1965/72
FORD CAR
FINAL ISSUE

Master Parts and Accessories CATALOG

Form FP 7635-A & B

Supersedes All Previous Issues, Changes and Revisions

May, 1975

FINAL ISSUE

COPYRIGHT © 1975 — FORD MOTOR COMPANY — DEARBORN, MICHIGAN

MASTER PARTS AND ACCESSORIES ILLUSTRATION CATALOG

FORM FP 7635-B

FORD PARTS and SERVICE DIVISION

GENERAL INSTRUCTIONS

This Ford Car Master Parts Catalog contains parts illustrations for Bronco, Fairlane/Torino, Falcon, Ford, Maverick, Mustang, Pinto and Thunderbird for model years 1965 to 1972 for U.S. and Canadian built vehicles.

Use this Illustration Catalog in conjunction with the Text Catalog, form FP 7635-A.

For greater convenience this catalog is divided into specific sections, such as brakes, front suspension, engine, transmission, etc. For example, FRONT SUSPENSION appears in Section 30, STEERING in Section 35, REAR AXLE in Section 40, etc.

A separate catalog which contains the text or descriptive information for the same model year is available as form FP 7635-A. The Text Catalog is divided into sections also and like parts are shown under similar section numbers in both the Text and Illustration Catalogs.

A listing of Ford group numbers and their related section numbers appears in the General Information Section of the Text Catalog, form FP 7635-A.

Illustrations contain group numbers only, therefore, it is necessary to refer to the group within the text catalog listing for complete applicable part number.

The driver's side is the left hand side of the vehicle and determines whether such parts as fenders, lamps, etc. are right or left hand.

Model year application is indicated by showing the first year followed by a diagonal line to indicate continued usage in all subsequent years until the insertion of the last year of usage, which is shown after the diagonal line. If no diagonal line is shown the part is applicable only to the year shown.

Example:
- 65/72 indicates part used 1965 through 1972 model years
- 65 indicates part used 1965 model year only

For Warranty Plate or Certification Label Data, Catalog Model Codes and Body Type Codes refer to the General Information Section of the Text catalog, form FP 7635-A.

The various car lines and their body types are identified by vehicle catalog codes and body type codes in the text catalog as follows -

VEHICLE	CATALOG CODE
Bronco	U
Fairlane	B
Falcon	X
Ford	A
Maverick	P
Mustang	F
Pinto	L
Thunderbird	S
Torino	B

BODY TYPE DESCRIPTION	BODY TYPE CODE
Convertible	76
Four door hardtop	57
Four door pillared hardtop	53
Four door sedan	54
Four door station wagon	71
Ranchero	66 or 97
Three door sedan	64
Two door hardtop (fastback roof)	63
Two door hardtop (formal roof)	65
Two door sedan	62
Two door station wagon	59 or 73

THE FOLLOWING SYMBOL APPEARS ON ILLUSTRATIONS AND IS INTERPRETED AS SHOWN BELOW

★ Indicates Not Serviced - must be improvised or procured locally

COPYRIGHT © 1975 — FORD MOTOR COMPANY — DEARBORN, MICHIGAN

CHASSIS PARTS ILLUSTRATION INDEX

Following is a general index of the major groups shown in the Chassis and Body Parts Illustration Sections. For more specific information refer to the Index appearing in front of the Section number listed below.

MAJOR GROUP	•TABBED DIVIDER TITLE	INDEX SECTION
Accelerator Linkage	Fuel	90
Accessories	Listed in their appropriate groups as identified in this index	
Air Cleaner	Fuel	90
Air Conditioner	Speedometer, Bumper	175
Alternator	Generator, Alternator, Starter, Distributor	100
Automatic Transmission	Automatic Transmission	A70
Axle (rear)	Rear Axle, Driveshaft	40
Battery	Generator, Alternator, Starter, Distributor	100
Brake System	Wheels, Brakes	10
Bumpers	Speedometer, Bumper	175
Carburetor	Fuel	90
Carrier (Wheel)	Wheels, Brakes	10
Clutch	Standard Transmission, Clutch	70
Cooling System	Cooling, Grille	80
Distributor	Generator, Alternator, Starter, Distributor	100
Driveshaft	Rear Axle, Driveshaft	40
Electrical	Generator, Alternator, Starter, Distributor	100
Electrical	Lamps, Wiring	130
Engine	Engine	60
Exhaust System	Frames, Mufflers, Springs	50
Fan	Cooling, Grille	80
Fenders	Fender, Hood	160
Frame	Frames, Mufflers, Springs	50
Front Suspension	Front Suspension, Steering	30
Fuel Pump	Fuel	90
Fuel System	Fuel	90
Fuel Tank	Fuel	90
Gearshift Lever	Standard Transmission, Clutch	70
Generator	Generator, Alternator, Starter, Distributor	100
Grille	Cooling, Grille	80
Heater	Speedometer, Bumper	175
Hood	Fender, Hood	160
Horn	Lamps, Wiring	130
Instrument Cluster	Generator, Alternator, Starter, Distributor	100
Lamps	Lamps, Wiring	130
Lever (Gearshift)	Standard Transmission, Clutch	70
Manifolds	Fuel	90
Mirrors	Speedometer, Bumper	175
Muffler	Frames, Muffler, Springs	50
Pump (Fuel)	Fuel	90
Pump (Water)	Cooling, Grille	80
Radiator	Cooling, Grille	80
Rear Axle	Rear Axle, Driveshaft	40

• Applicable to Loose Leaf Catalogs only.

CHASSIS PARTS ILLUSTRATION INDEX - cont'd.

MAJOR GROUP	• TABBED DIVIDER TITLE	INDEX SECTION
Speedometer	Speedometer, Bumper	175
Springs	Frames, Mufflers, Springs	50
Stabilizer (Front)	Front Suspension, Steering	30
Stabilizer (Rear)	Frames, Mufflers, Springs	50
Starter	Generator, Alternator, Starter, Distributor	100
Steering	Front Suspension, Steering	30
Suspension (Front)	Front Suspension, Steering	30
Tachometer	Generator, Alternator, Starter, Distributor	100
Tank (Fuel)	Fuel	90
Transfer Case	Standard Transmission Clutch	70
Transmission (Automatic)	Automatic Transmission	A70
Transmission (Standard)	Standard Transmission, Clutch	70
Voltage Regulator	Generator, Alternator, Starter, Distributor	100
Water Pump	Cooling, Grille	80
Wheels	Wheels, Brakes	10
Windshield Wiper	Speedometer, Bumper	175
Wiring	Lamps, Wiring	130

BODY PARTS ILLUSTRATION INDEX

Auxiliary Seat	Seat	600
Back Window	Back, Luggage Compartment	400
Body Sheet Metal	Body Sheet Metal	Body Sheet Metal
Console	Body Front, Floor	000
Door (Front)	Body Sides, Quarter	230
Door (Rear)	Body Sides, Quarter	230
Exterior Trim	Exterior Moulding	Exterior Moulding
Floor Sheet Metal	Body Sheet Metal	Body Sheet Metal
Folding Top	Back, Luggage Compartment	400
Front Door	Body Sides, Quarter	230
Front Seat	Seat	600
Front Seat Track	Seat	600
Glove Compartment	Body Front, Floor	000
Instrument Panel	Body Front, Floor	000
Interior Trim	Interior Trim	Interior Trim
Liftgate	Back, Luggage Compartment	400
Luggage Compartment Door Mechanism	Back, Luggage Compartment	400
Luggage Compartment Trim	Interior Trim	Interior Trim
Package Tray	Interior Trim	Interior Trim
Quarter Window	Body Sides, Quarter	230
Rear Door	Body Sides, Quarter	230
Rear Seat	Seat	600
Roof	Back, Luggage Compartment	400
Sheet Metal	Body Sheet Metal	Body Sheet Metal
Tailgate	Back, Luggage Compartment	400
Top (Folding)	Back, Luggage Compartment	400
Track (Front Seat)	Seat	600
Vent System	Body Front, Floor	000
Windshield	Body Front, Floor	000

• Applicable to Loose Leaf Catalogs only.

COPYRIGHT © 1975 — FORD MOTOR COMPANY — DEARBORN, MICHIGAN

PROCEDURE FOR USING CATALOG

There are three ways of finding part numbers

1. By Part Name
2. By Illustration
3. By Identification

Should an inquiry be received for a rear brake backing plate for a 1965 Thunderbird -

BY PART NAME

A. Refer to the Chassis Parts Alphabetical Index in the Text Catalog, form FP 7635-A.
B. Refer to the alphabetical nomenclature and find the part name "Plate (rear brake backing)". The group number listed is 2211-2.
C. Refer to group number 2211-2 and locate 1965 in the "YEAR" column. Find the vehicle catalog code "S" (for Thunderbird) in the "MODEL" column.
D. The part numbers shown are C6SZ 2211-A for right hand and C6SZ 2212-A for left hand.

BY ILLUSTRATION

A. Refer to the tabbed divider marked "WHEELS, BRAKES" in this catalog.
B. Refer to the index immediately behind the divider and find the illustration titles for 1965 S(Thunderbird).
C. Under the heading "BRAKES" find the "Brake details (drum rear)" illustration for the 1965 S(Thunderbird).
D. Refer to the illustration designated (on page 4 of Illustration Section 20.1) and find the group number for the rear brake backing plate to be 2211-2.
E. Refer to group number 2211-2 in the Text Catalog and locate 1965 in the "YEAR" column. Find the vehicle catalog code "S" (for Thunderbird) in the "MODEL" column.
F. The part numbers shown are C6SZ 2211-A for right hand and C6SZ 2212-A for left hand.

BY IDENTIFICATION

Certain parts and most major assemblies are identified with a part number shown on an attached tag or plate or on the part itself. Reference to identification numbers is made throughout the catalog and cross reference charts are included in some sections to provide immediate knowledge of the service part number when the identification number is known. All identification information other than charts will be preceded by the symbol (#). IMPORTANT - Identification tags and plates must be retained with the part or assembly with which they are originally supplied.

HOW TO ORDER PARTS

When ordering parts, always give the complete part number.
In the event the part number is not known, the following information should be included.

A. Complete description of part.
B. Model year and body type.
C. Dimension, number of teeth, size, etc., if possible rough sketch of part.
D. If applicable to engine, transmission, axle, steering, etc., specify type, such as 400 cubic inch, Automatic Transmission, Power Steering, etc.
E. Advise how shipment is to be made - Freight, Express, Air, Parcel Post.

EXPLANATION OF SYMBOL ★

★ Symbol indicates part is not supplied for service due to the following

a. Part is superseded and replaced as indicated in the description column of the text catalog.
b. Part can be improvised as indicated in the description column of text catalog.
c. Due to its function there would be little or no demand.

NOTE - ALWAYS REFER TO THE DESCRIPTION COLUMN OF THE TEXT FOR POSSIBLE SUBSTITUTION, OR FOR MATERIAL SPECIFICATIONS AND DIMENSIONS WHICH MAY BE HELPFUL IN OBTAINING THE NON-SERVICED PART LOCALLY.

INDEX

THIS INDEX SECTION INCLUDES BRAKES, WHEELS and RELATED PARTS

TITLE	SECTION	PAGE	ILLUS. NO.
1965			
A (FORD)			
BRAKES			
Brake & clutch pedals	75	1	P-4595
Drum brake system	20	1	P-4610
Brake booster installation			
Booster details (Midland - Ross)	23	2	P-4893
Brake cylinder details - front & rear	20.1	2	P-2284
Brake details - front & rear	20.1	4	P-3380
Brake master cylinder details	20.1	1	P-3098
Parking brake system	20	1	P-4610
WHEELS			
Front & rear wheel, hub, & bearings	10	1	P-1780
Hub cap & wheel cover - refer to text Group 1130			
Spare wheel & jack storage	175.2	1	P-4823
B (FAIRLANE/TORINO)			
BRAKES			
Brake & clutch pedals	75	2	P-3674
Drum brake system	20	3	P-3678
Brake booster installation (Midland - Ross)	20	3	P-3678
Booster details (Midland - Ross)	23	2	P-4893
Brake cylinder details - front & rear	20.1	2	P-3906
Brake details - front & rear	20.1	5	P-3703
Brake master cylinder details	20.1	1	P-3098
Parking brake system	20	3	P-3678
WHEELS			
Front & rear wheel, hub, & bearings	10	1	P-3118
Hub cap & wheel cover - Refer to text Group 1130			
Spare wheel and jack storage - except station wagon	175.2	2	P-3706
- station wagon	175.2	2	P-4824
F (MUSTANG)			
BRAKES			
Brake & clutch pedals	75	5	P-4472
Disc brake system	20	6	P-4470
Brake booster installation (Bendix)	23	1	P-4533
Booster details (Bendix)	23	3	P-4590
Brake cylinder details - rear	20.1	3	P-2990
Brake details - disc front	20.1	8	P-4604
Brake details - drum rear	20.1	5	P-3703
Brake master cylinder details	20.1	1	P-3098
Drum brake system	20	6	P-4470
Brake booster installation (Bendix)	23	1	P-4533
Booster details (Bendix)	23	3	P-4590
Brake cylinder details - front & rear	20.1	3	P-2990
Brake details - front & rear	20.1	5	P-3703
Brake master cylinder details	20.1	1	P-3098
Parking brake system	20	6	P-4470
WHEELS			
Front & rear wheel, hub, & bearings	10	1	P-3118
Hub cap & wheel cover - refer to text Group 1130			
Spare wheel & jack storage	175.2	3	P-4596
Wheel lug nuts (Mustang GT350/500) - refer to text Group 1012			

COPYRIGHT © 1975 — FORD MOTOR COMPANY — DEARBORN, MICHIGAN

INDEX

TITLE	SECTION	PAGE	ILLUS. NO.
1965			
S (THUNDERBIRD)			
BRAKES			
Brake pedal	20	7	P-4240
Disc brake system	20	7	P-4240
Brake booster installation	20	7	P-4240
Booster details (Bendix)	23	4	P-4892
Brake cylinder details - rear	20.1	2	P-3906
Brake details - disc front	20.1	7	P-4603
Brake details - drum rear	20.1	4	P-3380
Brake master cylinder details	20.1	1	P-3098
Parking brake system	20	7	P-4240
WHEELS			
Front & rear wheel, hub, & bearings	10	1	P-1780
Hub cap & wheel cover - refer to text Group 1130			
Spare wheel & jack storage	175.2	3	P-4597
X (FALCON)			
BRAKES			
Brake & clutch pedal - manual gear shift	75	7	P-3130
Brake pedal - automatic transmission	75	7	P-3131
Drum brake system	20	4	P-3119
Brake booster installation			
Booster details (Bendix)	23	3	P-4590
Brake cylinder - front & rear	20.1	3	P-2990
Brake details - front & rear	20.1	5	P-3703
Brake master cylinder details	20.1	1	P-3098
Parking brake system	20	4	P-3119
WHEELS			
Front & rear wheel, hub, & bearings	10	1	P-3118
Hub cap & wheel cover - refer to text Group 1130			
Spare wheel & jack storage	175.2	4	P-3916
1966			
A (FORD)			
BRAKES			
Brake & clutch pedals	75	1	P-4595
Disc brake system	20	2	P-5235
Brake booster installation	20	2	P-5235
Booster details (Midland - Ross)	23	2	P-4893
Brake cylinder details - rear	20.1	2	P-2284
Brake details - disc front	20.1	7	P-4603
Brake details - drum rear	20.1	4	P-3380
Brake master cylinder details	20.1	1	P-3098
Drum brake system	20	1	P-4610
Brake cylinder details - front & rear	20.1	2	P-2284
Brake details - front & rear	20.1	4	P-3380
Brake master cylinder details	20.1	1	P-3098
Parking brake system	20	1	P-4610
WHEELS			
Front & rear wheel, hub, & bearings	10	1	P-1780
Hub cap & wheel cover - refer to text Group 1130			
Spare wheel & jack storage	175.2	1	P-4823

INDEX

TITLE	SECTION	PAGE	ILLUS. NO.
1966			
B (FAIRLANE/TORINO)			
BRAKES			
Brake & clutch pedals	75	4	P-4983
Drum brake system	20	5	P-4985
Brake booster installation	20	5	P-4985
Booster details (Midland - Ross)	23	2	P-4893
Brake cylinder details - front & rear	20.1	2	P-3906
Brake details - front & rear	20.1	5	P-3703
Brake master cylinder details	20.1	1	P-3098
Parking brake system	20	5	P-4985
WHEELS			
Front & rear wheel, hub, & bearings	10	1	P-3118
Hub cap & wheel cover - refer to text Group 1130			
Spare wheel & jack storage - except station wagon	175.2	5	P-5211
- station wagon	175.2	6	P-5212
F (MUSTANG)			
BRAKES			
Brake & clutch pedals	75	5	P-4472
Disc brake system	20	6	P-4470
Brake booster installation (Bendix)	23	1	P-4533
Booster details (Bendix)	23	3	P-4590
Brake cylinder details - rear	20.1	2	P-3906
Brake details - disc front	20.1	8	P-4604
Brake details - drum rear	20.1	5	P-3703
Brake master cylinder details	20.1	1	P-3098
Drum brake system	20	6	P-4470
Brake booster installation (Bendix)	23	1	P-4533
Booster details (Bendix)	23	3	P-4590
Brake cylinder details - front & rear	20.1	2	P-3906
Brake details - front & rear	20.1	5	P-3703
Brake master cylinder details	20.1	1	P-3098
Parking brake system	20	6	P-4470
WHEELS			
Front & rear wheel, hub, & bearings	10	1	P-3118
Hub cap & wheel cover - refer to text Group 1130			
Spare wheel & jack storage	175.2	3	P-4596
Wheel lug nuts (Mustang GT350/500) - refer to text Group 1012			
S (THUNDERBIRD)			
BRAKES			
Brake pedal	20	7	P-4240
Disc brake system	20	7	P-4240
Brake booster installation	20	7	P-4240
Booster details (Bendix)	23	4	P-4892
Brake cylinder details - rear	20.1	2	P-3906
Brake details - disc front	20.1	7	P-4603
Brake details - drum rear	20.1	4	P-3380
Brake master cylinder details	20.1	1	P-3098
Parking brake system	20	7	P-4240
WHEELS			
Front & rear wheel, hub, & bearings	10	1	P-1780
Hub cap & wheel cover - refer to text Group 1130			
Spare wheel & jack storage	175.2	3	P-4597

COPYRIGHT © 1975 — FORD MOTOR COMPANY — DEARBORN, MICHIGAN

INDEX

TITLE	SECTION	PAGE	ILLUS. NO.
1966			
U (BRONCO)			
BRAKES			
Brake & clutch pedals	75	6	P-4972
Drum brake system	20	8	P-4974
Brake cylinder details - front & rear	20.1	2	P-3906
Brake details - front & rear	20.1	6	P-6602
Brake master cylinder details	20.1	1	P-3098
Parking brake system	20	8	P-4974
WHEELS			
Free running hub - Dana (Spicer)	10	3	P-7799
Front hub & bearings	30	7	P-5312
Hub cap & wheel cover - refer to text Group 1130			
Spare wheel & jack storage - Before Ser. 830,001	175.2	8	P-4982
- From Ser. 830,001	175.2	9	P-6599
X (FALCON)			
BRAKES			
Brake & clutch pedals	75	4	P-4983
Drum brake system	20	5	P-4985
Brake booster installation	20	5	P-4985
Booster details (Midland - Ross)	23	2	P-4893
Brake cylinder details - front & rear	20.1	2	P-3906
Brake details - front & rear	20.1	5	P-3703
Brake master cylinder details	20.1	1	P-3098
Parking brake system	20	5	P-4985
WHEELS			
Front & rear wheel, hub, & bearings	10	1	P-3118
Hub cap & wheel cover - refer to text Group 1130			
Spare wheel & jack storage - except Ranchero & station wagon	175.2	5	P-5211
- Ranchero & station wagon	175.2	6	P-5212
1967			
A (FORD)			
BRAKES			
Brake & clutch pedals	75	1	P-4595
Disc brake system	*20*	*10*	*P-5491*
Brake booster installation	20	10	P-5481
Brake cylinder details - rear	20.1	2	P-2284
Brake details - disc front	20.1	7	P-4603
Brake details - drum rear	20.1	4	P-3380
Brake master cylinder details	20.1	1	P-5518
Drum brake system	20	9	P-5482
Brake cylinder details - front & rear	20.1	2	P-2284
Brake details - front & rear	20.1	4	P-3380
Brake master cylinder details	20.1	1	P-5518
Parking brake system	20	9	P-5482
WHEELS			
Front & rear wheel, hub, & bearings	10	1	P-1780
Hub cap & wheel cover - refer to text Group 1130			
Spare wheel & jack storage	175.2	7	P-5779

INDEX

TITLE	SECTION	PAGE	ILLUS. NO.
1967			
B (FAIRLANE/TORINO)			
BRAKES			
Brake & clutch pedals	75	9	P-5514
Disc brake system	20	11	P-5515
Brake booster installation	20	11	P-5515
Brake cylinder details - rear	20.1	2	P-3906
Brake details - disc front	20.1	8	P-4604
Brake details - drum rear	20.1	5	P-3703
Brake master cylinder details	20.1	1	P-5518
Drum brake system	20	11	P-5515
Brake booster installation	20	11	P-5515
Brake cylinder details - front & rear	20.1	2	P-3906
Brake details - front & rear	20.1	5	P-3703
Brake master cylinder details	20.1	1	P-5518
Parking brake system	20	11	P-5515
WHEELS			
Front & rear wheel, hub, & bearings	10	1	P-3118
Hub cap & wheel cover - refer to text Group 1130			
Spare wheel & jack storage - except Ranchero & station wagon	175.2	5	P-5211
- Ranchero & station wagon	175.2	6	P-5212
F (MUSTANG)			
BRAKES			
Brake & clutch pedals	75	11	P-5513
Disc brake system	20	12	P-5516
Brake booster installation	20	12	P-5516
Brake cylinder details - rear	20.1	2	P-3906
Brake details - disc front	20.1	8	P-4604
Brake details - drum rear	20.1	5	P-3703
Brake master cylinder details	20.1	1	P-5518
Drum brake system	20	12	P-5516
Brake cylinder details - front & rear	20.1	2	P-3906
Brake details - front & rear	20.1	5	P-3703
Brake master cylinder details	20.1	1	P-5518
Parking brake system	20	12	P-5516
WHEELS			
Front & rear wheel, hub, & bearings	10	1	P-3118
Hub cap & wheel cover - refer to text Group 1130			
Spare wheel & jack storage	175.2	3	P-4596
Wheel lug nuts (Mustang GT350/500) - refer to text Group 1012			
S (THUNDERBIRD)			
BRAKES			
Disc brake system	20	13	P-5480
Brake booster installation	20	13	P-5480
Brake cylinder details - rear	20.1	2	P-3906
Brake details - disc front	20.1	7	P-4603
Brake details - drum rear	20.1	4	P-3380
Brake master cylinder details	20.1	1	P-5518
Parking brake system	20	13	P-5480
WHEELS			
Front & rear wheel, hub, & bearings	10	1	P-1780
Hub cap & wheel cover - refer to text Group 1130			
Spare wheel & jack storage	175.2	8	P-5780

COPYRIGHT © 1975 — FORD MOTOR COMPANY — DEARBORN, MICHIGAN

INDEX

TITLE	SECTION	PAGE	ILLUS. NO.
1967			
U (BRONCO)			
BRAKES			
Brake & clutch pedals	75	6	P-4972
Drum brake system	20	8	P-4974
Brake cylinder details - front & rear	20.1	2	P-3906
Brake details - front & rear	20.1	6	P-6602
Brake master cylinder details	20.1	1	P-5518
Parking brake system	20	8	P-4974
WHEELS			
Free running hub - Dana (Spicer)	10	3	P-7799
Front hub, & bearings	30	7	P-5312
Hub cap & wheel cover - refer to text Group 1130			
Spare wheel & jack storage	175.2	9	P-6599
X (FALCON)			
BRAKES			
Brake & clutch pedals	75	9	P-5514
Disc brake system	20	11	P-5515
Brake booster installation	20	11	P-5515
Brake cylinder details - rear	20.1	2	P-3906
Brake details - disc front	20.1	8	P-4604
Brake details - drum rear	20.1	5	P-3703
Brake master cylinder details	20.1	1	P-5518
Drum brake system	20	11	P-5515
Brake booster installation	20	11	P-5515
Brake cylinder details - front & rear	20.1	2	P-3906
Brake details - front & rear	20.1	5	P-3703
Brake master cylinder details	20.1	1	P-5518
Parking brake system	20	11	P-5515
WHEELS			
Front & rear wheel, hub, & bearings	10	1	P-3118
Hub cap & wheel cover - refer to text Group 1130			
Spare wheel & jack storage - except station wagon	175.2	5	P-5211
- station wagon	175.2	6	P-5212
1968			
A (FORD)			
BRAKES			
Brake & clutch pedals	75	1	P-4595
Disc brake system	20	10	P-5481
Brake booster installation	20	10	P-5481
Brake cylinder details - rear	20.1	2	P-2284
Brake details - disc front	20.1	9	P-6219
Brake details - drum rear	20.1	4	P-3380
Brake master cylinder details	20.1	1	P-5518
Drum brake system	20	9	P-5482
Brake cylinder details - front & rear	20.1	2	P-2284
Brake details - front & rear	20.1	4	P-3380
Brake master cylinder details	20.1	1	P-5518
Parking brake system	20	9	P-5482
WHEELS			
Front & rear wheel, hub, & bearings	10	1	P-1780
Hub cap & wheel cover - refer to text Group 1130			
Spare wheel & jack storage	175.2	7	P-5779

INDEX

TITLE	SECTION	PAGE	ILLUS. NO.
1968			
B (FAIRLANE/TORINO)			
BRAKES			
Brake & clutch pedals	75	10	P-6541
Disc brake system	20	11	P-5515
Brake booster installation	20	11	P-5515
Brake cylinder details - rear	20.1	2	P-3906
Brake details - disc front	20.1	10	P-6218
Brake details - drum rear	20.1	5	P-3703
Brake master cylinder details	20.1	1	P-5518
Drum brake system	20	11	P-5515
Brake booster installation	20	11	P-5515
Brake cylinder details - front & rear	20.1	2	P-3906
Brake details - front & rear	20.1	5	P-3703
Brake master cylinder details	20.1	1	P-5518
Parking brake system	20	11	P-5515
WHEELS			
Front & rear wheel, hub, & bearings	10	1	P-3118
Hub cap & wheel cover - refer to text Group 1130			
Spare wheel & jack storage - except Ranchero & station wagon	175.2	5	P-5211
- Ranchero & station wagon	175.2	6	P-5212
F (MUSTANG)			
BRAKES			
Brake & clutch pedals	75	11	P-5513
Disc brake system	20	12	P-5516
Brake booster installation	20	12	P-5516
Brake cylinder details - rear	20.1	2	P-3906
Brake details - disc front	20.1	10	P-6218
Brake details - drum rear	20.1	5	P-3703
Brake master cylinder details	20.1	1	P-5518
Drum brake system	20	12	P-5516
Brake booster installation	20	12	P-5516
Brake cylinder details - front & rear	20.1	2	P-3906
Brake details - front & rear	20.1	5	P-3703
Brake master cylinder details	20.1	1	P-5518
Parking brake system	20	12	P-5516
WHEELS			
Front & rear wheel, hub, & bearings	10	1	P-3118
Hub cap & wheel cover - refer to text Group 1130			
Spare wheel & jack storage	175.2	3	P-4596
Wheel lug nuts (Mustang GT350/500) - refer to text Group 1012			
S (THUNDERBIRD)			
BRAKES			
Disc brake system	20	14	P-6399
Brake booster installation	20	14	P-6399
Brake cylinder details - rear	20.1	2	P-3906
Brake details - disc front	20.1	9	P-6219
Brake details - drum rear	20.1	4	P-3380
Brake master cylinder details	20.1	1	P-5518
Parking brake system	20	15	P-6400
WHEELS			
Front & rear wheel, hub, & bearings	10	1	P-1780
Hub cap & wheel cover - refer to text Group 1130			
Spare wheel & jack storage	175.2	8	P-5780

COPYRIGHT © 1975 — FORD MOTOR COMPANY — DEARBORN, MICHIGAN

INDEX

TITLE	SECTION	PAGE	ILLUS. NO.
1968			
U (BRONCO)			
BRAKES			
Brake & clutch pedals	75	6	P-4972
Drum brake system	20	8	P-4974
Brake cylinder details - front & rear	20.1	2	P-3906
Brake details - front & rear	20.1	6	P-6602
Brake master cylinder details	20.1	1	P-5518
Parking brake system	20	8	P-4974
WHEELS			
Free running hub - Dana (Spicer)	10	3	P-7799
Front hub & bearings	30	7	P-5312
Hub cap & wheel cover - refer to text Group 1130			
Jack parts	175.2	10	P-6600
Spare wheel carrier - swing away	10	2	P-6232
X (FALCON)			
BRAKES			
Brake & clutch pedals	75	10	P-6541
Disc brake system	20	11	P-5515
Brake booster installation	20	11	P-5515
Brake cylinder details - rear	20.1	2	P-3906
Brake details - disc front	20.1	10	P-6218
Brake details - drum rear	20.1	5	P-3703
Brake master cylinder details	20.1	1	P-5518
Drum brake system	20	11	P-5515
Brake booster installation	20	11	P-5515
Brake cylinder details - front & rear	20.1	2	P-3906
Brake details - front & rear	20.1	5	P-3703
Brake master cylinder details	20.1	1	P-5518
Parking brake system	20	11	P-5515
WHEELS			
Front & rear wheel, hub, & bearings	10	1	P-3118
Hub cap & wheel cover - refer to text Group 1130			
Spare wheel & jack storage - except station wagon	175.2	5	P-5211
- station wagon	175.2	6	P-5212
1969			
A (FORD)			
BRAKES			
Brake & clutch pedals	75	12	P-6724
Disc brake system - power - except New York taxi	20	17	P-6718
- non-power - New York taxi	20	18	P-6720
Brake booster installation	20	17	P-6718
Brake cylinder details - rear	20.1	2	P-2284
Brake details - disc front	20.1	9	P-6219
Brake details - drum rear	20.1	4	P-3380
Brake master cylinder details	20.1	1	P-5518
Drum brake system	20	16	P-6719
Brake cylinder details - front & rear	20.1	2	P-2284
Brake details - front & rear	20.1	4	P-3380
Brake master cylinder details	20.1	1	P-5518
Parking brake system	20	19	P-6721
WHEELS			
Front & rear wheel, hub, & bearings	10	1	P-1780
Hub cap & wheel cover - refer to text Group 1130			
Spare wheel & jack storage - except model 71	175.2	12	P-7055
- model 71	175.2	13	P-7056

INDEX

TITLE	SECTION	PAGE	ILLUS. NO.
1969			
B (FAIRLANE/TORINO)			
BRAKES			
Brake & clutch pedals	75	10	P-6541
Disc brake system	20	11	P-5515
Brake booster installation	20	11	P-5515
Brake cylinder details - rear	20.1	2	P-3906
Brake details - disc front	20.1	10	P-6218
Brake details - drum rear	20.1	5	P-3703
Brake master cylinder details	20.1	1	P-5518
Drum brake system	20	11	P-5515
Brake booster installation	20	11	P-5515
Brake cylinder details - front & rear	20.1	2	P-3906
Brake details - front & rear	20.1	5	P-3703
Brake master cylinder details	20.1	1	P-5518
Parking brake system	20	11	P-5515
WHEELS			
Front & rear wheel, hub, & bearings	10	1	P-3118
Hub cap & wheel cover - refer to text Group 1130			
Spare wheel & jack storage - except Ranchero & station wagon	175.2	5	P-5211
- Ranchero & station wagon	175.2	6	P-5212
F (MUSTANG)			
BRAKES			
Brake & clutch details	75	13	P-6756
Disc brake system	20	20	P-6754
Brake booster installation	20	20	P-6754
Brake cylinder details - rear	20.1	2	P-3906
Brake details - disc front	20.1	10	P-6218
Brake details - drum rear	20.1	5	P-3703
Brake master cylinder details	20.1	1	P-5518
Drum brake system	20	20	P-6754
Brake cylinder details - front & rear	20.1	2	P-3906
Brake details - front & rear	20.1	5	P-3703
Brake master cylinder details	20.1	1	P-5518
Parking brake system	20	21	P-6755
WHEELS			
Front & rear wheel, hub, & bearings	10	1	P-3118
Hub cap & wheel cover - refer to text Group 1130			
Spare wheel & jack storage	175.2	13	P-7063
Wheel lug nuts (Mustang GT350/500) - refer to text Group 1012			
S (THUNDERBIRD)			
BRAKES			
Disc brake system	20	14	P-6399
Anti-skid control system	20	22	P-6766
Brake booster installation	20	14	P-6399
Brake cylinder details - rear	20.1	2	P-3906
Brake details - disc front	20.1	9	P-6219
Brake details - drum rear	20.1	4	P-3380
Brake master cylinder details	20.1	1	P-5518
Parking brake system	20	15	P-6400
WHEELS			
Front & rear wheel, hub, & bearings	10	1	P-1780
Hub cap & wheel cover - refer to text Group 1130			
Spare wheel & jack storage	175.2	8	P-5780

COPYRIGHT © 1975 — FORD MOTOR COMPANY — DEARBORN, MICHIGAN

INDEX

TITLE	SECTION	PAGE	ILLUS. NO.
1969			
U (BRONCO)			
BRAKES			
Brake & clutch pedals	75	6	P-4972
Drum brake system	20	8	P-4974
Brake cylinder details - front & rear	20.1	2	P-3906
Brake details - front & rear	20.1	6	P-6602
Brake master cylinder details	20.1	1	P-5518
Parking brake system	20	8	P-4974
WHEELS			
Free running hub - Dana (Spicer)	10	3	P-7799
Front hub & bearings	30	7	P-5312
Hub cap & wheel cover - refer to text Group 1130			
Jack parts	175.2	10	P-6600
Spare wheel carrier - swing away	10	2	P-6232
X (FALCON)			
BRAKES			
Brake & clutch pedals	75	10	P-6541
Disc brake system	20	11	P-5515
Brake booster installation	20	11	P-5515
Brake cylinder details - rear	20.1	2	P-3906
Brake details - disc front	20.1	10	P-6218
Brake details - drum rear	20.1	5	P-3703
Brake master cylinder details	20.1	1	P-5518
Drum brake system	20	11	P-5515
Brake booster installation	20	11	P-5515
Brake cylinder details - front & rear	20.1	2	P-3906
Brake details - front & rear	20.1	5	P-3703
Brake master cylinder details	20.1	1	P-5518
Parking brake system	20	11	P-5515
WHEELS			
Front & rear wheel, hub, & bearings	10	1	P-3118
Hub cap & wheel cover - refer to text Group 1130			
Spare wheel & jack storage - except station wagon	175.2	5	P-5211
- station wagon	175.2	6	P-5212
1970			
A (FORD)			
BRAKES			
Brake & clutch pedals	75	12	P-6724
Disc brake system	20	28	P-7500
Brake booster installation	20	28	P-7500
Brake cylinder details - rear	20.1	2	P-2284
Brake details - disc front	20.1	9	P-6219
Brake details - drum rear	20.1	4	P-3380
Brake master cylinder details	20.1	1	P-5518
Drum brake system	20	27	P-7507
Brake booster installation	20	27	P-7507
Brake cylinder details - front & rear	20.1	2	P-2284
Brake details - front & rear	20.1	4	P-3380
Brake master cylinder details	20.1	1	P-5518
Parking brake system	20	19	P-6721
WHEELS			
Front & rear wheel, hub & bearing	10	1	P-1780
Hub cap & wheel cover - refer to text Group 1130			
Spare wheel & jack storage - except model 71	175.2	12	P-7055
- model 71	175.2	13	P-7056

INDEX

TITLE	SECTION	PAGE	ILLUS. NO.
1970			
B (FAIRLANE/TORINO)			
B(FALCON)FROM 1/2/70			
BRAKES			
Brake & clutch pedals	75	15	P-7306
Disc brake system	20	25	P-7308
Brake booster installation	20	25	P-7308
Brake cylinder details - rear	20.1	2	P-3906
Brake details - disc front	20.1	10	P-6218
Brake details - drum rear	20.1	5	P-3703
Brake master cylinder details	20.1	1	P-5518
Drum brake system	20	25	P-7308
Brake cylinder details - front & rear	20.1	2	P-3906
Brake details - front & rear	20.1	5	P-3703
Brake master cylinder details	20.1	1	P-5518
Parking brake system	20	26	P-7307
WHEELS			
Front & rear wheel, hub & bearings	10	1	P-3118
Hub cap & wheel cover - refer to text Group 1130			
Spare wheel jack storage - except Ranchero & station wagon	175.2	5	P-5211
- Ranchero & station wagon	175.2	6	P-5212
F (MUSTANG)			
BRAKES			
Brake & clutch pedals	75	13	P-6756
Disc brake system	20	20	P-6754
Brake booster installation	20	20	P-6754
Brake cylinder details - rear	20.1	2	P-3906
Brake details - disc front	20.1	10	P-6218
Brake details - drum rear	20.1	5	P-3703
Brake master cylinder details	20.1	1	P-5518
Drum brake system	20	20	P-6754
Brake cylinder details - front & rear	20.1	2	P-3906
Brake details - front & rear	20.1	5	P-3703
Brake master cylinder details	20.1	1	P-5518
Parking brake system	20	21	P-6755
WHEELS			
Front & rear wheel, hub & bearings	10	1	P-3118
Hub cap & wheel cover - refer to text Group 1130			
Spare wheel & jack storage	175.2	13	P-7063
P (MAVERICK)			
BRAKES			
Brake & clutch pedals	75	14	P-6883
Drum brake system	20	23	P-6881
Brake cylinder details - front & rear	20.1	2	P-3906
Brake details - front & rear	20.1	5	P-3703
Brake master cylinder details	20.1	1	P-5518
Parking brake system	20	24	P-6882
WHEELS			
Front & rear wheel, hub, & bearings	10	1	P-3118
Hub cap & wheel cover - refer to text Group 1130			
Spare wheel & jack storage	175.2	11	P-6925

COPYRIGHT © 1975 — FORD MOTOR COMPANY — DEARBORN, MICHIGAN

INDEX

TITLE	SECTION	PAGE	ILLUS. NO.
1970			
S (THUNDERBIRD)			
BRAKES			
Disc brake system	20	14	P-6399
Anti-skid control system (sure track) - "Before 1/12/70"	20	29	P-7679
- "From 1/12/70"	20	30	P-7680
Brake booster installation	20	14	P-6399
Brake cylinder details - rear	20.1	2	P-3906
Brake details - disc front	20.1	9	P-6219
Brake details - drum rear	20.1	4	P-3380
Brake master cylinder details	20.1	1	P-5518
Parking brake system	20	15	P-6400
WHEELS			
Front & rear wheel, hub & bearings	10	1	P-1780
Hub cap & wheel cover - refer to text Group 1130			
Spare wheel & jack storage	175.2	8	P-5780
U (BRONCO)			
BRAKES			
Brake & clutch pedals	75	6	P-4972
Drum brake system	20	8	P-4974
Brake cylinder details - front & rear	20.1	2	P-3906
Brake details - front & rear	20.1	6	P-6602
Brake master cylinder details	20.1	1	P-5518
Parking brake system	20	8	P-4974
WHEELS			
Free running hub - Dana (Spicer)	10	3	P-7799
Front hub & bearings	30	7	P-5312
Hub cap & wheel cover - refer to text Group 1130			
Jack parts	175.2	10	P-6600
Spare wheel carrier - swing away	10	2	P-6232
X (FALCON) BEFORE 1/2/70			
FOR UNITS BUILT FROM 1/2/70, REFER TO B(FALCON)			
BRAKES			
Brake & clutch pedals	75	10	P-6541
Disc brake system	20	11	P-5515
Brake booster installation	20	11	P-5515
Brake cylinder details - rear	20.1	2	P-3906
Brake details - disc front	20.1	10	P-6218
Brake details - drum rear	20.1	5	P-3703
Brake master cylinder details	20.1	1	P-5518
Drum brake system	20	11	P-5515
Brake booster installation	20	11	P-5515
Brake cylinder details - front & rear	20.1	2	P-3906
Brake details - front & rear	20.1	5	P-3703
Brake master cylinder details	20.1	1	P-5518
Parking brake system	20	11	P-5515
WHEELS			
Front & rear wheel, hub & bearings	10	1	P-3118
Hub cap & wheel cover - refer to text Group 1130			
Spare wheel & jack storage - except station wagon	175.2	5	P-5211
- station wagon	175.2	6	P-5212

INDEX

TITLE	SECTION	PAGE	ILLUS. NO.
1971			
A (FORD)			
BRAKES			
Brake & clutch pedals	75	12	P-6724
Disc brake system	20	28	P-7500
Brake booster installation	20	28	P-7500
Brake cylinder details - rear	20.1	2	P-2284
Brake details - disc front	20.1	9	P-6219
Brake details - drum rear	20.1	4	P-3380
Brake master cylinder details	20.1	1	P-5518
Drum brake system	20	27	P-7507
Brake booster installation	20	27	P-7507
Brake cylinder details - front & rear	20.1	2	P-2284
Brake details - front & rear	20.1	4	P-3380
Brake master cylinder details	20.1	1	P-5518
Parking brake system	20	19	P-6721
WHEELS			
Front & rear wheel, hub & bearing	10	1	P-1780
Hub cap & wheel cover - refer to text Group 1130			
Spare wheel & jack storage - except model 71	175.2	12	P-7055
- model 71	175.2	13	P-7056
B (TORINO)			
BRAKES			
Brake & clutch pedals	75	15	P-7306
Disc brake system	20	25	P-7308
Brake booster installation	20	25	P-7308
Brake cylinder details - rear	20.1	2	P-3906
Brake details - disc front	20.1	10	P-6218
Brake details - drum rear	20.1	5	P-3703
Brake master cylinder details	20.1	1	P-5518
Drum brake system	20	25	P-7308
Brake cylinder details - front & rear	20.1	2	P-3906
Brake details - front & rear	20.1	5	P-3703
Brake master cylinder details	20.1	1	P-5518
Parking brake system	20	26	P-7307
WHEELS			
Front & rear wheel, hub & bearings	10	1	P-3118
Hub cap & wheel cover - refer to text Group 1130			
Spare wheel jack storage - except Ranchero & station wagon	175.2	5	P-5211
- Ranchero & station wagon	175.2	6	P-5212
F (MUSTANG)			
BRAKES			
Brake & clutch pedals	75	16	P-8144
Disc brake system	20	34	P-8141
Brake booster installation	20	34	P-8141
Brake cylinder details - rear	20.1	2	P-3906
Brake details - disc front	20.1	10	P-6218
Brake details - drum rear	20.1	5	P-3703
Brake master cylinder details	20.1	1	P-5518
Drum brake system	20	36	P-8142
Brake cylinder details - front & rear	20.1	2	P-3906
Brake details - front & rear	20.1	5	P-3703
Brake master cylinder details	20.1	1	P-5518
Parking brake system	20	35	P-8143
WHEELS			
Front & rear wheel, hub & bearings	10	1	P-3118
Hub cap & wheel cover - refer to text Group 1130			
Spare wheel & jack storage	175.2	13	P-7063

COPYRIGHT © 1975 — FORD MOTOR COMPANY — DEARBORN, MICHIGAN

INDEX

TITLE	SECTION	PAGE	ILLUS. NO.
1971			
L (PINTO)			
BRAKES			
Brake and clutch pedals	75	17	P-7933
Disc brake system	20	31	P-7934
Brake cylinder details - rear	20.1	2	P-3906
Brake details - disc front	20.1	11	P-7937
Brake details - drum rear	20.1	5	P-3703
Brake master cylinder details	20.1	1	P-5518
Drum brake system	20	31	P-7934
Brake cylinder details - front & rear	20.1	2	P-3906
Brake details - front & rear	20.1	5	P-3703
Brake master cylinder details	20.1	1	P-5518
Parking brake system	20	32	P-8064
WHEELS			
Front & rear wheel, hub & bearings	10	1	P-3118
Hub cap & wheel cover - Refer to text Group 1130			
Spare wheel and jack storage	175.2	11	P-8407
P (MAVERICK)			
BRAKES			
Brake & clutch pedals	75	14	P-8822
Drum brake system	20	23	P-6881
Brake cylinder details - front & rear	20.1	2	P-3906
Brake details - front & rear	20.1	5	P-3703
Brake master cylinder details	20.1	1	P-5518
Parking brake system	20	24	P-6882
WHEELS			
Front & rear wheel, hub, & bearings	10	1	P-3118
Hub cap & wheel cover - refer to text Group 1130			
S (THUNDERBIRD)			
BRAKES			
Disc brake system	20	33	P-8145
Anti-skid control system (sure track)	20	30	P-7680
Brake booster installation	20	33	P-8145
Brake cylinder details - rear	20.1	2	P-3906
Brake details - disc front	20.1	9	P-6219
Brake details - drum rear	20.1	4	P-3380
Brake master cylinder details	20.1	1	P-5518
Parking brake system	20	15	P-6400
WHEELS			
Front & rear wheel, hub & bearings	10	1	P-1780
Hub cap & wheel cover - refer to text Group 1130			
Spare wheel & jack storage	175.2	8	P-5786
U (BRONCO)			
BRAKES			
Brake & clutch pedals	75	6	P-4972
Drum brake system	20	44	P-10475
Brake cylinder details - front & rear	20.1	2	P-3906
Brake details - front & rear	20.1	6	P-6602
Brake master cylinder details	20.1	1	P-5518
Parking brake system	20	32	P-10474
WHEELS			
Free running hub - Dana (Spicer)	10	3	P-7799
Front hub & bearings	30	7	P-5312
Hub cap & wheel cover - refer to text Group 1130			
Jack parts	175.2	10	P-6600
Spare wheel carrier - swing away	10	2	P-6232

INDEX

TITLE	SECTION	PAGE	ILLUS. NO.
1972			
A (FORD)			
BRAKES			
Disc brake system	20	43	P-8944
Brake booster installation	20	43	P-8944
Brake cylinder details - rear	20.1	2	P-2284
Brake details - disc front	20.1	9	P-6219
Brake details - drum rear	20.1	4	P-3380
Brake master cylinder details	20.1	1	P-5518
Drum brake system	20	27	P-7507
Brake booster installation	20	27	P-7507
Brake cylinder details - front & rear	20.1	2	P-2284
Brake details - front & rear	20.1	4	P-3380
Brake master cylinder details	20.1	1	P-5518
Parking brake system	20	19	P-6721
WHEELS			
Front & rear wheel, hub & bearing	10	1	P-1780
Hub cap & wheel cover - refer to text Group 1130			
Spare wheel & jack storage - except model 71	175.2	12	P-7055
- model 71	175.2	13	P-7056
B (TORINO)			
BRAKES			
Brake & clutch pedals	75	18	P-8812
Disc brake system	20	39	P-8811
Brake booster installation	20	39	P-8811
Brake cylinder details - rear	20.1	2	P-3906
Brake details - disc front	20.1	12	P-8754
Brake details - drum rear	20.1	5	P-3703
Brake master cylinder details	20.1	1	P-5518
Parking brake system	20	37	P-8584
WHEELS			
Front & rear wheel, hub & bearings	10	1	P-3118
Hub cap & wheel cover - refer to text Group 1130			
Spare wheel & jack storage - except Ranchero & Station wagon	175.2	14	P-9975
- Ranchero	175.2	15	P-9976
- Station Wagon	175.2	14	P-9974
F (MUSTANG)			
BRAKES			
Brake & clutch pedals	75	16	P-8144
Disc brake system	20	34	P-8141
Brake booster installation	20	34	P-8141
Brake cylinder details - rear	20.1	2	P-3906
Brake details - disc front	20.1	10	P-6218
Brake details - drum rear	20.1	5	P-3703
Brake master cylinder details	20.1	1	P-5518
Drum brake system	20	36	P-8142
Brake cylinder details - front & rear	20.1	2	P-3906
Brake details - front & rear	20.1	5	P-3703
Brake master cylinder details	20.1	1	P-5518
Parking brake system	20	35	P-8143
WHEELS			
Front & rear wheel, hub & bearings	10	1	P-3118
Hub cap & wheel cover - refer to text Group 1130			
Spare wheel & jack storage	175.2	13	P-7063

COPYRIGHT © 1975 — FORD MOTOR COMPANY — DEARBORN, MICHIGAN

INDEX

TITLE	SECTION	PAGE	ILLUS. NO.
1972			
L (PINTO)			
BRAKES			
Brake and clutch pedals	75	17	P-7933
Disc brake system	20	31	P-7934
Brake cylinder details - rear	20.1	2	P-3906
Brake details - disc front	20.1	11	P-7937
Brake details - drum rear	20.1	5	P-3703
Brake master cylinder details	20.1	1	P-5518
Drum brake system	20	31	P-7934
Brake cylinder details - front & rear	20.1	2	P-3906
Brake details - front & rear	20.1	5	P-3703
Brake master cylinder details	20.1	1	P-5518
Parking brake system	20	32	P-8064
WHEELS			
Front & rear wheel, hub & bearings	10	1	P-3118
Hub cap & wheel cover - Refer to text Group 1130			
Spare wheel and jack storage	175.2	11	P-8407
P (MAVERICK)			
BRAKES			
Brake & clutch pedals	75	14	P-8822
Drum brake system	20	40	P-8813
Brake cylinder details - front & rear	20.1	2	P-3906
Brake details - front & rear	20.1	5	P-3703
Brake master cylinder details	20.1	1	P-5518
Parking brake system	20	24	P-6882
WHEELS			
Front & rear wheel, hub & bearings	10	1	P-3118
Hub cap & wheel cover - refer to text Group 1130			
Spare wheel & jack storage	175.2	11	P-6925
S (THUNDERBIRD)			
BRAKES			
Disc brake system	20	42	P-8819
Anti-skid control system (Sure-track)	20	41	P-8820
Brake booster installation	20	42	P-8819
Brake cylinder details - rear	20.1	2	P-3906
Brake details - disc front	20.1	12	P-8754
Brake details - drum rear	20.1	4	P-3380
Brake master cylinder details	20.1	1	P-5518
Parking brake system	20	38	P-8682
WHEELS			
Front & rear wheel, hub & bearings	10	1	P-1780
Hub cap & wheel cover - refer to text Group 1130			
Spare wheel & jack storage	175.2	15	P-9973
U (BRONCO)			
BRAKES			
Brake & clutch pedals	75	6	P-4972
Drum brake system	20	44	P-10475
Brake cylinder details - front & rear	20.1	2	P-3906
Brake details - front & rear	20.1	6	P-6602
Brake master cylinder details	20.1	1	P-5518
Parking brake system	20	32	P-10474
WHEELS			
Free running hub - Dana (Spicer)	10	3	P-7799
Front hub & bearings	30	10	P-8317
Hub cap & wheel cover - refer to text Group 1130			
Jack parts	175.2	10	P-6600
Spare wheel carrier - swing away	10	2	P-6232

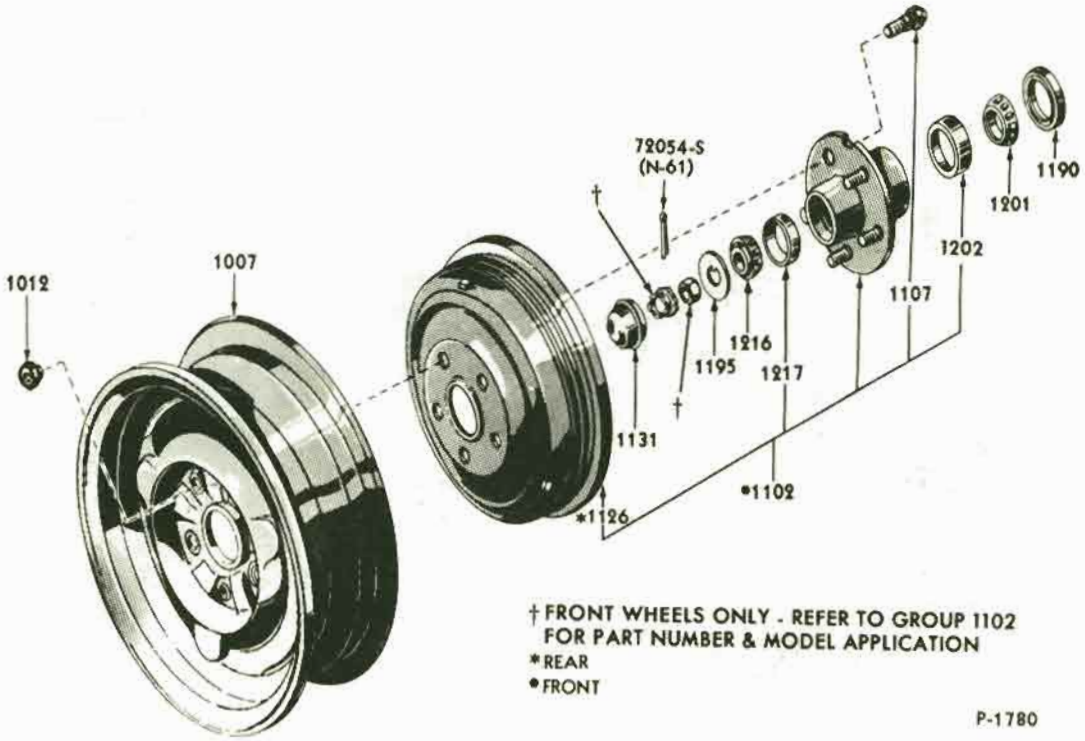

FRONT & REAR WHEEL, HUB, & BEARINGS - TYPICAL
1965/72 FORD, THUNDERBIRD

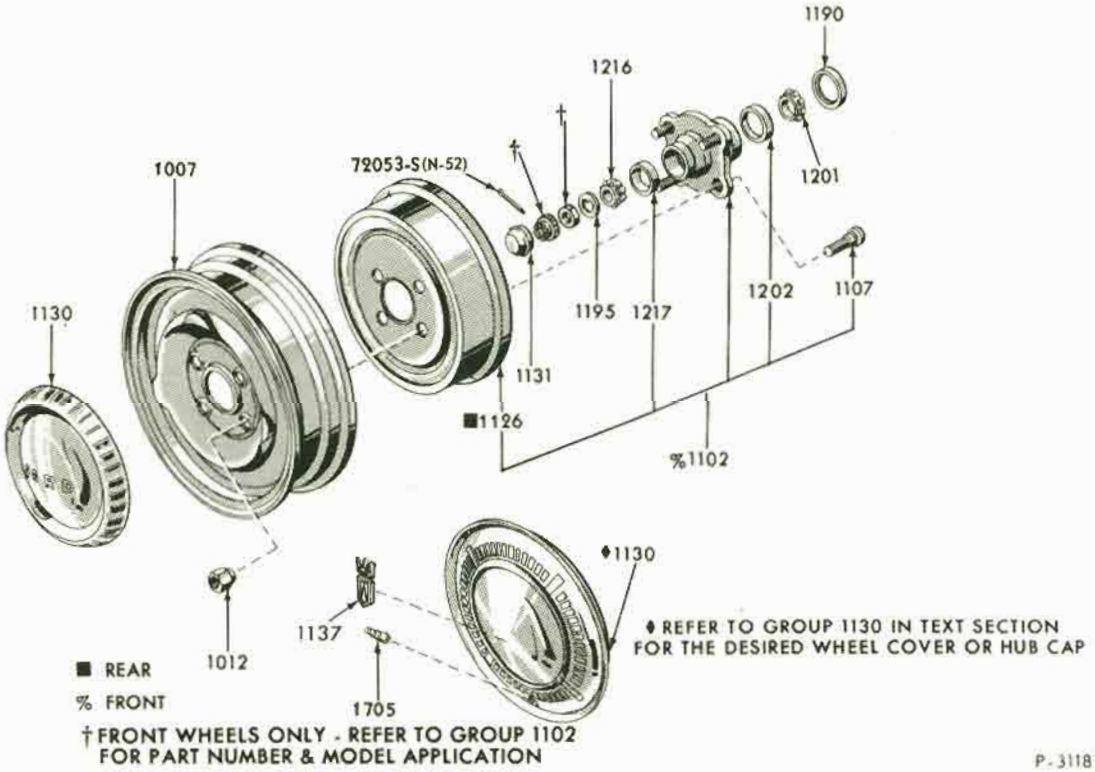

FRONT & REAR WHEEL, HUB, & BEARINGS - TYPICAL
1965/72 FAIRLANE/TORINO, FALCON, MAVERICK, MUSTANG 1971 PINTO

COPYRIGHT © 1975 — FORD MOTOR COMPANY — DEARBORN, MICHIGAN

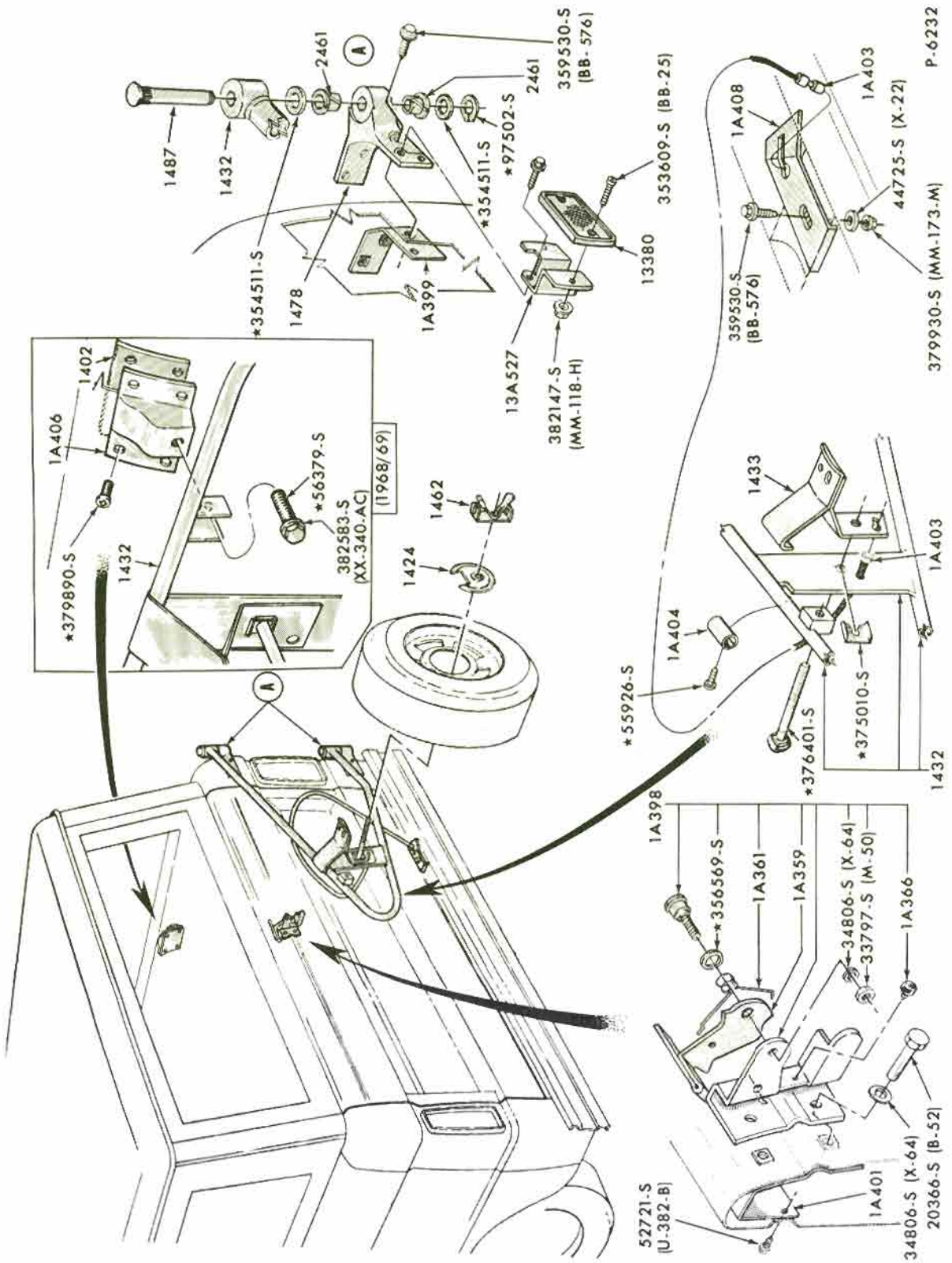

SPARE WHEEL CARRIER (SWING AWAY)
1968/72 BRONCO

P-7799

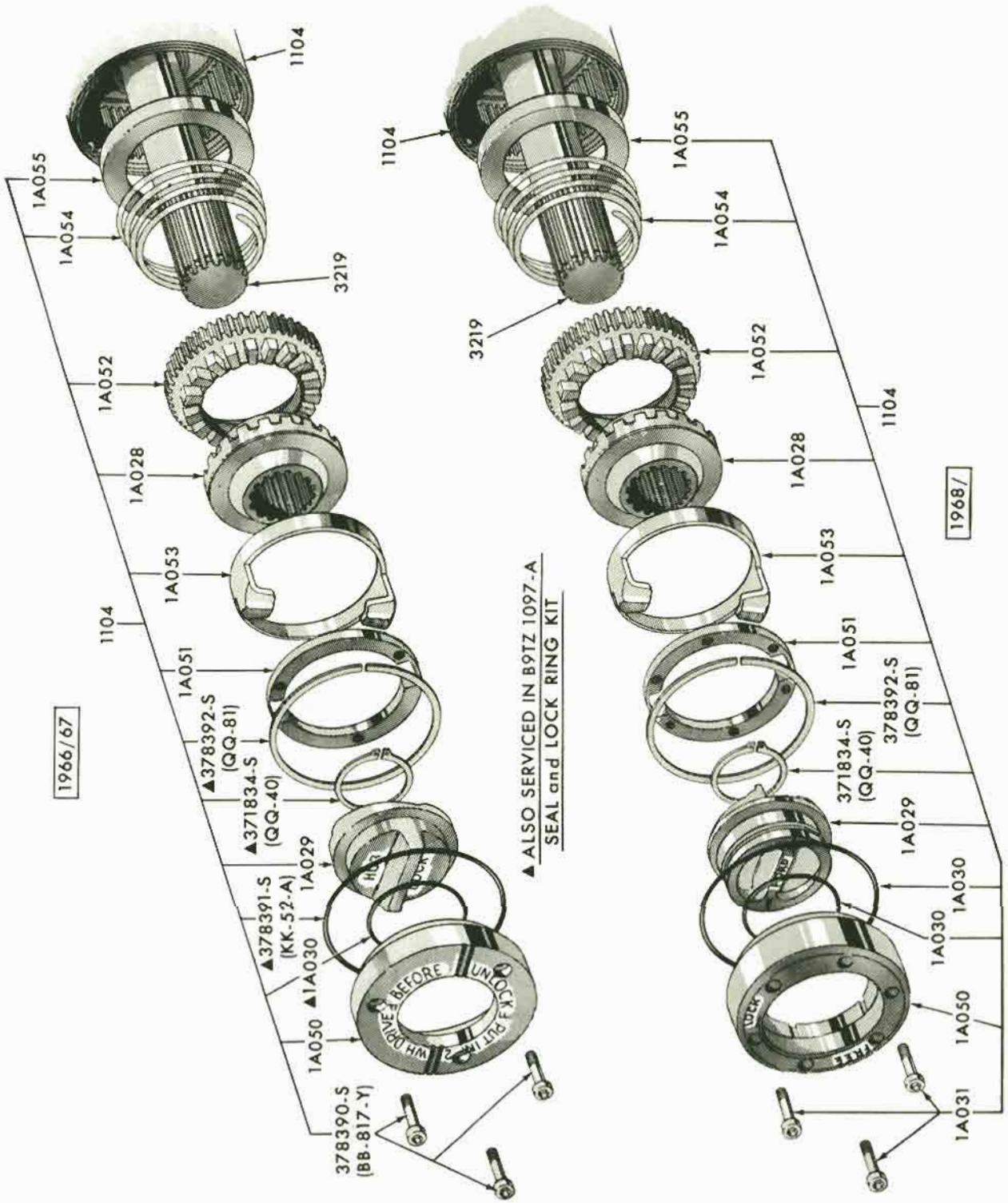

FREE RUNNING HUB - DANA (SPICER)
1966/72 BRONCO

COPYRIGHT © 1975 — FORD MOTOR COMPANY — DEARBORN, MICHIGAN

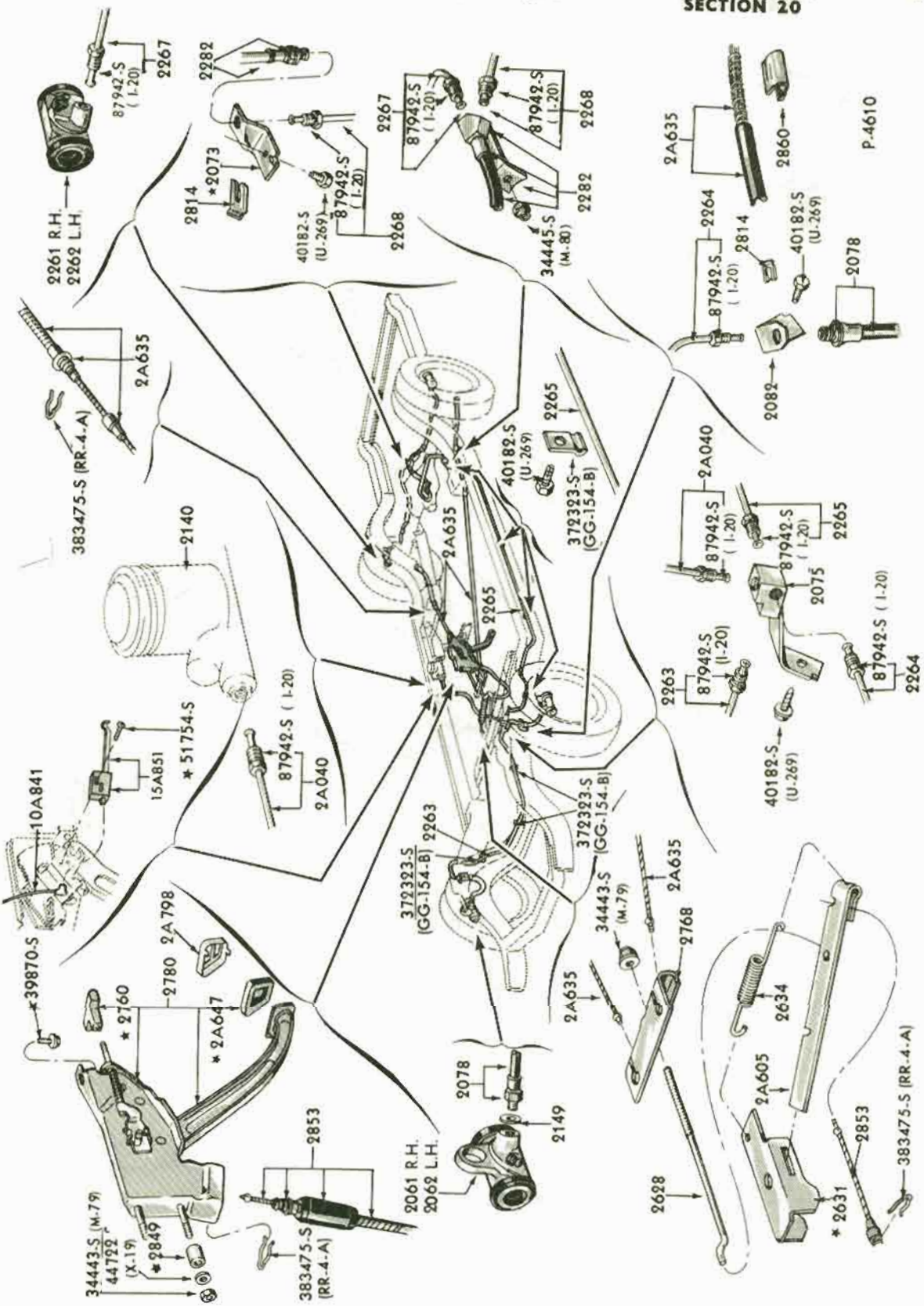

DRUM & PARKING BRAKE SYSTEMS
1965/66 FORD

COPYRIGHT © 1975 — FORD MOTOR COMPANY — DEARBORN, MICHIGAN

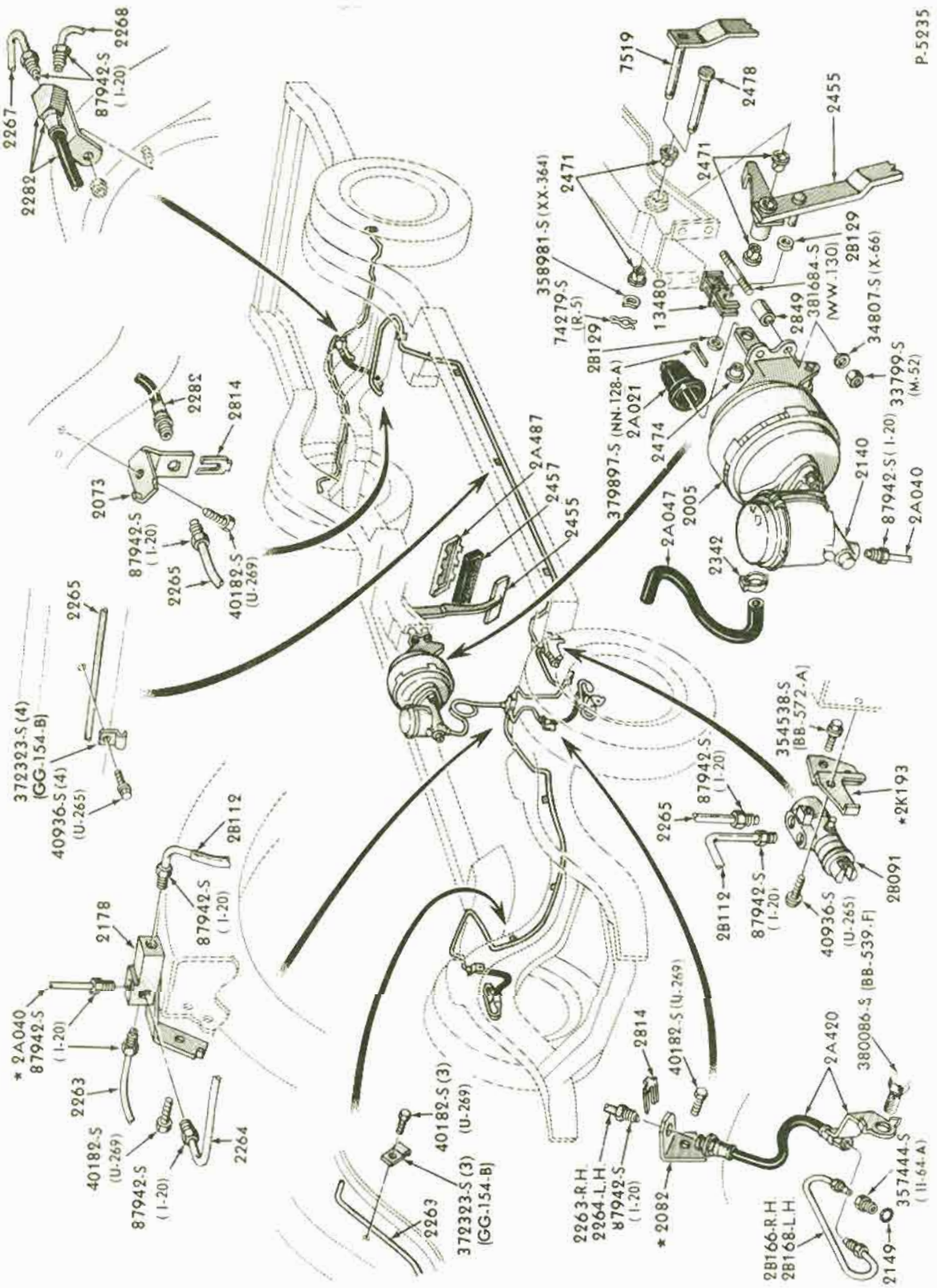
P-5235
2267
2282
87942-S (1-20)
2268
2814
2073
87942-S (1-20)
2265
40182-S (U-269)
2A487
2457
2455
2265
372323-S (4) (GG-154-B)
40936-S (4) (U-265)
2178
87942-S (1-20)
2B112
* 2A040
87942-S (1-20)
2263
40182-S (U-269)
87942-S (1-20)
2264
40182-S (3) (U-269)
372323-S (3) (GG-154-B)
2263
2263-R.H.
2264-L.H.
87942-S (1-20)
2814
40182-S (U-269)
* 2082
2A420
380086-S (BB-539-F)
2B166-R.H.
2B168-L.H.
357444-S (11-64-A)
2149
7519
2478
2455
2471
2471
358981-S (XX-364)
74279-S (R-5)
2B129
13480
2849
381684-S (WW-130)
2B129
34807-S (X-66)
379897-S (NN-128-A)
2A021
2474
2A047
2005
2342
2140
87942-S (1-20)
2A040
33799-S (M-52)
354538-S (BB-572-A)
87942-S (1-20)
2265
2B112
87942-S (1-20)
40936-S (U-265)
2B091
* 2K193

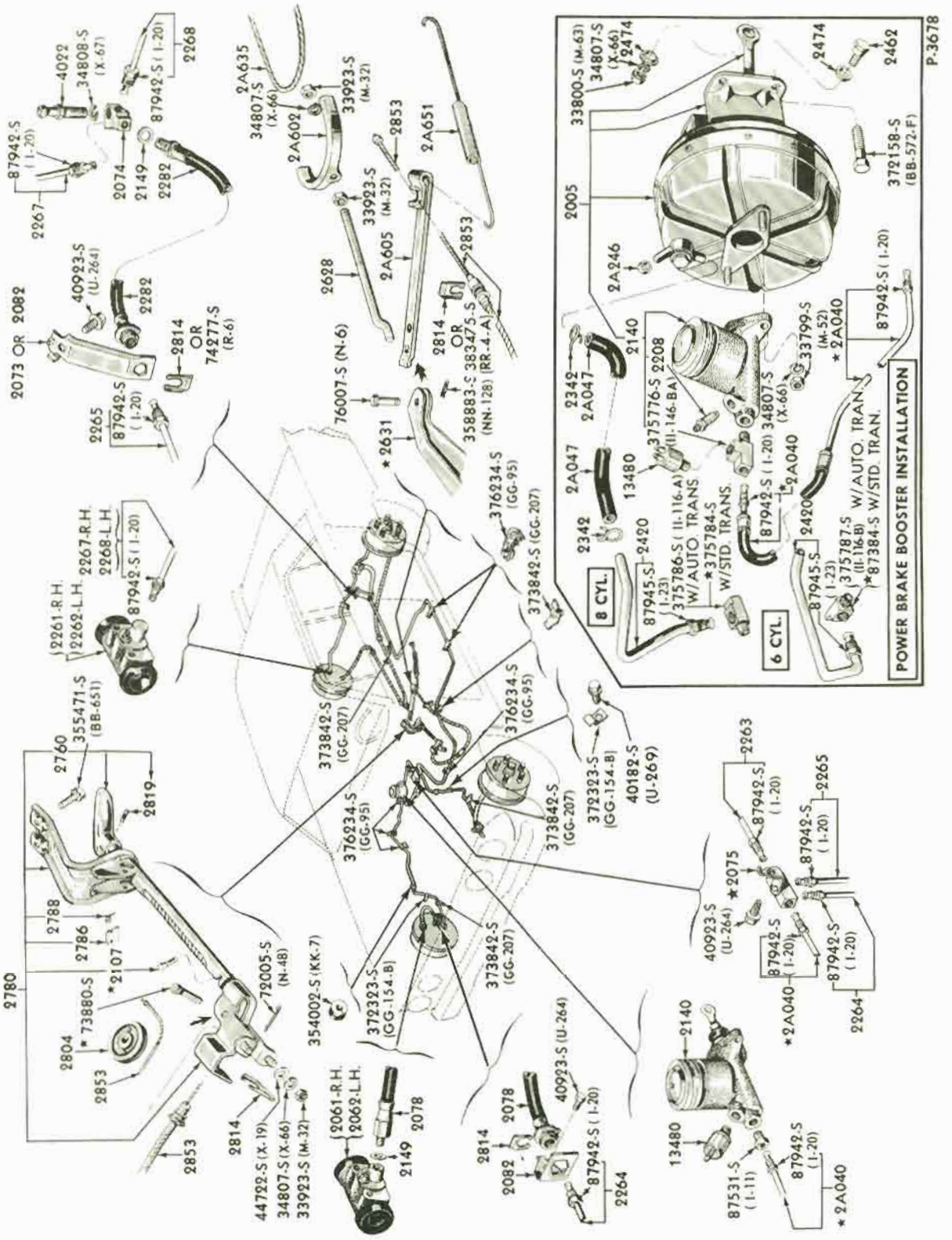

DRUM & PARKING BRAKE SYSTEMS
1965 FAIRLANE

COPYRIGHT © 1975— FORD MOTOR COMPANY —DEARBORN, MICHIGAN

FORD CAR PARTS

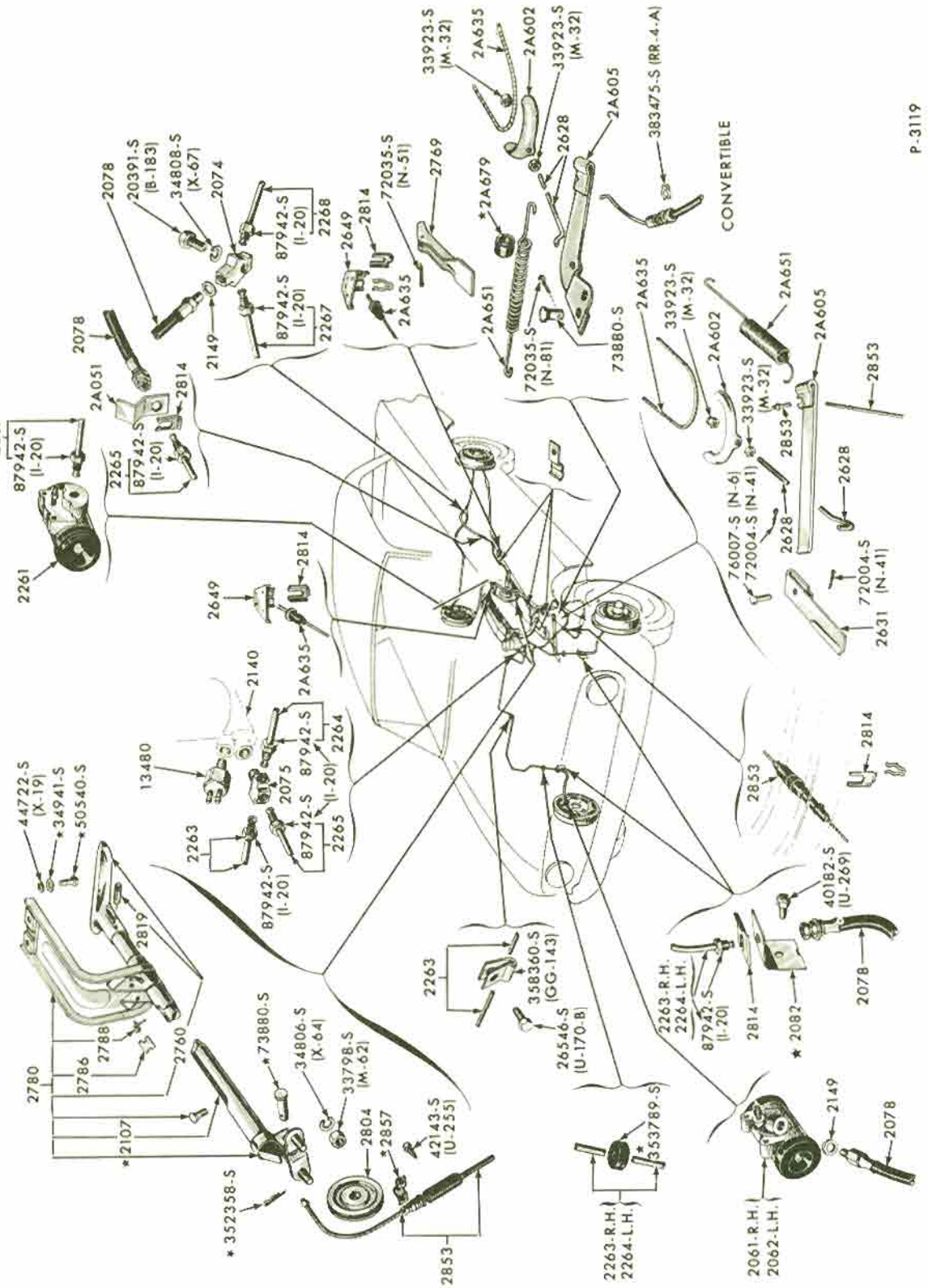

DRUM & PARKING BRAKE SYSTEMS
1965 FALCON

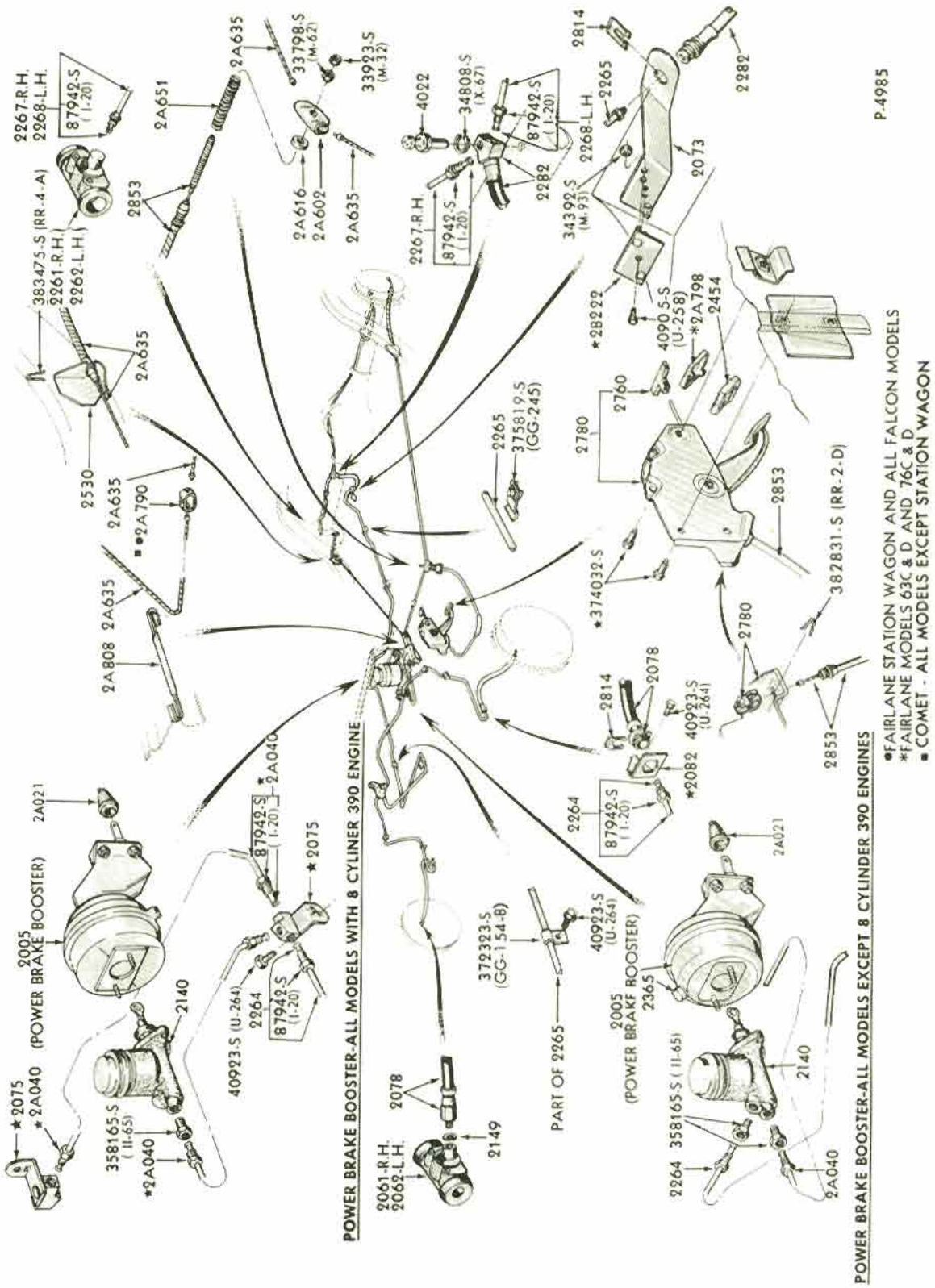

DRUM & PARKING BRAKE SYSTEMS
1966 FAIRLANE, FALCON

COPYRIGHT © 1975 — FORD MOTOR COMPANY — DEARBORN, MICHIGAN

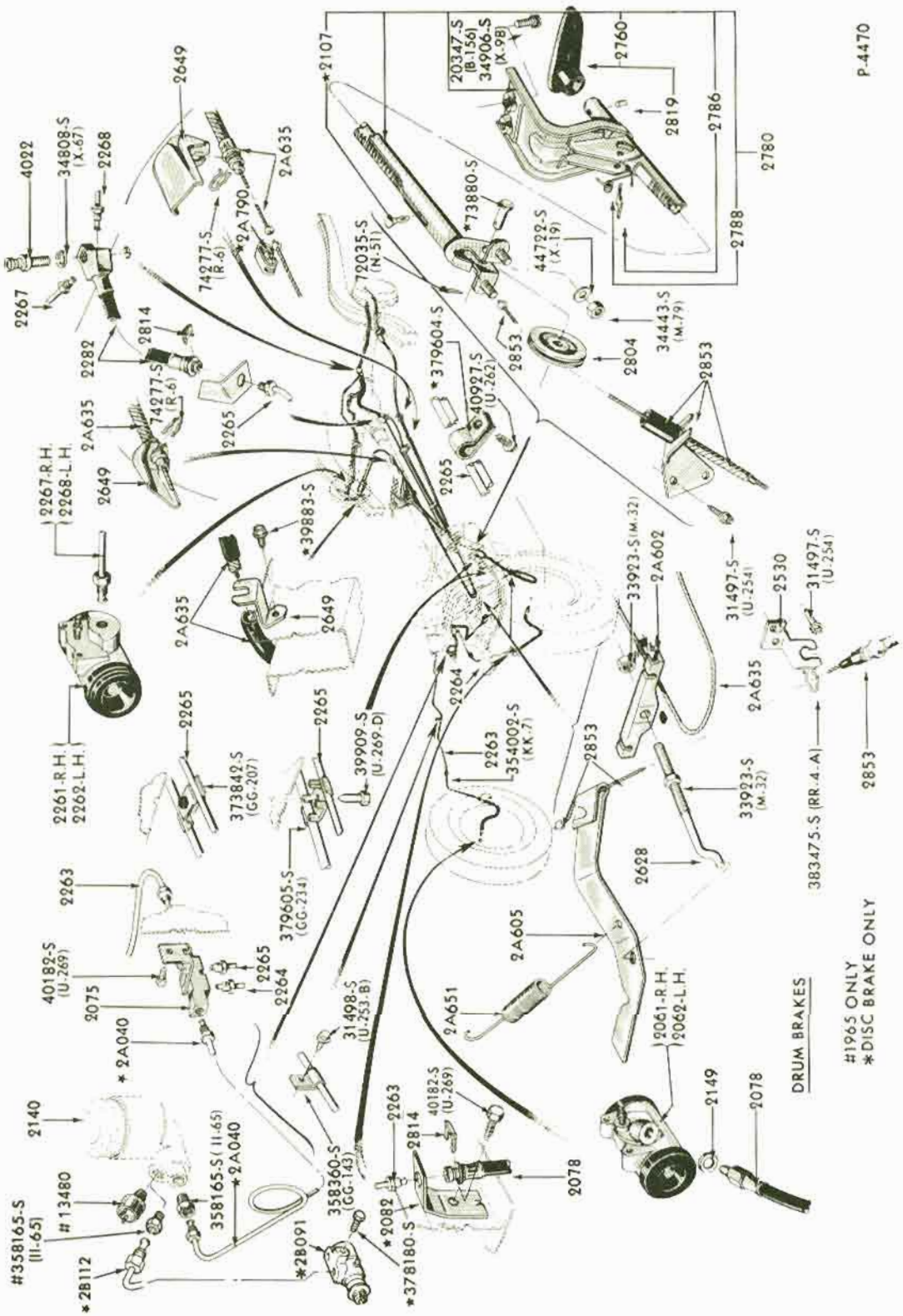
P-4470
DRUM BRAKES
#1965 ONLY
*DISC BRAKE ONLY

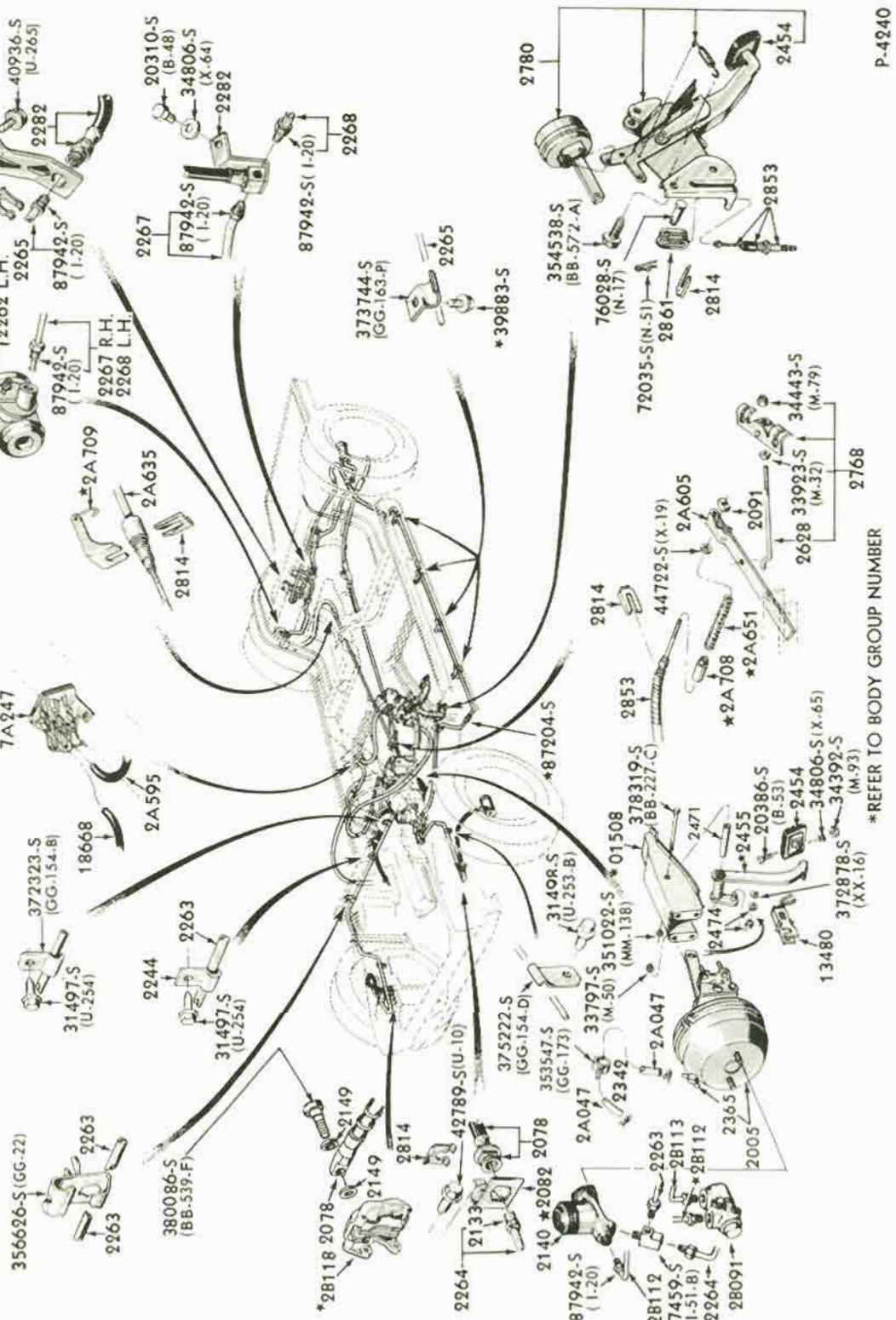

DISC, DRUM & PARKING BRAKE SYSTEMS
1965/66 THUNDERBIRD

COPYRIGHT © 1975 — FORD MOTOR COMPANY — DEARBORN, MICHIGAN

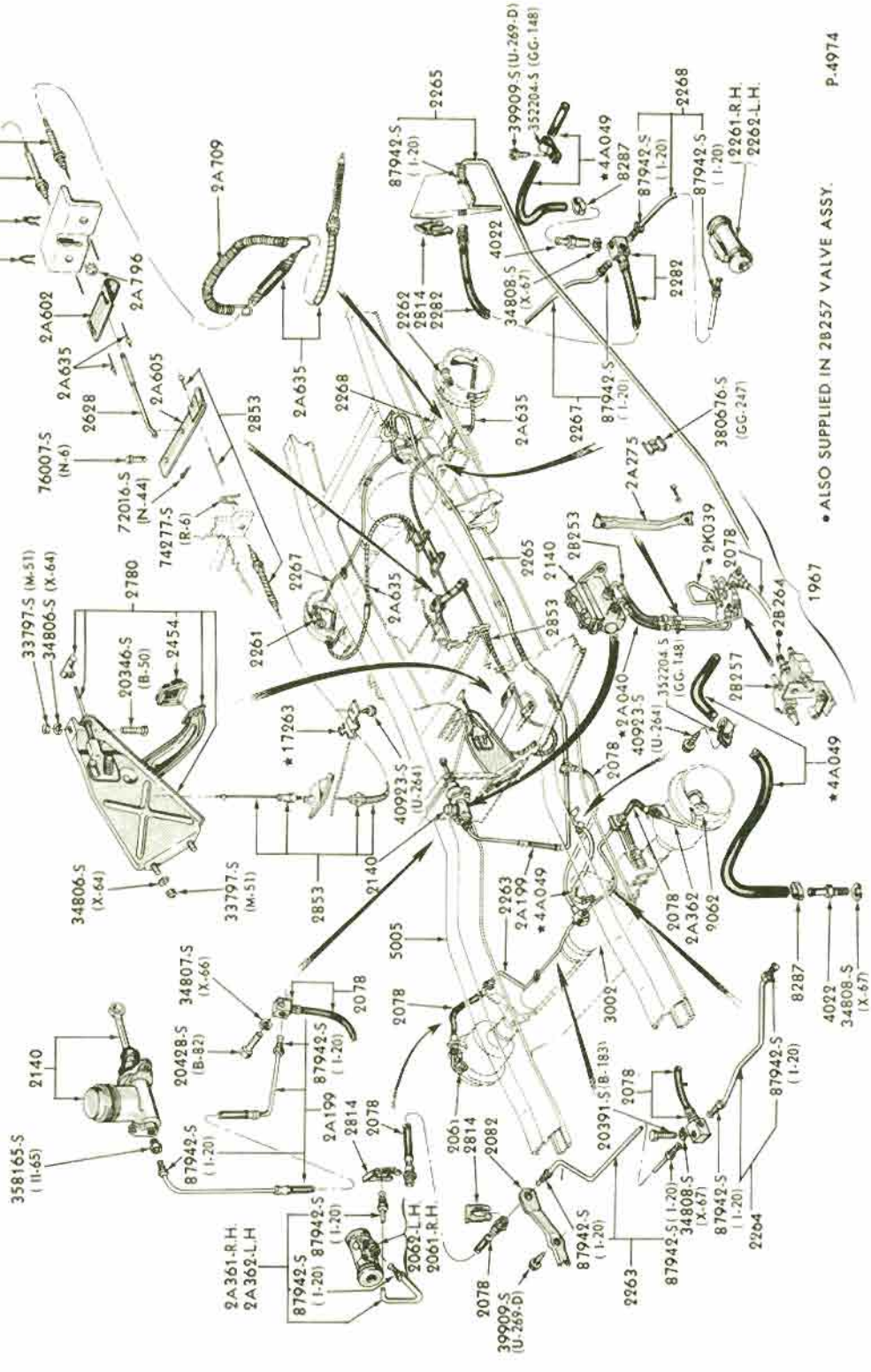

DRUM & PARKING BRAKE SYSTEMS
FRONT & REAR AXLE VENTILATION SYSTEMS
1966/70 BRONCO

INDEX

TITLE	SECTION	PAGE	ILLUS. NO.
1966			
U (BRONCO)			
FRONT AXLE	30	7	P-5312
FRONT SUSPENSION - air spring installation	30	12	P-10676
- spindles	30	7	P-5312
- springs, arms, shock absorbers	30	6	P-4938
STEERING			
Manual steering system			
Steering gear details	36.1	6	P-9981
Steering linkage	30	6	P-4938
Steering column - manual transmission - column shift	35	7	P-4962
Steering wheel & horn ring	138	3	P-4953
X (FALCON)			
FRONT SUSPENSION - arms, shock absorbers, spindles, springs, stabilizer	30	3	P-4945
STEERING			
Manual steering system			
Steering gear details	36.1	6	P-9859
Steering linkage	32	1	P-3669
Power steering system	36	3	P-4986
Control valve details	36.2	5	P-7454
Cylinder details	36.2	6	P-4180
Pump details	36.2	2	P-4574
Steering gear details	36.1	6	P-9859
Steering linkage	36	3	P-4986
Steering column - automatic transmission - column shift	A72	4	P-5001
- floor shift	35	3	P-5138
- manual transmission - column shift	72	5	P-5000
- floor shift	35	3	P-5138
Steering wheel & horn ring	138	3	P-5145
1967			
A (FORD)			
FRONT SUSPENSION - arms, shock absorbers, spindles, springs, stabilizer	30	1	P-4545
STEERING			
Manual steering system			
Steering gear details	36.1	1	P-4607
Steering linkage - 6 cyl.	36	8	P-5616
- 8 cyl.	36	9	P-5617
Power steering system - 6 cyl.	36	8	P-5616
- 8 cyl.	36	9	P-5617
Pump details	36.2	3	P-5615
Steering gear details - Ford type	36.1	2	P-4577
- Saginaw type	36.1	3	P-4723
Steering linkage - 6 cyl.	36	8	P-5616
- 8 cyl.	36	9	P-5617
Steering column - automatic transmission - column shift	A72	8	P-5497
- floor shift	35	1	P-5495
- manual transmission - column shift	72	7	P-5496
- floor shift	35	1	P-5495
Steering wheel & horn ring - except wood grain - 2 spoke	138	4	P-5744
- wood grain - 3 spoke	138	6	P-5747

INDEX

TITLE	SECTION	PAGE	ILLUS. NO.
1966			
B (FAIRLANE)			
FRONT SUSPENSION - arms, shock absorbers, spindles, springs, stabilizer	30	3	P-4945
STEERING			
Manual steering system			
Steering gear details	36.1	6	P-9859
Steering linkage	32	1	P-3669
Power steering system	36	3	P-4986
Control valve details	36.2	5	P-7454
Cylinder details	36.2	6	P-4180
Pump details	36.2	2	P-4574
Steering gear details	36.1	6	P-9859
Steering linkage	36	3	P-4986
Steering column - automatic transmission - column shift	A72	4	P-5001
- floor shift	35	3	P-5138
- manual transmission - column shift	72	5	P-5000
- floor shift	35	3	P-5138
Steering wheel & horn ring - wood grain - 3 spoke	138	1	P-4955
- exc. wood grain - 2 spoke	138	3	P-5145
F (MUSTANG)			
FRONT SUSPENSION - arms, shock absorbers, spindles, springs	30	3	P-4945
STEERING			
Manual steering system			
Steering gear details	36.1	6	P-9859
Steering linkage - 6 cyl.	32	2	P-3121
- 8 cyl.	32	3	P-4483
Power steering system - 6 cyl.	36	5	P-4606
- 8 cyl.	36	6	P-4605
Control valve details - 6 cyl.	36.2	5	P-7454
- 8 cyl.	36.2	4	P-7453
Cylinder details	36.2	6	P-4180
Pump details	36.2	2	P-4574
Steering gear details	36.1	6	P-9859
Steering linkage - 6 cyl.	32	2	P-3121
- 8 cyl.	32	3	P-4483
Steering column	35	4	P-6366
Steering wheel & horn ring - except GT	138	2	P-4514
- GT	138	1	P-4955
S (THUNDERBIRD)			
FRONT SUSPENSION - arms, shock absorbers, spindles, springs, stabilizer	30	5	P-4400
STEERING			
Power steering system	36	7	P-4578
Pump details	36.2	2	P-4574
Steering gear details	36.1	2	P-4577
Steering linkage	36	7	P-4578
Steering column - automatic trans. - column shift - fixed	A72	5	P-3284
- movable	A72	6	P-4224
Steering wheel & horn ring	138	2	P-4544

COPYRIGHT © 1975 — FORD MOTOR COMPANY — DEARBORN, MICHIGAN

INDEX

1965

TITLE	SECTION	PAGE	ILLUS. NO.
F (MUSTANG) - continued			
Control valve details - 6 cyl.	36.2	5	P-7454
- 8 cyl.	36.2	4	P-7453
Cylinder details	36.2	6	P-4180
S (THUNDERBIRD)			
FRONT SUSPENSION - arms, shock absorbers, spindles, springs, stabilizer	30	5	P-4400
STEERING			
Power steering system	36	7	P-4578
Pump details - Ford type	36.2	2	P-4574
- Eaton type	36.2	1	P-9579
Steering gear details	36.1	2	P-4577
Steering linkage	36	7	P-4578
Steering column - automatic trans. - column shift - fixed	A72	5	P-3284
- movable	A72	6	P-4224
Steering wheel & horn ring	138	2	P-4544
X (FALCON)			
FRONT SUSPENSION - arms, spindles, springs	30	4	P-3120
- shock absorbers	180	1	P-3129
STEERING			
Manual steering system			
Steering gear details	36.1	4	P-3122
Steering linkage - 6 cyl.	32	2	P-3121
- 8 cyl.	32	3	P-4483
Power steering system - 6 cyl.	36	5	P-4606
- 8 cyl.	36	6	P-4605
Control valve details - 6 cyl.	36.2	5	P-7454
- 8 cyl.	36.2	4	P-7453
Cylinder details	36.2	6	P-4180
Pump details - Ford type	36.2	2	P-4574
- Eaton type	36.2	1	P-9579
Steering gear details	36.1	4	P-3122
Steering linkage - 6 cyl.	36	5	P-4606
- 8 cyl.	36	6	P-4605
Steering column - automatic transmission - column shift	A72	7	P-4601
- floor shift	35	4	P-6366
- manual transmission - column shift	72	4	P-4600
- floor shift	35	4	P-6366
Steering wheel & horn ring	138	1	P-4864

1966

TITLE	SECTION	PAGE	ILLUS. NO.
A (FORD)			
FRONT SUSPENSION - arms, shock absorbers, spindles, springs, stabilizer	30	1	P-4545
STEERING			
Manual steering system			
Steering gear details	36.1	1	P-4607
Steering linkage	36	1	P-4579
Power steering system	36	1	P-4579
Pump details	36.2	2	P-4574
Steering gear details - Ford type	36.1	2	P-4577
- Saginaw type	36.1	3	P-4723
Steering linkage	36	1	P-4579
Steering column - automatic trans. - column shift - fixed	A72	1	P-4930
- movable	A72	2	P-4931
- floor shift	35	1	P-5495
- manual trans. - column shift	72	2	P-4794
- floor shift	35	1	P-5495
Steering wheel & horn ring	138	1	P-4864

INDEX

THIS INDEX SECTION INCLUDES THE FOLLOWING MAJOR GROUPS:
FRONT AXLE FRONT SUSPENSION STEERING

1965

TITLE	SECTION	PAGE	ILLUS. NO.
A (FORD)			
FRONT SUSPENSION - arms, shock absorbers, spindles, springs, stabilizer	30	1	P-4545
STEERING			
Manual steering system			
Steering gear details	36.1	1	P-4607
Steering linkage	36	1	P-4579
Power steering system	36	1	P-4579
Pump details - Ford type	36.2	2	P-4574
- Eaton type	36.2	1	P-9579
Steering gear details - Ford type	36.1	2	P-4577
- Saginaw type	36.1	3	P-4723
Steering linkage	36	1	P-4579
Steering column - automatic trans. - column shift - fixed	A72	1	P-4930
- movable	A72	2	P-4931
- floor shift	35	1	P-5495
- manual trans. - column shift	72	2	P-4794
- floor shift	35	1	P-5495
Steering wheel & horn ring	138	1	P-4864
B (FAIRLANE)			
FRONT SUSPENSION - arms, shock absorbers, spindles, springs, stabilizer	30	2	P-3675
STEERING			
Manual steering system			
Steering gear details	35	2	P-3724
Steering linkage	32	1	P-3669
Power steering system	36	2	P-3773
Control valve details	36.2	5	P-7454
Cylinder details	36.2	6	P-4180
Pump details - Ford type	36.2	2	P-4574
- Eaton type	36.2	1	P-9579
Steering gear details	35	2	P-3724
Steering linkage	36	2	P-3773
Steering column - automatic transmission - column shift	A72	3	P-3713
- floor shift	35	2	P-3724
- manual transmission - column shift	72	3	P-3712
- floor shift	35	2	P-3724
Steering wheel & horn ring			
F (MUSTANG)			
FRONT SUSPENSION - arms, spindles, springs	30	4	P-3120
Shock absorbers	180	1	P-3129
STEERING			
Manual steering system			
Steering gear details	36.1	1	P-3122
Steering linkage - 6 cyl.	32	2	P-3121
- 8 cyl.	32	3	P-4483
Power steering system - with Eaton pump	36	4	P-4139
- 6 cyl. - with Ford pump	36	5	P-4606
- 8 cyl. - with Ford pump	36	6	P-4605
Pump details - Ford type	36.2	2	P-4574
- Eaton type	36.2	1	P-9579
Steering gear details	36.1	4	P-3122
Steering linkage - 6 & 8 cyl. - with Eaton pump	36	4	P-4139
- 6 cyl. - with Ford pump	36	5	P-4606
- 8 cyl. - with Ford pump	36	6	P-4605
Steering column	35	4	P-6366
Steering wheel & horn ring - except GT	138	2	P-4514
- GT	138	1	P-4955

COPYRIGHT © 1975 — FORD MOTOR COMPANY — DEARBORN, MICHIGAN

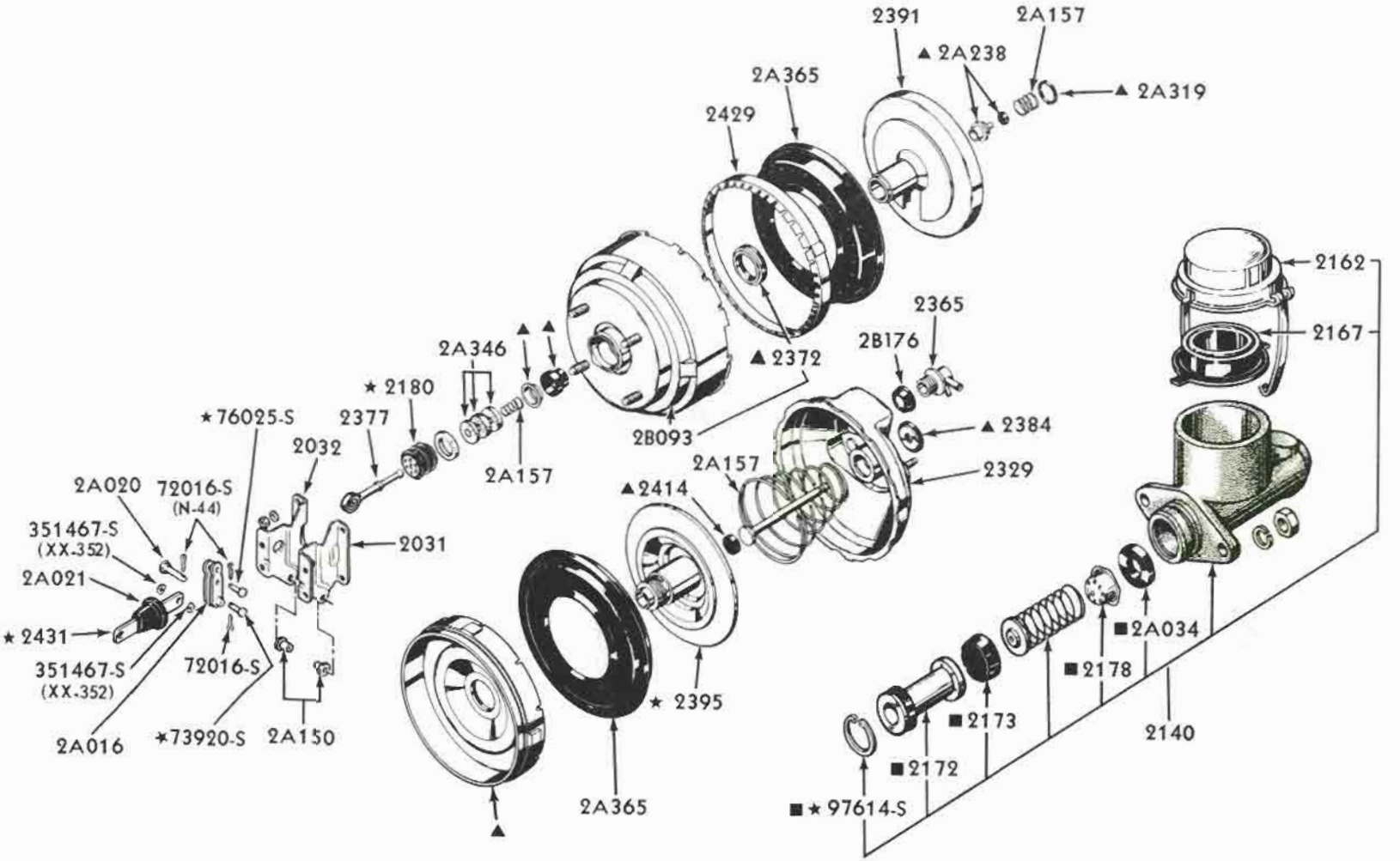

▲ SUPPLIED IN 2005 BOOSTER ASSEMBLY ONLY

■ SUPPLIED IN 2005 BOOSTER ASSEMBLY AND 2004 MASTER CYLINDER REPAIR KIT

P-4892

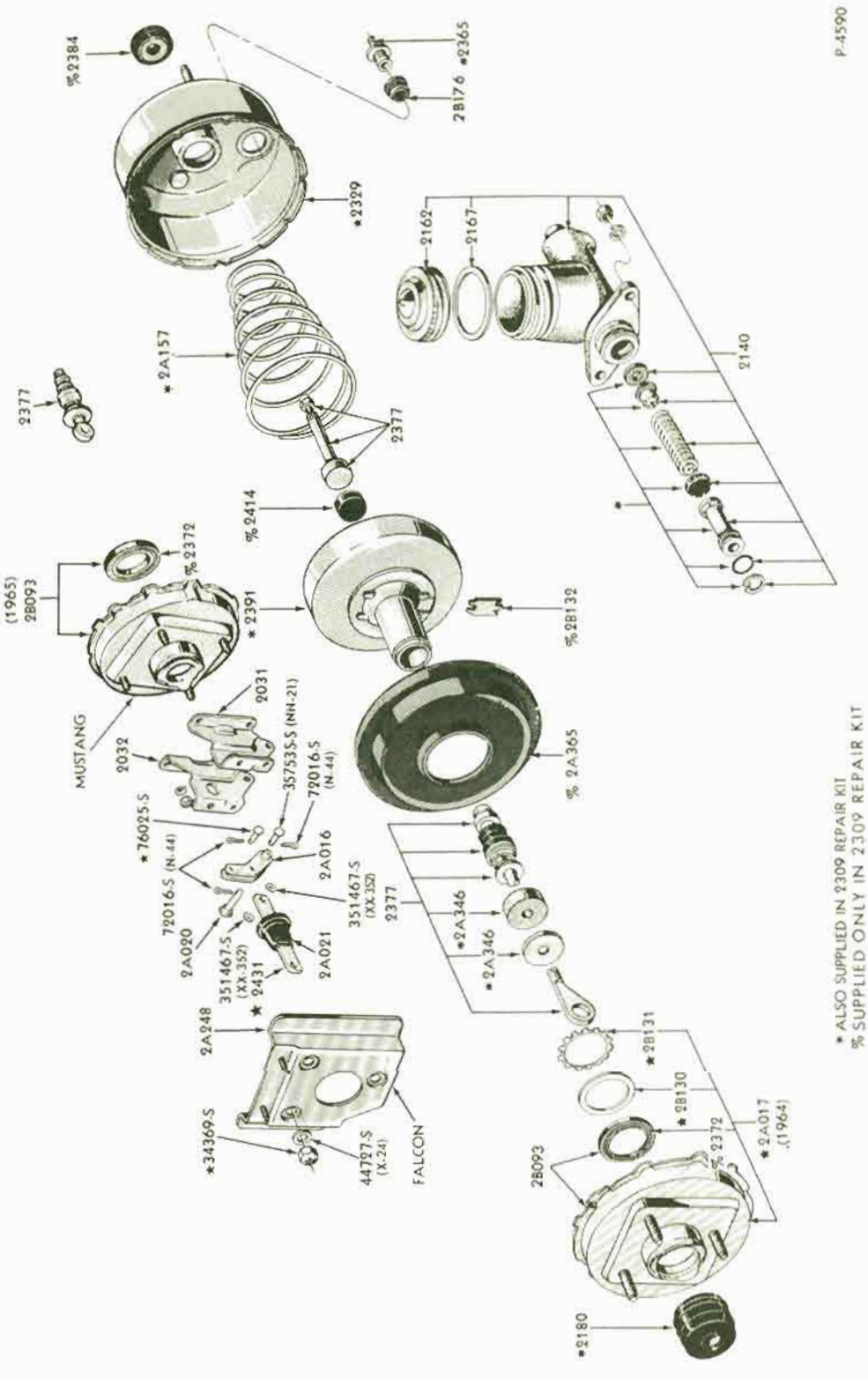

POWER BRAKE BOOSTER DETAILS (BENDIX)

1965/66 MUSTANG 1965/66 FALCON

COPYRIGHT © 1975 — FORD MOTOR COMPANY — DEARBORN, MICHIGAN

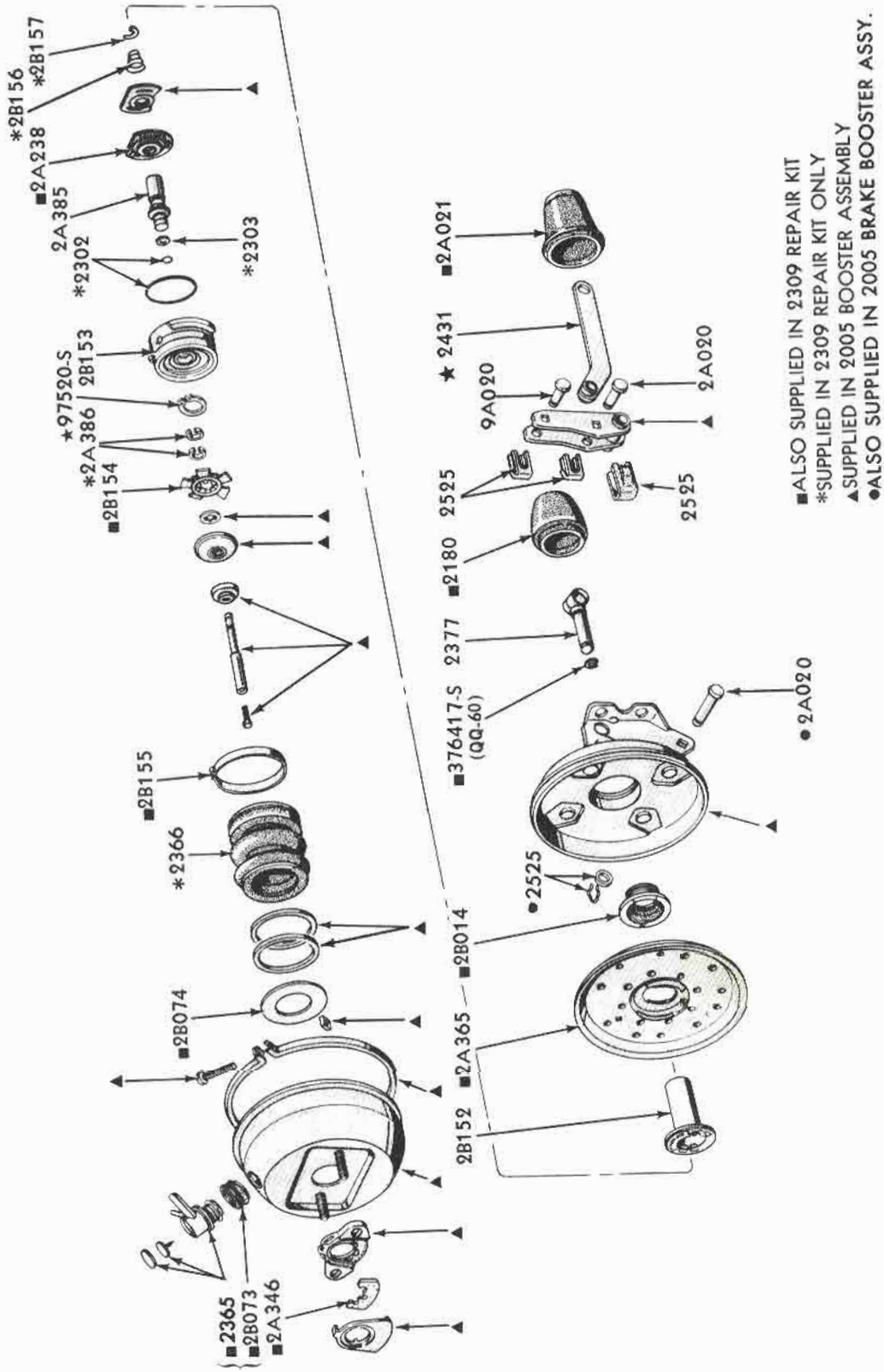

POWER BRAKE BOOSTER DETAILS (MIDLAND - ROSS)
1965/66 FORD & FAIRLANE/TORINO, 1966 FALCON

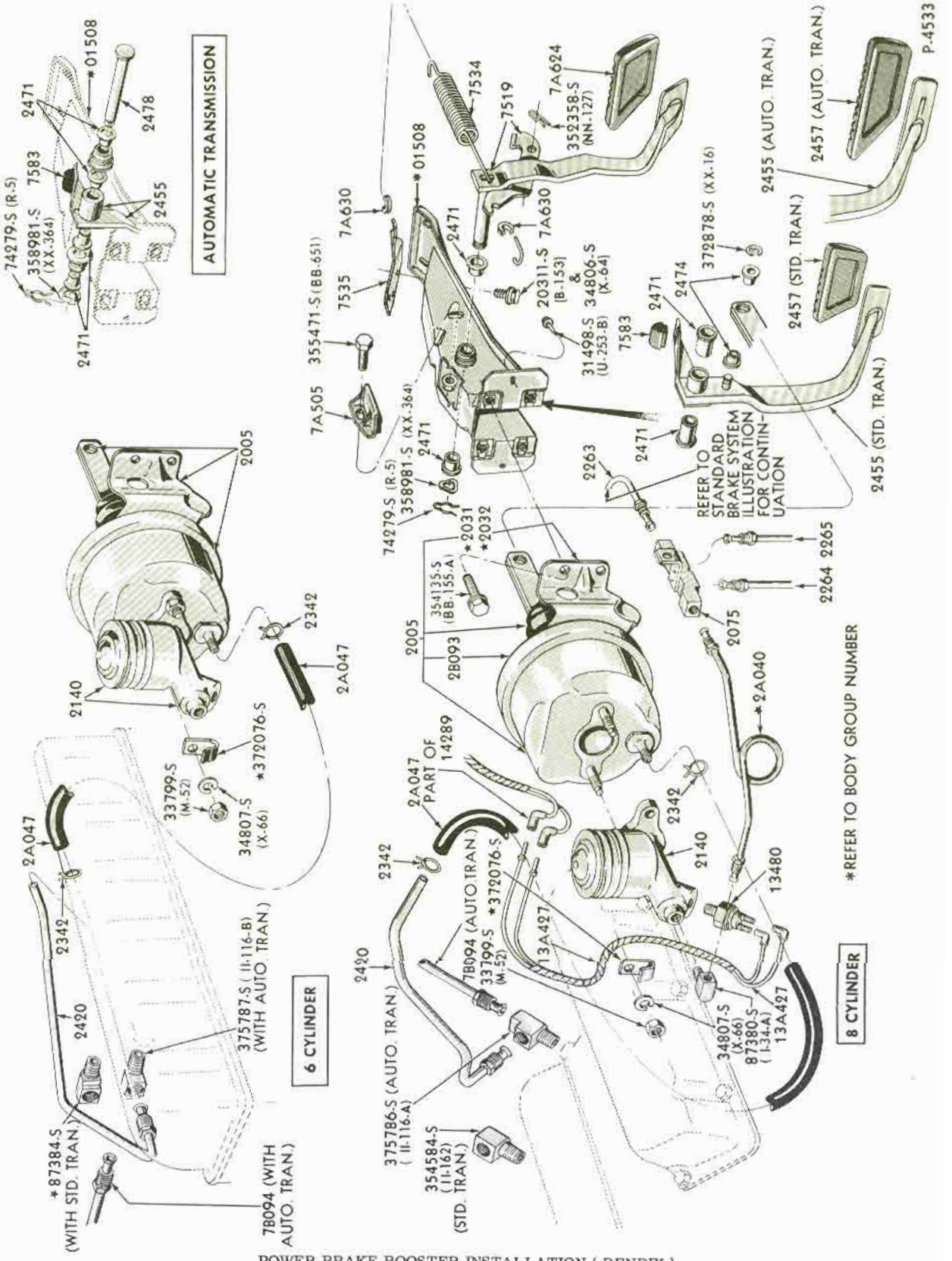

POWER BRAKE BOOSTER INSTALLATION (BENDIX)
1965/66 MUSTANG

COPYRIGHT © 1975 — FORD MOTOR COMPANY — DEARBORN, MICHIGAN

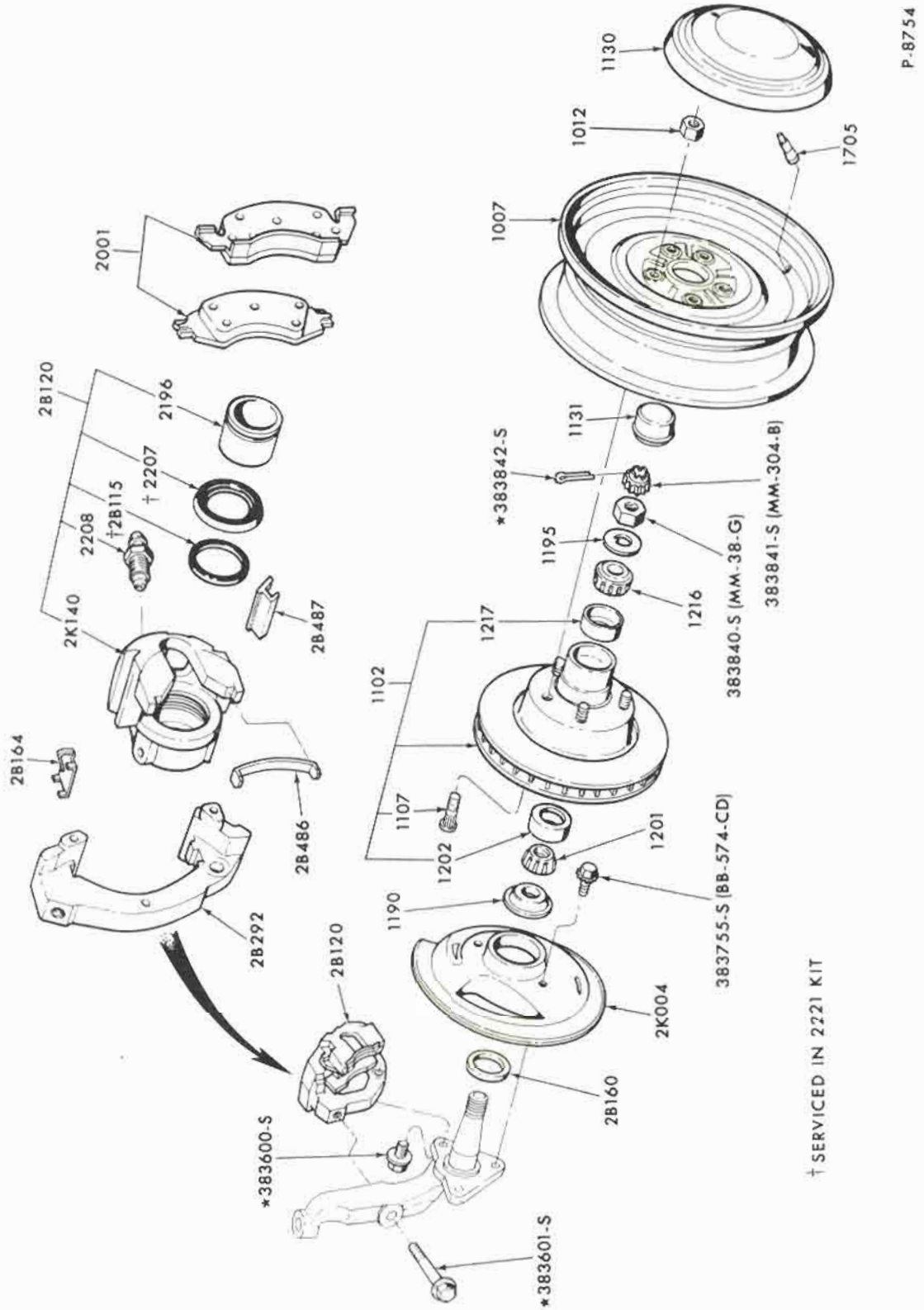

FRONT DISC BRAKE DETAILS
1972 THUNDERBIRD, TORINO

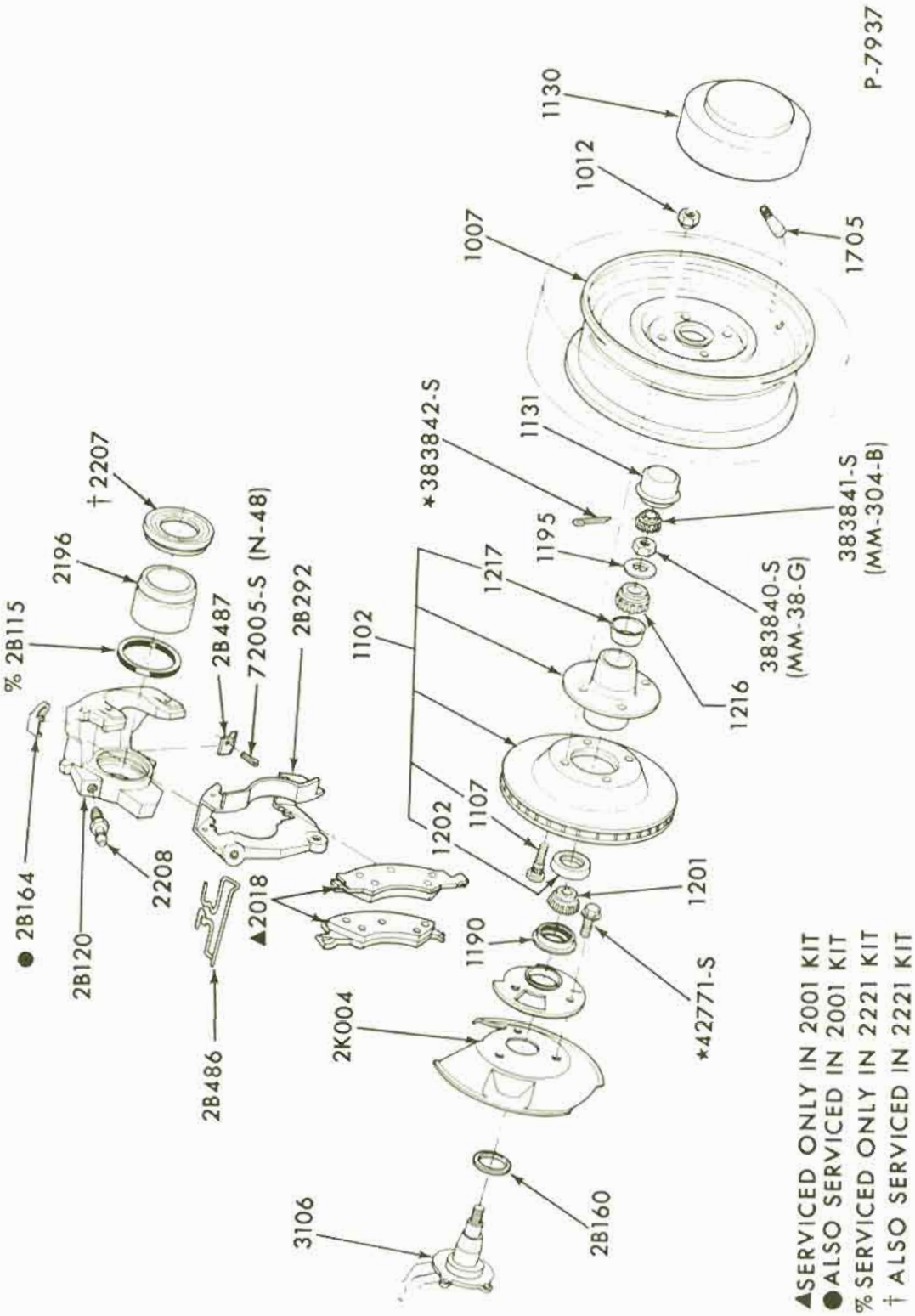

FRONT DISC BRAKE DETAILS
1971/72 PINTO

COPYRIGHT © 1975 — FORD MOTOR COMPANY — DEARBORN, MICHIGAN

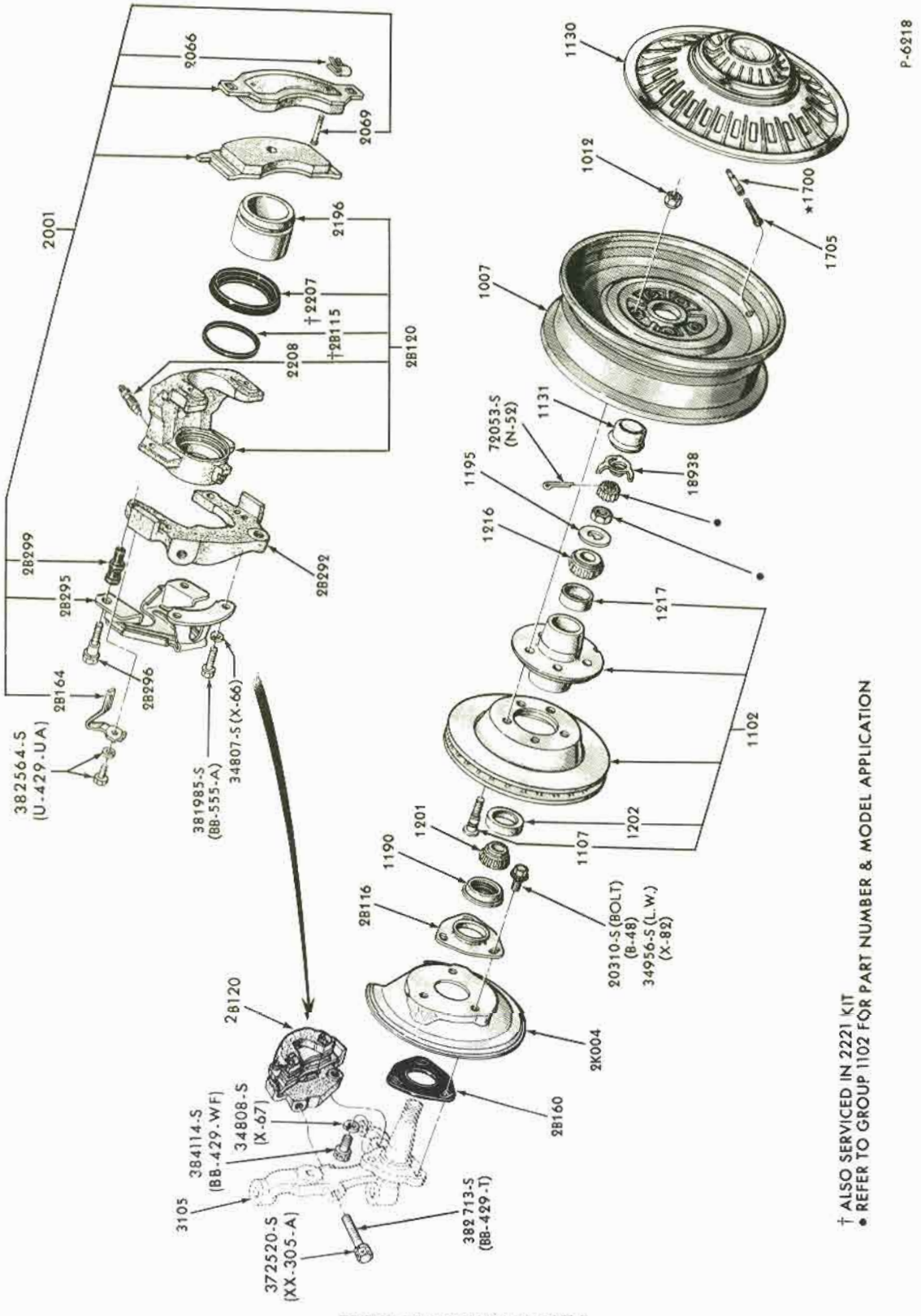

† ALSO SERVICED IN 2221 KIT
• REFER TO GROUP 1102 FOR PART NUMBER & MODEL APPLICATION

FRONT DISC BRAKE DETAILS
1968/71 FAIRLANE/TORINO 1968/72 FALCON & MUSTANG

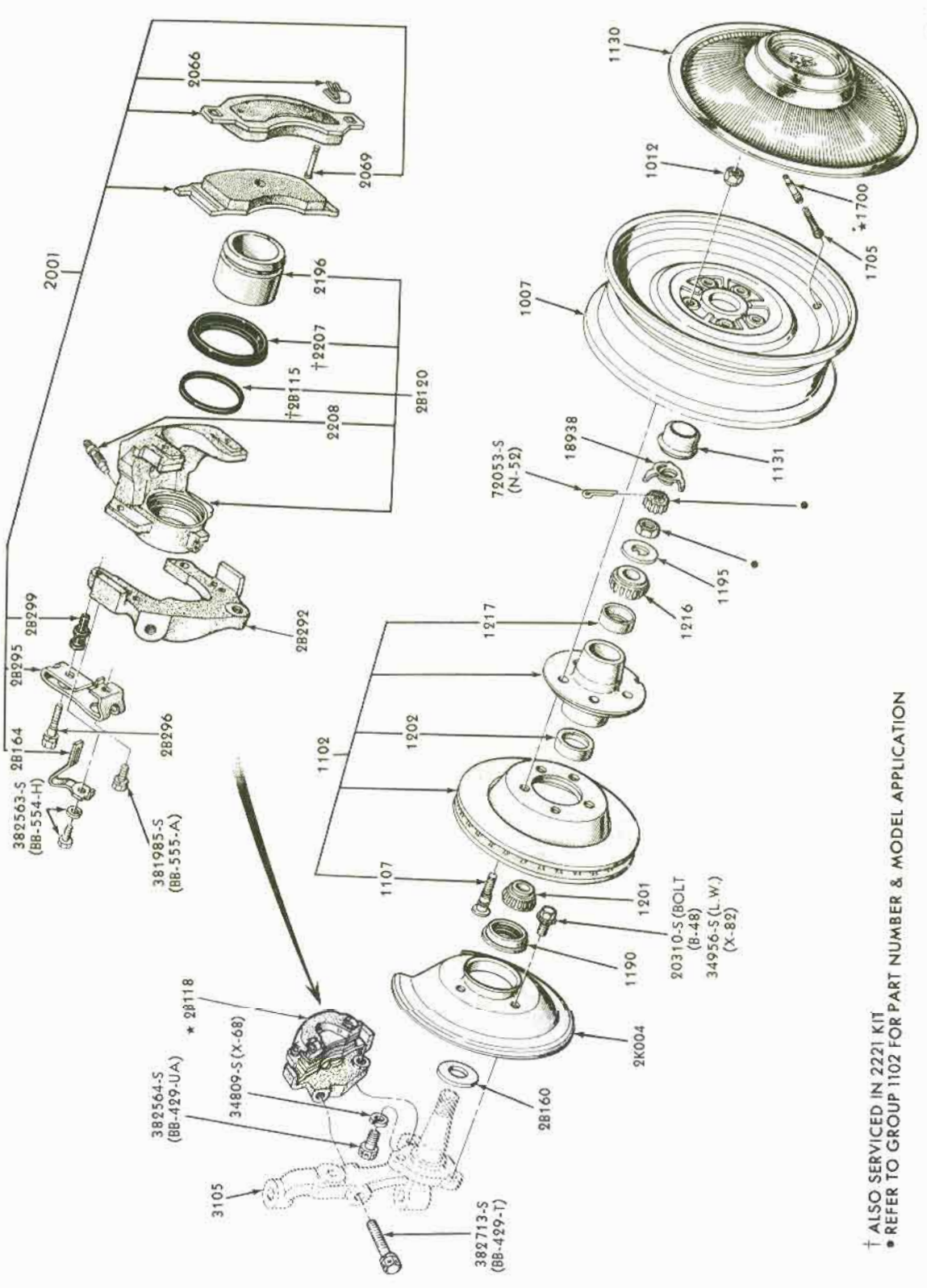

† ALSO SERVICED IN 2221 KIT
• REFER TO GROUP 1102 FOR PART NUMBER & MODEL APPLICATION

FRONT DISC BRAKE DETAILS
1968/72 FORD 1968/71 THUNDERBIRD

COPYRIGHT © 1975 — FORD MOTOR COMPANY — DEARBORN, MICHIGAN

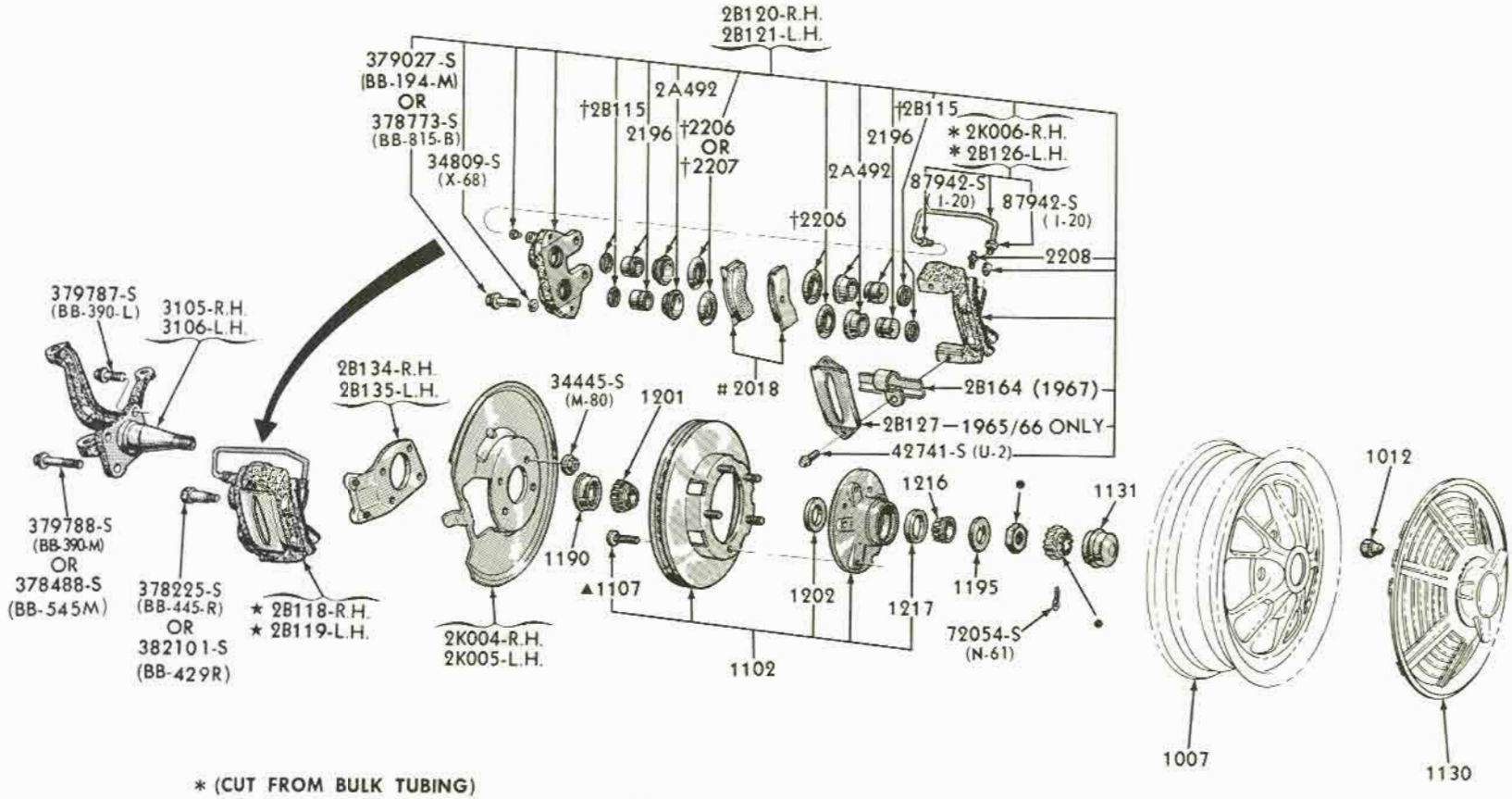

* (CUT FROM BULK TUBING)
▲ IF MORE THAN ONE BOLT HAS TO BE REPLACED IN AN ASSEMBLY-COMPLETE HUB AND DRUM MUST BE REPLACED
† ALSO SERVICED IN 2221 KIT
• REFER TO GROUP 1102 FOR PART NUMBER & MODEL APPLICATION
SERVICED IN 2001 KIT

10-70

P-4604

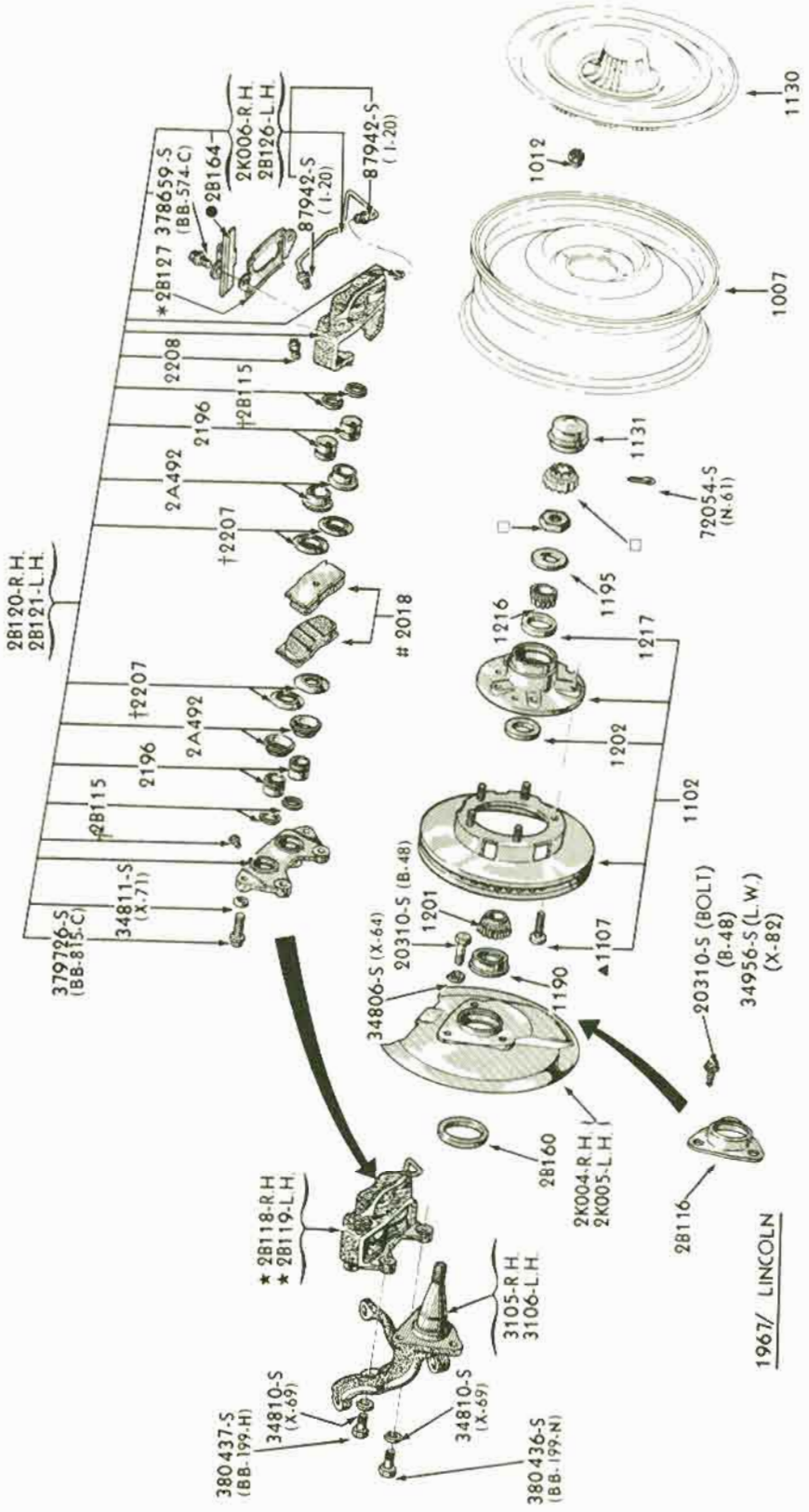

▲ IF MORE THAN ONE BOLT HAS TO BE REPLACED IN AN ASSEMBLY-COMPLETE HUB AND DRUM MUST BE REPLACED
* 1965/66
● 1967
□ REFER TO GROUP 1102 FOR PART NUMBER & MODEL APPLICATION
† ALSO SERVICED IN 2221 KIT
# SERVICED IN 2001 KIT

FRONT DISC BRAKE DETAILS
1965/67 THUNDERBIRD, 1966/67 FORD

COPYRIGHT © 1975 — FORD MOTOR COMPANY — DEARBORN, MICHIGAN

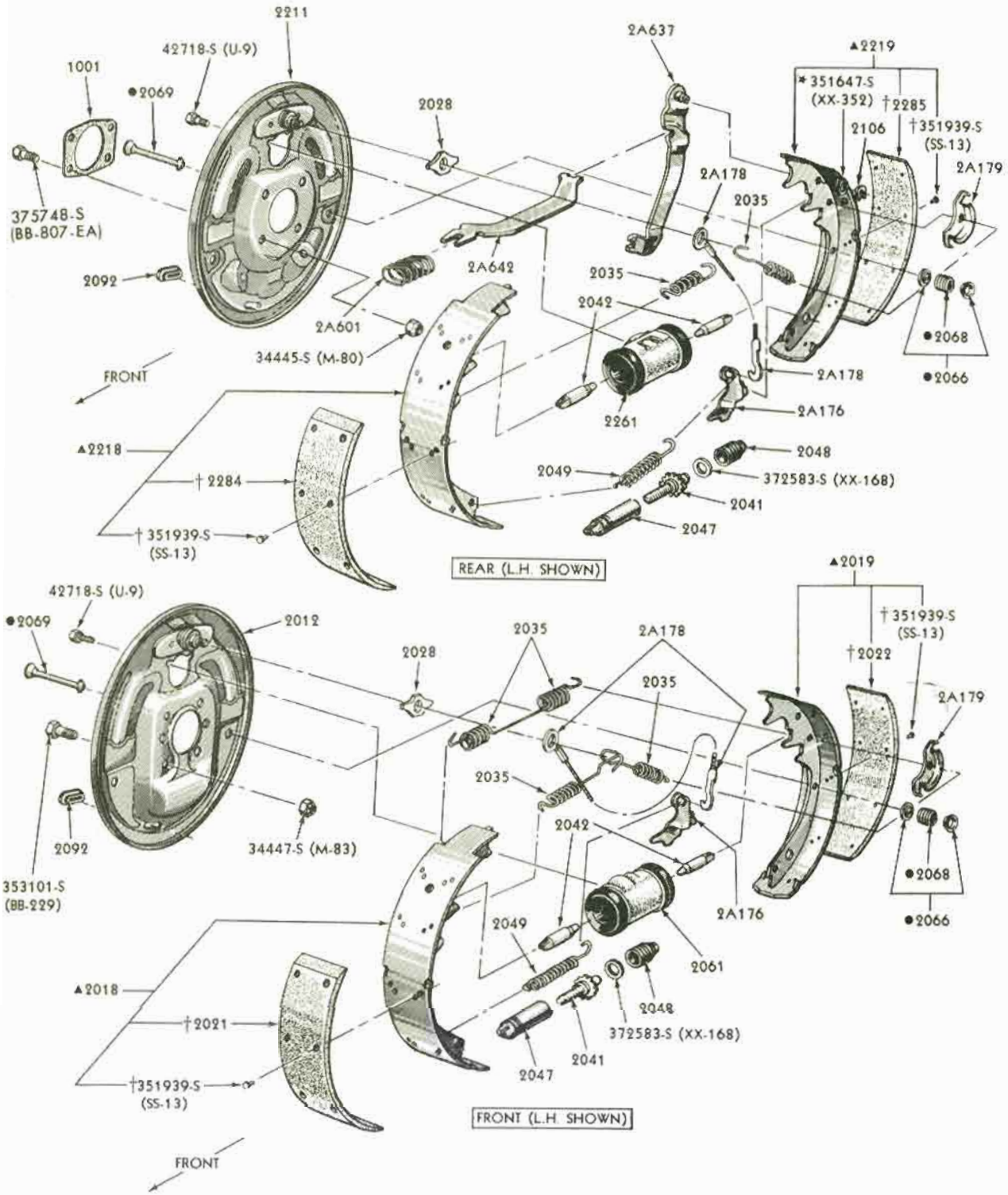

† SERVICED IN 2007 LINING KIT

▲ SERVICED IN 2001 BRAKE SHOE AND LINING KIT

• ALSO SERVICED IN 2A094 BRAKE SHOE HOLD DOWN KIT

P-6602

FRONT & REAR DRUM BRAKES
1966/72 BRONCO

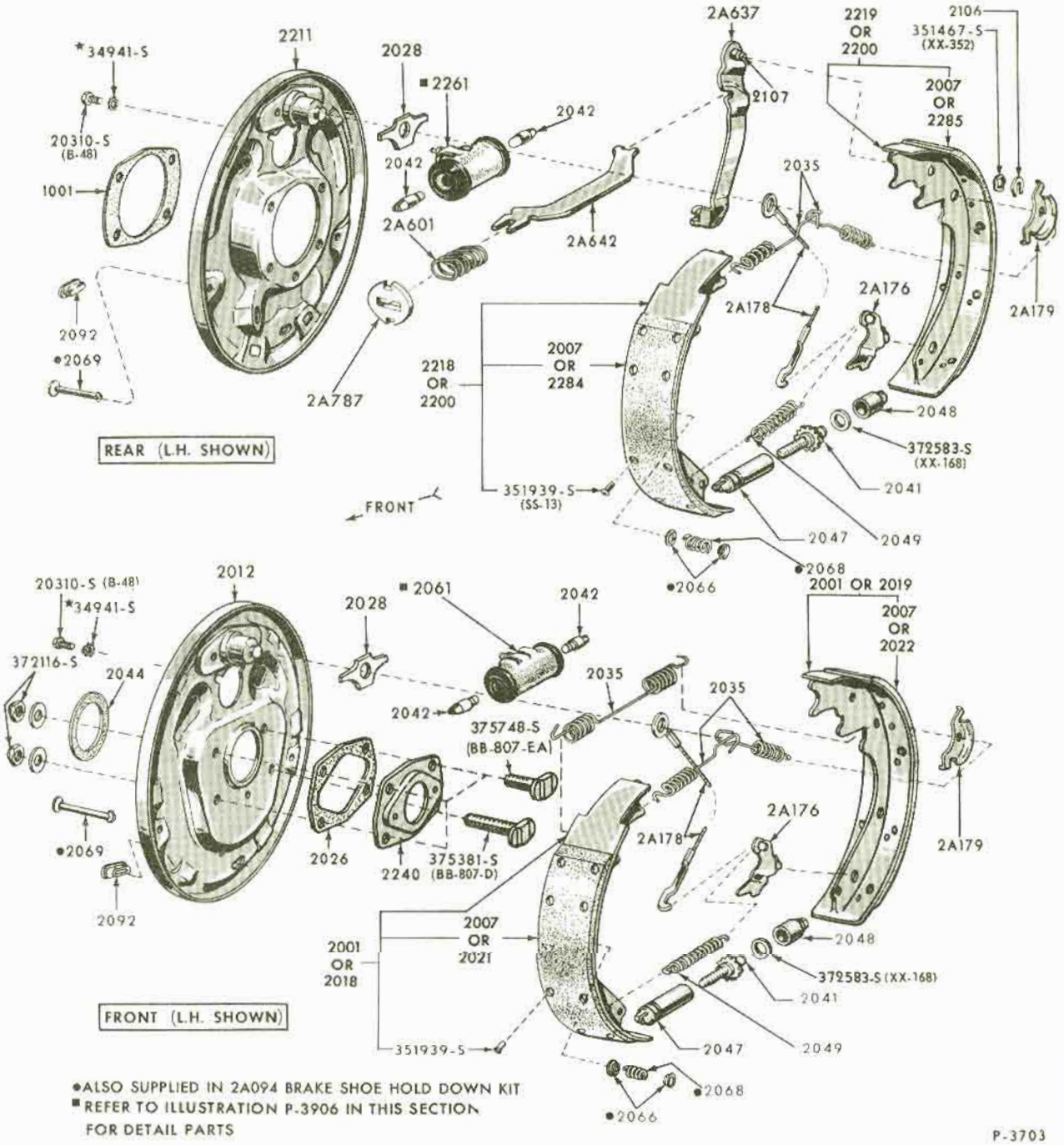

•ALSO SUPPLIED IN 2A094 BRAKE SHOE HOLD DOWN KIT
■REFER TO ILLUSTRATION P-3906 IN THIS SECTION FOR DETAIL PARTS

P-3703

COPYRIGHT © 1975 — FORD MOTOR COMPANY — DEARBORN, MICHIGAN

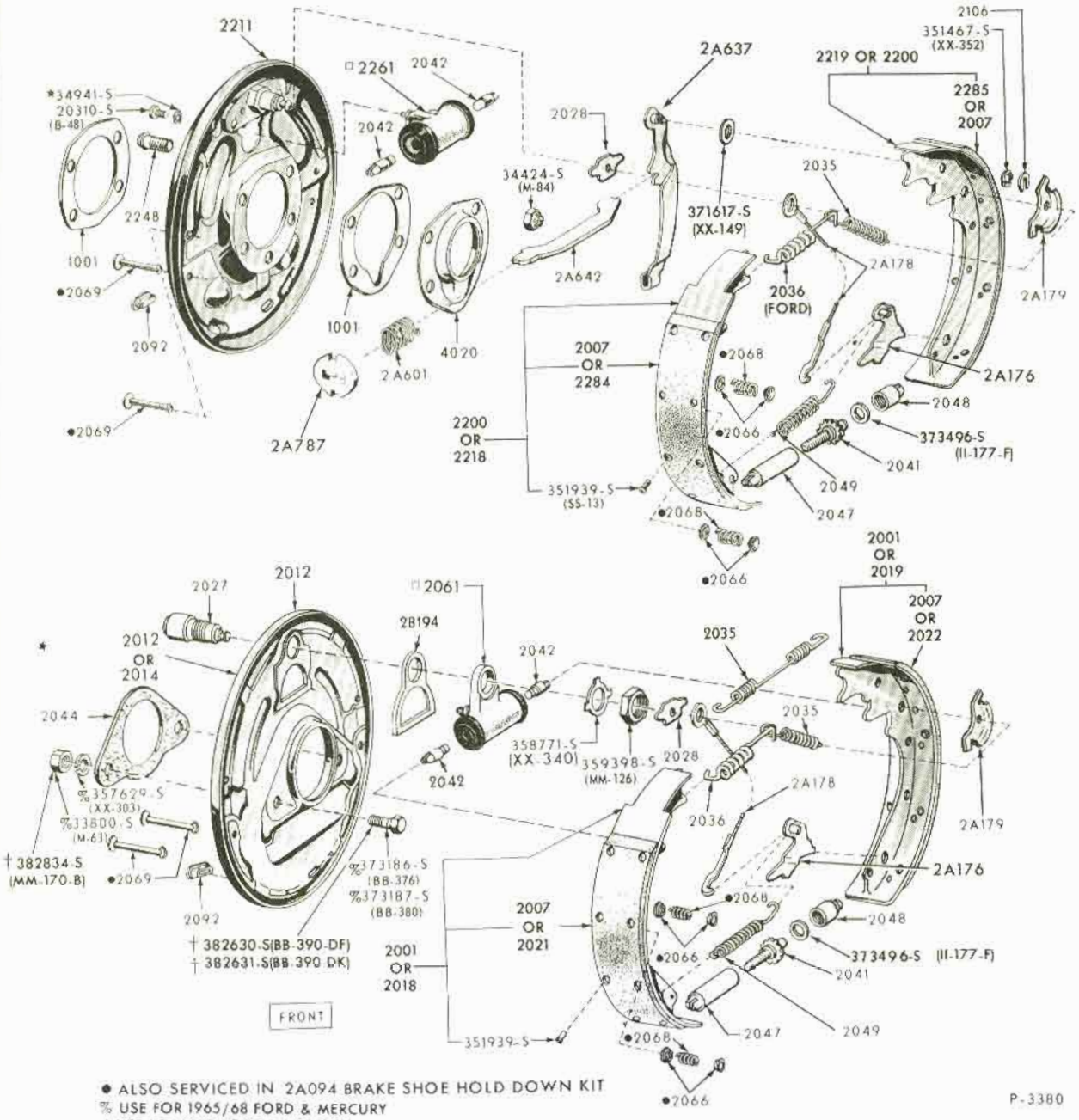

• ALSO SERVICED IN 2A094 BRAKE SHOE HOLD DOWN KIT
% USE FOR 1965/68 FORD & MERCURY
† USE FOR 1969 FORD & MERCURY
– REFER TO ILLUSTRATION P-2284 IN THIS SECTION FOR DETAIL PARTS

P-3380

FRONT & REAR DRUM BRAKES (SELF ADJUSTING) - TYPICAL
1965/72 FORD & THUNDERBIRD

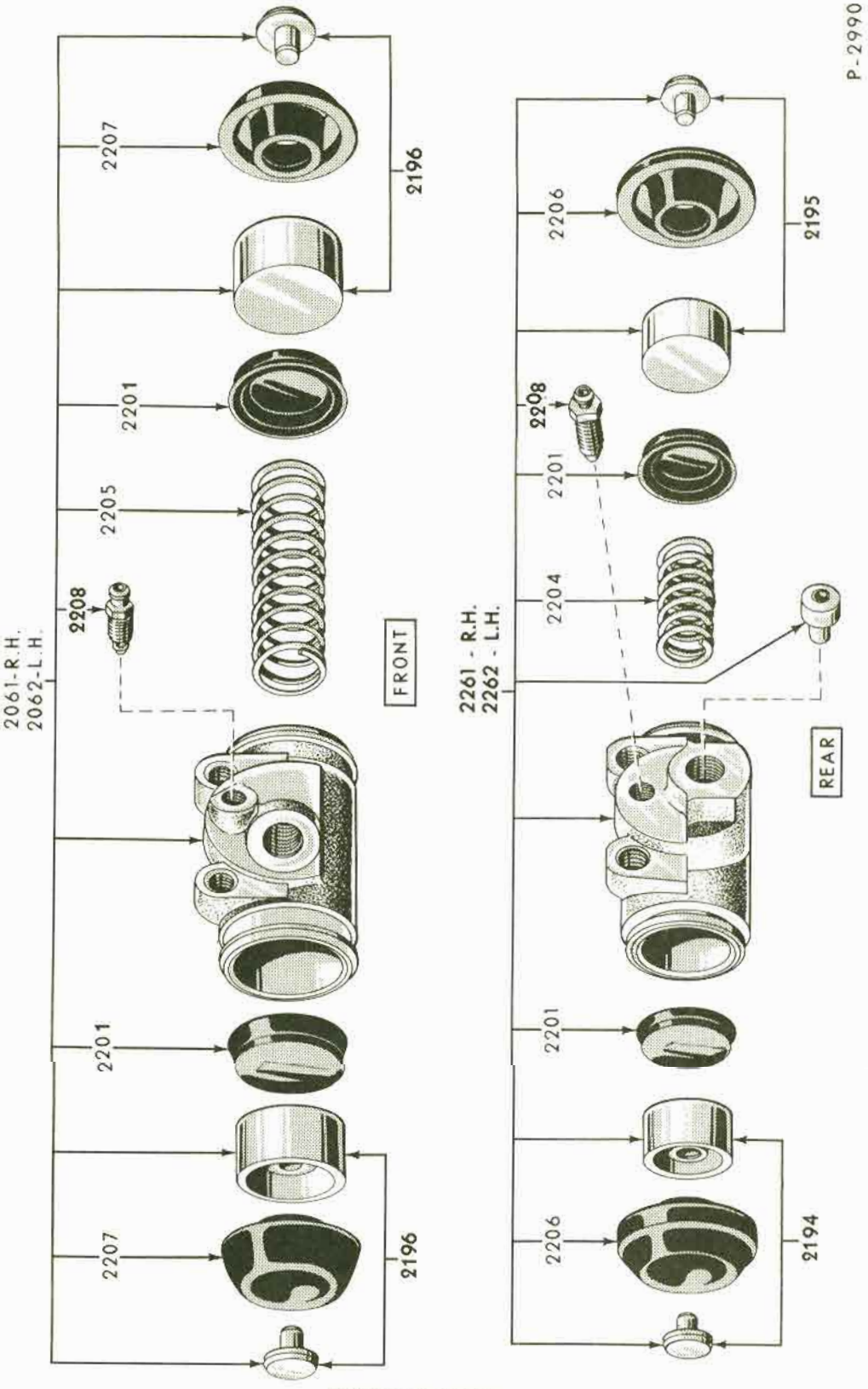

BRAKE CYLINDER
1965 FALCON, MUSTANG

COPYRIGHT © 1975 — FORD MOTOR COMPANY — DEARBORN, MICHIGAN

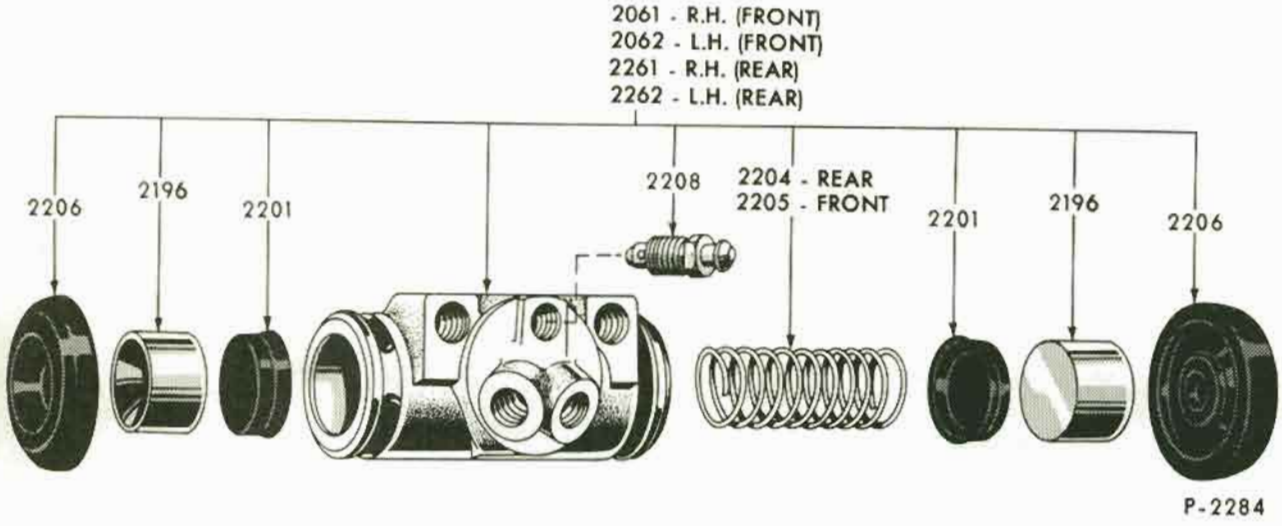

BRAKE CYLINDER
1965/72 FORD

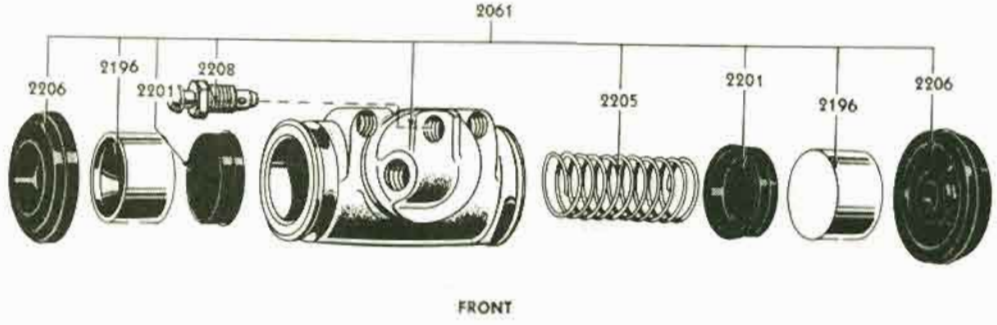

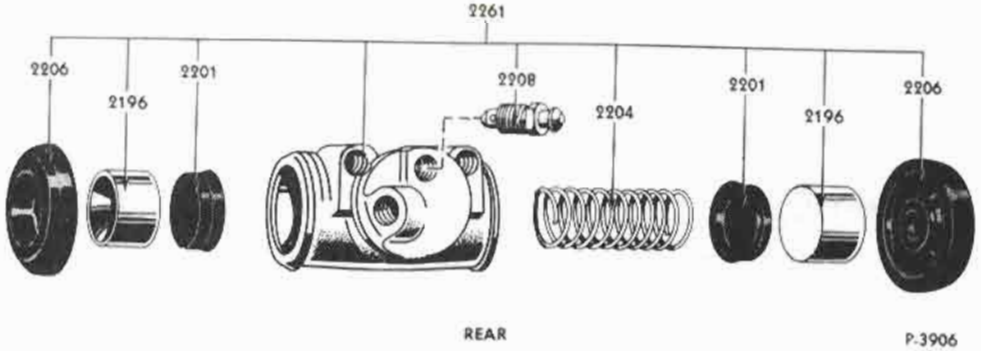

BRAKE CYLINDER
1965/72 FAIRLANE/TORINO, THUNDERBIRD
1966/72 BRONCO, FALCON, MUSTANG, MAVERICK, 1971/72 PINTO

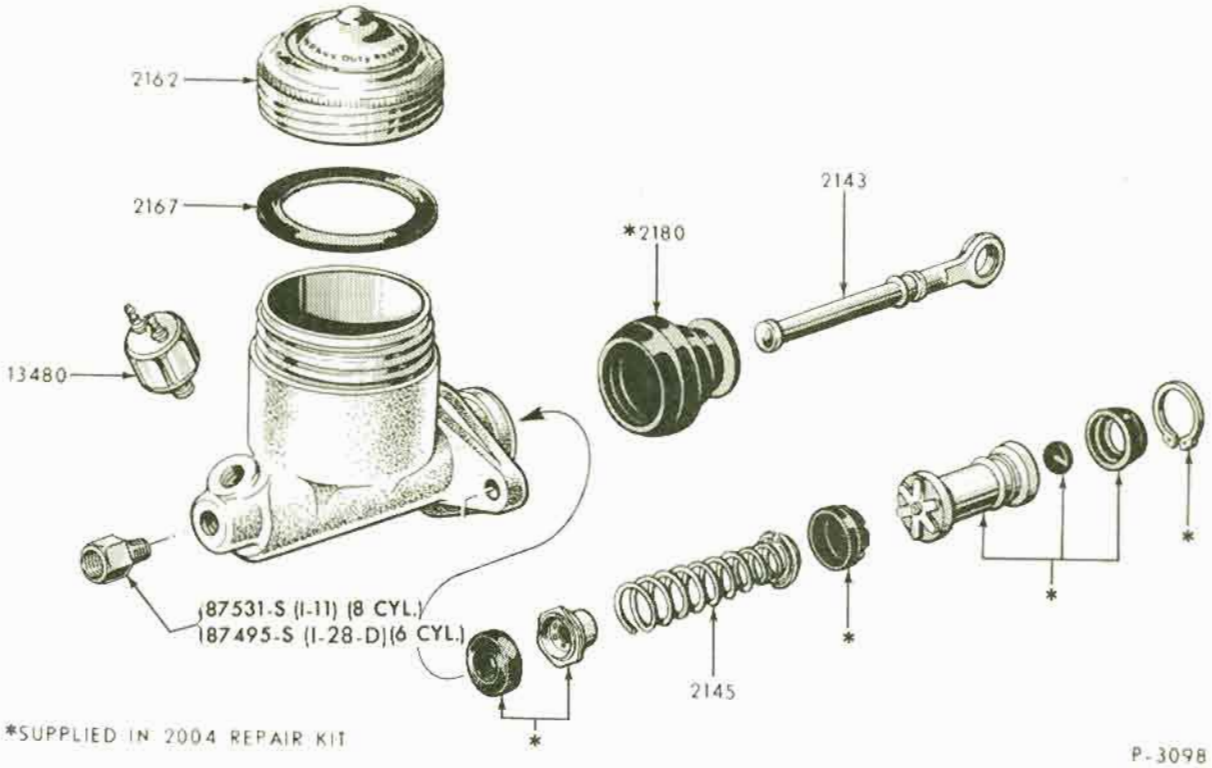

BRAKE MASTER CYLINDER - TYPICAL
1965/66 FORD, FAIRLANE, FALCON, MUSTANG, THUNDERBIRD and 1966 BRONCO

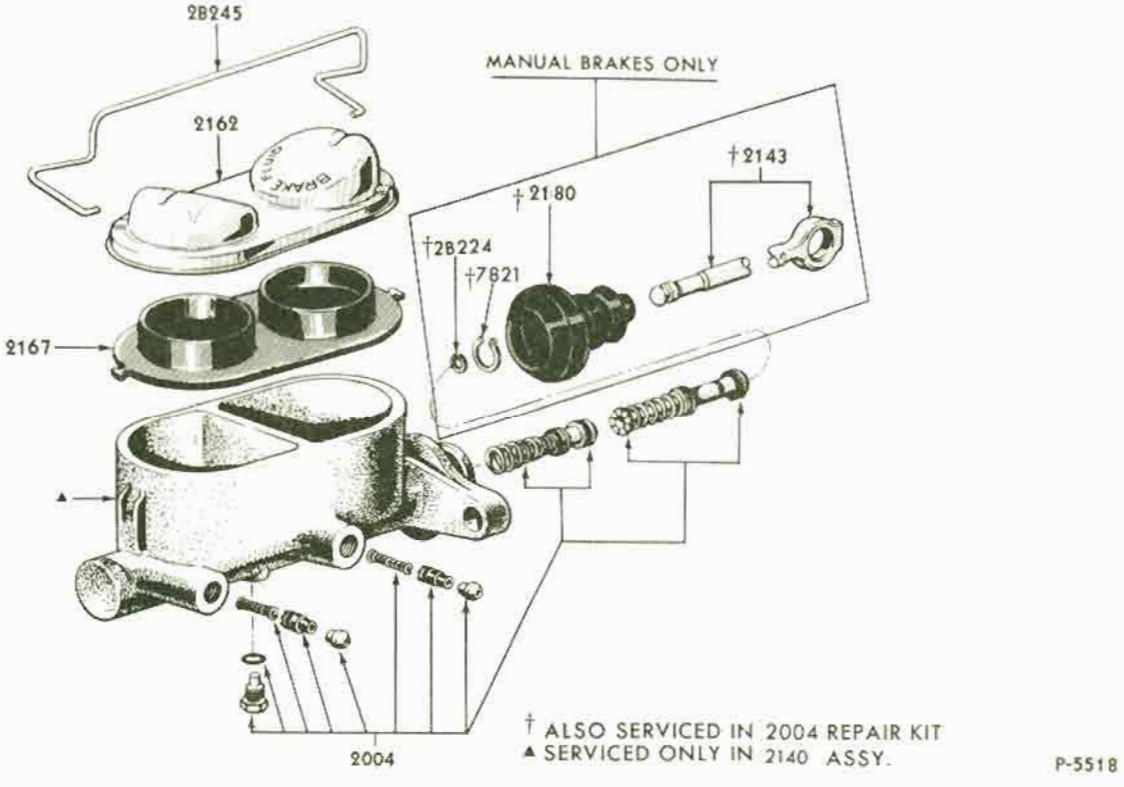

BRAKE MASTER CYLINDER - TYPICAL
1967/72 BRONCO, FORD, FAIRLANE/TORINO, FALCON, PINTO, MAVERICK, MUSTANG, THUNDERBIRD

COPYRIGHT © 1975 — FORD MOTOR COMPANY — DEARBORN, MICHIGAN

ILLUSTRATION SECTION 20

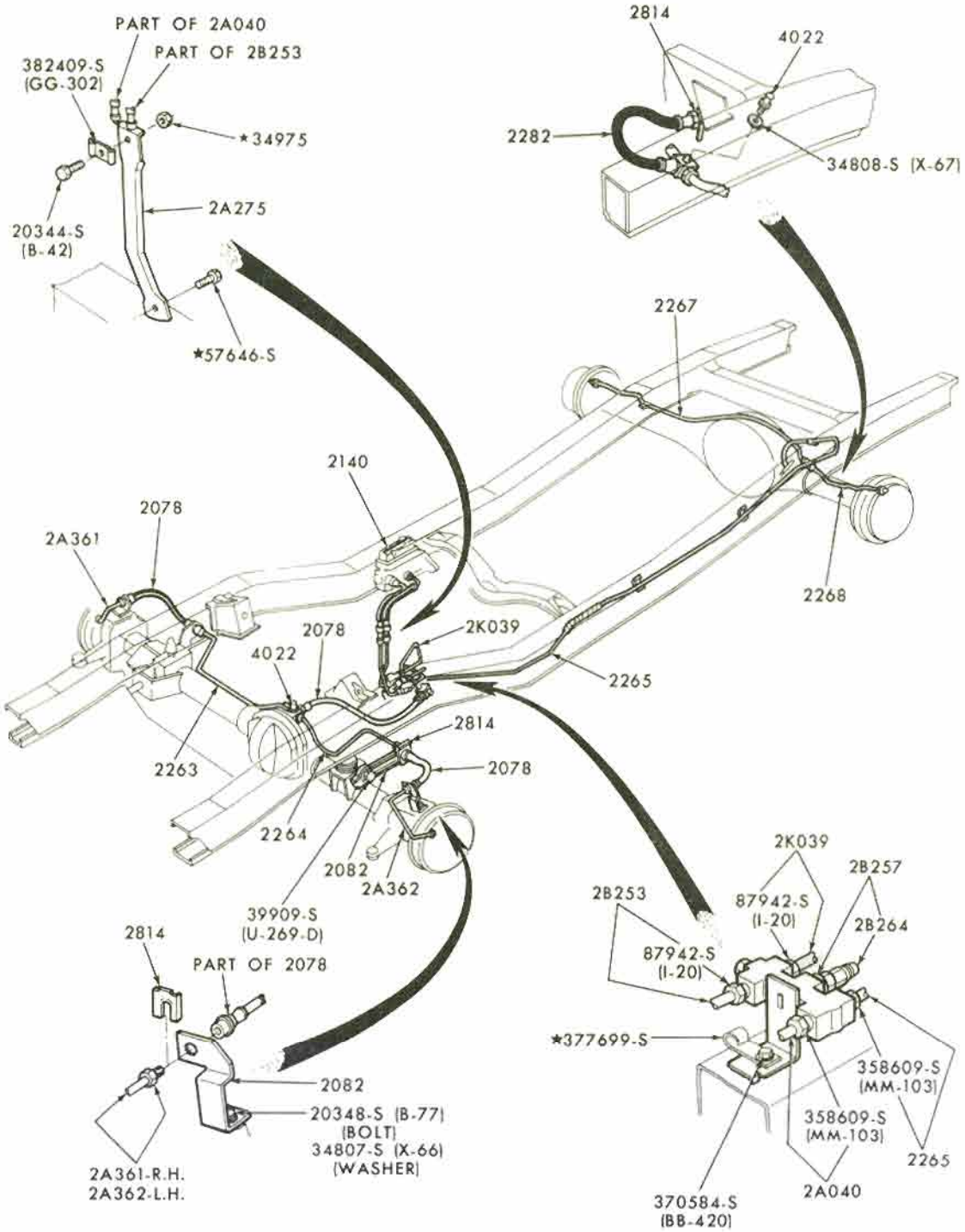

P-10475

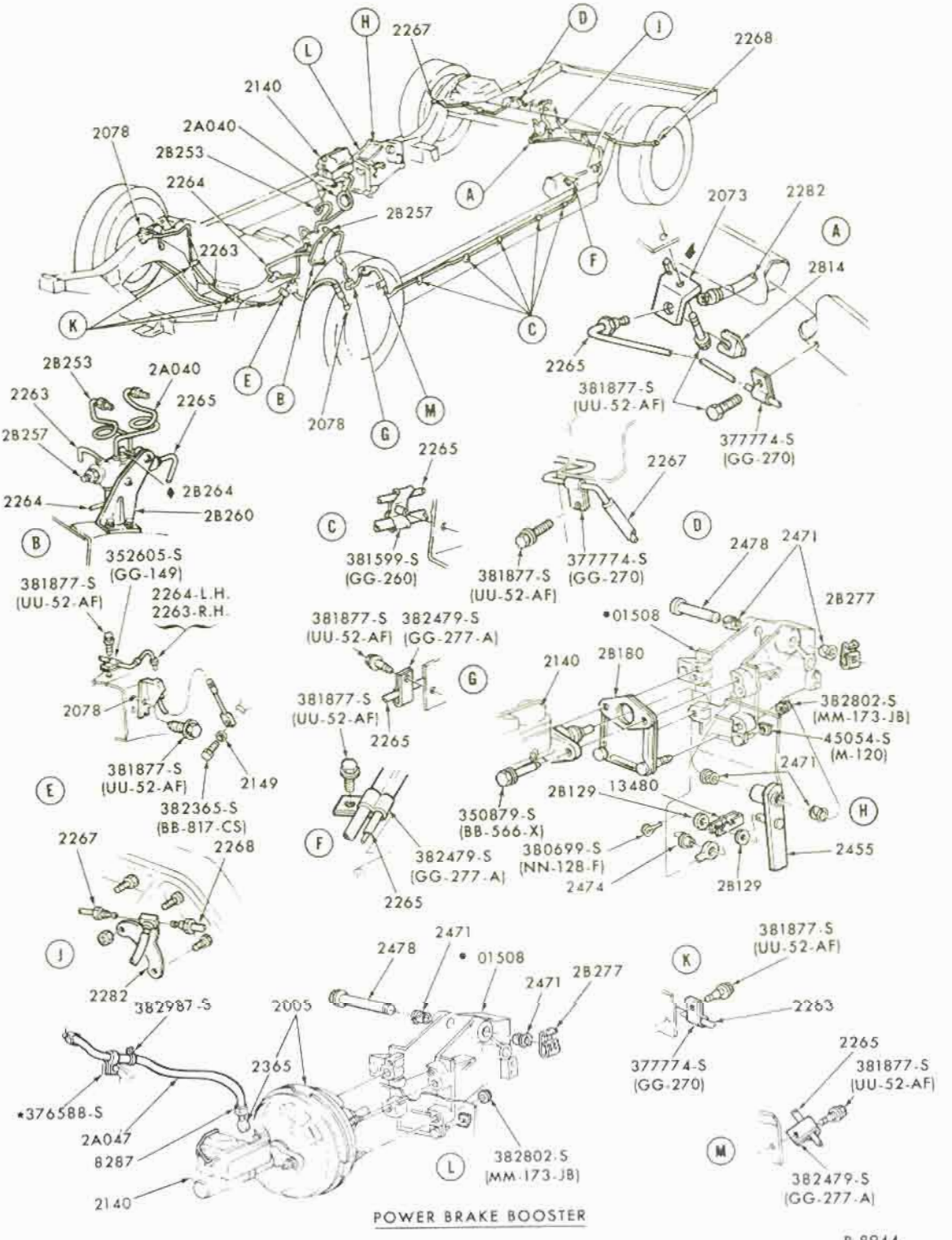

POWER BRAKE BOOSTER

P-8944

• REFER TO BODY SECTION
♦ ALSO SERVICED IN 2B257 VALVE ASSY.

DISC BRAKE SYSTEM
1972 FORD

COPYRIGHT © 1975 — FORD MOTOR COMPANY — DEARBORN, MICHIGAN

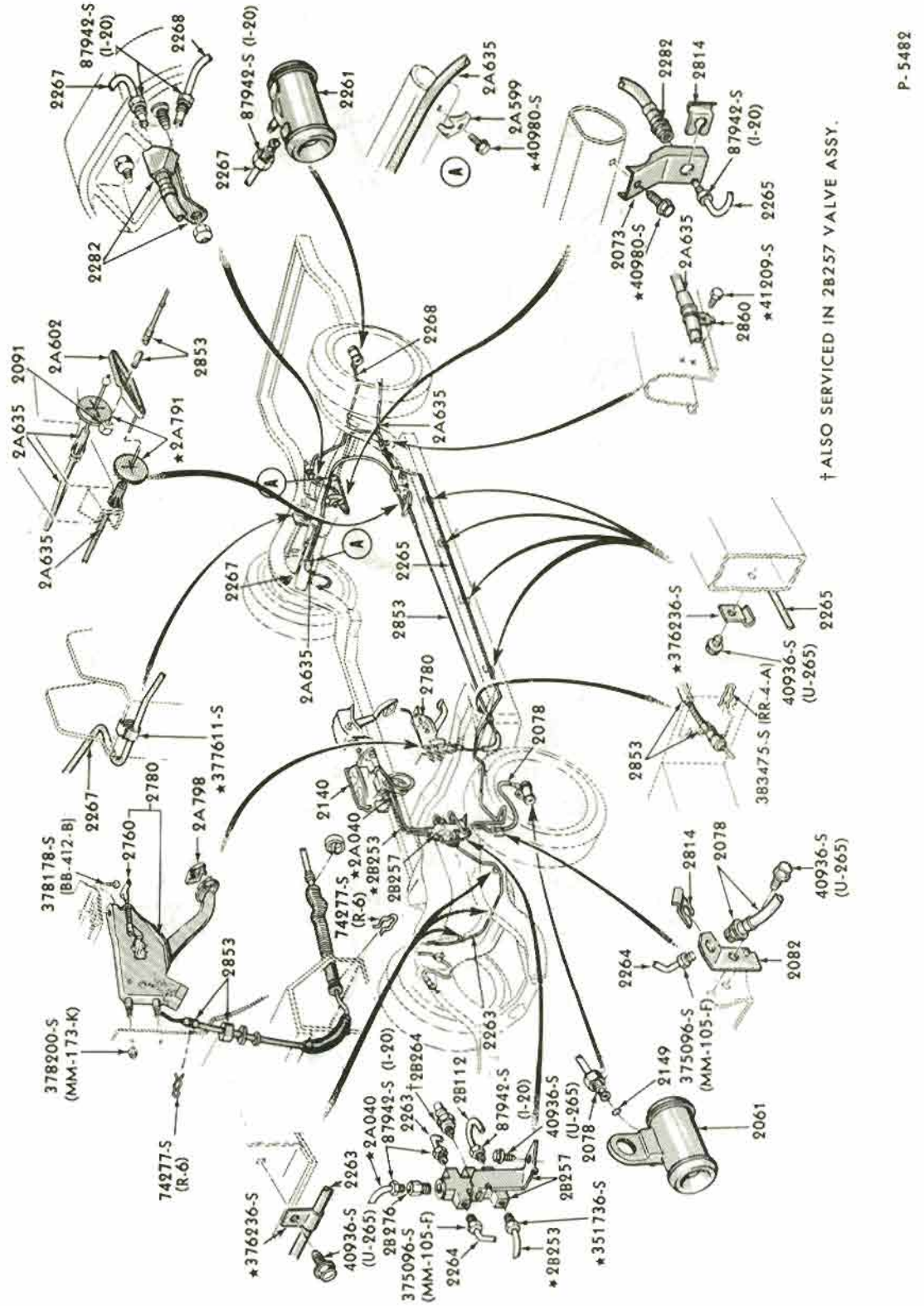

† ALSO SERVICED IN 2B257 VALVE ASSY.

P-5482

DRUM & PARKING BRAKE SYSTEMS
1967/68 FORD

COPYRIGHT © 1975 — FORD MOTOR COMPANY — DEARBORN, MICHIGAN

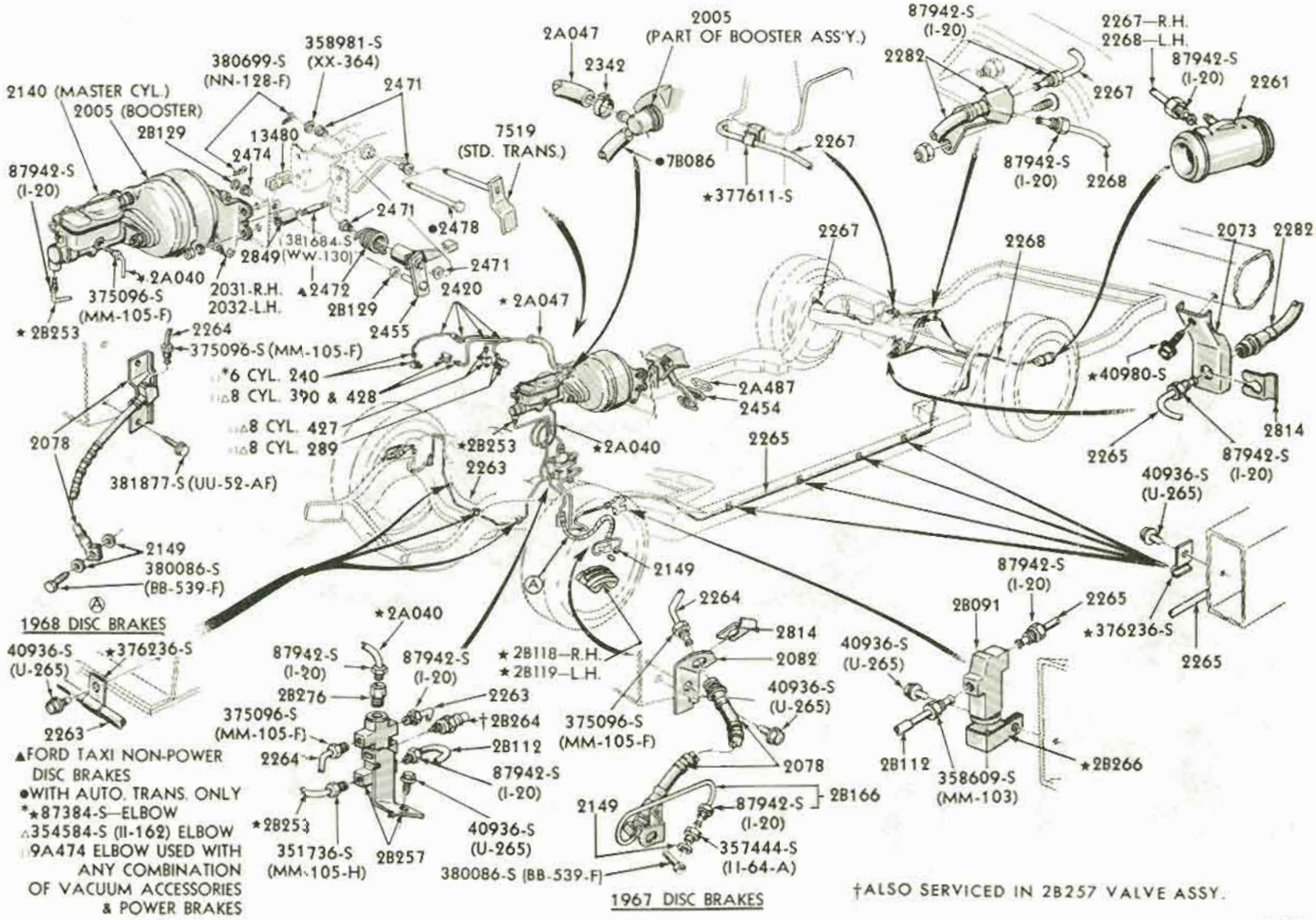
2140 (MASTER CYL.)
2005 (BOOSTER)
2B129
87942-S (I-20)
380699-S (NN-128-F)
358981-S (XX-364)
2471
13480
2474
7519 (STD. TRANS.)
2A047
2342
2005 (PART OF BOOSTER ASS'Y.)
•7B086
★377611-S
87942-S (I-20)
2267—R.H.
2268—L.H.
2282
2267
2261
2268
2849
381684-S (WW-130)
▲2472
2420
2455
★2A040
375096-S (MM-105-F)
2031-R.H.
2032-L.H.
★2B253
2264
375096-S (MM-105-F)
*6 CYL. 240
△8 CYL. 390 & 428
△8 CYL. 427
△8 CYL. 289
★2A047
2A487
2454
2073
2282
2267
2268
★40980-S
2814
2265
87942-S (I-20)
40936-S (U-265)
2078
381877-S (UU-52-AF)
2149
380086-S (BB-539-F)
Ⓐ
1968 DISC BRAKES
★2B253
2263
★2A040
2265
2149
2264
2814
2082
40936-S (U-265)
375096-S (MM-105-F)
2078
87942-S (I-20)
2B091
2265
★376236-S
2265
40936-S (U-265)
★376236-S
2263
★2A040
87942-S (I-20)
87942-S (I-20)
★2B118—R.H.
★2B119—L.H.
2B276
2263
375096-S (MM-105-F)
2264
†2B264
2B112
87942-S (I-20)
★2B253
351736-S (MM-105-H)
2B257
40936-S (U-265)
2149
87942-S (I-20)
2B166
357444-S (11-64-A)
380086-S (BB-539-F)
1967 DISC BRAKES
2B112
358609-S (MM-103)
★2B266
▲FORD TAXI NON-POWER DISC BRAKES
•WITH AUTO. TRANS. ONLY
*★87384-S—ELBOW
△354584-S (11-162) ELBOW
9A474 ELBOW USED WITH ANY COMBINATION OF VACUUM ACCESSORIES & POWER BRAKES
†ALSO SERVICED IN 2B257 VALVE ASSY.
P-5481

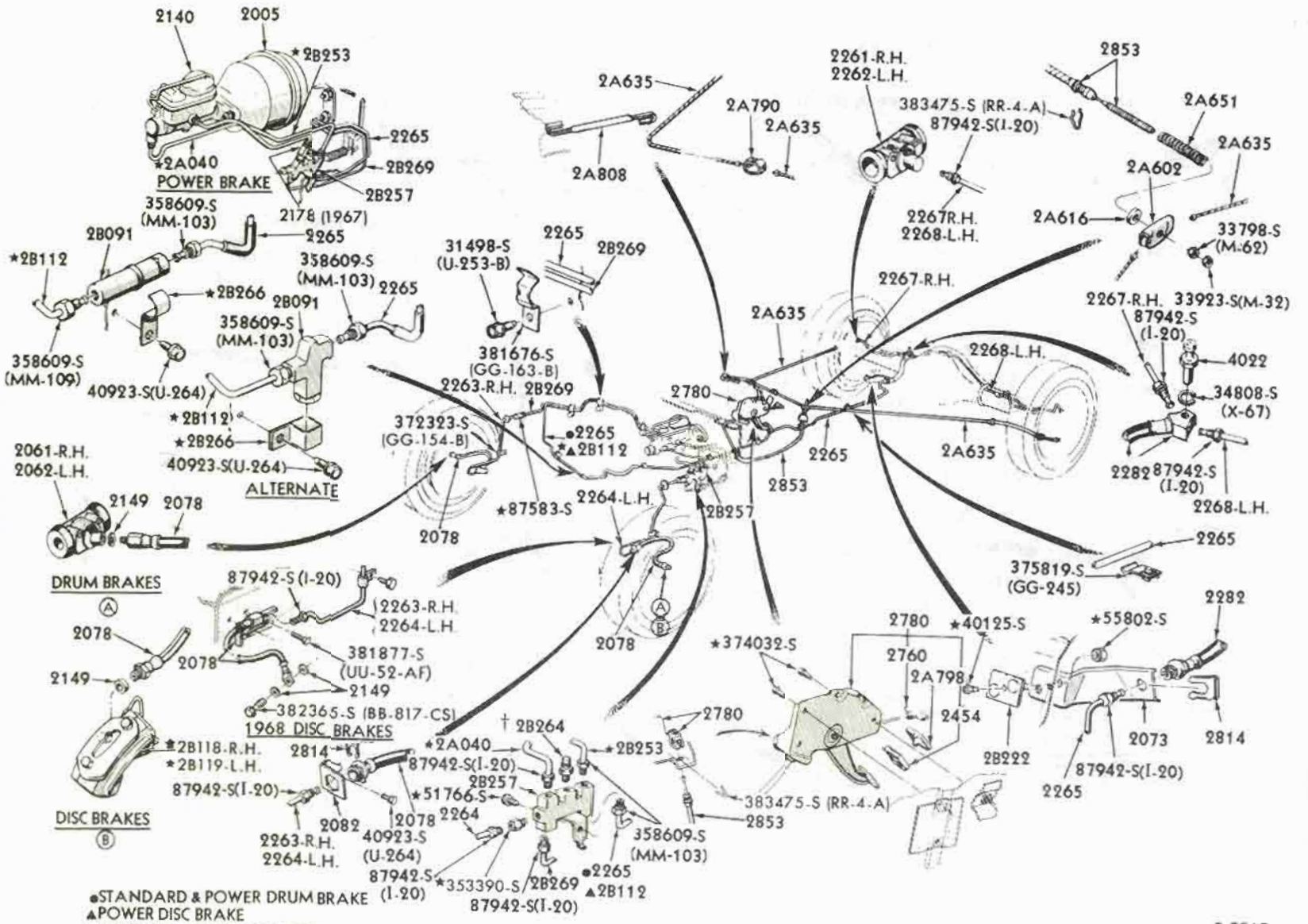

P-5515

COPYRIGHT © 1975 — FORD MOTOR COMPANY — DEARBORN, MICHIGAN

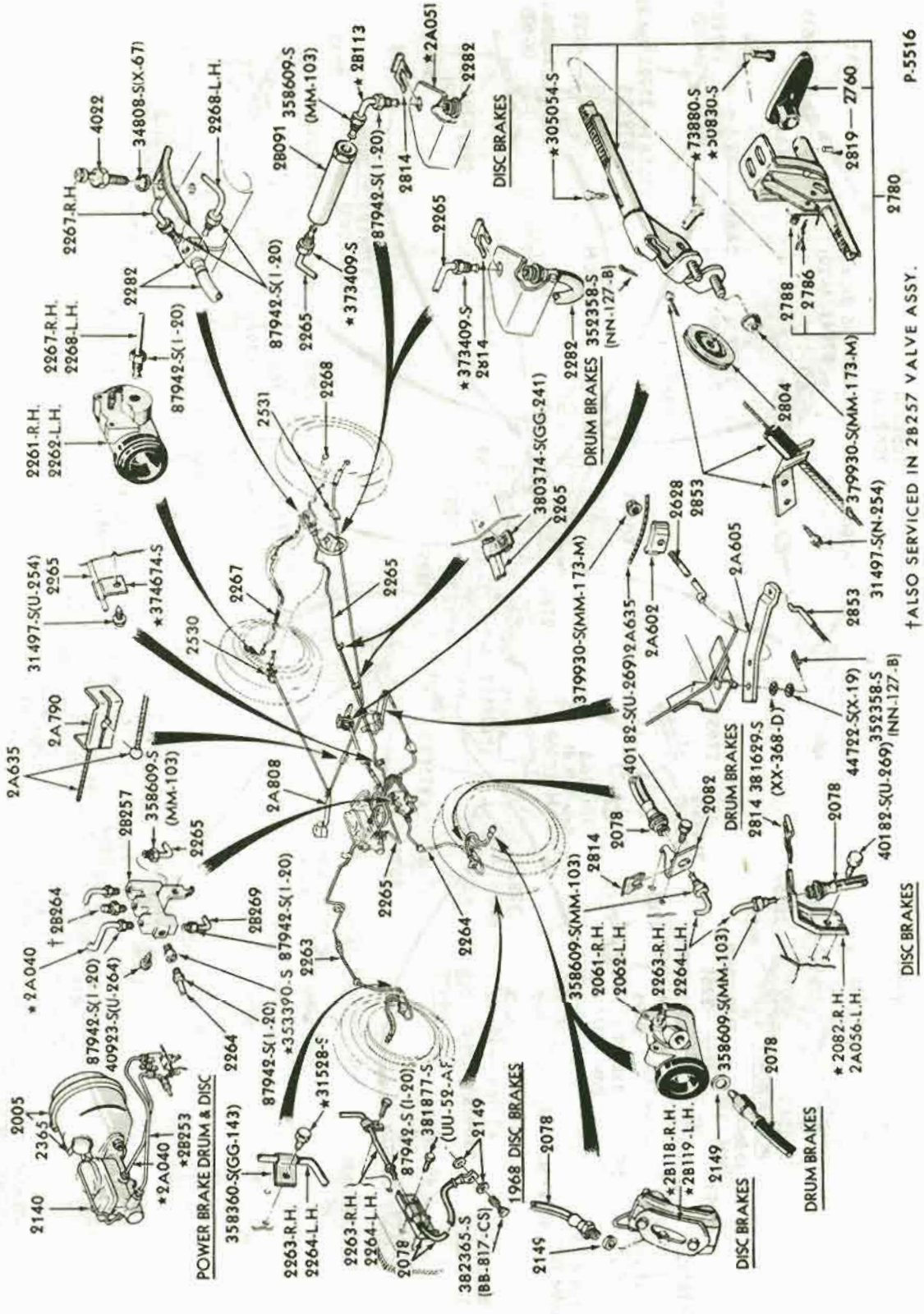
2005
23651
2140
*2A040
*28253
POWER BRAKE DRUM & DISC
358360-S(GG-143)
2264
87942-S(1-20)
40923-S(U-264)
*2A040
†28264
87942-S(1-20)
*353390-S
87942-S(1-20)
28269
2263-R.H.
2264-L.H.
*31528-S
2263-R.H.
2264-L.H.
87942-S(1-20)
381877-S
(UU-52-AF)
2078
382365-S
(BB-817-CS)
2149
1968 DISC BRAKES
2145
2078
*28118-R.H.
*28119-L.H.
2149
DISC BRAKES
358609-S(MM-103)
2061-R.H.
2062-L.H.
2263-R.H.
2264-L.H.
2814
2078
40182-S(U-269)
2082
DRUM BRAKES
2814 381629-S
(XX-368-D)
2078
* 2082-R.H.
2A056-L.H.
DRUM BRAKES
44792-S(X-19)
352358-S
(NN-127-B)
40182-S(U-269)
DISC BRAKES
2A635
2A790
31497-S(U-254)
2265
*374674-S
2530
2267
2265
2A808
2265
2264
2265
2531
2268
*373409-S
87942-S(1-20)
2814
*2A051
2282
DISC BRAKES
28091
358609-S
(MM-103)
*28113
87942-S(1-20)
2265
2268-L.H.
2267-R.H.
2268-L.H.
2282
87942-S(1-20)
2261-R.H.
2262-L.H.
2267-R.H.
4022
34808-S(IX-67)
2268-L.H.
*373409-S
2814
2265
380374-S(GG-241)
2265
DRUM BRAKES
352358-S
(NN-127-B)
2282
379930-S(MM-173-M)
2628
2853
2A602
2A635
2A605
2853
31497-S(N-254)
†ALSO SERVICED IN 28257 VALVE ASSY.
*305054-S
*73880-S
*30830-S
2819 — 2760
2780
2788
2786
2804
379930-S(MM-173-M)
P-5516

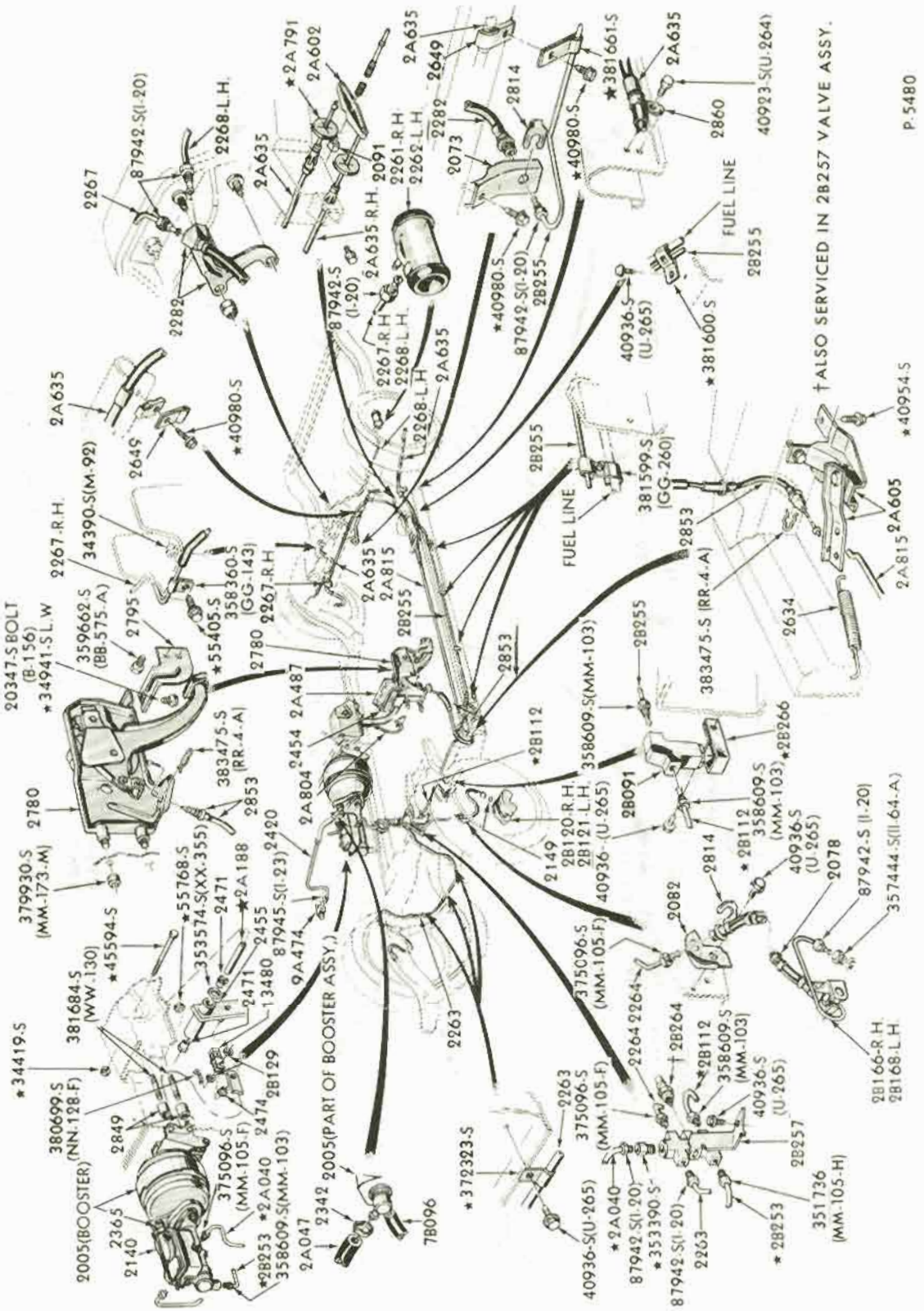

DISC BRAKE SYSTEM
1967 THUNDERBIRD

COPYRIGHT © 1975 — FORD MOTOR COMPANY — DEARBORN, MICHIGAN

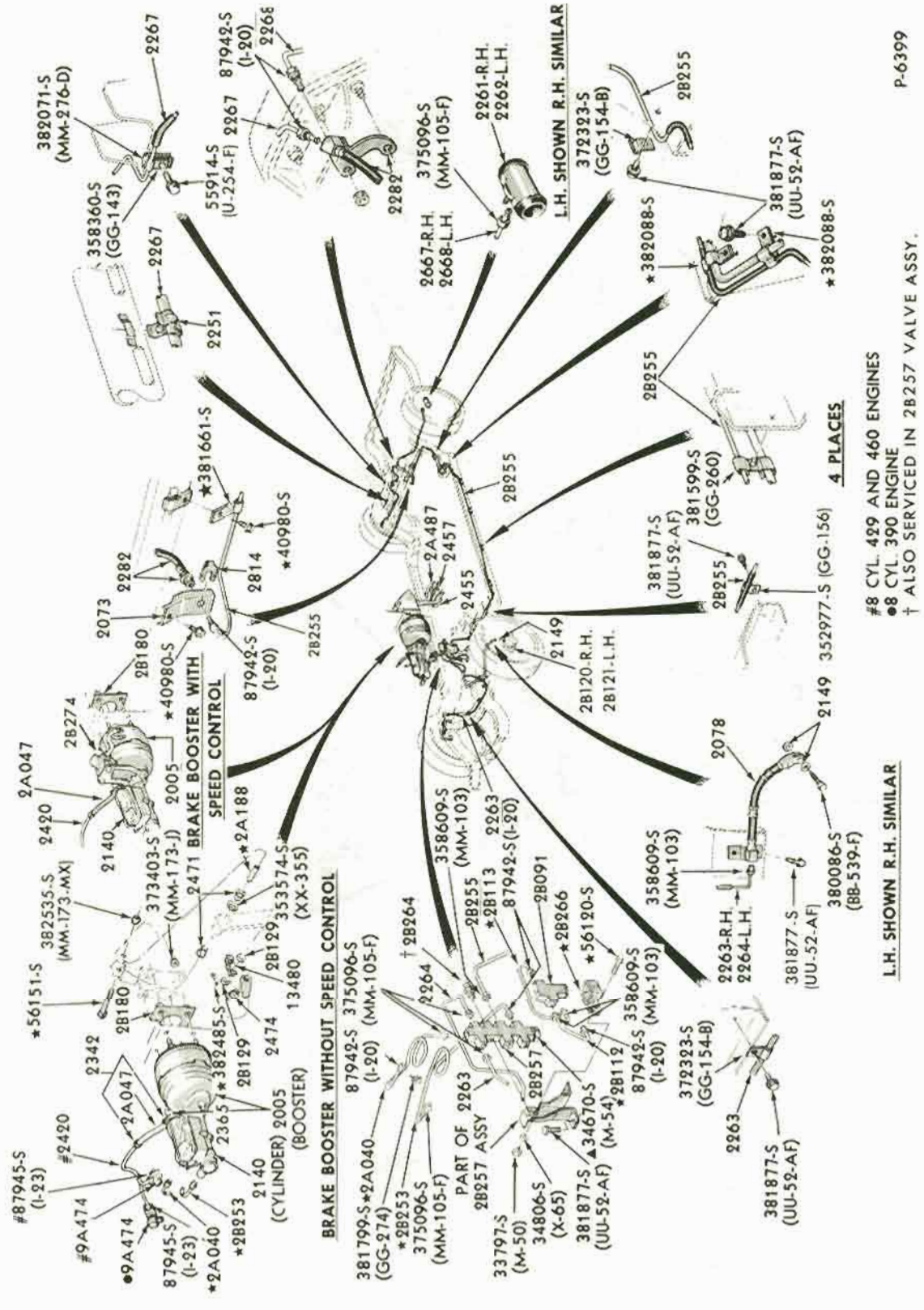
BRAKE BOOSTER WITHOUT SPEED CONTROL
BRAKE BOOSTER WITH SPEED CONTROL
L.H. SHOWN R.H. SIMILAR
4 PLACES
L.H. SHOWN R.H. SIMILAR
#8 CYL. 429 AND 460 ENGINES
•8 CYL. 390 ENGINE
† ALSO SERVICED IN 2B257 VALVE ASSY.
P-6399

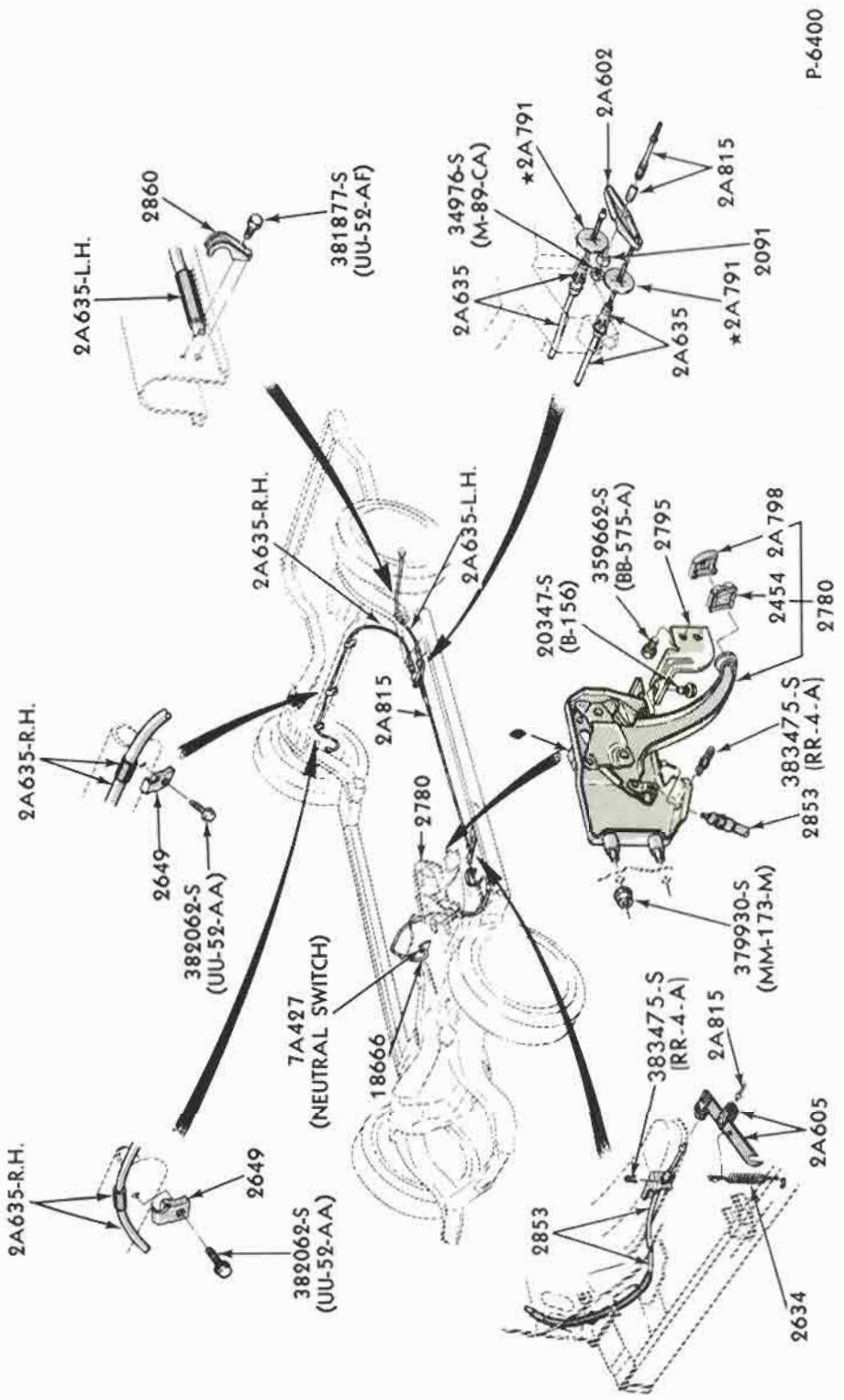

PARKING BRAKE SYSTEM
1968/71 THUNDERBIRD

COPYRIGHT © 1975 — FORD MOTOR COMPANY — DEARBORN, MICHIGAN

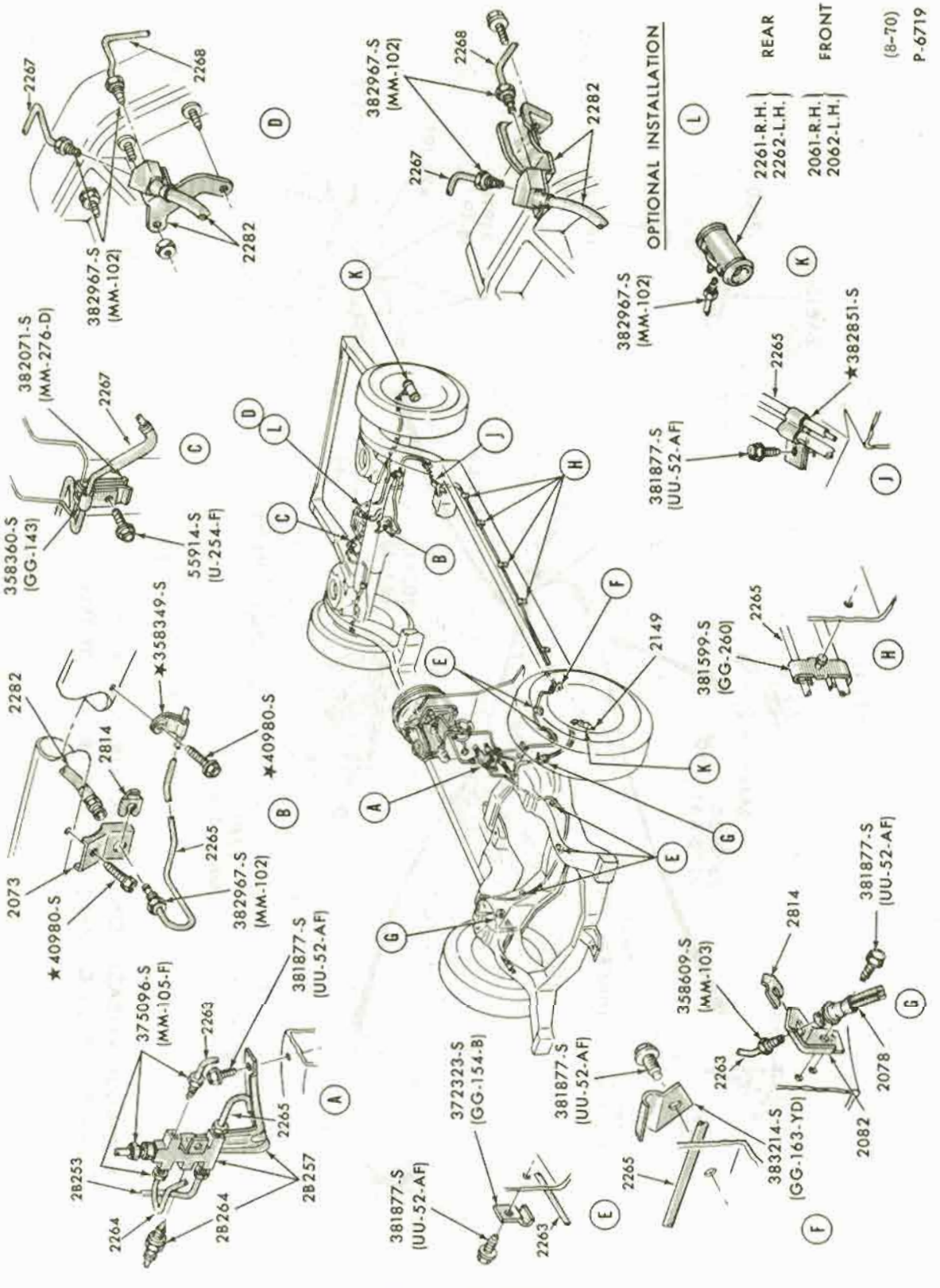
2267
2268
382967-S (MM-102)
2282
382071-S (MM-276-D)
358360-S (GG-143)
55914-S (U-254-F)
★358349-S
★40980-S
2282
2814
2073
2265
382967-S (MM-102)
375096-S (MM-105-F)
2263
381877-S (UU-52-AF)
2253
2264
2257
2264
382967-S (MM-102)
2268
2282
OPTIONAL INSTALLATION
2261-R.H. 2262-L.H. REAR
2061-R.H. 2062-L.H. FRONT
382967-S (MM-102)
★382851-S
2265
381877-S (UU-52-AF)
381599-S (GG-260)
2265
2149
372323-S (GG-154-B)
381877-S (UU-52-AF)
381877-S (UU-52-AF)
2263
2265
358609-S (MM-103)
2814
2263
383214-S (GG-163-YD)
2082
2078
381877-S (UU-52-AF)
(8-70)
P-6719

DISC BRAKE SYSTEM
1969 FORD - EXCEPT NEW YORK TAXI

COPYRIGHT © 1975 — FORD MOTOR COMPANY — DEARBORN, MICHIGAN

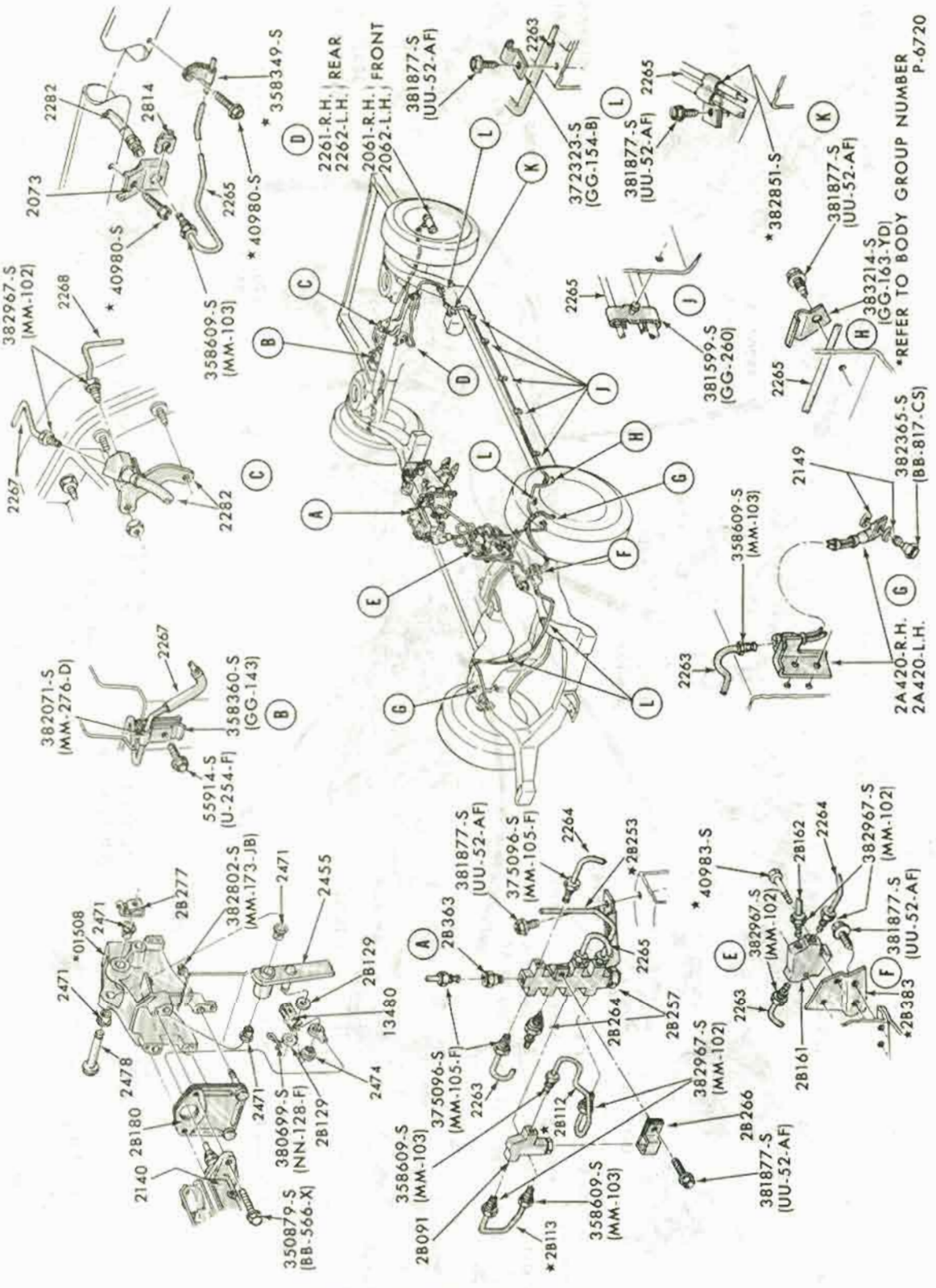

DISC BRAKE (NON - POWER) SYSTEM
1969 FORD - NEW YORK TAXI

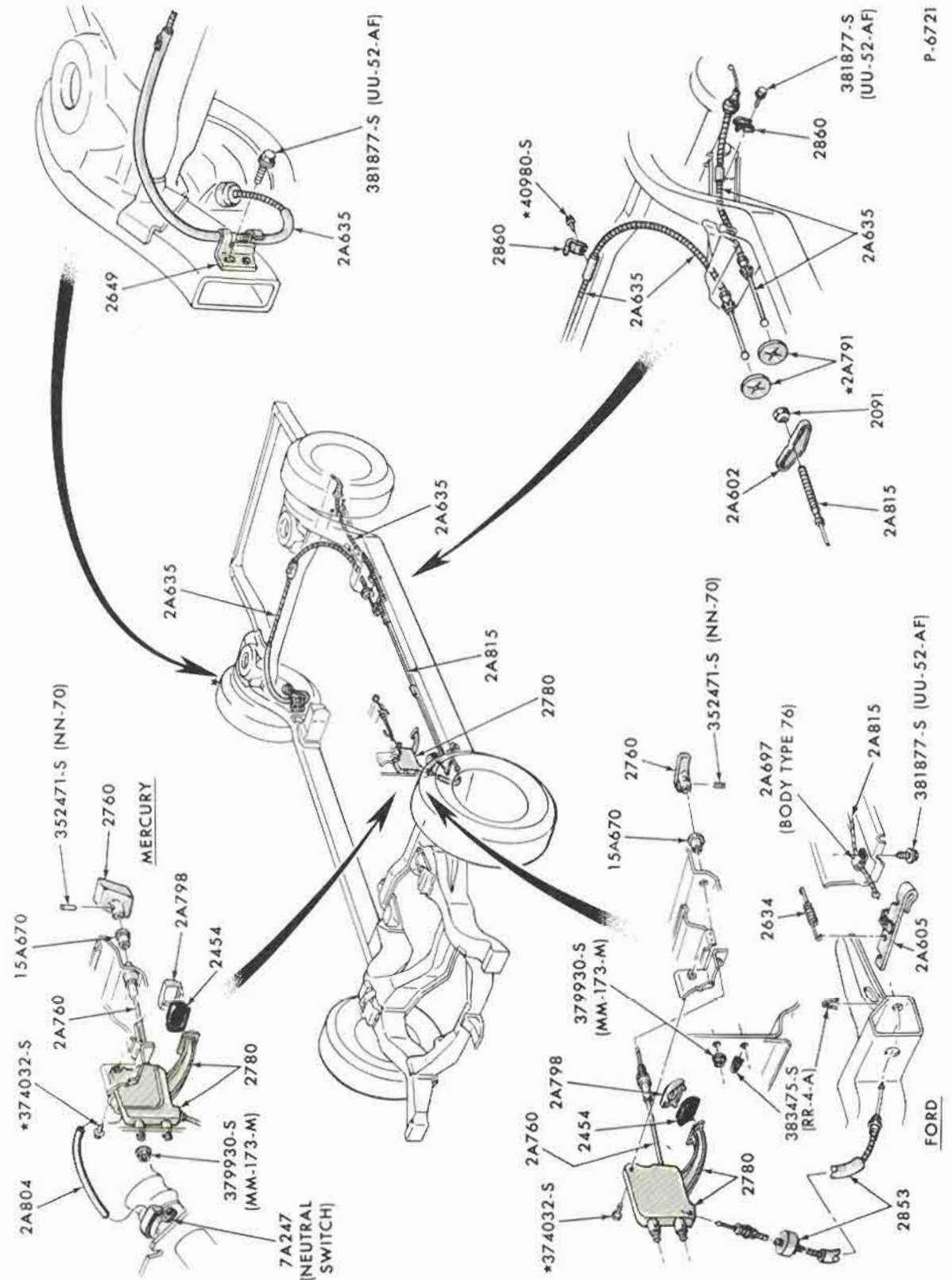

PARKING BRAKE SYSTEM
1969/72 FORD

COPYRIGHT © 1975 — FORD MOTOR COMPANY — DEARBORN, MICHIGAN

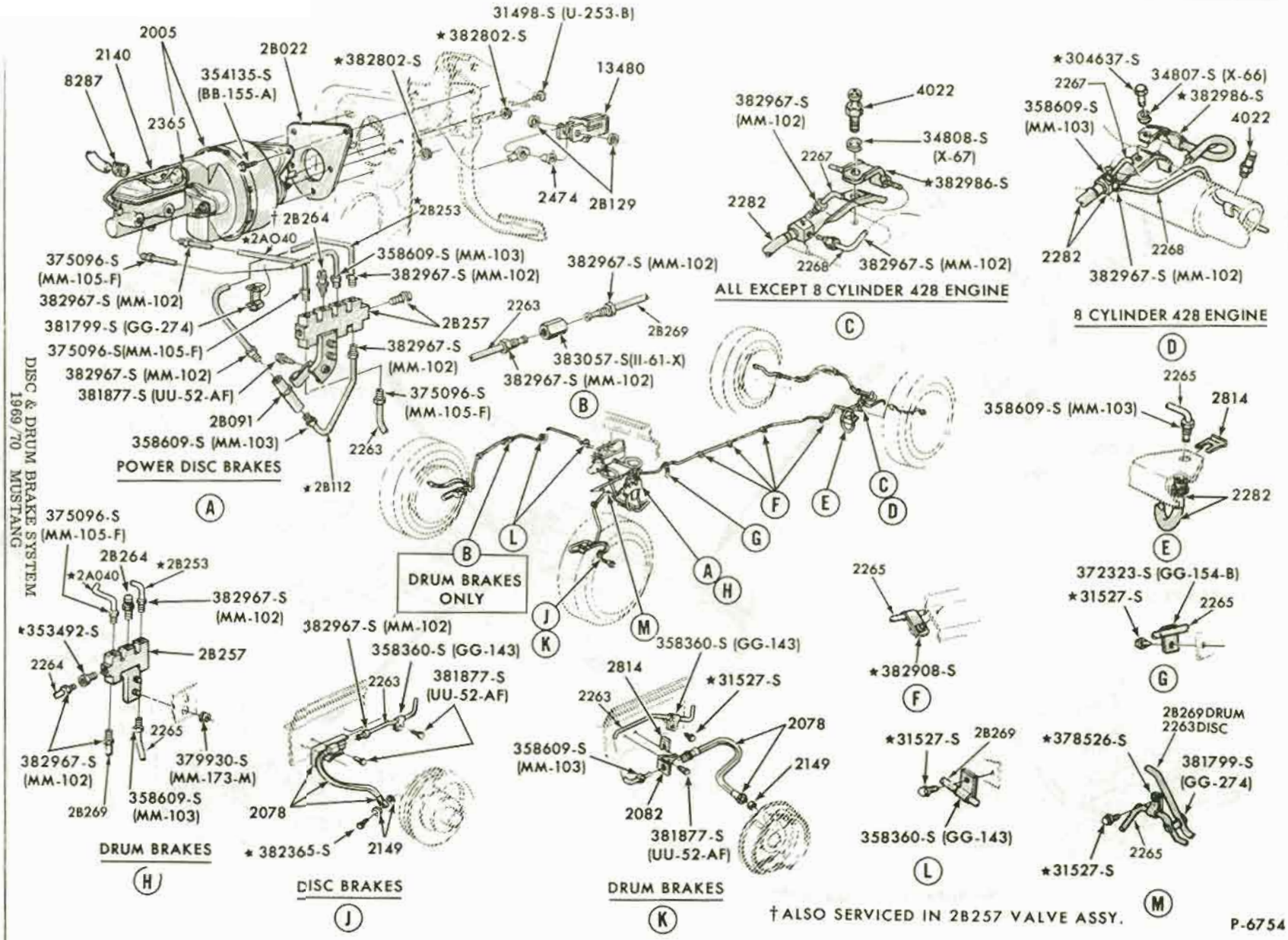
DISC & DRUM BRAKE SYSTEM
1969/70 MUSTANG
POWER DISC BRAKES
A
ALL EXCEPT 8 CYLINDER 428 ENGINE
C
8 CYLINDER 428 ENGINE
D
DRUM BRAKES ONLY
B
DRUM BRAKES
H
DISC BRAKES
J
DRUM BRAKES
K
E
F
G
L
M
†ALSO SERVICED IN 2B257 VALVE ASSY.
P-6754

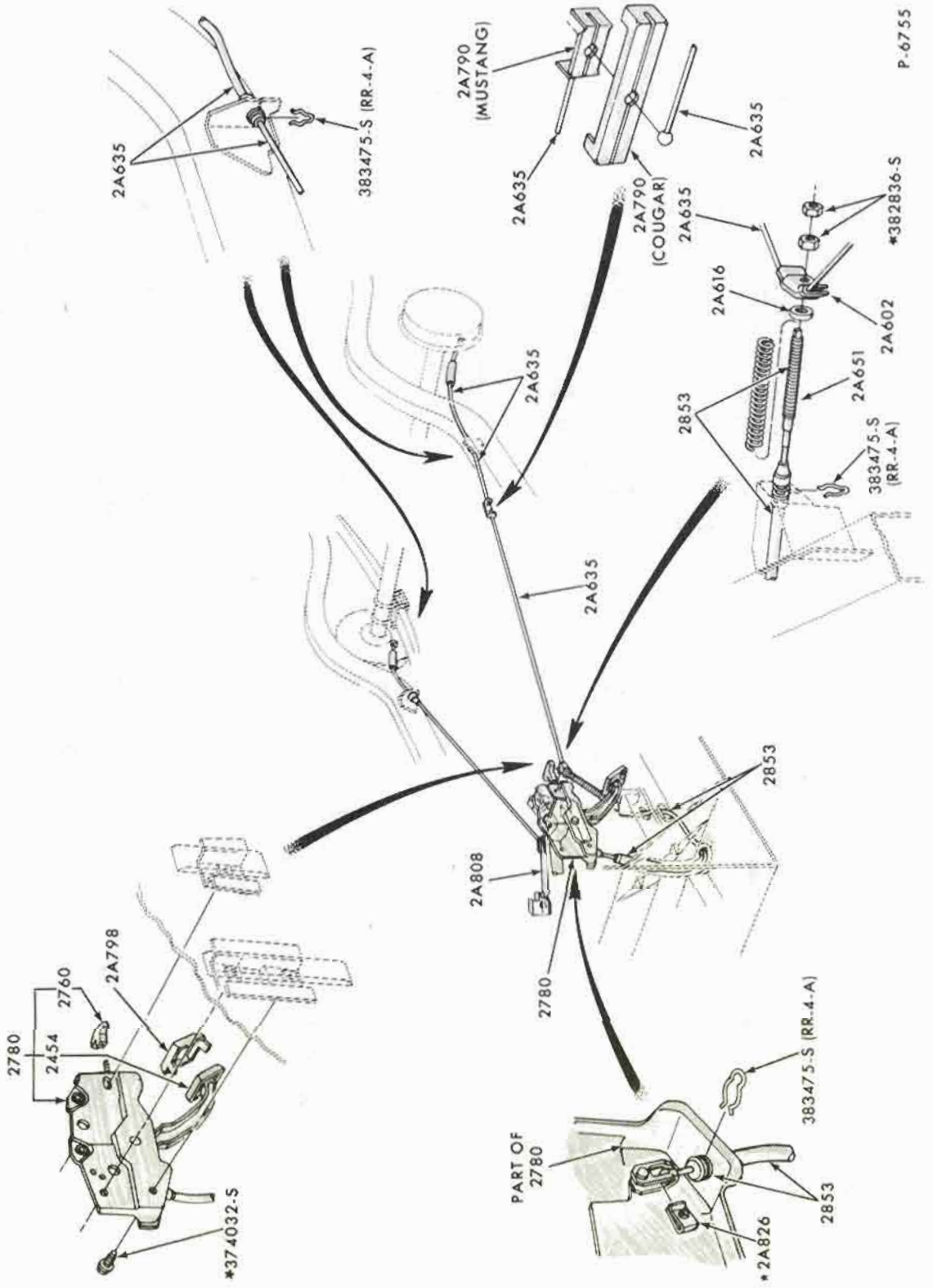

PARKING BRAKE SYSTEM
1969/70 MUSTANG

COPYRIGHT © 1975 — FORD MOTOR COMPANY — DEARBORN, MICHIGAN

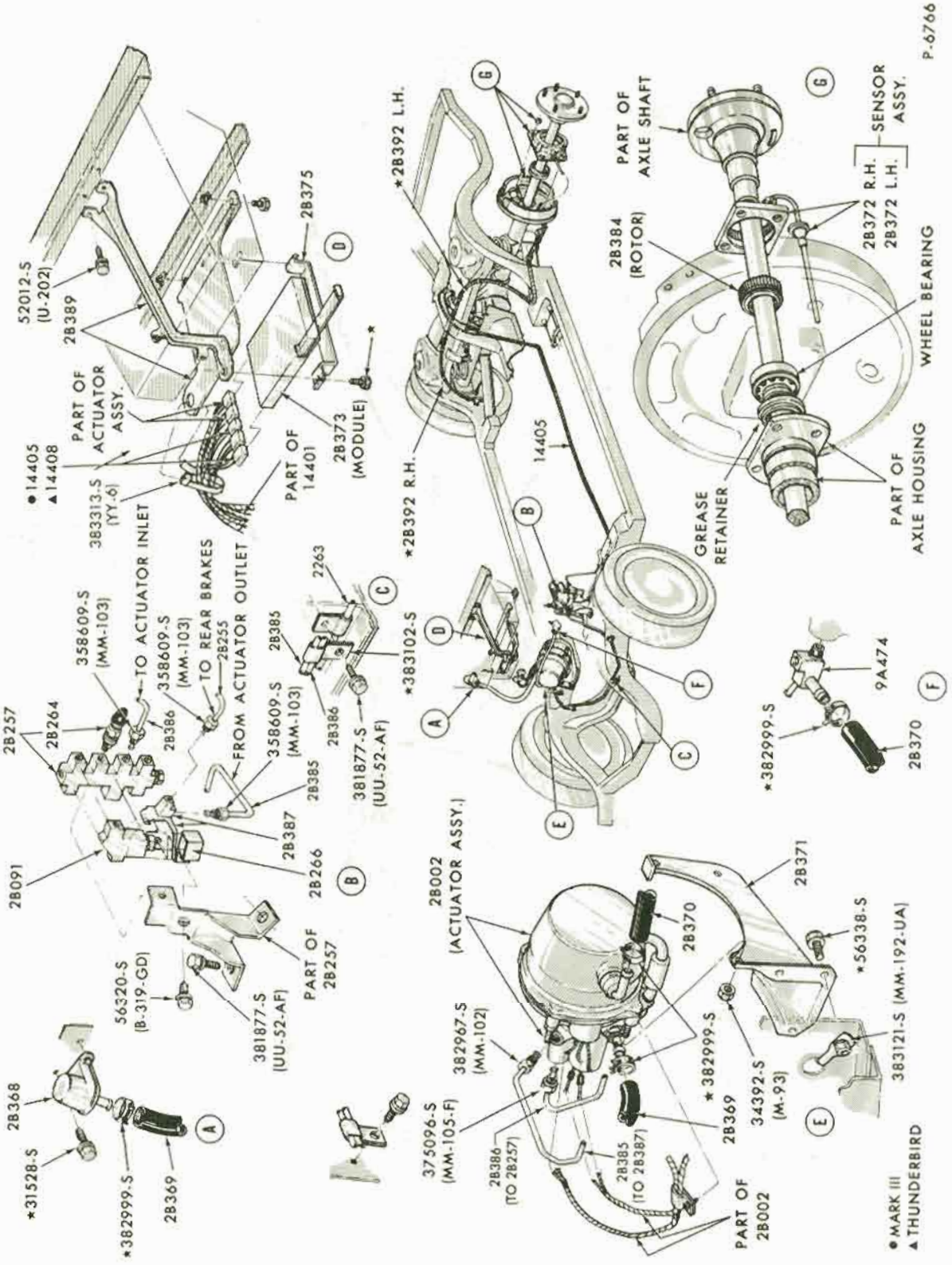

BRAKE ANTI - SKID CONTROL SYSTEM
1969 THUNDERBIRD

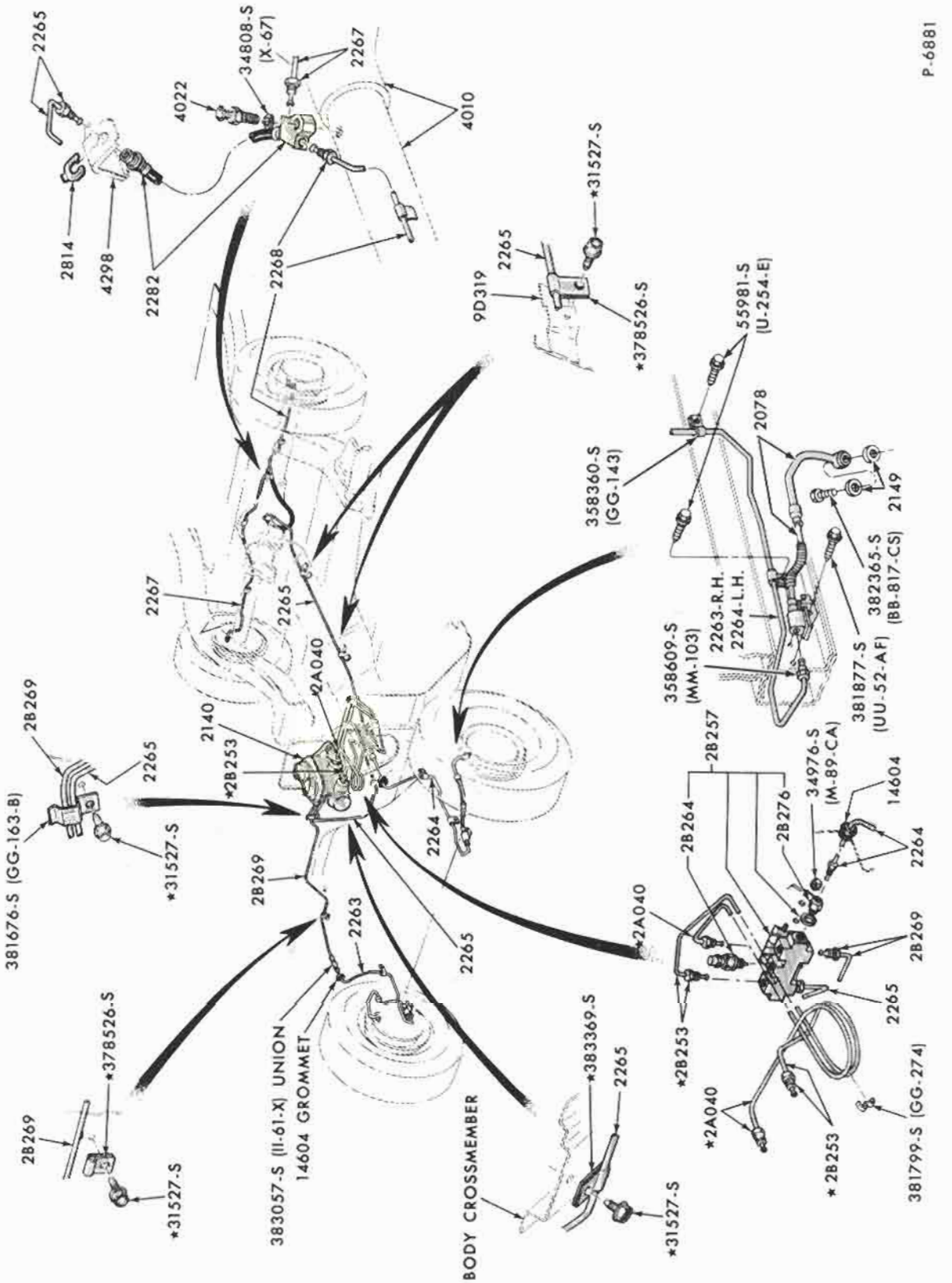

DRUM BRAKE SYSTEM
1970/71 MAVERICK

COPYRIGHT © 1975 — FORD MOTOR COMPANY — DEARBORN, MICHIGAN

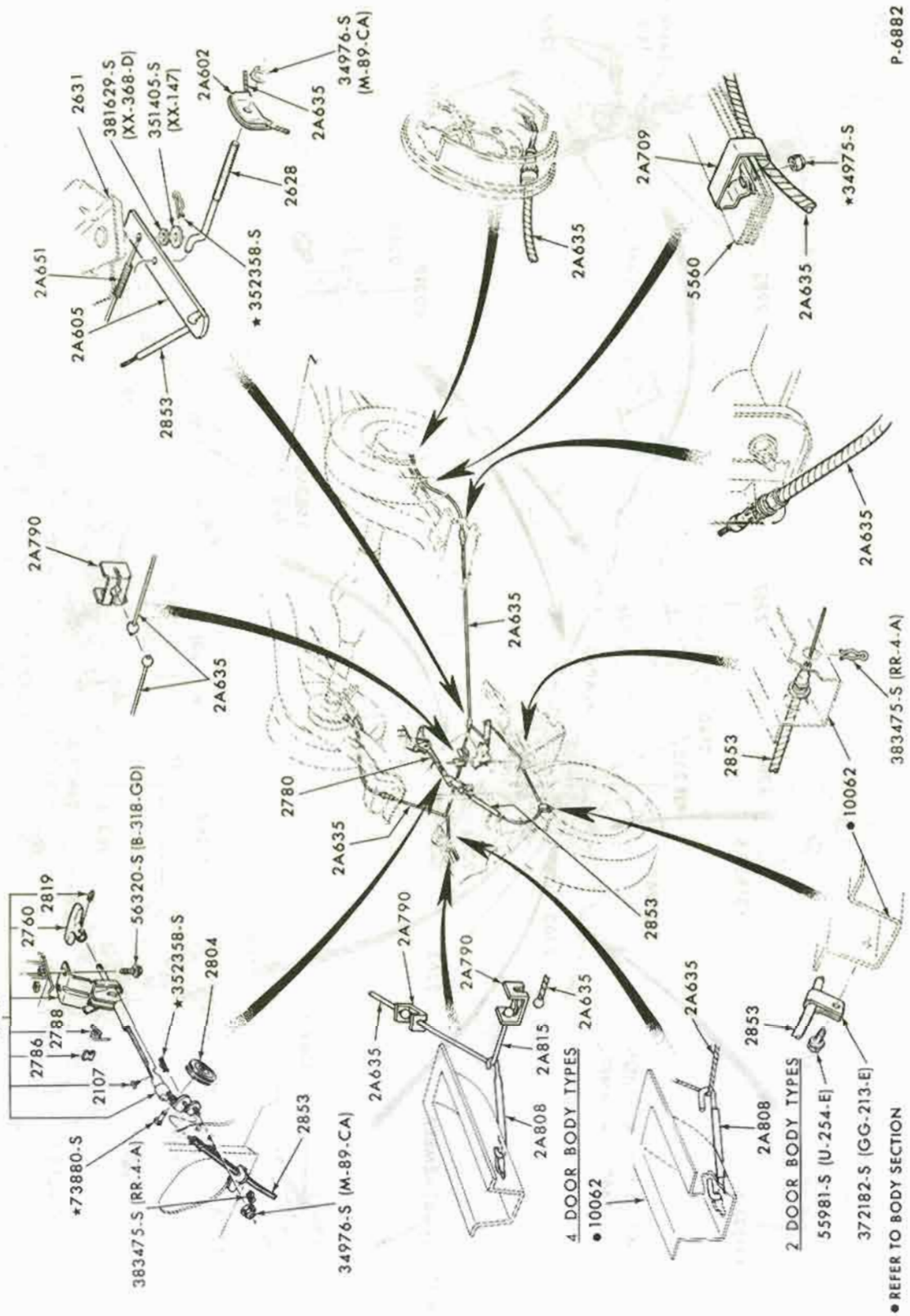

PARKING BRAKE SYSTEM
1970/72 MAVERICK

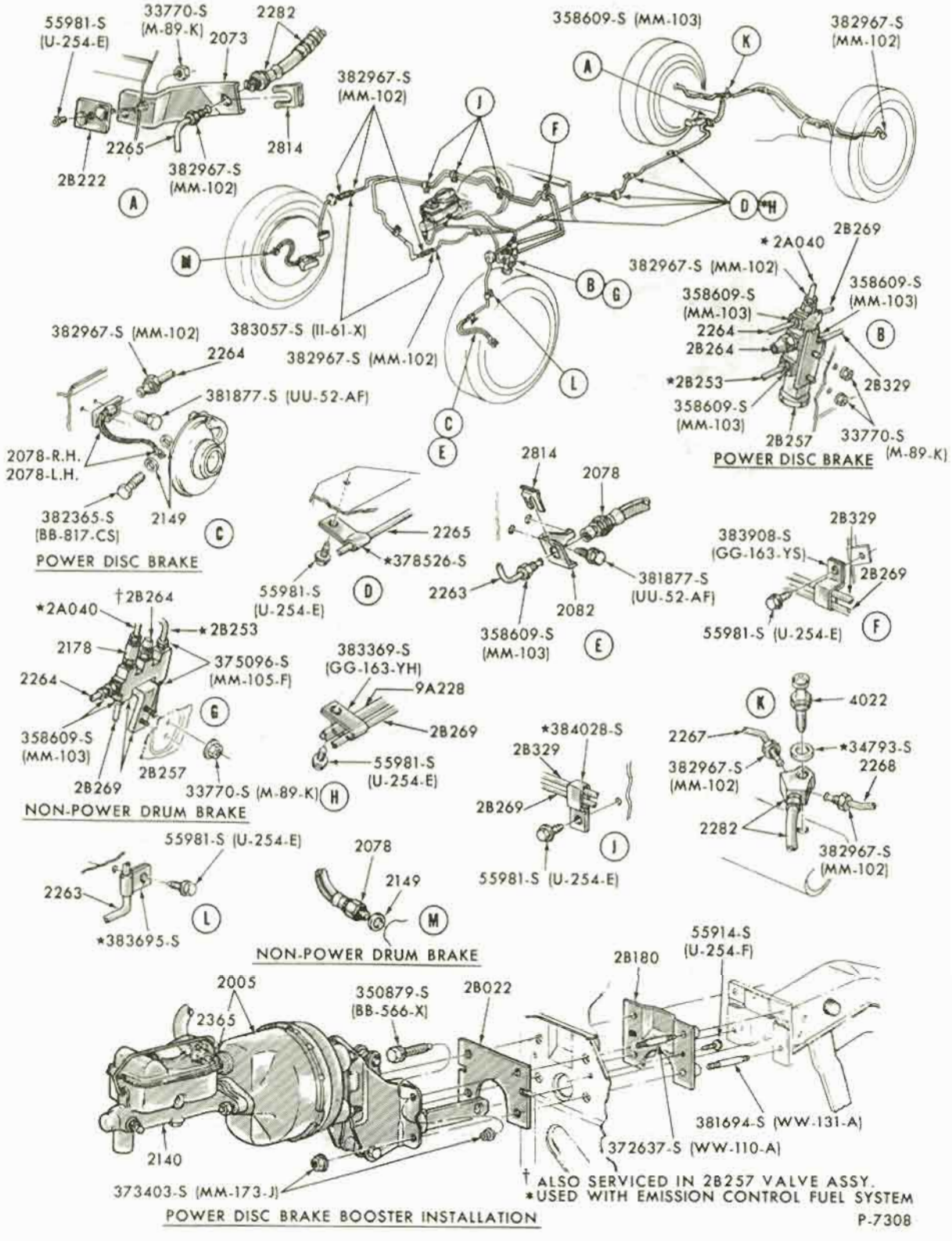

POWER DISC BRAKE BOOSTER INSTALLATION

DISC & DRUM BRAKE SYSTEM
1970/71 FAIRLANE/TORINO

COPYRIGHT © 1975 — FORD MOTOR COMPANY — DEARBORN, MICHIGAN

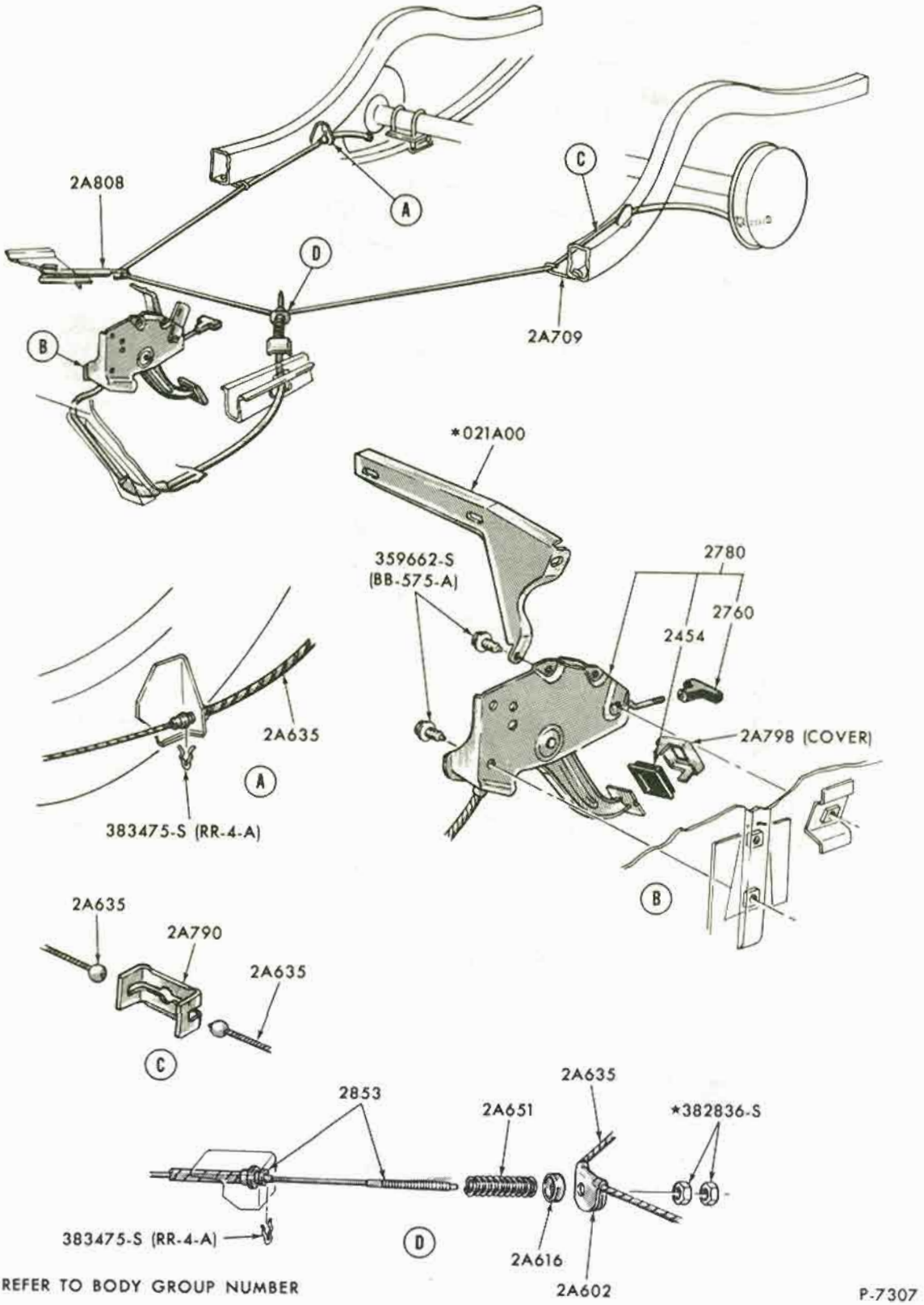

*REFER TO BODY GROUP NUMBER

P-7307

PARKING BRAKE SYSTEM
1970/71 FAIRLANE/TORINO

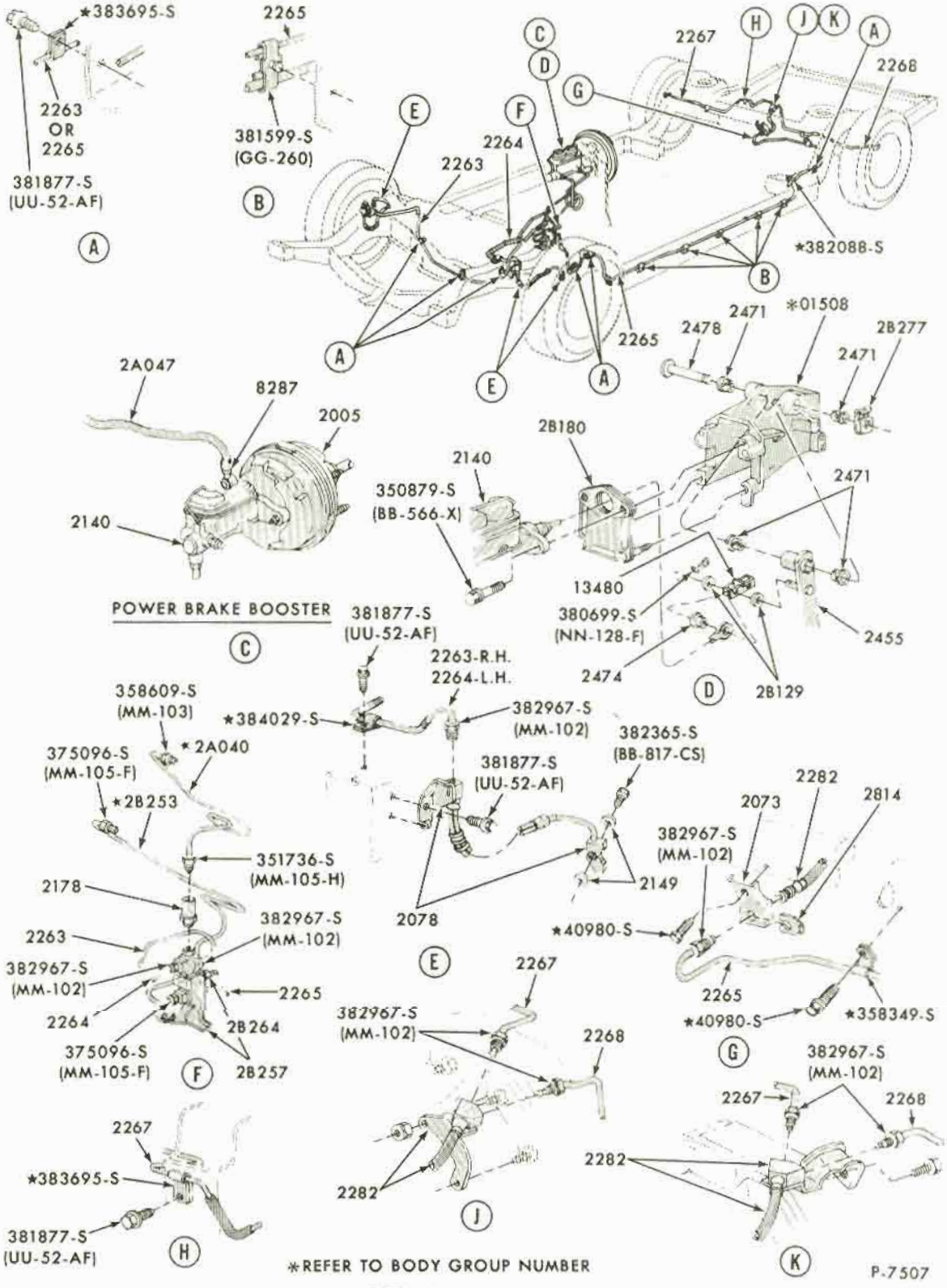

DRUM BRAKE SYSTEM
1970/72 FORD

COPYRIGHT © 1975 — FORD MOTOR COMPANY — DEARBORN, MICHIGAN

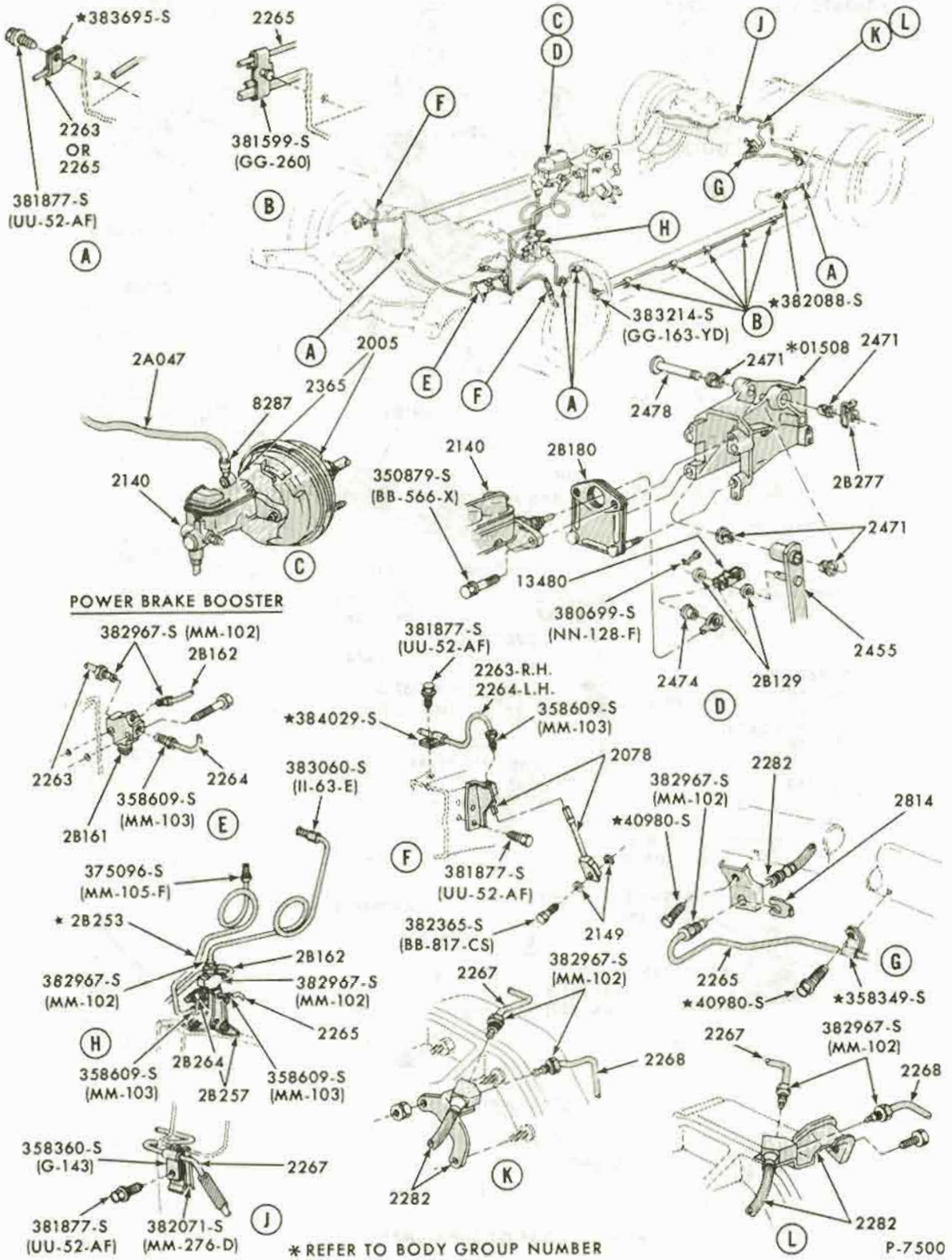
*383695-S
2263
OR
2265
381877-S
(UU-52-AF)
A
2265
381599-S
(GG-260)
B
C
D
F
J
K
L
G
H
A
*382088-S
383214-S
(GG-163-YD)
B
A
E
F
A
2A047
2005
2365
8287
2140
C
POWER BRAKE BOOSTER
2140
2B180
350879-S
(BB-566-X)
13480
*01508
2471
2471
2478
2B277
2471
380699-S
(NN-128-F)
2474
2B129
2455
D
382967-S (MM-102)
2B162
2263
2264
358609-S
(MM-103)
2B161
E
381877-S
(UU-52-AF)
2263-R.H.
2264-L.H.
*384029-S
358609-S
(MM-103)
2078
383060-S
(II-63-E)
F
381877-S
(UU-52-AF)
2282
382967-S
(MM-102)
*40980-S
2814
382365-S
(BB-817-CS)
2149
375096-S
(MM-105-F)
* 2B253
2B162
382967-S
(MM-102)
382967-S
(MM-102)
2265
H
358609-S
(MM-103)
2B264
2B257
358609-S
(MM-103)
2267
382967-S
(MM-102)
2265
*40980-S
G
*358349-S
2267
382967-S
(MM-102)
2268
2268
K
2282
358360-S
(G-143)
2267
381877-S
(UU-52-AF)
382071-S
(MM-276-D)
J
2267
382967-S
(MM-102)
2268
2282
L
* REFER TO BODY GROUP NUMBER
P-7500

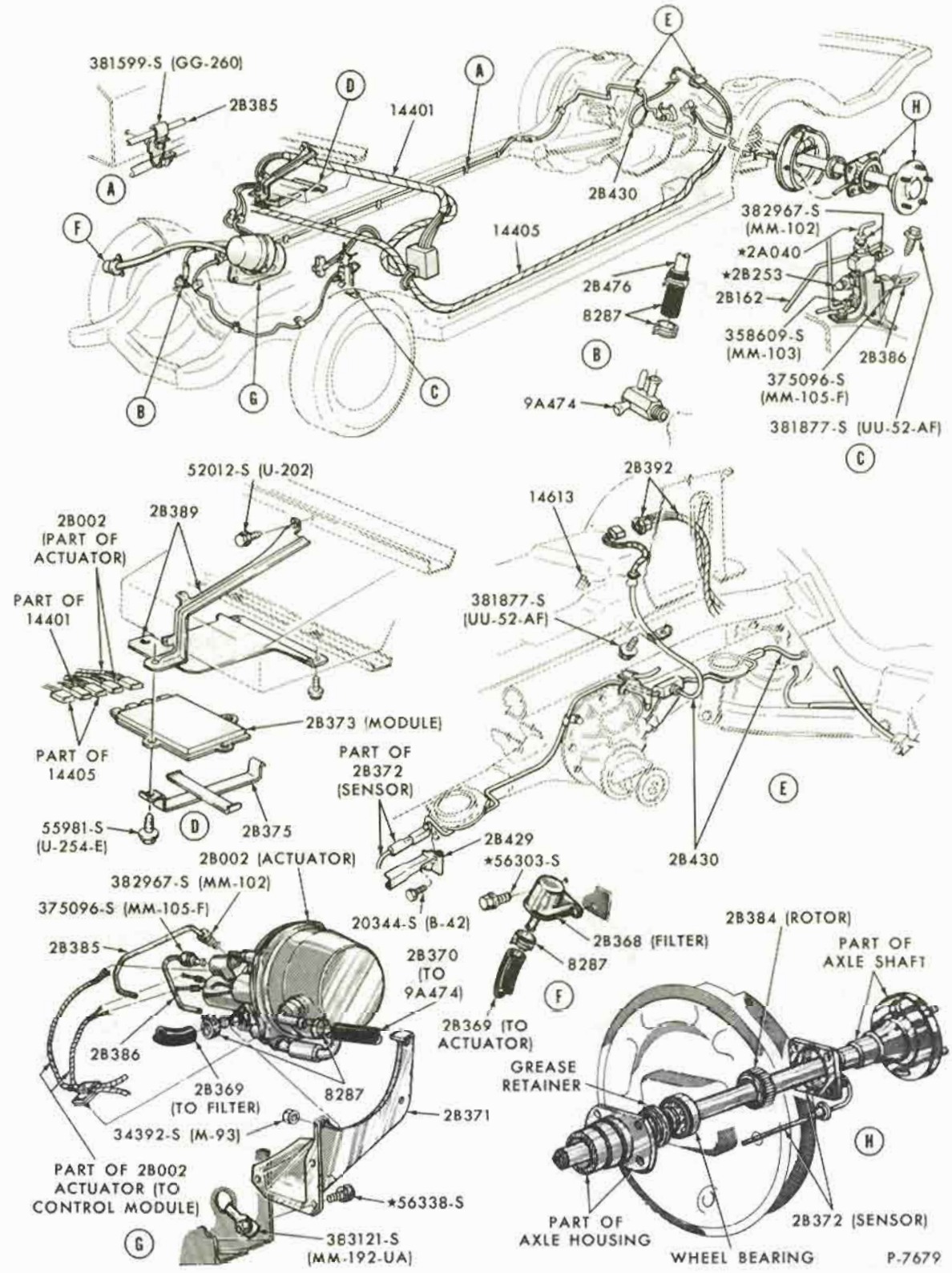

BRAKE ANTI-SKID CONTROL SYSTEM
1970 THUNDERBIRD - "Before 1/12/70"

COPYRIGHT © 1975 — FORD MOTOR COMPANY — DEARBORN, MICHIGAN

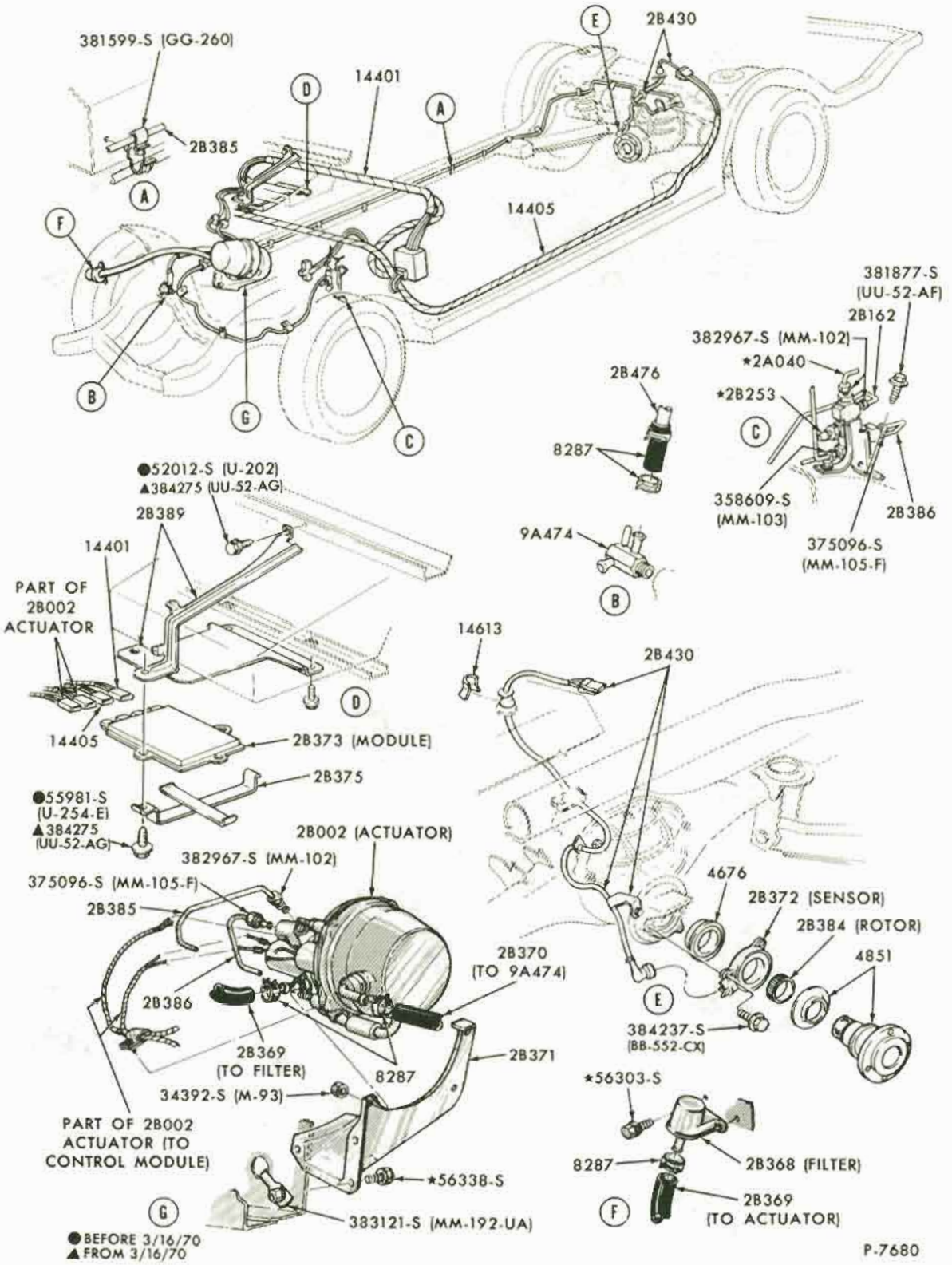

BRAKE ANTI-SKID CONTROL SYSTEM (SURE-TRACK)
1970/71 THUNDERBIRD - "From 1/12/70"

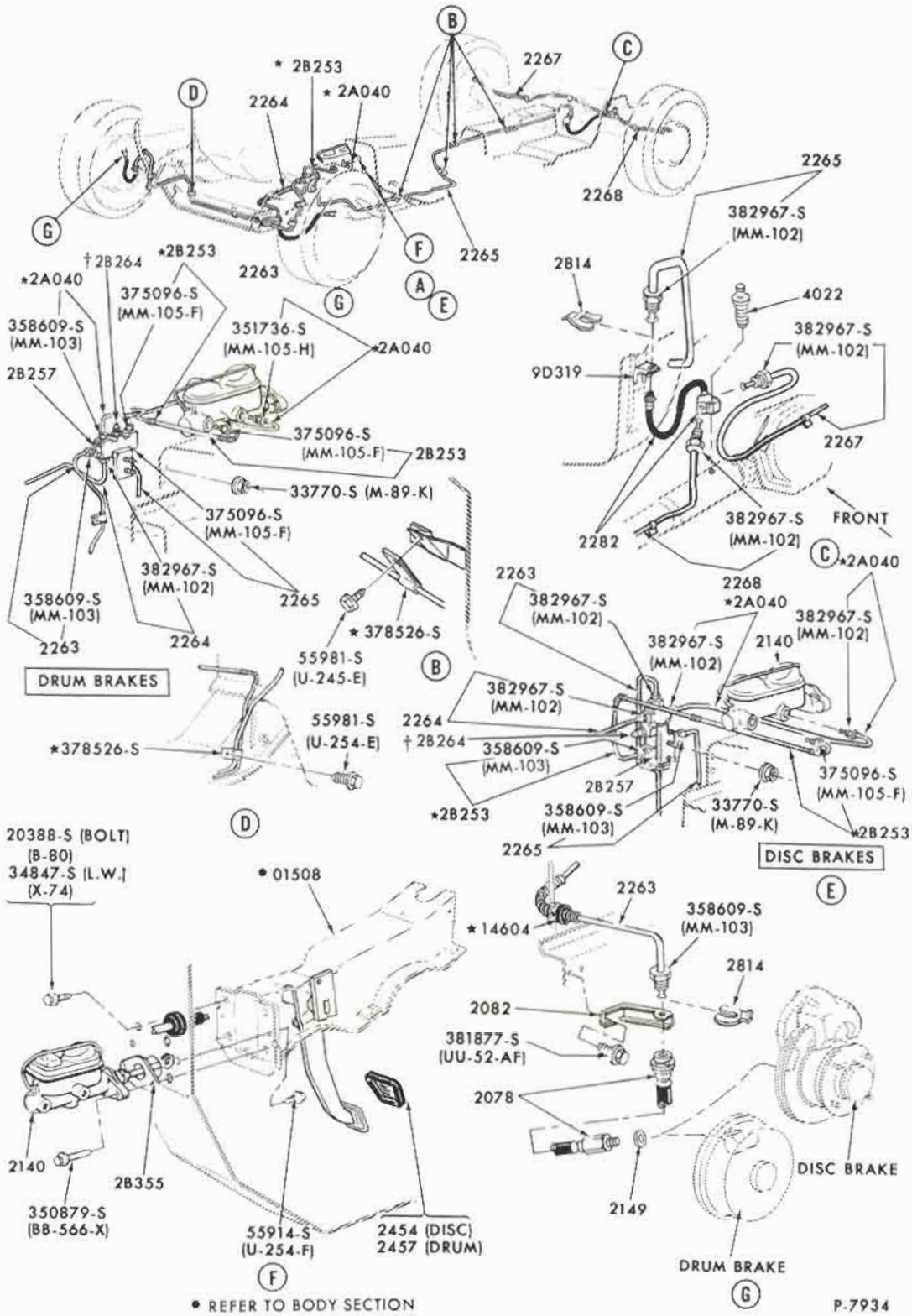

• REFER TO BODY SECTION
† ALSO SERVICED IN 2B257 VALVE ASSY.

DISC and DRUM BRAKE SYSTEM
1971/72 PINTO

COPYRIGHT © 1975 — FORD MOTOR COMPANY — DEARBORN, MICHIGAN

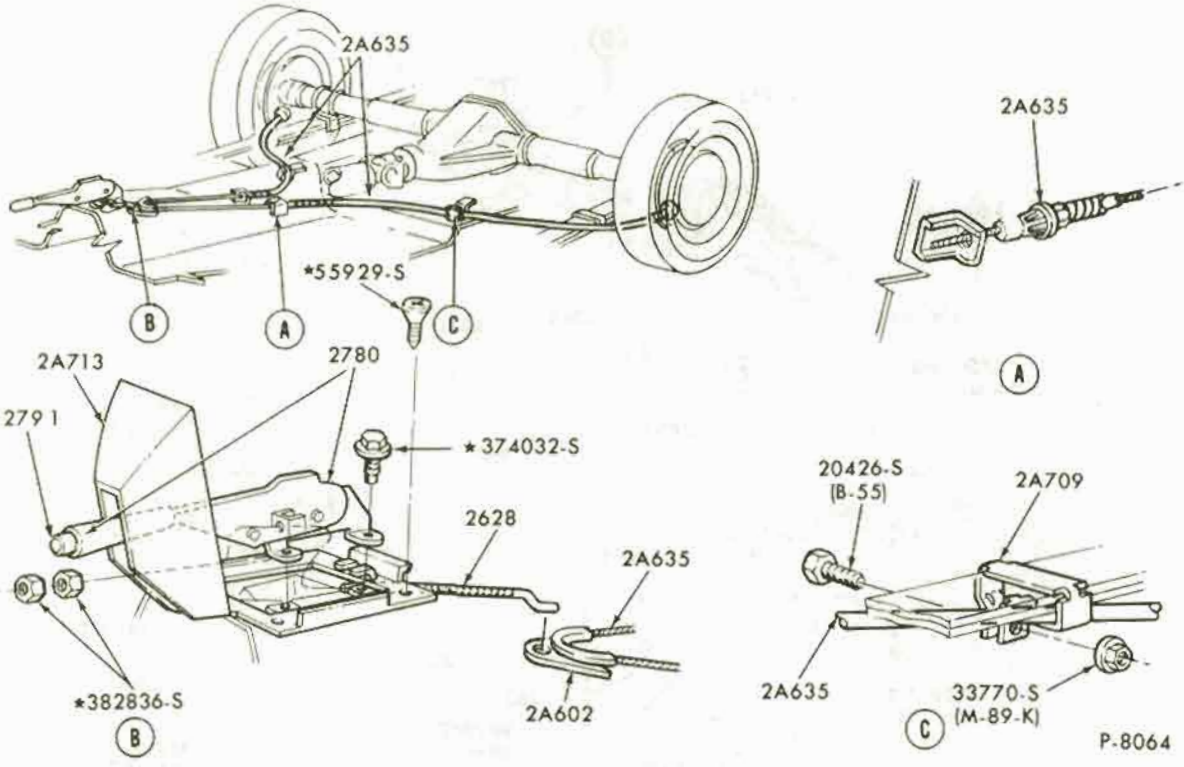

PARKING BRAKE SYSTEM
1971/72 PINTO

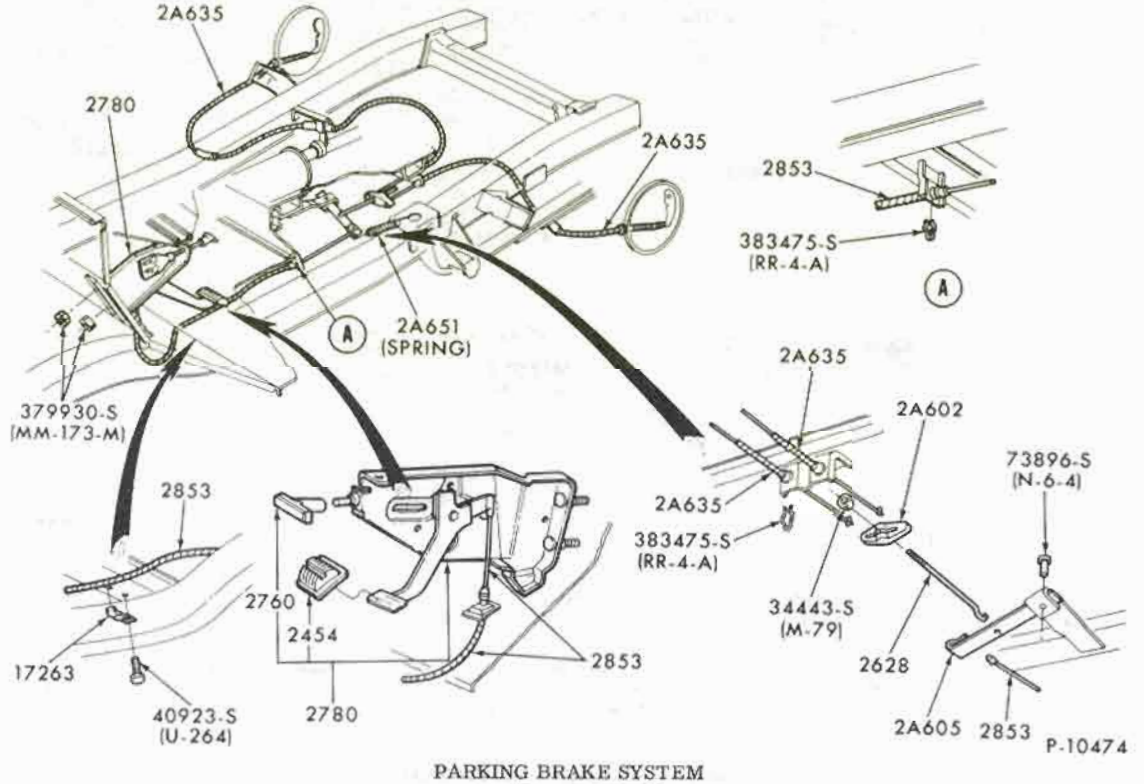

PARKING BRAKE SYSTEM
1971/72 BRONCO

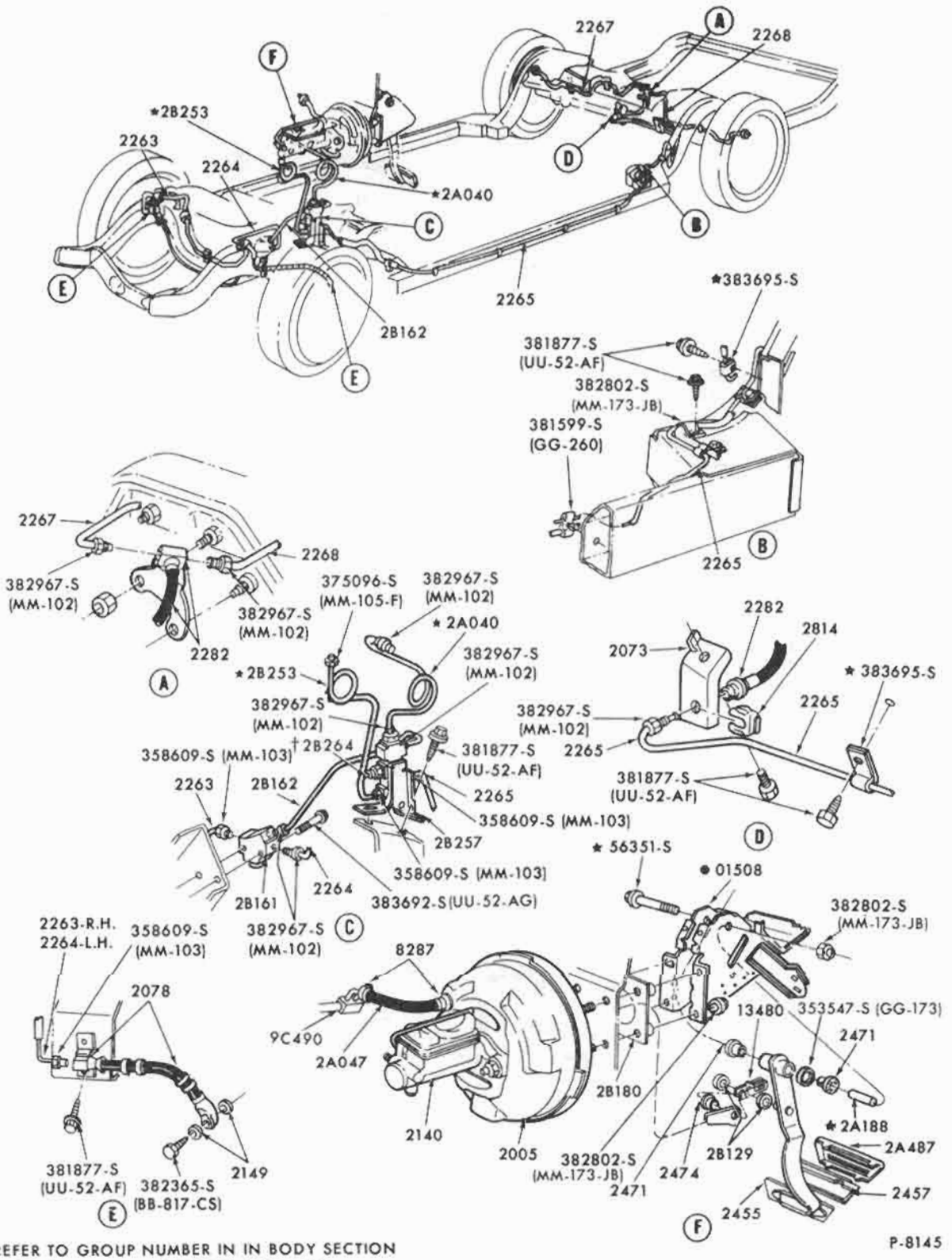

● REFER TO GROUP NUMBER IN IN BODY SECTION

† ALSO SERVICED IN 2B257 VALVE ASSY.

P-8145

DISC BRAKE SYSTEM
1971 THUNDERBIRD

COPYRIGHT © 1975 — FORD MOTOR COMPANY — DEARBORN, MICHIGAN

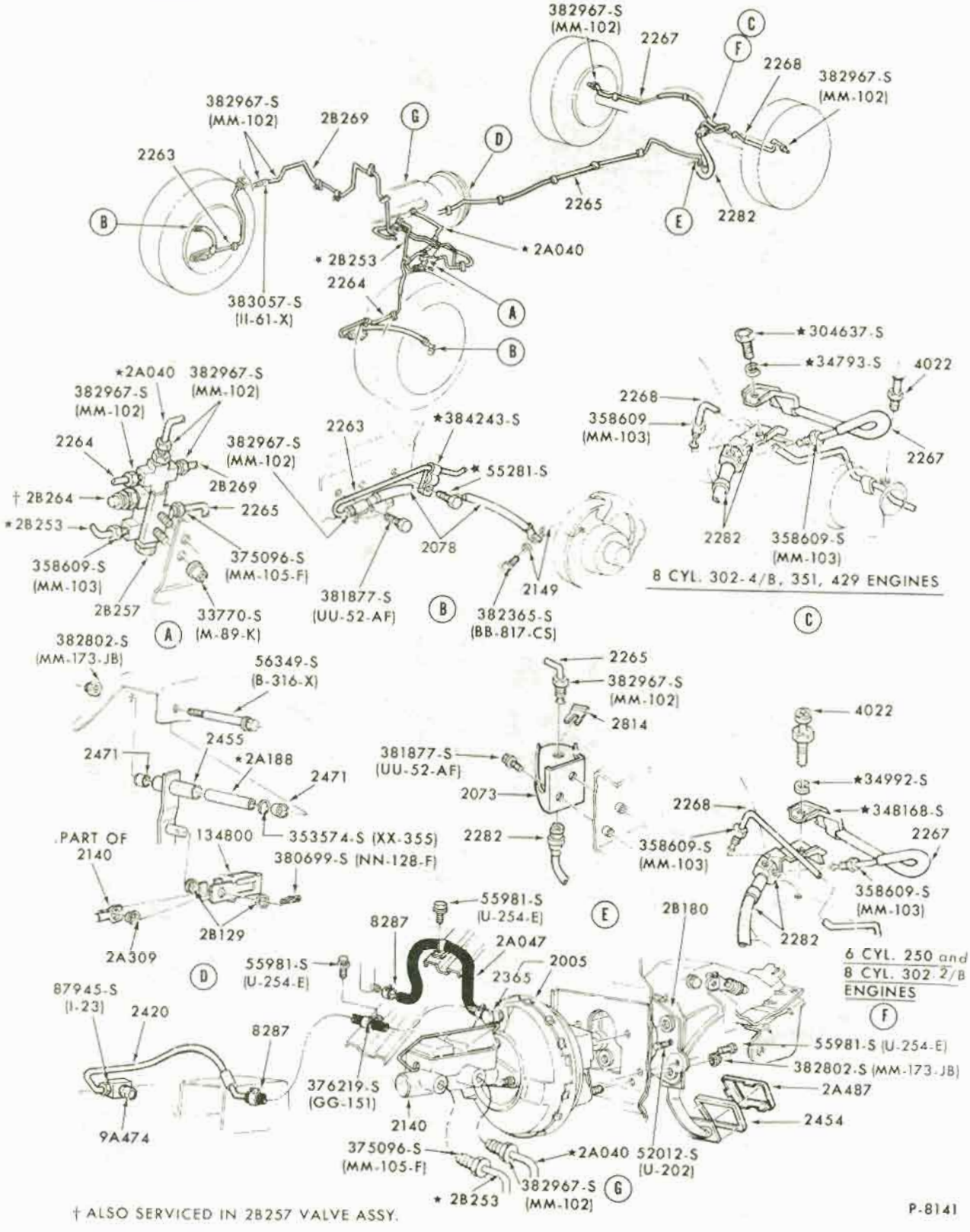

† ALSO SERVICED IN 2B257 VALVE ASSY.

P-8141

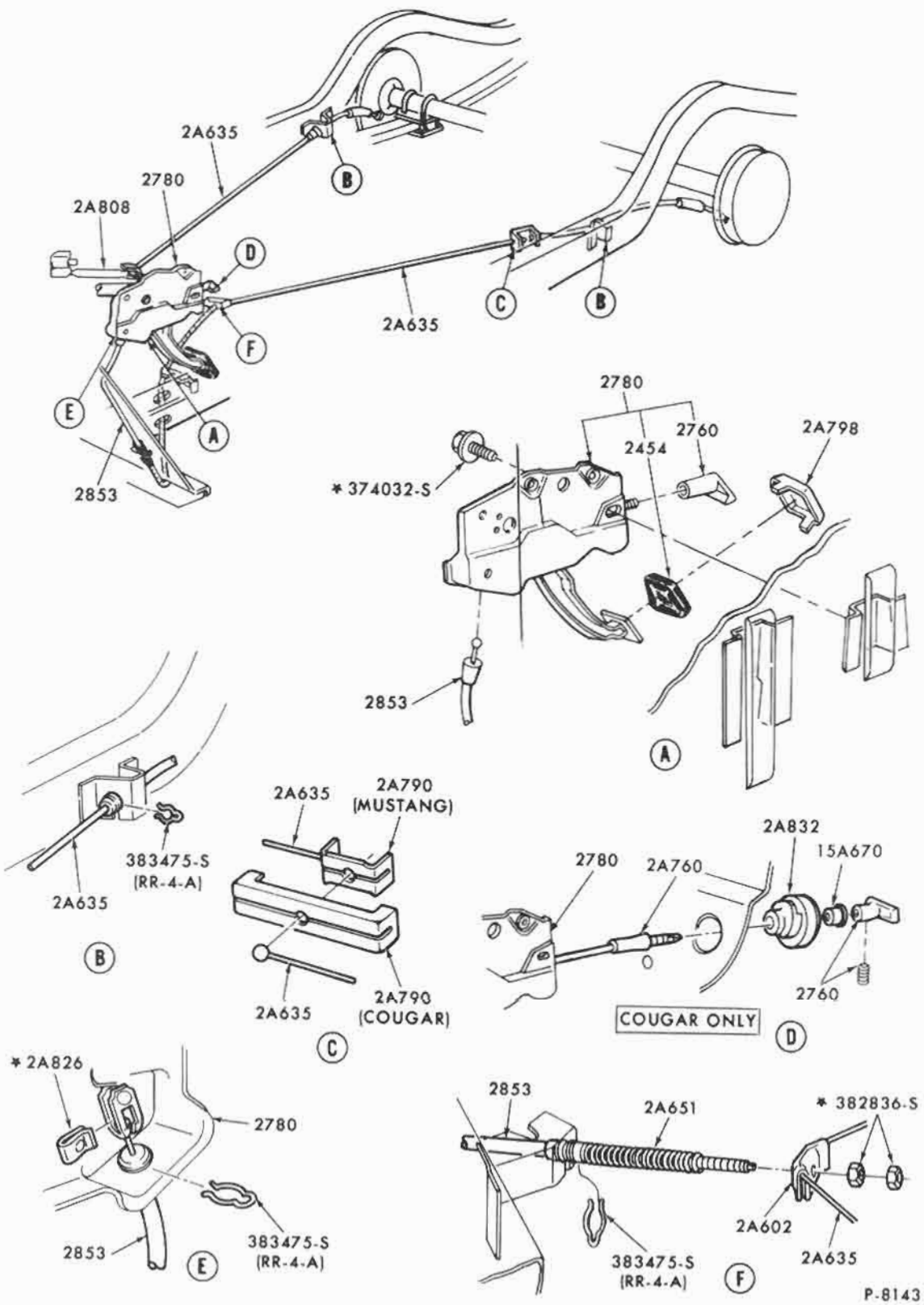

PARKING BRAKE SYSTEM
1971/72 MUSTANG

COPYRIGHT © 1975 — FORD MOTOR COMPANY — DEARBORN, MICHIGAN

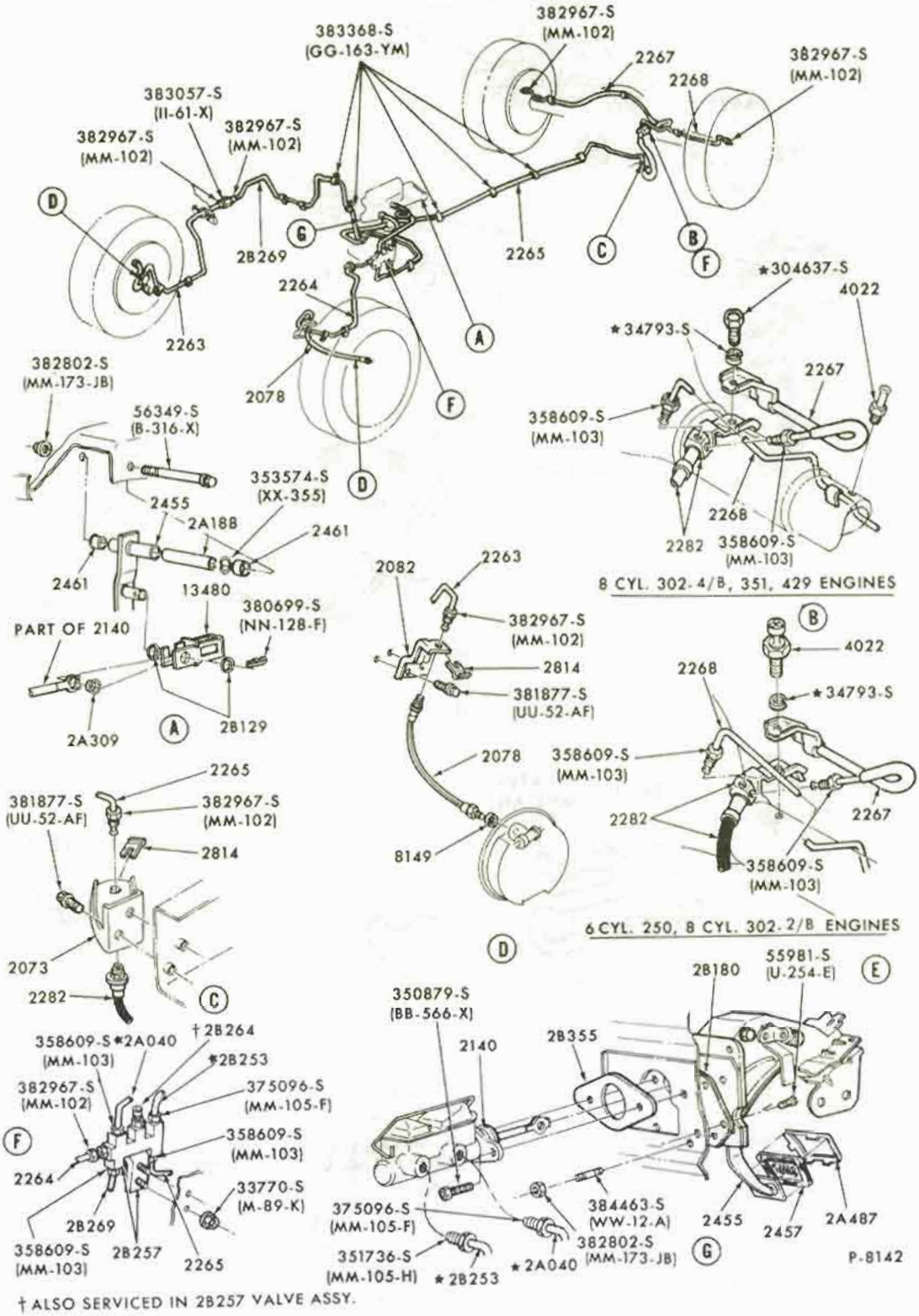

†ALSO SERVICED IN 2B257 VALVE ASSY.

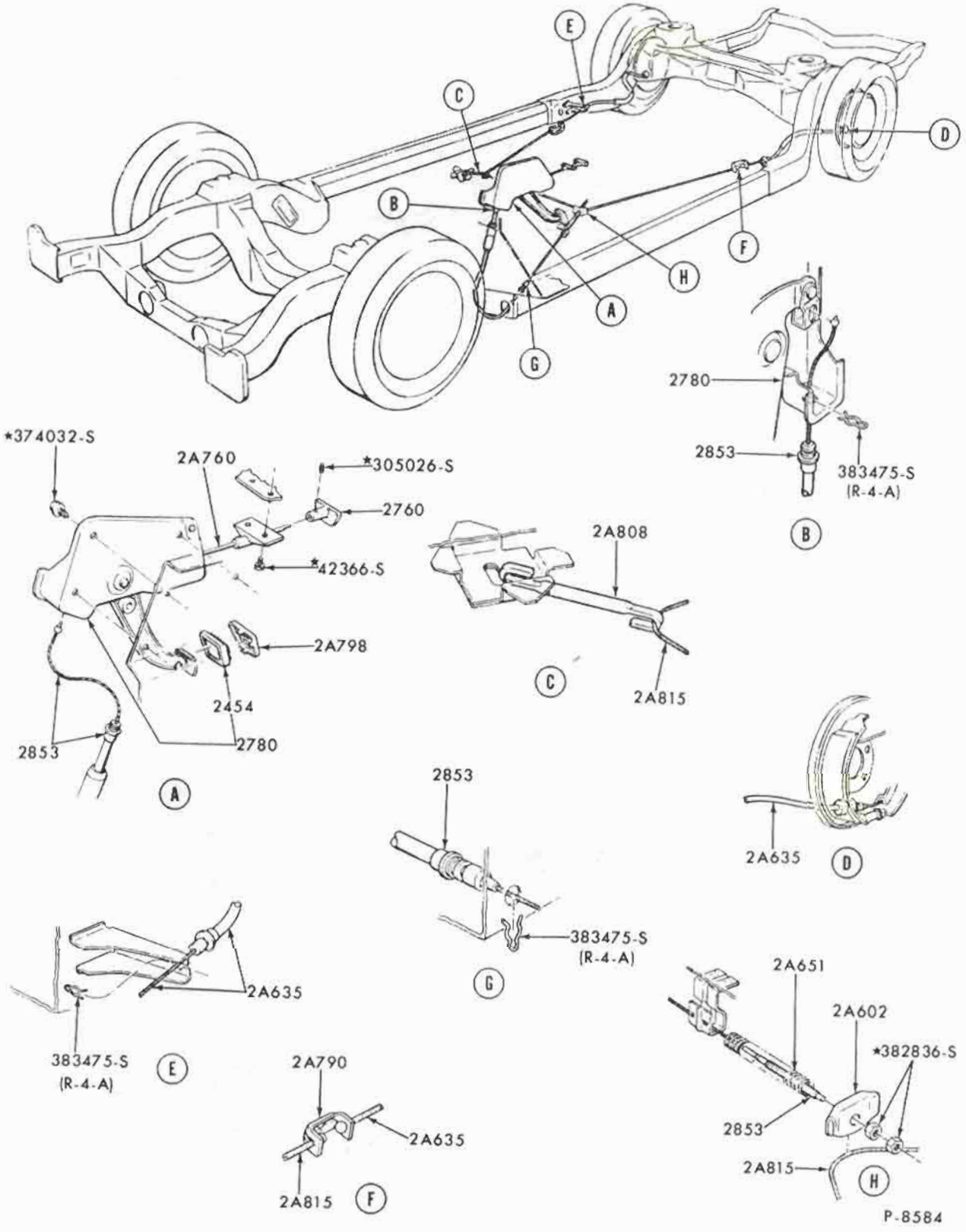

PARKING BRAKE SYSTEM
1972 TORINO

COPYRIGHT © 1975 — FORD MOTOR COMPANY — DEARBORN, MICHIGAN

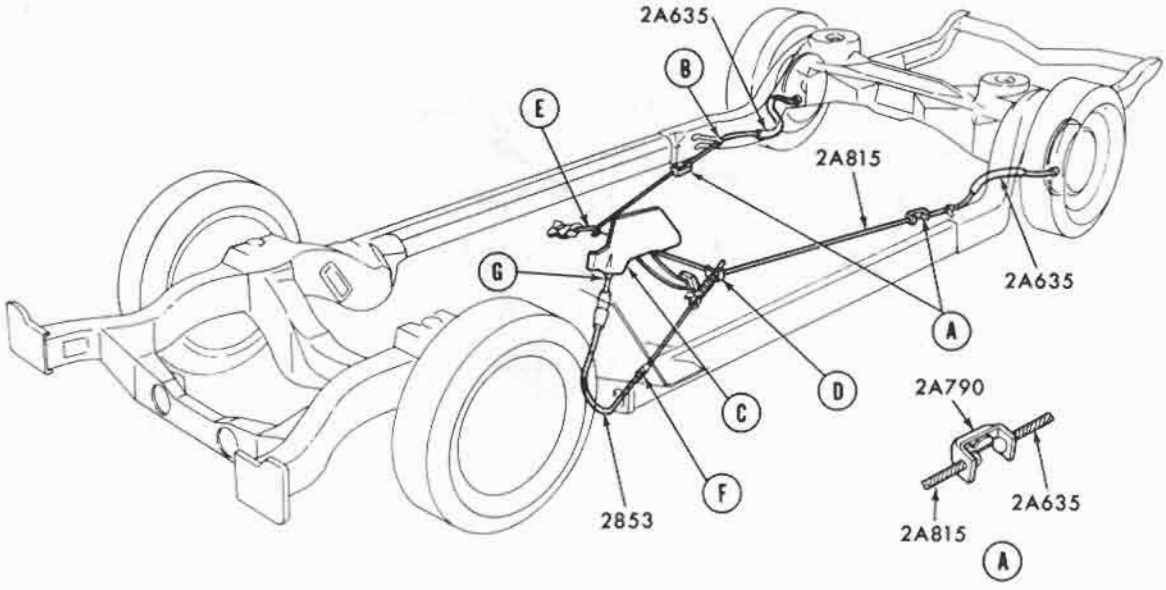
2A635
B
E
2A815
G
2A635
A
D
C
F
2853
2A790
2A635
2A815
A

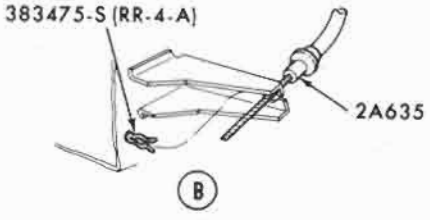
383475-S (RR-4-A)
2A635
B

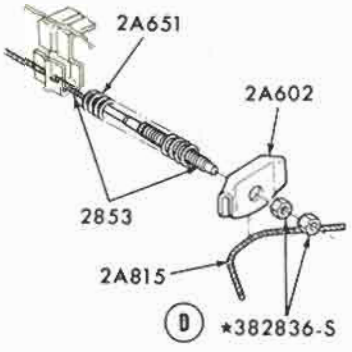
2A651
2A602
2853
2A815
D
★382836-S

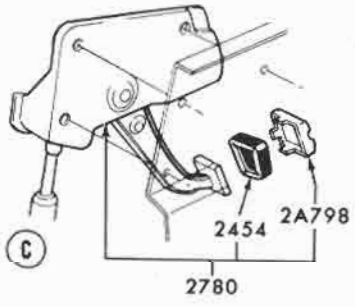
2454
2A798
C
2780

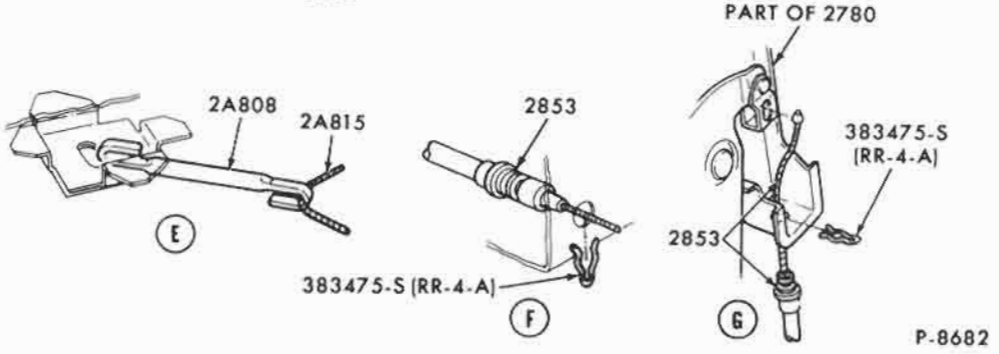
PART OF 2780
2A808
2A815
E
2853
383475-S (RR-4-A)
F
383475-S (RR-4-A)
2853
G
P-8682

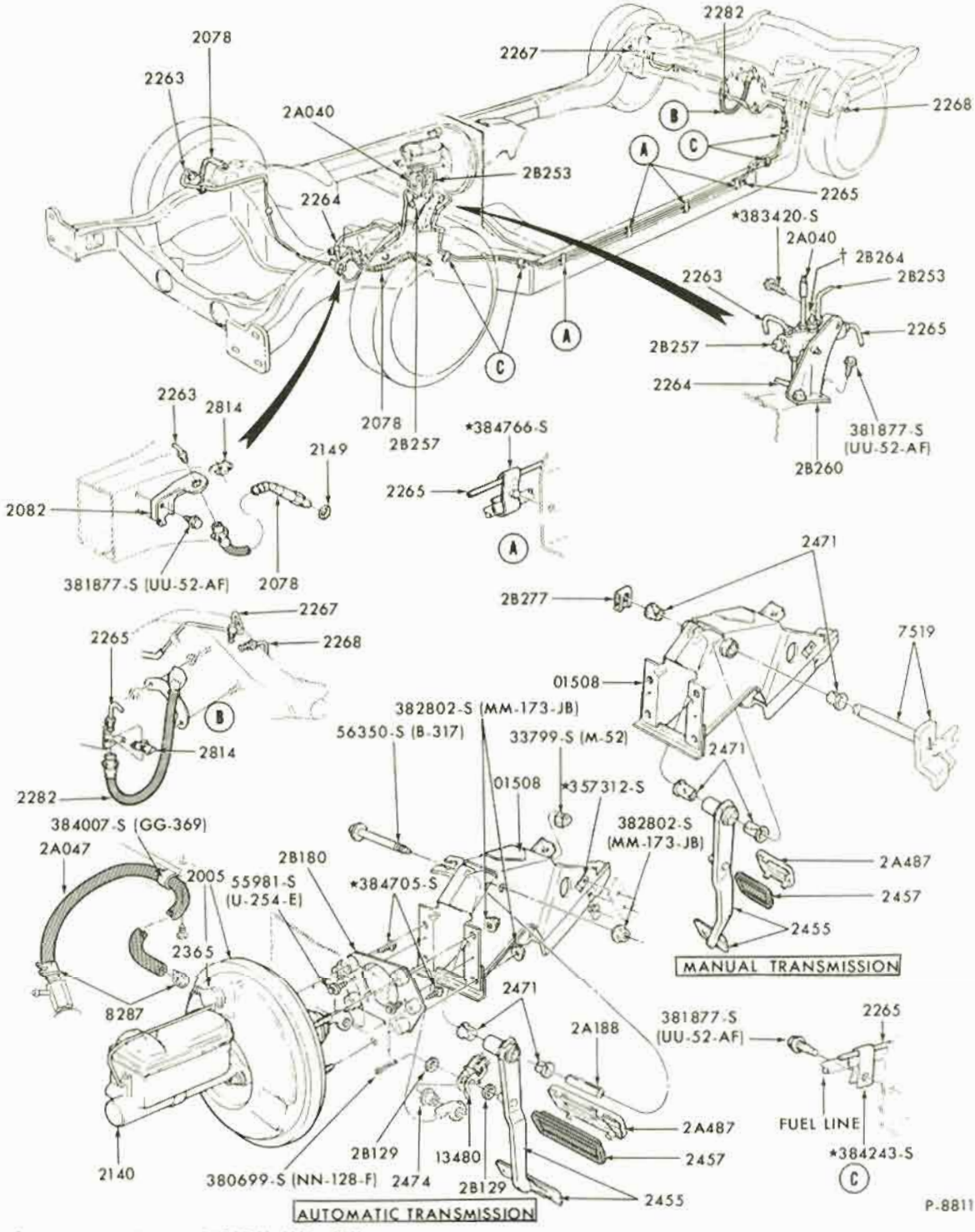

† ALSO SERVICED IN 2B257 VALVE ASSY.

May, 1975 COPYRIGHT © 1975 — FORD MOTOR COMPANY — DEARBORN, MICHIGAN

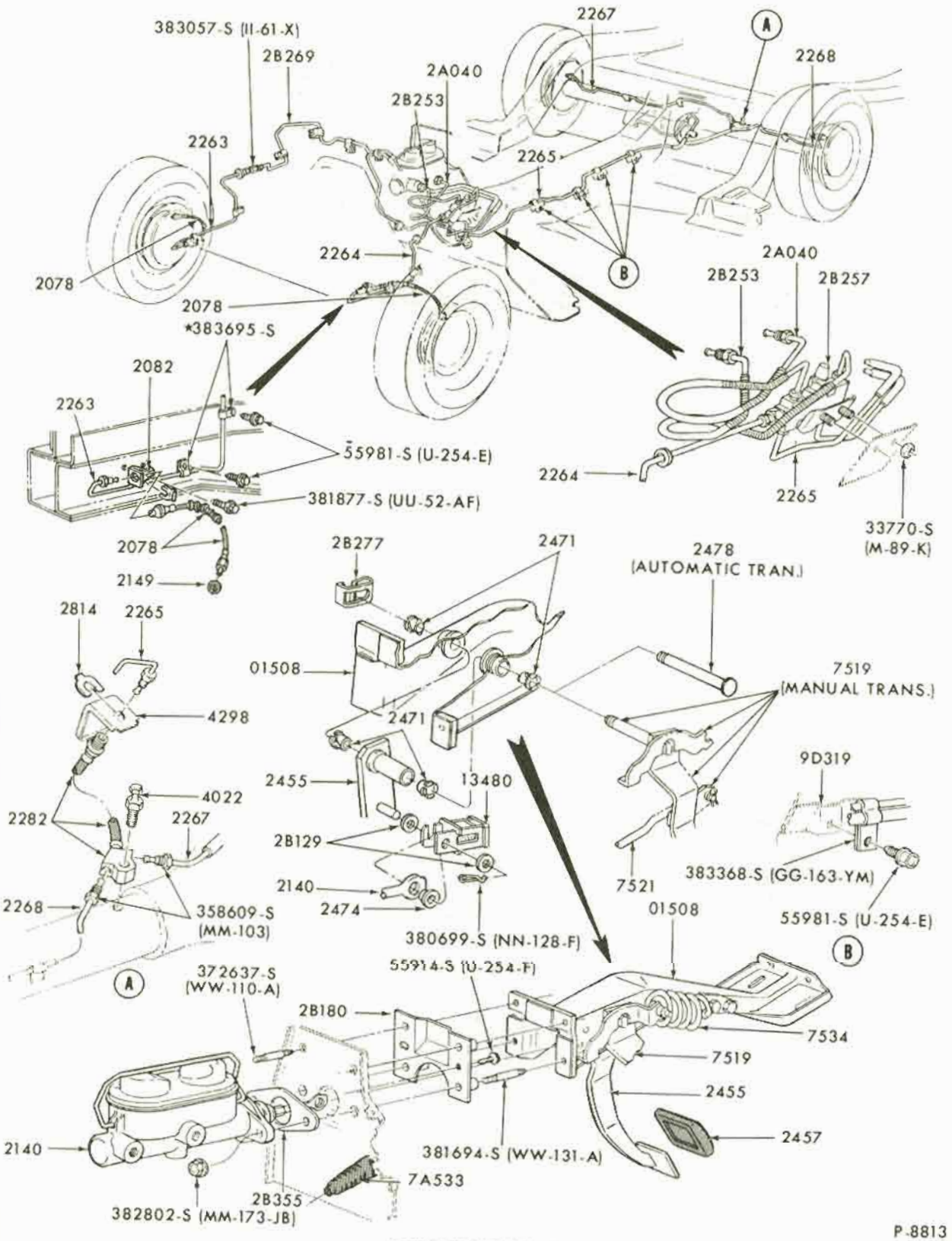

P-8813

DRUM BRAKE SYSTEM
1972 MAVERICK

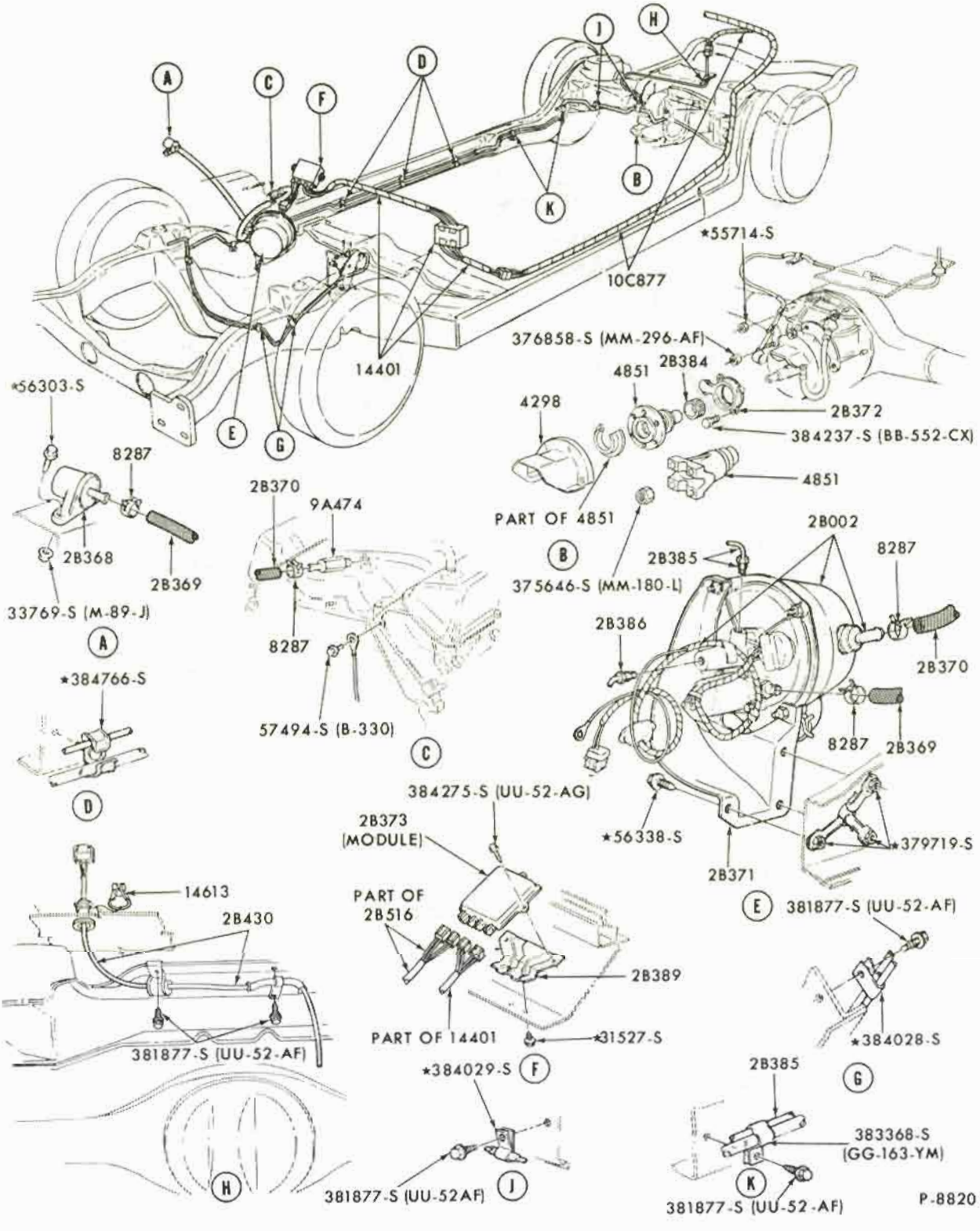

BRAKE ANTI-SKID CONTROL SYSTEM (SURE-TRACK)
1972 THUNDERBIRD

COPYRIGHT © 1975 — FORD MOTOR COMPANY — DEARBORN, MICHIGAN

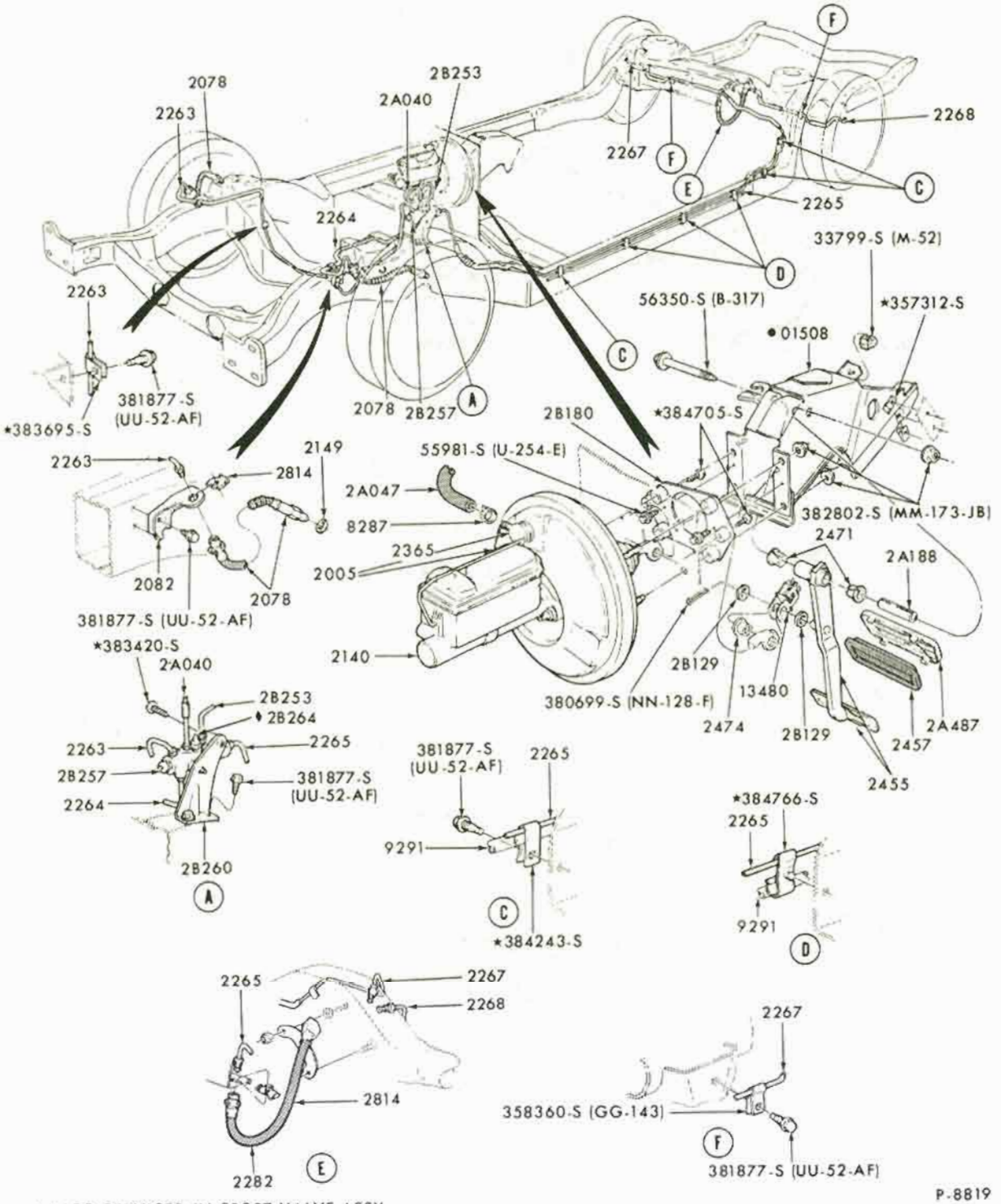

P-8819

♦ ALSO SERVICED IN 2B257 VALVE ASSY.
• REFER TO BODY SECTION

INDEX

TITLE	SECTION	PAGE	ILLUS. NO.
1967			
B (FAIRLANE)			
FRONT SUSPENSION - arms, shock absorbers, spindles, springs, stabilizer	30	3	P-4945
STEERING			
Manual steering system			
Steering gear details	36.1	6	P-9859
Steering linkage	32	4	P-5959
Power steering system	36	3	P-4986
Control valve details	36.2	5	P-7454
Cylinder details	36.2	6	P-4180
Pump details	36.2	3	P-5615
Steering gear details	36.1	6	P-9859
Steering linkage	36	3	P-4986
Steering column - automatic transmission - column shift	A72	4	P-5001
- floor shift	35	3	P-5138
- manual transmission - column shift	72	5	P-5000
- floor shift	35	3	P-5138
Steering wheel & horn ring - except wood grain	138	5	P-5745
- wood grain	138	6	P-5747
F (MUSTANG)			
FRONT SUSPENSION - arms, shock absorbers, spindles, springs, stabilizer	30	3	P-4945
STEERING			
Manual steering system			
Steering gear details	36.1	6	P-9859
Steering linkage	32	4	P-5959
Power steering system	36	10	P-5714
Control valve details	36.2	5	P-7454
Cylinder details	36.2	6	P-4180
Pump details	36.2	3	P-5615
Steering gear details	36.1	6	P-9859
Steering linkage	36	10	P-5714
Steering column - fixed wheel	35	6	P-5710
- tilt wheel	35	5	P-5622
Steering wheel & horn ring - except wood grain	138	5	P-5746
- wood grain	138	6	P-5747

COPYRIGHT © 1975 — FORD MOTOR COMPANY — DEARBORN, MICHIGAN

INDEX

TITLE	SECTION	PAGE	ILLUS. NO.
1967			
S (THUNDERBIRD)			
FRONT SUSPENSION - arms, shock absorbers, spindles, springs, stabilizer	30	1	P-4545
STEERING			
Power steering system	36	11	P-5618
Pump details	36.2	3	P-5615
Steering gear details	36.1	2	P-4577
Steering linkage	36	11	P-5618
Steering column - automatic transmission - column shift	A72	9	P-5493
Steering wheel & horn ring	138	4	P-5743
U (BRONCO)			
FRONT AXLE	30	7	P-5312
FRONT SUSPENSION - air spring installation	30	12	P-10676
- arms, shock absorbers, springs	30	6	P-4938
- spindles	30	7	P-5312
STEERING			
Manual steering system			
Steering gear details	36.1	6	P-9981
Steering linkage	30	6	P-4938
Steering column - manual transmission - column shift	35	7	P-4962
Steering wheel & horn ring	138	3	P-4953
X (FALCON)			
FRONT SUSPENSION - arms, shock absorbers, spindles, springs, stabilizer	30	3	P-4945
STEERING			
Manual steering system			
Steering gear details	36.1	6	P-9859
Steering linkage	32	4	P-5959
Power steering system	36	3	P-4986
Control valve details	36.2	5	P-7454
Cylinder details	36.2	6	P-4180
Pump details	36.2	3	P-5615
Steering gear details	36.1	6	P-9859
Steering linkage	36	3	P-4986
Steering column - automatic transmission - column shift	A72	4	P-5001
- floor shift	35	3	P-5138
- manual transmission - column shift	72	5	P-5000
- floor shift	35	3	P-5138
Steering wheel & horn ring - except wood grain	138	5	P-5745
- wood grain	138	6	P-5747
1968			
A (FORD)			
FRONT SUSPENSION - arms, shock absorbers, spindles, springs, stabilizer	30	1	P-4545
STEERING			
Manual steering system			
Steering gear details	36.1	1	P-4607
Steering linkage - 6 cyl.	36	8	P-5616
- 8 cyl.	36	9	P-5617
Power steering system - 6 cyl.	36	8	P-5616
- 8 cyl.	36	9	P-5617
Pump details	36.2	3	P-5615
Steering gear details - Ford type	36.1	2	P-4577
- Saginaw type	36.1	3	P-4723
Steering linkage - 6 cyl.	36	8	P-5616
- 8 cyl.	36	9	P-5617

INDEX

TITLE	SECTION	PAGE	ILLUS. NO.
1968			
A (FORD) - continued			
Steering column - automatic trans. - column shift - fixed wheel	A72	10	P-6017
- tilt wheel	A72	11	P-5986
- floor shift - fixed wheel	35	8	P-5984
- tilt wheel	35	9	P-6016
- manual trans. - column shift	72	8	P-5985
- floor shift - fixed wheel	35	8	P-5984
- tilt wheel	35	9	P-6016
Steering wheel & horn ring	138	7	P-6025
B (FAIRLANE/TORINO)			
FRONT SUSPENSION - arms, shock absorbers, spindles, springs, stabilizer	30	8	P-6927
STEERING			
Manual steering system			
Steering linkage	32	4	P-5959
Steering gear details	36.1	6	P-9859
Power steering system	36	3	P-4986
Control valve details	36.2	5	P-7454
Cylinder details	36.2	6	P-4180
Pump details	36.2	3	P-5615
Steering gear details	36.1	6	P-9859
Steering linkage	36	3	P-4986
Steering column - automatic transmission - column shift	A72	14	P-6020
- floor shift	35	10	P-6018
- manual transmission - column shift	72	9	P-6019
- floor shift	35	10	P-6018
Steering wheel & horn ring	138	7	P-6025
F (MUSTANG)			
FRONT SUSPENSION - arms, shock absorbers, spindles, springs, stabilizer	30	8	P-6927
STEERING			
Manual steering system			
Steering linkage	32	4	P-5959
Steering gear details	36.1	6	P-9859
Power steering system	36	10	P-5714
Control valve details	36.2	5	P-7454
Cylinder details	36.2	6	P-4180
Pump details	36.2	3	P-5615
Steering gear details	36.1	6	P-9859
Steering linkage	36	10	P-5714
Steering column - floor shift - tilt wheel	35	11	P-5769
- fixed wheel	35	12	P-5770
Steering wheel & horn ring	138	7	P-6025
S (THUNDERBIRD)			
FRONT SUSPENSION - arms, shock absorbers, spindles, springs, stabilizer	30	1	P-4545
STEERING			
Power steering system	36	11	P-5618
Pump details	36.2	3	P-5615
Steering gear details	36.1	2	P-4577
Steering linkage	36	11	P-5618
Steering column - automatic transmission - column shift - fixed	A72	15	P-6021
- tilt	A72	16	P-6022
Steering wheel & horn ring - except with speed control	138	7	P-6025
- with speed control	97.1	16	P-6211

COPYRIGHT © 1975 — FORD MOTOR COMPANY — DEARBORN, MICHIGAN

INDEX

TITLE	SECTION	PAGE	ILLUS. NO.
1968			
U (BRONCO)			
FRONT AXLE	30	7	P-5312
FRONT SUSPENSION - air spring installation	30	12	P-10676
- arms, shock absorbers, springs	30	6	P-4938
- spindles	30	7	P-5312
STEERING			
Manual steering system			
Steering gear details	36.1	6	P-9981
Steering linkage	30	6	P-4938
Steering column - manual transmission - column shift	35	7	P-4962
Steering shock absorber installation	35	7	P-4962
Steering wheel & horn ring	138	3	P-4953
X (FALCON)			
FRONT SUSPENSION - arms, shock absorbers, spindles, springs, stabilizer	30	8	P-6927
STEERING			
Manual steering system			
Steering gear details	36.1	6	P-9859
Steering linkage	32	4	P-5959
Power steering system	36	3	P-4986
Control valve details	36.2	5	P-7454
Cylinder details	36.2	6	P-4180
Pump details	36.2	3	P-5615
Steering gear details	36.1	6	P-9859
Steering linkage	36	3	P-4986
Steering column - automatic transmission - column shift	A72	14	P-6020
- floor shift	35	10	P-6018
- manual transmission - column shift	72	9	P-6019
- floor shift	35	10	P-6018
Steering wheel & horn ring	138	7	P-6025
1969			
A (FORD)			
FRONT SUSPENSION - arms, shock absorbers, spindles, springs stabilizer	30	1	P-4545
STEERING			
Manual steering system			
Steering linkage - 6 cyl.	36	8	P-5616
- 8 cyl.	36	9	P-5617
Steering gear details	36.1	1	P-4607
Power steering system - 6 cyl.	36	8	P-5616
- 8 cyl.	36	9	P-5617
Pump details	36.2	3	P-5615
Steering gear details - Ford type	36.1	2	P-4577
- Saginaw type	36.1	3	P-4723
Steering linkage - 6 cyl.	36	8	P-5616
- 8 cyl.	36	9	P-5617
Steering column - automatic trans. - column shift - fixed wheel	A72	12	P-6783
- tilt wheel	A72	13	P-6784
- floor shift - fixed wheel	35	13	P-6786
- tilt wheel	35	14	P-6787
- manual trans. - column shift	72	10	P-6785
- floor shift - fixed wheel	35	13	P-6786
- tilt wheel	35	14	P-6787
Steering wheel & horn ring - 2 spoke - w/o speed control	138	7	P-6025
- w/ speed control	97.1	18	P-6686
- 3 spoke (rim blow)	138	7	P-6823

INDEX

TITLE	SECTION	PAGE	ILLUS. NO.
1969			
B (FAIRLANE/TORINO)			
FRONT SUSPENSION - arms, shock absorbers, spindles, springs, stabilizer	30	8	P-6927
STEERING			
Manual steering system			
Steering gear details	36.1	6	P-9859
Steering linkage	32	4	P-5959
Power steering system			
Control valve details	36.2	5	P-7454
Cylinder details	36.2	6	P-4180
Pump details	36.2	3	P-5615
Pump installation - 6 cyl.	36.4	4	P-6946
- 8 cyl.	36.4	5	P-6947
Steering gear details	36.1	6	P-9859
Steering linkage	36.3	2	P-6906
Steering column - automatic transmission - column shift	A72	14	P-6020
- floor shift	35	10	P-6018
- manual transmission - column shift	72	9	P-6019
- floor shift	35	10	P-6018
Steering wheel & horn ring - 2 spoke	138	7	P-6025
- 3 spoke (rim blow)	138	7	P-6823
F (MUSTANG)			
FRONT SUSPENSION - arms, shock absorbers, spindles, springs, stabilizer	30	8	P-6927
STEERING			
Manual steering system			
Steering gear details	36.1	6	P-9859
Steering linkage	32	4	P-5959
Power steering system			
Control valve details	36.2	5	P-7454
Cylinder details	36.2	6	P-4180
Pump details	36.2	3	P-5615
Pump installation - 6 cyl.	36.4	4	P-6946
- 8 cyl.	36.4	5	P-6947
Steering gear details	36.1	6	P-9859
Steering linkage	36.3	2	P-6906
Steering column - floor shift - fixed	35	15	P-6781
- tilt	35	16	P-6782
Steering wheel & horn ring - 2 spoke	138	7	P-6025
- 3 spoke (rim blow)	138	7	P-6823
S (THUNDERBIRD)			
FRONT SUSPENSION - arms, shock absorbers, spindles, springs, stabilizer	30	1	P-4545
STEERING			
Power steering system	36	11	P-5618
Pump details	36.2	3	P-5615
Steering gear details	36.1	2	P-4577
Steering linkage	36	11	P-5618
Steering column - automatic transmission - column shift - fixed	A72	15	P-6021
- tilt	A72	16	P-6022
Steering wheel & horn ring - 2 spoke - w/o speed control	138	7	P-6025
- w/ speed control	97.1	16	P-6211
- 3 spoke (rim blow)	138	7	P-6823

COPYRIGHT © 1975 — FORD MOTOR COMPANY — DEARBORN, MICHIGAN

INDEX

TITLE	SECTION	PAGE	ILLUS. NO.
1969			
U (BRONCO)			
FRONT AXLE	30	7	P-5312
FRONT SUSPENSION - air spring installation	30	12	P-10676
- arms, shock absorbers, springs	30	6	P-4938
- spindles	30	7	P-5312
STEERING			
Manual steering system			
Steering gear details	36.1	6	P-9981
Steering linkage	30	6	P-4938
Steering column - manual transmission - column shift	35	7	P-4962
Steering shock absorber installation	35	7	P-4962
Steering wheel & horn ring	138	3	P-4953
X (FALCON)			
FRONT SUSPENSION - arms, shock absorbers, spindles, springs, stabilizer	30	8	P-6927
STEERING			
Manual steering system			
Steering gear details	36.1	6	P-9859
Steering linkage	32	4	P-5959
Power steering system			
Control valve details	36.2	5	P-7454
Cylinder details	36.2	6	P-4180
Pump details	36.2	3	P-5615
Pump installation - 6 cyl.	36.4	4	P-6946
- 8 cyl.	36.4	5	P-6947
Steering linkage	36.3	2	P-6906
Steering gear details	36.1	6	P-9859
Steering column - automatic transmission - column shift	A72	14	P-6020
- floor shift	35	10	P-6018
- manual transmission - column shift	72	9	P-6019
- floor shift	35	10	P-6018
Steering wheel & horn ring - 2 spoke	138	7	P-6025
- 3 spoke (rim blow)	138	7	P-6823
1970			
A (FORD)			
FRONT SUSPENSION - arms, shock absorbers, spindles, springs, stabilizer	30	1	P-4545
STEERING			
Manual steering system			
Steering gear details	36.1	1	P-4607
Steering linkage	36.3	1	P-7362
Power steering system			
Pump details	36.2	3	P-5615
Pump installation - 6 cyl. 240	36.4	1	P-7364
- 8 cyl. 302,351	36.4	9	P-7366
- 8 cyl. 390,428	36.4	2	P-7367
- 8 cyl. 429	36.4	3	P-7369
Steering gear details	36.1	2	P-4577
Steering linkage	36.3	1	P-7362

INDEX

TITLE	SECTION	PAGE	ILLUS. NO.
1970			
A (FORD)			
STEERING - continued			
Steering column - automatic trans. - column shift - fixed wheel	A72	18	P-7220
- tilt wheel	A72	19	P-7241
- floor shift - fixed wheel	35	17	P-7243
- tilt wheel	35	18	P-7242
- manual trans. - column shift	72	12	P-7244
- floor shift - fixed wheel	35	17	P-7243
- tilt wheel	35	18	P-7242
Steering wheel - 2 spoke - w/o speed control	138	8	P-7513
- w/speed control	97.1	18	P-6686
- 3 spoke	138	8	P-7514
B (FAIRLANE/TORINO)			
B (FALCON) - FROM 1/2/70			
FRONT SUSPENSION-arms, shock absorbers, spindles, springs, stabilizer	30	8	P-6927
STEERING			
Manual steering system			
Steering gear details	36.1	6	P-9859
Steering linkage	32	4	P-5959
Power steering system			
Control valve details	36.2	5	P-7454
Cylinder details	36.2	6	P-4180
Pump details	36.2	3	P-5615
Pump installation - 6 cyl.	36.4	4	P-6946
- 8 cyl. 302, 351	36.4	6	P-7365
- 8 cyl. 429	36.4	7	P-7368
Steering gear details	36.1	6	P-9859
Steering linkage	36.3	2	P-6906
Steering column - automatic transmission - column shift	A72	20	P-7249
- floor shift	35	19	P-7248
- manual transmission - column shift	72	13	P-7247
- floor shift	35	19	P-7248
Steering wheel - 2 spoke	138	8	P-7513
- 3 spoke-rim blow-with cover	138	8	P-7514
- 3 spoke-rim blow-w/o cover	138	9	P-10685
F (MUSTANG)			
FRONT SUSPENSION-arms, shock absorbers, spindles, springs, stabilizer	30	8	P-6927
STEERING			
Manual steering system			
Steering gear details	*36.1*	*6*	*P-9859*
Steering linkage	32	4	P-5959
Power steering system			
Control valve details	36.2	5	P-7454
Cylinder details	36.2	6	P-4180
Pump details	36.2	3	P-5615
Pump installation - 6 cyl.	36.4	4	P-6946
- 8 cyl. 302, 351	36.4	6	P-7365
- 8 cyl. 428	36.4	5	P-6947
Steering gear details	36.1	6	P-9859
Steering linkage	36.3	2	P-6906
Steering column - floor shift - fixed wheel	35	20	P-7245
- tilt wheel	35	21	P-7246
Steering wheel - 2 spoke	138	8	P-7513
- 3 spoke-rim blow-with cover	138	8	P-7514
- 3 spoke-rim blow-w/o cover	138	9	P-10685

COPYRIGHT © 1975 — FORD MOTOR COMPANY — DEARBORN, MICHIGAN

INDEX

TITLE	SECTION	PAGE	ILLUS. NO.
1970			
P (MAVERICK)			
FRONT SUSPENSION-arms, shock absorbers, spindles, springs, stabilizer	30	8	P-6927
STEERING			
Manual steering system			
Steering gear details	36.1	6	P-9859
Steering linkage	32	5	P-6929
Power steering system			
Control valve details	36.2	5	P-7454
Cylinder details	36.2	6	P-4180
Pump details	36.2	3	P-5615
Pump installation -6 cyl.170,200	36.4	8	P-6957
-6 cyl.250	36.4	4	P-6946
Steering gear details	36.1	6	P-9859
Steering linkage	36.3	3	P-6958
Steering column - automatic transmission - non-locking	A72	17	P-6967
- locking	A72	23	P-7747
- manual transmission - non-locking	72	11	P-6968
- locking	72	14	P-7748
Steering wheel & horn ring (without locking steering column)	138	7	P-6025
Steering wheel & horn ring (with locking steering column)			
- 2 spoke	138	8	P-7513
- 3 spoke	138	8	P-7514
S (THUNDERBIRD)			
FRONT SUSPENSION - arms, shock absorbers, spindles, springs, stabilizer	30	1	P-4545
STEERING			
Power steering system			
Pump details	36.2	3	P-5615
Pump installation	36.4	3	P-7369
Steering gear details	36.1	2	P-4577
Steering linkage	36.3	1	P-7362
Steering column - automatic transmission - fixed	A72	21	P-7219
- tilt	A72	22	P-7218
Steering wheel - 2 spoke - w/o speed control	138	8	P-7513
- w/speed control	97.1	22	P-7698
- 3 spoke	138	8	P-7514
U (BRONCO)			
FRONT AXLE	30	7	P-5312
FRONT SUSPENSION - air spring installation	30	12	P-10676
- arms, shock absorbers, springs	30	6	P-4938
- spindles	30	7	P-5312
STEERING			
Manual steering system			
Steering gear details	36.1	6	P-9981
Steering linkage	30	6	P-4938
Steering column - manual transmission - column shift	35	7	P-4962
Steering shock absorber installation	35	7	P-4962
Steering wheel & horn ring	138	3	P-4953

INDEX

TITLE	SECTION	PAGE	ILLUS. NO.
1970			
X (FALCON) - BEFORE 1/2/70 FOR UNITS BUILT FROM 1/2/70 REFER TO B (FALCON)			
FRONT SUSPENSION - arms, shock absorbers, spindles, springs, stabilizer	30	8	P-6927
STEERING			
Manual steering system			
Steering gear details	36.1	6	P-9859
Steering linkage	32	4	P-5959
Power steering system			
Control valve details	36.2	5	P-7454
Cylinder details	36.2	6	P-4180
Pump details	36.2	3	P-5615
Pump installation - 6 cyl.	36.4	4	P-6946
- 8 cyl.	36.4	6	P-6947
Steering gear details	36.1	6	P-9859
Steering linkage	36.3	2	P-6906
Steering column - automatic transmission	A72	14	P-6020
- manual transmission	72	9	P-6019
Steering wheel & horn ring - 2 spoke	138	7	P-6025
- 3 spoke (rim blow)	138	7	P-6823
1971			
A (FORD)			
FRONT SUSPENSION - arms, shock absorbers, spindles, springs, stabilizer	30	1	P-4545
STEERING			
Manual steering system			
Steering gear details	36.1	1	P-4607
Steering linkage	36.3	1	P-7362
Power steering system			
Pump details	36.2	3	P-5615
Pump installation - 6 cyl. 240	36.4	1	P-7364
- 8 cyl. 302	36.4	9	P-7366
- 8 cyl. 390	36.4	2	P-7367
- 8 cyl. 351,400,429	36.4	3	P-7369
Steering gear details	36.1	2	P-4577
Steering linkage	36.3	1	P-7362
Steering column - automatic trans. - column shift - fixed wheel	A72	18	P-7220
- tilt wheel	A72	19	P-7241
- floor shift - fixed wheel	35	17	P-7243
- tilt wheel	35	18	P-7242
- manual trans. - column shift	72	12	P-7244
- floor shift - fixed wheel	35	17	P-7243
- tilt wheel	35	18	P-7242
Steering wheel - 2 spoke - w/o speed control	138	8	P-7513
- w/speed control	97.1	24	P-8310
- 3 spoke - rim blow	138	8	P-7514
B (TORINO)			
FRONT SUSPENSION - arms, shock absorbers, spindles, springs, stabilizer	30	8	P-6927
STEERING			
Manual steering system			
Steering gear details	36.1	6	P-9859
Steering linkage	32	4	P-5959

COPYRIGHT © 1975 — FORD MOTOR COMPANY — DEARBORN, MICHIGAN

INDEX

TITLE	SECTION	PAGE	ILLUS. NO.
1971			
B (TORINO)			
STEERING - continued			
Power steering system			
Control valve details	36.2	5	P-7454
Cylinder details	36.2	6	P-4180
Pump details	36.2	3	P-5615
Pump installation - 6 cyl.	36.4	4	P-6946
- 8 cyl. 302, 351	36.4	6	P-7365
- 8 cyl. 429	36.4	7	P-7368
Steering gear details	36.1	6	P-9859
Steering linkage	36.3	2	P-6906
Steering column - automatic transmission - column shift	A72	20	P-7249
- floor shift	35	19	P-7248
- manual transmission - column shift	72	13	P-7247
- floor shift	35	19	P-7248
Steering wheel - 2 spoke - pad blow	138	8	P-7513
- 3 spoke - rim blow - with cover	138	8	P-7514
- 3 spoke - rim blow - w/o cover	138	9	P-10685
F (MUSTANG)			
FRONT SUSPENSION - arms, shock absorbers, spindles, springs, stabilizer	30	8	P-6927
STEERING			
Manual steering system			
Steering gear details	36.1	6	P-9859
Steering linkage	36.3	4	P-8121
Power steering system			
Pump details	36.2	3	P-5615
Pump installation - 6 cyl. 250	36.4	1	P-7364
- 8 cyl. 302, 351	36.4	10	P-8119
- 8 cyl. 429	36.4	11	P-8120
Steering gear details	36.1	3	P-4723
Steering linkage	36.3	4	P-8121
Steering column - floor shift - fixed wheel	35	20	P-7245
- tilt wheel	35	21	P-7246
Steering wheel - 2 spoke - pad blow	138	8	P-7513
- 2 spoke - button blow	138	9	P-8307
- 3 spoke - rim blow - with cover	138	8	P-7514
- 3 spoke - rim blow - w/o cover	138	9	P-10685
L (PINTO)			
FRONT SUSPENSION - arms, shock absorbers, spindles, springs, stabilizer	30	9	P-7936
STEERING			
Manual steering system			
Steering gear details & linkage	36.1	5	P-7966
Steering column	35	22	P-7961
Steering wheel - 2 spoke wheel - button blow	138	9	P-8309
- 2 spoke wheel - pad blow	138	8	P-7513

INDEX

TITLE	SECTION	PAGE	ILLUS. NO.
1971			
P (MAVERICK)			
FRONT SUSPENSION - arms, shock absorbers, spindles, springs, stabilizer	30	8	P-6927
STEERING			
Manual steering system			
Steering gear details	36.1	6	P-9859
Steering linkage	32	5	P-6929
Power steering system			
Control valve details	36.2	5	P-7454
Cylinder details	36.2	6	P-4180
Pump details	36.2	3	P-5615
Pump installation - 6 cyl. 170, 200	36.4	8	P-6957
- 6 cyl. 250	36.4	4	P-6946
- 8 cyl. 302	36.4	8	P-6957
Steering linkage	36.3	3	P-6958
Steering column - automatic transmission - column shift	A72	23	P-7747
- floor shift	35	23	P-8323
- manual transmission	72	13	P-7748
Steering wheel - 2 spoke - pad blow	138	8	P-7513
- 2 spoke - button blow	138	9	P-8309
- 3 spoke - rim blow	138	8	P-7514
S (THUNDERBIRD)			
FRONT SUSPENSION - arms, shock absorbers, spindles, springs, stabilizer	30	1	P-4545
STEERING			
Power steering system			
Pump details	36.2	3	P-5615
Pump installation	36.4	3	P-7369
Steering gear details	36.1	2	P-4577
Steering linkage	36.3	1	P-7362
Steering column - automatic transmission - fixed	A72	21	P-7219
- tilt	A72	22	P-7218
Steering wheel - 2 spoke - w/o speed control	138	8	P-7513
- w/ speed control	97.1	22	P-7698
- 3 spoke - rim blow	138	8	P-7514
U (BRONCO)			
FRONT AXLE ("Before Serial No. K20,001")	30	7	P-5312
("From Serial No. K20,001")	30	10	P-8317
FRONT SUSPENSION - air spring installation	30	12	P-10676
- arms, shock absorbers, springs	30	6	P-4938
- spindles ("Before Serial No. K20,001")	30	7	P-5312
- spindles ("From Serial No. K20,001")	30	10	P-8317
STEERING			
Manual steering system			
Steering gear details	36.1	6	P-9981
Steering linkage	30	6	P-4938
Steering column - manual transmission - column shift	35	7	P-4962
Steering shock absorber installation	35	7	P-4962
Steering wheel & horn ring	138	3	P-4953

COPYRIGHT © 1975 — FORD MOTOR COMPANY — DEARBORN, MICHIGAN

INDEX

TITLE	SECTION	PAGE	ILLUS. NO.
1972			
A (FORD)			
FRONT SUSPENSION - arms, shock absorbers, spindles, springs, stabilizers	30	11	P-8639
STEERING			
Manual steering system			
Steering gear details	36.1	1	P-4607
Steering linkage	36.3	1	P-7362
Power steering system			
Steering gear details	36.1	2	P-4577
Steering linkage	36.3	1	P-7362
Pump details	36.2	3	P-5615
Pump installation - 6 cyl. 240	36.4	1	P-7364
- 8 cyl. 302	36.4	9	P-7366
- 8 cyl. 351,400,429	36.4	3	P-7369
Steering column - automatic trans. - column shift - fixed wheel	A72	18	P-7220
- tilt wheel	A72	19	P-7241
Steering wheel - 2 spoke - w/o speed control	138	8	P-7513
- 2 spoke - w/speed control	97.1	24	P-8310
- 3 spoke - rim blow	138	8	P-7514
B (TORINO)			
FRONT SUSPENSION - arms, shock absorbers, spindles, springs, stabilizers	30	11	P-8639
STEERING			
Manual steering system			
Steering gear details	36.1	1	P-4607
Steering linkage	36.3	4	P-8121
Power steering system			
Pump details	36.2	3	P-5615
Pump installation - 6 cyl.	36.4	1	P-7364
- 8 cyl. 302 w/o A/C,351-C	36.4	10	P-8119
- 8 cyl. 302 w/A/C,351-W,400,429	36.4	11	P-8120
Steering gear details	36.1	2	P-4577
Steering linkage	36.3	4	P-8121
Steering column - automatic trans. - column shift	A72	26	P-8623
- floor shift	35	24	P-8624
- manual trans. - column shift	72	15	P-8625
- floor shift	35	24	P-8624
Steering wheel - 2 spoke - pad blow	138	8	P-7513
- 3 spoke - rim blow - with cover	138	8	P-7514
- 3 spoke - rim blow - w/o cover	138	9	P-10685

INDEX

TITLE	SECTION	PAGE	ILLUS. NO.
1972			
F (MUSTANG)			
FRONT SUSPENSION - arms, shock absorbers, spindles, springs, stabilizers	30	8	P-6927
STEERING			
Manual steering system			
Steering gear details	36.1	6	P-9859
Steering linkage	36.3	4	P-8121
Power steering system			
Pump details	36.2	3	P-5615
Pump installation - 6 cyl. 250	36.4	1	P-7364
- 8 cyl. 302,351	36.4	10	P-8119
Steering gear details	36.1	3	P-4723
Steering linkage	36.3	4	P-8121
Steering column - floor shift - fixed wheel	35	20	P-7245
- tilt wheel	35	21	P-7246
Steering wheel - 2 spoke - pad blow	138	8	P-7513
- 2 spoke - button blow	138	9	P-8307
- 3 spoke - rim blow - with cover	138	8	P-7514
- 3 spoke -rim blow - w/o cover	138	9	P-10685
L (PINTO)			
FRONT SUSPENSION - arms, shock absorbers, spindles, springs, stabilizers	30	9	P-7936
STEERING			
Manual steering system			
Steering gear details & linkage	36.1	5	P-7966
Steering column - "Before 1/7/72"	35	22	P-7961
- "From 1/7/72"	35	25	P-10303
Steering wheel - 2 spoke wheel - button blow	138	9	P-8309
- 2 spoke wheel - pad blow	138	8	P-7513
P (MAVERICK)			
FRONT SUSPENSION - arms, shock absorbers, spindles, springs, stabilizer	30	8	P-6927
STEERING			
Manual steering system			
Steering gear details	36.1	6	P-9859
Steering linkage	32	5	P-6929
Power steering system			
Control valve details	36.2	5	P-7454
Cylinder details	36.2	6	P-4180
Pump details	36.2	3	P-5615
Pump installation - 6 cyl. 170,200	36.4	8	P-6957
- 6 cyl. 250	36.4	4	P-6946
- 8 cyl. 302	36.4	8	P-6957
Steering linkage	36.3	3	P-6958
Steering column - automatic trans. - column shift	A72	23	P-7747
- floor shift	35	23	P-8323
- manual trans.	72	14	P-7748
Steering wheel - 2 spoke - pad blow	138	8	P-7513
- 2 spoke - button blow	138	9	P-8309

COPYRIGHT © 1975 — FORD MOTOR COMPANY — DEARBORN, MICHIGAN

INDEX

TITLE	SECTION	PAGE	ILLUS. NO.
1972			
S (THUNDERBIRD)			
FRONT SUSPENSION - arms, shock absorbers, springs, spindles, stabilizer	30	11	P-8639
STEERING			
Power steering system			
Pump details - Ford type	36.2	3	P-5615
Pump details - Saginaw type	36.2	6	P-8816
Pump installation - 400, (429 w/o A/C)	36.4	3	P-7369
- (429 with A/C), 460	36.4	1	P-8680
Steering gear details	36.1	2	P-4577
Steering linkage	36.3	4	P-8121
Steering column - automatic transmission - fixed	A72	25	P-8622
- tilt	A72	24	P-8621
Steering wheel - 2 spoke - w/o speed control	138	8	P-7513
- 2 spoke - w/speed control	97.1	25	P-9119
- 3 spoke - rim blow	138	8	P-7514
U (BRONCO)			
FRONT AXLE	30	10	P-8317
FRONT SUSPENSION - air spring installation	30	12	P-10676
- arms, shock absorbers, springs	30	6	P-4938
- spindles	30	10	P-8317
STEERING			
Manual steering system			
Steering gear details	36.1	6	P-9981
Steering linkage	30	6	P-4938
Power steering system			
Pump details	36.2	3	P-5615
Pump installation	36.4	12	P-10454
Steering gear details	36.1	3	P-4723
Steering linkage	30	6	P-4938
Steering column - manual transmission - manual steering	72	16	P-10771
- power steering	72	17	P-10773
Steering shock absorber installation	35	7	P-4962
Steering wheel & horn ring	138	3	P-4953

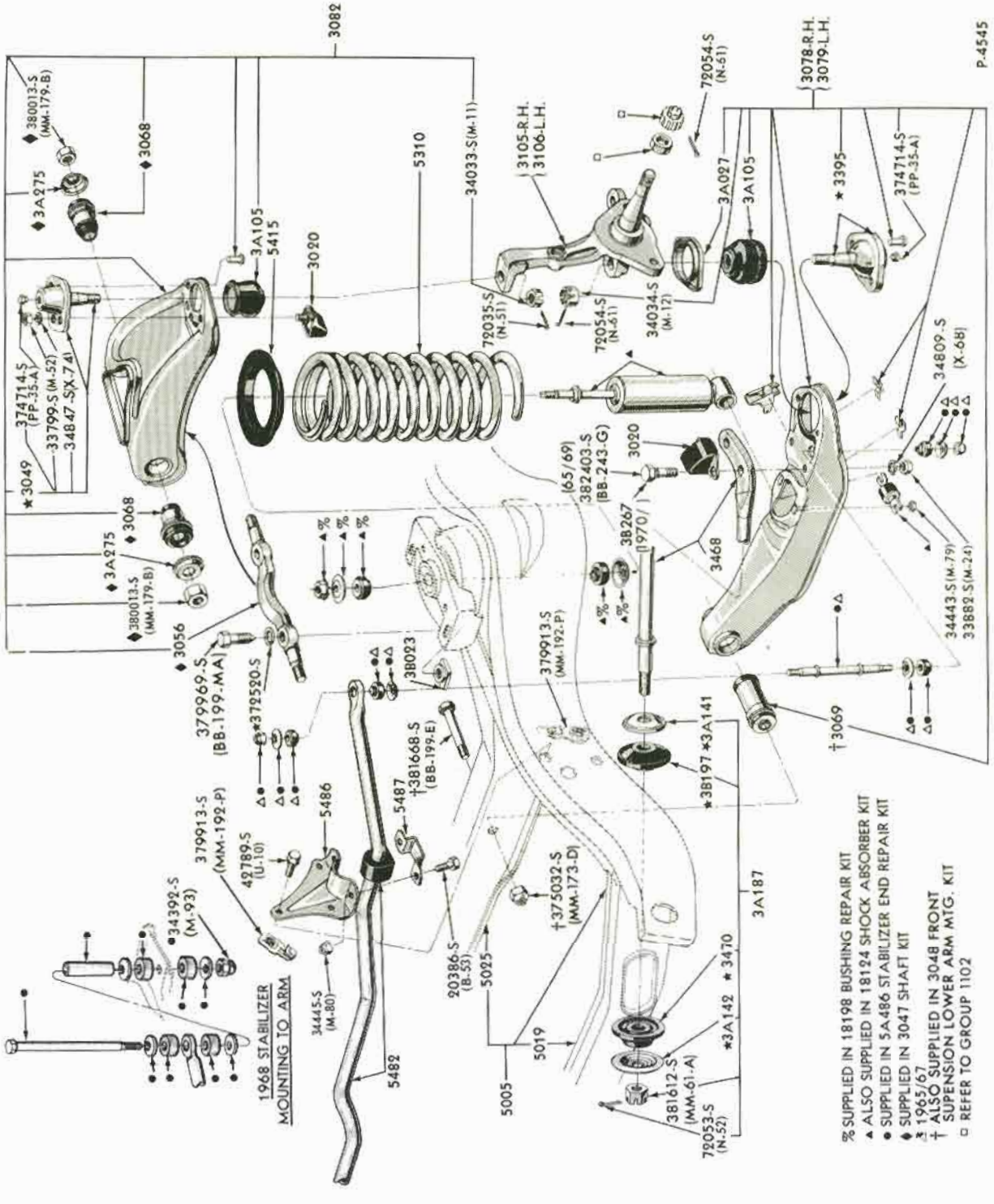

FRONT SUSPENSION
1965/71 FORD 1967/71 THUNDERBIRD

COPYRIGHT © 1975 — FORD MOTOR COMPANY — DEARBORN, MICHIGAN

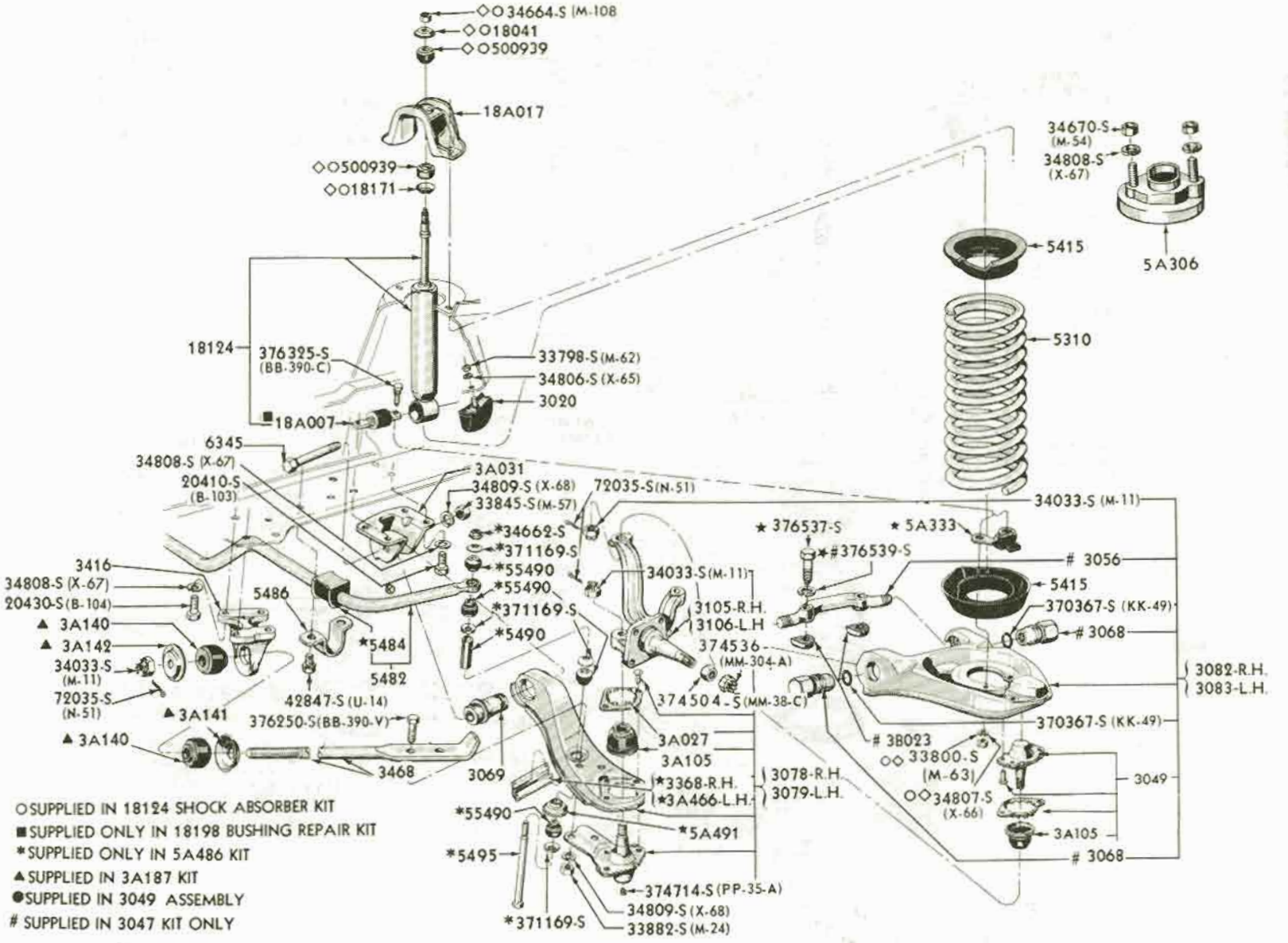

○SUPPLIED IN 18124 SHOCK ABSORBER KIT
■SUPPLIED ONLY IN 18198 BUSHING REPAIR KIT
*SUPPLIED ONLY IN 5A486 KIT
▲SUPPLIED IN 3A187 KIT
●SUPPLIED IN 3049 ASSEMBLY
SUPPLIED IN 3047 KIT ONLY

P-3675

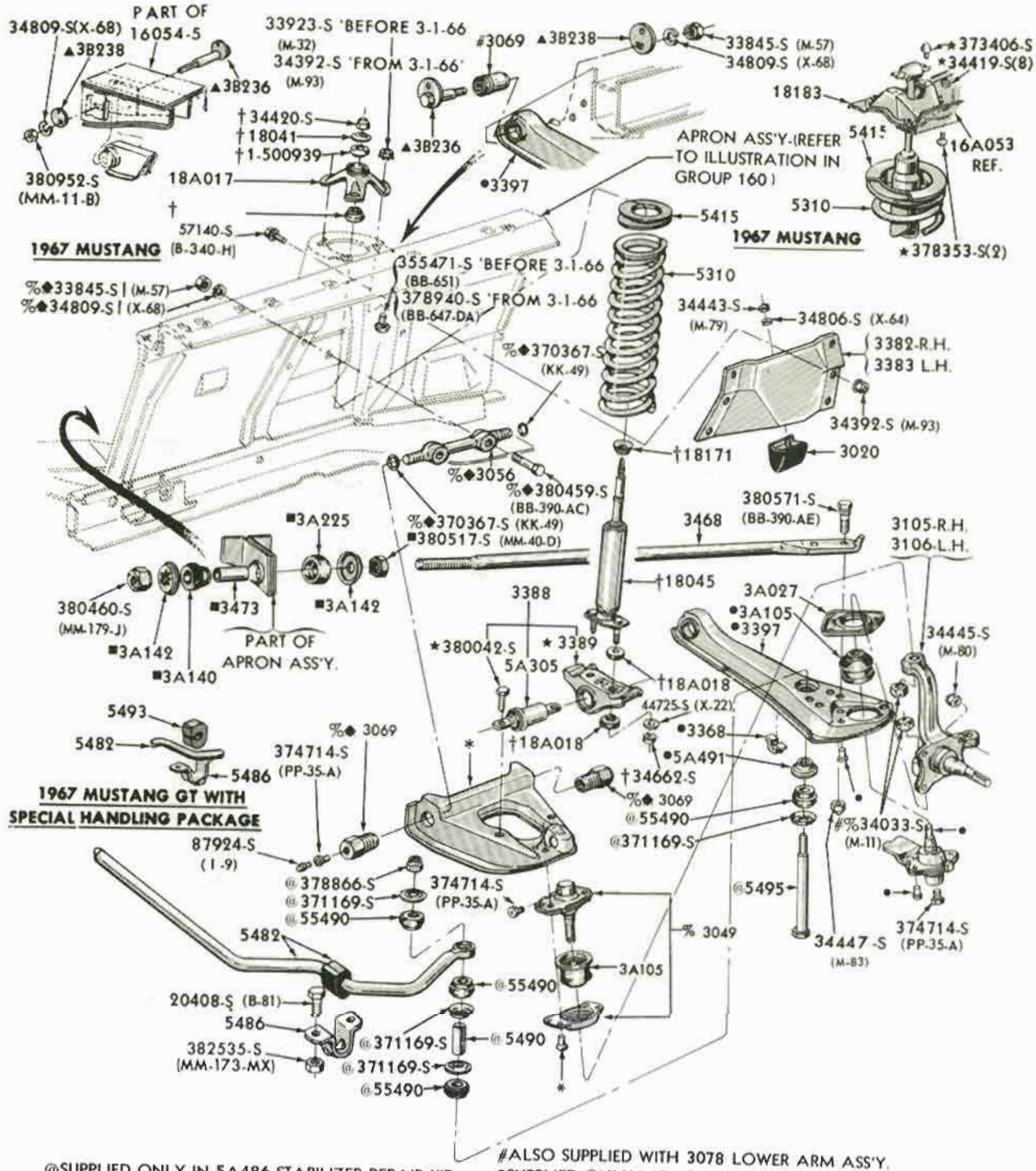

@SUPPLIED ONLY IN 5A486 STABILIZER REPAIR KIT
†SUPPLIED IN 18124 SHOCK ABSORBER KIT
▲SUPPLIED ONLY IN 3048 KIT
■SUPPLIED ONLY IN 3A187 KIT

#ALSO SUPPLIED WITH 3078 LOWER ARM ASS'Y.
•SUPPLIED ONLY WITH 3078 LOWER ARM ASS'Y.
* SUPPLIED WITH 3082 UPPER ARM ASS'Y. OR 3049 JOINT ASS'Y.
%ALSO SUPPLIED WITH 3082 UPPER ARM ASS'Y.
◆SUPPLIED IN 3047 KIT

P-4945

May, 1975 COPYRIGHT © 1975 — FORD MOTOR COMPANY — DEARBORN, MICHIGAN

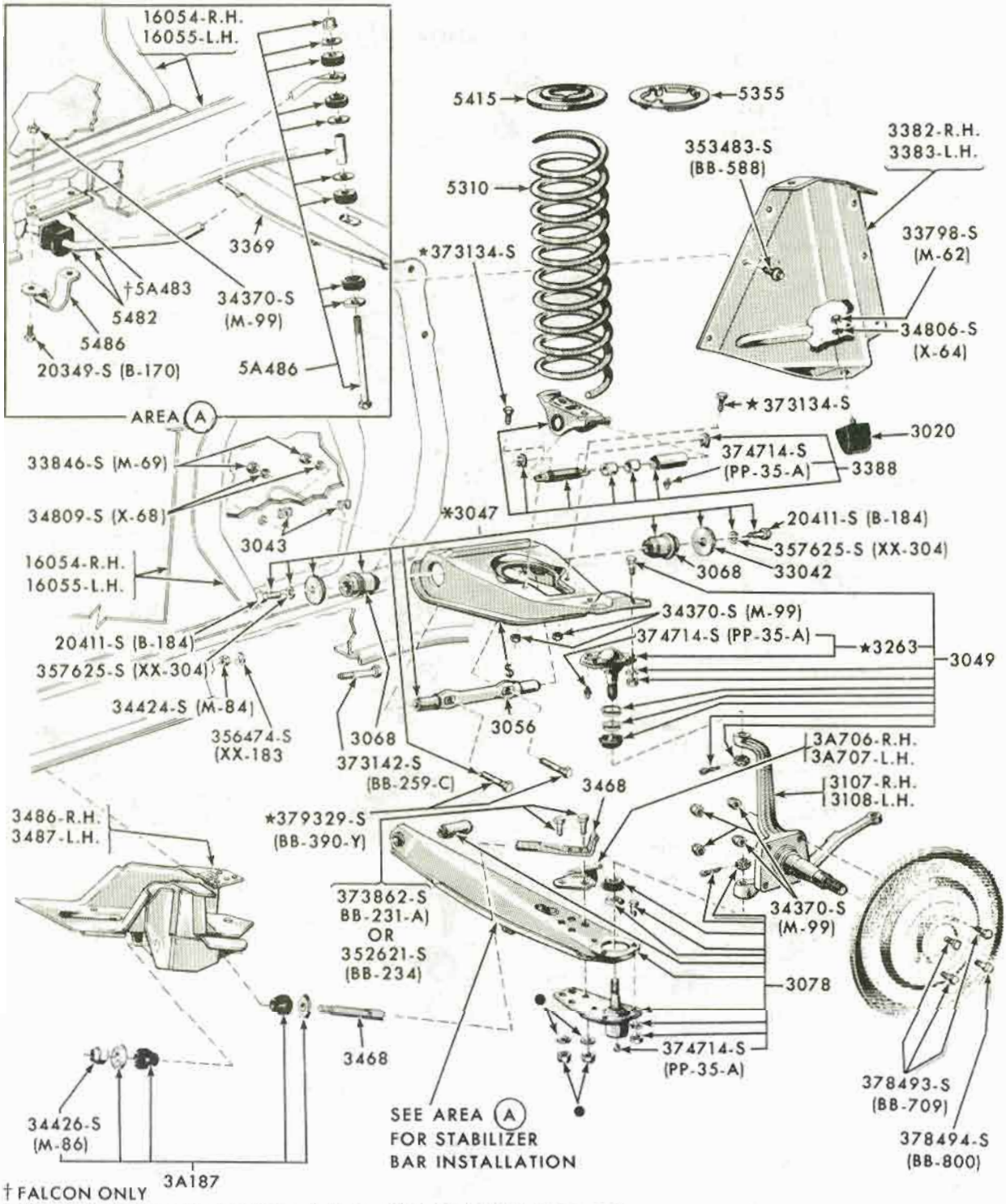

†FALCON ONLY
*ALSO SUPPLIED IN 3082 UPPER ARM, SHAFT AND JOINT ASSEMBLY
● SUPPLIED IN 3468 LOWER ARM STRUT REPAIR KIT
□ SUPPLIED IN 3082 UPPER ARM ASSY
&SUPPLIED ONLY IN 3082 UPPER ARM, SHAFT AND JOINT ASSEMBLY

P-3120

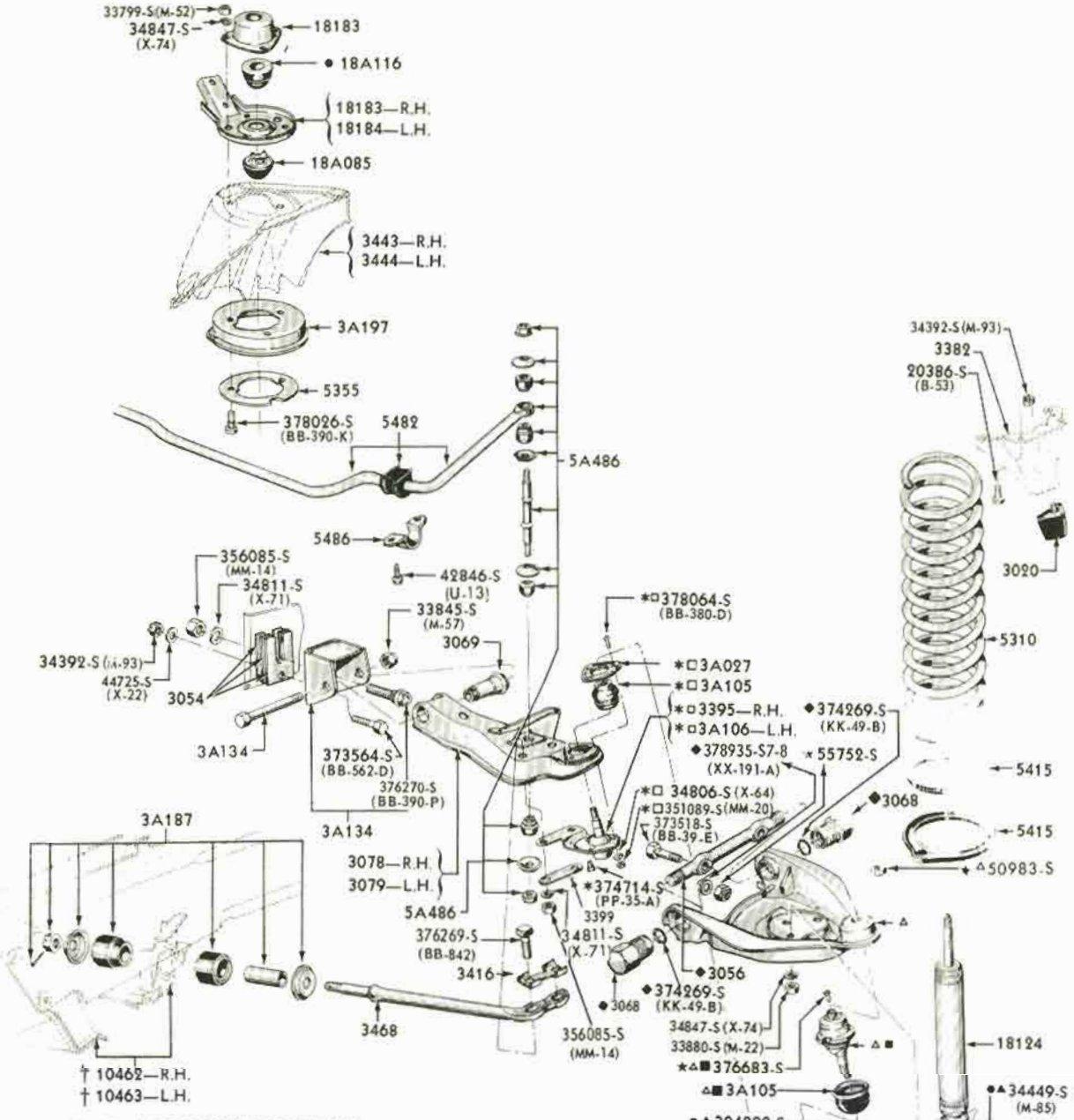

- ● SUPPLIED IN 18198 BUSHING REPAIR KIT
- ▲ ALSO SUPPLIED IN 18124 SHOCK ABSORBER KIT
- ■ ALSO SUPPLIED IN 3049 UPPER ARM BALL JOINT ASSEMBLY
- ◆ ALSO SUPPLIED IN 3047 UPPER SHAFT KIT
- △ ALSO SUPPLIED IN 3082 AND 3083 UPPER ARM AND JOINT ASSEMBLIES
- □ ALSO SUPPLIED IN 3050 LOWER ARM BALL JOINT ASSY.
- * ALSO SUPPLIED IN 3078 AND 3079 LOWER ARM AND JOINT ASSEMBLIES
- † REFER TO BODY GROUP NUMBER

P-4400

COPYRIGHT © 1975 — FORD MOTOR COMPANY — DEARBORN, MICHIGAN

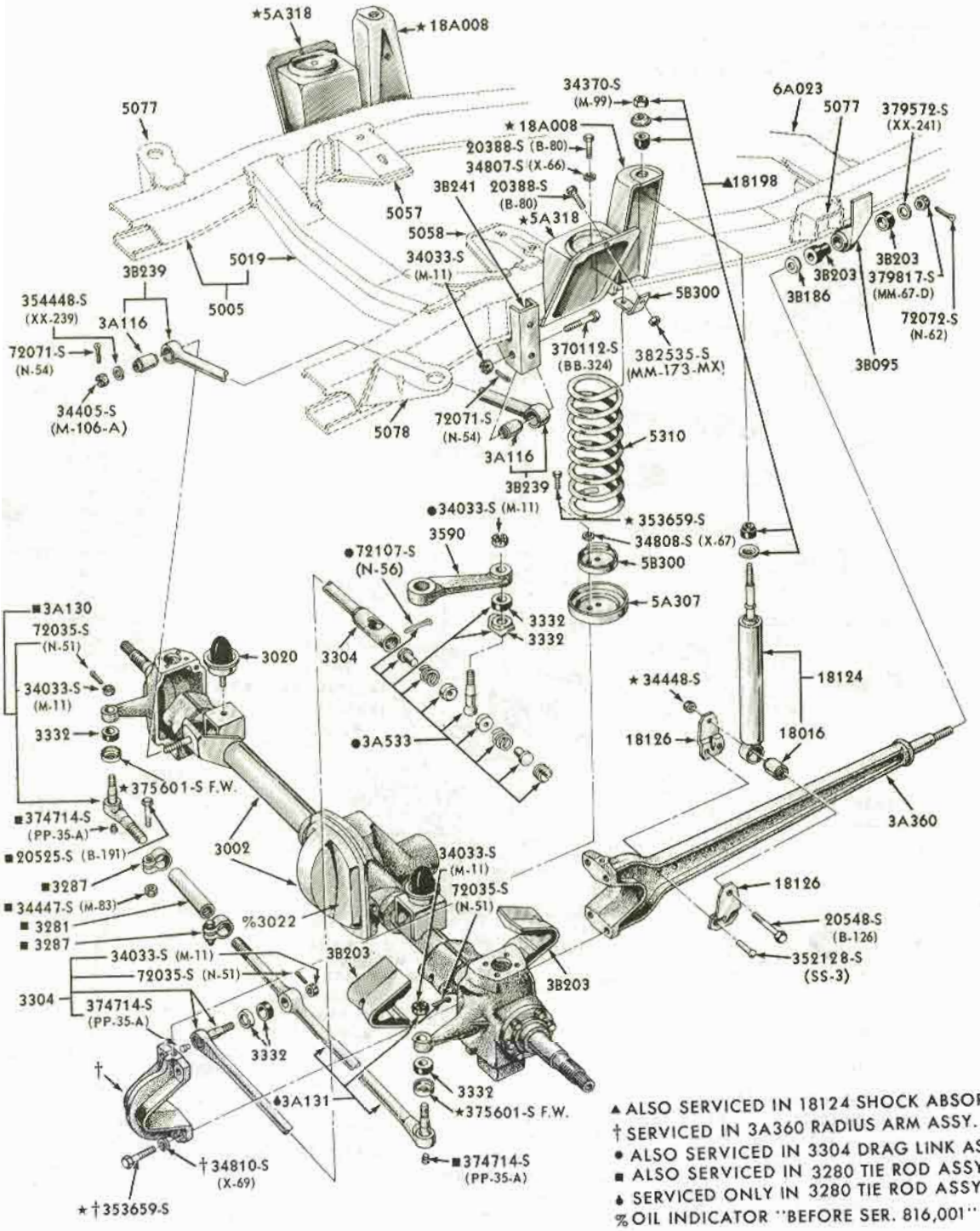

▲ ALSO SERVICED IN 18124 SHOCK ABSORBER KIT
† SERVICED IN 3A360 RADIUS ARM ASSY.
• ALSO SERVICED IN 3304 DRAG LINK ASSY.
■ ALSO SERVICED IN 3280 TIE ROD ASSY.
♦ SERVICED ONLY IN 3280 TIE ROD ASSY.
% OIL INDICATOR "BEFORE SER. 816,001"

P-4938

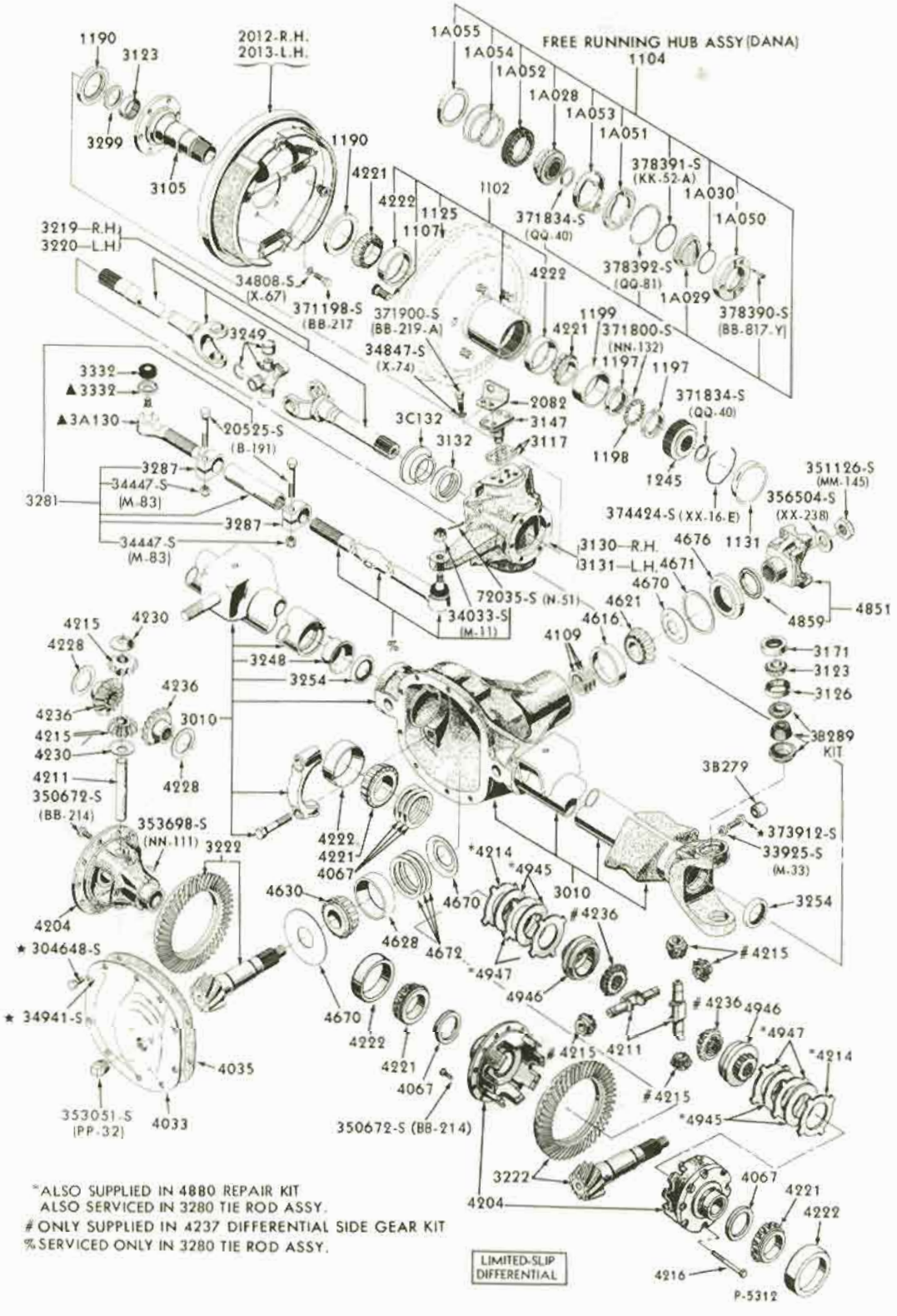

*ALSO SUPPLIED IN 4880 REPAIR KIT
ALSO SERVICED IN 3280 TIE ROD ASSY.
ONLY SUPPLIED IN 4237 DIFFERENTIAL SIDE GEAR KIT
% SERVICED ONLY IN 3280 TIE ROD ASSY.

FRONT AXLE
1966/71 BRONCO - "BEFORE SER. K20,001"

COPYRIGHT © 1975 — FORD MOTOR COMPANY — DEARBORN, MICHIGAN

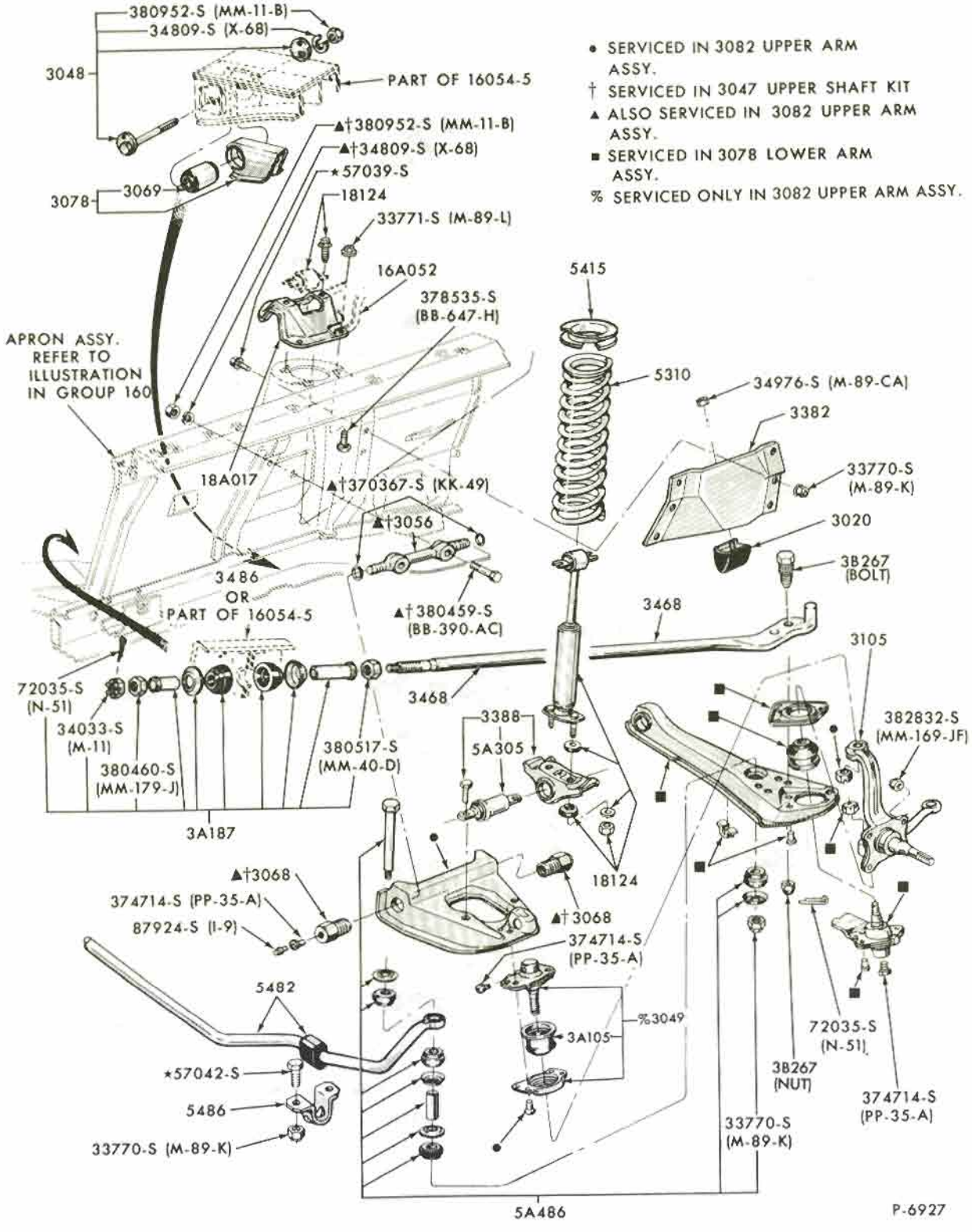

• SERVICED IN 3082 UPPER ARM ASSY.
† SERVICED IN 3047 UPPER SHAFT KIT
▲ ALSO SERVICED IN 3082 UPPER ARM ASSY.
■ SERVICED IN 3078 LOWER ARM ASSY.
% SERVICED ONLY IN 3082 UPPER ARM ASSY.

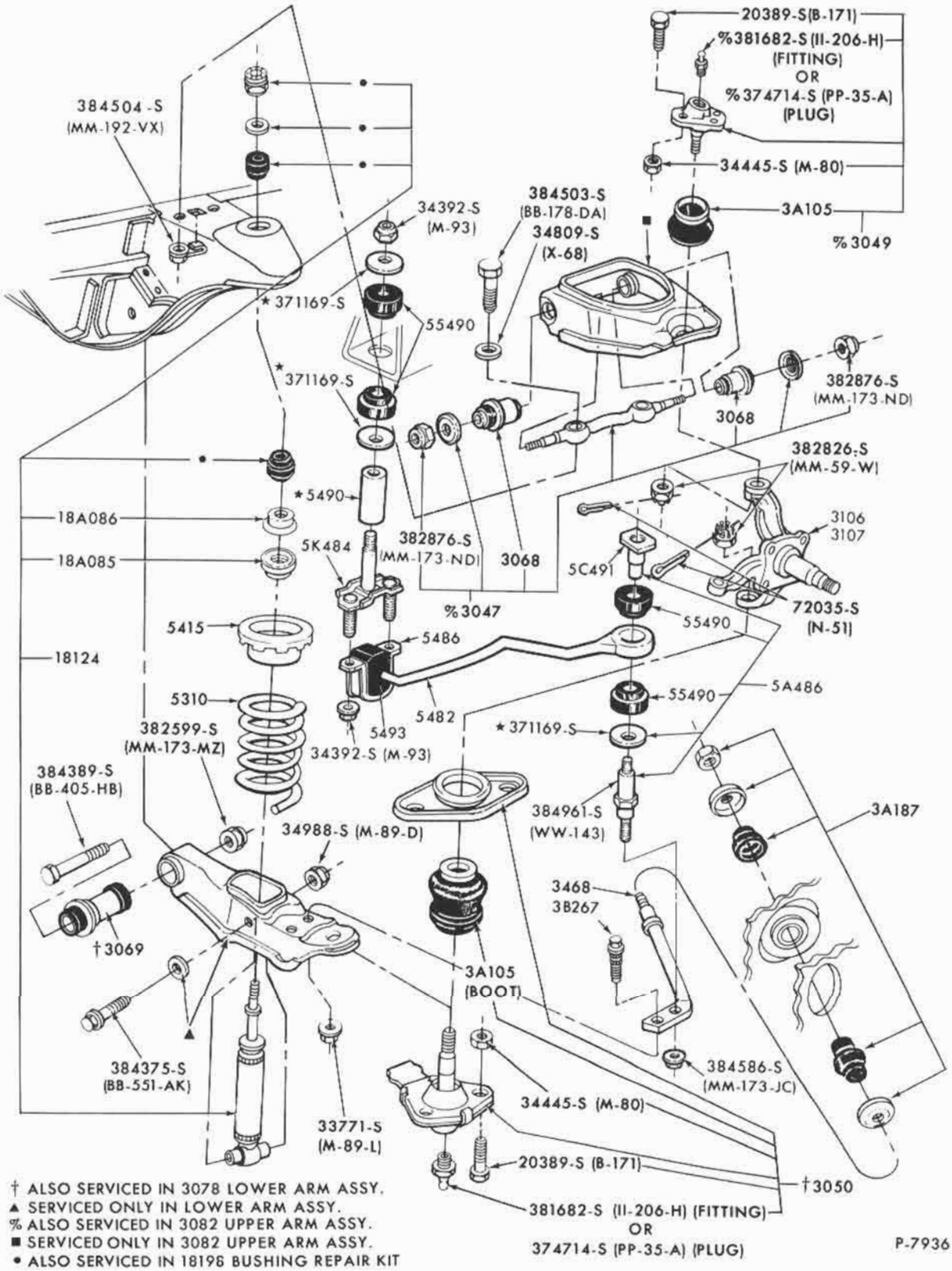

† ALSO SERVICED IN 3078 LOWER ARM ASSY.
▲ SERVICED ONLY IN LOWER ARM ASSY.
% ALSO SERVICED IN 3082 UPPER ARM ASSY.
■ SERVICED ONLY IN 3082 UPPER ARM ASSY.
• ALSO SERVICED IN 18198 BUSHING REPAIR KIT

P-7936

FRONT SUSPENSION
1971/72 PINTO

COPYRIGHT © 1975 — FORD MOTOR COMPANY — DEARBORN, MICHIGAN

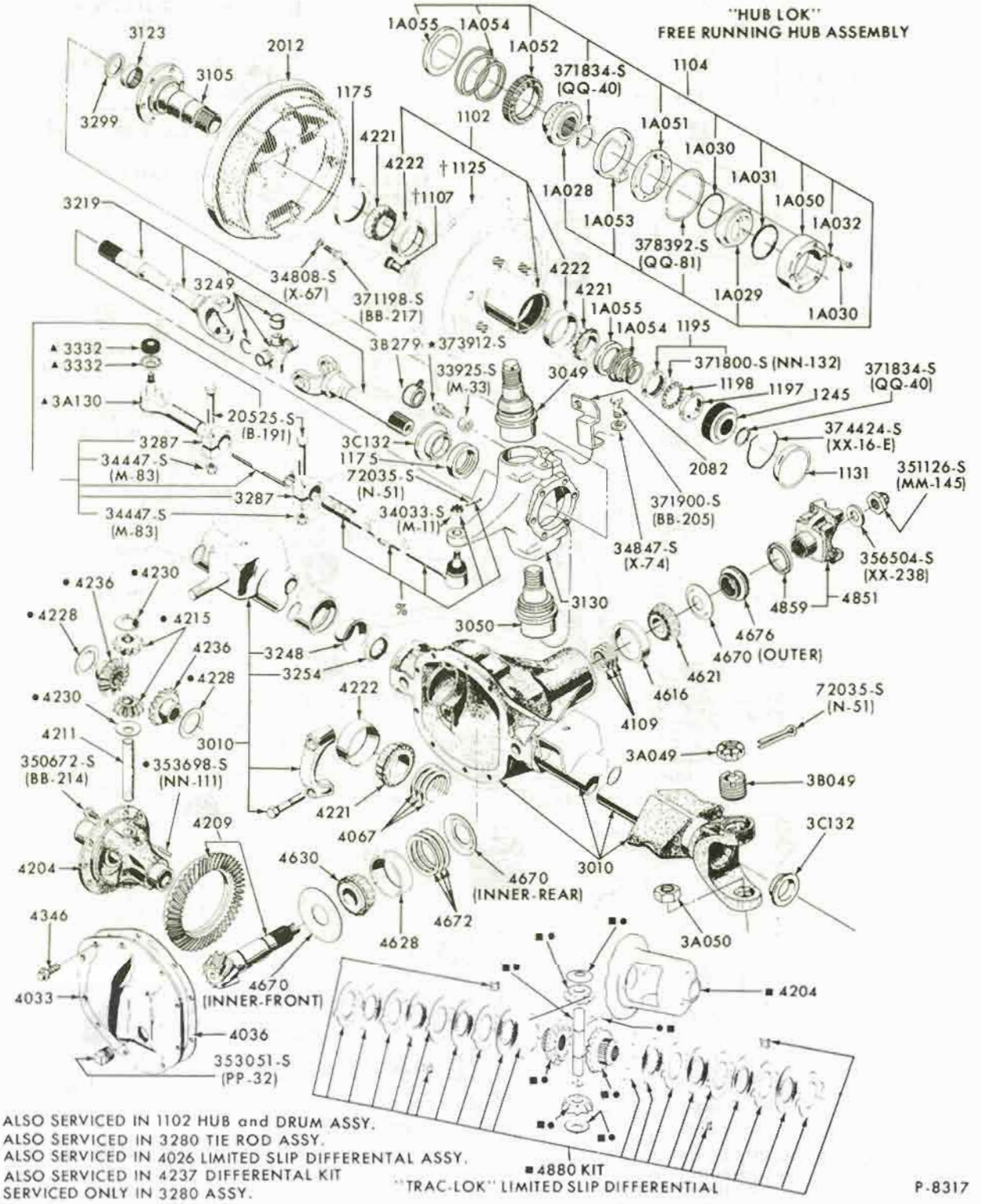

† ALSO SERVICED IN 1102 HUB and DRUM ASSY.
▲ ALSO SERVICED IN 3280 TIE ROD ASSY.
■ ALSO SERVICED IN 4026 LIMITED SLIP DIFFERENTAL ASSY.
• ALSO SERVICED IN 4237 DIFFERENTAL KIT
% SERVICED ONLY IN 3280 ASSY.

P-8317

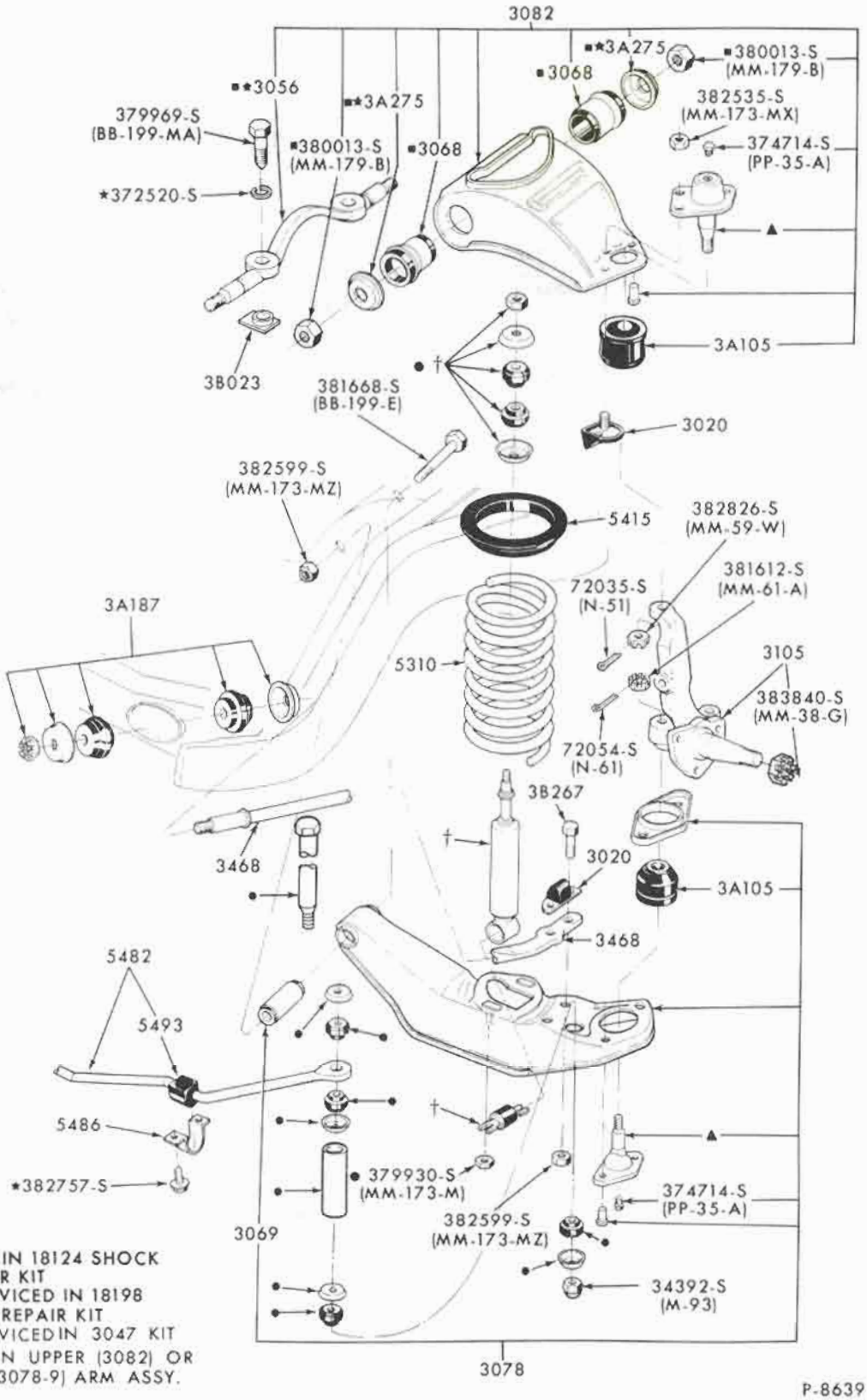

†SERVICED IN 18124 SHOCK ABSORBER KIT
● ALSO SERVICED IN 18198 BUSHING REPAIR KIT
■ ALSO SERVICED IN 3047 KIT
▲SERVICED IN UPPER (3082) OR LOWER (3078-9) ARM ASSY.

P-8639

FRONT SUSPENSION
1972 FORD, THUNDERBIRD AND TORINO

COPYRIGHT © 1975 — FORD MOTOR COMPANY — DEARBORN, MICHIGAN

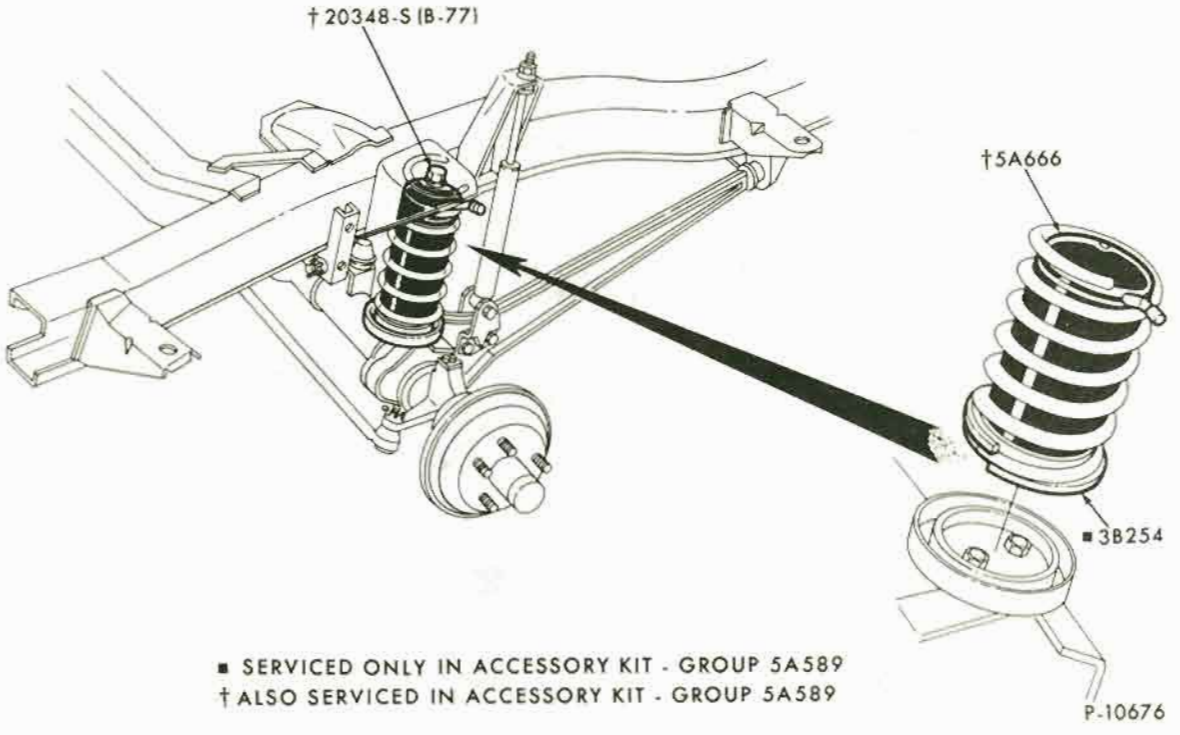

■ SERVICED ONLY IN ACCESSORY KIT - GROUP 5A589
† ALSO SERVICED IN ACCESSORY KIT - GROUP 5A589

FRONT SUSPENSION (AIR SPRING INSTALLATION)
1966/72 BRONCO

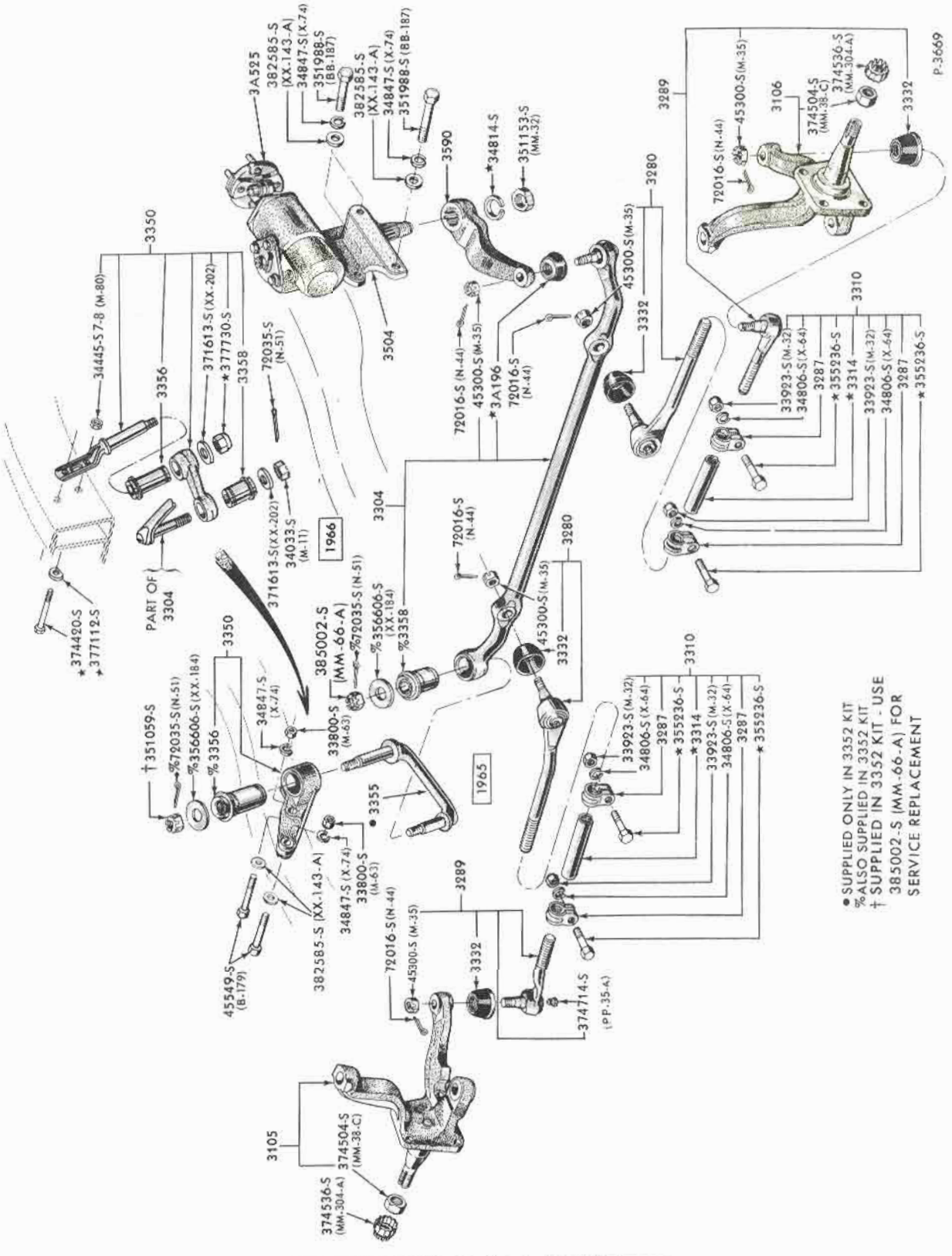

• SUPPLIED ONLY IN 3352 KIT
% ALSO SUPPLIED IN 3352 KIT
† SUPPLIED IN 3352 KIT - USE 385002-S (MM-66-A) FOR SERVICE REPLACEMENT

MANUAL STEERING LINKAGE - 6 & 8 CYLINDER
1965/66 FAIRLANE 1966 FALCON

COPYRIGHT © 1975 — FORD MOTOR COMPANY — DEARBORN, MICHIGAN

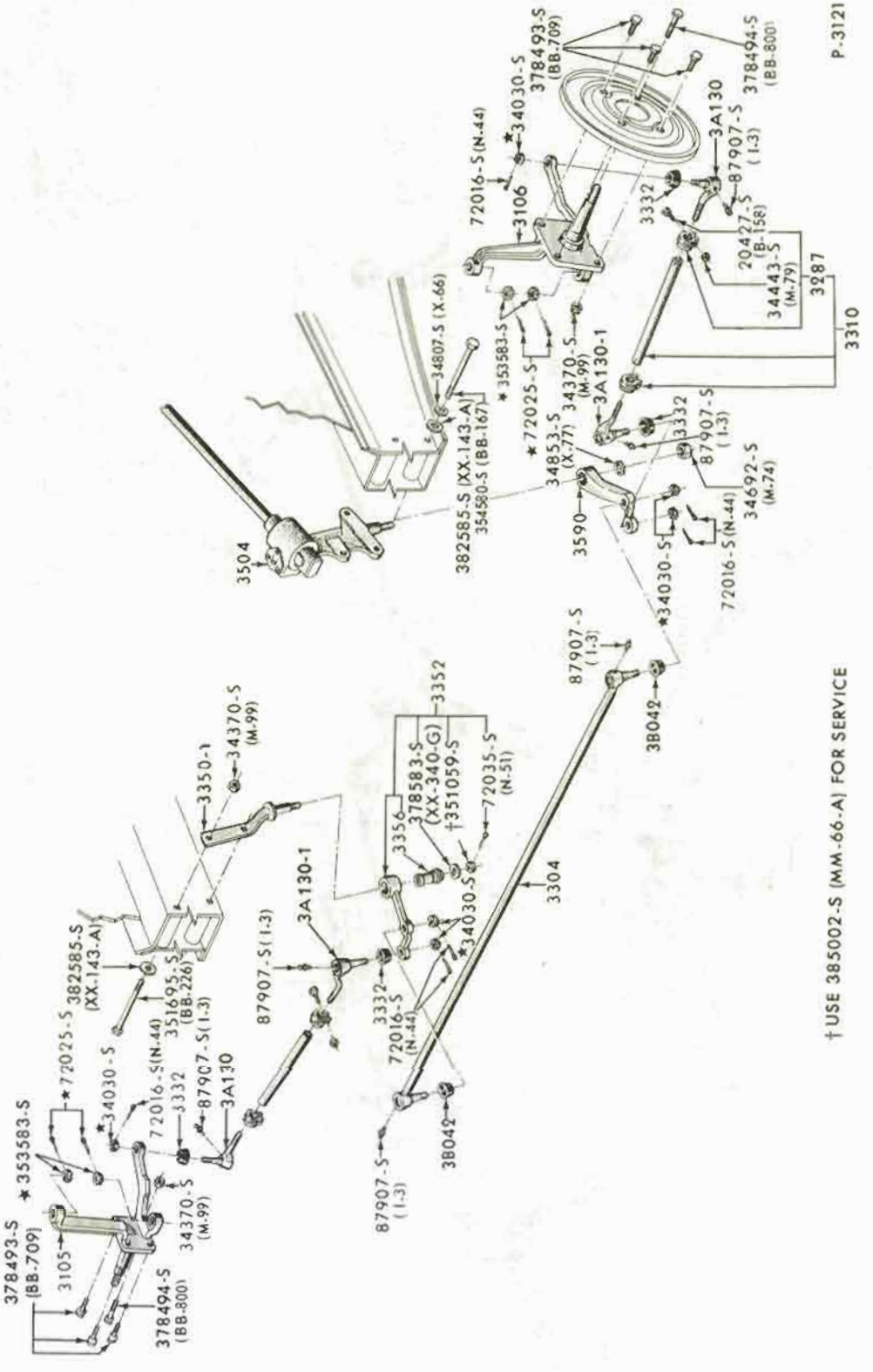

MANUAL STEERING LINKAGE - 6 CYLINDER
1965 FALCON, 1965/66 MUSTANG

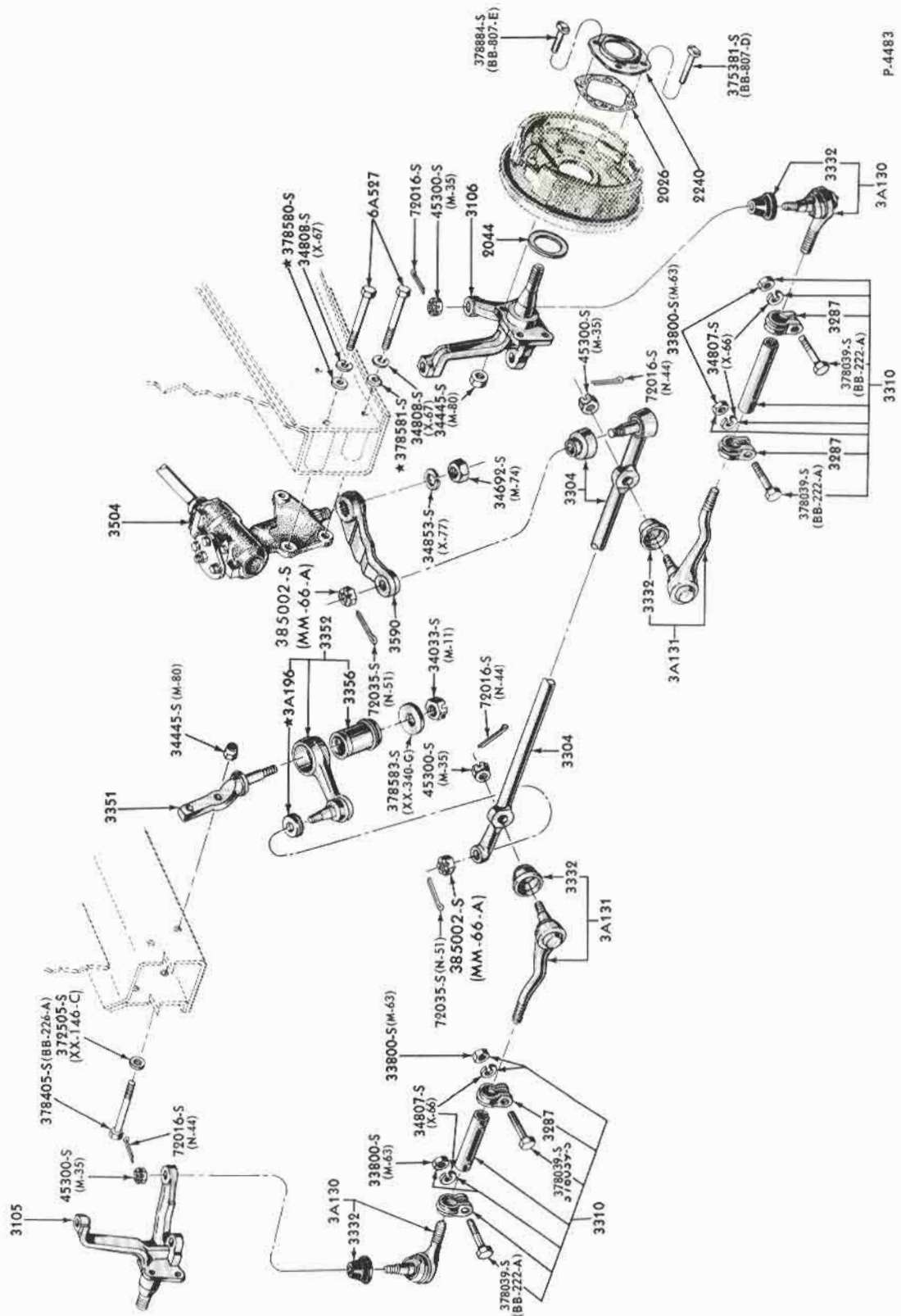

MANUAL STEERING LINKAGE - 8 CYLINDER
1965 FALCON, 1965/66 MUSTANG

COPYRIGHT © 1975 — FORD MOTOR COMPANY — DEARBORN, MICHIGAN

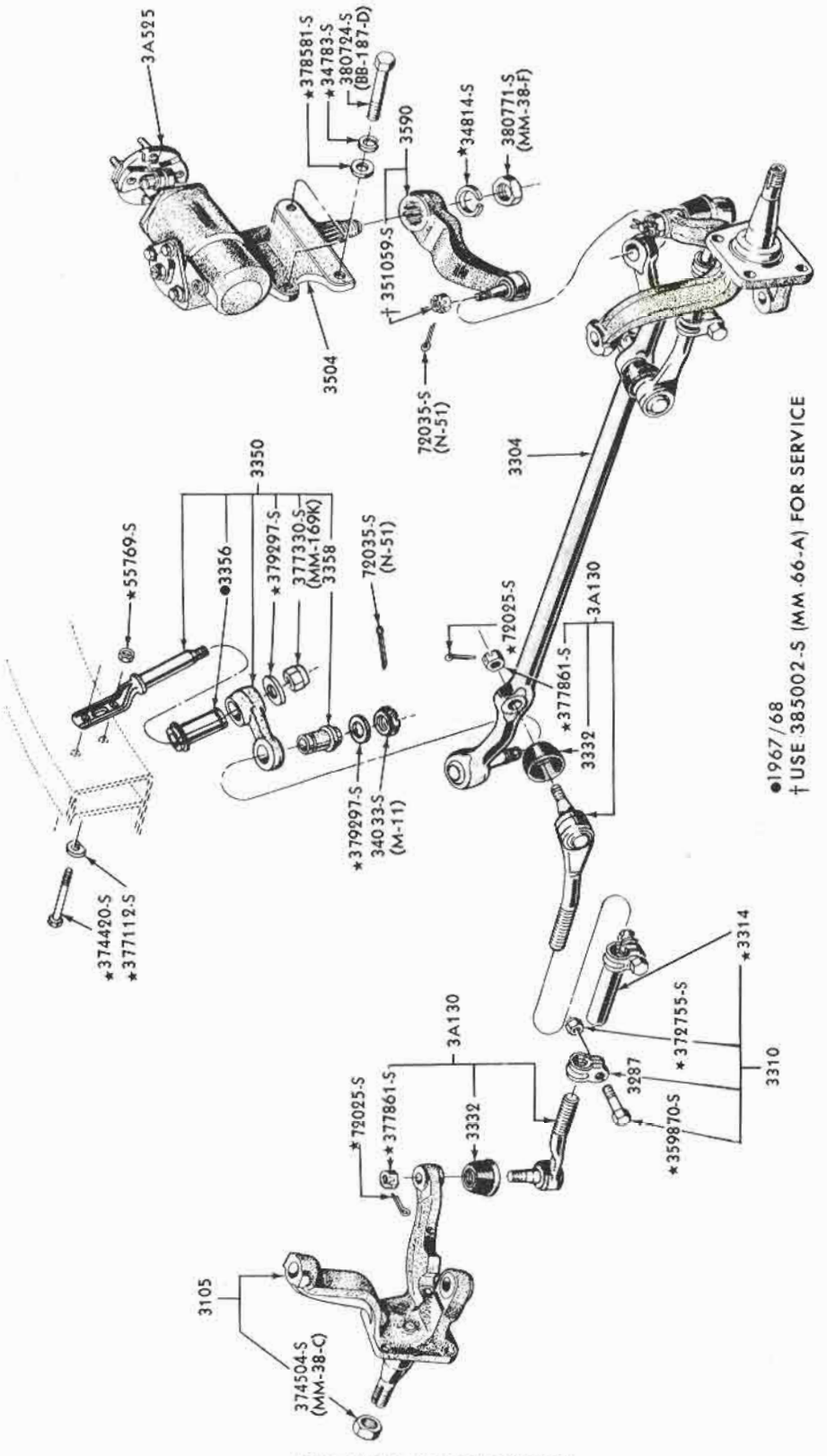

MANUAL STEERING LINKAGE
1967/71 FAIRLANE/TORINO, 1967/70 FALCON & MUSTANG

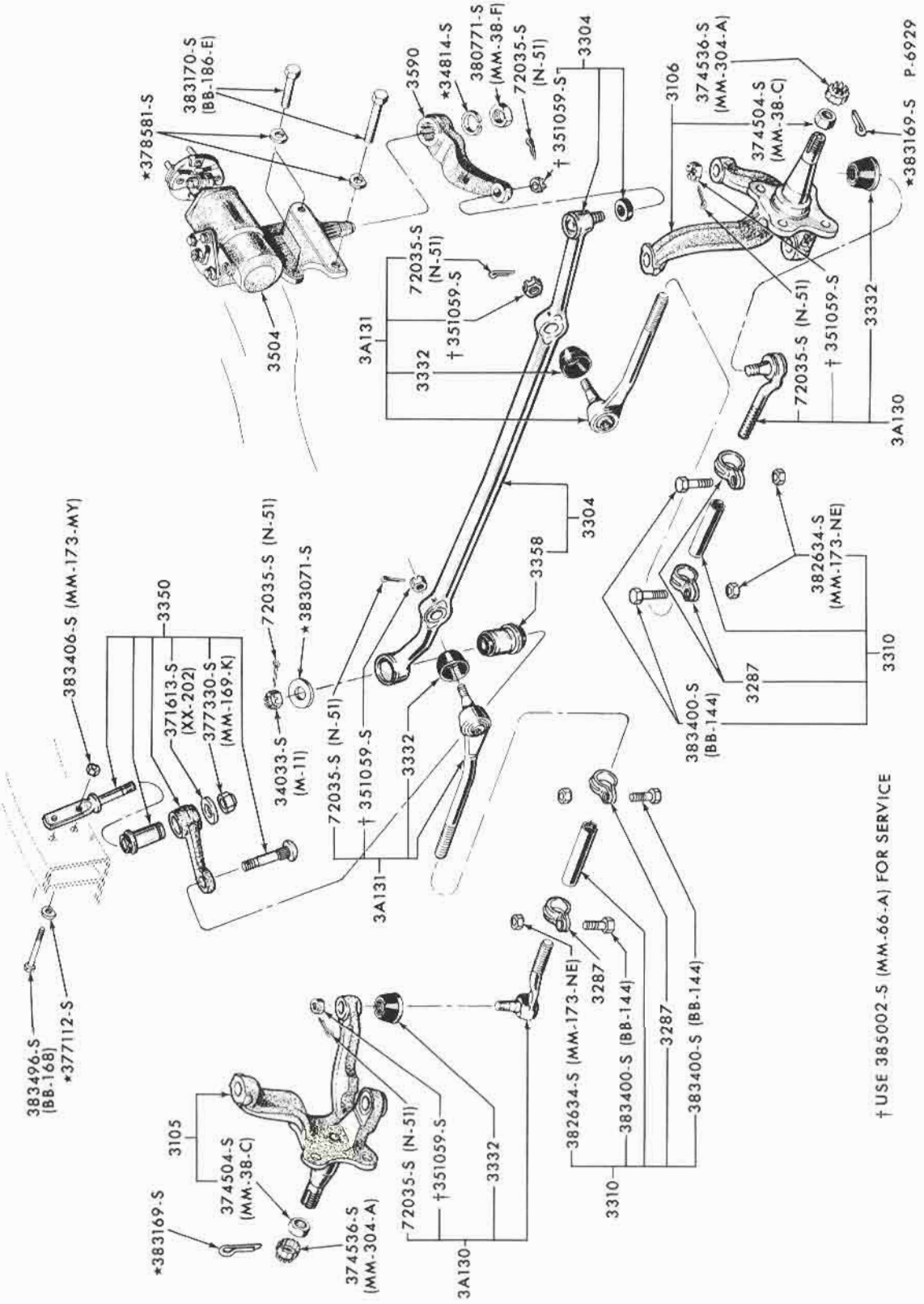

MANUAL STEERING LINKAGE
1970/72 MAVERICK

COPYRIGHT © 1975 — FORD MOTOR COMPANY — DEARBORN, MICHIGAN

P-5495

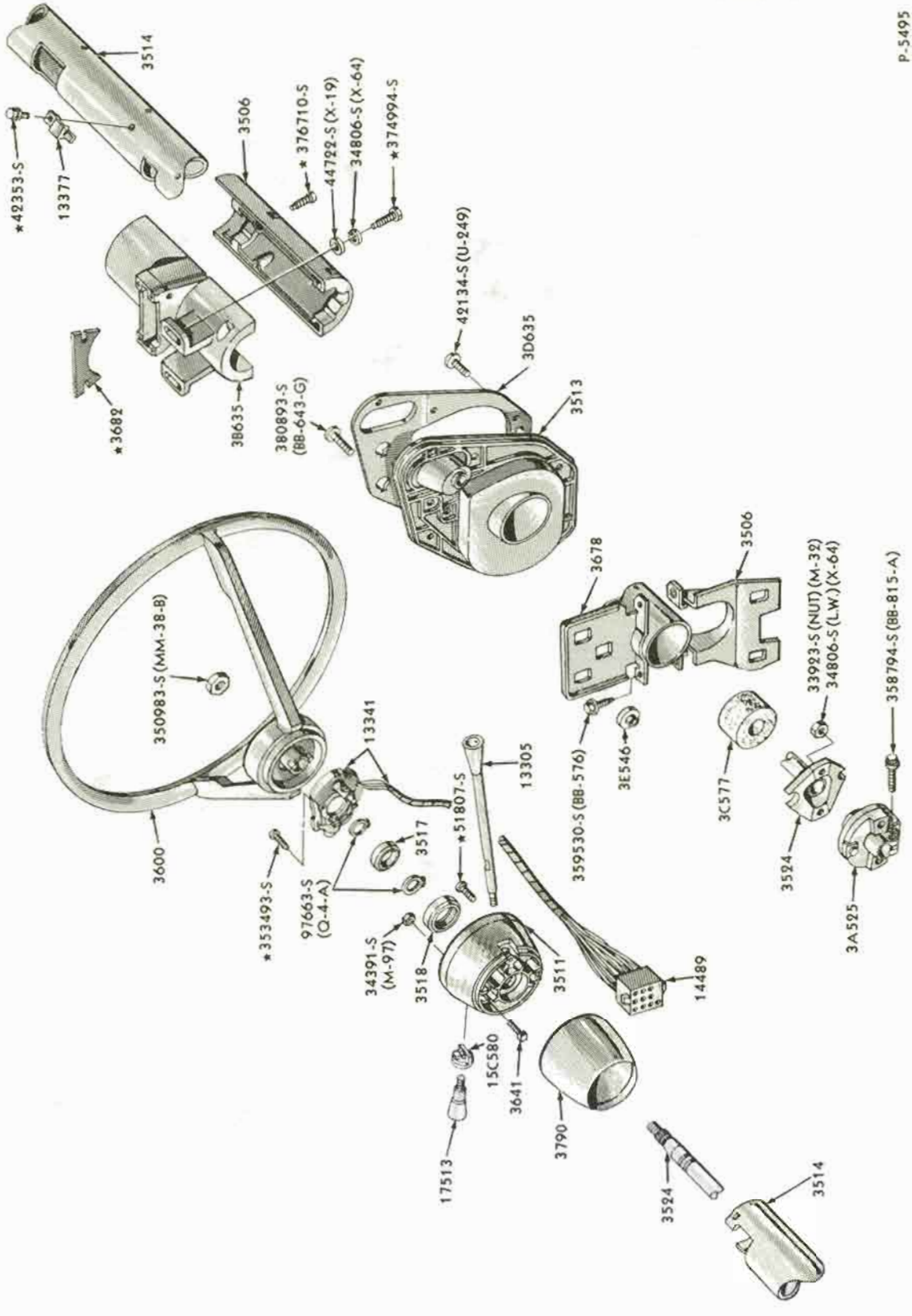

STEERING COLUMN FOR FLOOR OR CONSOLE MOUNTED SHIFT - TYPICAL
1965/67 FORD

COPYRIGHT © 1975 — FORD MOTOR COMPANY — DEARBORN, MICHIGAN

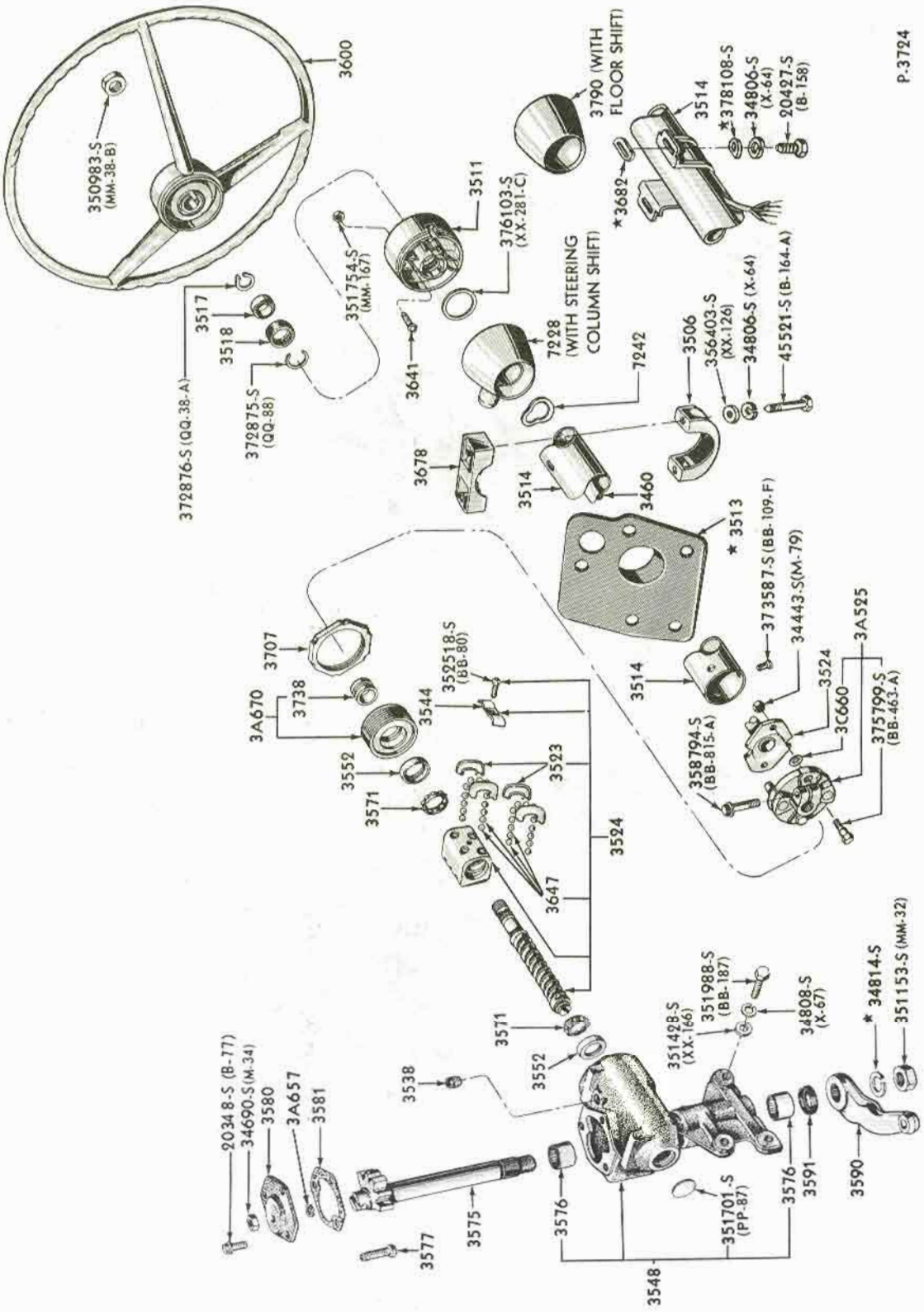

STEERING COLUMN FOR FLOOR SHIFT - 1965 FAIRLANE
STEERING GEAR - 1965 FAIRLANE

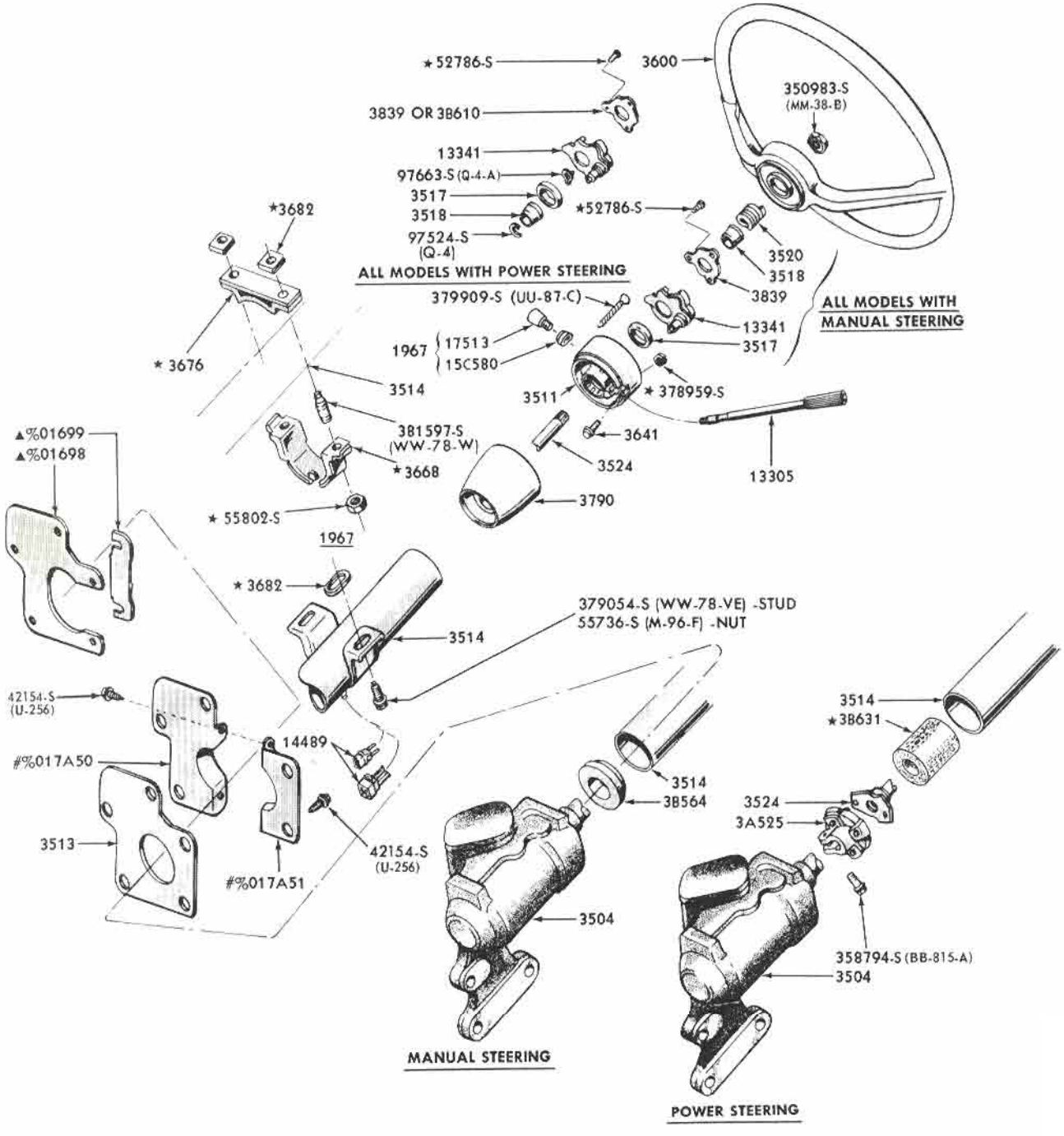

▲MANUAL STEERING FAIRLANE & COMET - POWER & MANUAL STEERING FALCON
#POWER STEERING FAIRLANE & COMET ONLY
%REFER TO BODY GROUP NUMBER

P-5138

COPYRIGHT © 1975 — FORD MOTOR COMPANY — DEARBORN, MICHIGAN

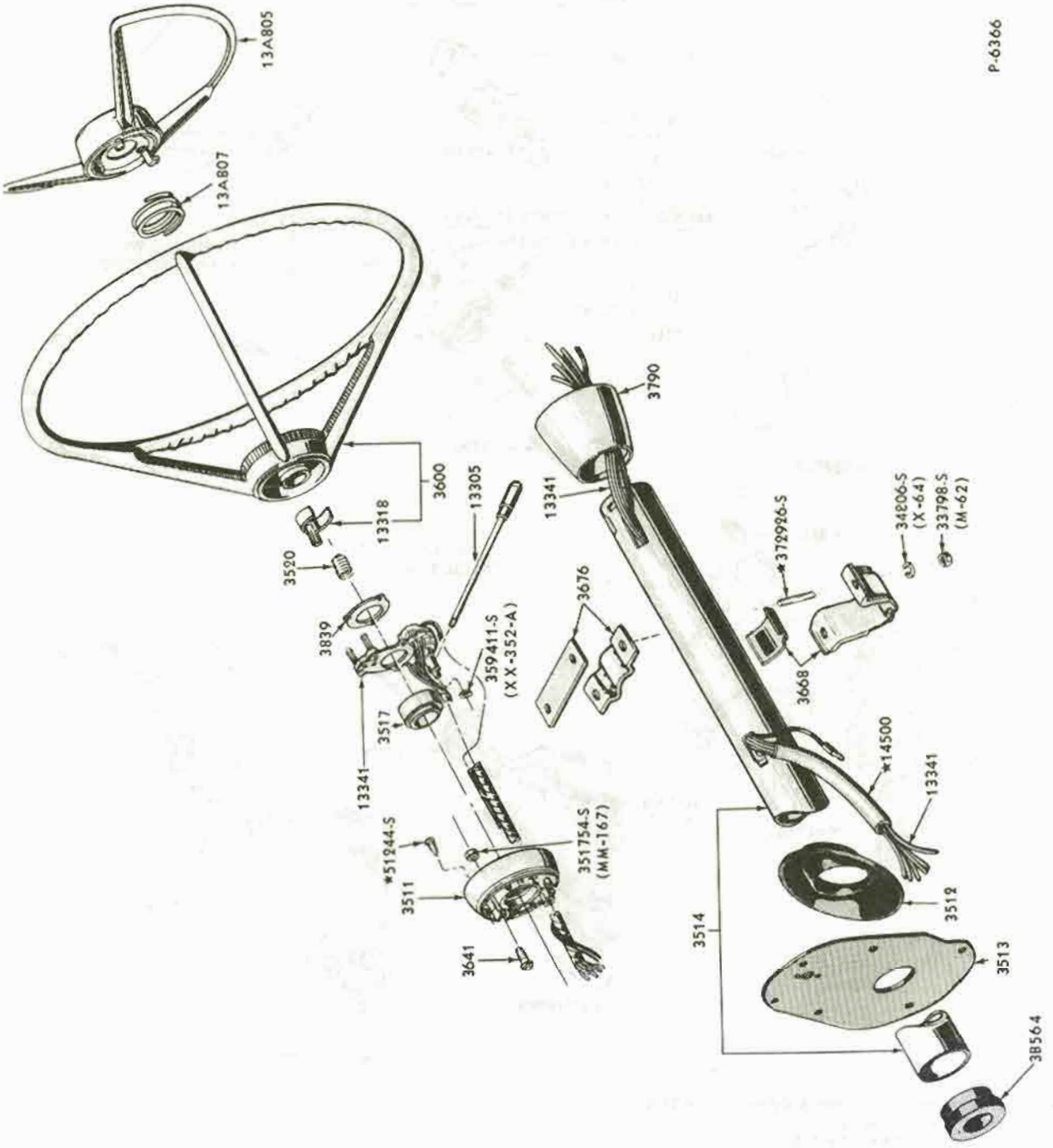

STEERING COLUMN FOR FLOOR SHIFT
1965 FALCON, 1965/66 MUSTANG

STEERING COLUMN FOR FLOOR SHIFT - TILT WHEEL
1967 MUSTANG

COPYRIGHT © 1975 — FORD MOTOR COMPANY — DEARBORN, MICHIGAN

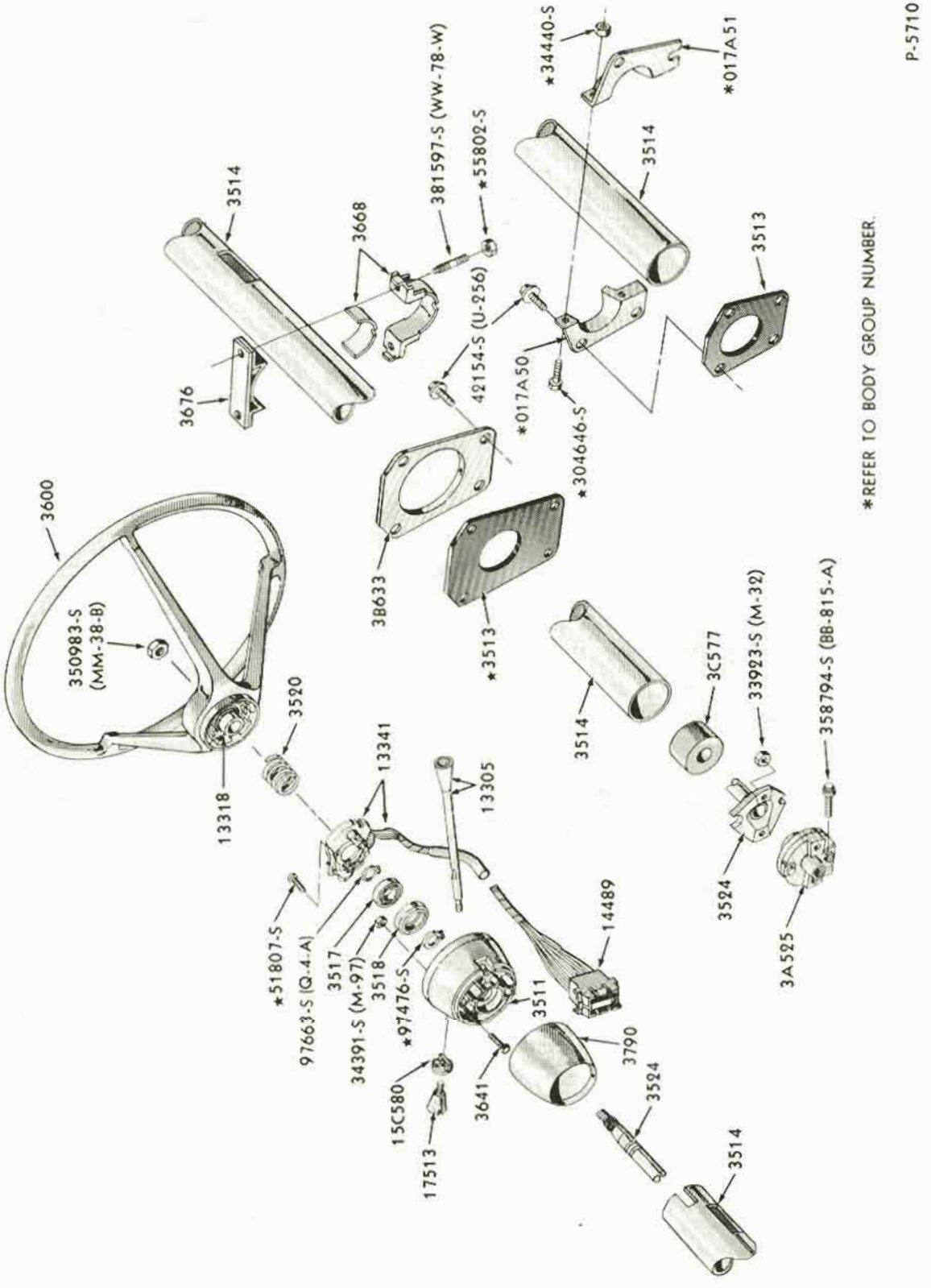

STEERING COLUMN FOR FLOOR SHIFT - FIXED WHEEL
1967 MUSTANG

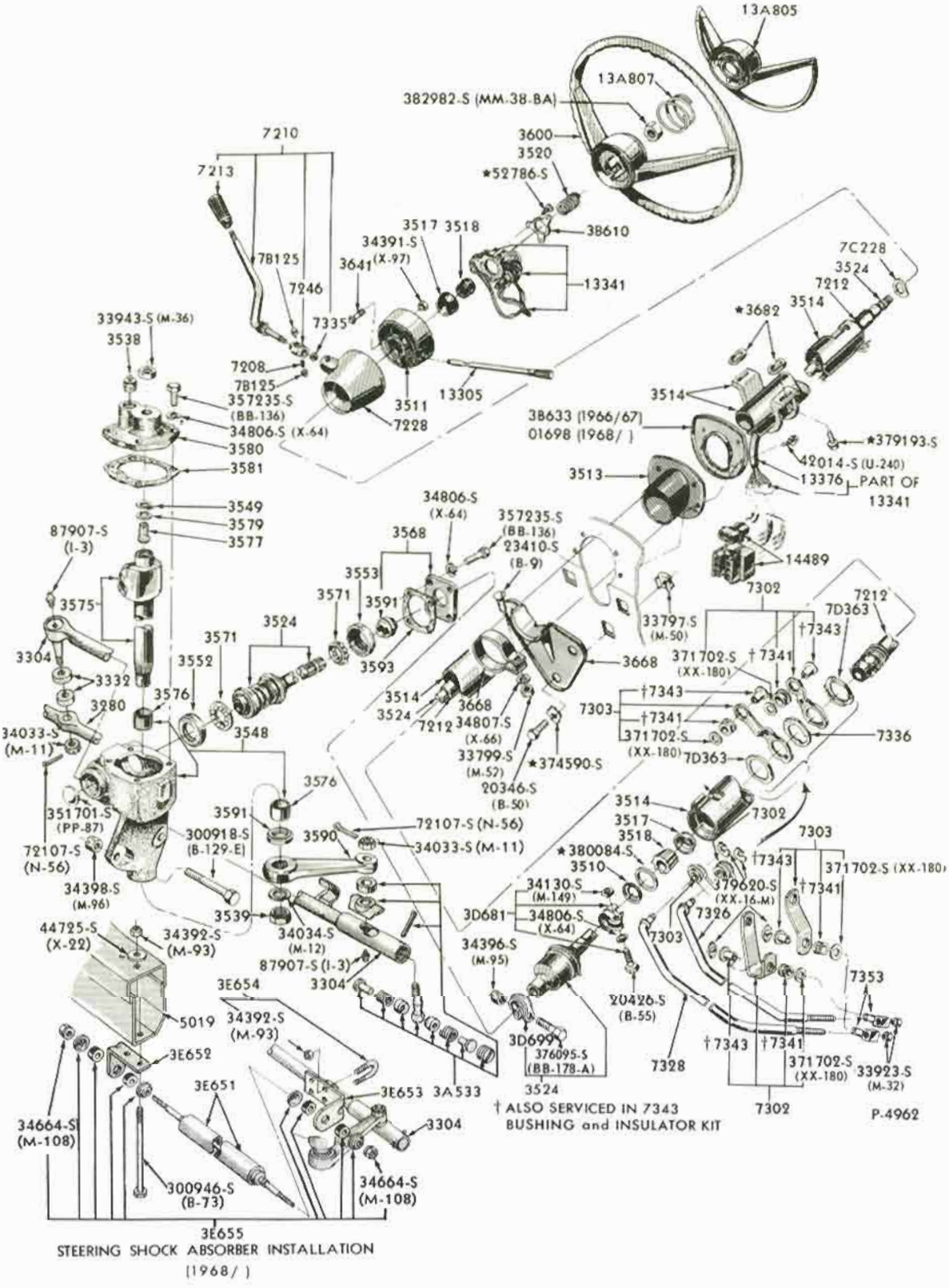

STEERING COLUMN FOR MANUAL TRANSMISSION and MANUAL STEERING
1966/71 BRONCO

COPYRIGHT © 1975 — FORD MOTOR COMPANY — DEARBORN, MICHIGAN

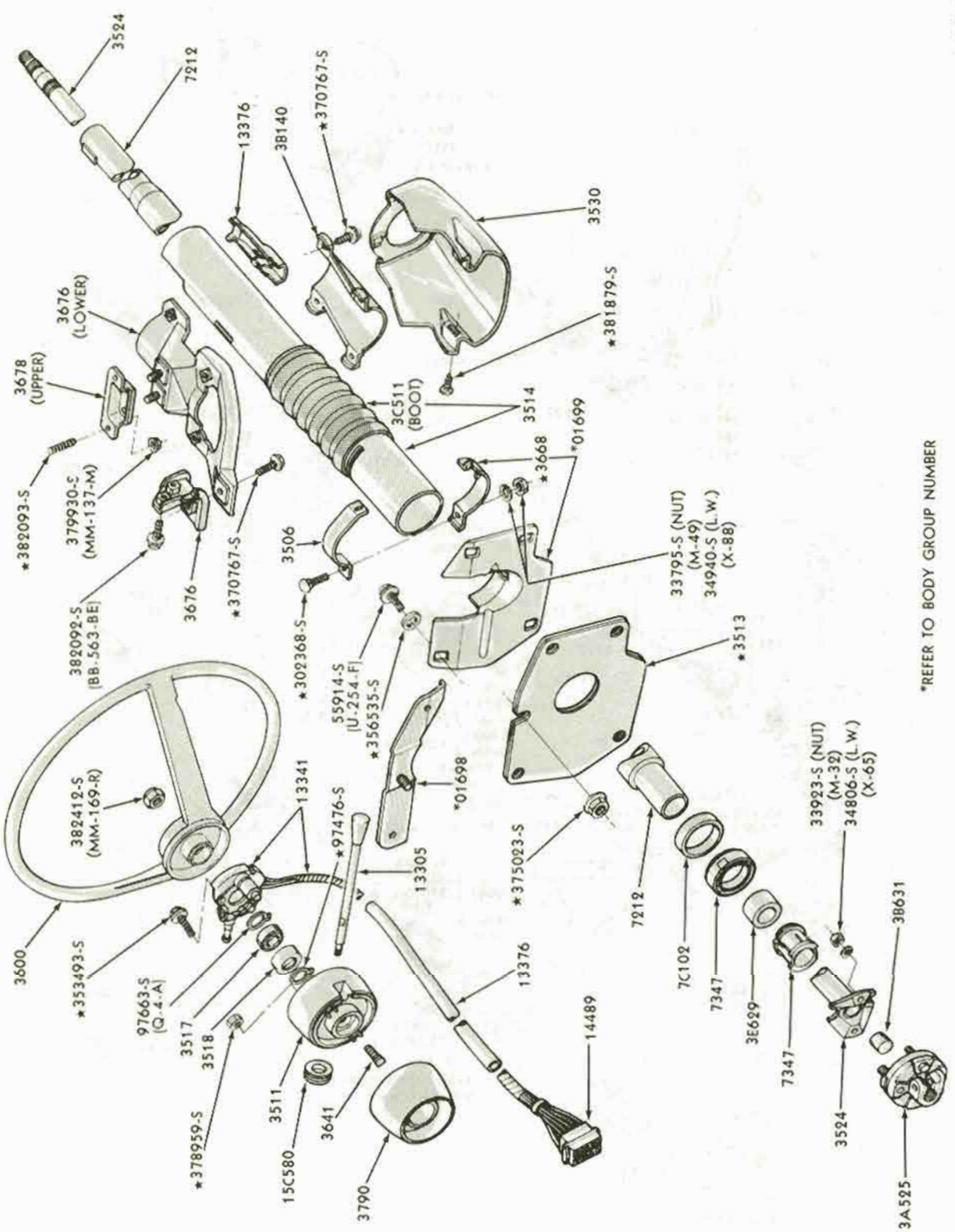

STEERING COLUMN FOR FLOOR SHIFT - FIXED WHEEL
1968 FORD

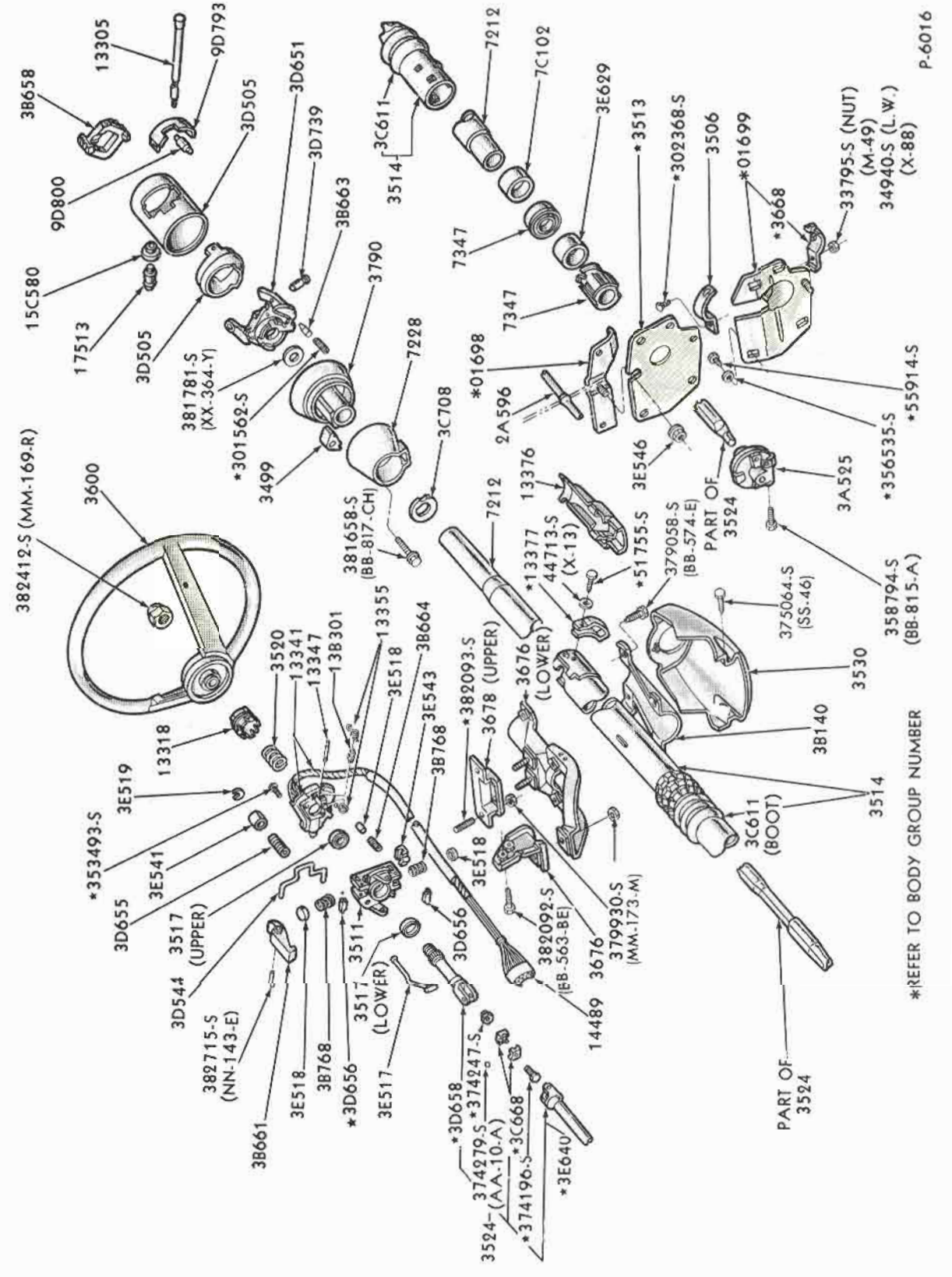

STEERING COLUMN FOR FLOOR SHIFT - TILT WHEEL
1968 FORD

COPYRIGHT © 1975 — FORD MOTOR COMPANY — DEARBORN, MICHIGAN

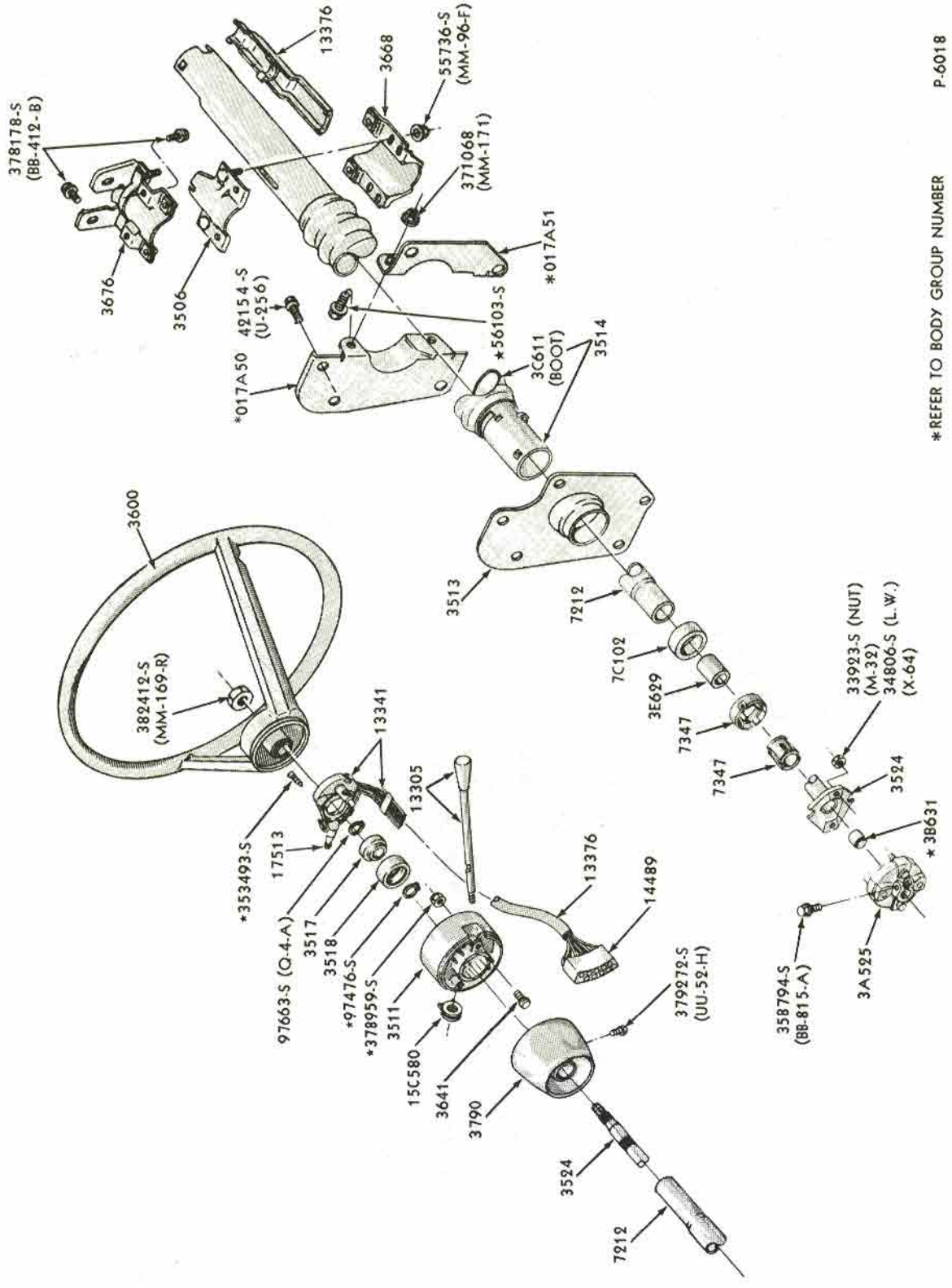

STEERING COLUMN FOR FLOOR SHIFT
1968/69 FAIRLANE/TORINO & FALCON

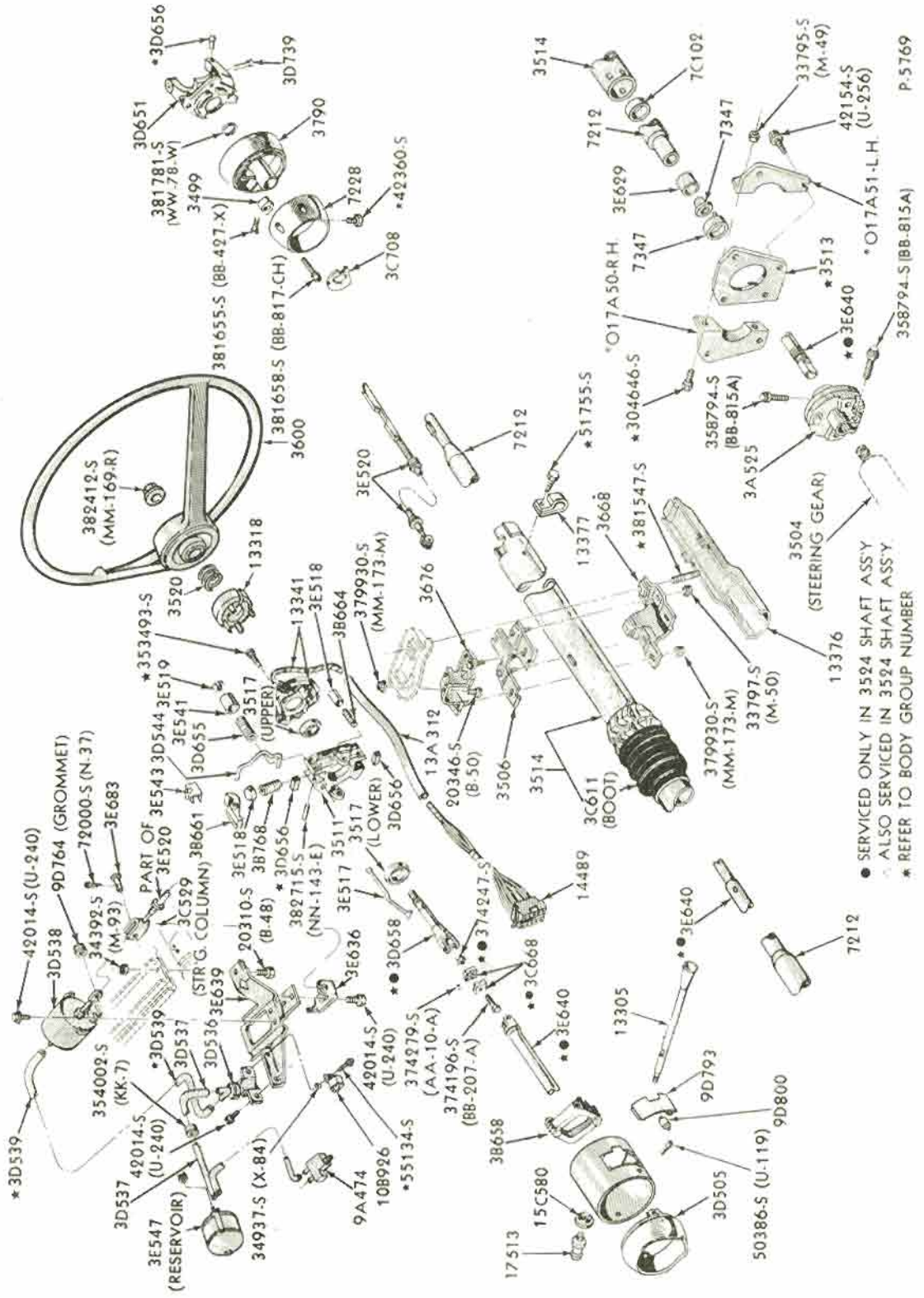

STEERING COLUMN FOR FLOOR SHIFT - TILT WHEEL
1968 MUSTANG

COPYRIGHT © 1975 — FORD MOTOR COMPANY — DEARBORN, MICHIGAN

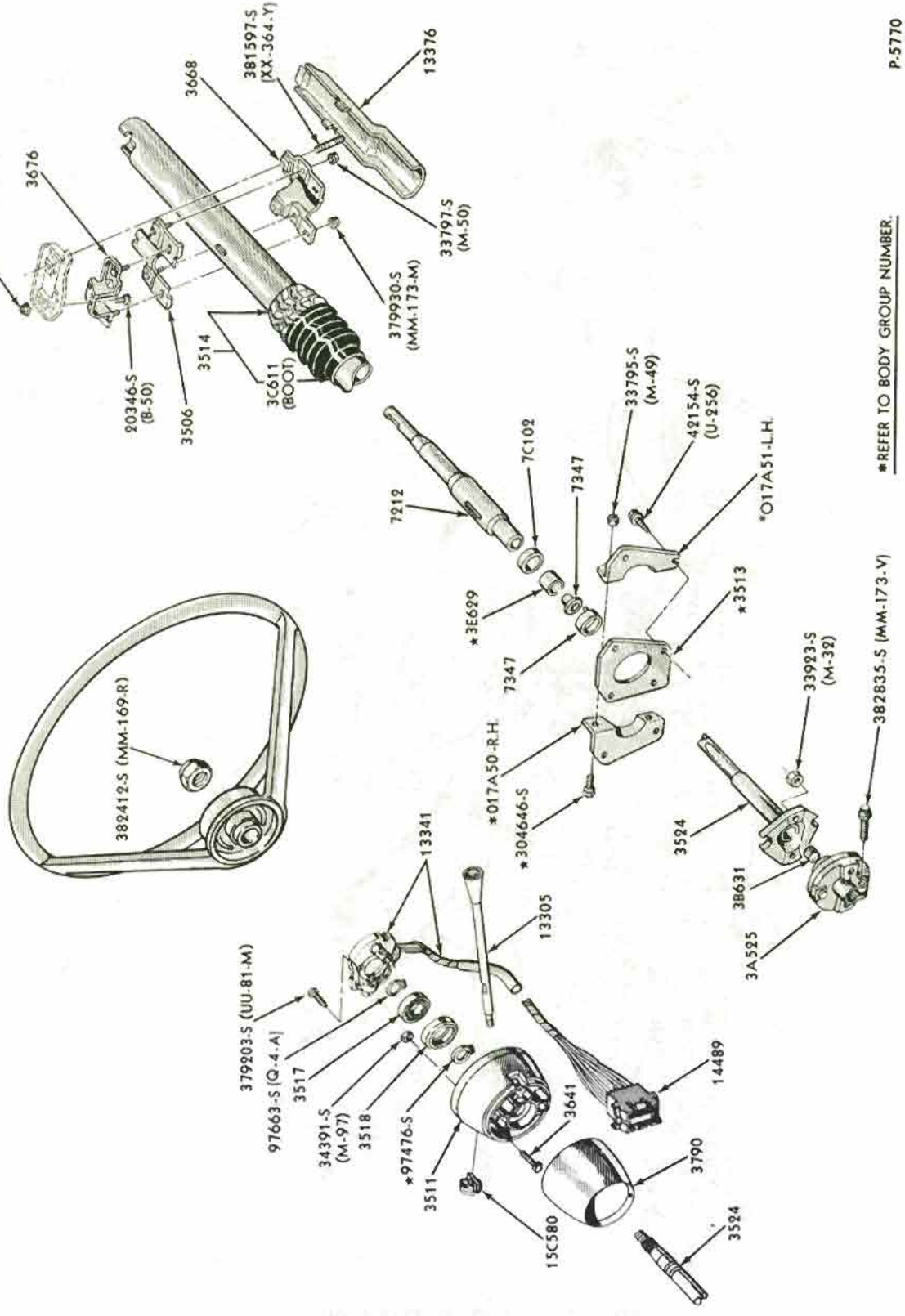

STEERING COLUMN FOR FLOOR SHIFT - FIXED WHEEL
1968 MUSTANG

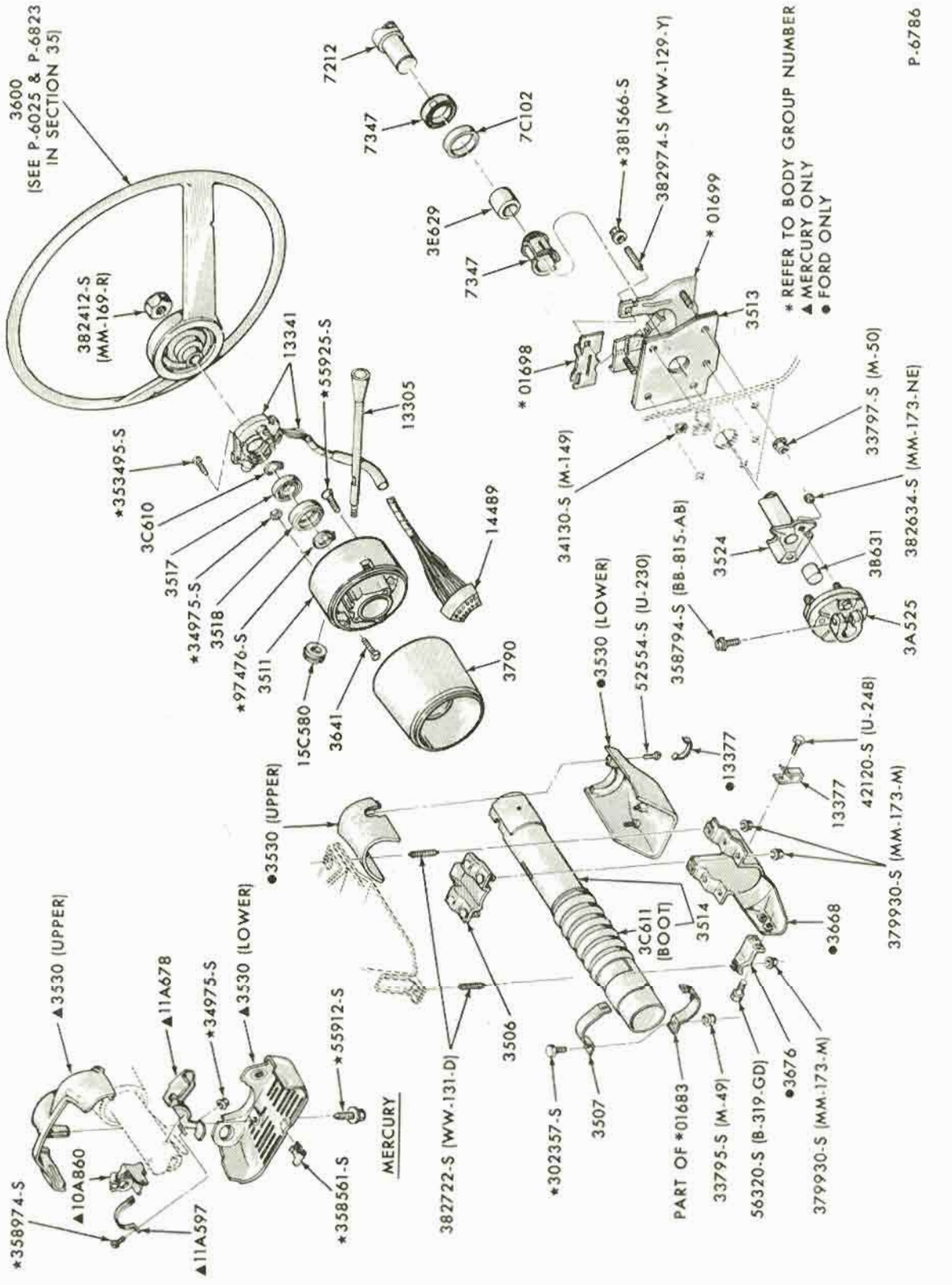

STEERING COLUMN FOR FLOOR SHIFT - FIXED WHEEL
1969 FORD

COPYRIGHT © 1975 — FORD MOTOR COMPANY — DEARBORN, MICHIGAN

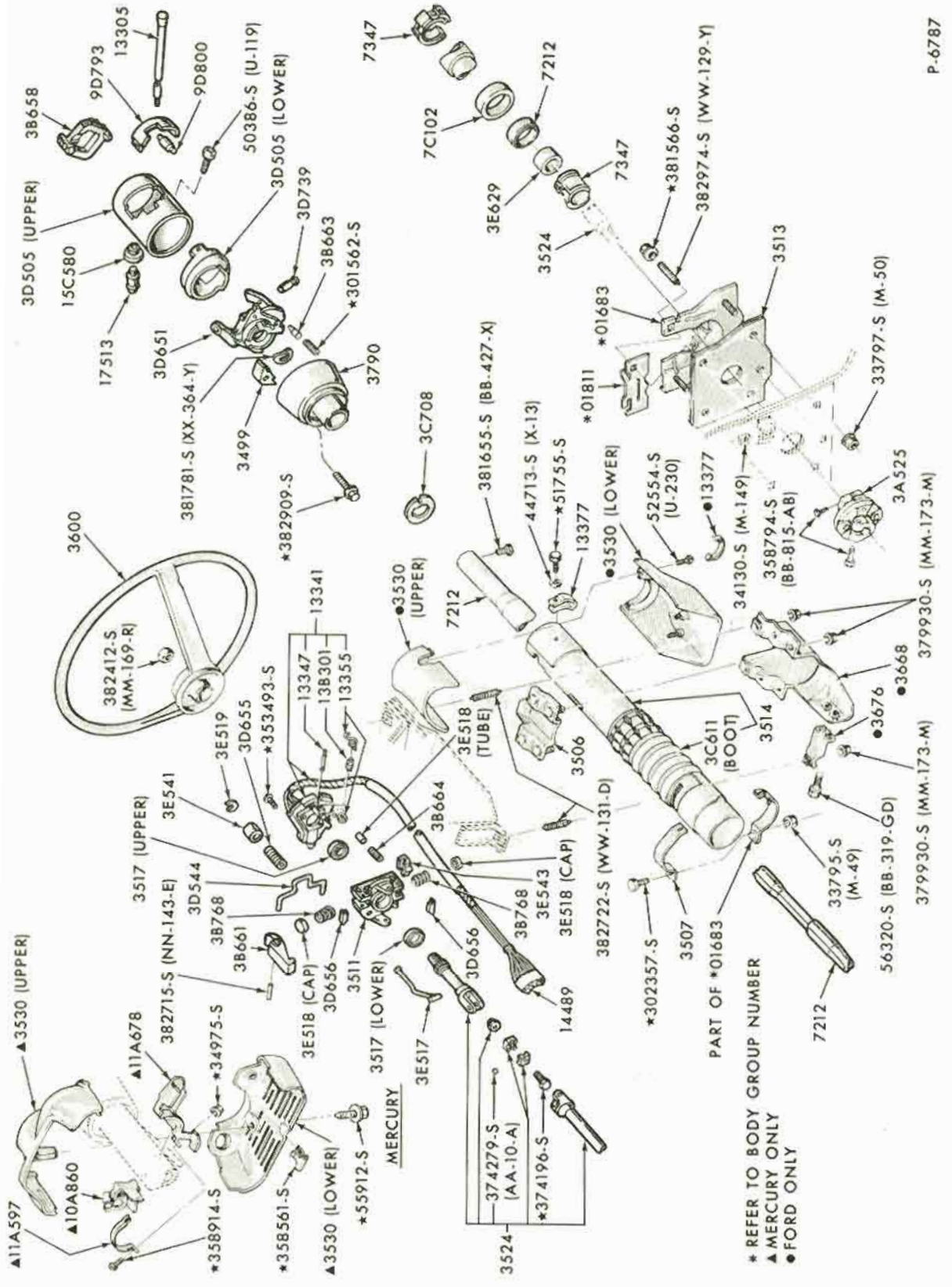

STEERING COLUMN FOR FLOOR SHIFT - TILT WHEEL
1969 FORD

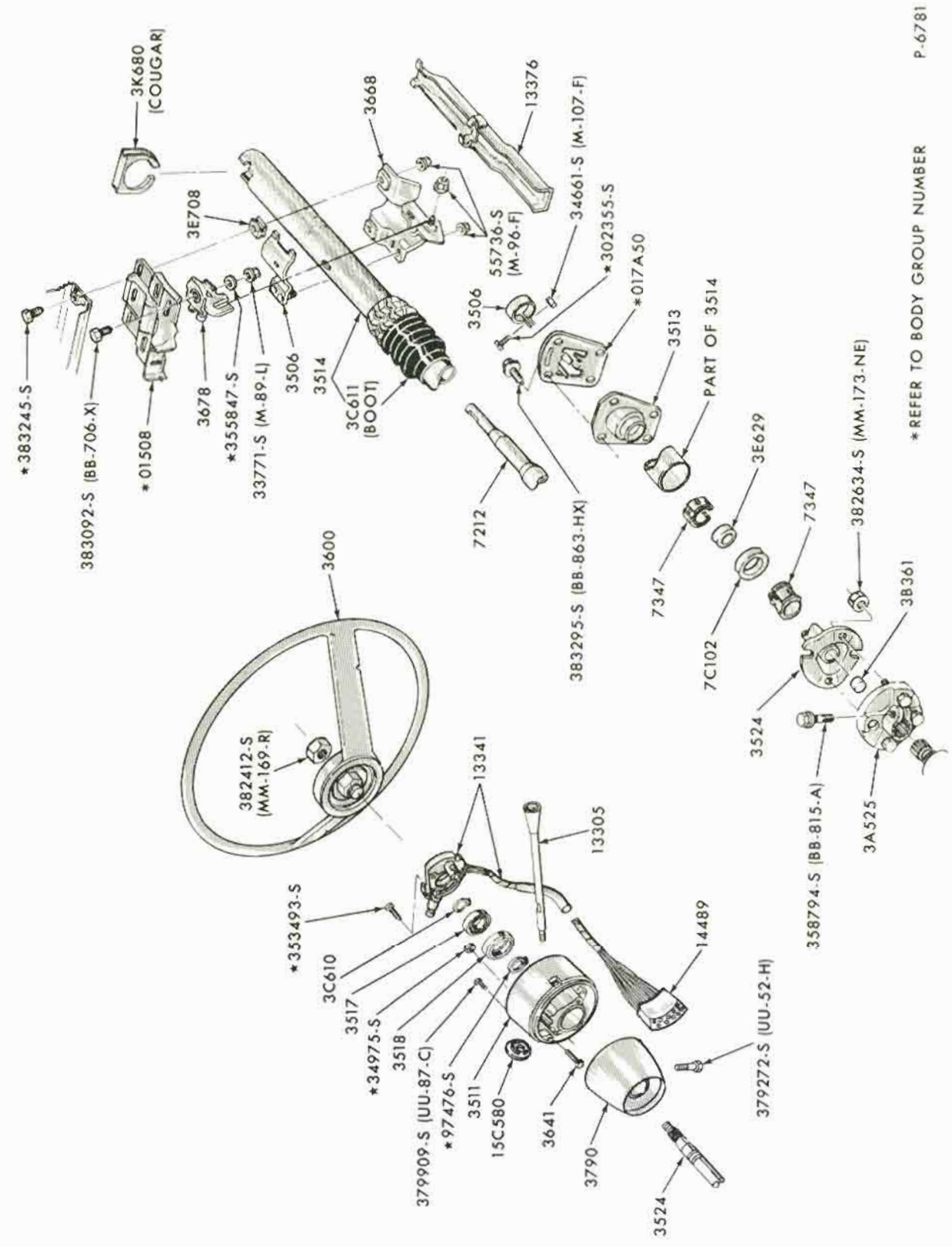

STEERING COLUMN FOR FLOOR SHIFT - FIXED WHEEL
1969 MUSTANG

COPYRIGHT © 1975 — FORD MOTOR COMPANY — DEARBORN, MICHIGAN

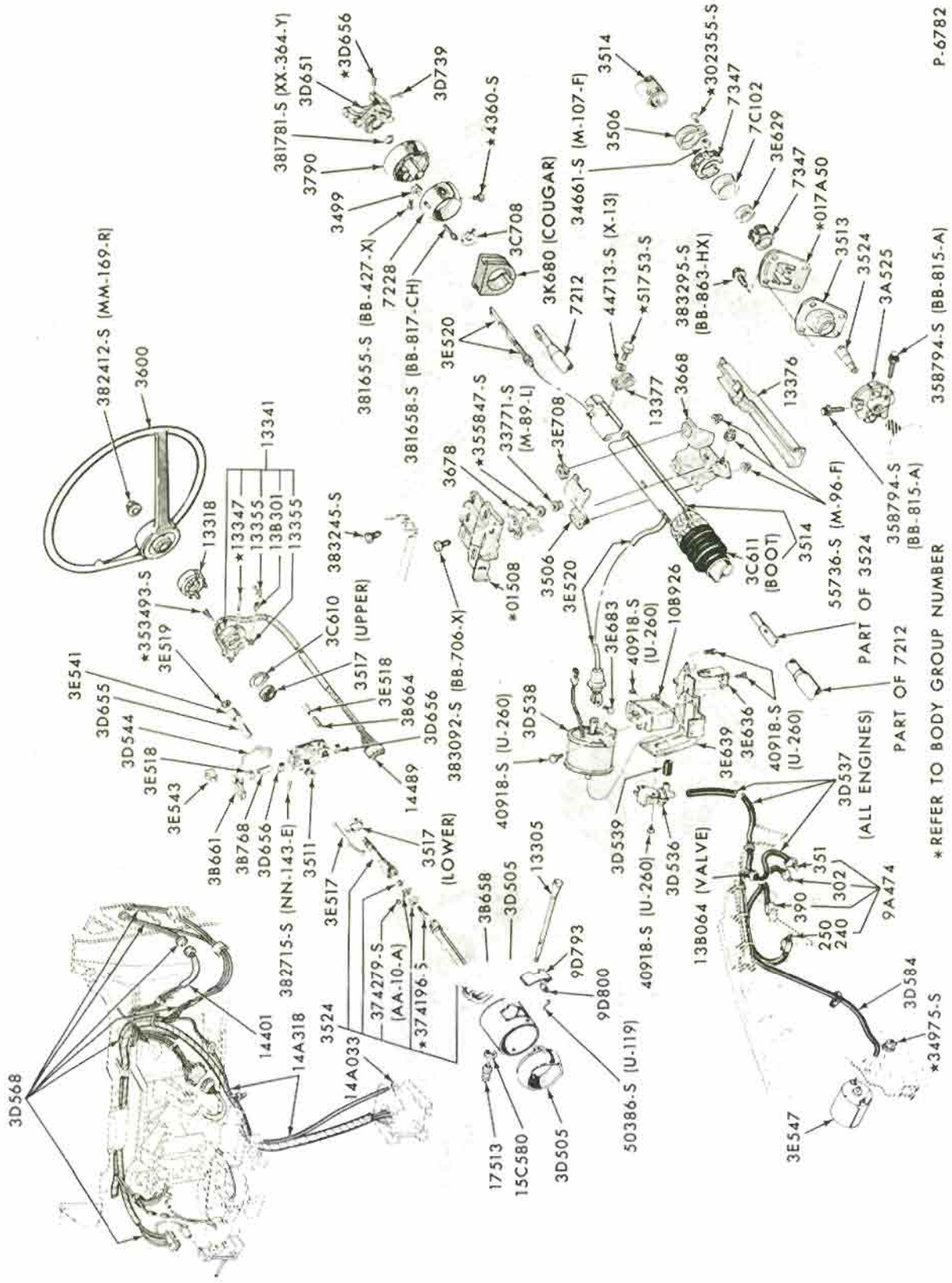

STEERING COLUMN FOR FLOOR SHIFT - TILT WHEEL
1969 MUSTANG

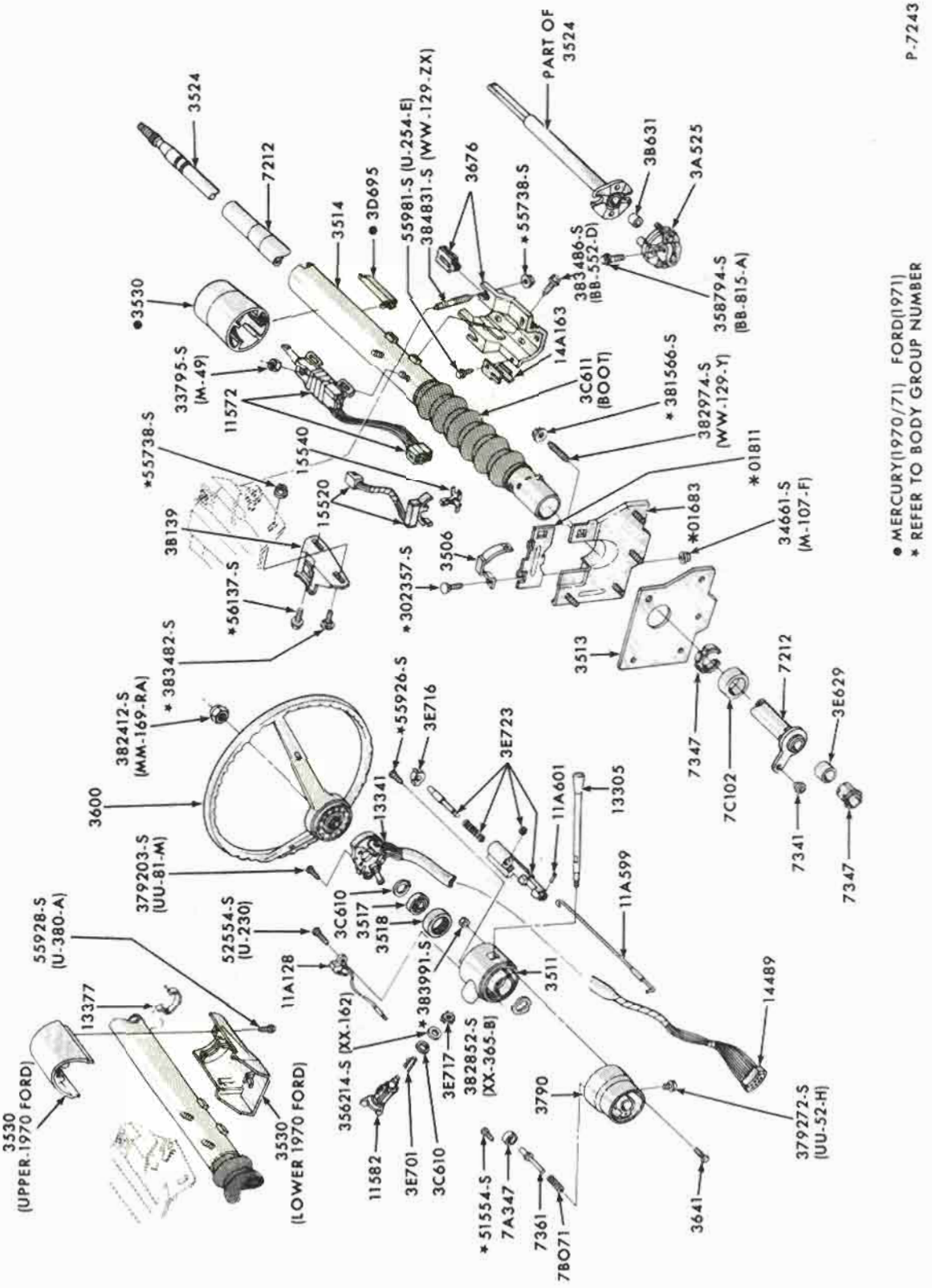

STEERING COLUMN FOR FLOOR SHIFT - FIXED WHEEL
1970/71 FORD

COPYRIGHT © 1975 — FORD MOTOR COMPANY — DEARBORN, MICHIGAN

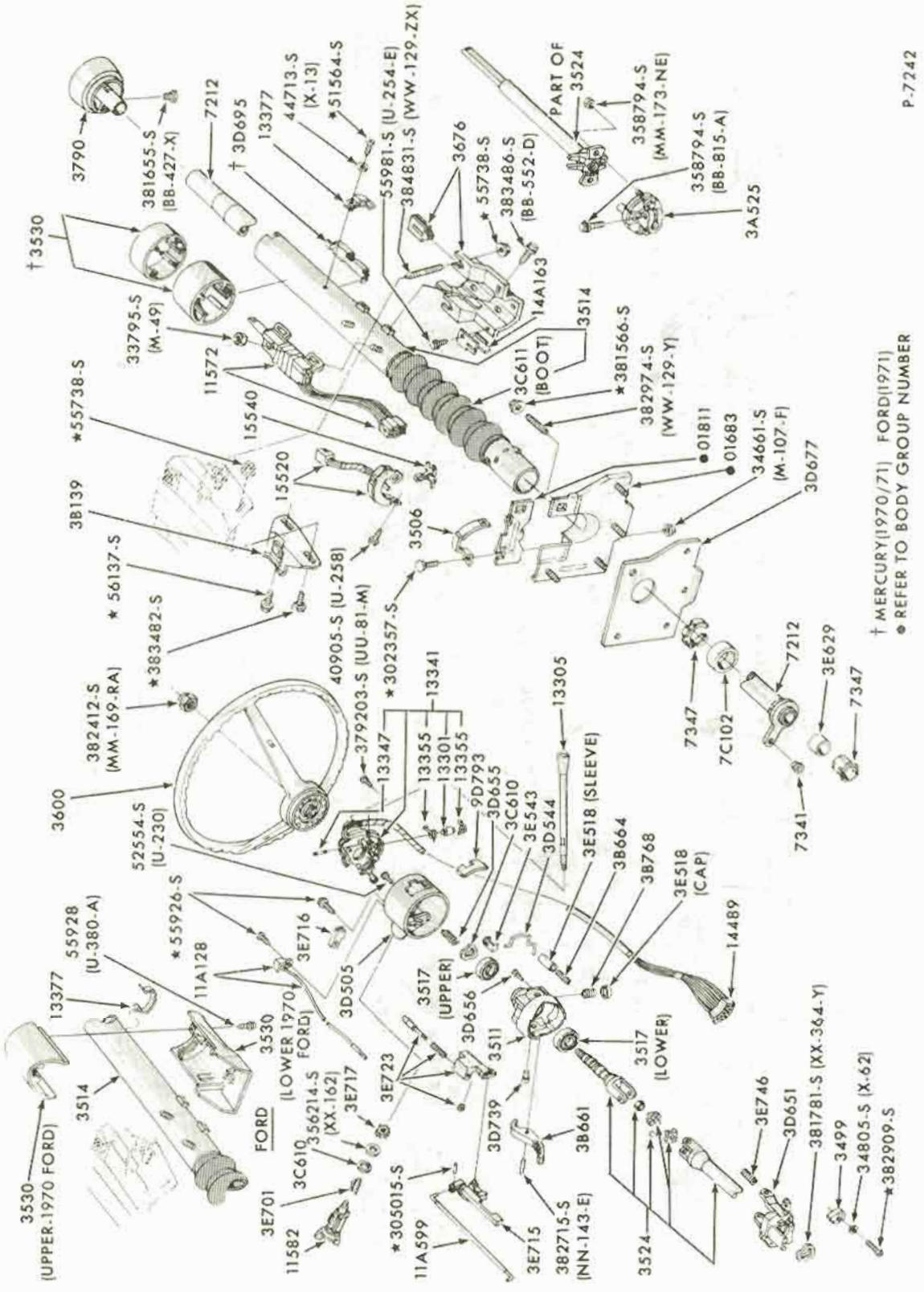

STEERING COLUMN FOR FLOOR SHIFT - TILT WHEEL
1970/71 FORD

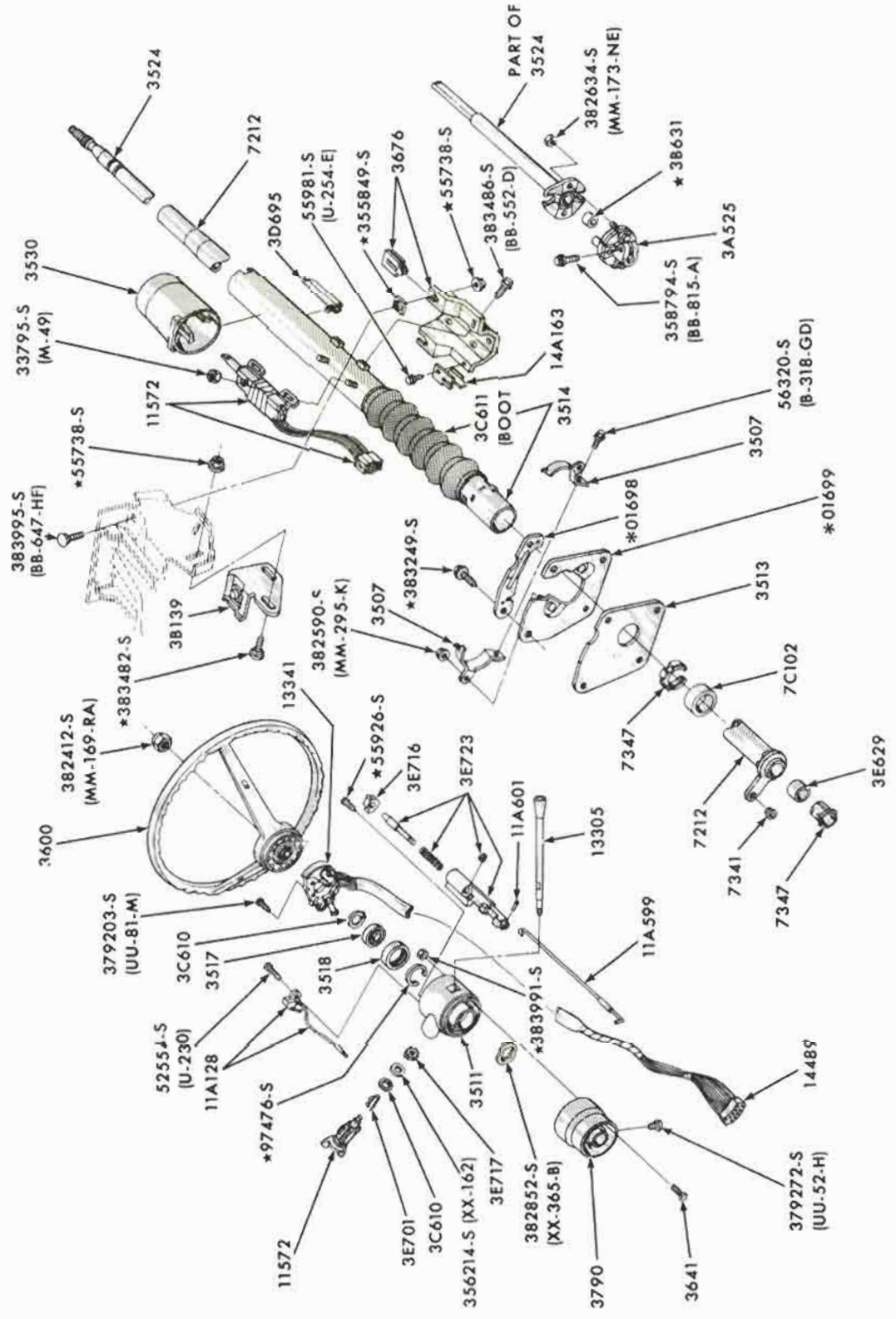

STEERING COLUMN FOR FLOOR SHIFT
1970/71 FAIRLANE/TORINO

COPYRIGHT © 1975 — FORD MOTOR COMPANY — DEARBORN, MICHIGAN

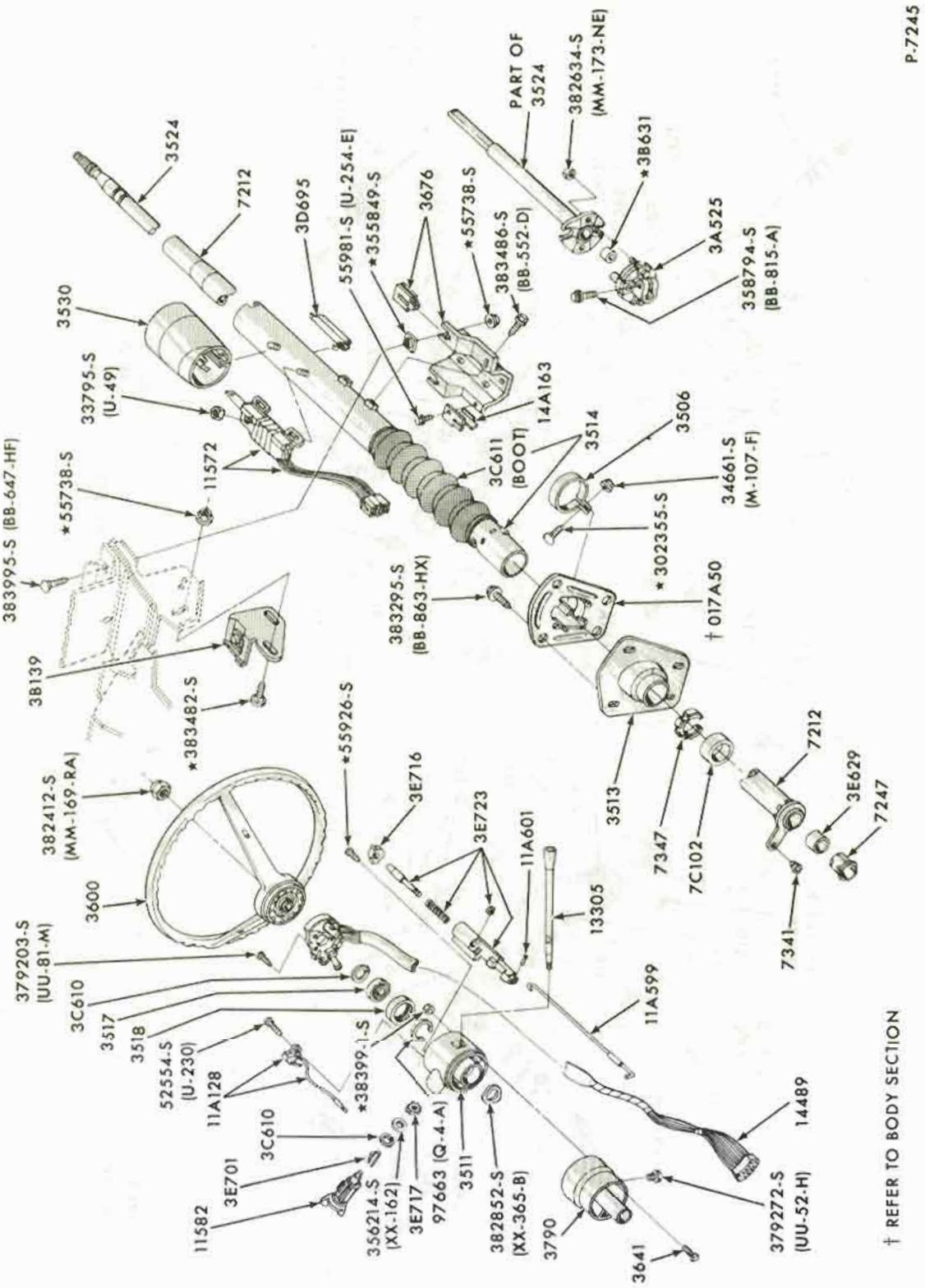

STEERING COLUMN FOR FLOOR SHIFT - FIXED WHEEL
1970/72 MUSTANG

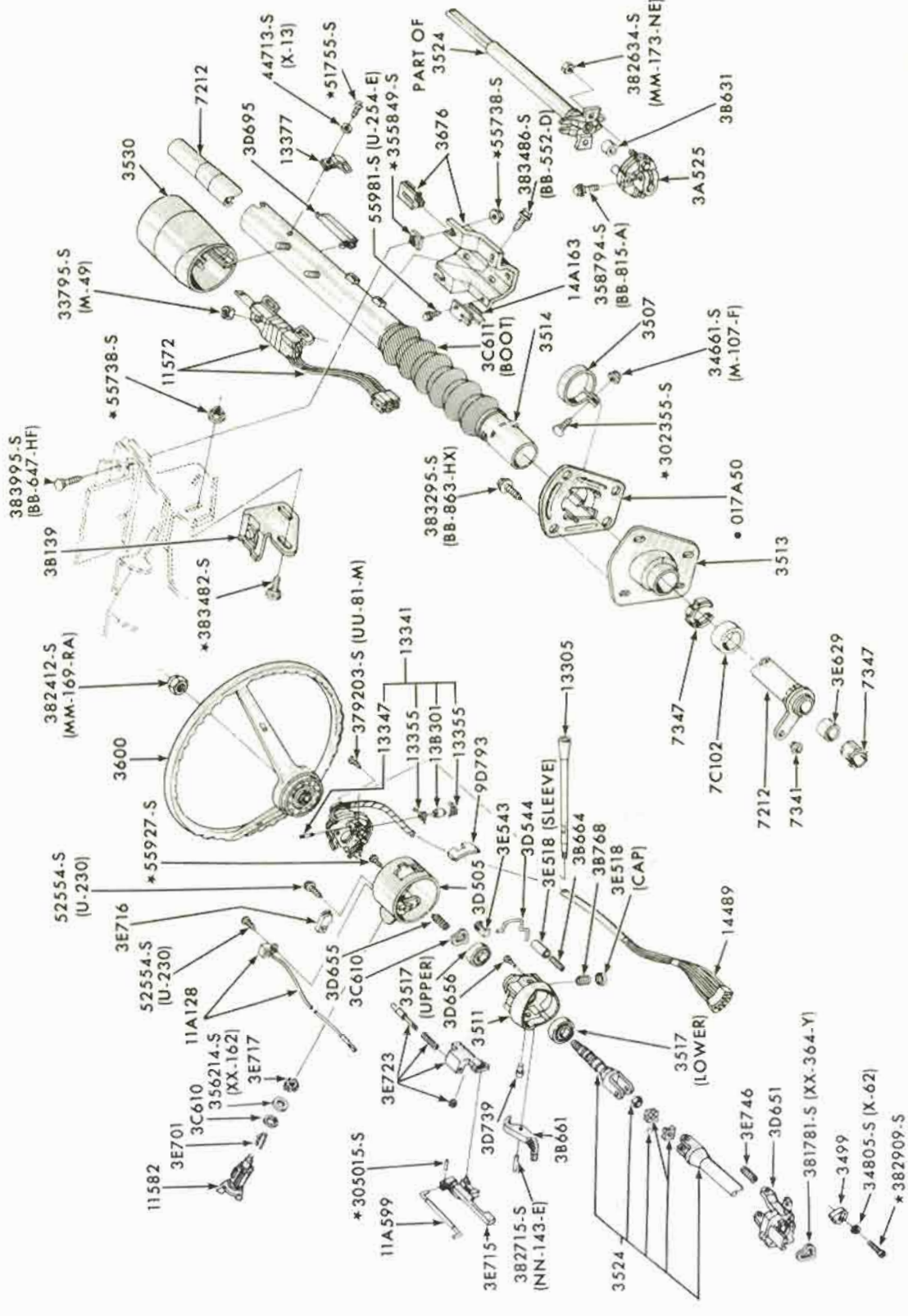

STEERING COLUMN FOR FLOOR SHIFT - TILT WHEEL
1970/72 MUSTANG

COPYRIGHT © 1975 — FORD MOTOR COMPANY — DEARBORN, MICHIGAN

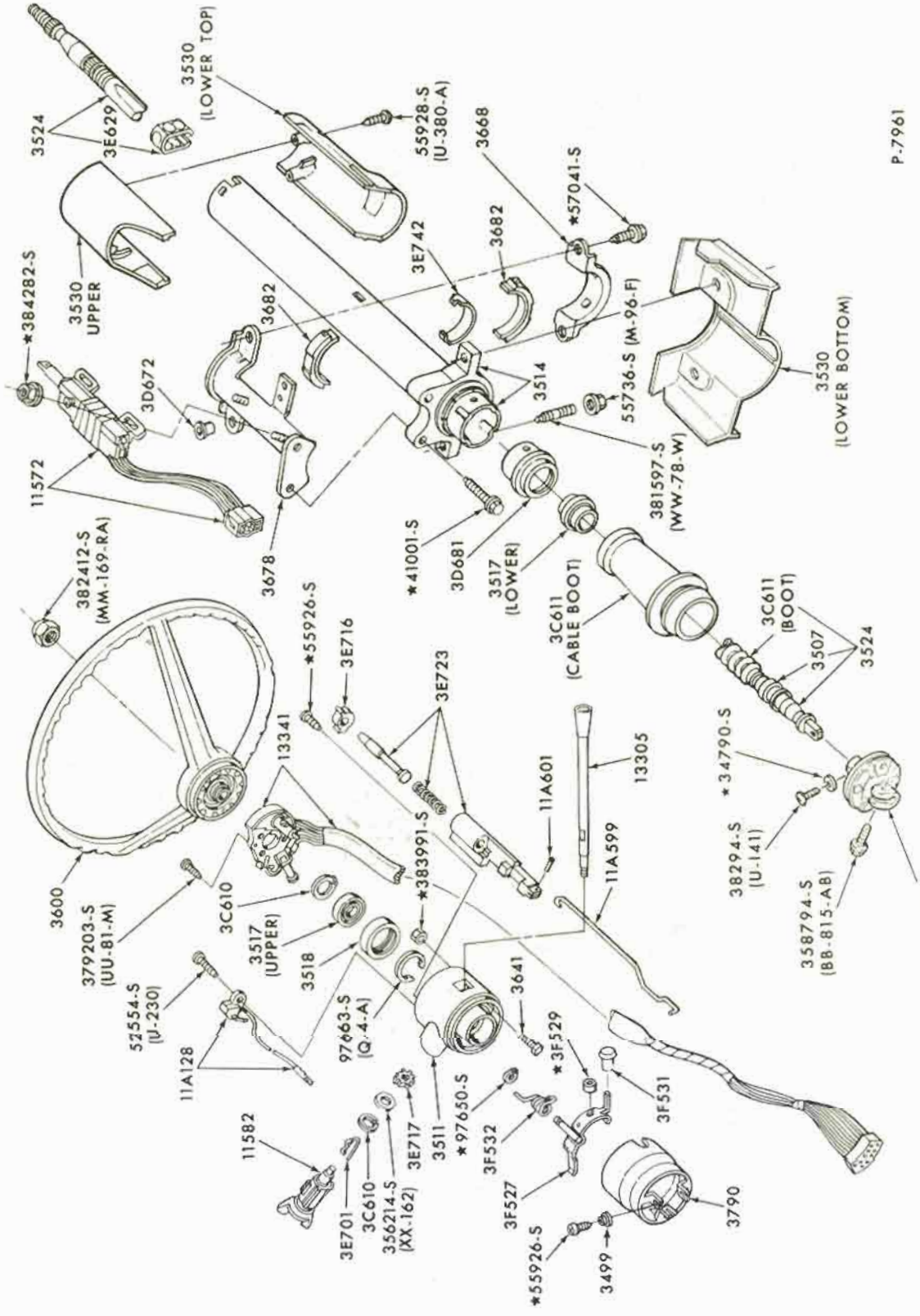

STEERING COLUMN FOR FLOOR SHIFT
1971/72 PINTO - "BEFORE 1/7/72"

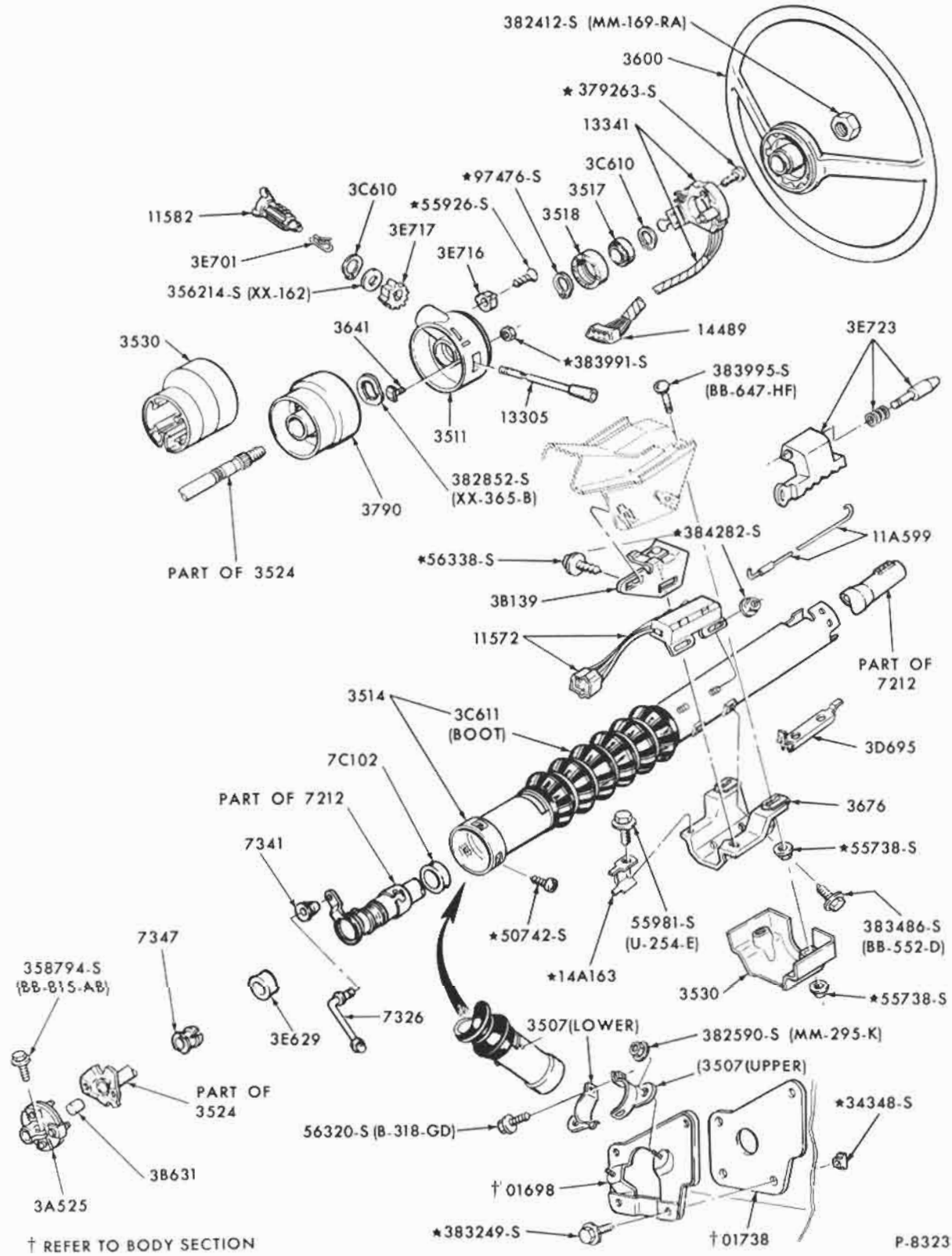

STEERING COLUMN FOR FLOOR SHIFT
1971/72 MAVERICK

COPYRIGHT © 1975 — FORD MOTOR COMPANY — DEARBORN, MICHIGAN

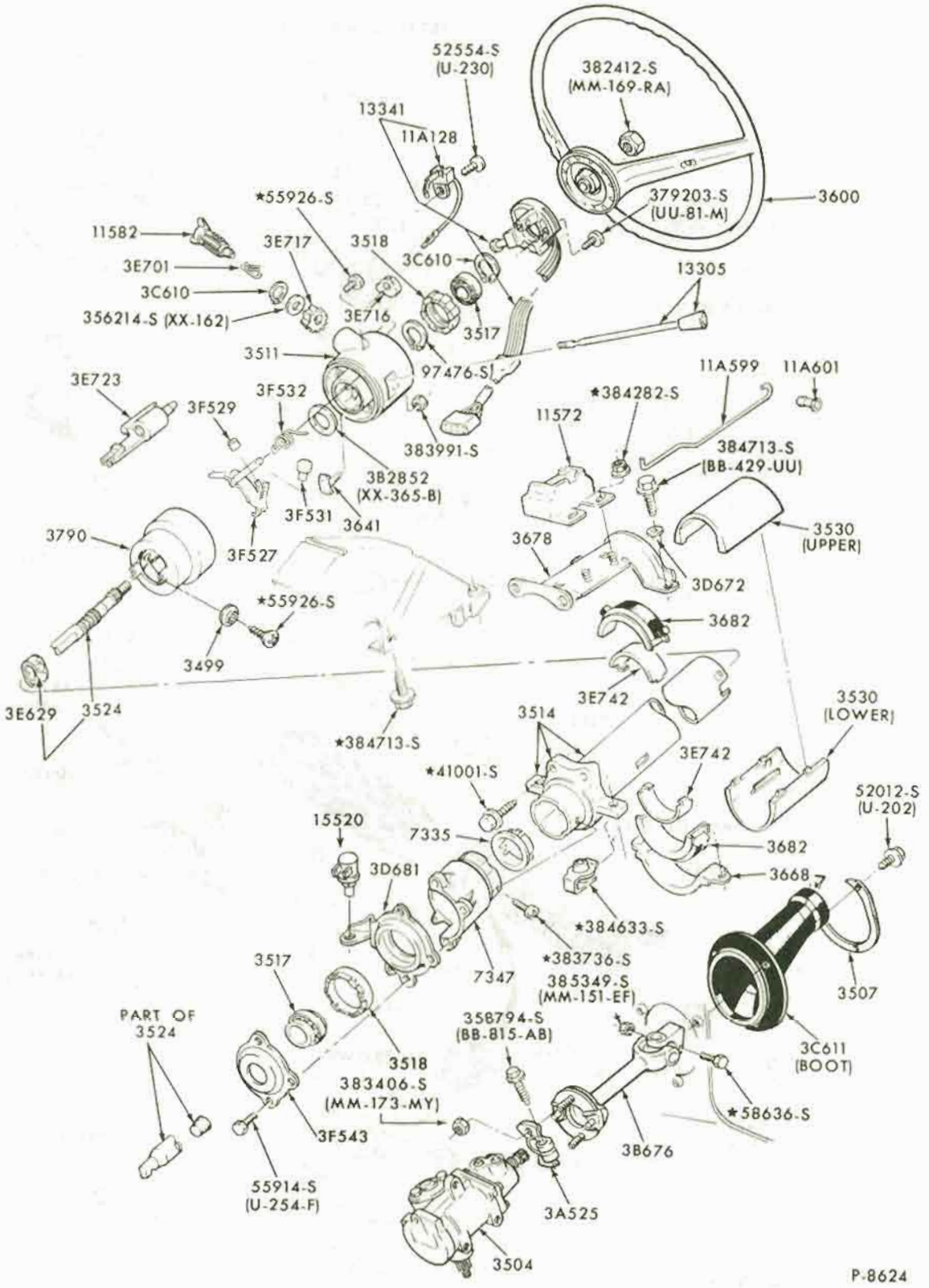

STEERING COLUMN FOR FLOOR SHIFT
1972 TORINO

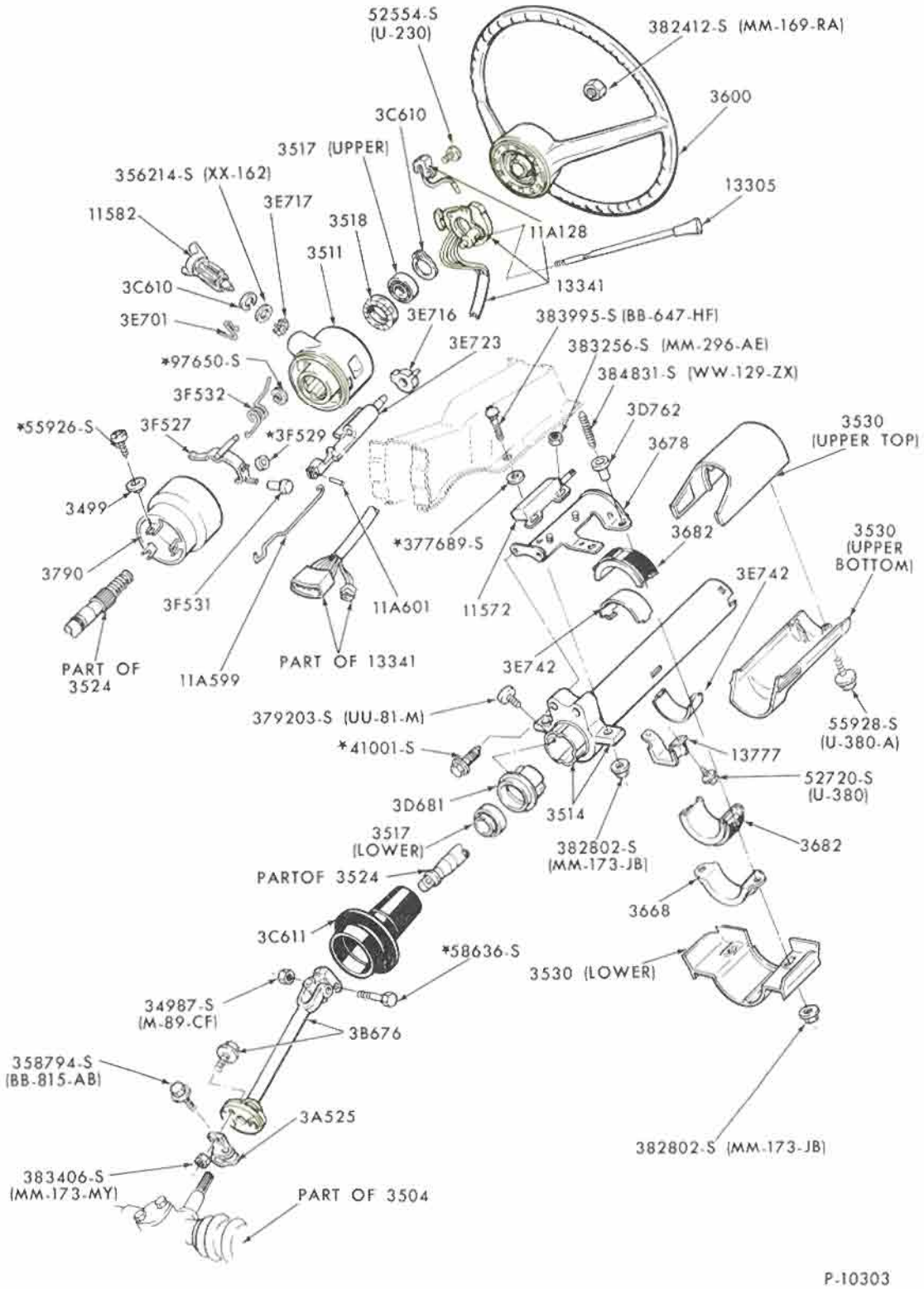

P-10303

STEERING COLUMN FOR FLOOR SHIFT
1972 PINTO - "FROM 1/7/72"

COPYRIGHT © 1975 — FORD MOTOR COMPANY — DEARBORN, MICHIGAN

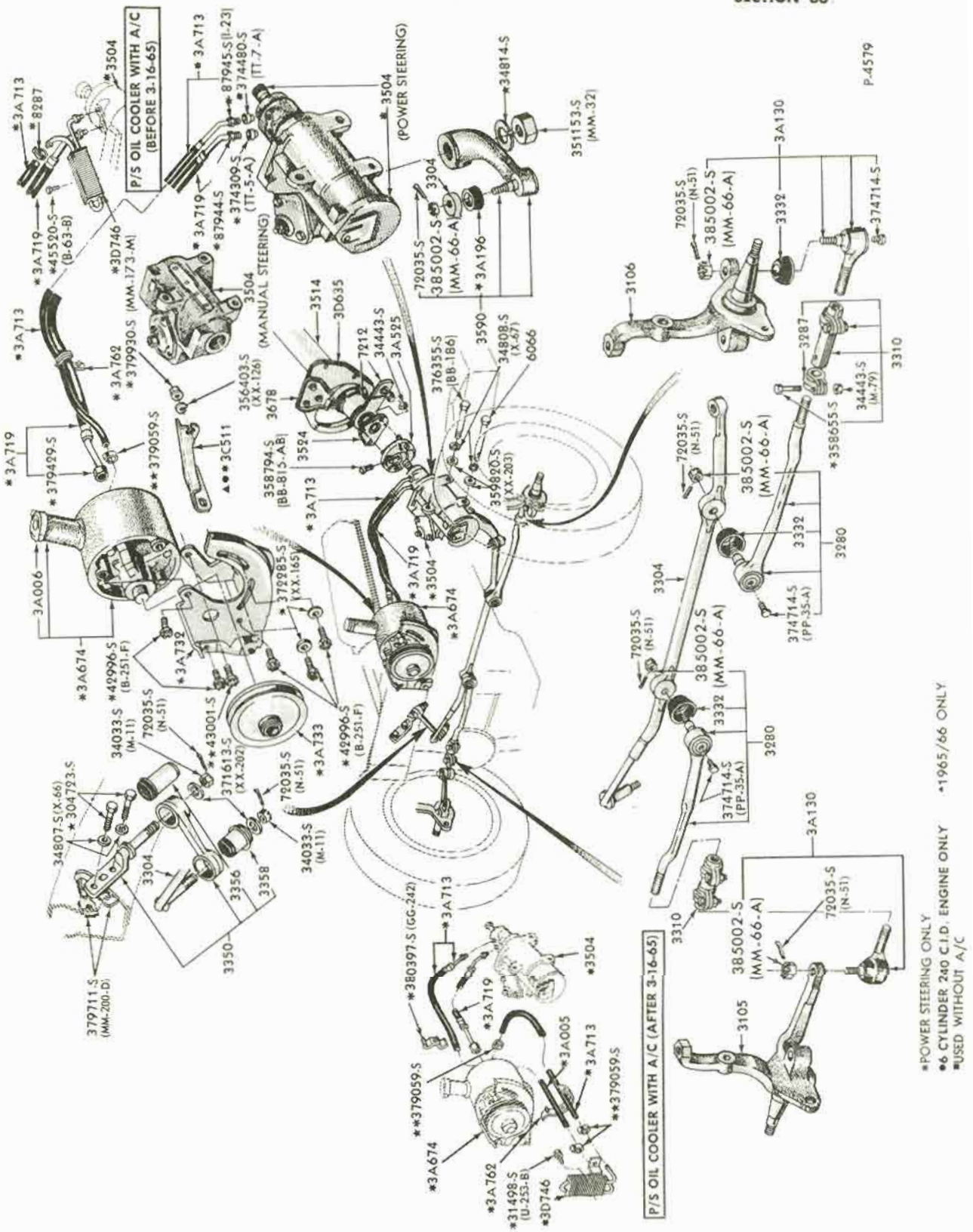

POWER STEERING SYSTEM
(TYPICAL FOR MANUAL STEERING LINKAGE)
1965/66 FORD

COPYRIGHT © 1975 — FORD MOTOR COMPANY — DEARBORN, MICHIGAN

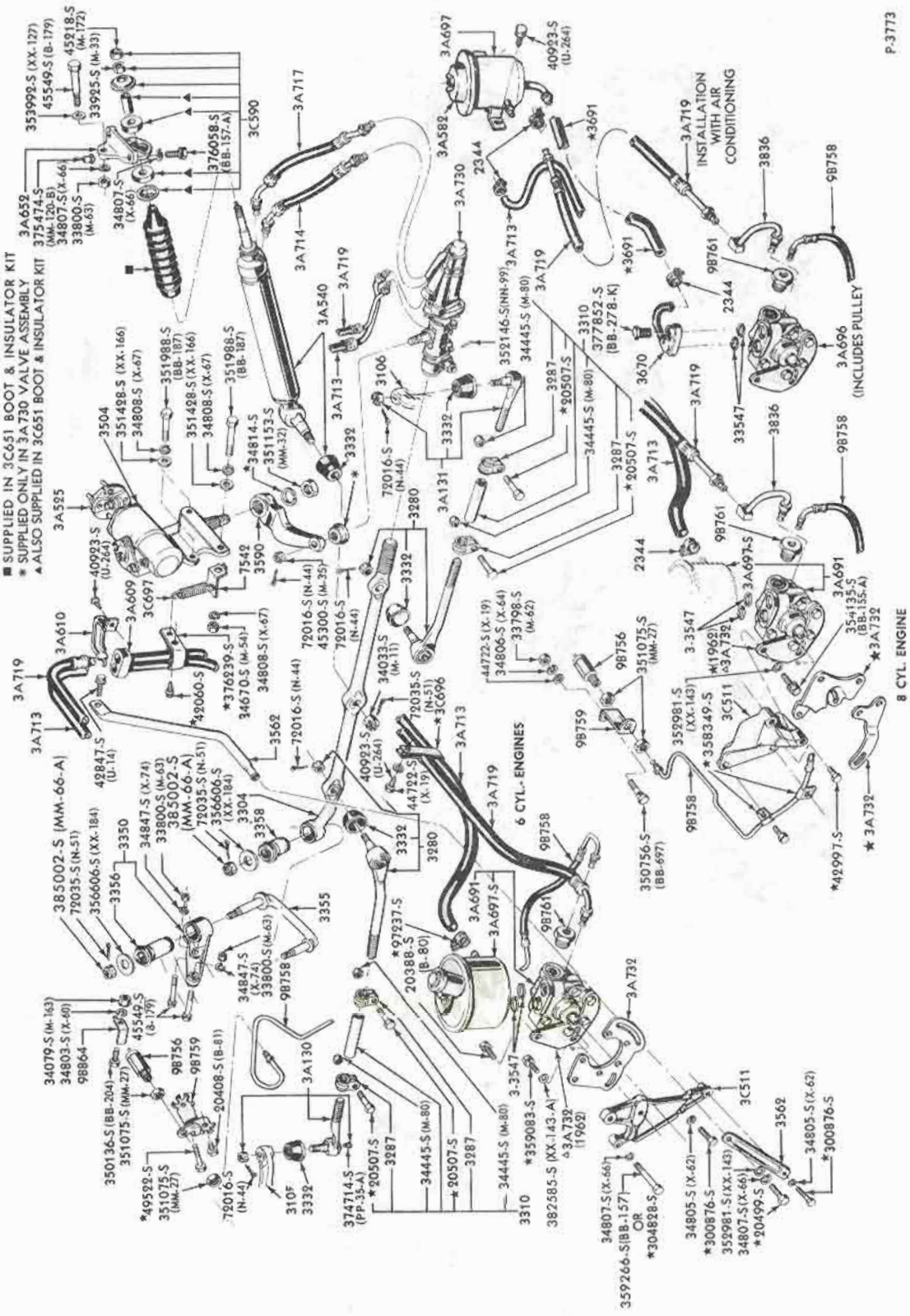
■ SUPPLIED IN 3C651 BOOT & INSULATOR KIT
* SUPPLIED ONLY IN 3A730 VALVE ASSEMBLY
▲ ALSO SUPPLIED IN 3C651 BOOT & INSULATOR KIT
P-3773
INSTALLATION WITH AIR CONDITIONING
(INCLUDES PULLEY)
8 CYL. ENGINE
6 CYL. ENGINES

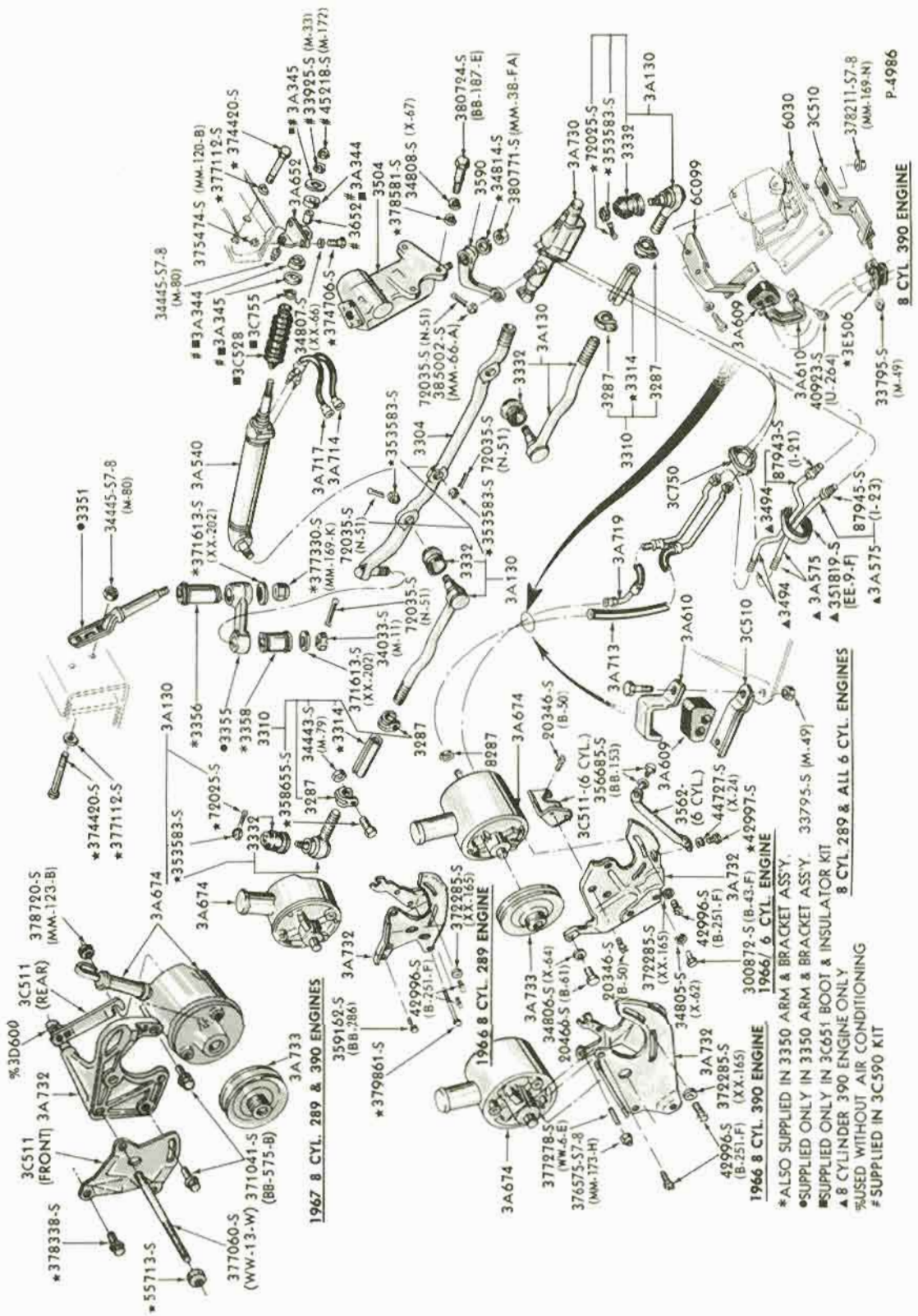

POWER STEERING SYSTEM - TYPICAL
1966/68 FAIRLANE/TORINO & FALCON

COPYRIGHT © 1975 — FORD MOTOR COMPANY — DEARBORN, MICHIGAN

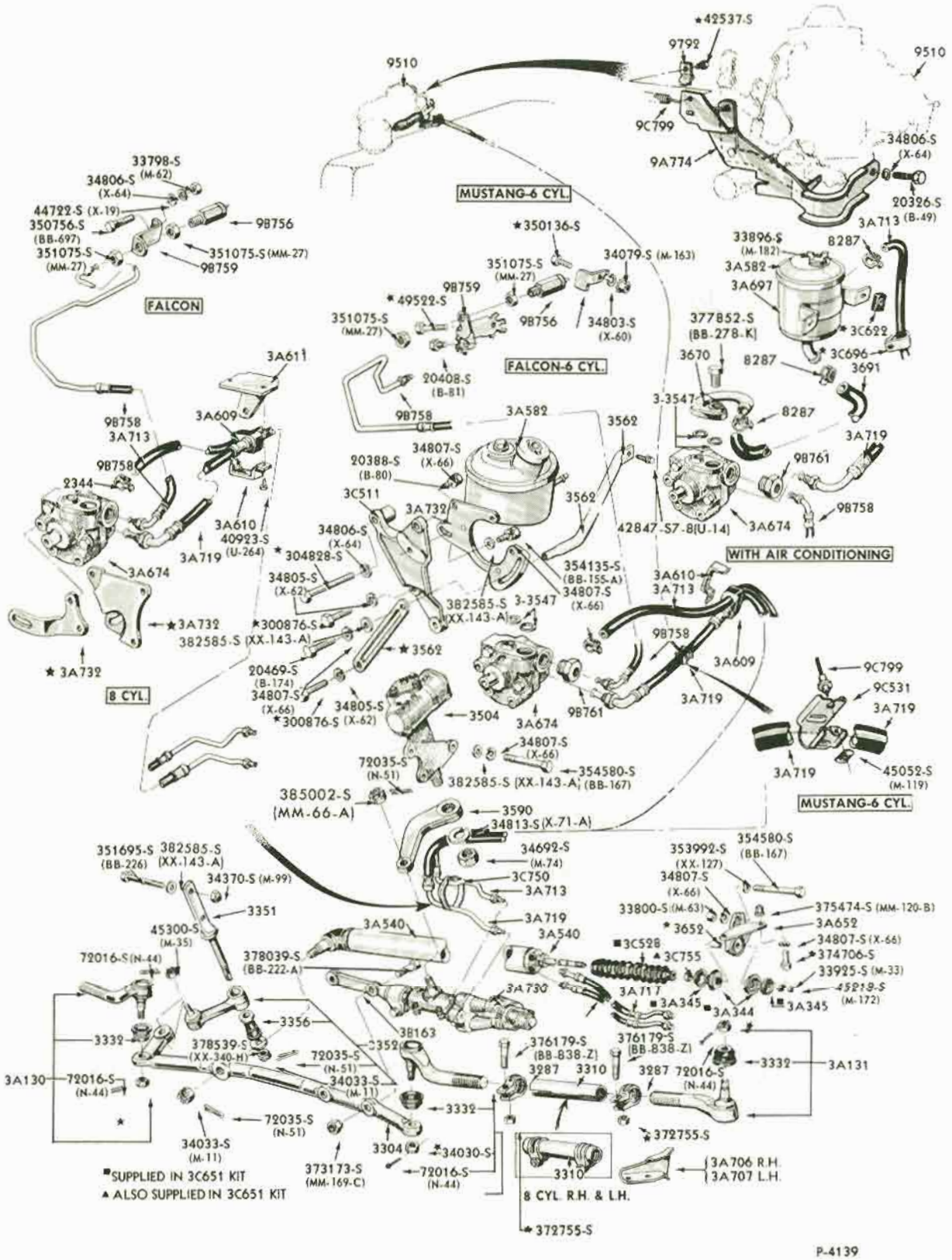

POWER STEERING SYSTEM - WITH EATON PUMP
1965 FALCON & MUSTANG

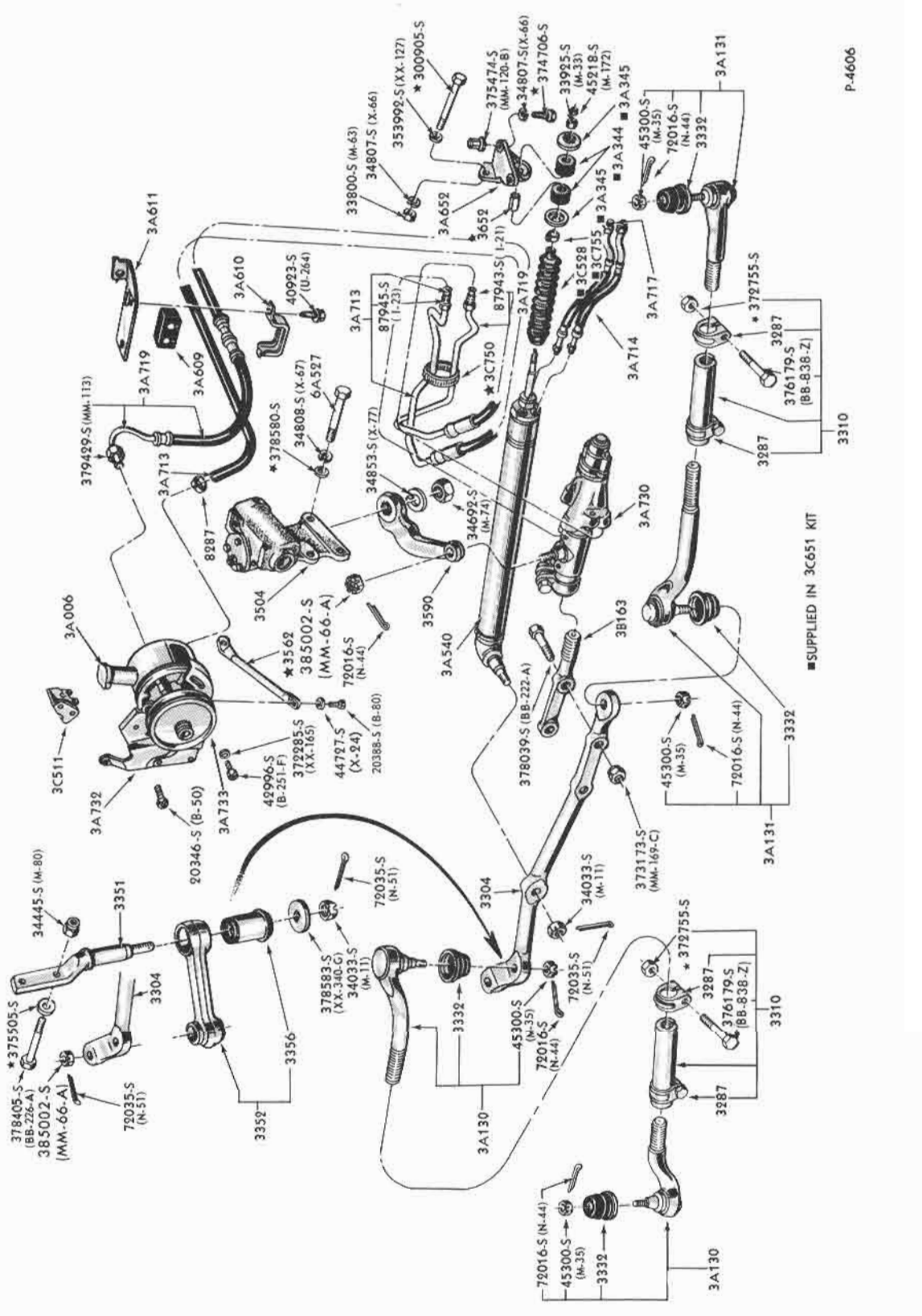

POWER STEERING SYSTEM WITH FORD PUMP - 6 CYLINDER
1965 FALCON, 1965/66 MUSTANG

COPYRIGHT © 1975 — FORD MOTOR COMPANY — DEARBORN, MICHIGAN

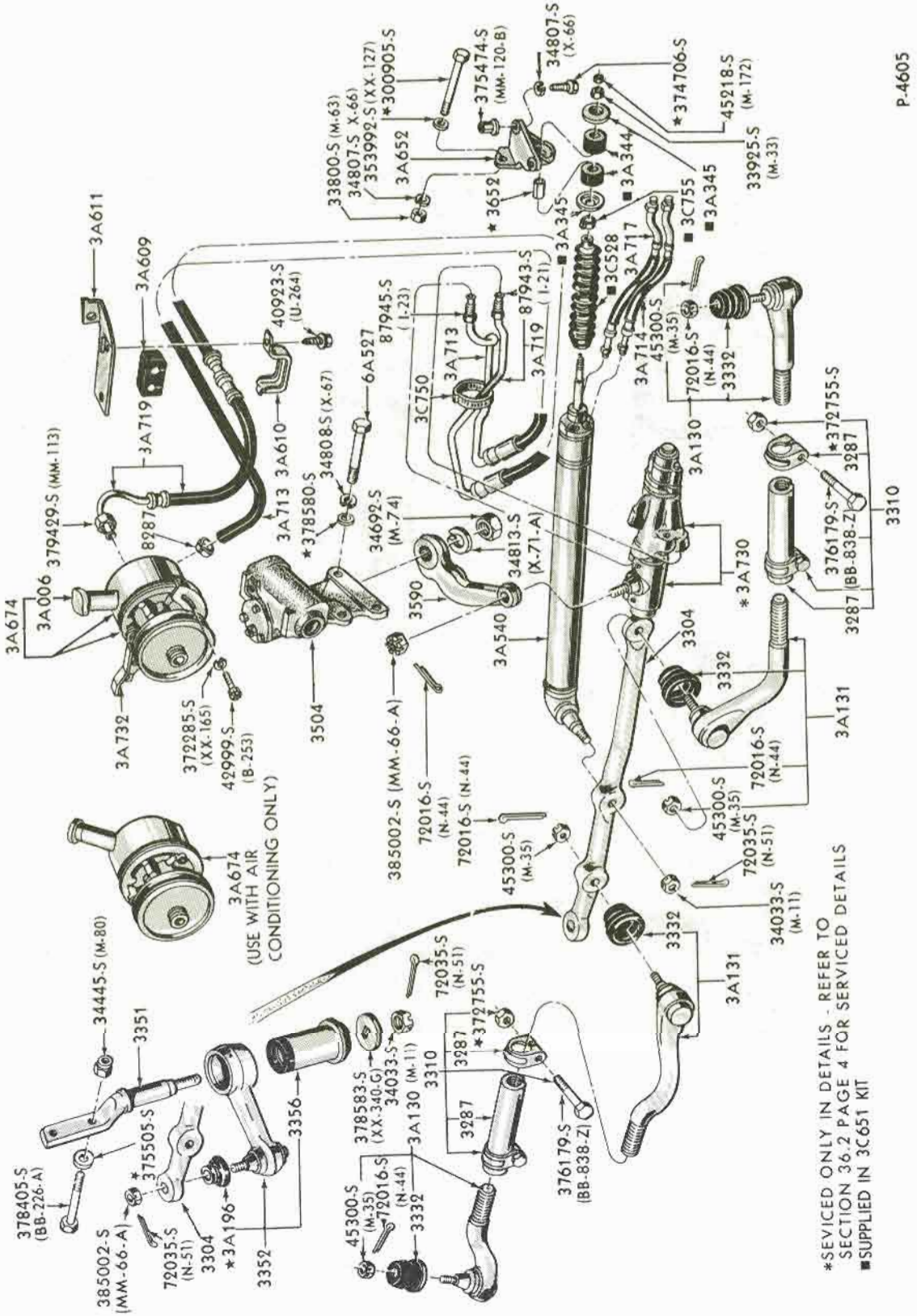

POWER STEERING SYSTEM WITH FORD PUMP - 8 CYLINDER
1965 FALCON 1965/66 MUSTANG

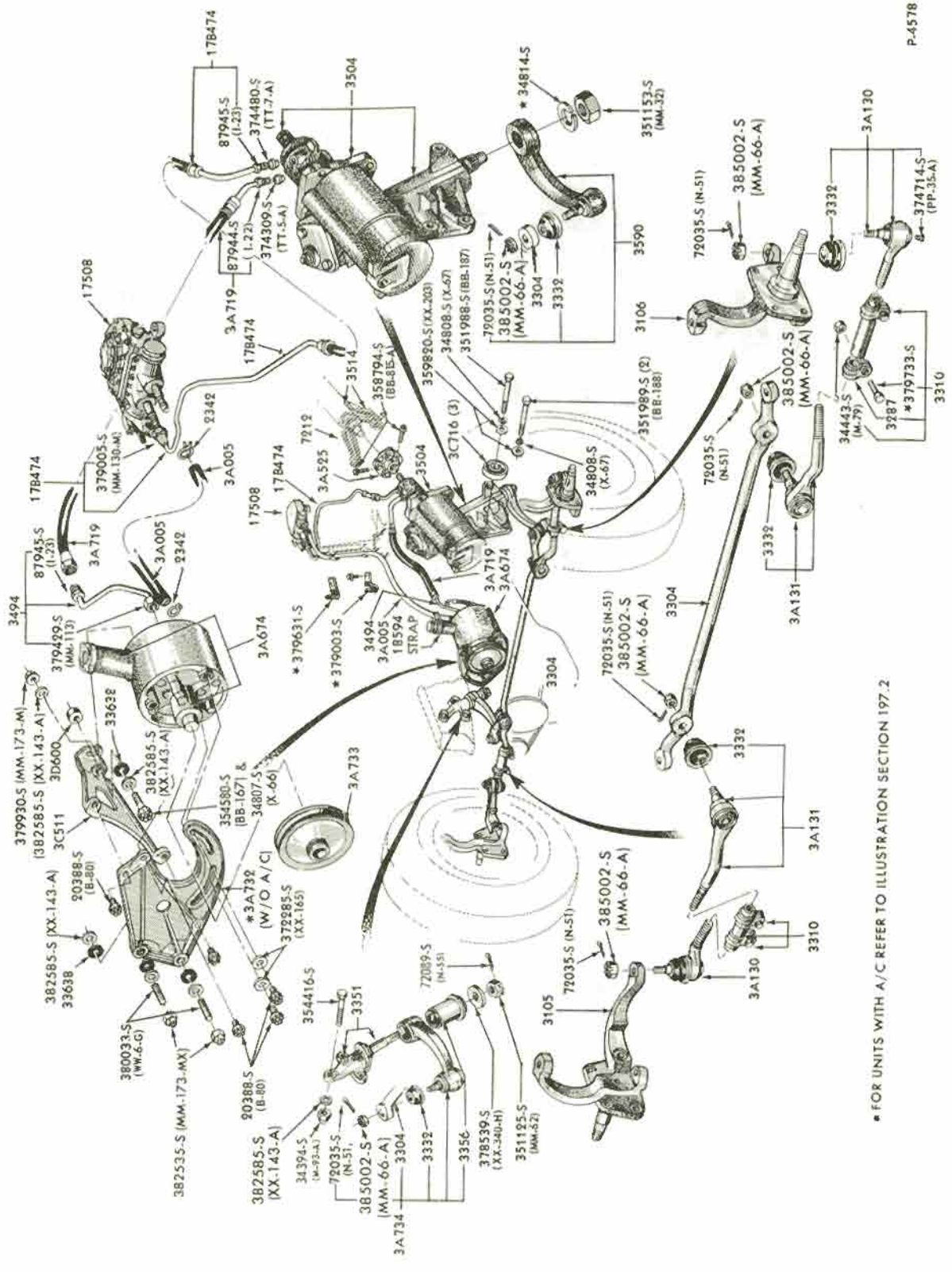

POWER STEERING SYSTEM
1965/66 THUNDERBIRD

COPYRIGHT © 1975 — FORD MOTOR COMPANY — DEARBORN, MICHIGAN

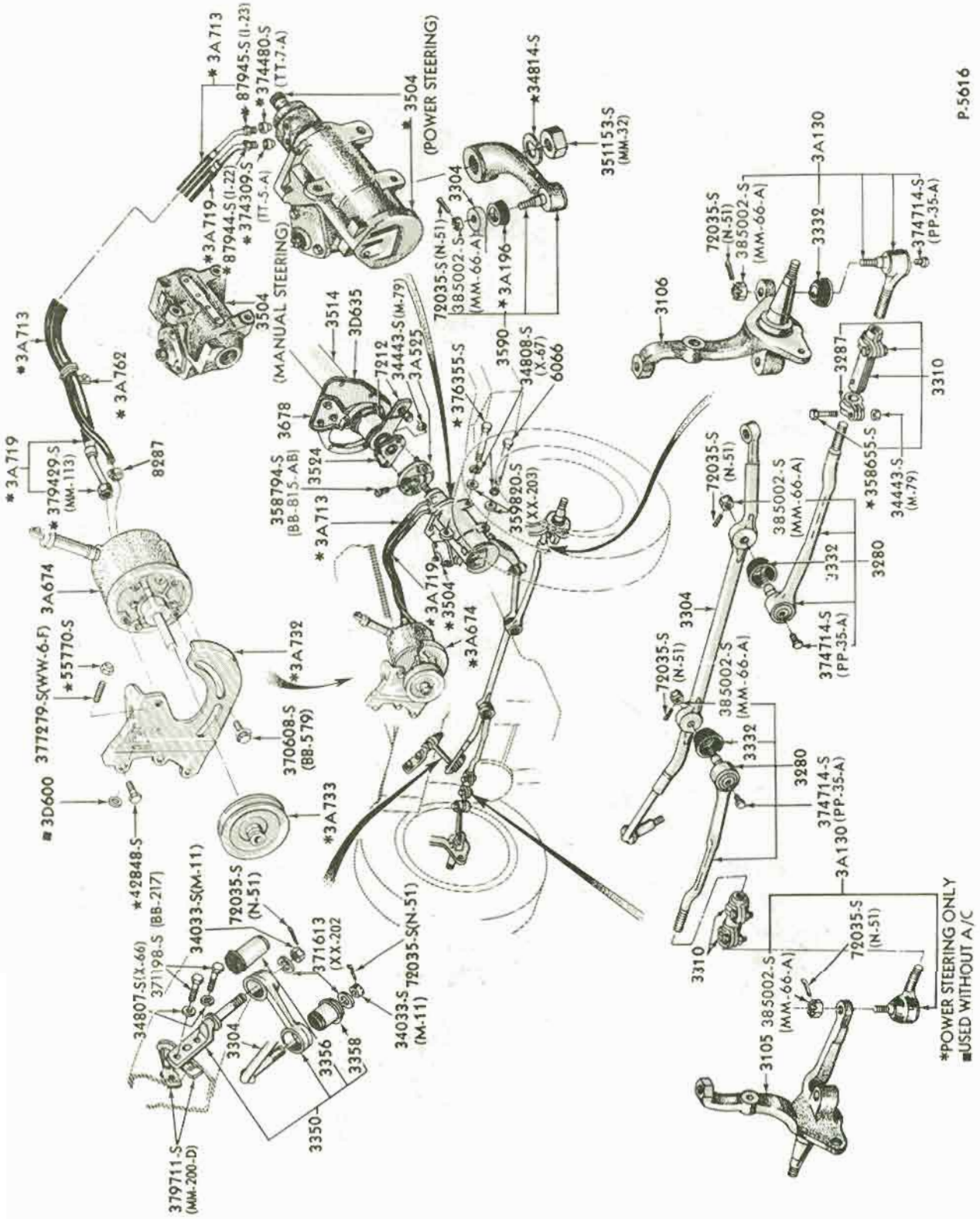

POWER STEERING SYSTEM
(TYPICAL FOR MANUAL STEERING LINKAGE)
1967/69 FORD - 6 CYL.

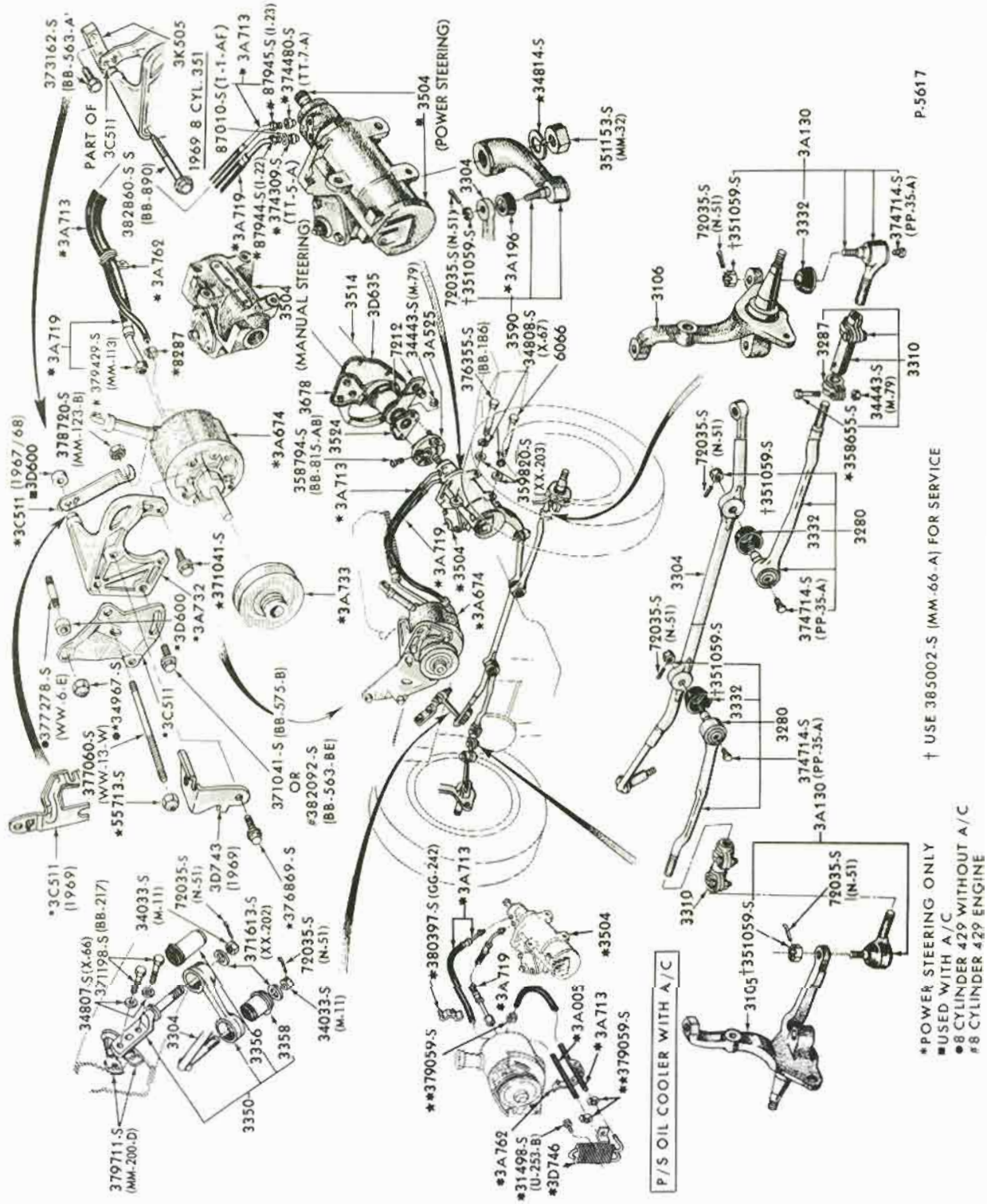

POWER STEERING SYSTEM (TYPICAL FOR MANUAL STEERING LINKAGE)
1967/69 FORD - 8 CYLINDER

COPYRIGHT © 1975 — FORD MOTOR COMPANY — DEARBORN, MICHIGAN

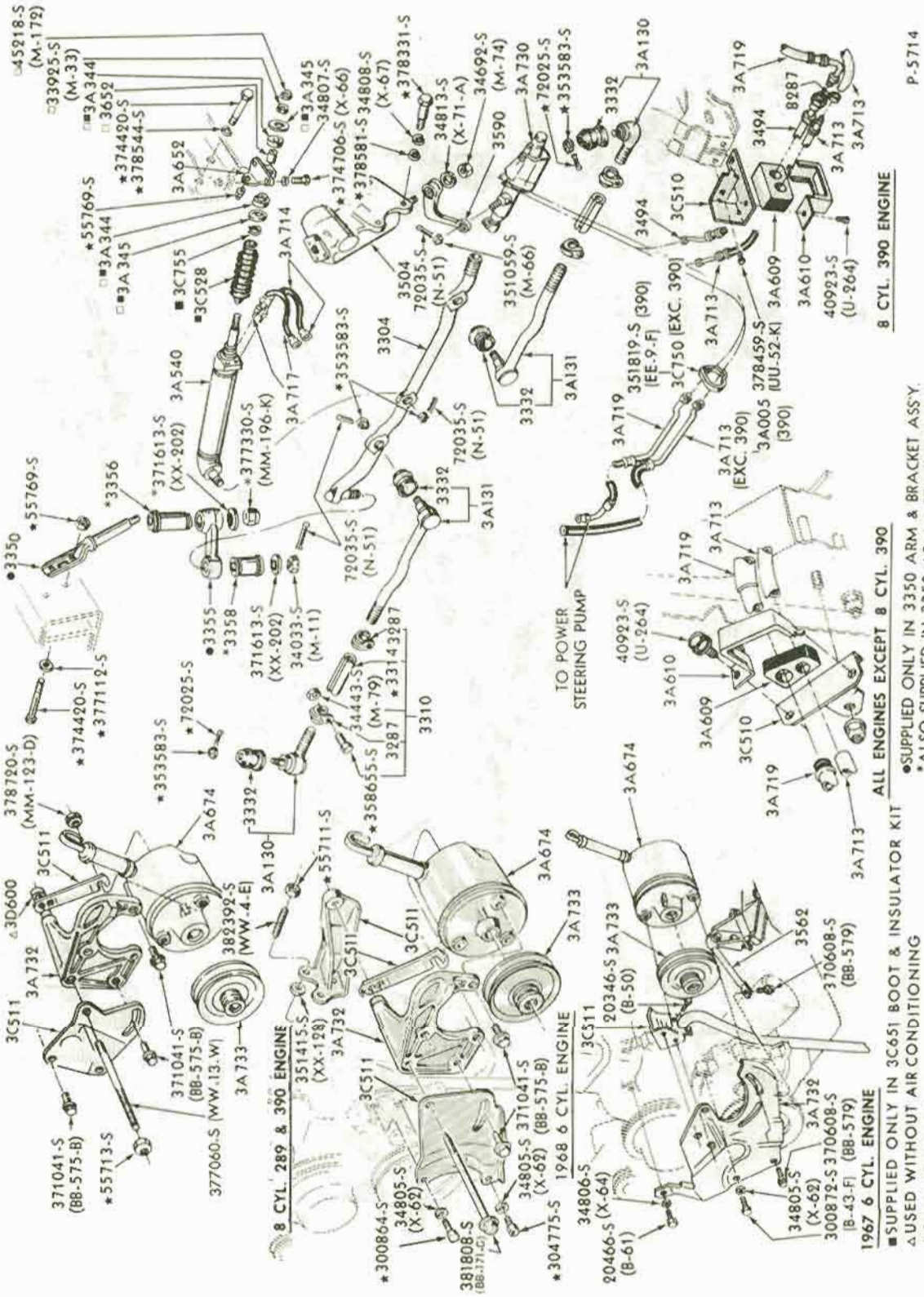
8 CYL. 289 & 390 ENGINE
1968 6 CYL. ENGINE
1967 6 CYL. ENGINE
8 CYL. 390 ENGINE
ALL ENGINES EXCEPT 8 CYL. 390
TO POWER STEERING PUMP
■SUPPLIED ONLY IN 3C651 BOOT & INSULATOR KIT
△USED WITHOUT AIR CONDITIONING
□SUPPLIED IN 3C590 KIT
●SUPPLIED ONLY IN 3350 ARM & BRACKET ASS'Y.
*ALSO SUPPLIED IN 3350 ARM & BRACKET ASS'Y.
P-5714

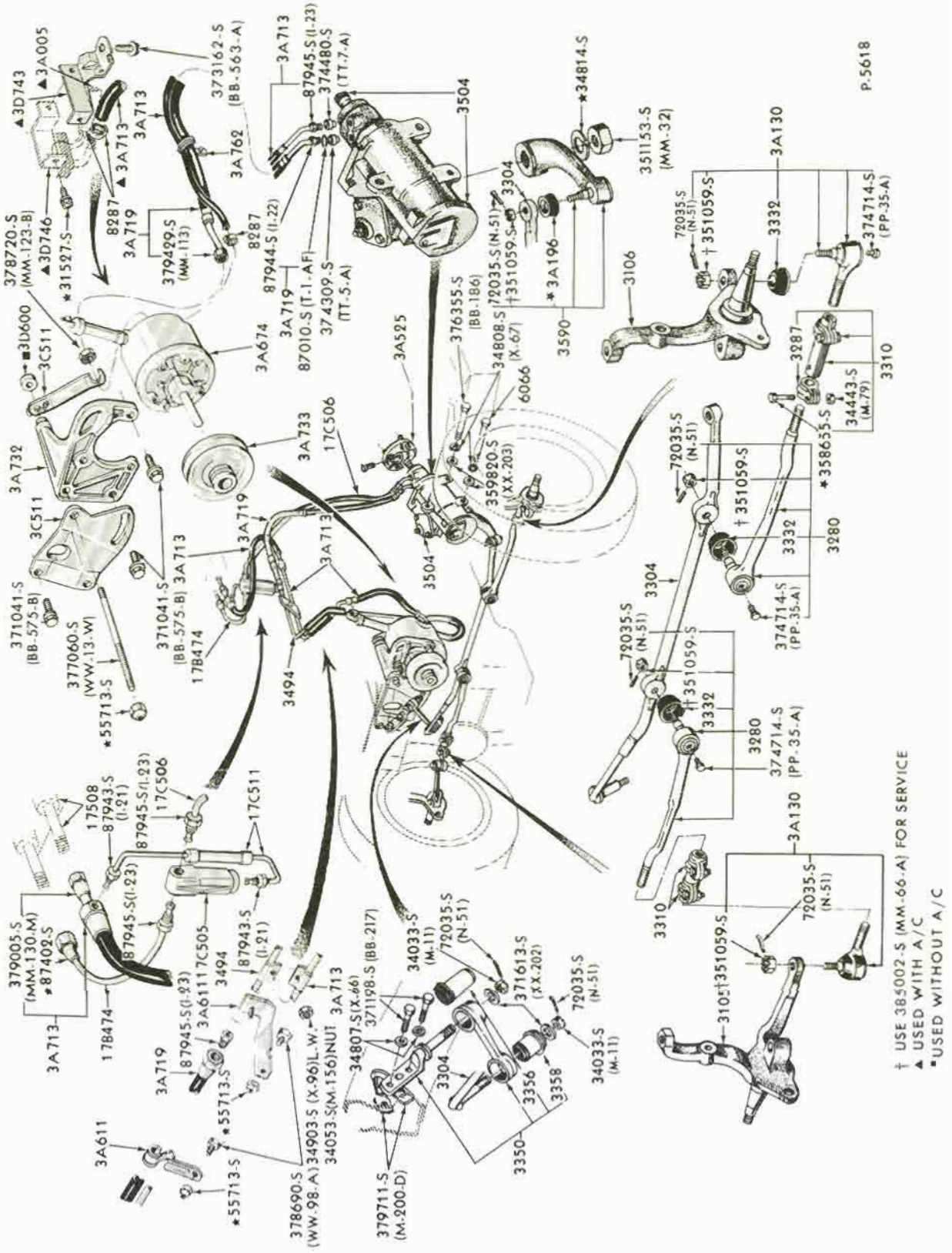

POWER STEERING SYSTEM
1967/69 THUNDERBIRD

COPYRIGHT © 1975 — FORD MOTOR COMPANY — DEARBORN, MICHIGAN

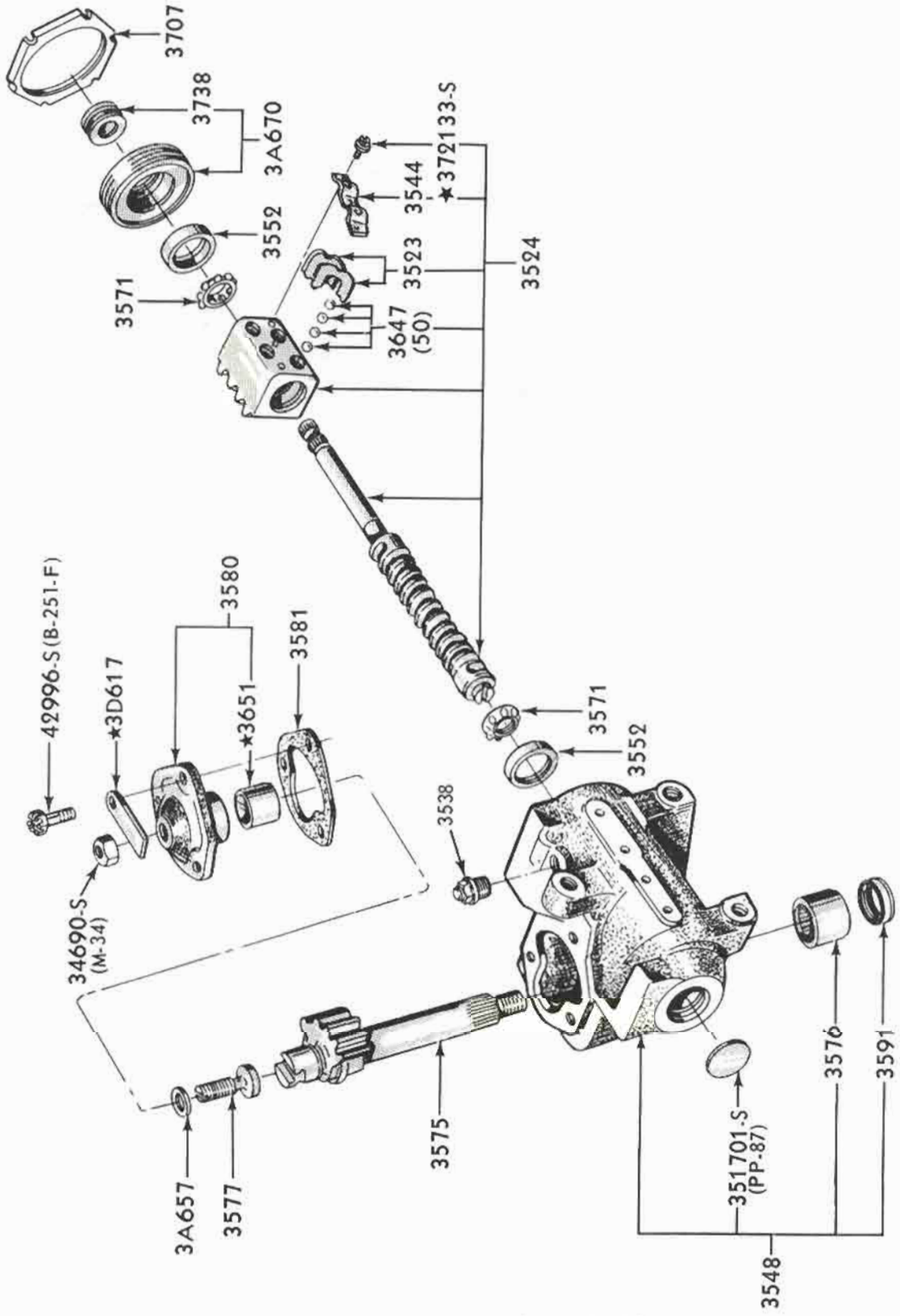

MANUAL STEERING GEAR DETAILS
1965/72 FORD & 1972 TORINO

COPYRIGHT © 1975 — FORD MOTOR COMPANY — DEARBORN, MICHIGAN

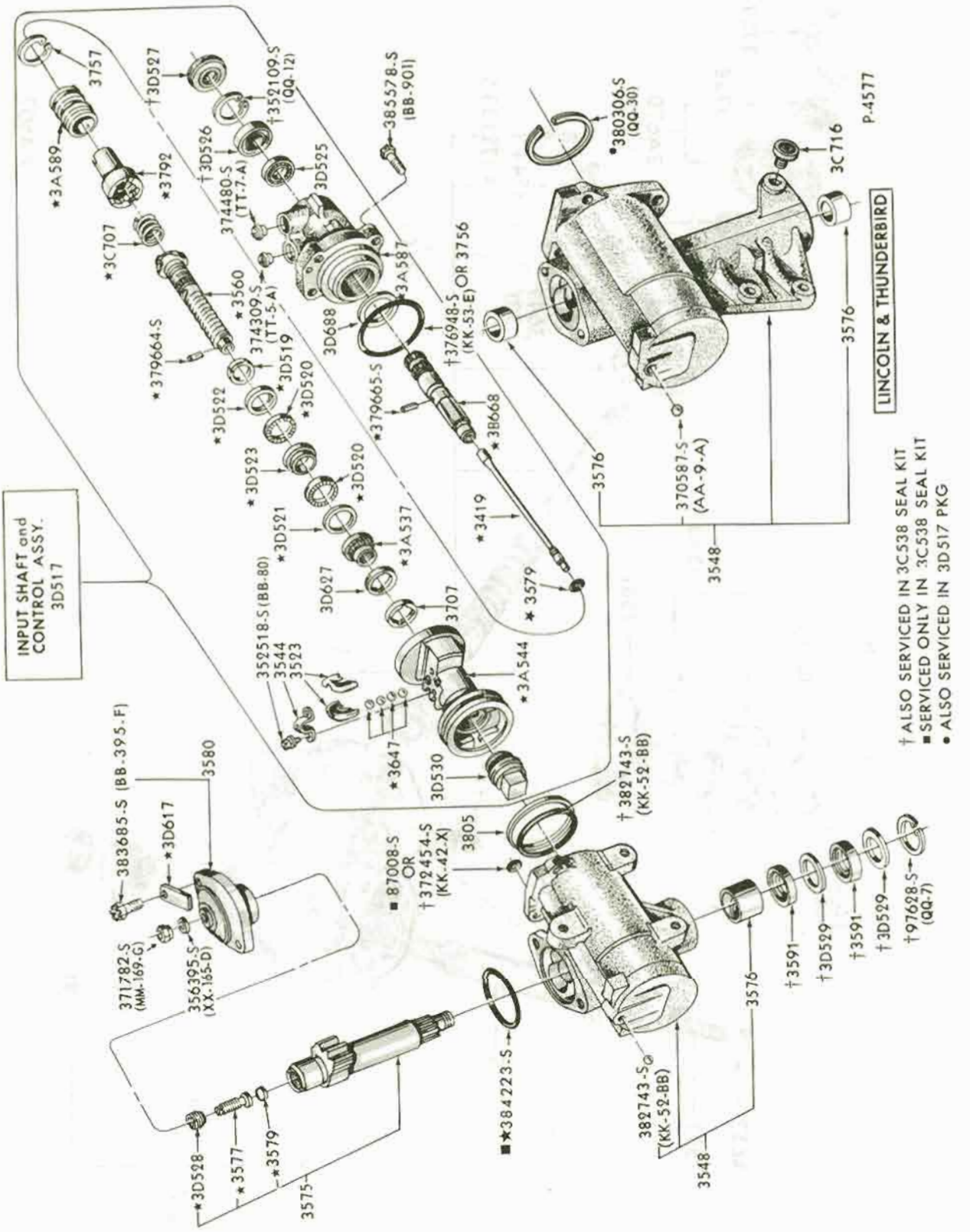

POWER STEERING GEAR DETAILS - FORD DESIGN
1965/72 FORD & THUNDERBIRD, 1972 TORINO

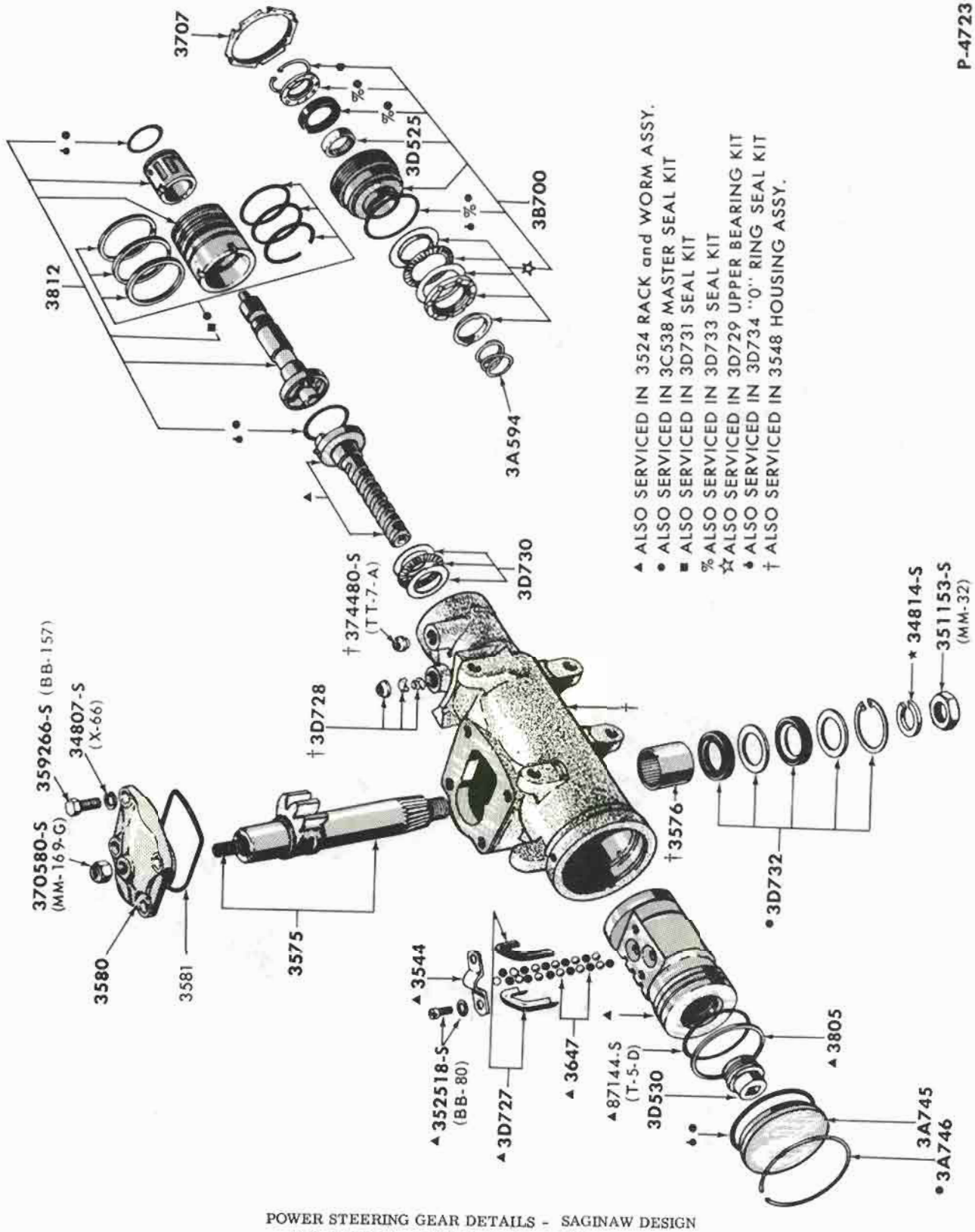

POWER STEERING GEAR DETAILS - SAGINAW DESIGN
1972 BRONCO, 1965/69 FORD, 1971/72 MUSTANG

COPYRIGHT © 1975 — FORD MOTOR COMPANY — DEARBORN, MICHIGAN

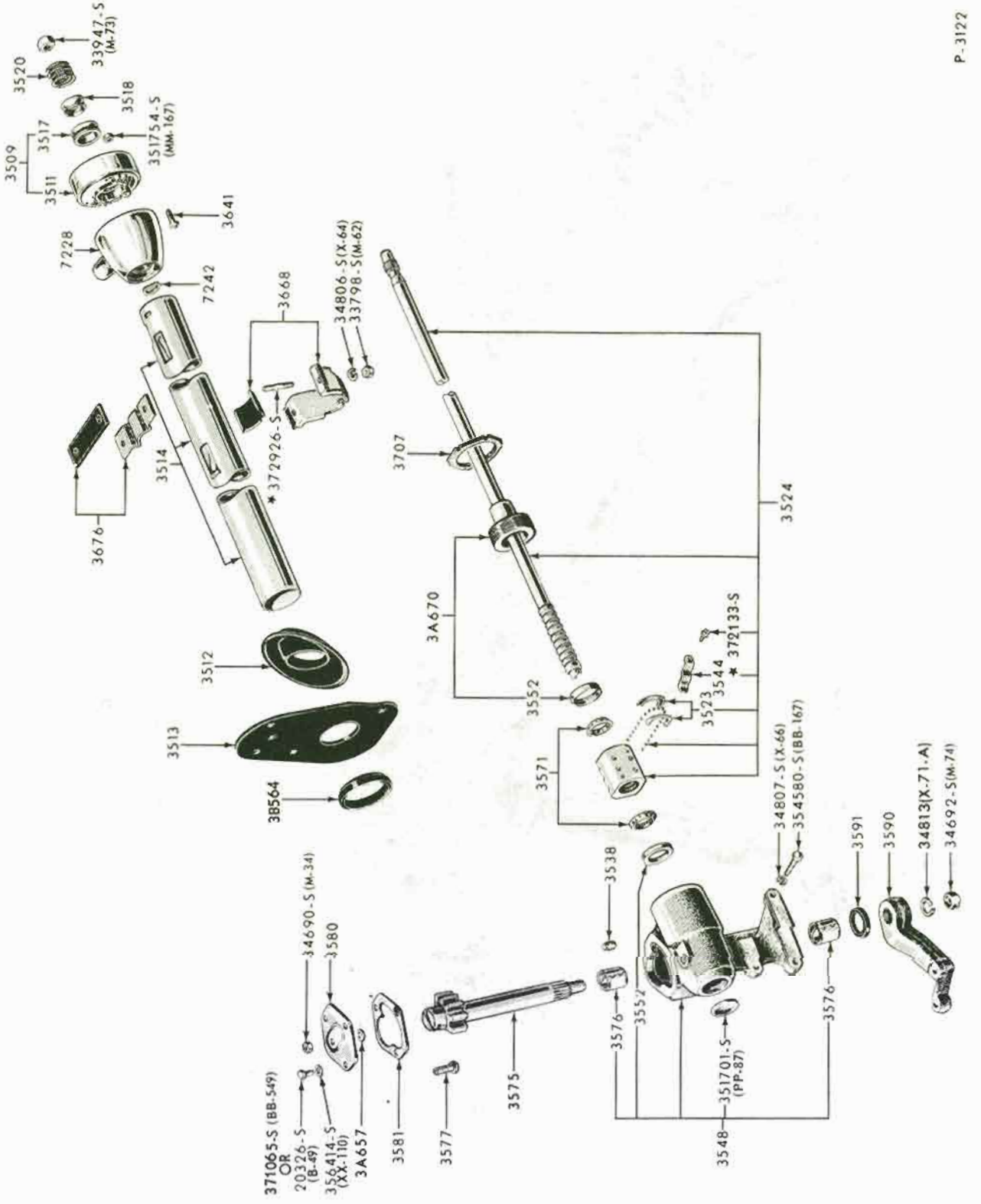

STEERING GEAR DETAILS
1965 FALCON & MUSTANG

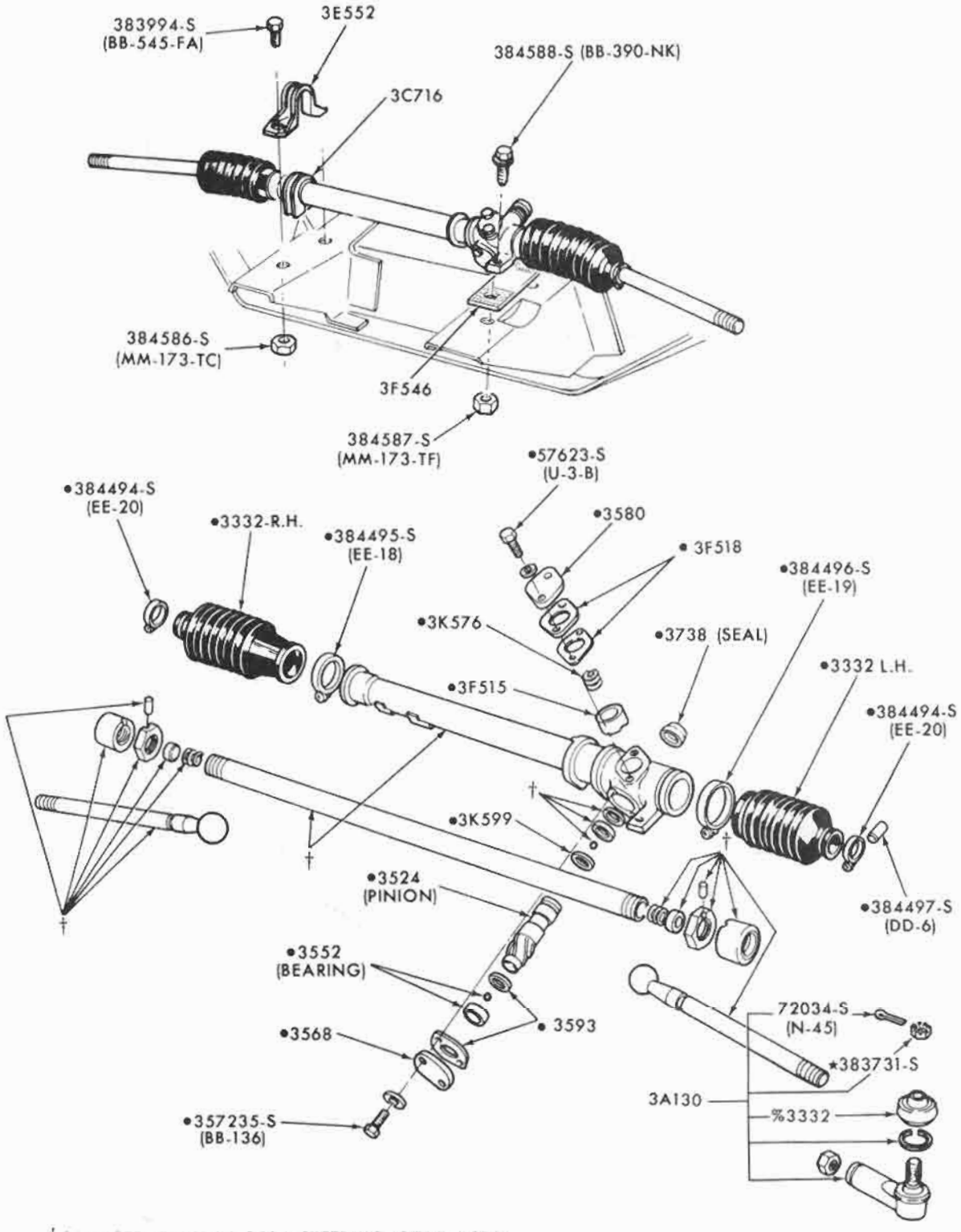

† SERVICED ONLY IN 3504 STEERING GEAR ASSY.
•ALSO SERVICED IN 3504 STEERING GEAR ASSY.
% 1973 ONLY

P-7966

STEERING GEAR and LINKAGE
1971/72 PINTO

COPYRIGHT © 1975 — FORD MOTOR COMPANY — DEARBORN, MICHIGAN

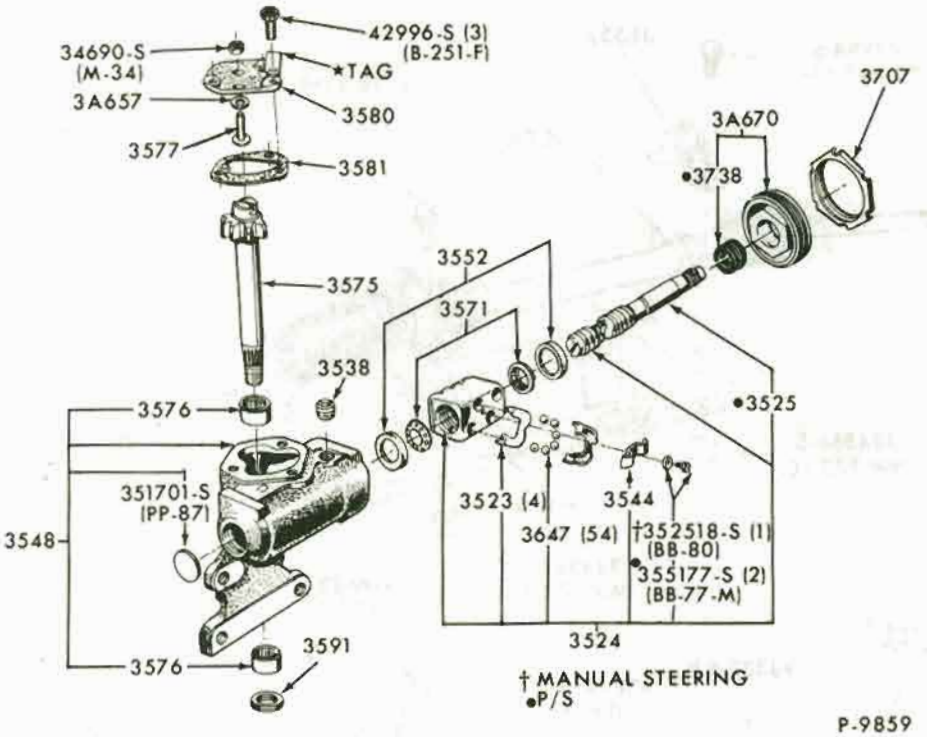

STEERING GEAR DETAILS
1966/71 FAIRLANE/TORINO, 1966/70 FALCON, 1970/72 MAVERICK & 1966/72 MUSTANG

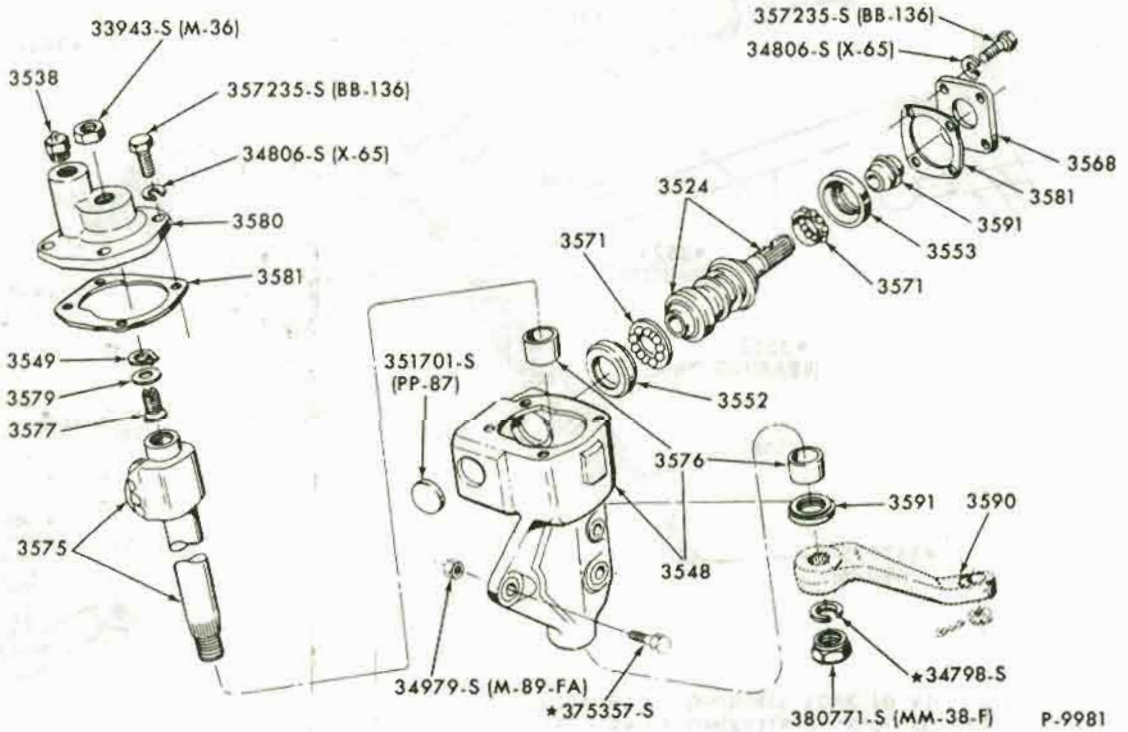

STEERING GEAR DETAILS
1966/72 BRONCO

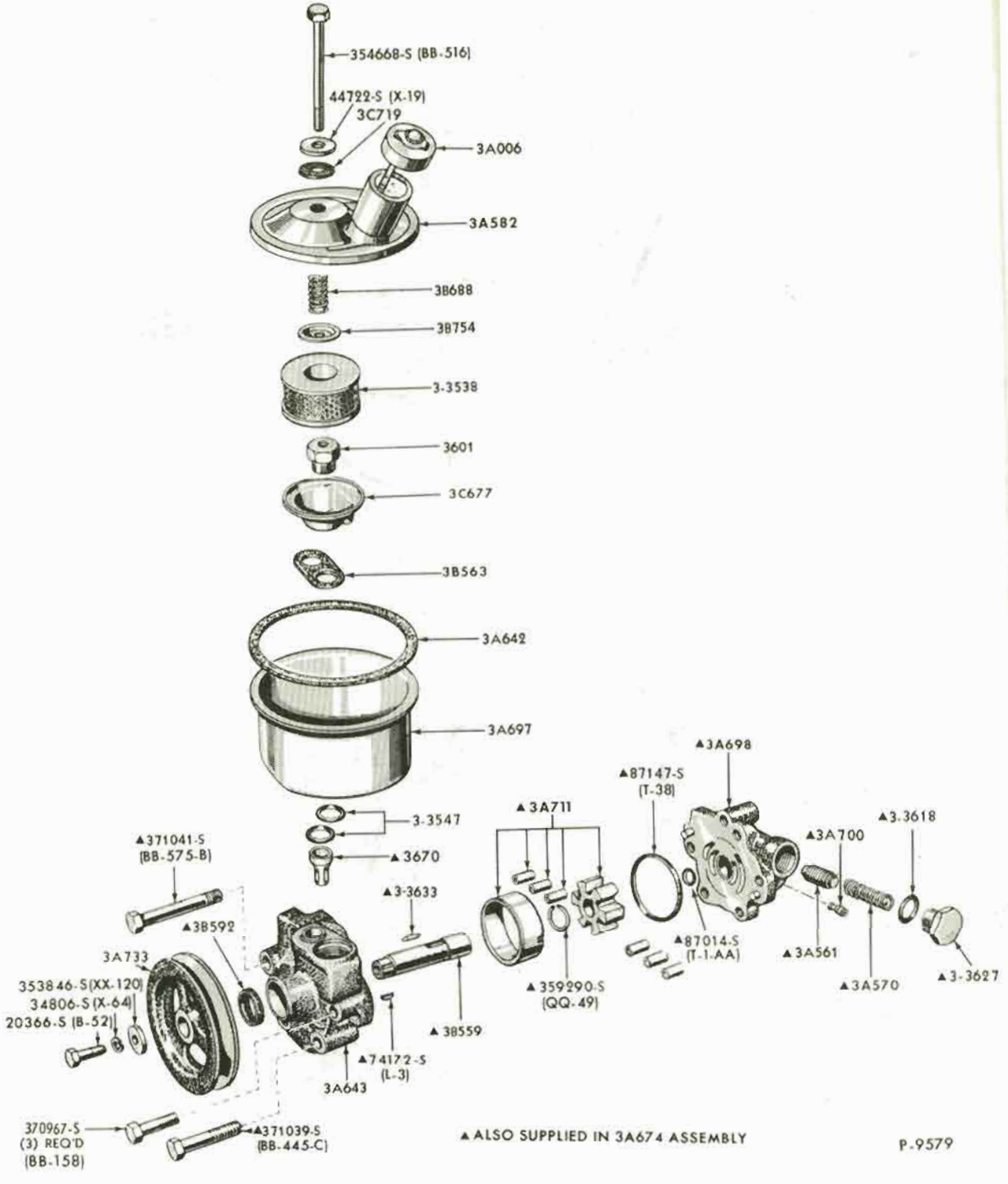

POWER STEERING PUMP & RELATED PARTS - (EATON TYPE)
1965 FORD, FAIRLANE, FALCON, MUSTANG & THUNDERBIRD

COPYRIGHT © 1975 — FORD MOTOR COMPANY — DEARBORN, MICHIGAN

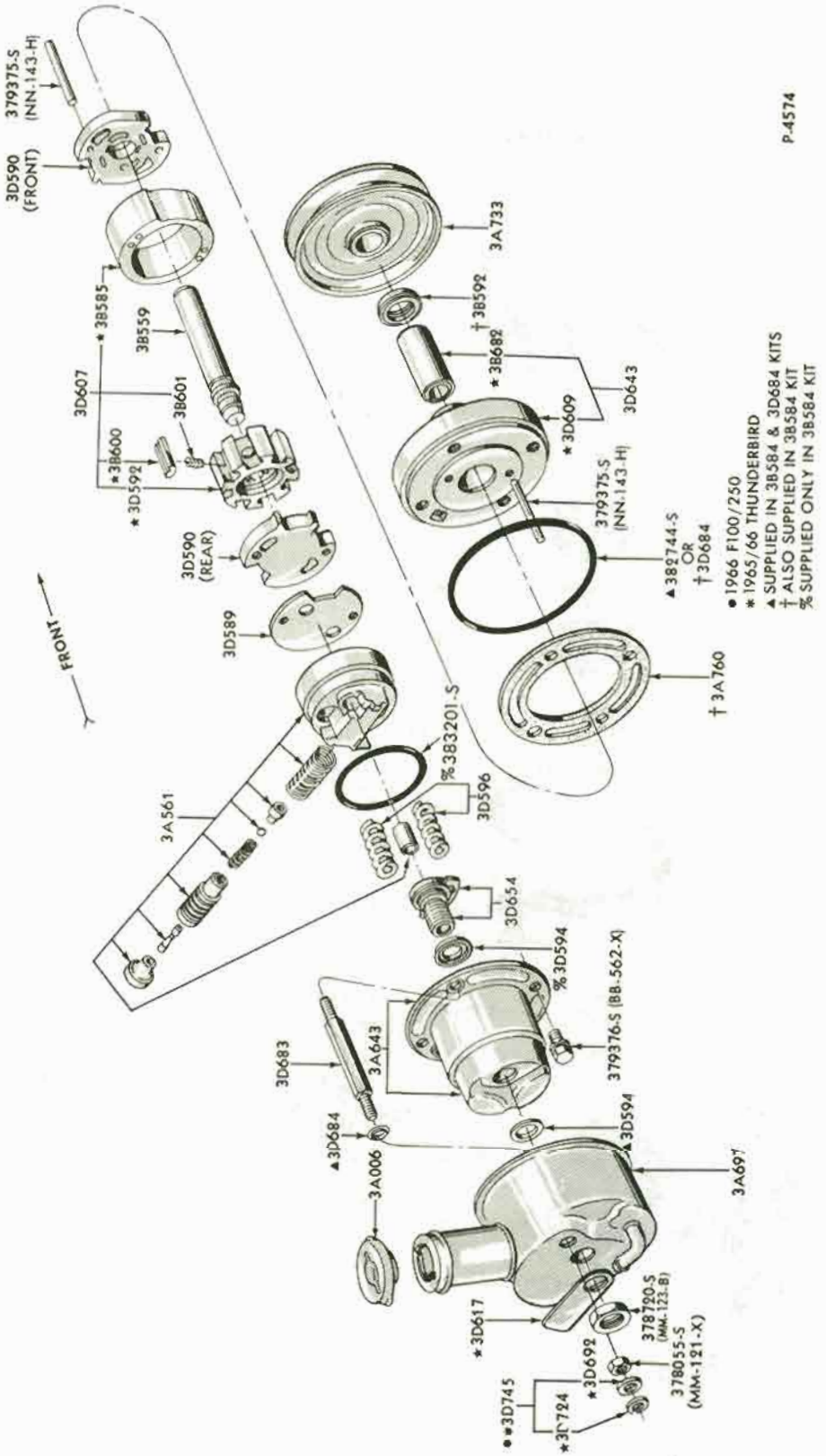

POWER STEERING PUMP DETAILS (FORD SLIPPER TYPE)
1965/66 FORD, FAIRLANE, FALCON & THUNDERBIRD, 1965/66 MUSTANG

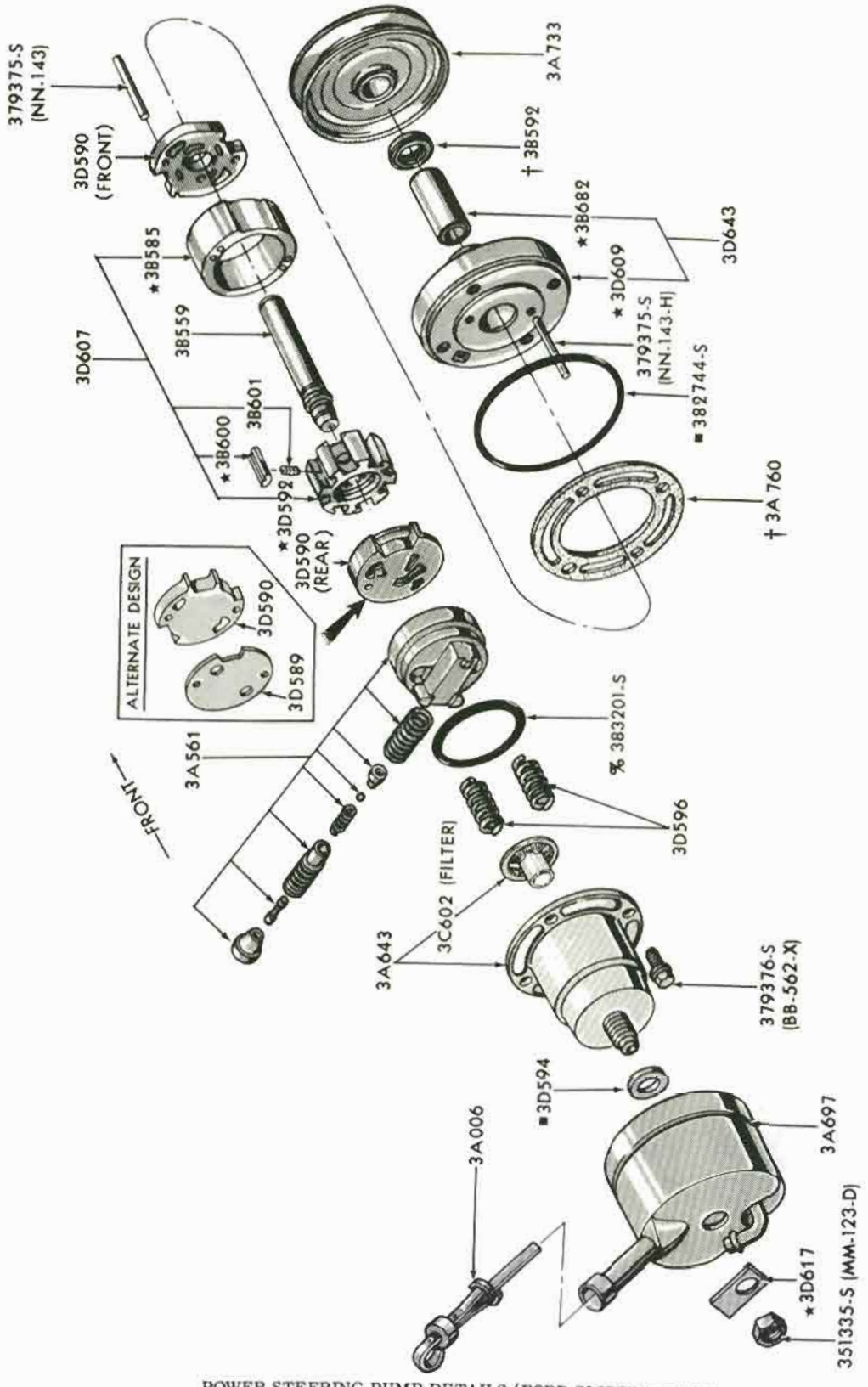

POWER STEERING PUMP DETAILS (FORD SLIPPER TYPE)
1972 BRONCO, 1967/72 FAIRLANE/TORINO, FALCON, FORD, MUSTANG, 1970/72 MAVERICK, 1967/71 THUNDERBIRD

COPYRIGHT © 1975 — FORD MOTOR COMPANY — DEARBORN, MICHIGAN

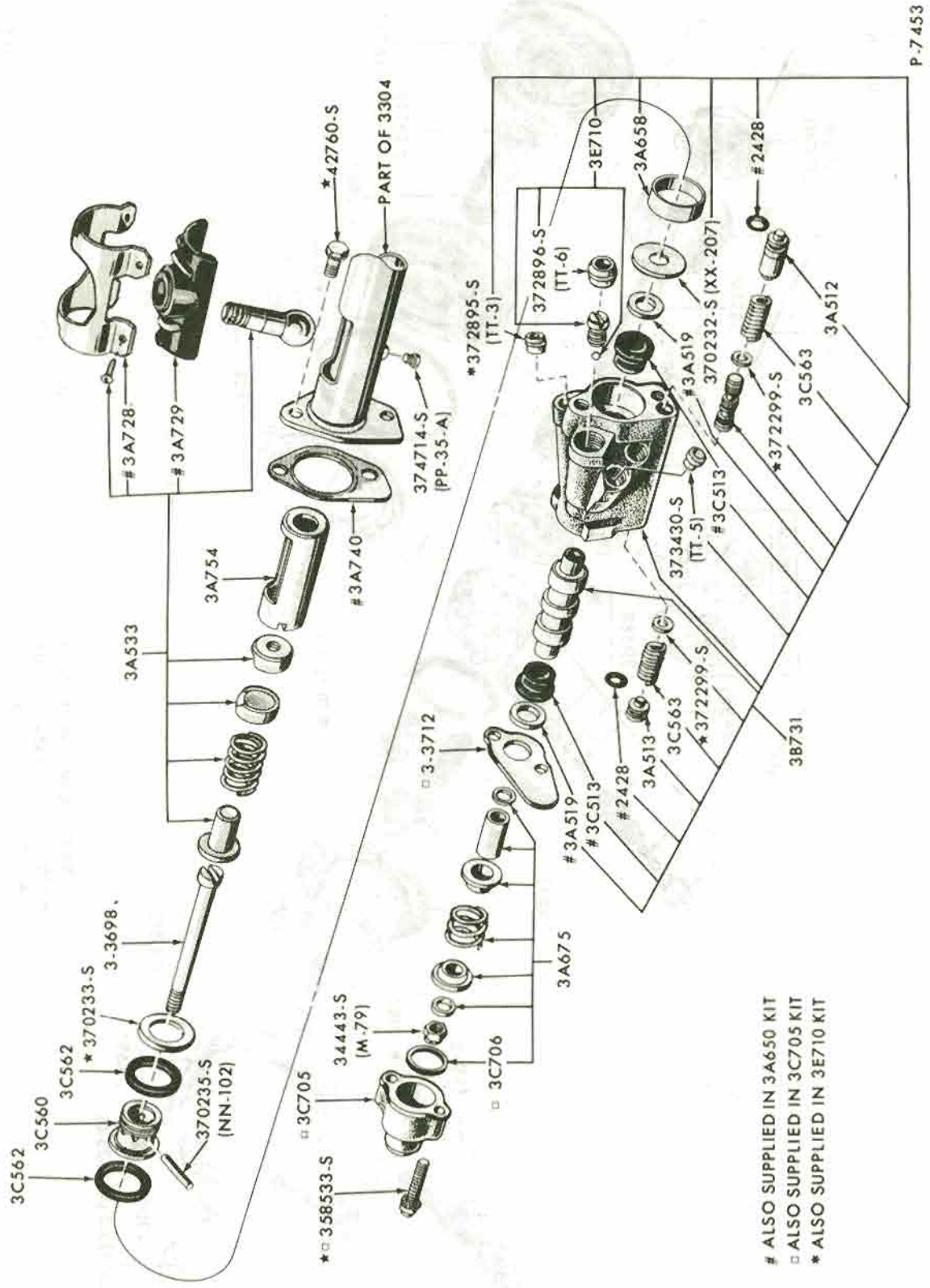

POWER STEERING CONTROL VALVE DETAILS - TYPICAL
1965 FALCON- 8 CYLINDER, 1965/66 MUSTANG- 8 CYLINDER

P-7454

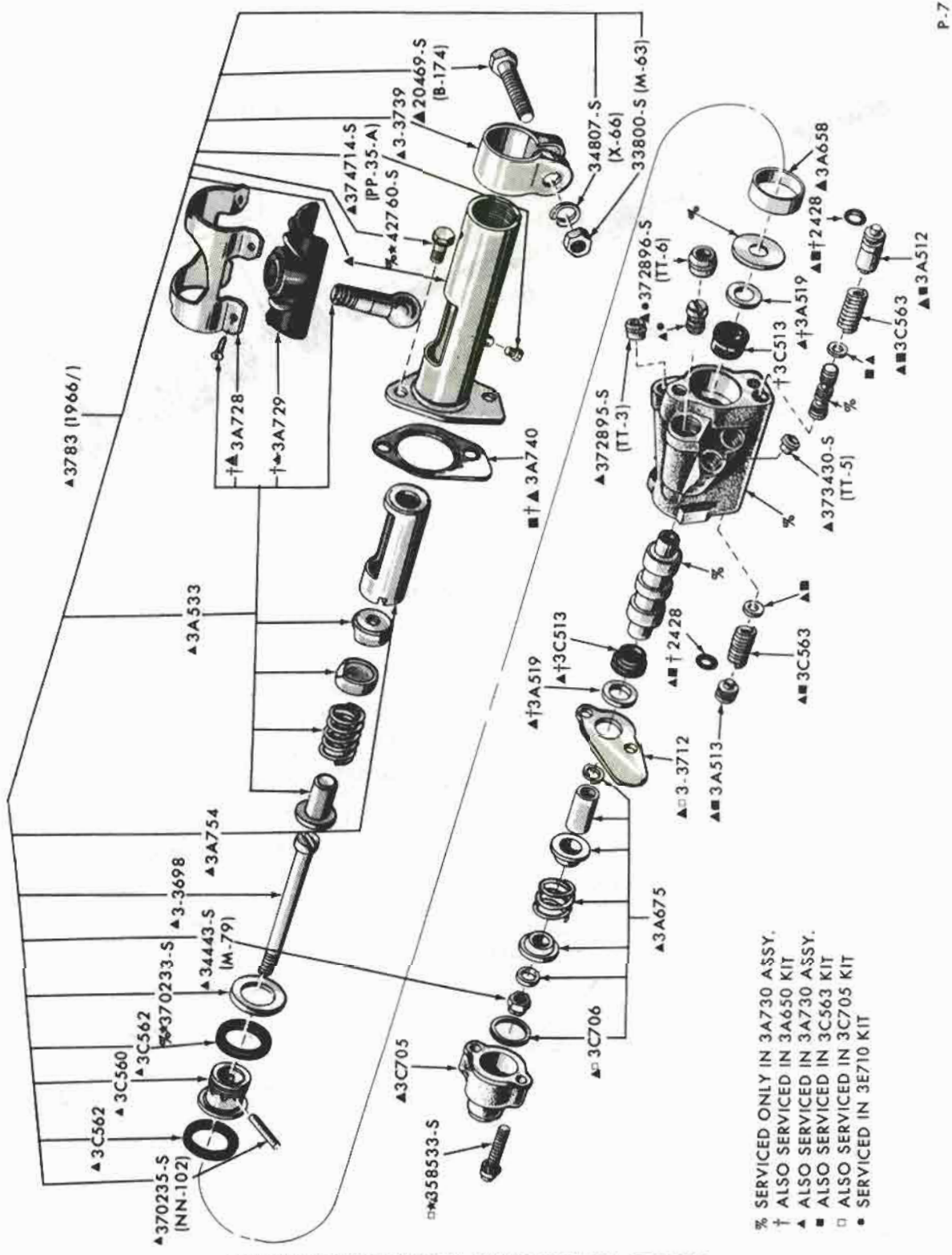

POWER STEERING CONTROL VALVE DETAILS - TYPICAL
1965/71 FAIRLANE/TORINO, 1965/70 FALCON - 6 CYL., 1966/70 FALCON - 8 CYL.
1970/72 MAVERICK, 1965/66 MUSTANG - 6 CYL., 1967/70 MUSTANG

COPYRIGHT © 1975 — FORD MOTOR COMPANY — DEARBORN, MICHIGAN

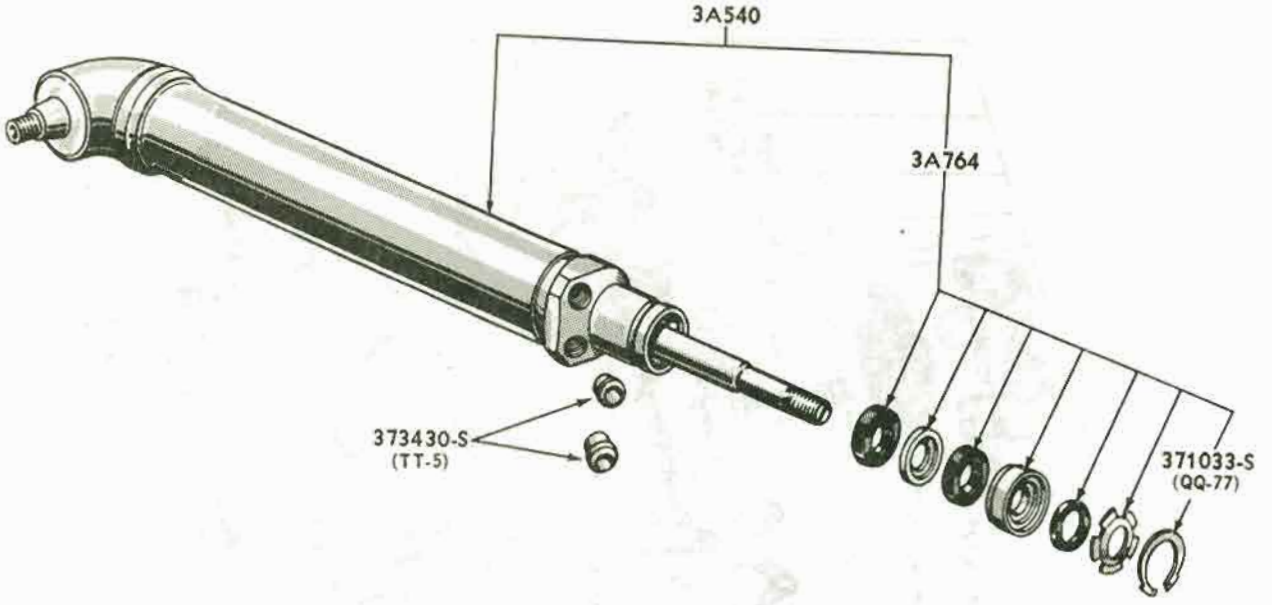

POWER STEERING CYLINDER DETAILS - TYPICAL
1965/71 FAIRLANE/TORINO, 1965/70 FALCON & MUSTANG, 1970/72 MAVERICK

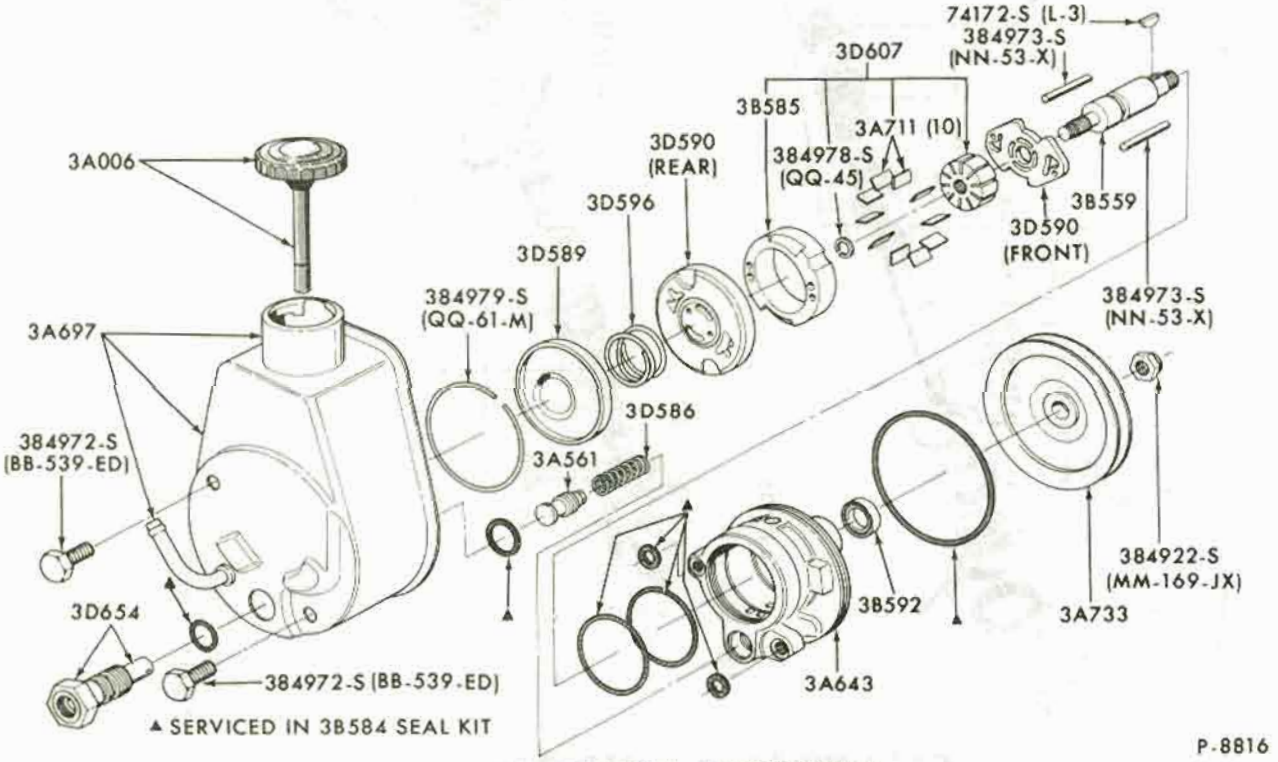

POWER STEERING PUMP - SAGINAW DESIGN
1972 THUNDERBIRD - 8 CYLINDER 429,460 WITH A/C ONLY

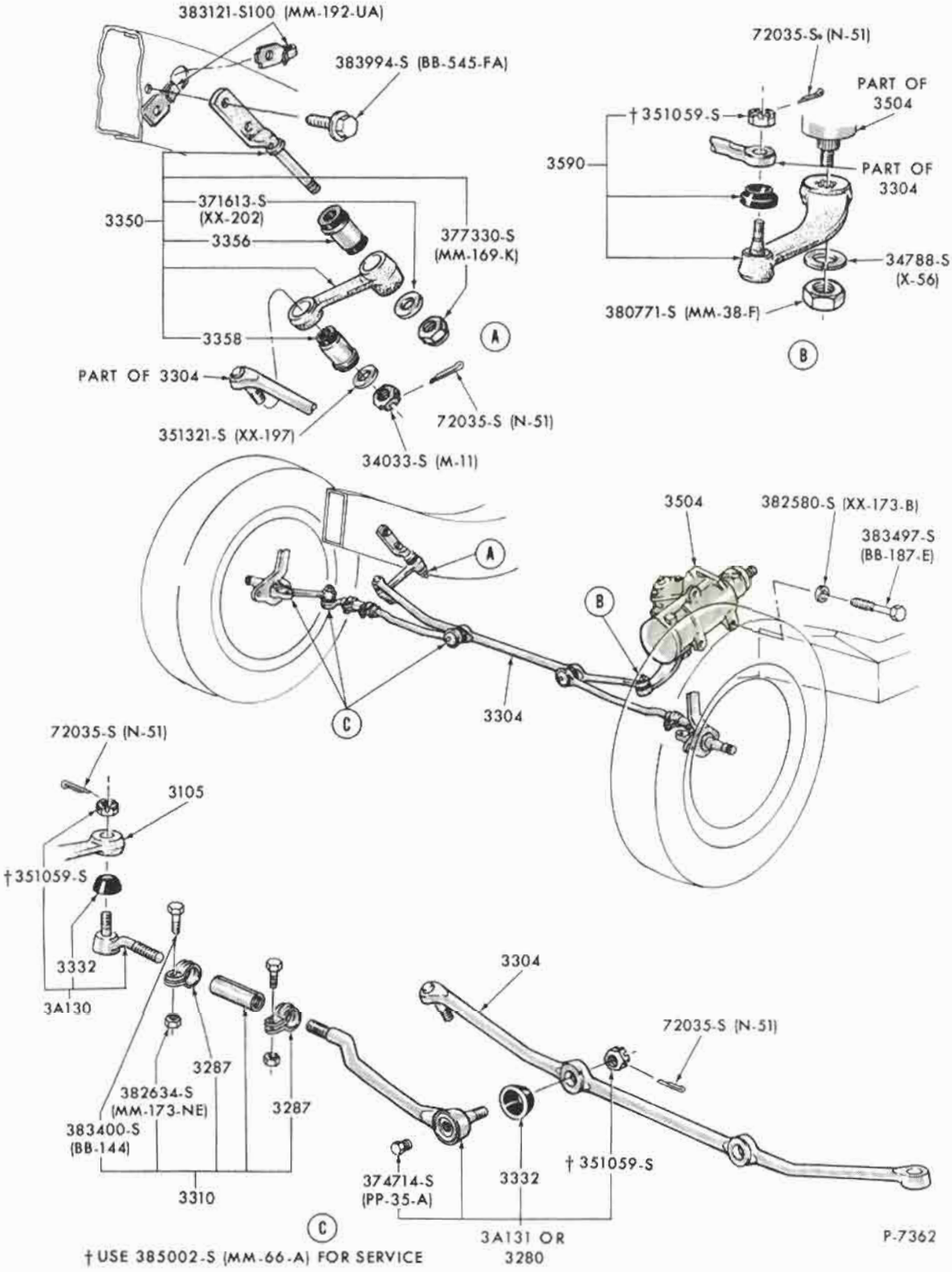

STEERING LINKAGE (POWER and MANUAL) - TYPICAL
1970/72 FORD, 1970/71 THUNDERBIRD

COPYRIGHT © 1975 — FORD MOTOR COMPANY — DEARBORN, MICHIGAN

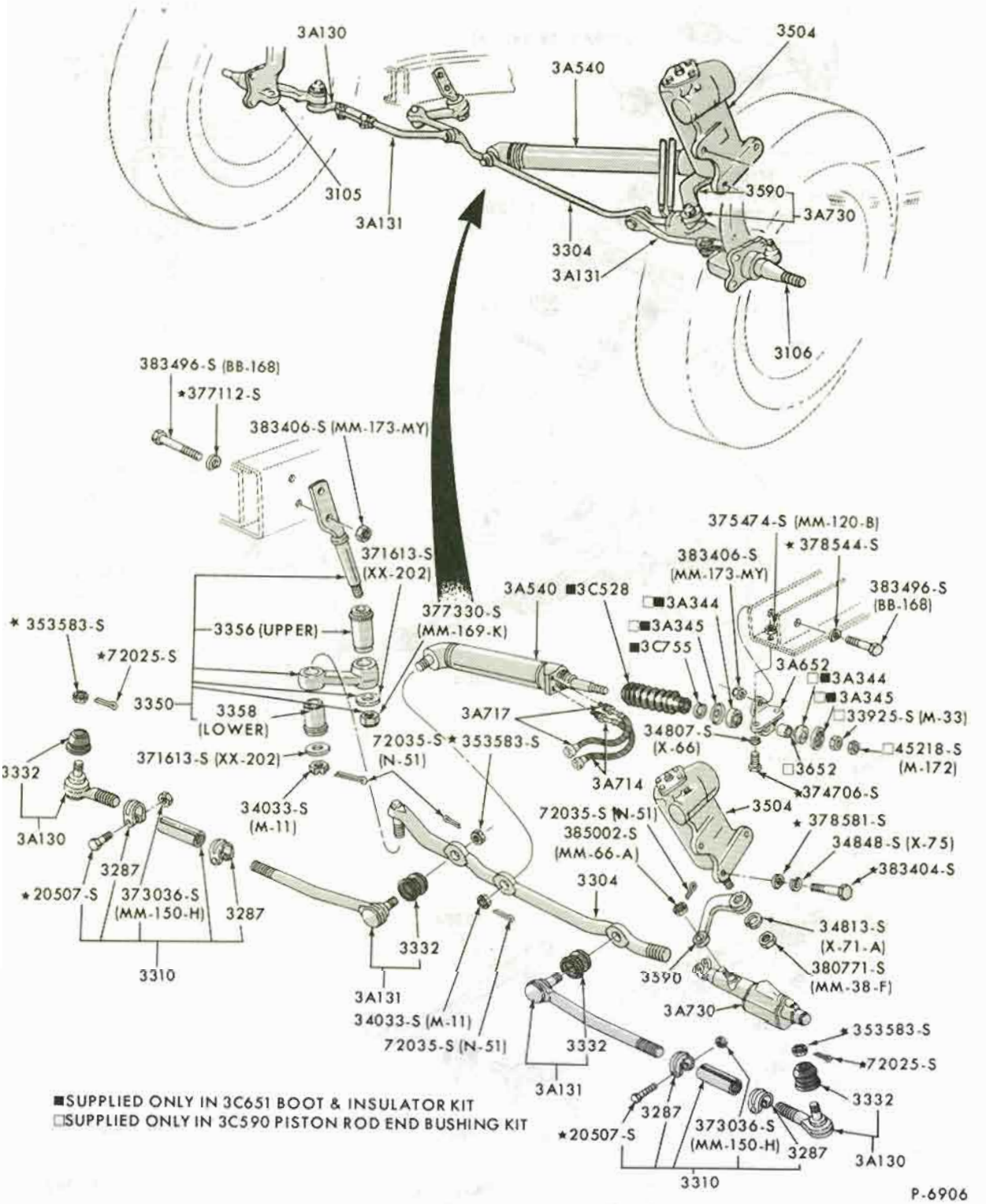
3A130
3504
3A540
3105
3A131
3590
3A730
3304
3A131
3106
383496-S (BB-168)
*377112-S
383406-S (MM-173-MY)
371613-S (XX-202)
375474-S (MM-120-B)
* 378544-S
383406-S (MM-173-MY)
383496-S (BB-168)
3A540 ■3C528
■□3A344
■□3A345
■3C755
377330-S (MM-169-K)
* 353583-S
*72025-S
3356 (UPPER)
3350
3358 (LOWER)
3A652
□■3A344
□■3A345
□33925-S (M-33)
□45218-S (M-172)
3A717
34807-S (X-66)
□3652
*374706-S
371613-S (XX-202)
72035-S (N-51)
* 353583-S
3A714
3504
* 378581-S
34848-S (X-75)
*383404-S
3332
3A130
34033-S (M-11)
72035-S (N-51)
385002-S (MM-66-A)
3287
*20507-S
373036-S (MM-150-H)
3287
3310
3304
34813-S (X-71-A)
380771-S (MM-38-F)
3590
3A730
3332
3A131
34033-S (M-11)
72035-S (N-51)
3332
3A131
* 353583-S
*72025-S
3332
3287
*20507-S
373036-S (MM-150-H)
3287
3A130
3310
■SUPPLIED ONLY IN 3C651 BOOT & INSULATOR KIT
□SUPPLIED ONLY IN 3C590 PISTON ROD END BUSHING KIT
P-6906

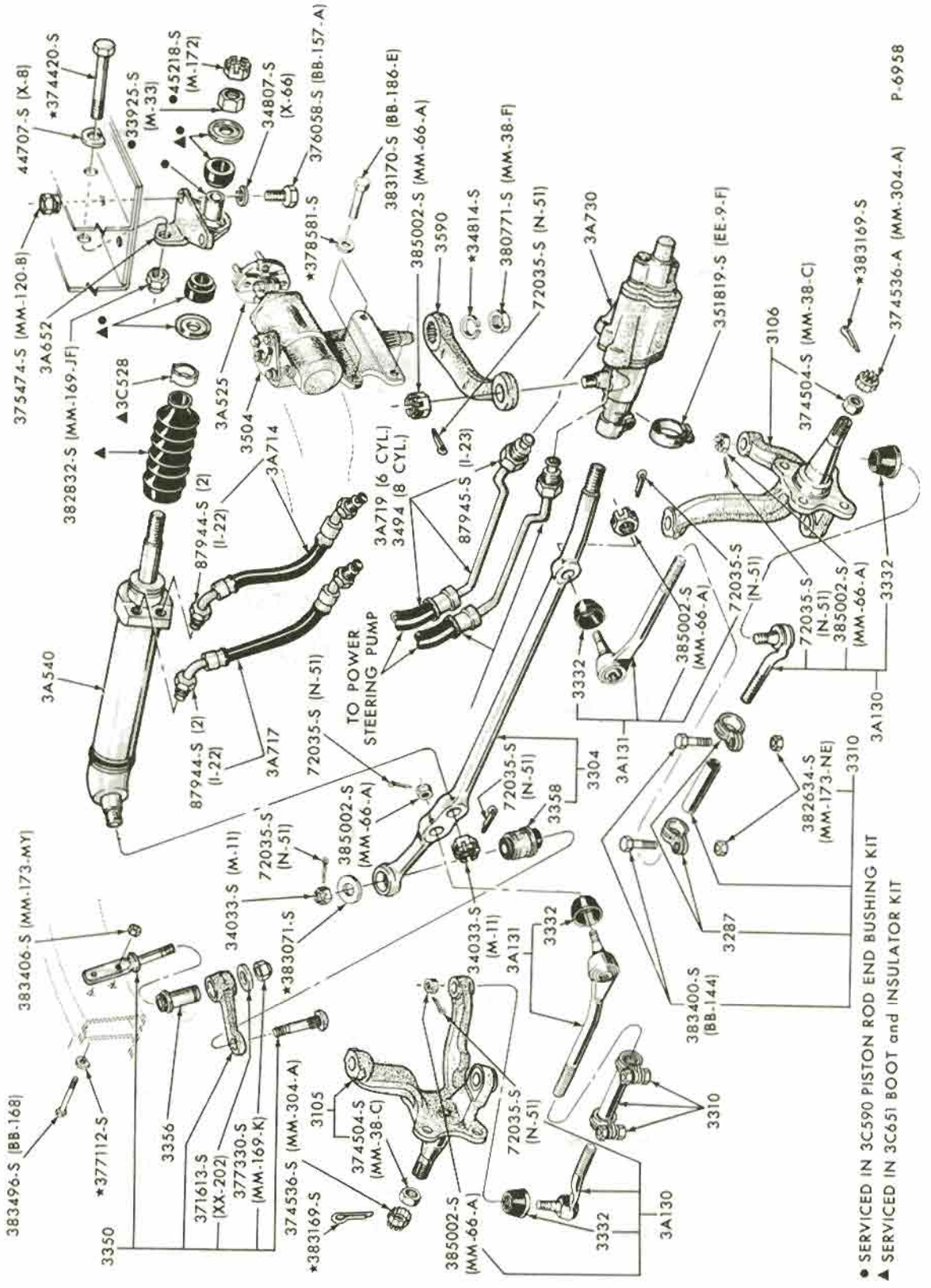

POWER STEERING LINKAGE
1970/72 MAVERICK

COPYRIGHT © 1975 — FORD MOTOR COMPANY — DEARBORN, MICHIGAN

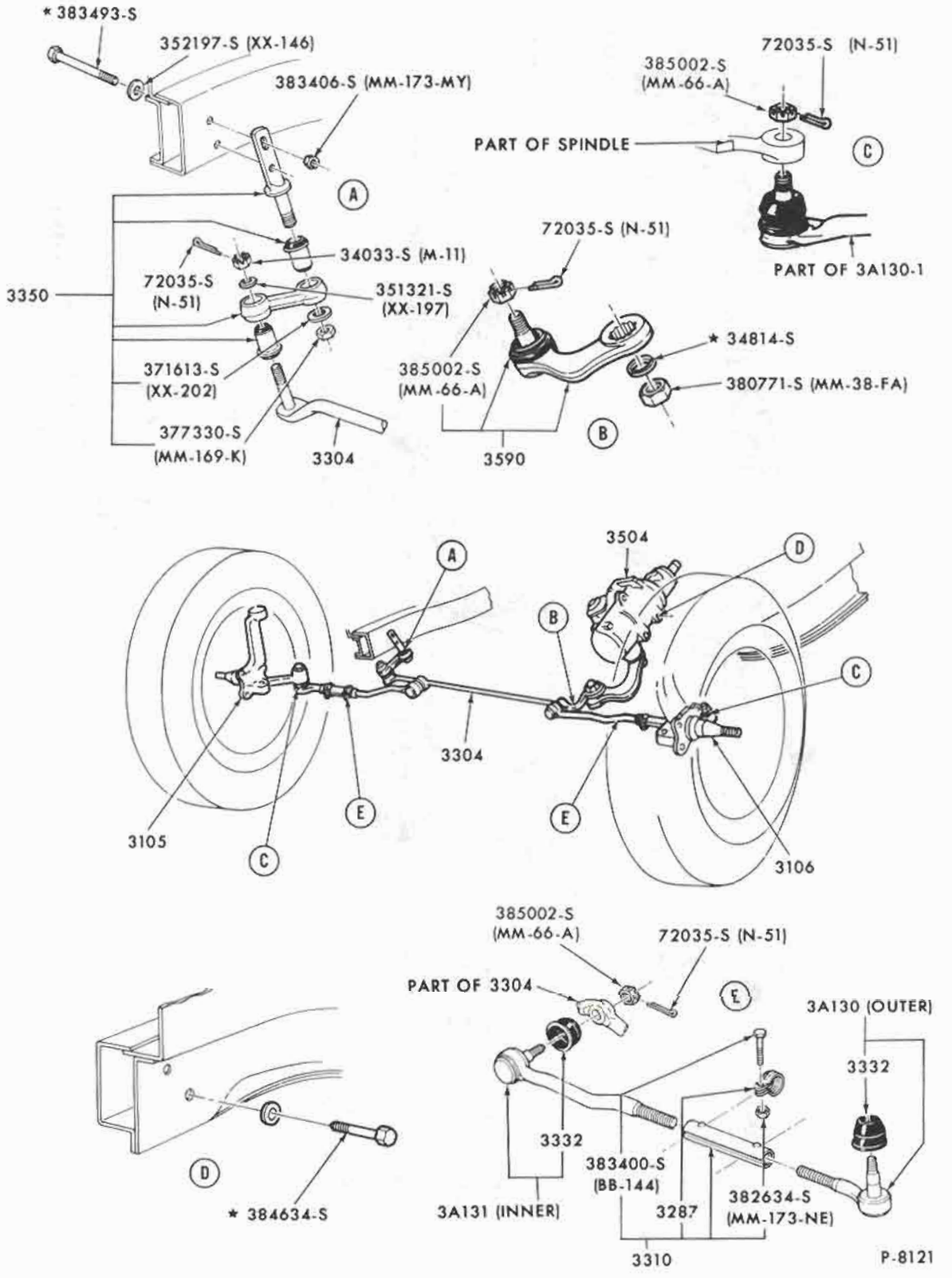

STEERING LINKAGE (POWER & MANUAL) - TYPICAL
1971/72 MUSTANG, 1972 THUNDERBIRD & TORINO

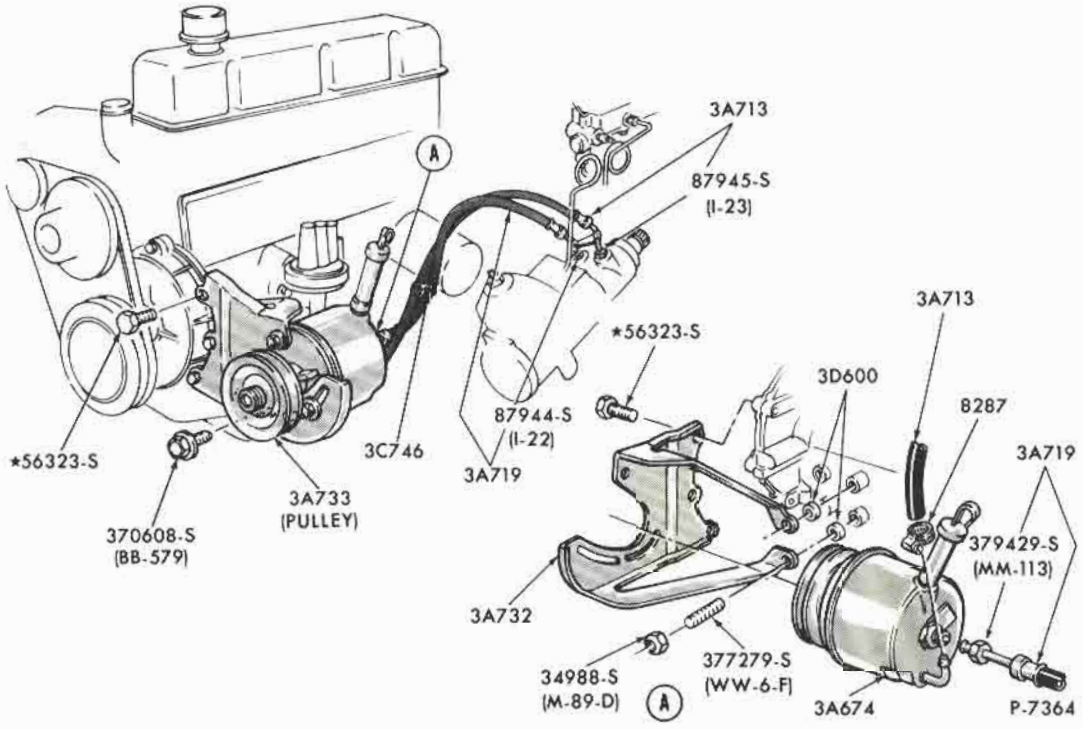

POWER STEERING PUMP INSTALLATION - TYPICAL
1970/72 FORD - 6 CYL. 240, 1971/72 MUSTANG, 1972 TORINO - 6 CYL. 250

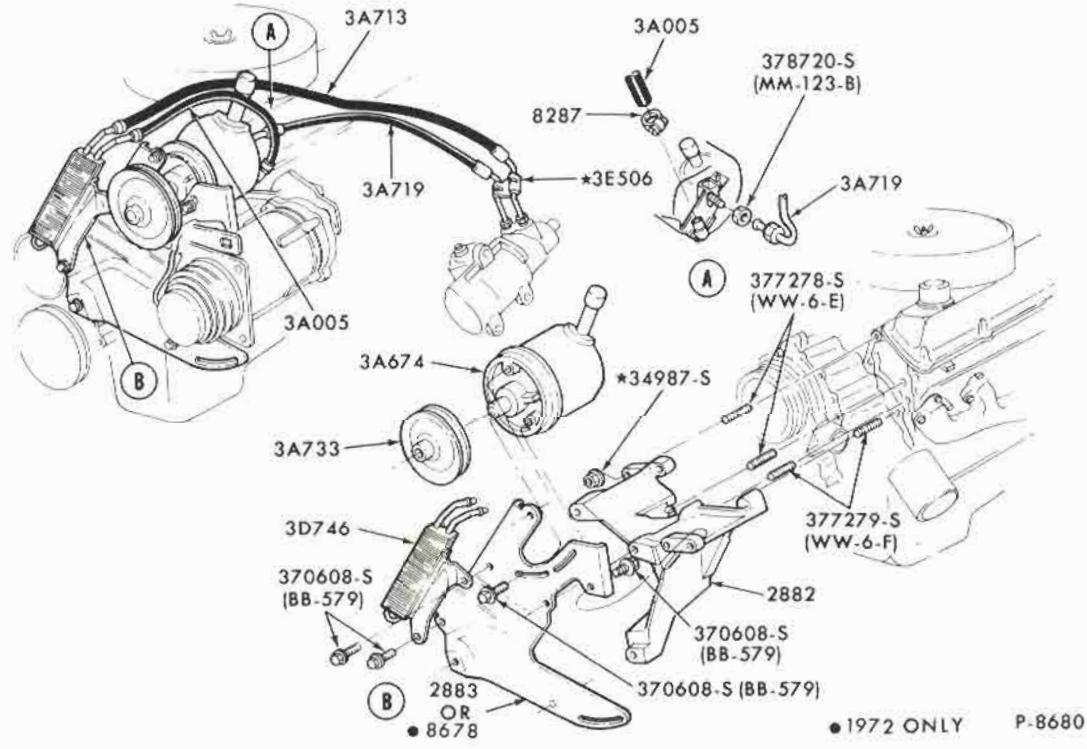

POWER STEERING PUMP INSTALLATION
1972 THUNDERBIRD - 8 CYL. 429 WITH AIR CONDITIONING AND 8 CYL. 460

COPYRIGHT © 1975 — FORD MOTOR COMPANY — DEARBORN, MICHIGAN

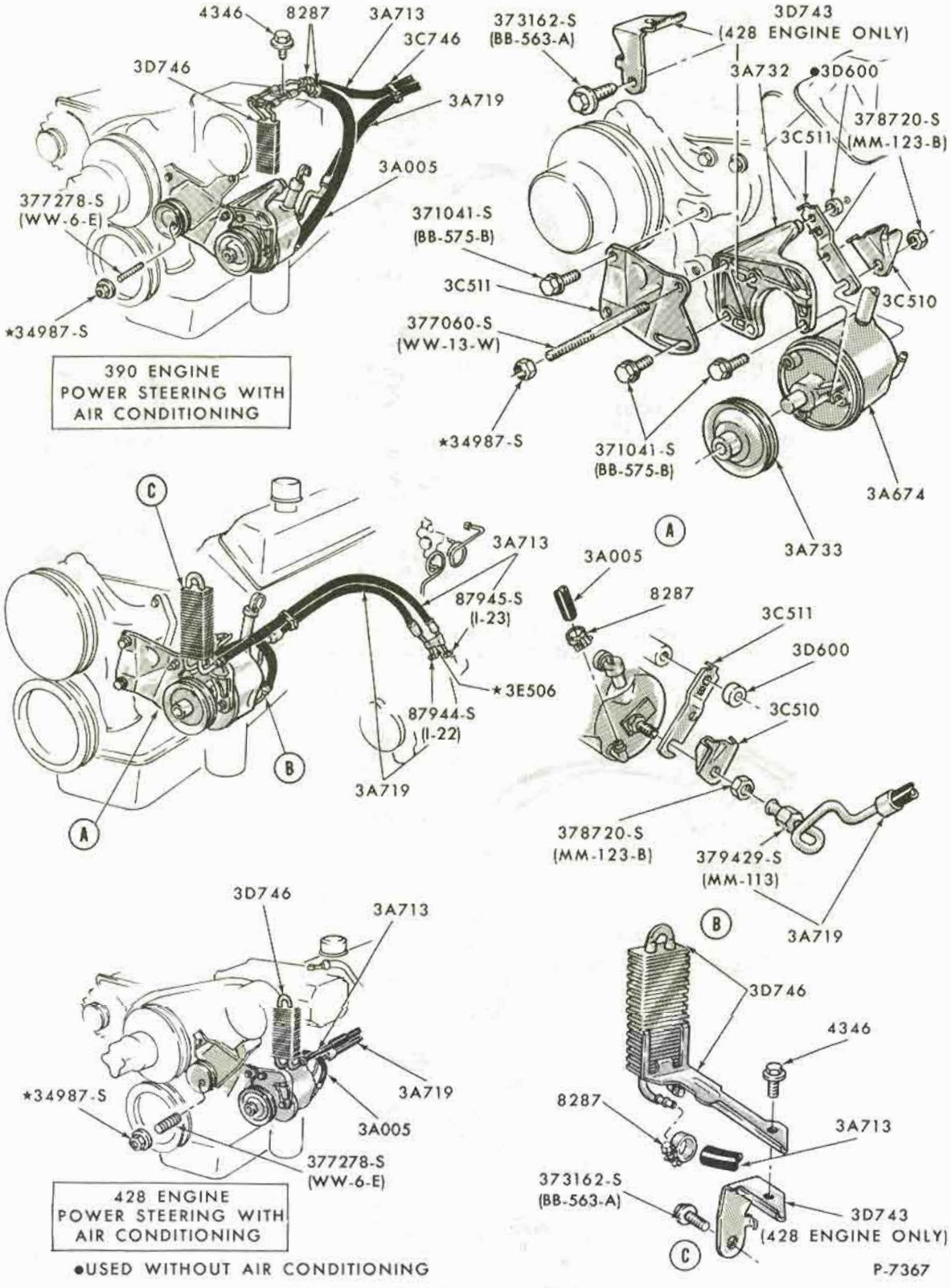

POWER STEERING PUMP INSTALLATION
1970/71 FORD - 8 CYL. 390, 428

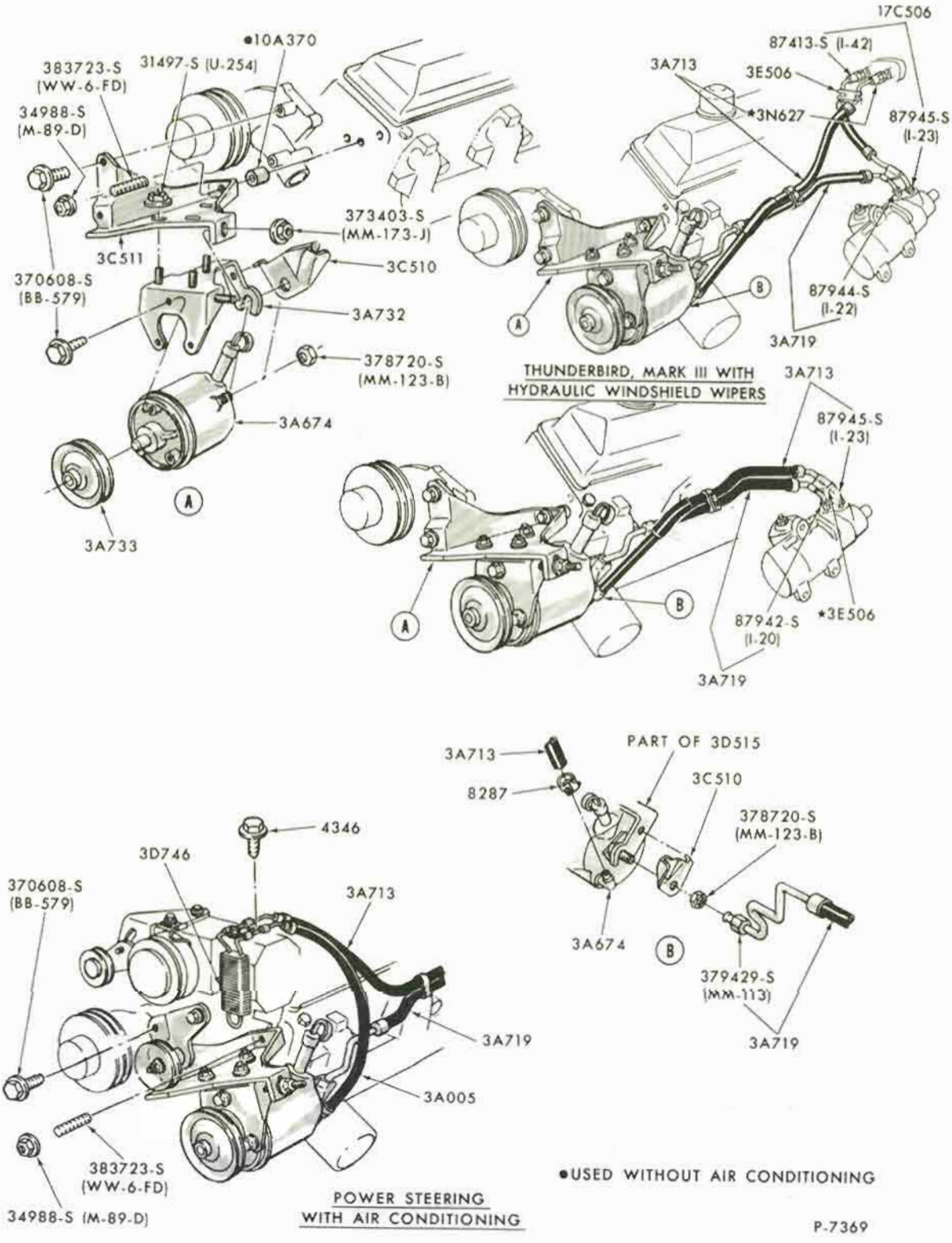

POWER STEERING PUMP INSTALLATION - TYPICAL
1970/72 FORD 8 CYL. 351, 400, 429, 1970/72 THUNDERBIRD 8 CYL. 400, (429 w/o A/C)

COPYRIGHT © 1975 — FORD MOTOR COMPANY — DEARBORN, MICHIGAN

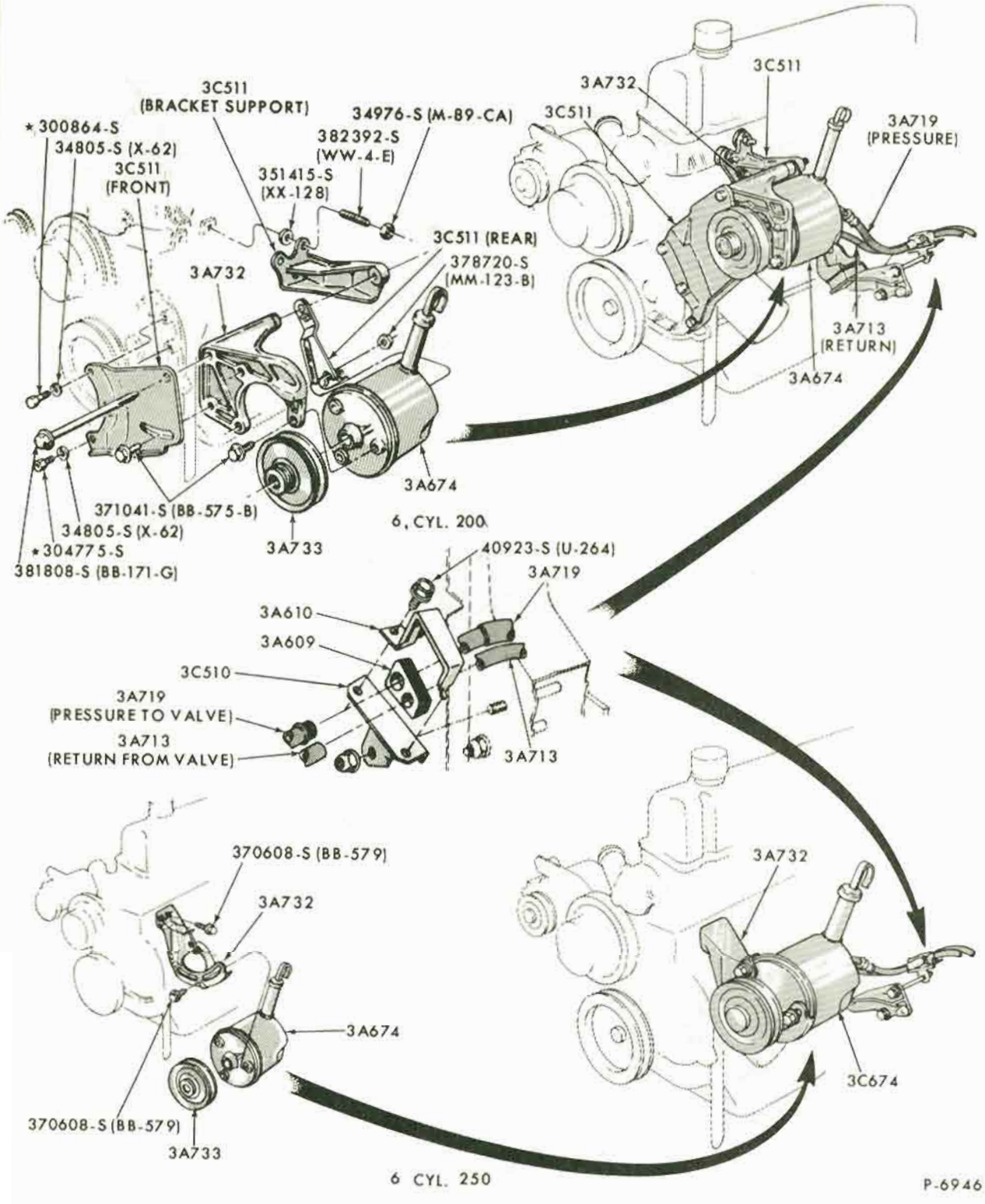

POWER STEERING PUMP INSTALLATION - 6 CYL. ENGINE
1969/71 FAIRLANE/TORINO, 1969/70 FALCON & MUSTANG
1970/72 MAVERICK - 6 CYL. 250

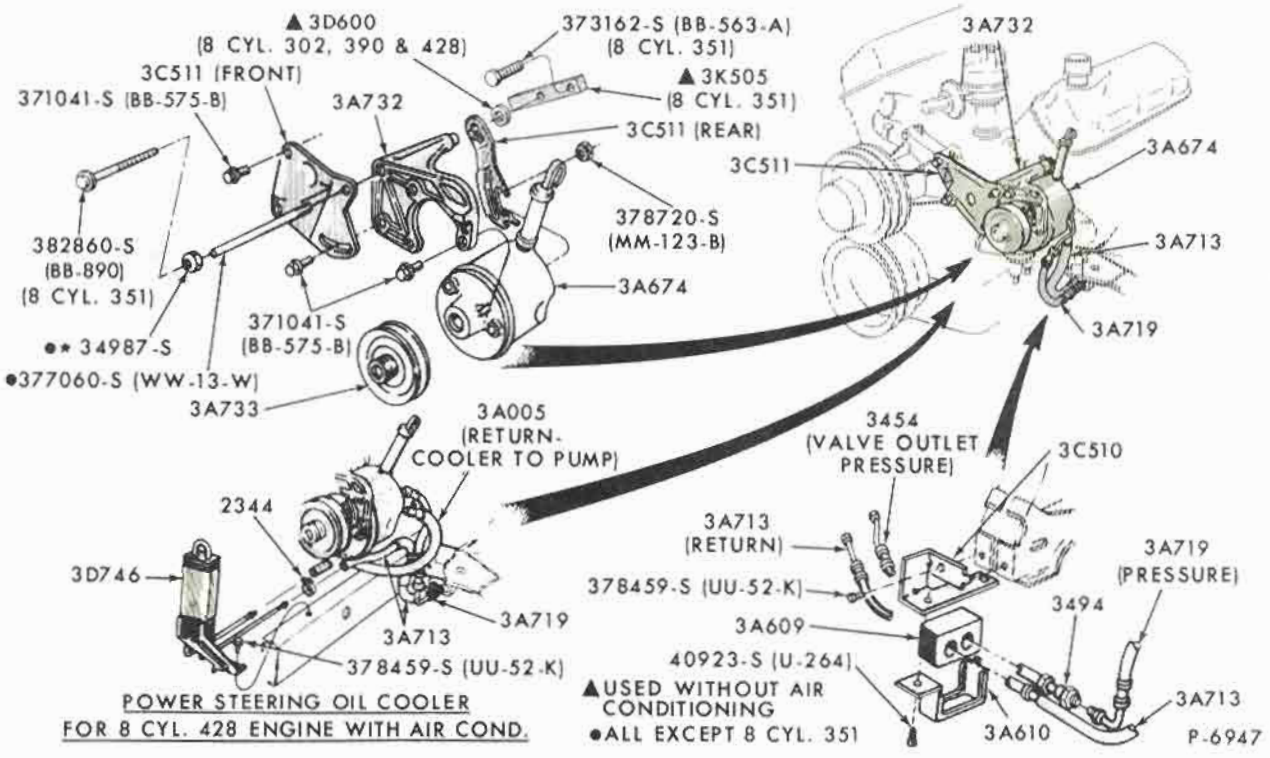

POWER STEERING PUMP INSTALLATION
1969 FAIRLANE/TORINO, FALCON - 8 CYL., MUSTANG
1970 MUSTANG - 8 CYL. 428

COPYRIGHT © 1975 — FORD MOTOR COMPANY — DEARBORN, MICHIGAN

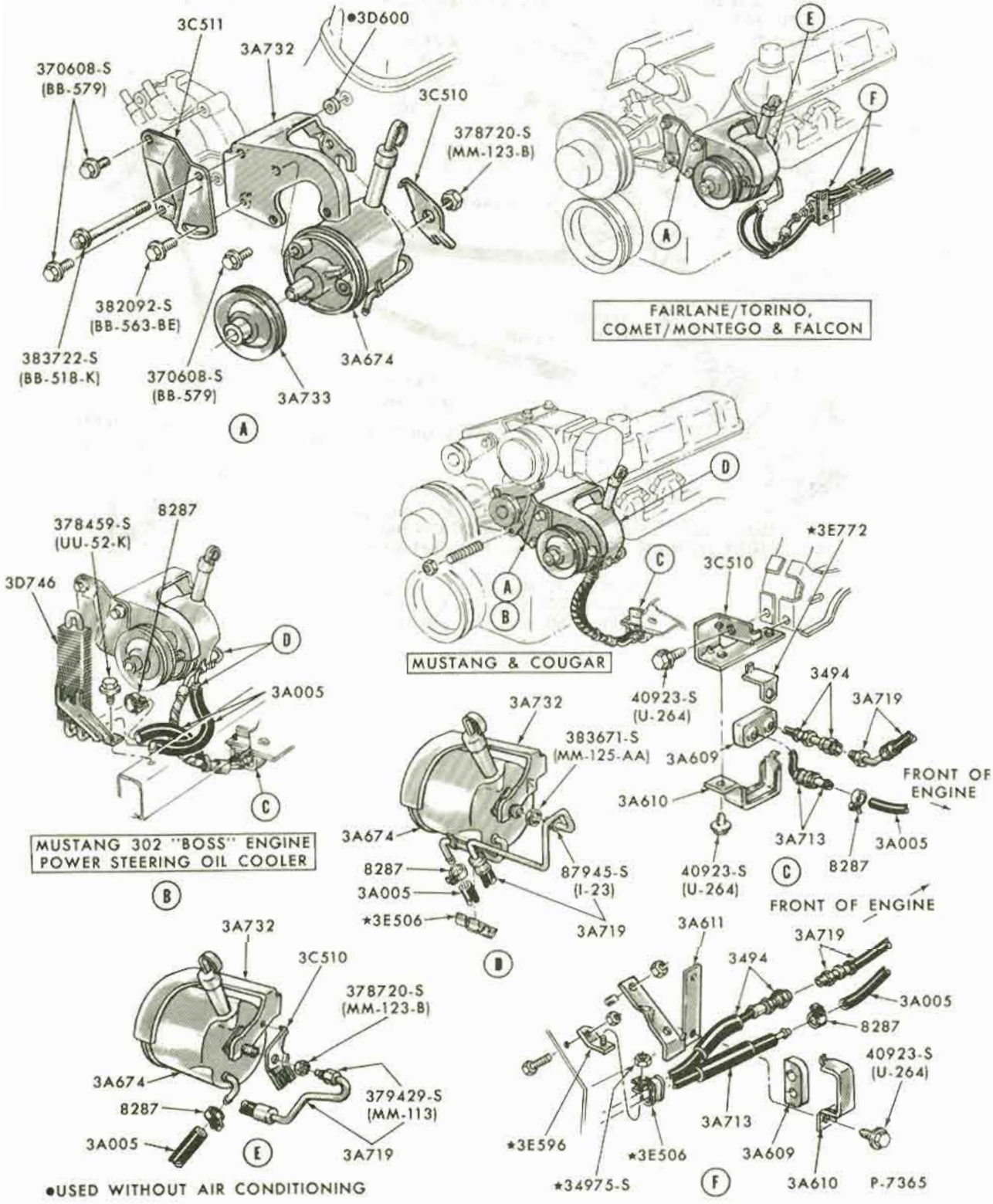

•USED WITHOUT AIR CONDITIONING

POWER STEERING PUMP INSTALLATION

1970/71 FAIRLANE/TORINO - 8 CYL. 302,351, 1970 FALCON, MUSTANG - 8 CYL. 302,351

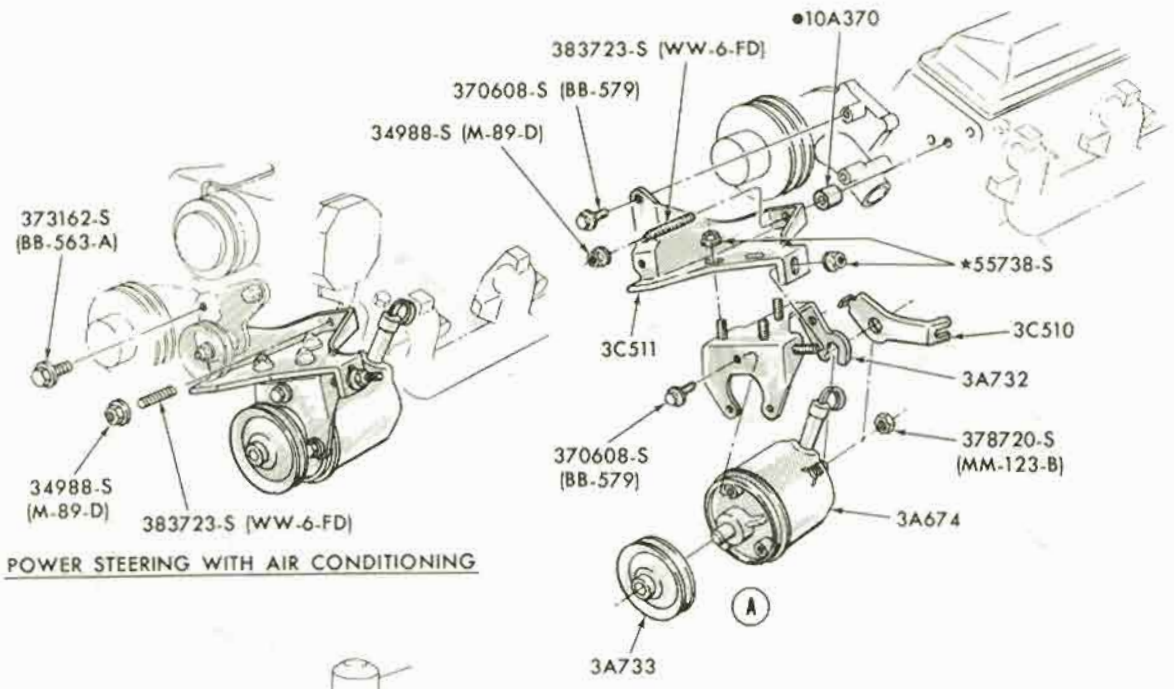

POWER STEERING WITH AIR CONDITIONING

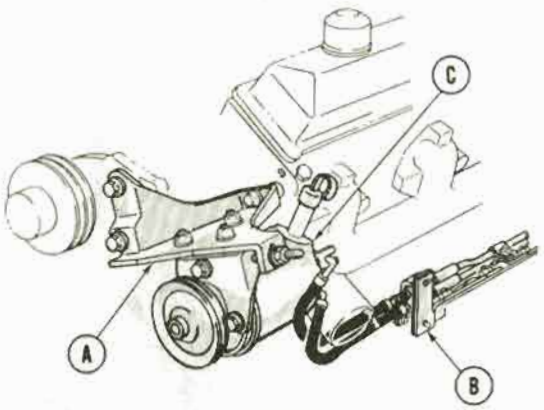

MAIN VIEW

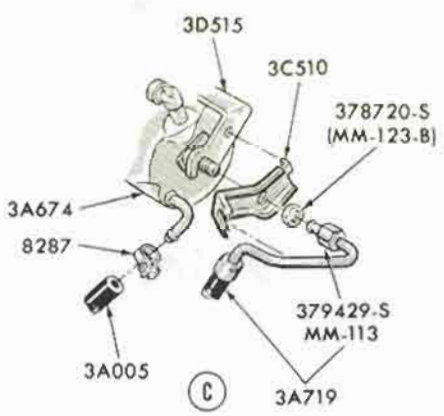

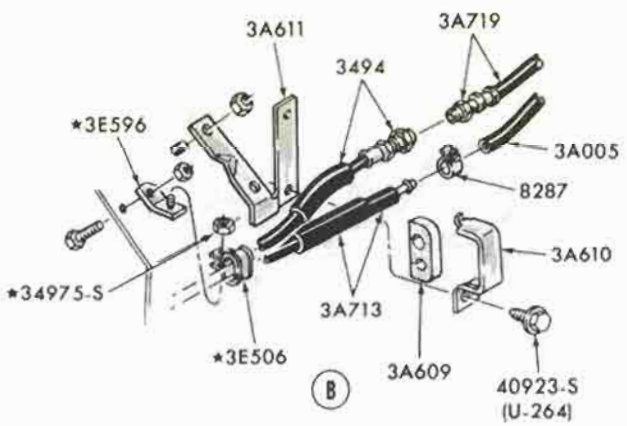

FAIRLANE/TORINO & COMET/MONTEGO

• USED WITHOUT AIR CONDITIONING

P-7368

POWER STEERING PUMP INSTALLATION
1970/71 FAIRLANE/TORINO - 8 CYLINDER 429

COPYRIGHT © 1975 — FORD MOTOR COMPANY — DEARBORN, MICHIGAN

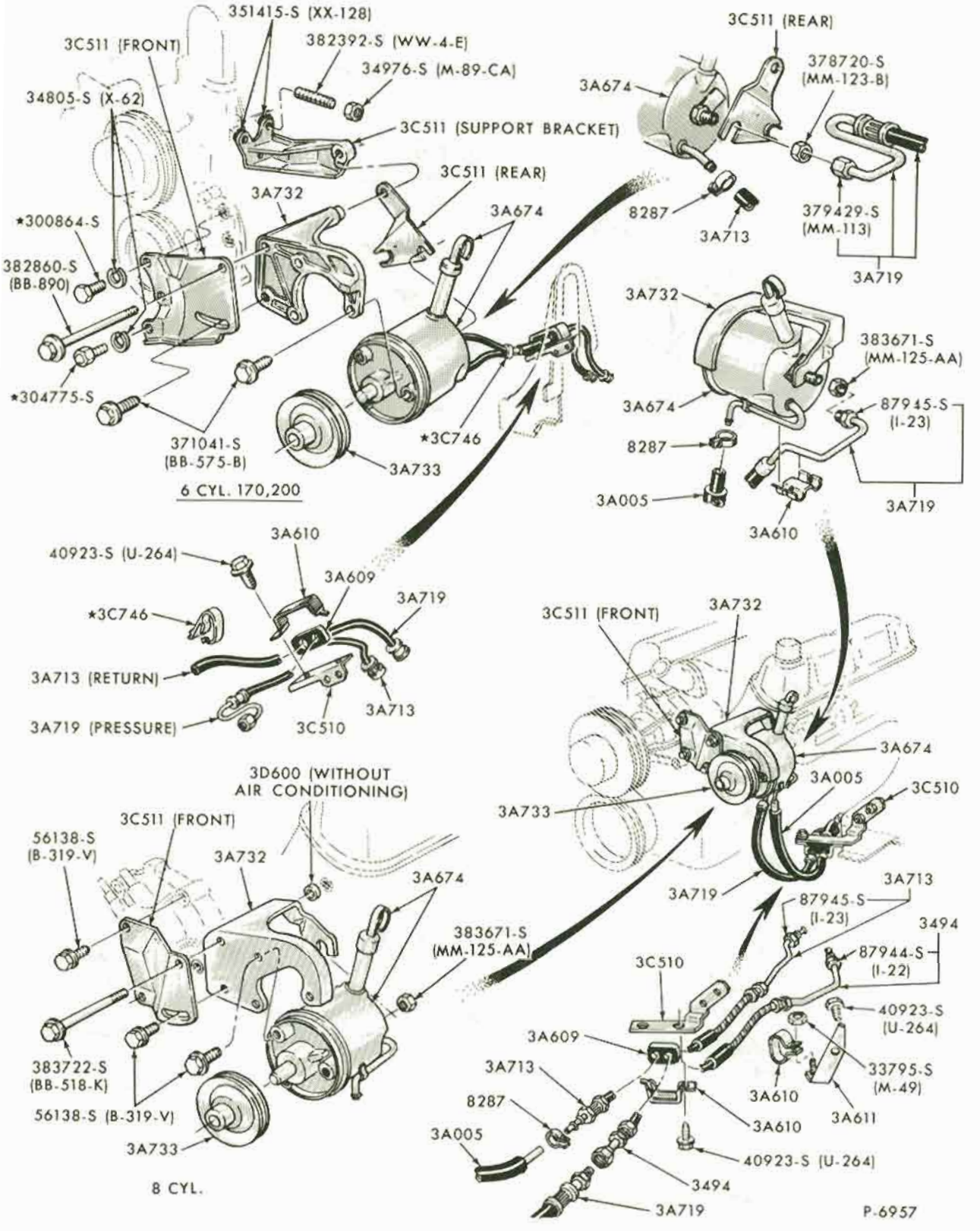

POWER STEERING PUMP INSTALLATION
1970/72 MAVERICK

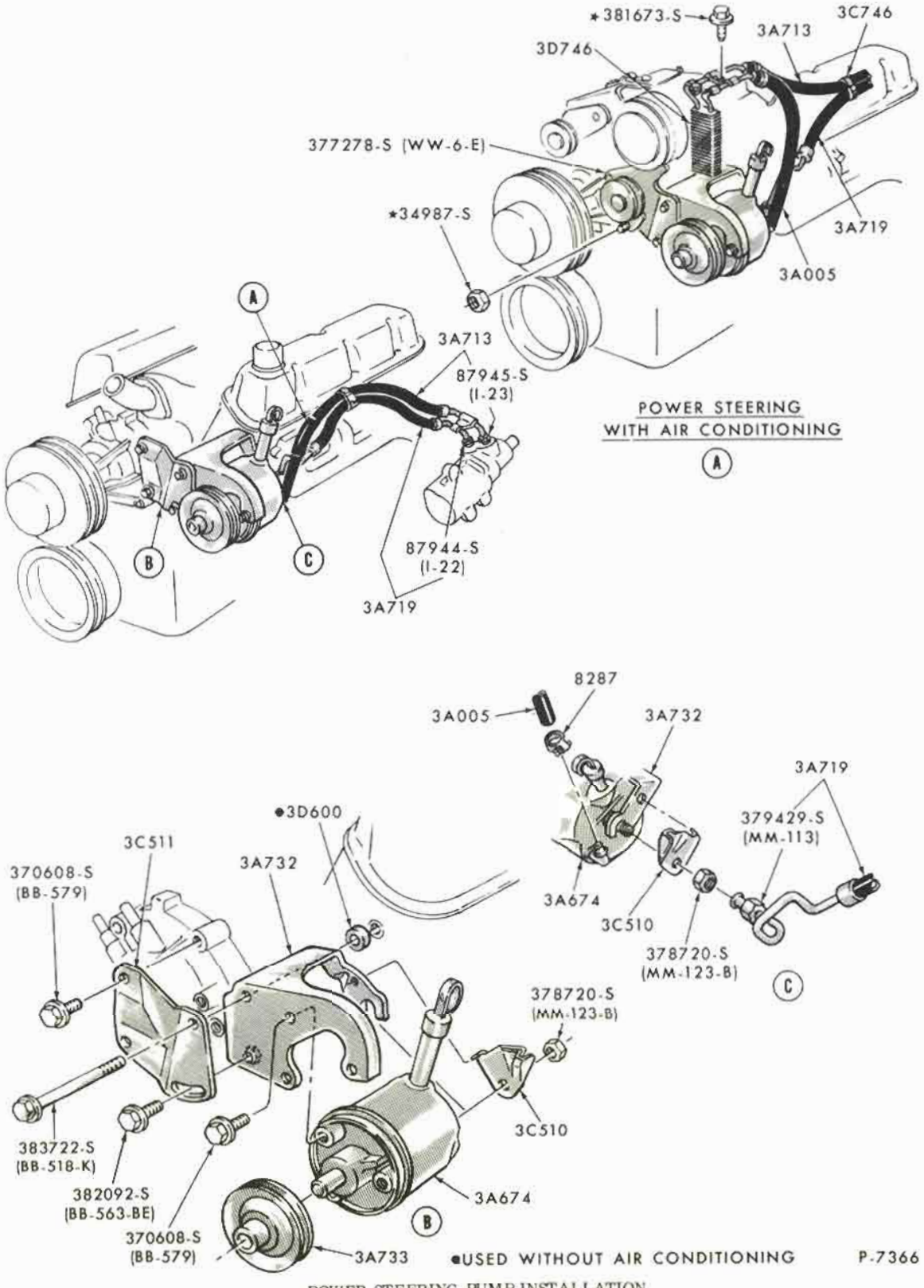

POWER STEERING PUMP INSTALLATION
1970/72 FORD - 8 CYL. 302
1970 FORD - 8 CYL. 351

COPYRIGHT © 1975 — FORD MOTOR COMPANY — DEARBORN, MICHIGAN

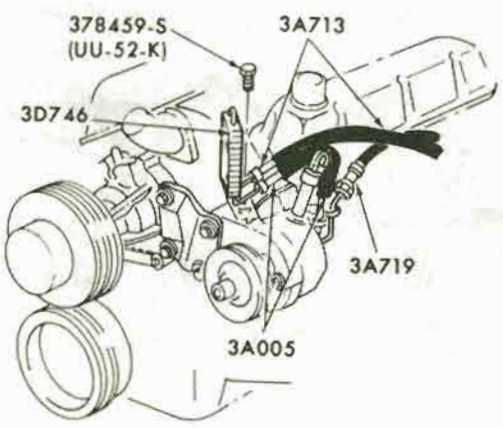

POWER STEERING WITHOUT AIR CONDITIONING

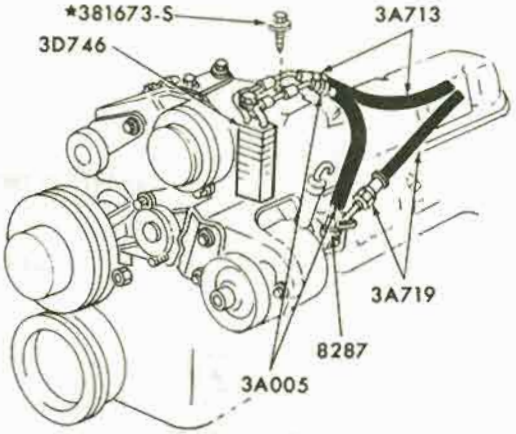

POWER STEERING WITH AIR CONDITIONING

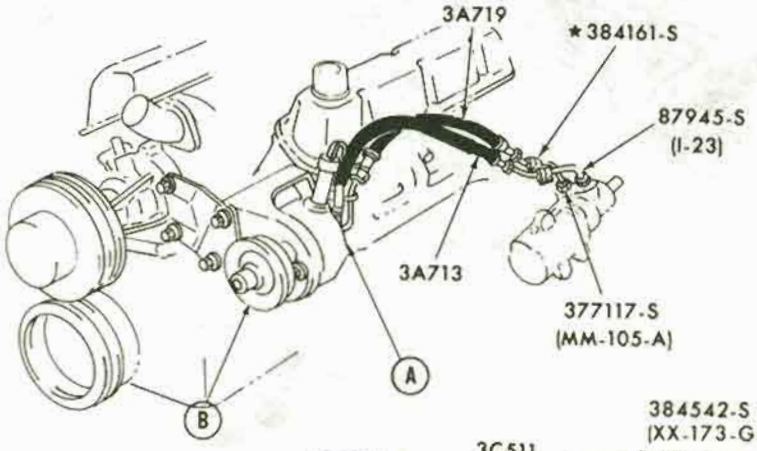

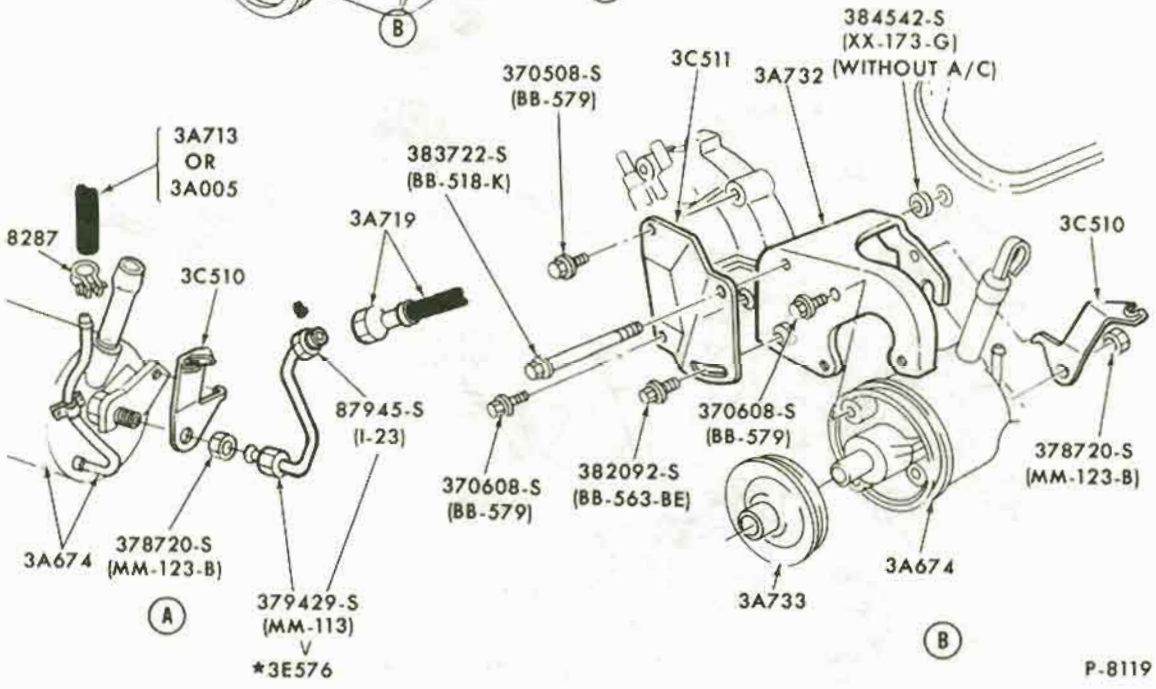

P-8119

POWER STEERING PUMP INSTALLATION
1971/72 MUSTANG - 8 CYL. 302, 351, 1972 TORINO - 8 CYL. 302 (w/o A/C), 351-C

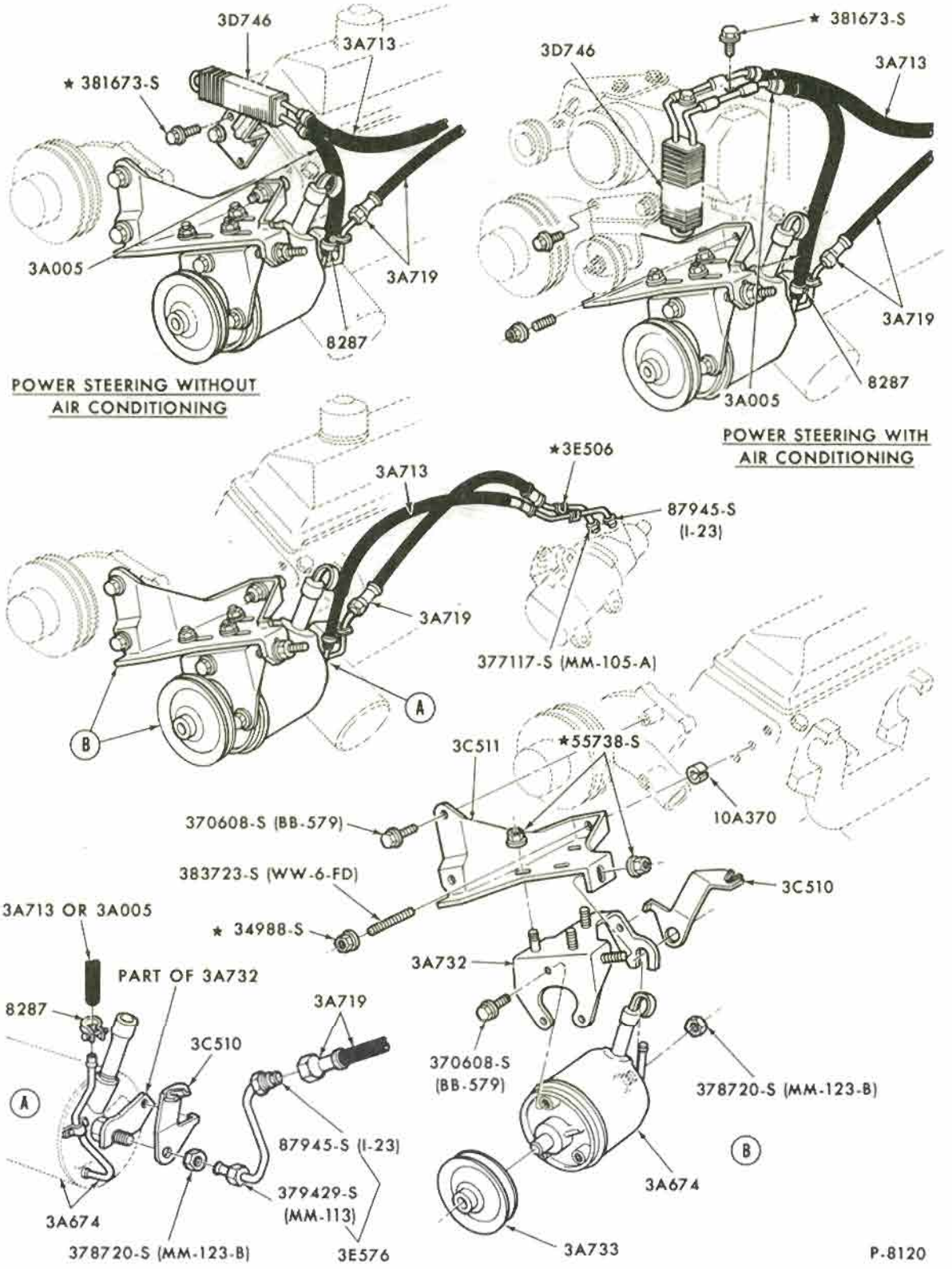

POWER STEERING PUMP INSTALLATION
1971 MUSTANG - 8 CYL. 429, 1972 TORINO - 8 CYL. 302 (W/A/C), 351-W, 400, 429

COPYRIGHT © 1975 — FORD MOTOR COMPANY — DEARBORN, MICHIGAN

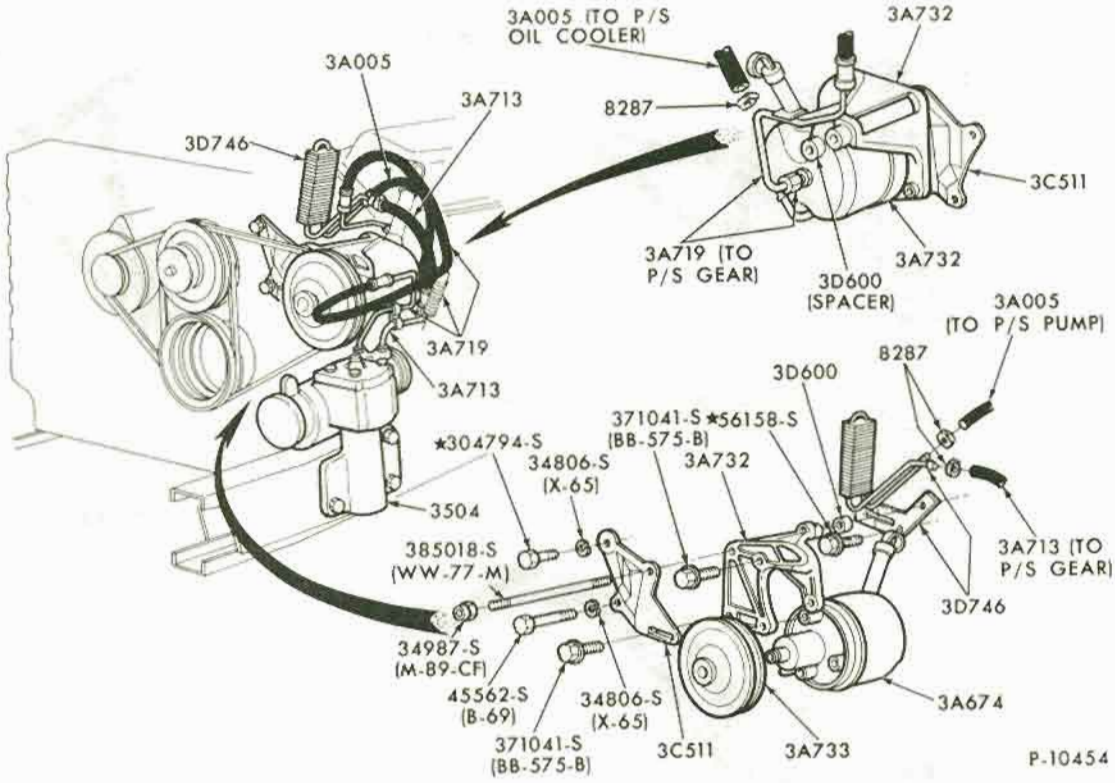

POWER STEERING PUMP INSTALLATION
1972 BRONCO-8 CYLINDER 302

INDEX

THIS INDEX SECTION INCLUDES THE FOLLOWING MAJOR GROUPS:

DRIVE LINE VIBRATION DAMPER
DRIVE SHAFT
REAR AXLE

TITLE	SECTION	PAGE	ILLUS. NO.
1965			
A (FORD)			
DRIVE SHAFT	46	1	P-2995
REAR AXLE			
Locking - Equa lock	40	2	P-2819
- Dapco no-spin-9" ring gear - 8 cyl. 427	40	3	P-4721
Non - locking	40	1	P-2130
B (FAIRLANE)			
DRIVE SHAFT	46	1	P-3144
REAR AXLE			
Locking - Equa lock	40	2	P-2819
Non - locking	40	1	P-2130
F (MUSTANG)			
DRIVE SHAFT	46	1	P-3144
REAR AXLE			
Locking - Equa lock - 7 1/4" ring gear (integral carrier)	40	4	P-5796
- 7 3/4", 8", 8 3/4", 9" ring gears (separate carrier)	40	2	P-2819
Non - locking - 7 3/4", 8", 9" ring gears (separate carrier)	40	1	P-2130
- 7 1/4" ring gear - (integral carrier)	40	4	P-5796
S (THUNDERBIRD)			
DRIVE SHAFT	46	1	P-2995
REAR AXLE			
Locking - Equa lock	40	2	P-2819
Non - locking	40	1	P-2130
X (FALCON)			
DRIVE SHAFT	46	1	P-3144
REAR AXLE			
Locking - Equa lock - 7 1/4" ring gear (integral carrier)	40	4	P-5796
- 7 3/4", 8" ring gears (separate carrier)	40	2	P-2819
Non - locking - 7 3/4", 8", 9" ring gears (separate carrier)	40	1	P-2130
- 7 1/4" ring gear (integral carrier)	40	4	P-5796
1966			
A (FORD)			
DRIVE LINE VIBRATION DAMPER	46	2	P-5498
DRIVE SHAFT	46	1	P-2995
REAR AXLE			
Locking - Dapco no-spin-9" ring gear - 8 cyl. 427	40	3	P-4721
- Equa lock - 8 3/4", 9" ring gears	40	2	P-2819
- 9 3/8" ring gear	40	5	P-9720
Non - locking - 8 3/4", 9" ring gears	40	1	P-2130
- 9 3/8" ring gear	40	5	P-9720

COPYRIGHT © 1975 — FORD MOTOR COMPANY — DEARBORN, MICHIGAN

INDEX

TITLE	SECTION	PAGE	ILLUS. NO.
1966			
B (FAIRLANE)			
DRIVE SHAFT	46	1	P-3144
REAR AXLE			
Locking - Equa lock	40	2	P-2819
Non - locking	40	1	P-2130
F (MUSTANG)			
DRIVE SHAFT	46	1	P-3144
REAR AXLE			
Locking - Equa lock - 7 1/4" ring gear (integral carrier)	40	4	P-5796
7 3/4", 8", 8 3/4", 9" ring gears (separate carrier)	40	2	P-2819
Non - locking - 7 3/4", 8", 9" ring gears (separate carrier)	40	1	P-2130
- 7 1/4" ring gear (integral carrier)	40	4	P-5796
S (THUNDERBIRD)			
DRIVE SHAFT	46	1	P-2995
REAR AXLE			
Locking - Equa lock - 8 3/4", 9" ring gears	40	2	P-2819
- 9 3/8" ring gear	40	5	P-9720
Non - locking - 8 3/4", 9" ring gears	40	1	P-2130
- 9 3/8" ring gear	40	5	P-9720
U (BRONCO)			
DRIVE SHAFT	46	5	P-5232
REAR AXLE - Non - locking	40	1	P-2130
- Locking - Equa lock	40	2	P-2819
X (FALCON)			
DRIVE SHAFT	46	1	P-3144
REAR AXLE			
Locking - Equa lock - 7 1/4" ring gear (integral carrier)	40	4	P-5796
- 7 3/4", 8" ring gears (separate carrier)	40	2	P-2819
Non - locking - 7 3/4", 8", 9" ring gears (separate carrier)	40	1	P-2130
- 7 1/4" ring gears (integral carrier)	40	4	P-5796
1967			
A (FORD)			
DRIVE LINE VIBRATION DAMPER	46	2	P-5498
DRIVE SHAFT	46	1	P-2995
REAR AXLE			
Locking - Dapco no-spin-9" ring gear - 8 cyl. 427 (separate carrier)	40	3	P-4721
- Equa lock - 8 3/4", 9" ring gears (separate carrier)	40	2	P-2819
- 9 3/8" ring gear (separate carrier)	40	5	P-9720
Non - locking - 8 3/4", 9" ring gears - (separate carrier)	40	1	P-2130
- 8 1/2" ring gear - (integral carrier)	40	6	P-5471
- 9 3/8" ring gear - (separate carrier)	40	5	P-9720
B (FAIRLANE)			
DRIVE LINE VIBRATION DAMPER	46	3	P-5732
DRIVE SHAFT	46	1	P-3144
REAR AXLE			
Locking - Equa lock	40	2	P-2819
Non - locking	40	1	P-2130

INDEX

TITLE	SECTION	PAGE	ILLUS. NO.
1967			
F (MUSTANG)			
DRIVE SHAFT	46	1	P-3144
REAR AXLE			
Locking - Equa lock - 7 1/4" ring gear (integral carrier)	40	4	P-5796
- 7 3/4", 8", 8 3/4", 9" ring gears (separate carrier)	40	2	P-2819
Non - locking - 7 1/4" ring gear (integral carrier)	40	4	P-5796
- 7 3/4", 8", 9" ring gears (separate carrier)	40	1	P-2130
S (THUNDERBIRD)			
DRIVE SHAFT - 2 door	46	1	P-2995
- 4 door	46	3	P-5512
REAR AXLE			
Locking - Equa lock - 9" ring gear	40	2	P-2819
- 9 3/8" ring gear	40	5	P-9720
Non - locking - 9" ring gear	40	1	P-2130
- 9 3/8" ring gear	40	5	P-9720
U (BRONCO)			
DRIVE SHAFT	46	5	P-5232
REAR AXLE - Non - locking	40	1	P-2130
- Locking - Equa lock	40	2	P-2819
X (FALCON)			
DRIVE SHAFT	46	1	P-3144
REAR AXLE			
Locking - Equa lock - 7 1/4" ring gear (integral carrier)	40	4	P-5796
- 7 3/4", 8" ring gears (separate carrier)	40	2	P-2819
Non - locking - 7 3/4", 8", 9" ring gears (separate carrier)	40	1	P-2130
- 7 1/4" ring gears (integral carrier)	40	4	P-5796
1968			
A (FORD)			
DRIVE LINE VIBRATION DAMPER - slip yoke type	46	4	P-5898
DRIVE SHAFT	46	1	P-2995
REAR AXLE			
Locking - Equa lock - 8 3/4", 9" ring gears (separate carrier)	40	2	P-2819
- 9 3/8" ring gear (separate carrier)	40	5	P-9720
Non - locking - 8 3/4", 9" ring gears - (separate carrier)	40	1	P-2130
- 8 1/2" ring gear - (integral carrier)	40	6	P-5471
- 9 3/8" ring gear - (separate carrier)	40	5	P-9720
B (FAIRLANE/TORINO)			
DRIVE LINE VIBRATION DAMPER	46	4	P-6425
DRIVE SHAFT	46	1	P-3144
REAR AXLE			
Locking - Equa lock	40	2	P-2819
- Traction Lok	40	7	P-6459
Non - locking	40	1	P-2130

COPYRIGHT © 1975 — FORD MOTOR COMPANY — DEARBORN, MICHIGAN

INDEX

TITLE	SECTION	PAGE	ILLUS. NO.
1968			
F (MUSTANG)			
DRIVE SHAFT	46	1	P-3144
REAR AXLE			
Locking - Equa lock - 7 1/4" ring gear (integral carrier)	40	4	P-5796
- 7 3/4", 8", 8 3/4", 9" ring gears (separate carrier)	40	2	P-2819
- Traction Lok - 9" ring gear (separate carrier)	40	7	P-6459
Non - locking - 7 1/4" ring gear (integral carrier)	40	4	P-5796
- 7 3/4", 8", 9" ring gears (separate carrier)	40	1	P-2130
S (THUNDERBIRD)			
DRIVE LINE VIBRATION DAMPER	46	4	P-6425
DRIVE SHAFT	46	6	P-5987
REAR AXLE	40	5	P-9720
U (BRONCO)			
DRIVE SHAFT	46	5	P-5232
REAR AXLE - Non locking	40	1	P-2130
- Locking - Equa lock	40	2	P-2819
X (FALCON)			
DRIVE SHAFT	46	1	P-3144
REAR AXLE			
Locking - Equa lock - 7 1/4" ring gear (integral carrier)	40	4	P-5796
- 7 3/4", 8", ring gears (separate carrier)	40	2	P-2819
Non - locking - 7 3/4", 8", 9" ring gears (separate carrier)	40	1	P-2130
- 7 1/4" ring gear (integral carrier)	40	4	P-5796
1969			
A (FORD)			
DRIVE LINE VIBRATION DAMPER	46	4	P-6425
DRIVE SHAFT	46	1	P-2995
REAR AXLE			
Locking - Equa lock - 8 3/4", 9" ring gears (separate carrier)	40	2	P-2819
- 9 3/8" ring gear (separate carrier)	40	5	P-9720
Non - locking - 9" ring gear -(separate carrier)	40	1	P-2130
- 8 1/2", 8 3/4" ring gears-(integral carrier)	40	6	P-5471
- 9 3/8" ring gear - (separate carrier)	40	5	P-9720
B (FAIRLANE/TORINO)			
DRIVE LINE VIBRATION DAMPER	46	4	P-6425
DRIVE SHAFT	46	1	P-3144
REAR AXLE			
Locking - Traction Lok	40	7	P-6459
Non - locking	40	1	P-2130
F (MUSTANG)			
DRIVE SHAFT	46	1	P-3144
REAR AXLE			
Locking - Equa lock - 7 1/4" ring gear (integral carrier)	40	4	P-5796
- Traction Lok - 9" ring gear (separate carrier)	40	7	P-6459
Non - locking - 7 1/4" ring gear (integral carrier)	40	4	P-5796
- 7 3/4", 8", 9" ring gears (separate carrier)	40	1	P-2130

INDEX

TITLE	SECTION	PAGE	ILLUS. NO.
1969			
S (THUNDERBIRD)			
DRIVE LINE VIBRATION DAMPER	46	4	P-6425
DRIVE SHAFT	46	6	P-5987
REAR AXLE	40	5	P-9720
U (BRONCO)			
DRIVE SHAFT - Mechanics type - Before Ser. G20,001"	46	5	P-5232
- Dana type - From Ser. G20,001"	46	5	P-7280
REAR AXLE - Non - locking	40	1	P-2130
- Locking - Equa lock	40	2	P-2819
X (FALCON)			
DRIVE SHAFT	46	1	P-3144
REAR AXLE			
Locking - Equa lock - 7 1/4" ring gear (integral carrier)	40	4	P-5796
- 7 3/4", 8" ring gears (separate carrier)	40	2	P-2819
Non - locking - 7 3/4", 8", 9", ring gears (separate carrier)	40	1	P-2130
-7 1/4" ring gears (integral carrier)	40	4	P-5796
1970			
A (FORD)			
DRIVE LINE VIBRATION DAMPER	46	4	P-6425
DRIVE SHAFT	46	1	P-2995
REAR AXLE			
Locking -Traction Lok -	40	7	P-6459
Non - locking - 9" ring gear (separate carrier)	40	1	P-2130
- 8 3/4" ring gear (integral carrier)	40	6	P-5471
- 9 3/8" ring gear (separate carrier)	40	5	P-9720
B (FAIRLANE/TORINO)			
B (FALCON) - FROM 1/2/70			
DRIVE LINE VIBRATION DAMPER	46	4	P-6425
DRIVE SHAFT	46	1	P-3144
REAR AXLE			
Locking - Traction Lok	40	7	P-6459
Non - locking	40	1	P-2130
F (MUSTANG)			
DRIVE SHAFT	46	1	P-3144
REAR AXLE			
Locking - Equa lock - 7 1/4" ring gear (integral carrier)	40	4	P-5796
- Traction Lok - 8", 9" ring gears (separate carrier)	40	7	P-6459
- Dapco no-spin-9" ring gear (separate carrier)	40	3	P-4721
Non - locking - 7 1/4" ring gears (integral carrier)	40	4	P-5796
- 7 3/4", 8", 9" ring gears (separate carrier)	40	1	P-2130
P (MAVERICK)			
DRIVE SHAFT	46	1	P-3144
REAR AXLE - 7 1/4" ring gear (integral carrier)	40	4	P-5796
S (THUNDERBIRD)			
DRIVE LINE VIBRATION DAMPER	46	4	P-6425
DRIVE SHAFT	46	6	P-5987
REAR AXLE			
Non - locking - 9" ring gear	40	1	P-2130
- 9 3/8" ring gears	40	5	P-9720
Locking - Traction lok- 9", 9 3/8" ring gears	40	7	P-6459

COPYRIGHT © 1975 — FORD MOTOR COMPANY — DEARBORN, MICHIGAN

INDEX

TITLE	SECTION	PAGE	ILLUS. NO.
1970			
U (BRONCO)			
DRIVE SHAFT - Mechanics type - "Before Ser. G20,001"	46	5	P-5232
- Dana type - "From Ser. G20,001"	46	5	P-7280
REAR AXLE - Non - locking	40	1	P-2130
- Locking - Traction Lok	40	7	P-6459
X (FALCON) - BEFORE 1/2/70			
FOR UNITS BUILT FROM 1/2/70 REFER TO B (FALCON)			
DRIVE SHAFT	46	1	P-3144
REAR AXLE			
Locking - Equa lock - 7 1/4" ring gear (integral carrier)	40	4	P-5796
- Traction Lok - 8" ring gear (separate carrier)	40	2	P-2819
Non - locking - 8" ring gears (separate carrier)	40	1	P-2130
- 7 1/4" ring gears (integral carrier)	40	4	P-5796
1971			
A (FORD)			
DRIVE LINE VIBRATION DAMPER - slip yoke type (with FMX trans. & integral 8 3/4" R/G rear axle	46	4	P-5898
DRIVE LINE VIBRATION DAMPER - trans. mounted	46	4	P-6425
DRIVE SHAFT	46	1	P-2995
REAR AXLE			
Locking - Traction Lok	40	7	P-6459
Non - locking - 9" ring gear (separate carrier)	40	1	P-2130
- 8 3/4" ring gear (integral carrier)	40	6	P-5471
B (FAIRLANE/TORINO)			
DRIVE LINE VIBRATION DAMPER - trans. mounted	46	4	P-6425
DRIVE SHAFT	46	1	P-3144
REAR AXLE			
Locking - Traction Lok	40	7	P-6459
Non - locking	40	1	P-2130
F (MUSTANG)			
DRIVE SHAFT	46	1	P-3144
REAR AXLE			
Locking - Traction Lok	40	7	P-6459
- Dapco no-spin	40	3	P-4721
Non - locking	40	1	P-2130
L (PINTO)			
DRIVE SHAFT	46	1	P-3144
REAR AXLE	40	4	P-5796
DRIVE LINE VIBRATION DAMPER - auto. trans. mounted	46	2	P-8324
P (MAVERICK)			
DRIVE SHAFT	46	1	P-3144
REAR AXLE - Non - locking	40	1	P-2130
- Locking - Traction Lok	40	7	P-6459
S (THUNDERBIRD)			
DRIVE LINE VIBRATION DAMPER - trans. mounted	46	4	P-6425
DRIVE SHAFT	46	6	P-5987
REAR AXLE - Non - locking	40	1	P-2130
- Locking - Traction Lok	40	7	P-6459
U (BRONCO)			
DRIVE SHAFT	46	5	P-7280
REAR AXLE - Non - locking	40	1	P-2130
- Locking - Traction Lok	40	7	P-6459

INDEX

1972

TITLE	SECTION	PAGE	ILLUS. NO.
A (FORD)			
DRIVE LINE VIBRATION DAMPER - slip yoke type (with FMX trans. & integral 8.7" R/G rear axle)	46	4	P-5898
DRIVE LINE VIBRATION DAMPER - trans. mounted	46	4	P-6425
DRIVE SHAFT	46	1	P-2995
REAR AXLE			
Locking - Traction Lok	40	7	P-6459
Non-locking - 9" ring gear (separate carrier)	40	1	P-2130
- 8.7" ring gear (integral carrier)	40	6	P-5471
B (FAIRLANE/TORINO)			
DRIVE SHAFT	46	1	P-3144
REAR AXLE			
Locking - Traction Lok	40	7	P-6459
Non-locking	40	1	P-2130
F (MUSTANG)			
DRIVE SHAFT	46	1	P-3144
REAR AXLE			
Locking - Traction Lok	40	7	P-6459
Non-locking	40	1	P-2130
L (PINTO)			
DRIVE SHAFT	46	1	P-3144
REAR AXLE	40	4	P-5796
DRIVE LINE VIBRATION DAMPER - auto. trans. mounted	46	2	P-8324
P (MAVERICK)			
DRIVE SHAFT	46	1	P-3144
REAR AXLE	40	1	P-2130
S (THUNDERBIRD)			
DRIVE SHAFT - "Before 12/1/71"	46	1	P-2995
- "From 12/1/71"	46	7	P-8946
REAR AXLE - Non-locking	40	1	P-2130
- Locking - Traction Lok	40	7	P-6459
U (BRONCO)			
DRIVE SHAFT	46	5	P-7280
REAR AXLE - Non-locking	40	1	P-2130
- Locking - Traction Lok	40	7	P-6459

COPYRIGHT © 1975 — FORD MOTOR COMPANY — DEARBORN, MICHIGAN

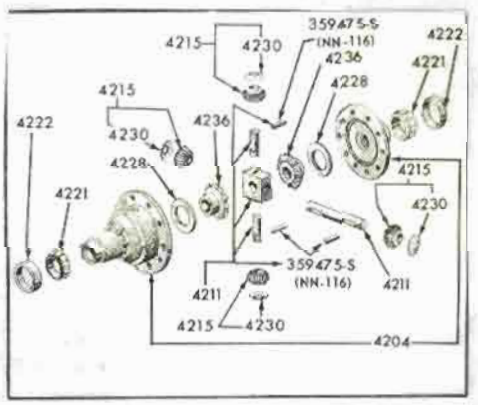
359475-S
(NN-116)
4215
4230
4236
4222
4221
4228
4215
4222
4230
4236
4228
4215
4221
4230
359475-S
(NN-116)
4211
4211
4215
4230
4204

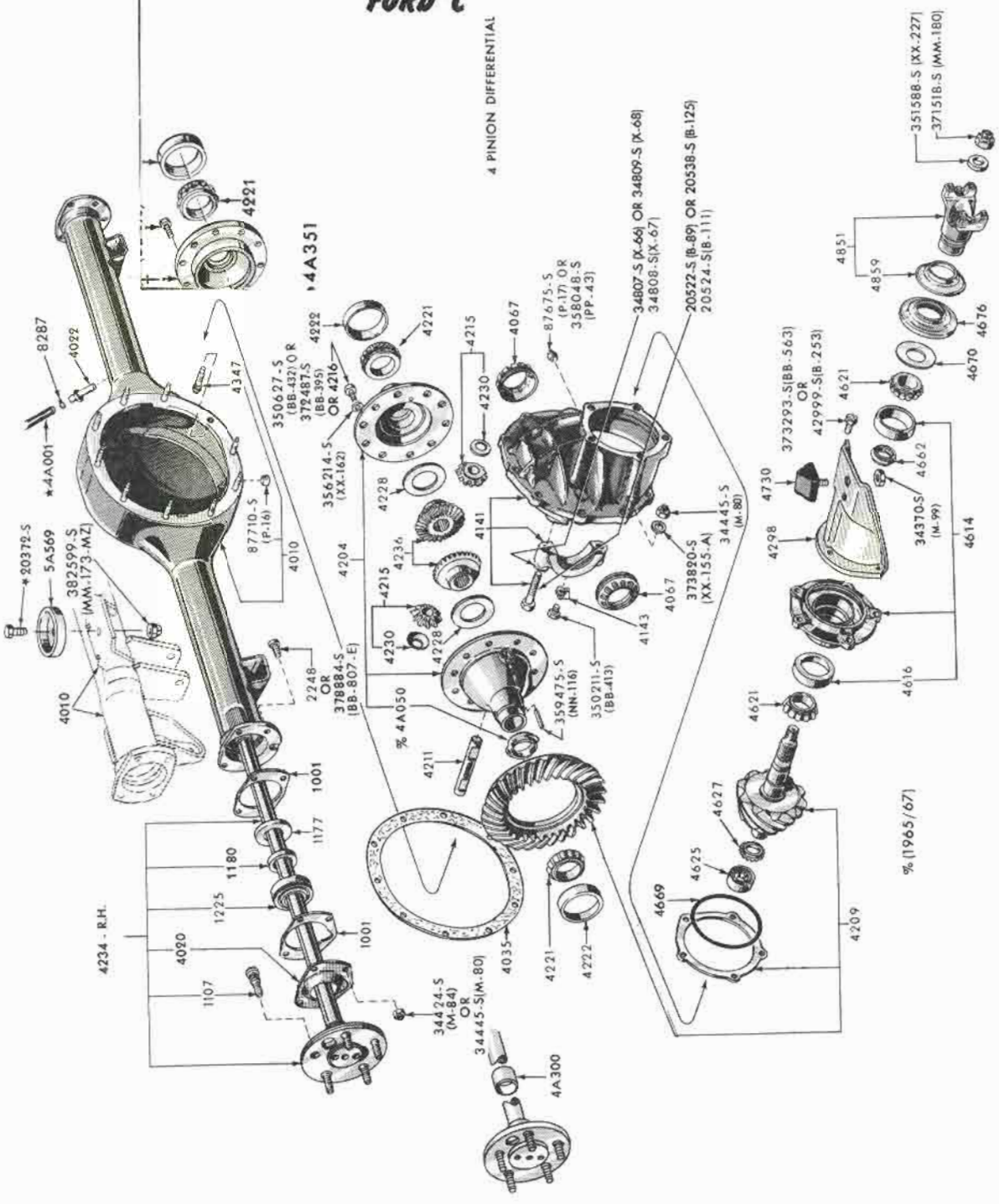

REAR AXLE - NON-LOCKING WITH SEPARATE CARRIER - TYPICAL
7 3/4", 8", 8 3/4", 9" RING GEARS
1966/72 BRONCO, 1965/72 FALCON, FAIRLANE/TORINO, FORD, MUSTANG,
1971/72 MAVERICK, 1965/67, 1970/72 THUNDERBIRD

COPYRIGHT © 1975 — FORD MOTOR COMPANY — DEARBORN, MICHIGAN

COMPANY FINAL ISSUE

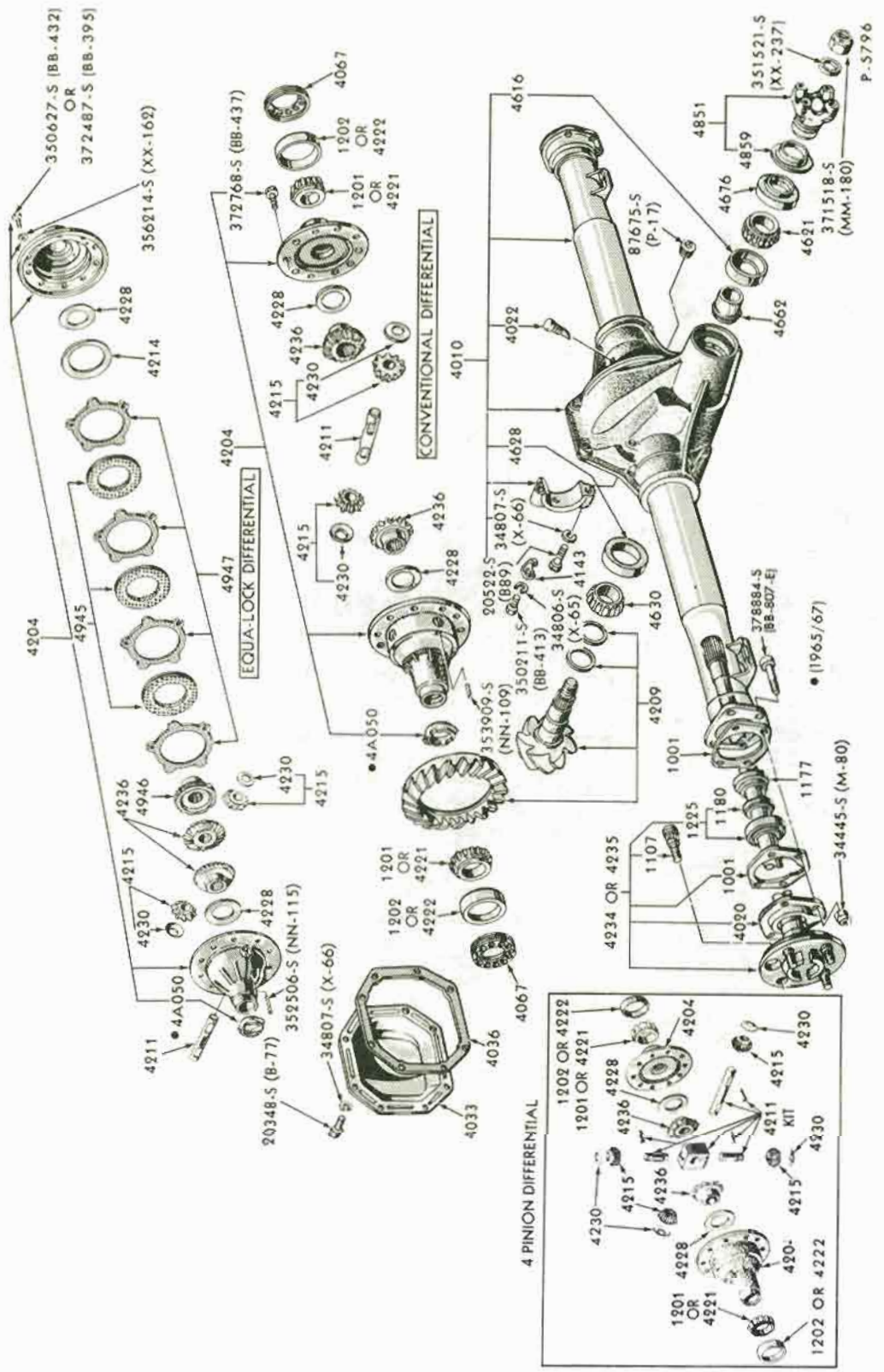

REAR AXLE - LOCKING (EQUA LOCK) & NON-LOCKING WITH INTEGRAL CARRIER - TYPICAL
6 3/4", 7 1/4" RING GEARS

1965/70 FALCON, 1971/72 MAVERICK, 1965/70 MUSTANG, 1971/72 PINTO

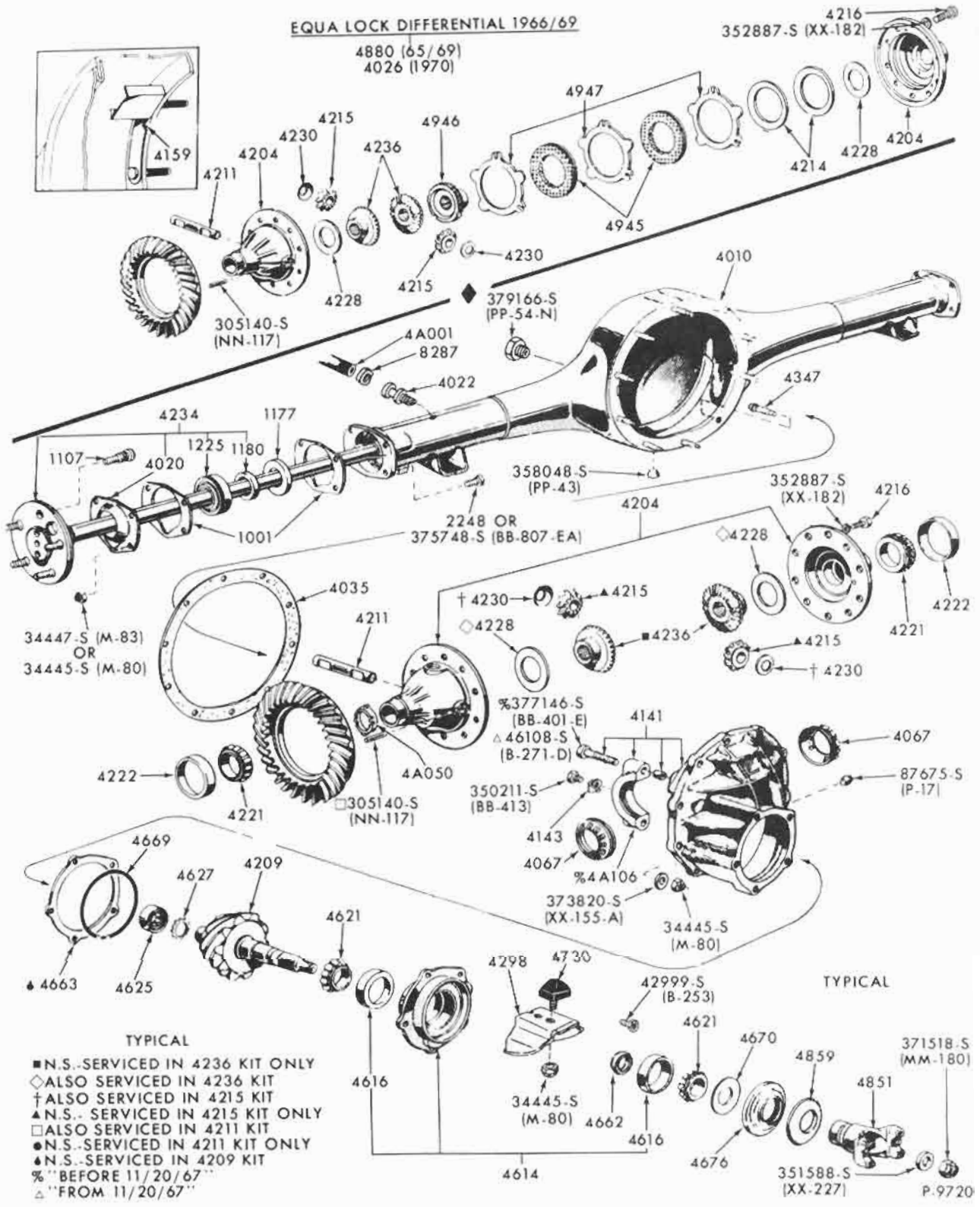

REAR AXLE - LOCKING (EQUA-LOCK) and NON-LOCKING WITH SEPARATE CARRIER - TYPICAL
9 3/8" RING GEAR
1966/70 FORD & THUNDERBIRD

COPYRIGHT © 1975 — FORD MOTOR COMPANY — DEARBORN, MICHIGAN

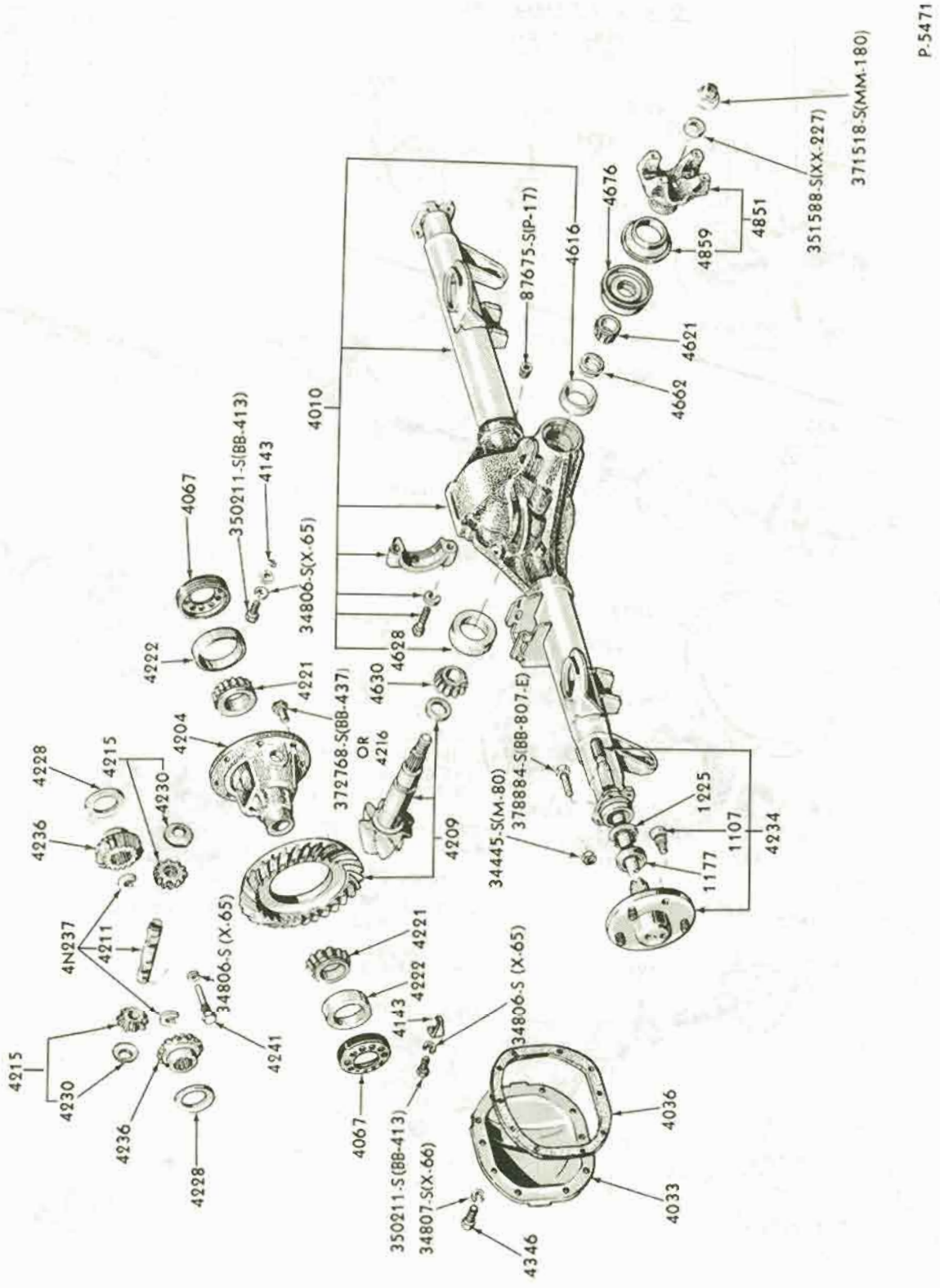

REAR AXLE - NON-LOCKING WITH INTEGRAL CARRIER
8 1/2", 8.7" RING GEARS
1967/72 FORD

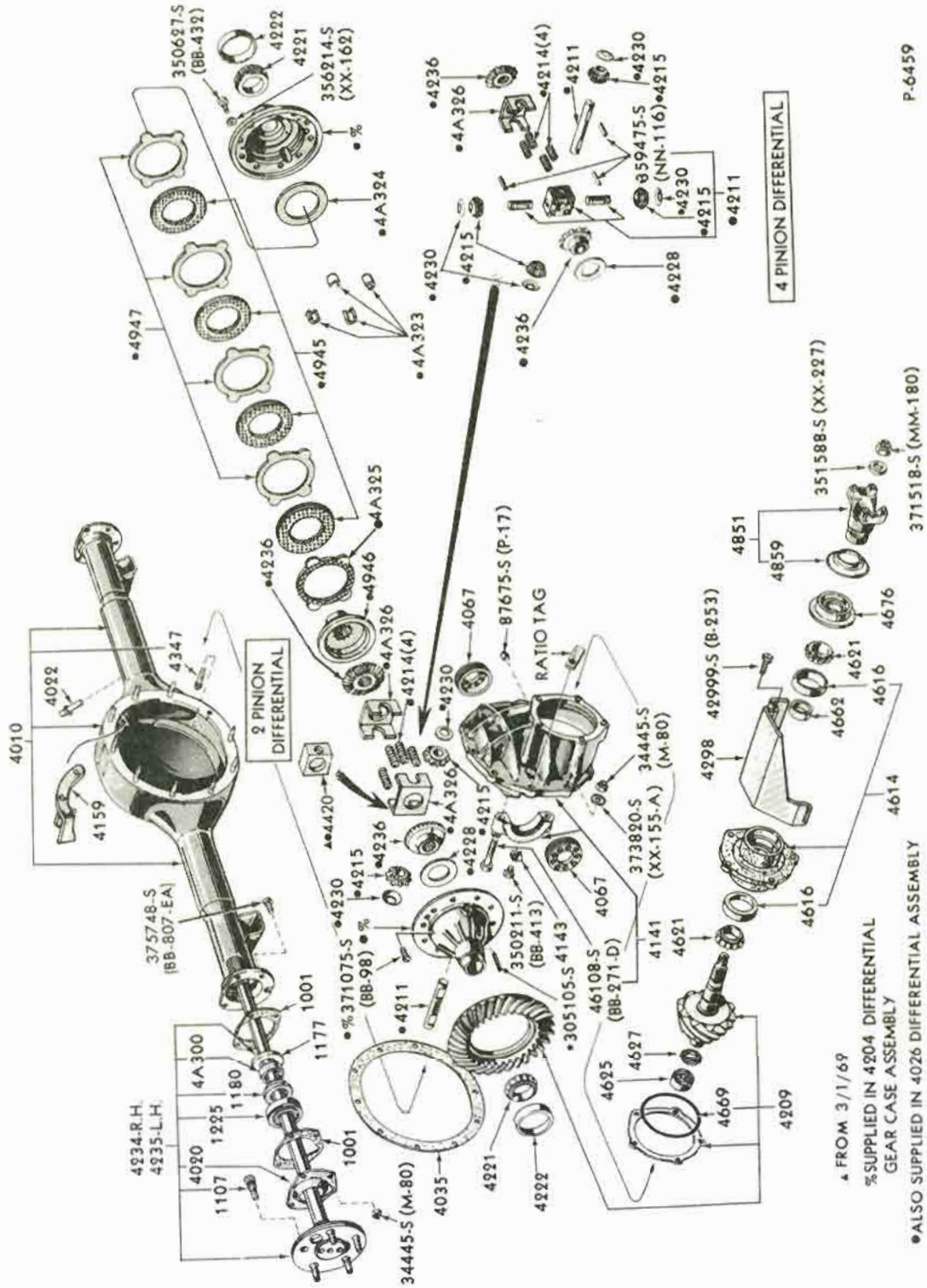

REAR AXLE-LOCKING (TRACTION LOK)-TYPICAL
8", 9", 9 3/8" RING GEARS
1970/72 BRONCO, 1968/72 FAIRLANE/TORINO, MUSTANG, 1969/70 FALCON,
1966/72 FORD, THUNDERBIRD, 1971 MAVERICK

COPYRIGHT © 1975 — FORD MOTOR COMPANY — DEARBORN, MICHIGAN

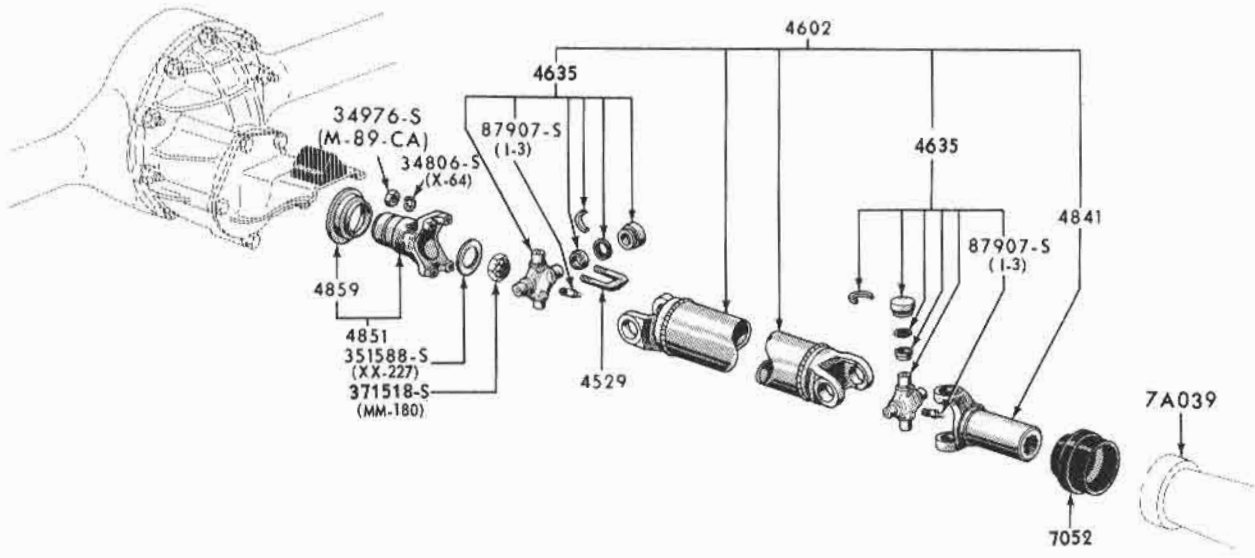

DRIVE SHAFT - TYPICAL
1965/72 FORD, 1965/67 THUNDERBIRD TWO-DOOR
1972 THUNDERBIRD - "BEFORE 12/1/71"

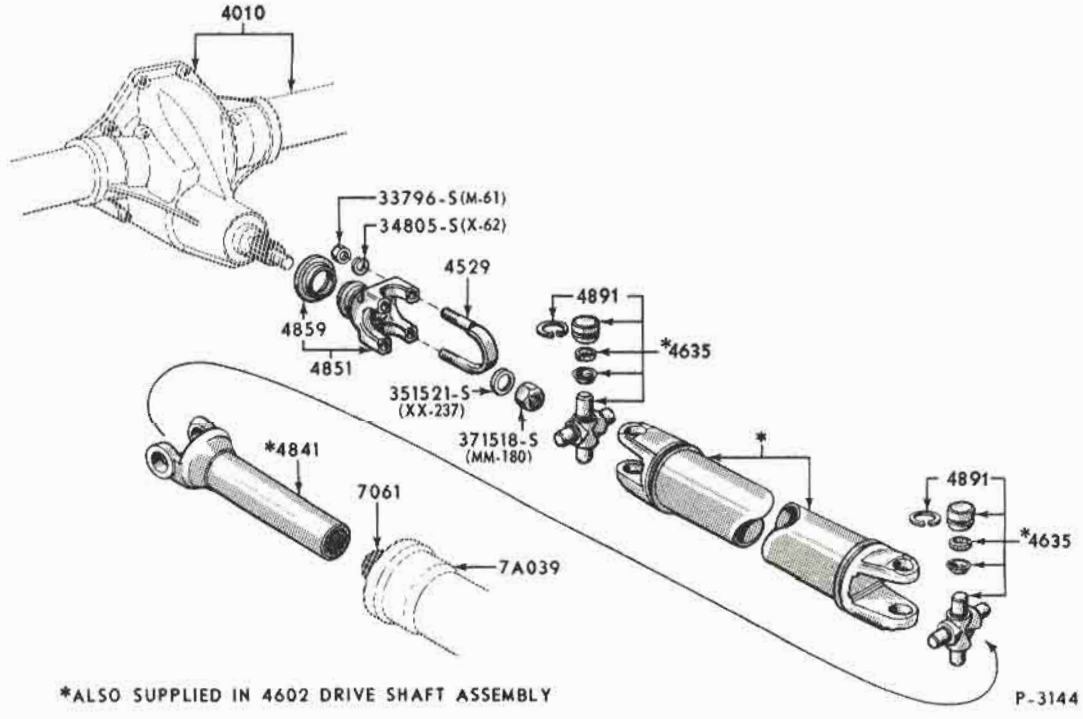

*ALSO SUPPLIED IN 4602 DRIVE SHAFT ASSEMBLY

DRIVE SHAFT - TYPICAL
1965/72 MUSTANG, FAIRLANE/TORINO & 1965/70 FALCON
1970/72 MAVERICK, 1971/72 PINTO

COPYRIGHT © 1975 — FORD MOTOR COMPANY — DEARBORN, MICHIGAN

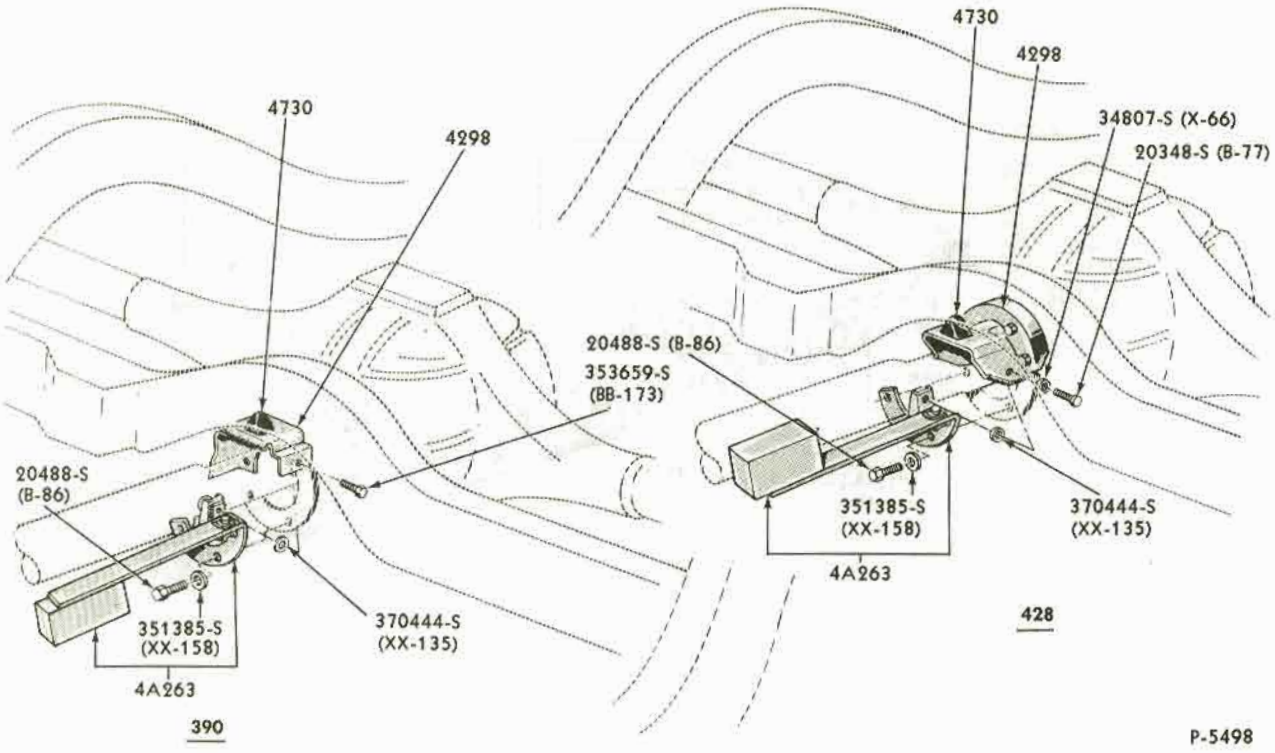

VIBRATION DAMPER - DRIVELINE
1966/67 FORD

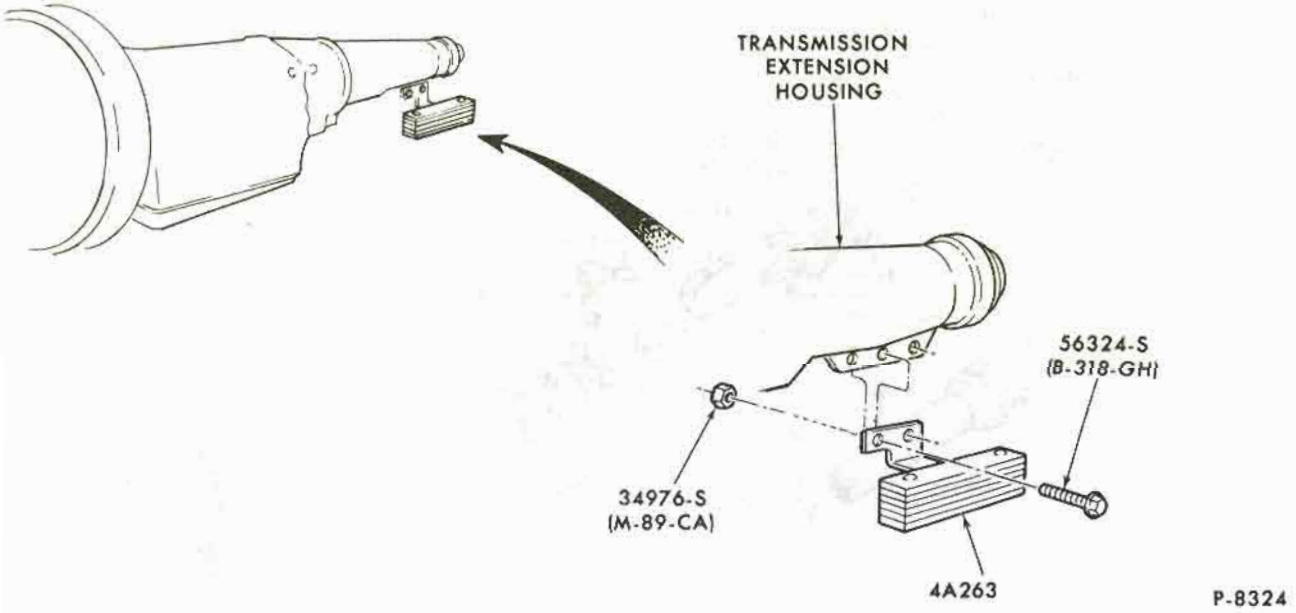

DRIVE LINE VIBRATION DAMPER
1971/72 PINTO - 4 CYLINDER 122 O.H.C. ENGINE - AUTOMATIC TRANSMISSION

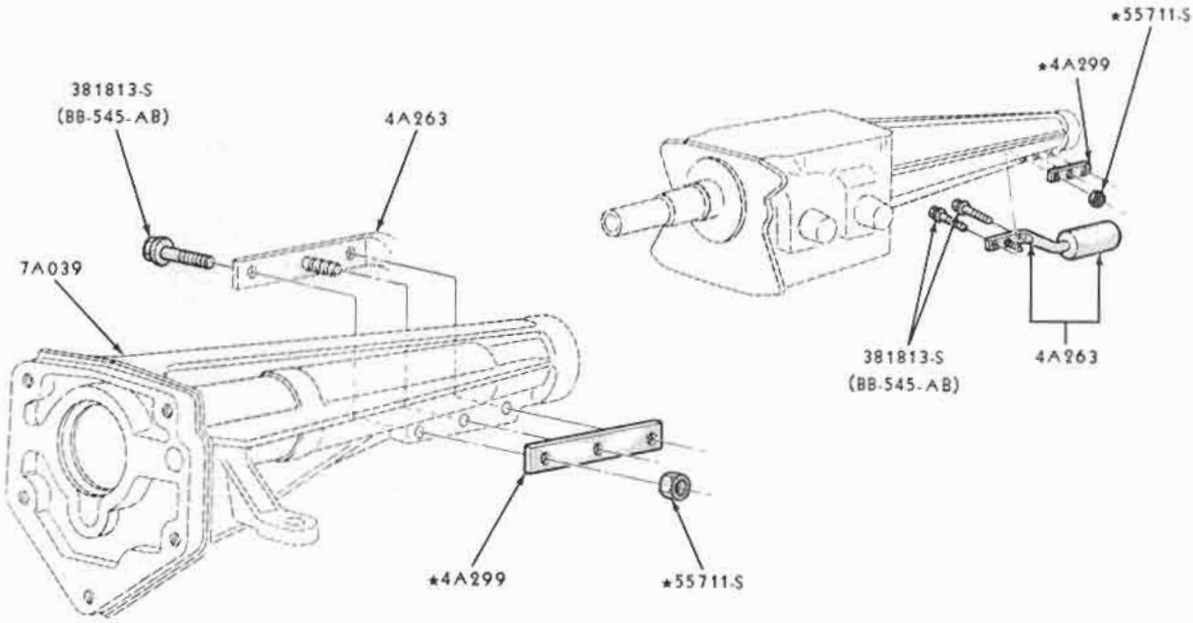

P-5732

DRIVE LINE VIBRATION DAMPER
1967 FAIRLANE - EXCEPT MODEL 76 (6 CYL & C4 TRANS., 8 CYL 289 2/B & 3/S/T or C4 TRANS.)

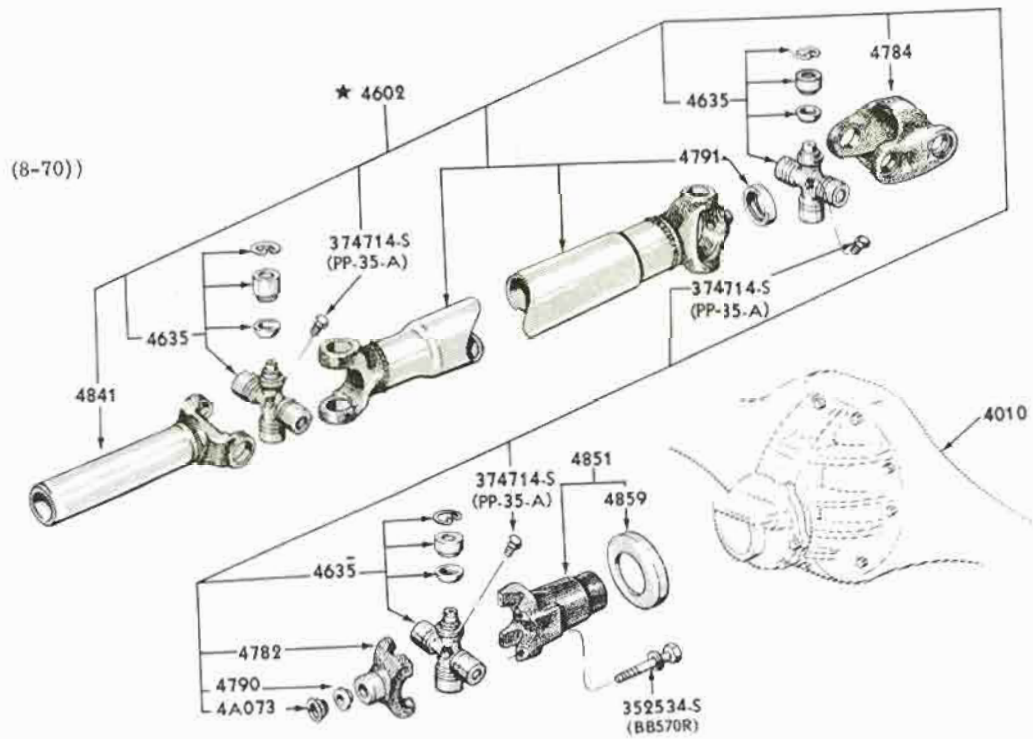

P-5512

DRIVE SHAFT
1967 THUNDERBIRD FOUR - DOOR

COPYRIGHT © 1975 — FORD MOTOR COMPANY — DEARBORN, MICHIGAN

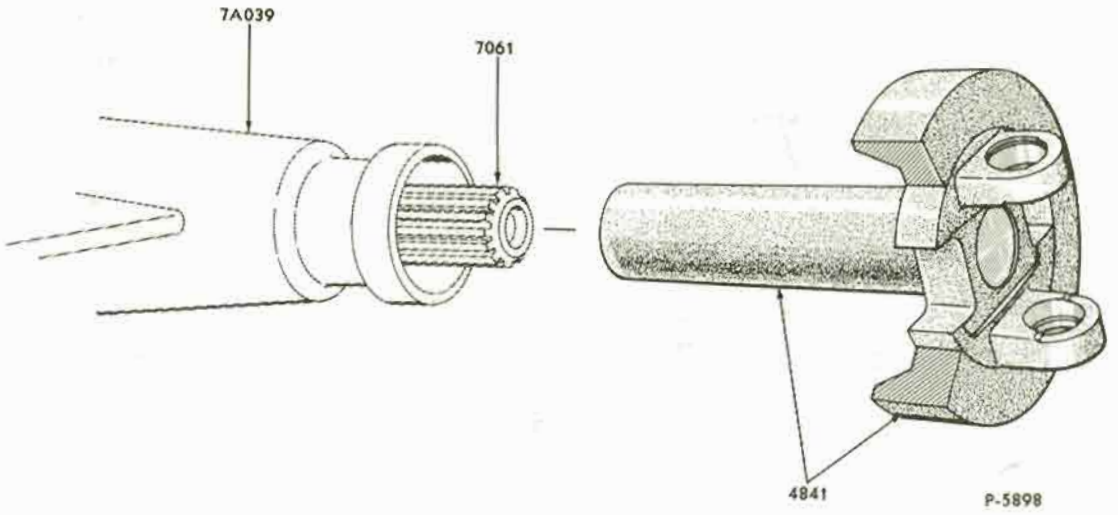

DRIVE LINE VIBRATION DAMPER - SLIP YOKE TYPE
1968 FORD, 1971/72 FORD

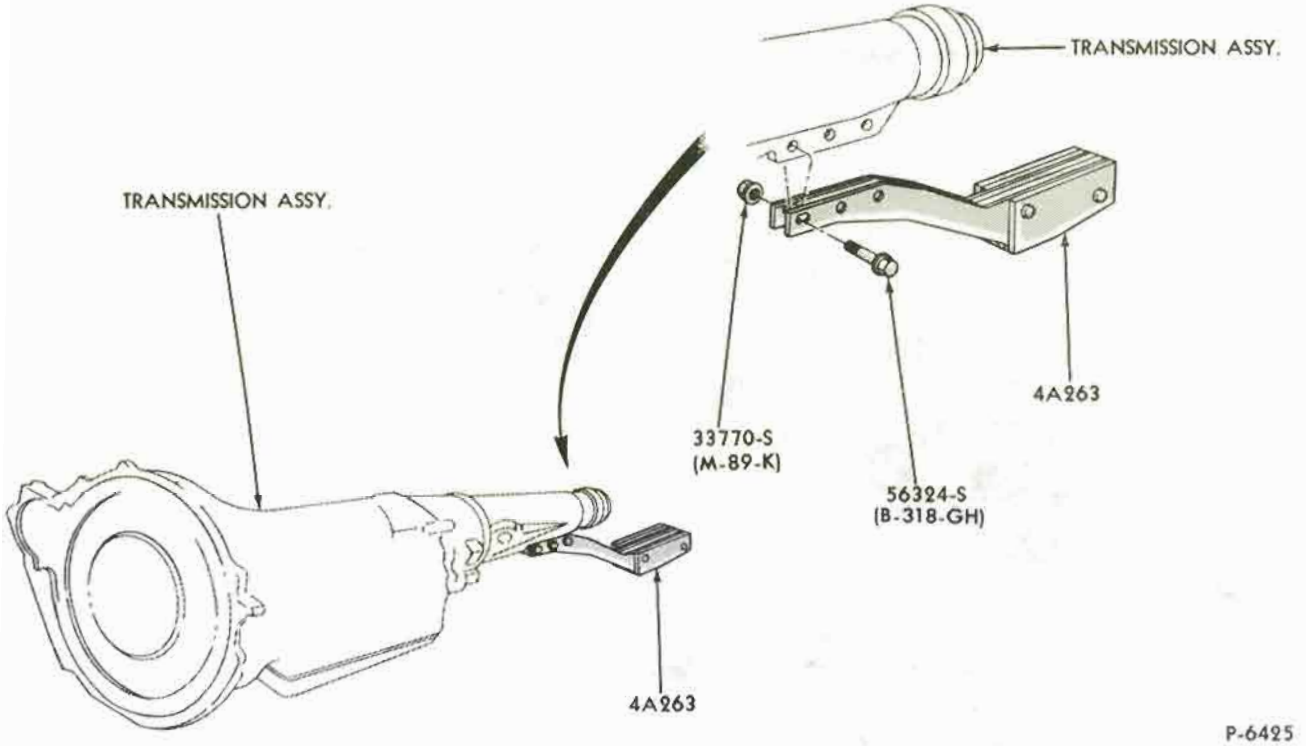

DRIVE LINE VIBRATION DAMPER
1969/72 FORD, 1968/71 FAIRLANE/TORINO, 1968/72 THUNDERBIRD

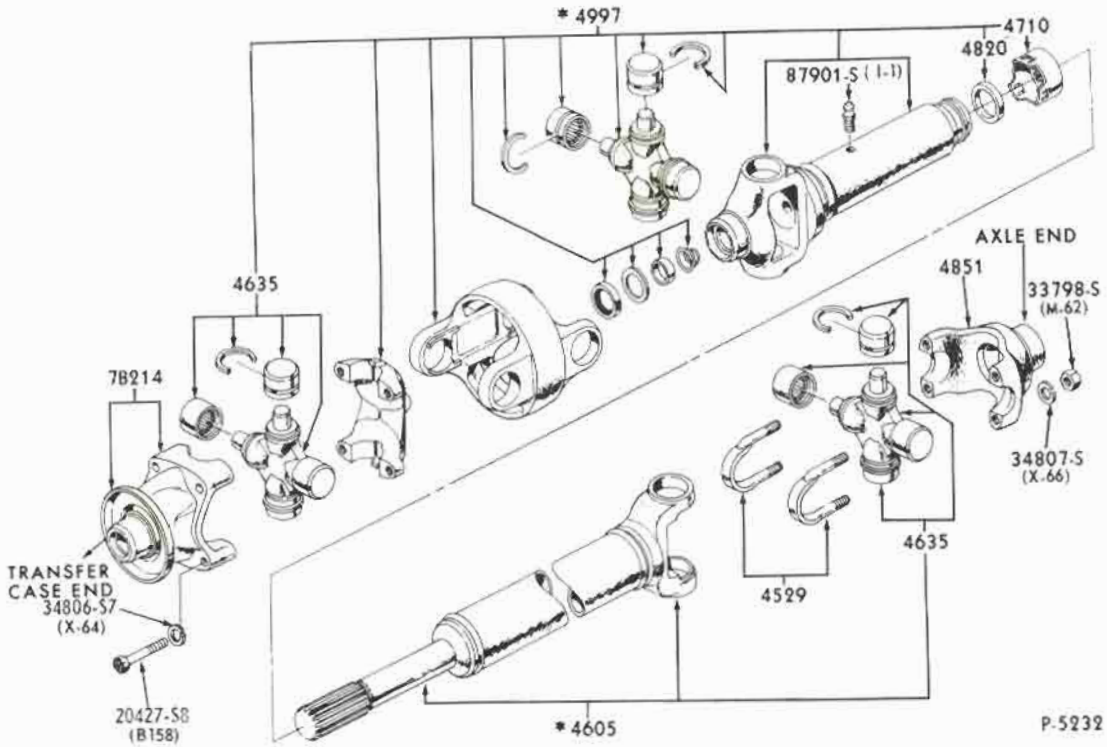

*Included in 4602 Assy.

DRIVE SHAFT - MECHANICS TYPE
1966/70 BRONCO - "BEFORE SER. G70,001"

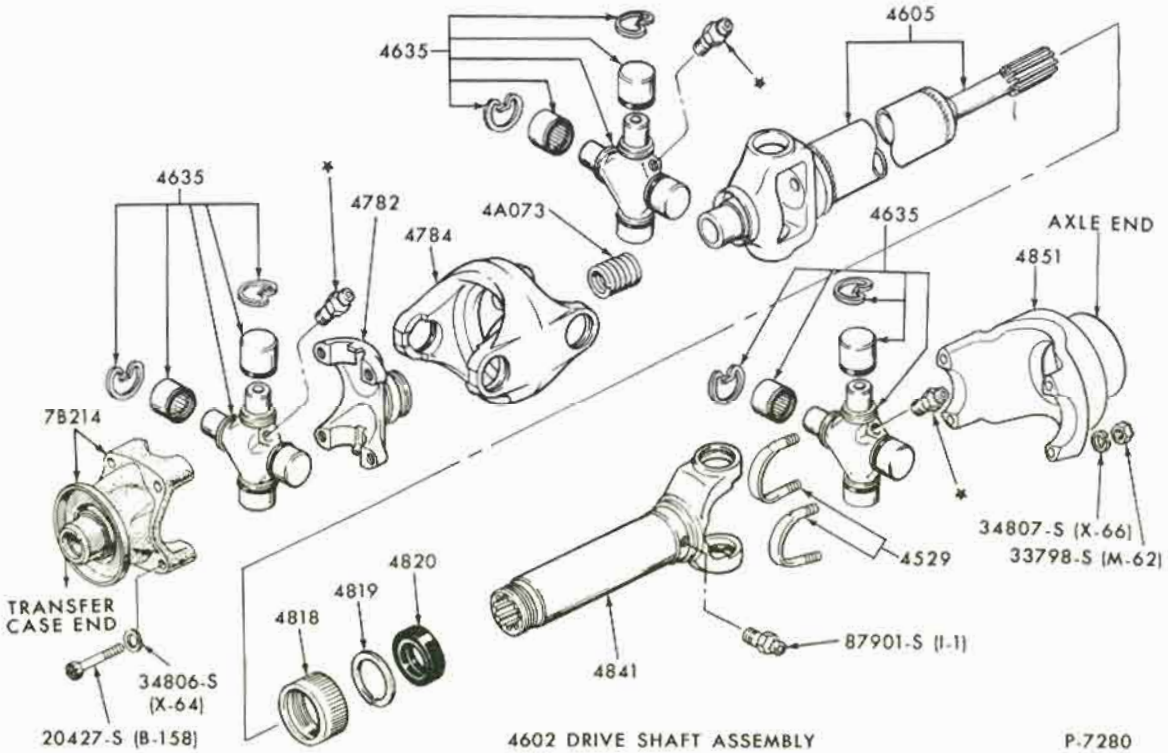

DRIVE SHAFT - DANA TYPE
1970/72 BRONCO - FROM SER. G70,001

COPYRIGHT © 1975 — FORD MOTOR COMPANY — DEARBORN, MICHIGAN

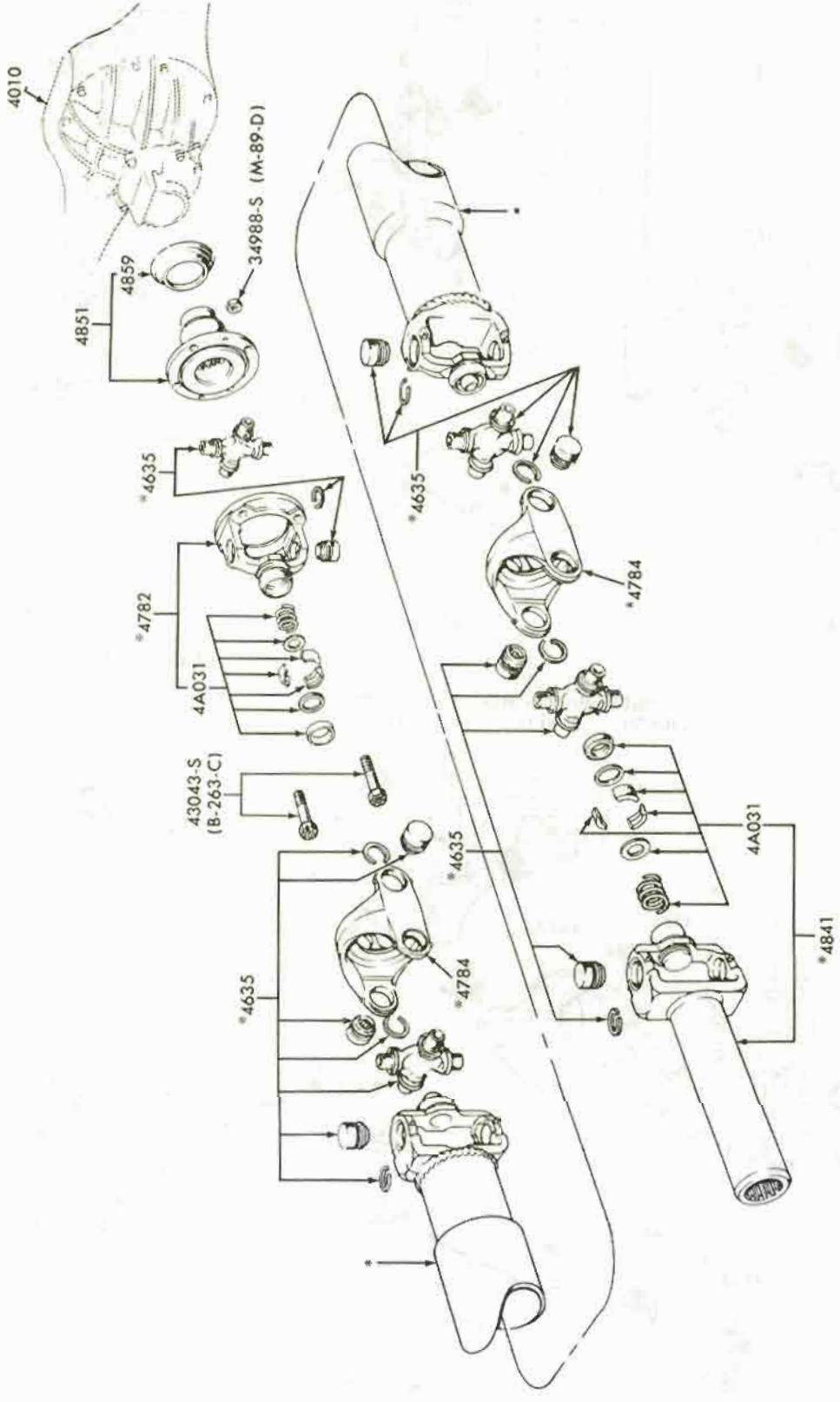

*ALSO SUPPLIED IN 4602 DRIVESHAFT ASSEMBLY

DRIVE SHAFT
1968/71 THUNDERBIRD

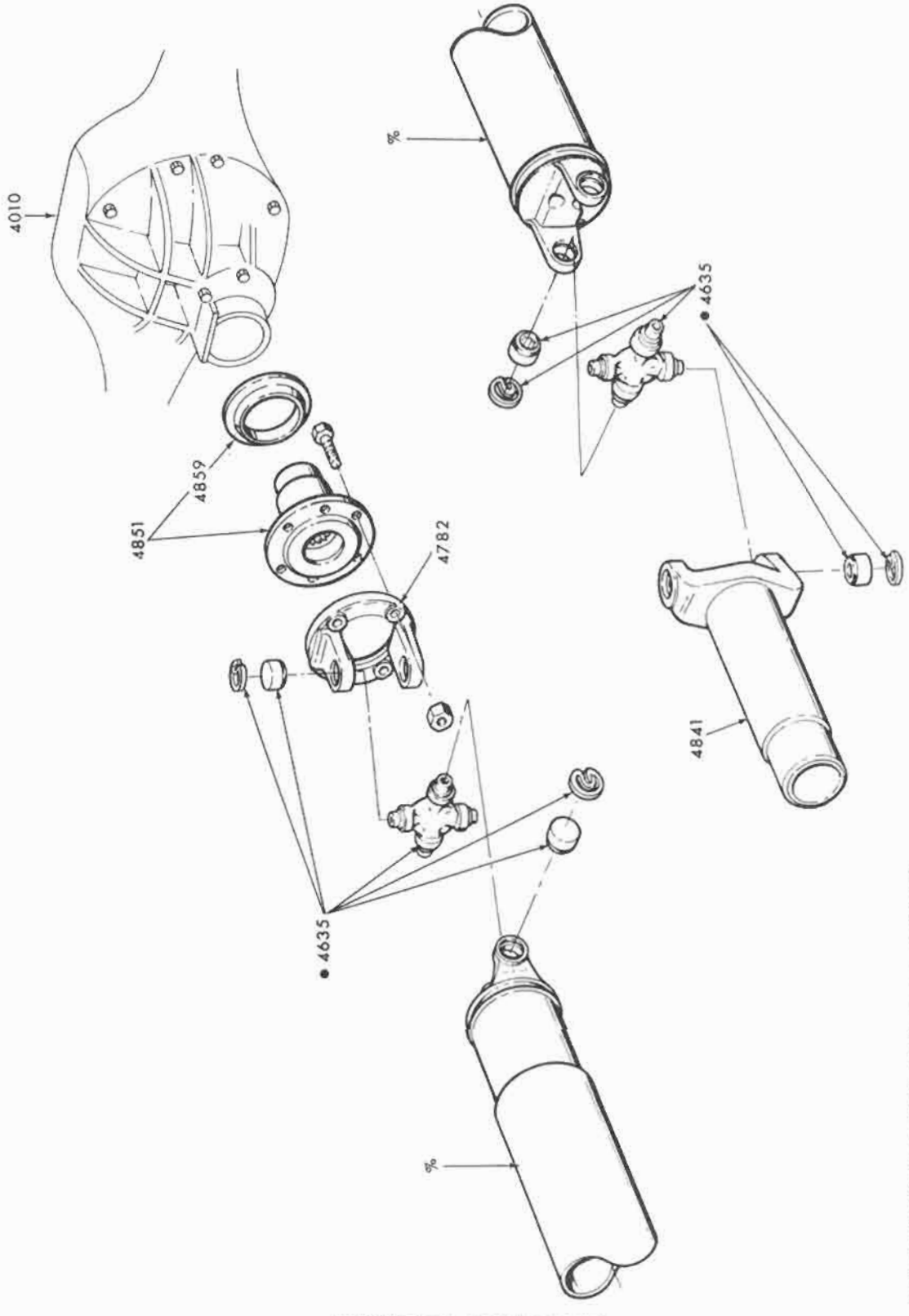

DRIVE SHAFT - "FROM 12/1/71"

1972 THUNDERBIRD

COPYRIGHT © 1975 — FORD MOTOR COMPANY — DEARBORN, MICHIGAN

INDEX

THIS ILLUSTRATION INDEX INCLUDES THE FOLLOWING MAJOR GROUPS:

EXHAUST SYSTEM
FRAMES
FRONT STABILIZER
REAR SUSPENSION

TITLE	SECTION	PAGE	ILLUS. NO.
1965			
A (FORD)			
BODY BOLTS - refer to Body Text Section 020			
EXHAUST SYSTEM - refer to Text Section 52 on Page 1			
FRAME	50	1	P-4576
FRONT STABILIZER	30	1	P-4545
FRONT SUSPENSION	30	1	P-4545
REAR SUSPENSION - air leveler system	54	2	P-4944
- arms, shock absorbers, springs	54	1	P-4546
B (FAIRLANE)			
EXHAUST SYSTEM - refer to Text Section 52 on Page 1			
FRAME - refer to Sheet Metal Illustration Section			
FRONT STABILIZER	30	2	P-3675
FRONT SUSPENSION	30	2	P-3675
REAR SUSPENSION - shock absorbers, springs	54	3	P-3662
F (MUSTANG)			
EXHAUST SYSTEM - refer to Text Section 52 on Page 1			
FRAME - refer to Sheet Metal Illustration Section			
FRONT SUSPENSION	30	6	P-3120
REAR SUSPENSION - auxiliary air spring installation	54	20	P-10675
- shock absorbers	180	1	P-3137
- springs	54	5	P-3125
S (THUNDERBIRD)			
EXHAUST SYSTEM - refer to Text Section 52 on Page 1			
FRAME - refer to Sheet Metal Illustration Section			
FRONT STABILIZER	30	5	P-4400
FRONT SUSPENSION	30	5	P-4400
REAR SUSPENSION - shock absorbers, springs	54	6	P-4351

COPYRIGHT © 1975 — FORD MOTOR COMPANY — DEARBORN, MICHIGAN

INDEX

TITLE	SECTION	PAGE	ILLUS. NO.
1965			
X (FALCON)			
EXHAUST SYSTEM - refer to Text Section 52 on Page 1			
FRAME - refer to Sheet Metal Illustration Section			
FRONT SUSPENSION	30	4	P-3120
REAR SUSPENSION - shock absorbers	180	1	P-3137
- springs	54	5	P-3125
1966			
A (FORD)			
BODY BOLTS - refer to Body Text Section 020			
EXHAUST SYSTEM - refer to Text Section 52 on Page 1			
FRAME	50	1	P-4576
FRONT STABILIZER	30	1	P-4545
FRONT SUSPENSION	30	1	P-4545
REAR SUSPENSION - air leveler system	54	2	P-4944
- arms, shock absorbers, springs	54	1	P-4546
B (FAIRLANE)			
EXHAUST SYSTEM - refer to Text Section 52 on Page 1			
FRAME - refer to Sheet Metal Illustration Section			
FRONT STABILIZER	30	3	P-4945
FRONT SUSPENSION	30	3	P-4945
REAR SUSPENSION - auxiliary air spring installation	54	20	P-10675
- shock absorbers, springs	54	4	P-5150
F (MUSTANG)			
EXHAUST SYSTEM - refer to Text Section 52 on Page 1			
FRAME - refer to Sheet Metal Illustration Section			
FRONT SUSPENSION	30	6	P-3120
REAR SUSPENSION - auxiliary air spring installation	54	20	P-10675
- shock absorbers	180	1	P-3137
- springs	54	5	P-3125

INDEX

TITLE	SECTION	PAGE	ILLUS. NO.
1966			
S (THUNDERBIRD)			
EXHAUST SYSTEM - refer to Text Section 52 on Page 1			
FRAME - refer to Sheet Metal Illustration Section			
FRONT STABILIZER	30	5	P-4400
FRONT SUSPENSION	30	5	P-4400
REAR SUSPENSION - shock absorbers, springs	54	6	P-4351
U (BRONCO)			
EXHAUST SYSTEM - refer to Text Section 52 on Page 1			
FRAME	50	1	P-4937
FRAME - BODY MOUNTING PARTS	50	4	P-8570
FRONT SUSPENSION	30	6	P-4938
REAR SUSPENSION - air spring installation	30	12	P-10676
- shock absorbers, springs	54	7	P-4939
X (FALCON)			
EXHAUST SYSTEM - refer to Text Section 52 on Page 1			
FRAME - refer to Sheet Metal Illustration Section			
FRONT SUSPENSION	30	3	P-4945
REAR SUSPENSION - auxiliary air spring installation	54	20	P-10675
- shock absorbers	180	1	P-3137
- springs	54	4	P-5150
1967			
A (FORD)			
BODY BOLTS - refer to Body Text Section 020			
EXHAUST SYSTEM - refer to Text Section 52 on Page 1			
FRAME	50	1	P-4576
FRONT STABILIZER	30	1	P-4545
FRONT SUSPENSION	30	1	P-4545
REAR SUSPENSION - air leveler system with dash control	54	19	P-10678
- air leveler system without dash control	54	2	P-4944
- arms, shock absorbers, springs	54	1	P-4546
B (FAIRLANE)			
EXHAUST SYSTEM - refer to Text Section 52 on Page 1			
FRAME - refer to Sheet Metal Illustration Section			
FRONT STABILIZER	30	3	P-4945
FRONT SUSPENSION	30	3	P-4945
REAR SUSPENSION - auxiliary air spring installation	54	20	P-10675
- shock absorbers, springs	54	4	P-5150

COPYRIGHT © 1975 — FORD MOTOR COMPANY — DEARBORN, MICHIGAN

INDEX

TITLE	SECTION	PAGE	ILLUS. NO.
1967			
F (MUSTANG)			
EXHAUST SYSTEM - refer to Text Section 52 on Page 1			
FRAME - refer to Sheet Metal Illustration Section			
FRONT STABILIZER	30	3	P-4945
FRONT SUSPENSION	30	3	P-4945
REAR SUSPENSION - auxiliary air spring installation	54	20	P-10675
- shock absorbers	180	1	P-3137
- springs	54	5	P-3125
S (THUNDERBIRD)			
BODY BOLTS - refer to Body Text Section 020			
EXHAUST SYSTEM - refer to Text Section 52 on Page 1			
FRAME - refer to Sheet Metal Illustration Section			
FRONT STABILIZER	30	1	P-4545
FRONT SUSPENSION	30	1	P-4545
REAR SUSPENSION - air leveler system with dash control	54	19	P-10678
- air leveler system without dash control	54	2	P-4944
- arms, shock absorbers, springs	54	1	P-4546
U (BRONCO)			
EXHAUST SYSTEM - refer to Text Section 52 on Page 1			
FRAME	50	1	P-4937
FRAME - BODY MOUNTING PARTS	50	4	P-8570
FRONT SUSPENSION	30	6	P-4938
REAR SUSPENSION - air spring installation	30	12	P-10676
- shock absorbers, springs	54	7	P-4939
X (FALCON)			
EXHAUST SYSTEM - refer to Text Section 52 on Page 1			
FRAME - refer to Sheet Metal Illustration Section			
FRONT STABILIZER	30	3	P-4945
FRONT SUSPENSION	30	3	P-4945
REAR SUSPENSION - auxiliary air spring installation	54	20	P-10675
- shock absorbers	180	1	P-3137
- springs	54	4	P-5150
1968			
A (FORD)			
BODY BOLTS - refer to Body Text Section 020			
EXHAUST SYSTEM - refer to Text Section 52 on Page 1			
FRAME	50	1	P-4576
FRONT STABILIZER	30	1	P-4545
FRONT SUSPENSION	30	1	P-4545
REAR SUSPENSION - air leveler system with dash control	54	19	P-10678
- air leveler system without dash control	54	2	P-4944
- arms, shock absorbers, springs	54	1	P-4546
- automatic air leveler system	54	8	P-6220
B (FAIRLANE/TORINO)			
EXHAUST SYSTEM - refer to Text Section 52 on Page 1			
FRAME - refer to Sheet Metal Illustration Section			
FRONT STABILIZER	30	8	P-6927
FRONT SUSPENSION	30	8	P-6927
REAR SUSPENSION - auxiliary air spring installation	54	20	P-10675
- shock absorbers, springs	54	4	P-5150

INDEX

TITLE	SECTION	PAGE	ILLUS. NO.
1968			
F (MUSTANG)			
EXHAUST SYSTEM - refer to Text Section 52 on Page 1			
FRAME - refer to Sheet Metal Illustration Section			
FRONT STABILIZER	30	3	P-4945
FRONT SUSPENSION	30	3	P-4945
REAR SUSPENSION - auxiliary air spring installation	54	20	P-10675
- shock absorbers	180	1	P-3137
- springs	54	5	P-3125
S (THUNDERBIRD)			
BODY BOLTS - refer to Body Text Section 020			
EXHAUST SYSTEM - refer to Text Section 52 on Page 1			
FRAME	50	2	P-7054
FRONT STABILIZER	30	1	P-4545
FRONT SUSPENSION	30	1	P-4545
REAR SUSPENSION - air leveler system with dash control	54	19	P-10678
- air leveler system without dash control	54	2	P-4944
- arms, shock absorbers, springs	54	1	P-4546
U (BRONCO)			
EXHAUST SYSTEM - refer to Text Section 52 on Page 1			
FRAME	50	1	P-4937
FRAME - BODY MOUNTING PARTS	50	4	P-8570
FRONT SUSPENSION	30	6	P-4938
REAR SUSPENSION - air spring installation	30	12	P-10676
- shock absorbers, springs	54	7	P-4939
X (FALCON)			
EXHAUST SYSTEM - refer to Text Section 52 on Page 1			
FRAME - refer to Sheet Metal Illustration Section			
FRONT STABILIZER	30	8	P-6927
FRONT SUSPENSION	30	8	P-6927
REAR SUSPENSION - auxiliary air spring installation	54	20	P-10675
- shock absorbers	180	1	P-3137
- springs	54	4	P-5150
1969			
A (FORD)			
BODY BOLTS - refer to Body Text Section 020			
EXHAUST SYSTEM - refer to Text Section 52 on Page 1			
FRAME	50	2	P-7053
FRONT STABILIZER	30	1	P-4545
FRONT SUSPENSION	30	1	P-4545
REAR SUSPENSION - air leveler system with dash control	54	19	P-10678
- air leveler system without dash control	54	2	P-4944
- arms, shock absorbers, springs	54	1	P-4546
- automatic air leveler system	54	10	P-6910
- police maximum handling stabilizer bar	54	9	P-6725
B (FAIRLANE/TORINO)			
EXHAUST SYSTEM - refer to Text Section 52 on Page 1			
FRAME - refer to Sheet Metal Illustration Section			
FRONT STABILIZER	30	8	P-6927
FRONT SUSPENSION	30	8	P-6927
REAR SUSPENSION - auxiliary air spring installation	54	20	P-10675
- shock absorbers, springs	54	4	P-5150

COPYRIGHT © 1975 — FORD MOTOR COMPANY — DEARBORN, MICHIGAN

INDEX

TITLE	SECTION	PAGE	ILLUS. NO.
1969			
F (MUSTANG)			
EXHAUST SYSTEM - refer to Text Section 52 on Page 1			
FRAME - refer to Sheet Metal Illustration Section			
FRONT STABILIZER	30	8	P-6927
FRONT SUSPENSION	30	8	P-6927
REAR SUSPENSION - auxiliary air spring installation	54	20	P-10675
- shock absorbers	180	1	P-3137
- springs	54	5	P-3125
S (THUNDERBIRD)			
BODY BOLTS - refer to Body Text Section 020			
EXHAUST SYSTEM - refer to Text Section 52 on Page 1			
FRAME	50	2	P-7054
FRONT STABILIZER	30	1	P-4545
FRONT SUSPENSION	30	1	P-4545
REAR SUSPENSION - air leveler system with dash control	54	19	P-10678
- air leveler system without dash control	54	2	P-4944
- arms, shock absorbers, springs	54	1	P-4546
U (BRONCO)			
EXHAUST SYSTEM - refer to Text Section 52 on Page 1			
FRAME	50	1	P-4937
FRAME - BODY MOUNTING PARTS	50	4	P-8570
FRONT SUSPENSION	30	6	P-4938
REAR SUSPENSION - air spring installation	30	12	P-10676
- shock absorbers, springs	54	7	P-4939
X (FALCON)			
EXHAUST SYSTEM - refer to Text Section 52 on Page 1			
FRAME - refer to Sheet Metal Illustration Section			
FRONT STABILIZER	30	8	P-6927
FRONT SUSPENSION	30	8	P-6927
REAR SUSPENSION - shock absorbers	180	1	P-3137
- springs	54	4	P-5150
1970			
A (FORD)			
BODY BOLTS - refer to Body Text Section 020			
EXHAUST SYSTEM - refer to Text Section 52 on Page 1			
FRAME	50	2	P-7053
FRONT STABILIZER	30	1	P-4545
FRONT SUSPENSION	30	1	P-4545
REAR SUSPENSION - air leveler system with dash control	54	19	P-10678
- air leveler system without dash control	54	2	P-4944
- arms, shock absorbers, springs	54	1	P-4546
- automatic air leveler system	54	10	P-6910
- police maximum handling stabilizer bar	54	9	P-6725
B (FAIRLANE/TORINO)			
B(FALCON)FROM 1/2/70			
EXHAUST SYSTEM - refer to Text Section 52 on Page 1			
FRAME - refer to Sheet Metal Illustration Section			
FRONT STABILIZER	30	8	P-6927
FRONT SUSPENSION	30	8	P-6927
REAR SUSPENSION - auxiliary air spring installation	54	20	P-10675
- police maximum handling stabilizer bar	54	14	P-8390
- shock absorbers, springs	54	4	P-5150

INDEX

TITLE	SECTION	PAGE	ILLUS. NO.
1970			
F (MUSTANG)			
EXHAUST SYSTEM - refer to Text Section 52 on Page 1			
FRAME - refer to Sheet Metal Illustration Section			
FRONT STABILIZER	30	8	P-6927
FRONT SUSPENSION	30	8	P-6927
REAR SUSPENSION - auxiliary air spring installation	54	20	P-10675
- maximum handling stabilizer bar	54	9	P-7455
- shock absorbers	180	1	P-3137
- springs	54	5	P-3125
P (MAVERICK)			
EXHAUST SYSTEM - refer to Text Section 52 on Page 1			
FRAME - refer to Sheet Metal Illustration Section			
FRONT STABILIZER	30	8	P-6927
FRONT SUSPENSION	30	8	P-6927
REAR SUSPENSION - shock absorbers, springs	54	11	P-6887
S (THUNDERBIRD)			
BODY BOLTS - refer to Body Text Section 020			
EXHAUST SYSTEM - refer to Text Section 52 on Page 1			
FRAME	50	2	P-7054
FRONT STABILIZER	30	1	P-4545
FRONT SUSPENSION	30	1	P-4545
REAR SUSPENSION - air leveler system with dash control	54	19	P-10678
- air leveler system without dash control	54	2	P-4944
- arms, shock absorber, springs	54	21	P-10302
U (BRONCO)			
EXHAUST SYSTEM - refer to Text Section 52 on Page 1			
FRAME	50	1	P-4937
FRAME - BODY MOUNTING PARTS	50	4	P-8570
FRONT SUSPENSION	30	6	P-4938
REAR SUSPENSION - air spring installation	30	12	P-10676
- *shock absorbers, springs*	54	7	P-4939
X (FALCON) BEFORE 1/2/70			
FOR UNITS BUILT FROM 1/2/70, REFER TO B(FALCON)			
EXHAUST SYSTEM - refer to Text Section 52 on Page 1			
FRAME - refer to Sheet Metal Illustration Section			
FRONT STABILIZER	30	8	P-6927
FRONT SUSPENSION	30	8	P-6927
REAR SUSPENSION - shock absorbers	180	1	P-3137
- springs	54	4	P-5150

COPYRIGHT © 1975 — FORD MOTOR COMPANY — DEARBORN, MICHIGAN

INDEX

TITLE	SECTION	PAGE	ILLUS. NO.
1971			
A (FORD)			
BODY BOLTS - refer to Body Text Section 020			
EXHAUST SYSTEM - refer to Text Section 52 on Page 1			
FRAME	50	2	P-7053
FRONT STABILIZER	30	1	P-4545
FRONT SUSPENSION	30	1	P-4545
REAR SUSPENSION - air leveler system with dash control	54	19	P-10678
- air leveler system without dash control	54	2	P-4944
- arms, shock absorbers, springs	54	1	P-4546
- automatic air leveler system	54	17	P-7334
- police maximum handling stabilizer bar	54	9	P-6725
B (TORINO)			
EXHAUST SYSTEM - refer to Text Section 52 on Page 1			
FRAME - refer to Sheet Metal Illustration Section			
FRONT STABILIZER	30	8	P-6927
FRONT SUSPENSION	30	8	P-6927
REAR SUSPENSION - police maximum handling stabilizer bar	54	14	P-8390
- shock absorbers, springs	54	4	P-5150
F (MUSTANG)			
EXHAUST SYSTEM - refer to Text Section 52 on Page 1			
FRAME - refer to Sheet Metal Illustration Section			
FRONT STABILIZER	30	8	P-6927
FRONT SUSPENSION	30	8	P-6927
REAR SUSPENSION - maximum handling stablizer bar	54	9	P-7455
- shock absorbers	180	1	P-3137
- springs	54	12	P-5960
L (PINTO)			
EXHAUST SYSTEM - refer to Text Section 52 on Page 1			
REAR SUSPENSION - shock absorbers, springs	54	13	P-7942
P (MAVERICK)			
EXHAUST SYSTEM - refer to Text Section 52 on Page 1			
FRAME - refer to Sheet Metal Illustration Section			
FRONT STABILIZER	30	8	P-6927
FRONT SUSPENSION	30	8	P-6927
REAR SUSPENSION - shock absorbers, springs	54	11	P-6887
S (THUNDERBIRD)			
BODY BOLTS - refer to Body Text Section 020			
EXHAUST SYSTEM - refer to Text Section 52 on Page 1			
FRAME	50	2	P-7054
FRONT STABILIZER	30	1	P-4545
FRONT SUSPENSION	30	1	P-4545
REAR SUSPENSION - air leveler system with dash control	54	19	P-10678
- air leveler system without dash control	54	2	P-4944
- arms, shock absorbers, springs	54	21	P-10302
U (BRONCO)			
EXHAUST SYSTEM - refer to Text Section 52 on Page 1			
FRAME	50	1	P-4937
FRAME - BODY MOUNTING PARTS	50	4	P-8570
FRONT SUSPENSION	30	6	P-4938
REAR SUSPENSION - air spring installation	30	12	P-10676
- shock absorbers, springs	54	7	P-4939

INDEX

TITLE	SECTION	PAGE	ILLUS. NO.
1972			
A (FORD)			
BODY BOLTS - refer to Body Text Section 020			
EXHAUST SYSTEM - refer to Text Section 52 on Page 1			
FRAME	50	2	P-7053
FRONT STABILIZER	30	11	P-8639
FRONT SUSPENSION	30	11	P-8639
REAR SUSPENSION - air leveler system with dash control	54	19	P-10678
- air leveler system without dash control	54	2	P-4944
- arms, shock absorbers, springs	54	21	P-10302
- automatic air leveler system	54	18	P-10674
- police maximum handling stabilizer bar	54	9	P-6725
B (TORINO)			
BODY BOLTS - refer to Body Text Section 020			
EXHAUST SYSTEM - refer to Text Section 52 on Page 1			
FRAME	50	3	P-8771
FRONT STABILIZER	30	11	P-8639
FRONT SUSPENSION	30	11	P-8639
REAR SUSPENSION - air leveler system with dash control	54	19	P-10678
- air leveler system without dash control	54	2	P-4944
- maximum handling stabilizer bar	54	16	P-8583
- shock absorbers, springs	54	15	P-8638
F (MUSTANG)			
EXHAUST SYSTEM - refer to Text Section 52 on Page 1			
FRAME - refer to Sheet Metal Illustration Section			
FRONT STABILIZER	30	8	P-6927
FRONT SUSPENSION	30	8	P-6927
REAR SUSPENSION - maximum handling stabilizer bar	54	9	P-7455
- shock absorbers	180	1	P-3137
- springs	54	12	P-5960
L (PINTO)			
EXHAUST SYSTEM - refer to Text Section 52 on Page 1			
REAR SUSPENSION - shock absorbers, springs	54	13	P-7942
P (MAVERICK)			
EXHAUST SYSTEM - refer to Text Section 52 on Page 1			
FRAME - refer to Sheet Metal Illustration Section			
FRONT STABILIZER	30	8	P-6927
FRONT SUSPENSION	30	8	P-6927
REAR SUSPENSION - shock absorbers, springs	54	11	P-6887

COPYRIGHT © 1975 — FORD MOTOR COMPANY — DEARBORN, MICHIGAN

INDEX

TITLE	SECTION	PAGE	ILLUS. NO.
1972			
S (THUNDERBIRD)			
BODY BOLTS - refer to Body Text Section 020			
EXHAUST SYSTEM - refer to Text Section 52 on Page 1			
FRAME	50	3	P-8770
FRONT STABILIZER	30	11	P-8639
FRONT SUSPENSION	30	11	P-8639
REAR SUSPENSION - air leveler system with dash control	54	19	P-10678
- air leveler system without dash control	54	2	P-4944
- arms, shock absorbers, springs	54	15	P-8638
- maximum handling stabilizer bar	54	16	P-8583
U (BRONCO)			
EXHAUST SYSTEM - refer to Text Section 52 on Page 1			
FRAME	50	1	P-4937
FRAME - BODY MOUNTING PARTS	50	4	P-8570
FRONT SUSPENSION	30	6	P-4938
REAR SUSPENSION - air spring installation	30	12	P-10676
- shock absorbers, springs	54	7	P-4939

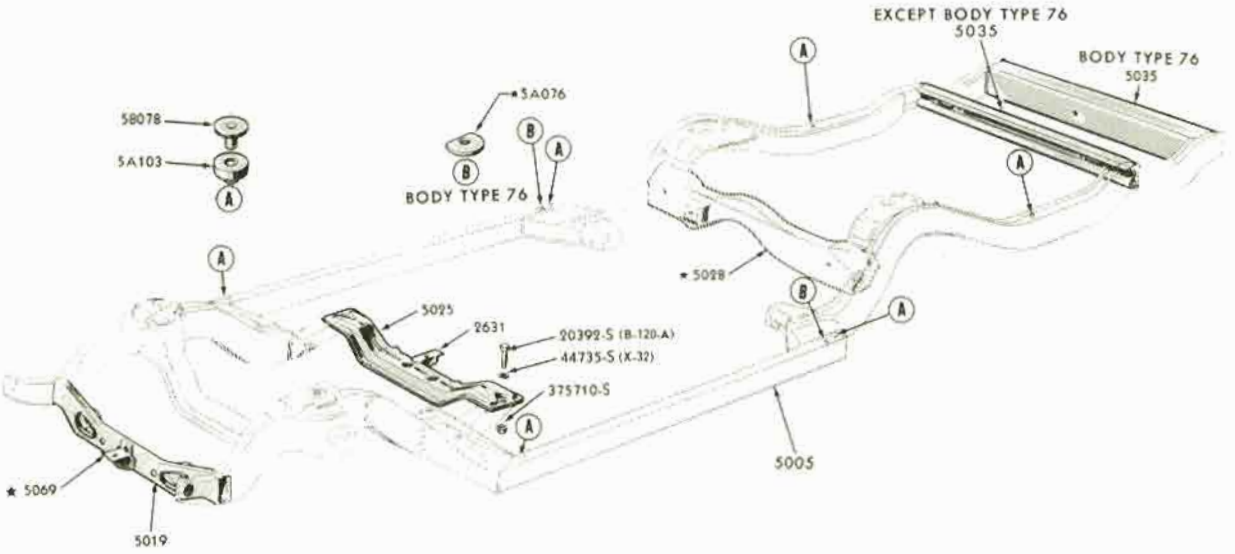

FRAME
1965/68 FORD

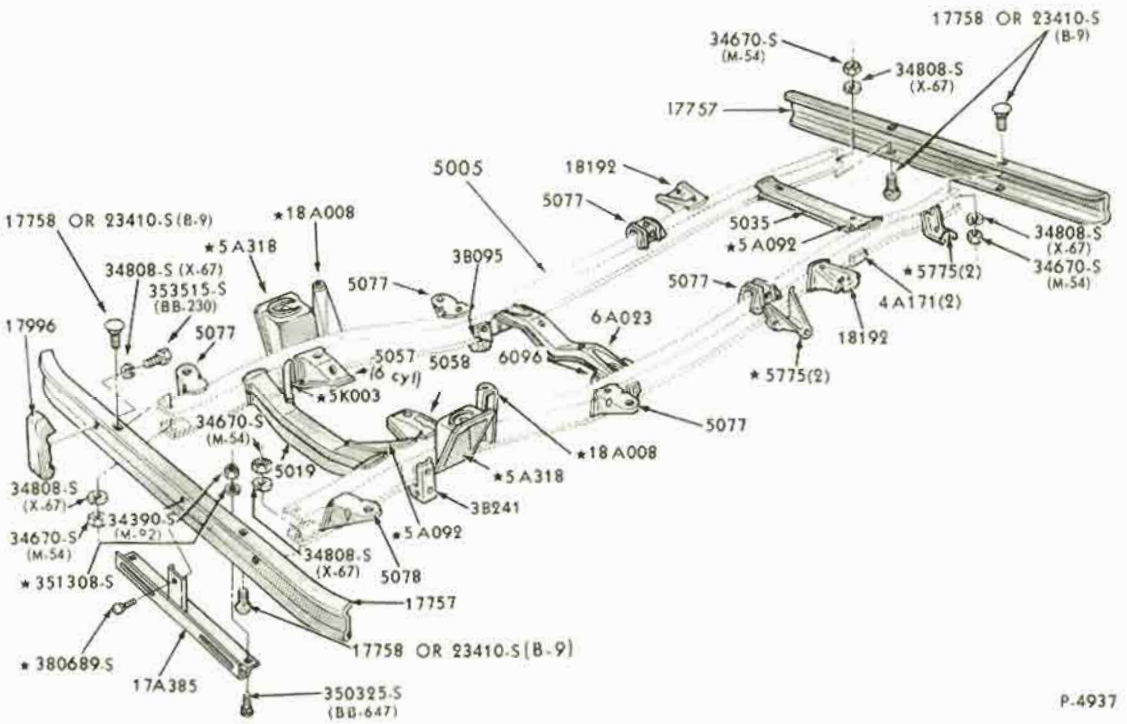

FRAME, FRONT & REAR BUMPERS
1966/72 BRONCO

COPYRIGHT © 1975 — FORD MOTOR COMPANY — DEARBORN, MICHIGAN

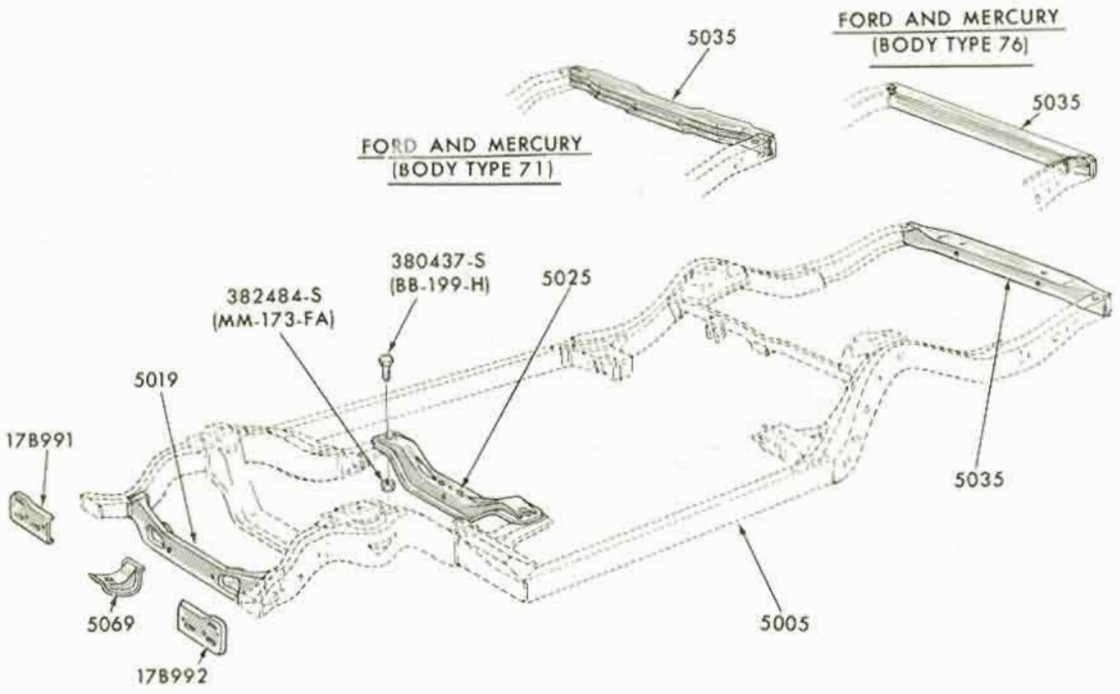

FRAME
1969/72 FORD

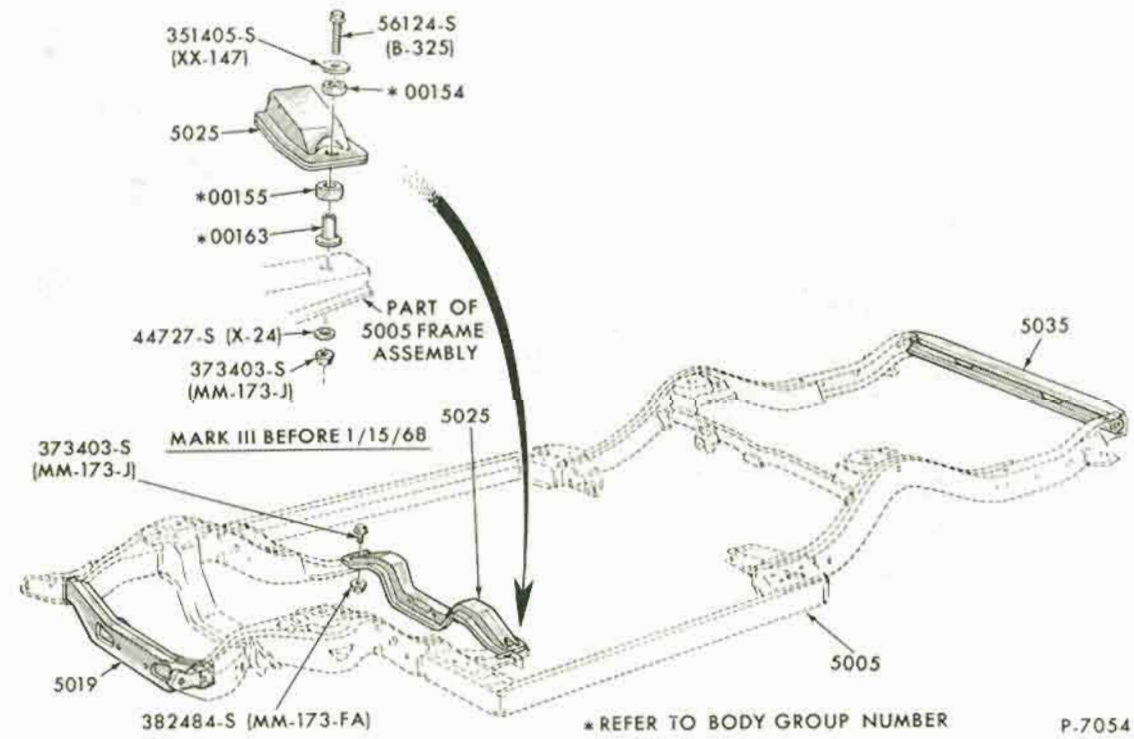

FRAME
1968/71 THUNDERBIRD

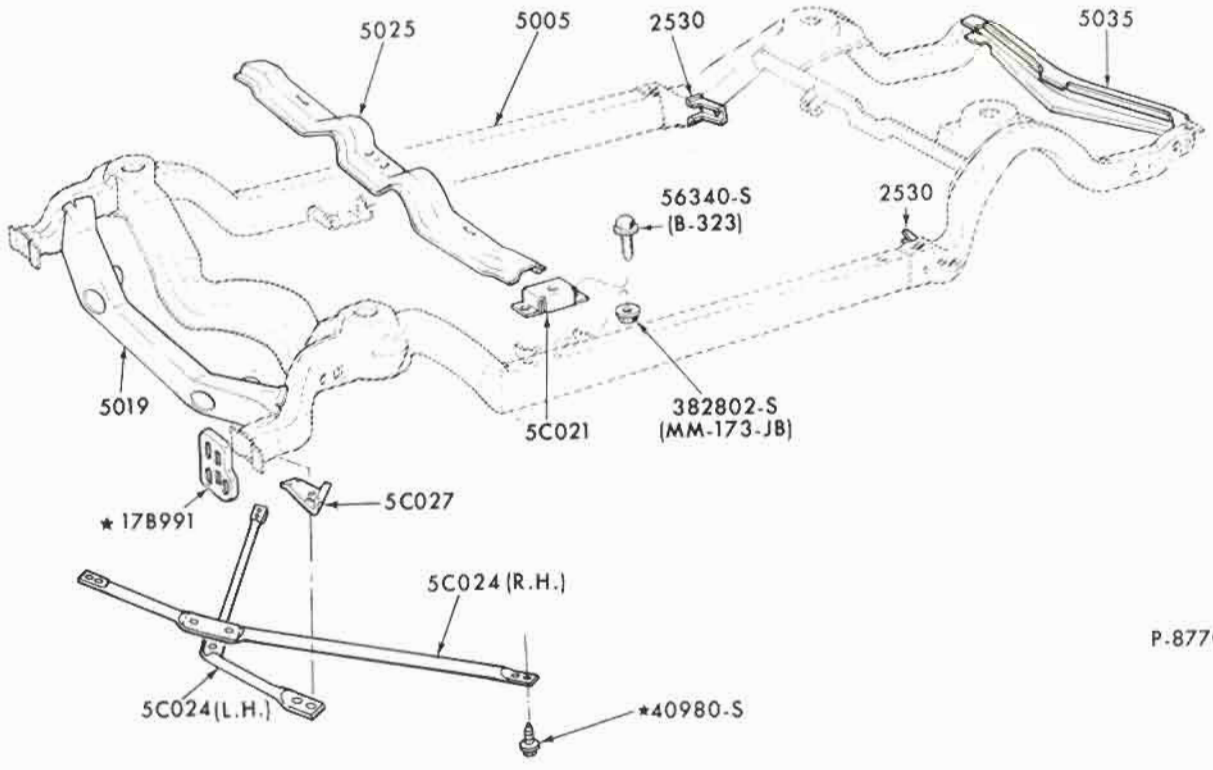

FRAME
1972 THUNDERBIRD

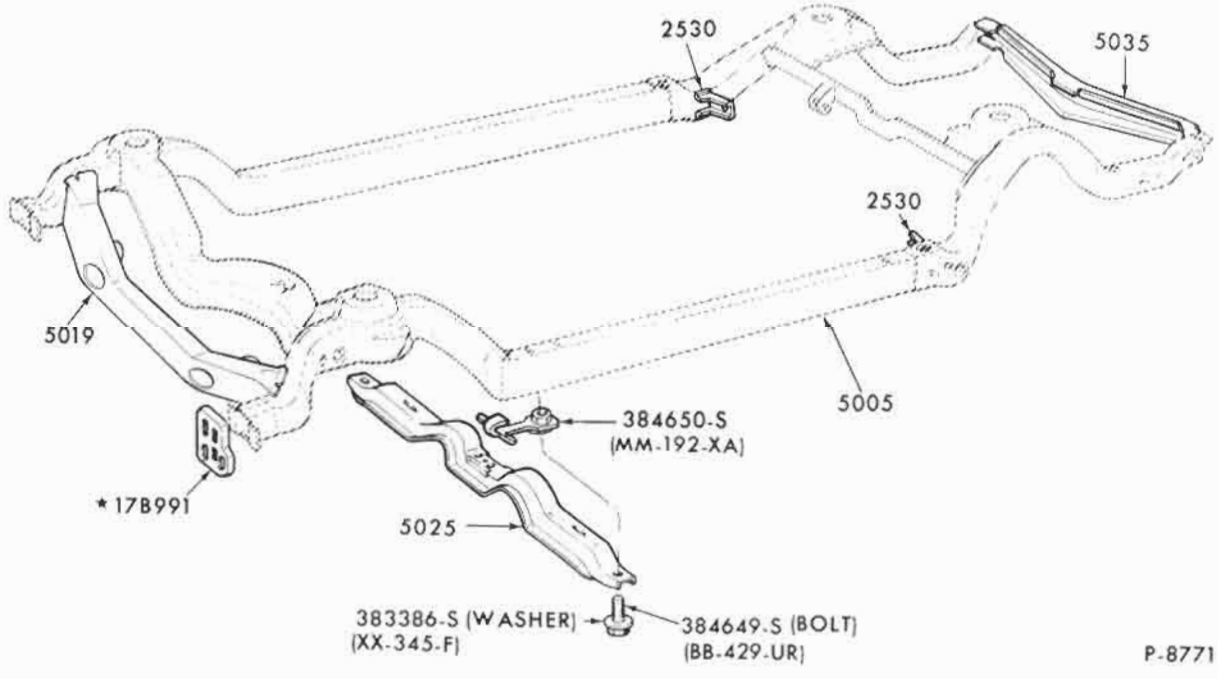

FRAME
1972 TORINO

COPYRIGHT © 1975 — FORD MOTOR COMPANY — DEARBORN, MICHIGAN

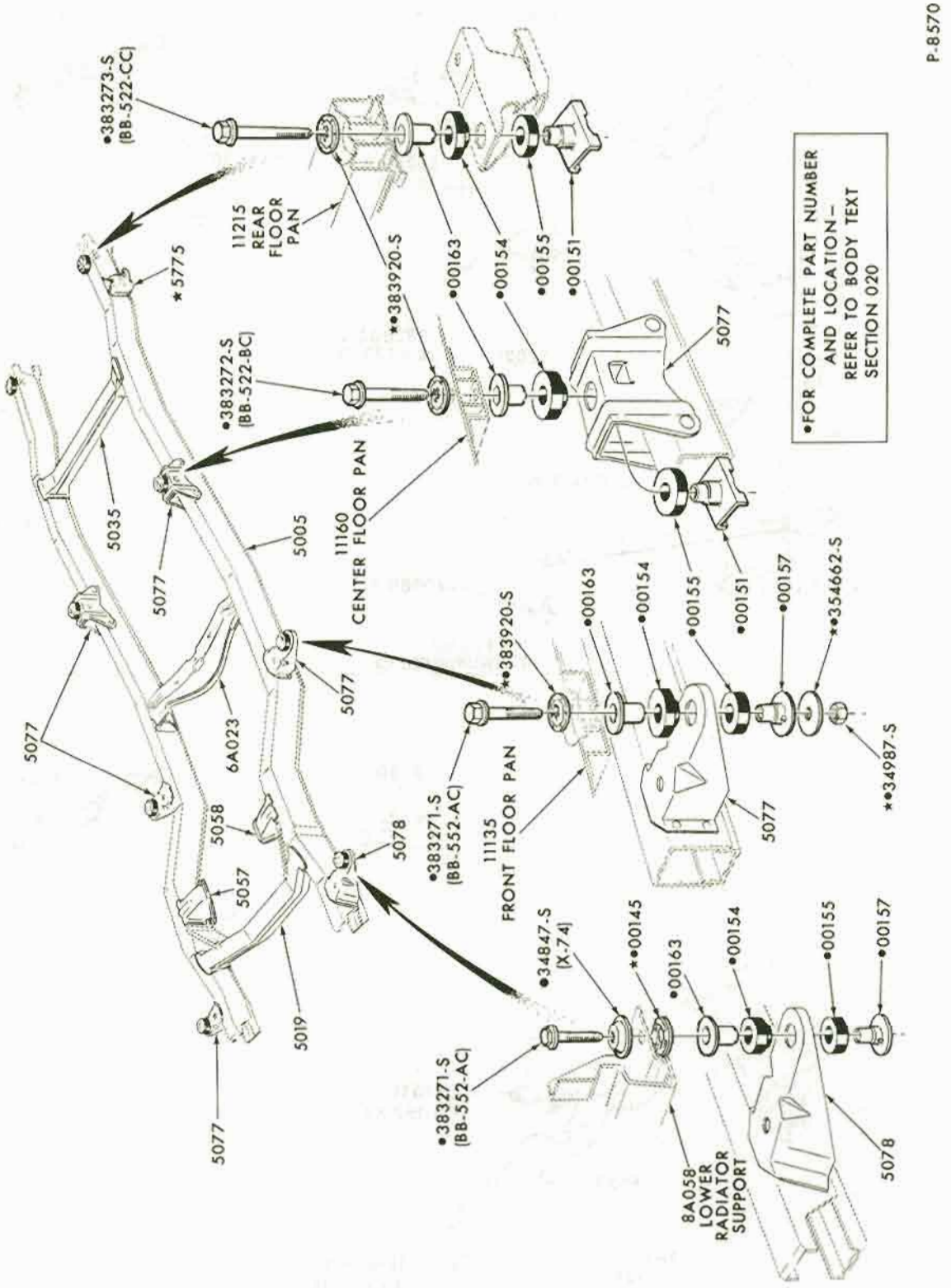
•383273-S (BB-522-CC)
11215 REAR FLOOR PAN
★5775
••383920-S
•00163
•00154
•00155
•00151
5077
•383272-S (BB-522-BC)
11160 CENTER FLOOR PAN
5035
5005
5077
5077
6A023
5077
••383920-S
•00163
•00154
•00155
•00151
•00157
••354662-S
•383271-S (BB-552-AC)
11135 FRONT FLOOR PAN
5077
••34987-S
5058
5078
5057
5019
5077
•34847-S (X-74)
••00145
•00163
•00154
•00155
•00157
•383271-S (BB-552-AC)
8A058 LOWER RADIATOR SUPPORT
5078
•FOR COMPLETE PART NUMBER AND LOCATION – REFER TO BODY TEXT SECTION 020
P-8570

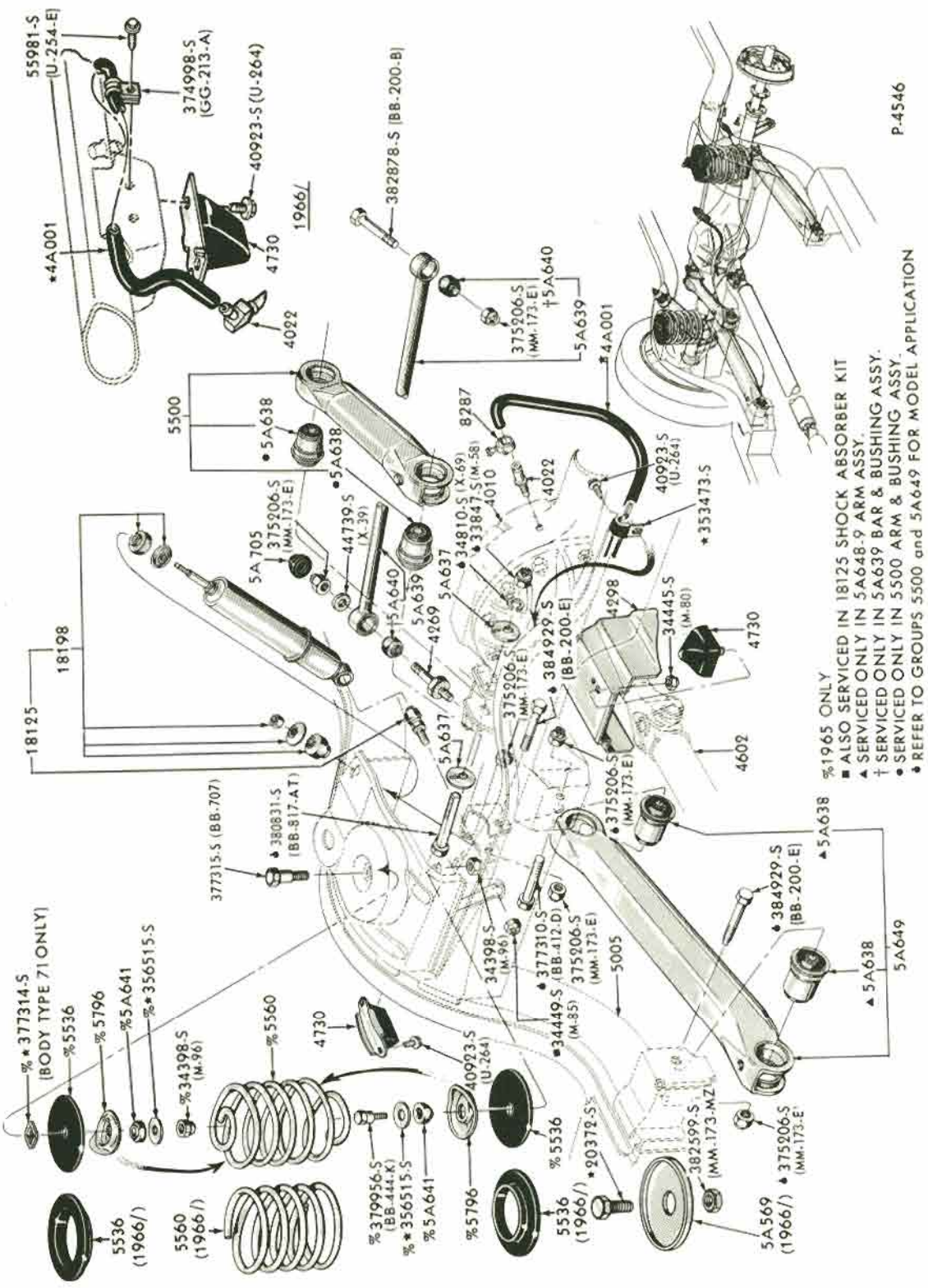

REAR SUSPENSION

1965/71 FORD 1967/69 THUNDERBIRD

COPYRIGHT © 1975 — FORD MOTOR COMPANY — DEARBORN, MICHIGAN

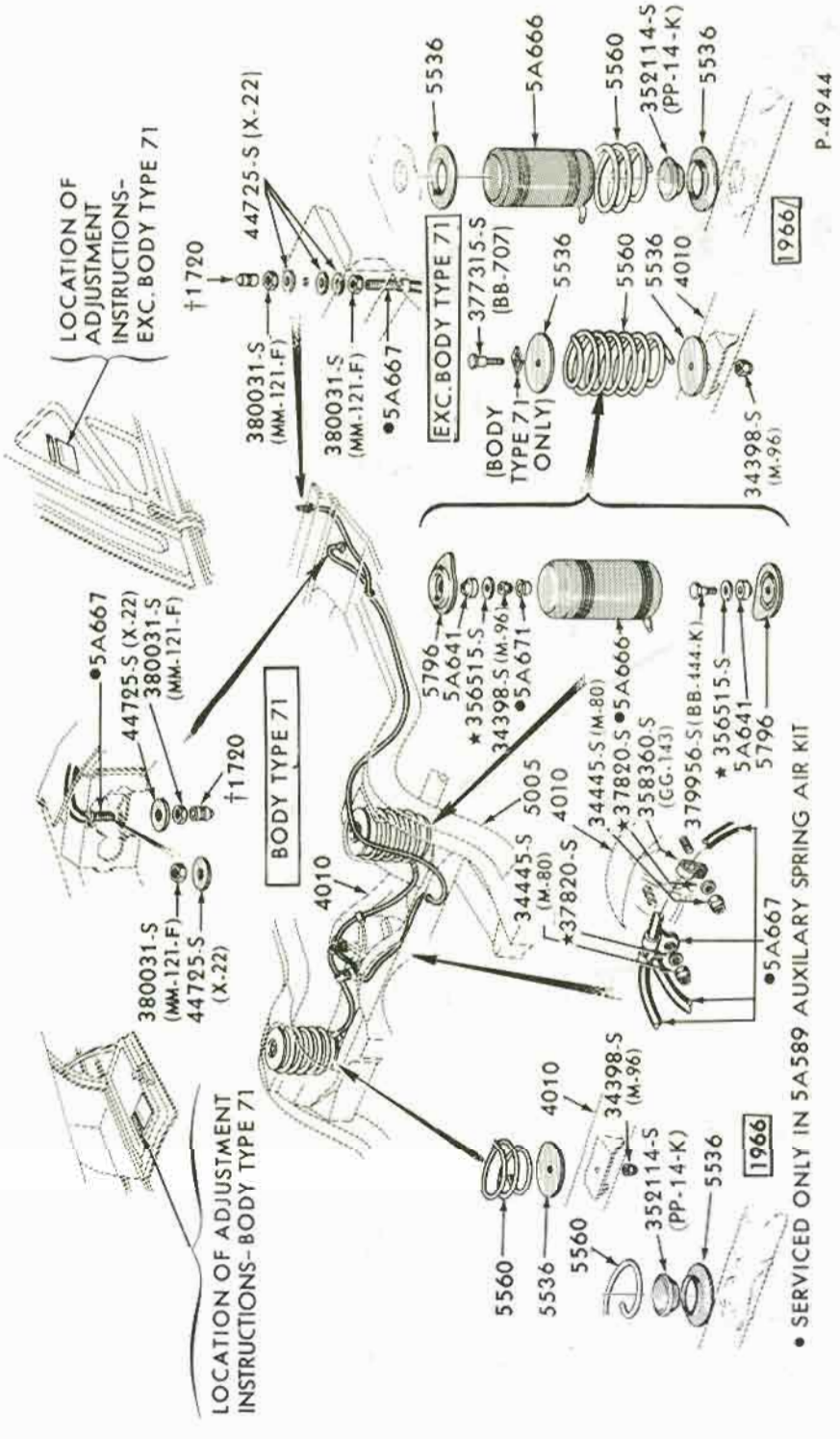

REAR SUSPENSION (AIR LEVELER SYSTEM WITHOUT DASH CONTROL)

1965/72 FORD, 1967/72 THUNDERBIRD AND 1972 TORINO

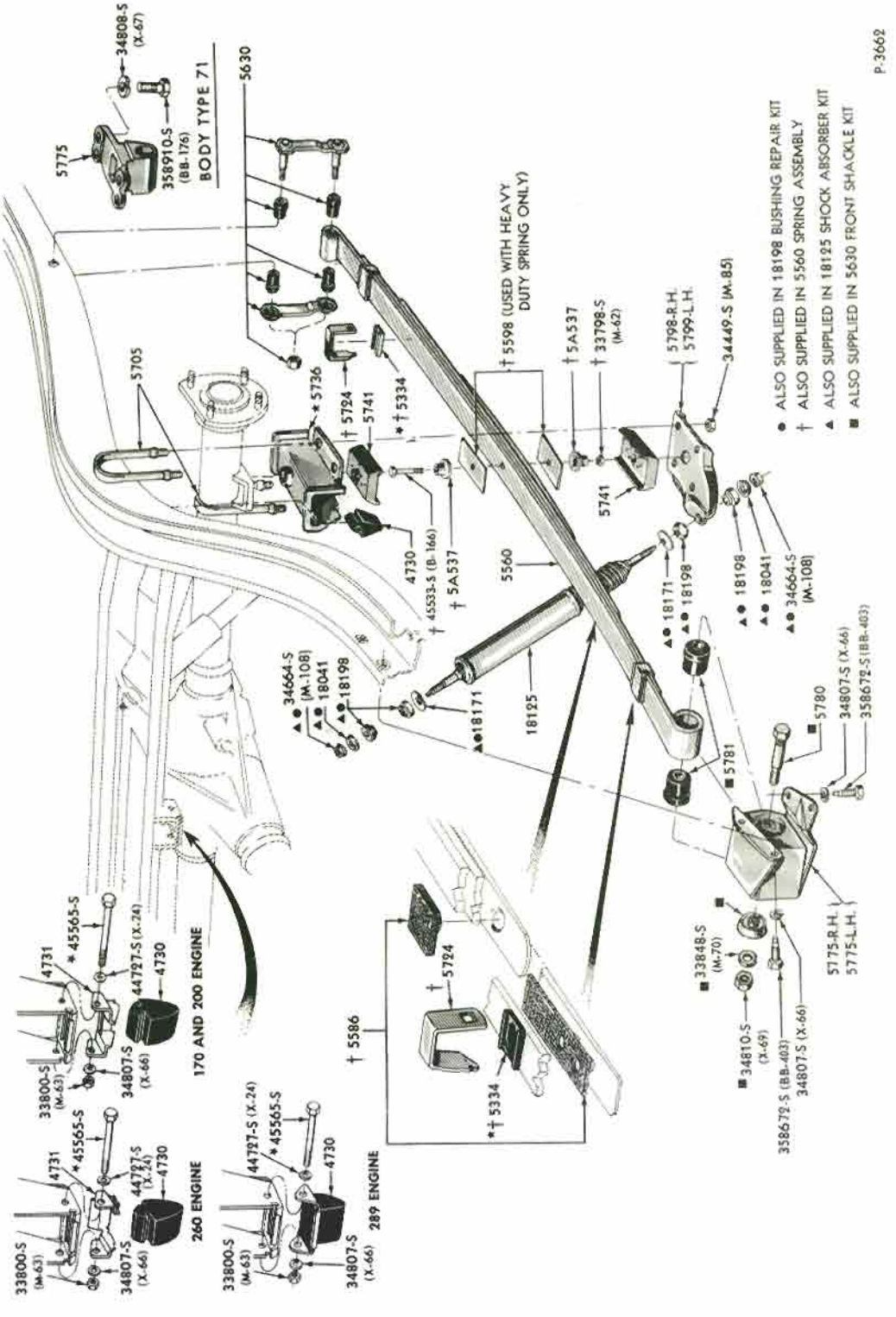

REAR SUSPENSION

1965 FAIRLANE

COPYRIGHT © 1975 — FORD MOTOR COMPANY — DEARBORN, MICHIGAN

REAR SUSPENSION

1966/71 FAIRLANE/TORINO and FALCON

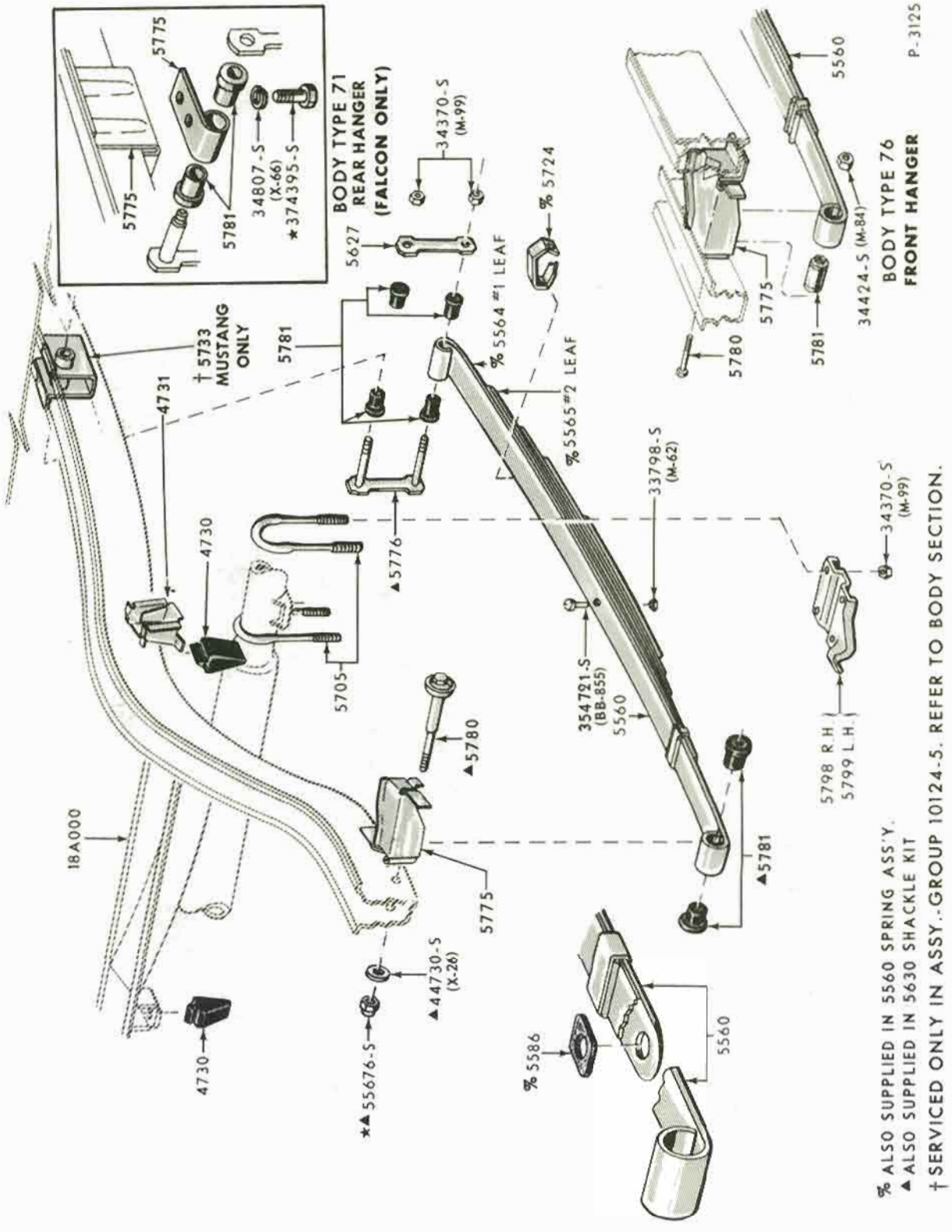

% ALSO SUPPLIED IN 5560 SPRING ASS'Y.
▲ ALSO SUPPLIED IN 5630 SHACKLE KIT
† SERVICED ONLY IN ASSY.-GROUP 10124-5. REFER TO BODY SECTION.

COPYRIGHT © 1975 — FORD MOTOR COMPANY — DEARBORN, MICHIGAN

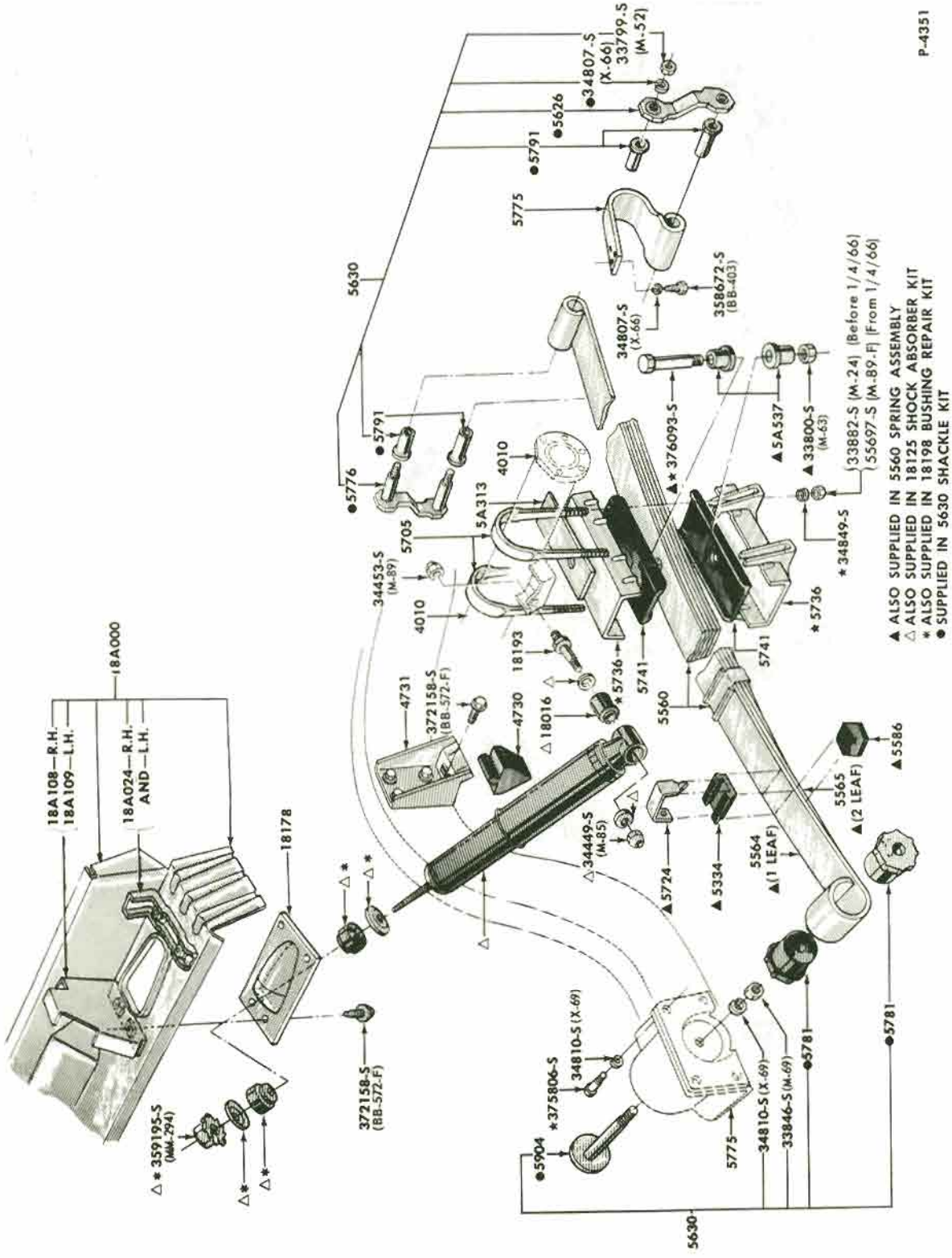

REAR SUSPENSION

1965/66 THUNDERBIRD

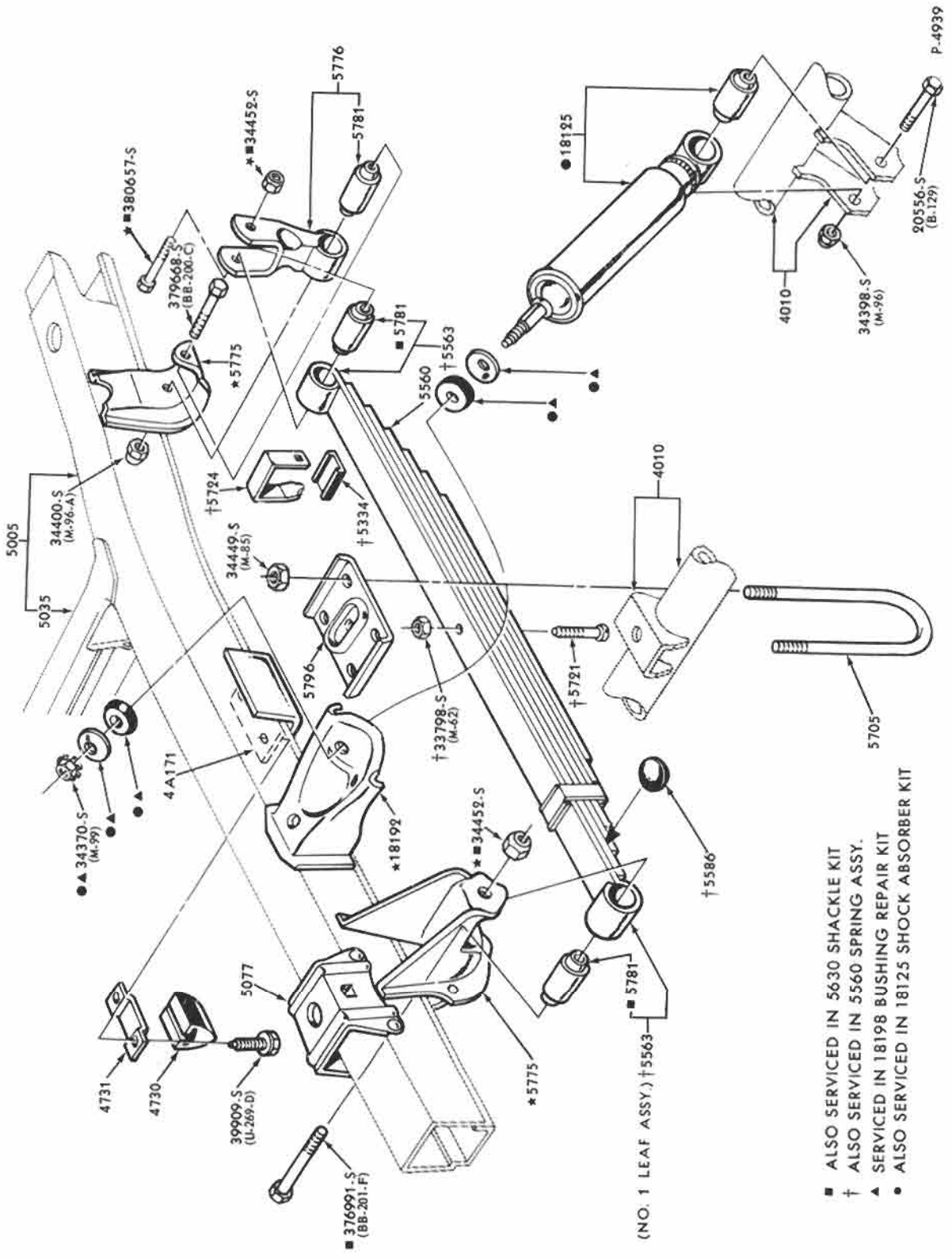

REAR SUSPENSION
1966/72 BRONCO

COPYRIGHT © 1975 — FORD MOTOR COMPANY — DEARBORN, MICHIGAN

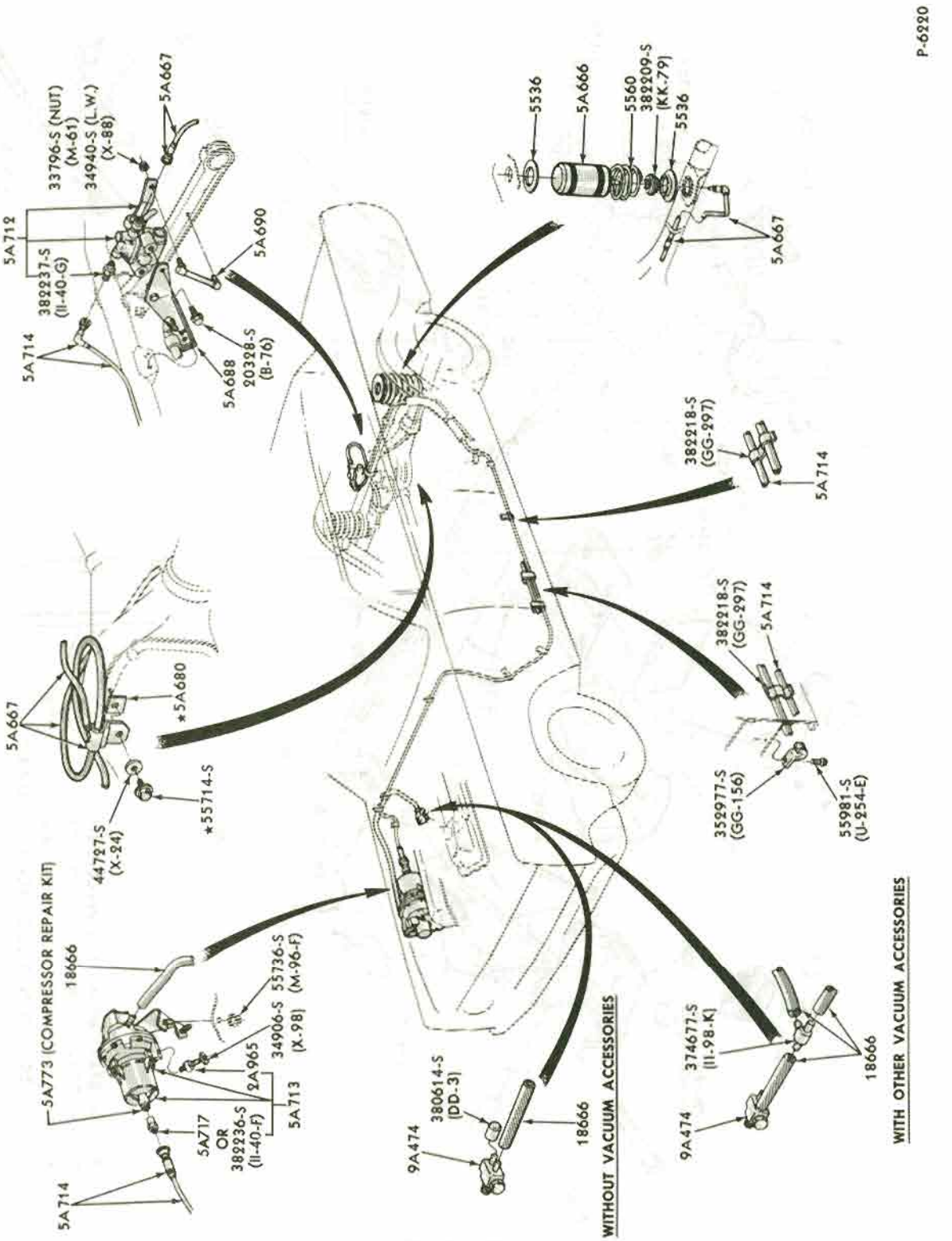

REAR SUSPENSION (AUTOMATIC AIR LEVELER SYSTEM)
1968 FORD

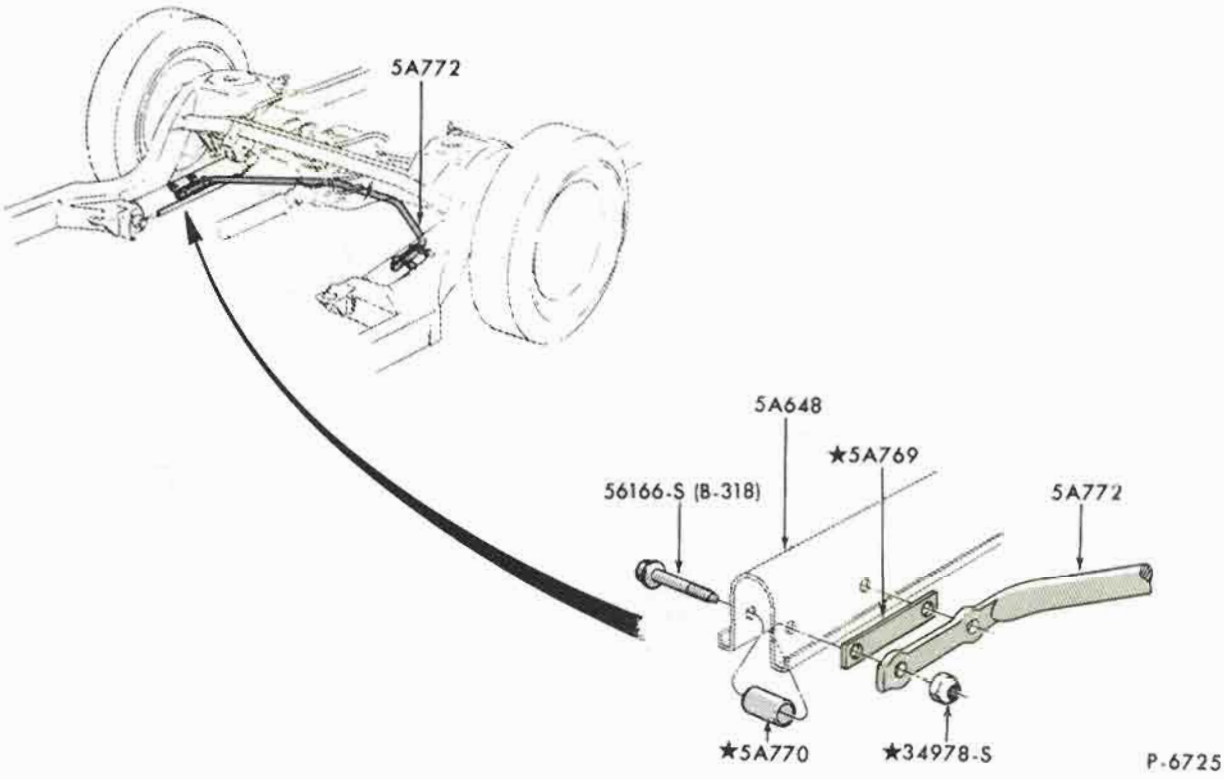

REAR SUSPENSION (MAXIMUM HANDLING STABILIZER BAR)
1969/72 FORD - POLICE

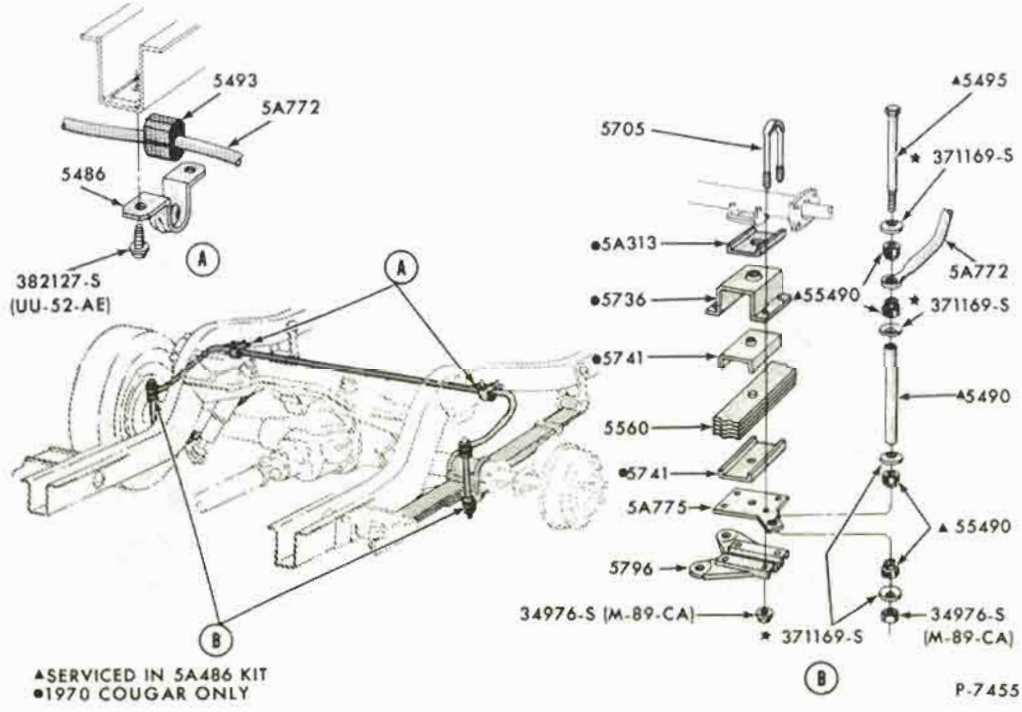

REAR SUSPENSION (MAXIMUM HANDLING STABILIZER BAR)
1970/72 MUSTANG

COPYRIGHT © 1975 — FORD MOTOR COMPANY — DEARBORN, MICHIGAN

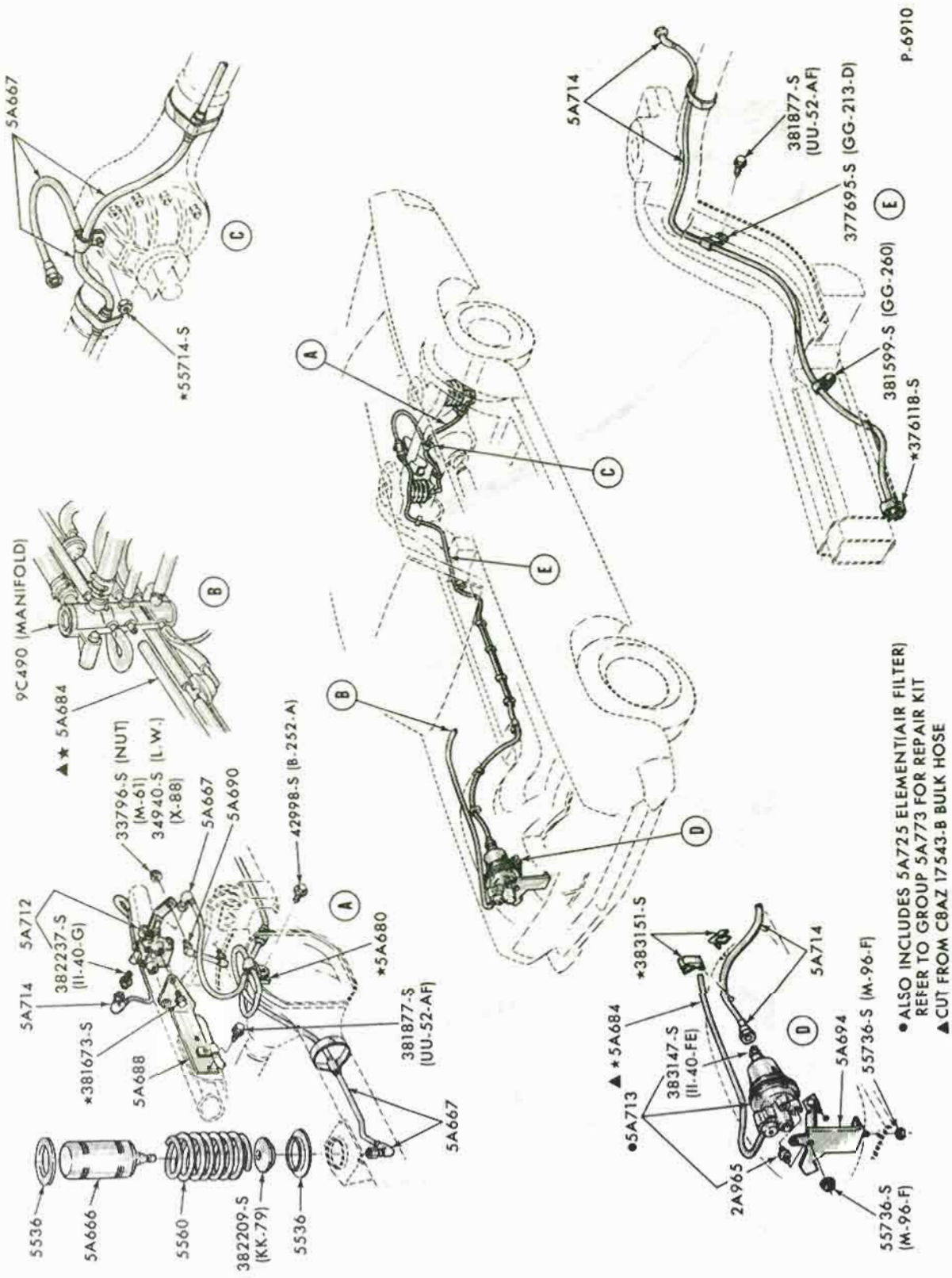

REAR SUSPENSION (AUTOMATIC AIR LEVELER SYSTEM)
1969/70 FORD

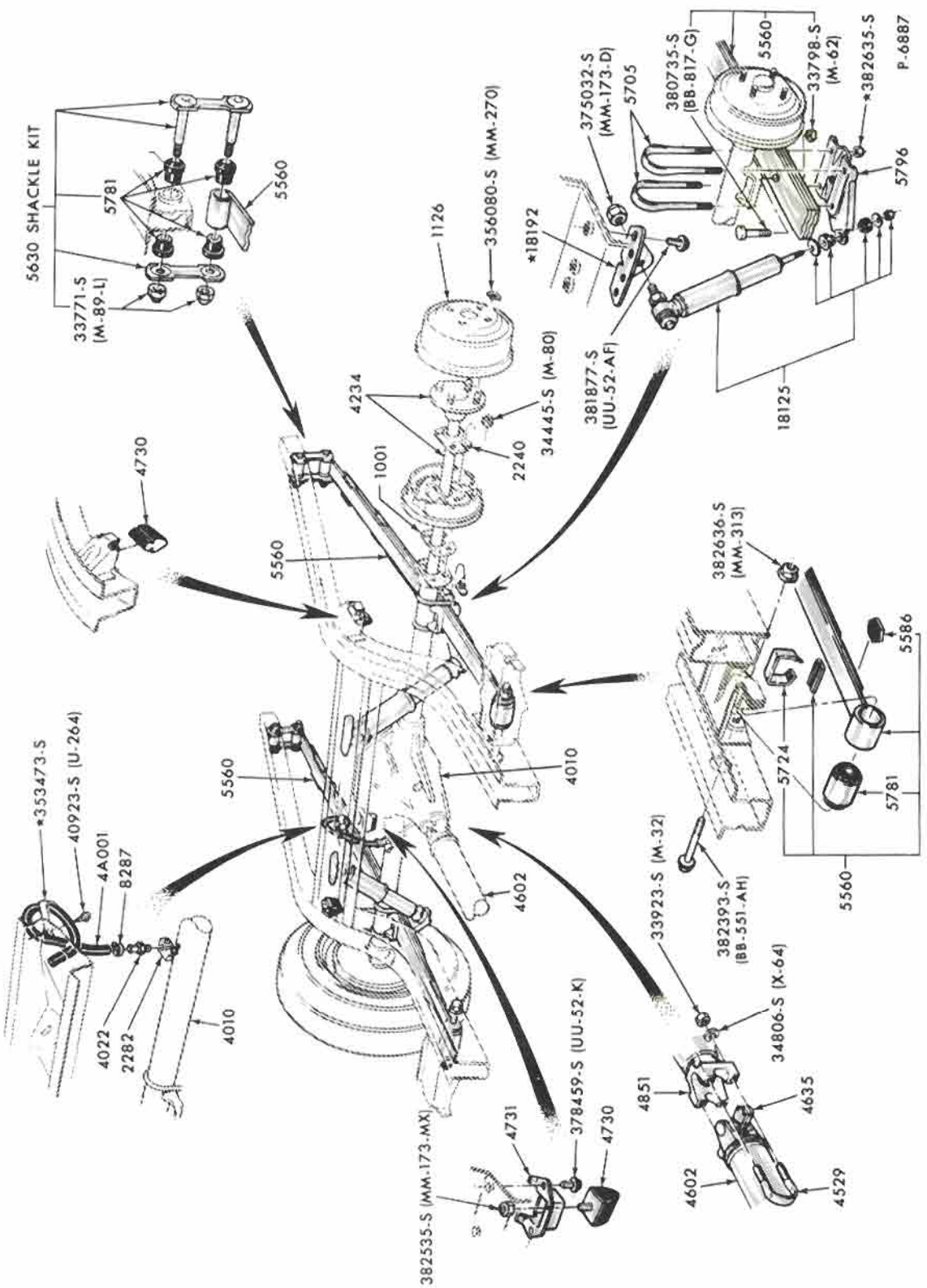

REAR SUSPENSION
1970/72 MAVERICK

COPYRIGHT © 1975 — FORD MOTOR COMPANY — DEARBORN, MICHIGAN

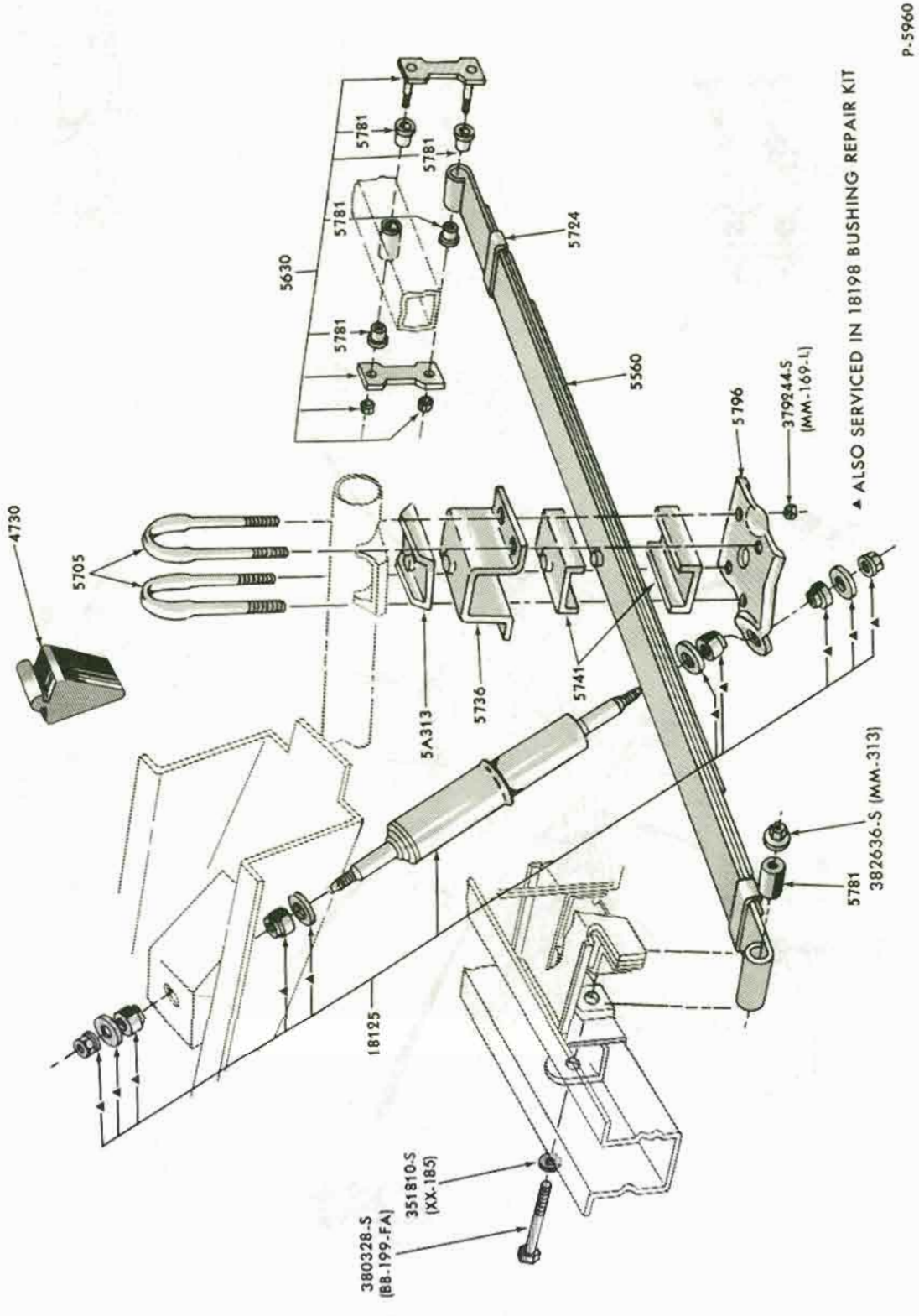

REAR SUSPENSION
1971/72 MUSTANG

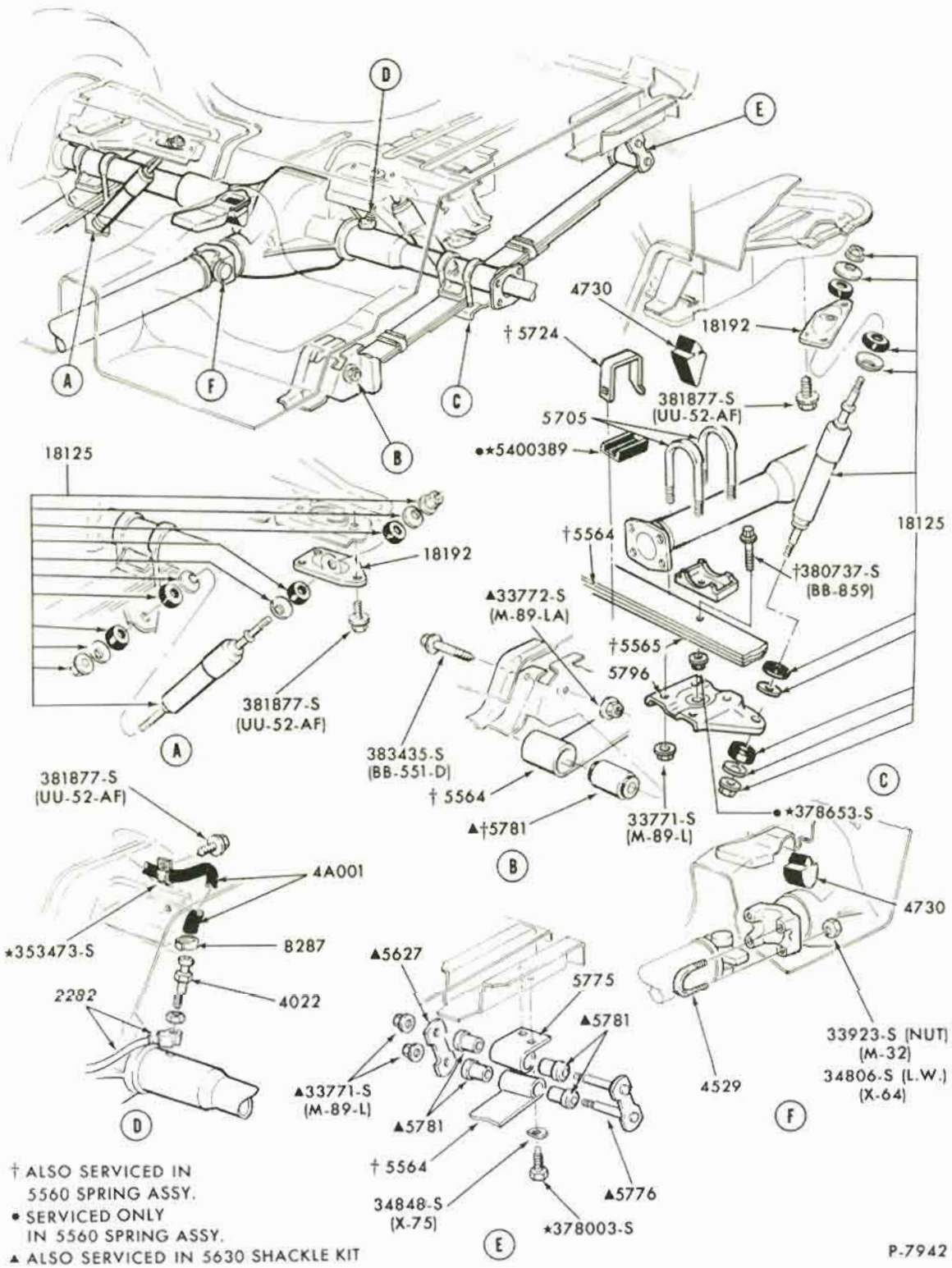

† ALSO SERVICED IN 5560 SPRING ASSY.
• SERVICED ONLY IN 5560 SPRING ASSY.
▲ ALSO SERVICED IN 5630 SHACKLE KIT

P-7942

REAR SUSPENSION
1971/72 PINTO

COPYRIGHT © 1975 — FORD MOTOR COMPANY — DEARBORN, MICHIGAN

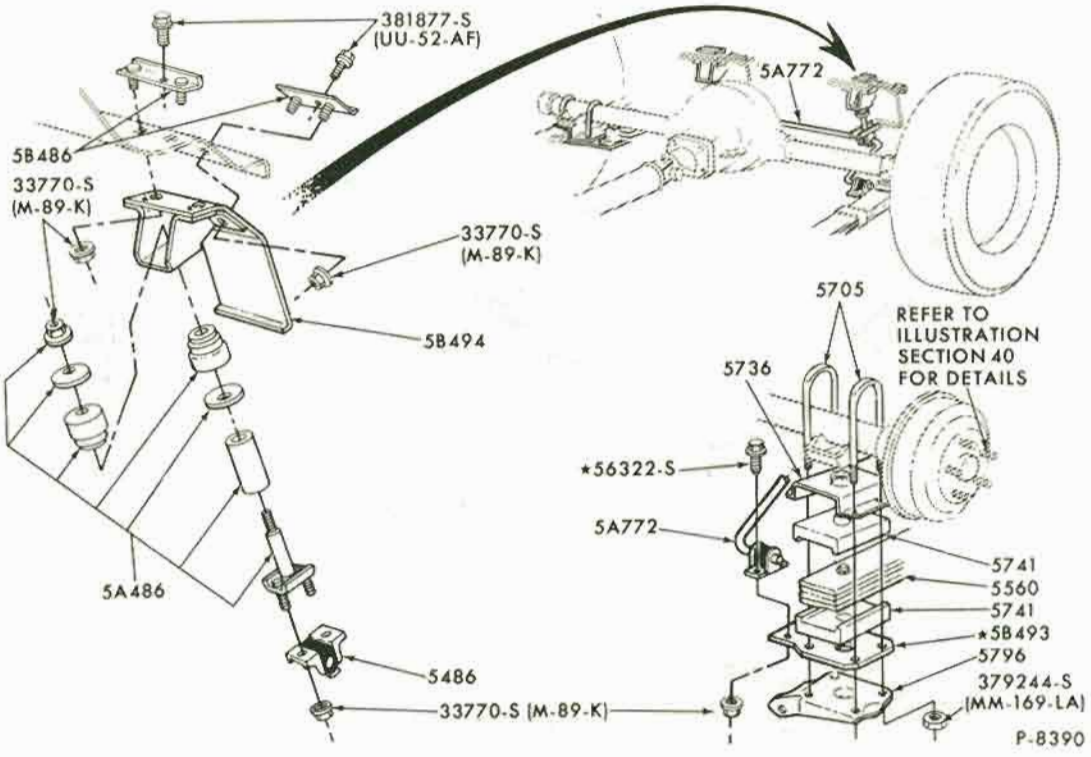

REAR SUSPENSION (MAXIMUM HANDLING STABILIZER BAR)
1970 FAIRLANE/TORINO-POLICE and 1971 TORINO-POLICE

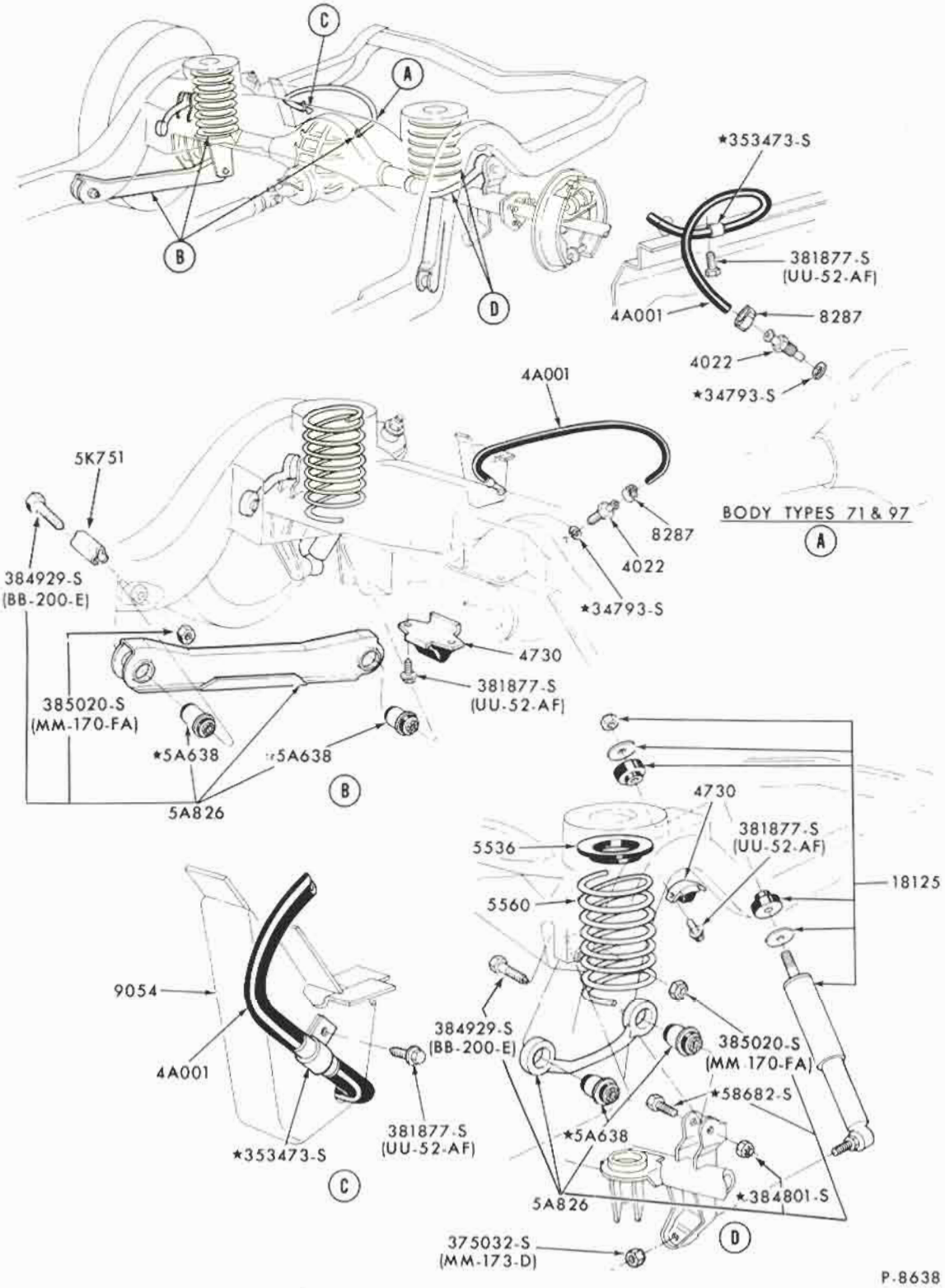

REAR SUSPENSION
1972 THUNDERBIRD and TORINO

COPYRIGHT © 1975 — FORD MOTOR COMPANY — DEARBORN, MICHIGAN

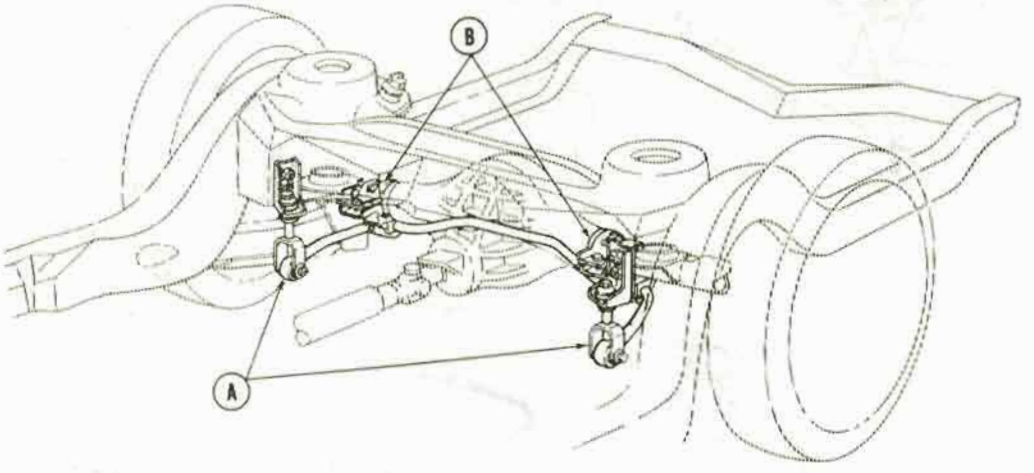

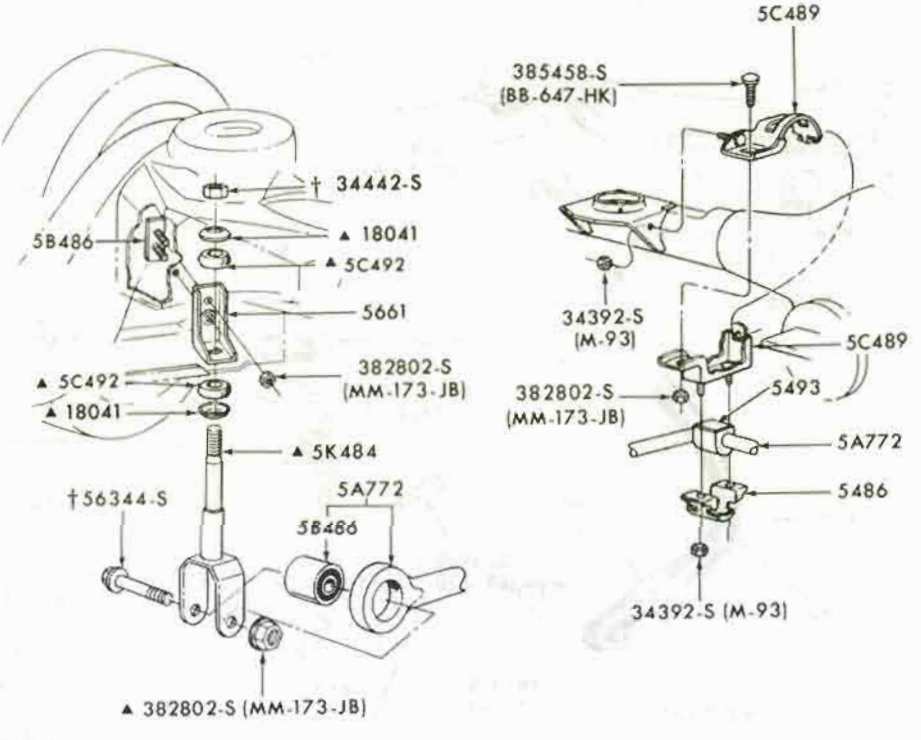

† SERVICED ONLY IN 5A486 REPAIR KIT
▲ ALSO SERVICED IN 5A486 REPAIR KIT

P-8583

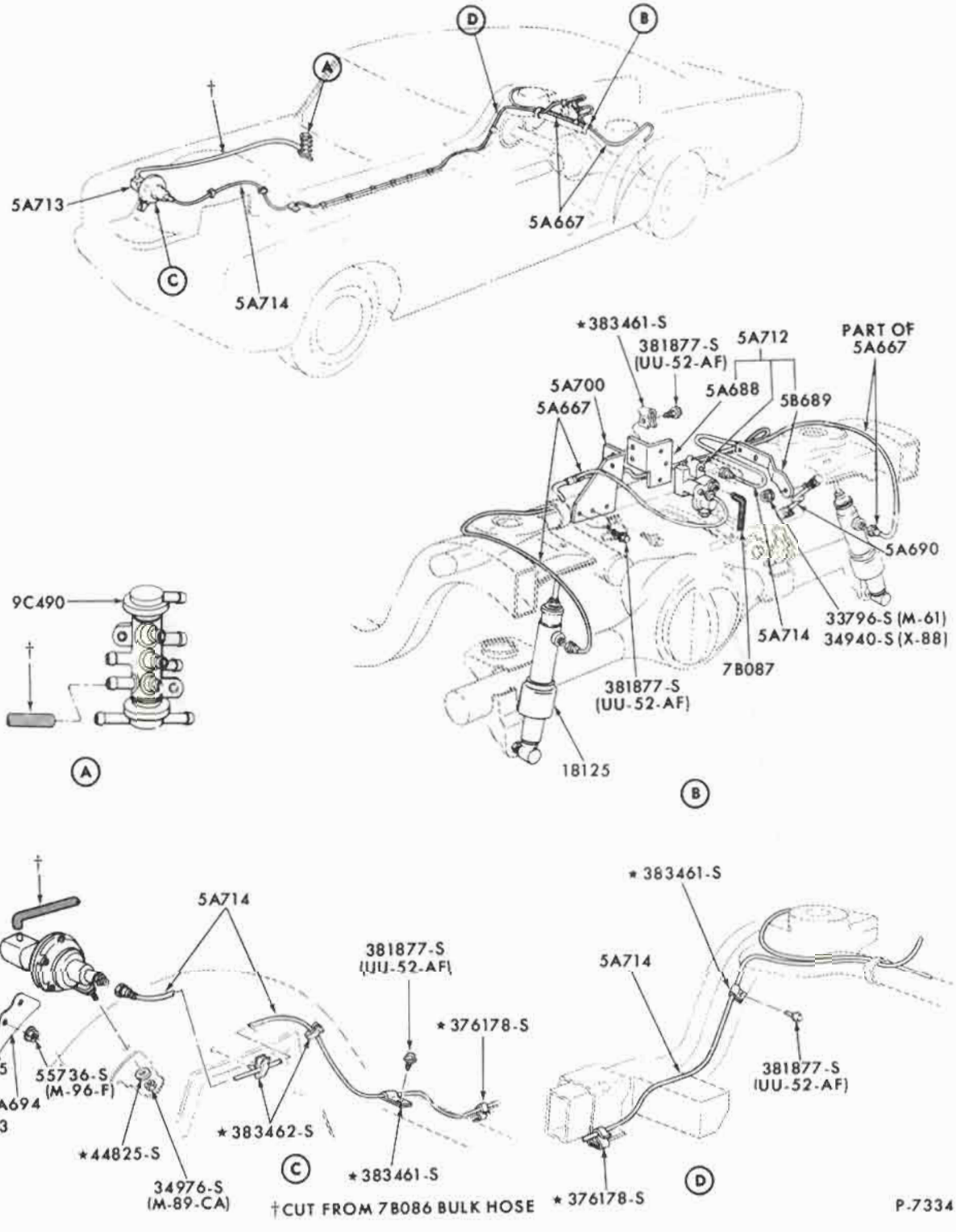

REAR SUSPENSION (AUTOMATIC AIR LEVELER SYSTEM)
1971 FORD

COPYRIGHT © 1975 — FORD MOTOR COMPANY — DEARBORN, MICHIGAN

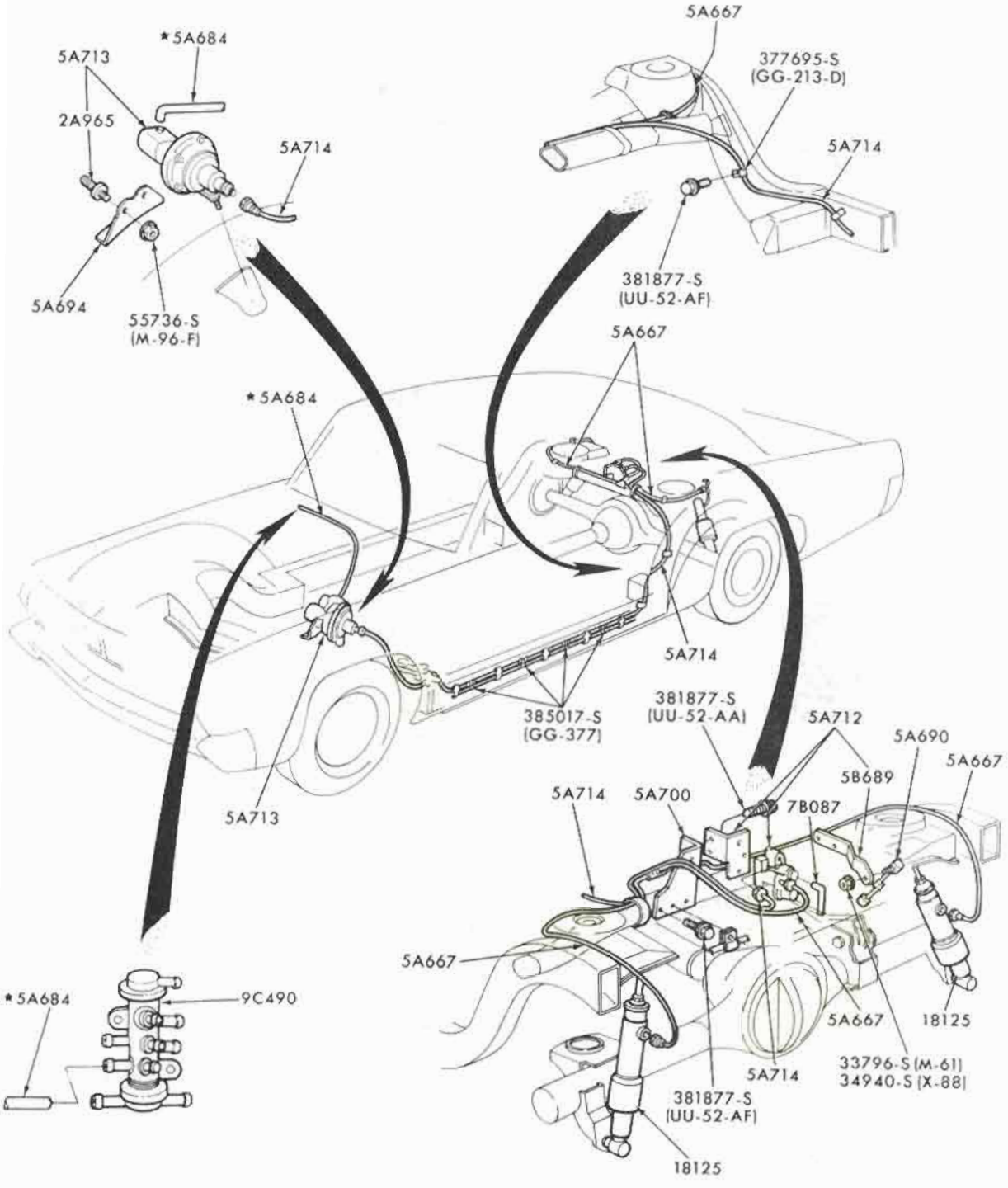
5A667
*5A684
5A713
377695-S
(GG-213-D)
2A965
5A714
5A714
5A694
381877-S
(UU-52-AF)
55736-S
(M-96-F)
5A667
*5A684
5A714
385017-S
(GG-377)
381877-S
(UU-52-AA)
5A712
5A690
5A667
5B689
5A714
5A700
7B087
5A713
5A667
*5A684
9C490
5A667
18125
5A714
33796-S (M-61)
34940-S (X-88)
381877-S
(UU-52-AF)
18125

P-10674

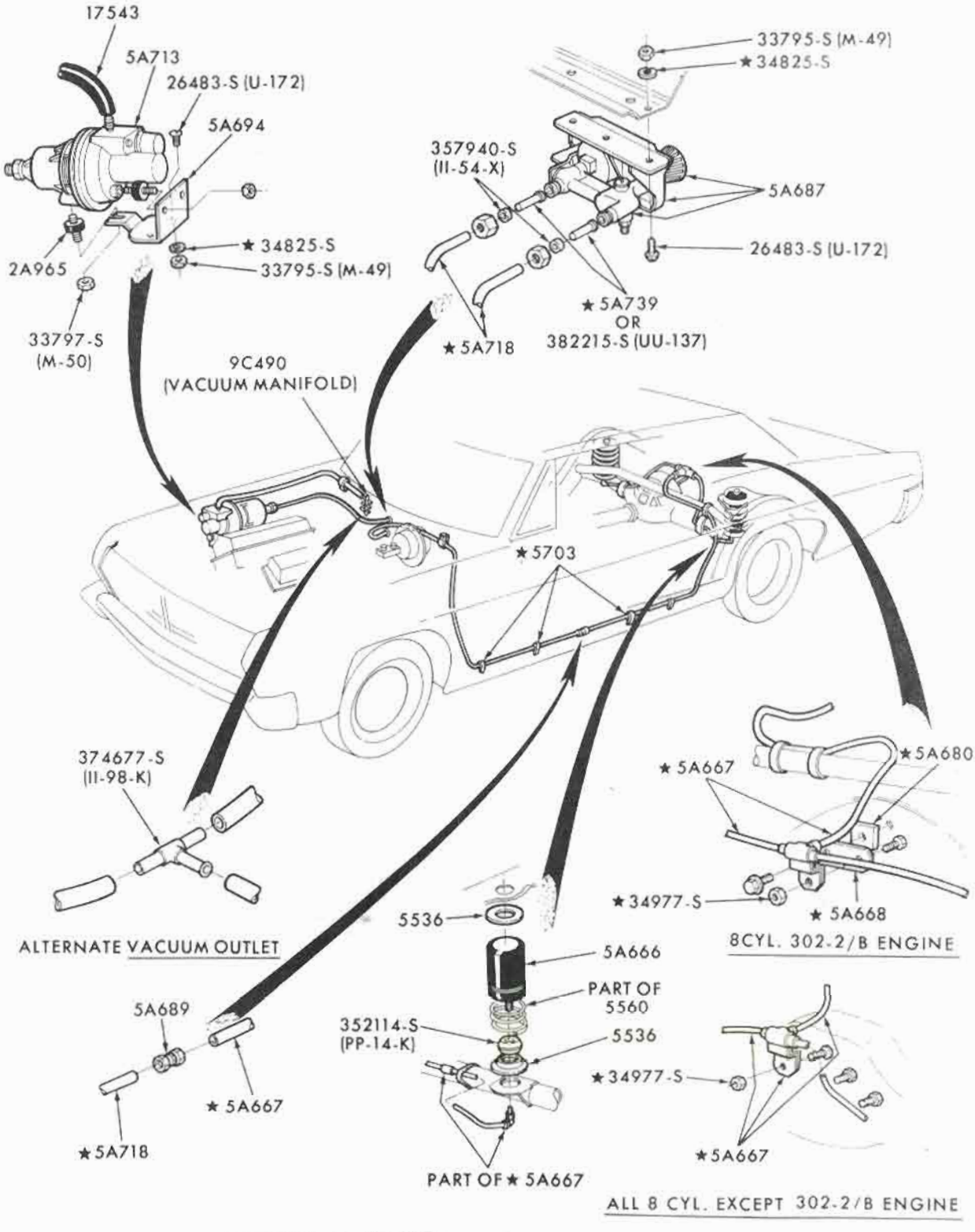

NOTE: ALL PARTS SHOWN ARE SERVICED IN 5A589 ACCESSORY KIT

P-10678

REAR SUSPENSION (AIR LEVELER SYSTEM WITH DASH CONTROL)

1967/72 FORD, THUNDERBIRD & TORINO

COPYRIGHT © 1975 — FORD MOTOR COMPANY — DEARBORN, MICHIGAN

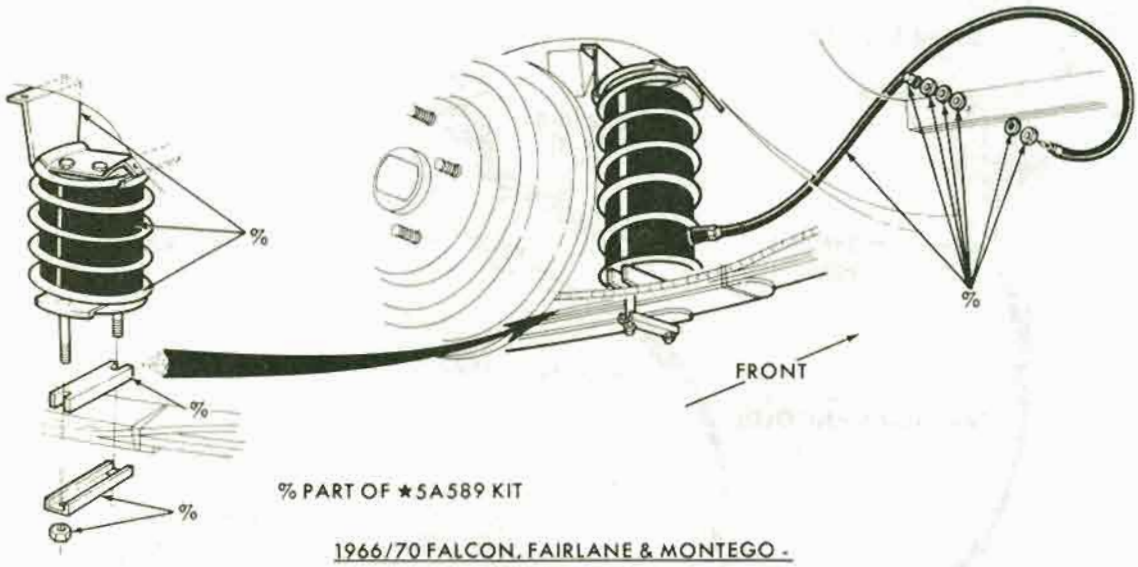

% PART OF ★5A589 KIT

1966/70 FALCON, FAIRLANE & MONTEGO - BODY TYPE 71

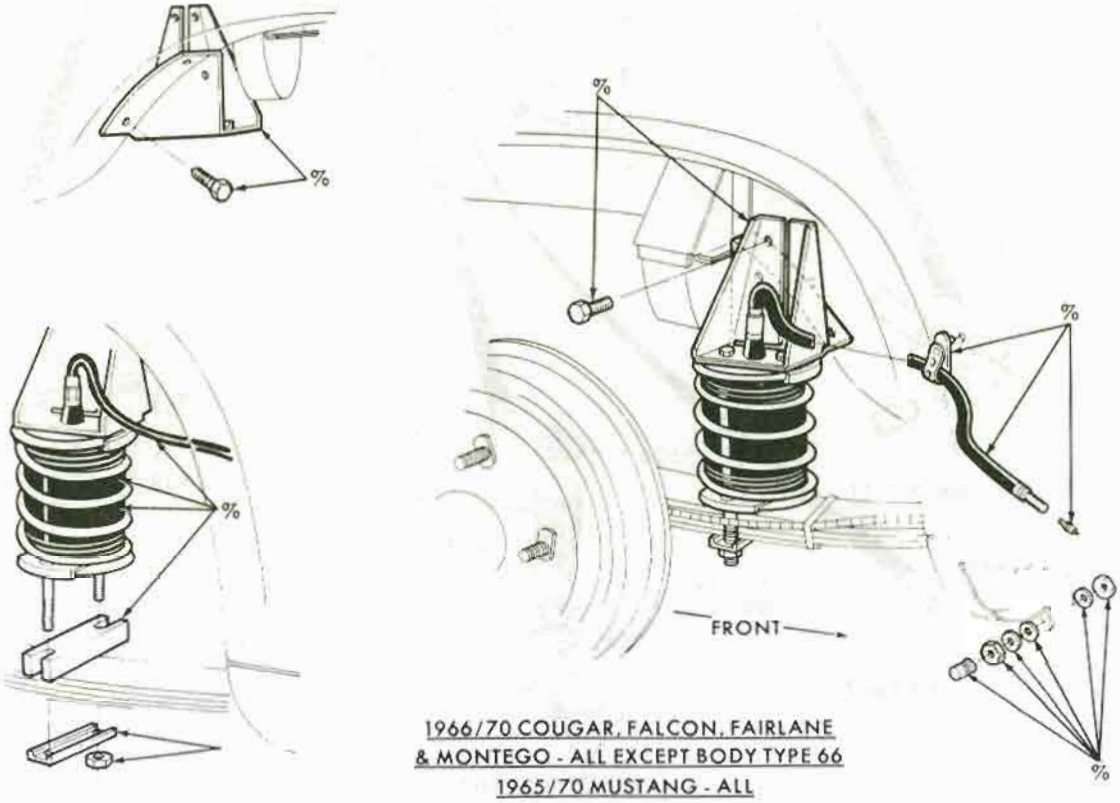

1966/70 COUGAR, FALCON, FAIRLANE & MONTEGO - ALL EXCEPT BODY TYPE 66
1965/70 MUSTANG - ALL

% PART OF ★5A589 KIT

P-10675

REAR SUSPENSION (AUXILIARY AIR SPRING INSTALLATION)
1966/68 FALCON, 1966/70 FAIRLANE/TORINO AND 1965/70 MUSTANG

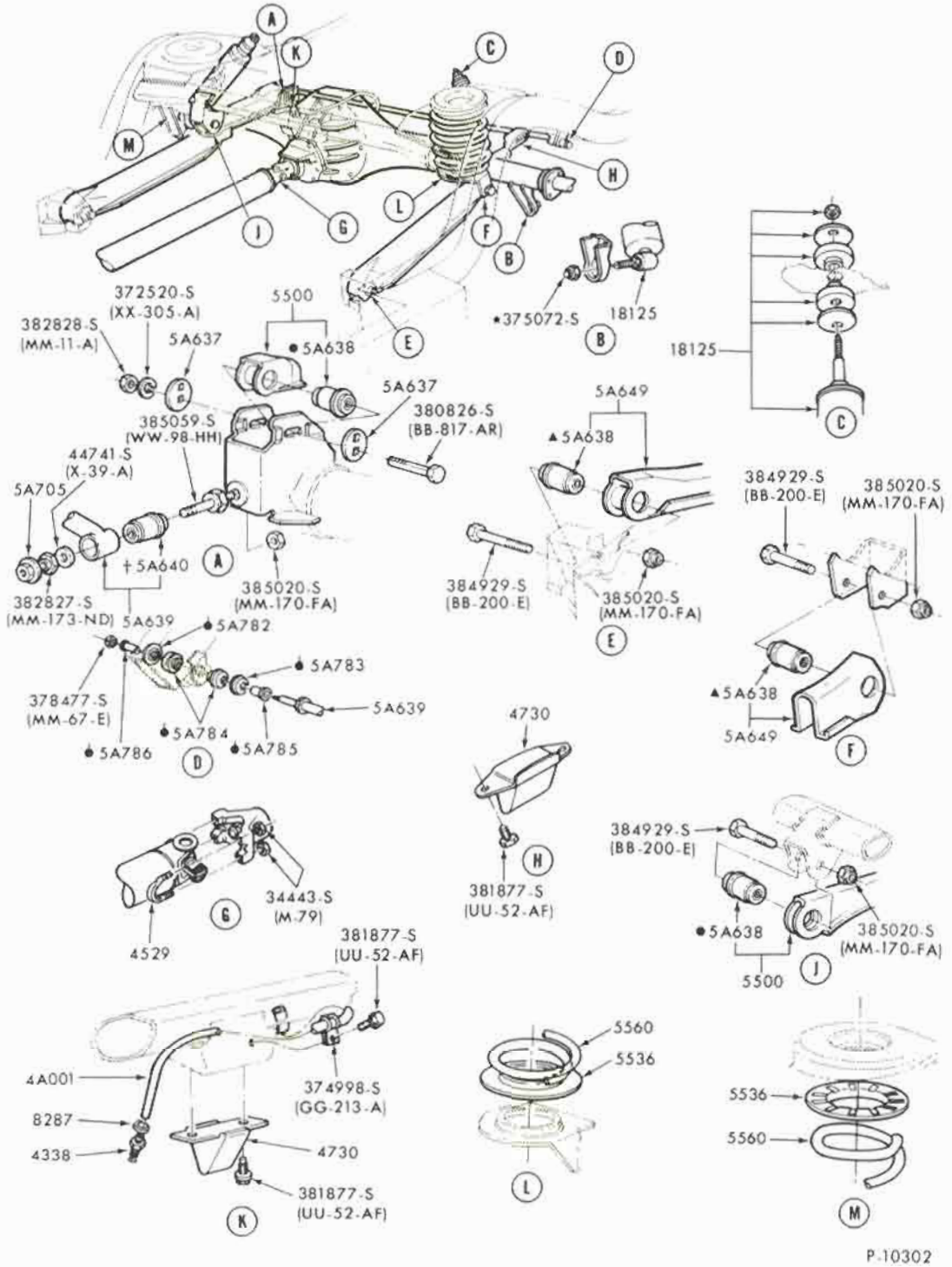

P-10302

▲SERVICED ONLY IN 5A649 ARM ASSY
•SERVICED ONLY IN 5500 ARM AND BUSHING ASSY
†SERVICED IN 5A639 BAR AND BUSHING ASSY
♦SERVICED ONLY IN 5B640 BAR KIT

REAR SUSPENSION-TYPICAL
1972 FORD, 1970/71 THUNDERBIRD

COPYRIGHT © 1975 — FORD MOTOR COMPANY — DEARBORN, MICHIGAN

INDEX

THIS INDEX SECTION INCLUDES THE FOLLOWING MAJOR GROUPS:

AIR CLEANER OIL BREATHER CAP
CAMSHAFT
CRANKCASE VENT SYSTEM
CRANKSHAFT and FLYWHEEL
CYLINDER BLOCK and RELATED PARTS
CYLINDER HEAD, VALVES and EXHAUST MANIFOLD
EMISSION REDUCTION SYSTEM
ENGINE
ENGINE SUPPORTS
OIL FILTER
OIL PUMP and PAN
PISTON and CONNECTING ROD
VALVES, PUSH RODS and COVERS

TITLE	SECTION	PAGE	ILLUS. NO.
4 CYLINDER 98 C.I.D. - 1.6 LITRE			
Camshaft, gear and bearings	62	3	P-7595
Crankcase vent system	66.1	5	P-8025
Crankshaft and flywheel	63	5	P-7596
Cylinder block	60	15	P-7593
Engine parts - external	60	15	P-7593
Engine Supports - Pinto (front & rear)	60.1	12	P-7873
Engine gasket kit	60	14	P-7597
Oil filter-spin on type	66	5	P-7592
Oil pump	66	5	P-7592
Piston and connecting rod	63	5	P-7596
Splash shield - engine	66	1	P-7598
Valve and push rods	62	3	P-7595
4 CYLINDER 122 C.I.D. (O.H.C.) - 2.0 LITRE			
Cylinder block	60	13	P-8229
Emission reduction system - without hot idle compensator	66.1	8	P-8024
- with hot idle compensator	66.1	8	P-10484
Engine parts-internal	60	12	P-8039
-external	60	13	P-8229
Engine supports - Pinto (front & rear)	60.1	12	P-7873
Oil filter-spin on type	60	13	P-8229
Oil pump	66	5	P-8038
Splash shield - engine	66	1	P-7598
6 CYLINDER 170 C.I.D.			
Camshaft, gear and bearings	62	1	P-2964
Crankshaft and flywheel	63	1	P-2965
Cylinder block	60	5	P-3088
Emission reduction system - Rocker arm cover type-open system (1965/70)	66.1	1	P-4389
Closed system (1971/72)	66.1	6	P-8408
Engine assembly	60	4	P-8398
Engine supports - Bronco (front & rear)(1966/72)	60.1	10	P-4954
Falcon (front) (1965)	60.1	5	P-3617
Falcon (rear) (1965)	60.1	6	P-3094
Falcon (front & rear) (1966/69)	60.1	8	P-4958
Maverick (front & rear) (1970/72)	60.1	12	P-6909
Mustang (front & rear) (1965)	60.1	4	P-4500
Oil filters - cartridge type	66	3	P-1246
spin-on type	66	3	P-2384
Oil pump	66	6	P-2963
Piston and connecting rod	62	1	P-3090
Valves, push rods and rocker arm cover	65	1	P-3089

TITLE	SECTION	PAGE	ILLUS. NO.
6 CYLINDER 200 C.I.D.			
Camshaft, gear and bearings	62	1	P-2964
Crankshaft and flywheel	63	1	P-4899
Cylinder block and cylinder head	60	5	P-3088
Emission reduction system - Rocker arm cover type-open system (1965/70)	66.1	1	P-4389
Closed system (1971/72)	66.1	6	P-8408
Engine assembly	60	4	P-8398
Engine supports - Fairlane (front & rear) (1965)	60.1	2	P-3672
Fairlane (front & rear) (1966/68)	60.1	8	P-4958
Falcon (front) (1965)	60.1	5	P-3617
Falcon (rear) (1965)	60.1	6	P-3094
Falcon (front & rear) (1966/70)	60.1	8	P-4958
Maverick (front & rear) (1970/72)	60.1	12	P-6909
Mustang (front & rear) (1965/66)	60.1	4	P-4500
Mustang (front & rear) (1967/70)	60.1	9	P-5625
Oil filters - cartridge type	66	3	P-1246
spin-on type	66	3	P-2384
Oil pump	66	6	P-2963
Piston and connecting rod	62	1	P-3090
Valves, push rods and rocker arm cover	65	1	P-3089
6 CYLINDER 240 C.I.D.			
Camshaft, gear and bearings	62	2	P-4873
Crankshaft and flywheel	63	2	P-4874
Cylinder block - - external	60	2	P-7851
- internal	60	3	P-7852
Emission reduction system - Rocker arm cover type-open system (1965/70)	66.1	1	P-4389
Closed system (1971/72)	66.1	6	P-8409
Engine assembly	60	1	P-8395
Engine supports - Ford (front & rear)(1965/70)	60.1	1	P-4616
Ford (front & rear)(1971/72)	60.1	13	P-8264
Oil filters - cartridge type	66	3	P-1246
spin-on type	66	3	P-2384
Oil pump	66	1	P-4872
Piston and connecting rod	62	2	P-3732
Valves, push rods and rocker arm cover	65	2	P-3726

COPYRIGHT © 1975 — FORD MOTOR COMPANY — DEARBORN, MICHIGAN

INDEX

TITLE	SECTION	PAGE	ILLUS. NO.
6 CYLINDER 250 C.I.D.			
Camshaft, gear and bearings	62	1	P-2964
Crankshaft and flywheel	63	1	P-4899
Cylinder block and cylinder head	60	5	P-3088
Emission reduction system	66.1	6	P-8408
Engine assembly	60	4	P-8398
Engine supports-			
Fairlane (front & rear) (1969/71)	60.1	8	P-4958
Maverick (front & rear) (1971/72)	60.1	12	P-6909
Mustang (front & rear) (1969/70)	60.1	9	P-5625
Mustang (front & rear) (1971/72)	60.1	15	P-8269
Torino (front & rear) (1972)	60.1	18	P-8585
Oil filters-			
cartridge type	66	3	P-1246
spin-on type	66	3	P-2384
Oil pump	66	6	P-2963
Piston and connecting rod	62	1	P-3090
Valves, push rods and rocker arm cover	65	1	P-3089
8 CYLINDER 260 C.I.D.			
Camshaft, gear and bearings	62	3	P-3733
Crankshaft and flywheel	63	3	P-3734
Cylinder block and cylinder head	60	7	P-3767
Emission reduction system-			
Intake manifold type-open system	66.1	2	P-4146
Rocker arm cover type-open system	66.1	2	P-4592
Air cleaner oil breather cap installation-closed system	66.1	4	P-4575
Engine assembly	60	6	P-8393
Engine supports-			
Mustang (front & rear)	60.1	4	P-4500
Oil filters-			
cartridge type	66	3	P-1246
spin-on type	66	3	P-2384
Oil pump	66	2	P-3736
Piston and connecting rod	62	2	P-3732
Valves, push rods and rocker arm cover	65	2	P-3726

TITLE	SECTION	PAGE	ILLUS. NO.
8 CYLINDER 289 C.I.D.			
Camshaft, gear and bearing	62	3	P-3733
Crankshaft and flywheel	63	3	P-3734
Cylinder block and cylinder head	60	7	P-3767
Emission reduction system-			
Air cleaner oil breather cap installation-closed system	66.1	4	P-4575
Intake manifold type-open system	66.1	2	P-4146
Rocker arm cover type-open system	66.1	2	P-4592
Engine assembly	60	10	P-8396
Engine supports-			
Bronco (front & rear) (1966/68)	60.1	10	P-4954
Fairlane (front & rear) (1965)	60.1	3	P-3673
Fairlane (front & rear) (1966/68)	60.1	8	P-4958
Falcon (front) (1965)	60.1	5	P-4353
Falcon (front & rear) (1966/68)	60.1	8	P-4958
Falcon (rear) (1965)	60.1	6	P-3094
Ford (front & rear) (1965/67)	60.1	1	P-4616
Mustang (front & rear) (1965/66)	60.1	4	P-4500
Mustang (front & rear) (1967/68)	60.1	9	P-5625
Oil filters-			
cartridge type	66	3	P-1246
spin-on type	66	3	P-2384
Oil pump	66	2	P-3736
Piston and connecting rod	62	2	P-3732
Valves, push rods and rocker arm cover	65	2	P-3726
8 CYLINDER 302 C.I.D.			
Camshaft, gear and bearings	62	3	P-3733
Crankshaft and flywheel	63	3	P-3734
Cylinder block -			
- external	60	18	P-8369
- internal	60	19	P-8370
- head - typical	65	2	P-3727
Emission reduction system-			
Air cleaner oil breather cap installation-closed system (1968/70)	66.1	4	P-4575
Closed system (1971/72 exc. "Boss")	66.1	7	P-8413
Closed system (1971 "Boss")	66.1	7	P-8412
Engine assembly	60	17	P-8372
Engine oil cooler system	66	4	P-6984
Engine supports-			
Bronco (front & rear) (1969/72)	60.1	10	P-4954
Fairlane (front & rear) (1968/71)	60.1	8	P-4958
Falcon (front & rear) (1968/70)	60.1	8	P-4958
Ford (front & rear) (1968/70)	60.1	1	P-4616
Ford (front & rear) (1971/72)	60.1	13	P-8265
Maverick (front & rear) (1971/72)	60.1	16	P-6932
Mustang (front & rear) (1968/70)	60.1	9	P-5625
Mustang (front & rear) (1971/72)	60.1	17	P-8270
Torino (front & rear) (1972)	60.1	18	P-8586
Oil filters-			
cartridge type	66	3	P-1246
spin-on type	66	3	P-2384
Oil pump	66	2	P-3736
Piston and connecting rod	62	2	P-3732
Valves, push rods and rocker arm cover	65	2	P-3726

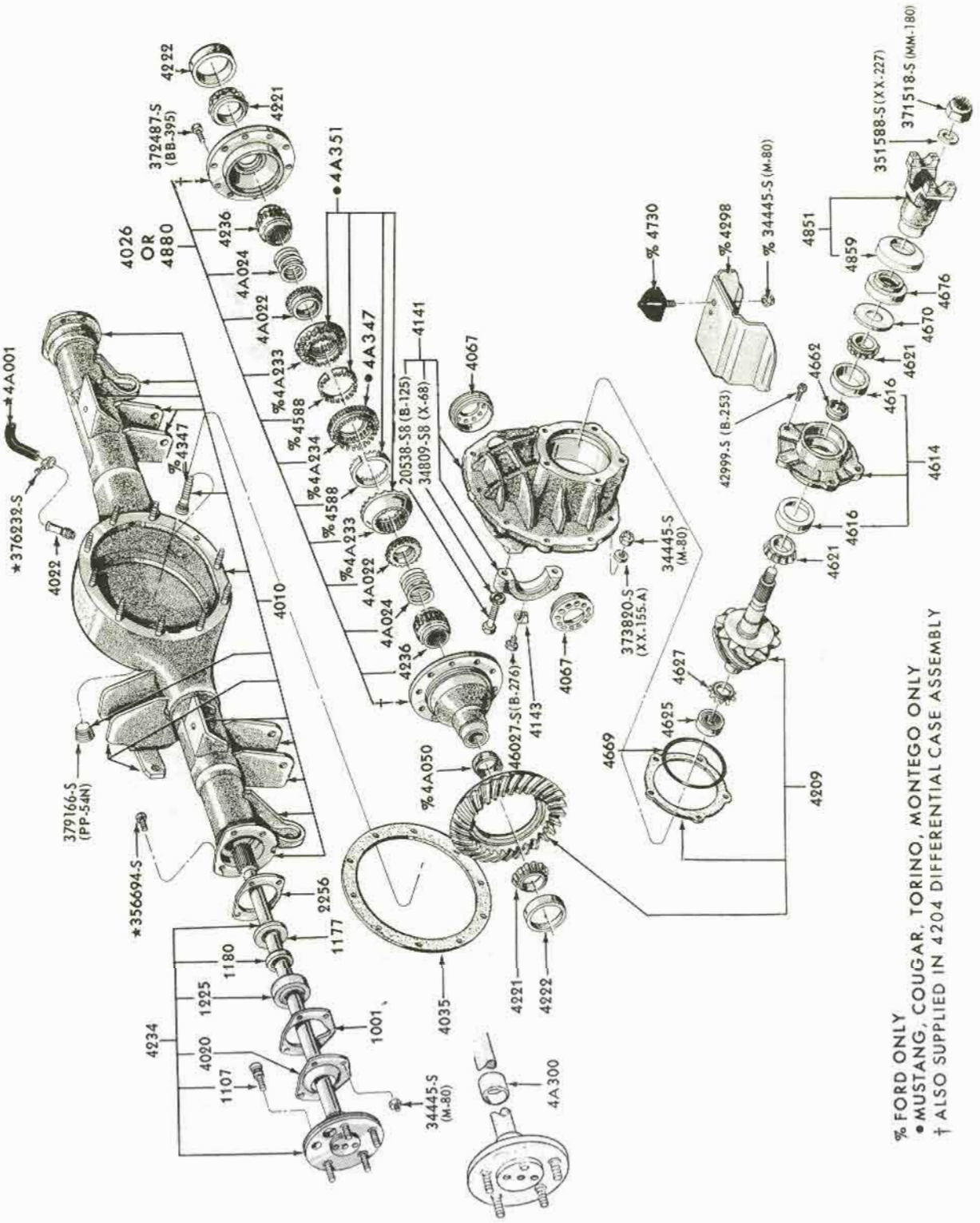

% FORD ONLY
• MUSTANG, COUGAR, TORINO, MONTEGO ONLY
† ALSO SUPPLIED IN 4204 DIFFERENTIAL CASE ASSEMBLY

P-4721

REAR AXLE - LOCKING (DAPCO NO-SPIN) - TYPICAL
9" RING GEAR
1970/71 FAIRLANE/TORINO, MUSTANG, 1965/67 FORD - 8 CYL. 427

COPYRIGHT © 1975 — FORD MOTOR COMPANY — DEARBORN, MICHIGAN

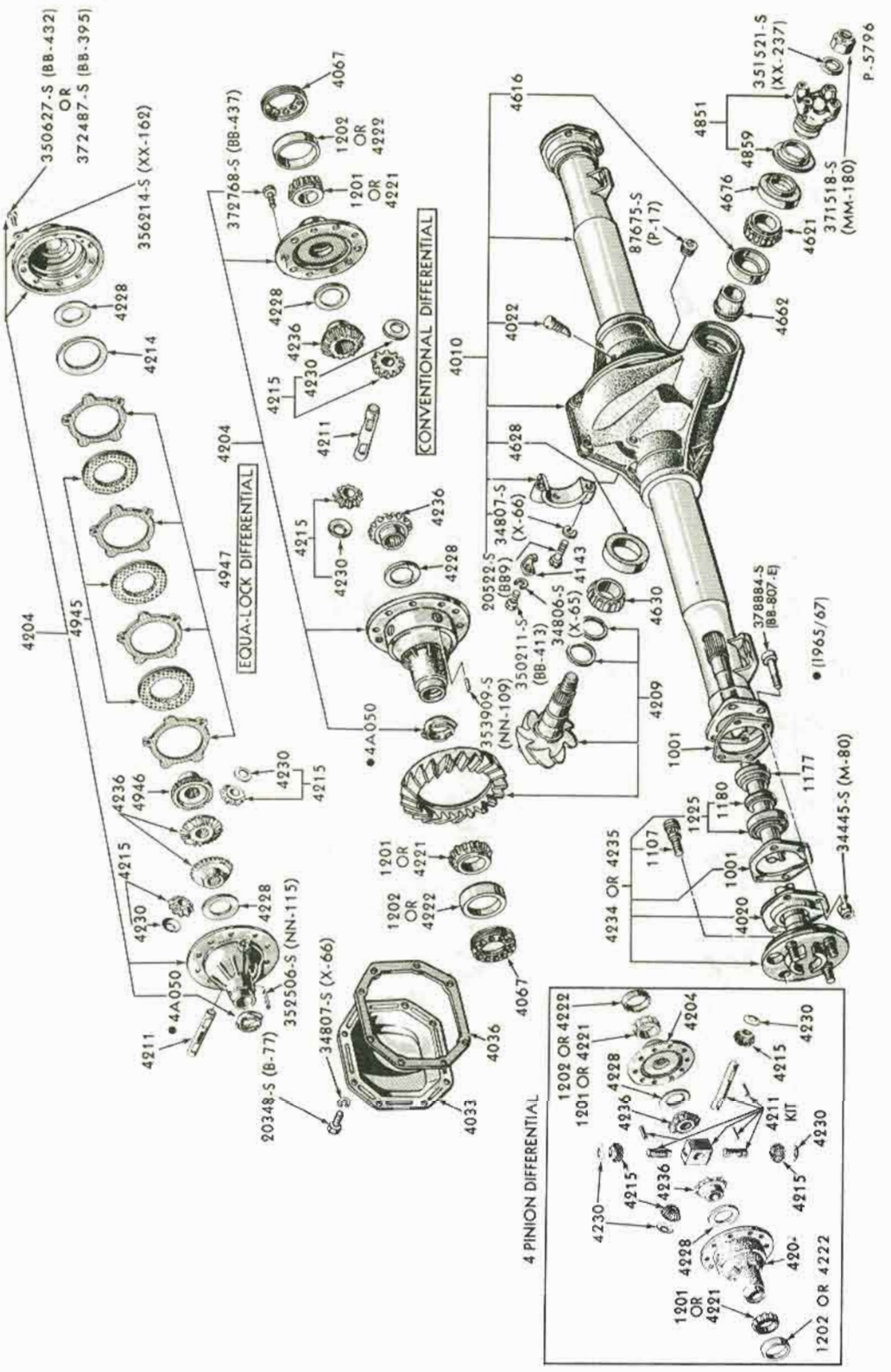

REAR AXLE - LOCKING (EQUA LOCK) & NON-LOCKING WITH INTEGRAL CARRIER - TYPICAL
6 3/4", 7 1/4" RING GEARS

1965/70 FALCON, 1971/72 MAVERICK, 1965/70 MUSTANG, 1971/72 PINTO

INDEX

TITLE	SECTION	PAGE	ILLUS. NO.
8 CYLINDER 351 C.I.D.			
Camshaft, gear and bearings	62	3	P-3733
Crankshaft and flywheel	63	3	P-3734
Cylinder block -			
- external (Windsor)	60	18	P-8369
- internal (Windsor)	60	19	P-8370
- external (Cleveland)	60	20	P-8367
- internal (Cleveland)	60	21	P-8368
- head - typical	62	2	P-3727
Emission reduction system	66.1	7	P-8413
Engine assembly	60	17	P-8372
Engine supports-			
Fairlane (front & rear)(1969/71)	60.1	8	P-4958
Ford (front & rear)(1969/70)	60.1	1	P-4616
Ford (front & rear) (1971/72)	60.1	13	P-8265
Mustang (front & rear)(1969/70)	60.1	9	P-5625
Mustang (front & rear)(1971/72)	60.1	17	P-8270
Torino (front & rear)(1972)	60.1	18	P-8586
Oil filters-			
cartridge type	66	3	P-1246
spin-on type	66	3	P-2384
Oil pump	66	2	P-3736
Piston and connecting rod	62	2	P-3732
Valves, push rods and rocker arm cover	65	2	P-3726
8 CYLINDER 352 C.I.D.			
Camshaft, gear and bearings	62	4	P-4878
Crankshaft and flywheel	63	4	P-2488
Cylinder block and cylinder head	60	9	P-2881
Emission reduction system-			
Air cleaner oil breather cap installation-closed system	66.1	4	P-4575
Rocker arm cover type-open system	66.1	2	P-4592
Engine assembly	60	8	P-8397
Engine supports-			
Ford (front & rear)	60.1	1	P-4616
Oil filters-			
Spin-on type	66	3	P-2384
Spin-on type and adapter	66	4	P-2486
Oil pump	66	2	P-2476
Piston and connecting rod	62	4	P-2487
Valves, push rods and rocker arm cover	65	3	P-2485

TITLE	SECTION	PAGE	ILLUS. NO.
8 CYLINDER 390 C.I.D.			
Camshaft, gear and bearings	62	4	P-4878
Crankshaft and flywheel	63	4	P-2488
Cylinder block and cylinder head	60	9	P-2881
Emission reduction system-			
Air cleaner oil breather cap installation-closed system (1965/71)	66.1	4	P-4575
Rocker arm cover type-open system (1965)	66.1	2	P-4592
Rocker arm cover type-open system (1966)	66.1	4	P-5302
Rocker arm cover type-2/B carb. - open system (1967/72)	66.1	2*	P-4592
Rocker arm cover type-4/B carb. - open system (1967/69)	66.1	4	P-5302
Engine assembly			
(1965/67)	60	8	P-8397
(1968/71)	60	16	P-8371
Engine supports-			
Fairlane (front & rear) (1966/69)	60.1	8	P-4958
Ford (front & rear) (1965/70)	60.1	1	P-4616
Ford (front & rear)(1971)	60.1	14	P-8266
Mustang (front & rear)(1967/69)	60.1	11	P-5626
Thunderbird (front & rear) (1965/66)	60.1	7	P-3396
Thunderbird (front & rear) (1967)	60.1	10	P-5479
Thunderbird (front & rear) (1968)	60.1	21	P-6422
Oil filters-			
spin-on type	66	3	P-2384
spin-on type and adapter	66	4	P-2486
Oil pump	66	2	P-2476
Piston and connecting rod	62	4	P-2487
Valves, push rods and rocker arm cover	65	3	P-2485
8 CYLINDER 400 C.I.D.			
Camshaft, gear and bearings	62	3	P-3733
Crankshaft and flywheel	63	3	P-3734
Cylinder block -			
- external	60	20	P-8367
- internal	60	21	P-8368
- head - typical	65	2	P-3727
Emission reduction system	66.1	7	P-8413
Engine assembly	60	17	P-8372
Engine supports -			
Ford (front & rear)(1971/72)	60.1	15	P-8268
Thunderbird (front & rear)(1972)	60.1	20	P-8683
Torino (front & rear)(1972)	60.1	19	P-8587
Oil filters -			
spin-on type	66	3	P-2384
Oil pump	66	2	P-3736
Piston and connecting rod	62	2	P-3732
Valves, push rods and rocker arm	65	2	P-3726

COPYRIGHT © 1975 — FORD MOTOR COMPANY — DEARBORN, MICHIGAN

INDEX

TITLE	SECTION	PAGE	ILLUS. NO.
8 CYLINDER 427 C.I.D.			
Camshaft, gear and bearings	62	4	P-4878
Crankshaft and flywheel	63	4	P-2488
Cylinder block and cylinder head	60	9	P-2881
Emission reduction system-			
Air cleaner oil burner cap installation-closed system	66.1	4	P-4575
Intake manifold type-open system	66.1	3	P-4107
Engine assembly (1965/69)	60	8	P-4831
Engine supports-			
Fairlane (front & rear)(1967/69)	60.1	8	P-4958
Ford (front & rear) (1965/68)	60.1	1	P-4616
Mustang (front & rear) (1968/69)	60.1	11	P-5626
Oil filters-			
spin-on type	66	3	P-2384
spin-on type and adapter	66	4	P-2486
Oil pump	66	2	P-2476
Piston and connecting rod	62	4	P-2487
Valves, push rods and rocker arm cover	65	3	P-2485
8 CYLINDER 428 C.I.D.			
Camshaft, gear and bearings	62	4	P-4878
Crankshaft and flywheel	63	4	P-2488
Cylinder block and cylinder head	60	9	P-2881
Emission reduction system-			
Air cleaner oil breather cap installation-closed system	66.1	4	P-4575
Rocker arm cover type-open system	66.1	4	P-5302
Engine assembly			
(1965/67)	60	8	P-8397
(1968/70)	60	16	P-8371
Engine oil cooler system	*66*	*4*	*P-6984*
Engine supports-			
Fairlane (front & rear) (1968/69)	60.1	8	P-4958
Ford (front & rear) (1966/70)	60.1	1	P-4616
Thunderbird (front & rear) (1967)	60.1	10	P-5479
Mustang (front & rear) (1968/70)	60.1	11	P-5626
Oil filters-			
spin-on type	66	3	P-2384
spin-on type and adapter	66	4	P-2486
Oil pump	66	2	P-2476
Piston and connecting rod	62	4	P-2487
Valves, push rods and rocker arm cover	65	3	P-2485

TITLE	SECTION	PAGE	ILLUS. NO.
8 CYLINDER 429 C.I.D.			
Camshaft, gear and bearings	62	3	P-3733
Crankshaft and flywheel	63	3	P-3734
Cylinder block -			
- external	60	18	P-8369
- internal	60	19	P-8370
Emission reduction system	66.1	7	P-8413
Engine assembly	60	11	P-8403
Engine oil cooler system	66	4	P-6984
Engine supports-			
Ford (front & rear) (1969/70)	60.1	1	P-4616
Ford (front & rear) (1971/72)	60.1	14	P-8267
Fairlane (front & rear)(1970/71)	60.1	8	P-4958
Mustang (front & rear)(1971)	60.1	16	P-8282
Thunderbird (front & rear)(1968/71)	60.1	21	P-6422
Thunderbird (front & rear)(1972)	60.1	20	P-8683
Torino (front & rear)(1972)	60.1	19	P-8588
Oil filters-			
spin-on type	66	3	P-2384
Oil pump	66	2	P-3736
Piston and connecting rod	62	2	P-3732
Valves, push rods and rocker arm cover	65	2	P-3726
8 CYLINDER 460 C.I.D.			
Camshaft, gear and bearings	62	3	P-3733
Crankshaft and flywheel	63	3	P-3734
Cylinder block-			
- external	60	18	P-8369
- internal	60	19	P-8370
Emission reduction system	66.1	7	P-8413
Engine assembly	60	11	P-8403
Engine supports-			
Thunderbird (front & rear) (1972)	60.1	20	P-8683
Oil filters-			
spin-on type	66	3	P-2384
Oil pump	66	2	P-3736
Piston and connecting rod	62	2	P-3732
Valves, push rods and rocker arm cover	65	2	P-3726

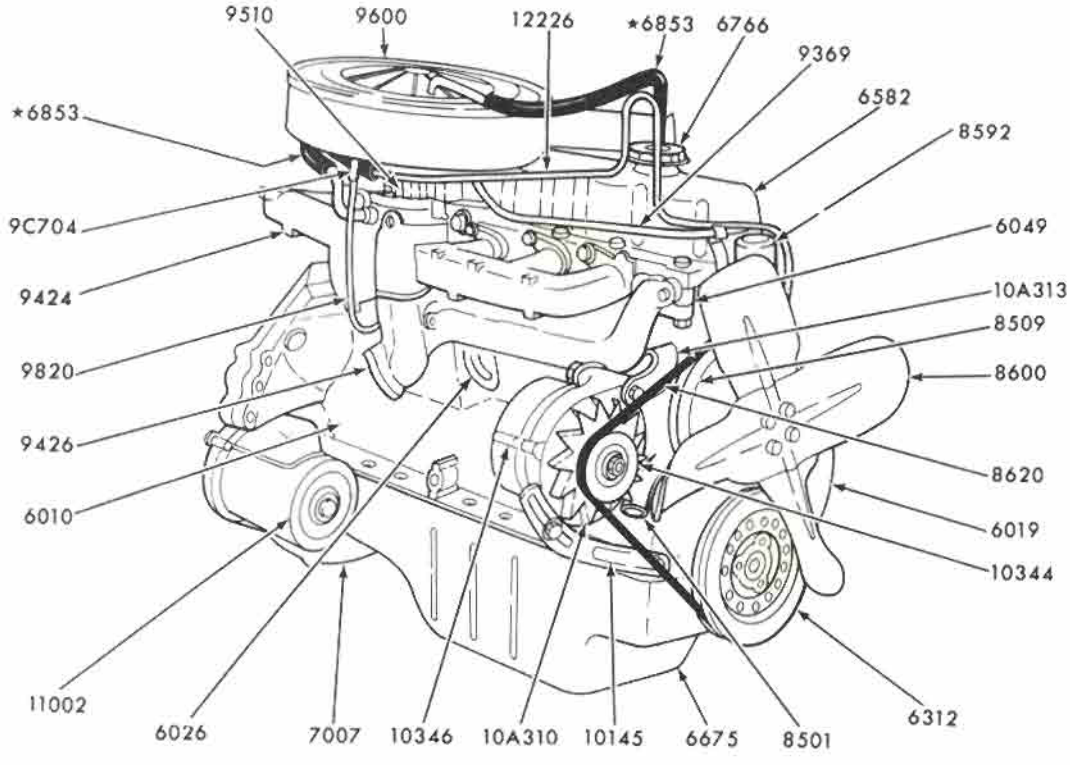

RIGHT-FRONT VIEW

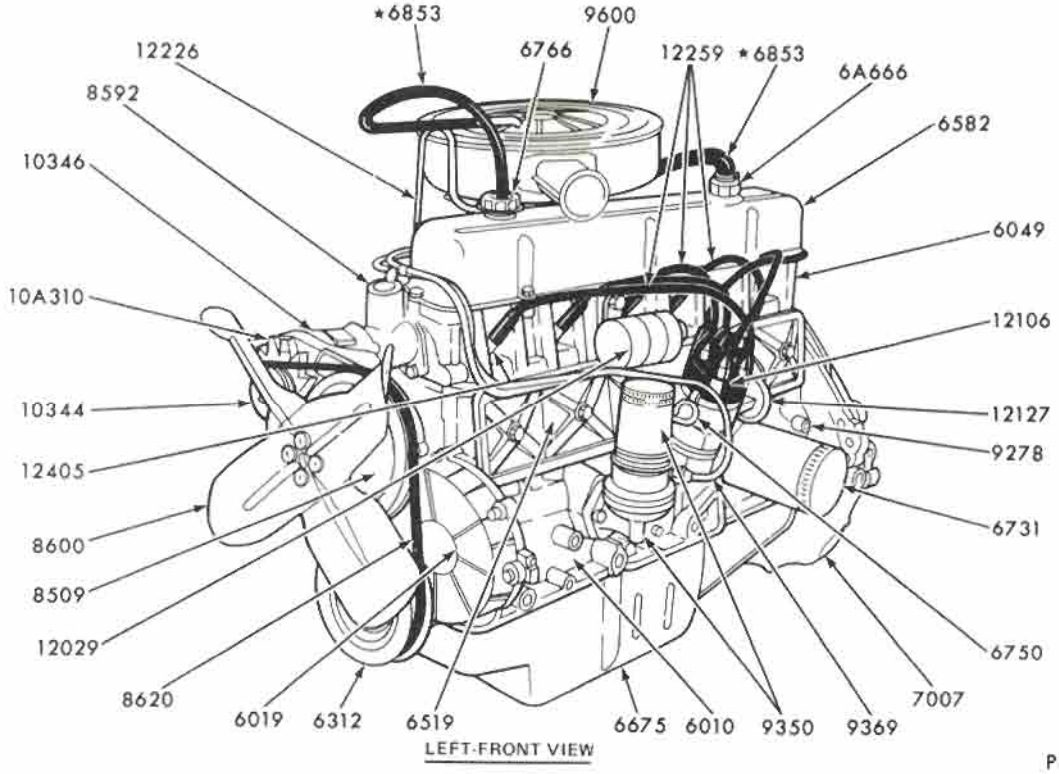

LEFT-FRONT VIEW

P-8395

ENGINE ASSEMBLY - 6 CYLINDER 240 -- TYPICAL
1965/72

COPYRIGHT © 1975 — FORD MOTOR COMPANY — DEARBORN, MICHIGAN

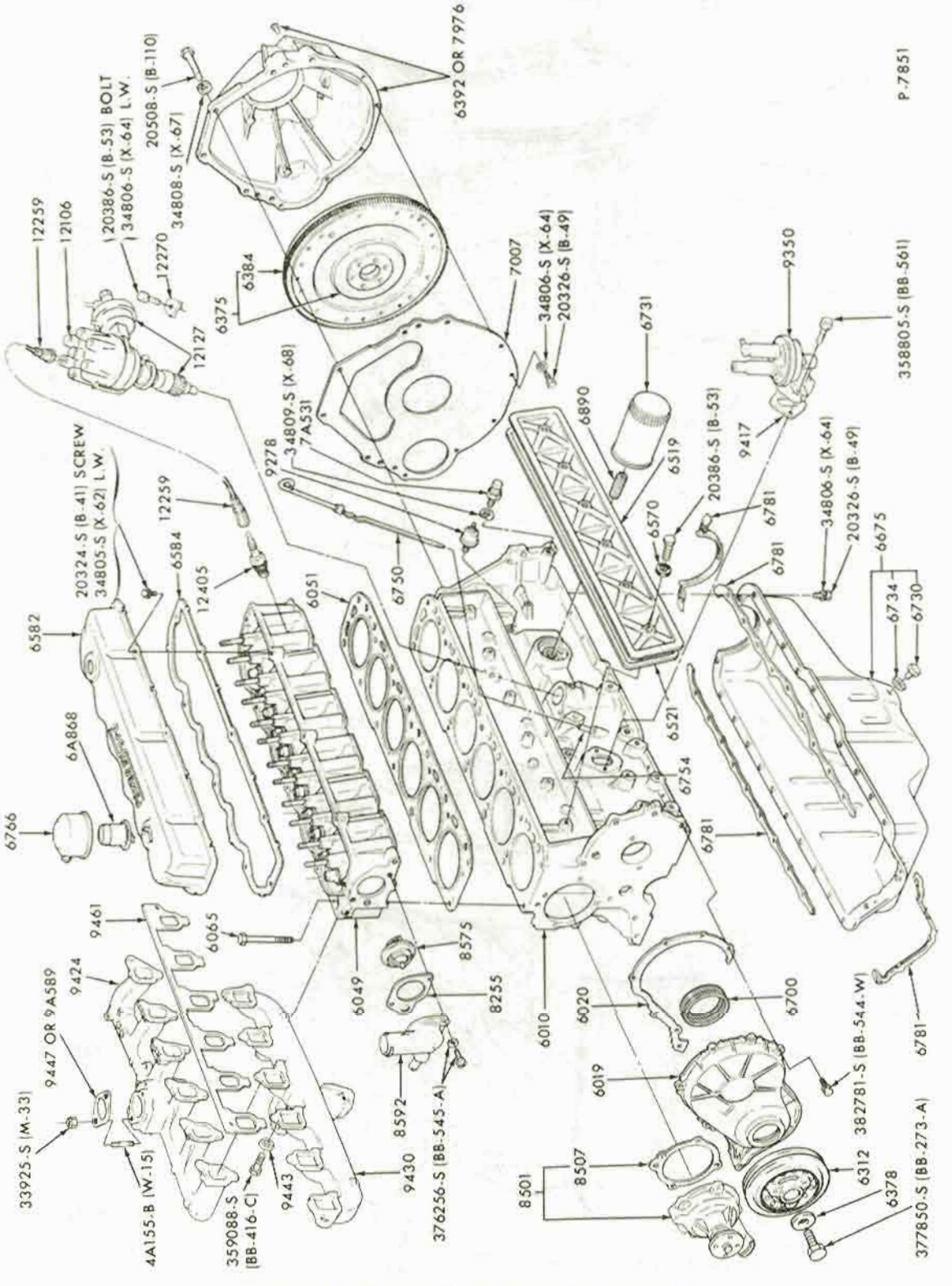

CYLINDER BLOCK and RELATED PARTS - EXTERNAL
6 CYLINDER 240 ENGINE
1965/72

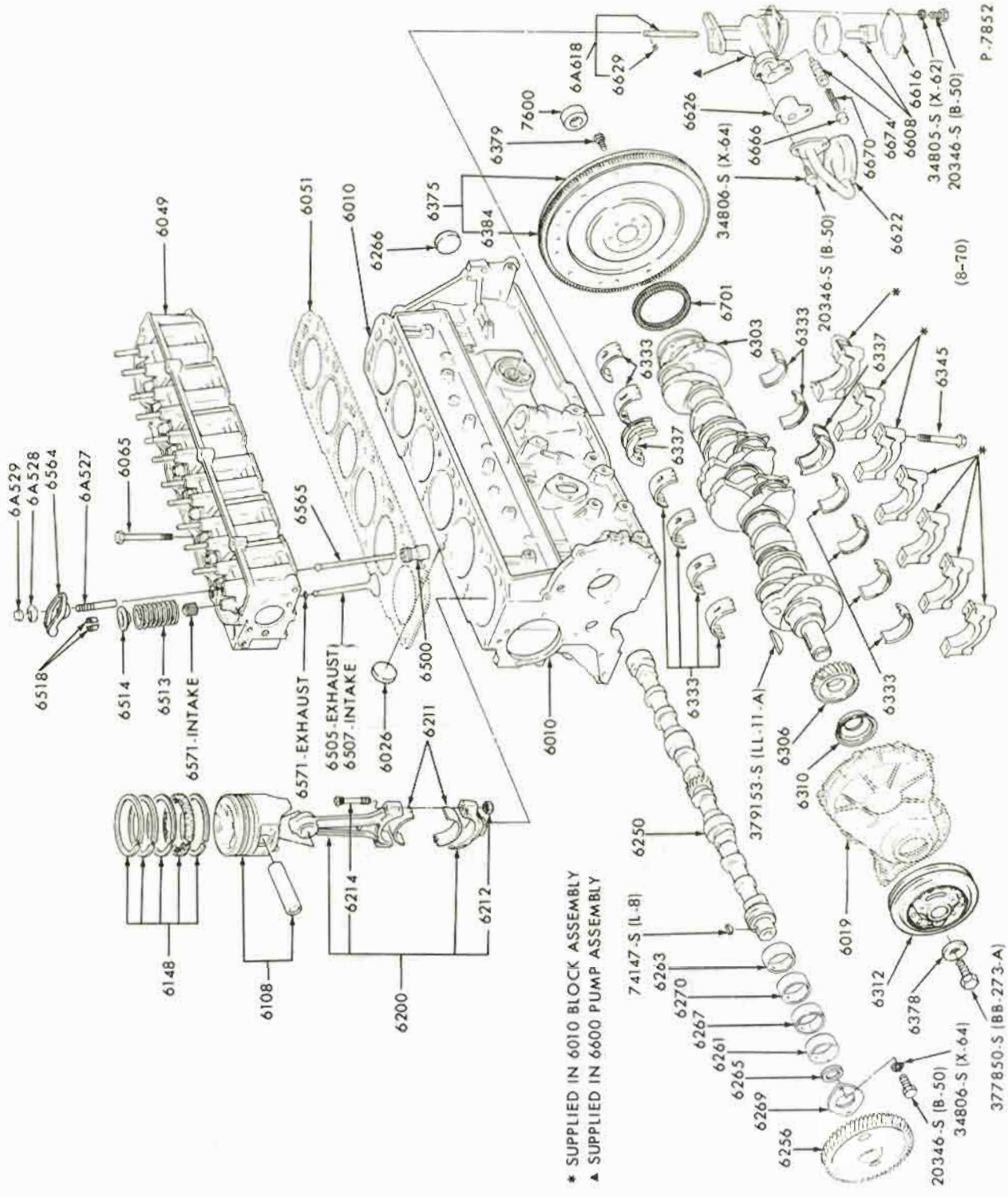

CYLINDER BLOCK and RELATED PARTS - INTERNAL
6 CYLINDER 240 ENGINE
1965/72

COPYRIGHT © 1975 — FORD MOTOR COMPANY — DEARBORN, MICHIGAN

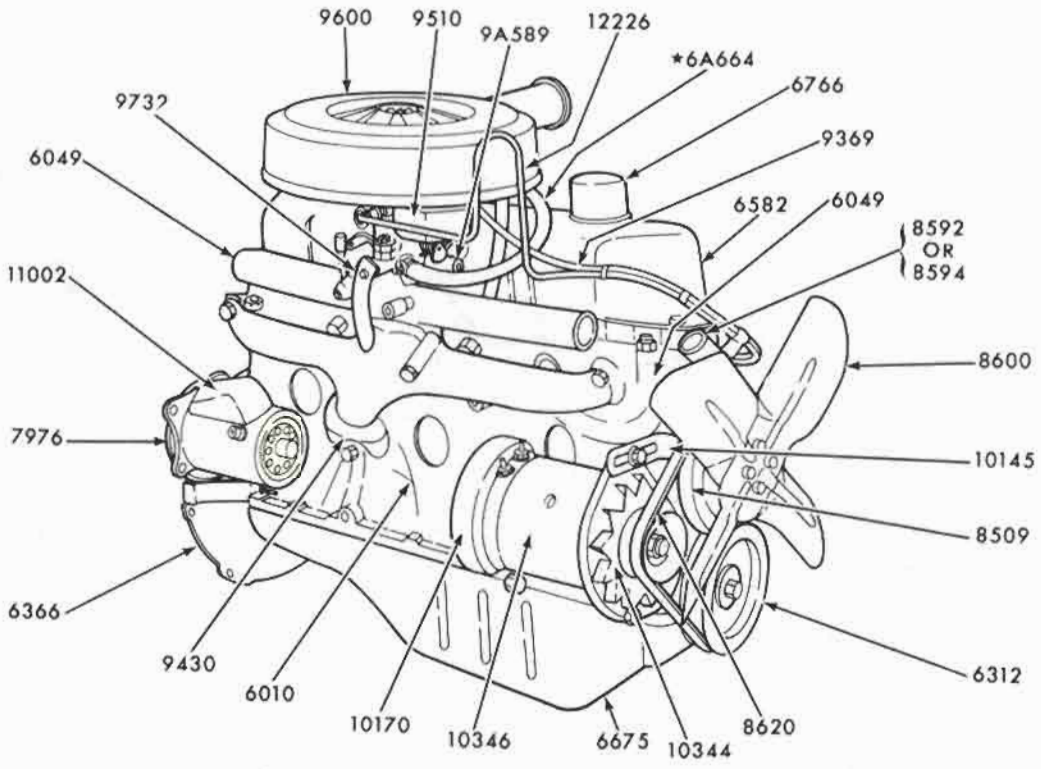

RIGHT-FRONT VIEW

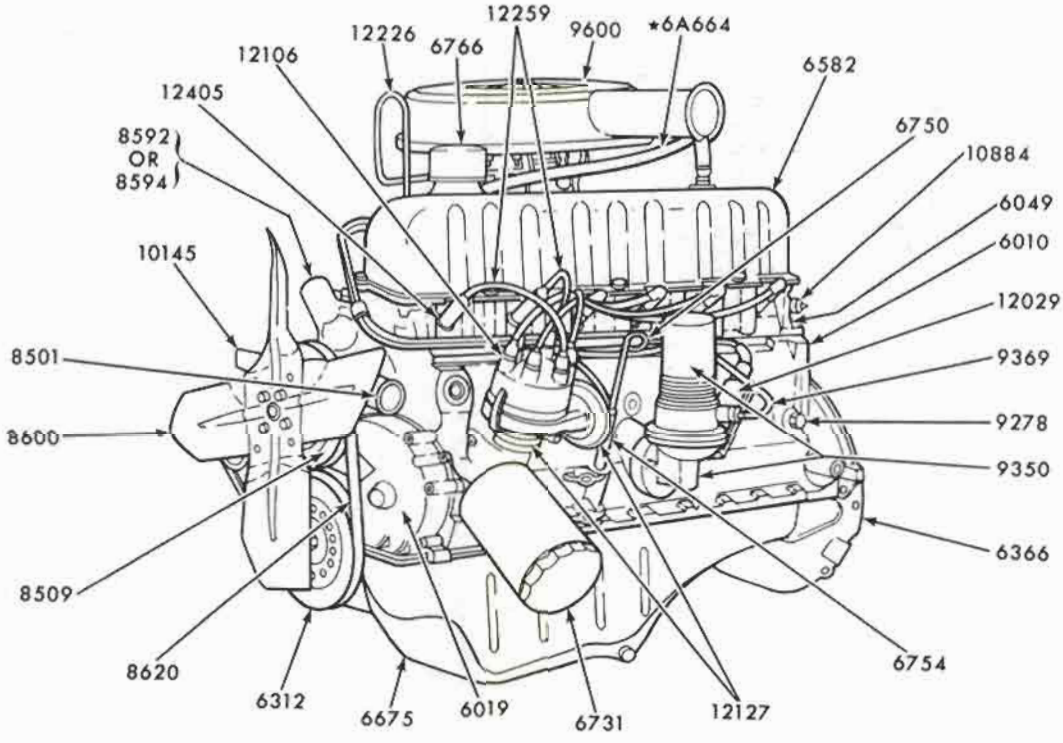

LEFT-FRONT VIEW

P-8398

ENGINE ASSEMBLY - 6 CYLINDER 170, 200 and 250 - TYPICAL
1965/72

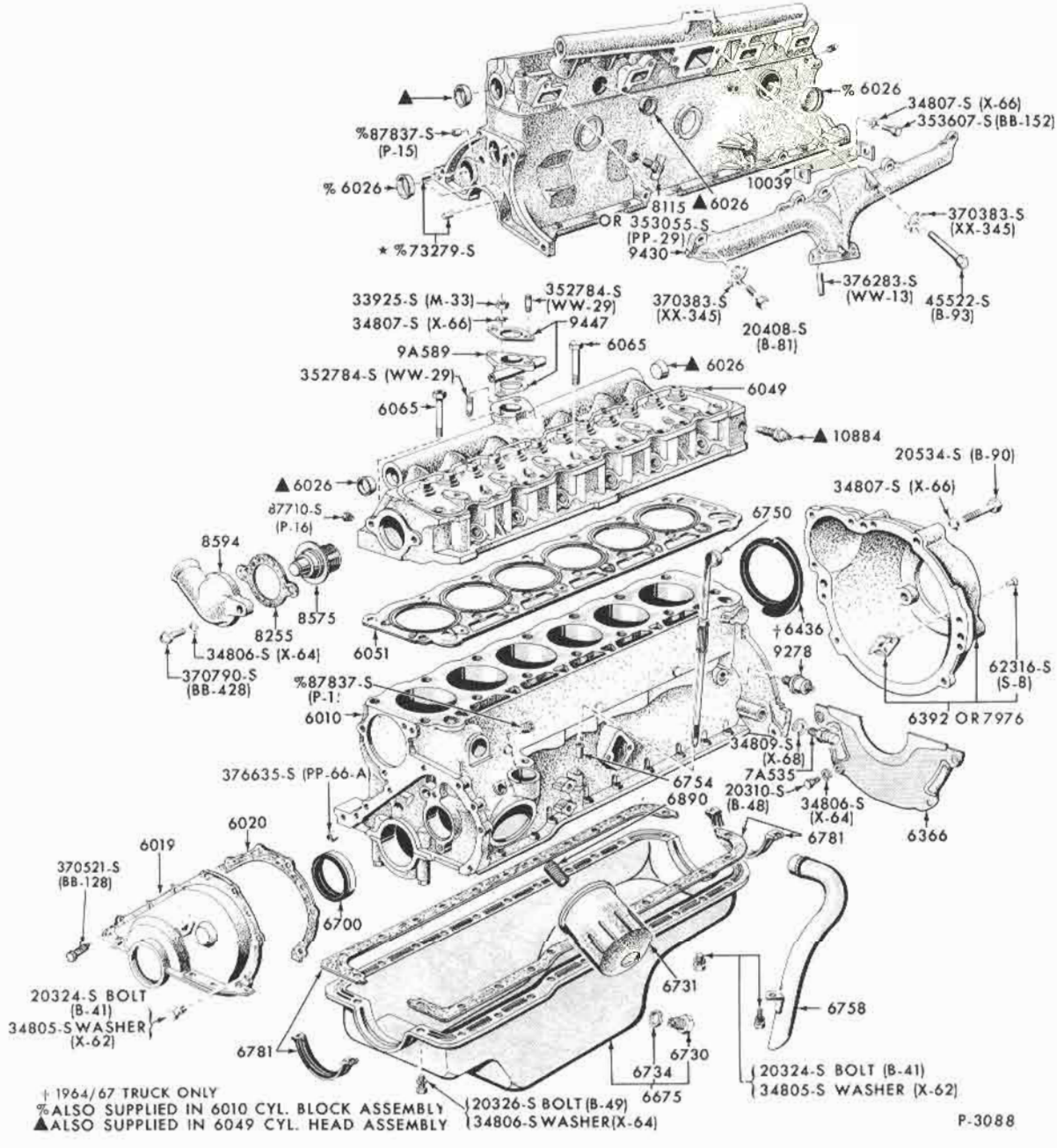

CYLINDER BLOCK and RELATED PARTS -
6 CYLINDER 170, 200 and 250 ENGINES -- TYPICAL
1965/72

COPYRIGHT © 1975 — FORD MOTOR COMPANY — DEARBORN, MICHIGAN

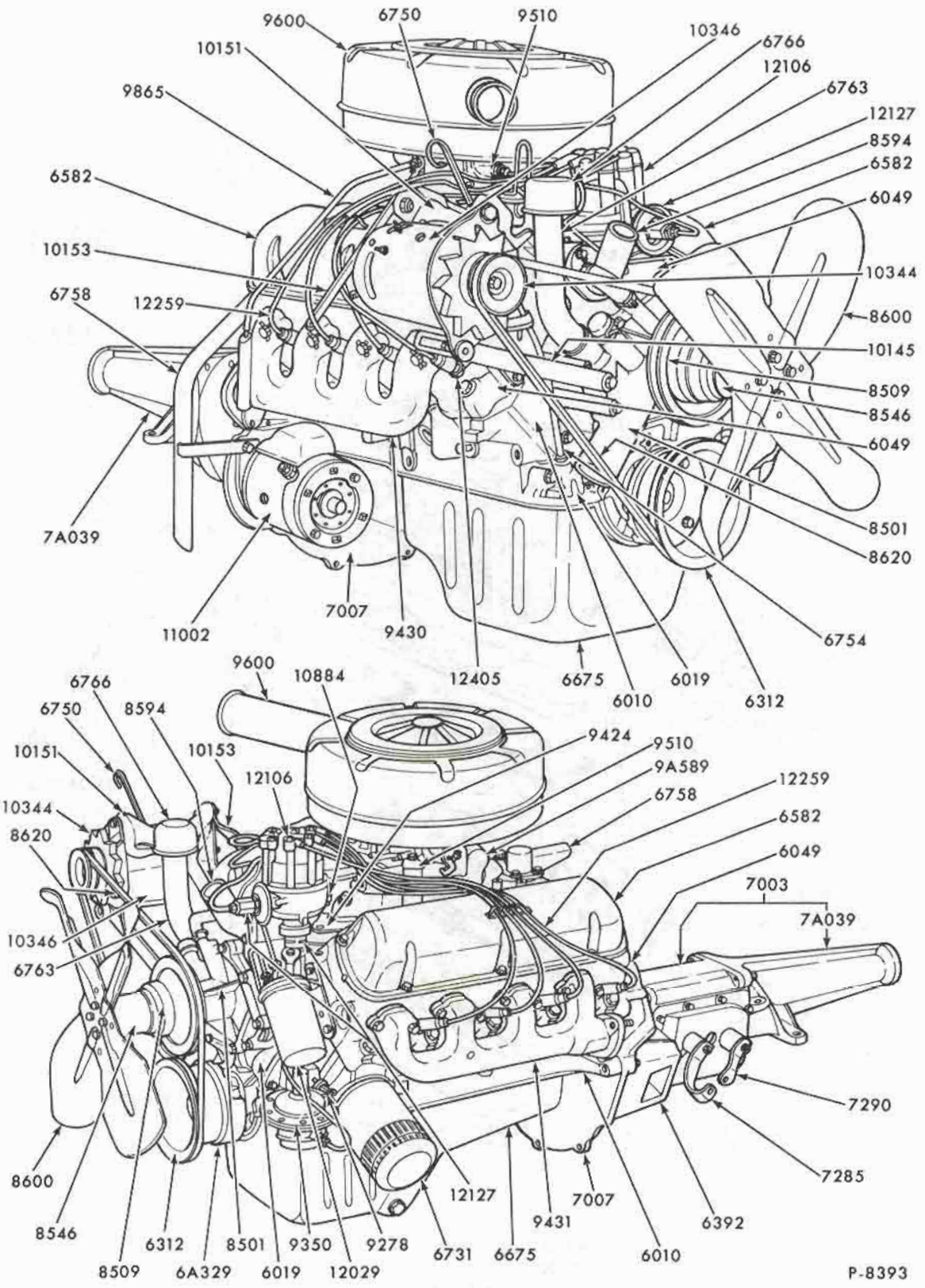

ENGINE ASSEMBLY - 8 CYLINDER 260 -- TYPICAL
1965

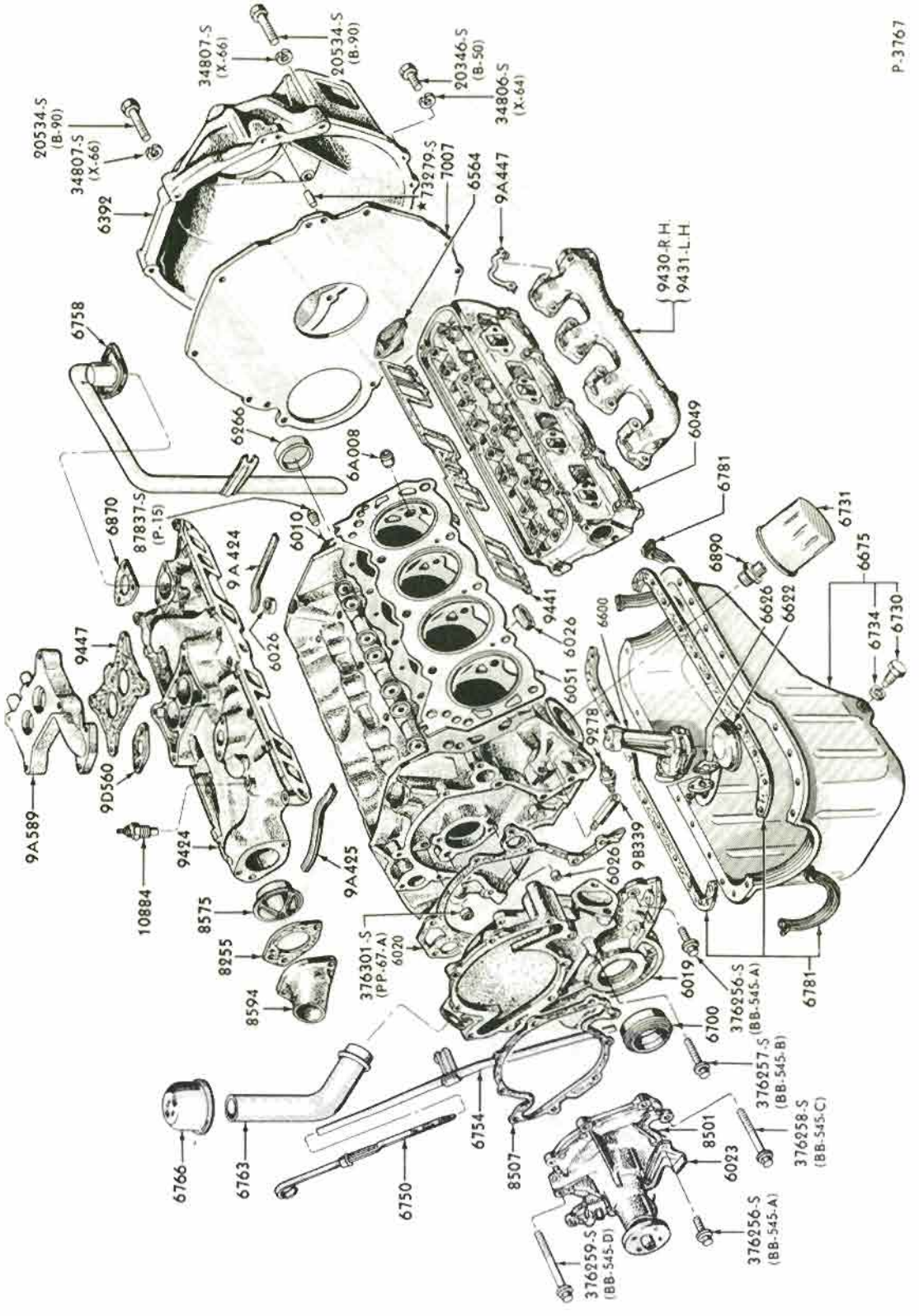

CYLINDER BLOCK and RELATED PARTS -
8 CYLINDER 260 and 289 ENGINES -- TYPICAL
1965/68

COPYRIGHT © 1975 — FORD MOTOR COMPANY — DEARBORN, MICHIGAN

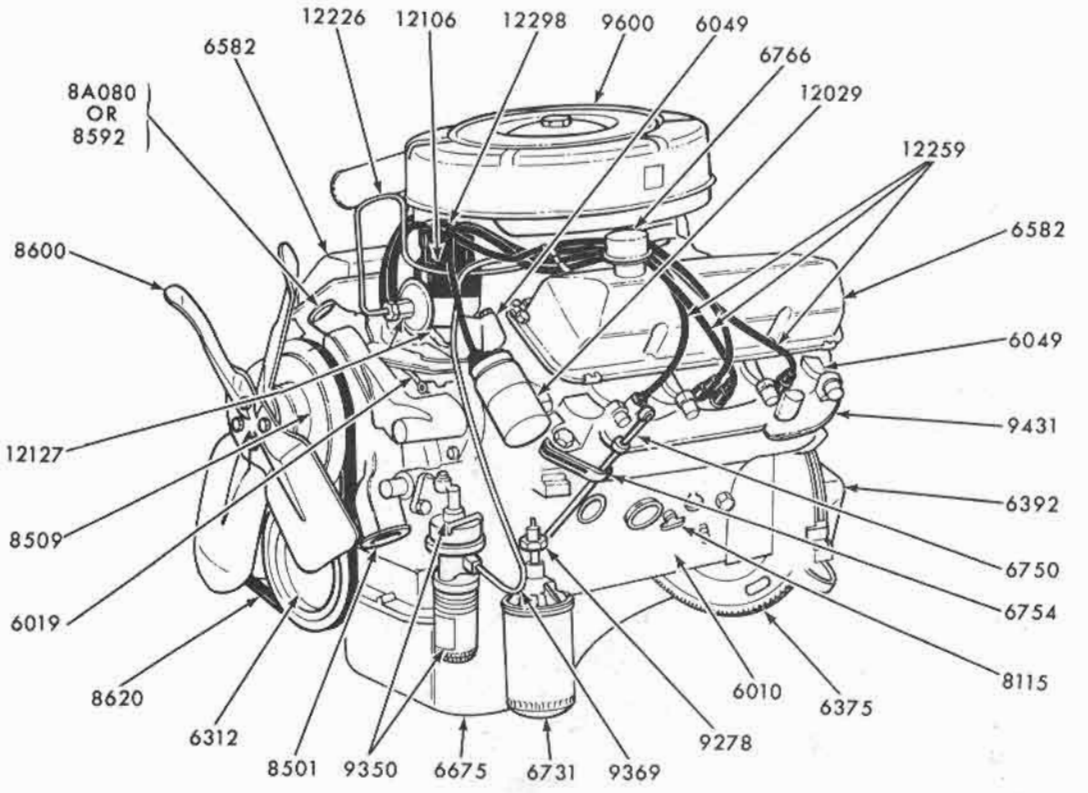

1965/67 LEFT—FRONT VIEW
(352, 390, 428-TYPICAL)

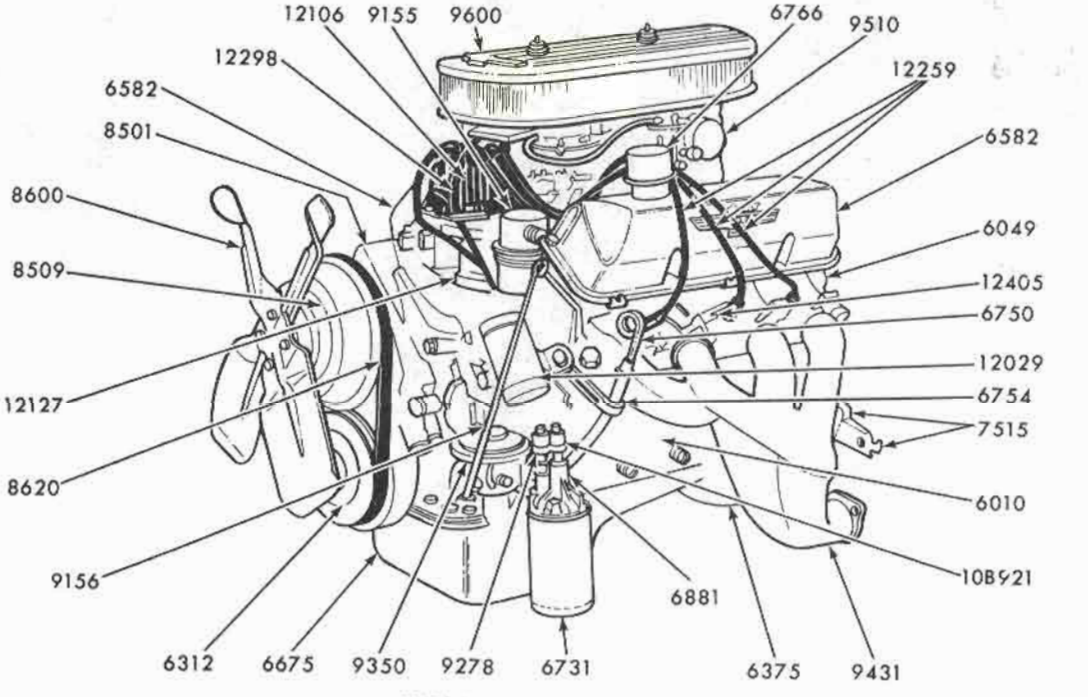

1965/68 LEFT—FRONT VIEW
(427 HI-PERFORMANCE-TYPICAL)

P-8397

1965/67 ENGINE ASSEMBLY - 8 CYLINDER 352, 390, and 428 - TYPICAL
1965/69 ENGINE ASSEMBLY - 8 CYLINDER 427 - TYPICAL

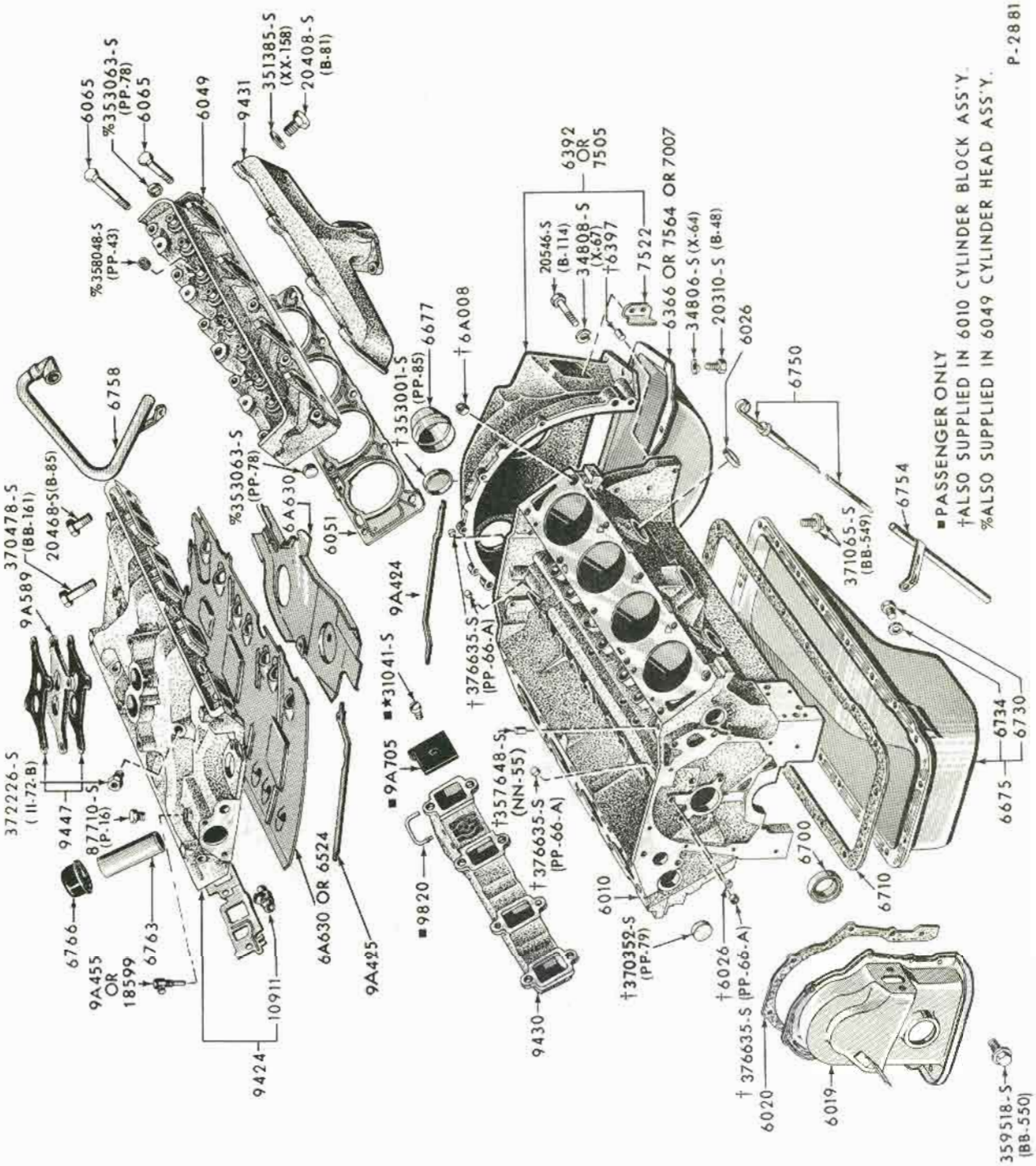

CYLINDER BLOCK and RELATED PARTS
8 CYLINDER 352, 390, 427 and 428 ENGINES - TYPICAL
1965/71

COPYRIGHT © 1975 — FORD MOTOR COMPANY — DEARBORN, MICHIGAN

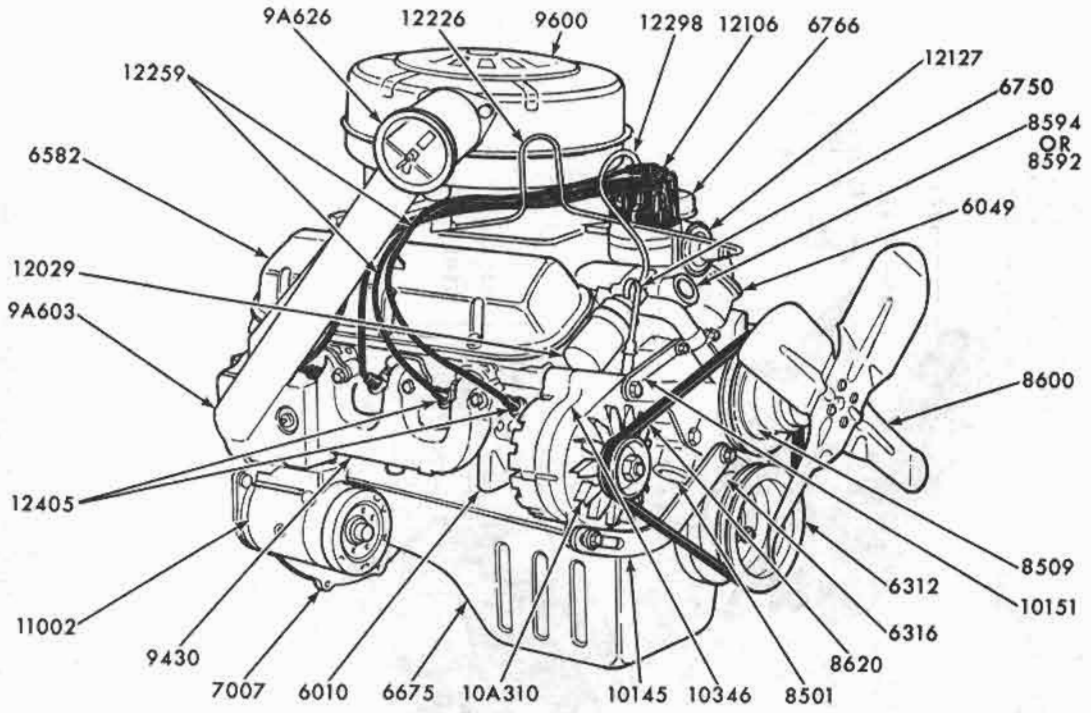

RIGHT-FRONT VIEW

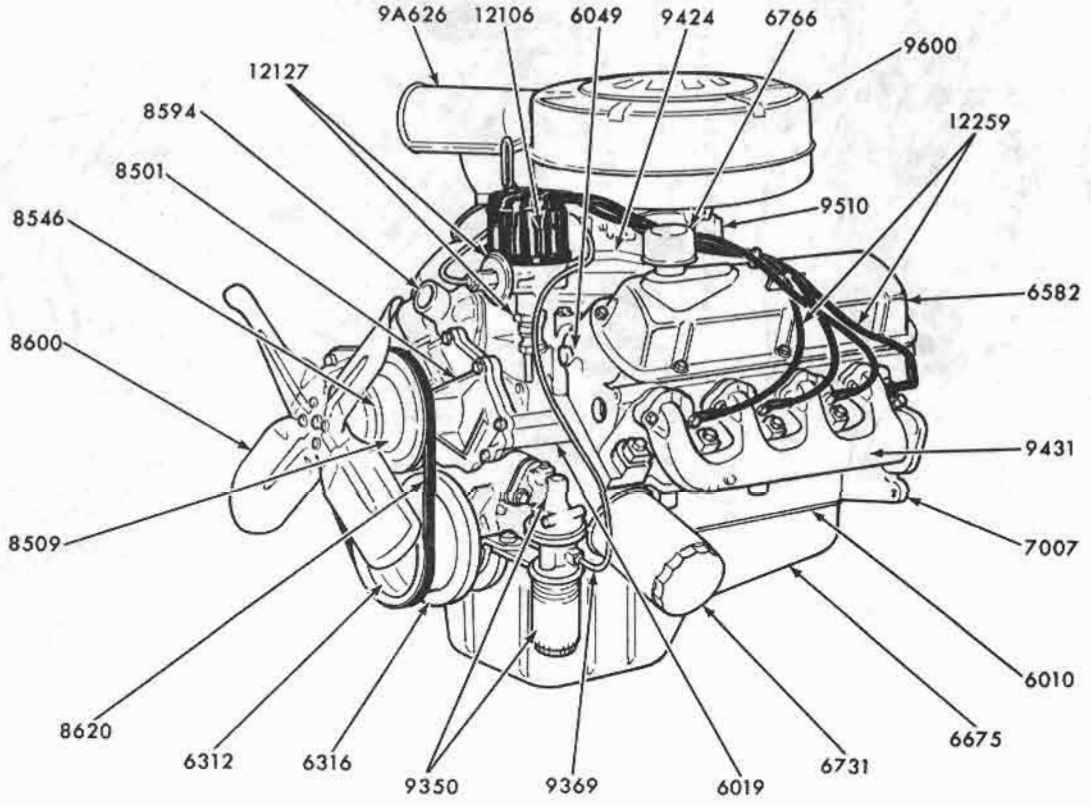

LEFT-FRONT VIEW

P-8396

ENGINE ASSEMBLY - 8 CYLINDER 289 - TYPICAL
1965/68

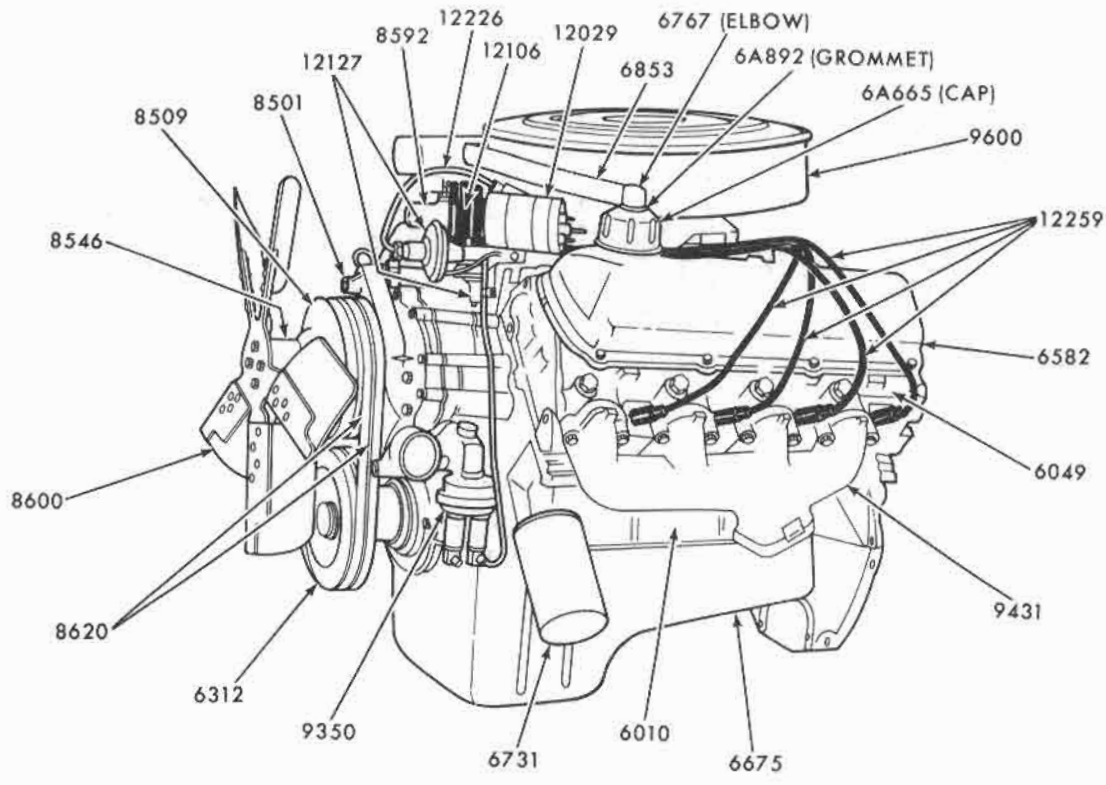

LEFT-FRONT VIEW

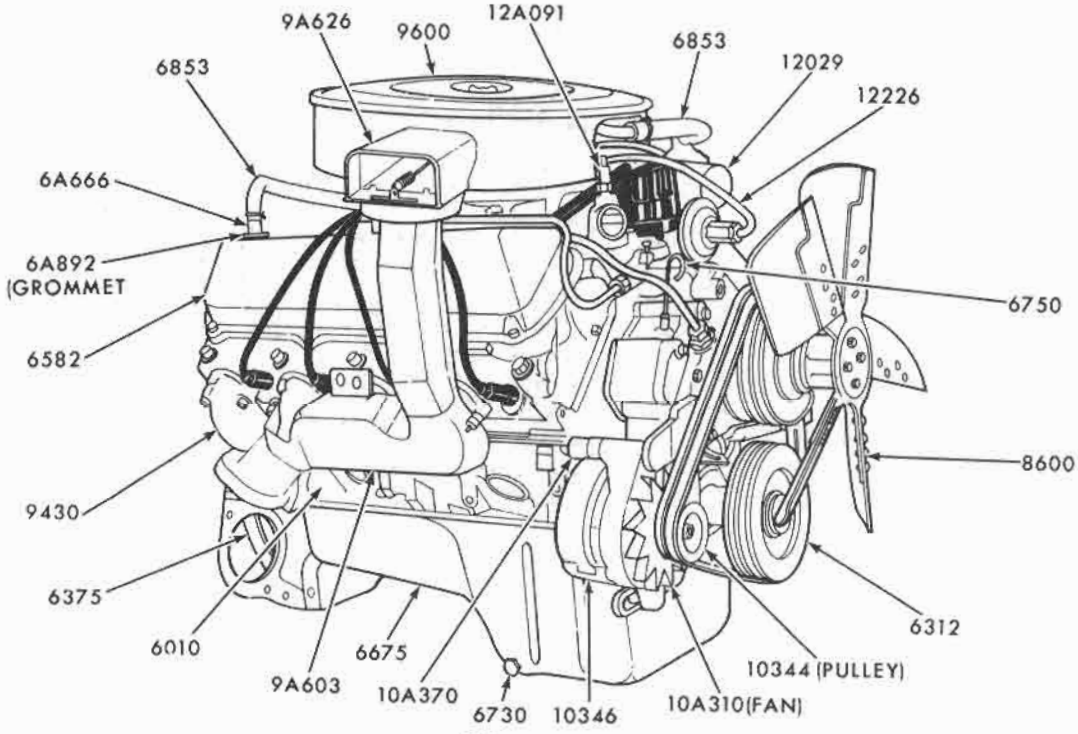

RIGHT-FRONT VIEW

P-8403

ENGINE ASSEMBLY - 8 CYLINDER 429,460
1968/72

COPYRIGHT © 1975 — FORD MOTOR COMPANY — DEARBORN, MICHIGAN

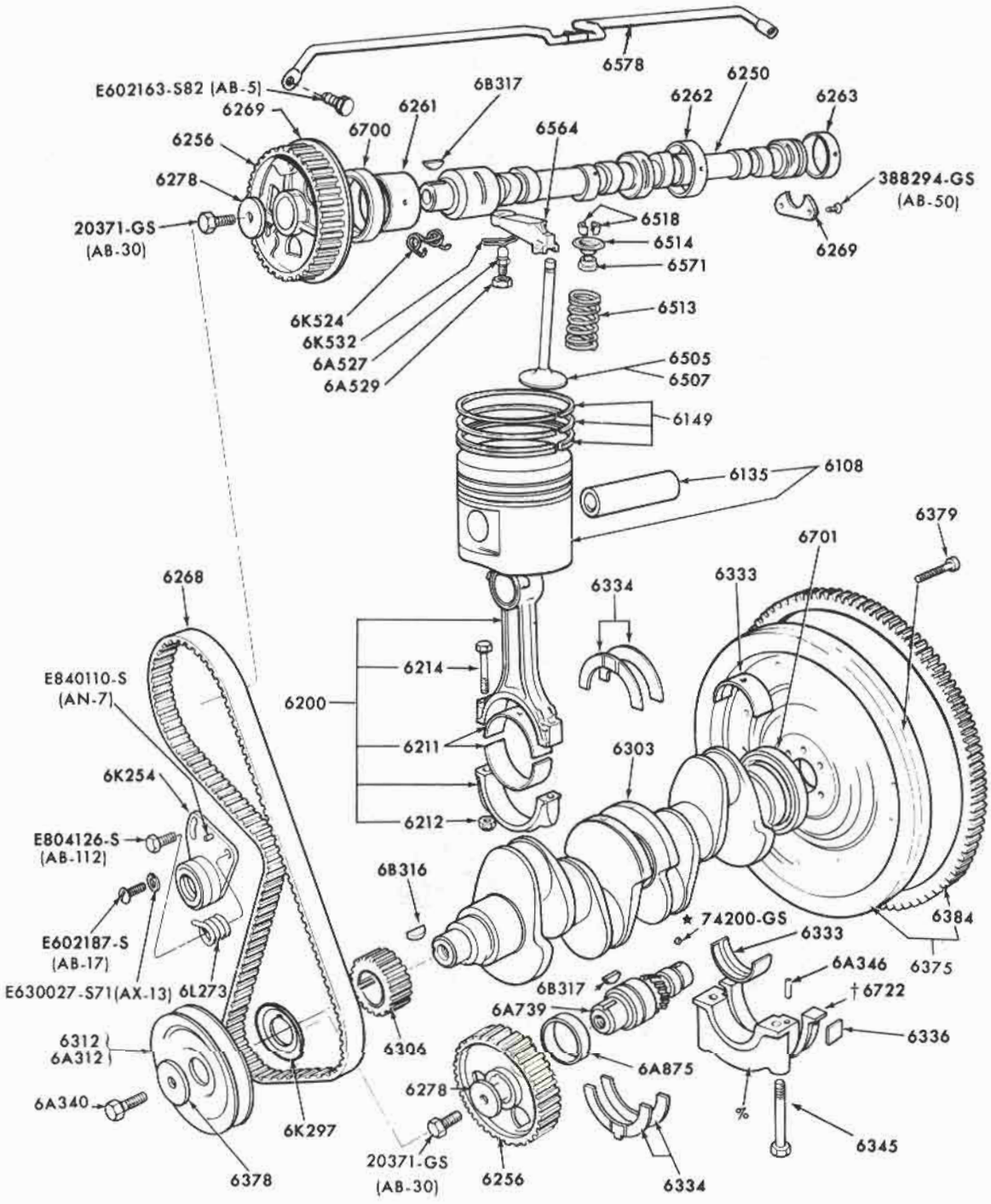

† SERVICED IN 6781 GASKET SET ONLY
% SERVICED IN 6010 ASSEMBLY

P-8039

ENGINE COMPONENTS - INTERNAL
1971/72 4 CYLINDER 122 (2000 cc) ENGINE

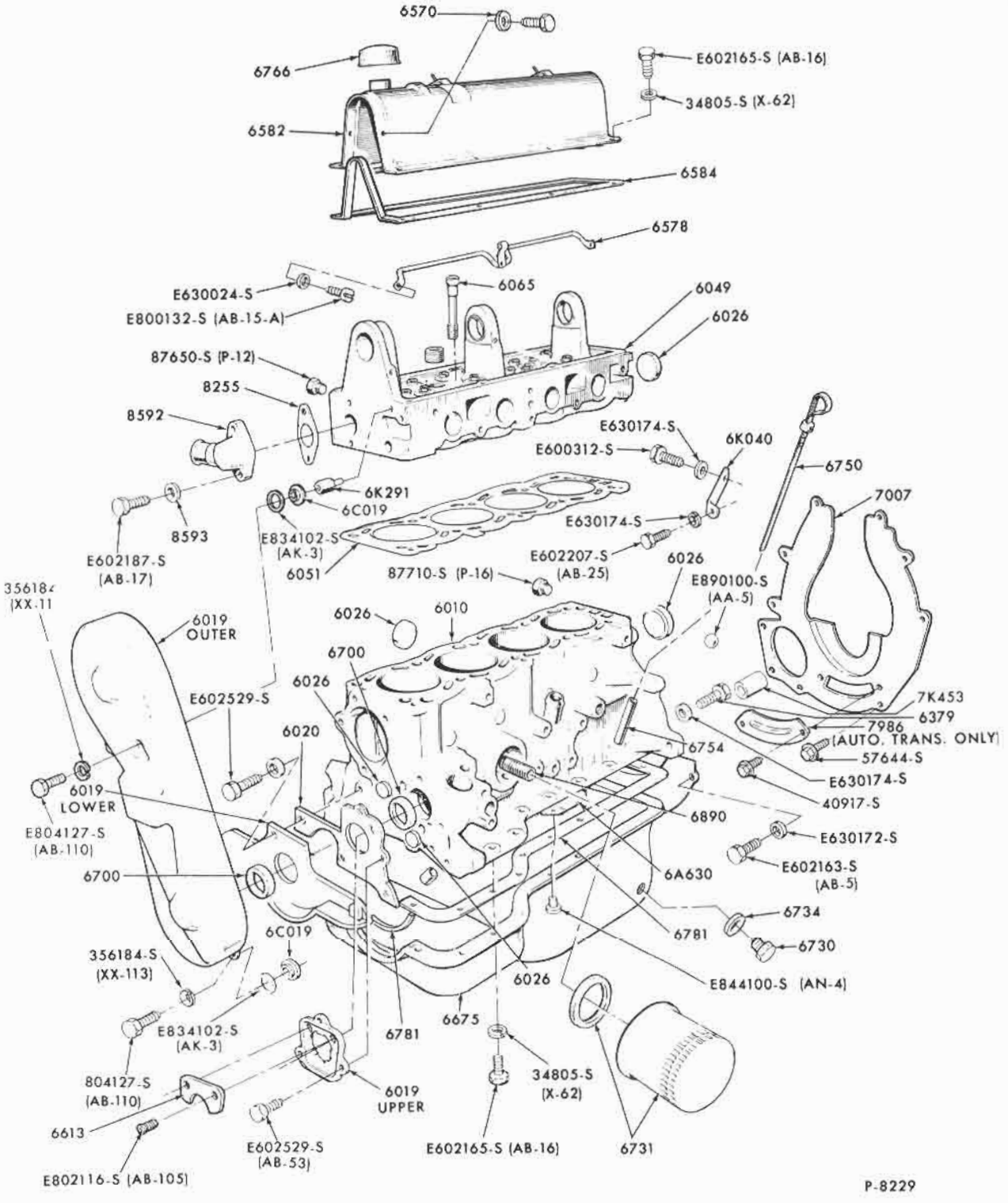

ENGINE COMPONENTS - EXTERNAL
1971/72 4 CYLINDER 122 (2000 cc) ENGINE

COPYRIGHT © 1975 — FORD MOTOR COMPANY — DEARBORN, MICHIGAN

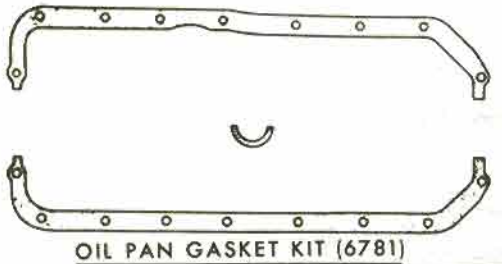

OIL PAN GASKET KIT (6781)

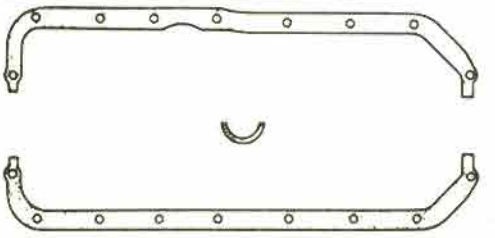

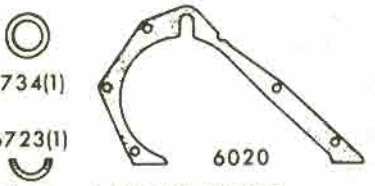

6734(1)

★6723(1)

6020

OIL PAN and FRONT COVER GASKET KIT (6K600)

★12410(4)

34443-S(M-79)(2)

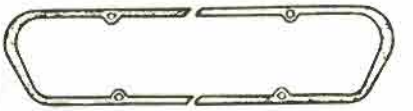

6584

★2733E-9448-A

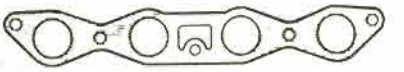

★2733E-9441-A

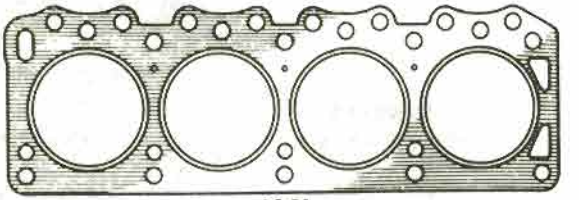

6051

6571 (8)

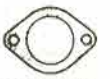

★9447(1)

★8255(1)

★2733E-9448-B(2)

VALVE GRIND GASKET KIT(6079)

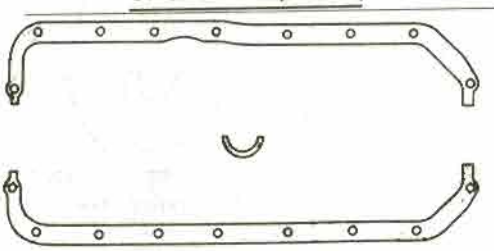

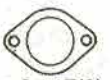

★9447(1)

★8255(1)

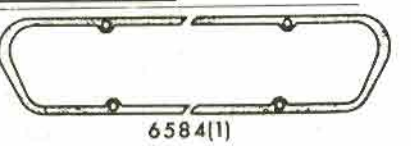

6584(1)

★2733E-9448-A(1)

★2733E-9441-A(1)

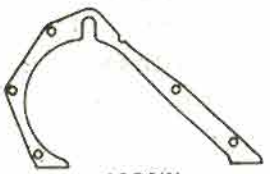

6020(1)

6344(1)

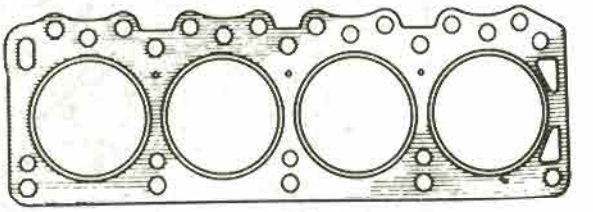

6051

6571(8)

8507(1)

★18688(1)

9417

6659(1)

★2733E-9448-B(2)

★6723(1)

6734(1)

34443-S(M-79)(2)

★12410(4)

P-7597

GASKET KIT - COMPLETE ENGINE (6008)
1971/72 4 CYLINDER 98 ENGINE

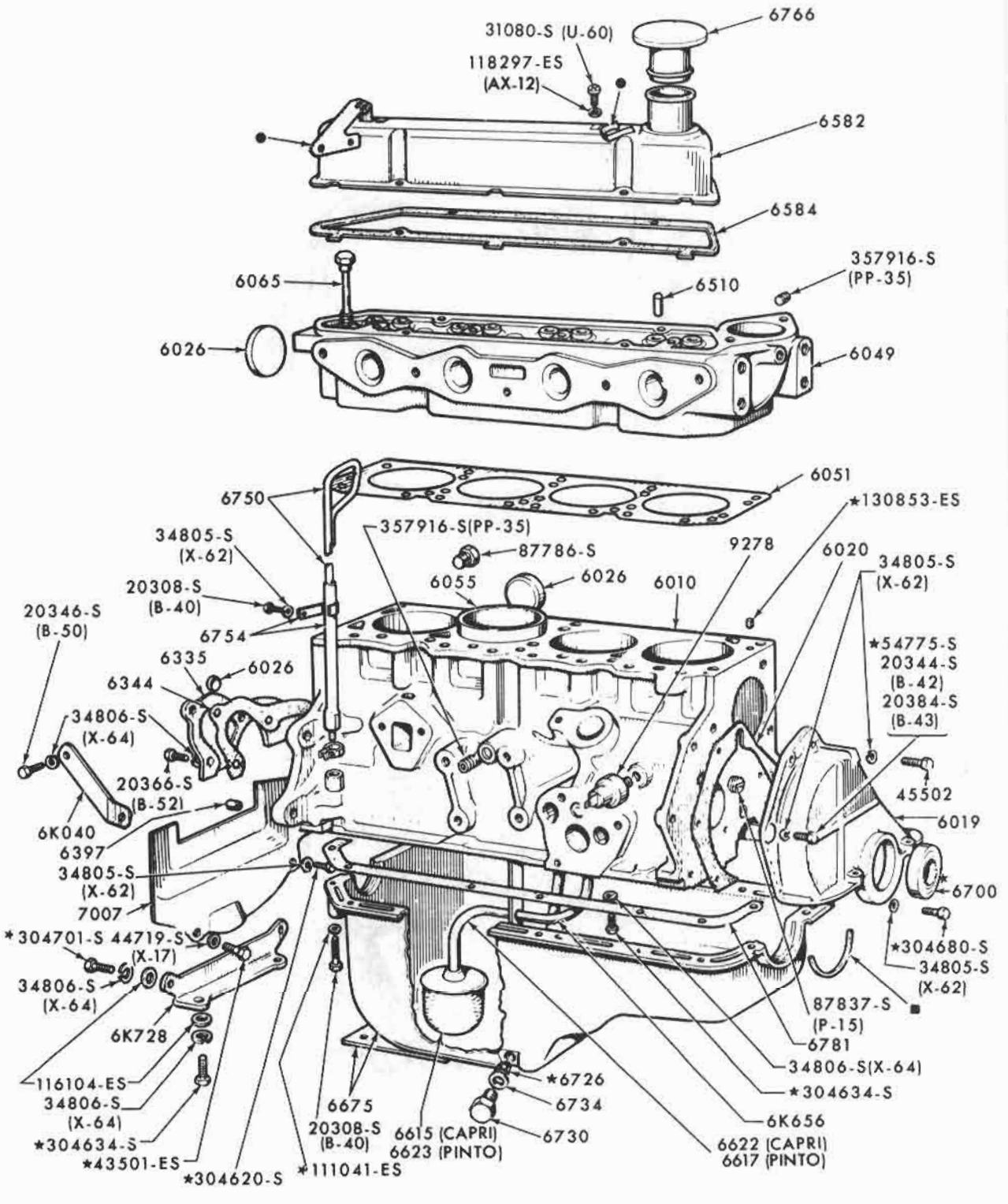

● SERVICED ONLY IN ASSEMBLY-REFER TO GROUP 6582
■ SERVICED ONLY IN KIT-REFER TO GROUP 6781

P-7593

ENGINE PARTS - EXTERNAL
1971/72 4 CYLINDER 98 ENGINE

COPYRIGHT © 1975 — FORD MOTOR COMPANY — DEARBORN, MICHIGAN

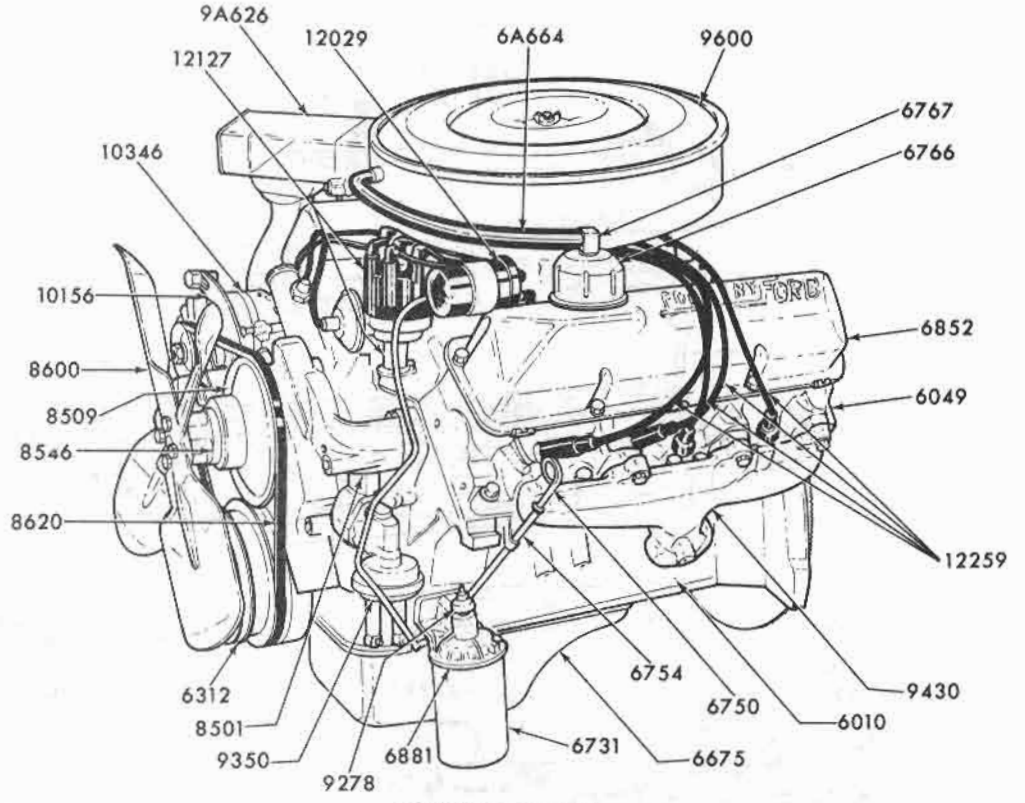

LEFT FRONT VIEW

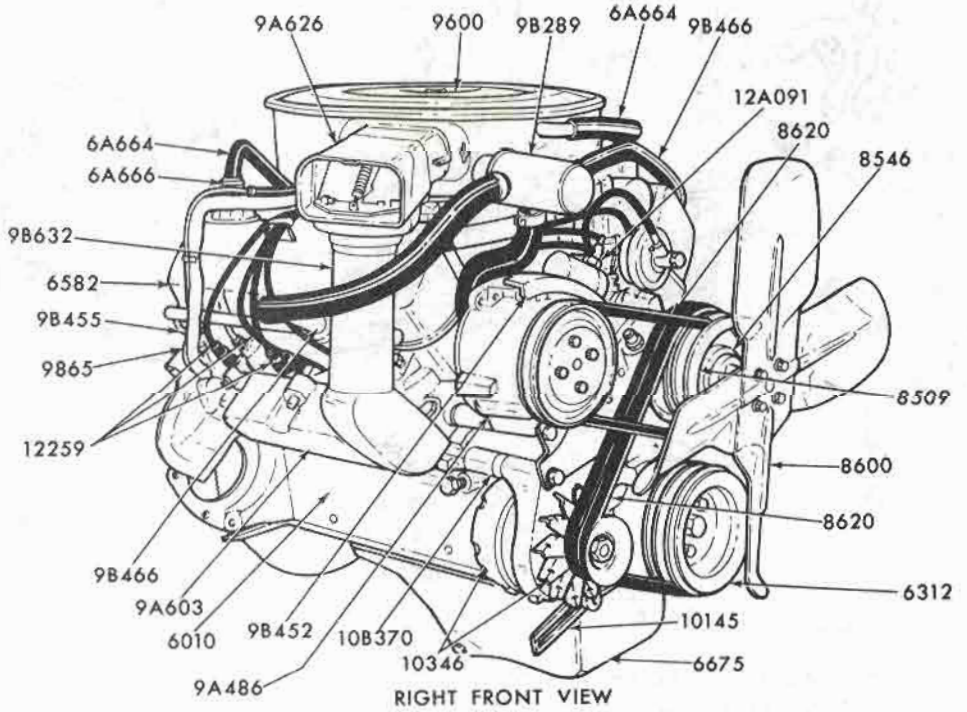

RIGHT FRONT VIEW

P-8371

ENGINE ASSEMBLY - 8 CYLINDER 390 and 428 - TYPICAL
1968/71

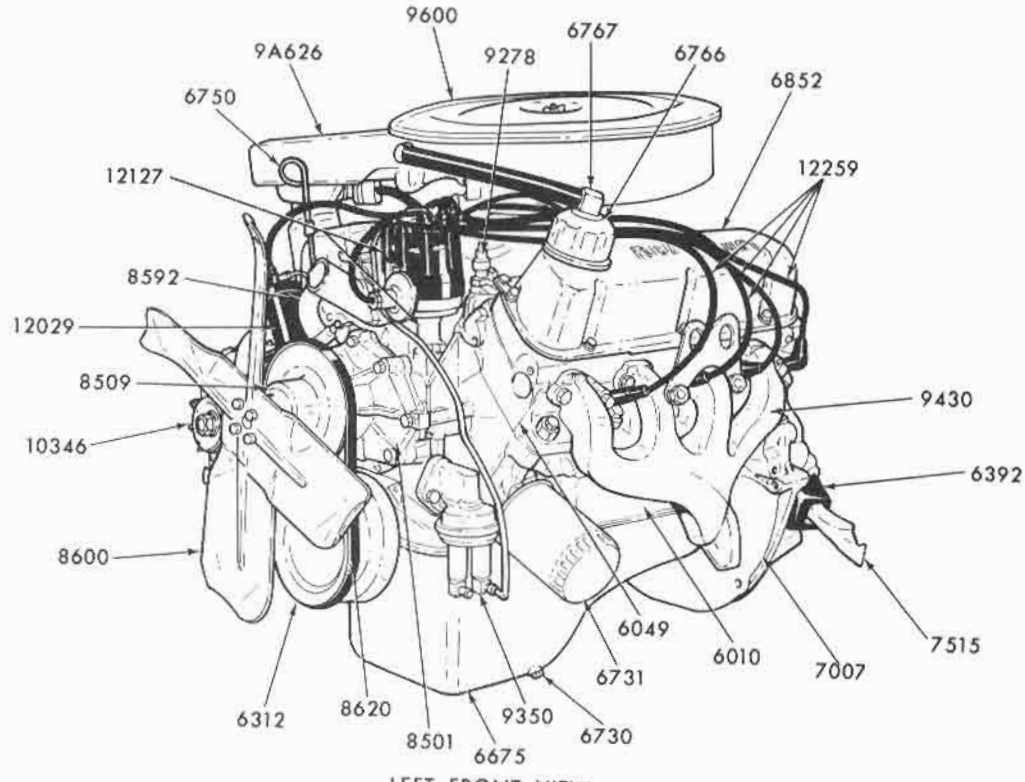

LEFT FRONT VIEW

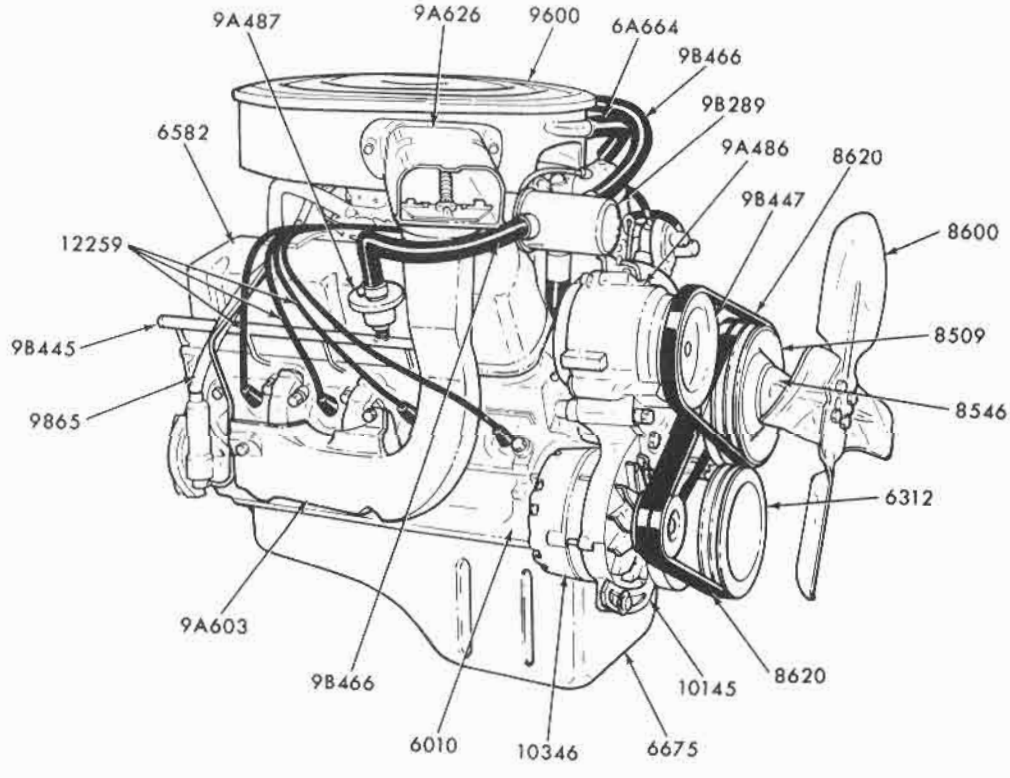

P-8372

ENGINE ASSEMBLY - 8 CYLINDER 302, 351 and 400 - TYPICAL
1968/72

COPYRIGHT © 1975 — FORD MOTOR COMPANY — DEARBORN, MICHIGAN

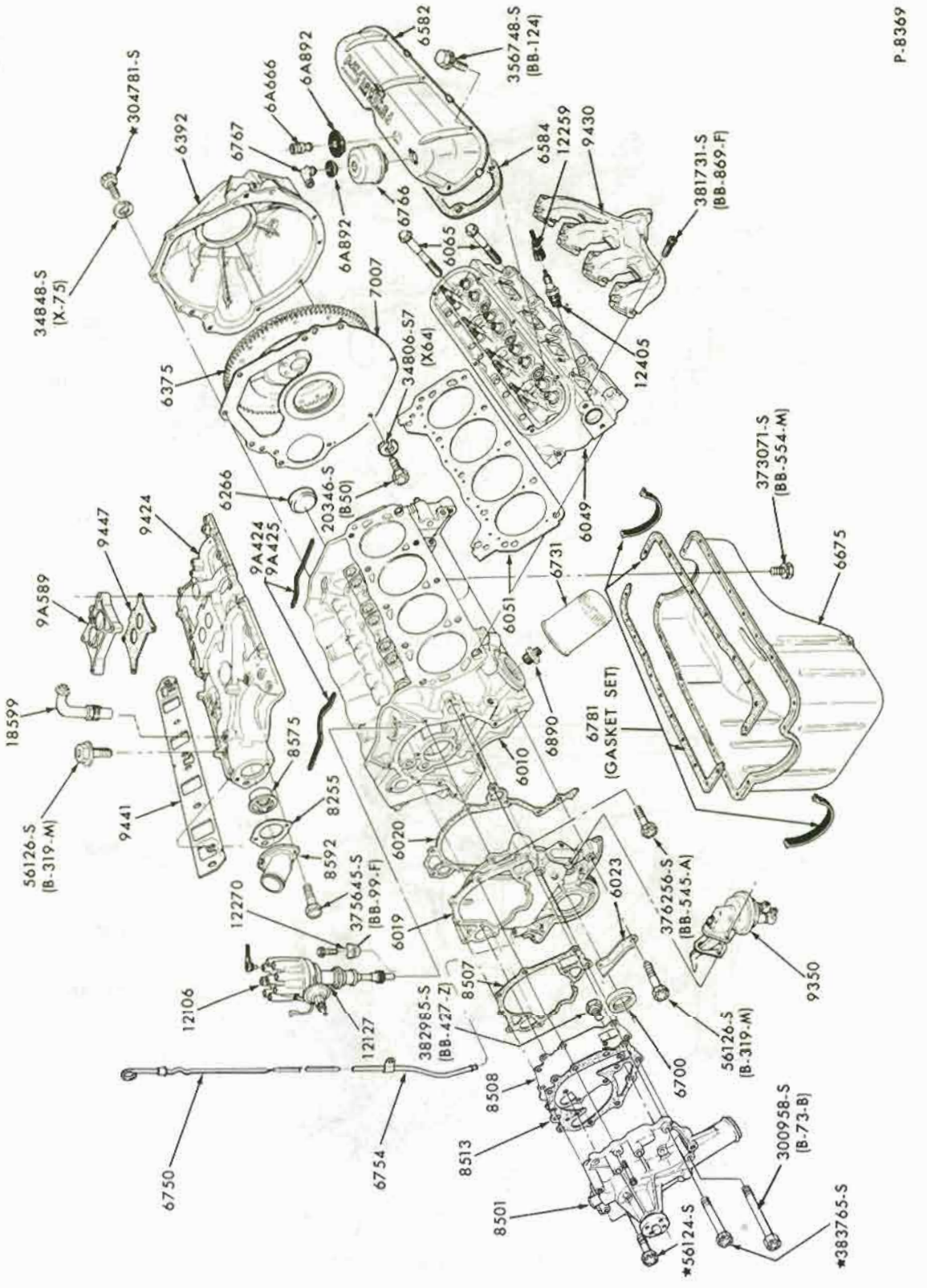

CYLINDER BLOCK and RELATED PARTS - EXTERNAL
1968/72 8 CYLINDER 429 ENGINE
1969/72 8 CYLINDER 302, 351-W and 460 ENGINES

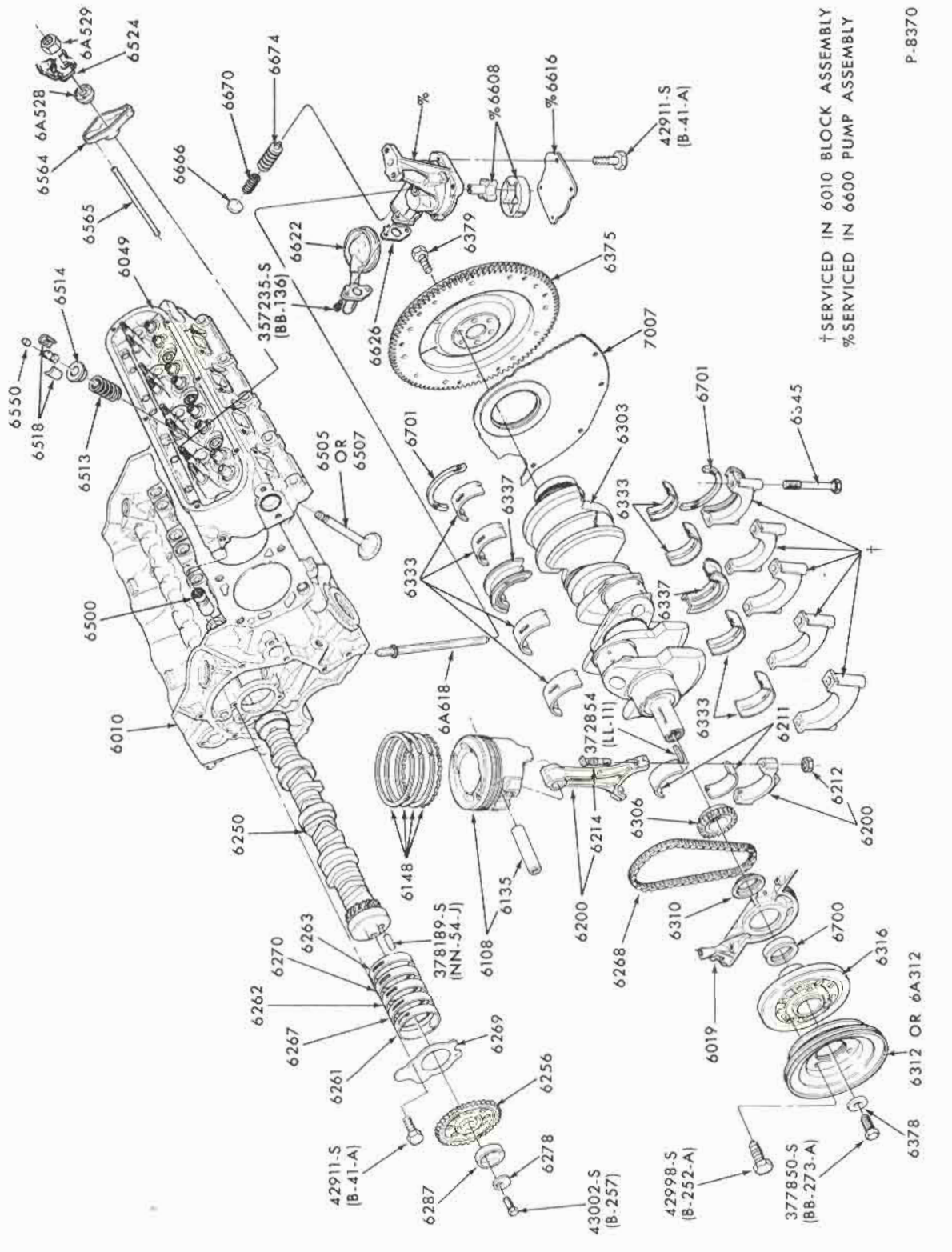

CYLINDER BLOCK and RELATED PARTS - INTERNAL
1968/72 8 CYLINDER 429 ENGINE
1969/72 8 CYLINDER 302, 351-W and 460 ENGINES

COPYRIGHT © 1975 — FORD MOTOR COMPANY — DEARBORN, MICHIGAN

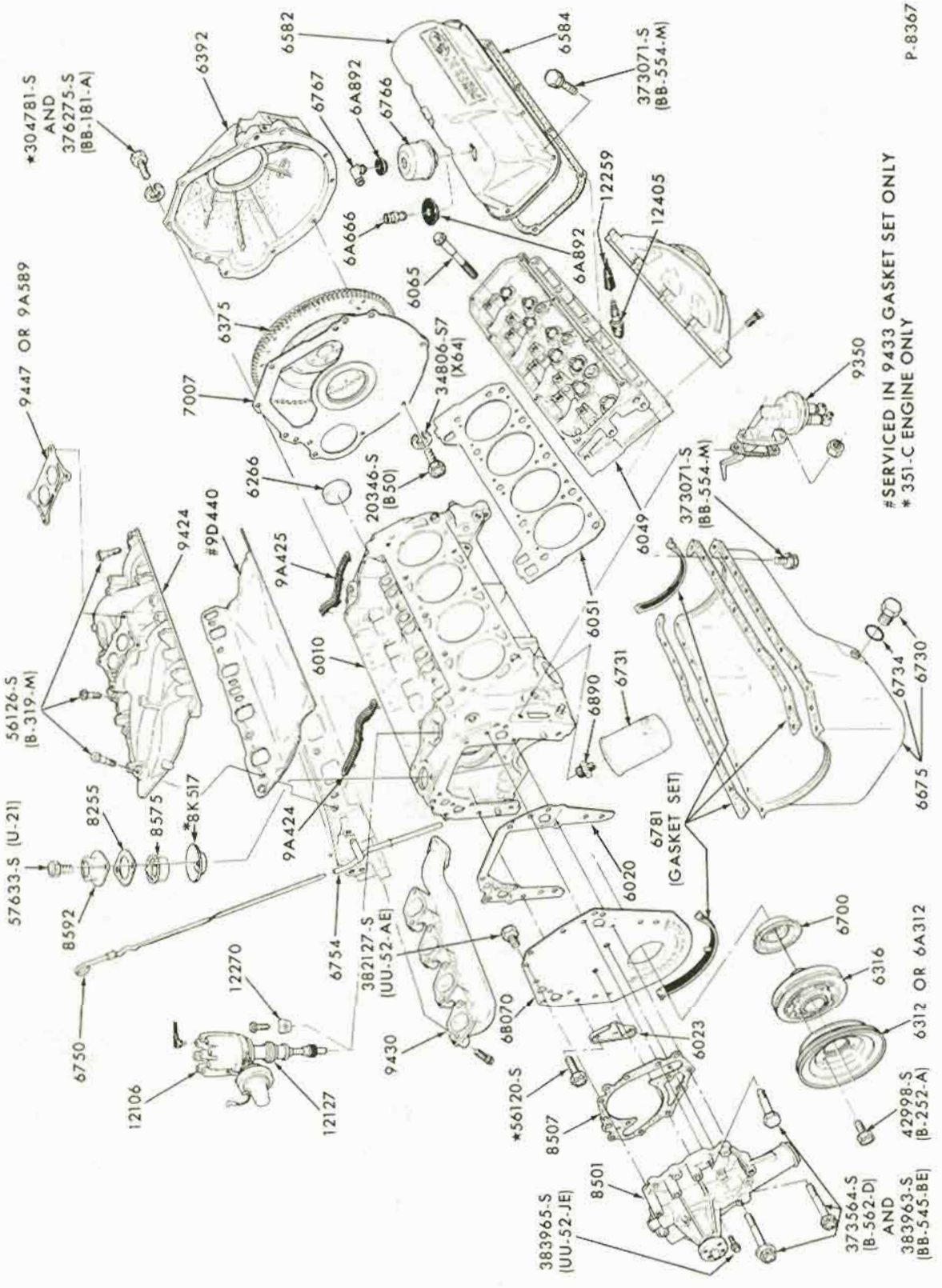

CYLINDER BLOCK and RELATED PARTS-EXTERNAL
1970/72 8 CYLINDER 351-C,400 ENGINES

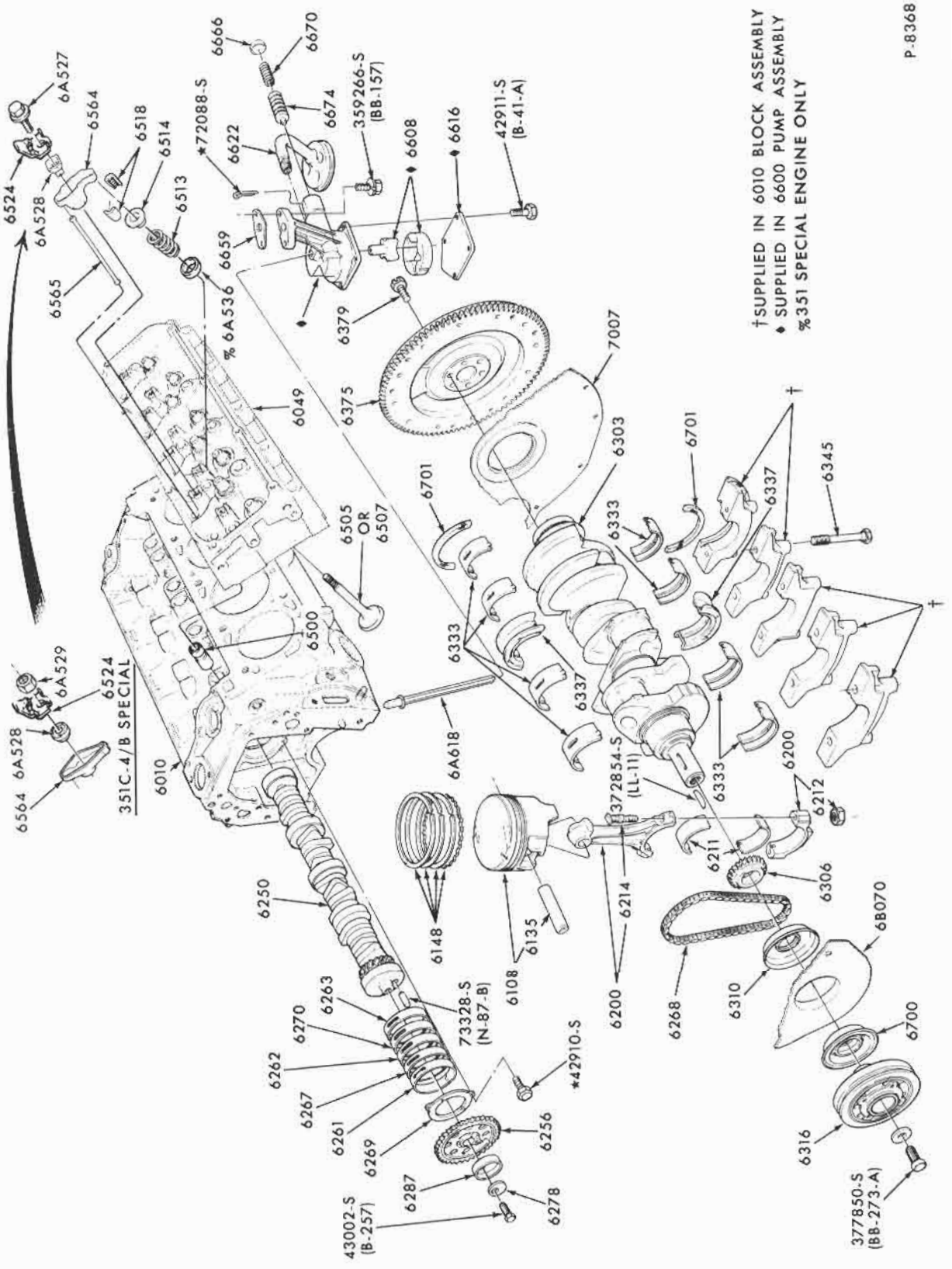

CYLINDER BLOCK and RELATED PARTS-INTERNAL
1970/72 8 CYLINDER 351-C,400 ENGINES

COPYRIGHT © 1975 — FORD MOTOR COMPANY — DEARBORN, MICHIGAN

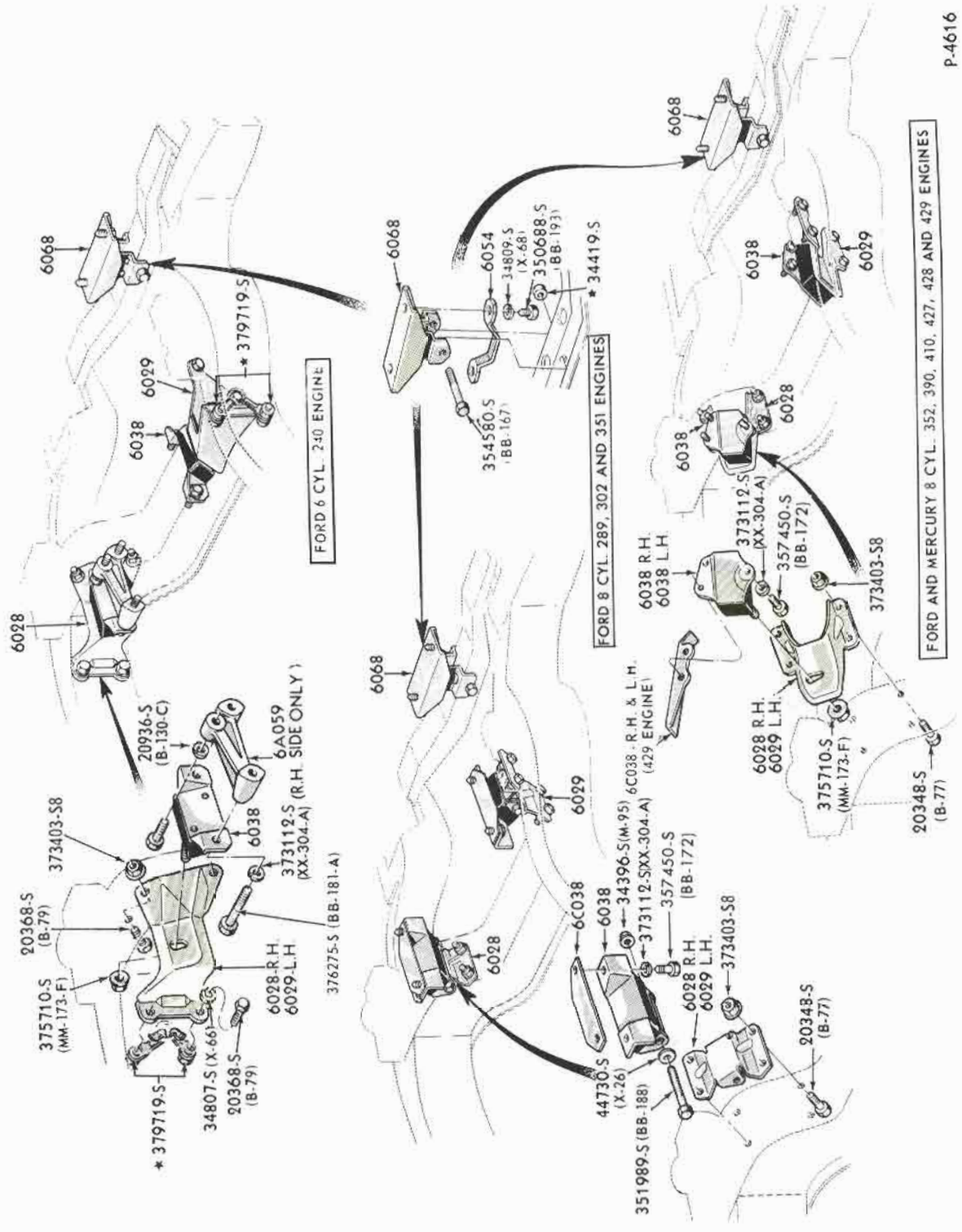

ENGINE SUPPORTS, INSULATORS and RELATED PARTS - FRONT and REAR
1965/70 FORD - 6 CYLINDER 240 and 8 CYLINDER 289, 302, 351, 352, 390, 427, 428, 429

COPYRIGHT © 1975 — FORD MOTOR COMPANY — DEARBORN, MICHIGAN

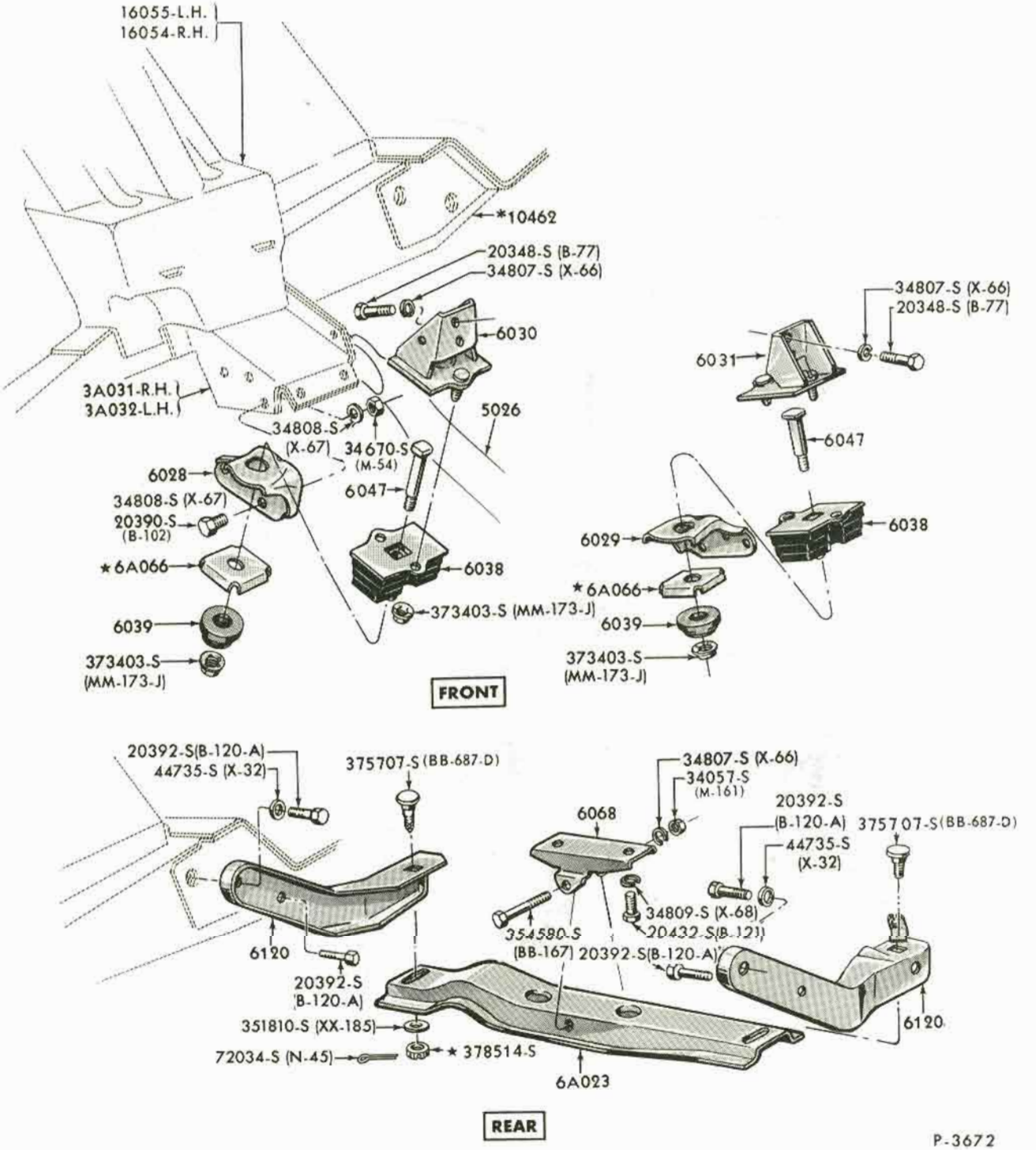

ENGINE SUPPORTS, INSULATORS and RELATED PARTS - FRONT and REAR -- TYPICAL
1965 FAIRLANE - 6 CYLINDER 200

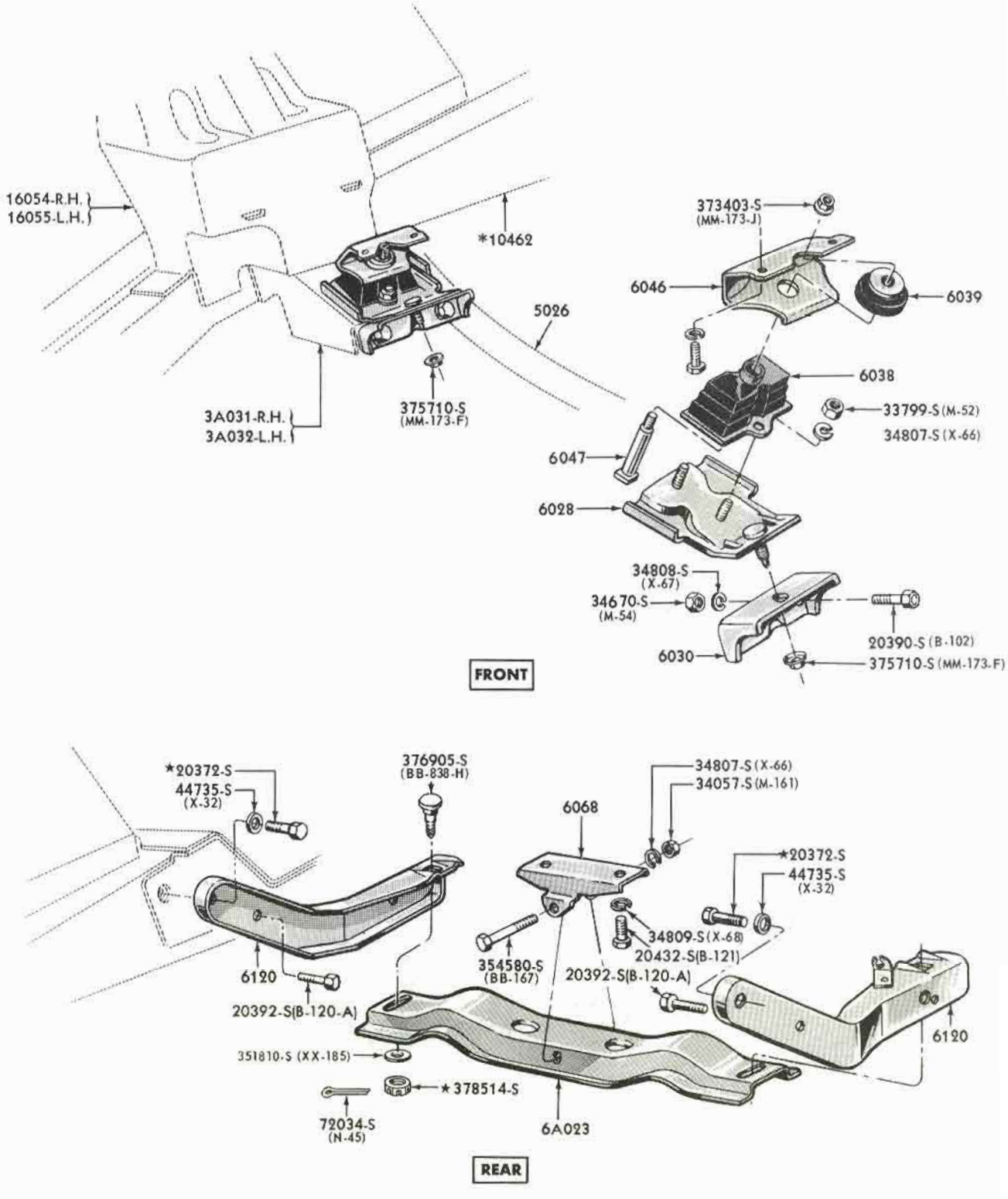

P-3673

ENGINE SUPPORTS, INSULATORS and RELATED PARTS - FRONT and REAR
1965 FAIRLANE - 8 CYLINDER 289

COPYRIGHT © 1975 — FORD MOTOR COMPANY — DEARBORN, MICHIGAN

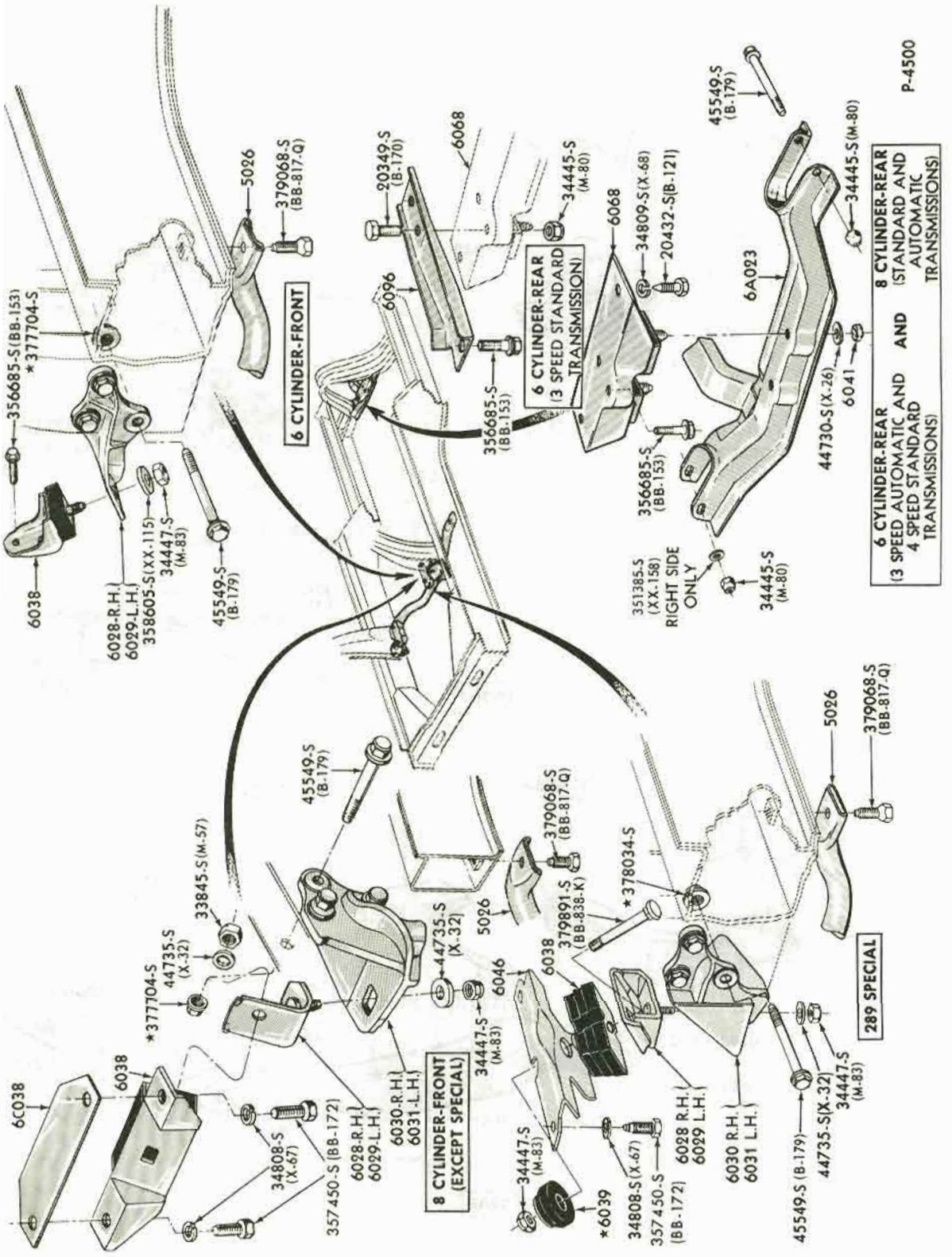

ENGINE SUPPORTS, INSULATORS and RELATED PARTS - FRONT and REAR
1965/66 MUSTANG - 6 CYLINDER 170, 200 and 8 CYLINDER 260, 289

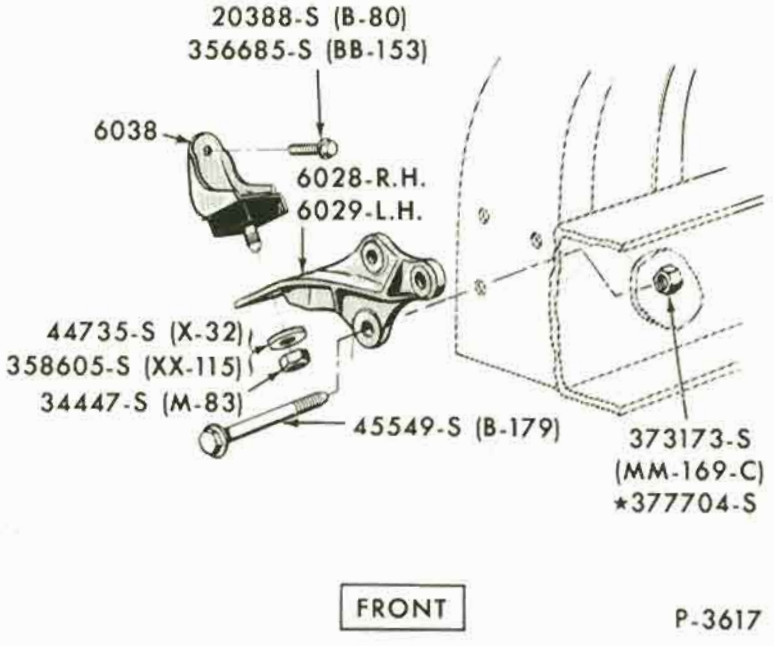

ENGINE SUPPORTS, INSULATORS and RELATED PARTS - FRONT -- TYPICAL
1965 FALCON - 6 CYLINDER 170 and 200

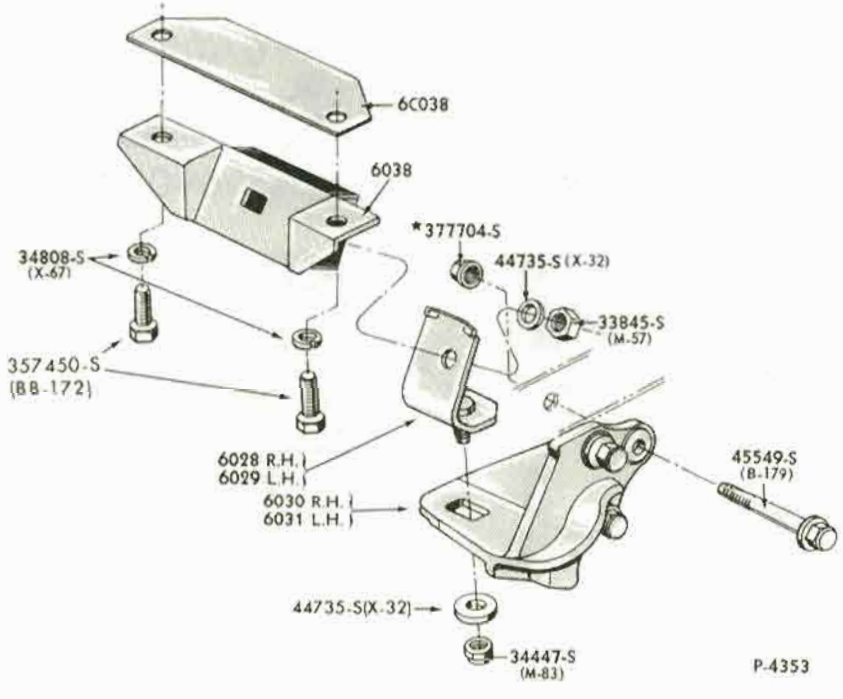

ENGINE SUPPORTS, INSULATORS and RELATED PARTS - FRONT
1965 FALCON - 8 CYLINDER 289

COPYRIGHT © 1975 — FORD MOTOR COMPANY — DEARBORN, MICHIGAN

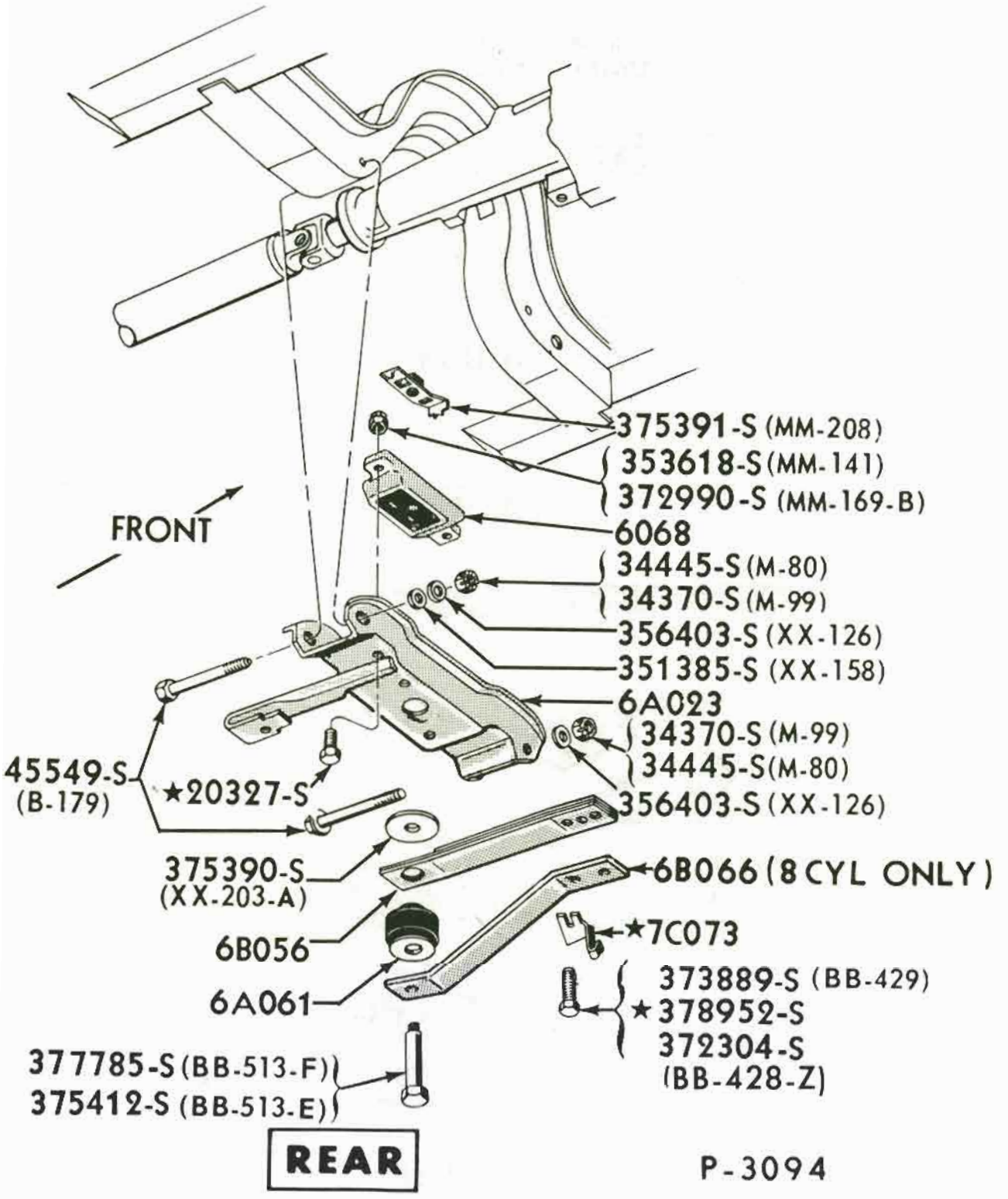

ENGINE SUPPORTS, INSULATORS and RELATED PARTS - REAR -- TYPICAL
1965 FALCON - 6 CYLINDER 170, 200 and 8 CYLINDER 289

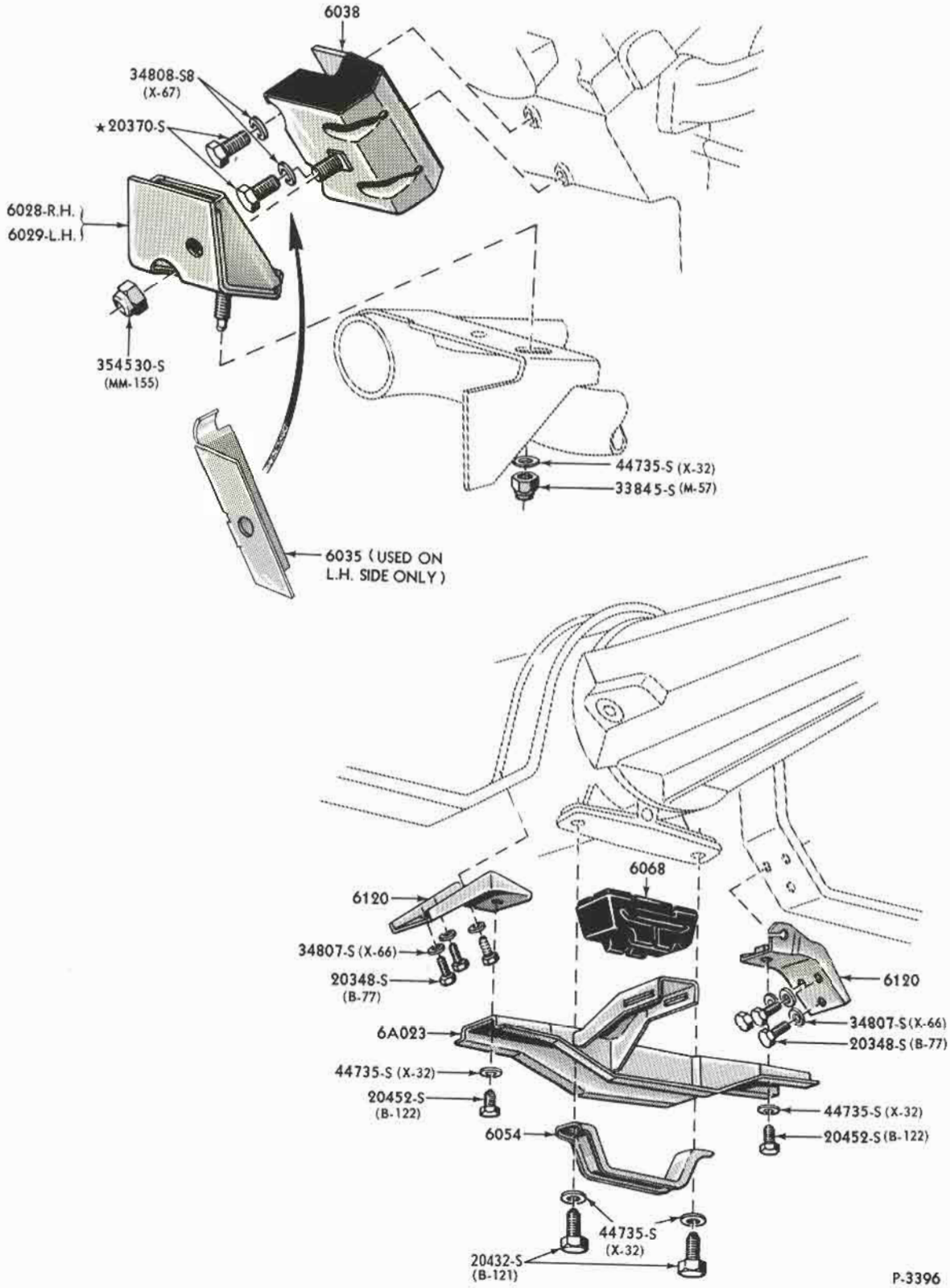

ENGINE SUPPORTS, INSULATORS and RELATED PARTS - FRONT and REAR -- TYPICAL
1965/66 THUNDERBIRD - 8 CYLINDER 390

COPYRIGHT © 1975 — FORD MOTOR COMPANY — DEARBORN, MICHIGAN

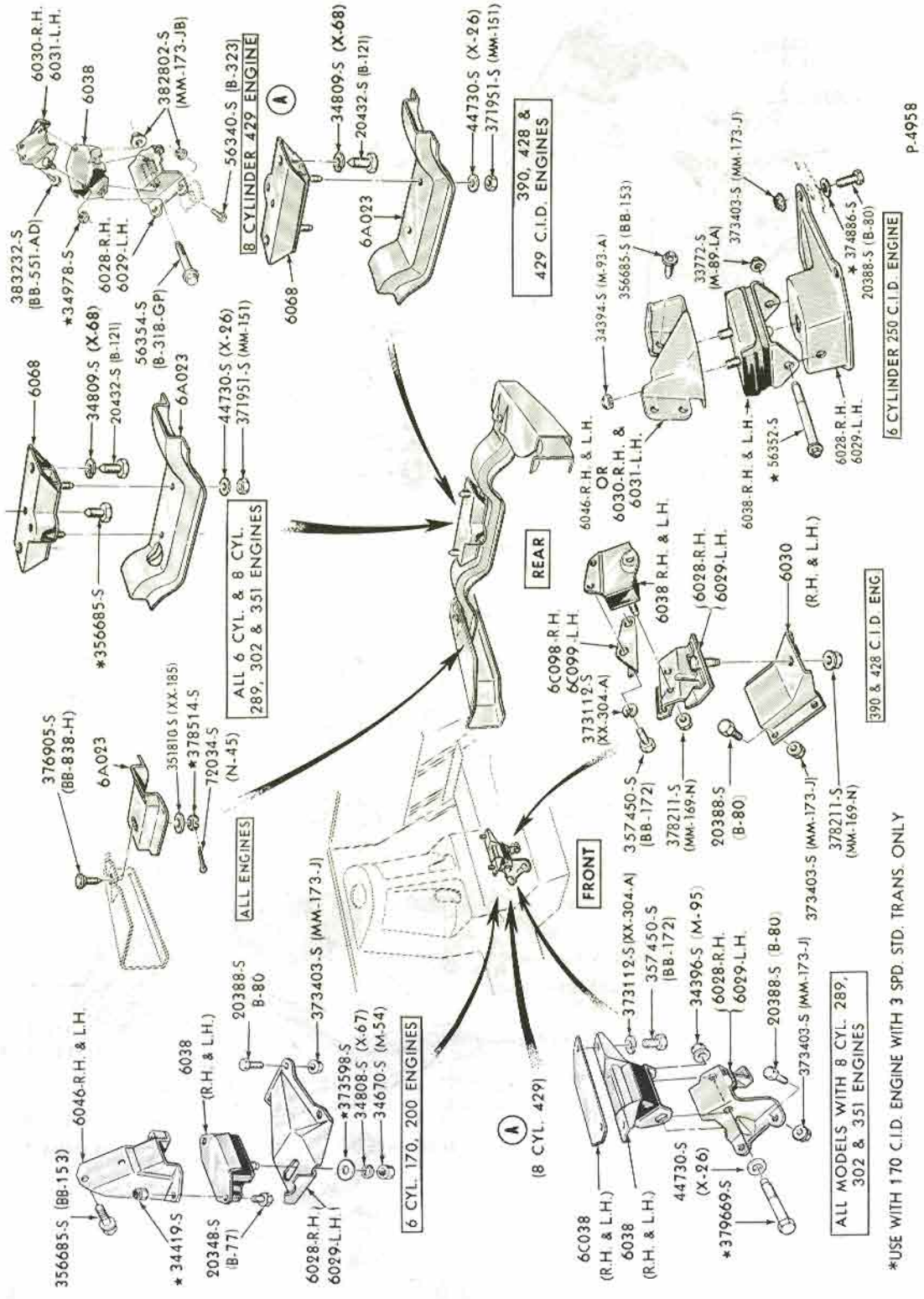
6030-R.H.
6031-L.H.
6038
382802-S (MM-173-JB)
383232-S (BB-551-AD)
*34978-S
6028-R.H.
6029-L.H.
56340-S (B-323)
56354-S (B-318-GP)
8 CYLINDER 429 ENGINE
A
34809-S (X-68)
20432-S (B-121)
6068
6A023
44730-S (X-26)
371951-S (MM-151)
390, 428 & 429 C.I.D. ENGINES
6068
34809-S (X-68)
20432-S (B-121)
*356685-S
6A023
44730-S (X-26)
371951-S (MM-151)
ALL 6 CYL. & 8 CYL. 289, 302 & 351 ENGINES
REAR
34394-S (M-93-A)
356685-S (BB-153)
33772-S (M-89-LA)
373403-S (MM-173-J)
6046-R.H. & L.H. OR 6030-R.H. & 6031-L.H.
6038-R.H. & L.H.
* 56352-S
* 374886-S
20388-S (B-80)
6028-R.H.
6029-L.H.
6 CYLINDER 250 C.I.D. ENGINE
P.4958
376905-S (BB-838-H)
6A023
351810-S (XX-185)
*378514-S
72034-S (N-45)
ALL ENGINES
6C098-R.H.
6C099-L.H.
373112-S (XX-304-A)
6038 R.H. & L.H.
6028-R.H.
6029-L.H.
6030 (R.H. & L.H.)
357450-S (BB-172)
378211-S (MM-169-N)
20388-S (B-80)
373403-S (MM-173-J)
378211-S (MM-169-N)
390 & 428 C.I.D. ENG
FRONT
*373598-S
34808-S (X-67)
34670-S (M-54)
373403-S (MM-173-J)
20388-S B-80
6038 (R.H. & L.H.)
6046-R.H. & L.H.
356685-S (BB-153)
* 34419-S
20348-S (B-77)
6028-R.H.
6029-L.H.
6 CYL. 170, 200 ENGINES
A
(8 CYL. 429)
373112-S (XX-304-A)
357450-S (BB-172)
34396-S (M-95)
6028-R.H.
6029-L.H.
20388-S (B-80)
373403-S (MM-173-J)
6C038 (R.H. & L.H.)
6038 (R.H. & L.H.)
44730-S (X-26)
*379669-S
ALL MODELS WITH 8 CYL. 289, 302 & 351 ENGINES
*USE WITH 170 C.I.D. ENGINE WITH 3 SPD. STD. TRANS. ONLY

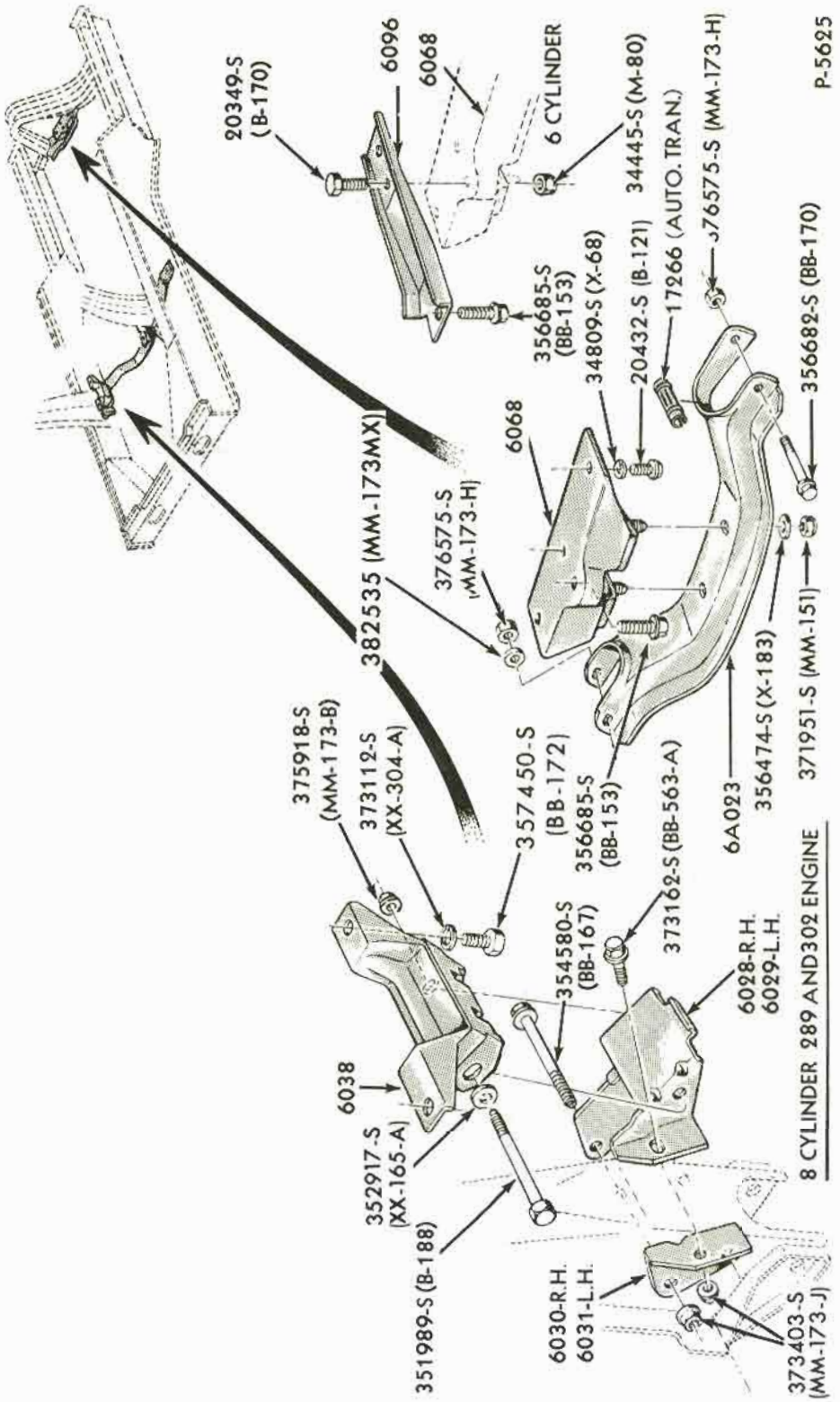

ENGINE SUPPORTS, INSULATORS and RELATED PARTS - FRONT and REAR -- TYPICAL
1967/70 MUSTANG - 6 CYLINDER 200, 250 and 8 CYLINDER 289, 302, 351

COPYRIGHT © 1975 — FORD MOTOR COMPANY — DEARBORN, MICHIGAN

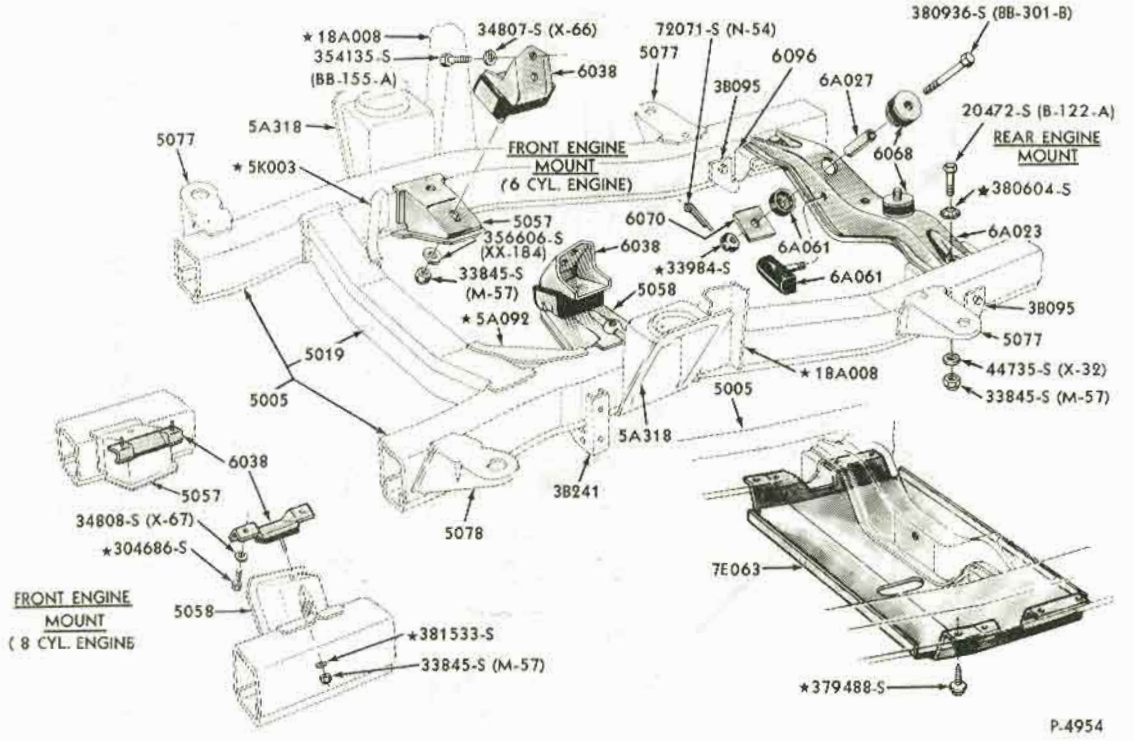

ENGINE SUPPORTS, INSULATORS and RELATED PARTS - FRONT and REAR
1966/72 BRONCO - 6 CYLINDER 170 and 8 CYLINDER 289, 302

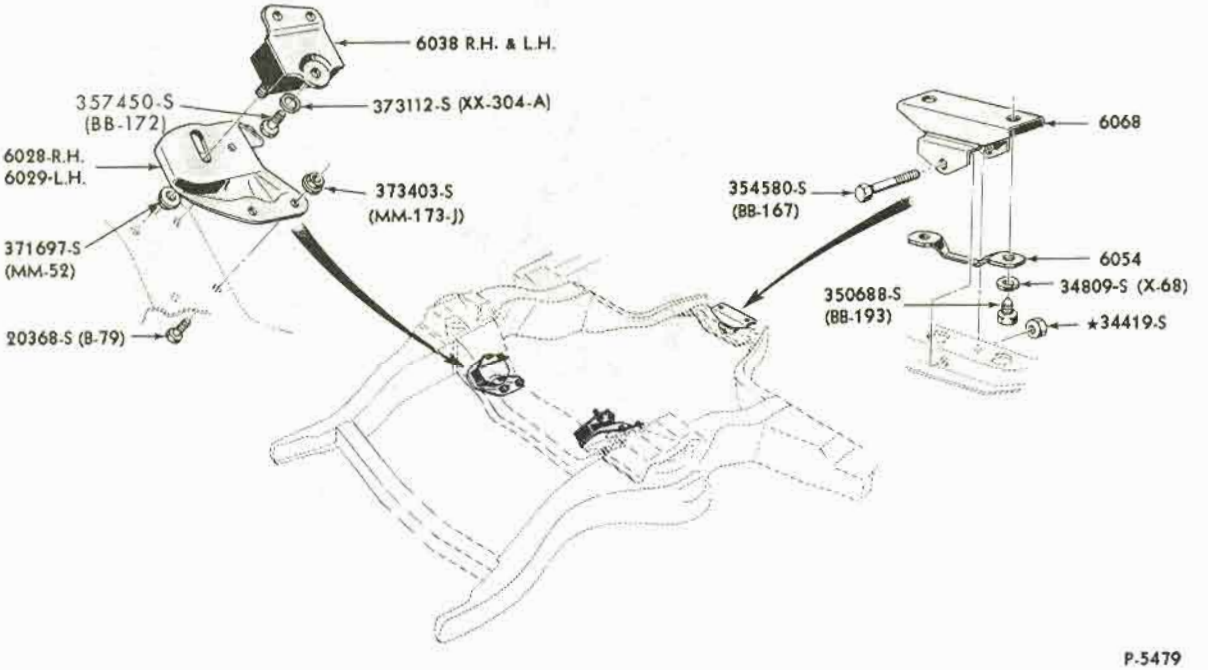

ENGINE SUPPORTS, INSULATORS and RELATED PARTS - FRONT and REAR
1967 THUNDERBIRD - 8 CYLINDER 390, 428

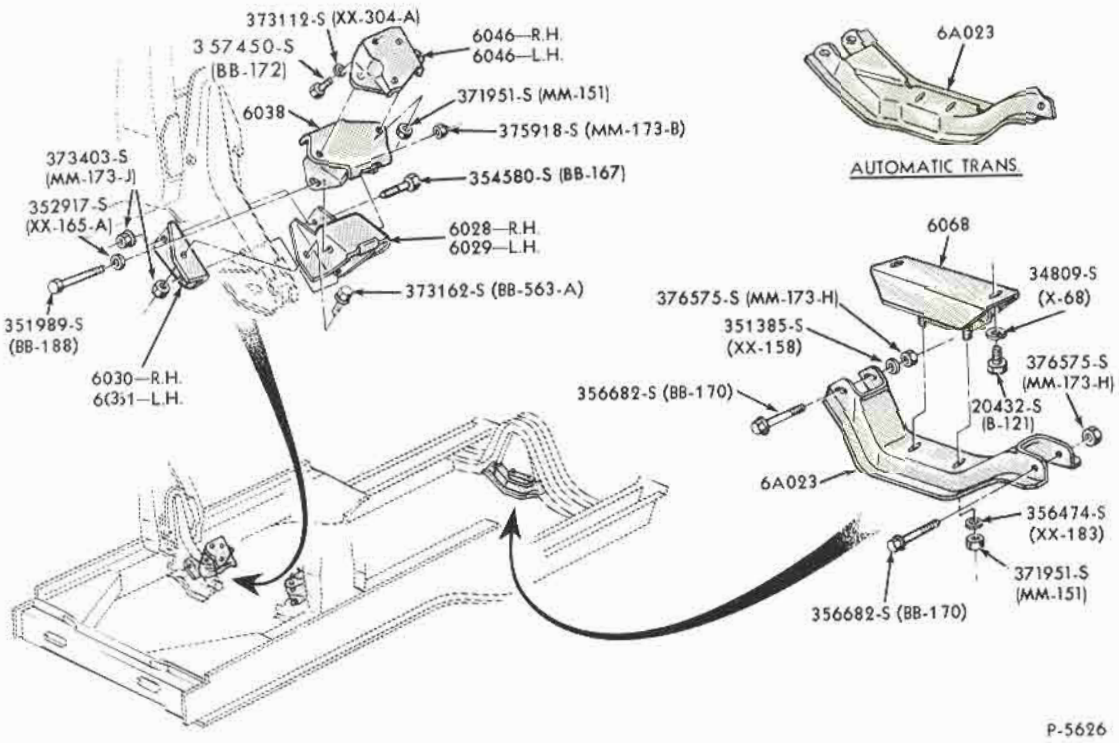

ENGINE SUPPORTS, INSULATORS and RELATED PARTS - FRONT and REAR
1967/70 MUSTANG - 8 CYLINDER 390,427,428

COPYRIGHT © 1975 — FORD MOTOR COMPANY — DEARBORN, MICHIGAN

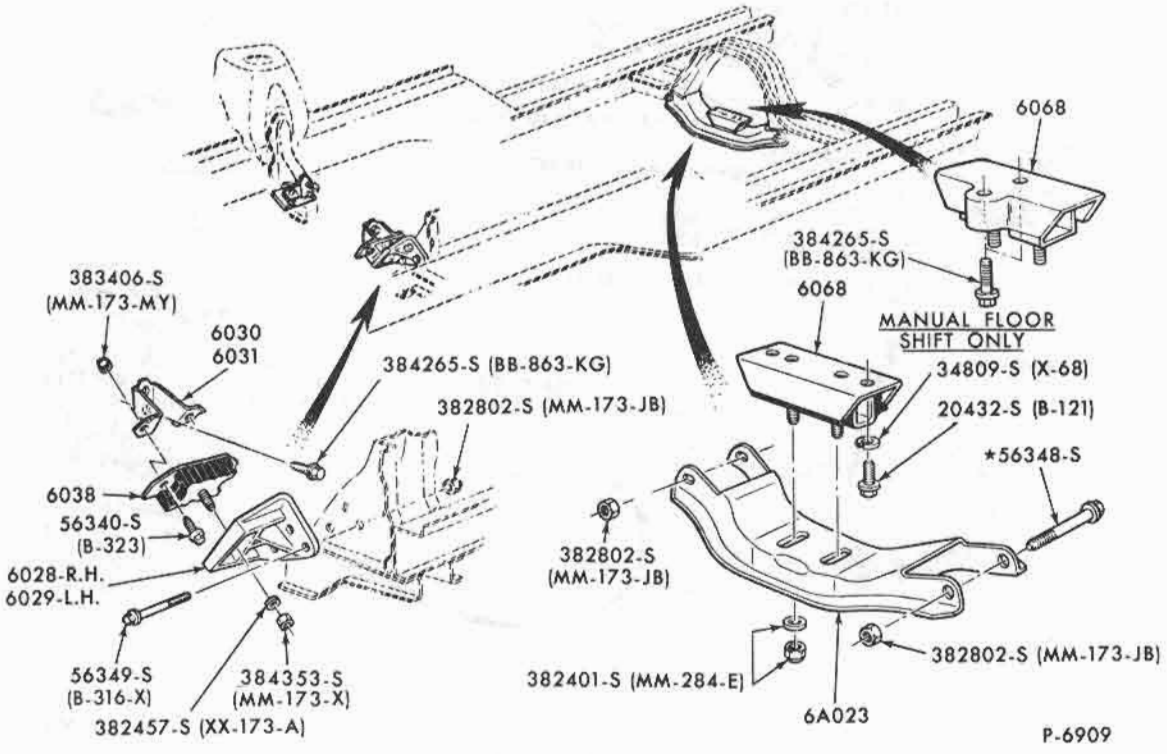

ENGINE SUPPORTS, INSULATORS and RELATED PARTS - FRONT and REAR
1970/72 MAVERICK - 6 CYLINDER 170, 200, 250

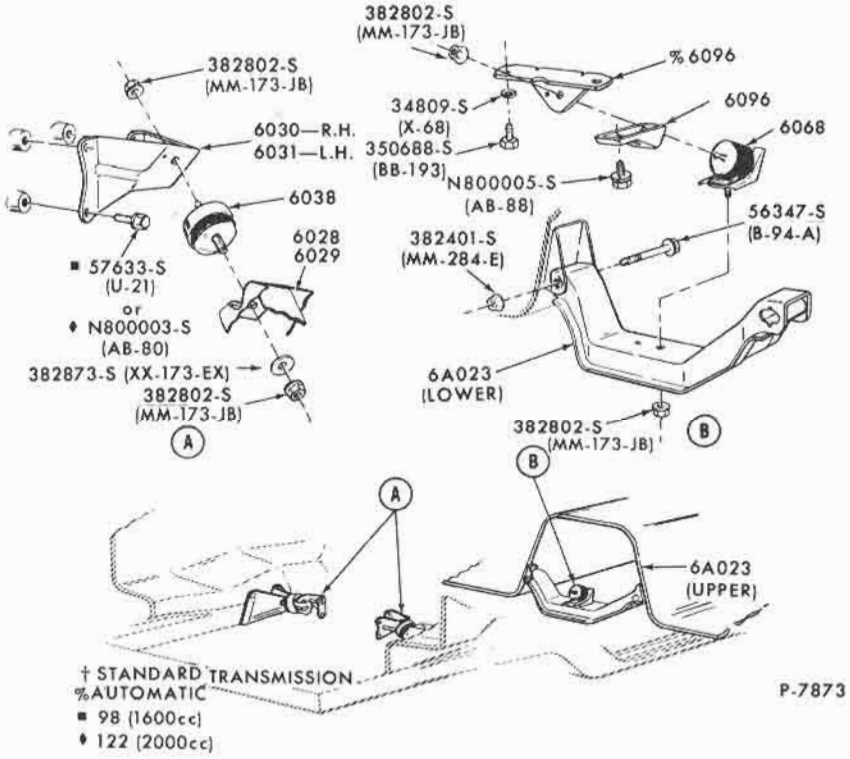

ENGINE SUPPORTS, INSULATORS and RELATED PARTS - FRONT and REAR
1971/72 PINTO - 4 CYLINDER 98 (1600cc) and 122 (2000cc)

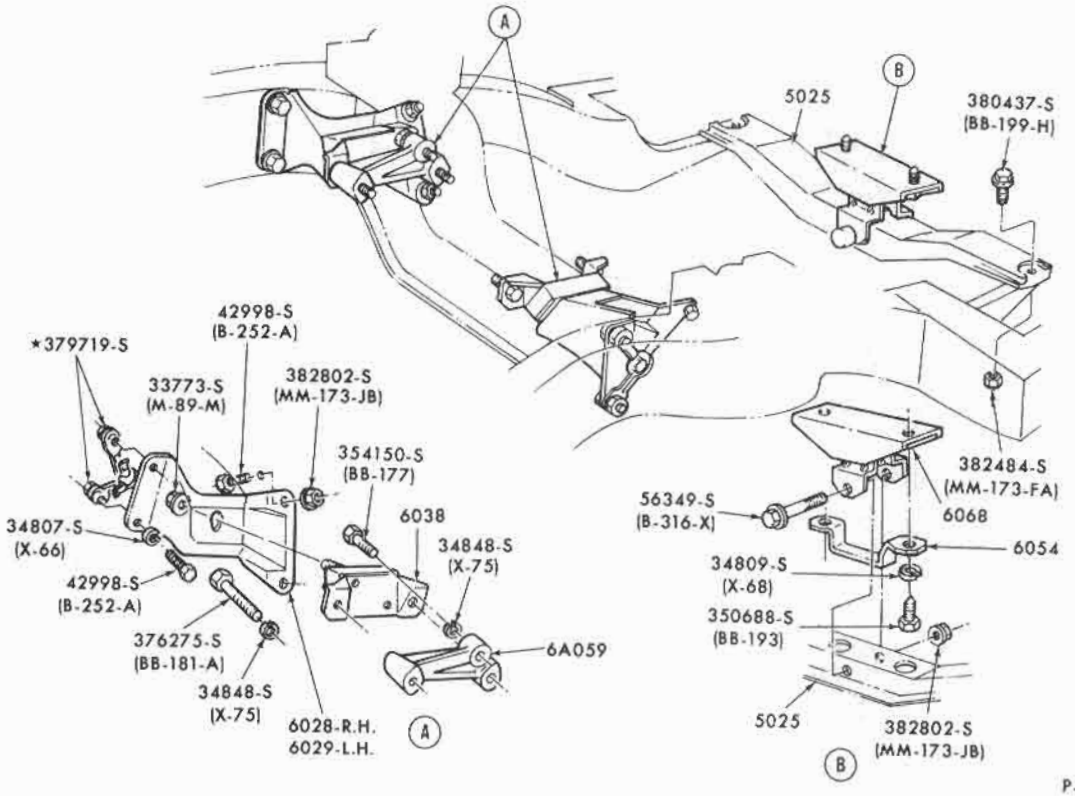

ENGINE SUPPORTS, INSULATORS and RELATED PARTS - FRONT and REAR
1971/72 FORD - 6 CYLINDER 240

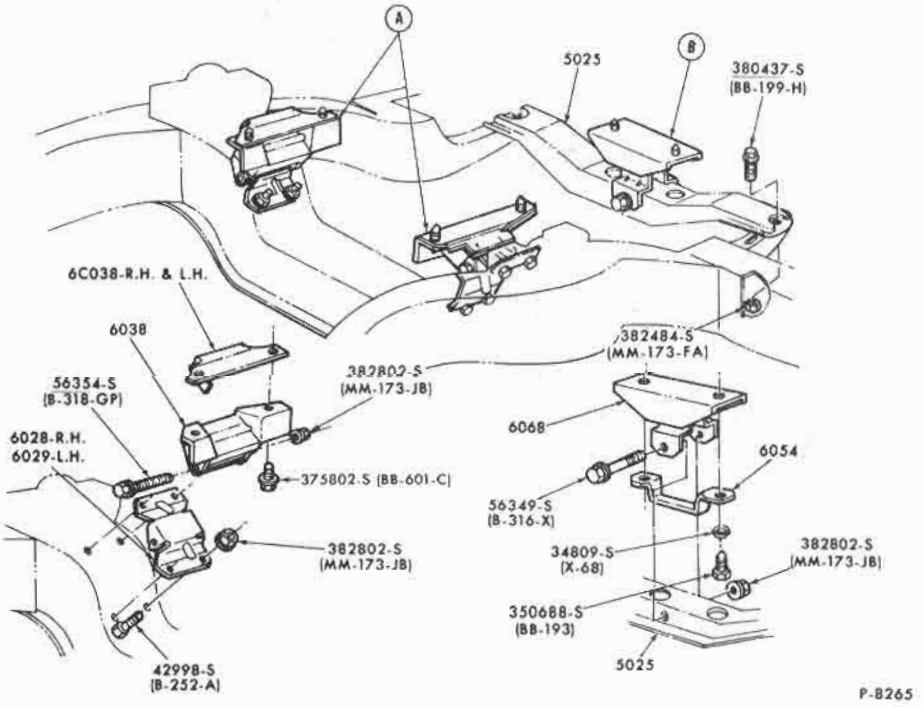

ENGINE SUPPORTS, INSULATORS and RELATED PARTS - FRONT and REAR
1971/72 FORD - 8 CYLINDER 302,351

COPYRIGHT © 1975 — FORD MOTOR COMPANY — DEARBORN, MICHIGAN

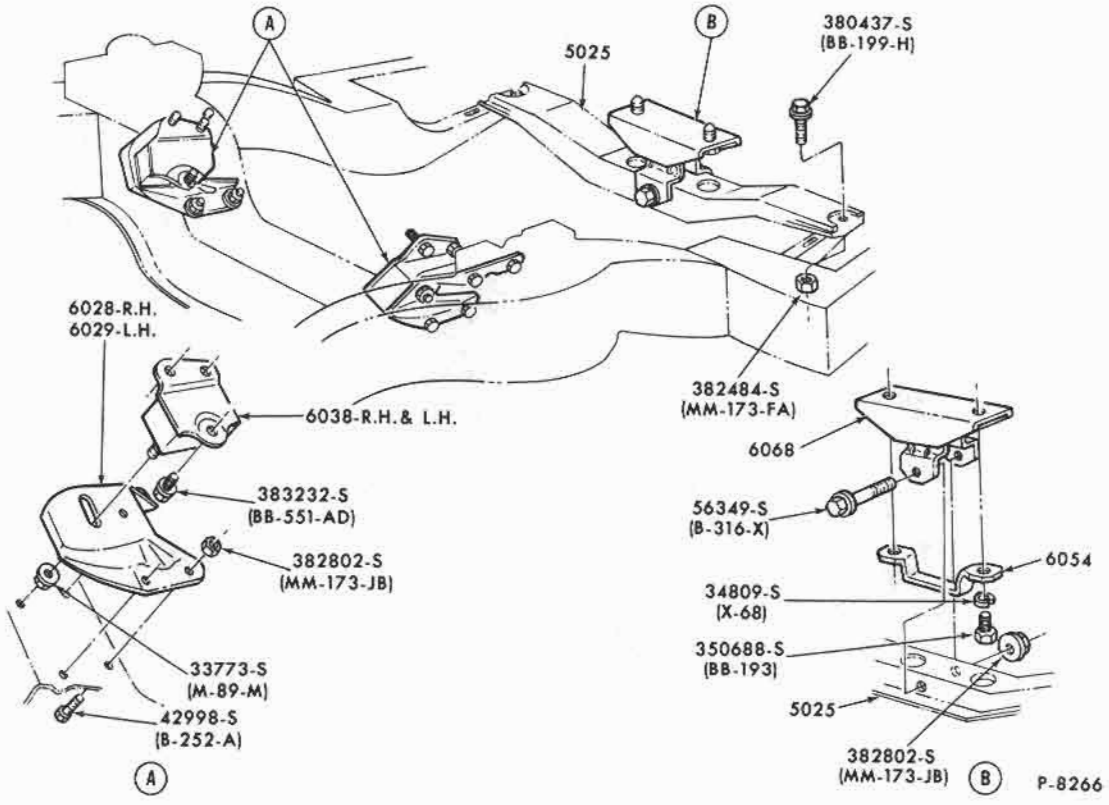

ENGINE SUPPORTS, INSULATORS and RELATED PARTS - FRONT and REAR
1971 FORD - 8 CYLINDER 390

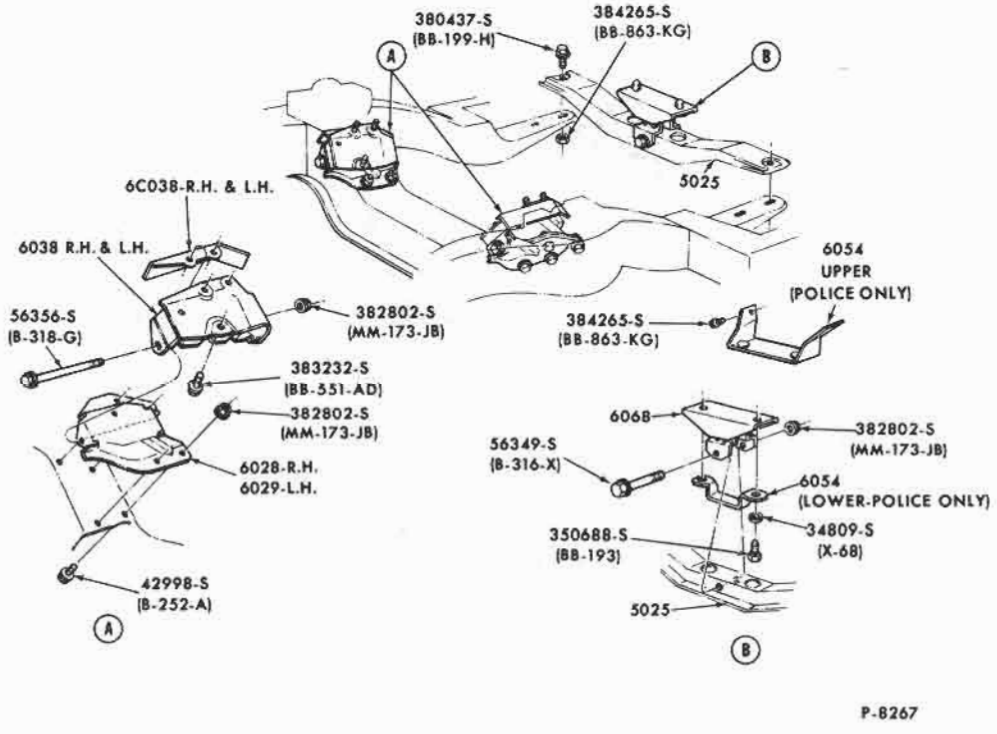

ENGINE SUPPORTS, INSULATORS and RELATED PARTS - FRONT and REAR
1971/72 FORD - 8 CYLINDER 429

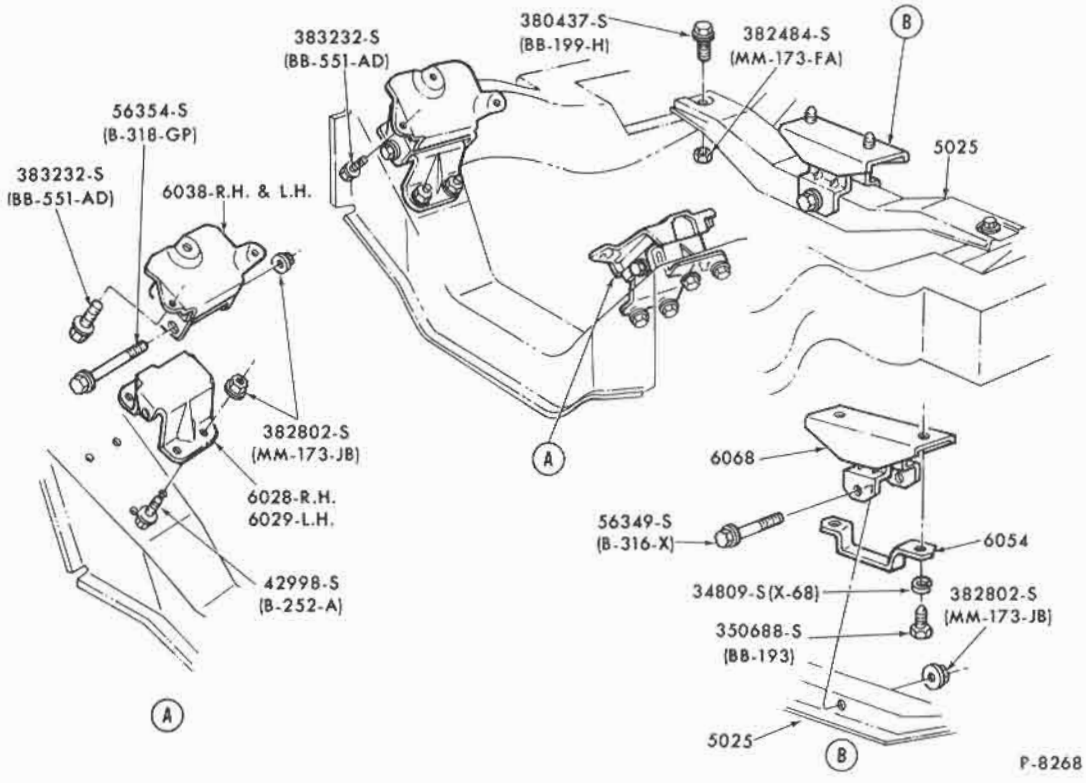

ENGINE SUPPORTS, INSULATORS and RELATED PARTS - FRONT and REAR
1971/72 FORD - 8 CYLINDER 400

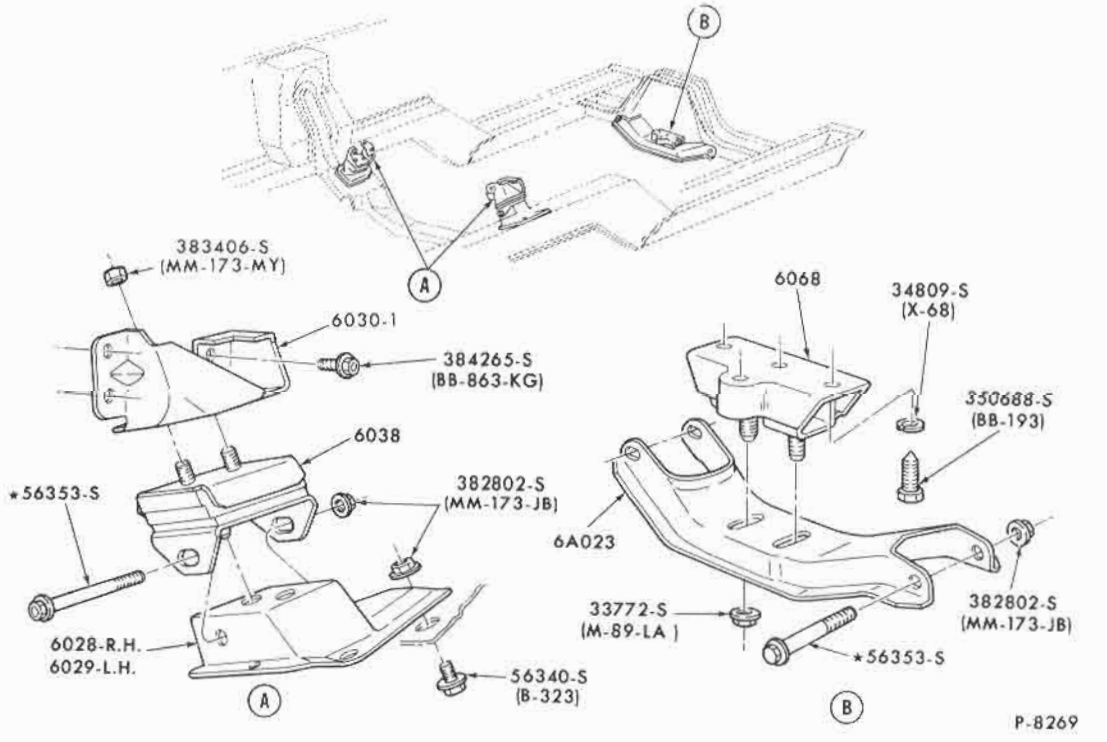

ENGINE SUPPORTS, INSULATORS and RELATED PARTS - FRONT and REAR
1971/72 MUSTANG - 6 CYLINDER 250

COPYRIGHT © 1975 — FORD MOTOR COMPANY — DEARBORN, MICHIGAN

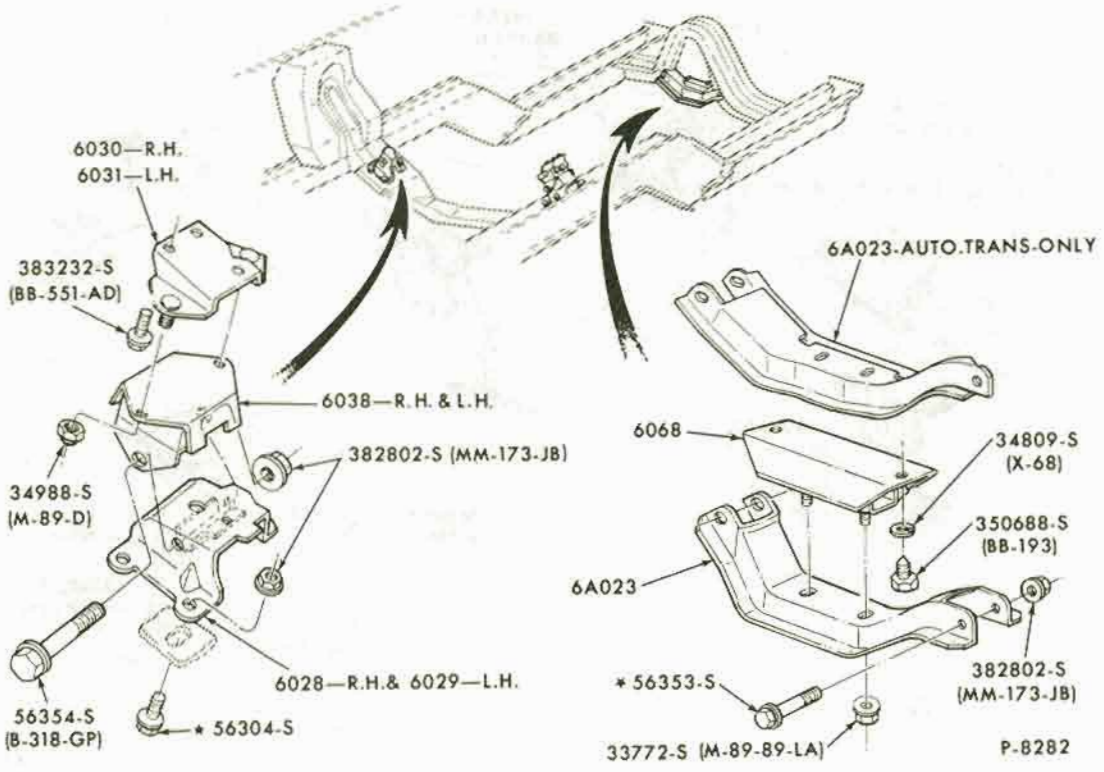

ENGINE SUPPORTS, INSULATORS and RELATED PARTS - FRONT and REAR
1971 MUSTANG - 8 CYLINDER 429

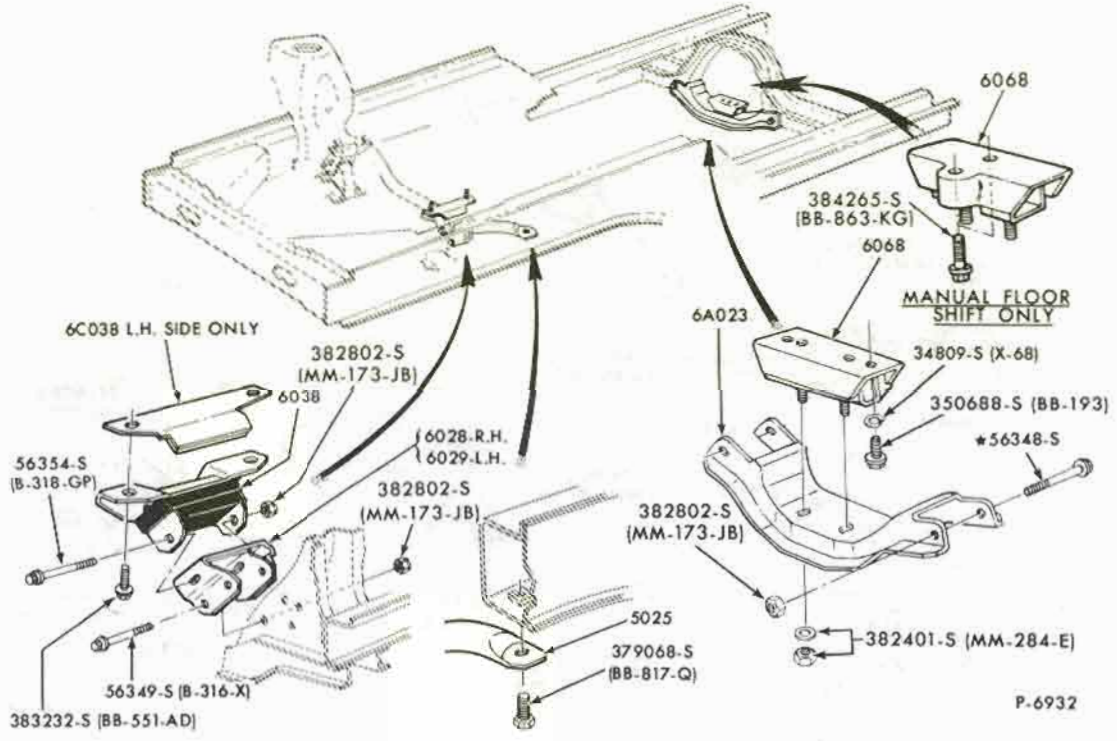

ENGINE SUPPORTS, INSULATORS and RELATED PARTS - FRONT and REAR
1971/72 MAVERICK - 8 CYLINDER 302

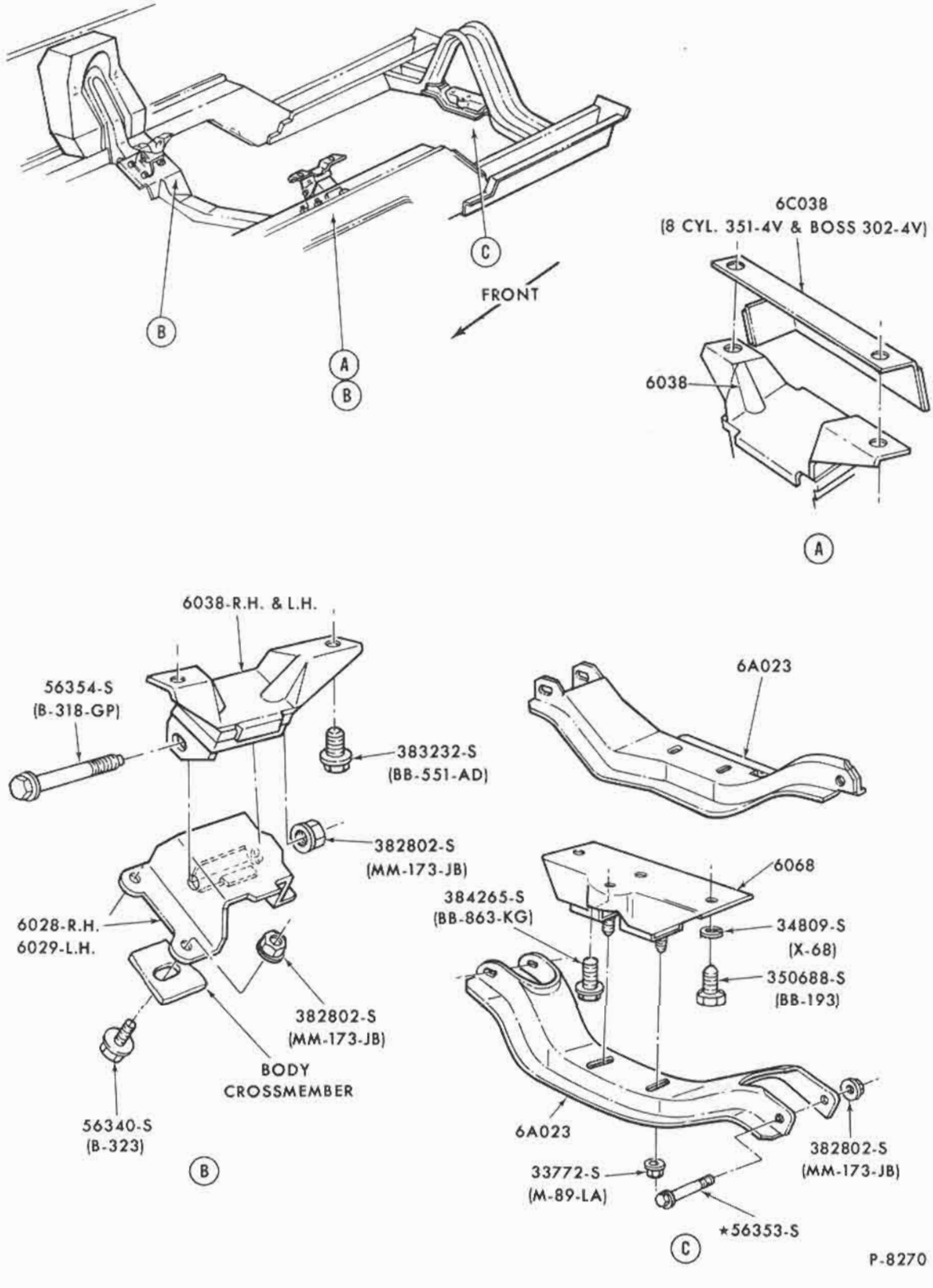

ENGINE SUPPORTS, INSULATORS and RELATED PARTS - FRONT and REAR
1971/72 MUSTANG - 8 CYLINDER 302,351

COPYRIGHT © 1975 — FORD MOTOR COMPANY — DEARBORN, MICHIGAN

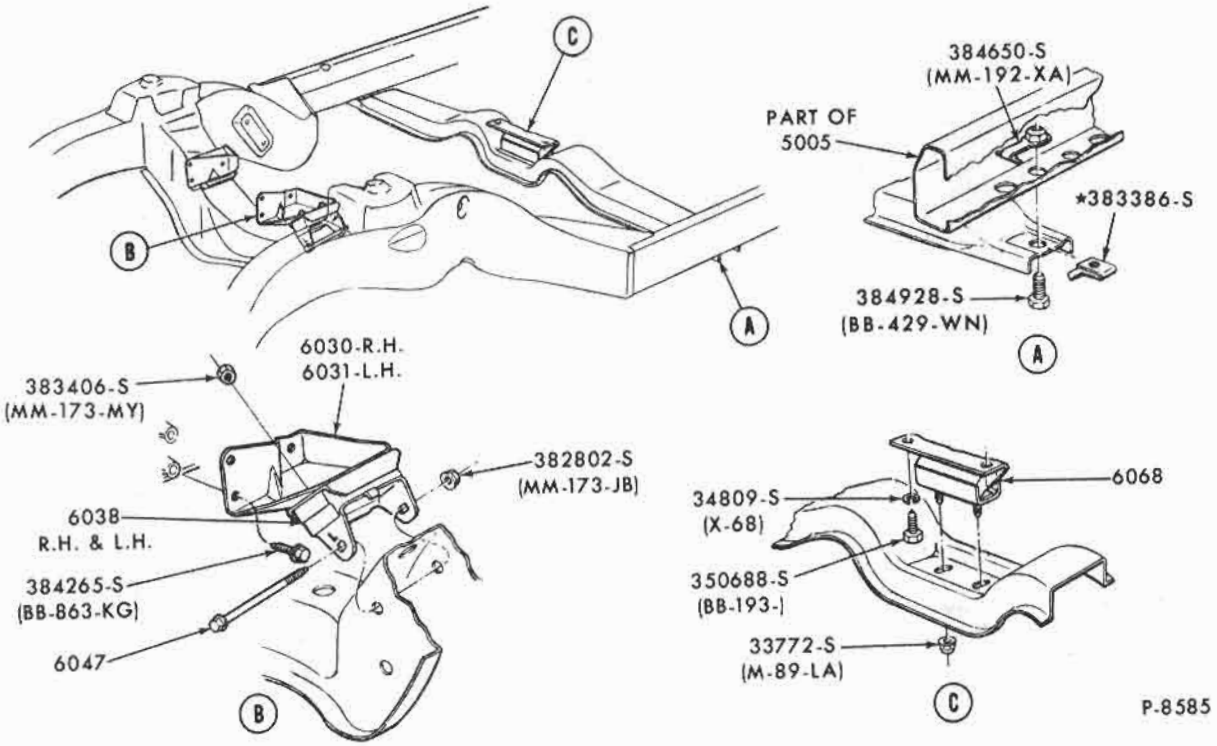

ENGINE SUPPORTS, INSULATORS and RELATED PARTS - FRONT and REAR
1972 TORINO - 6 CYLINDER 250

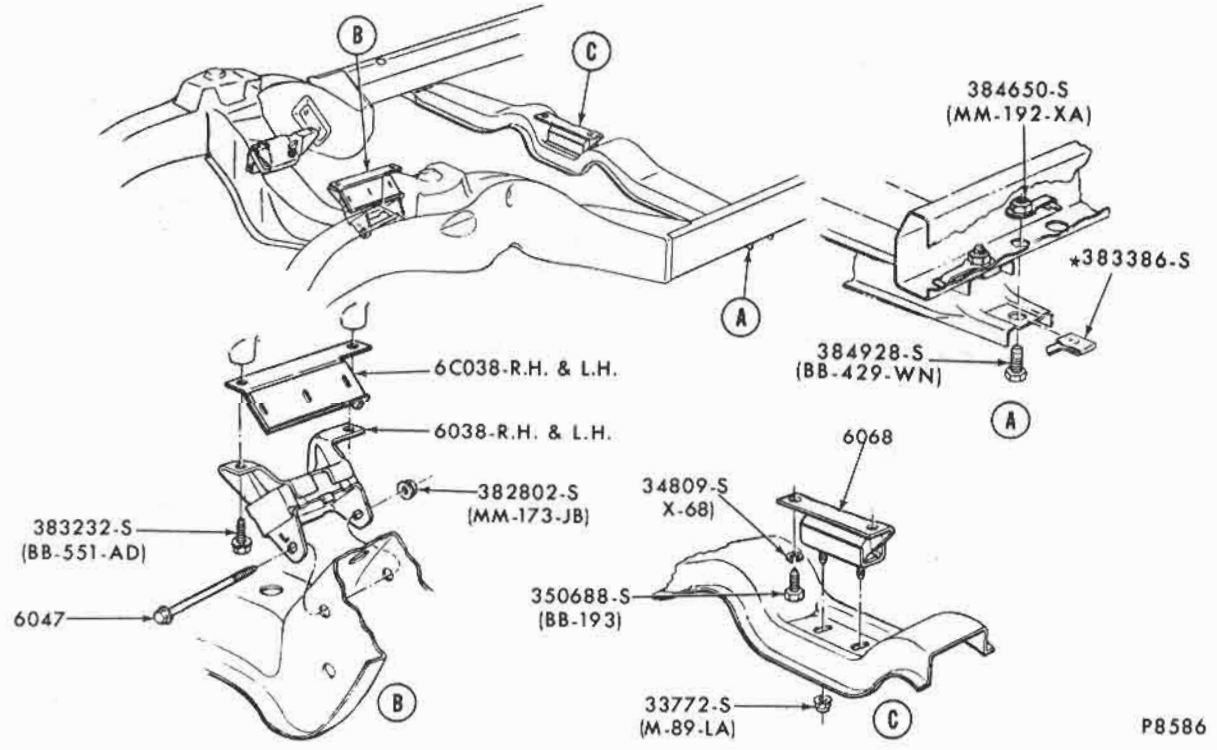

ENGINE SUPPORTS, INSULATORS and RELATED PARTS - FRONT and REAR
1972 TORINO - 8 CYLINDER 302, 351

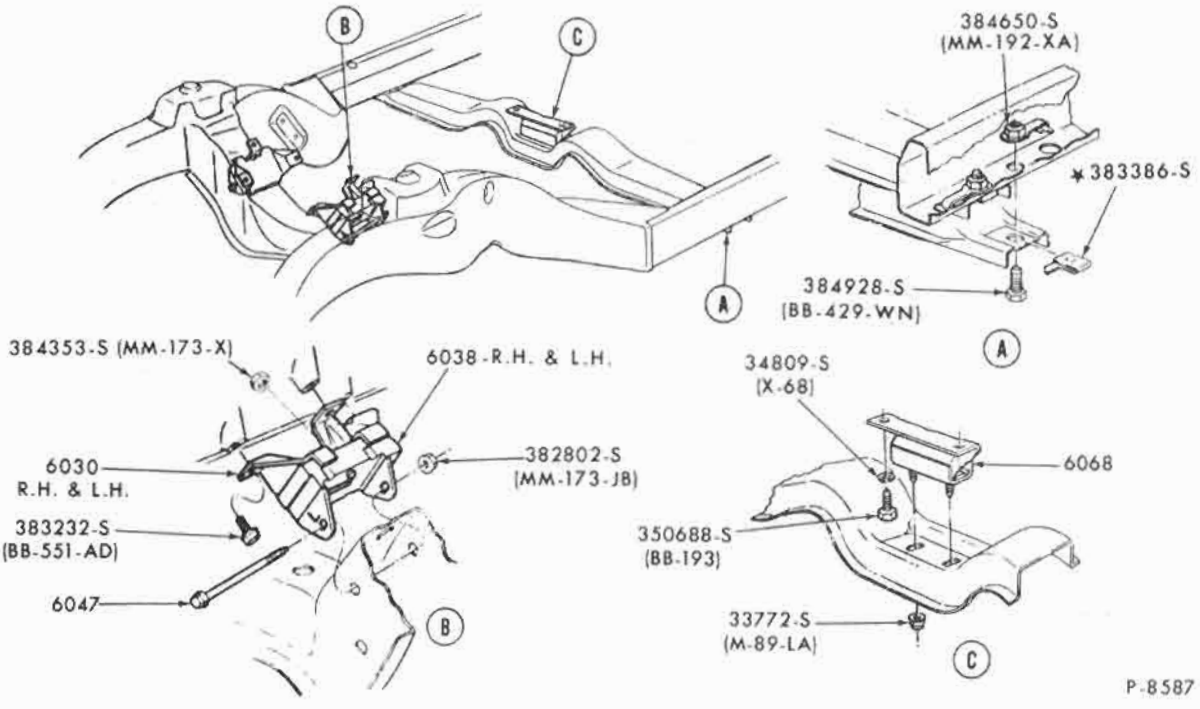

ENGINE SUPPORTS, INSULATORS and RELATED PARTS - FRONT and REAR
1972 TORINO - 8 CYLINDER 400

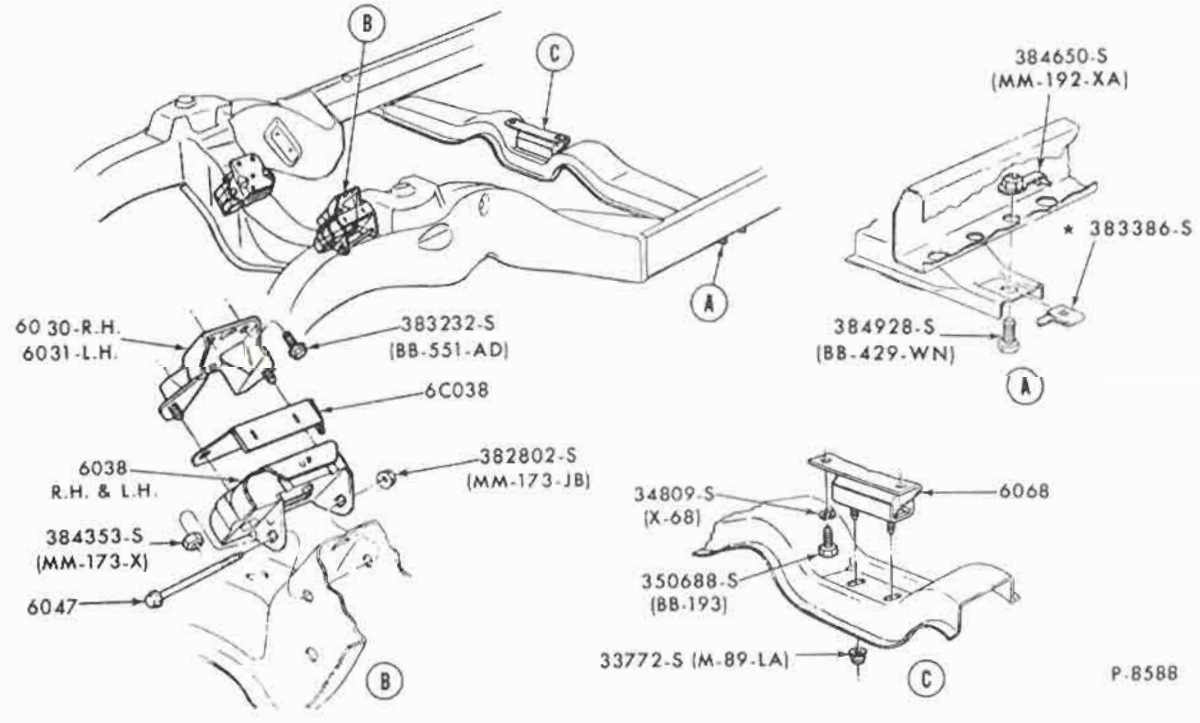

ENGINE SUPPORTS, INSULATORS and RELATED PARTS - FRONT and REAR
1972 TORINO - 8 CYLINDER 429

COPYRIGHT © 1975 — FORD MOTOR COMPANY — DEARBORN, MICHIGAN

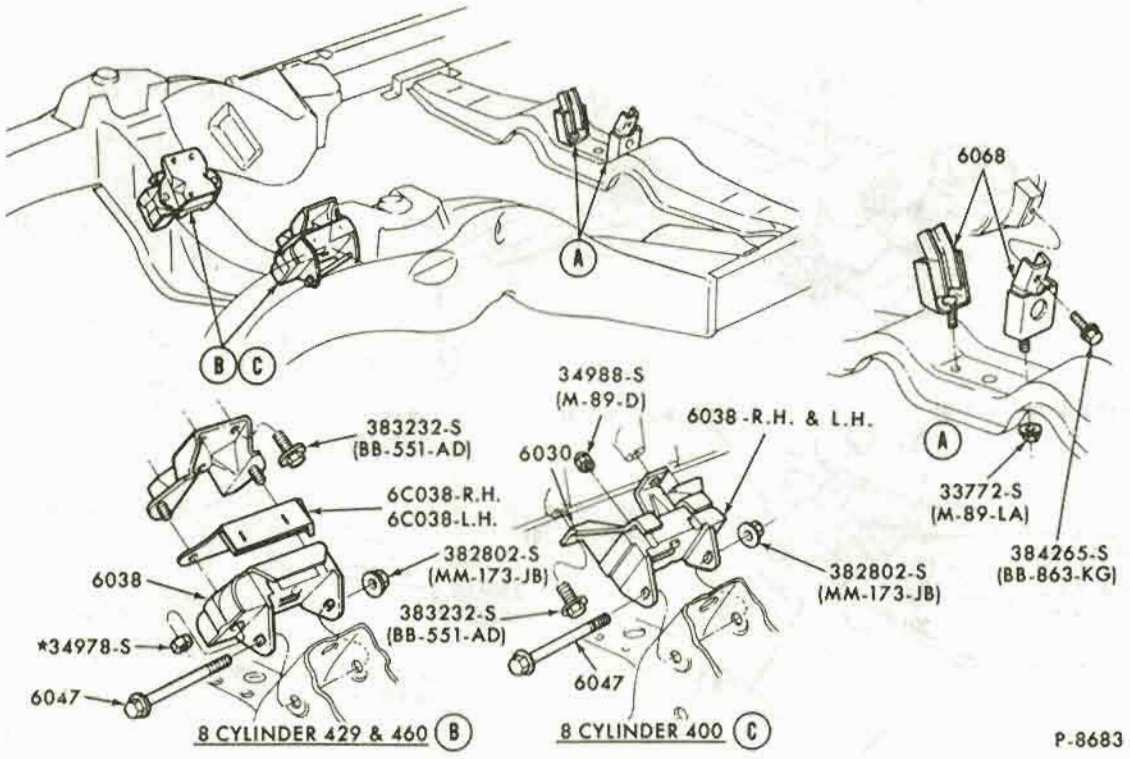

ENGINE SUPPORTS, INSULATORS and RELATED PARTS - FRONT and REAR
1972 THUNDERBIRD - 8 CYLINDER 400,429,460

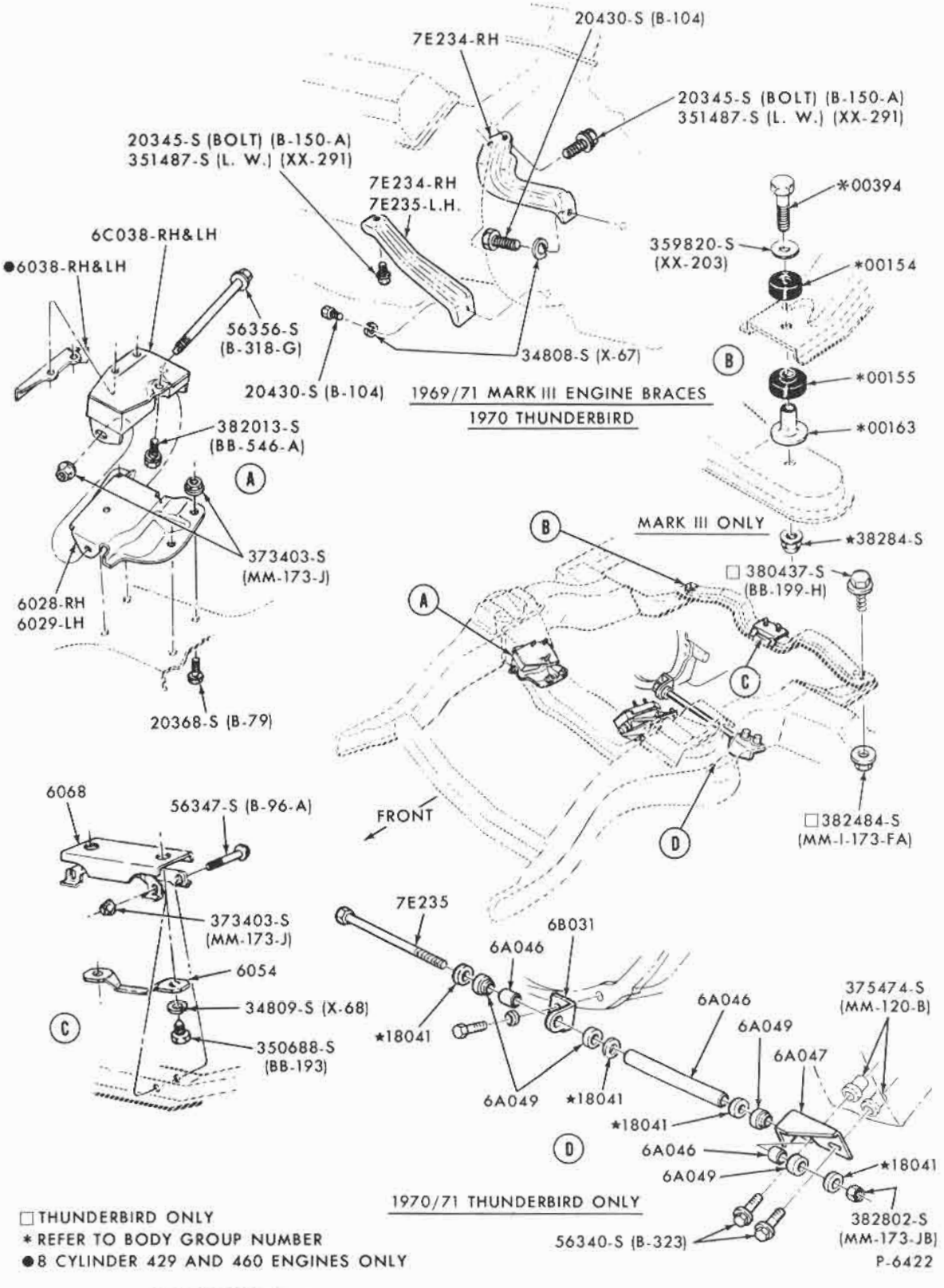

□ THUNDERBIRD ONLY
* REFER TO BODY GROUP NUMBER
● 8 CYLINDER 429 AND 460 ENGINES ONLY

P-6422

ENGINE SUPPORTS, INSULATORS and RELATED PARTS - FRONT and REAR
1968/71 THUNDERBIRD - 8 CYLINDER 390,429

COPYRIGHT © 1975 — FORD MOTOR COMPANY — DEARBORN, MICHIGAN

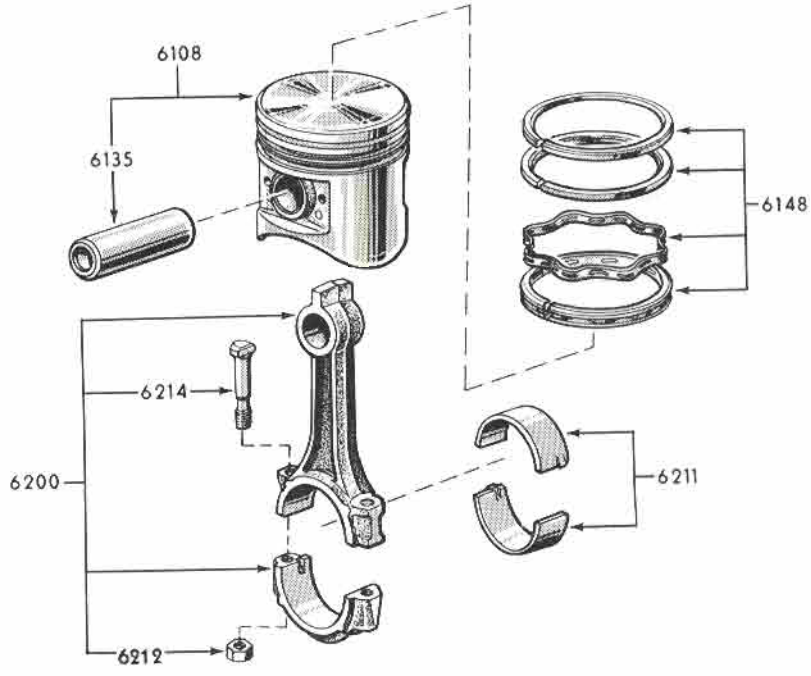

ENGINE PISTON, CONNECTING ROD and RELATED PARTS -- TYPICAL
1965/72 6 CYLINDER 170, 200 and 250

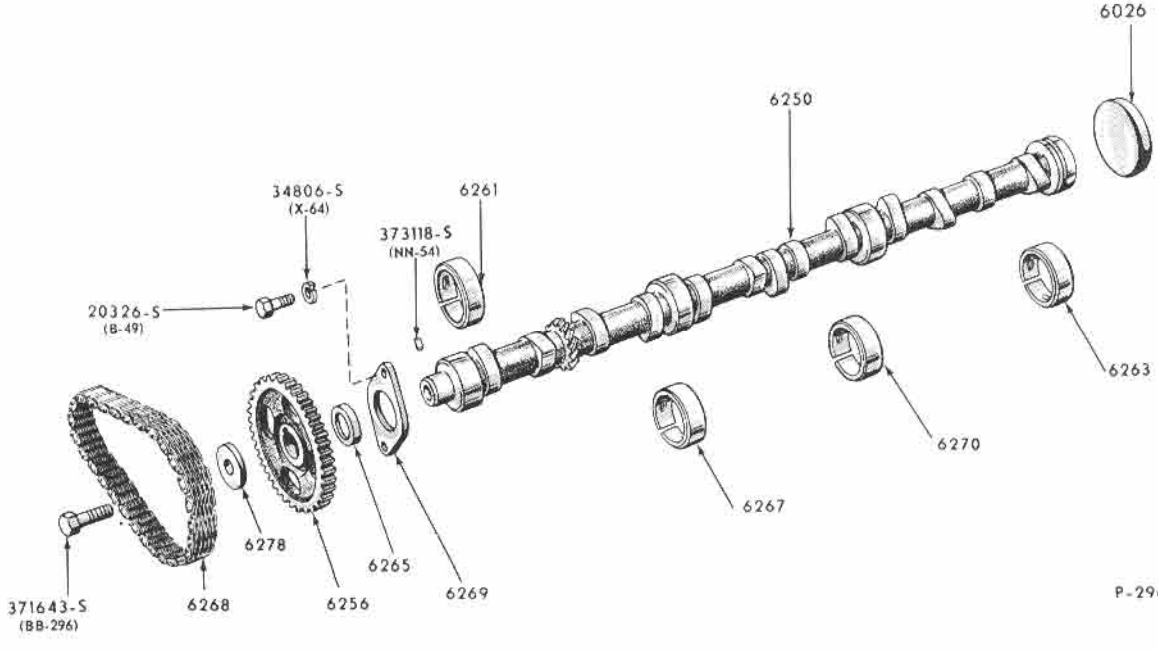

ENGINE CAMSHAFT, GEAR, BEARINGS and RELATED PARTS -- TYPICAL
1965/72 6 CYLINDER 170, 200 and 250

COPYRIGHT © 1975 — FORD MOTOR COMPANY — DEARBORN, MICHIGAN

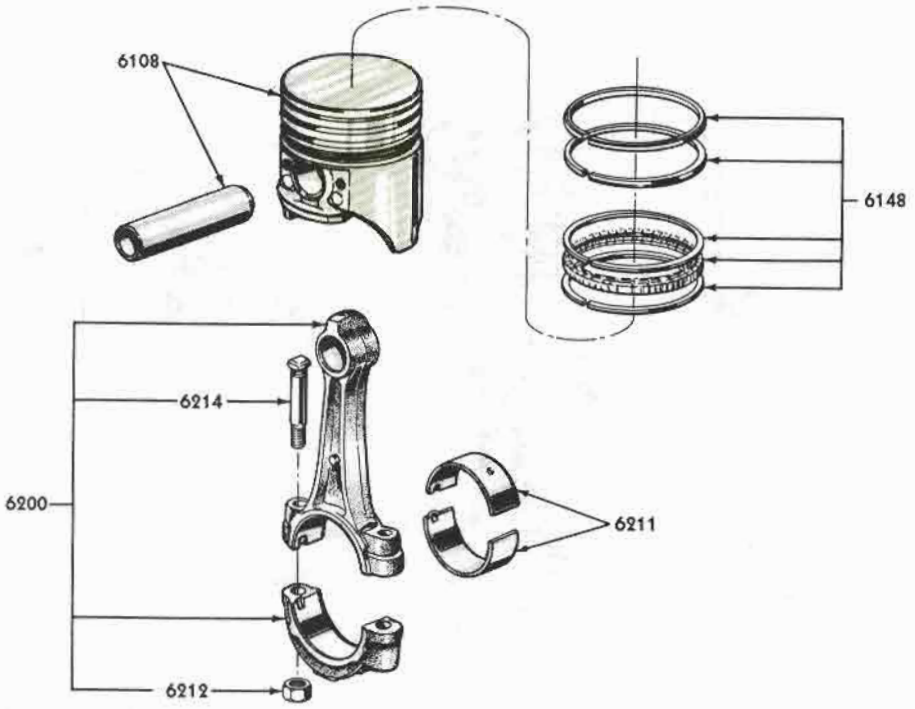

ENGINE PISTON, CONNECTING ROD and RELATED PARTS -- TYPICAL
1965/72 6 CYLINDER 240 and 8 CYLINDER 260, 289, 302, 351, 400,429 and 460

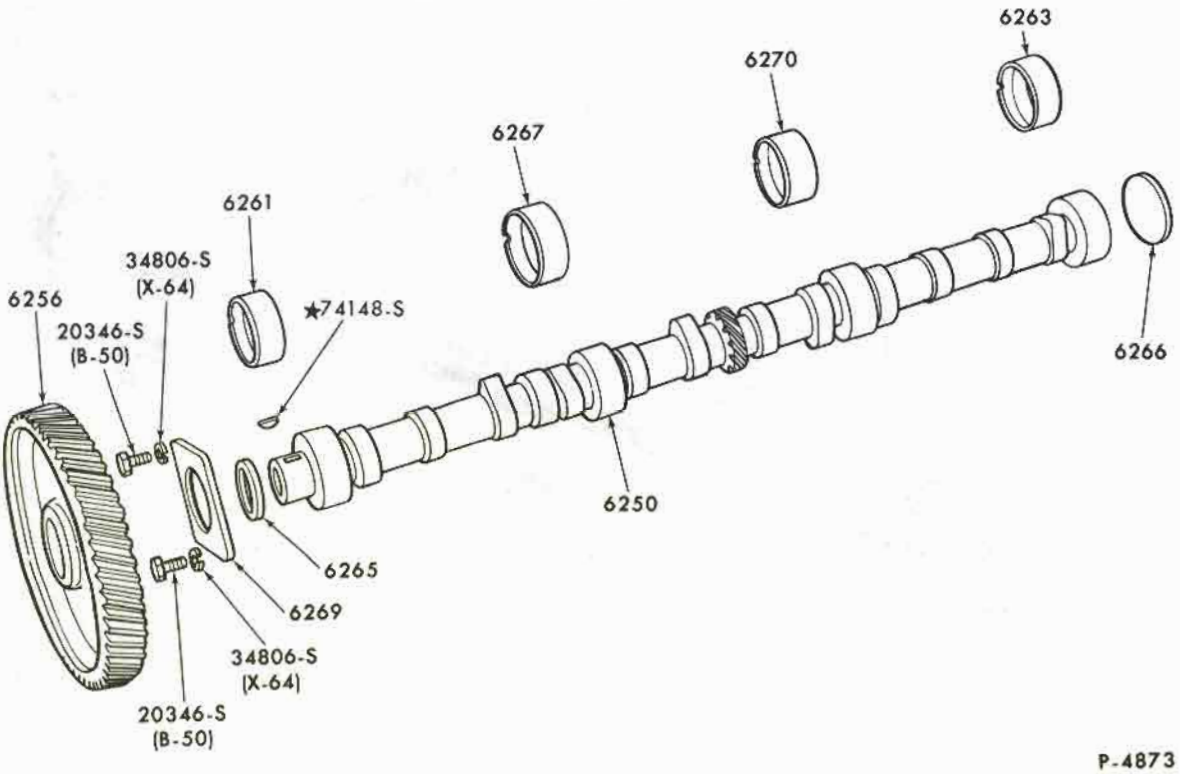

ENGINE CAMSHAFT, GEAR, BEARINGS and RELATED PARTS -- TYPICAL
1965/72 6 CYLINDER 240

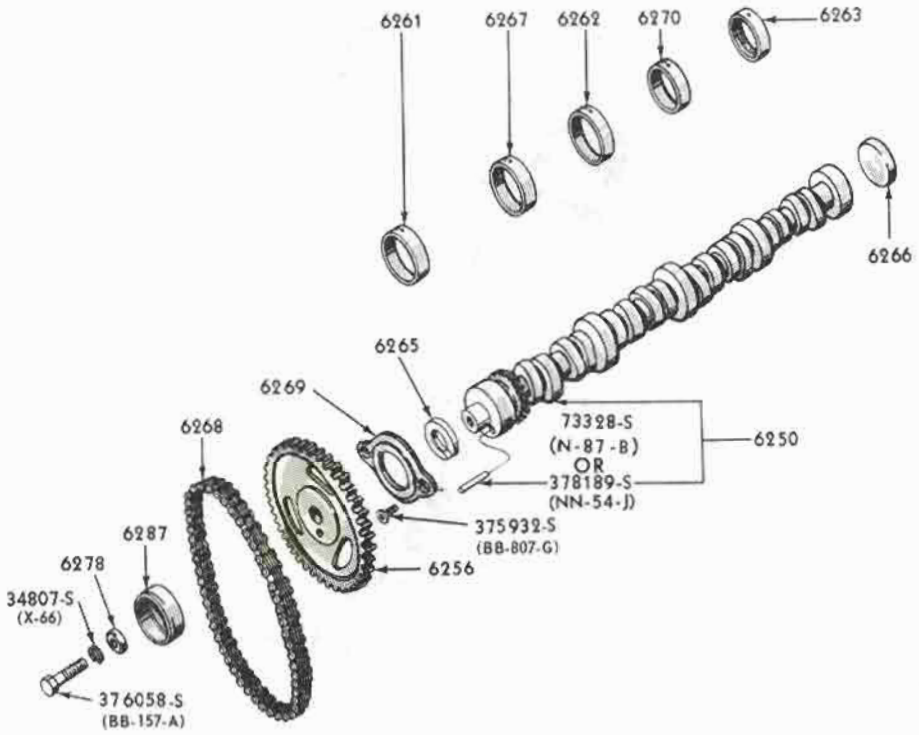

ENGINE CAMSHAFT, GEAR, BEARINGS and RELATED PARTS -- TYPICAL
1965/72 8 CYLINDER 260, 289, 302, 351, 400,429 and 460

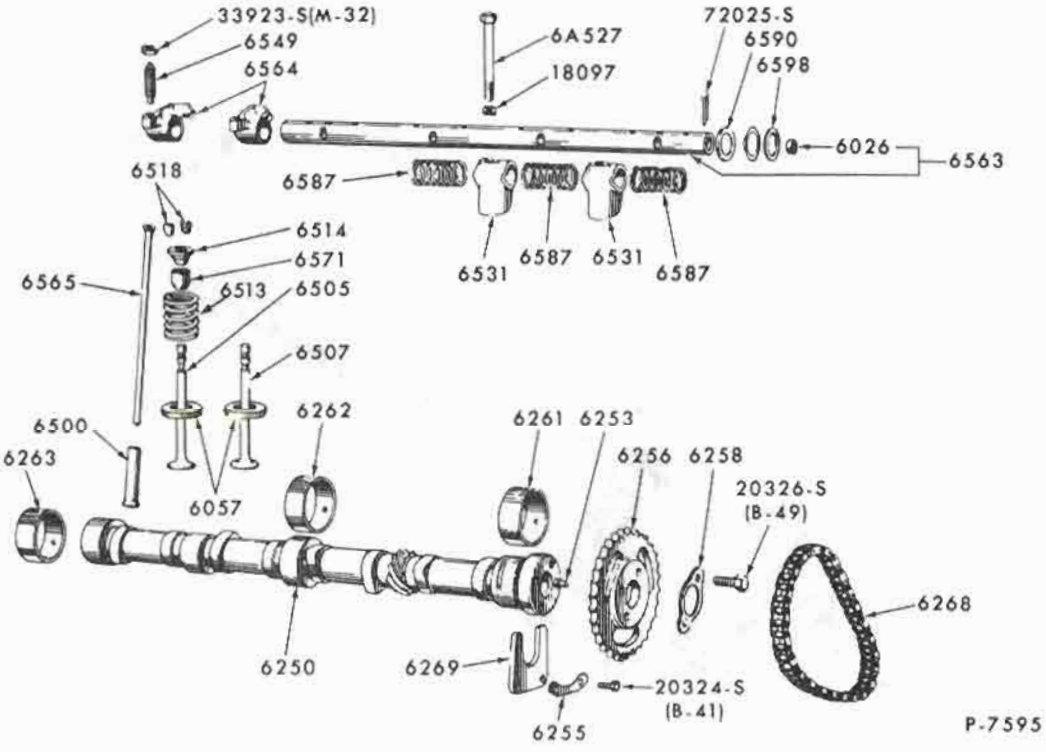

ENGINE CAMSHAFT, GEAR, BEARINGS and RELATED PARTS
1971/72 4 CYLINDER 98 (1600cc) ENGINE

COPYRIGHT © 1975 — FORD MOTOR COMPANY — DEARBORN, MICHIGAN

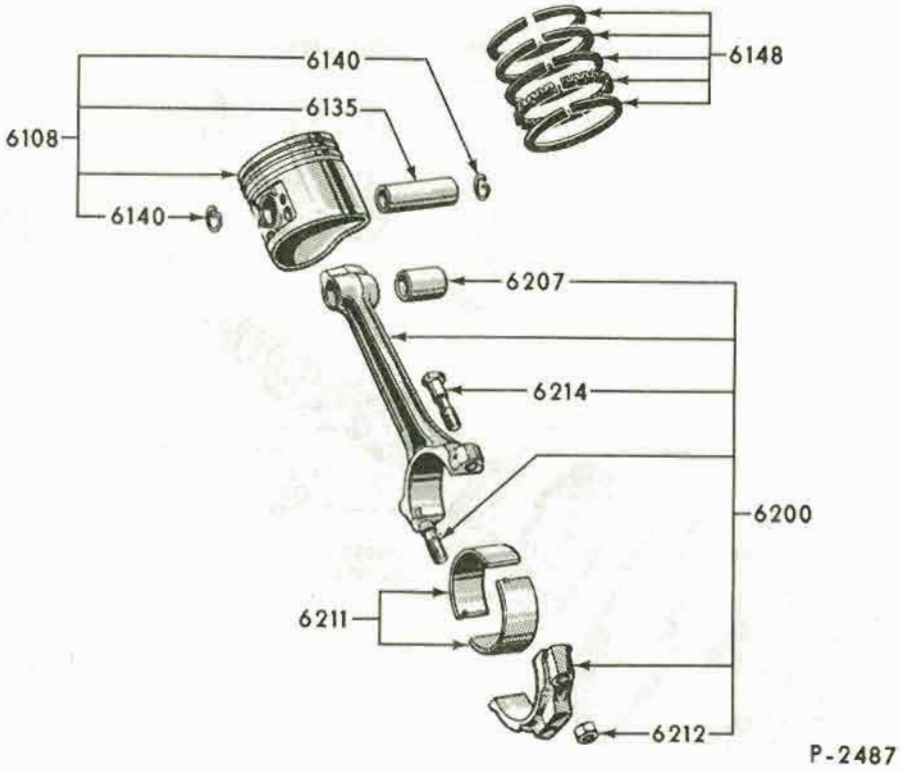

ENGINE PISTON, CONNECTING ROD and RELATED PARTS -- TYPICAL
1965/71 8 CYLINDER 352, 390, 427 and 428

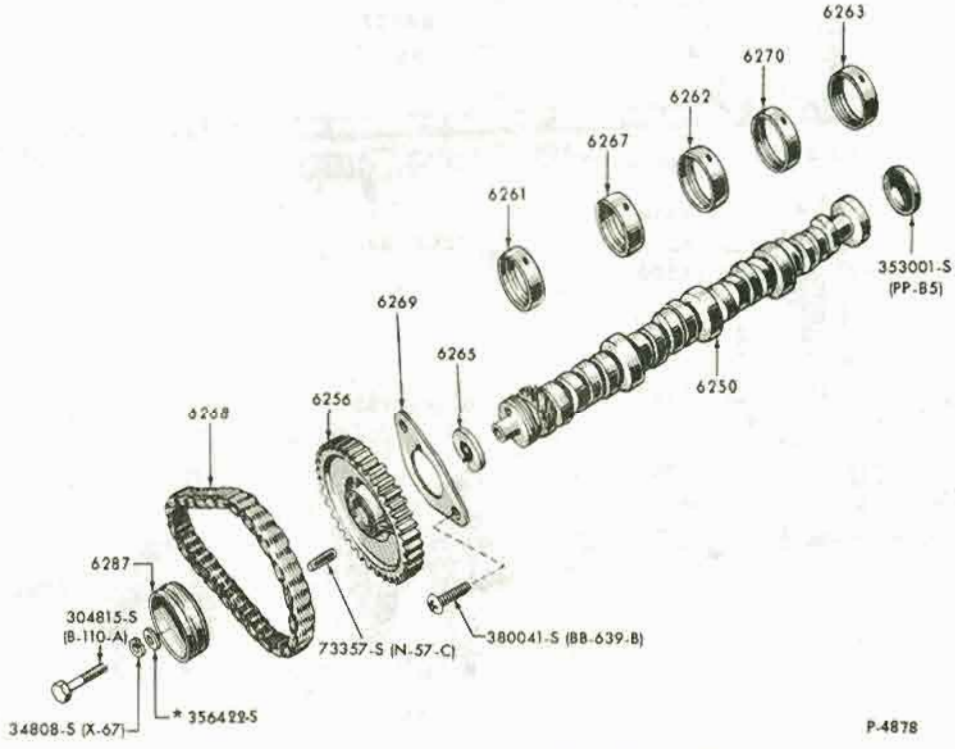

ENGINE CAMSHAFT, GEAR, BEARINGS and RELATED PARTS -- TYPICAL
1965/71 8 CYLINDER 352, 390, 427 and 428

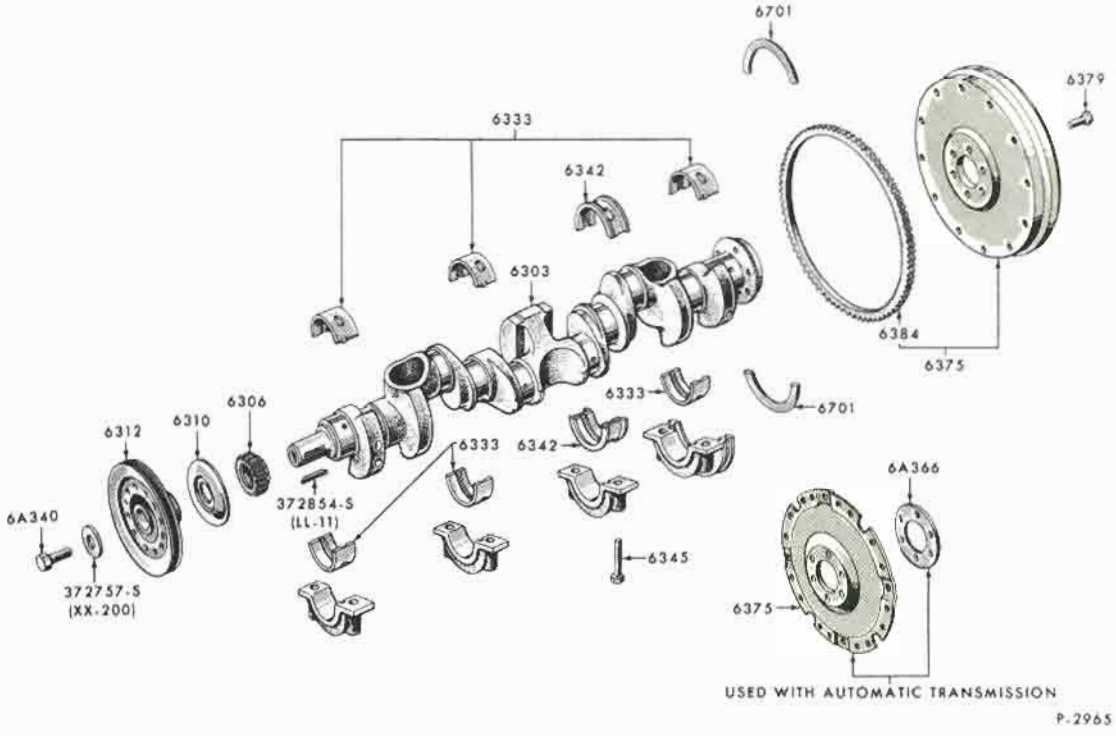

ENGINE CRANKSHAFT, FLYWHEEL and RELATED PARTS -- TYPICAL
1965/72 6 CYLINDER 170

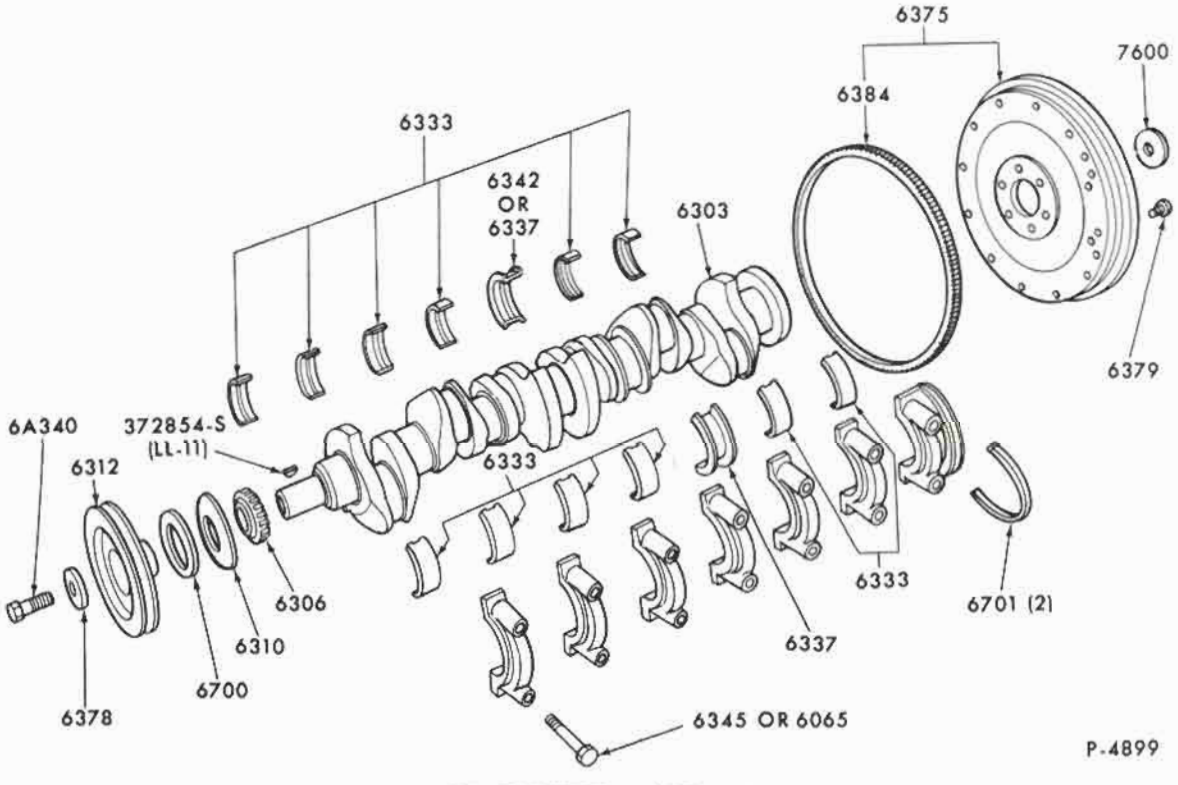

ENGINE CRANKSHAFT, FLYWHEEL and RELATED PARTS -- TYPICAL
1965/72 6 CYLINDER 200, 250

COPYRIGHT © 1975 — FORD MOTOR COMPANY — DEARBORN, MICHIGAN

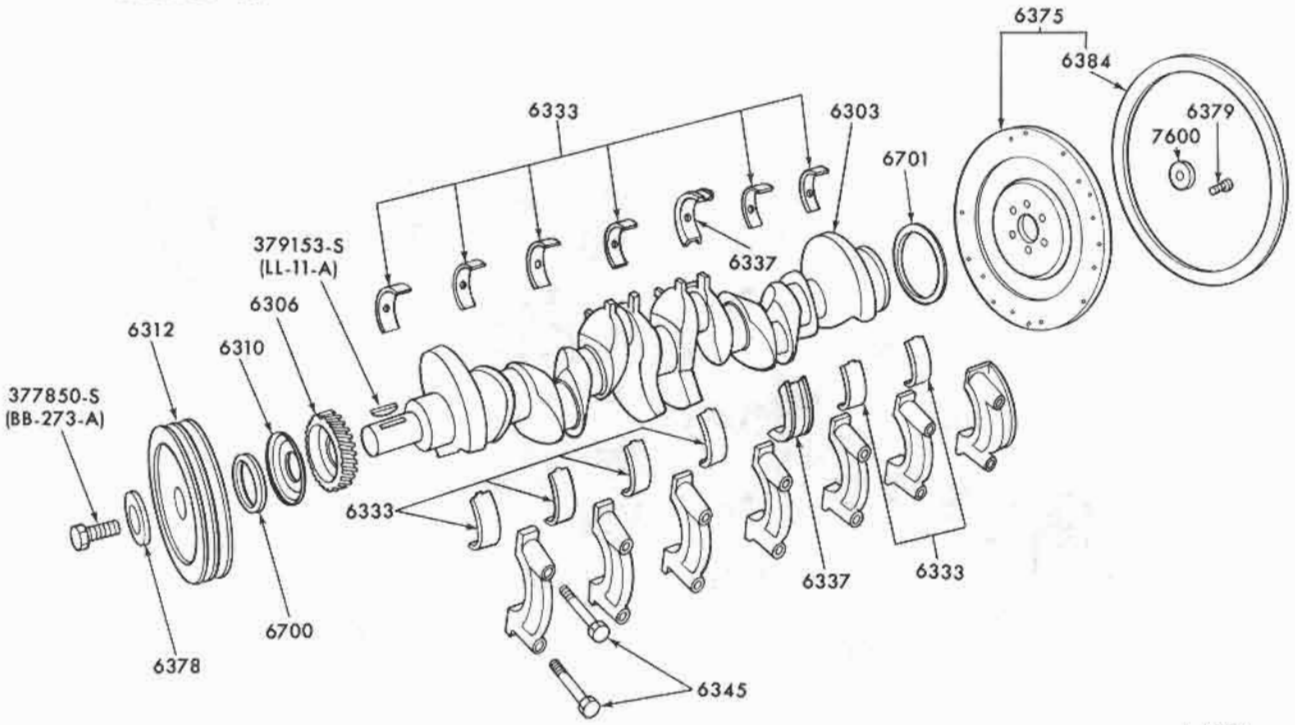

ENGINE CRANKSHAFT, FLYWHEEL and RELATED PARTS -- TYPICAL
1965/72 6 CYLINDER 240

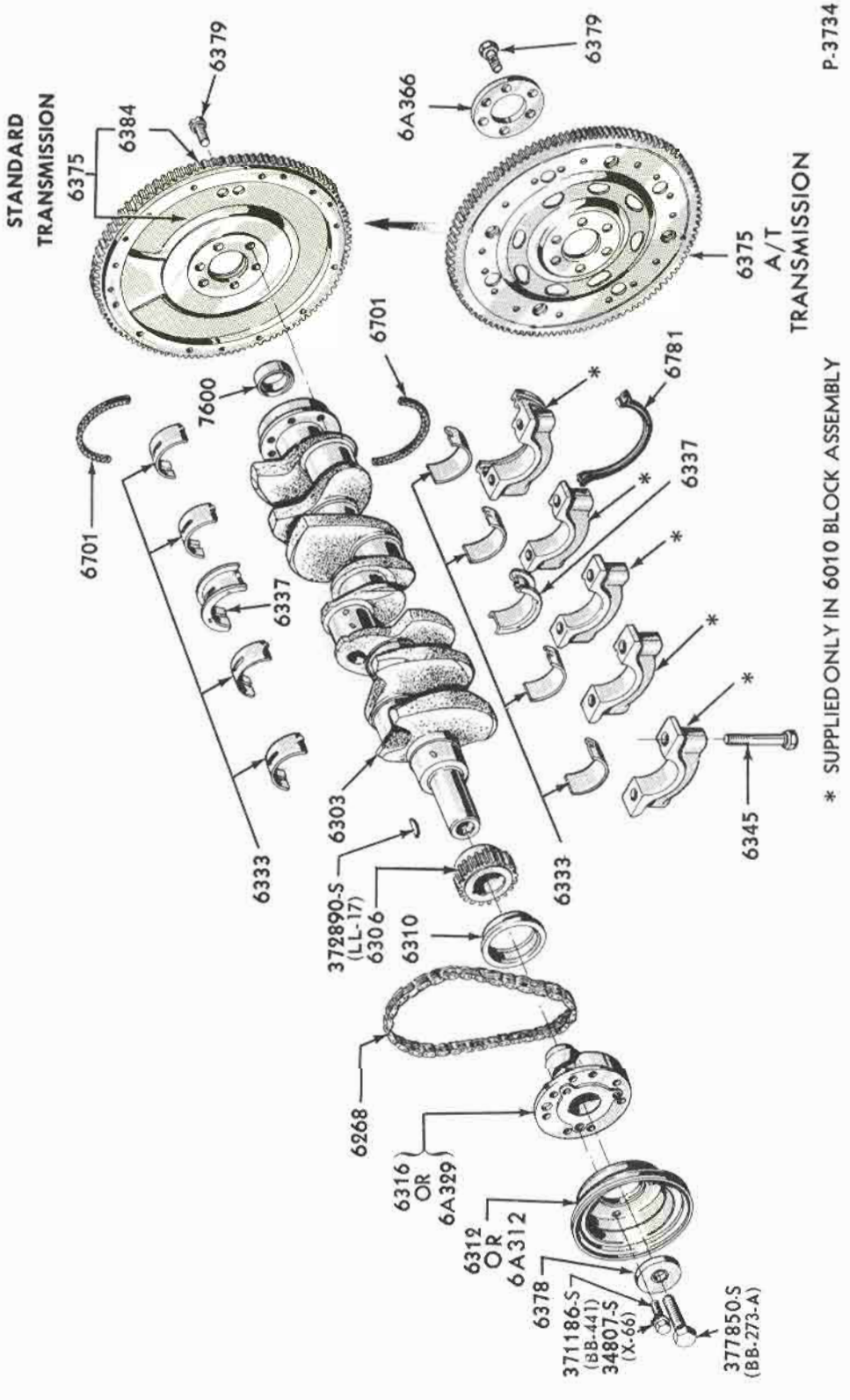

ENGINE CRANKSHAFT, FLYWHEEL and RELATED PARTS -- TYPICAL
1965/72 8 CYLINDER 260, 289, 302, 351, 400, 429 and 460

COPYRIGHT © 1975 — FORD MOTOR COMPANY — DEARBORN, MICHIGAN

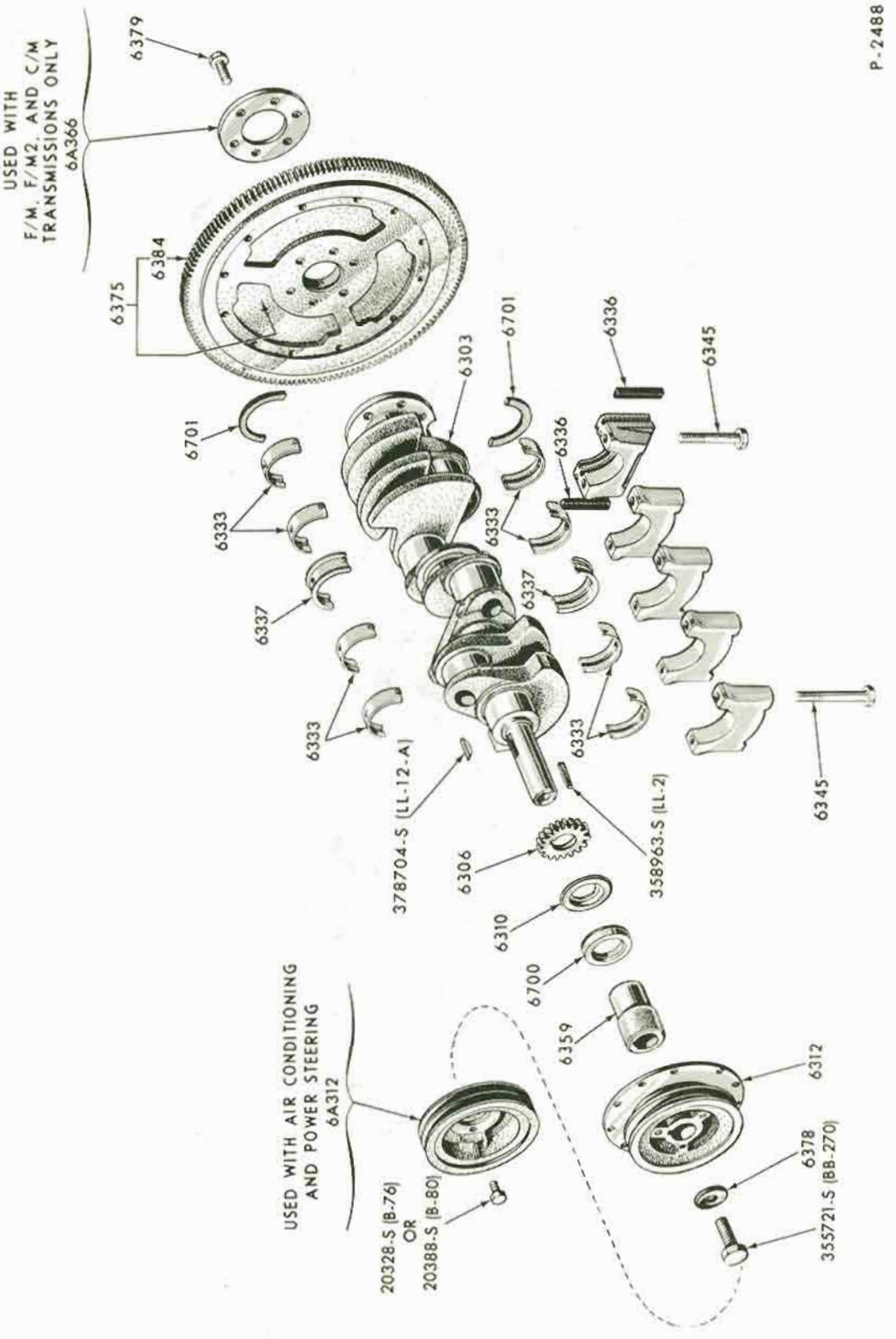

ENGINE CRANKSHAFT, FLYWHEEL and RELATED PARTS--TYPICAL
1965/71 8 CYLINDER 352, 390, 427 and 428

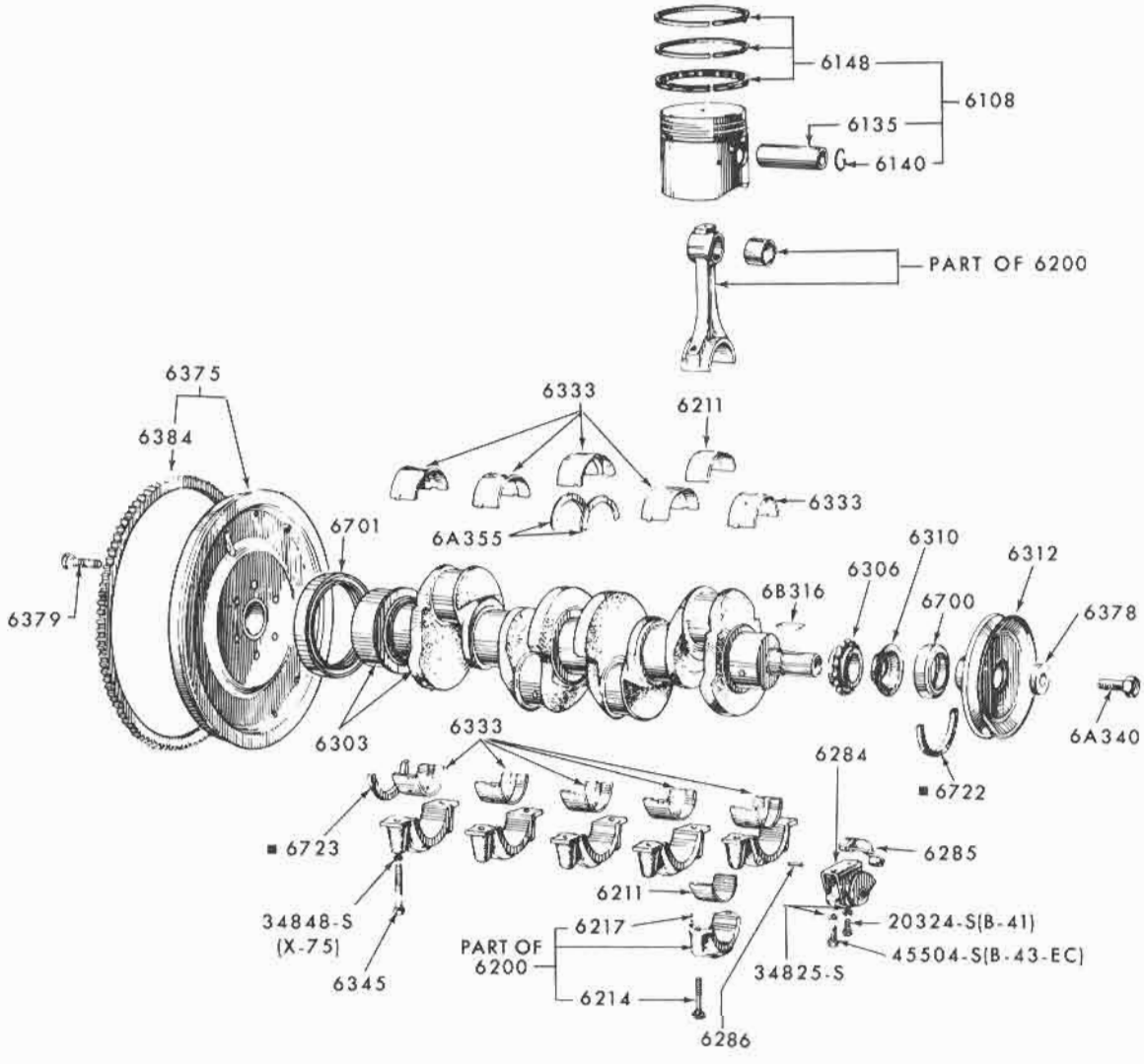

■ SERVICED IN 6781 GASKET SET ONLY

P-7596

COPYRIGHT © 1975— FORD MOTOR COMPANY —DEARBORN, MICHIGAN

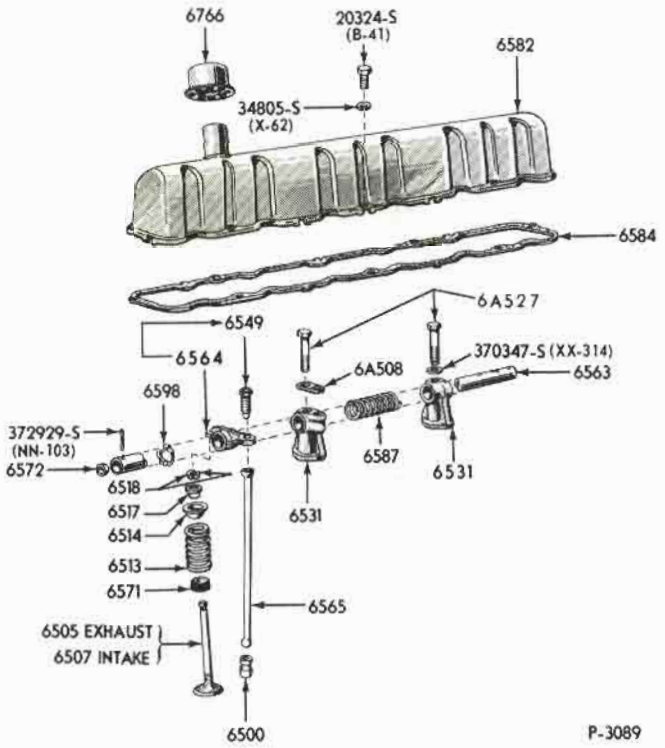

ENGINE VALVES, PUSH RODS, ROCKER ARM COVER and RELATED PARTS -- TYPICAL
1965/72 6 CYLINDER 170, 200 and 250

COPYRIGHT © 1975 — FORD MOTOR COMPANY — DEARBORN, MICHIGAN

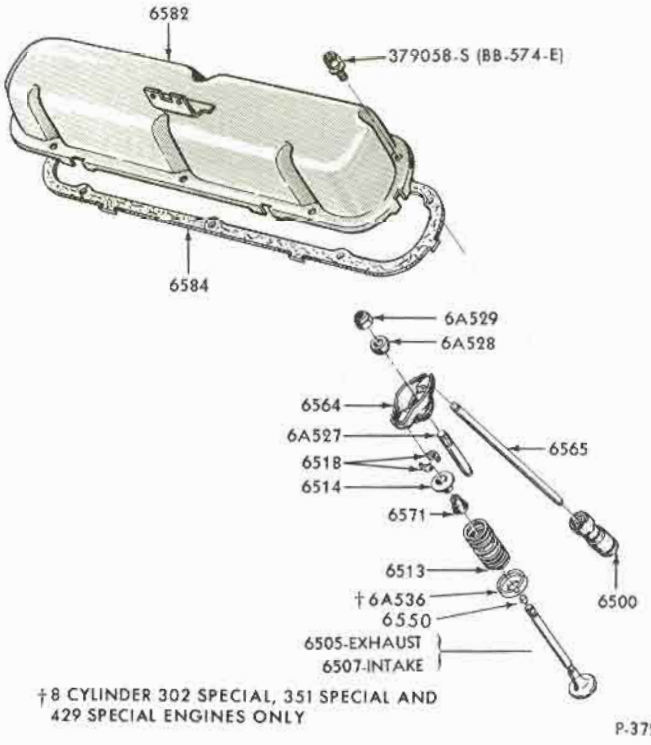

ENGINE VALVES, PUSH RODS, ROCKER ARM COVER and RELATED PARTS -- TYPICAL
1965/72 6 CYLINDER 240 and 8 CYLINDER 260, 289, 302, 351, 400 and 429

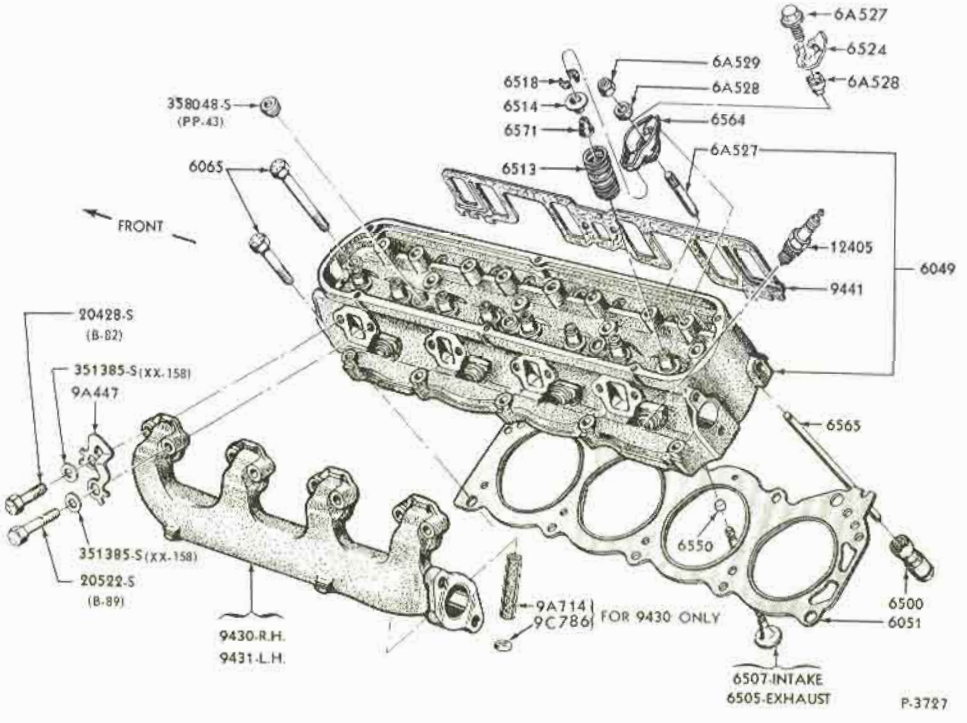

CYLINDER HEAD, VALVES and RELATED PARTS -
1965/72 8 CYLINDER 260, 289, 302, 351, 400, 429 and 460 ENGINES -- TYPICAL

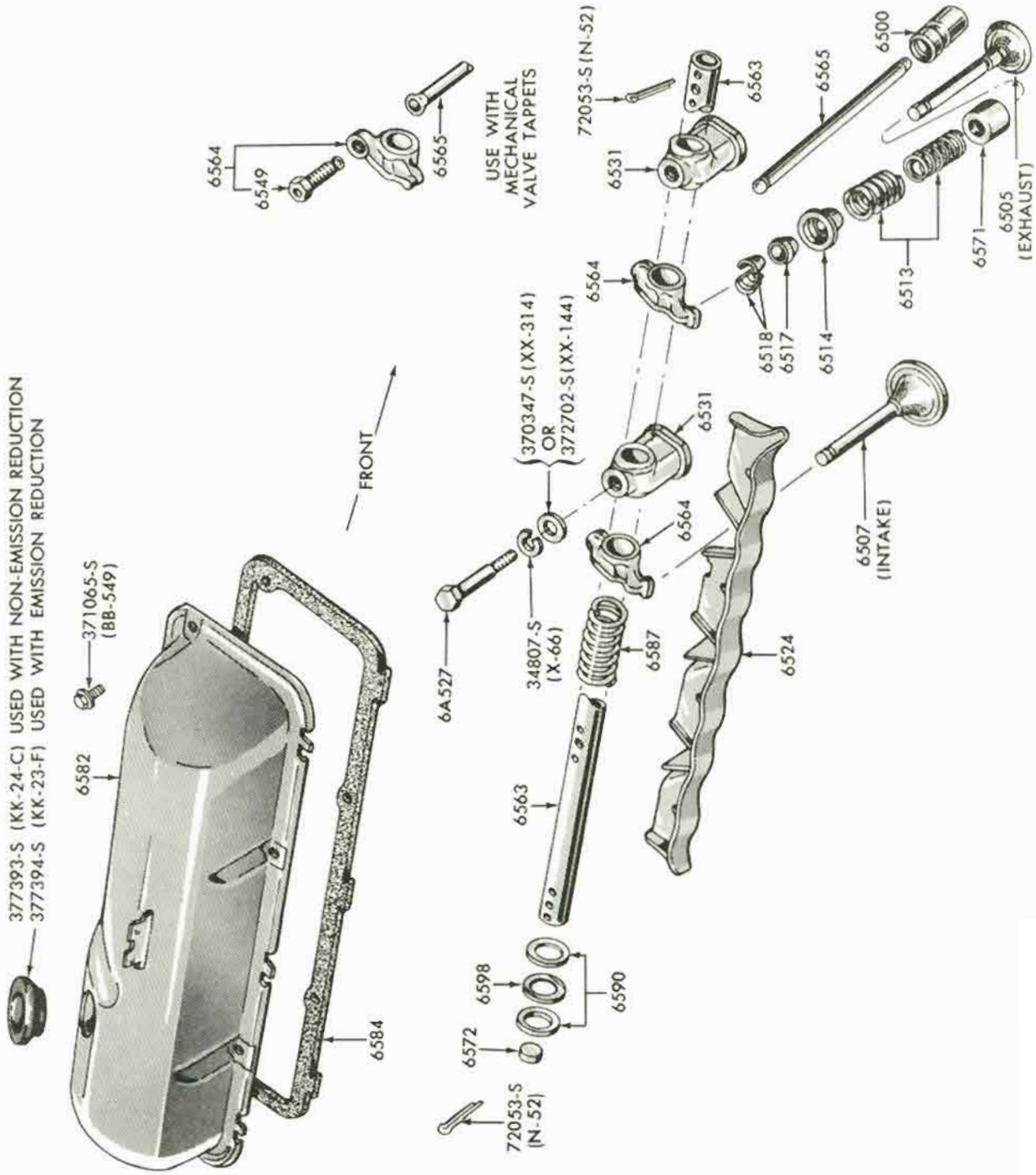

ENGINE VALVES, PUSH RODS, ROCKER ARM COVER and RELATED PARTS -- TYPICAL
1965/71 8 CYLINDER 352, 390, 427 and 428

COPYRIGHT © 1975 — FORD MOTOR COMPANY — DEARBORN, MICHIGAN

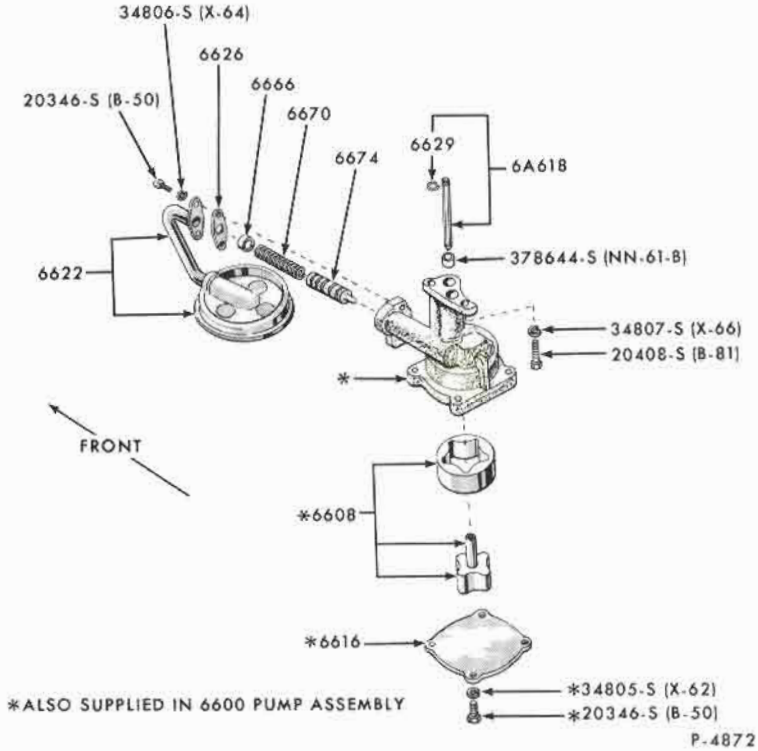

ENGINE OIL PUMP and RELATED PARTS
1965/72 6 CYLINDER 240

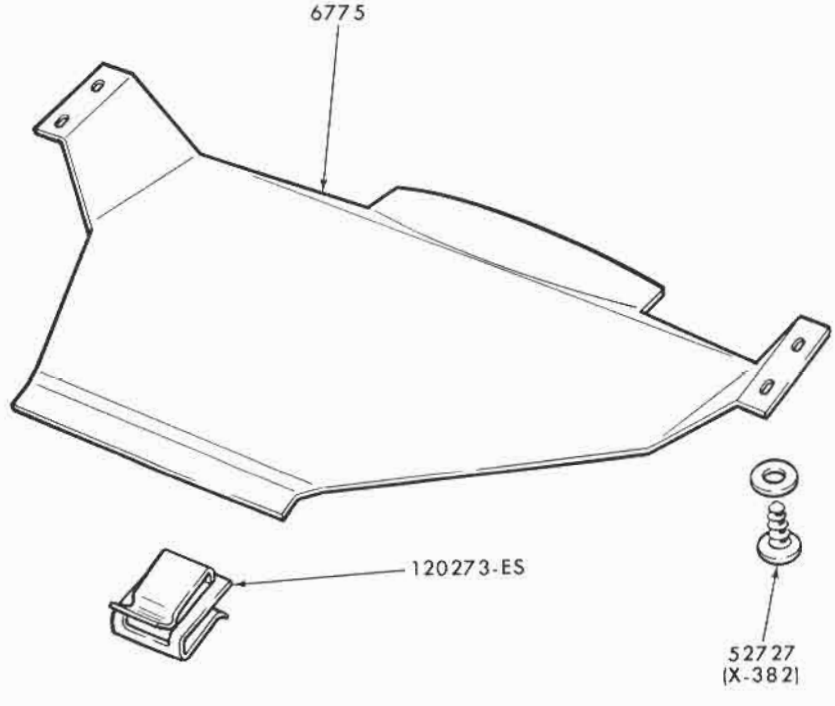

ENGINE SPLASH SHIELD
1971/72 PINTO

COPYRIGHT © 1975 — FORD MOTOR COMPANY — DEARBORN, MICHIGAN

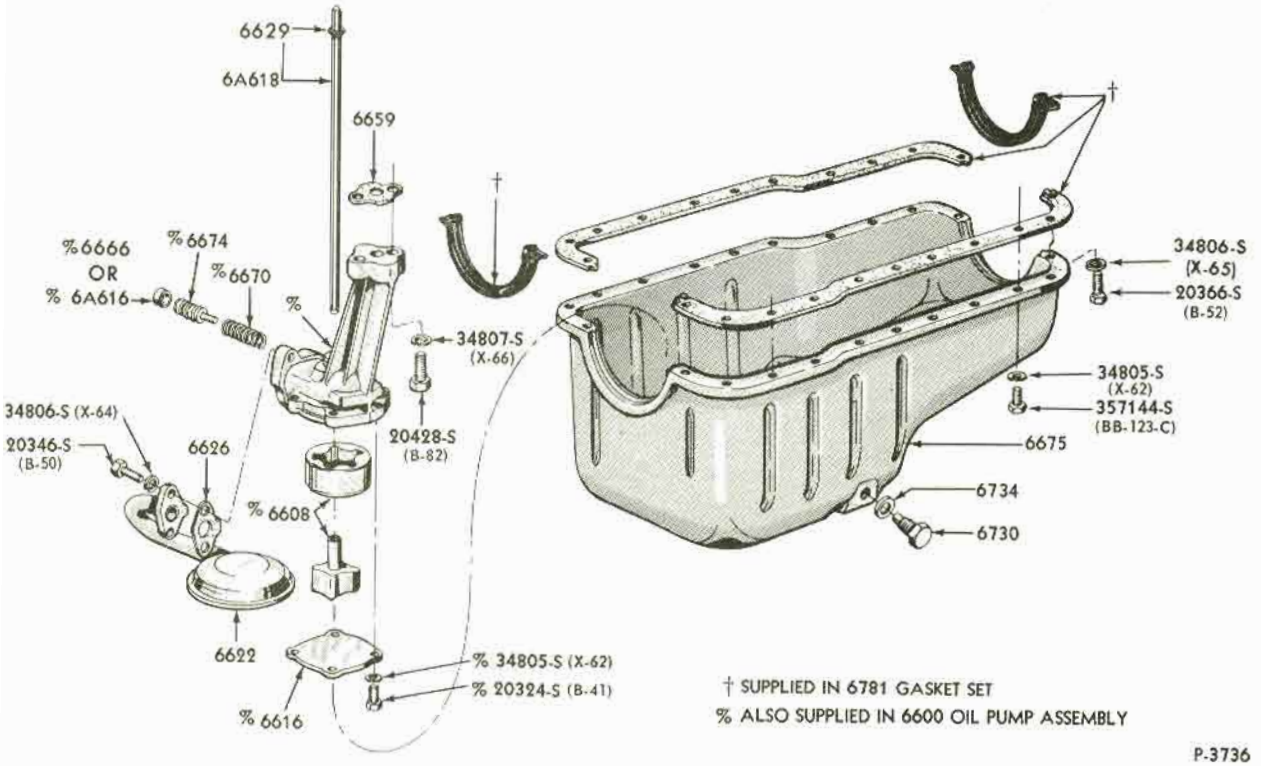

ENGINE OIL PUMP and RELATED PARTS -- TYPICAL
1965/72 8 CYLINDER 260, 289, 302, 351, 400, 429 and 460

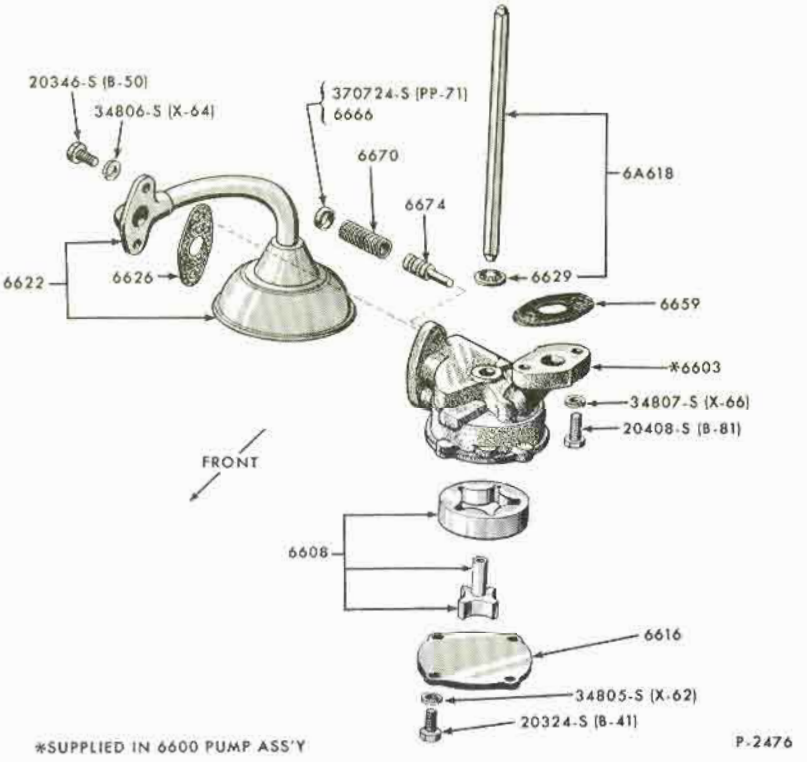

ENGINF OIL PUMP and RELATED PARTS -- TYPICAL
1965/71 8 CYLINDER 352, 390, 427 and 428

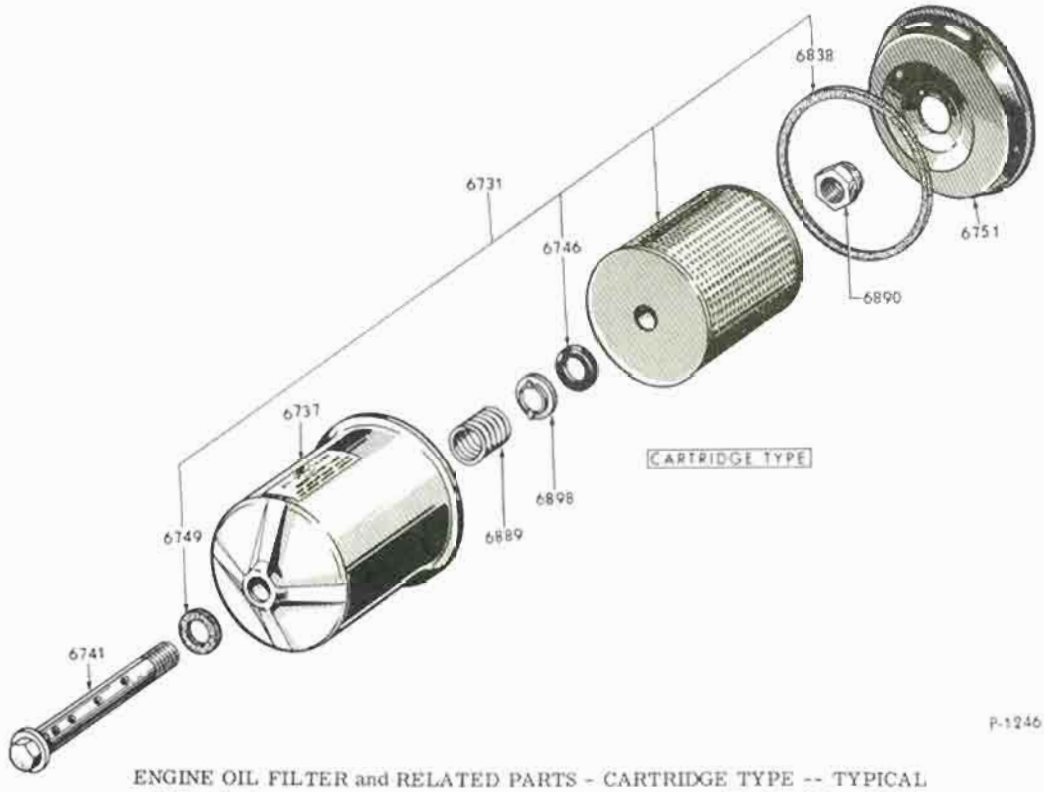

ENGINE OIL FILTER and RELATED PARTS - CARTRIDGE TYPE -- TYPICAL
1965/72 6 CYLINDER 170,200,240,250 and 8 CYLINDER 260,289,302 and 351

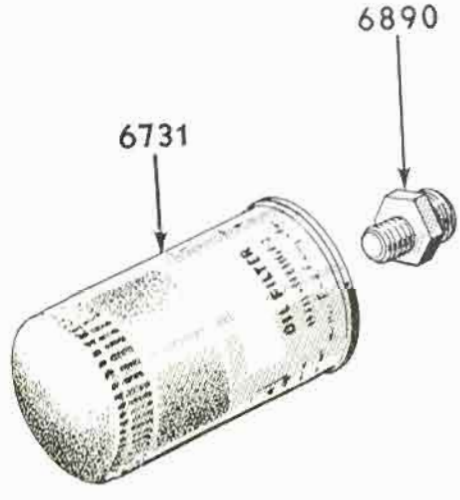

ENGINE OIL FILTER and RELATED PARTS - SPIN-ON TYPE -- TYPICAL
1965/72 6 CYLINDER 170,200,240,250 and 8 CYLINDER 260,289,302,351,352,390,400,427,428, 429 and 460

COPYRIGHT © 1975 — FORD MOTOR COMPANY — DEARBORN, MICHIGAN

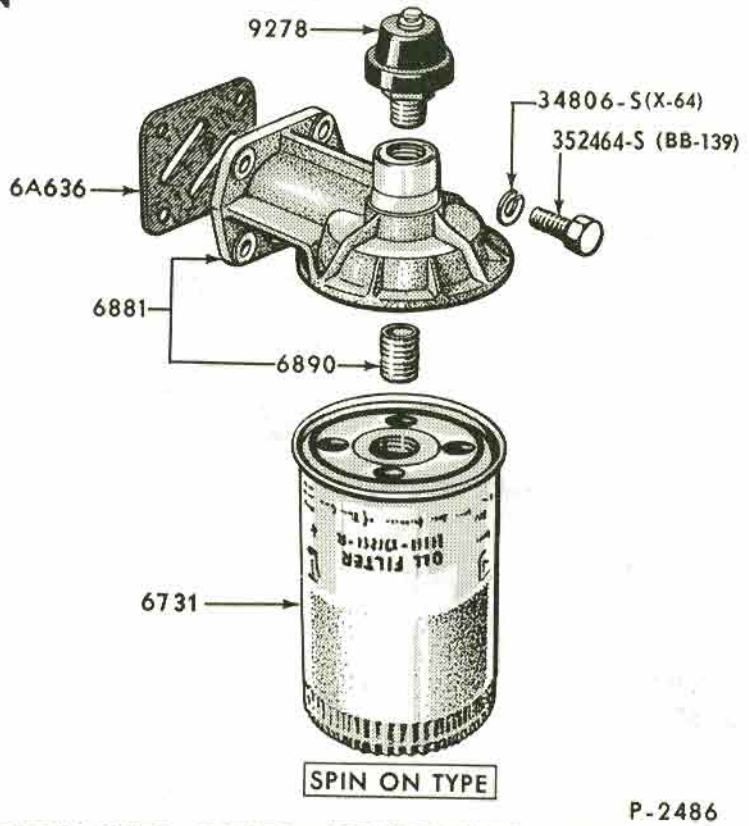

ENGINE OIL FILTER, ADAPTER and RELATED PARTS -- TYPICAL
1965/ 8 CYLINDER 352,390,400,427,428 and 429

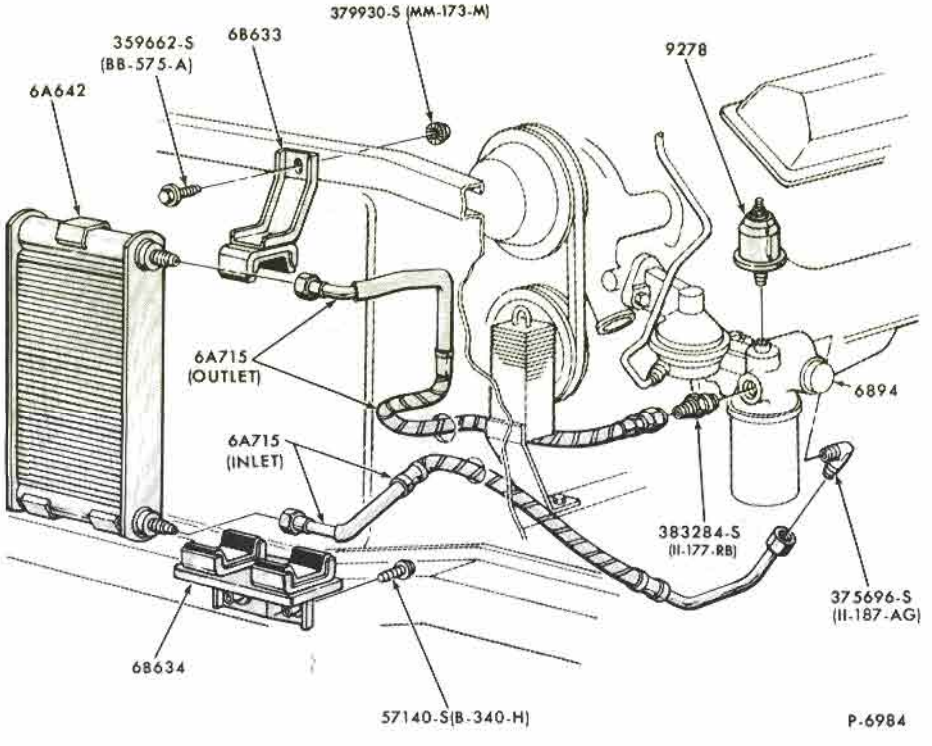

ENGINE OIL COOLER SYSTEM
1969/71 8 CYLINDER 302 BOSS, 428 SUPER CJ and 429 BOSS, 429S/CJ

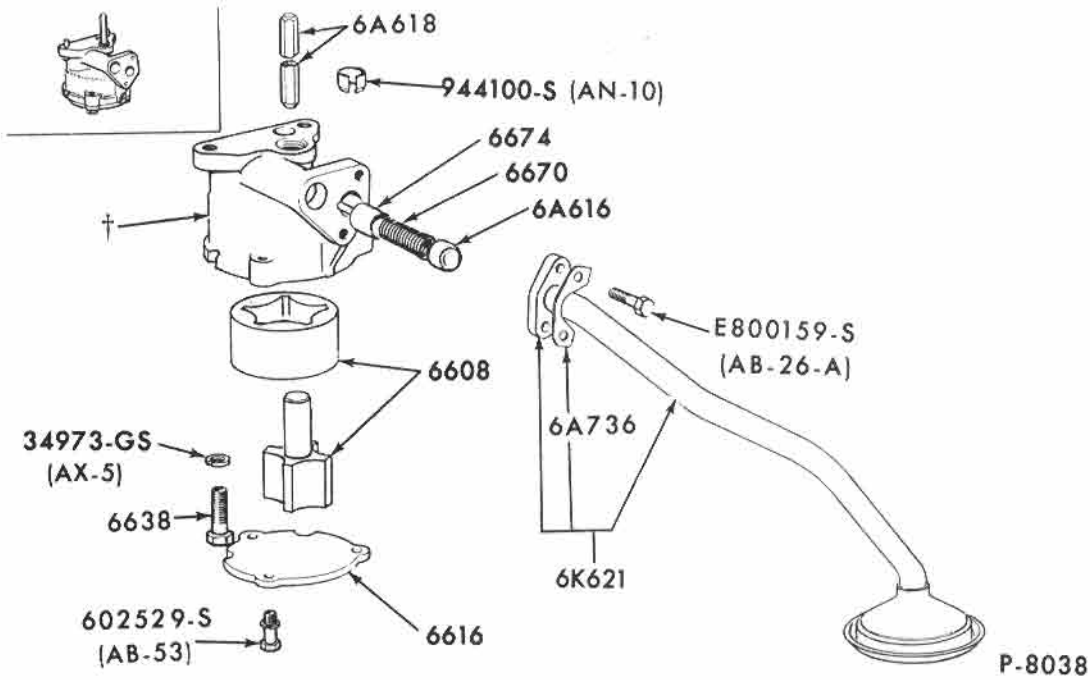

† SUPPLIED ONLY IN ASSEMBLY-REFER TO GROUP 6600

ENGINE OIL PUMP
1971/72 4 CYLINDER 122 O.H.C. ENGINE

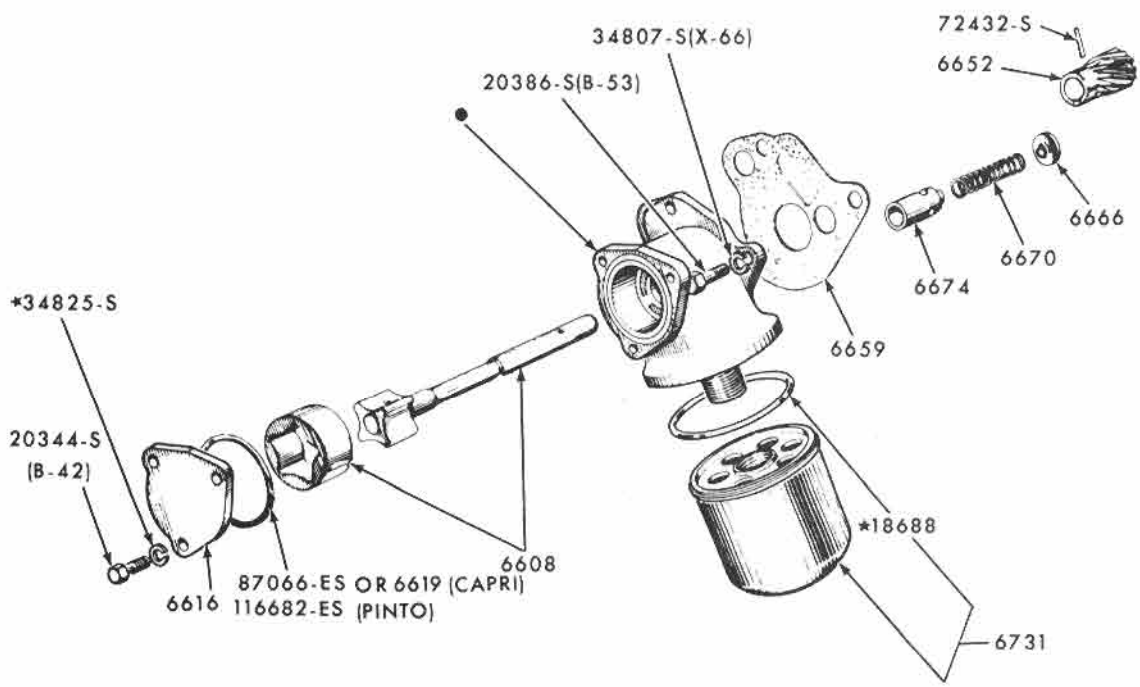

*SERVICED ONLY IN ASSEMBLY-REFER TO GROUP 6600

P-7592

ENGINE OIL PUMP and FILTER
1971/72 4 CYLINDER 98 ENGINE

COPYRIGHT © 1975 — FORD MOTOR COMPANY — DEARBORN, MICHIGAN

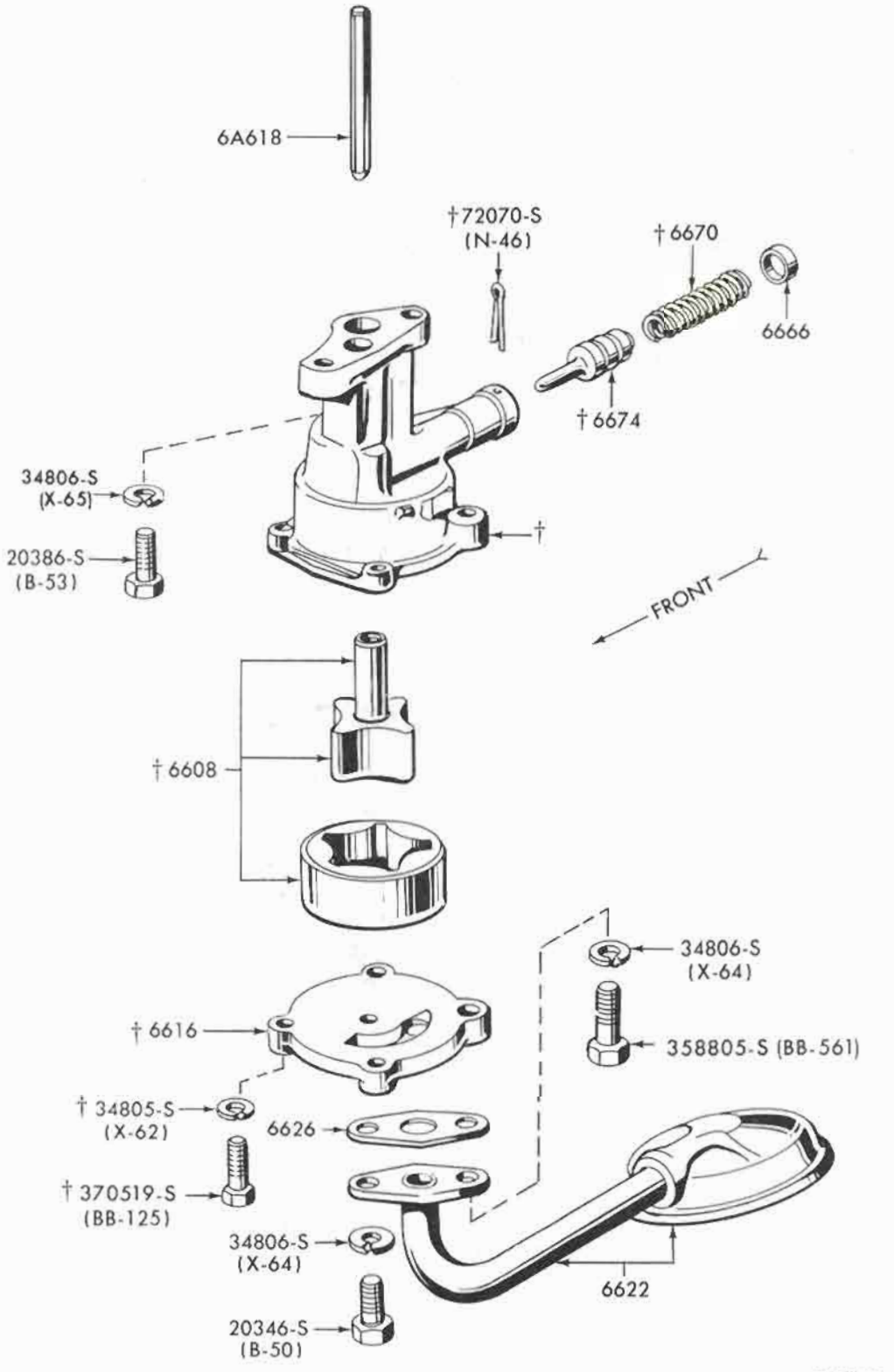

† SUPPLIED IN 6600 PUMP ASSEMBLY P-2963

ENGINE OIL PUMP and RELATED PARTS -- TYPICAL
1965/72 6 CYLINDER 170, 200 and 250

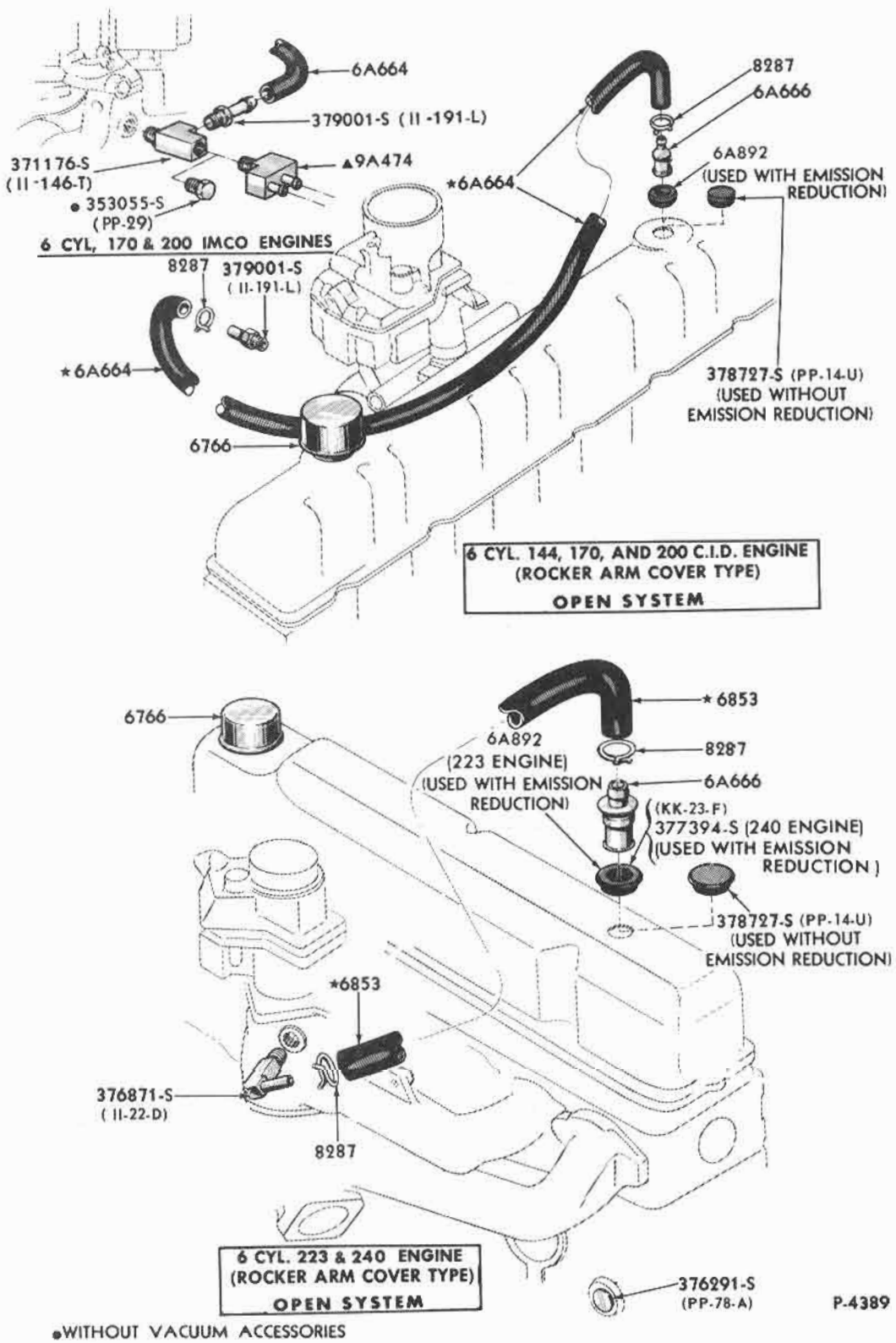

●WITHOUT VACUUM ACCESSORIES
▲WITH VACUUM ACCESSORIES

ENGINE EMISSION REDUCTION and RELATED PARTS - ROCKER ARM COVER TYPE
1965/70 6 CYLINDER 170, 200 and 240

COPYRIGHT © 1975 — FORD MOTOR COMPANY — DEARBORN, MICHIGAN

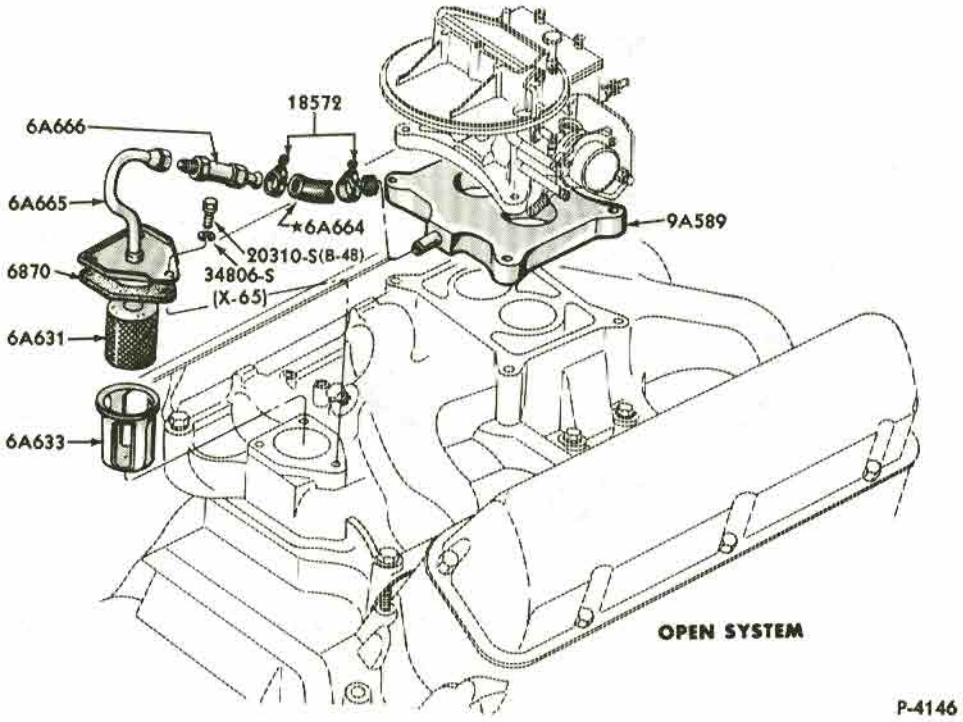

ENGINE EMISSION REDUCTION and RELATED PARTS - INTAKE MANIFOLD TYPE
1965 8 CYLINDER 260 and 289

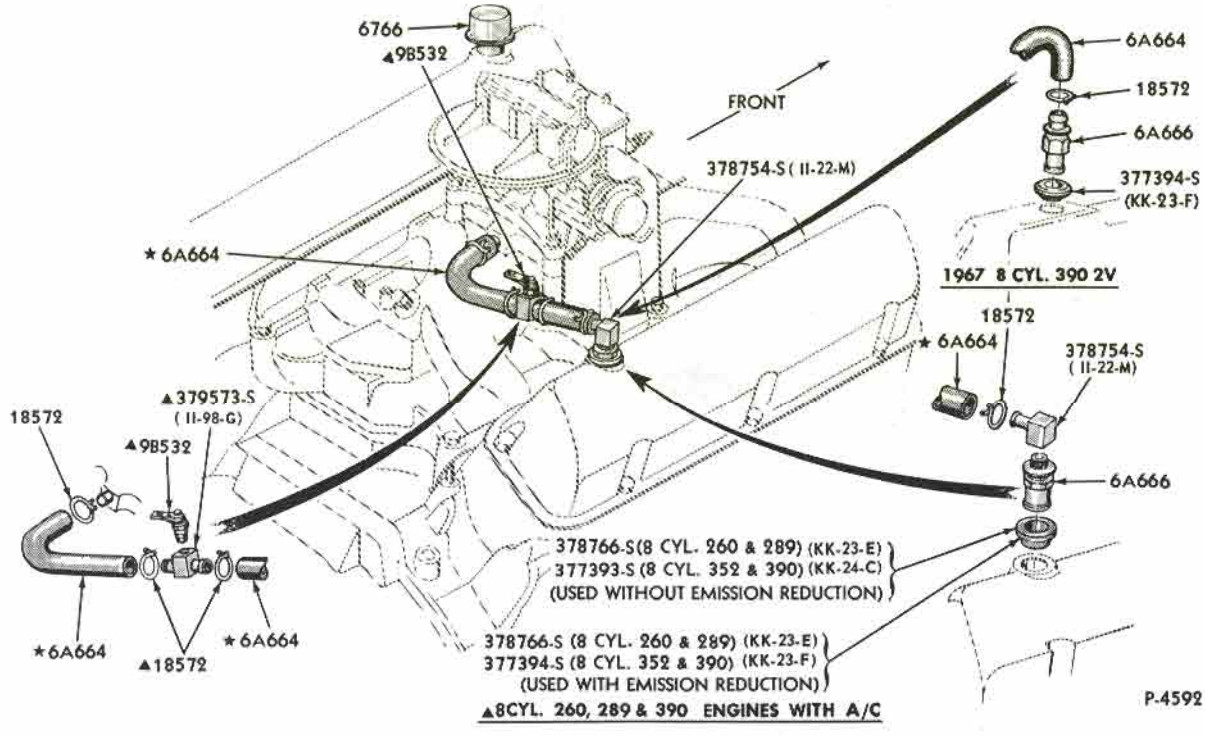

ENGINE EMISSION REDUCTION, HOT IDLE COMPENSATOR and RELATED PARTS - ROCKER ARM COVER TYPE
1965/70 8 CYLINDER 260,289,302 and 352 1965 8 CYLINDER 390
1967/70 8 CYLINDER 390 - 2/B CARBURETOR

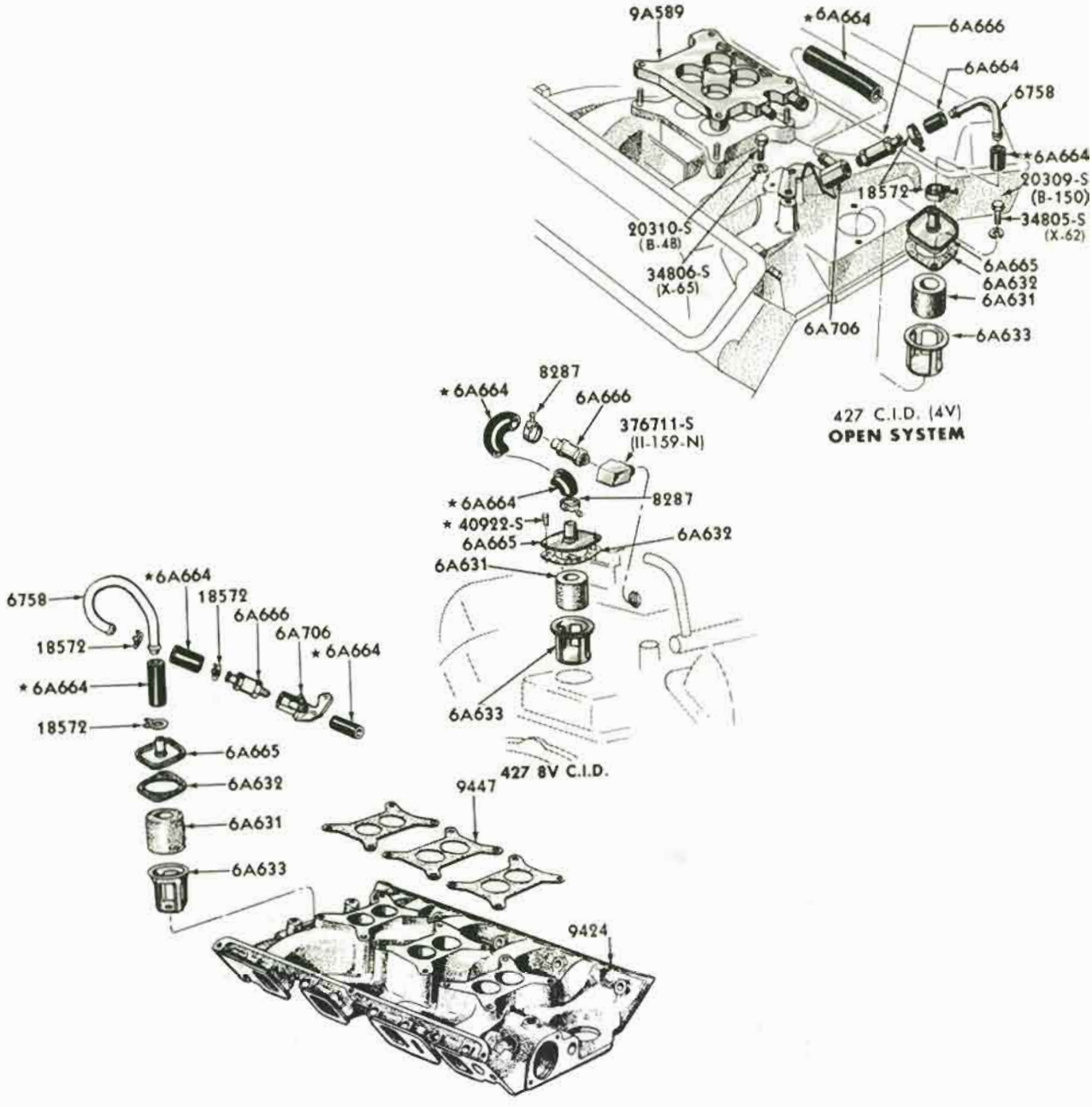

P-4107

May, 1975 COPYRIGHT © 1975 — FORD MOTOR COMPANY — DEARBORN, MICHIGAN

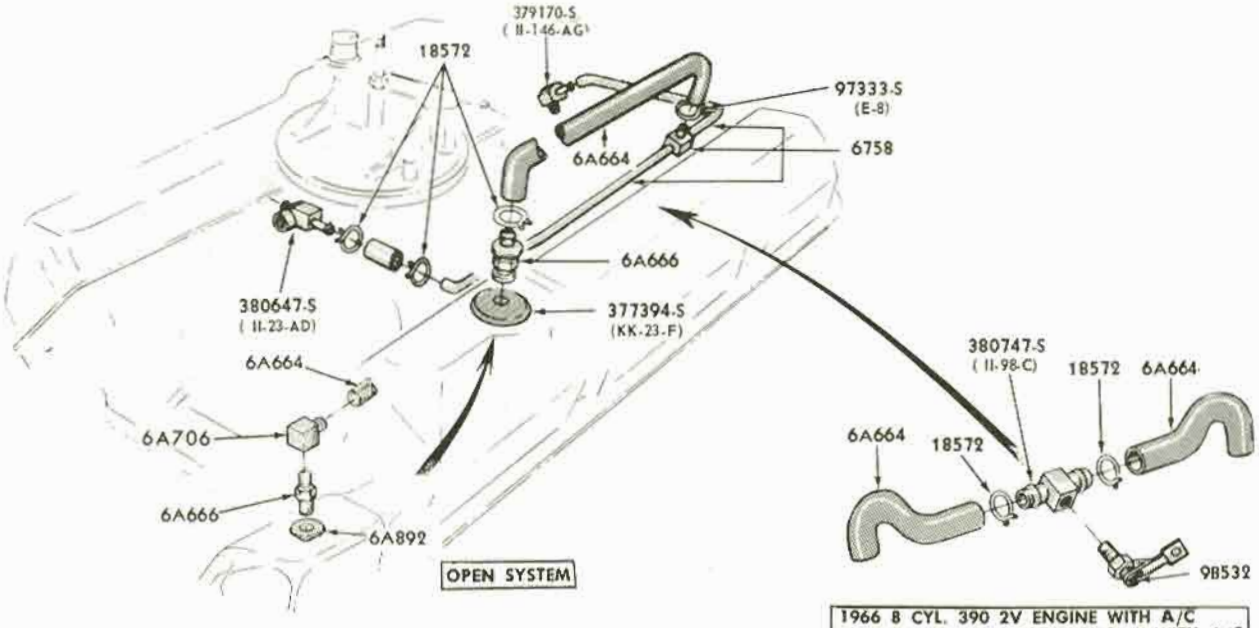

P-5302

ENGINE EMISSION REDUCTION, HOT IDLE COMPENSATOR and RELATED PARTS - ROCKER ARM COVER TYPE
1966 8 CYLINDER 390 - 2/B CARB. 1966/70 8 CYLINDER 390,428 - 4/B CARB.

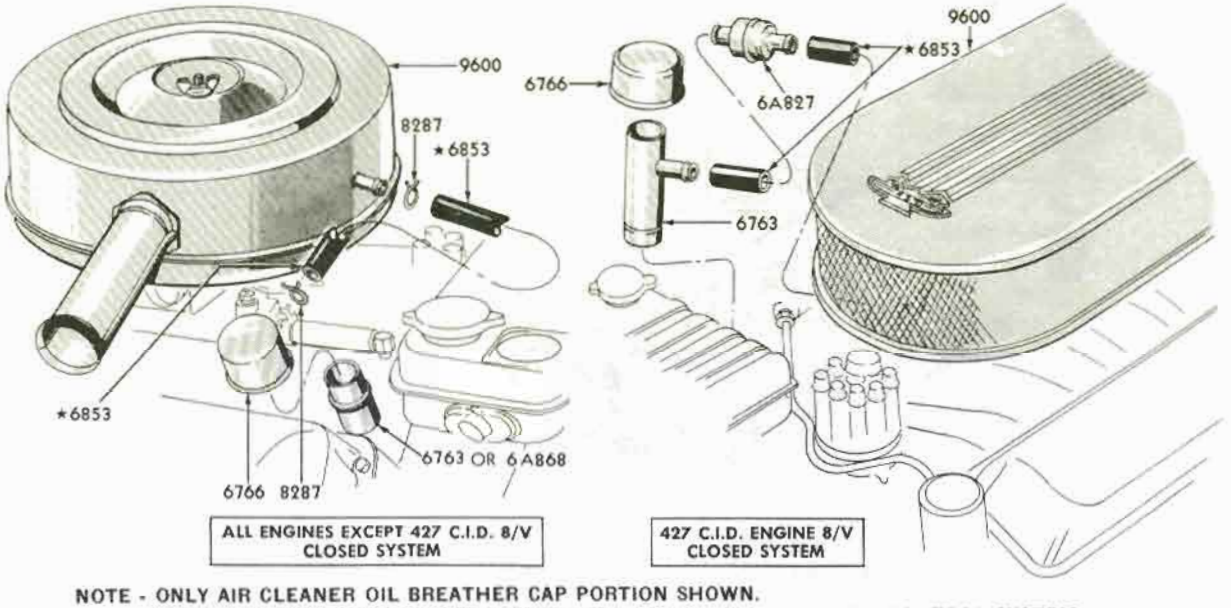

**NOTE - ONLY AIR CLEANER OIL BREATHER CAP PORTION SHOWN.
REFER TO PAGES 1 THRU 4 SECTION 66.1 FOR BALANCE OF EMISSION CONTROL SYSTEM**

P-4575

ENGINE EMISSION REDUCTION - AIR CLEANER OIL BREATHER CAP and RELATED PARTS - CLOSED SYSTEM
1965/69 6 CYLINDER 170,200,240 and 8 CYLINDER 260,289,302,352,390,427,428

P-8025

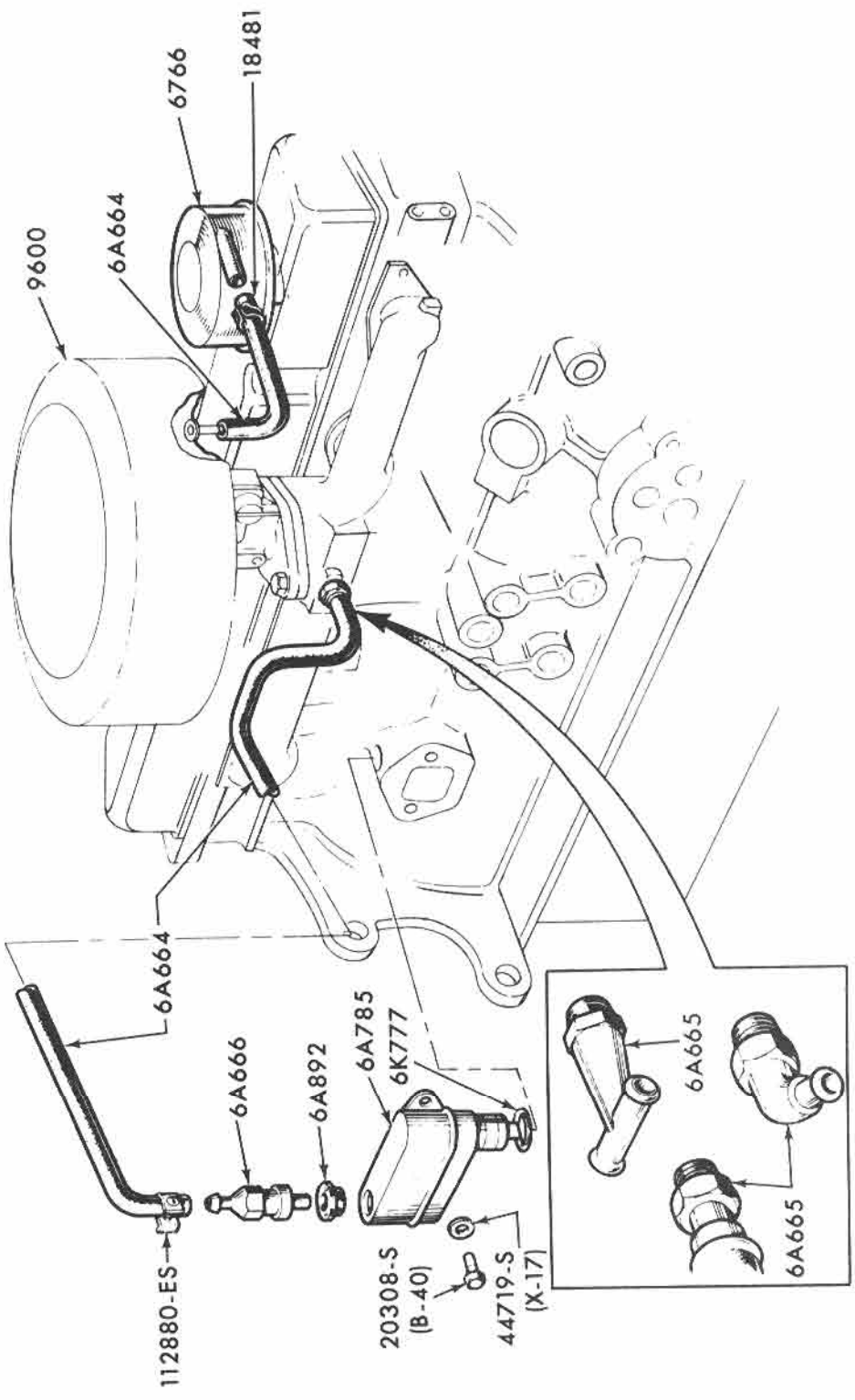

ENGINE CRANKCASE VENT SYSTEM
1971/72 4 CYLINDER 98 (1600cc) ENGINE

COPYRIGHT © 1975— FORD MOTOR COMPANY —DEARBORN, MICHIGAN

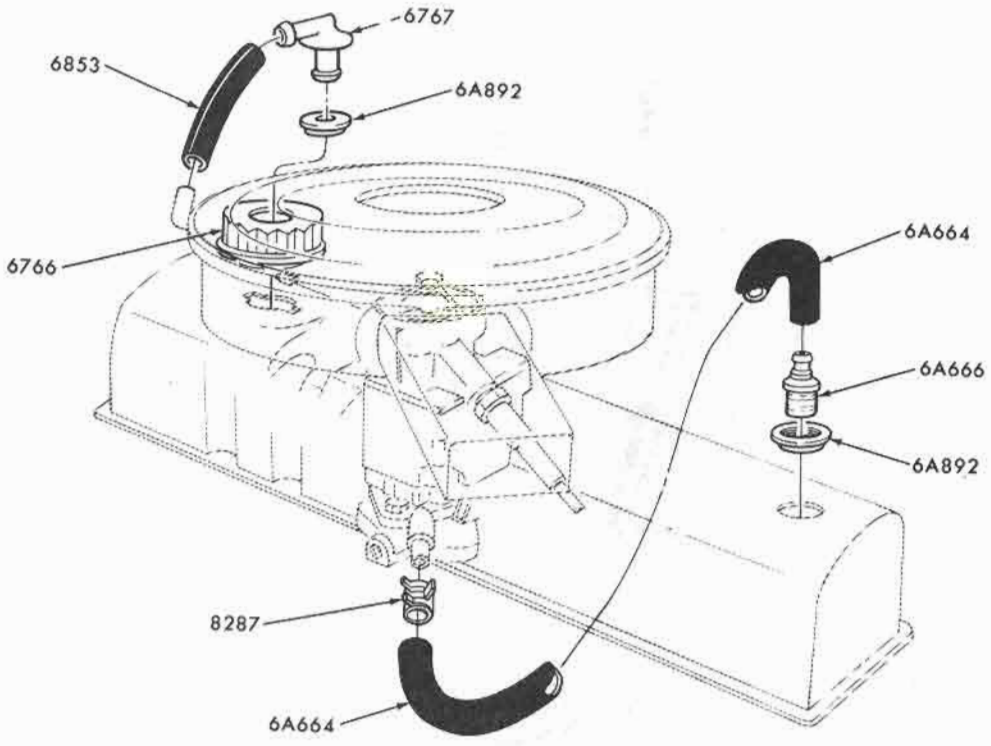

ENGINE EMISSION REDUCTION SYSTEM
1971/72 6 CYLINDER 170, 200, 250

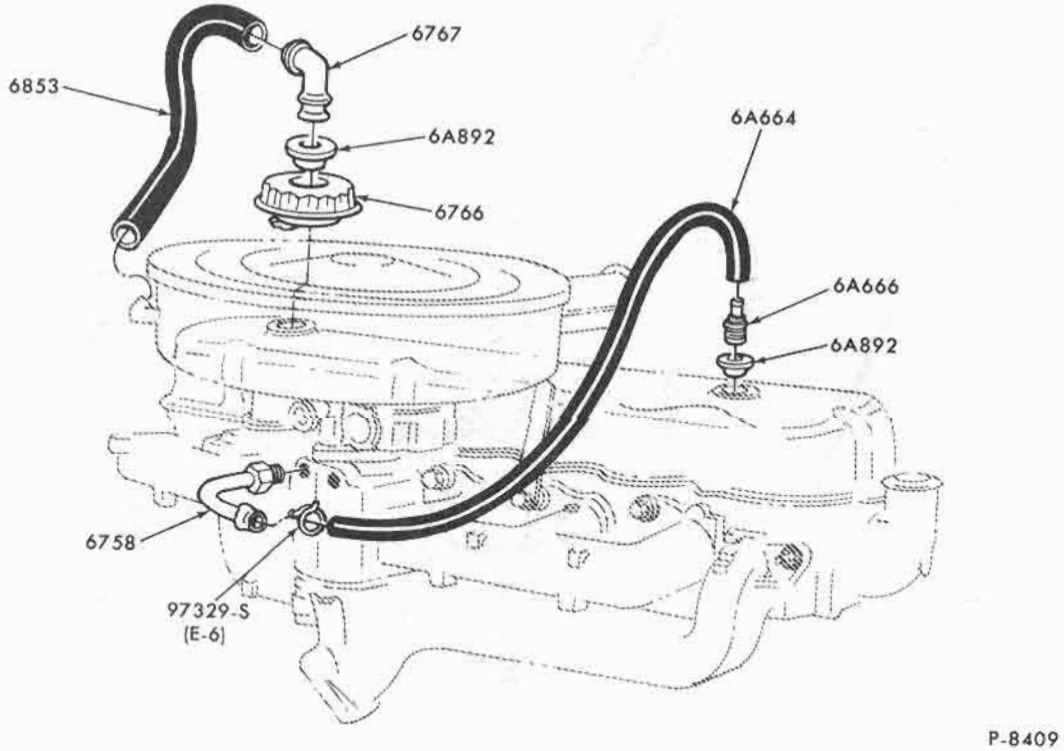

ENGINE EMISSION REDUCTION SYSTEM
1971/72 6 CYLINDER 240

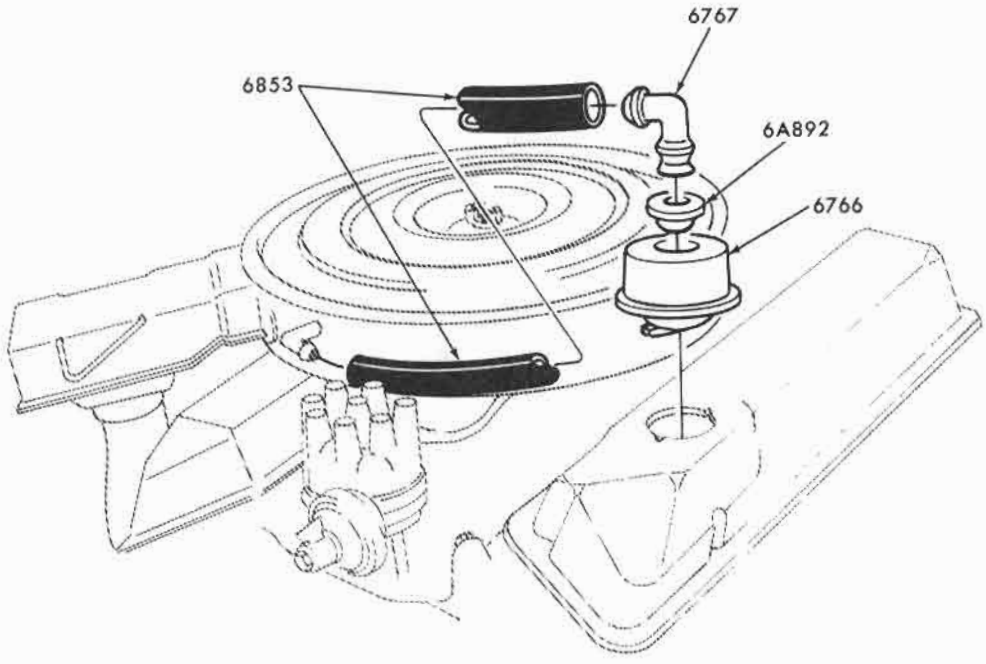

P-8412

ENGINE EMISSION REDUCTION SYSTEM
1971 8 CYLINDER 302 BOSS, 429

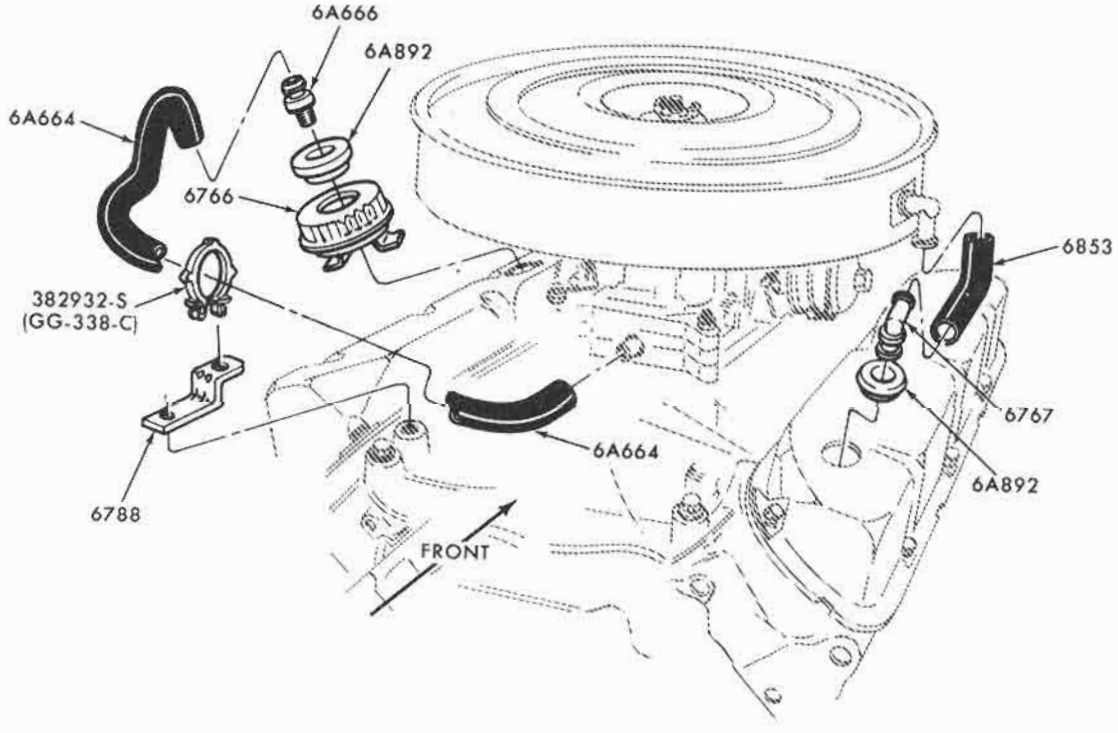

P-8413

ENGINE EMISSION REDUCTION SYSTEM
1971/72 8 CYLINDER 302, 351, 400, 429 and 460

COPYRIGHT © 1975 — FORD MOTOR COMPANY — DEARBORN, MICHIGAN

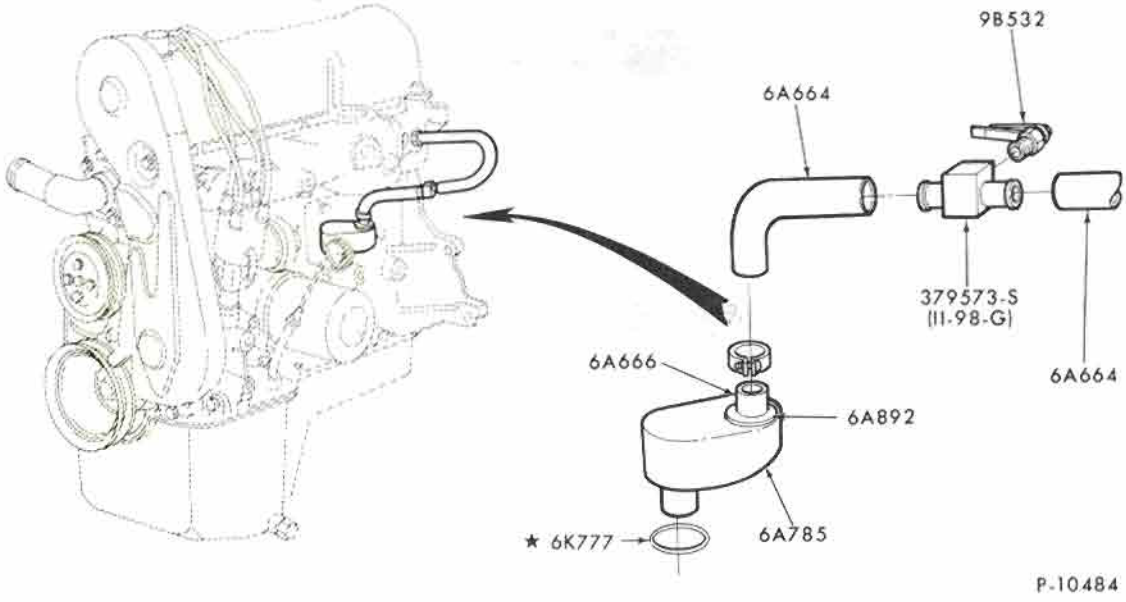

ENGINE HOT IDLE COMPENSATOR INSTALLATION
1971/72 4 CYLINDER 122 (2000cc) WITH A/C

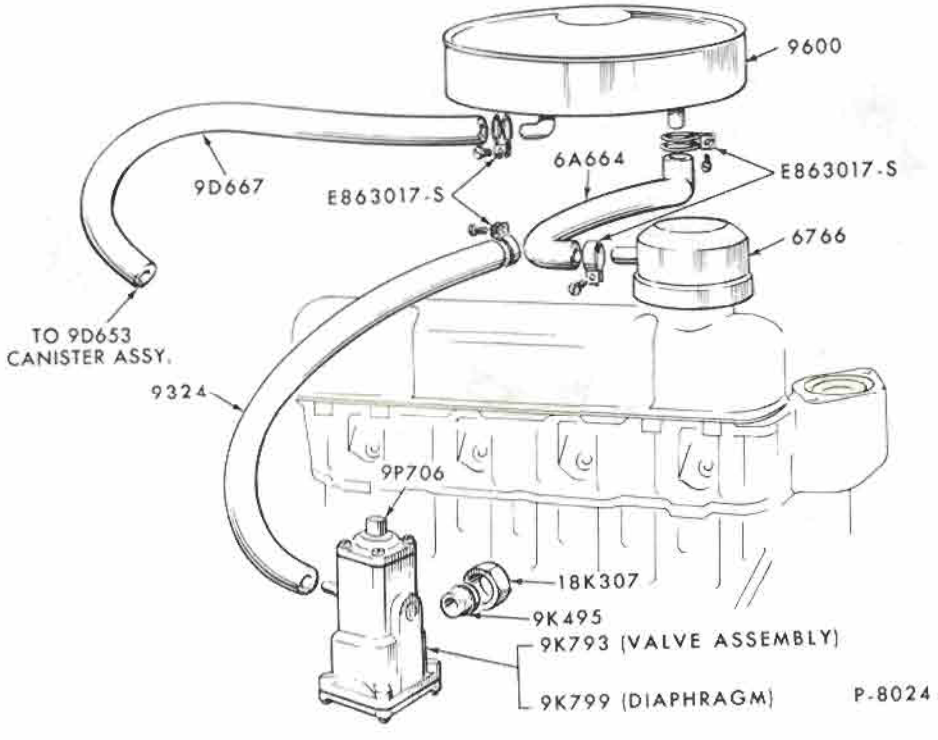

ENGINE EMISSION SYSTEM
1971/72 4 CYLINDER 122 (2000cc)

INDEX

THIS INDEX SECTION INCLUDES THE FOLLOWING MAJOR GROUPS:

CLUTCH & CLUTCH PEDAL
GEAR SHIFT MECHANISM
MANUAL TRANSMISSION
OVERDRIVE TRANSMISSION
STEERING COLUMN & SHIFT PARTS
TRANSFER CASE

TITLE	TRANS.	SECTION	PAGE	ILLUS. NO.
1965				
A (FORD)				
EXTERNAL PARTS				
Clutch & clutch pedal	All	75	1	P-4595
Shift mechanism				
Steering column & column shift	All 3/S	72	2	P-4794
- floor shift	4/S	35	1	P-5495
Gear shift mechanism - console or floor mtd. - Ford 4 speed	F/4/S	73	2	P-5809
INTERNAL PARTS				
3 speed overdrive trans. - less extension	O/D	70	1	P-1914
- extension - 6 & 8 cyl. 240, 289	O/D	70	2	P-2228
- 8 cyl. 390	O/D	70	3	P-2144
Gear shift and interlock linkage	O/D	72	1	P-3917
3 speed manual transmission - 3.03 type	3/S	70	5	P-4012
4 speed manual trans. - Ford 4 speed	4/S	70	8	P-4424
B (FAIRLANE)				
EXTERNAL PARTS				
Clutch & clutch pedal	All	75	3	P-3738
Clutch pedal	All	75	2	P-3674
Shift mechanism				
Steering column - column shift	All 3/S	72	3	P-3712
- floor shift	4/S	35	2	P-3724
Gear shift mechanism - console or floor mtd. - Ford 4 speed	F/4/S	73	4	P-5810
- Warner 4 speed	W/4/S	73	1	P-3745
INTERNAL PARTS				
3 speed overdrive trans. - less extension	O/D	70	1	P-1914
- extension	O/D	70	2	P-2228
3 speed manual trans. - 2.77 type	3/S	70	4	P-2966
- 3.03 type	3/S	70	5	P-4012
4 speed manual trans. - Ford 4 speed	F/4/S	70	8	P-4424
- Warner 4 speed less forks, levers & cover	W/4/S	70	7	P-3744
- Warner 4 speed forks, levers & cover	W/4/S	73	1	P-3745
F (MUSTANG)				
EXTERNAL PARTS				
Clutch, clutch pedal	All	75	5	P-4472
Shift mechanism				
Steering column - floor shift	All	35	4	P-6366
Gear shift mechanism - console or floor mtd. - 3 speed trans.	3/S	73	3	P-4516
- Ford 4 speed	F/4/S	73	4	P-5810
- Warner 4 speed	W/4/S	73	1	P-3745
- Dagenham 4 speed	D/4/S	73	5	P-3904

COPYRIGHT © 1975 — FORD MOTOR COMPANY — DEARBORN, MICHIGAN

INDEX

TITLE	TRANS.	SECTION	PAGE	ILLUS. NO.
1965				
F (MUSTANG)				
INTERNAL PARTS				
3 speed manual trans. - 2.77 type	3/S	70	4	P-2966
- 3.03 type	3/S	70	5	P-4012
4 speed manual trans.				
- Ford 4 speed	F/4/S	70	8	P-4424
- Warner 4 speed less forks, levers & cover	W/4/S	70	7	P-3744
- Warner 4 speed forks, levers & cover	W/4/S	73	1	P-3745
- Dagenham 4 speed less forks, levers & cover	D/4/S	70	6	P-3903
- Dagenham 4 speed forks, levers & cover	D/4/S	73	5	P-3904
X (FALCON)				
EXTERNAL PARTS				
Clutch & related parts	All	75	8	P-3141
Clutch pedal & brake pedal	All	75	7	P-3130
Shift mechanism				
Steering column - column shift	3/S	72	4	P-4600
- floor shift	All 4/S	35	4	P-6366
Gear shift mechanism - console or floor mtd.				
- Ford 4 speed	F/4/S	73	4	P-5810
- Warner 4 speed	W/4/S	73	1	P-3745
INTERNAL PARTS				
3 speed manual trans. - 2.77 type	3/S	70	4	P-2966
- 3.03 type	3/S	70	5	P-4012
4 speed manual trans.				
- Ford 4 speed	F/4/S	70	8	P-4424
- Warner 4 speed less forks, levers & cover	W/4/S	70	7	P-3744
- Warner 4 speed forks, levers & cover	W/4/S	73	1	P-3745
1966				
A (FORD)				
EXTERNAL PARTS				
Clutch & clutch pedal	All	75	1	P-4595
Shift mechanism				
Steering column - column shift	All 3/S	72	2	P-4794
- floor shift	All	35	1	P-5495
Gear shift mechanism - console or floor mtd.				
- Ford 4 speed	F/4/S	73	2	P-5809
INTERNAL PARTS				
3 speed overdrive trans. - less extension	O/D	70	1	P-1914
- extension - 6 & 8 cyl. 240, 289	O/D	70	2	P-2228
- 8 cyl. 352, 390	O/D	70	3	P-2144
Gear shift & interlock linkage	O/D	72	1	P-3917
3 speed manual transmission - 3.03 type	3/S	70	5	P-4012
4 speed manual trans. - Ford 4 speed	F/4/S	70	8	P-4424

INDEX

1966

B (FAIRLANE)

TITLE	TRANS.	SECTION	PAGE	ILLUS. NO.
EXTERNAL PARTS				
Clutch & clutch pedal	All	75	4	P-4983
Shift mechanism				
Steering column - column shift	All 3/S	72	5	P-5000
- floor shift	All	35	3	P-5138
Gear shift mechanism - console or floor mtd.				
- 3 speed trans.	3/S	73	3	P-4516
- Ford 4 speed	F/4/S	73	4	P-5810
INTERNAL PARTS				
3 speed overdrive trans. - less extension	O/D	70	1	P-1914
- extension	O/D	70	2	P-2228
3 speed manual trans. - 2.77 type	3/S	70	4	P-2966
- 3.03 type	3/S	70	5	P-4012
4 speed manual trans. - Ford 4 speed	F/4/S	70	8	P-4424

F (MUSTANG)

TITLE	TRANS.	SECTION	PAGE	ILLUS. NO.
EXTERNAL PARTS				
Clutch & clutch pedal	All	75	5	P-4472
Shift mechanism				
Steering column - floor shift	All	35	4	P-6366
Gear shift mechanism - console or floor mtd.				
- 3 speed trans.	3/S	73	3	P-4516
- Ford 4 speed	F/4/S	73	4	P-5810
- Warner 4 speed	W/4/S	73	1	P-3745
- Dagenham 4 speed	D/4/S	73	5	P-3904
INTERNAL PARTS				
3 speed manual trans. - 2.77 type	3/S	70	4	P-2966
- 3.03 type	3/S	70	5	P-4012
4 speed manual trans.				
- Ford 4 speed	F/4/S	70	8	P-4424
- Warner 4 speed less forks, levers & cover	W/4/S	70	7	P-3744
- Warner 4 speed forks, levers & cover	W/4/S	73	1	P-3745
- Dagenham 4 speed less forks, - levers & cover	D/4/S	70	6	P-3903
- Dagenham 4 speed forks, levers & cover	D/4/S	73	5	P-3904

U (BRONCO)

TITLE	TRANS.	SECTION	PAGE	ILLUS. NO.
EXTERNAL PARTS				
Clutch & clutch pedal	3/S	75	6	P-4972
Shift mechanism				
Steering column & trans. shift mechanism	3/S	35	7	P-4962
Transfer case shift linkage - Before Ser. 830,001		72	6	P-5229
- From Ser. 830,001		72	6	P-5202
INTERNAL PARTS				
3 speed manual trans. - 3.03 type	3/S	70	5	P-4012
Transfer case (7E028) parts		70	9	P-5149

COPYRIGHT © 1975 — FORD MOTOR COMPANY — DEARBORN, MICHIGAN

INDEX

TITLE	TRANS.	SECTION	PAGE	ILLUS. NO.
1966				
X (FALCON)				
EXTERNAL PARTS				
Clutch pedal	All	75	4	P-4983
Shift mechanism				
Steering column - column shift	3/S	72	5	P-5000
- floor shift	All 4/S	35	3	P-5138
Gear shift mechanism - console or floor mtd.				
- Ford 4 speed	F/4/S	73	4	P-5810
- Warner 4 speed	W/4/S	73	1	P-3745
INTERNAL PARTS				
3 speed manual trans. - 2.77 type	3/S	70	4	P-2966
- 3.03 type	3/S	70	5	P-4012
4 speed manual trans. - Ford design	F/4/S	70	8	P-4424
- Warner 4 speed less forks, levers & cover	W/4/S	70	7	P-3744
- Warner 4 speed forks, levers & cover	W/4/S	73	1	P-3745
1967				
A (FORD)				
EXTERNAL PARTS				
Clutch & clutch pedal	All	75	1	P-4595
Shift mechanism				
Steering column - column shift	All 3/S	72	7	P-5496
- floor shift	4/S	35	1	P-5495
Gear shift mechanism - console or floor mtd.				
- Ford 4 speed	F/4/S	73	2	P-5809
INTERNAL PARTS				
3 speed overdrive trans. - less extension	O/D	70	1	P-1914
- extension - 6 cyl. 240, 289	O/D	70	2	P-2228
- 8 cyl. 352, 390	O/D	70	3	P-2144
Gear shift & interlock linkage	O/D	72	1	P-3917
3 speed manual transmission - 3.03 type	3/S	70	5	P-4012
4 speed manual trans. - Ford design	F/4/S	70	8	P-4424
B (FAIRLANE)				
EXTERNAL PARTS				
Clutch & clutch pedal	All	75	9	P-5514
Shift mechanism				
Steering column - column shift	All 3/S	72	5	P-5000
- floor shift	All	35	3	P-5138
Gear shift mechanism - console or floor mtd.				
- 3 speed trans.	3/S	73	3	P-4516
- Ford 4 speed	F/4/S	73	4	P-5810
INTERNAL PARTS				
3 speed overdrive trans. - less extension	O/D	70	1	P-1914
- extension	O/D	70	2	P-2228
3 speed manual trans. - 3.03 type	3/S	70	5	P-4012
4 speed manual trans. - Ford 4 speed	F/4/S	70	8	P-4424

INDEX

TITLE	TRANS.	SECTION	PAGE	ILLUS. NO.
1967				
F (MUSTANG)				
EXTERNAL PARTS				
Clutch & clutch pedal	All	75	11	P-5513
Shift mechanism				
Steering column - floor shift - fixed wheel	All	35	6	P-5710
- tilt wheel	All	35	5	P-5622
Gear shift mechanism - console or floor mtd.				
- Ford 4 speed	F/4/S	73	4	P-5810
- 3 speed trans.	3/S	73	3	P-4516
INTERNAL PARTS				
3 speed manual trans. - 3.03 type	3/S	70	5	P-4012
4 speed manual trans. - Ford 4 speed	F/4/S	70	8	P-4424
U (BRONCO)				
EXTERNAL PARTS				
Clutch & clutch pedal	3/S	75	6	P-4972
Shift mechanism				
Steering column & trans. shift mechanism	3/S	35	7	P-4962
Transfer case shift linkage		72	6	P-5202
INTERNAL PARTS				
3 speed manual trans. - 3.03 type	3/S	70	5	P-4012
Transfer case (7E028) parts		70	9	P-5149
X (FALCON)				
EXTERNAL PARTS				
Clutch & clutch pedal	All	75	9	P-5514
Shift mechanism				
Steering column - column shift	3/S	72	5	P-5000
- floor shift	All 4/S	35	3	P-5138
Gear shift mechanism - console or floor mtd.				
- Ford 4 speed	F/4/S	73	4	P-5810
INTERNAL PARTS				
3 speed manual trans. - 2.77 type	3/S	70	4	P-2966
- 3.03 type	3/S	70	5	P-4012
4 speed manual trans. - Ford 4 speed	F/4/S	70	8	P-4424
1968				
A (FORD)				
EXTERNAL PARTS				
Clutch & clutch pedal	All	75	1	P-4595
Shift mechanism				
Steering column - column shift	3/S	72	8	P-5985
- floor shift - fixed	4/S	35	8	P-5984
- tilt	4/S	35	9	P-6016
Gear shift mechanism - console or floor mtd.				
- Ford 4 speed	F/4/S	73	6	P-6195
INTERNAL PARTS				
3 speed manual trans. - 3.03 type	3/S	70	5	P-4012
4 speed manual trans. - Ford 4 speed	F/4/S	70	8	P-4424

COPYRIGHT © 1975 — FORD MOTOR COMPANY — DEARBORN, MICHIGAN

INDEX

TITLE	TRANS.	SECTION	PAGE	ILLUS. NO.
1968				
B (FAIRLANE/TORINO)				
EXTERNAL PARTS				
Clutch & clutch pedal	All	75	10	P-6541
Shift mechanism				
Steering column - column shift	3/S	72	9	P-6019
- floor shift	All	35	10	P-6018
Gear shift mechanism - console or floor mtd.				
- 3 speed trans.	3/S	73	3	P-4516
- Ford 4 speed	F/4/S	73	4	P-5810
INTERNAL PARTS				
3 speed manual trans. - 3.03 type	3/S	70	5	P-4012
4 speed manual trans. - Ford 4 speed	F/4/S	70	8	P-4424
F (MUSTANG)				
EXTERNAL PARTS				
Clutch pedal	All	75	11	P-5513
Shift mechanism				
Steering column - floor shift - fixed wheel	All	35	12	P-5770
- tilt wheel	All	35	11	P-5769
Gear shift mechanism - console or floor mtd.				
- 3 speed trans.	3/S	73	3	P-4516
- Ford 4 speed	F/4/S	73	4	P-5810
INTERNAL PARTS				
3 speed manual trans. - 3.03 type	3/S	70	5	P-4012
4 speed manual trans. - Ford 4 speed	F/4/S	70	8	P-4424
U (BRONCO)				
EXTERNAL PARTS				
Clutch & clutch pedal	3/S	75	6	P-4972
Shift mechanism				
Steering column & trans. shift mechanism	3/S	35	7	P-4962
Transfer case shift linkage		72	6	P-5202
INTERNAL PARTS				
3 speed manual trans. - 3.03 type	3/S	70	5	P-4012
Transfer case (7E028) parts		70	9	P-5149
X (FALCON)				
EXTERNAL PARTS				
Clutch & clutch pedal	All	75	10	P-6541
Shift mechanism				
Steering column - column shift	3/S	72	9	P-6019
- floor shift	3/S	35	10	P-6018
Gear shift mechanism - console or floor mtd.				
- Ford 4 speed	F/4/S	73	4	P-5810
INTERNAL PARTS				
3 speed manual trans. - 3.03 type	3/S	70	5	P-4012
4 speed manual trans. - Ford 4 speed	F/4/S	70	8	P-4424

INDEX

1969

A (FORD)

TITLE	TRANS.	SECTION	PAGE	ILLUS. NO.
EXTERNAL PARTS				
Clutch & clutch pedal	All	75	12	P-6724
Shift mechanism				
Steering column - column shift	3/S	72	10	P-6785
- floor shift - fixed	4/S	35	13	P-6786
- tilt	4/S	35	14	P-6787
Gear shift mechanism - console or floor mtd.				
- Ford 4 speed	F/4/S	73	6	P-6195
INTERNAL PARTS				
3 speed manual trans. - 3.03 type	3/S	70	5	P-4012
4 speed manual trans. - Ford 4 speed	F/4/S	70	8	P-4424

B (FAIRLANE/TORINO)

TITLE	TRANS.	SECTION	PAGE	ILLUS. NO.
EXTERNAL PARTS				
Clutch & clutch pedal	All	75	10	P-6541
Shift mechanism				
Steering column - column shift	3/S	72	9	P-6019
- floor shift	All	35	10	P-6018
Gear shift mechanism - console or floor mtd.				
- 3 speed trans.	3/S	73	7	P-6794
- Ford 4 speed	F/4/S	73	8	P-6793
INTERNAL PARTS				
3 speed manual trans. - 3.03 type	3/T	70	5	P-4012
4 speed manual trans. - Ford 4 speed	F/4/S	70	8	P-4424

F (MUSTANG)

TITLE	TRANS.	SECTION	PAGE	ILLUS. NO.
EXTERNAL PARTS				
Clutch pedal	All	75	13	P-3756
Shift mechanism				
Steering column - floor shift - fixed wheel	All	35	15	P-6781
- tilt wheel	All	35	16	P-6782
Gear shift mechanism - console or floor mtd.				
- 3 speed trans.	3/S	73	7	P-6794
- Ford 4 speed	F/4/S	73	8	P-6793
INTERNAL PARTS				
3 speed manual trans. - 3.03 type	3/S	70	5	P-4012
4 speed manual trans. - Ford 4 speed	F/4/S	70	8	P-4424

U (BRONCO)

TITLE	TRANS.	SECTION	PAGE	ILLUS. NO.
EXTERNAL PARTS				
Clutch & clutch pedal	3/S	75	6	P-4972
Shift mechanism				
Steering column & trans. shift mechanism	3/S	35	7	P-4962
Transfer case shift linkage		72	6	P-5202
INTERNAL PARTS				
3 speed manual trans. - 3.03 type	3/S	70	5	P-4012
Transfer case (7E028) parts		70	9	P-5149

COPYRIGHT © 1975 — FORD MOTOR COMPANY — DEARBORN, MICHIGAN

INDEX

TITLE	TRANS.	SECTION	PAGE	ILLUS. NO.
1969				
X (FALCON)				
EXTERNAL PARTS				
Clutch & clutch pedal	All	75	10	P-6541
Shift mechanism				
Steering column - column shift	3/S	72	9	P-6019
Gear shift mechanism - console or floor mtd. - Ford 4 speed	F/4/S	73	8	P-6793
INTERNAL PARTS				
3 speed manual trans. - 3.03 type	3/S	70	5	P-4012
1970				
A (FORD)				
EXTERNAL PARTS				
Clutch & clutch pedal	All	75	12	P-6724
Shift mechanism				
Steering column - column shift	3/S	72	12	P-7244
INTERNAL PARTS				
3 speed manual trans. - 3.03 type	3/S	70	5	P-4012
B (FAIRLANE/TORINO)				
B (FALCON)-FROM 1/2/70				
EXTERNAL PARTS				
Clutch & clutch pedal	All	75	15	P-7306
Shift mechanism				
Steering column - column shift	3/S	72	13	P-7247
- floor shift	4/S	35	19	P-7248
Gear shift mechanism - console or floor mtd.				
- 3 speed trans.	3/S	73	7	P-6794
- 4 speed (Hurst)	4/S	73	9	P-7499
INTERNAL PARTS				
3 speed manual trans. - 3.03 type	3/S	70	5	P-4012
4 speed manual trans. - Ford 4 speed	F/4/S	70	8	P-4424
F (MUSTANG)				
EXTERNAL PARTS				
Clutch & clutch pedal	All	75	13	P-6756
Shift mechanism				
Steering column - floor shift - fixed wheel	All	35	20	P-7245
- tilt wheel	All	35	21	P-7246
Gear shift mechanism - console or floor mtd.				
- 3 speed trans.	3/S	73	7	P-6794
- 4 speed (Hurst)	4/S	73	9	P-7499
INTERNAL PARTS				
3 speed manual trans. - 3.03 type	3/S	70	5	P-4012
4 speed manual trans. - Ford 4 speed	F/4/S	70	8	P-4424
P (MAVERICK)				
EXTERNAL PARTS				
Clutch & clutch pedal	3/S	75	14	P-6883
Shift mechanism				
Steering column - column shift(non-locking)	3/S	72	11	P-6968
- column shift (locking)	3/S	72	14	P-7748
INTERNAL PARTS				
3 speed manual trans. - 3.03 type	3/S	70	5	P-4012

INDEX

TITLE	TRANS.	SECTION	PAGE	ILLUS. NO.
1970				
U (BRONCO)				
EXTERNAL PARTS				
Clutch & clutch pedal	3/S	75	6	P-4972
Transfer case shift linkage		72	6	P-5202
INTERNAL PARTS				
3 speed manual trans. & extension - 3.03 type	3/S	70	5	P-4012
Transfer case (7E028) parts		70	9	P-5149
X (FALCON) - BEFORE 1/2/70				
FOR UNITS BUILT FROM 1/2/70 REFER TO B (FALCON)				
EXTERNAL PARTS				
Clutch & clutch pedal	All	75	10	P-6541
Steering column - column shift (non-locking)	3/S	72	9	P-6019
INTERNAL PARTS				
3 speed manual trans. - 3.03 type	3/S	70	5	P-4012
1971				
A (FORD)				
EXTERNAL PARTS				
Clutch & clutch pedal	All	75	12	P-6724
Shift mechanism				
Steering column - column shift (locking)	3/S	72	12	P-7244
INTERNAL PARTS				
3 speed manual trans. - 3.03 type	3/S	70	5	P-4012
B (TORINO)				
EXTERNAL PARTS				
Clutch & clutch pedal	All	75	15	P-7306
Shift mechanism				
Steering column - column shift (locking)	3/S	72	13	P-7247
- floor shift	4/S	35	19	P-7248
Gear shift mechanism - console or floor mtd.				
- 3 speed trans.	3/S	73	7	P-6794
- 4 speed (Hurst)	4/S	73	9	P-7499
INTERNAL PARTS				
3 speed manual trans. - 3.03 type	3/S	70	5	P-4012
4 speed manual trans. - Ford 4 speed	F/4/S	70	8	P-4424

COPYRIGHT © 1975 — FORD MOTOR COMPANY — DEARBORN, MICHIGAN

INDEX

TITLE	TRANS.	SECTION	PAGE	ILLUS. NO.
1971				
F (MUSTANG)				
EXTERNAL PARTS				
Clutch & clutch pedal	All	75	16	P-8144
Shift mechanism				
Steering column - floor shift - fixed wheel	All	35	20	P-7245
- tilt wheel	All	35	21	P-7246
Gear shift mechanism - console or floor mtd.				
- 3 speed trans.	3/S	73	7	P-6794
- 4 speed (Hurst)	4/S	73	9	P-7499
INTERNAL PARTS				
3 speed manual trans. - 3.03 type	3/S	70	5	P-4012
4 speed manual trans. - Ford 4 speed	F/4/S	70	8	P-4424
L (PINTO)				
EXTERNAL PARTS				
Clutch & clutch pedal	All	75	17	P-7933
Shift mechanism				
Steering column	All	35	22	P-7961
Gear shift mechanism	All	73	10	P-7579
INTERNAL PARTS				
4 speed English design	4/S	70	10	P-8286
4 speed German design	4/S	70	11	P-8349
P (MAVERICK)				
EXTERNAL PARTS				
Clutch & clutch pedal	3/S	75	14	P-8822
Shift mechanism				
Steering column - column shift (locking)	3/S	72	14	P-7748
Gear shift mechanism - floor mounted	3/S	73	7	P-6794
INTERNAL PARTS				
3 speed manual trans. - 3.03 type	3/S	70	5	P-4012
U (BRONCO)				
EXTERNAL PARTS				
Clutch & clutch pedal	3/S	75	6	P-4972
Shift mechanism				
Steering column & trans. shift mechanism	3/S	35	7	P-4962
Transfer case shift linkage		72	6	P-5202
INTERNAL PARTS				
3 speed manual trans. & extension - 3.03 type	3/S	70	5	P-4012
Transfer case (7E028) parts		70	9	P-5149

INDEX

1972

TITLE	TRANS.	SECTION	PAGE	ILLUS. NO.
B (TORINO)				
EXTERNAL PARTS				
Clutch & clutch pedal	All	75	18	P-8812
Shift mechanism				
Steering column - column shift (locking)	3/S	72	15	P-8625
- floor shift	4/S	35	24	P-8624
Gear shift mechanism - console or floor mtd. - 4 speed (Hurst)	4/S	73	9	P-7499
INTERNAL PARTS				
3 speed manual trans. - 3.03 type	3/S	70	12	P-9882
4 speed manual trans. - Ford 4 speed	F/4/S	70	13	P-9881
F (MUSTANG)				
EXTERNAL PARTS				
Clutch & clutch pedal	All	75	16	P-8144
Shift mechanism				
Steering column - floor shift - fixed wheel	All	35	20	P-7245
- tilt wheel	All	35	21	P-7246
Gear shift mechanism - console or floor mtd.				
- 3 speed trans.	3/S	73	7	P-6794
- 4 speed (Hurst)	4/S	73	9	P-7499
INTERNAL PARTS				
3 speed manual trans. - 3.03 type	3/S	70	12	P-9882
4 speed manual trans. - Ford 4 speed	F/4/S	70	13	P-9881
L (PINTO)				
EXTERNAL PARTS				
Clutch & clutch pedal	All	75	17	P-7933
Shift mechanism				
Steering column	All	35	22	P-7961
Gear shift mechanism	All	73	10	P-10893
INTERNAL PARTS				
4 speed English design	4/S	70	10	P-8286
4 speed German design	4/S	70	11	P-8349

COPYRIGHT © 1975 — FORD MOTOR COMPANY — DEARBORN, MICHIGAN

INDEX

1972

P (MAVERICK)

TITLE	TRANS.	SECTION	PAGE	ILLUS. NO.
EXTERNAL PARTS				
Clutch & clutch pedal	3/S	75	14	P-8822
Shift mechanism				
Steering column - column shift (locking)	3/S	72	14	P-7748
Gear shift mechanism - floor mounted	3/S	73	7	P-6794
INTERNAL PARTS				
3 speed manual trans. - 3.03 type	3/S	70	12	P-9882

U (BRONCO)

EXTERNAL PARTS				
Clutch & clutch pedal	3/S	75	6	P-4972
Shift mechanism				
Steering column - manual steering	3/S	72	16	P-10771
- power steering	3/S	72	17	P-10773
Transfer case shift linkage		72	6	P-5202
INTERNAL PARTS				
3 speed manual trans. & extension - 3.03 type	3/S	70	12	P-9882
Transfer case (7E028) parts		70	9	P-5149

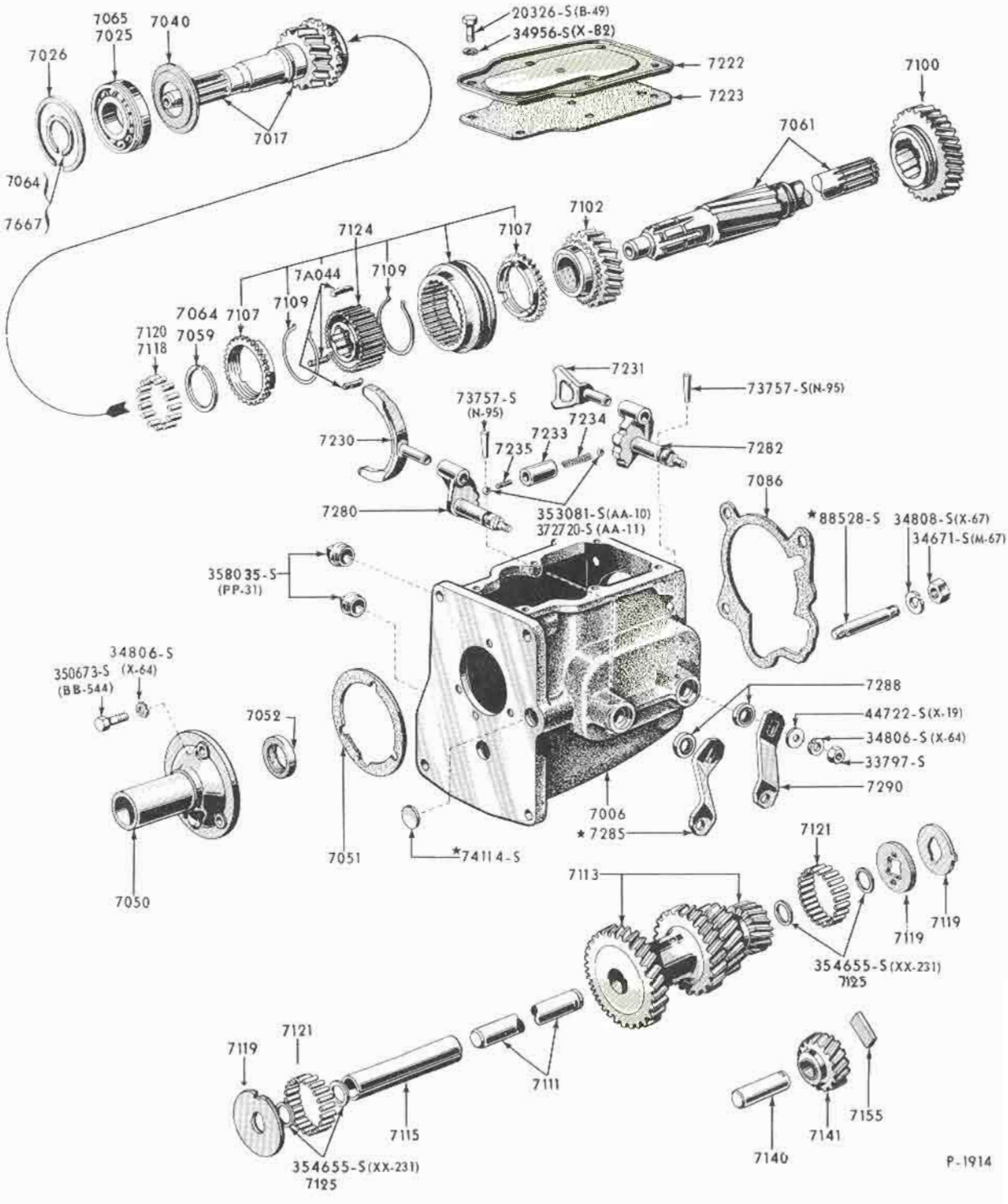

3 SPEED OVERDRIVE TRANSMISSION - LESS EXTENSION-TYPICAL

1965/67 FORD, FAIRLANE

COPYRIGHT © 1975 — FORD MOTOR COMPANY — DEARBORN, MICHIGAN

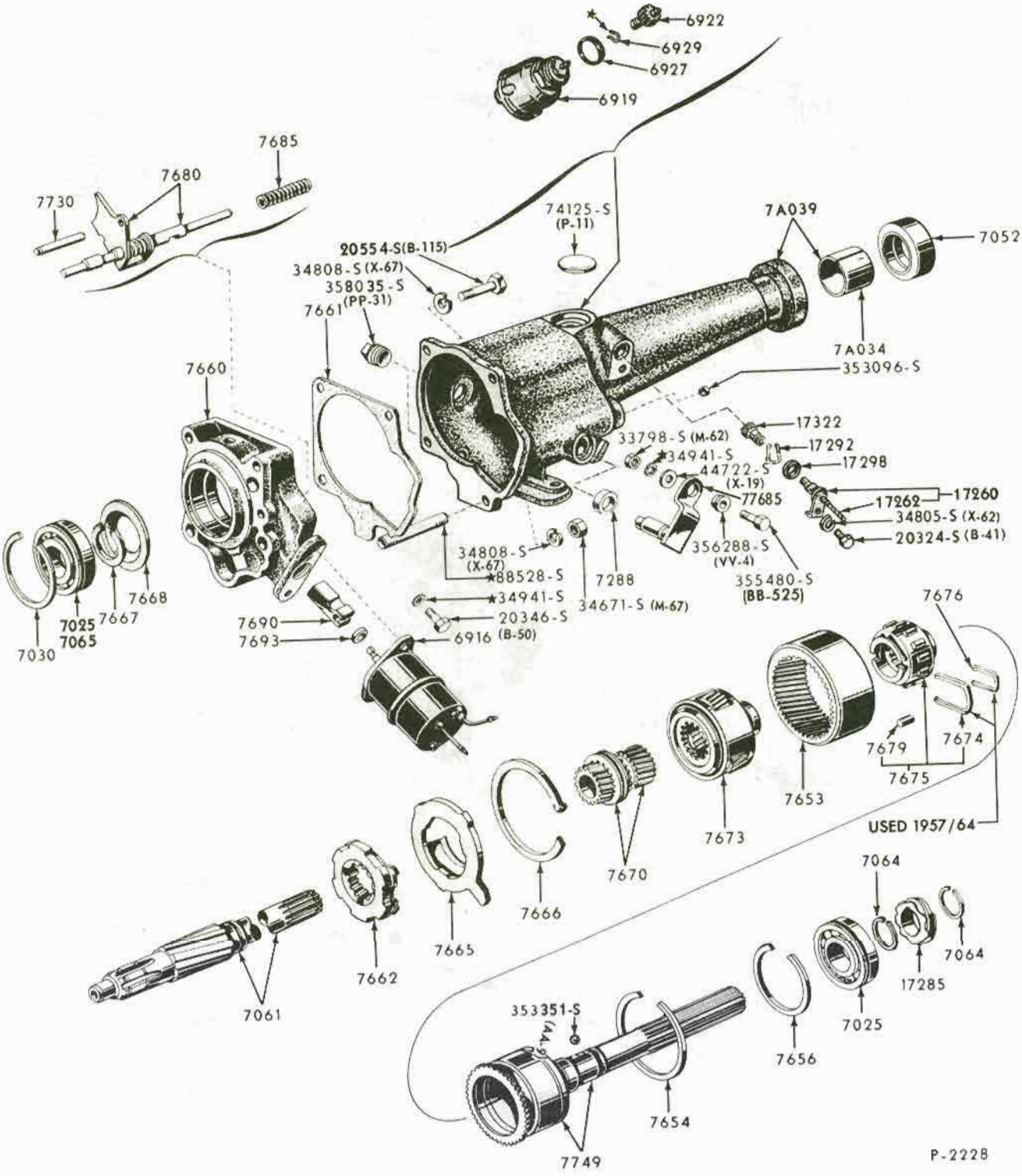

3 SPEED OVERDRIVE TRANSMISSION EXTENSION - TYPICAL
1965/67 FAIRLANE & 1965/67 FORD - 6 & 8 CYL. 240, 289

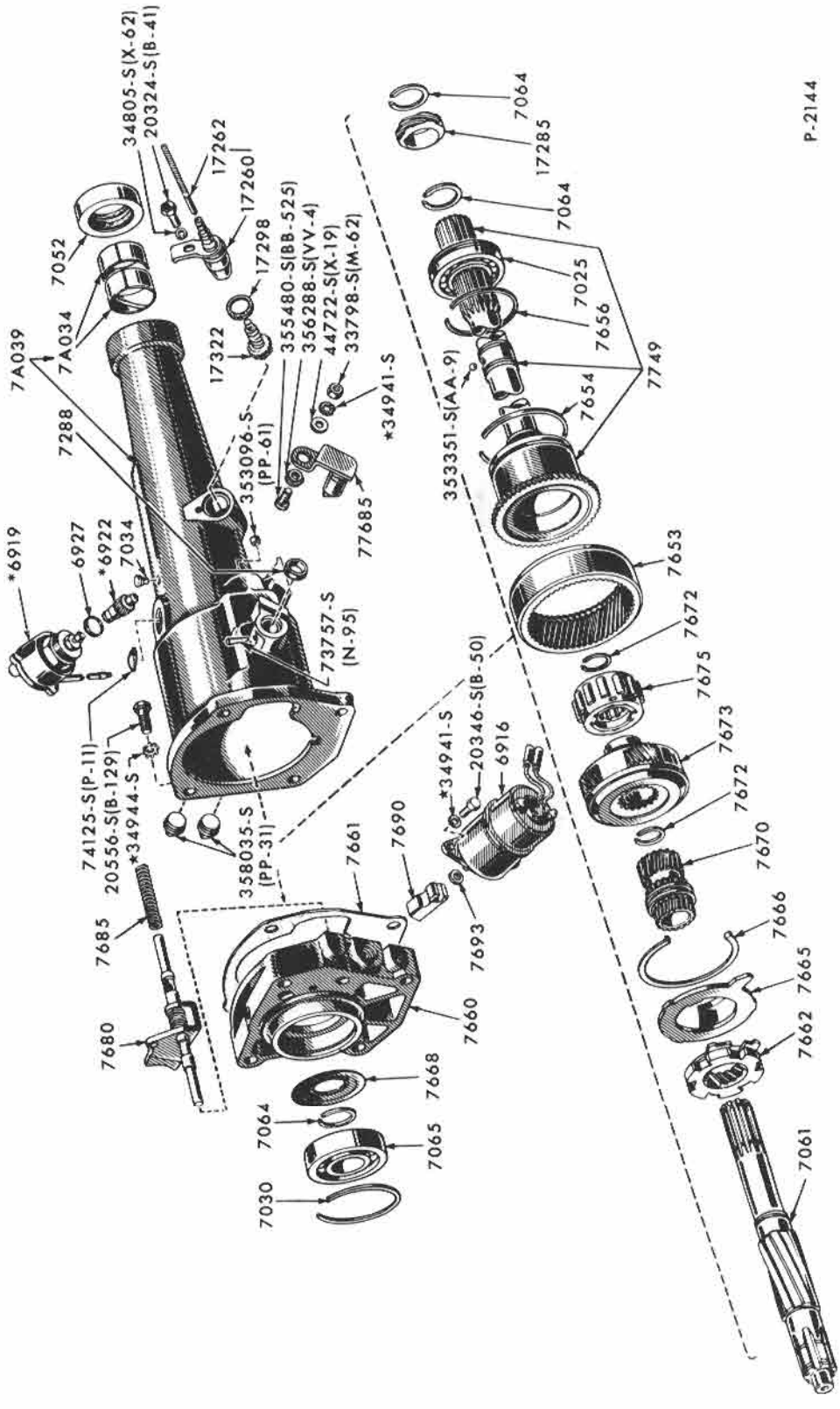

3 SPEED OVERDRIVE TRANSMISSION EXTENSION - TYPICAL

1965/67 FORD - 8 CYL. 390

COPYRIGHT © 1975 — FORD MOTOR COMPANY — DEARBORN, MICHIGAN

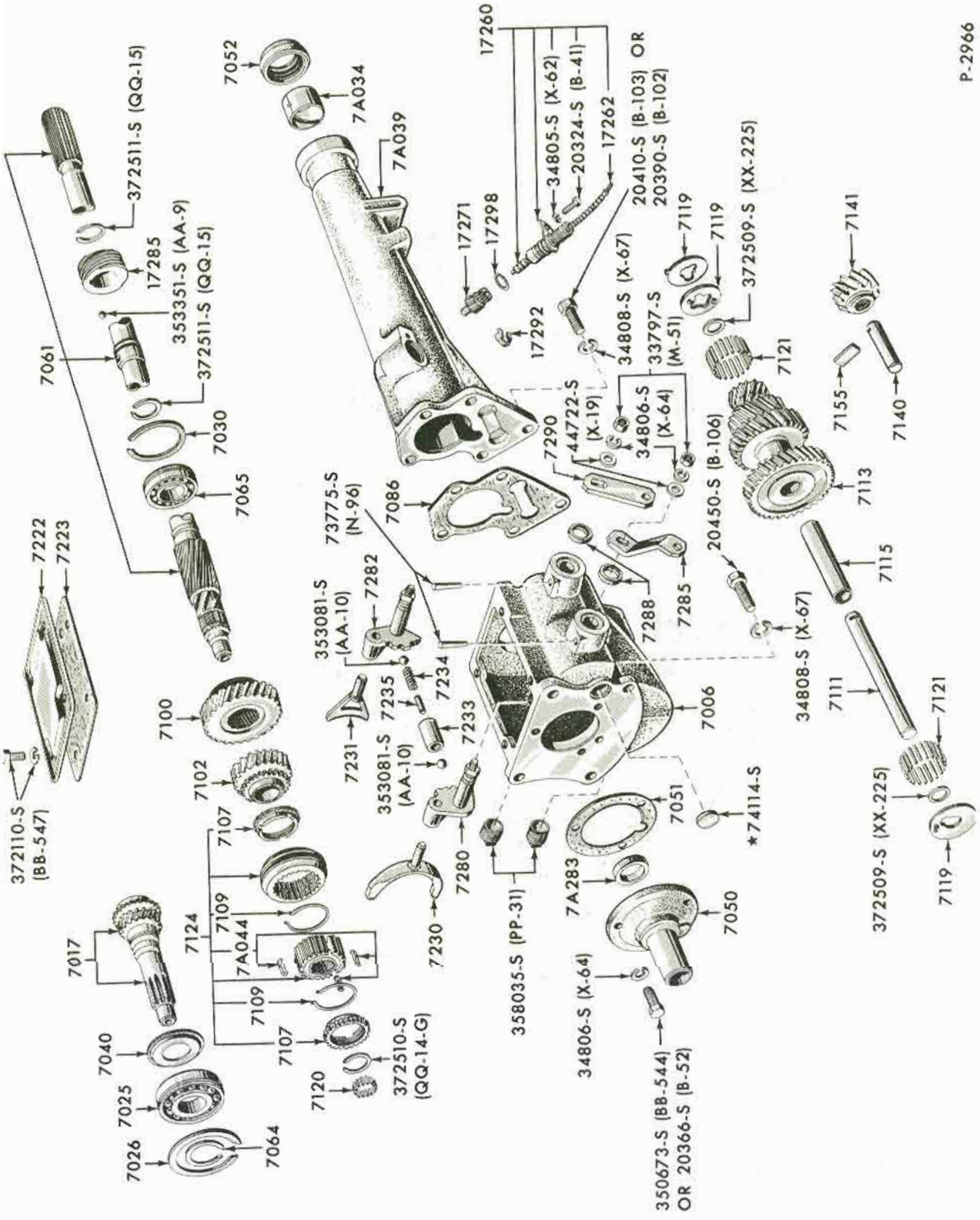

3 SPEED MANUAL TRANSMISSION - 2.77 TYPE - TYPICAL
1965/67 FAIRLANE, MUSTANG, FALCON

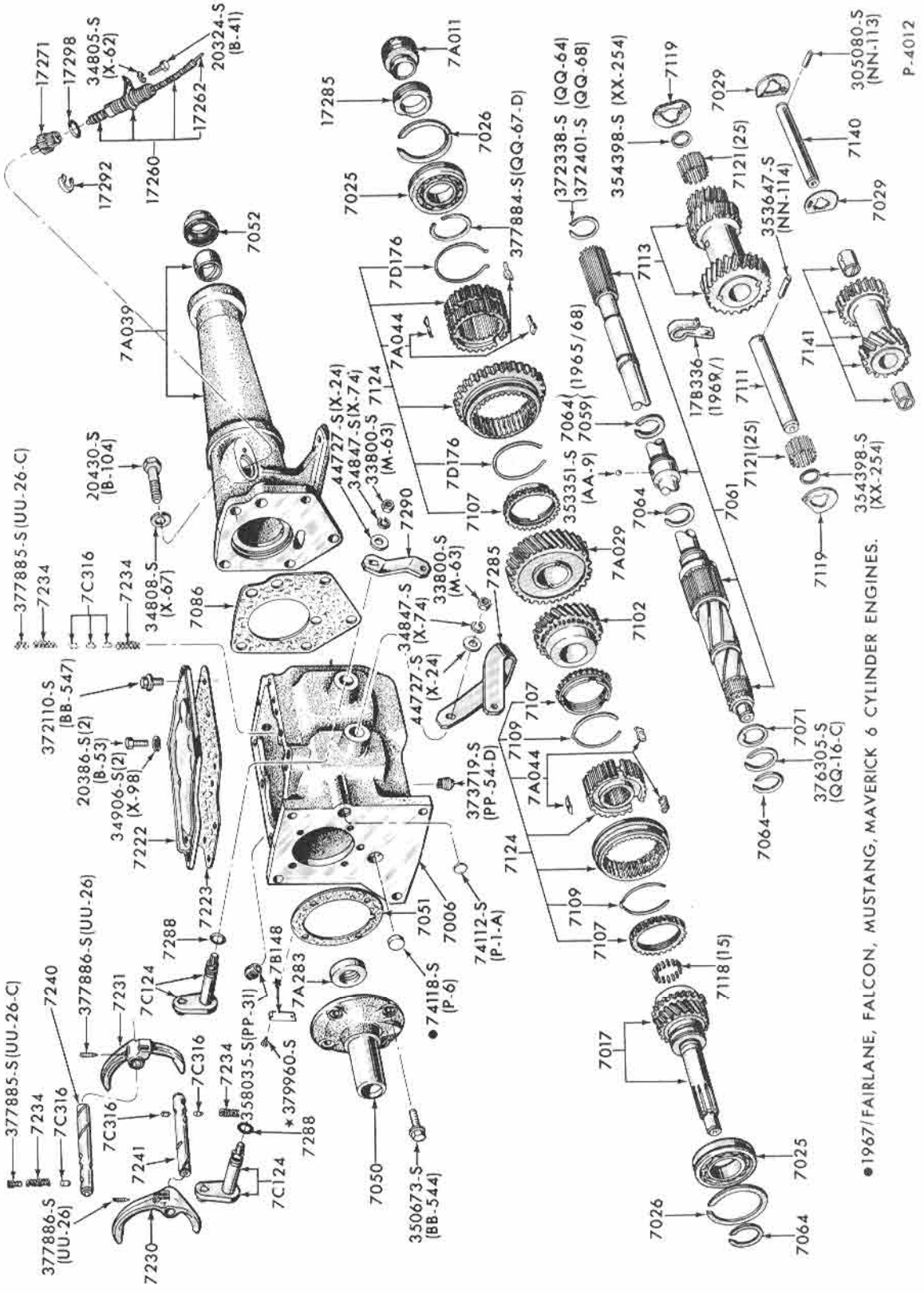

3 SPEED MANUAL TRANSMISSION - 3.03 TYPE - TYPICAL
1965/71 FORD, FAIRLANE/TORINO, MUSTANG, 1966/71 BRONCO, 1970/71 MAVERICK

COPYRIGHT © 1975— FORD MOTOR COMPANY —DEARBORN, MICHIGAN

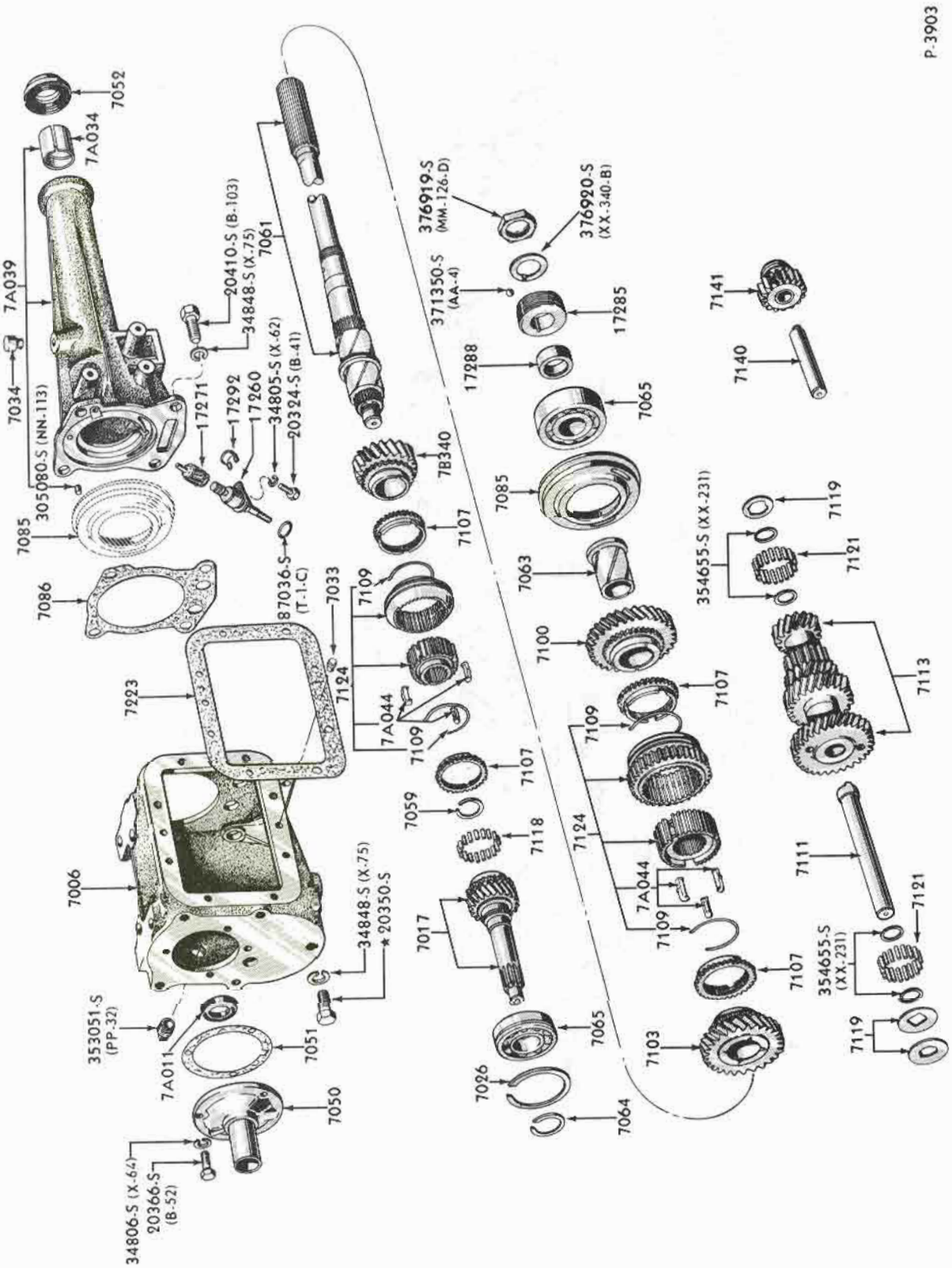

4 SPEED MANUAL TRANSMISSION - DAGENHAM DESIGN
1965/66 MUSTANG

COPYRIGHT © 1975 — FORD MOTOR COMPANY — DEARBORN, MICHIGAN

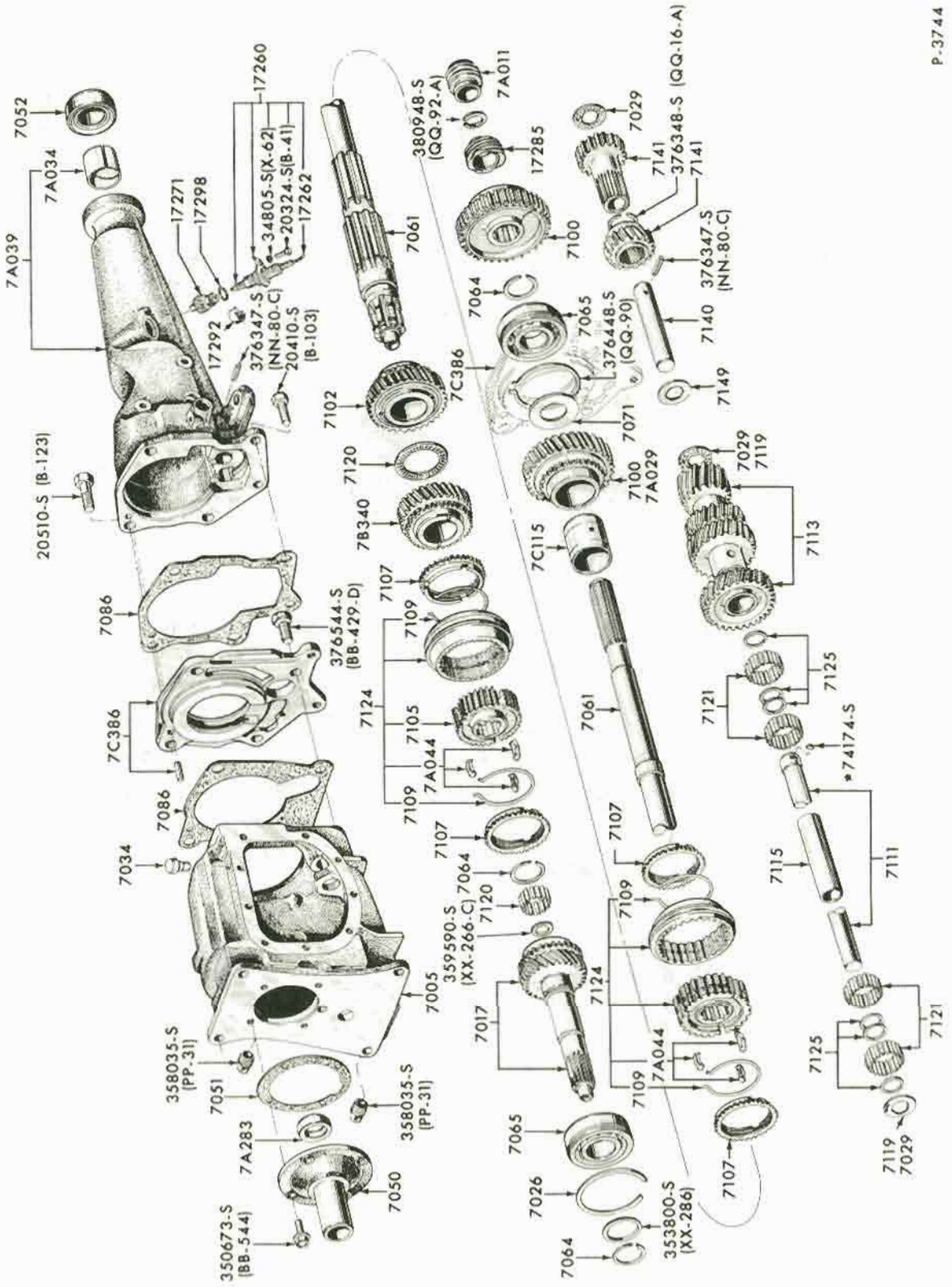

4 SPEED MANUAL TRANSMISSION - WARNER GEAR DESIGN
1965/66 FAIRLANE, MUSTANG, FALCON

COPYRIGHT © 1975 — FORD MOTOR COMPANY — DEARBORN, MICHIGAN

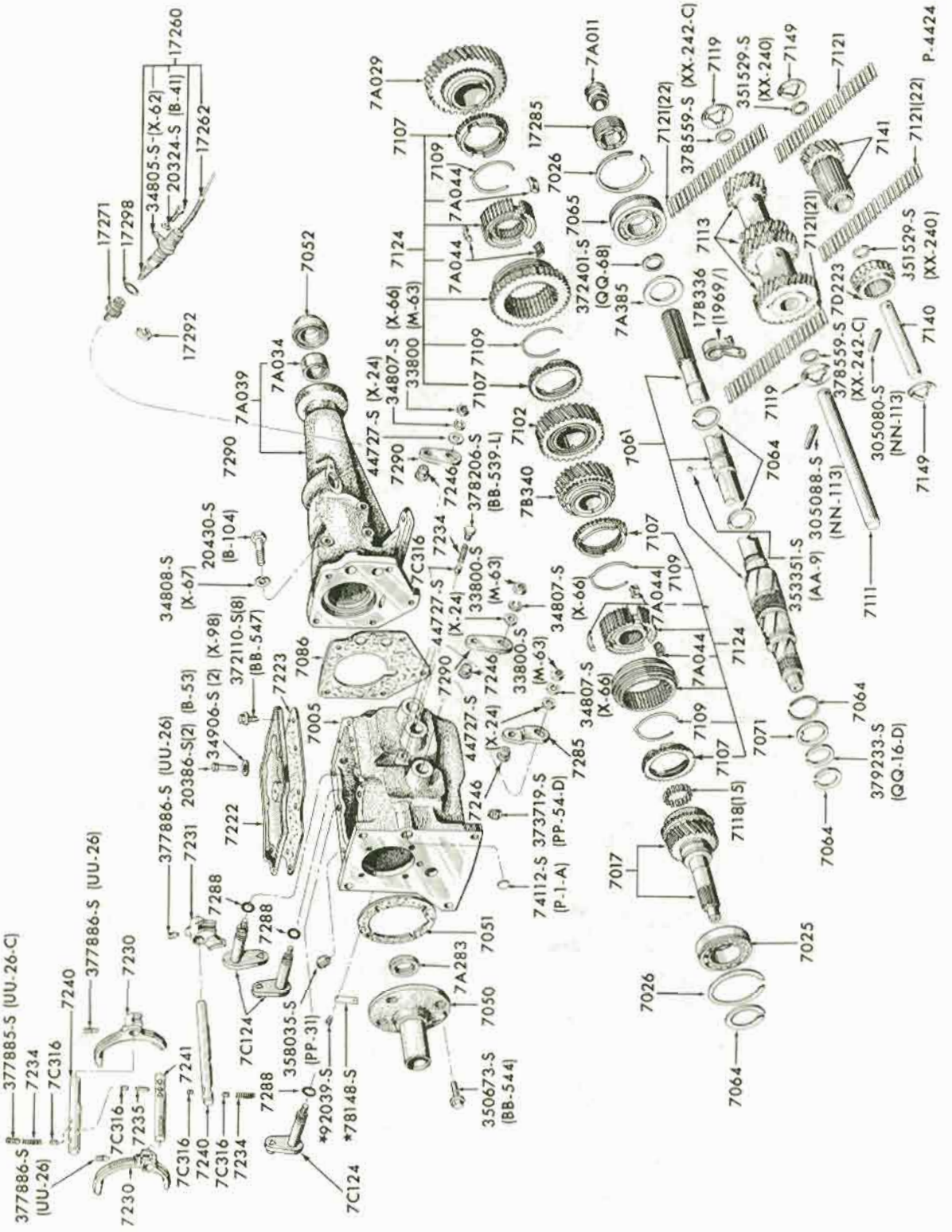

4 SPEED MANUAL TRANSMISSION - FORD DESIGN
1965/71 FORD, FAIRLANE/TORINO, MUSTANG, FALCON

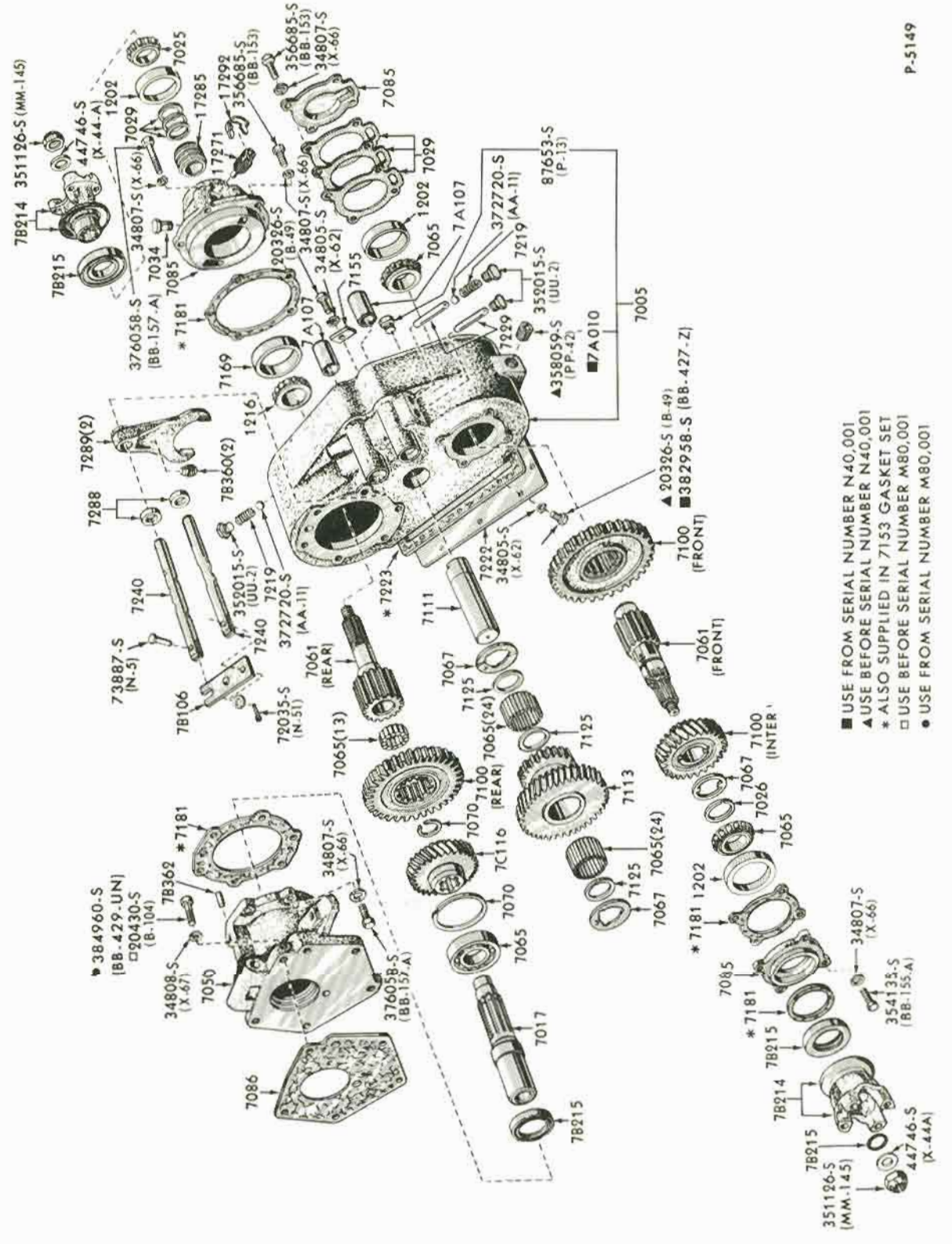

TRANSFER CASE (7E028) & RELATED PARTS
1966/72 BRONCO

COPYRIGHT © 1975 — FORD MOTOR COMPANY — DEARBORN, MICHIGAN

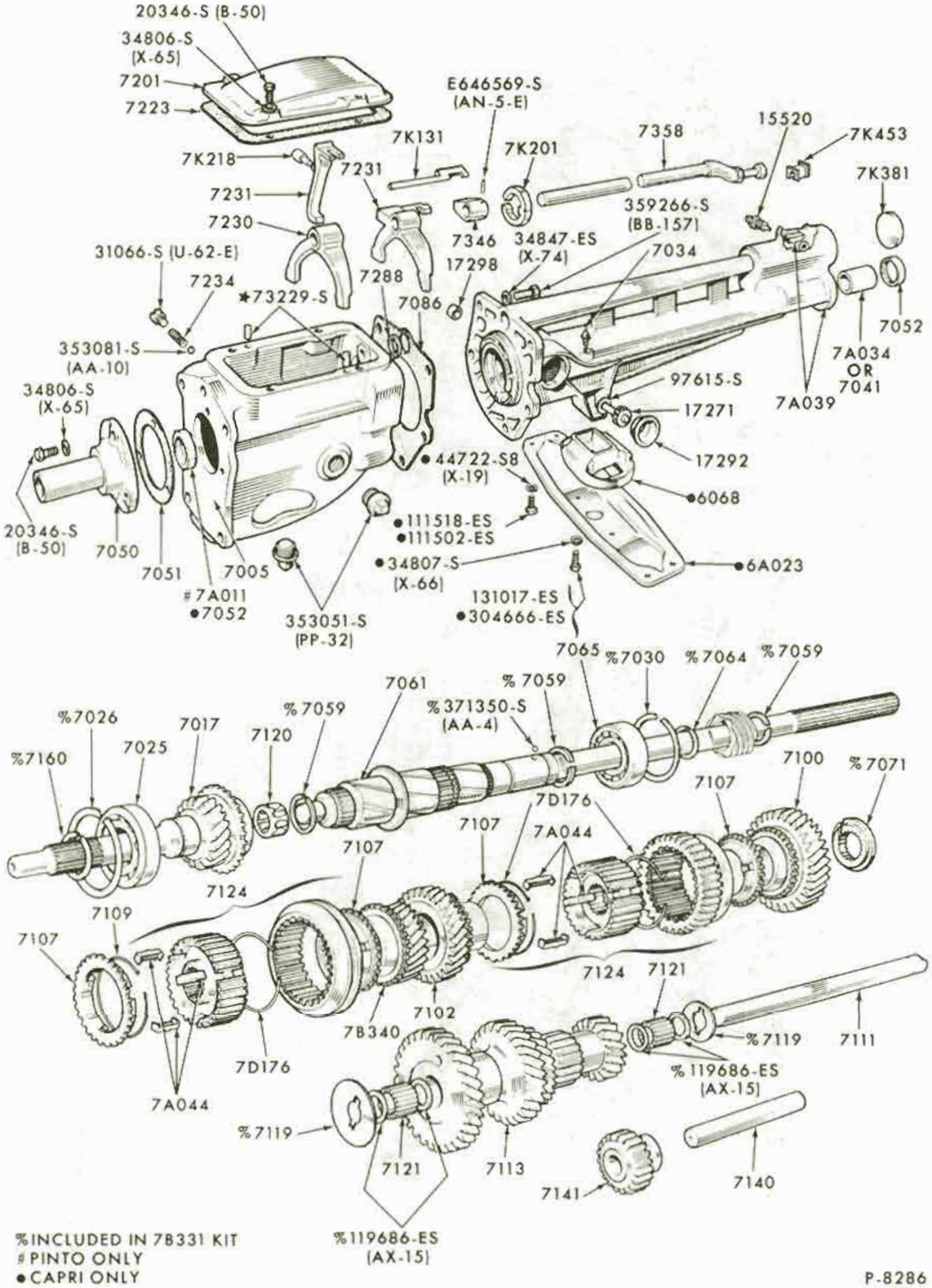

%INCLUDED IN 7B331 KIT
PINTO ONLY
● CAPRI ONLY

P-8286

4 SPEED MANUAL TRANSMISSION - ENGLISH DESIGN
1971/72 PINTO

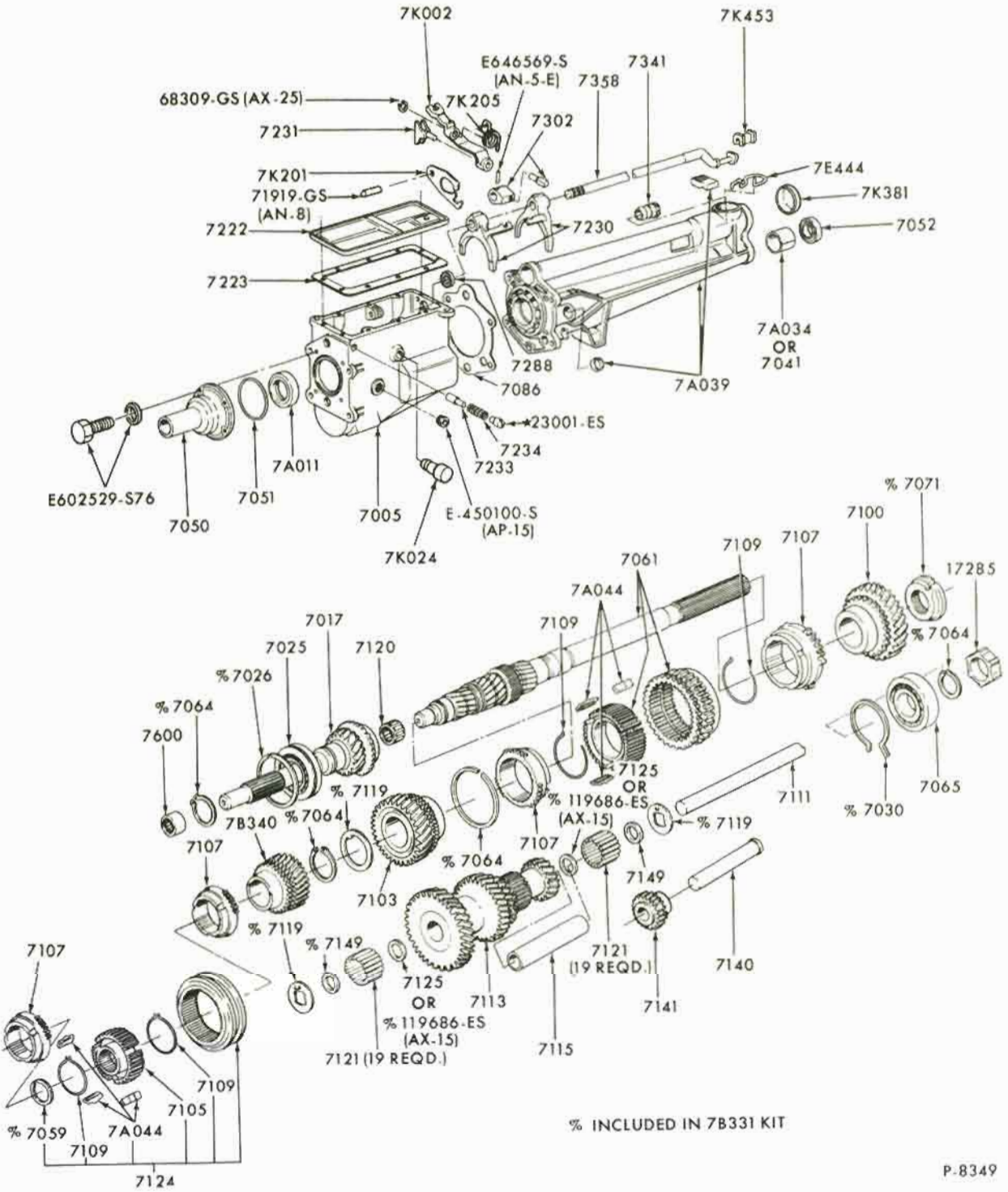

% INCLUDED IN 7B331 KIT

P-8349

4 SPEED MANUAL TRANSMISSION - INTERIOR and EXTERIOR - GERMAN DESIGN
1971/72 PINTO

COPYRIGHT © 1975 — FORD MOTOR COMPANY — DEARBORN, MICHIGAN

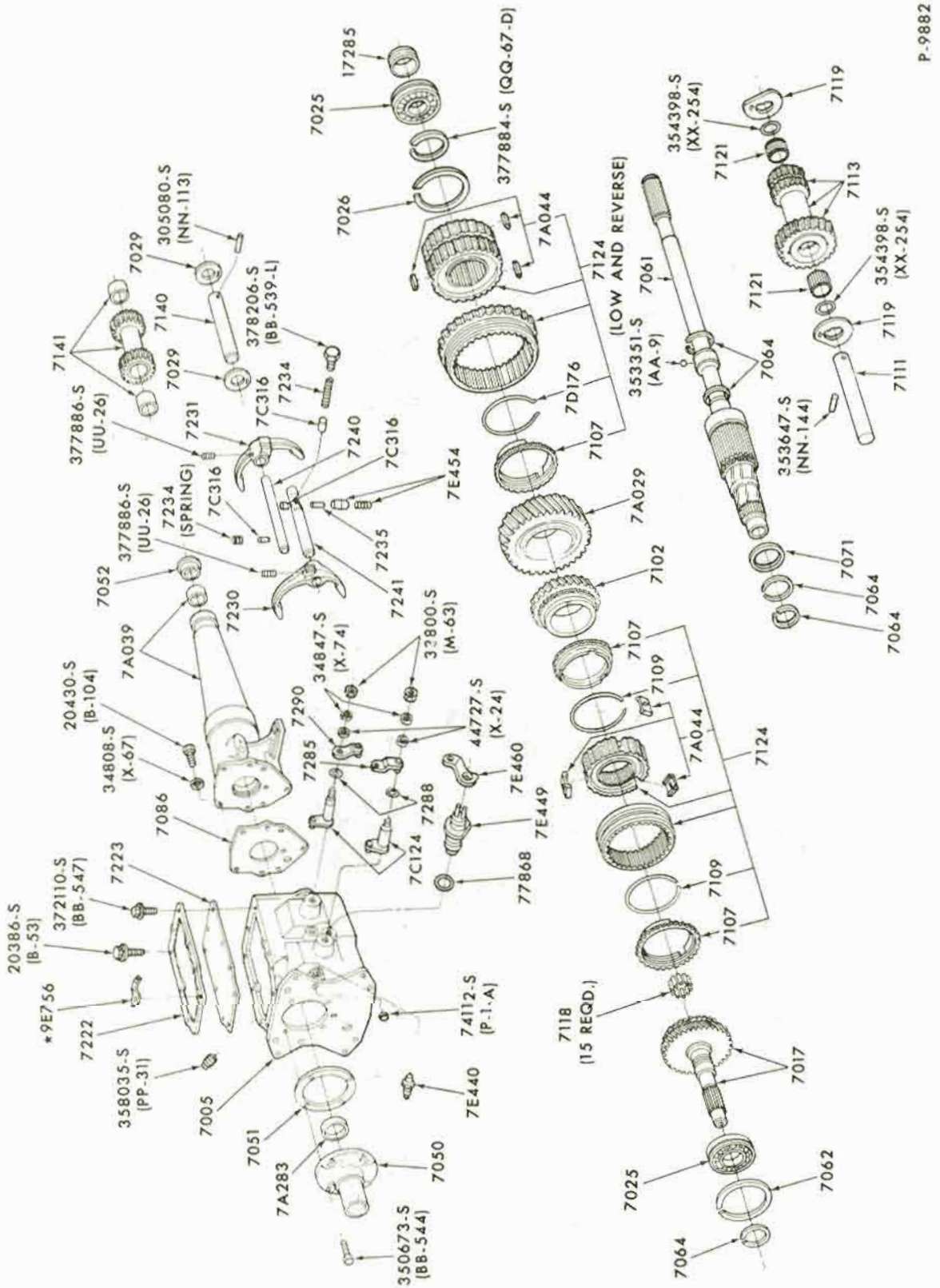

3 SPEED MANUAL TRANSMISSION-3.03 TYPE
1972 BRONCO, MAVERICK, MUSTANG, TORINO

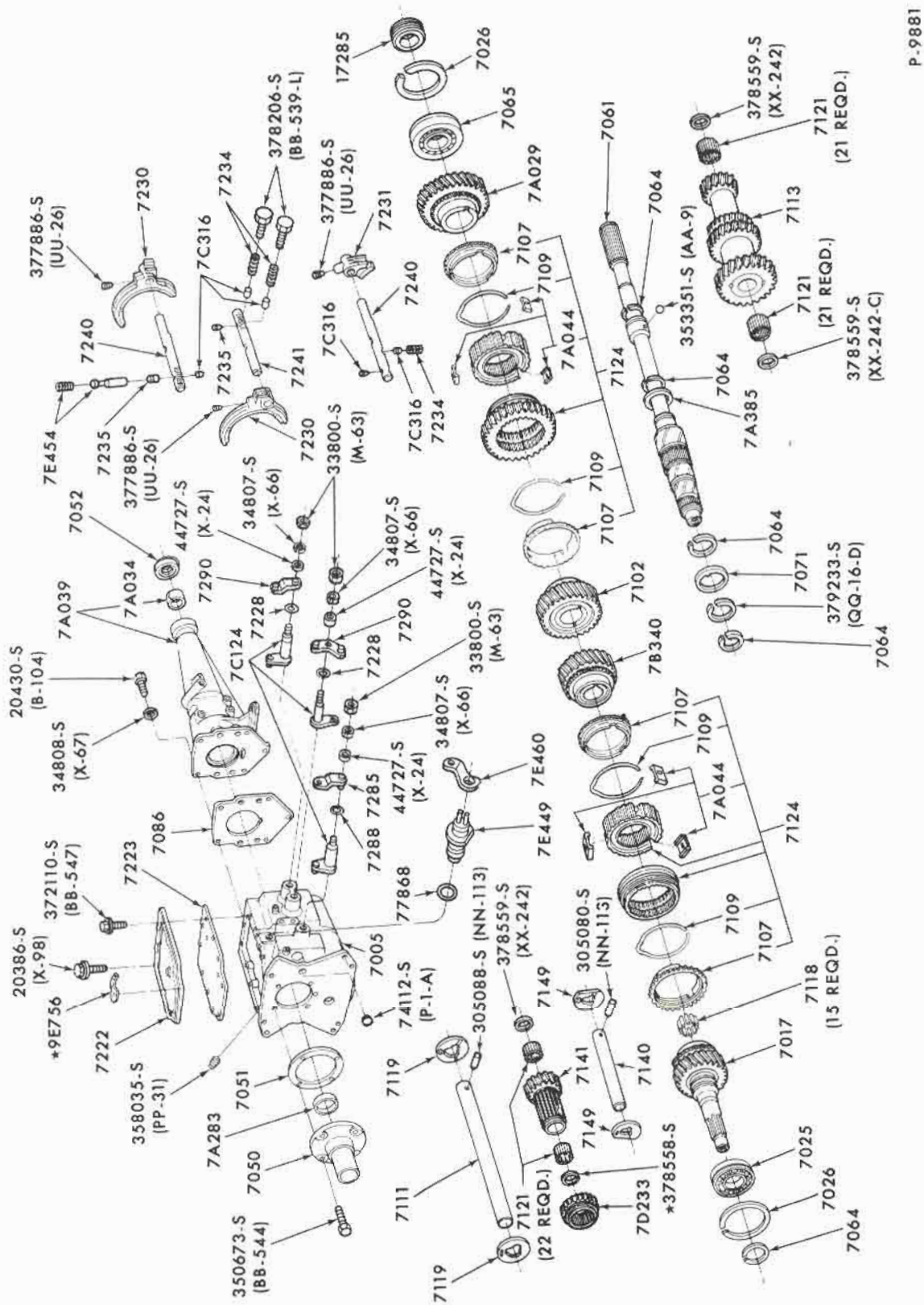

4 SPEED MANUAL TRANSMISSION-FORD DESIGN
1972 MUSTANG, TORINO

COPYRIGHT © 1975 — FORD MOTOR COMPANY — DEARBORN, MICHIGAN

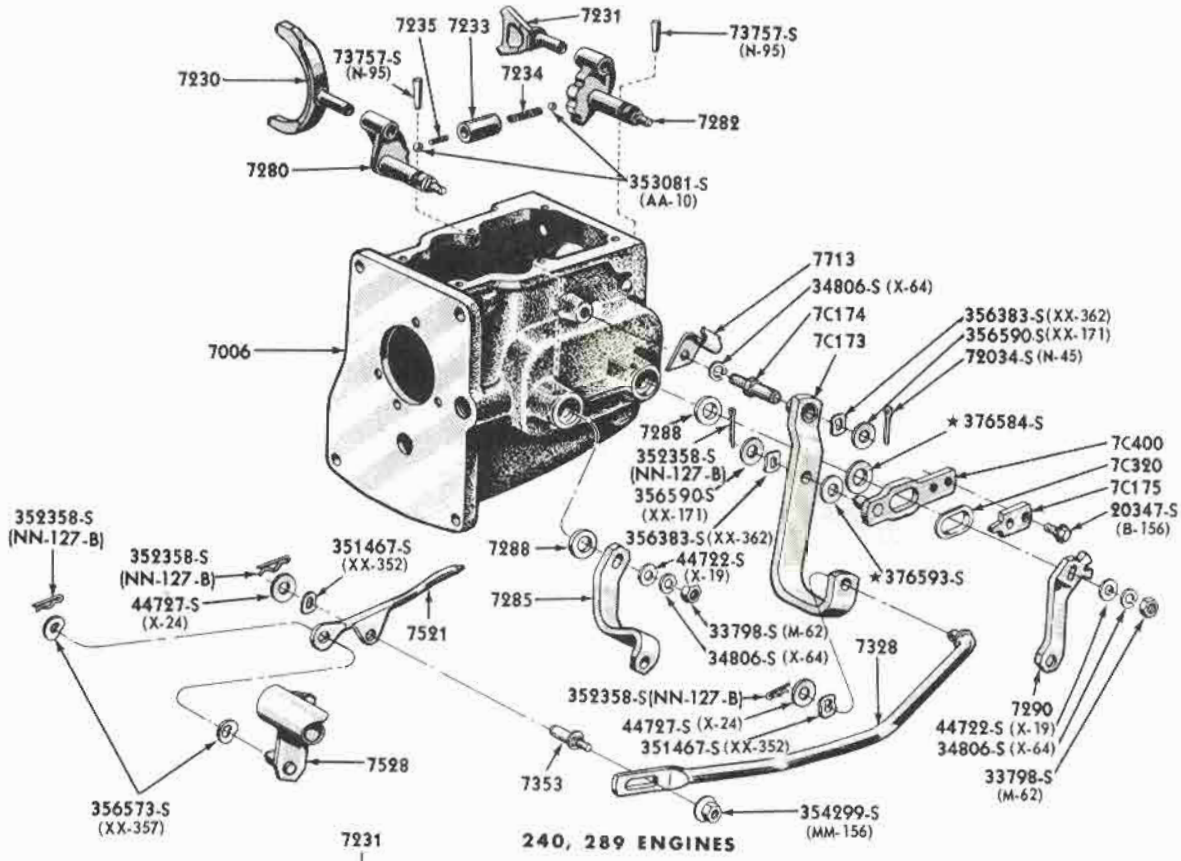

GEAR SHIFT & INTERLOCK LINKAGE - TYPICAL
OVERDRIVE TRANSMISSION
1965/67 FORD - 6 & 8 CYL.

COPYRIGHT © 1975 — FORD MOTOR COMPANY — DEARBORN, MICHIGAN

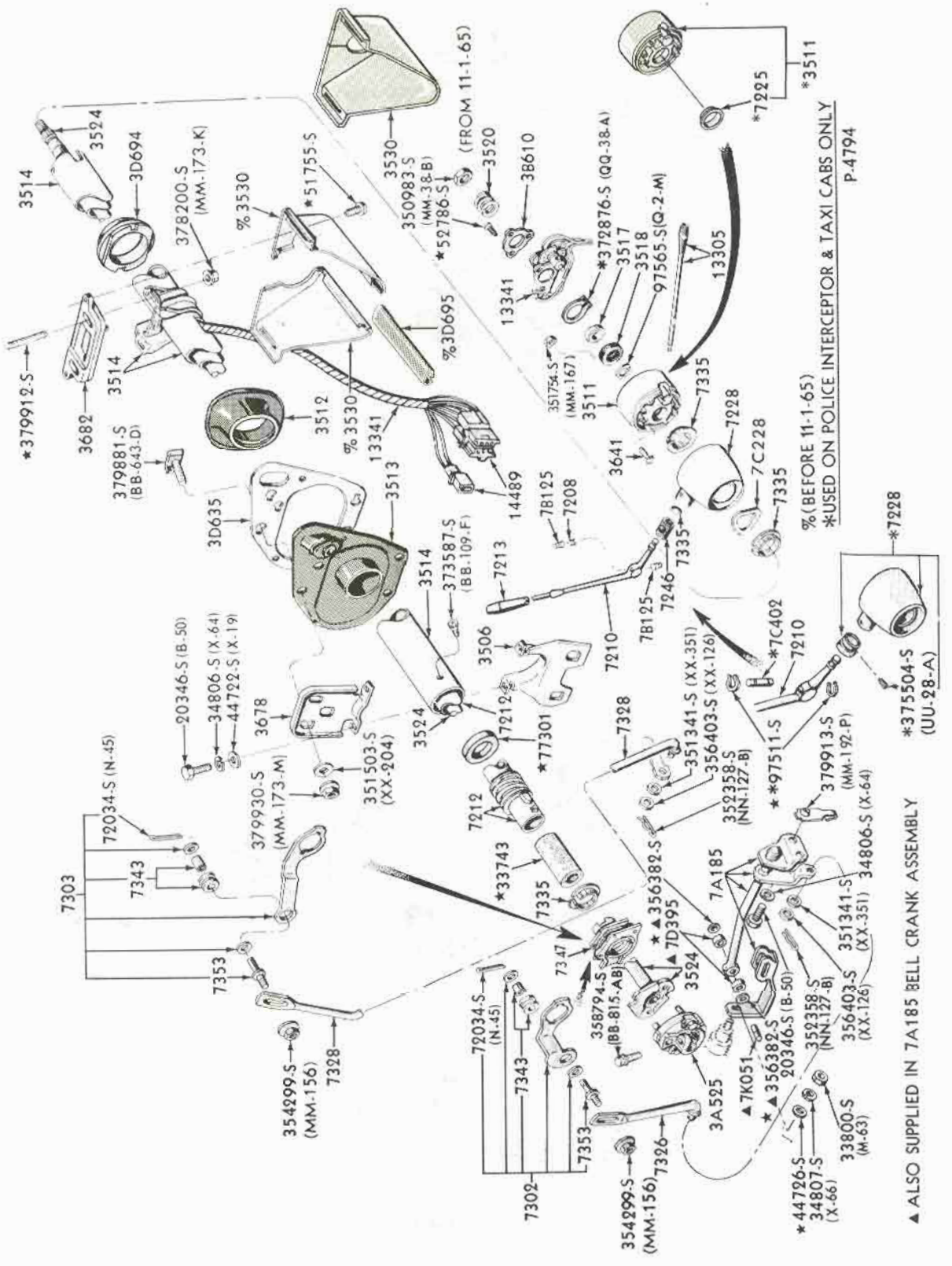

STEERING COLUMN & SHIFT MECHANISM - TYPICAL
3 SPEED MANUAL & OVERDRIVE TRANSMISSIONS
1965/66 FORD - 6 & 8 CYL.

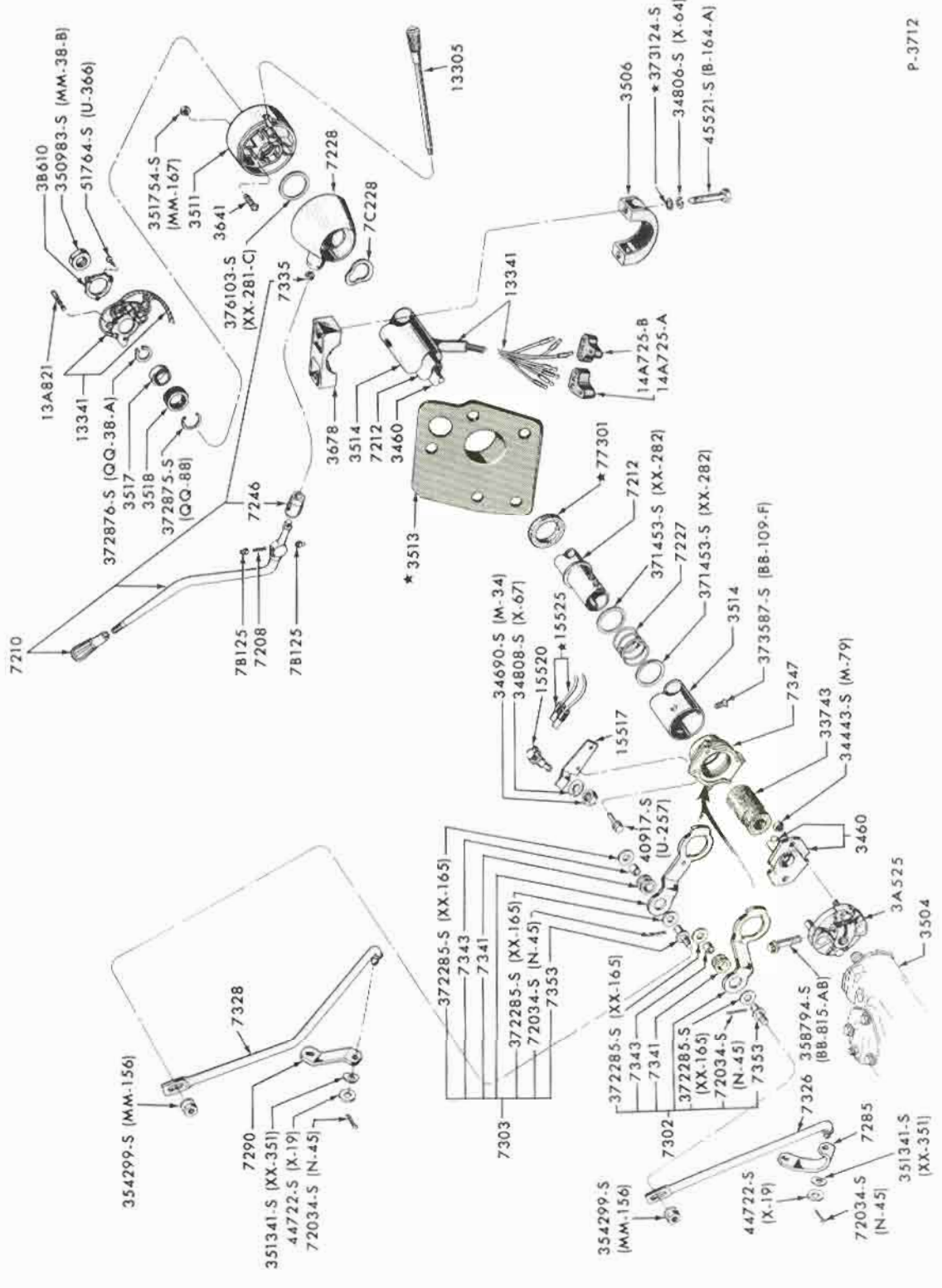

STEERING COLUMN & SHIFT MECHANISM
3 SPEED MANUAL & OVERDRIVE TRANSMISSIONS
1965 FAIRLANE

COPYRIGHT © 1975 — FORD MOTOR COMPANY — DEARBORN, MICHIGAN

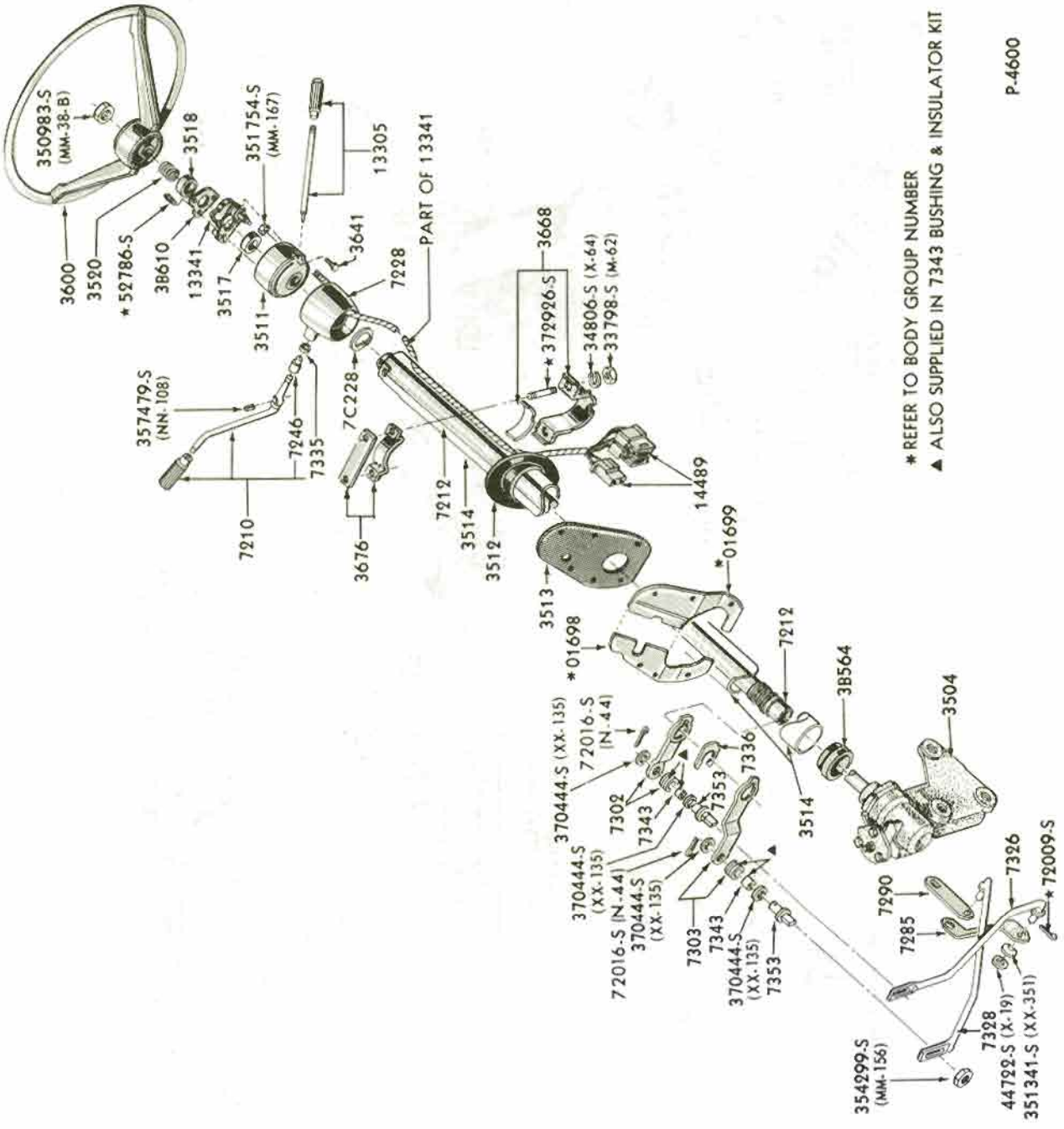

STEERING COLUMN & SHIFT MECHANISM
3 SPEED MANUAL & OVERDRIVE TRANSMISSIONS
1965 FALCON

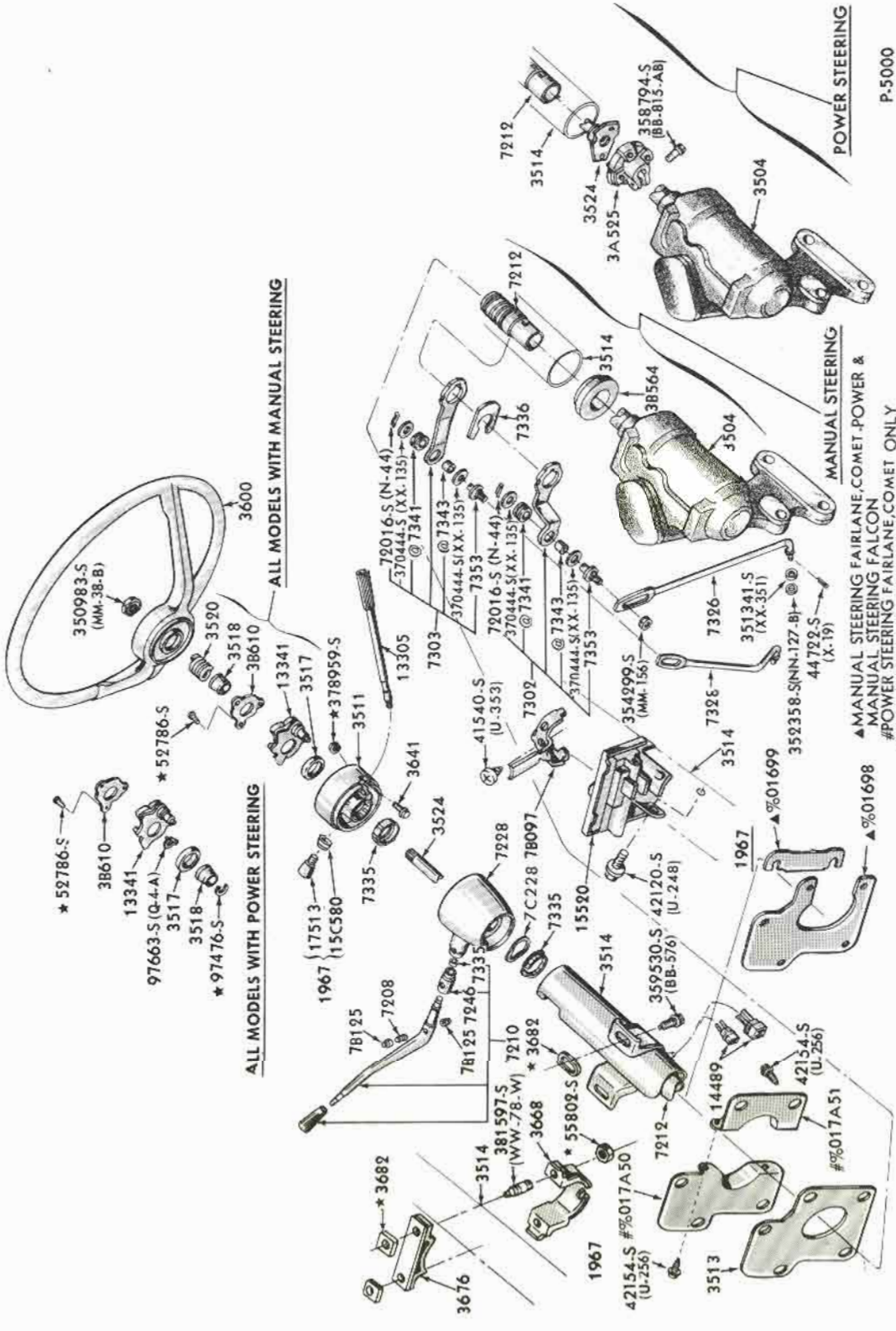

STEERING COLUMN & SHIFT MECHANISM
3 SPEED MANUAL & OVERDRIVE TRANSMISSIONS
1966/67 FAIRLANE & FALCON

COPYRIGHT © 1975 — FORD MOTOR COMPANY — DEARBORN, MICHIGAN

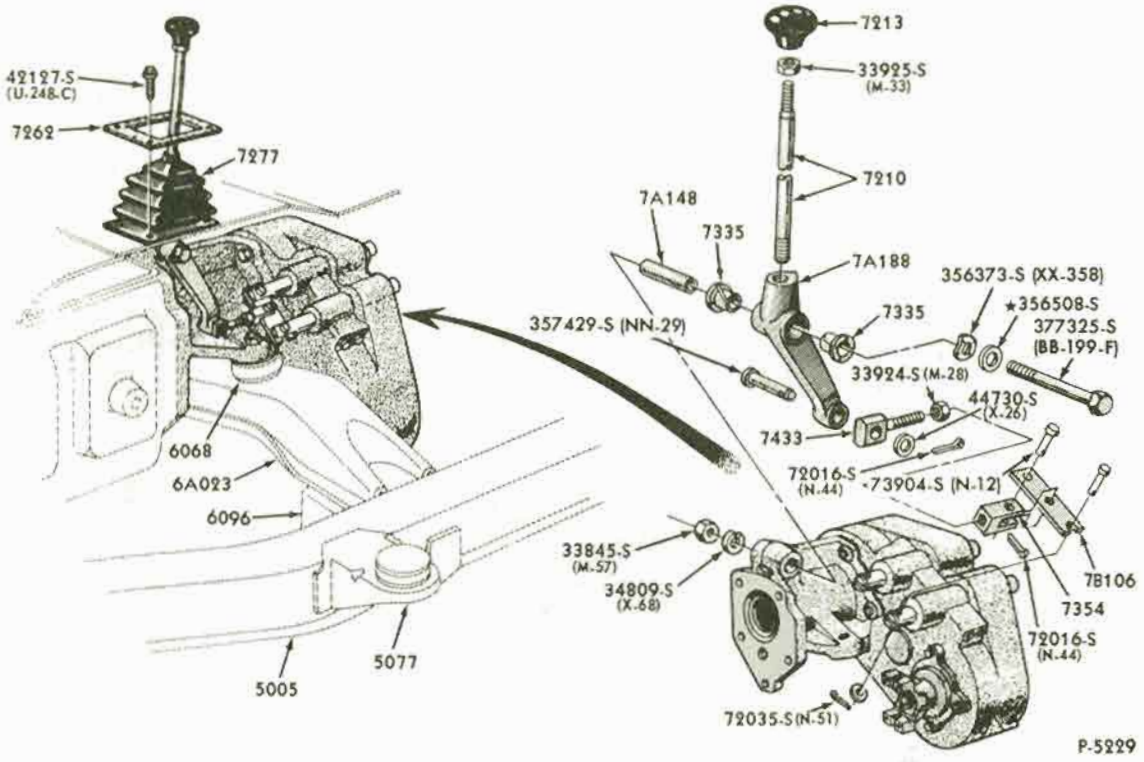

TRANSFER CASE SHIFT LINKAGE
1966 BRONCO - BEFORE SER. 830001

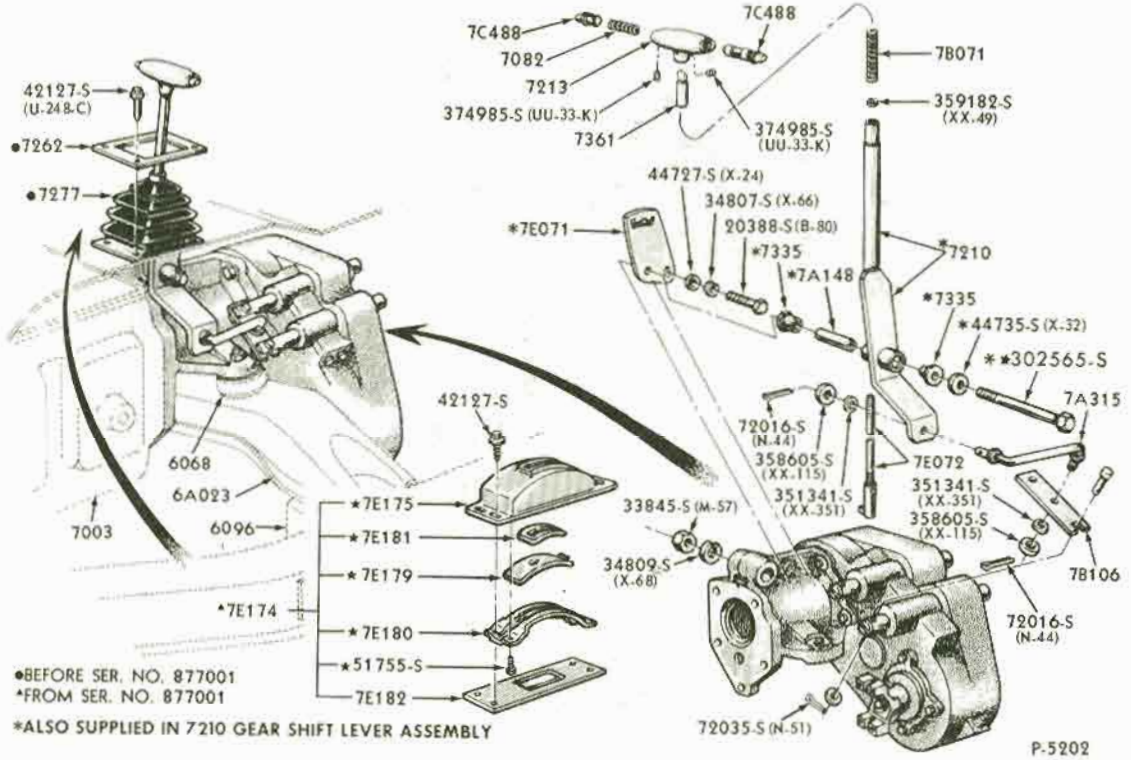

•BEFORE SER. NO. 877001
*FROM SER. NO. 877001
★ALSO SUPPLIED IN 7210 GEAR SHIFT LEVER ASSEMBLY

TRANSFER CASE SHIFT LINKAGE
1966/72 BRONCO - FROM SER. 830, 001

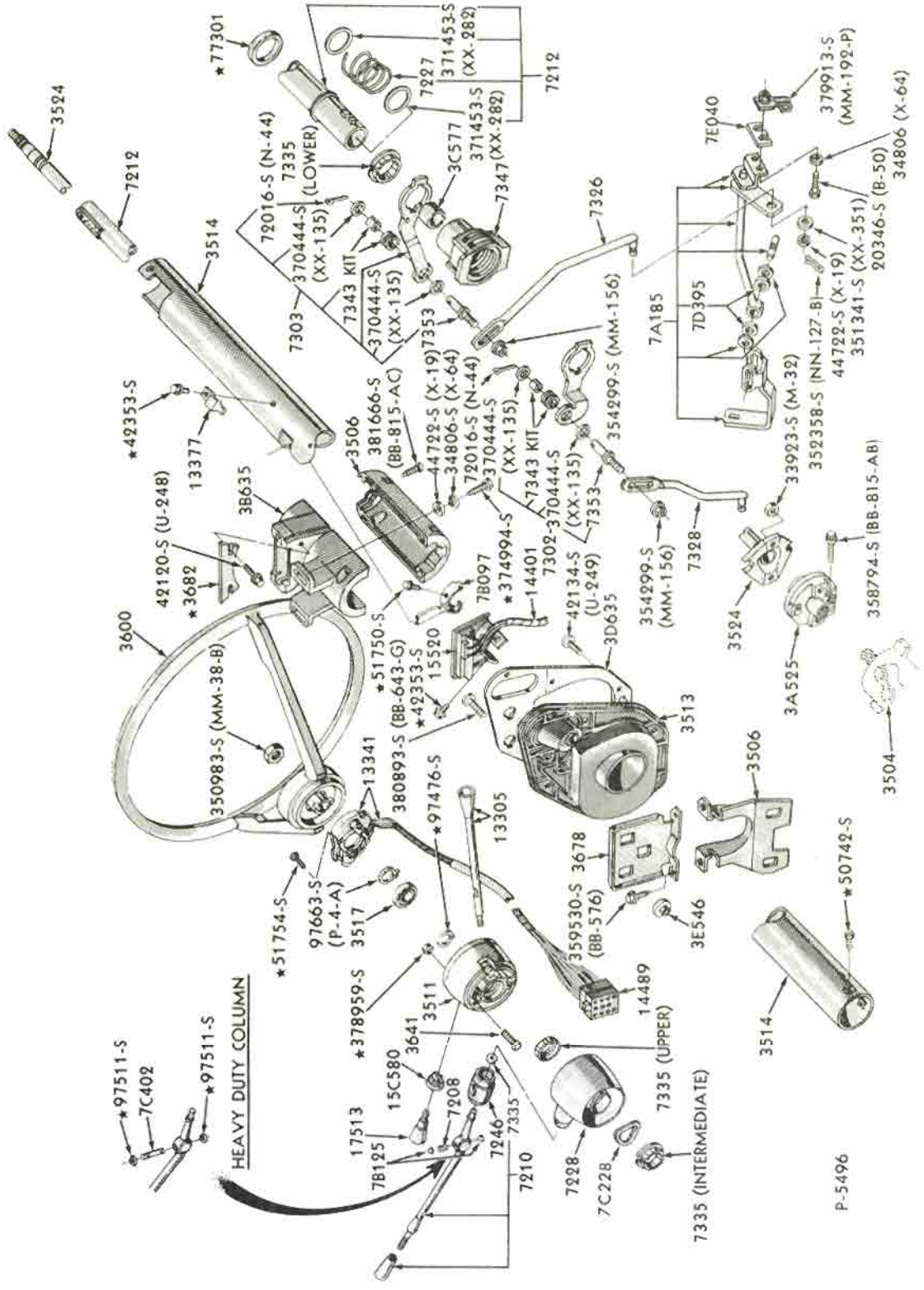

STEERING COLUMN & SHIFT MECHANISM - TYPICAL
3 SPEED MANUAL & OVERDRIVE TRANSMISSIONS
1967 FORD

COPYRIGHT © 1975 — FORD MOTOR COMPANY — DEARBORN, MICHIGAN

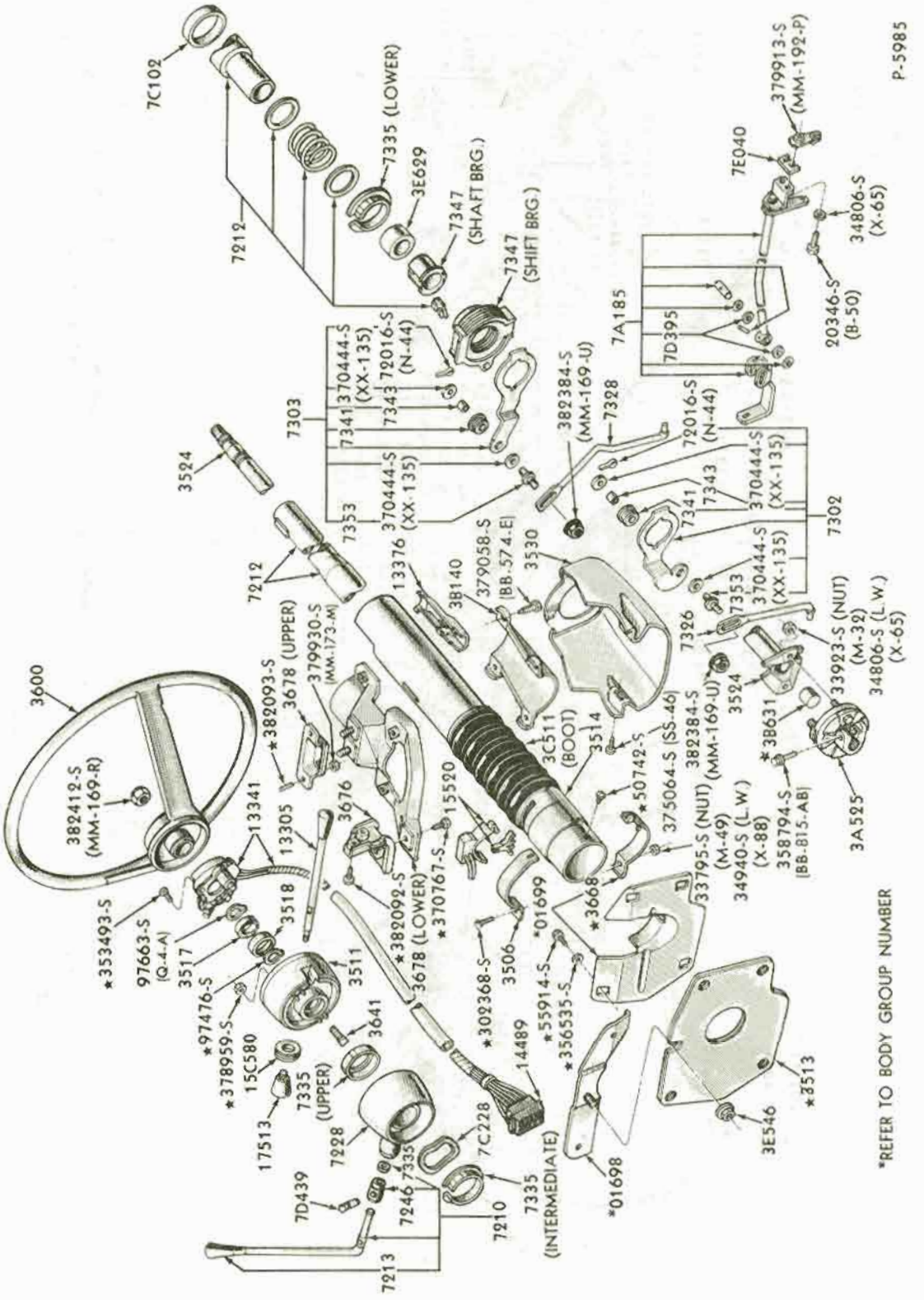

STEERING COLUMN & SHIFT MECHANISM
3 SPEED MANUAL TRANSMISSION
1968 FORD

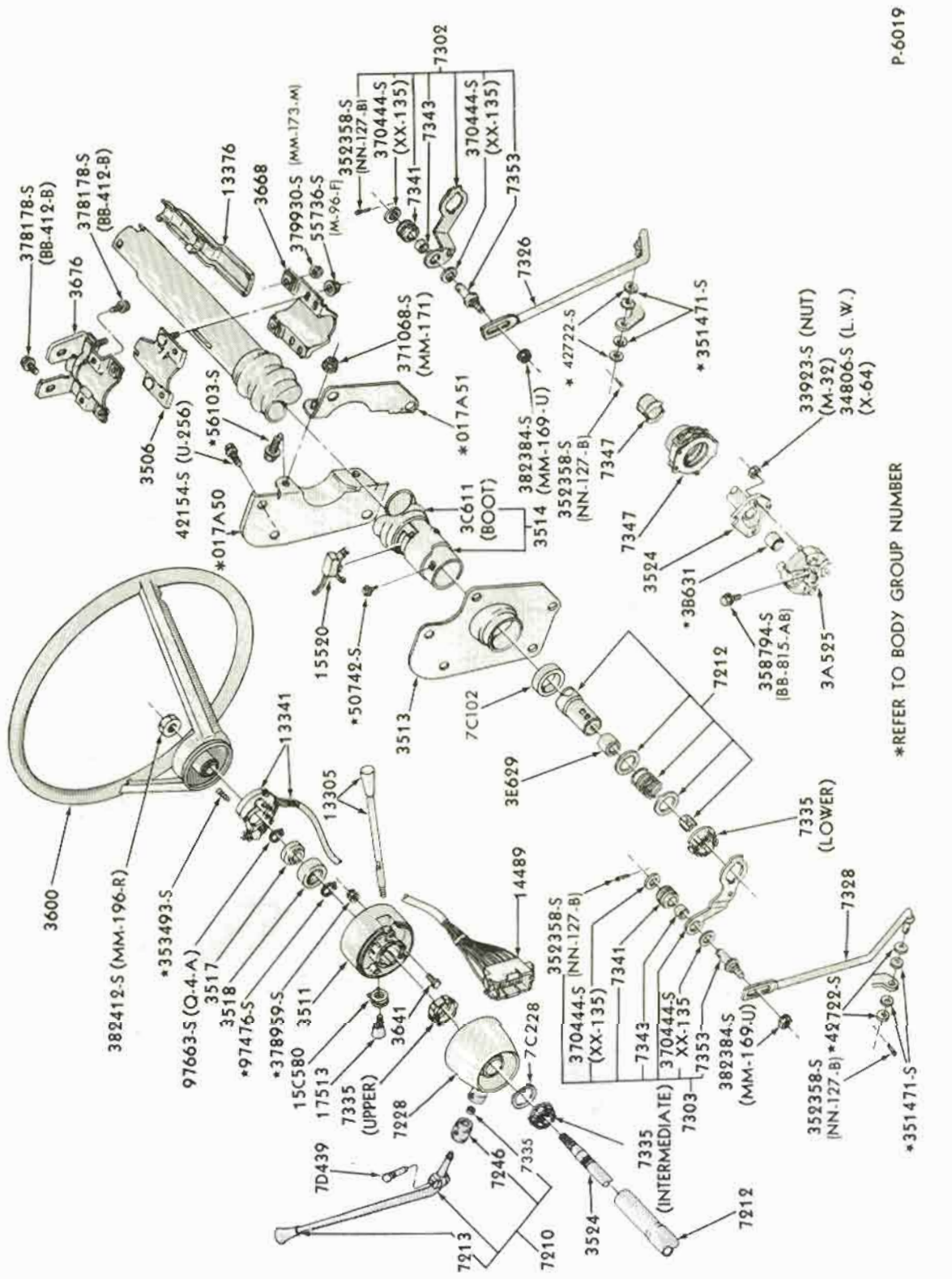

STEERING COLUMN & SHIFT MECHANISM
3 SPEED MANUAL TRANSMISSION
1968/69 FAIRLANE/TORINO & 1968/70 FALCON

COPYRIGHT © 1975 — FORD MOTOR COMPANY — DEARBORN, MICHIGAN

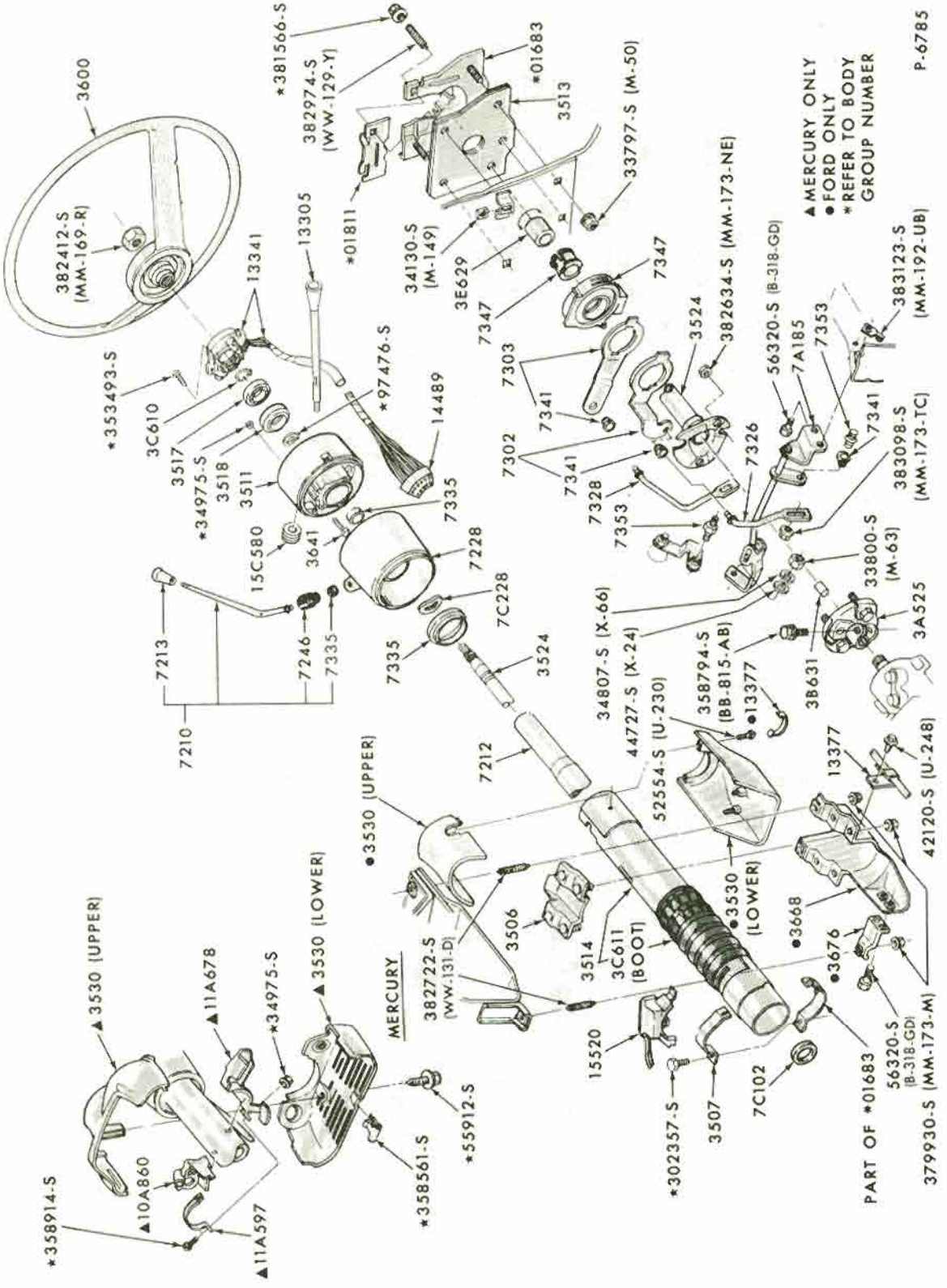

STEERING COLUMN & SHIFT MECHANISM
3 SPEED MANUAL TRANSMISSION
1969 FORD

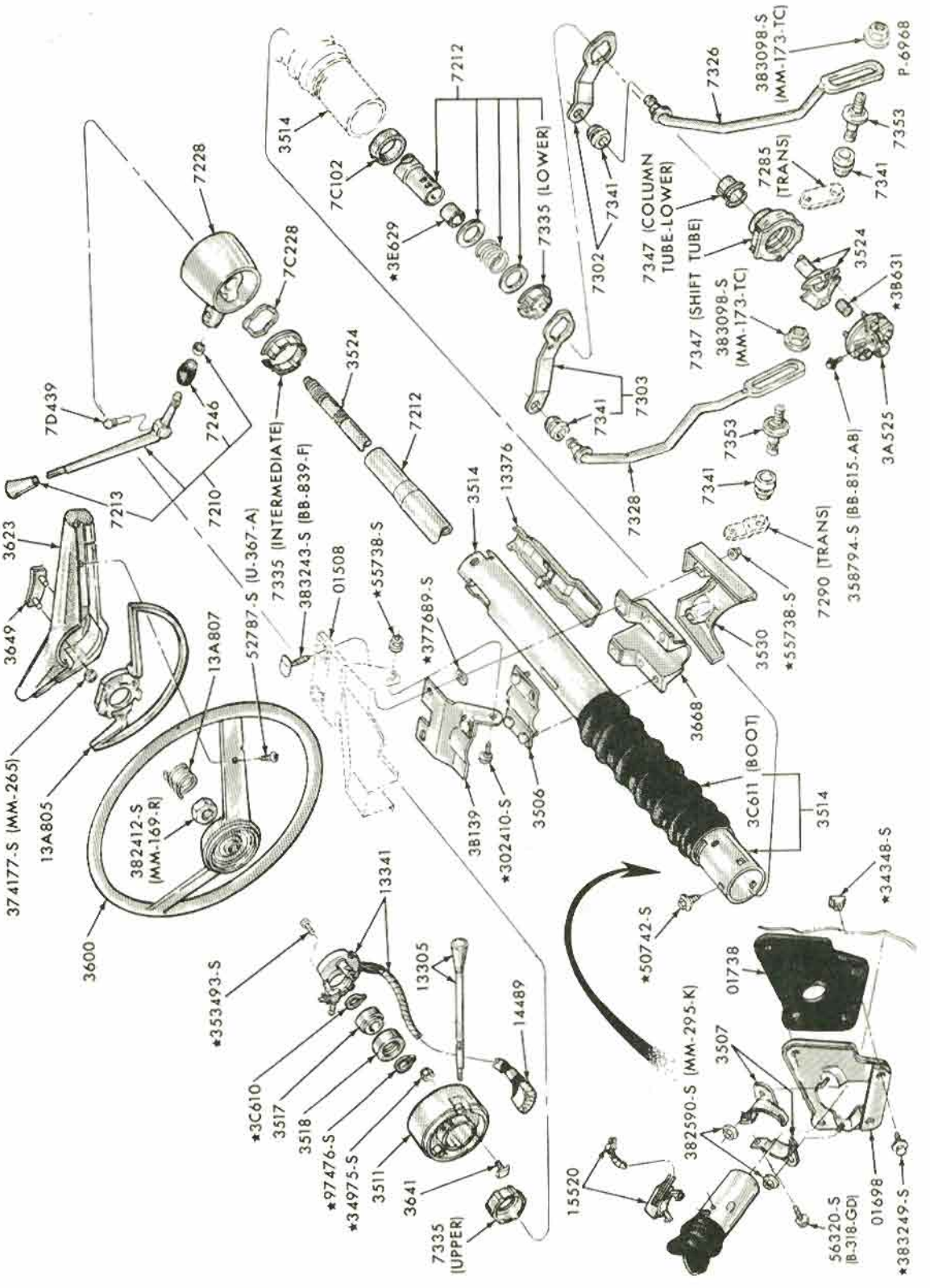

STEERING COLUMN & SHIFT MECHANISM - NON LOCKING
3 SPEED MANUAL TRANSMISSION
1970 MAVERICK

COPYRIGHT © 1975 — FORD MOTOR COMPANY — DEARBORN, MICHIGAN

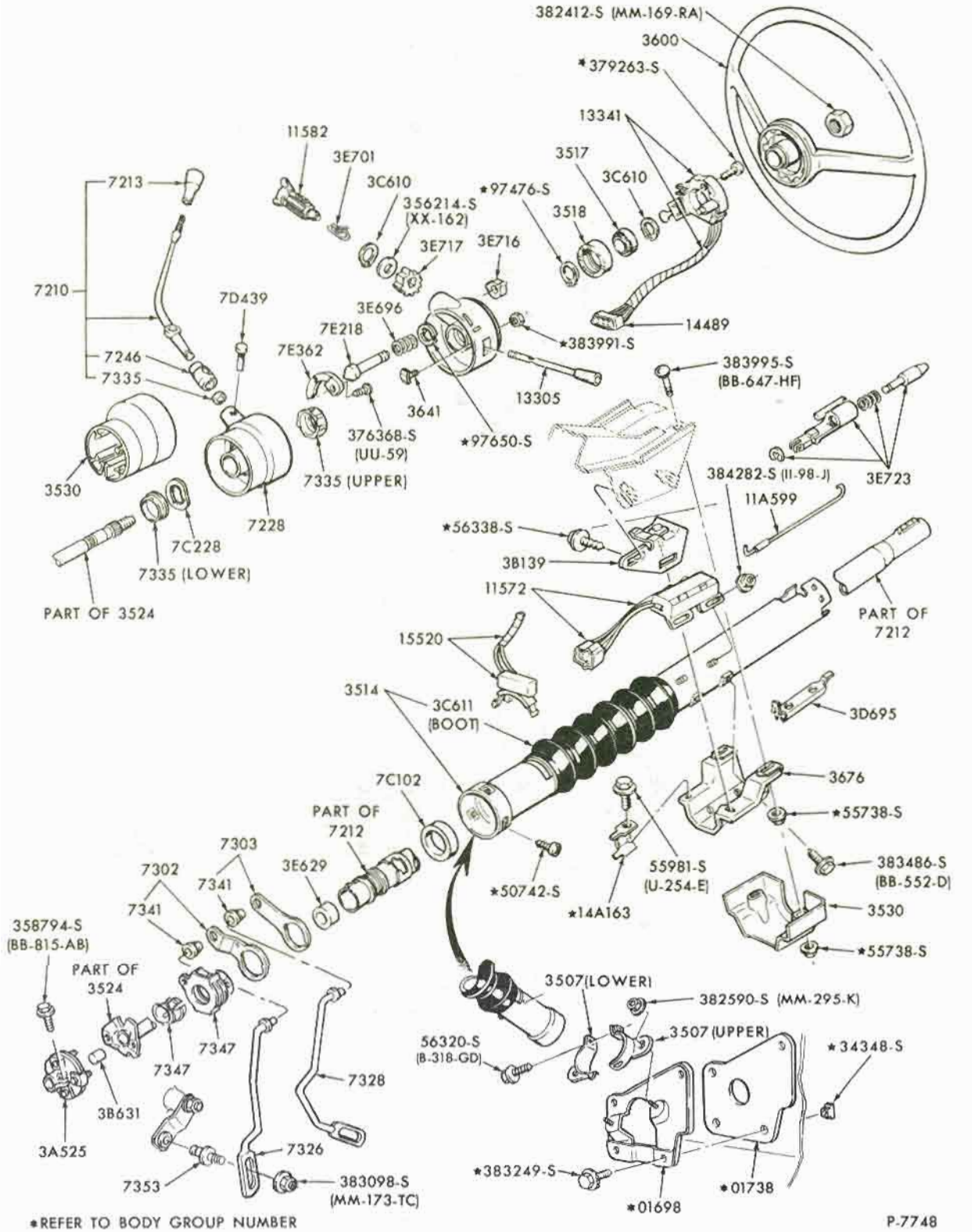

*REFER TO BODY GROUP NUMBER

P-7748

STEERING COLUMN & SHIFT MECHANISM - LOCKING
3 SPEED MANUAL TRANSMISSION
1970/72 MAVERICK

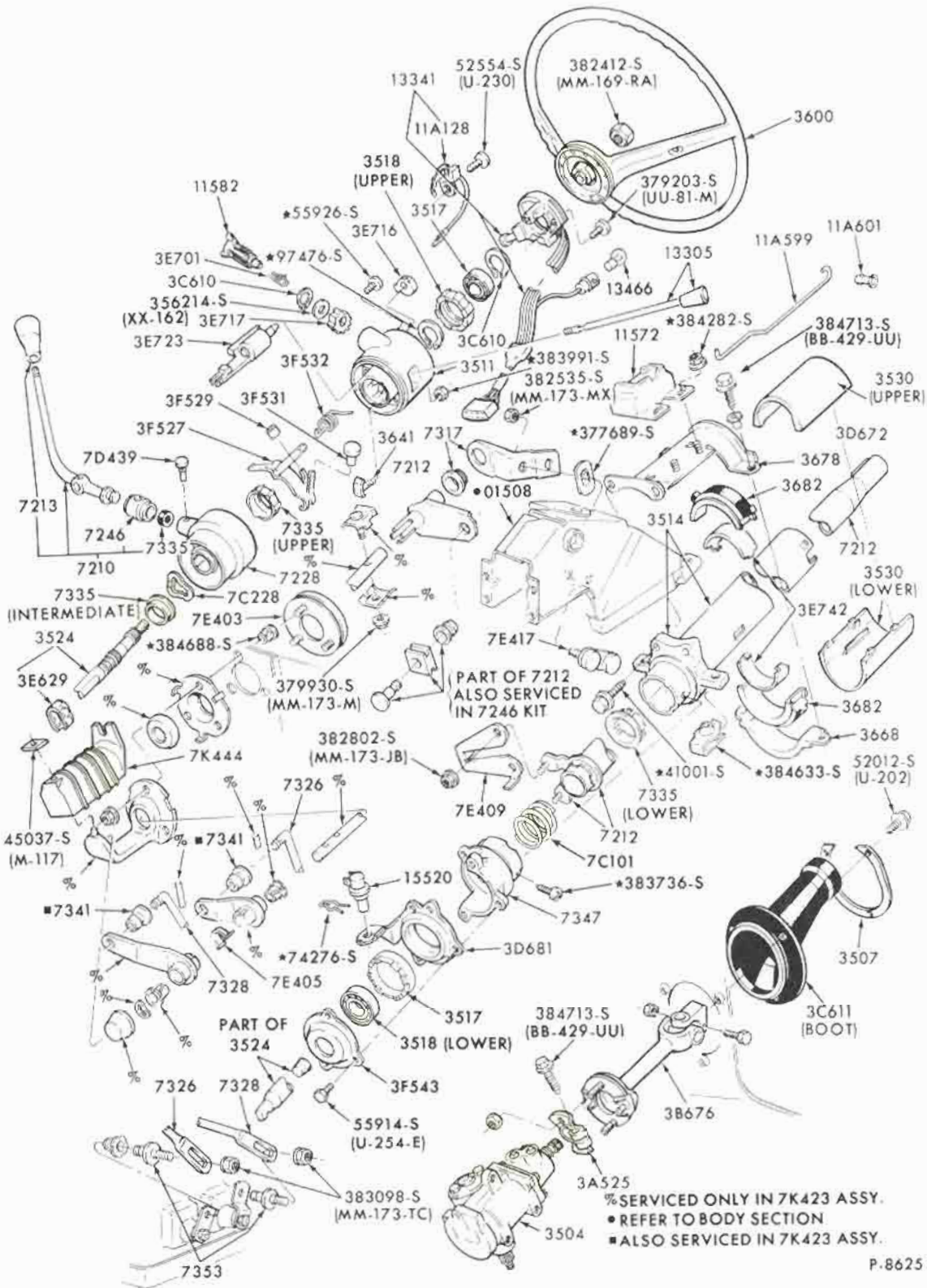

STEERING COLUMN and SHIFT MECHANISM - LOCKING
3 SPEED MANUAL TRANSMISSION
1972 TORINO

COPYRIGHT © 1975 — FORD MOTOR COMPANY — DEARBORN, MICHIGAN

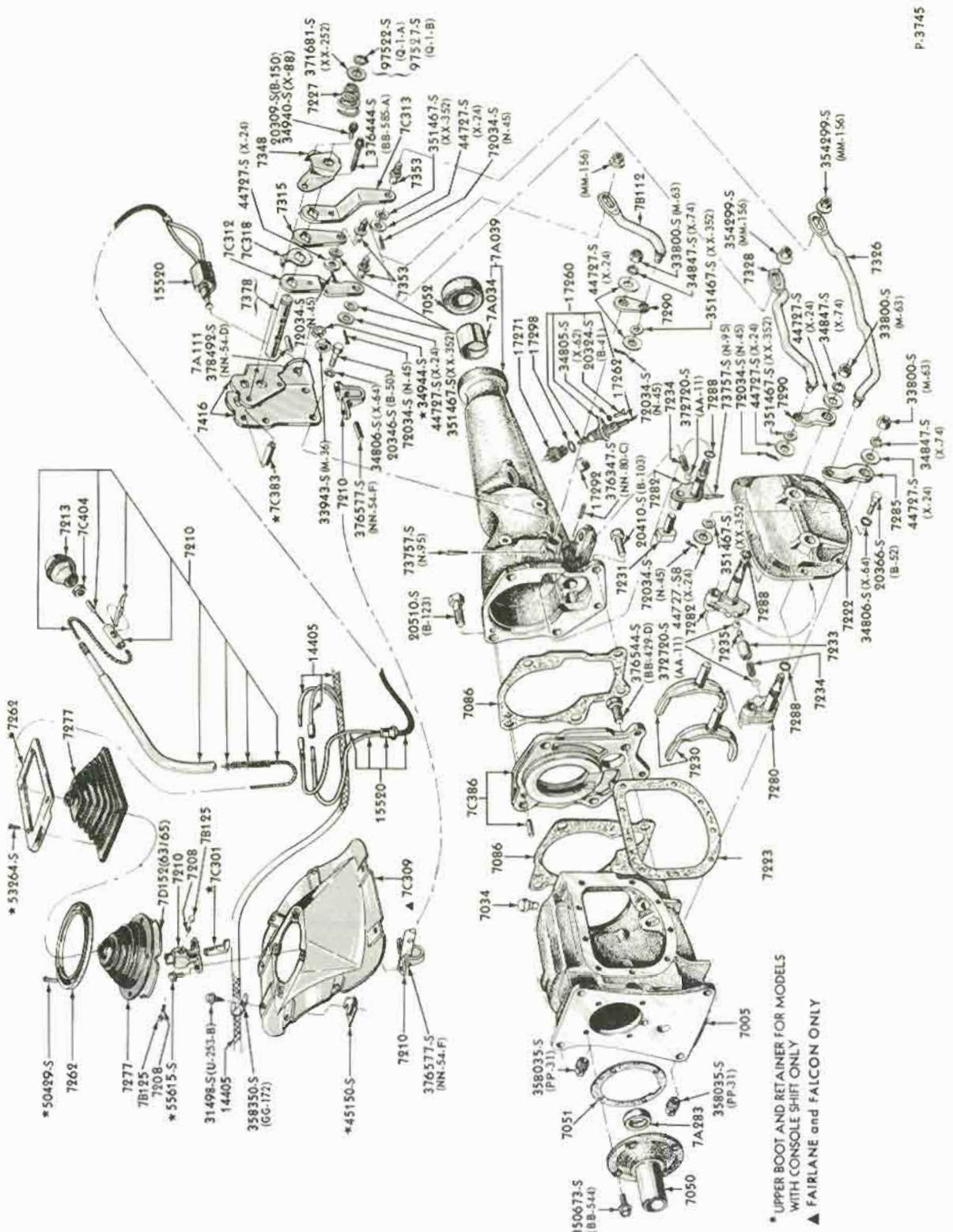

GEAR SHIFT MECHANISM - CONSOLE or FLOOR MOUNTED - TYPICAL
4 SPEED MANUAL TRANSMISSION - WARNER DESIGN
1965/66 FAIRLANE, MUSTANG & FALCON

COPYRIGHT © 1975 — FORD MOTOR COMPANY — DEARBORN, MICHIGAN

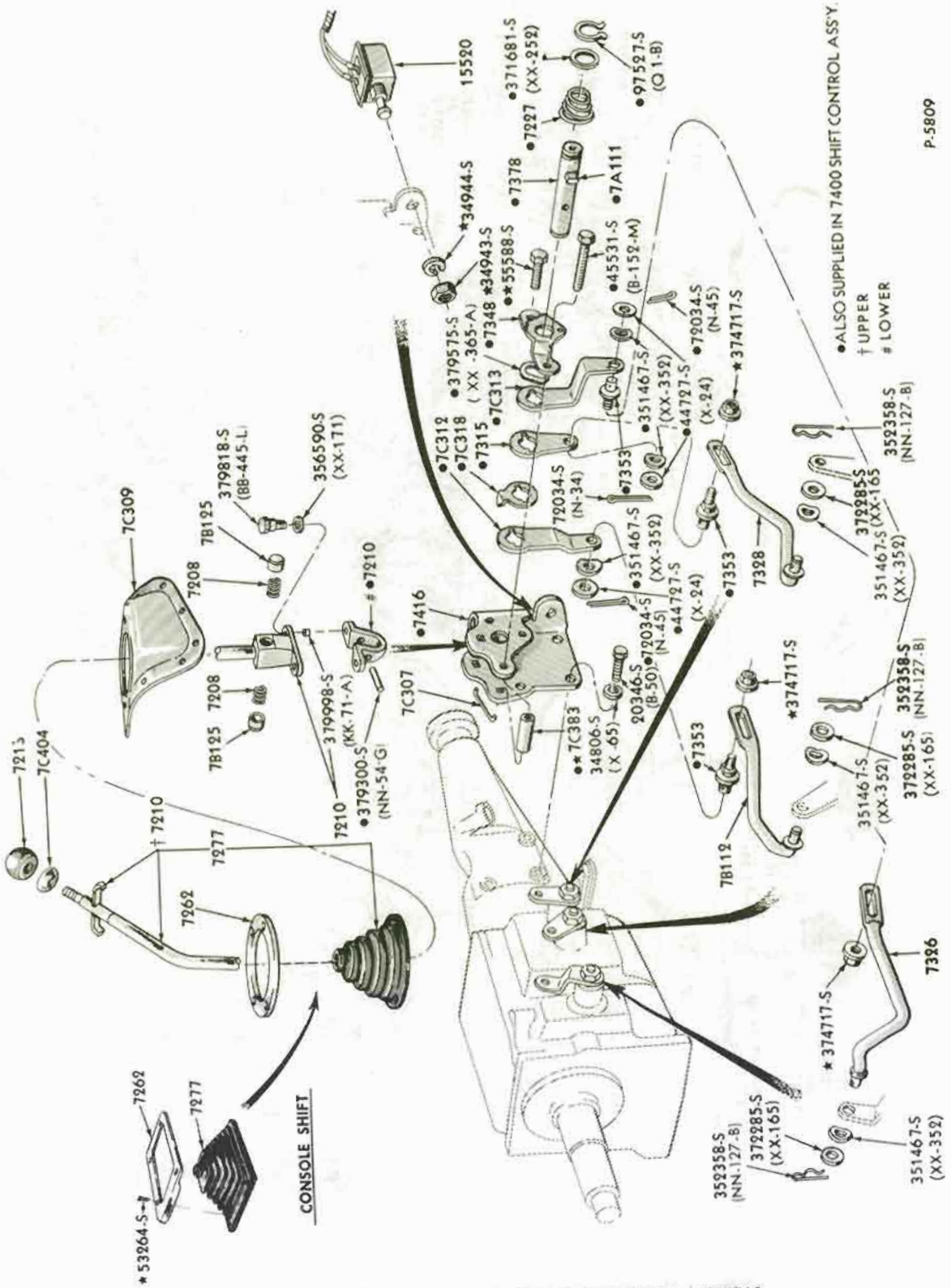

GEAR SHIFT MECHANISM - CONSOLE or FLOOR MOUNTED - TYPICAL
4 SPEED MANUAL TRANSMISSION - FORD DESIGN
1965/67 FORD

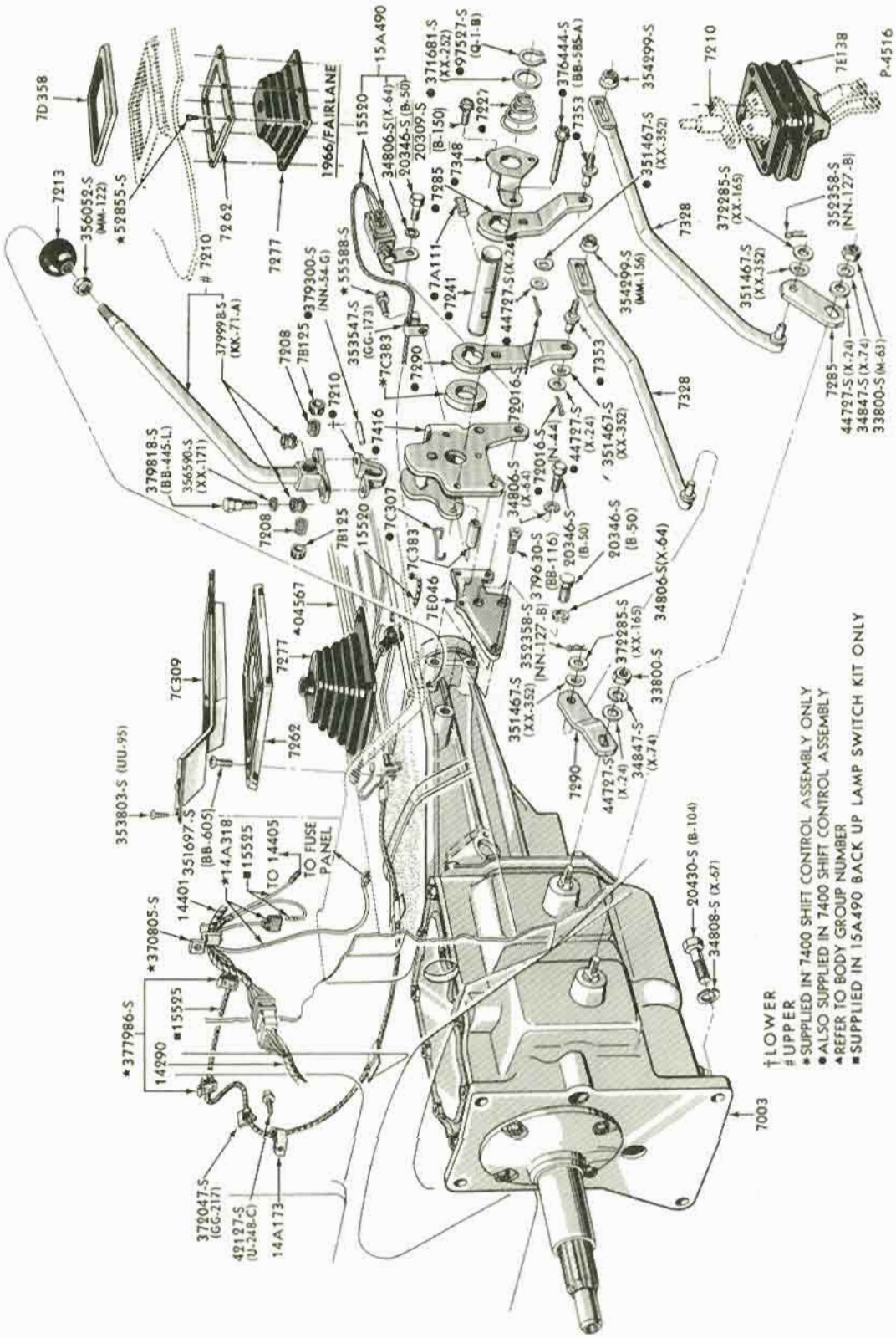

GEAR SHIFT MECHANISM - FLOOR MOUNTED
3 SPEED MANUAL TRANSMISSION
1965/68 FAIRLANE/TORINO & MUSTANG

COPYRIGHT © 1975 — FORD MOTOR COMPANY — DEARBORN, MICHIGAN

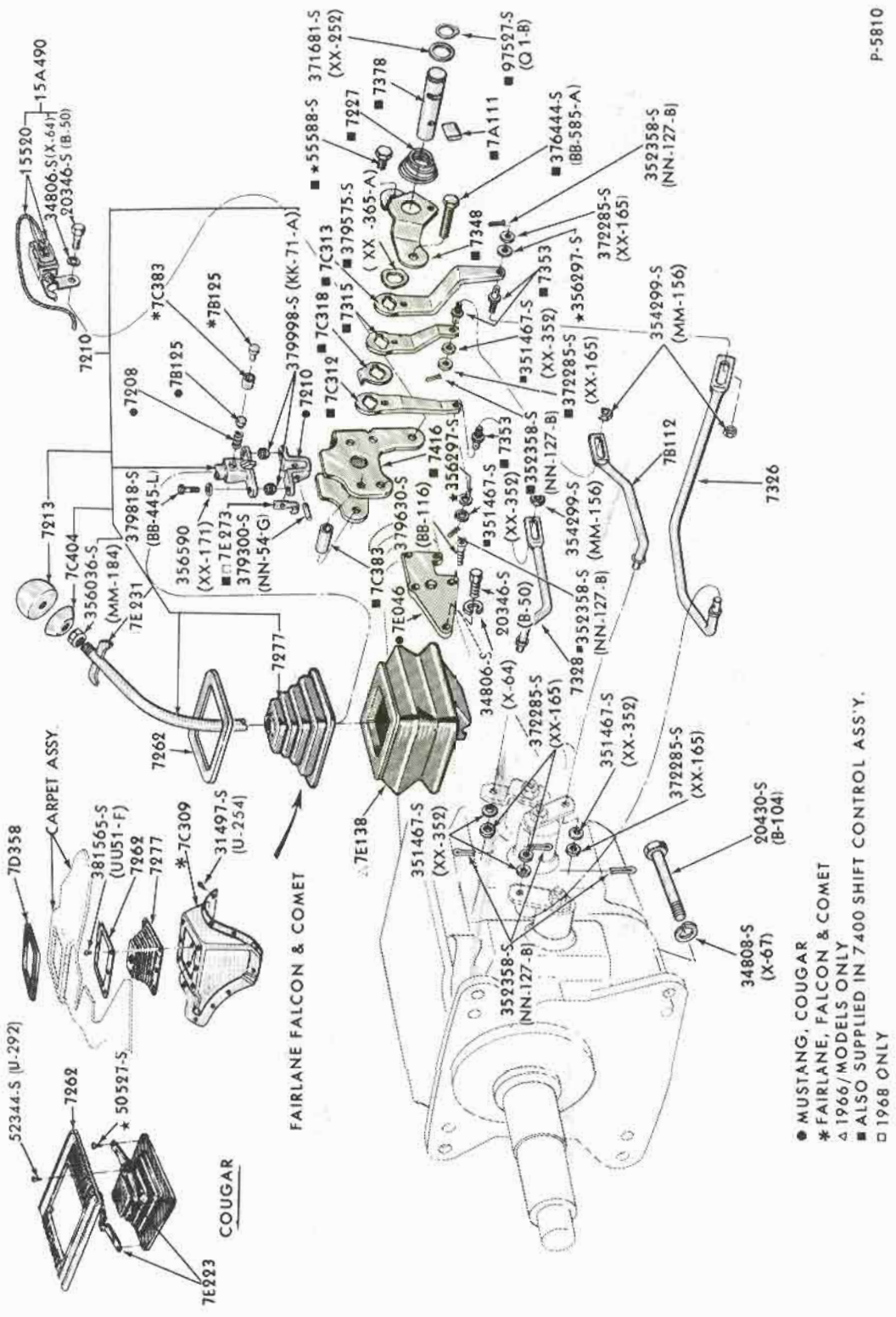

● MUSTANG, COUGAR
* FAIRLANE, FALCON & COMET
△ 1966/MODELS ONLY
■ ALSO SUPPLIED IN 7400 SHIFT CONTROL ASS'Y.
□ 1968 ONLY

GEAR SHIFT MECHANISM - CONSOLE or FLOOR MOUNTED - TYPICAL
4 SPEED MANUAL TRANSMISSION - FORD DESIGN
1965/68 FAIRLANE/TORINO, MUSTANG & FALCON

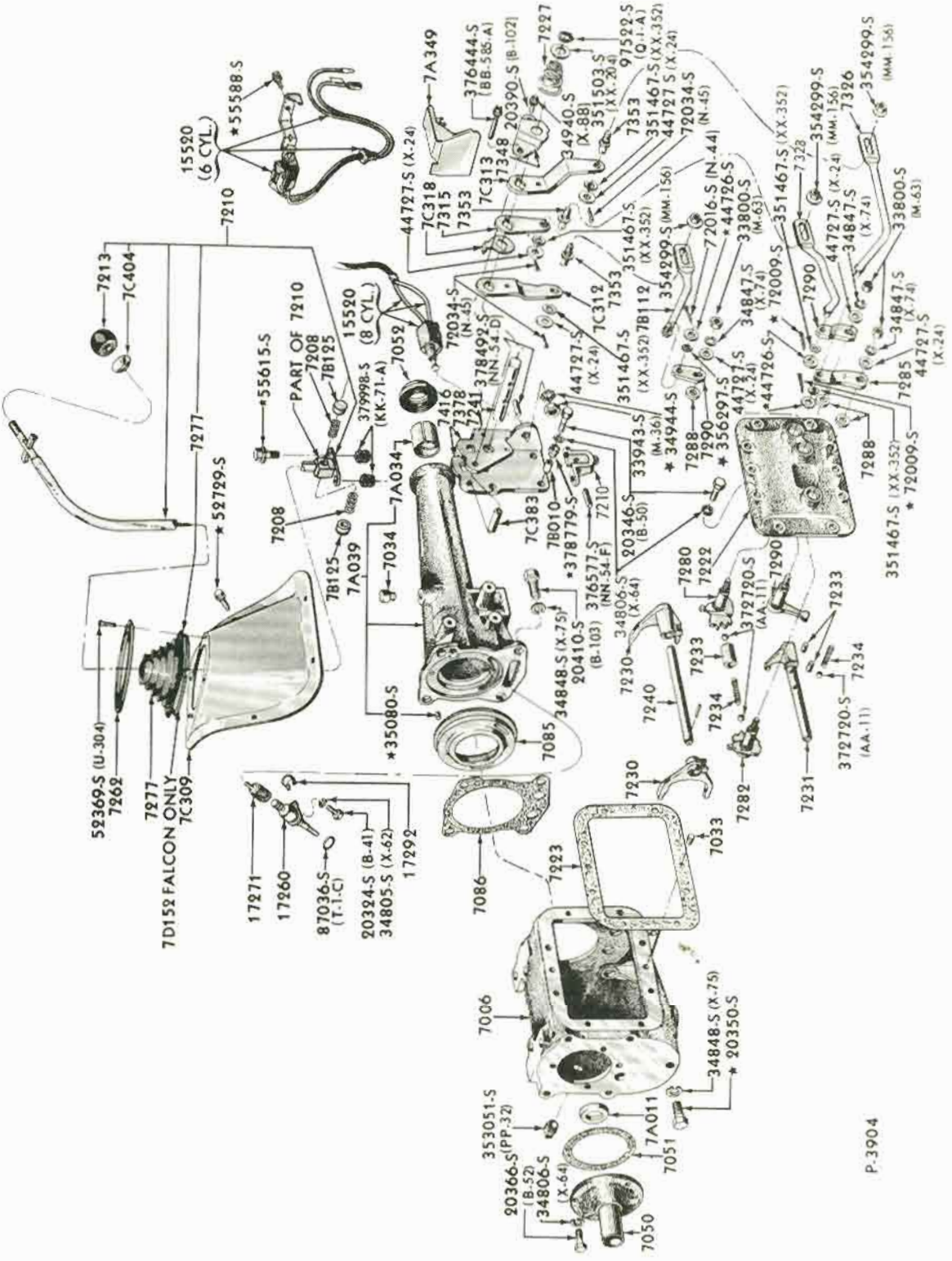

GEAR SHIFT MECHANISM
4 SPEED MANUAL TRANSMISSION - DAGENHAM DESIGN
1965/66 MUSTANG

COPYRIGHT © 1975 — FORD MOTOR COMPANY — DEARBORN, MICHIGAN

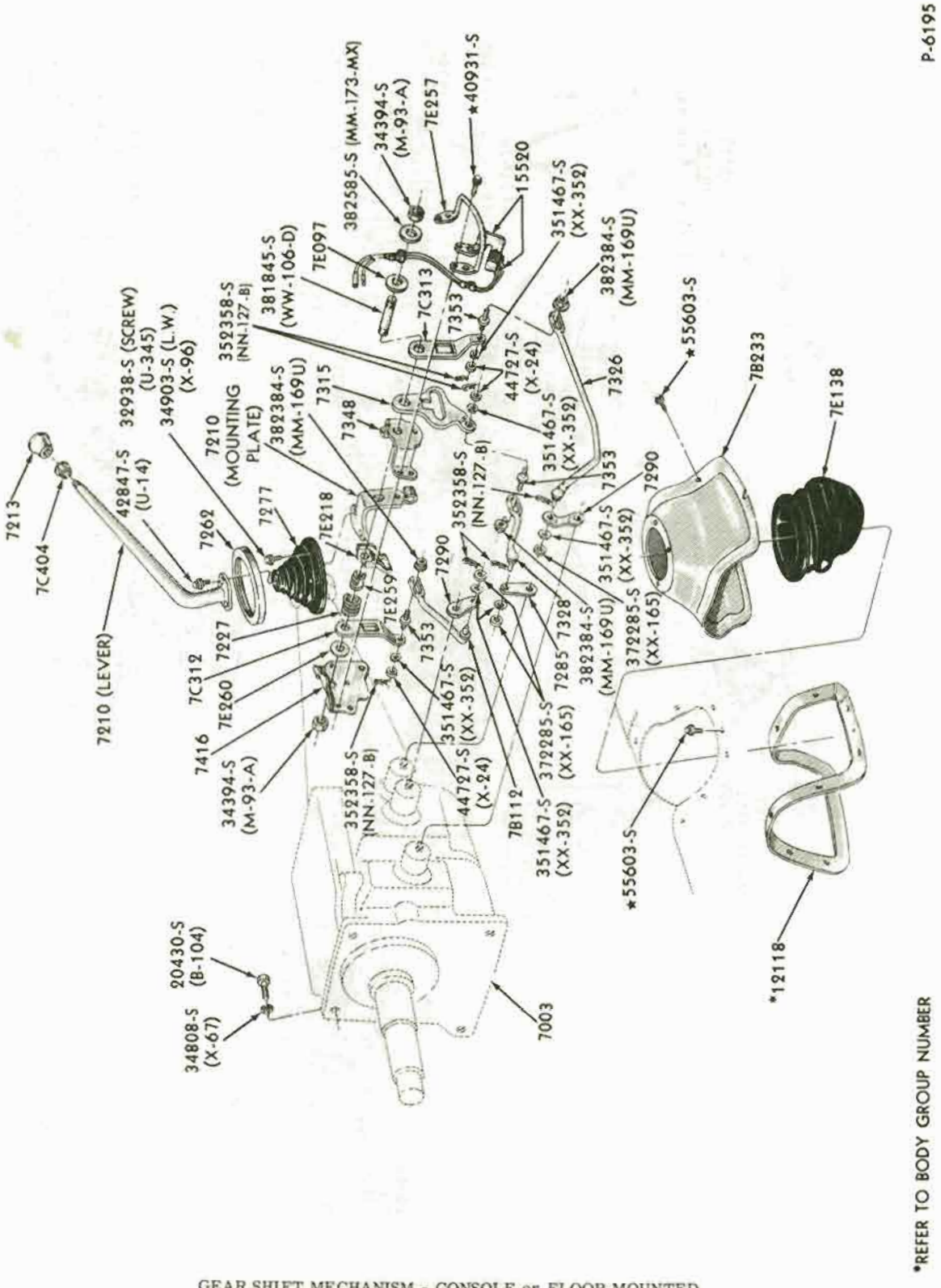

*REFER TO BODY GROUP NUMBER

GEAR SHIFT MECHANISM - CONSOLE or FLOOR MOUNTED
4 SPEED MANUAL TRANSMISSION - FORD DESIGN
1968 FORD

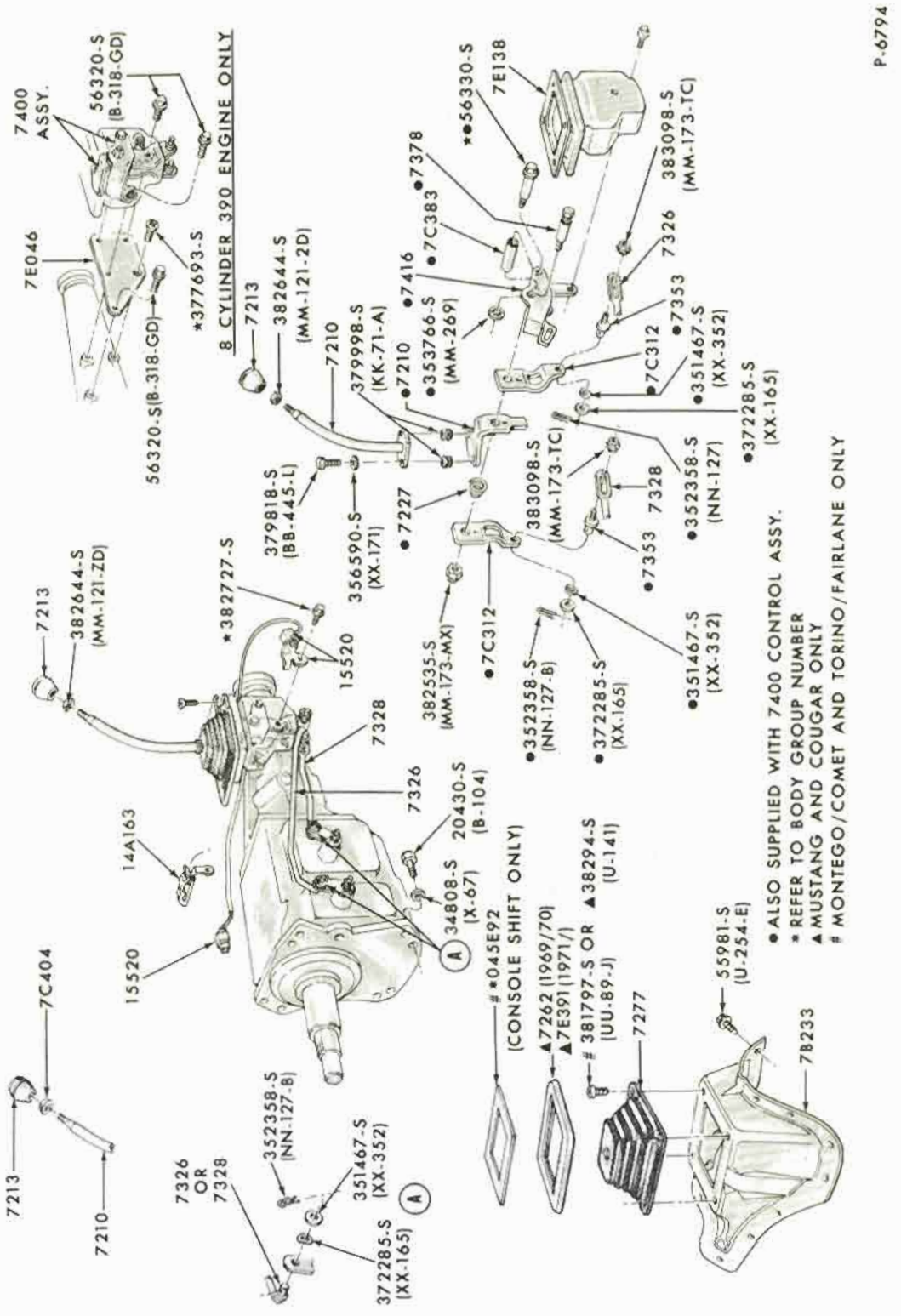

GEAR SHIFT MECHANISM - CONSOLE or FLOOR MOUNTED - TYPICAL
3 SPEED MANUAL TRANSMISSION
1969/71 FAIRLANE/TORINO, MUSTANG, 1971/72 MAVERICK

COPYRIGHT © 1975 — FORD MOTOR COMPANY — DEARBORN, MICHIGAN

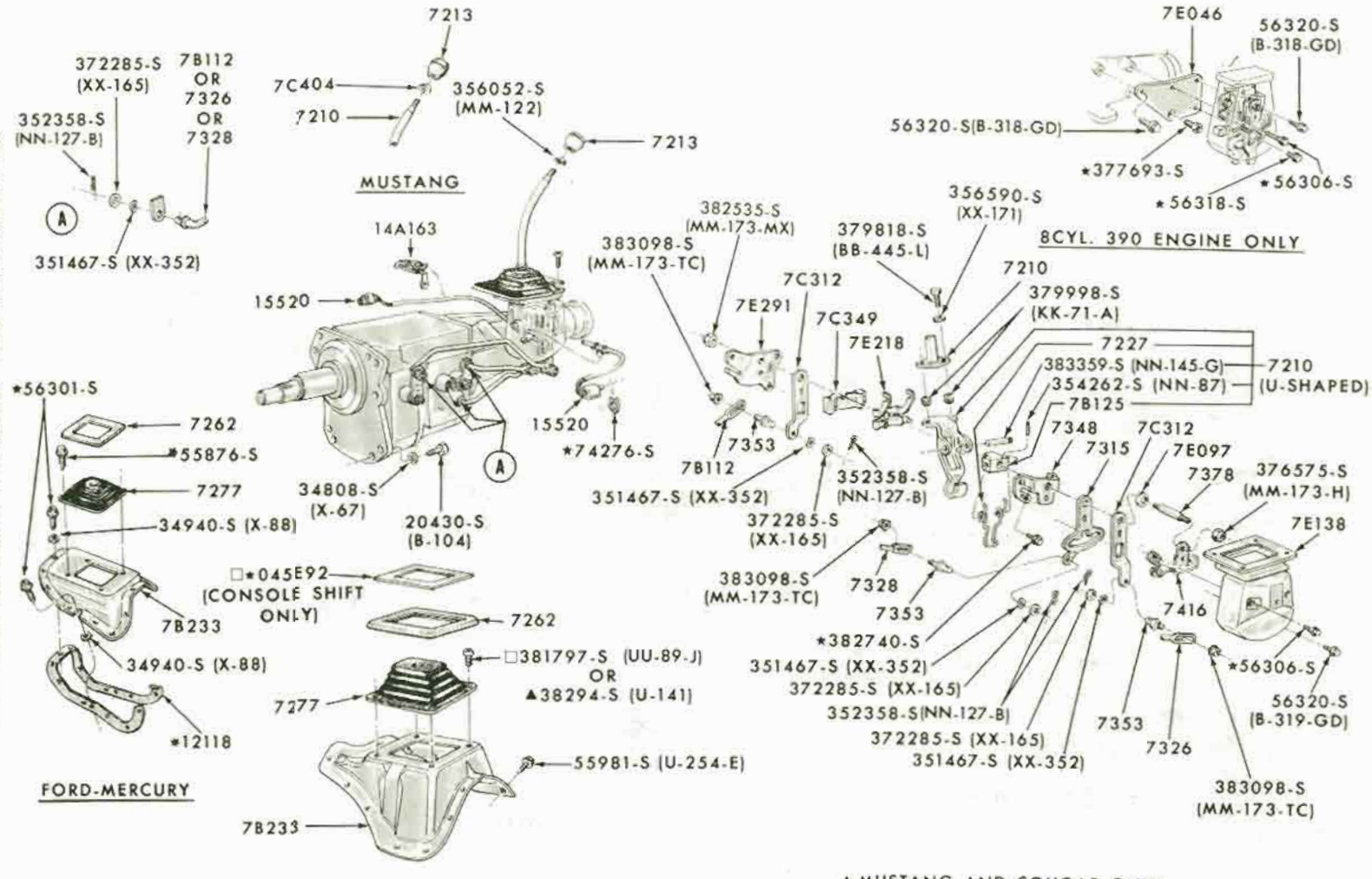

FAIRLANE/TORINO,COMET/MONTEGO,MUSTANG AND COUGAR

▲ MUSTANG AND COUGAR ONLY

□ MONTEGO/COMET AND TORINO/FAIRLANE ONLY

P-6793

GEAR SHIFT MECHANISM - CONSOLE or FLOOR MOUNTED - TYPICAL
4 SPEED MANUAL TRANSMISSION
1969 FORD, FAIRLANE/TORINO, MUSTANG & FALCON

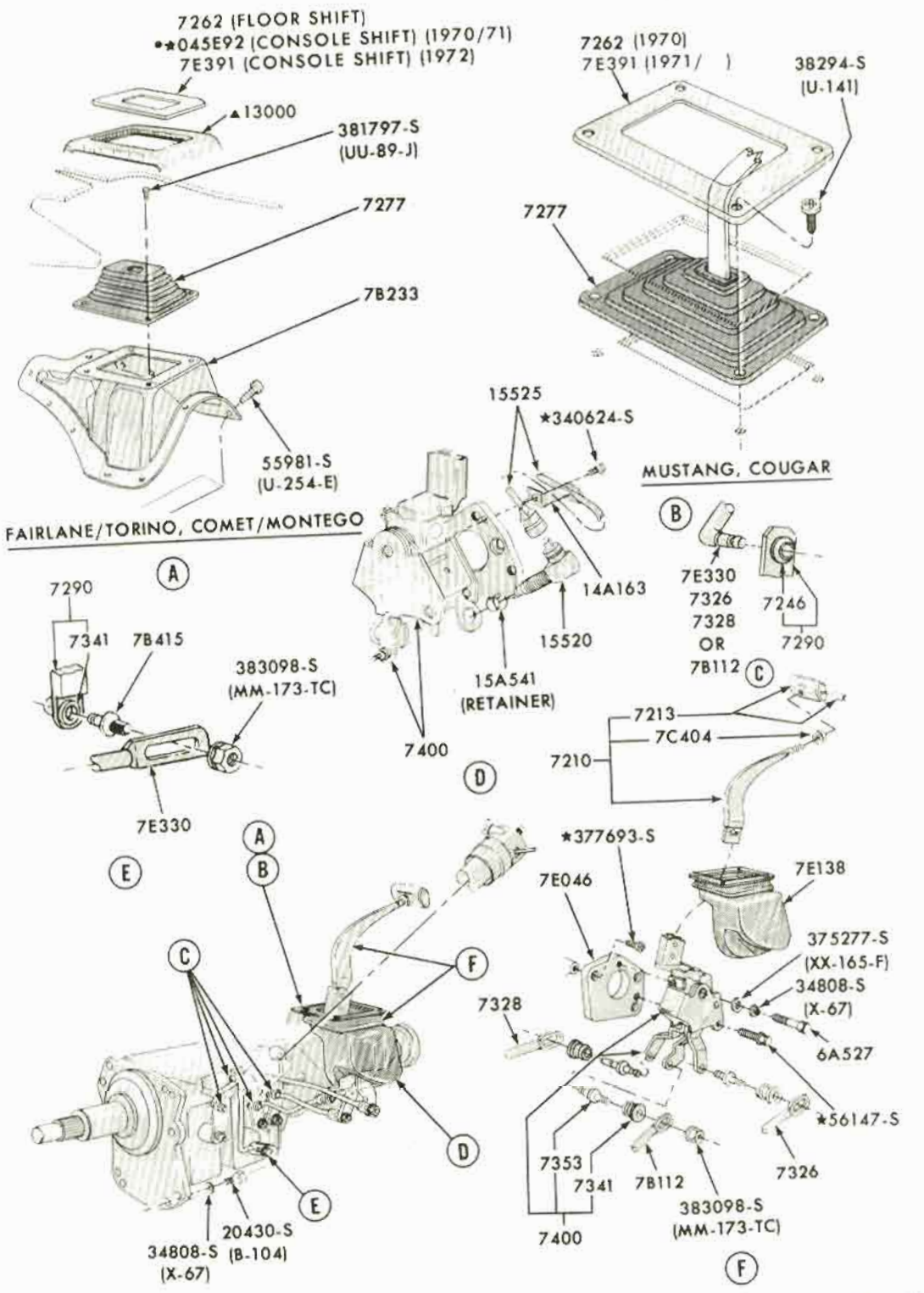

▲ REFER TO SOFT TRIM SECTION
• REFER TO BODY SECTION

P-7499

GEAR SHIFT MECHANISM - HURST FLOOR MOUNTED
4-SPEED MANUAL TRANSMISSION
1970/72 FAIRLANE/TORINO & MUSTANG

COPYRIGHT © 1975 — FORD MOTOR COMPANY — DEARBORN, MICHIGAN

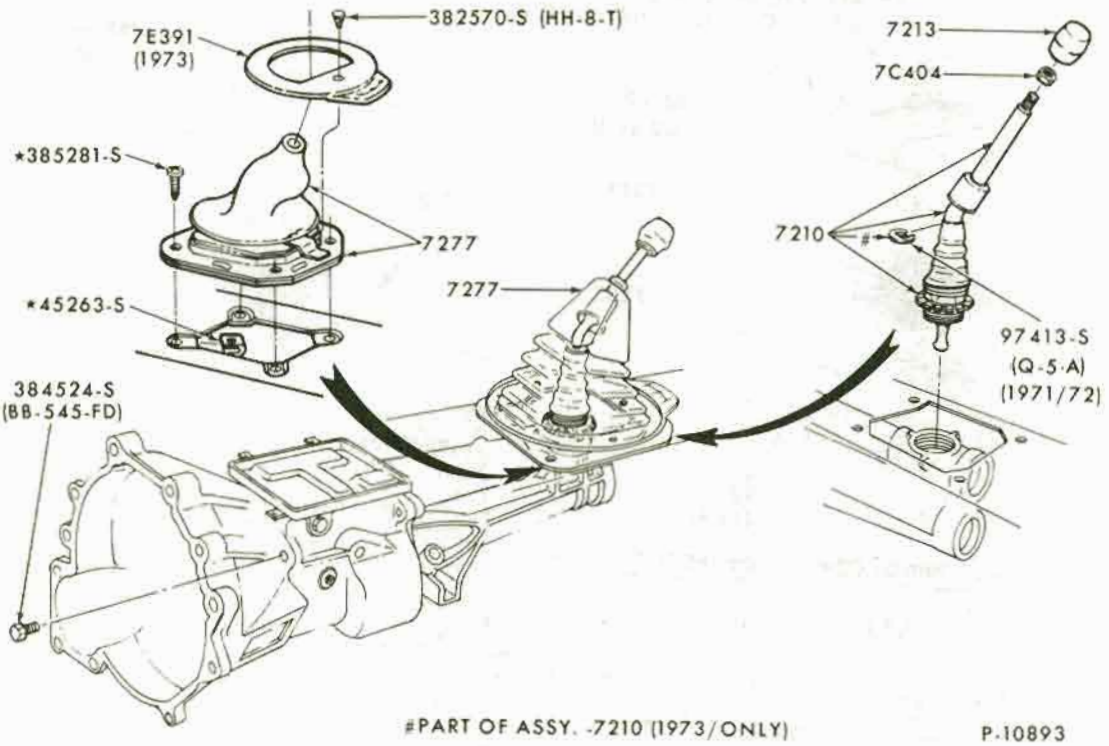

#PART OF ASSY. -7210 (1973/ONLY)

P-10893

GEAR SHIFT MECHANISM
4 SPEED MANUAL TRANSMISSION
1971/72 PINTO

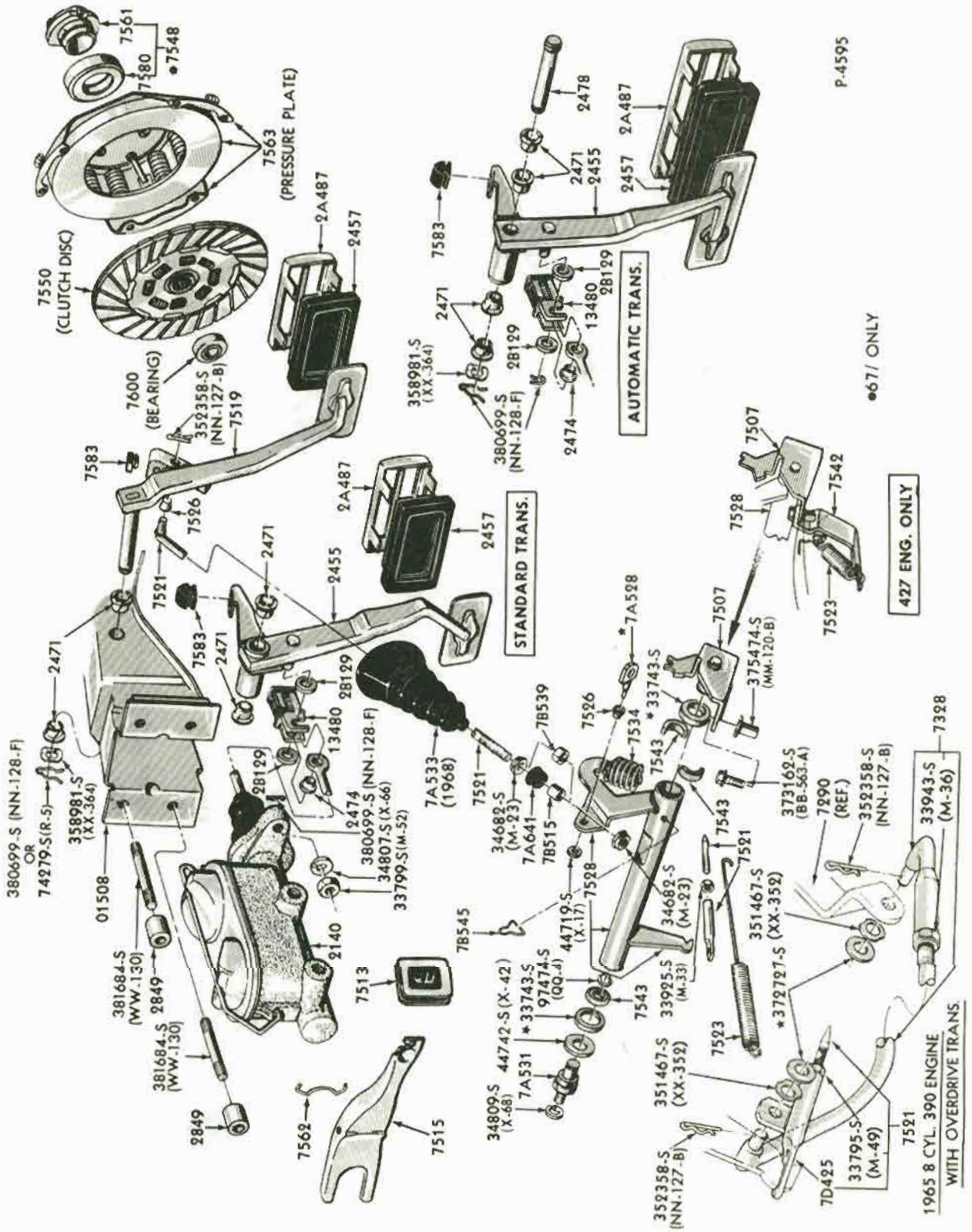

CLUTCH, CLUTCH PEDAL and BRAKE PEDAL

1965/68 FORD

COPYRIGHT © 1975 — FORD MOTOR COMPANY — DEARBORN, MICHIGAN

CLUTCH PEDAL and BRAKE PEDAL
1965 FAIRLANE

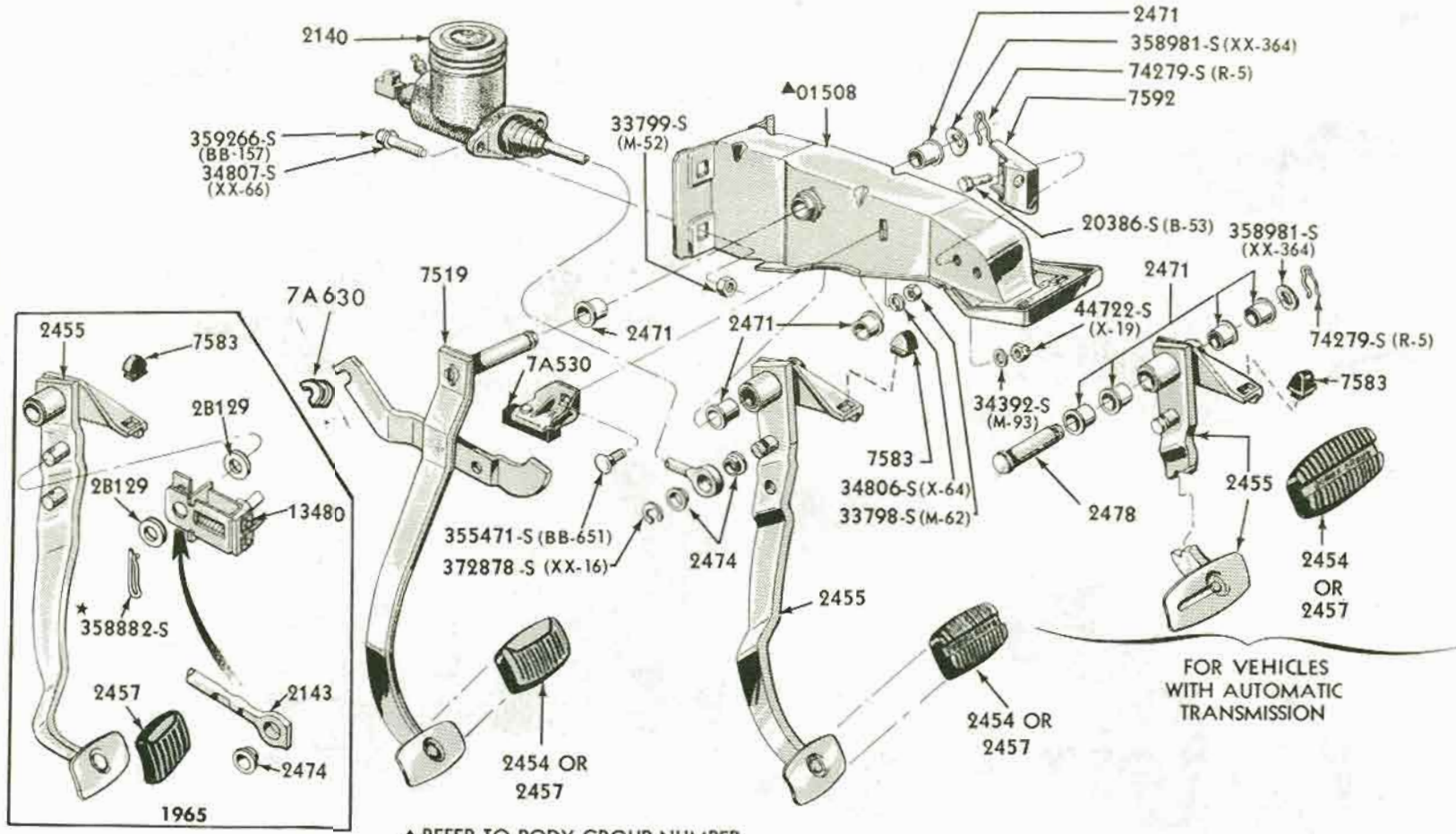

▲ REFER TO BODY GROUP NUMBER
* PART OF 2140 ASSEMBLY

P-3674

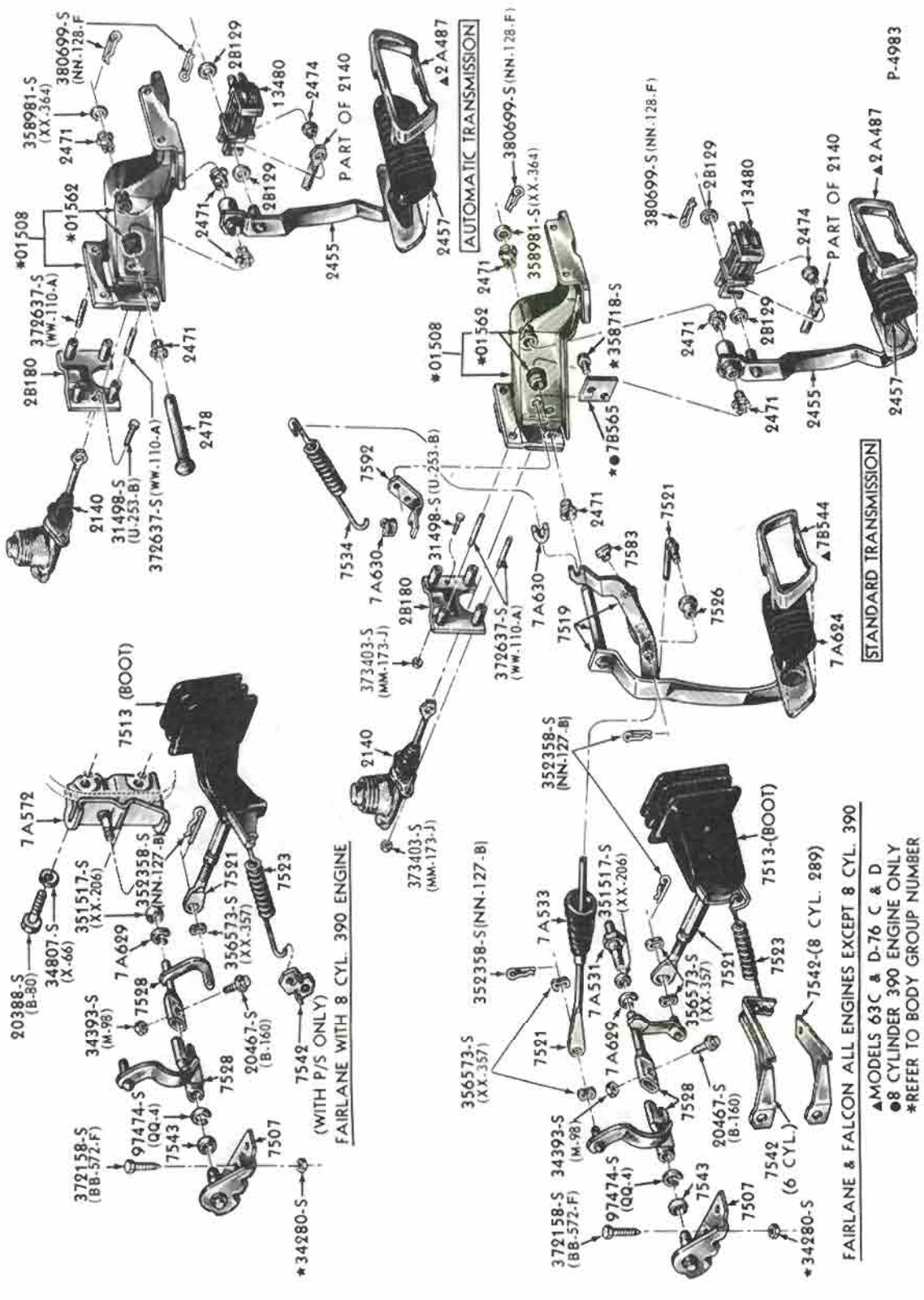

CLUTCH PEDAL and BRAKE PEDAL
1966 FAIRLANE and FALCON

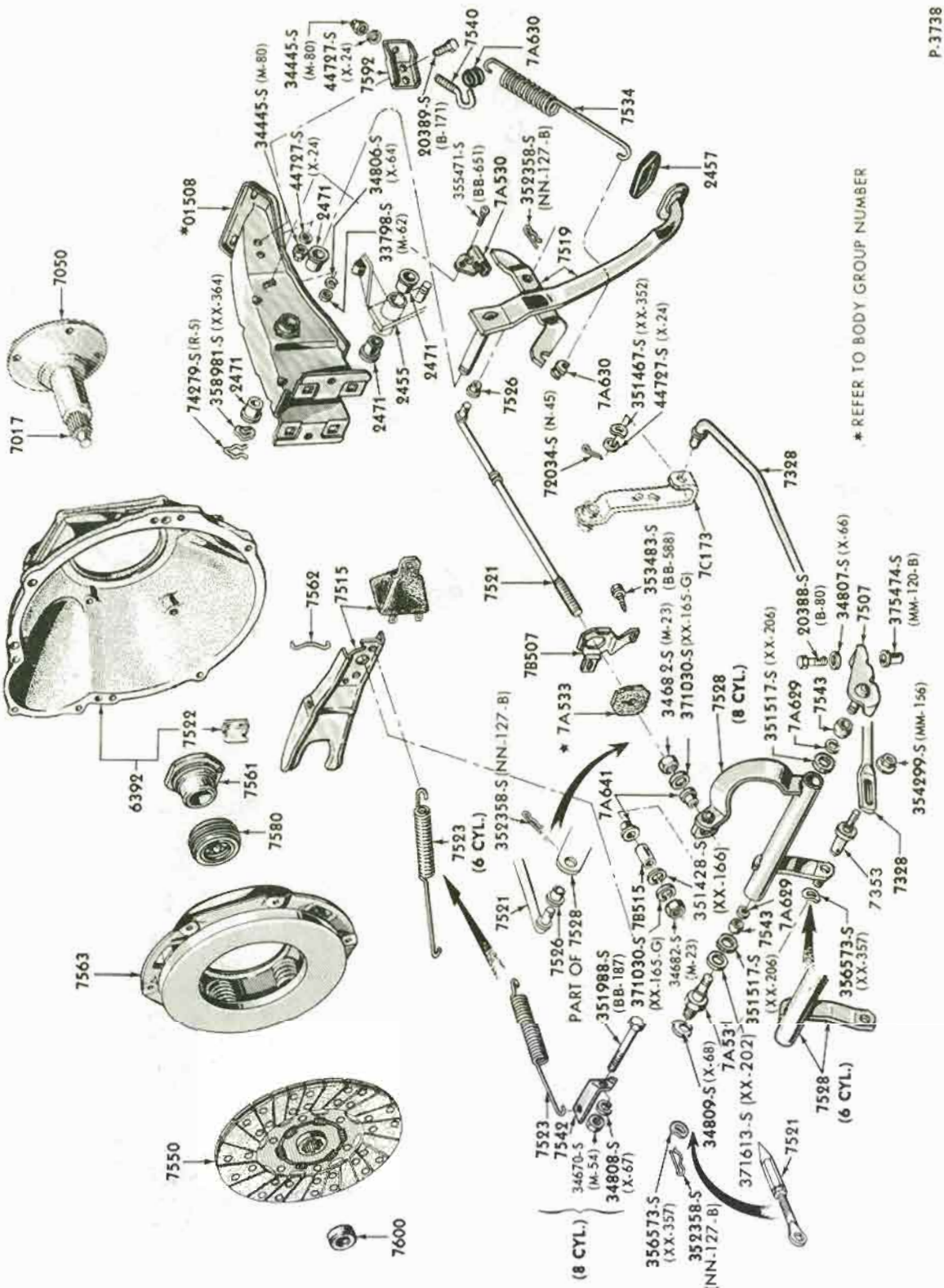

CLUTCH and CLUTCH PEDAL - TYPICAL
1965 FAIRLANE

COPYRIGHT © 1975 — FORD MOTOR COMPANY — DEARBORN, MICHIGAN

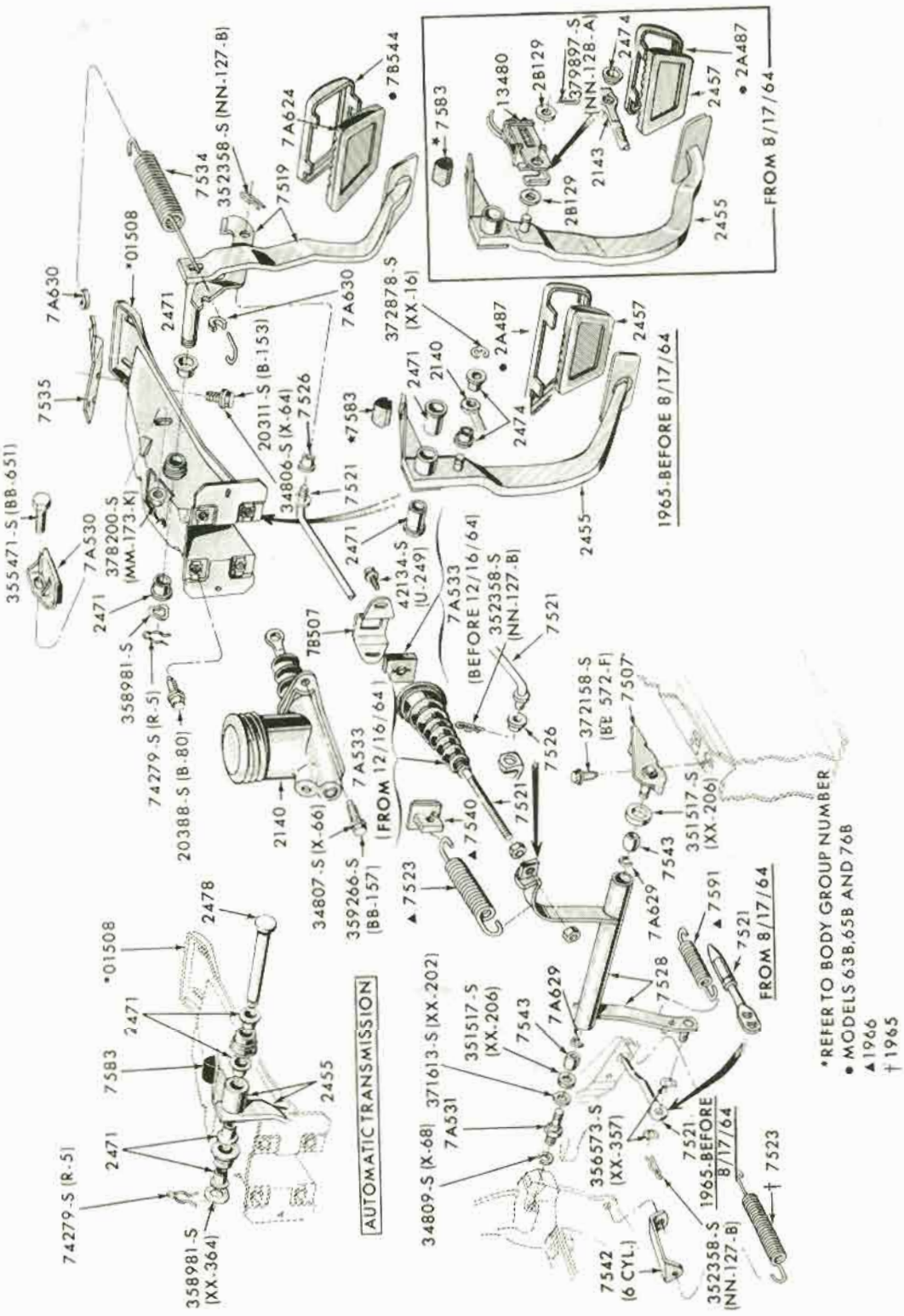

CLUTCH PEDAL and BRAKE PEDAL
1965/66 MUSTANG

COPYRIGHT © 1975 — FORD MOTOR COMPANY — DEARBORN, MICHIGAN

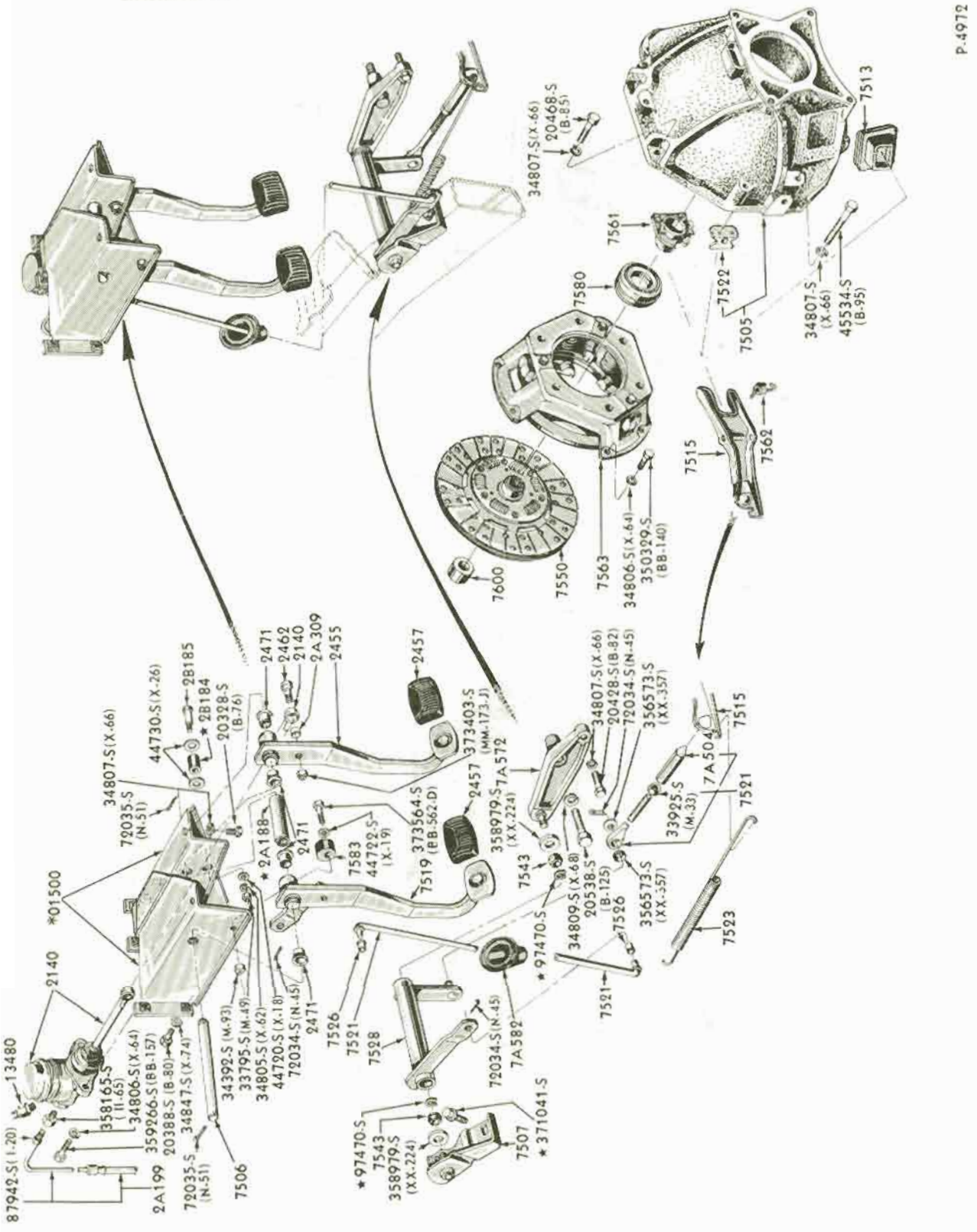

CLUTCH, CLUTCH PEDAL and BRAKE PEDAL
1966/72 BRONCO

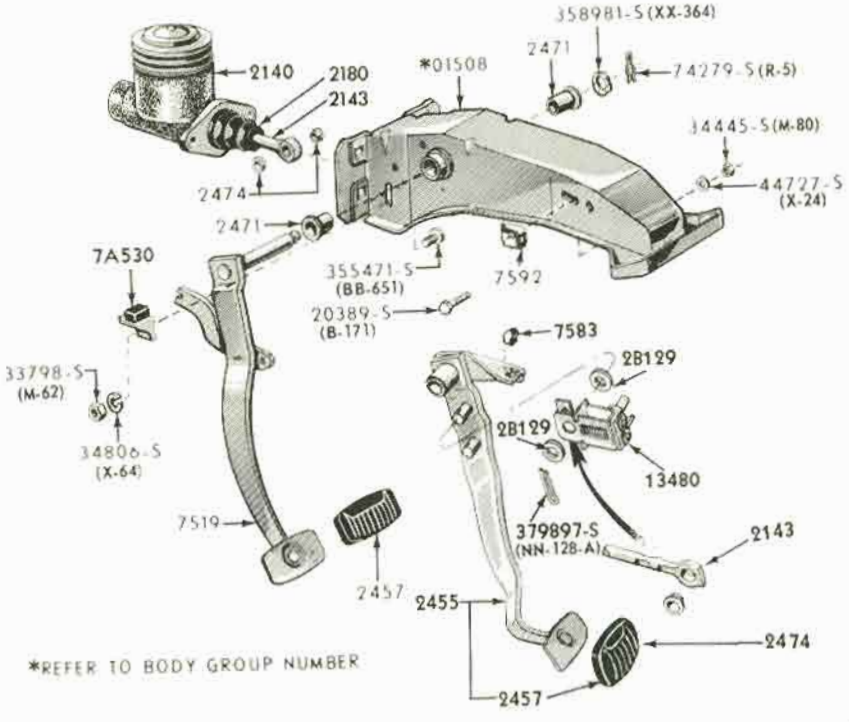

CLUTCH PEDAL and BRAKE PEDAL (MANUAL TRANSMISSION)
1965 FALCON

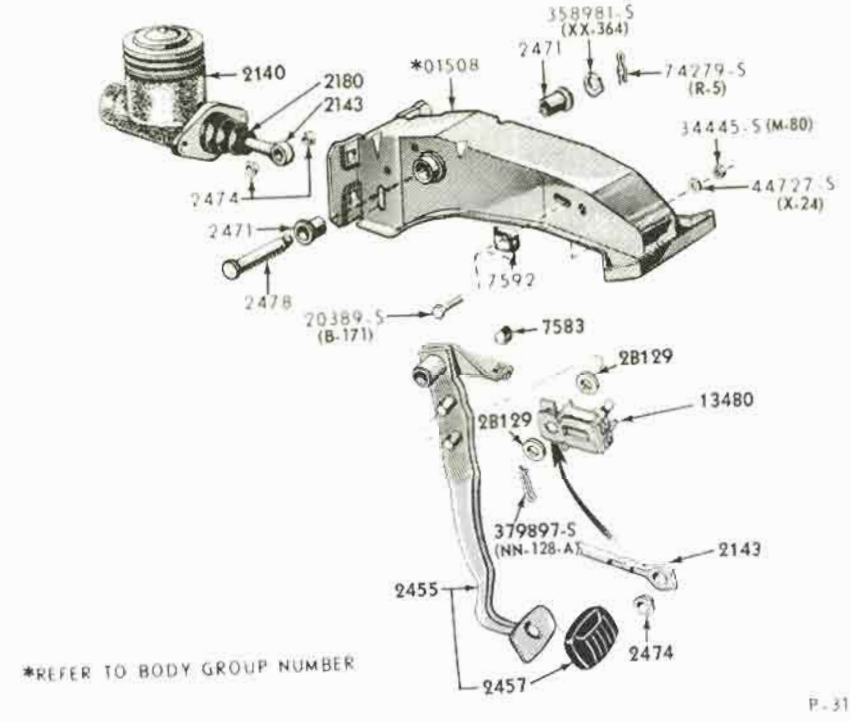

BRAKE PEDAL (AUTOMATIC TRANSMISSION)
1965 FALCON

COPYRIGHT © 1975 — FORD MOTOR COMPANY — DEARBORN, MICHIGAN

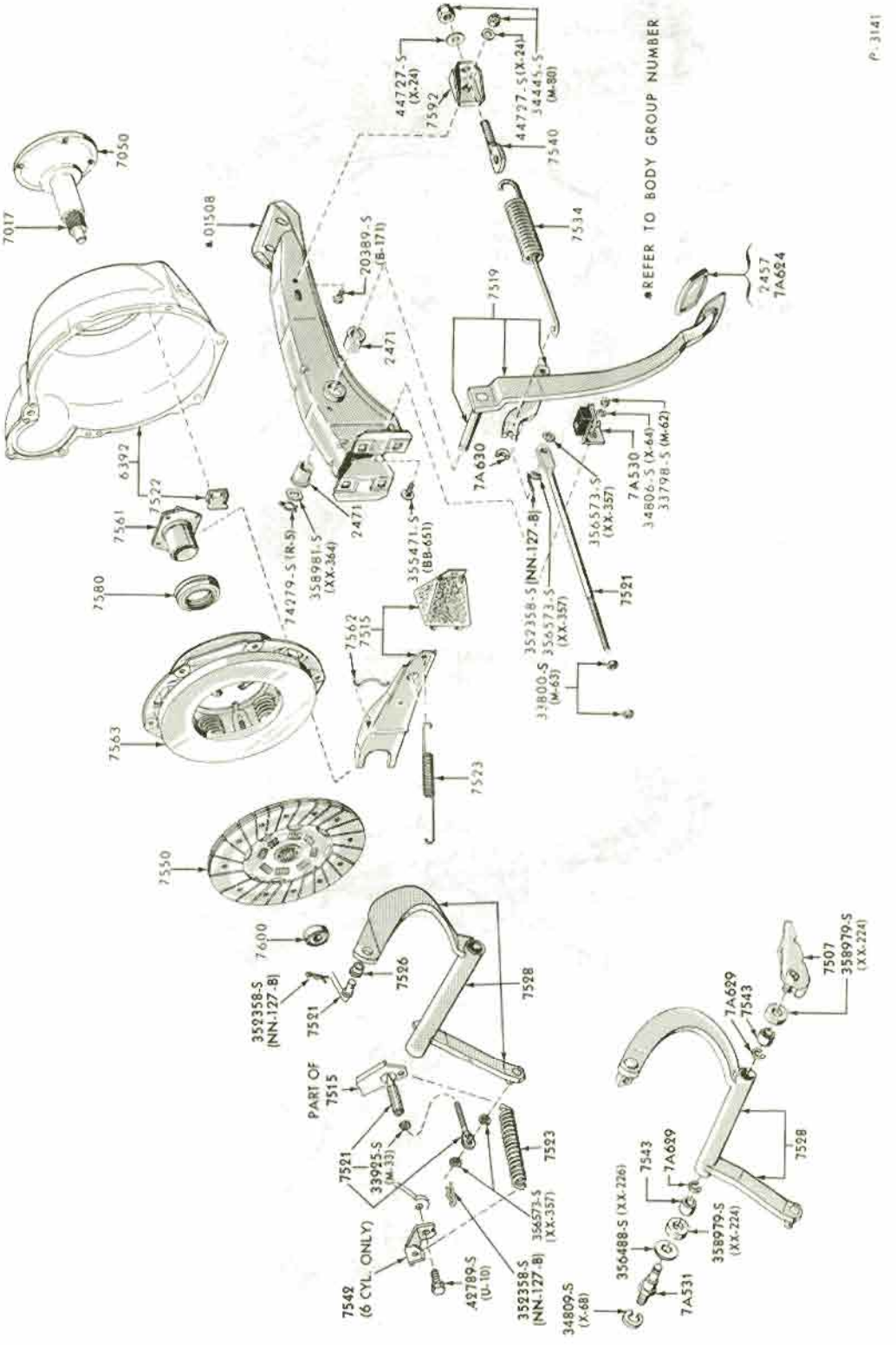

CLUTCH and CLUTCH PEDAL - TYPICAL
1965 FALCON

CLUTCH PEDAL and BRAKE PEDAL
1967 FAIRLANE and FALCON

COPYRIGHT © 1975 — FORD MOTOR COMPANY — DEARBORN, MICHIGAN

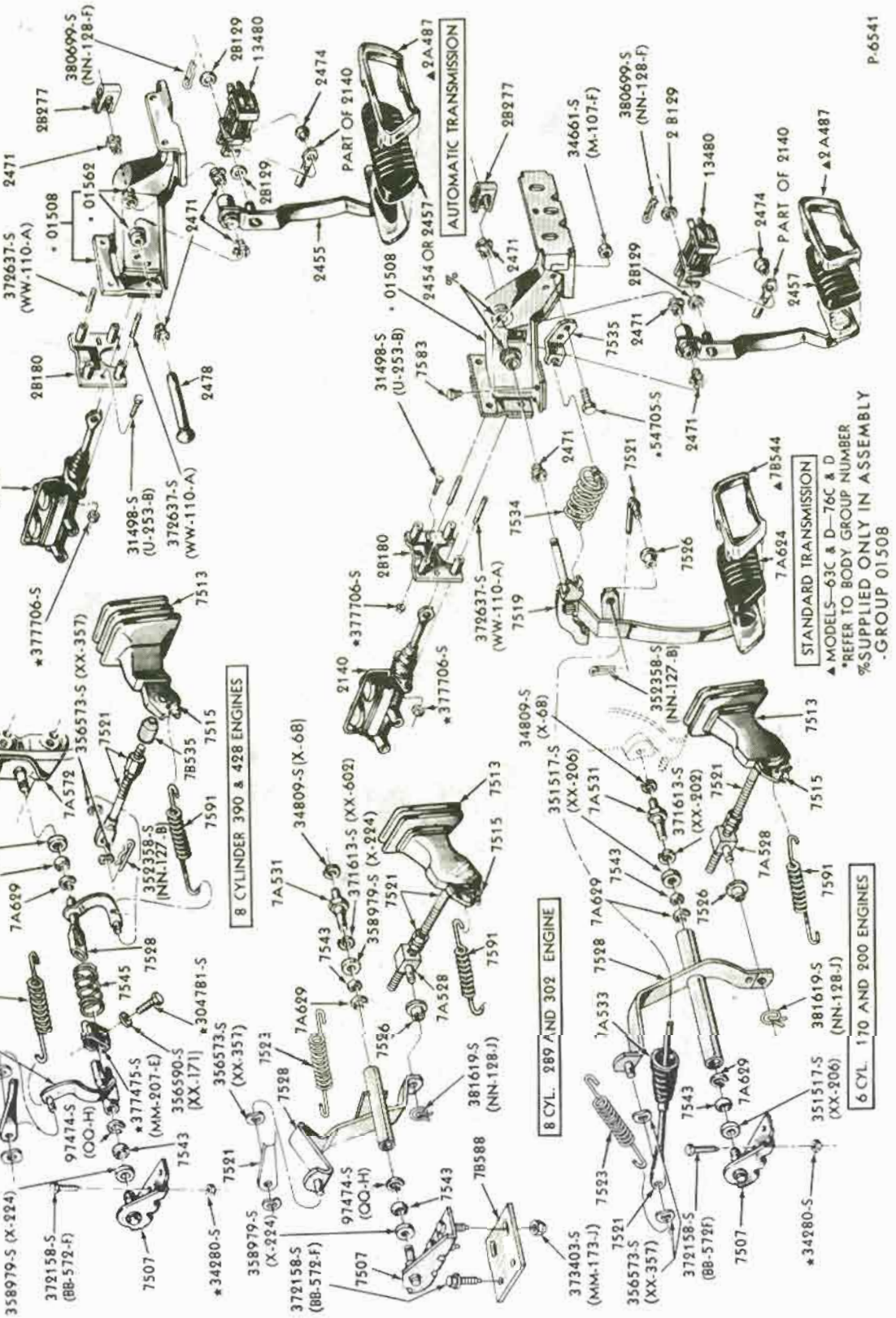

CLUTCH PEDAL and BRAKE PEDAL
1968/69 FAIRLANE/TORINO, 1968/70 FALCON

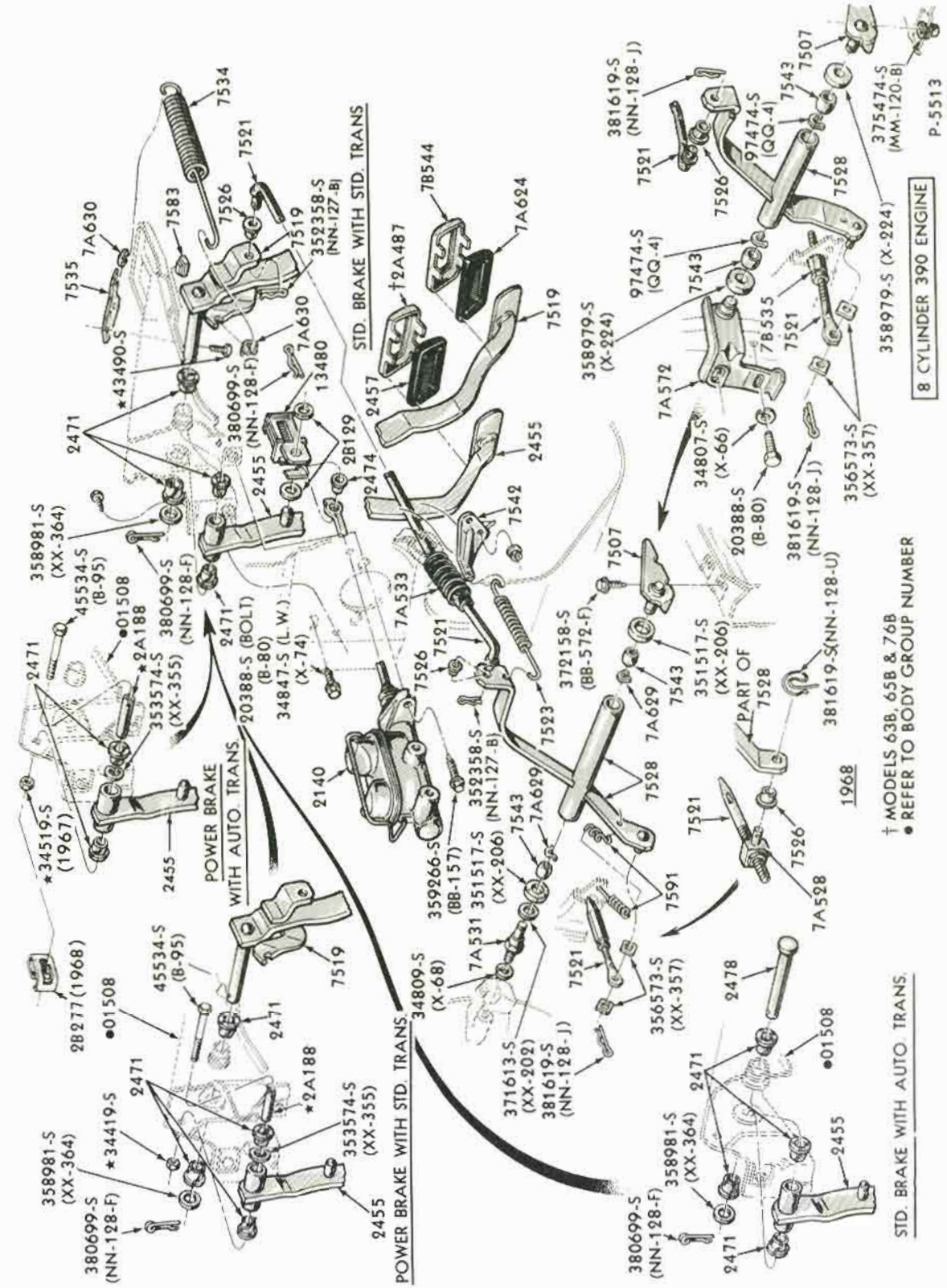

CLUTCH PEDAL and BRAKE PEDAL
1967/68 MUSTANG

COPYRIGHT © 1975— FORD MOTOR COMPANY —DEARBORN, MICHIGAN

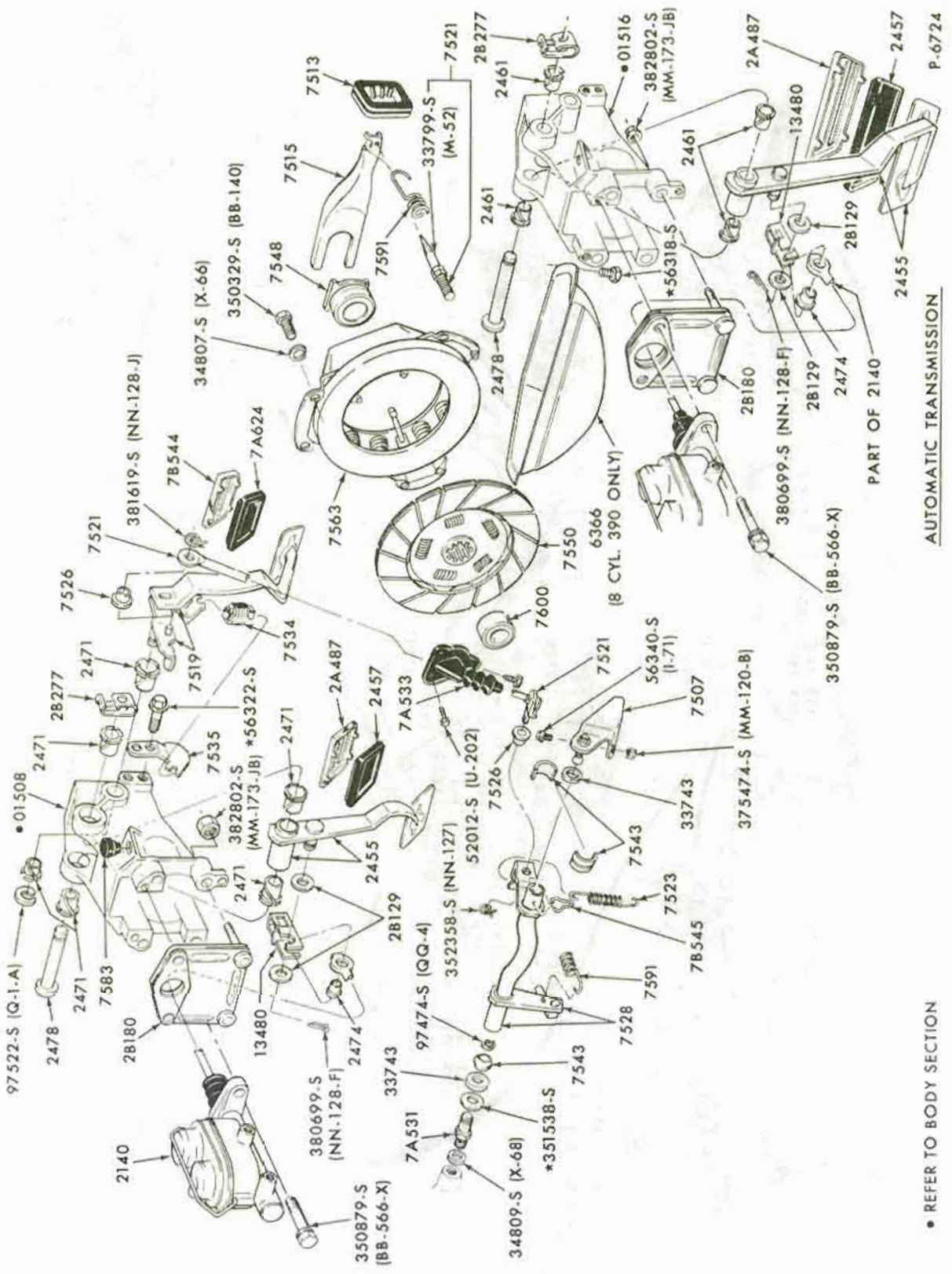

• REFER TO BODY SECTION

CLUTCH, CLUTCH PEDAL and BRAKE PEDAL
1969/71 FORD

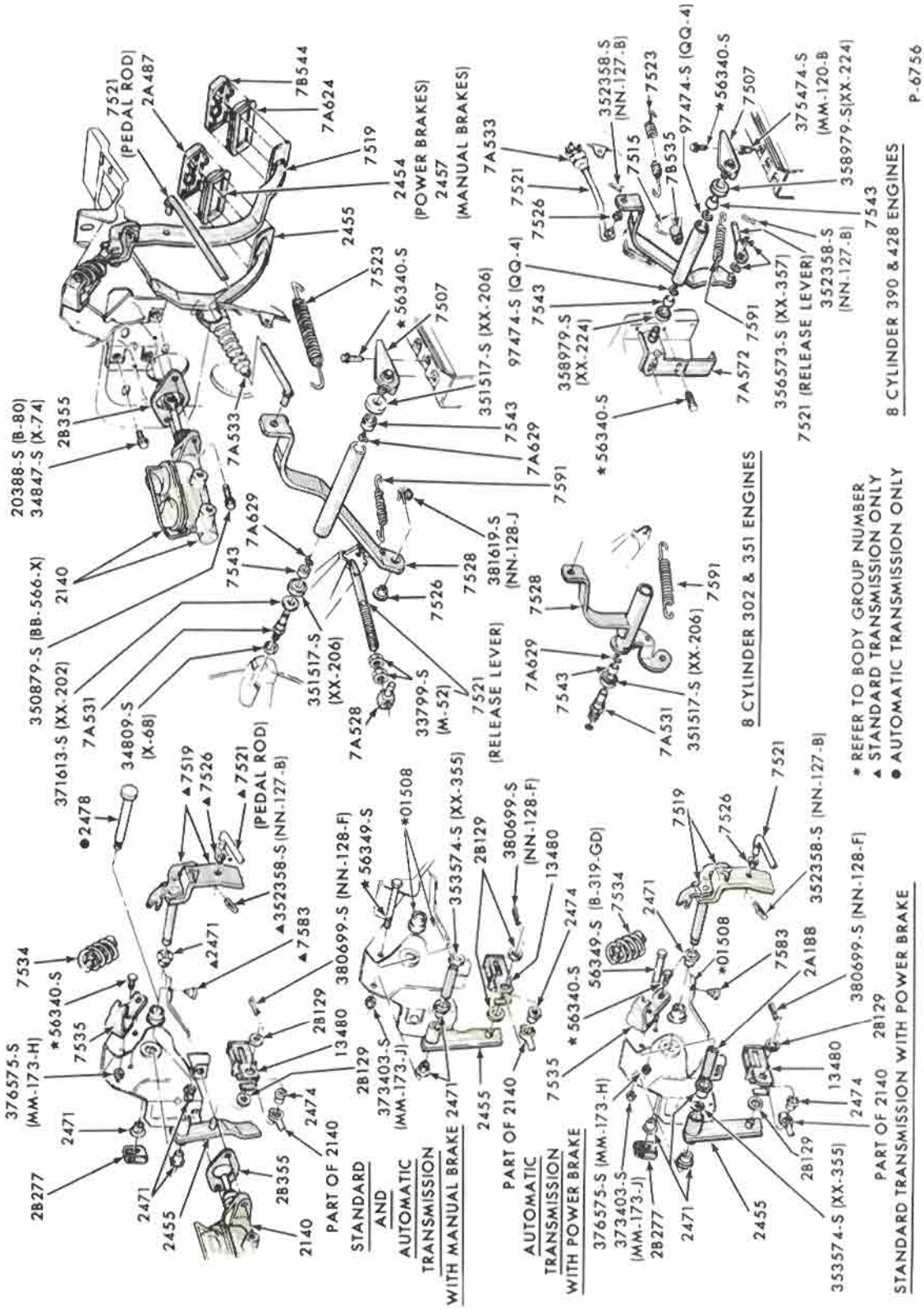

CLUTCH PEDAL and BRAKE PEDAL
1969/70 MUSTANG

COPYRIGHT © 1975 — FORD MOTOR COMPANY — DEARBORN, MICHIGAN

NO. 10

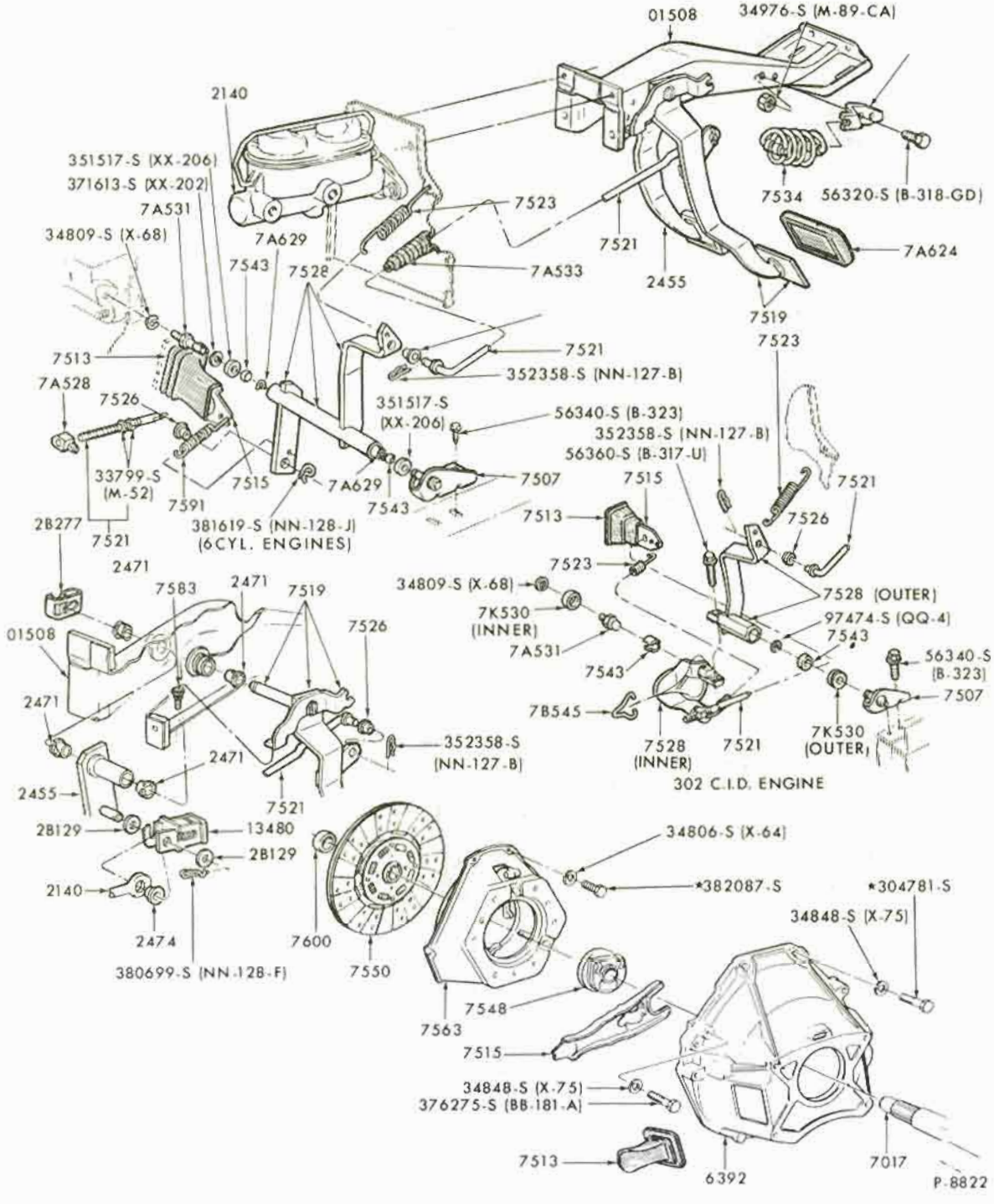

CLUTCH, CLUTCH PEDAL and BRAKE PEDAL
1970/72 MAVERICK

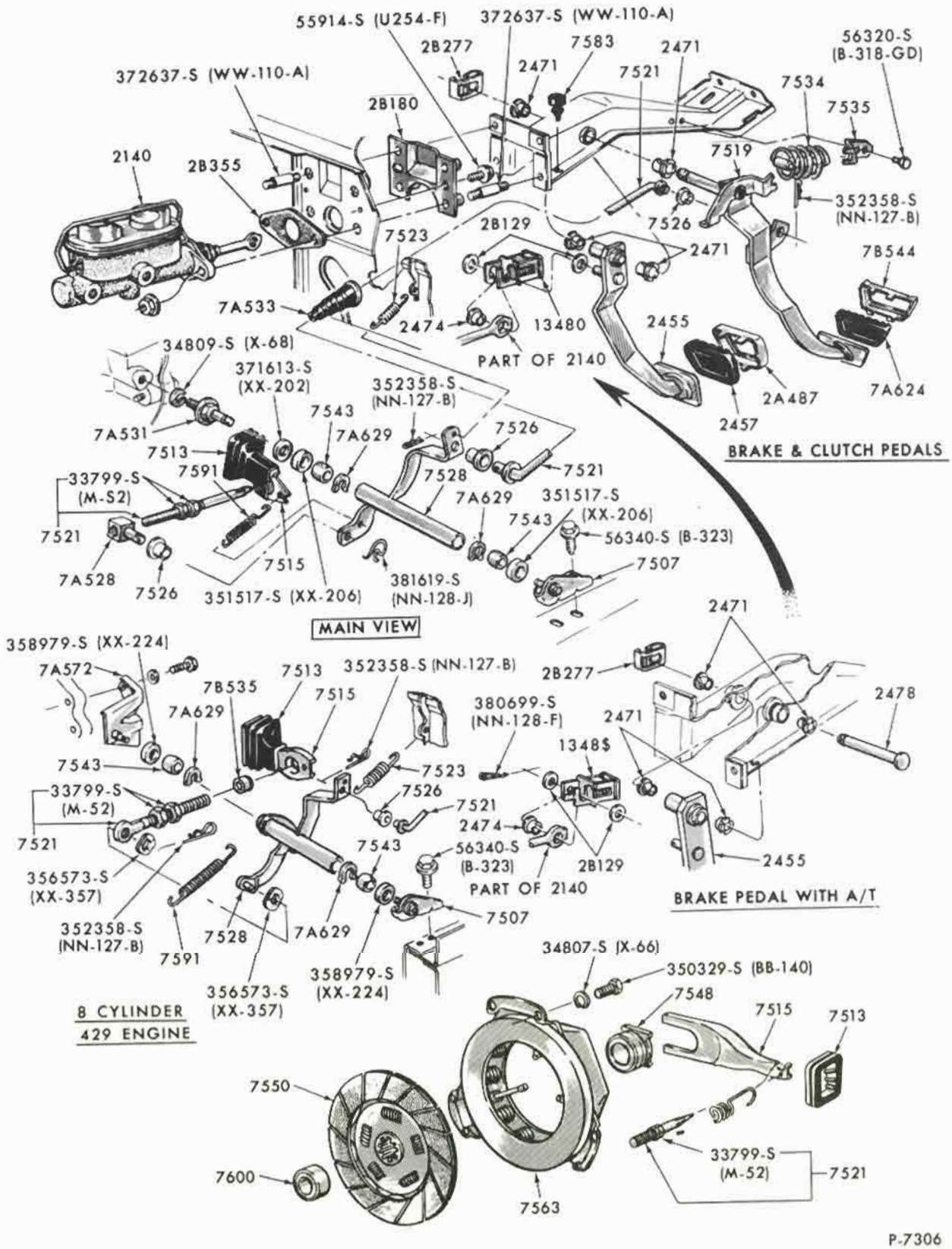

P-7306

CLUTCH, CLUTCH PEDAL and BRAKE PEDAL
1970/71 FAIRLANE/TORINO

COPYRIGHT © 1975 — FORD MOTOR COMPANY — DEARBORN, MICHIGAN

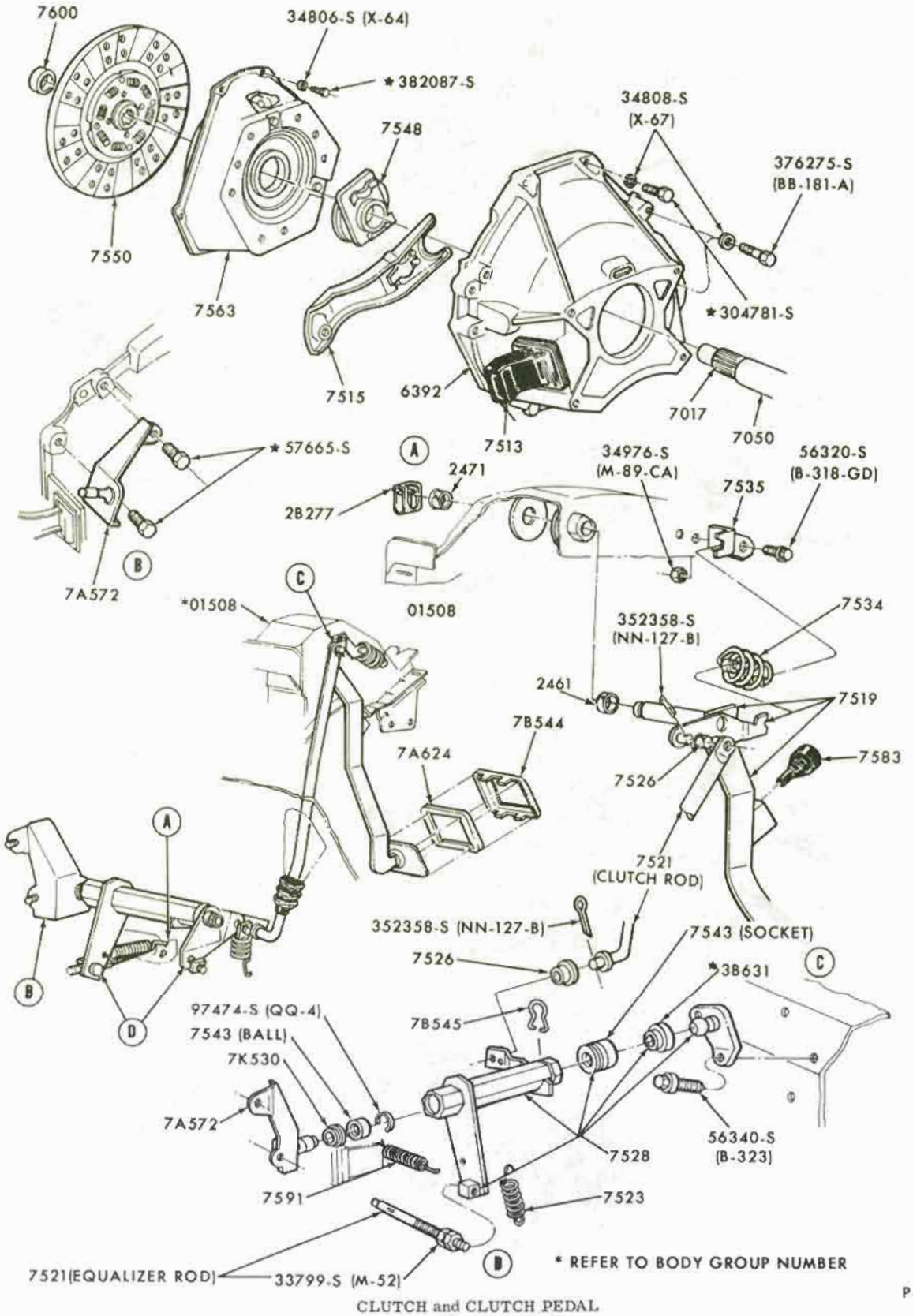

CLUTCH and CLUTCH PEDAL
1971/72 MUSTANG

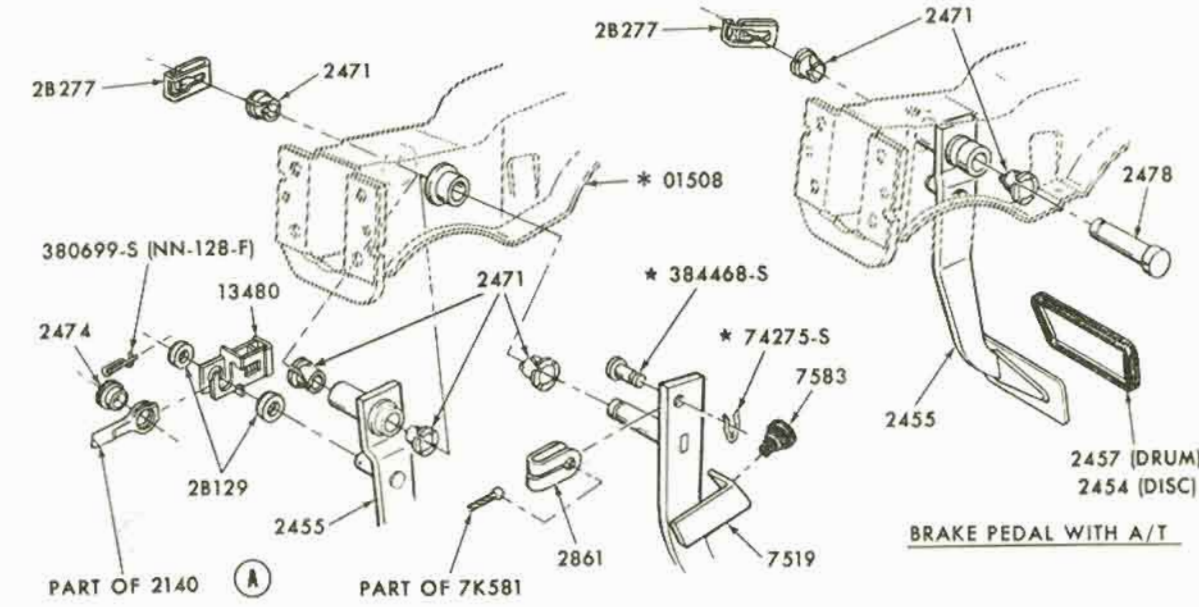

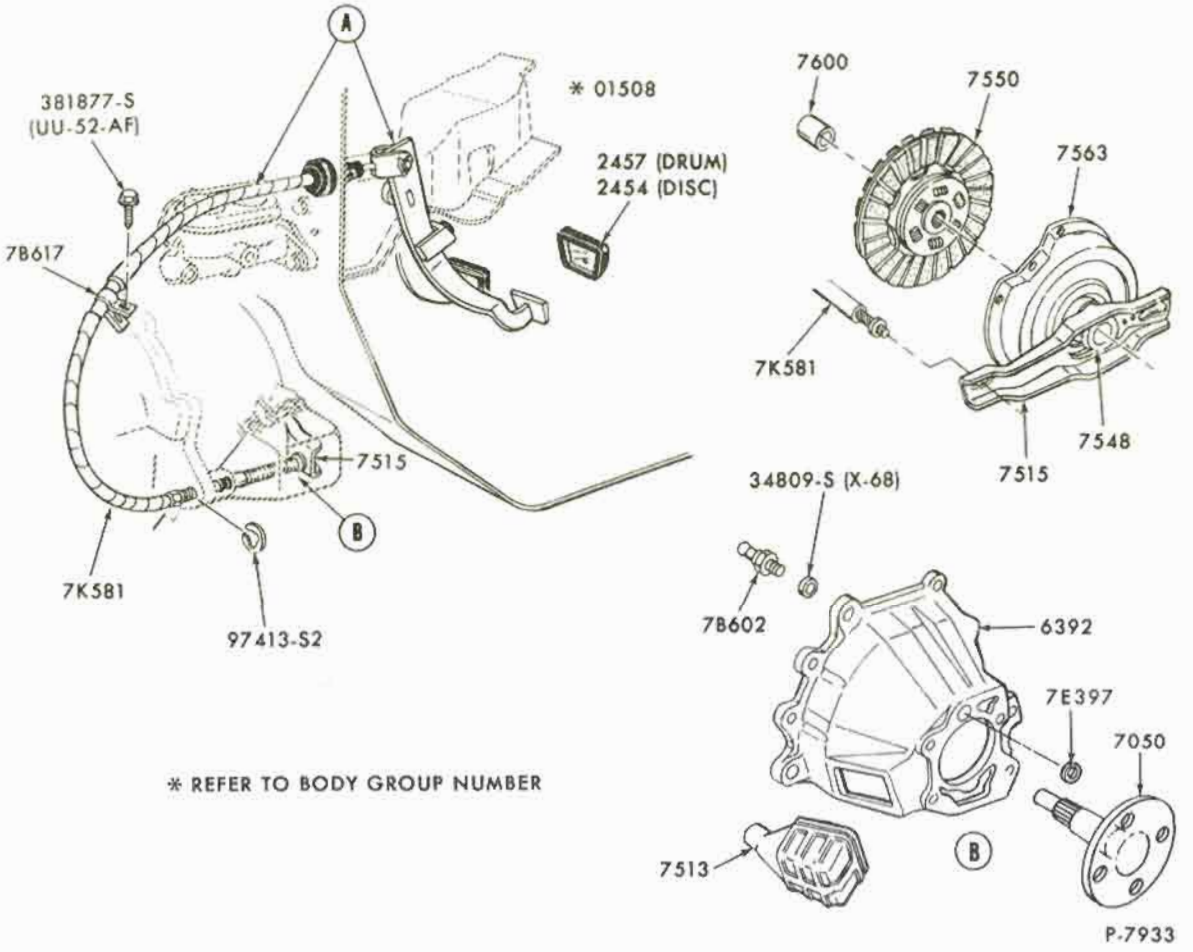

* REFER TO BODY GROUP NUMBER

COPYRIGHT © 1975 — FORD MOTOR COMPANY — DEARBORN, MICHIGAN

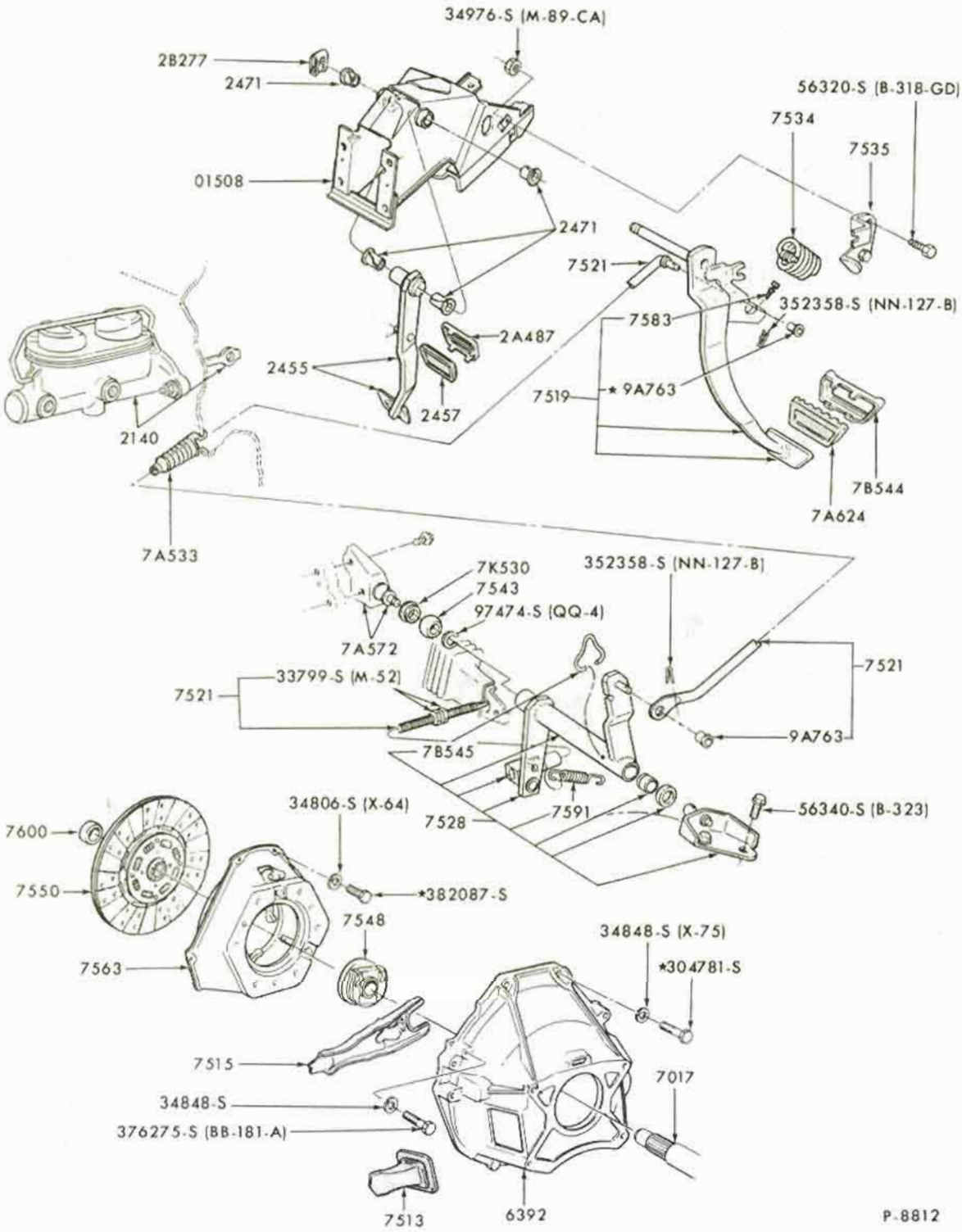

CLUTCH and CLUTCH PEDAL
1972 TORINO

INDEX

INCLUDED IN THIS INDEX ARE THE FOLLOWING MAJOR GROUPS IN THE ORDER SHOWN BELOW:

AUTOMATIC TRANSMISSION ASSEMBLIES

	Illustration Section
C/M Type - FX, MX Models	A70.2
C/M Type - FMX Model	A70.3
C4 Type	A70.4
C6 Type	A70.5
Transmission Oil Cooling System & Vacuum Advance System	A71

SHIFT CONTROL MECHANISMS

Column Mounted	A72
Floor & Console Mounted	A72.1

ILLUSTRATIONS RELATED TO TRANSMISSION FUNCTIONS ARE SHOWN BELOW FOR REFERENCE

Steering Column w/o Shift Mechanism	35
Transmission Kickdown & Acceleration Linkage Mechanism	97
Console Mounted Parts Related to Shift Control Mechanisms	045 (Body)

AUTOMATIC TRANSMISSION ASSEMBLIES

TITLE	YEAR	MODEL	SECTION	PAGE	ILLUS. NO.
C/M TYPE - FX,MX MODELS					
Case, converter assy., extension, pumps and related parts-Typical	65/68	A	A70.2	1	P-1871
Clutches, gears, shaft and related parts-Typical	65/68	A	A70.2	2	P-2554
Main control valve body assy.-(Basic 7A100)-Typical	65/68	A	A70.2	4	P-2583
	65/66	S			
Oil pressure regulator and related parts-(Basic 7A139)-Typical	65/68	A	A70.2	5	P-1725
	65/66	S			
Parking pawl, throttle and manual control linkage-Typical	65/68	A	A70.2	4	P-5206
	65/66	S			
Servo and band-Front-Typical	65/68	A	A70.2	3	P-2561
	65/66	S			
Rear-Typical			A70.2	3	P-6547

COPYRIGHT © 1975 — FORD MOTOR COMPANY — DEARBORN, MICHIGAN

INDEX

TITLE	YEAR	MODEL	SECTION	PAGE	ILLUS. NO.
AUTOMATIC TRANSMISSION ASSEMBLIES - continued					
C/M TYPE - FMX MODEL					
Case, converter assy., extension, pump, rear support and related parts-Typical	68/72	A	A70.3	2	P-6462
	69/72	B, F			
Clutches, gears, shafts, extension and related parts-Typical	68/72	A	A70.3	3	P-6463
	69/72	B, F			
Main control valve body assy. -(Basic 7A100)-Typical	68/72	A	A70.3	1	P-6466
	69/72	B, F			
Oil pressure regulator assy. -(Basic 7A139)-Typical	68/72	A	A70.3	5	P-6470
	69/72	B, F			
Oil pressure tubes installation-Typical	68/72	A	A70.3	1	P-6472
	69/72	B, F			
Parking pawl, throttle and manual control linkage-Typical	68/72	A	A70.3	5	P-6471
	69/72	B, F			
Servo and band-Front-Typical	68/72	A	A70.3	4	P-6464
	69/72	B, F			
Rear-Typical			A70.3	4	P-6465
C4 TYPE					
Case, converter assy., extension, pump and related parts-Typical	65/72	A, B, F, L, P, X	A70.4	1	P-4326
Clutches, gears, shafts, rear support and related parts-Typical	65/72	A, B, F, L, P, X	A70.4	2	P-4327
Main control valve body assy. -(Basic 7A100)-Typical	65/72	A, B, F, L, P, X	A70.4	4	P-4507
Parking pawl, throttle and manual control linkage-Typical	65/72	A, B, F, L, P, X	A70.4	4	P-4330
Servo and band- Front-Typical	65/72	A, B, F, L, P, X	A70.4	3	P-4328
Rear-Typical			A70.4	3	P-4329
C6 TYPE					
Case, converter assy., extension, pump and related parts-Typical	66/72	A, B, F, S	A70.5	1	P-5172
Clutches, gears, shafts and related parts-Typical	66/72	A, B, F, S	A70.5	2	P-5173
Main control valve body assy. (basic 7A100)-Typical	66/72	A, B, F, S	A70.5	4	P-5176
Parking pawl, throttle and manual control linkage-Typical	66/72	A, B, F, S	A70.5	3	P-5191
Servo and band - Typical	66/72	A, B, F, S	A70.5	3	P-5174
TRANSMISSION VACUUM THROTTLE & OIL COOLING SYSTEMS					
Vacuum throttle valve, lines and fittings - Typical	65/72	A, B, F, S, X	A71	1	P-3627
Transmission miscellaneous bushing			A71	2	P-4862
Oil cooling system - Typical	65/68	A	A71	3	P-4621
Oil cooling system	69/72	A	A71	4	P-7042
Oil cooling system - Typical	65	B, F, X	A71	5	P-4148
Oil cooling system - Typical	66/68	B, F, X	A71	6	P-5381
Oil cooling system	69/72	B, F, X	A71	7	P-7041
Oil cooling system	70/72	P	A71	8	P-6937
Oil cooling system - Typical	65/67	S	A71	8	P-4145
Oil cooling system	68/72	S	A71	9	P-7044
Oil cooling system	71/72	L	A71	10	P-7944

INDEX

TITLE	YEAR	MODEL	SECTION	PAGE	ILLUS. NO.
STEERING COLUMN & SHIFT CONTROL SELECTOR MECHANISMS					
Fixed steering column and shift control selector mechanism - Typical	65/66	A	A72	1	P-4930
Moveable steering column and shift control selector mechanism - Typical	65/66	A	A72	2	P-4931
Steering column and shift control selector mechanism	67	A	A72	8	P-5497
Fixed wheel steering column and shift control selector mechanism	68	A	A72	10	P-6017
Tilt wheel steering column and shift control selector mechanism	68	A	A72	11	P-5986
Fixed wheel steering column and shift control selector mechanism	69	A	A72	12	P-6783
Tilt wheel steering column and shift control selector mechanism	69	A	A72	13	P-6784
Fixed wheel steering column and shift control selector mechanism	70/72	A	A72	18	P-7220
Tilt wheel steering column and shift control selector mechanism	70/72	A	A72	19	P-7241
Steering column and shift control selector mechanism - Typical	65	B	A72	3	P-3713
Steering column and shift control selector mechanism - Typical	66/67	B	A72	4	P-5001
Steering column and shift control selector mechanism	68/69	B	A72	14	P-6020
Steering column and shift control selector mechanism	70/71	B (Fairlane/Torino)	A72	20	P-7249
Steering column and shift control selector mechanism	72	B	A72	26	P-8623
Steering column - floor shift	65/66	F	35	4	P-6366
Steering column - floor shift - fixed wheel	67	F	35	6	P-5710
- tilt wheel	67	F	35	7	P-5622
Steering column - floor shift - fixed wheel	68	F	35	12	P-5770
- tilt wheel	68	F	35	11	P-5769
Steering column - floor shift - fixed wheel	69	F	35	15	P-6781
- tilt wheel	69	F	35	16	P-6782
Steering column - floor shift - fixed wheel	70/72	F	35	20	P-7245
- tilt wheel	70/72	F	35	21	P-7246
Steering column and shift control selector mechanism - non locking	70	P	A72	17	P-6967
Steering column and shift control selector mechanism - locking	70/72	P	A72	23	P-7747
Fixed steering column and shift control selector mechanism - Typical	65/66	S	A72	5	P-3284
Moveable steering column and shift control selector mechanism- Typical	65/66	S	A72	6	P-4224
Tilt wheel steering column and shift control selector mechanism	67	S	A72	9	P-5493
Fixed wheel steering column and shift control selector mechanism	68/69	S	A72	15	P-6021
Tilt wheel steering column and shift control selector mechanism	68/69	S	A72	16	P-6022
Fixed wheel steering column and shift control selector mechanism	70/71	S	A72	21	P-7219
Fixed wheel steering column and control selector mechanism	72	S	A72	25	P-8622
Tilt wheel steering column and shift control selector mechanism	70/71	S	A72	22	P-7218
Tilt wheel steering column and shift control selector mechanism	72	S	A72	24	P-8621
Steering column and shift control selector mechanism - Typical	65	X	A72	7	P-4601
Steering column and shift control selector mechanism - Typical	66/67	X	A72	4	P-5001
Steering column and shift control selector mechanism	68/69	X	A72	14	P-6020
Steering column and shift control selector mechanism-Typical	70	X-Before 1/2/70	A72	14	P-6020
For Falcon units built from 1/2/70 Refer to B (Fairlane/Torino)					

COPYRIGHT © 1975 — FORD MOTOR COMPANY — DEARBORN, MICHIGAN

INDEX

TITLE	YEAR	MODEL	SECTION	PAGE	ILLUS. NO.
SHIFT CONTROL SELECTOR MECHANISM - CONSOLE MOUNTED					
Shift control selector mechanism	65/66	A	A72.1	1	P-4777
	67	A	A72.1	3	P-5494
	68/71	A	A72.1	6	P-6196
	65	B	A72.1	2	P-3896
	66/71	B, X	A72.1	3	P-5002
	72	B	A72.1	7	P-6802
	65/66	F	A72.1	4	P-4501
	67/68	F	A72.1	5	P-5771
	69/72	F	A72.1	7	P-6802
	71/72	L	A72.1	8	P-7935
	71/72	P	A72.1	7	P-6802

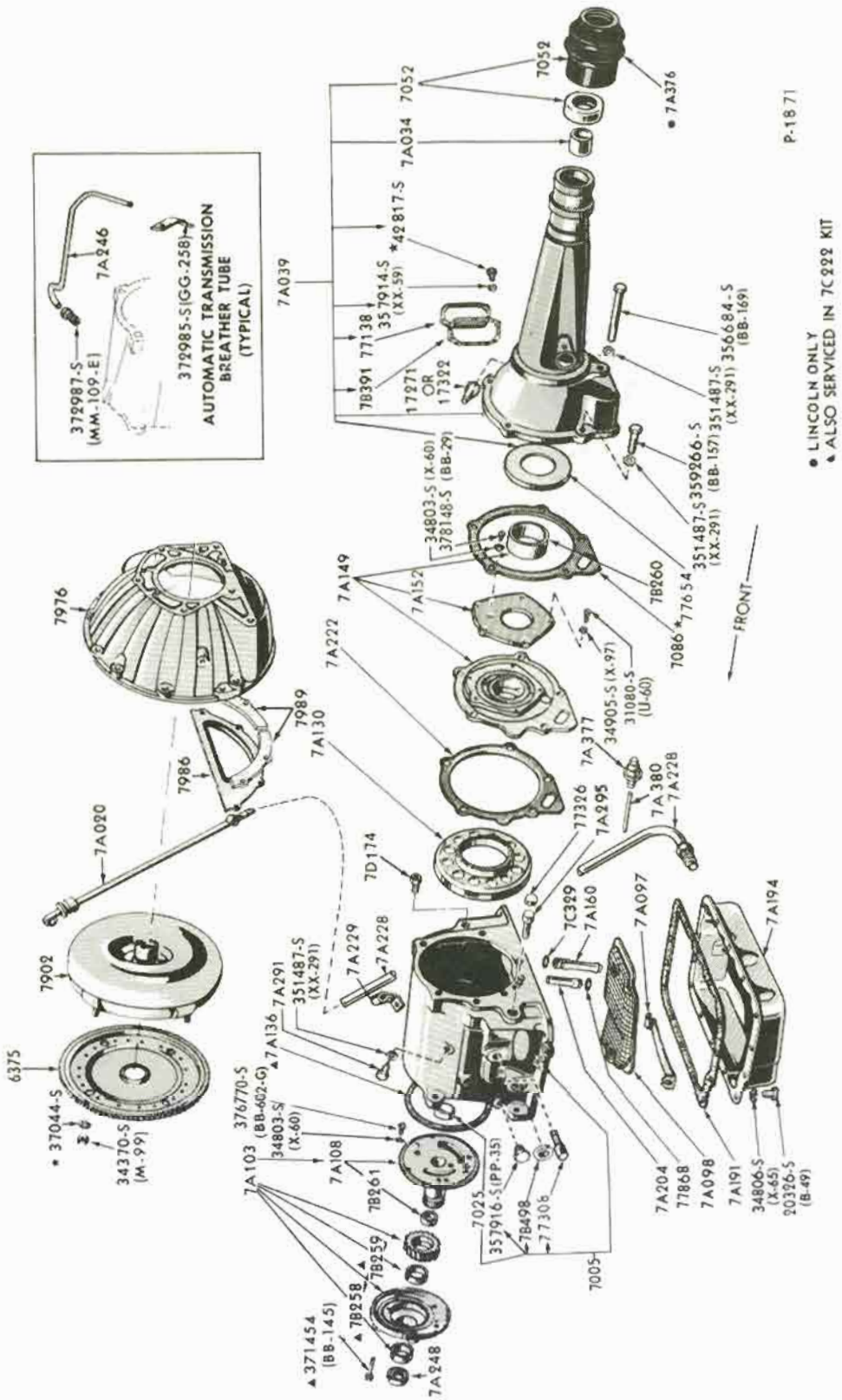

CASE, CONVERTER ASSY., EXTENSION, PUMPS & RELATED PARTS-TYPICAL

May, 1975 COPYRIGHT © 1975 — FORD MOTOR COMPANY — DEARBORN, MICHIGAN

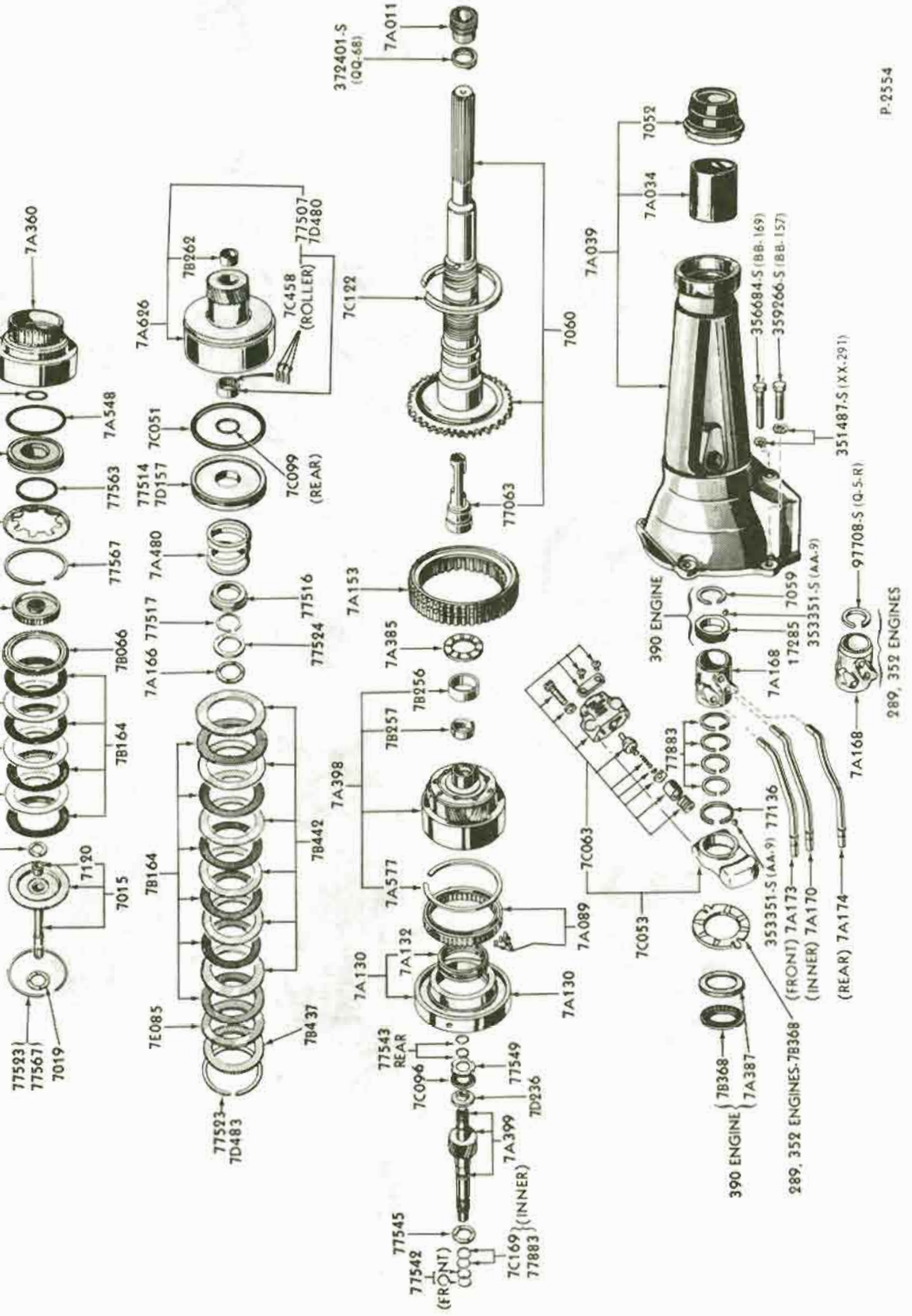

CLUTCHES, GEARS, SHAFTS & RELATED PARTS-TYPICAL
1965/68 FORD & THUNDERBIRD

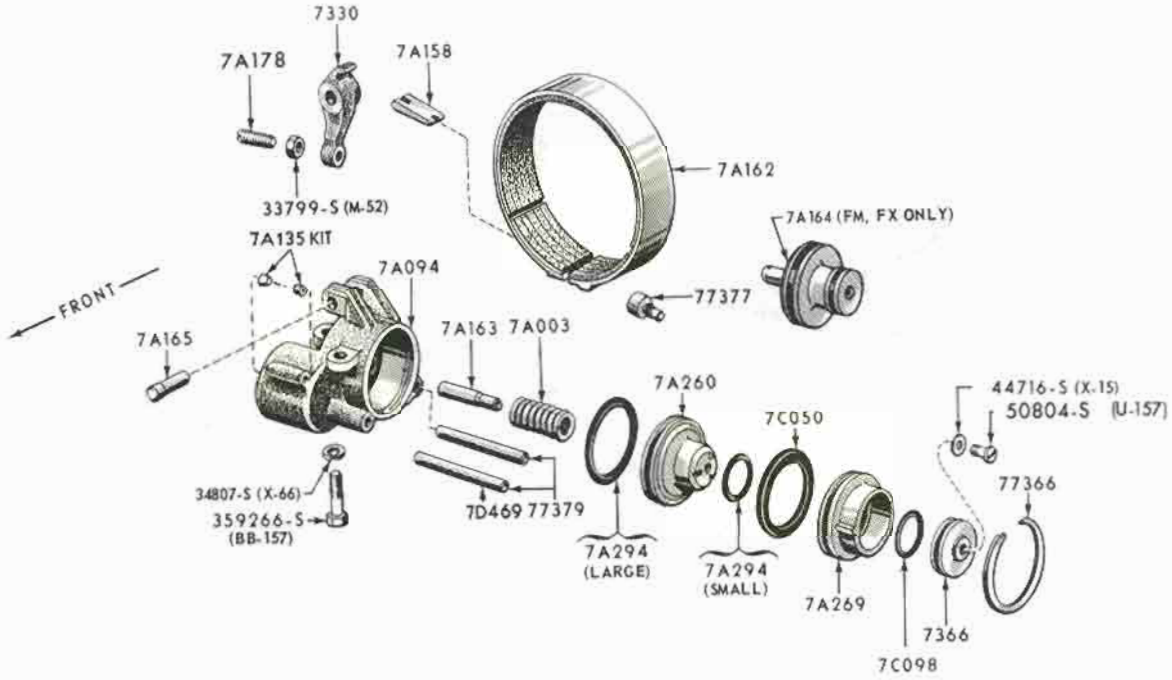

P-2561

FRONT SERVO & BAND-TYPICAL
1965/68 FORD, 1965/66 THUNDERBIRD

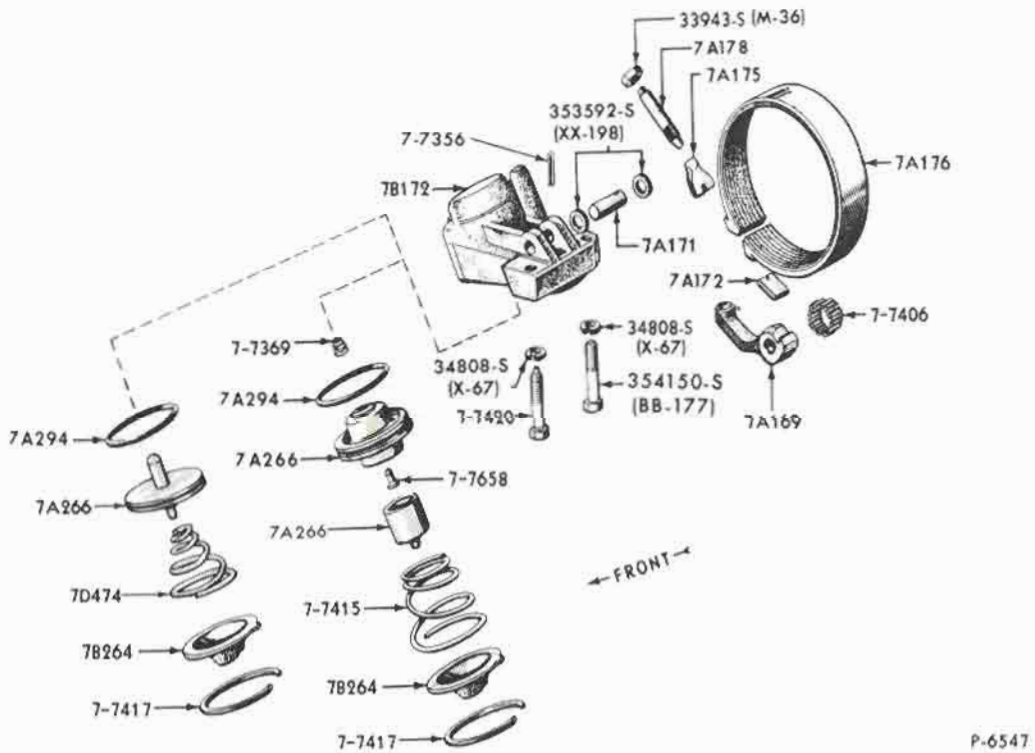

P-6547

REAR SERVO & BAND-TYPICAL
1965/68 FORD, 1965/66 THUNDERBIRD

COPYRIGHT © 1975 — FORD MOTOR COMPANY — DEARBORN, MICHIGAN

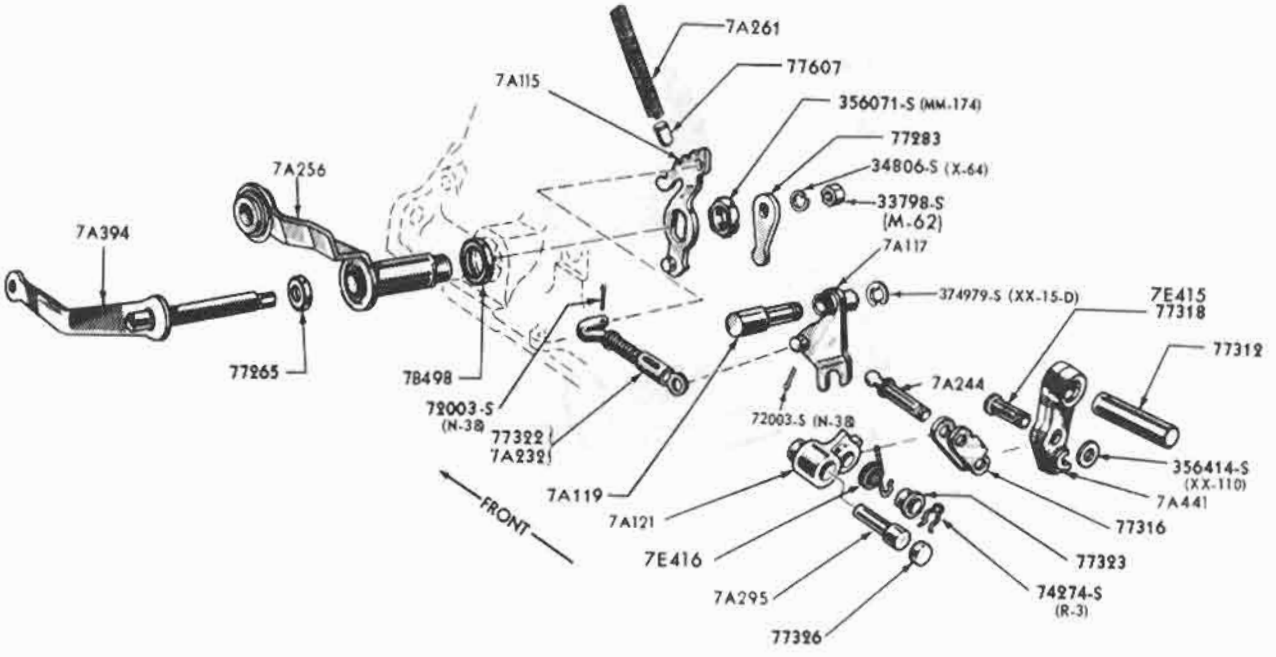

P5206

PARKING PAWL, THROTTLE & MANUAL CONTROL LINKAGE-TYPICAL
1965/68 FORD, 1965/66 THUNDERBIRD

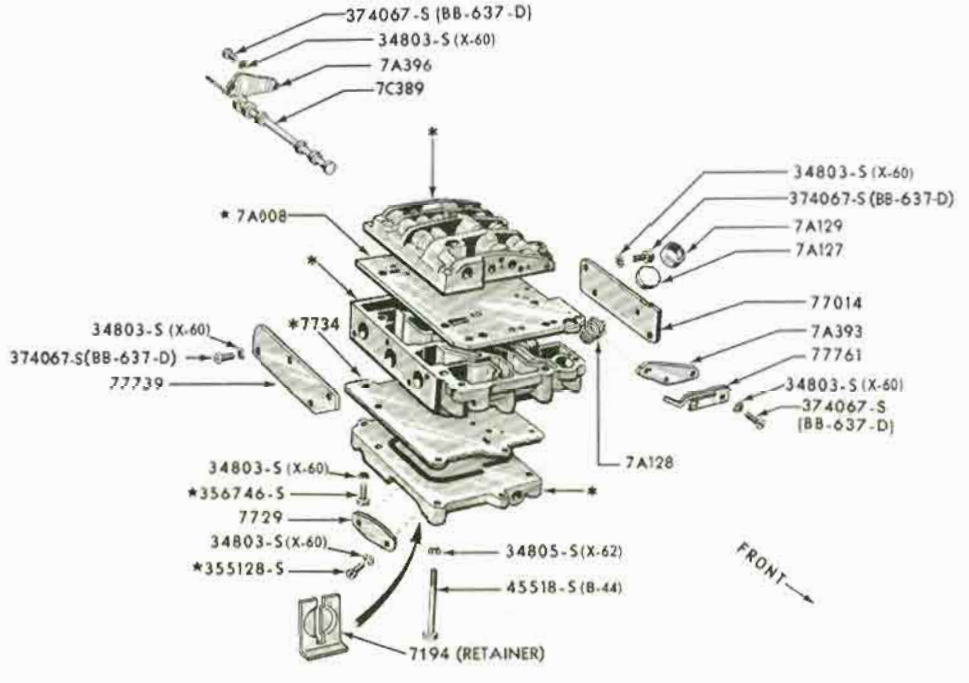

P-2583

* SUPPLIED IN 7A100 CONTROL VALVE ASS'Y.

MAIN CONTROL VALVE BODY ASSY.-(BASIC 7A100)-TYPICAL
1965/68 FORD, 1965/66 THUNDERBIRD

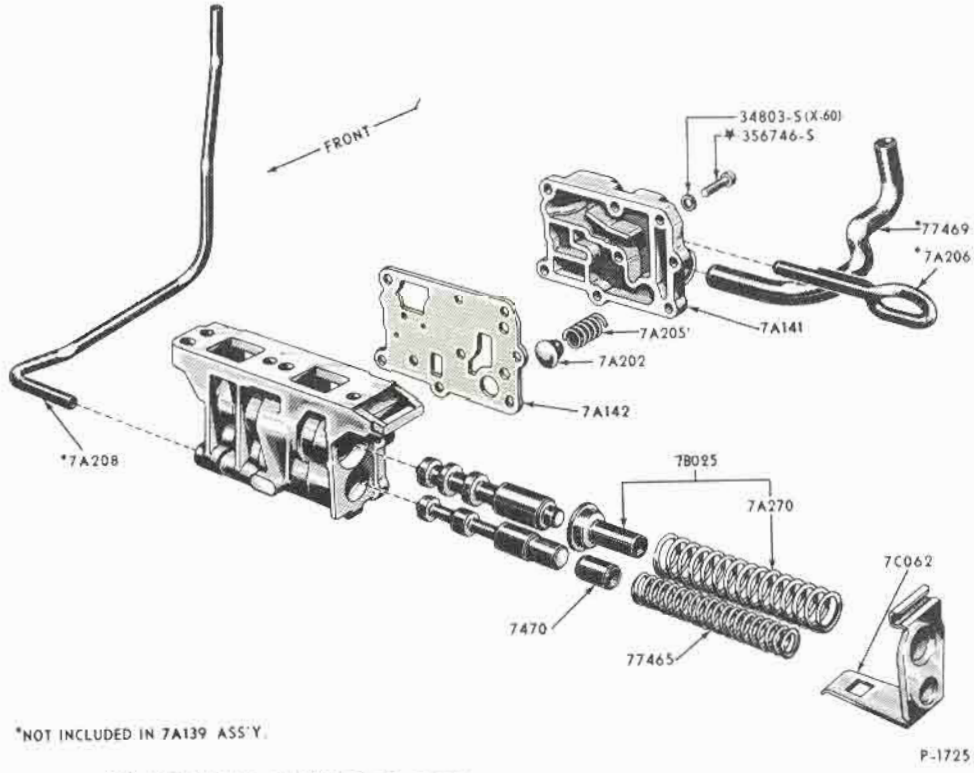

OIL PRESSURE REGULATOR & RELATED PARTS-TYPICAL (BASIC 7A139)
1965/68 FORD, 1965/66 THUNDERBIRD

COPYRIGHT © 1975 — FORD MOTOR COMPANY — DEARBORN, MICHIGAN

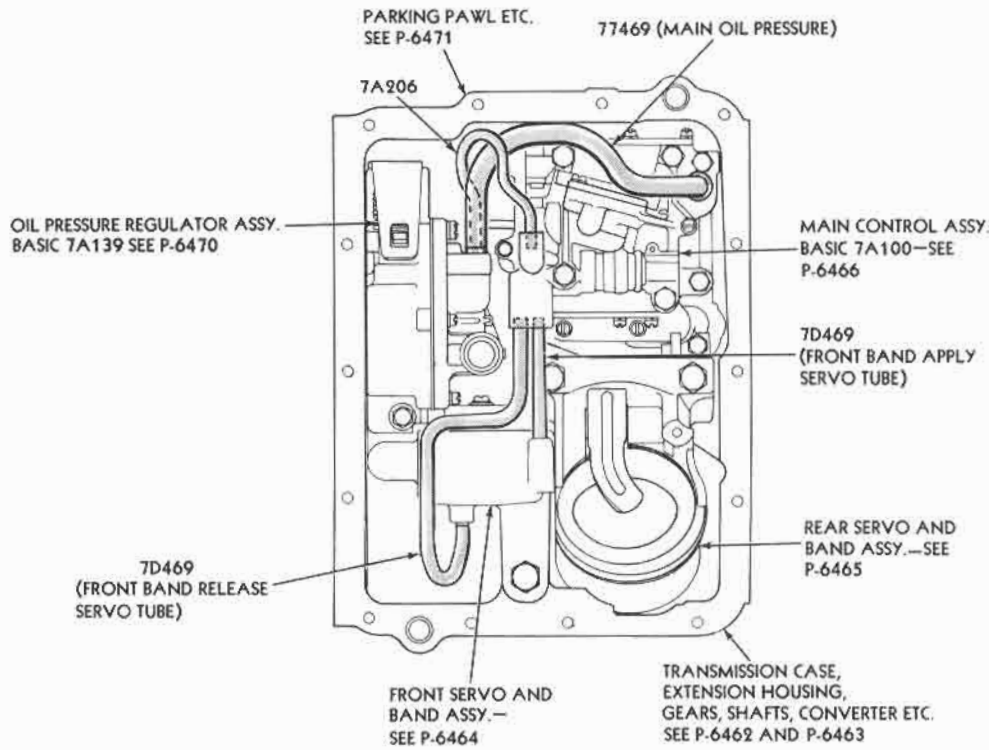

OIL PRESSURE TUBES INSTALLATION-TYPICAL
1968/72 FORD, 1969/72 FAIRLANE/TORINO & MUSTANG

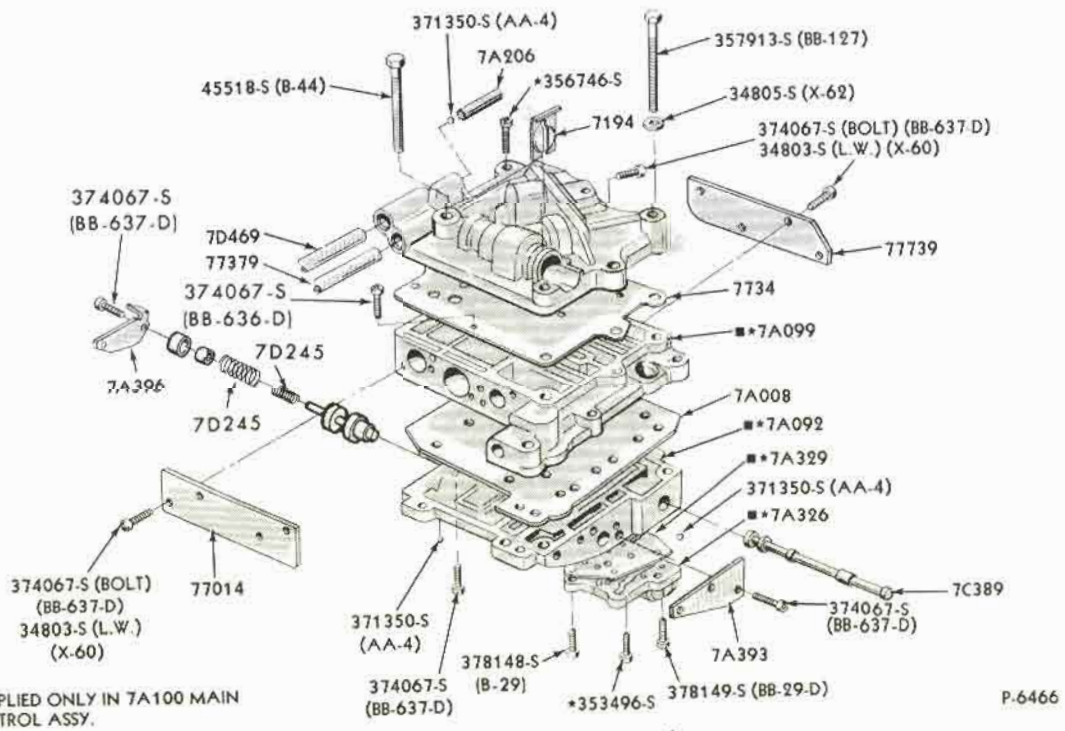

MAIN CONTROL VALVE BODY ASSY.-(BASIC 7A100)-TYPICAL
1968/72 FORD, 1969/72 FAIRLANE/TORINO & MUSTANG

COPYRIGHT © 1975 — FORD MOTOR COMPANY — DEARBORN, MICHIGAN

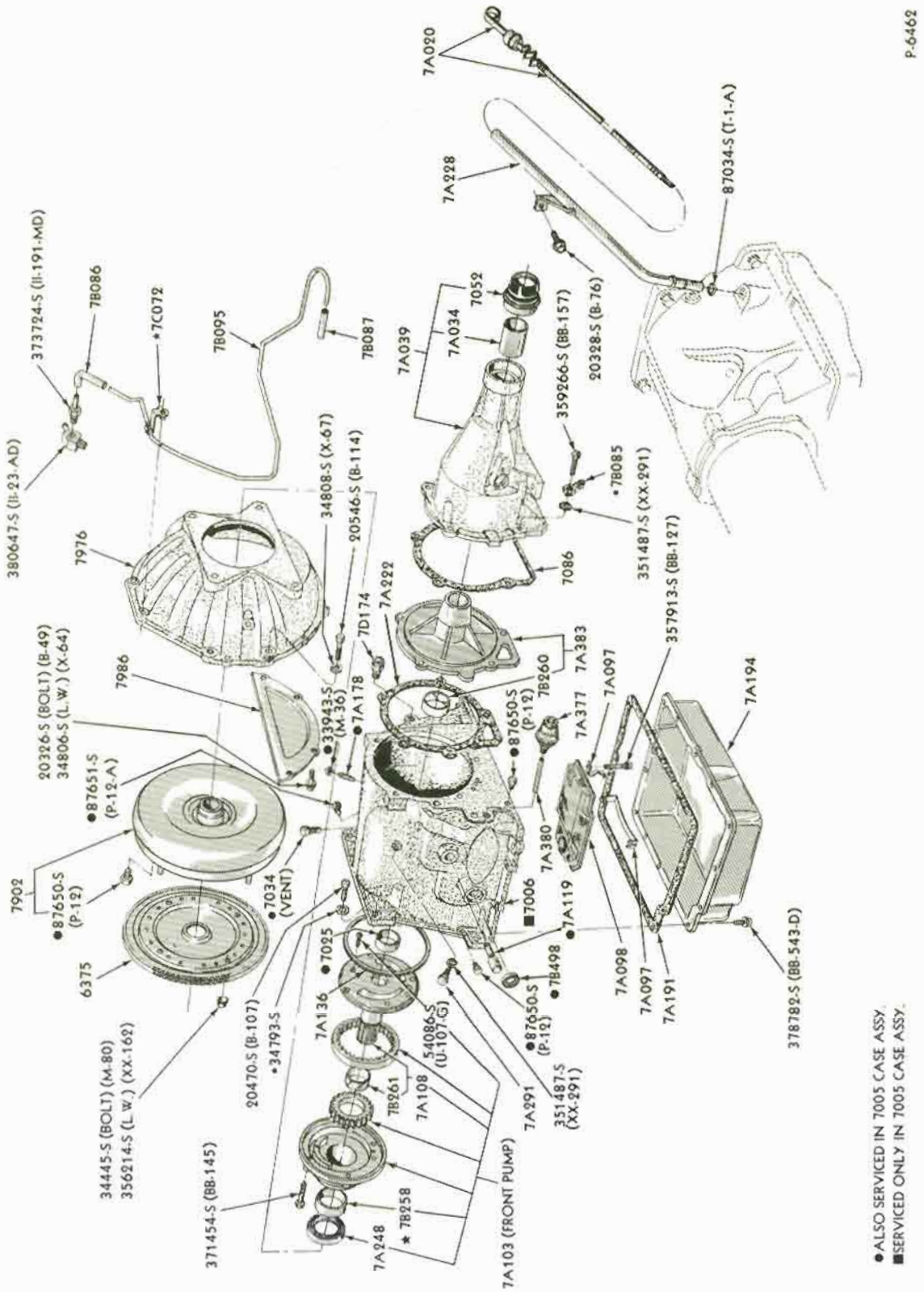

CASE, CONVERTER ASSY., EXTENSION, PUMP, REAR SUPPORT & RELATED PARTS-TYPICAL
1968/72 FORD, 1969/72 FAIRLANE/TORINO & MUSTANG

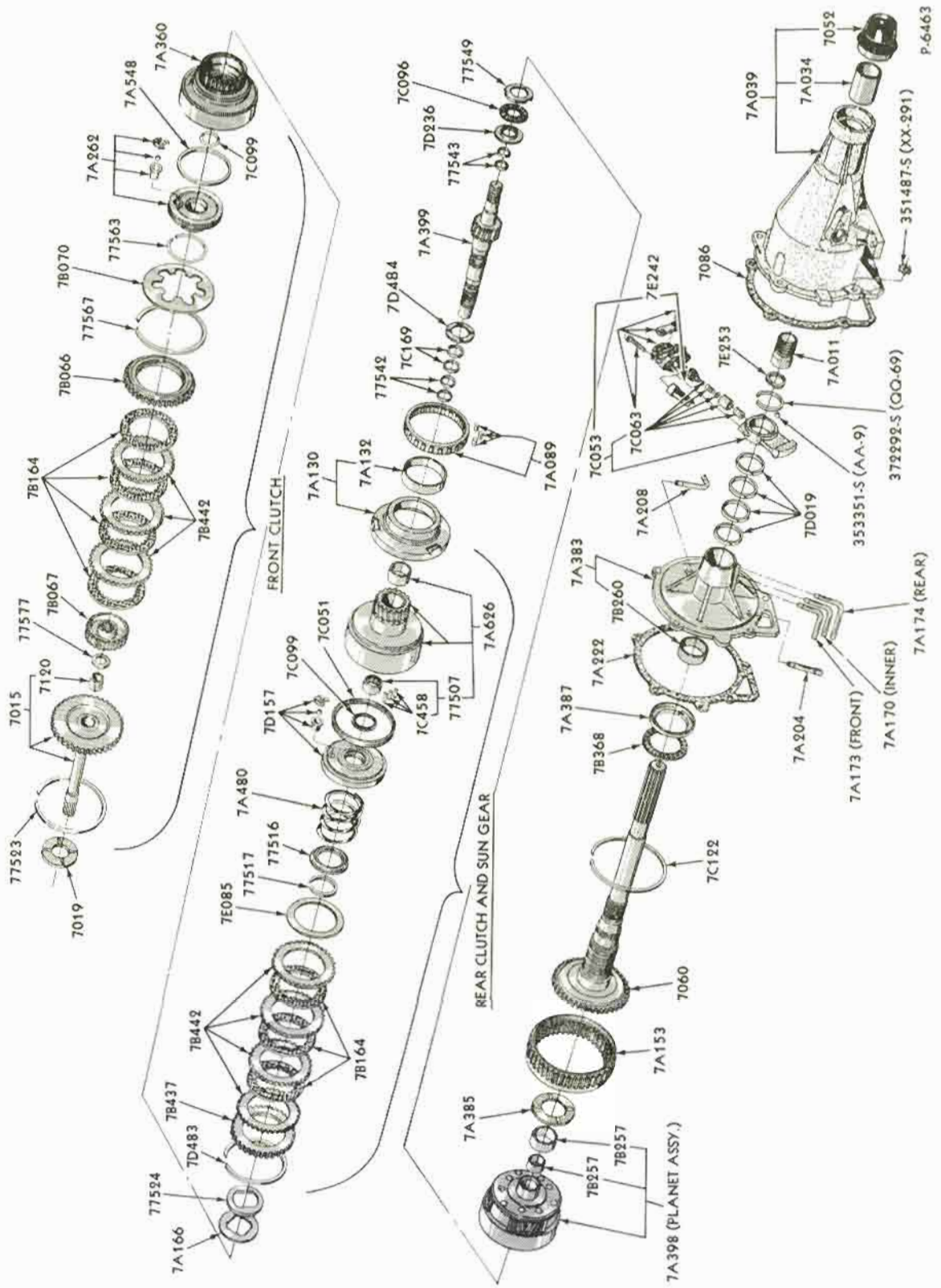

CLUTCHES, GEARS, SHAFTS, EXTENSION & RELATED PARTS-TYPICAL
1968/72 FORD, 1969/72 FAIRLANE/TORINO & MUSTANG

COPYRIGHT © 1975 — FORD MOTOR COMPANY — DEARBORN, MICHIGAN

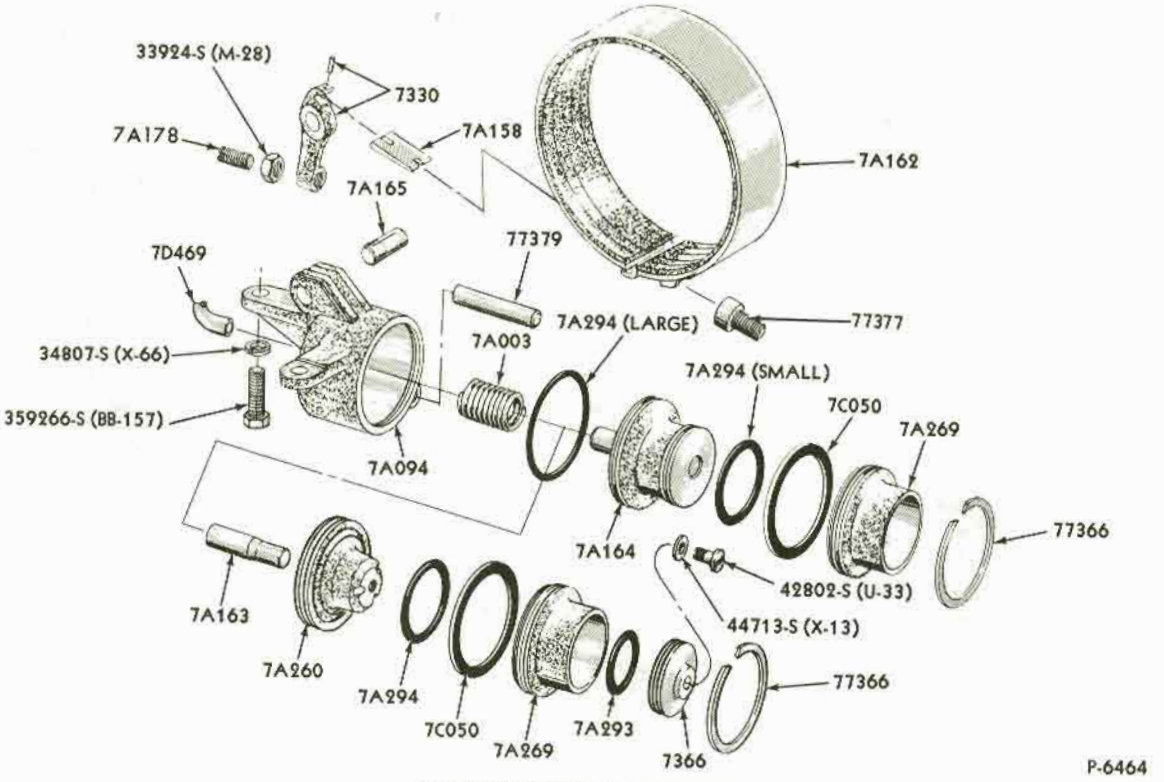

FRONT SERVO & BAND-TYPICAL
1968/72 FORD, 1969/72 FAIRLANE/TORINO & MUSTANG

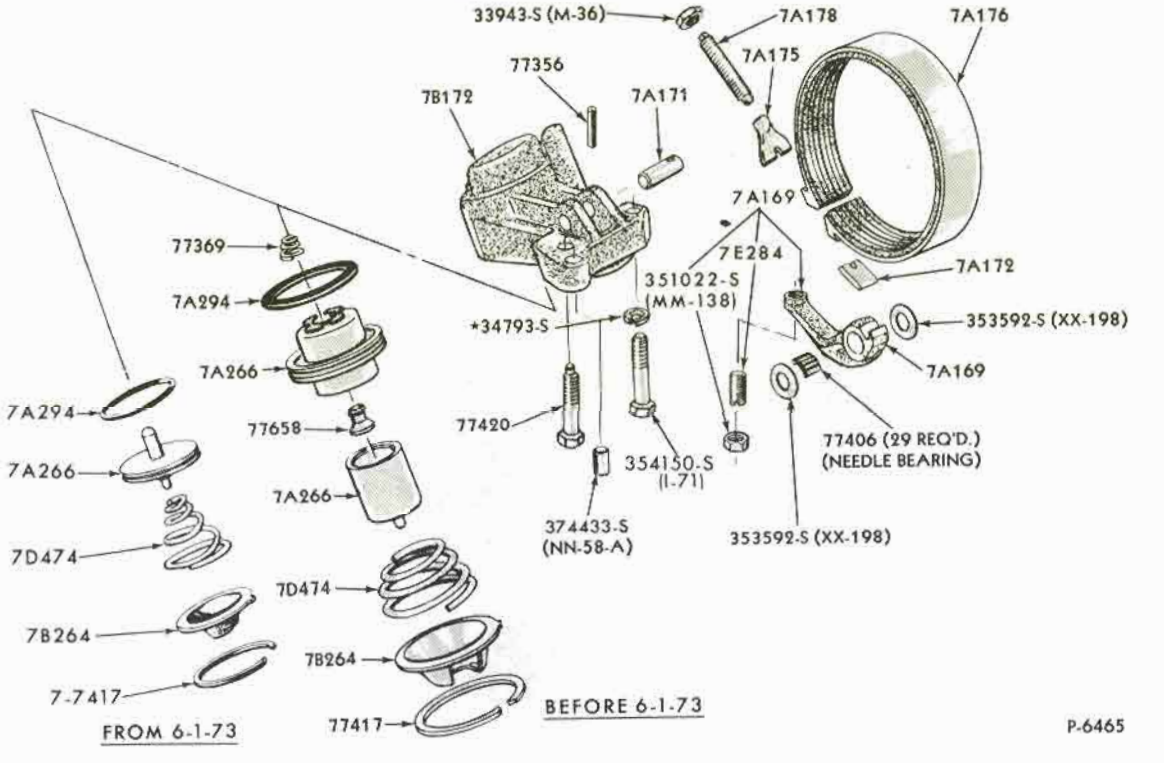

REAR SERVO & BAND-TYPICAL
1968/72 FORD, 1969/72 FAIRLANE/TORINO & MUSTANG

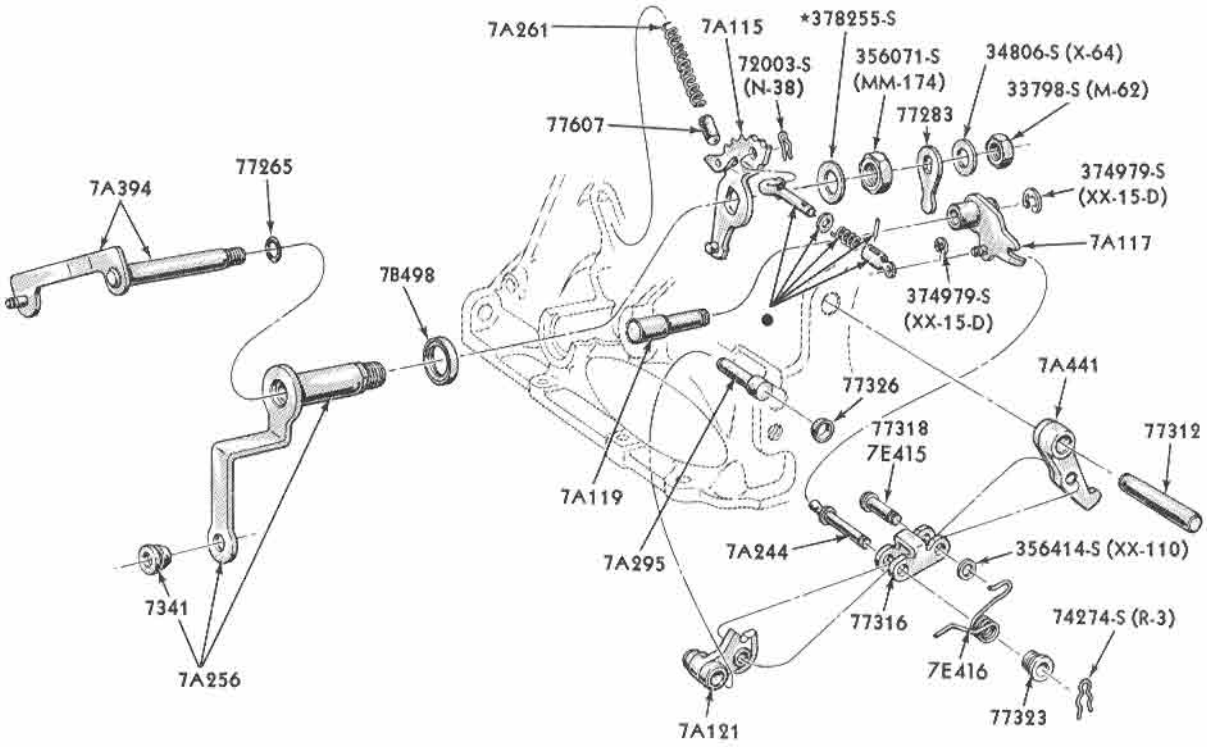

●SERVICED ONLY IN 7A232 ROD ASSY.

P-6471

PARKING PAWL, THROTTLE & MANUAL CONTROL LINKAGE-TYPICAL
1968/72 FORD, 1969/72 FAIRLANE/TORINO & MUSTANG

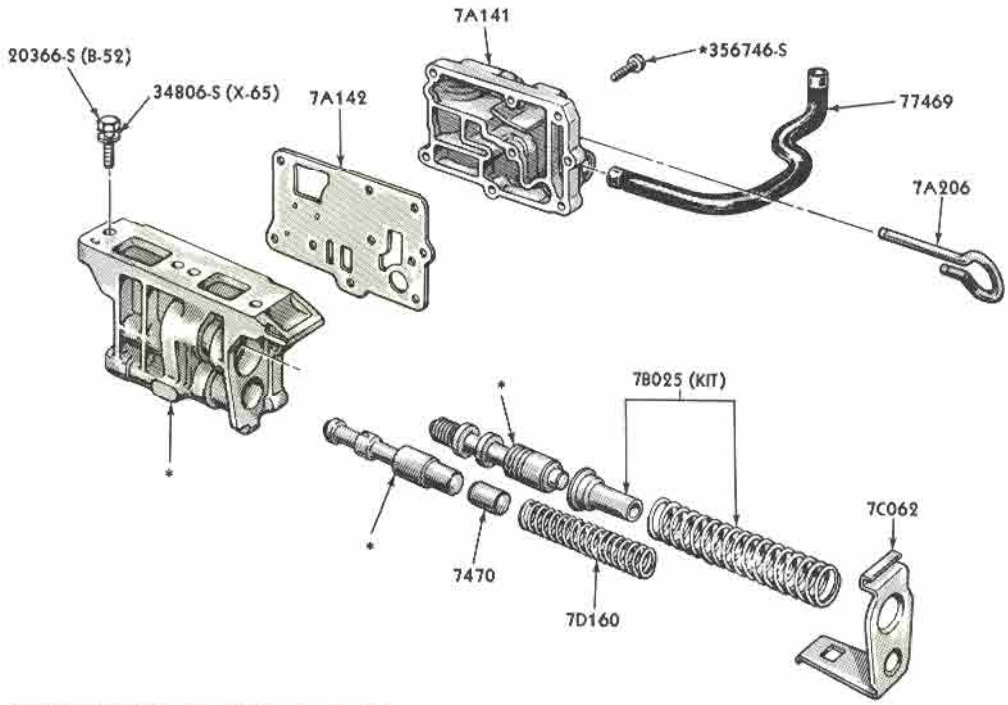

*SERVICED ONLY IN 7A139 REGULATOR ASSY.

P-6470

OIL PRESSURE REGULATOR ASSY. (BASIC 7A139)-TYPICAL
1968/72 FORD, 1969/72 FAIRLANE/TORINO & MUSTANG

COPYRIGHT © 1975 — FORD MOTOR COMPANY — DEARBORN, MICHIGAN

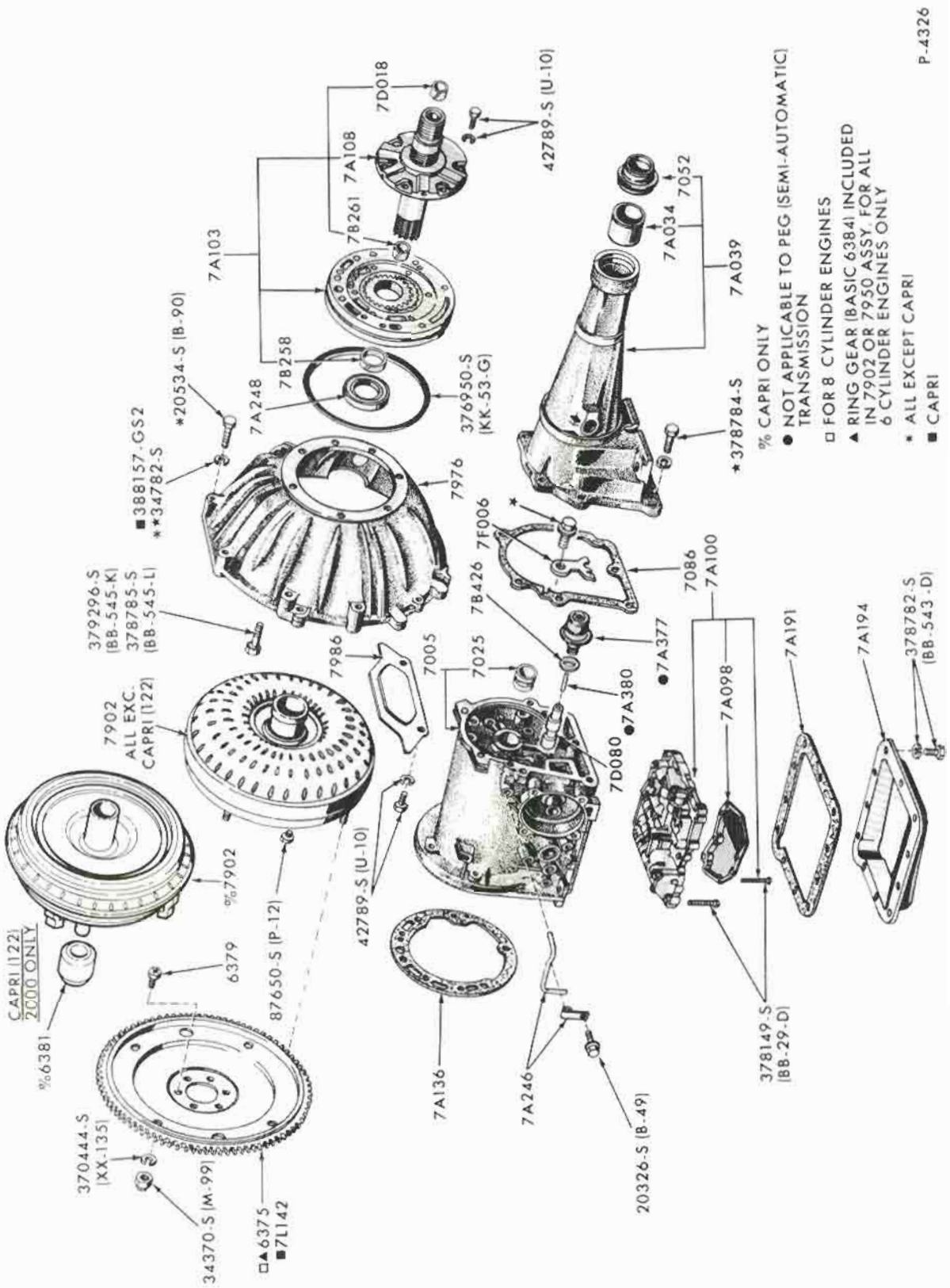

CASE, CONVERTER ASSY., EXTENSION, PUMP & RELATED PARTS-TYPICAL
1965/72 FORD, FAIRLANE/TORINO, MUSTANG & FALCON, 1970/72 MAVERICK, 1971/72 PINTO

COPYRIGHT © 1975 — FORD MOTOR COMPANY — DEARBORN, MICHIGAN

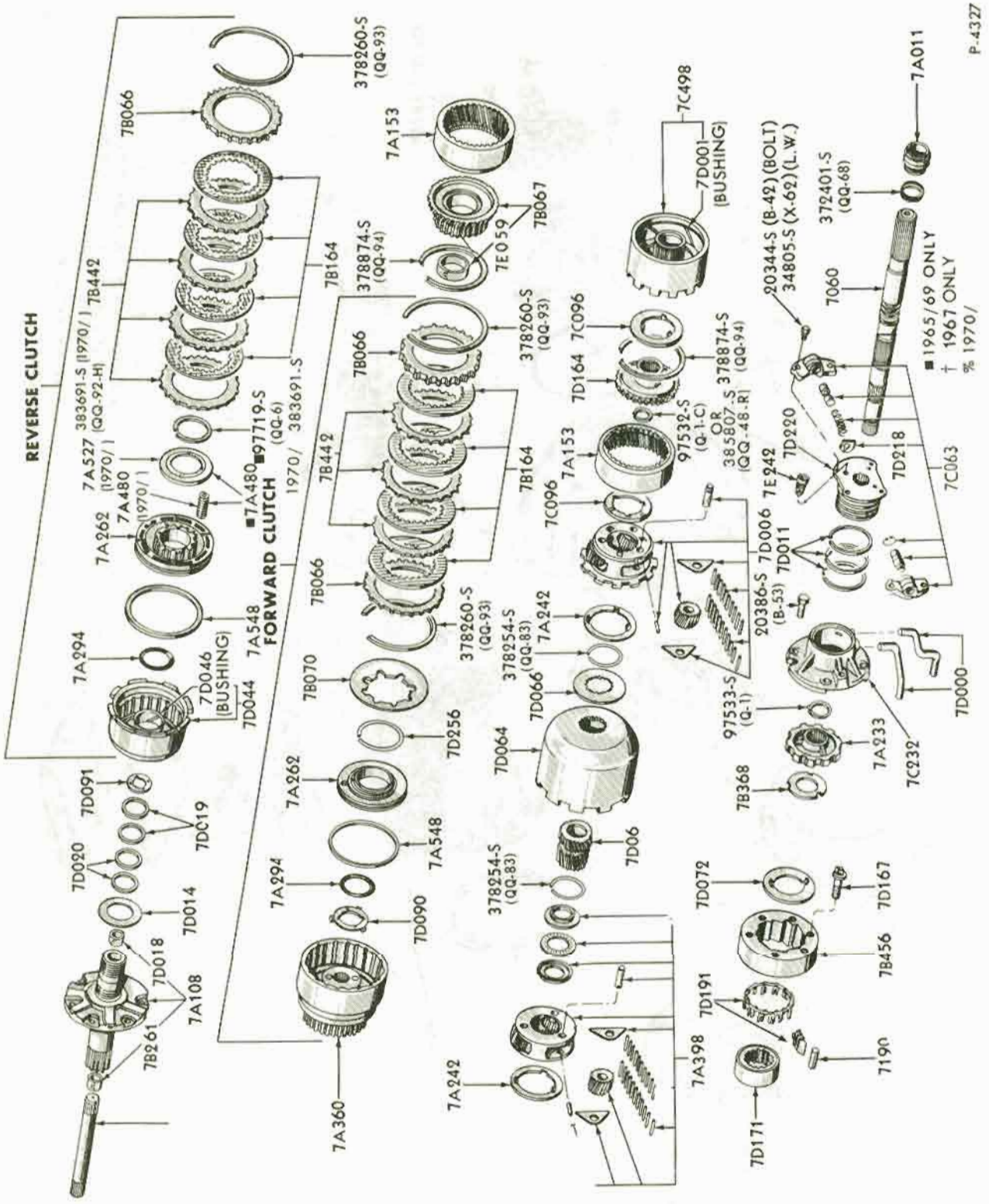

CLUTCHES, GEARS, SHAFTS, REAR SUPPORT & RELATED PARTS-TYPICAL
1965/72 FORD, FAIRLANE/TORINO, MUSTANG & FALCON, 1970/72 MAVERICK, 1971/72 PINTO

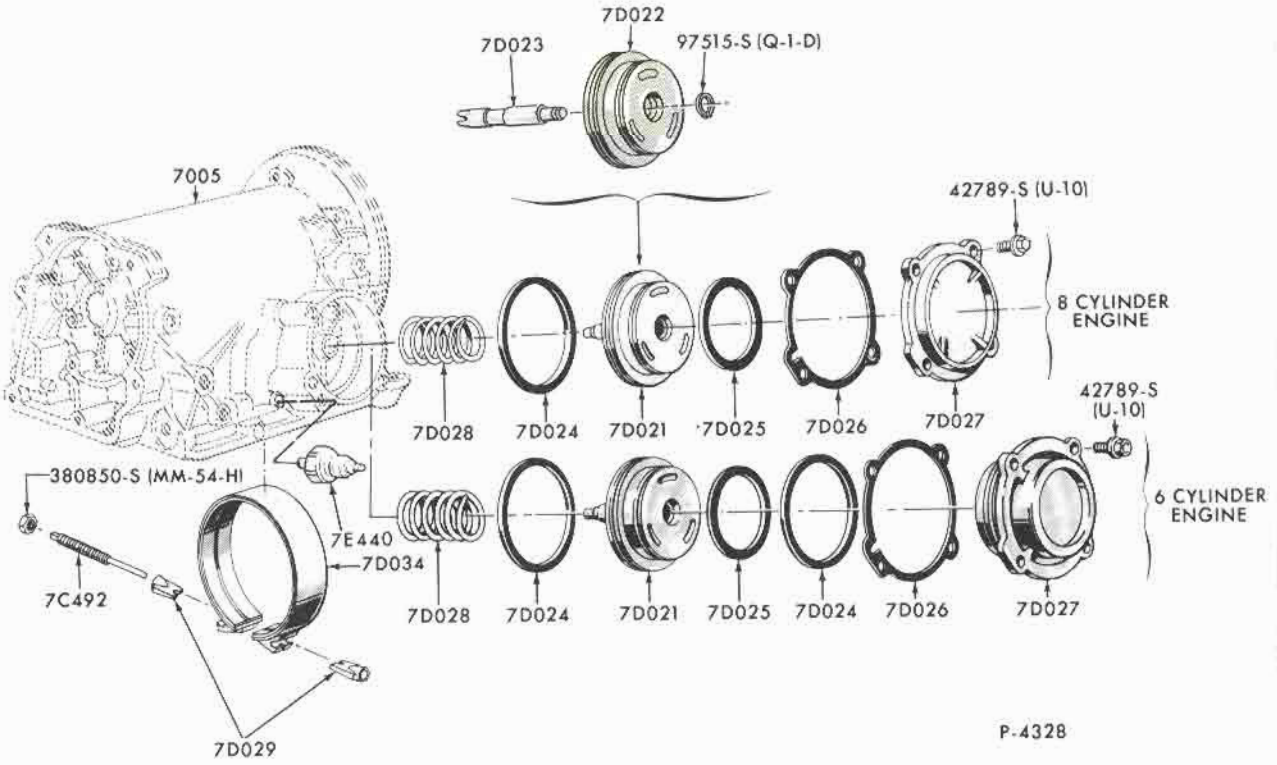

FRONT SERVO & BAND-TYPICAL
1965/72 FORD, FAIRLANE/TORINO, MUSTANG & FALCON, 1970/72 MAVERICK, 1971/72 PINTO

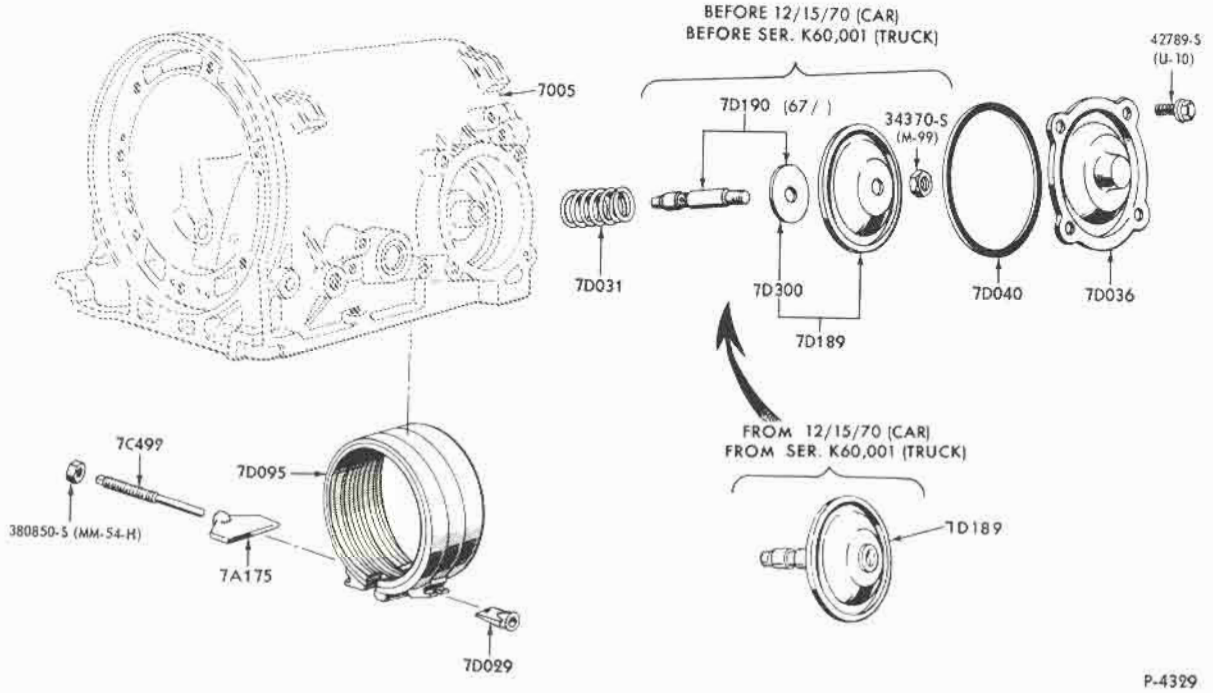

REAR SERVO & BAND - TYPICAL
1965/72 FORD, FAIRLANE/TORINO, MUSTANG & FALCON, 1970/72 MAVERICK, 1971/72 PINTO

COPYRIGHT © 1975 — FORD MOTOR COMPANY — DEARBORN, MICHIGAN

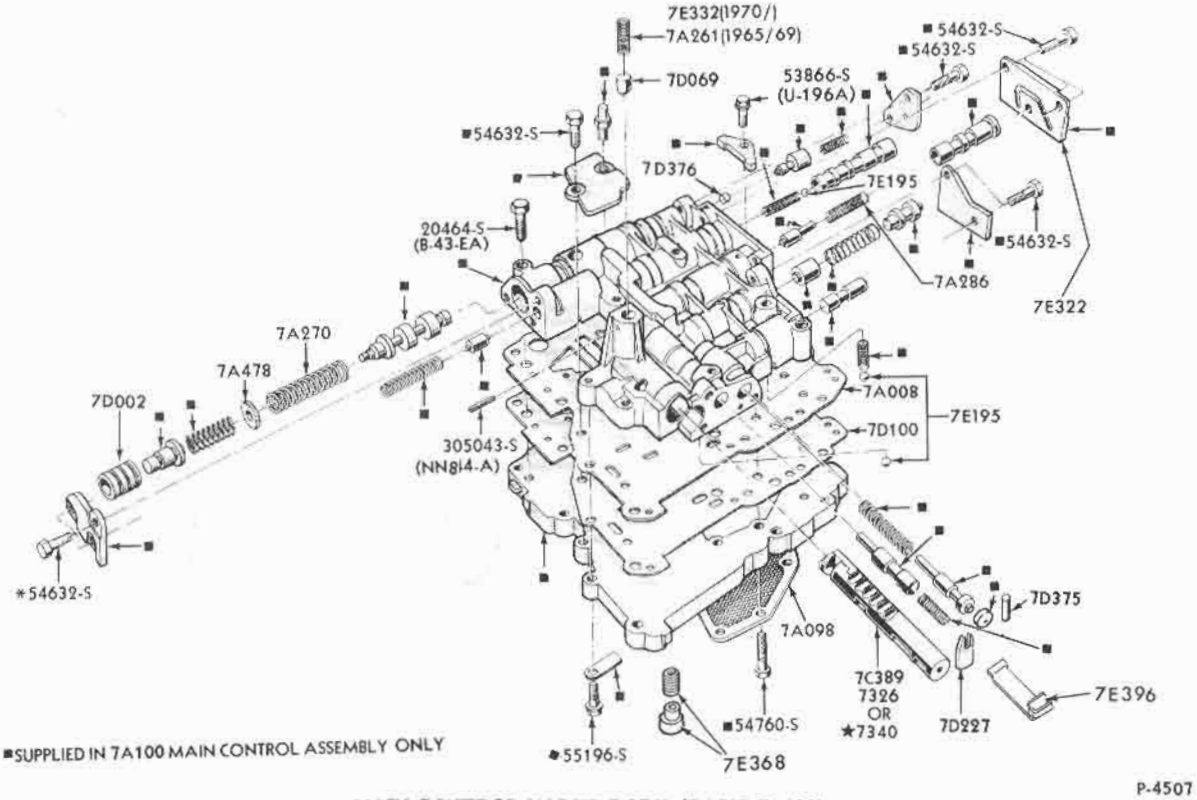

MAIN CONTROL VALVE BODY-(BASIC 7A100)-TYPICAL
1965/72 FORD, FAIRLANE/TORINO, MUSTANG & FALCON, 1970/72 MAVERICK, 1971/72 PINTO

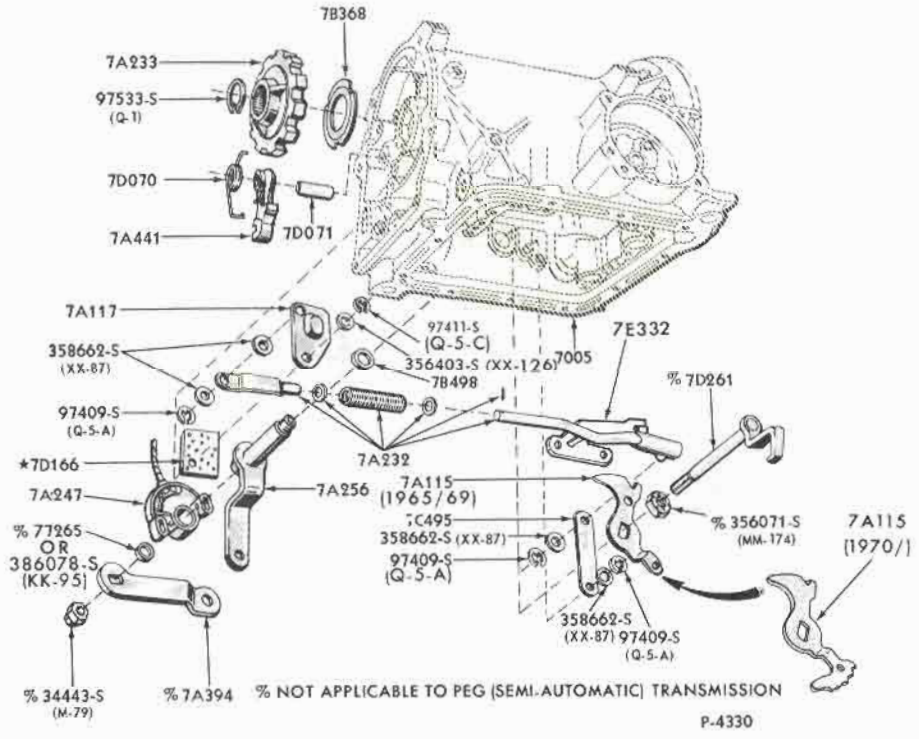

PARKING PAWL, THROTTLE & MANUAL CONTROL LINKAGE-TYPICAL
1965/72 FORD, FAIRLANE/TORINO, MUSTANG & FALCON, 1970/72 MAVERICK, 1971/72 PINTO

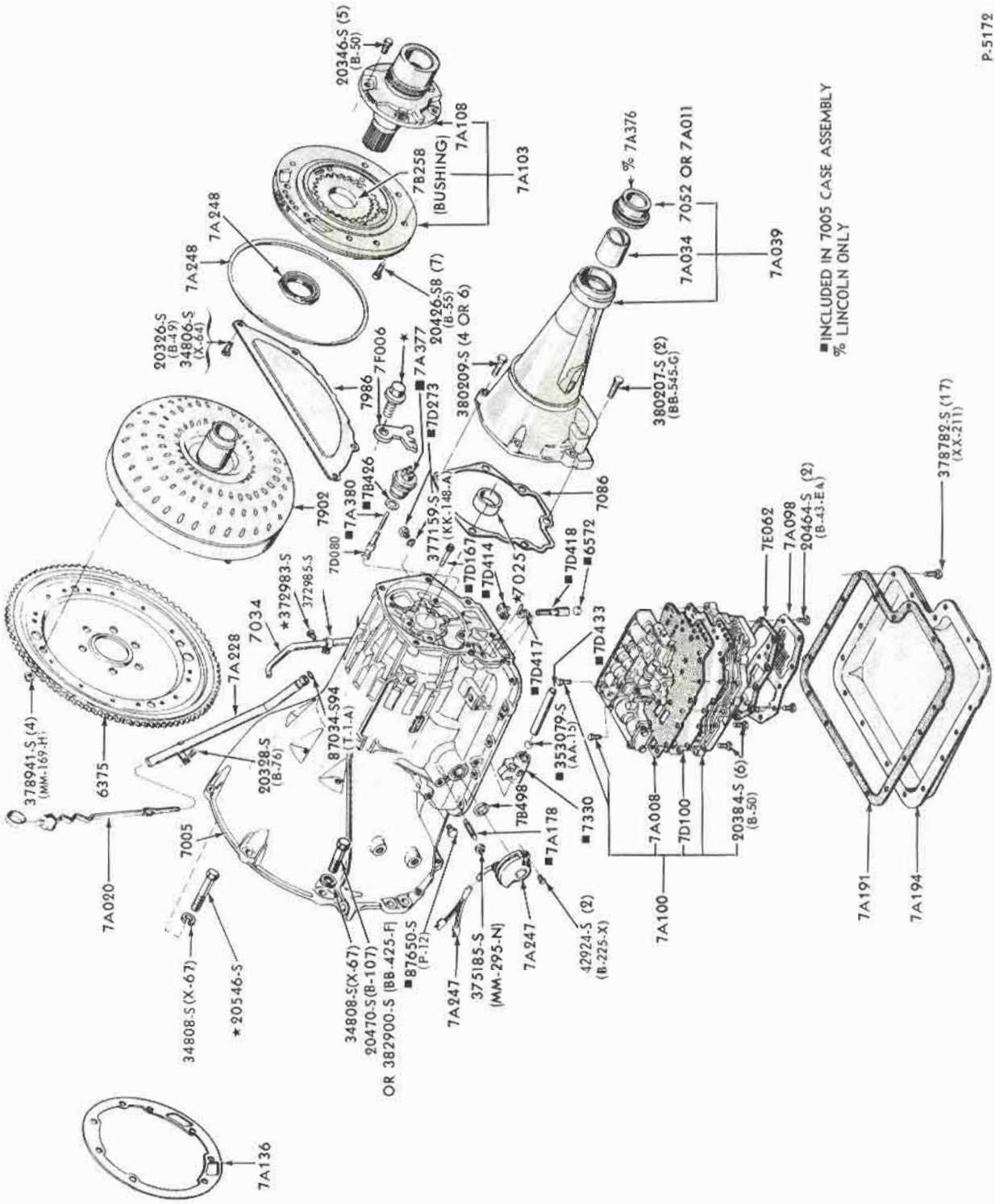

CASE, CONVERTER ASSY., EXTENSION, PUMP & RELATED PARTS-TYPICAL
1966/72 FORD, FAIRLANE/TORINO, MUSTANG & THUNDERBIRD

COPYRIGHT © 1975 — FORD MOTOR COMPANY — DEARBORN, MICHIGAN

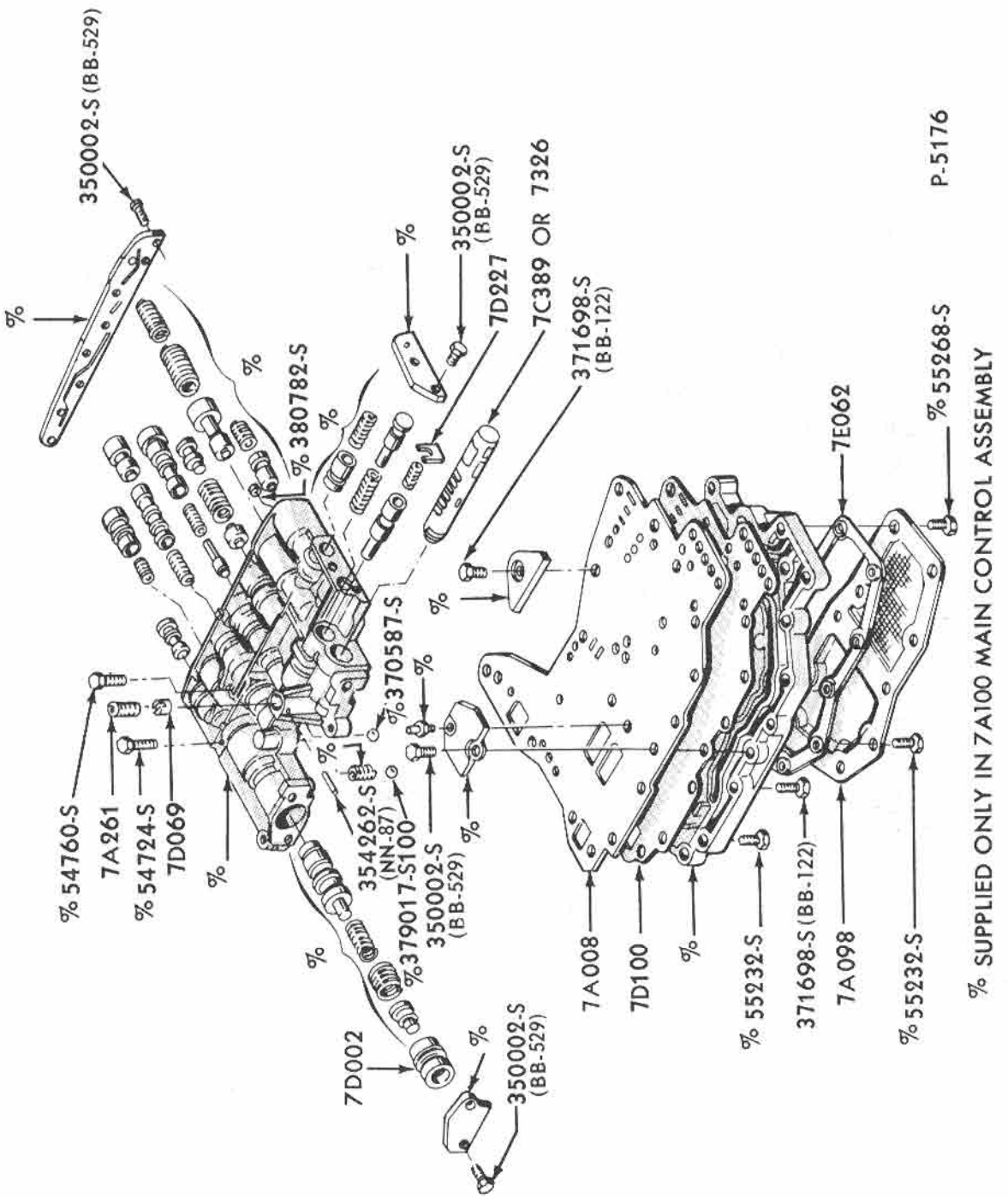

MAIN CONTROL VALVE BODY ASSY. - (BASIC 7A100)-TYPICAL
1966/72 FORD, FAIRLANE/TORINO, MUSTANG & THUNDERBIRD

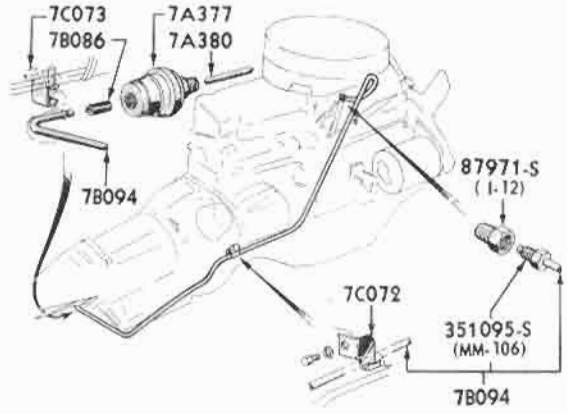

6 CYLINDER 200 & 250 ENGINES

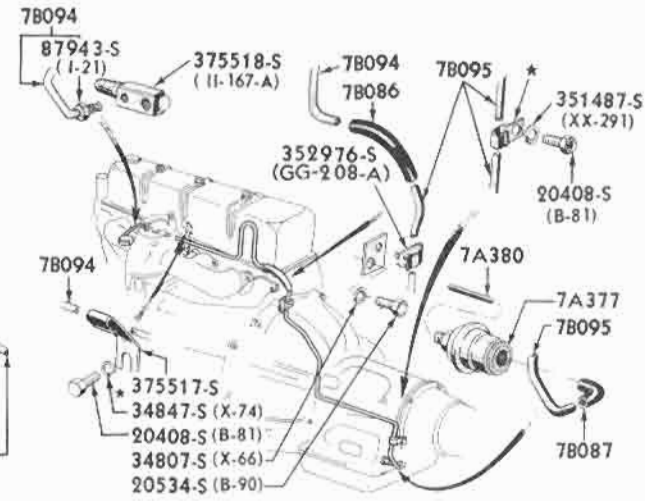

6 CYLINDER 240 ENGINE

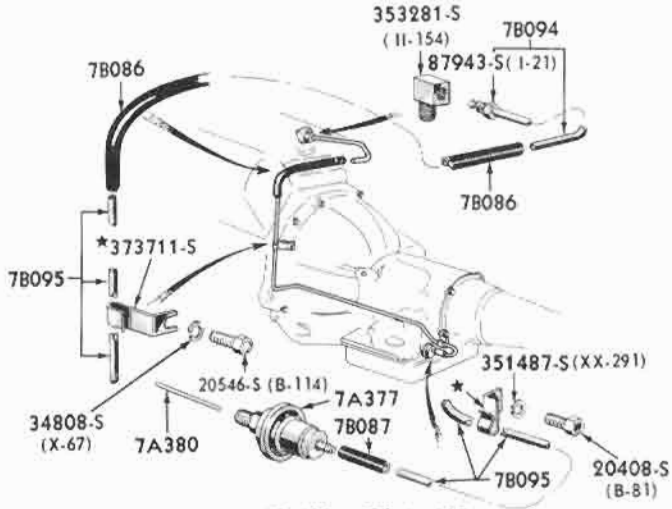

8 CYLINDER 400, 429 & 460 ENGINES WITH C/M & C/6 TRANSMISSIONS

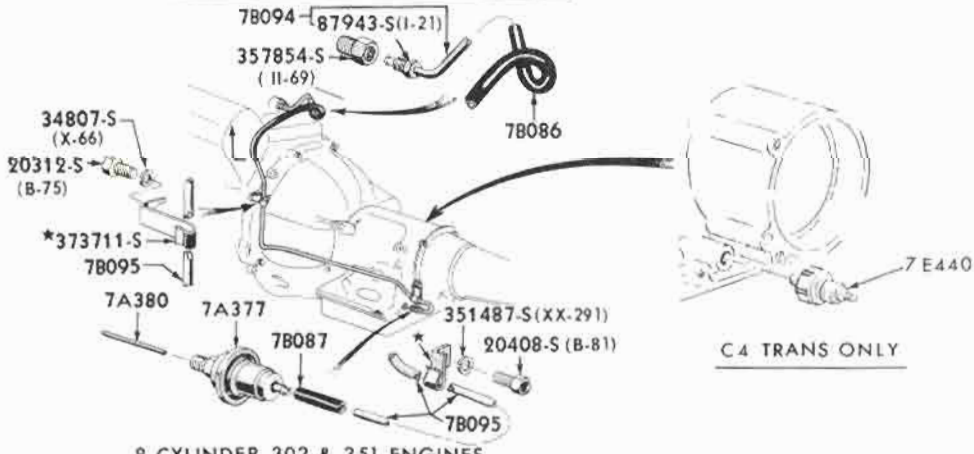

C4 TRANS ONLY

8 CYLINDER 302 & 351 ENGINES WITH C/M & C4 TRANSMISSIONS

P-3627

VACUUM THROTTLE VALVE, LINES & FITTINGS-TYPICAL
1965/72 FORD, FAIRLANE/TORINO, MUSTANG, THUNDERBIRD & FALCON

COPYRIGHT © 1975 — FORD MOTOR COMPANY — DEARBORN, MICHIGAN

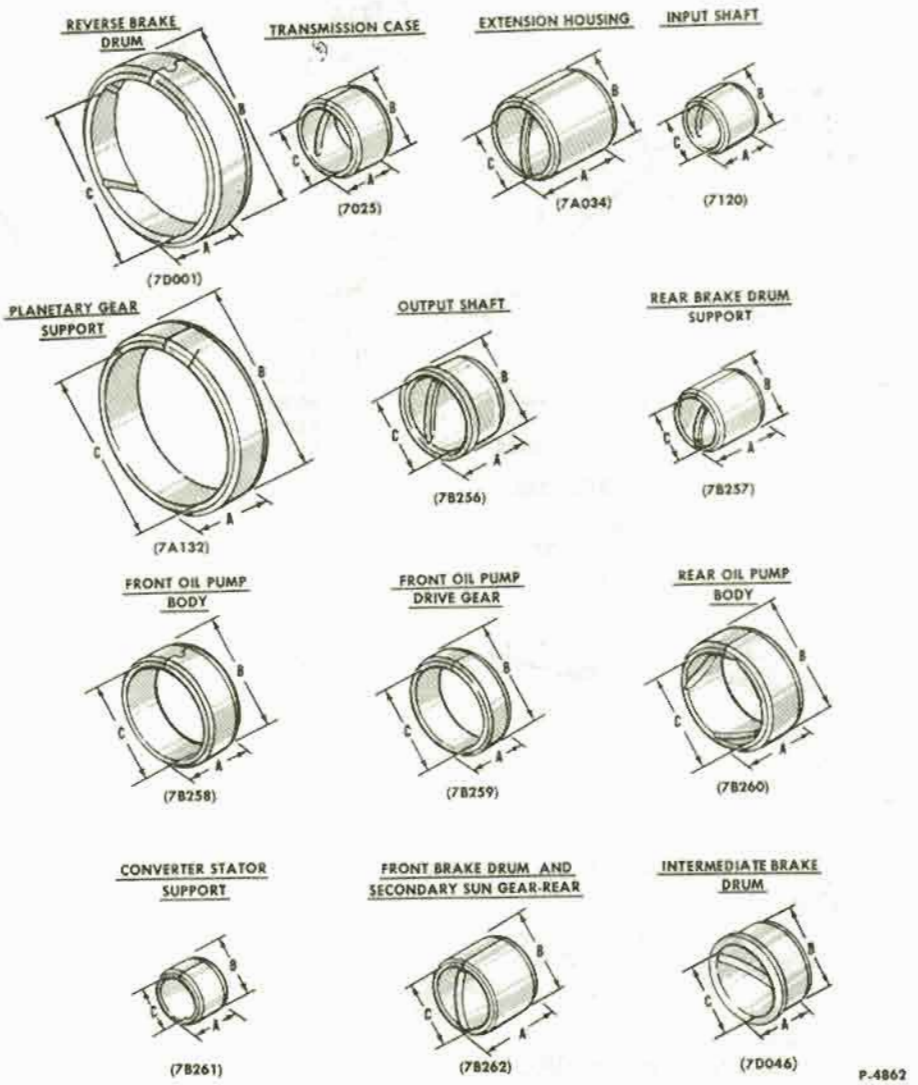

BUSHINGS - AUTOMATIC TRANSMISSION MISCELLANEOUS

A	B	C	PART NUMBER
3/4"	1 1/2"	1 3/8"	♦ B1A 7025-A
3/4"	1 1/2"	1 3/8"	⊕ B1A 7025-B
7/8"	1 1/2"	1 3/8"	B5A 7025-A
7/8"	1 5/8"	1 1/2"	C0MP 7025-A
1 1/2"	1 5/8"	1 1/2"	B3TZ 7A034-A
2 1/8"	1 13/16"	1 11/16"	B5AZ 7A034-A
1 3/8"	1 1/2"	1 3/8"	C0DP 7A034-B
3/4"	1"	7/8"	B1AZ 7120-A
27/32"	1"	7/8"	★B5A 7120-B
27/32"	1 1/8"	1"	★C0MP 7120-A
27/32"	1"	7/8"	C3AZ 7120-B
5/8"	3 3/8"	3 3/16"	B1AZ 7A132-A
11/16"	3 5/16"	3 5/32"	B9AP 7A132-A
23/32"	3 27/32"	3 11/16"	B9MP 7A132-A
11/16"	3 5/16"	3 5/32"	♦C3AZ 7A132-A
11/16"	3 5/16"	3 5/32"	♦C4AZ 7A132-A
7/8"	1 5/8"	1 1/2"	B5AZ 7B256-A
3/8"	1 1/8"	1"	★C0AP 7B256-A

♦ RECONDITIONERS ONLY ⊕ DEALER INSTALLATION

A	B	C	PART NUMBER
1"	1 3/4"	1 5/8"	★C0MP 7B256-A
3/4"	1 1/8"	1"	B1AZ 7B257-B
1"	1 1/8"	1"	B5AZ 7B257-A
29/32"	2 1/2"	2 3/8"	C0AP 7B257-A
15/16"	1 1/4"	1 1/8"	★C0MP 7B257-A
33/64"	2 1/8"	2"	C0AP 7B258-A
37/64"	2 1/16"	1 15/16"	C1AZ 7B256-A
7/16"	1 15/16"	1 13/16"	C0MP 7B259-A
3/8"	1 15/16"	1 13/16"	C1AZ 7B259-A
3/4"	2 3/16"	2 1/16"	B5AZ 7B260-A
7/8"	2"	1 7/8"	C0AP 7B260-A
13/16"	2 5/16"	2 3/16"	★C3SZ 7B260-B
3/4"	1 1/32"	29/32"	★B1AZ 7B261-A
9/16"	1"	15/16"	B5AZ 7B261-A
1"	1 3/16"	1 3/64"	C0AP 7B261-A
9/16"	1 1/16"	1"	★C0MP 7B261-A
1 1/16"	1 7/16"	1 5/16"	B5AZ 7B262-A
1 1/8"	1 11/16"	1 9/16"	C0MP 7B262-A

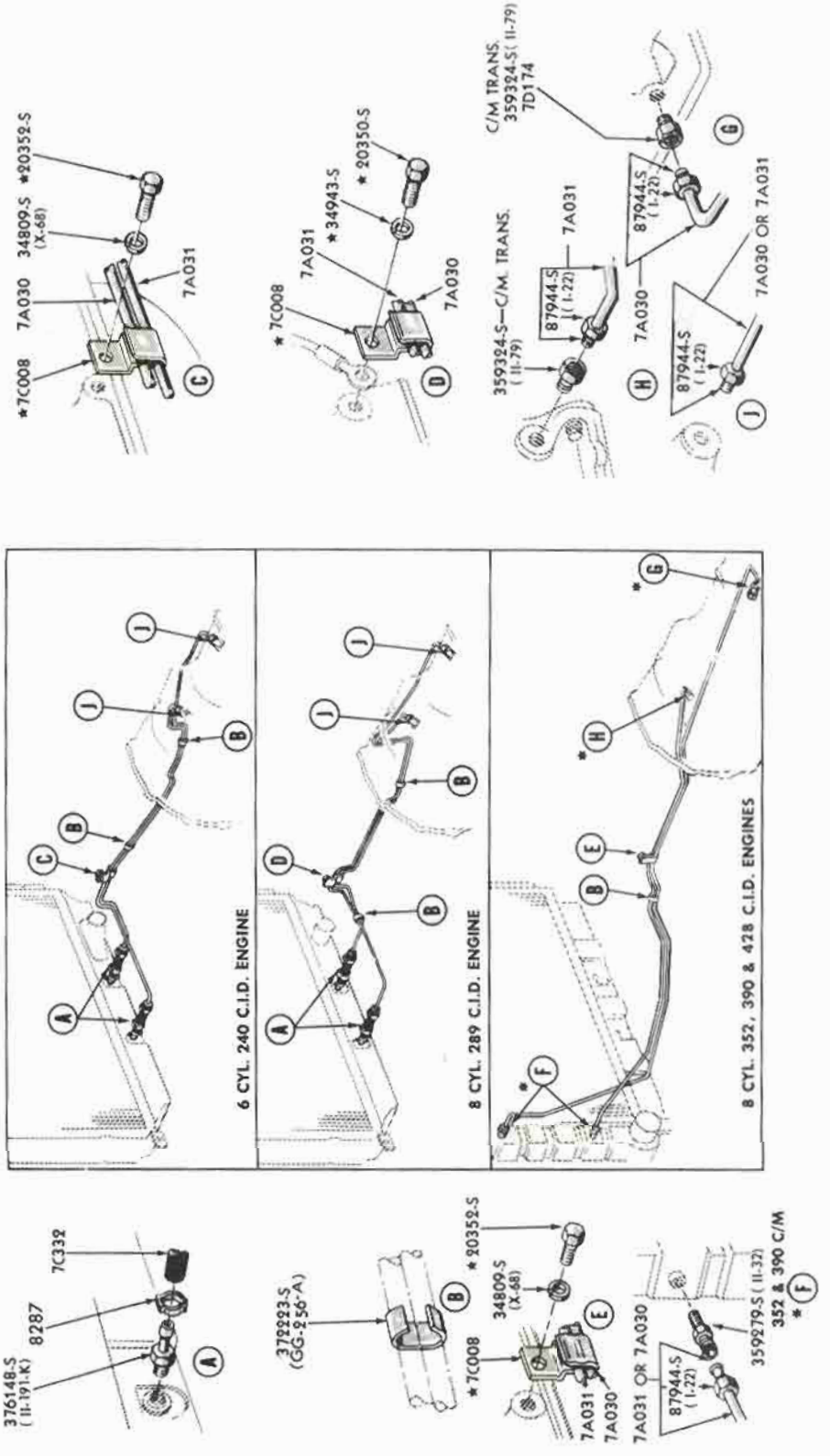

TRANSMISSION OIL COOLING SYSTEM-TYPICAL
1965/68 FORD

COPYRIGHT © 1975— FORD MOTOR COMPANY —DEARBORN, MICHIGAN

TRANSMISSION OIL COOLING SYSTEM
1969/72 FORD

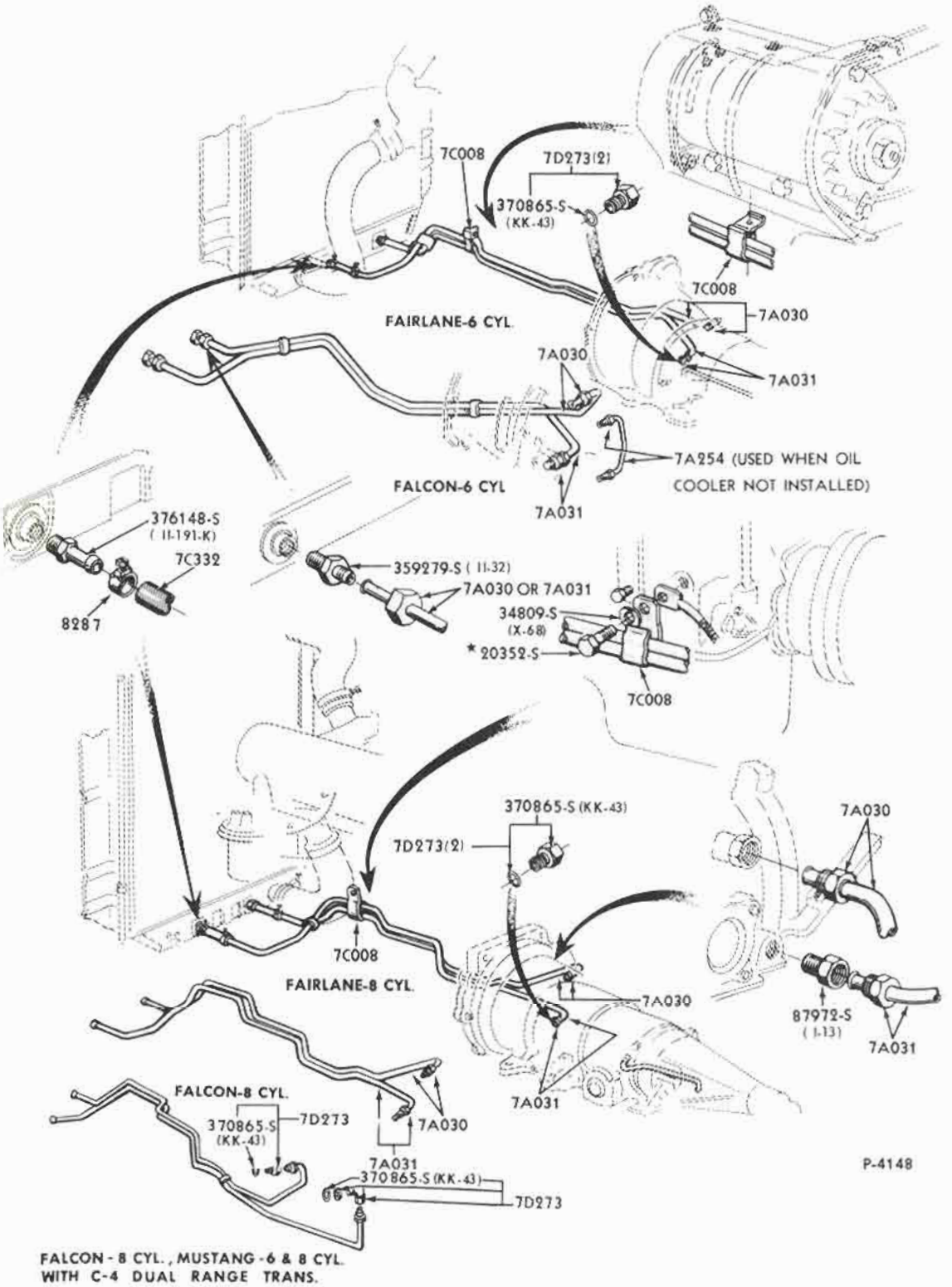

TRANSMISSION OIL COOLING SYSTEM-TYPICAL
1965 FAIRLANE, MUSTANG & FALCON

COPYRIGHT © 1975 — FORD MOTOR COMPANY — DEARBORN, MICHIGAN

TRANSMISSION OIL COOLING SYSTEM-TYPICAL
1966/68 FAIRLANE/TORINO, MUSTANG & FALCON

TRANSMISSION OIL COOLING SYSTEM
1969/72 FAIRLANE/TORINO, MUSTANG & FALCON

COPYRIGHT © 1975 — FORD MOTOR COMPANY — DEARBORN, MICHIGAN

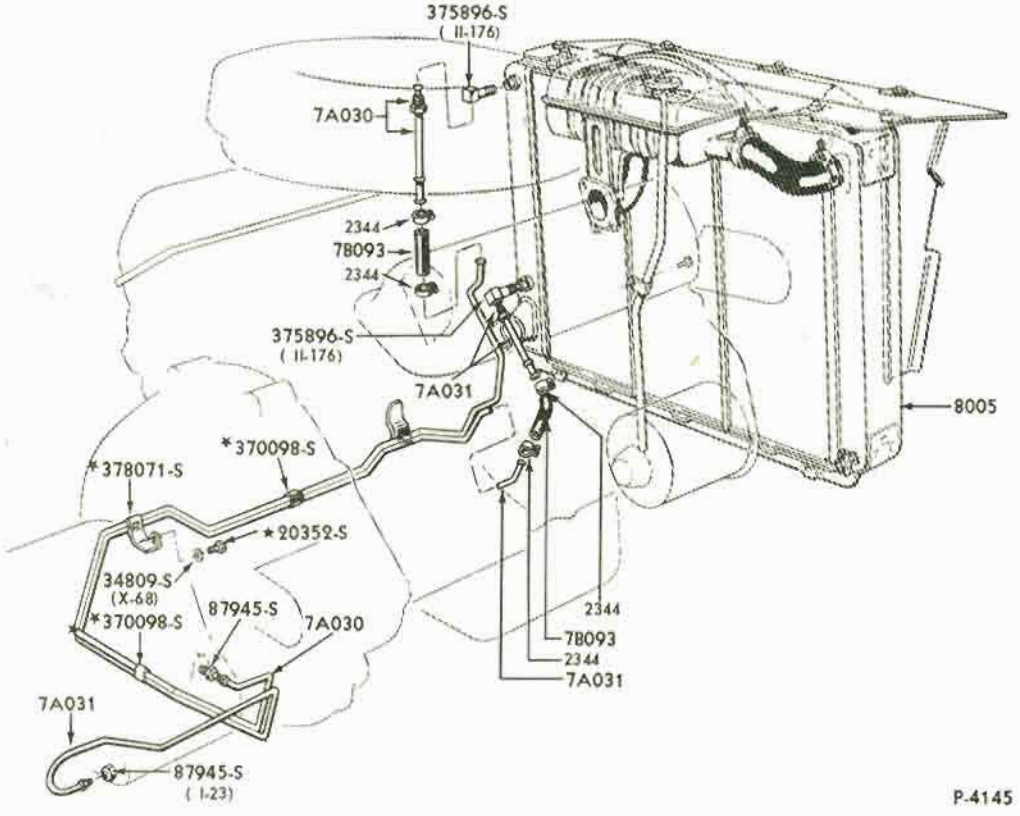

TRANSMISSION OIL COOLING SYSTEM-TYPICAL
1965/66 THUNDERBIRD

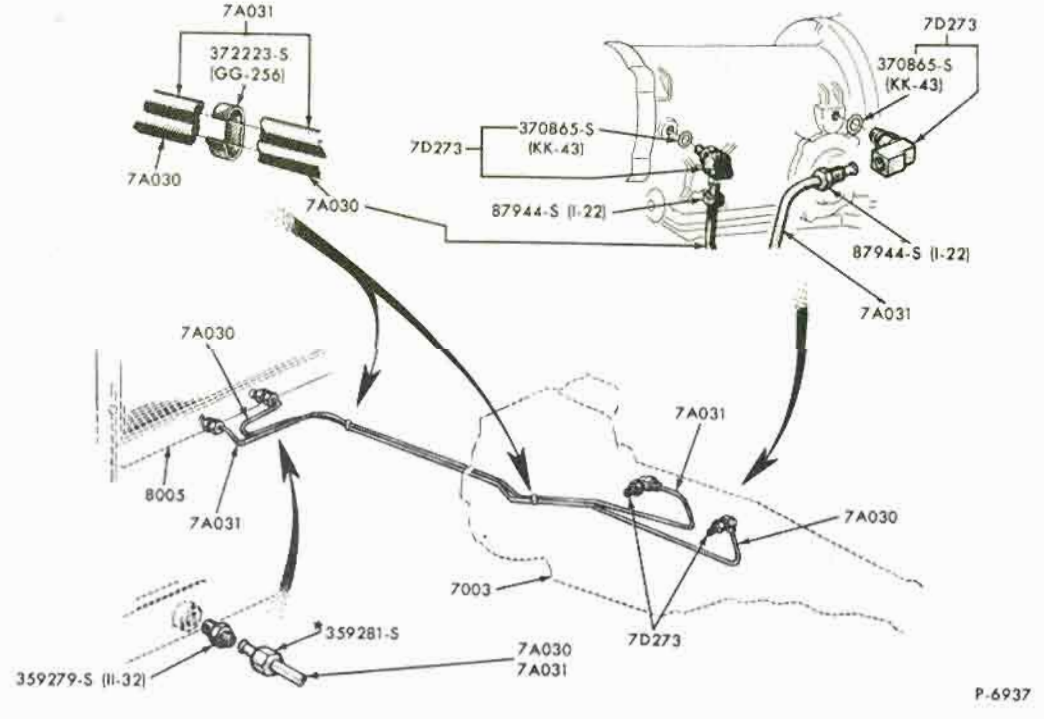

TRANSMISSION OIL COOLING SYSTEM
1970/72 MAVERICK

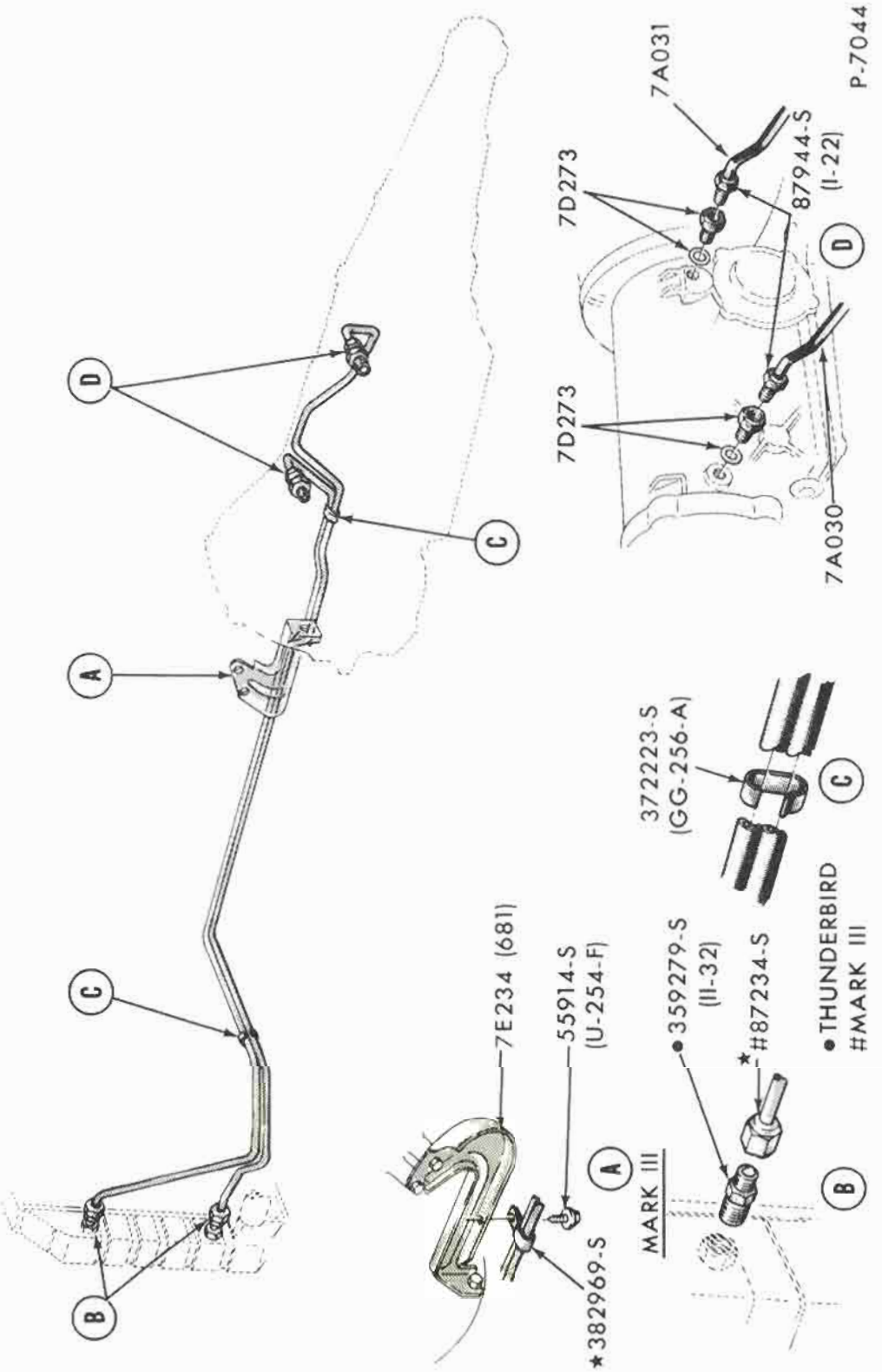

TRANSMISSION OIL COOLING SYSTEM
1967/72 THUNDERBIRD

COPYRIGHT © 1975 — FORD MOTOR COMPANY — DEARBORN, MICHIGAN

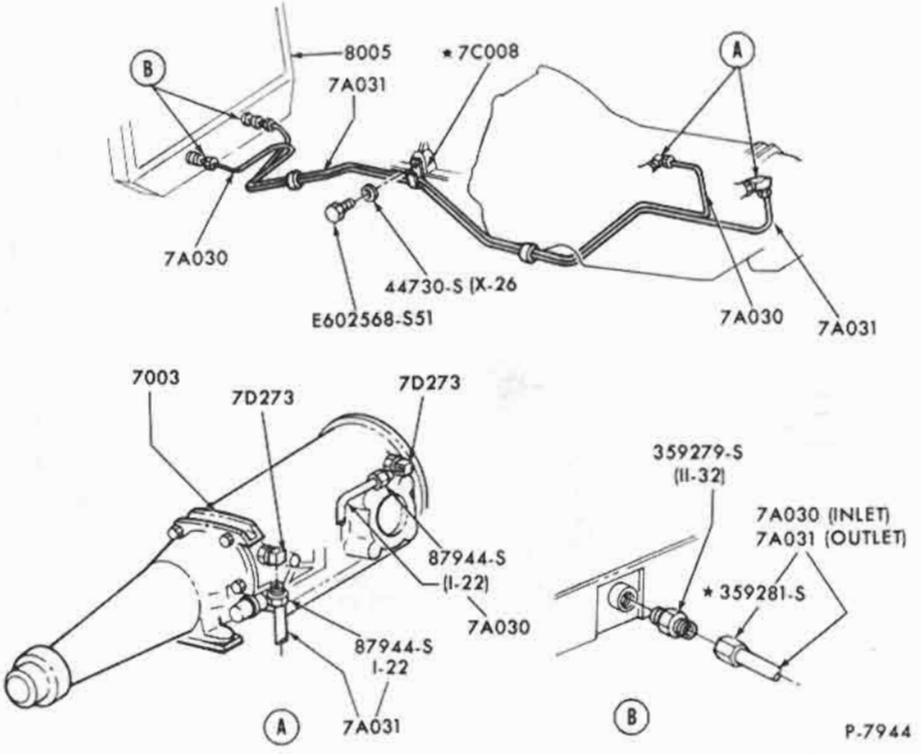

TRANSMISSION OIL COOLING SYSTEM
1971/72 PINTO

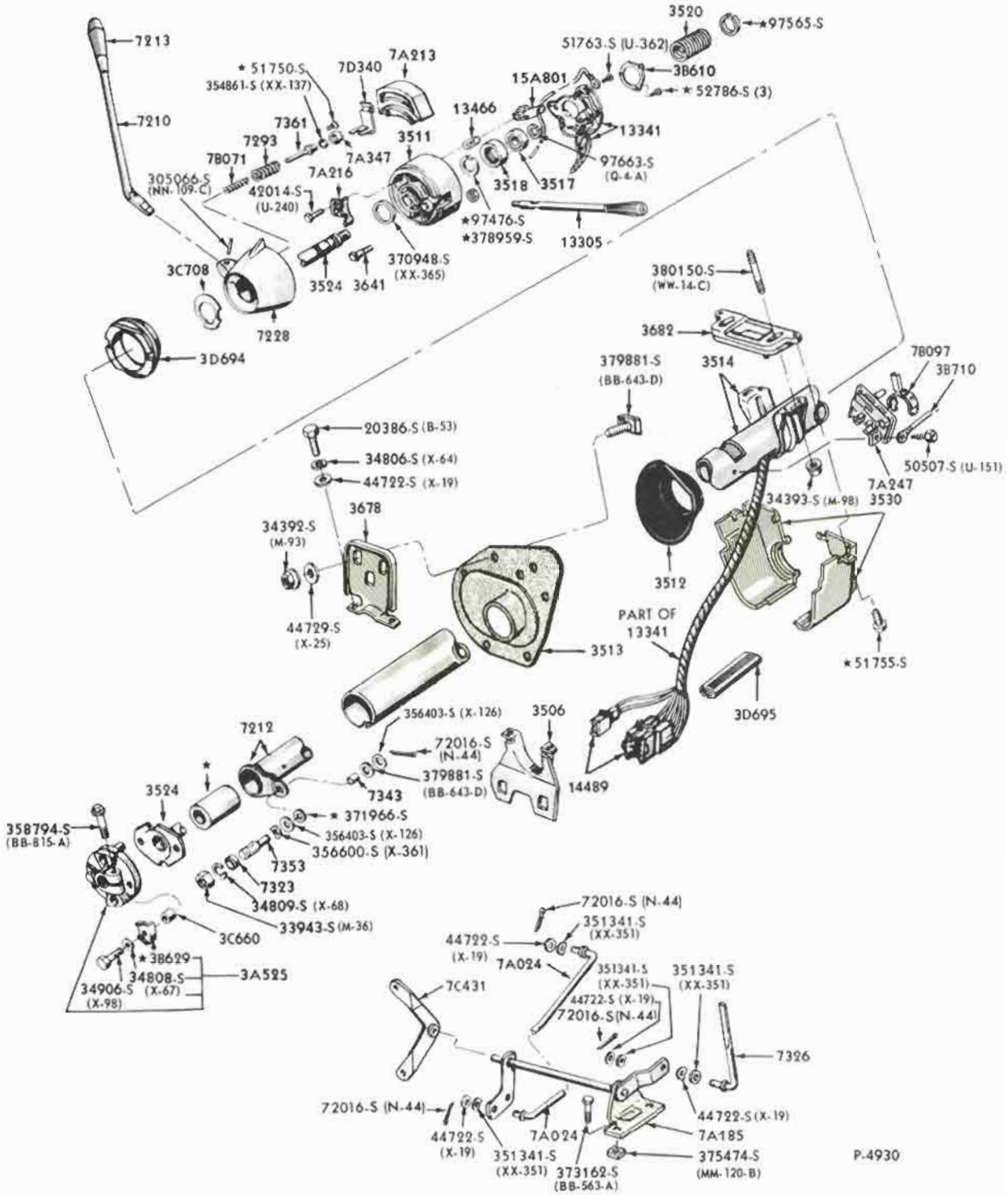

STEERING COLUMN & SHIFT CONTROL SELECTOR MECHANISM-FIXED-TYPICAL
1965/66 FORD

COPYRIGHT © 1975 — FORD MOTOR COMPANY — DEARBORN, MICHIGAN

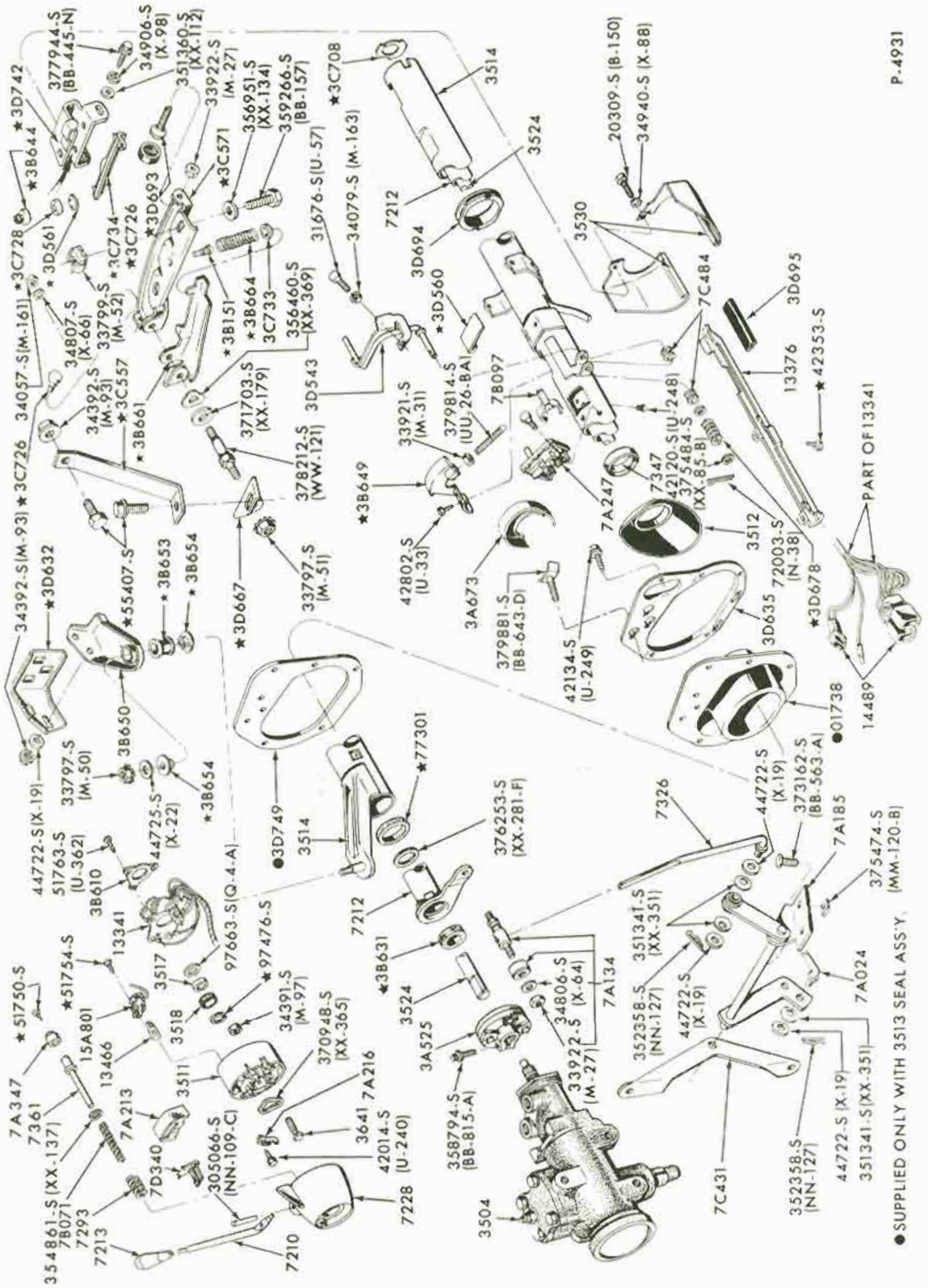

STEERING COLUMN & SHIFT CONTROL SELECTOR MECHANISM-MOVABLE COLUMN-TYPICAL
1965/66 FORD

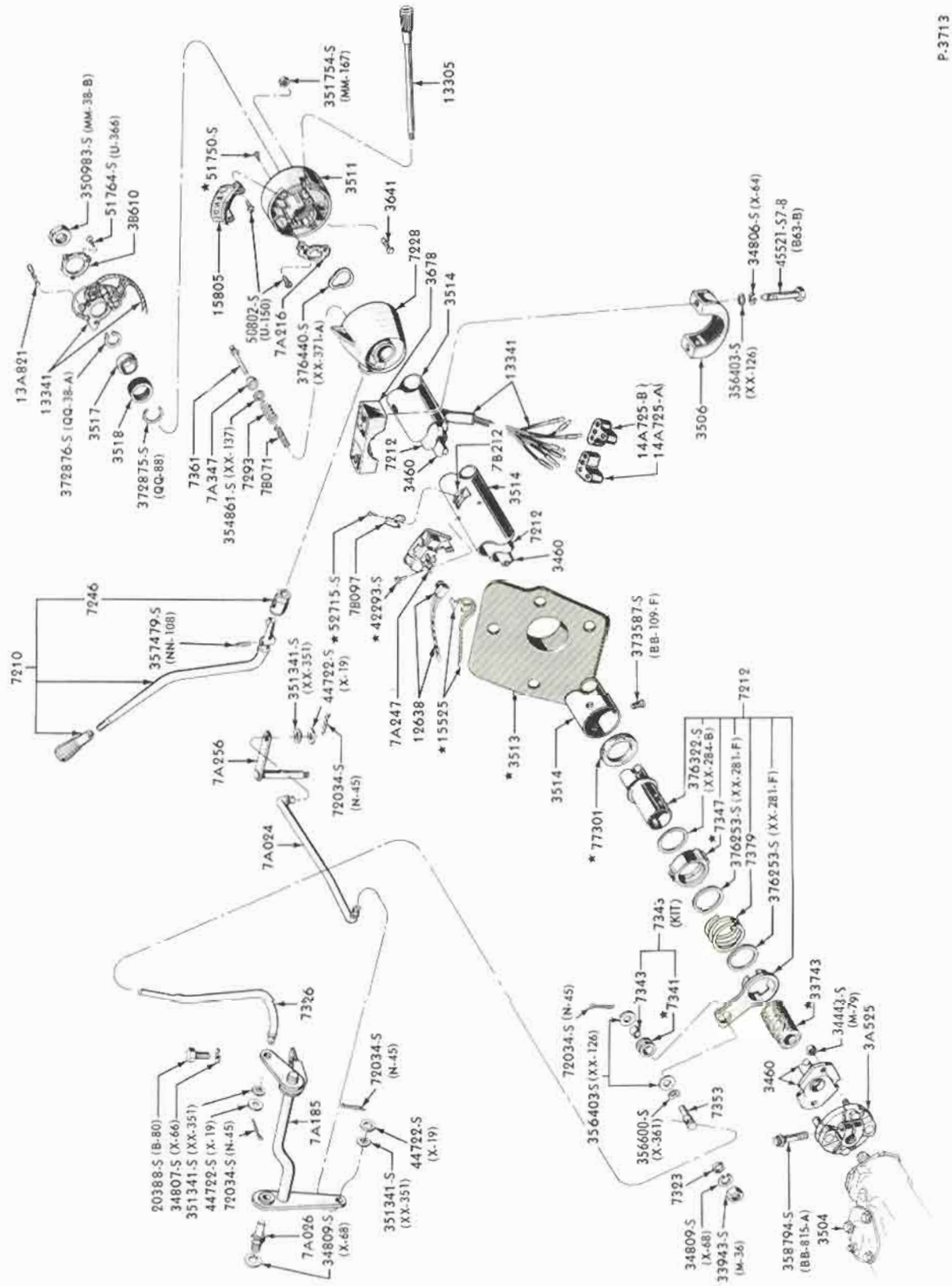

STEERING COLUMN & SHIFT CONTROL SELECTOR MECHANISM-TYPICAL
1965 FAIRLANE

COPYRIGHT © 1975 — FORD MOTOR COMPANY — DEARBORN, MICHIGAN

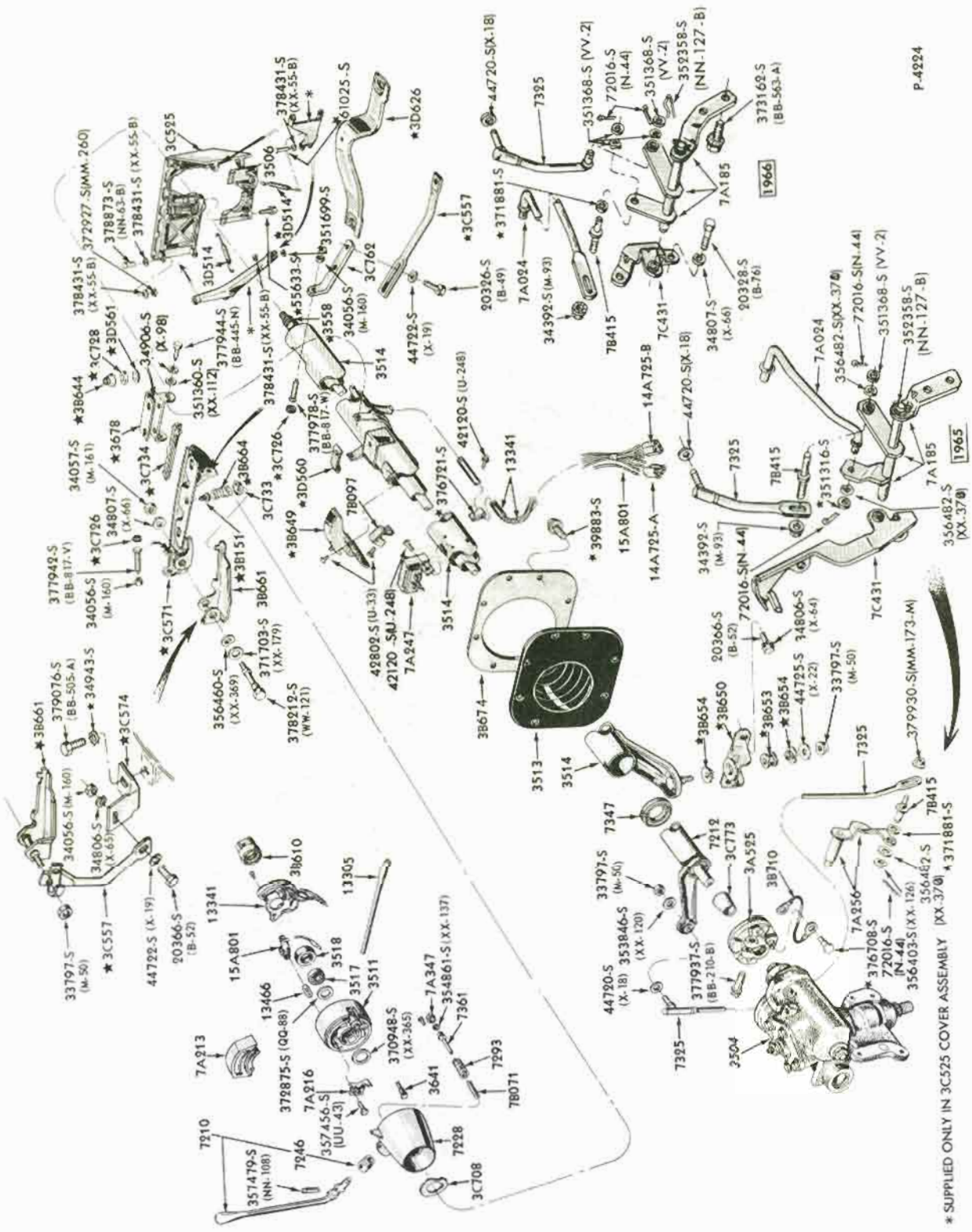

STEERING COLUMN & SHIFT CONTROL SELECTOR MECHANISM-MOVABLE COLUMN-TYPICAL
1965/66 THUNDERBIRD

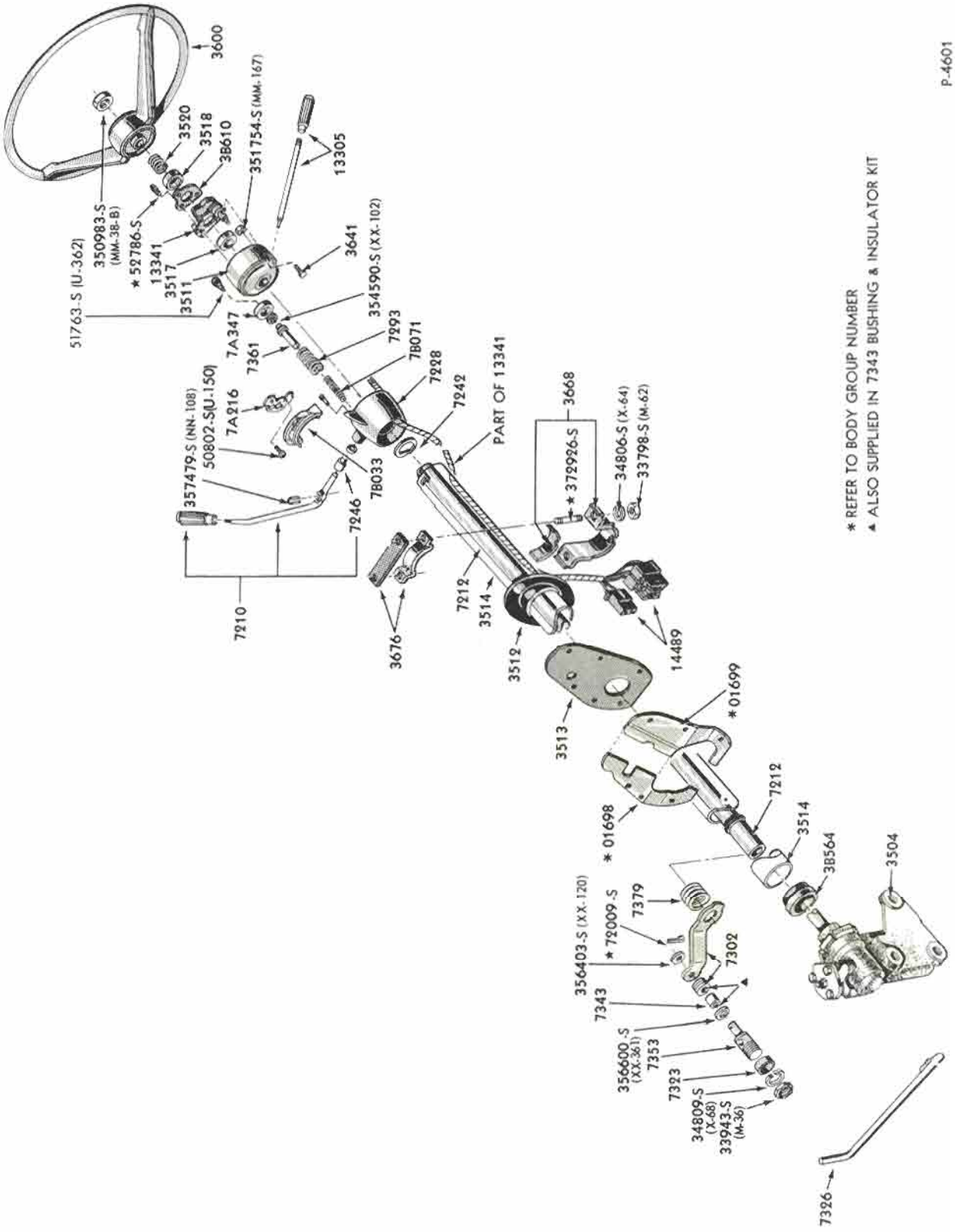

P-4601

STEERING COLUMN & SHIFT CONTROL SELECTOR MECHANISM-TYPICAL
1965 FALCON

COPYRIGHT © 1975 — FORD MOTOR COMPANY — DEARBORN, MICHIGAN

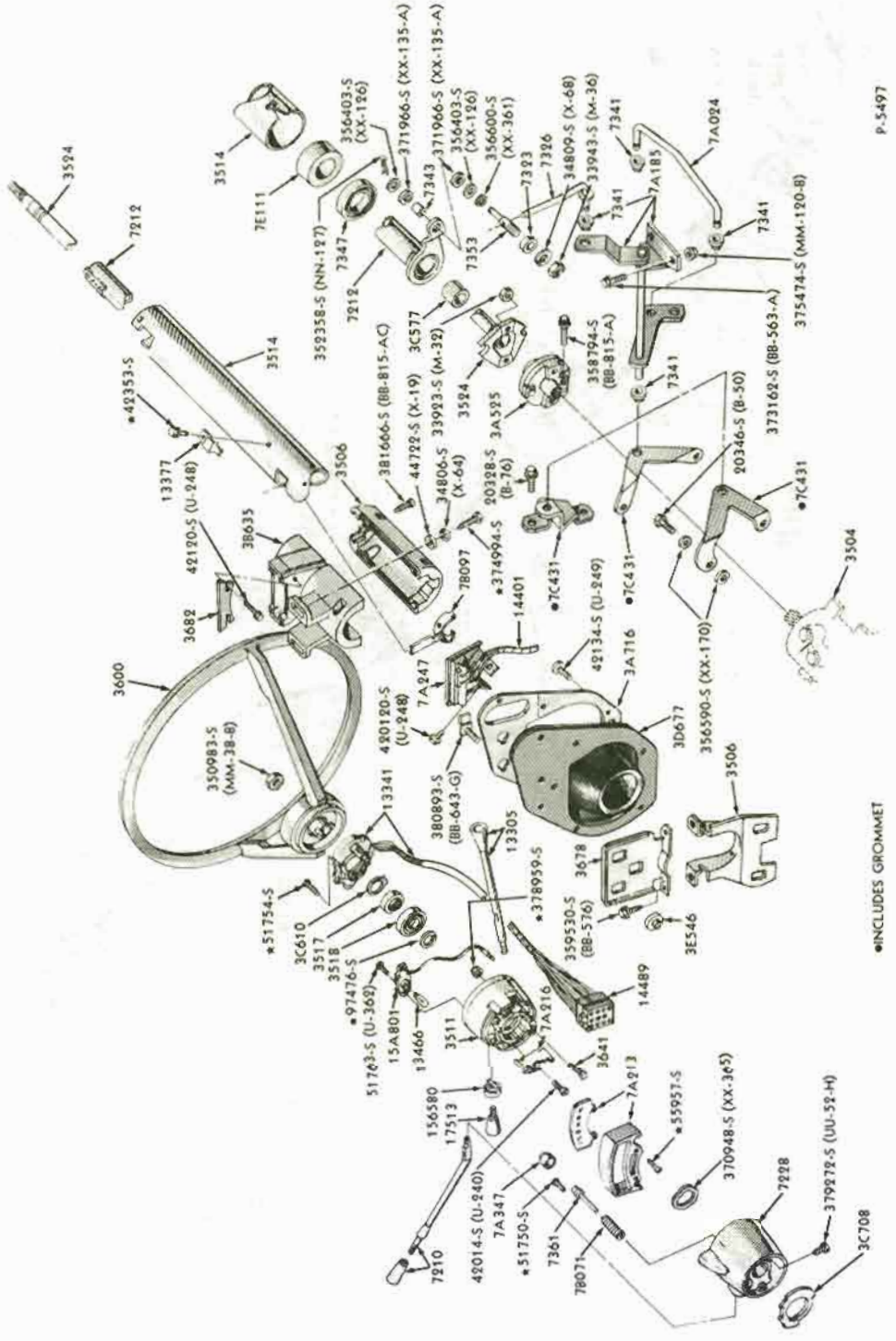

STEERING COLUMN & SHIFT CONTROL SELECTOR MECHANISM

1967 FORD

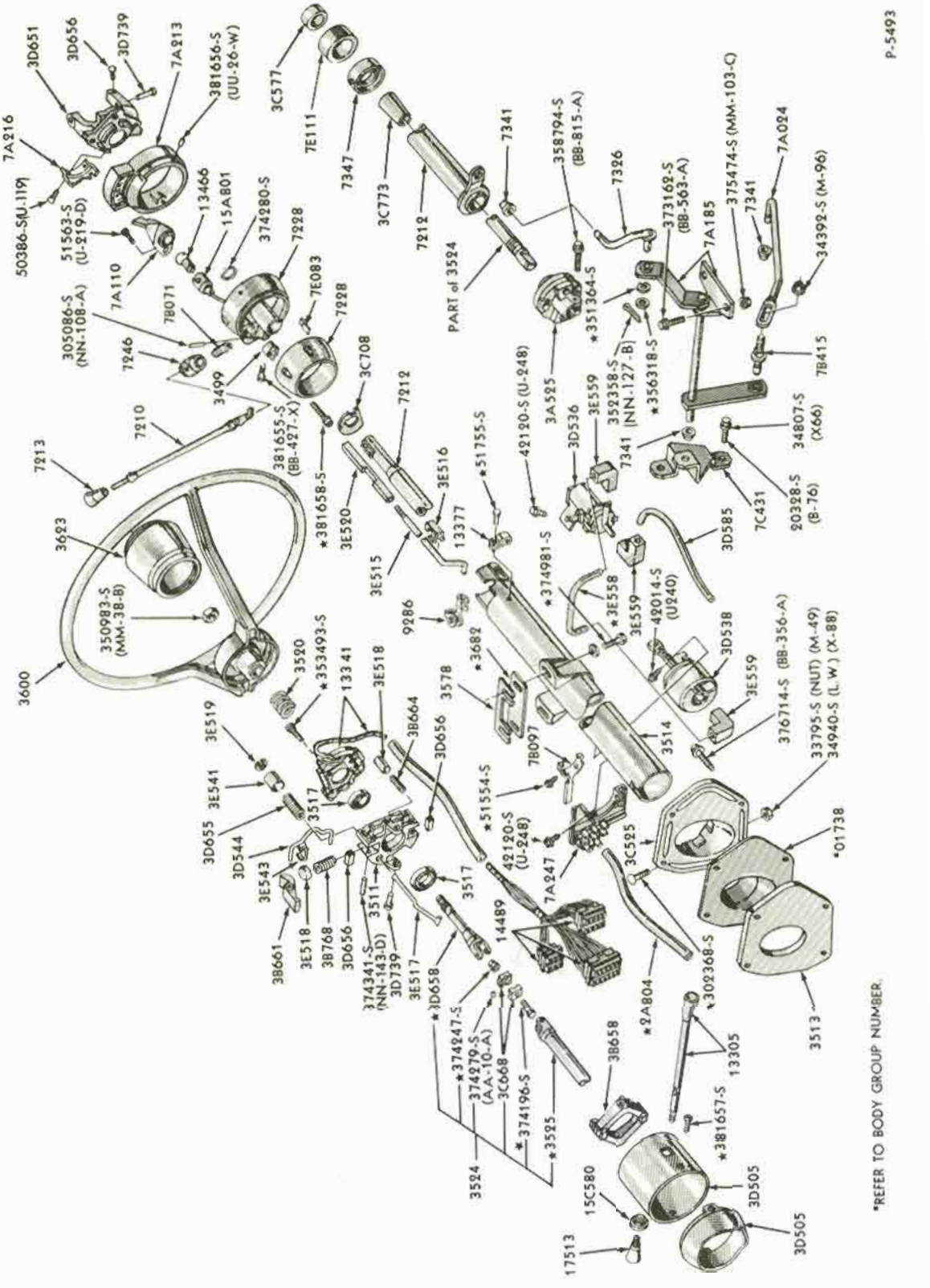

STEERING COLUMN& SHIFT CONTROL SELECTOR MECHANISM-TILT WHEEL
1967 THUNDERBIRD

COPYRIGHT © 1975 — FORD MOTOR COMPANY — DEARBORN, MICHIGAN

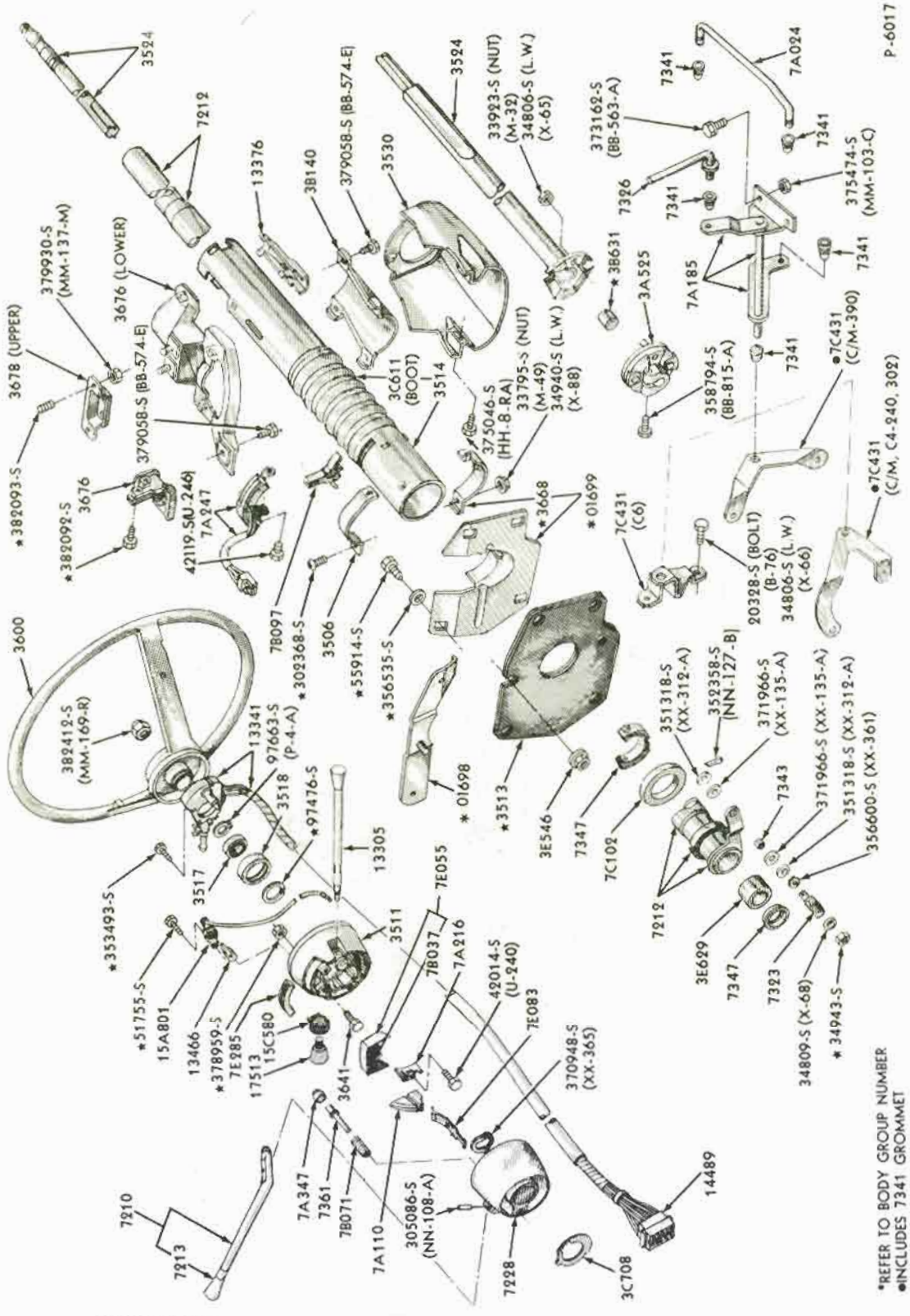

STEERING COLUMN & SHIFT CONTROL SELECTOR MECHANISM-FIXED WHEEL
1968 FORD

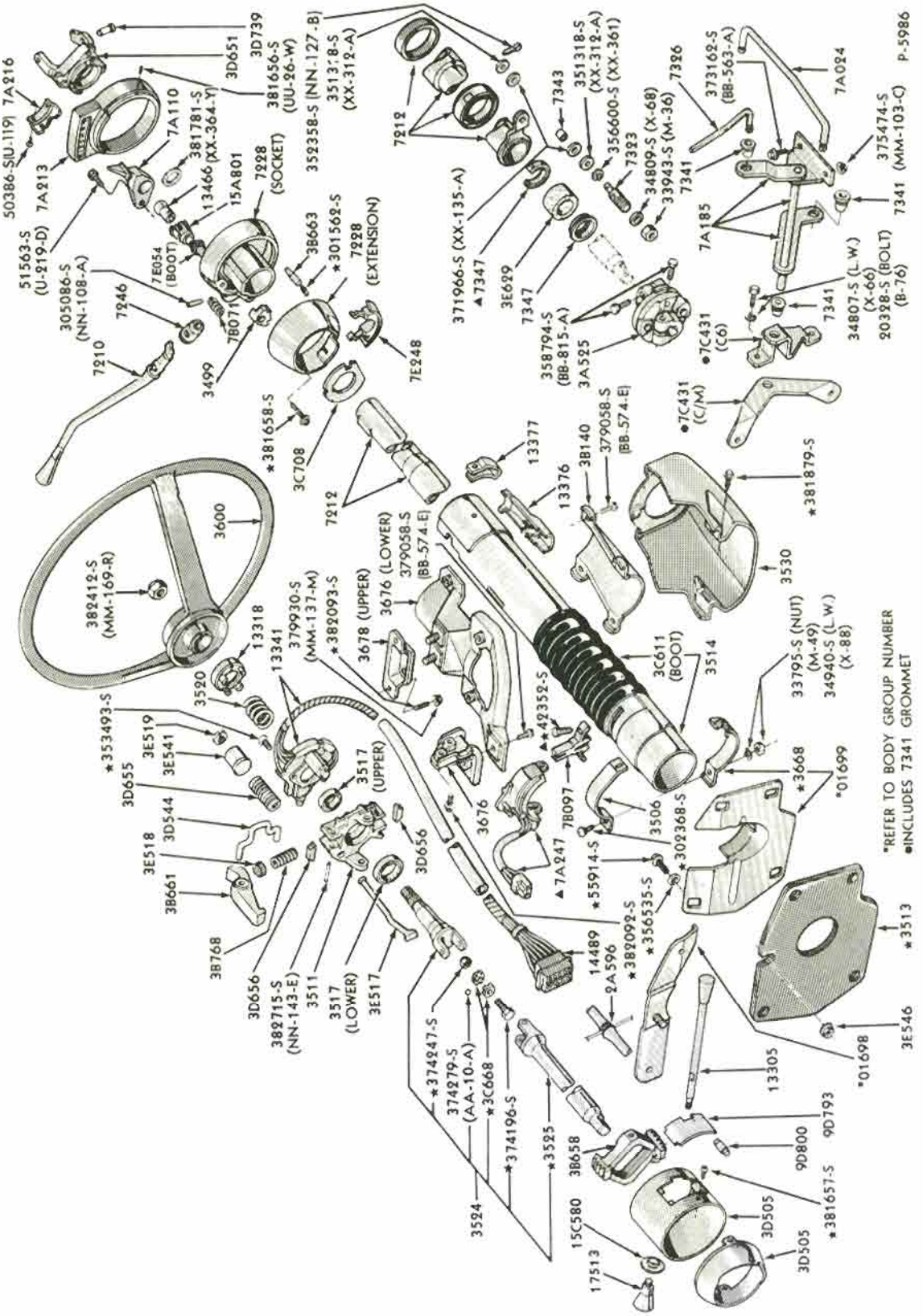

STEERING COLUMN & SHIFT CONTROL SELECTOR MECHANISM-TILT WHEEL
1968 FORD

COPYRIGHT © 1975 — FORD MOTOR COMPANY — DEARBORN, MICHIGAN

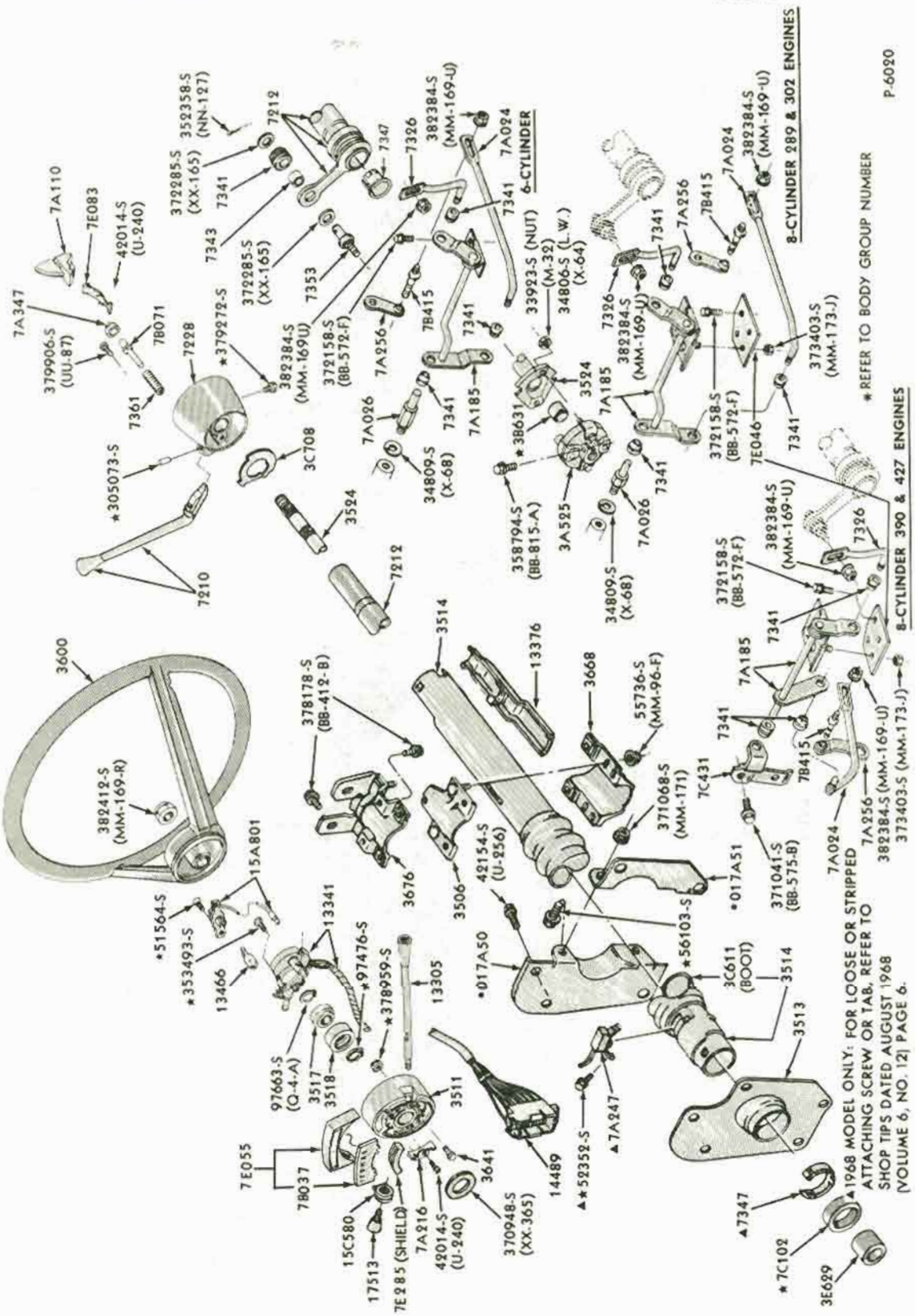

STEERING COLUMN & SHIFT CONTROL SELECTOR MECHANISM
1968/69 FAIRLANE/TORINO and 1968/70 FALCON (Before 1/2/70)

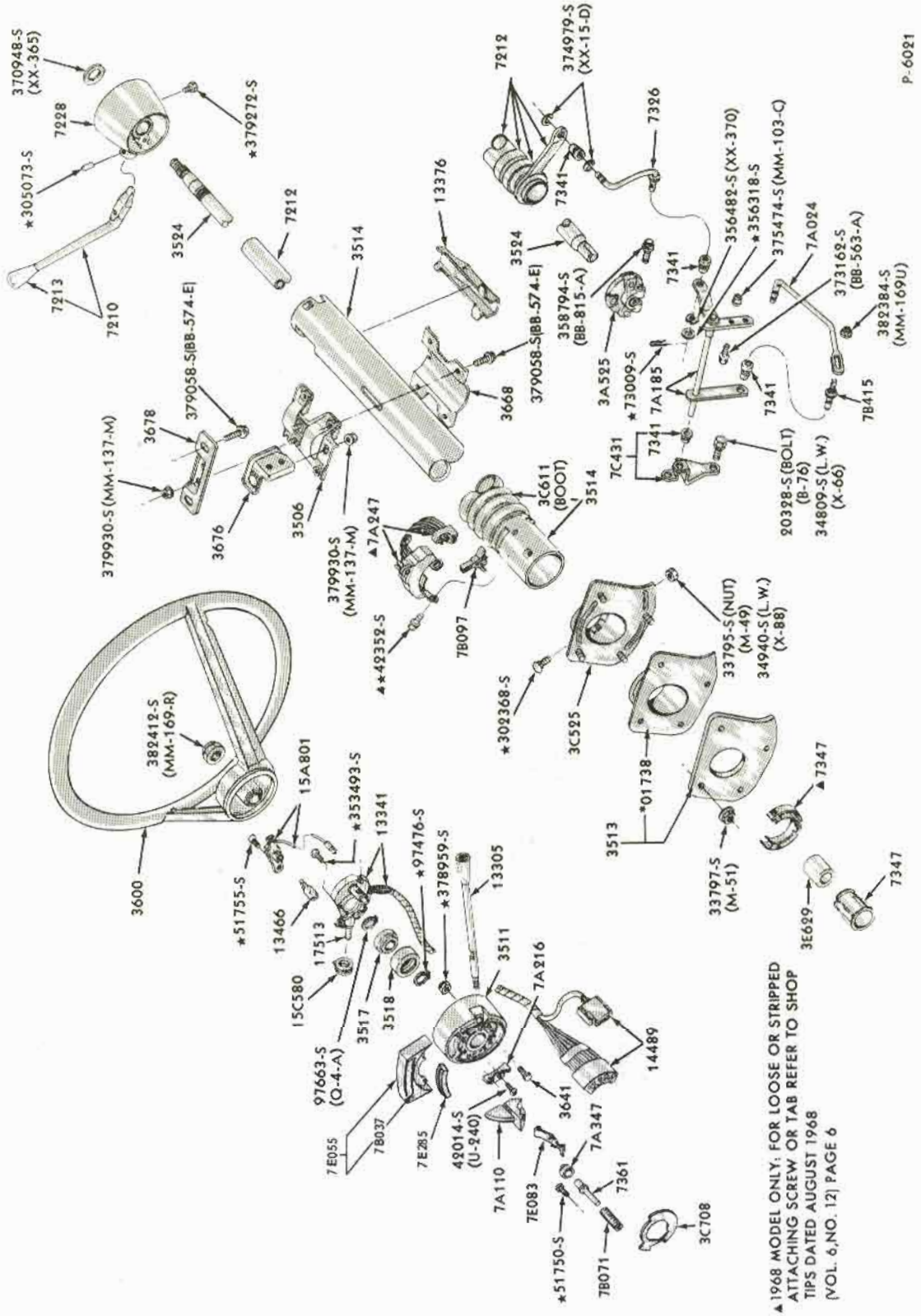

STEERING COLUMN & SHIFT CONTROL SELECTOR MECHANISM-FIXED WHEEL
1968/69 THUNDERBIRD

COPYRIGHT © 1975 — FORD MOTOR COMPANY — DEARBORN, MICHIGAN

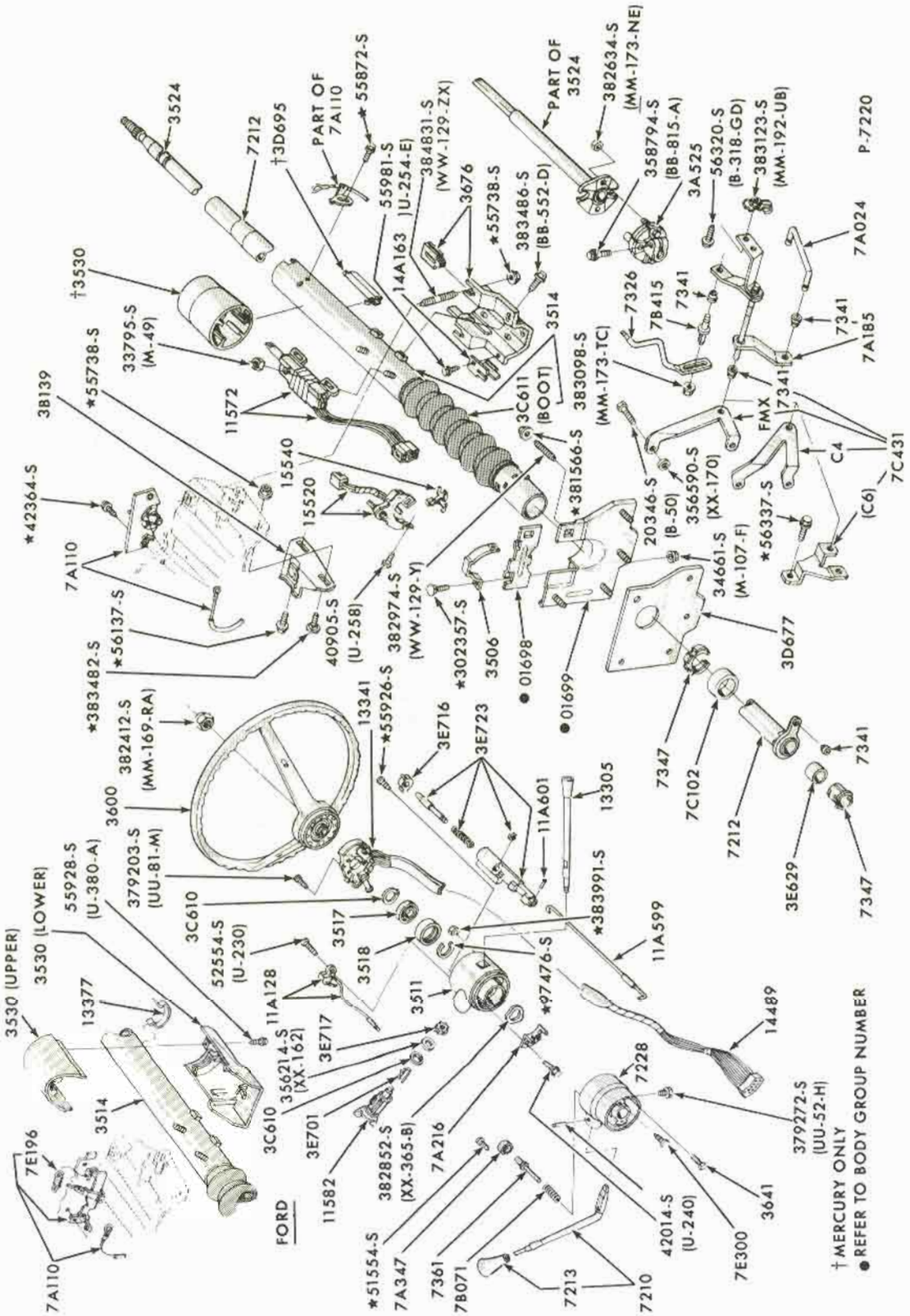

STEERING COLUMN & SHIFT CONTROL SELECTOR MECHANISM (LOCKING)-FIXED WHEEL
1970/72 FORD

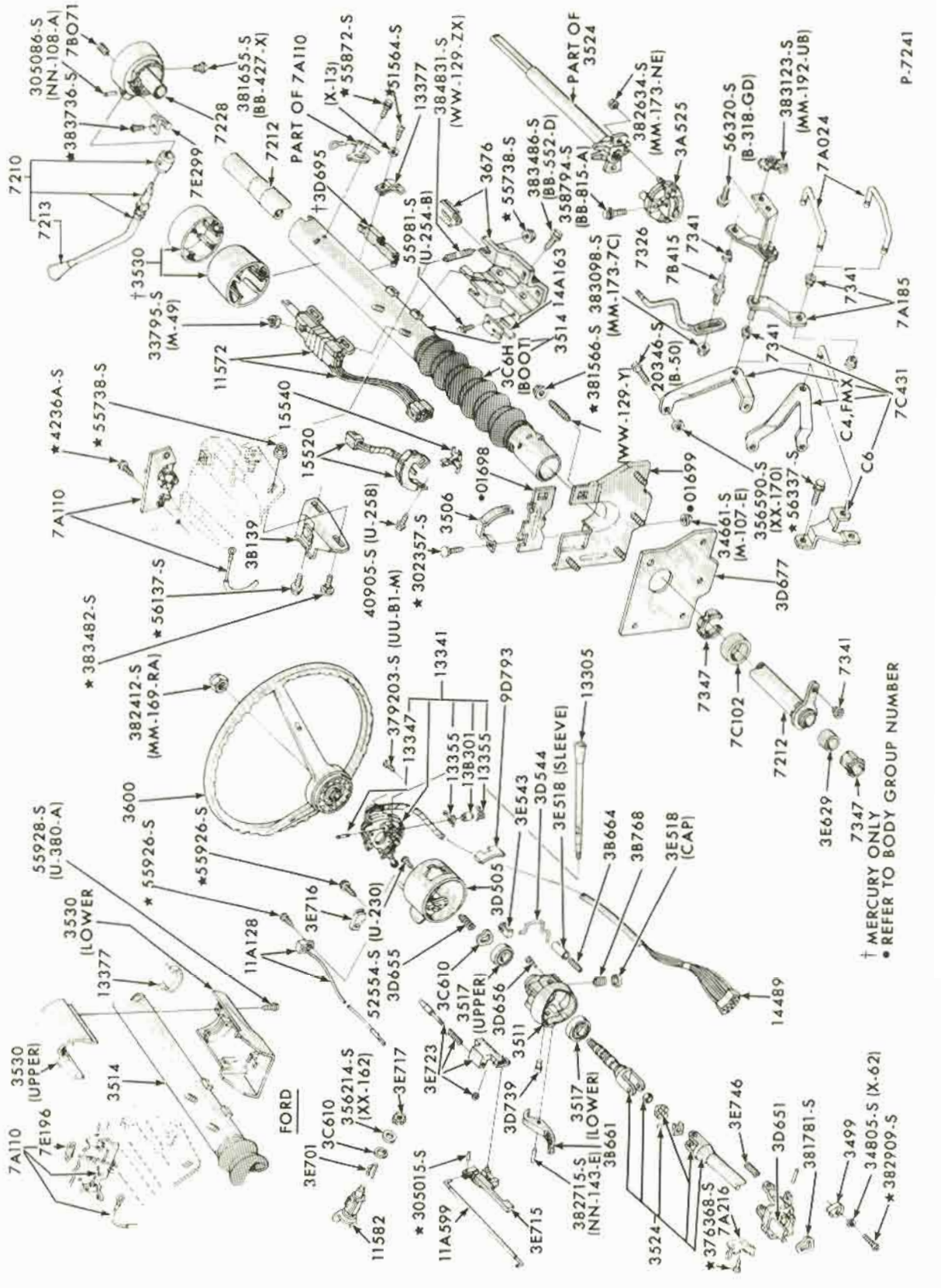

STEERING COLUMN & SHIFT CONTROL SELECTOR MECHANISM(LOCKING)-TILT WHEEL
1970/72 FORD

COPYRIGHT © 1975 — FORD MOTOR COMPANY — DEARBORN, MICHIGAN

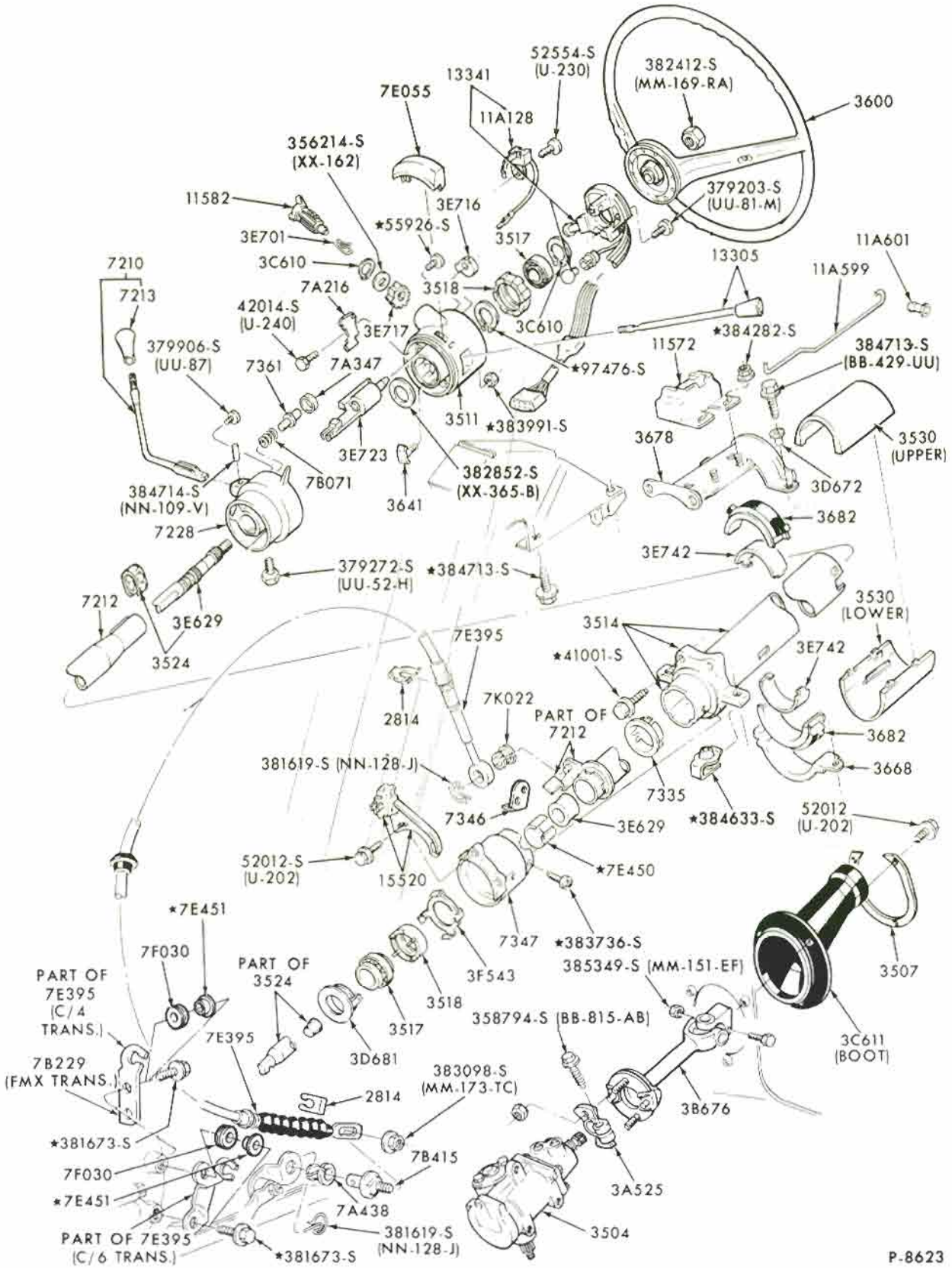

STEERING COLUMN & SHIFT CONTROL SELECTOR MECHANISM
1972 TORINO

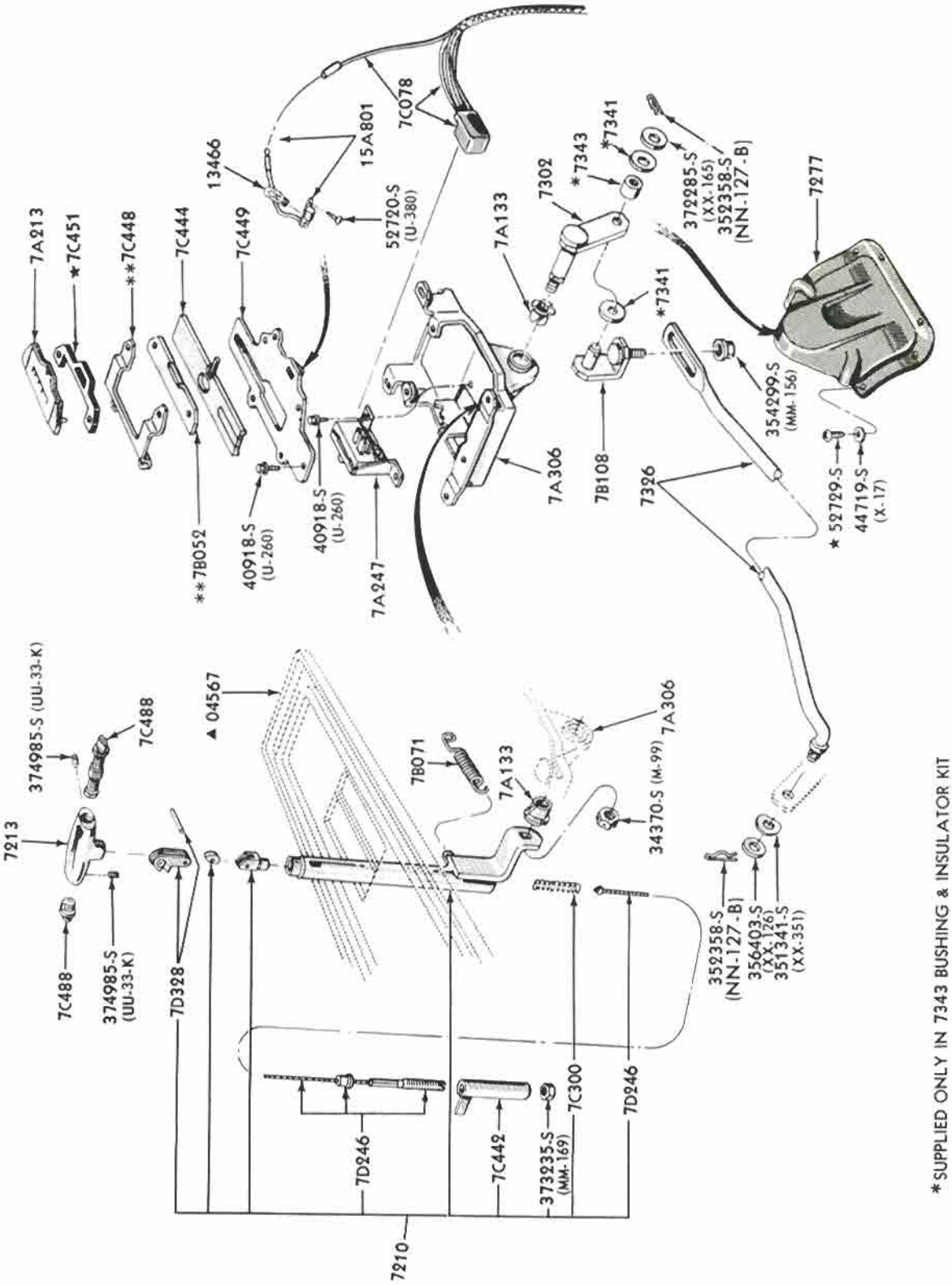

*SUPPLIED ONLY IN 7343 BUSHING & INSULATOR KIT

▲ REFER TO BODY GROUP NUMBER

** 1965

SHIFT CONTROL SELECTOR MECHANISM-CONSOLE MOUNTED-TYPICAL
1965/66 FORD

COPYRIGHT © 1975 — FORD MOTOR COMPANY — DEARBORN, MICHIGAN

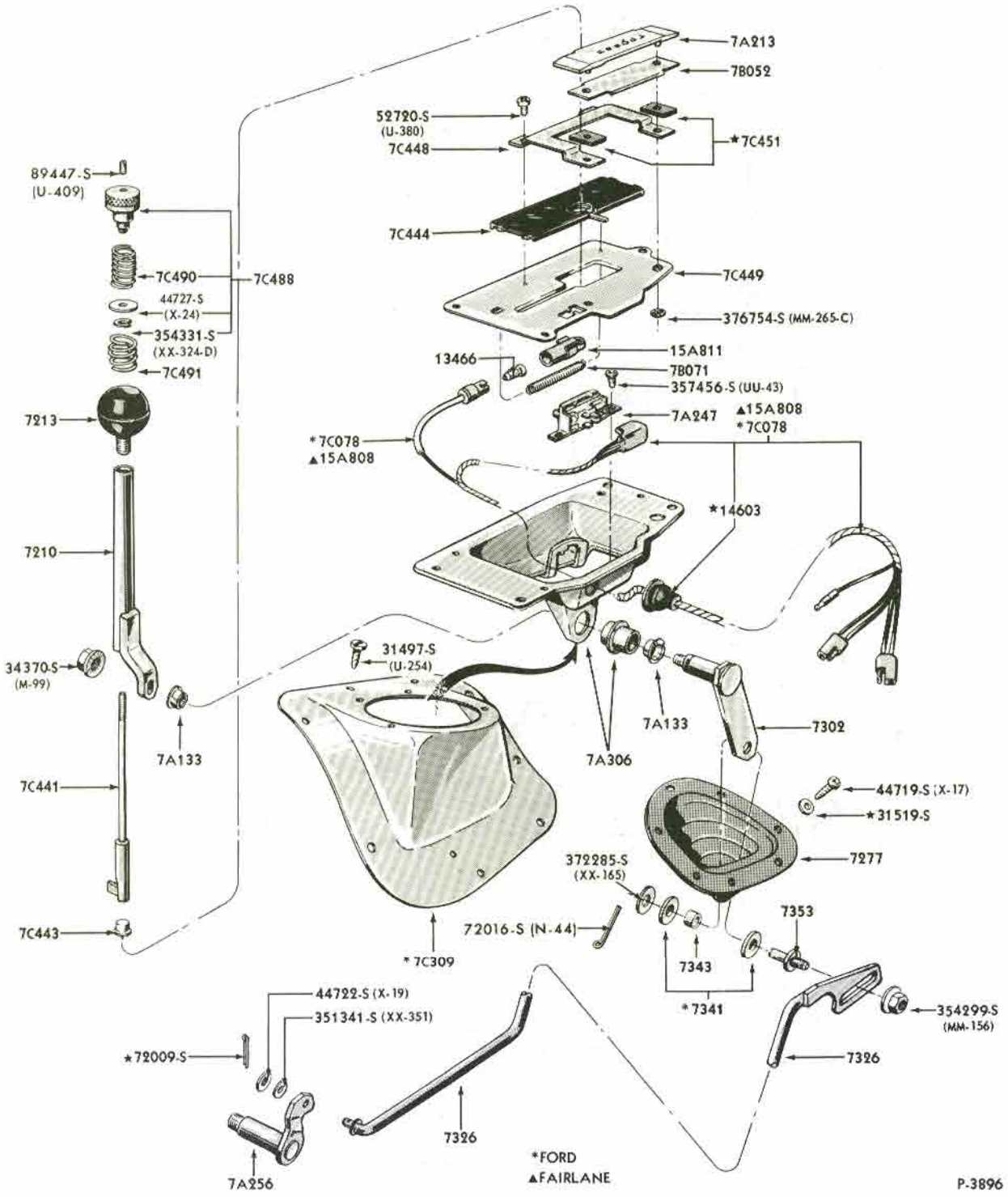

SHIFT CONTROL SELECTOR MECHANISM-CONSOLE MOUNTED-TYPICAL
1965 FAIRLANE

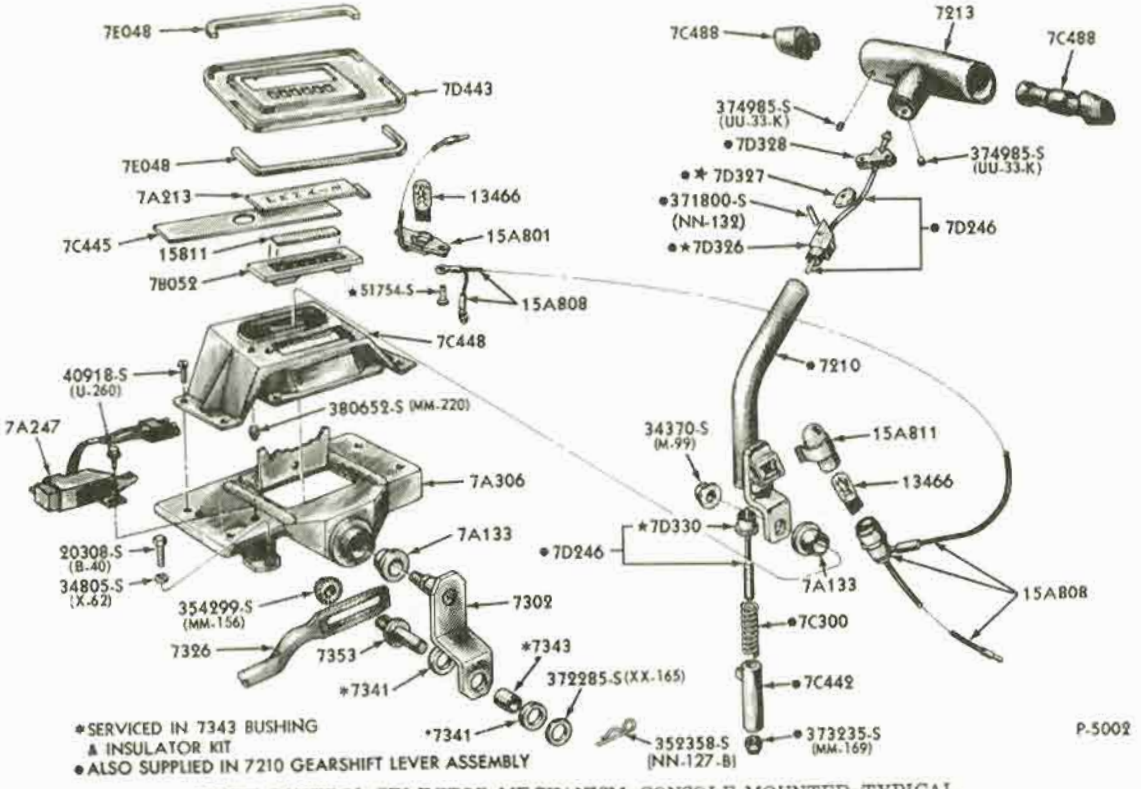

SHIFT CONTROL SELECTOR MECHANISM-CONSOLE MOUNTED-TYPICAL
1966/71 FAIRLANE/TORINO & FALCON

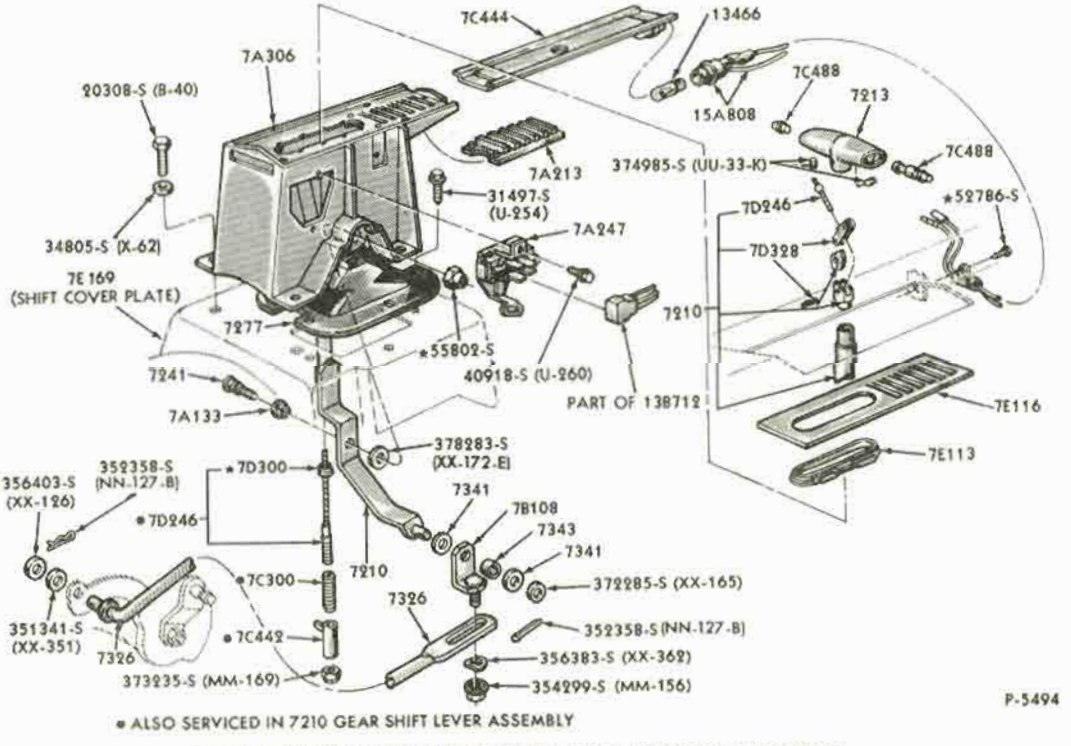

SHIFT CONTROL SELECTOR MECHANISM-CONSOLE MOUNTED
1967 FORD

COPYRIGHT © 1975 — FORD MOTOR COMPANY — DEARBORN, MICHIGAN

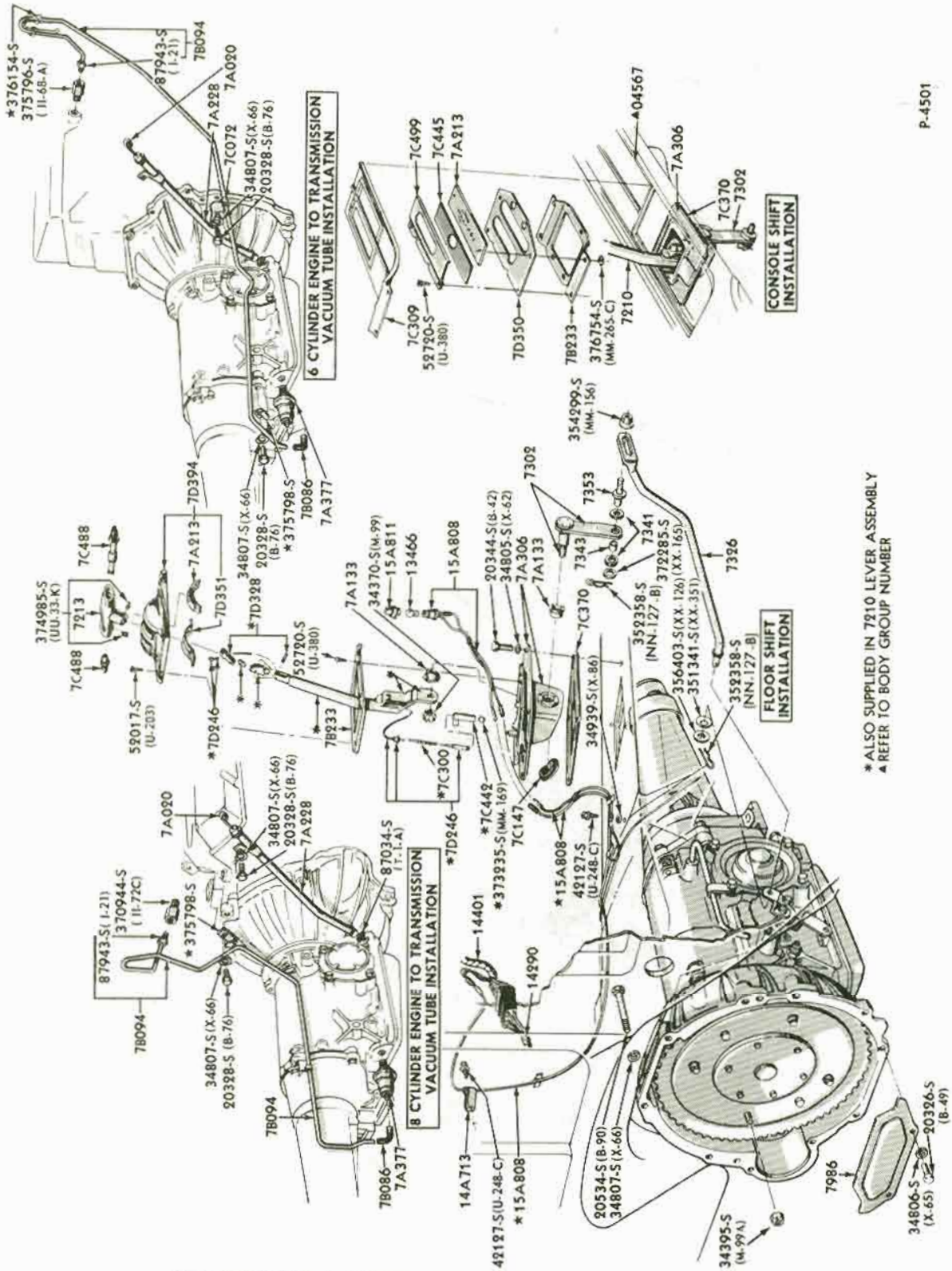

SHIFT CONTROL SELECTOR MECHANISM-FLOOR & CONSOLE MOUNTED
1965/66 MUSTANG

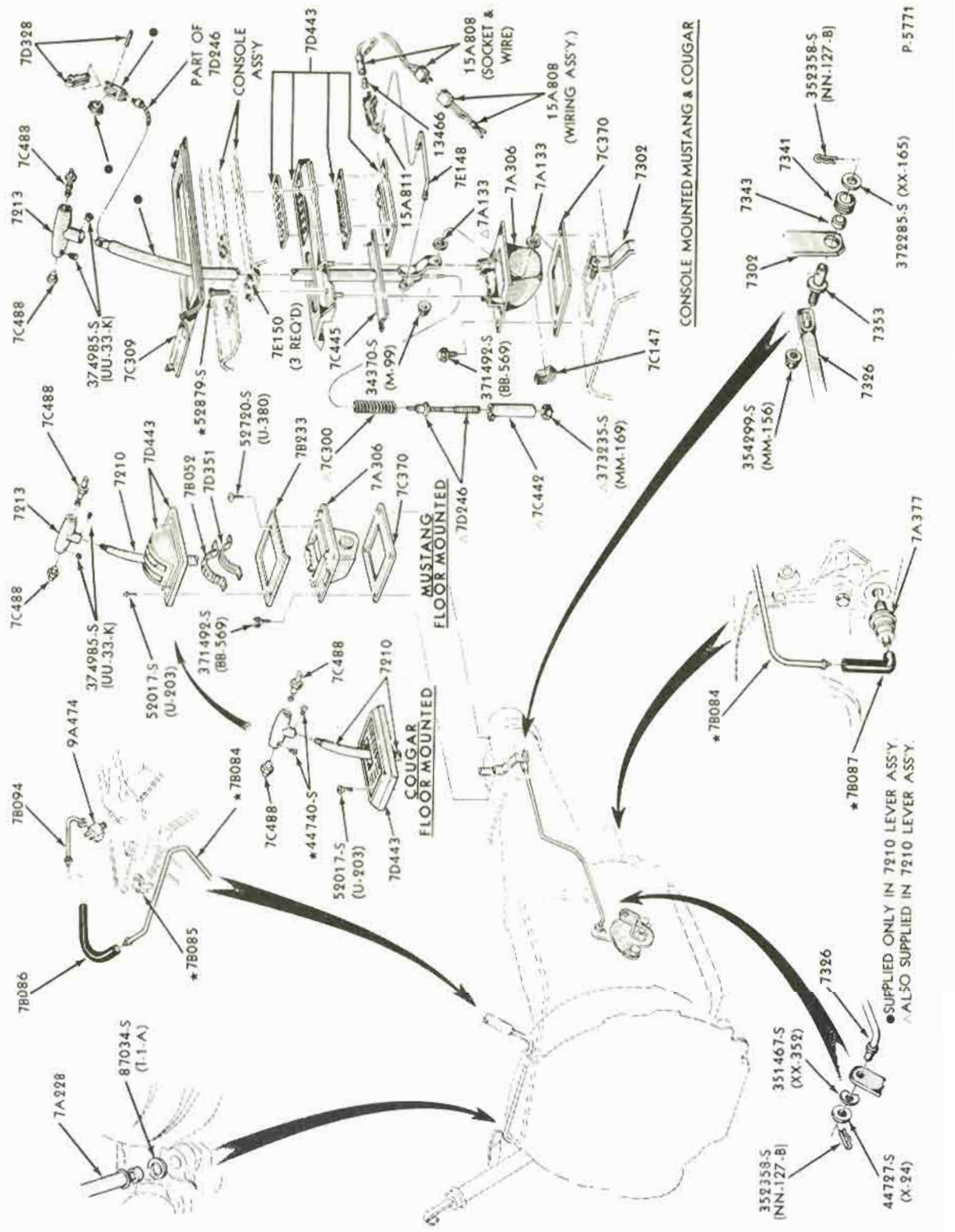

SHIFT CONTROL SELECTOR MECHANISM-FLOOR & CONSOLE MOUNTED
1967/68 MUSTANG

COPYRIGHT © 1975— FORD MOTOR COMPANY —DEARBORN, MICHIGAN

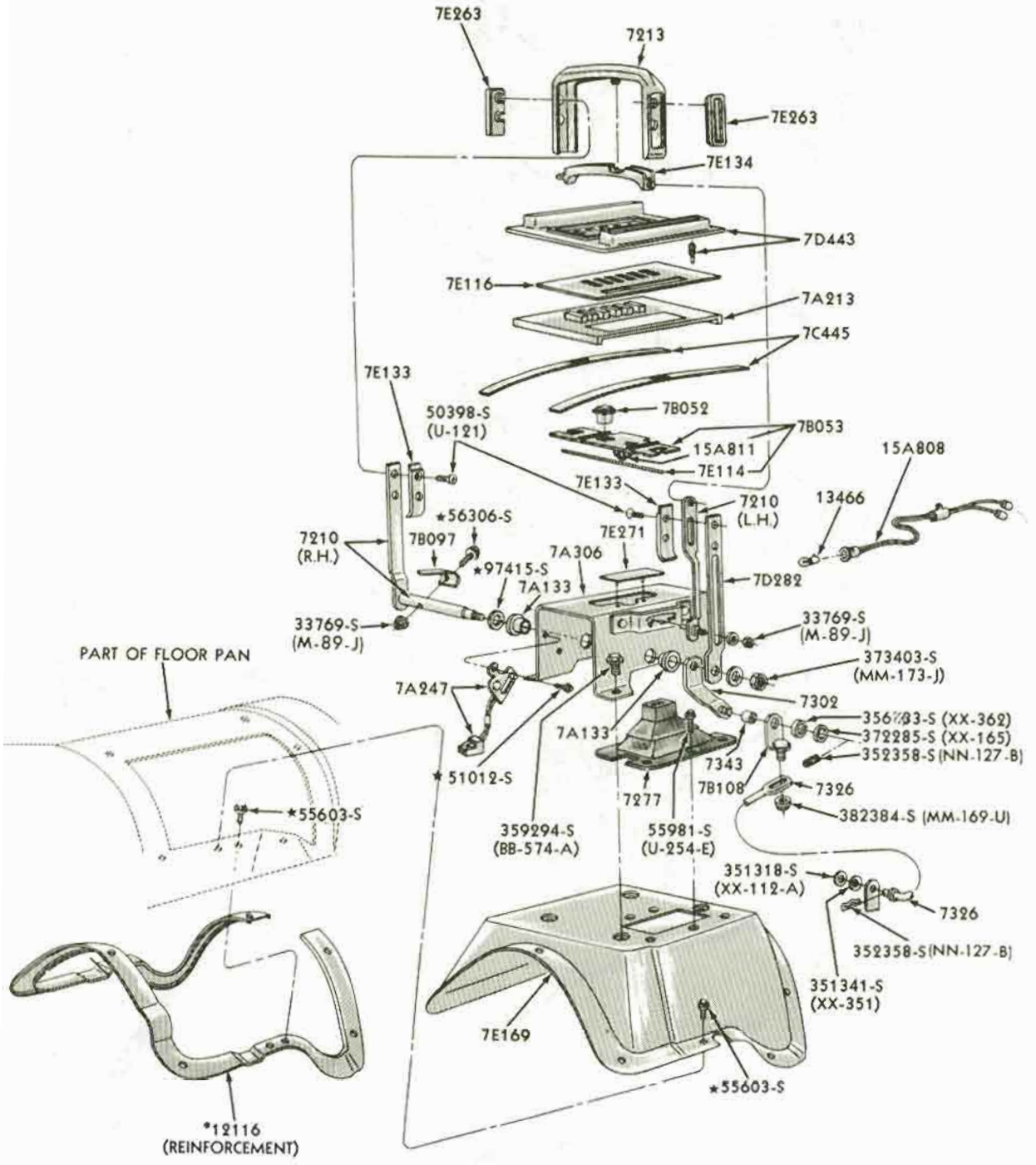

*REFER TO BODY GROUP NUMBER

P-6196

SHIFT CONTROL SELECTOR MECHANISM-CONSOLE MOUNTED
1968/71 FORD

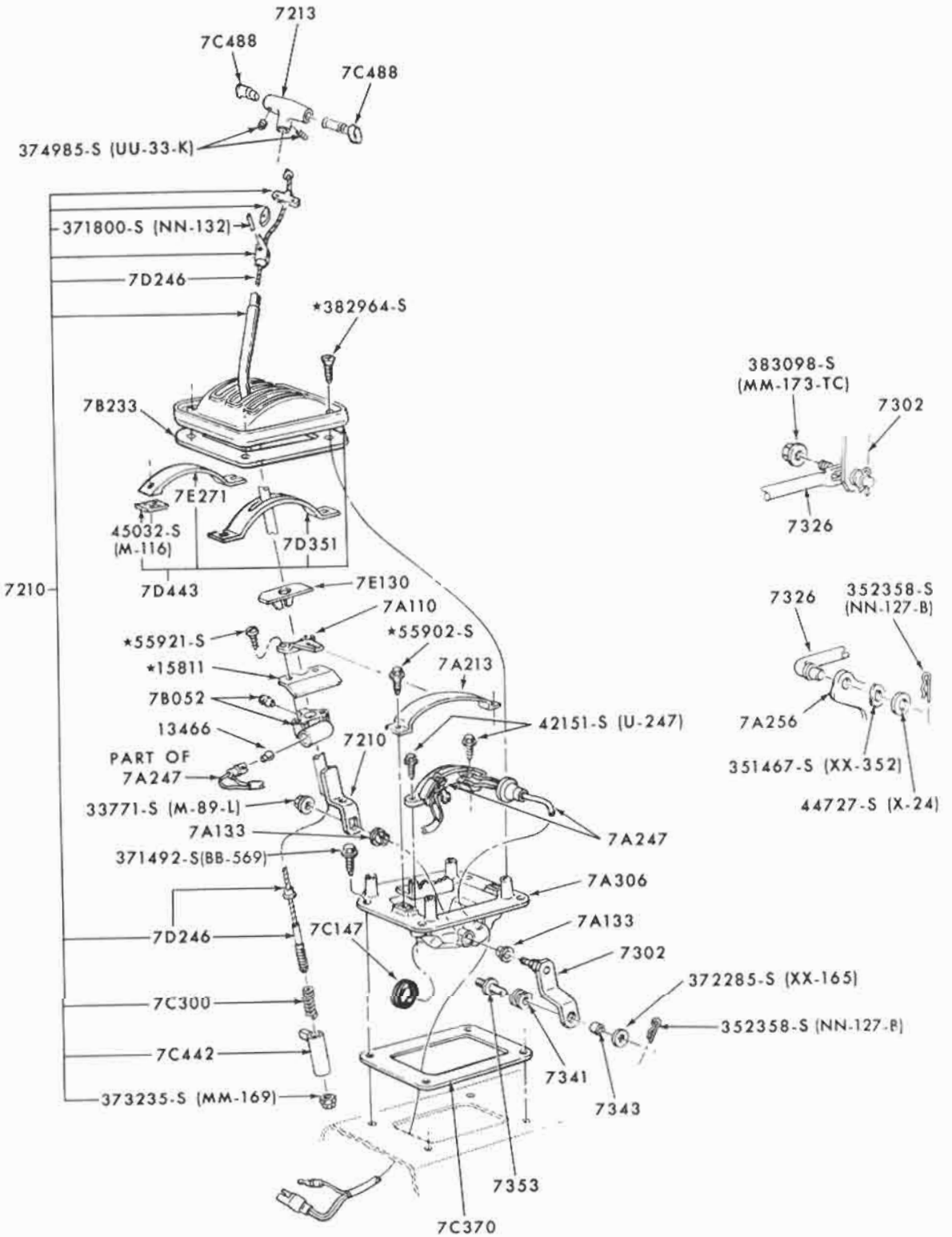

P-6802

SHIFT CONTROL SELECTOR MECHANISM - FLOOR OR CONSOLE MOUNTED
1969/72 MUSTANG, 1971/72 MAVERICK, 1972 TORINO

COPYRIGHT © 1975 — FORD MOTOR COMPANY — DEARBORN, MICHIGAN

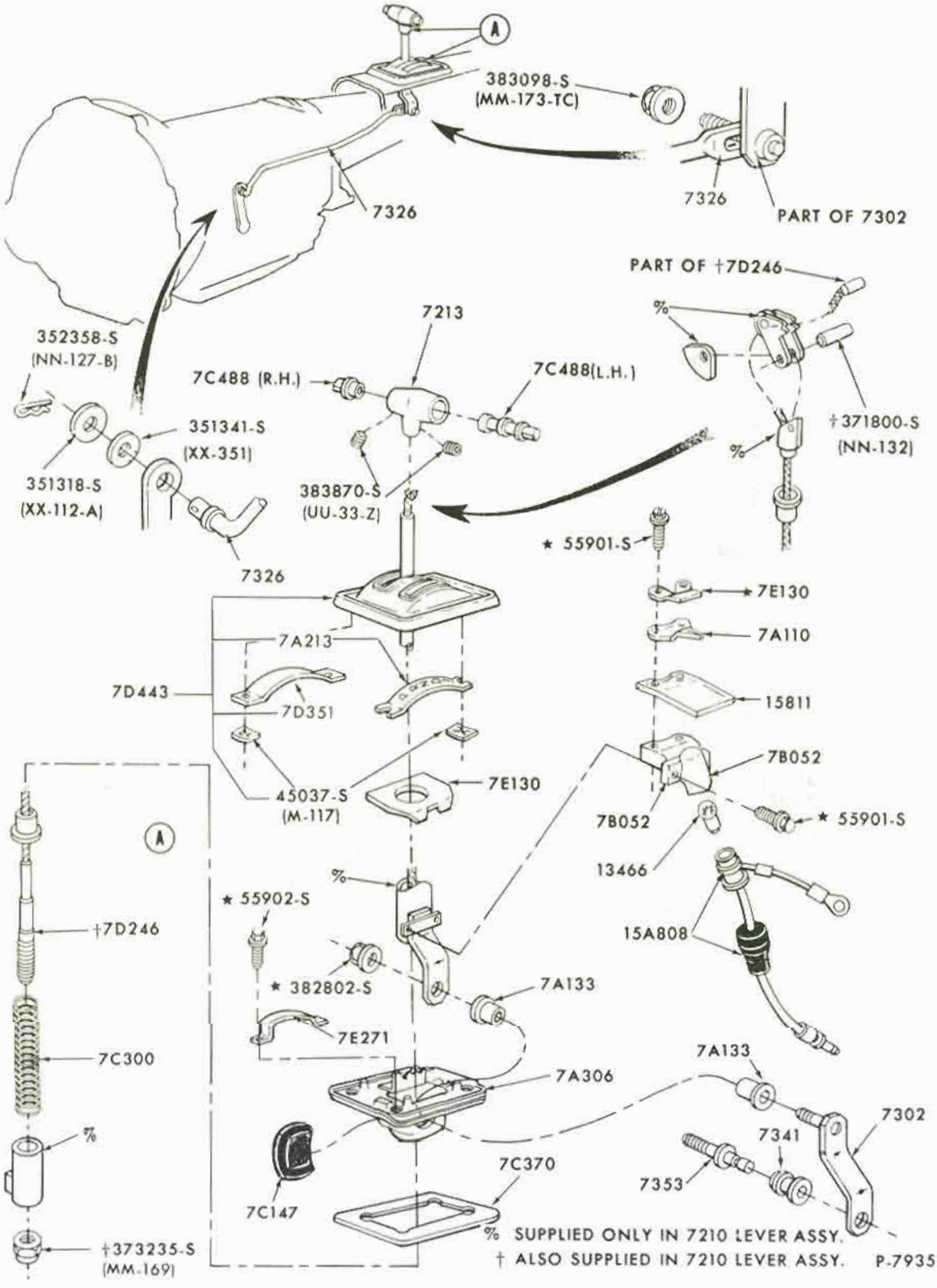

SHIFT CONTROL SELECTOR MECHANISM - FLOOR MOUNTED
1971/72 PINTO

INDEX

THIS INDEX SECTION INCLUDES THE FOLLOWING MAJOR GROUPS:

COOLING SYSTEMS | RADIATOR GRILLE & RELATED PARTS | WATER PUMPS

1965

A (FORD)

TITLE	SECTION	PAGE	ILLUS. NO.
COOLING SYSTEMS -			
6 cyl. - 240 engine	80	1	P-4159
8 cyl. - 289, 352, 390 & 427 engines	80	1	P-4159
RADIATOR GRILLE and RELATED PARTS	82	1	P-7753
WATER PUMPS -			
6 cyl. - 240 engine	85	1	P-4731
8 cyl. - 289 engine (without cover)	85	2	P-3772
8 cyl. - 289 engine (with cover)	85	2	P-5143
8 cyl. - 352, 390 & 427 engines	85	3	P-9198

B (FAIRLANE)

TITLE	SECTION	PAGE	ILLUS. NO.
COOLING SYSTEMS -			
6 cyl. - 200 engine	80	3	P-3723
8 cyl. - 289 engine	80	3	P-3723
RADIATOR GRILLE and RELATED PARTS	82	2	P-4701
WATER PUMPS -			
6 cyl. - 200 engine	85	1	P-2962
8 cyl. - 289 engine (without cover)	85	2	P-3772
8 cyl. - 289 engine (with cover)	85	2	P-5143

F (MUSTANG)

TITLE	SECTION	PAGE	ILLUS. NO.
COOLING SYSTEMS -			
6 cyl. - 170, 200 engines	80	1	P-3147
8 cyl. - 260, 289 engines	80	1	P-3147
RADIATOR GRILLE and RELATED PARTS	82	3	P-4458
WATER PUMPS -			
6 cyl. - 170, 200 engines	85	1	P-2962
8 cyl. - 260, 289 engines (without cover)	85	2	P-3772
8 cyl. - 289 engine (with cover)	85	2	P-5143

S (THUNDERBIRD)

TITLE	SECTION	PAGE	ILLUS. NO.
COOLING SYSTEM -			
8 cyl. - 390 engine	80	2	P-3400
RADIATOR GRILLE and RELATED PARTS	82	1	P-4212
WATER PUMP -			
8 cyl. - 390 engine	85	3	P-9198

X (FALCON)

TITLE	SECTION	PAGE	ILLUS. NO.
COOLING SYSTEMS -			
6 cyl. - 170, 200 engines	80	1	P-3147
8 cyl. - 289 engine	80	1	P-3147
RADIATOR GRILLE and RELATED PARTS	82	5	P-4206
WATER PUMPS -			
6 cyl. - 170, 200 engines	85	1	P-2962
8 cyl. - 289 engine (without cover)	85	2	P-3772
8 cyl. - 289 engine (with cover)	85	2	P-5143

1966

A (FORD)

TITLE	SECTION	PAGE	ILLUS. NO.
COOLING SYSTEMS -			
6 cyl. - 240 engine	80	1	P-4159
8 cyl. - 289, 352, 390, 427 & 428 engines	80	1	P-4159
RADIATOR GRILLE and RELATED PARTS	82	4	P-7752 P-7754
WATER PUMPS -			
6 cyl. - 240 engine	85	1	P-4731
8 cyl. - 289 engine	85	2	P-5143
8 cyl. - 352, 390, 427 & 428 engines	85	3	P-9198

B (FAIRLANE)

TITLE	SECTION	PAGE	ILLUS. NO.
COOLING SYSTEMS -			
6 cyl. - 200 engine	80	3	P-3723
8 cyl. - 289 engine	80	3	P-3723
8 cyl. - 390 engine	80	4	P-5723
RADIATOR GRILLE and RELATED PARTS	82	5	P-4946
WATER PUMPS -			
6 cyl. - 200 engine	85	1	P-2962
8 cyl. - 289 engine	85	2	P-5143
8 cyl. - 390 engine	85	3	P-9198

COPYRIGHT © 1975 — FORD MOTOR COMPANY — DEARBORN, MICHIGAN

INDEX

TITLE	SECTION	PAGE	ILLUS. NO.
1966			
F (MUSTANG)			
COOLING SYSTEMS -			
6 cyl. - 200 engine	80	1	P-3147
8 cyl. - 289 engine	80	1	P-3147
RADIATOR GRILLE and RELATED PARTS	82	3	P-4458
WATER PUMPS -			
6 cyl. - 200 engine	85	1	P-2962
8 cyl. - 289 engine	85	2	P-5143
S (THUNDERBIRD)			
COOLING SYSTEMS -			
8 cyl. - 390 & 428 engines	80	2	P-3400
RADIATOR GRILLE and RELATED PARTS	82	6	P-5010
WATER PUMPS -			
8 cyl. - 390 & 428 engines	85	3	P-9198
U (BRONCO)			
COOLING SYSTEMS -			
6 cyl. - 170 engine	80	1	P-3147
8 cyl. - 289 engine	80	4	P-5287
RADIATOR GRILLE and RELATED PARTS	82	7	P-5117
WATER PUMPS -			
6 cyl. - 170 engine	85	1	P-2962
8 cyl. - 289 engine	85	2	P-5143
X (FALCON)			
COOLING SYSTEMS -			
6 cyl. - 170 & 200 engines	80	1	P-3147
8 cyl. - 289 engine	80	1	P-3147
RADIATOR GRILLE and RELATED PARTS	82	8	P-4947
WATER PUMPS -			
6 cyl. - 170 & 200 engines	85	1	P-2962
8 cyl. - 289 engine	85	2	P-5143
1967			
A (FORD)			
COOLING SYSTEMS -			
6 cyl. - 240 engine	80	2	P-9823
8 cyl. - 289,390,427 & 428 engines	80	2	P-9823
RADIATOR GRILLE and RELATED PARTS	82	9	P-5605
WATER PUMPS -			
6 cyl. - 240 engine	85	1	P-4731
8 cyl. - 289 engine	85	2	P-5143
8 cyl. - 390,427 & 428 engines	85	3	P-9198
B (FAIRLANE)			
COOLING SYSTEMS -			
6 cyl. - 200 engine	80	3	P-3723
8 cyl. - 289 engine	80	3	P-3723
8 cyl. - 390 & 427 engines	80	4	P-5723
RADIATOR GRILLE and RELATED PARTS	82	5	P-4946
WATER PUMPS -			
6 cyl. - 200 engine	85	1	P-2962
8 cyl. - 289 engine	85	2	P-5143
8 cyl. - 390 & 427 engines	85	3	P-9198
F (MUSTANG)			
COOLING SYSTEMS -			
6 cyl. - 200 engine	80	1	P-3147
8 cyl. - 289 engine	80	1	P-3147
8 cyl. - 390 engine	80	4	P-5723
RADIATOR GRILLE and RELATED PARTS -			
-- except GT350/500	82	10	P-5609
-- GT350/500	82	11	P-6835
WATER PUMPS			
6 cyl. - 200 engine	85	1	P-2962
8 cyl. - 289 engine	85	2	P-5143
8 cyl. - 390 engine	85	3	P-9198
S (THUNDERBIRD)			
COOLING SYSTEM -			
8 cyl. - 390,428 engine	80	2	P-9823
RADIATOR GRILLE and RELATED PARTS	82	13	P-5520
WATER PUMPS -			
8 cyl. - 390 & 428 engines	85	3	P-9198

INDEX

TITLE	SECTION	PAGE	ILLUS. NO.

1967

U (BRONCO)

COOLING SYSTEMS -			
6 cyl. - 170 engine	80	1	P-3147
8 cyl. - 289 engine	80	4	P-5287
RADIATOR GRILLE and RELATED PARTS	82	7	P-5117
WATER PUMPS -			
6 cyl. - 170 engine	85	1	P-2962
8 cyl. - 289 engine	85	2	P-5143

X (FALCON)

COOLING SYSTEMS -			
6 cyl. - 170 & 200 engine	80	1	P-3147
8 cyl. - 289 engine	80	1	P-3147
RADIATOR GRILLE and RELATED PARTS	82	8	P-4947
WATER PUMPS -			
6 cyl. - 170 & 200 engines	85	1	P-2962
8 cyl. - 289 engine	85	2	P-5143

1968

A (FORD)

COOLING SYSTEMS -			
6 cyl. - 240 engine	80	2	P-9823
8 cyl. - 302 engine	80	2	P-9823
8 cyl. - 390, 427 & 428 engines	80	2	P-9823
RADIATOR GRILLE and RELATED PARTS -			
--w/o headlamp covers	82	14	P-5983
--w/headlamp covers	82	15	P-5982
WATER PUMPS -			
6 cyl. - 240 engine	85	1	P-4731
8 cyl. - 302 engine	85	2	P-5143
8 cyl. - 390, 427 & 428 engines	85	3	P-9198

B (FAIRLANE/TORINO)

COOLING SYSTEMS			
6 cyl. - 200 engine	80	3	P-3723
8 cyl. - 289 & 302 engines	80	3	P-3723
8 cyl. - 390 & 427 engines	80	4	P-5723
8 cyl. - 428 engine	80	4	P-5723
RADIATOR GRILLE and RELATED PARTS	82	16	P-6040
WATER PUMPS			
6 cyl. - 200 engine	85	1	P-2962
8 cyl. - 289 & 302 engines	85	2	P-5143
8 cyl. - 390, 427 & 428 engines	85	3	P-9198

F (MUSTANG)

COOLING SYSTEMS -			
6 cyl. - 200 engine	80	1	P-3147
8 cyl. - 289, 302 engines	80	1	P-3147
8 cyl. - 390, 427 & 428 engines	80	4	P-5723
RADIATOR GRILLE and RELATED PARTS -			
-- except GT350/500	82	10	P-5609
-- GT350/500	82	11	P-6835
WATER PUMPS -			
6 cyl. - 200 engine	85	1	P-2962
8 cyl. - 289 & 302 engines	85	2	P-5143
8 cyl. - 390, 427 & 428 engines	85	3	P-9198

S (THUNDERBIRD)

COOLING SYSTEMS -			
8 cyl. - 390 engine	80	2	P-9823
RADIATOR GRILLE and RELATED PARTS	82	13	P-5520
WATER PUMPS			
8 cyl. - 390 engine	85	3	P-9198
8 cyl. - 429 engine	85	3	P-6492

COPYRIGHT © 1975 — FORD MOTOR COMPANY — DEARBORN, MICHIGAN

FINAL ISSUE

INDEX

TITLE	SECTION	PAGE	ILLUS. NO.

1968

U (BRONCO)

COOLING SYSTEMS -			
6 cyl. - 170 engine	80	1	P-3147
8 cyl. - 289 engine	80	4	P-5287
RADIATOR GRILLE and RELATED PARTS	82	7	P-5117
WATER PUMPS -			
6 cyl. - 170 engine	85	1	P-2962
8 cyl. - 289 engine	85	2	P-5143

X (FALCON)

COOLING SYSTEMS -			
6 cyl. - 170 & 200 engines	80	1	P-3147
8 cyl. - 289 engine	80	1	P-3147
8 cyl. - 302 engine	80	1	P-3147
RADIATOR GRILLE and RELATED PARTS	82	8	P-4947
WATER PUMPS			
6 cyl. - 170 & 200 engines	85	1	P-2962
8 cyl. - 289 & 302 engines	85	2	P-5143

1969

A (FORD)

COOLING SYSTEMS -			
6 cyl. - 240 engine	80	2	P-9823
8 cyl. - 302 engine	80	2	P-9823
8 cyl. - 351 engine	80	2	P-9823
8 cyl. - 390 & 428 engines	80	2	P-9823
RADIATOR GRILLE and RELATED PARTS -			
--w/o headlamp covers	82	17	P-6622
--w/headlamp covers	82	18	P-6623
WATER PUMPS -			
6 cyl. - 240 engine	85	1	P-4731
8 cyl. - 302 & 351 engines	85	2	P-5143
8 cyl. - 390 & 428 engines	85	3	P-9198
8 cyl. - 429 engine	85	3	P-6492

B (FAIRLANE/TORINO)

COOLING SYSTEMS -			
6 cyl. - 250 engine	80	3	P-3723
8 cyl. - 302 engine	80	3	P-3723
8 cyl. - 351 engine	80	3	P-3723
8 cyl. - 390 & 427 engines	80	4	P-5723
8 cyl. - 428 engine	80	4	P-5723
RADIATOR GRILLE and RELATED PARTS	82	12	P-6672
WATER PUMPS -			
6 cyl. - 250 engine	85	1	P-2962
8 cyl. - 302 & 351 engines	85	2	P-5143
8 cyl. - 390, 427 & 428 engines	85	3	P-9198

F (MUSTANG)

COOLING SYSTEMS -			
6 cyl. - 200 engine	80	1	P-3147
6 cyl. - 250 engine	80	1	P-3147
8 cyl. - 302 engine	80	1	P-3147
8 cyl. - 351 engine	80	1	P-3147
8 cyl. - 390 engine	80	4	P-5723
8 cyl. - 428 engine	80	4	P-5723

F (MUSTANG) - continued

RADIATOR GRILLE and RELATED PARTS -			
-- except GT350/500	82	19	P-6665
-- GT350/500	82	8	P-6921-B
WATER PUMPS -			
6 cyl. - 200 & 250 engines	85	1	P-2962
8 cyl. - 302 & 351 engines	85	2	P-5143
8 cyl. - 390 & 428 engines	85	3	P-9198
8 cyl. - 429 engine	85	3	P-6492

X (FALCON)

COOLING SYSTEMS -			
6 cyl. - 170 & 200 engines	80	1	P-3147
8 cyl. - 302 engine	80	1	P-3147
RADIATOR GRILLE and RELATED PARTS	82	8	P-4947
WATER PUMPS -			
6 cyl. - 170 & 200 engines	85	1	P-2962
8 cyl. - 302 engine	85	2	P-5143

S (THUNDERBIRD)

COOLING SYSTEM			
8 cyl. - 429 engine	80	2	P-9823
RADIATOR GRILLE and RELATED PARTS	82	13	P-5520
WATER PUMPS -			
8 cyl. - 429 engine	85	3	P-6492

U (BRONCO)

COOLING SYSTEMS -			
6 cyl. - 170 engine	80	1	P-3147
8 cyl. - 302 engine	80	4	P-5287
RADIATOR GRILLE and RELATED PARTS	82	7	P-5117
WATER PUMPS -			
6 cyl. - 170 engine	85	1	P-2962
8 cyl. - 302 engine	85	2	P-5143

INDEX

TITLE	SECTION	PAGE	ILLUS. NO.

1970

A (FORD)

COOLING SYSTEMS -			
6 cyl. - 240 engine	80	2	P-9823
8 cyl. - 302 engine	80	2	P-9823
8 cyl. - 351 engine	80	2	P-9823
8 cyl. - 390 & 428 engines	80	2	P-9823
8 cyl. - 429 engine	80	2	P-9823
RADIATOR GRILLE and RELATED PARTS -			
--w/o headlamp covers	82	17	P-6622
--w/headlamp covers	82	22	P-7202
WATER PUMPS -			
6 cyl. - 240 engine	85	1	P-4731
8 cyl. - 302 & 351 engines	85	2	P-5143
8 cyl. - 390 & 428 engines	85	3	P-9198
8 cyl. - 351-C,429 engine	85	3	P-6492

B (FAIRLANE/TORINO)

B(FALCON)FROM 1/2/70

COOLING SYSTEMS -			
6 cyl. - 250 engine	80	3	P-3723
8 cyl. - 302 engine	80	3	P-3723
8 cyl. - 351 engine	80	3	P-3723
8 cyl. - 429 engine	80	4	P-5723
RADIATOR GRILLE and RELATED			
--w/o headlamp covers-body types 54A,B,62,63H,65B, 66A,71B,D	82	23	P-7121
--w/o headlamp covers-body type 66B "Before 12/30/69"	82	23	P-7121
--w/ or w/o headlamp covers-body types 54C,57C,E,63C, F, 65C,E,66C,E,71C,E,76	82	24	P-7123
w/ or w/o headlamp covers-body type 66B "From 12/30/69"	82	24	P-7123
WATER PUMPS -			
6 cyl. - 250 engine	85	1	P-2962
8 cyl. - 302 engine	85	2	P-5143
8 cyl. - 351-C,429 engines	85	3	P-6492

F (MUSTANG)

COOLING SYSTEMS -			
6 cyl. - 200 engine	80	1	P-3147
6 cyl. - 250 engine	80	1	P-3147
8 cyl. - 302 & 351 engines	80	1	P-3147
8 cyl. - 428 engine	80	4	P-5723
RADIATOR GRILLE and RELATED			
PARTS--except GT350/500	82	21	P-7160
--GT350/500	82	8	P-6921-B
WATER PUMPS -			
6 cyl. - 200 & 250 engines	85	1	P-2962
8 cyl. - 302 engine	85	2	P-5143
8 cyl. - 428 engine	85	3	P-9198
8 cyl. - 351-C,429 engines	85	3	P-6492

P (MAVERICK)

COOLING SYSTEMS -			
6 cyl.-170,200 & 250 engines	80	1	P-3147
RADIATOR GRILLE and RELATED PARTS	82	20	P-6879-A
WATER PUMPS -			
6 cyl.-170,200 & 250 engines	85	1	P-2962

S (THUNDERBIRD)

COOLING SYSTEM			
8 cyl. - 429 engine	80	2	P-9823
RADIATOR GRILLE and RELATED PARTS	82	25	P-7150
WATER PUMP -			
8 cyl. - 429 engine	85	3	P-6492

U (BRONCO)

COOLING SYSTEMS -			
6 cyl. - 170 engine	80	1	P-3147
8 cyl. - 302 engine	80	4	P-5287
RADIATOR GRILLE and RELATED PARTS	82	7	P-5117
WATER PUMPS -			
6 cyl. - 170 engine	85	1	P-2962
8 cyl. - 302 engine	85	2	P-5143

X (FALCON) BEFORE 1/2/70

FOR UNITS BUILT FROM 1/2/70, REFER TO B(FALCON)

COOLING SYSTEMS -			
6 cyl. - 200 engine	80	1	P-3147
8 cyl. - 302 engine	80	1	P-3147
RADIATOR GRILLE and RELATED PARTS	82	8	P-4947
WATER PUMPS -			
6 cyl. - 200 engine	85	1	P-2962
8 cyl. - 302 engine	85	2	P-5143

COPYRIGHT © 1975 — FORD MOTOR COMPANY — DEARBORN, MICHIGAN

INDEX

1971

A (FORD)

TITLE	SECTION	PAGE	ILLUS. NO.
COOLING SYSTEM -			
6 cyl. - 240 engine	80	2	P-9823
8 cyl. - 302 engine	80	2	P-9823
8 cyl. - 351 engine	80	2	P-9823
8 cyl. - 390, 400 & 429 engines	80	2	P-9823
RADIATOR GRILLE and RELATED PARTS	82	28	P-8080
WATER PUMPS-			
6 cyl. - 240 engine	85	1	P-4731
8 cyl. - 302 & 351 engines	85	2	P-5143
8 cyl. - 390 & 400 engines	85	3	P-9198
8 cyl. - 429 engine	85	3	P-6492

B (TORINO)

TITLE	SECTION	PAGE	ILLUS. NO.
COOLING SYSTEM-			
6 cyl. - 250 engine	80	3	P-3723
8 cyl. - 302 engine	80	3	P-3723
8 cyl. - 351 engine	80	3	P-3723
8 cyl. - 429 engine	80	3	P-5723
RADIATOR GRILLE and RELATED PARTS--w/o headlamp covers -body types 54A,63H,65A,66A,71D	82	23	P-7121
--w/o headlamp covers-body types 54C,57C,E,63C,F,65C, E,66B,C,E,71C,E,76F	82	29	P-8261
--w/headlamp covers-body types 54C,57,63C,F,65C,E, 66B,C,E,71C,E,76F	82	24	P-7123
WATER PUMPS			
6 cyl. - 250 engine	85	1	P-2962
8 cyl - 302 engine	85	2	P-5143
8 cyl. - 351-C,429 engine	85	3	P-6492

F (MUSTANG)

TITLE	SECTION	PAGE	ILLUS. NO.
COOLING SYSTEMS-			
6 cyl. - 250 engine	80	1	P-3147
8 cyl. - 302 & 351 engines	80	1	P-3147
8 cyl. - 429 engine	80	4	P-5723
RADIATOR GRILLE and RELATED PARTS			
--w/Sport lamps	82	26	P-8090
--w/o Sport lamps	82	27	P-8091
WATER PUMPS			
6 cyl. - 250 engine	85	1	P-2962
8 cyl. - 302 engine	85	2	P-5143
8 cyl. - 351-C,429 engines	85	3	P-6492

L (PINTO)

TITLE	SECTION	PAGE	ILLUS. NO.
COOLING SYSTEMS -			
4 cyl. - 98 engine	80	5	P-7568
4 cyl. - 122 O.H.C. engine	80	6	P-8230
RADIATOR GRILLE and RELATED PARTS	82	23	P-8016
WATER PUMPS			
4 cyl. - 98 engine	80	5	P-7568
4 cyl. - 122 O.H.C. engine	80	6	P-8230

P (MAVERICK)

TITLE	SECTION	PAGE	ILLUS. NO.
COOLING SYSTEMS-			
6 cyl. - 170, 200 & 250 engines	80	1	P-3147
RADIATOR GRILLE and RELATED PARTS	82	20	P-6879-A
WATER PUMPS-			
6 cyl. -170, 200 & 250 engines	85	1	P-2962

S (THUNDERBIRD)

TITLE	SECTION	PAGE	ILLUS. NO.
COOLING SYSTEMS -			
8 cyl. - 429 engine	80	2	P-9823
RADIATOR GRILLE and RELATED PARTS	82	25	P-7150
WATER PUMP -			
8 cyl. - 429 engine	85	3	P-6492

U (BRONCO)

TITLE	SECTION	PAGE	ILLUS. NO.
COOLING SYSTEMS -			
6 cyl. - 170 engine	80	1	P-3147
8 cyl. - 302 engine	80	4	P-5287
RADIATOR GRILLE and RELATED PARTS	82	7	P-5117
WATER PUMPS -			
6 cyl. - 170 engine	85	1	P-2962
8 cyl. - 302 engine	85	2	P-5143

INDEX

TITLE	SECTION	PAGE	ILLUS. NO.

1972

A (FORD)

COOLING SYSTEM -			
6 cyl. - 240 engine	80	2	P-9823
8 cyl. - 302 engine	80	2	P-9823
8 cyl. - 351 engine	80	2	P-9823
8 cyl. - 400,429 engines	80	2	P-9823
RADIATOR GRILLE and RELATED PARTS	82	33	P-8755
WATER PUMPS -			
6 cyl. - 240 engine	85	1	P-4731
8 cyl. - 302,351-W engines	85	2	P-5143
8 cyl. - 351-C,400,429 engines	85	3	P-6492

B (TORINO)

COOLING SYSTEM -			
6 cyl. - 250 engine	80	3	P-3723
8 cyl. - 302 engine	80	3	P-3723
8 cyl. - 351,400 engines	80	3	P-3723
8 cyl. - 429 engine	80	3	P-5723
RADIATOR GRILLE and RELATED PARTS			
--body types 53D,63R,65D,R, 71D,K,97D,K,R	82	31	P-8669
--body types 53B,65B,71B	82	32	P-8677
WATER PUMPS			
6 cyl. - 250 engine	85	1	P-2962
8 cyl. - 302 engine	85	2	P-5143
8 cyl. - 351-C,400,429 engines	85	3	P-6492

F (MUSTANG)

COOLING SYSTEMS -			
6 cyl. - 250 engine	80	1	P-3147
8 cyl. - 302,351 engines	80	1	P-3147
8 cyl. - 429 engine	80	4	P-5723
RADIATOR GRILLE and RELATED PARTS			
--w/Sport lamps	82	26	P-8090
--w/o Sport lamps	82	27	P-8091
WATER PUMPS			
6 cyl. - 250 engine	85	1	P-2962
8 cyl. - 302 engine	85	2	P-5143
8 cyl. - 351-C engine	85	3	P-6492

L (PINTO)

COOLING SYSTEMS -			
4 cyl. - 98 engine	80	5	P-7568
4 cyl. 122 O.H.C. engine	80	6	P-8230
RADIATOR GRILLE and RELATED PARTS	82	23	P-8016
WATER PUMPS			
4 cyl. - 98 engine	80	5	P-7568
4 cyl. - 122 O.H.C. engine	80	6	P-8230

P (MAVERICK)

COOLING SYSTEMS -			
6 cyl. - 170,200,250 engines	80	1	P-3147
8 cyl. - 302 engine	80	1	P-3147
RADIATOR GRILLE and RELATED PARTS	82	20	P-6879-A
WATER PUMPS -			
6 cyl. - 170,200,250 engines	85	1	P-2962
8 cyl. - 302 engine	85	2	P-5143

S (THUNDERBIRD)

COOLING SYSTEMS			
8 cyl. - 400,429 engines	80	2	P-9823
8 cyl. - 460 engine	80	2	P-9823
RADIATOR GRILLE and RELATED PARTS	82	30	P-8658
WATER PUMP -			
8 cyl. - 429 engine	85	3	P-6492
8 cyl. - 400 engine	85	3	P-6492
8 cyl. - 460 engine	85	3	P-6492

U (BRONCO)

COOLING SYSTEMS -			
6 cyl. - 170 engine	80	1	P-3147
8 cyl. - 302 engine	80	4	P-5287
RADIATOR GRILLE and RELATED PARTS	82	7	P-5117
WATER PUMPS -			
6 cyl. - 170 engine	85	1	P-2962
8 cyl. - 302 engine	85	2	P-5143

COPYRIGHT © 1975 — FORD MOTOR COMPANY — DEARBORN, MICHIGAN

FINAL ISSUE

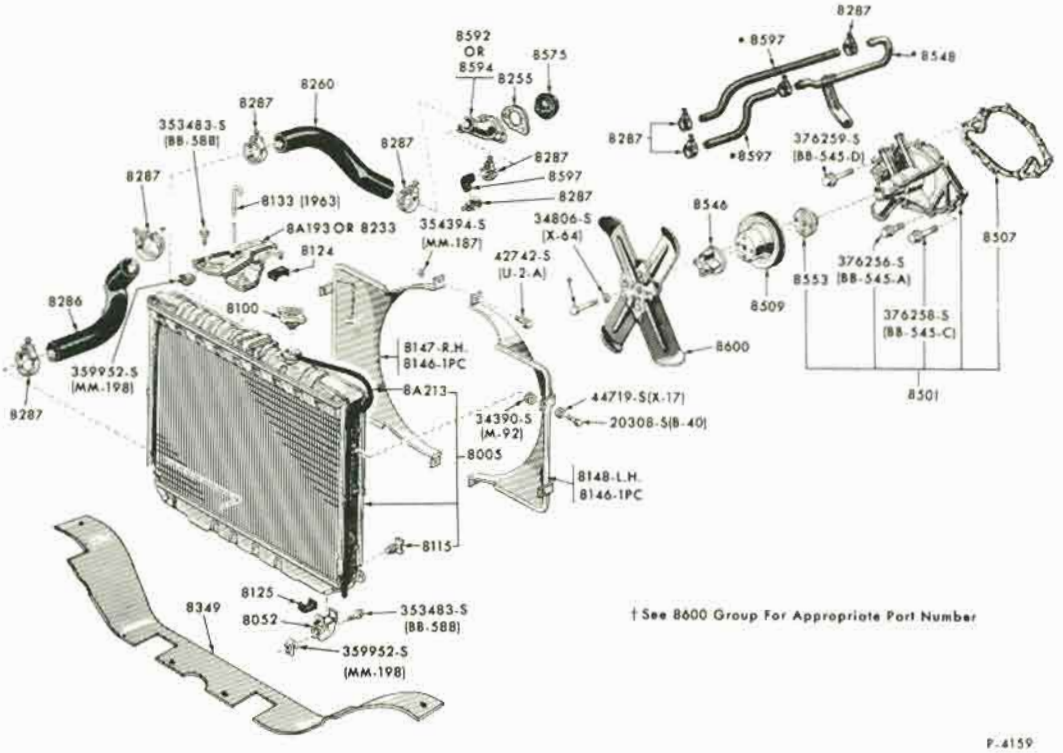

P-4159

COOLING SYSTEM and RELATED PARTS - TYPICAL
1965/66 FORD (CUSTOM & GALAXIE) - 6 CYLINDER 240, and 8 CYLINDER 289, 302, 351, 352, 390, 427, 428

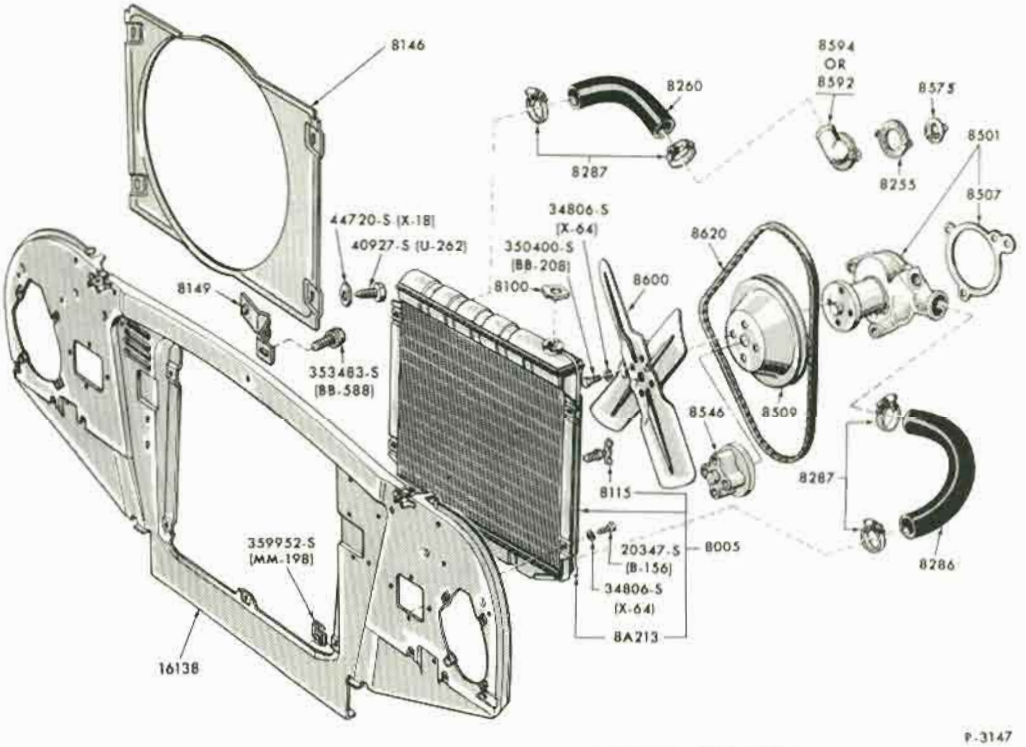

P-3147

COOLING SYSTEM and RELATED PARTS - TYPICAL
1965/72 FALCON, MAVERICK, MUSTANG - 6 CYLINDER 170, 200, 250, and 8 CYLINDER 260, 289, 302&351
1966/72 BRONCO - 6 CYLINDER 170

COPYRIGHT © 1975 — FORD MOTOR COMPANY — DEARBORN, MICHIGAN

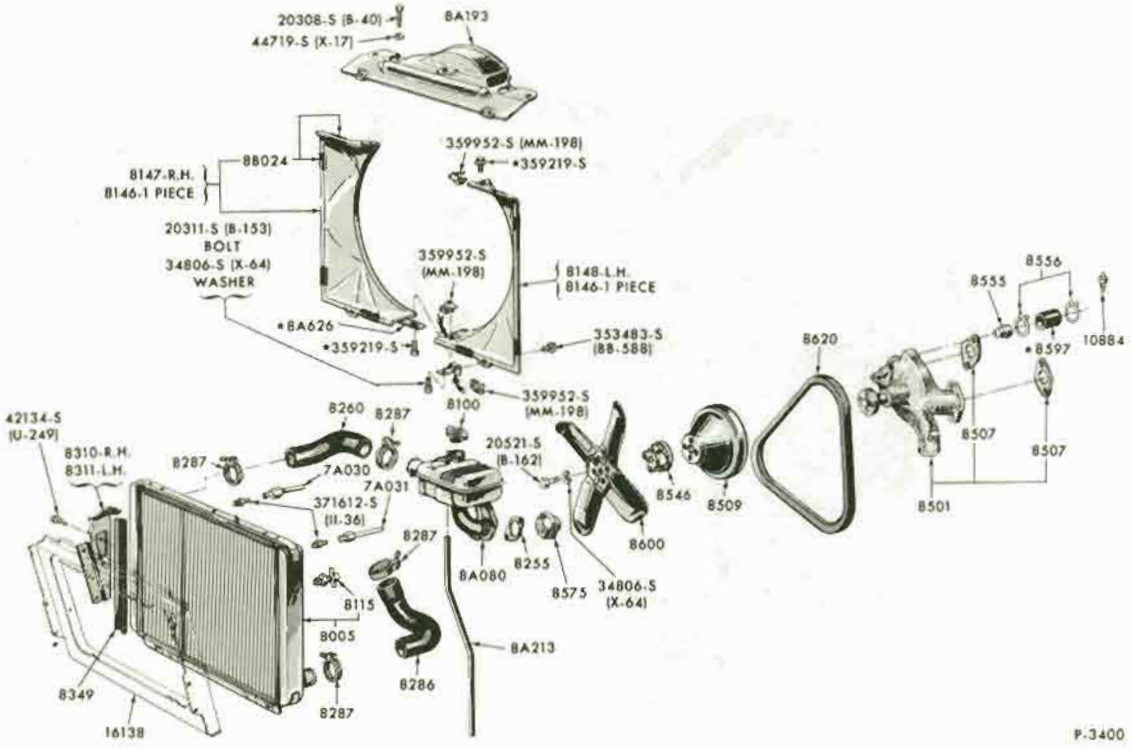

COOLING SYSTEM and RELATED PARTS
1965/66 THUNDERBIRD - 8 CYLINDER 390, 428

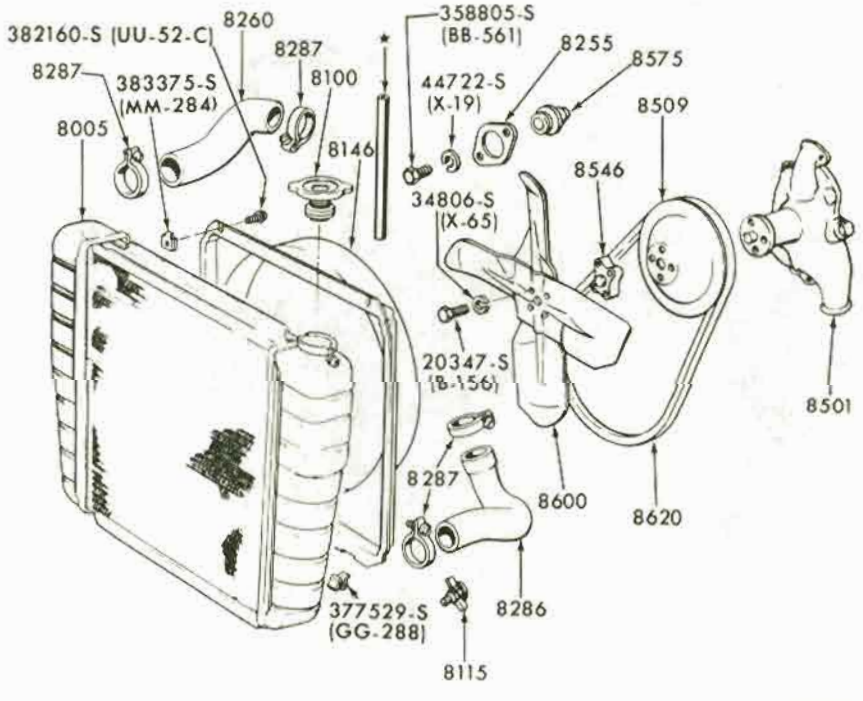

COOLING SYSTEM and RELATED PARTS - TYPICAL
1967/72 FORD, THUNDERBIRD - 6 CYLINDER 240 & 8 CYLINDER 289, 302, 351, 390, 400, 428, 429 ENGINES

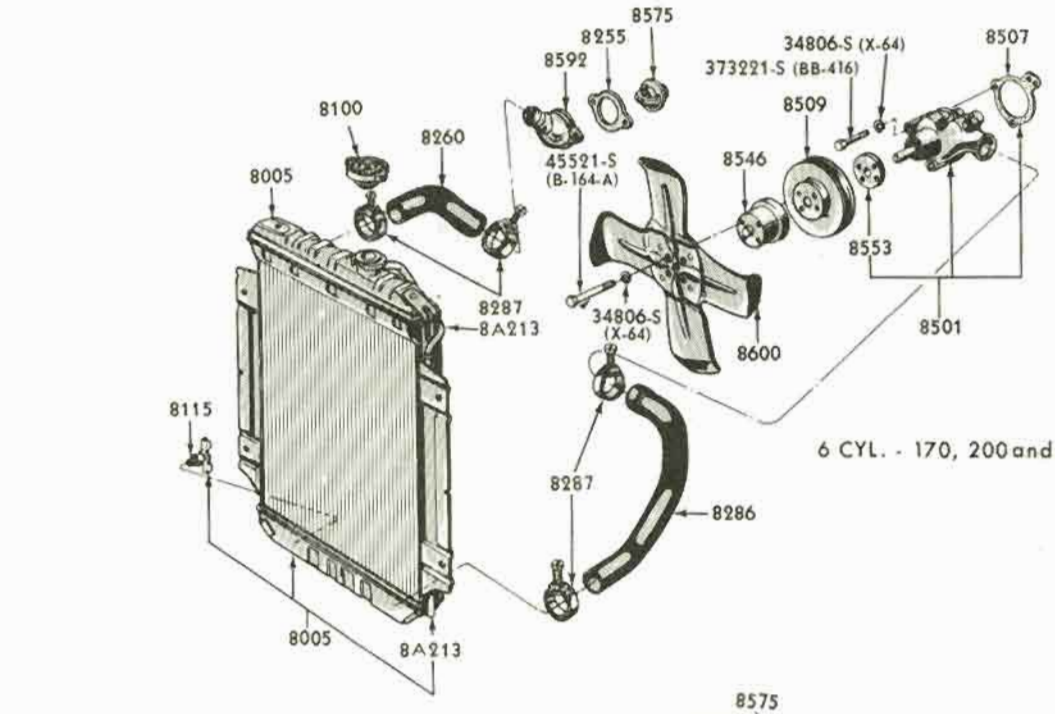

6 CYL. - 170, 200 and 250 ENGINES

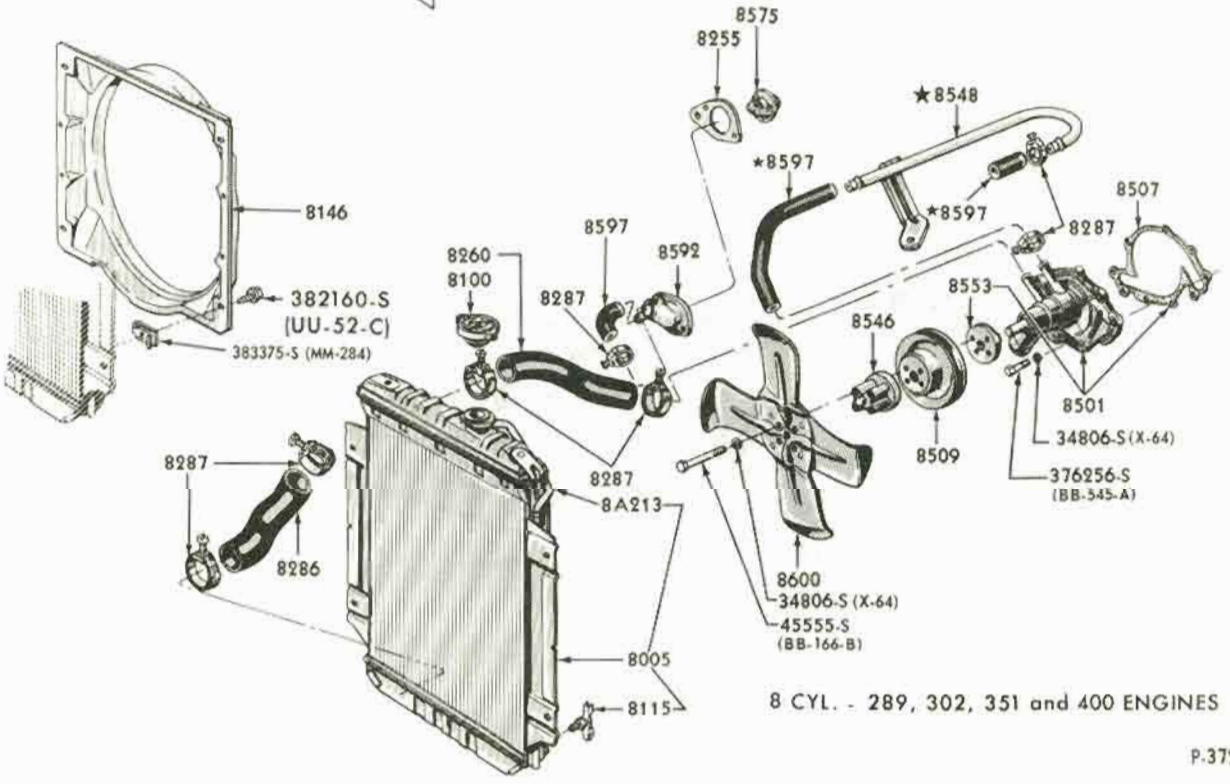

8 CYL. - 289, 302, 351 and 400 ENGINES

P-3723

COOLING SYSTEM and RELATED PARTS - TYPICAL
1965/72 FAIRLANE/TORINO - 6 CYLINDER 200, 250 and 8 CYLINDER 289, 302, 351

COPYRIGHT © 1975 — FORD MOTOR COMPANY — DEARBORN, MICHIGAN

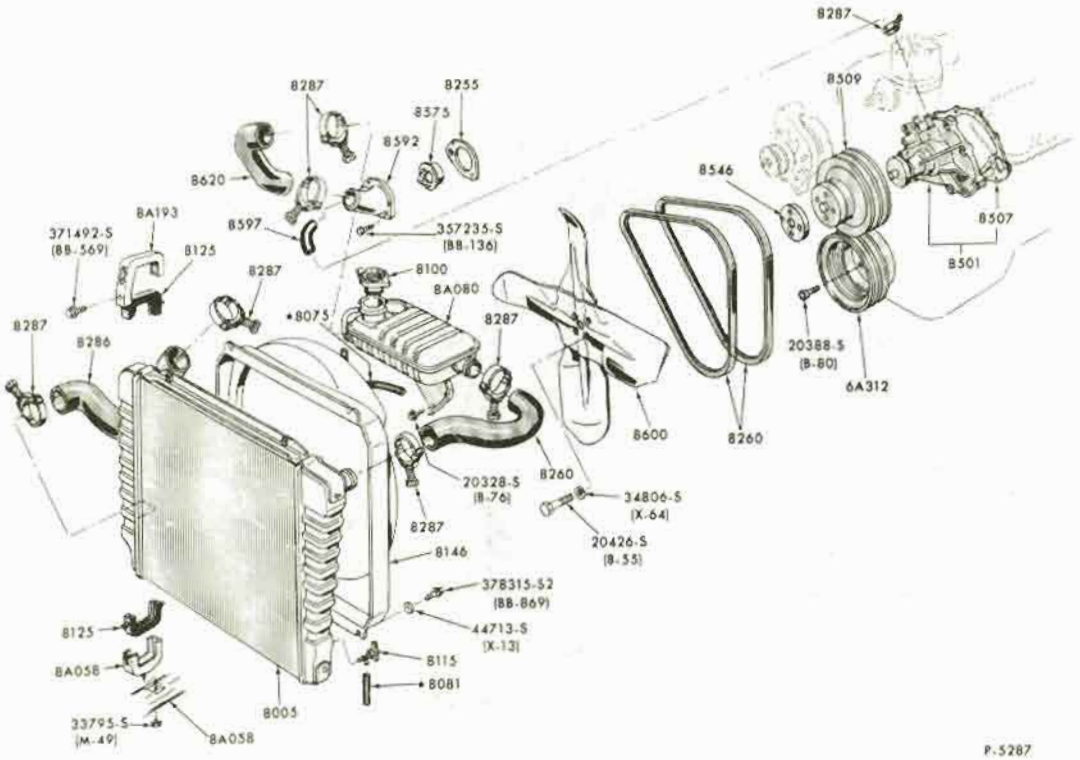

COOLING SYSTEM and RELATED PARTS
1966/72 BRONCO - 8 CYLINDER 289, 302

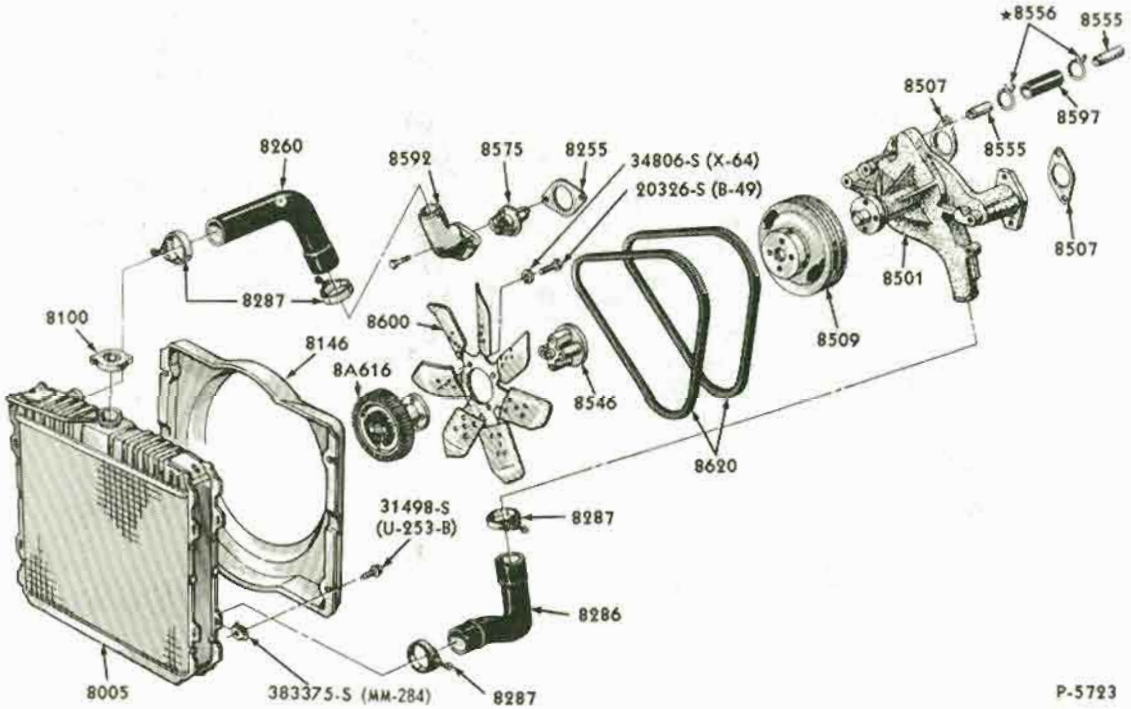

COOLING SYSTEM and RELATED PARTS - TYPICAL
1966/72 FAIRLANE/TORINO and MUSTANG - 8 CYLINDER 390,427,428,429

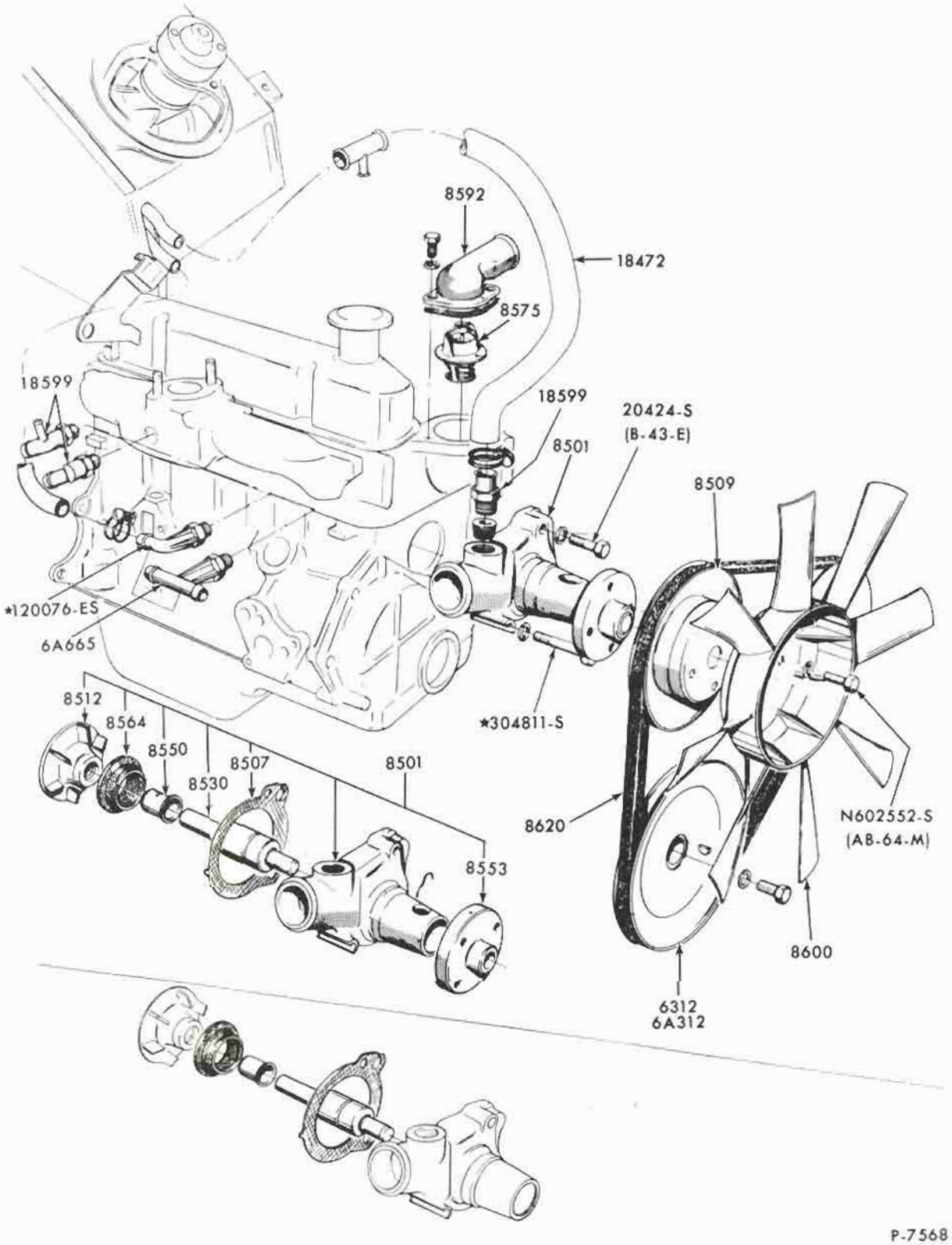

COOLING SYSTEM and RELATED PARTS
1971/72 PINTO - 4 CYLINDER 98 ENGINE

COPYRIGHT © 1975 — FORD MOTOR COMPANY — DEARBORN, MICHIGAN

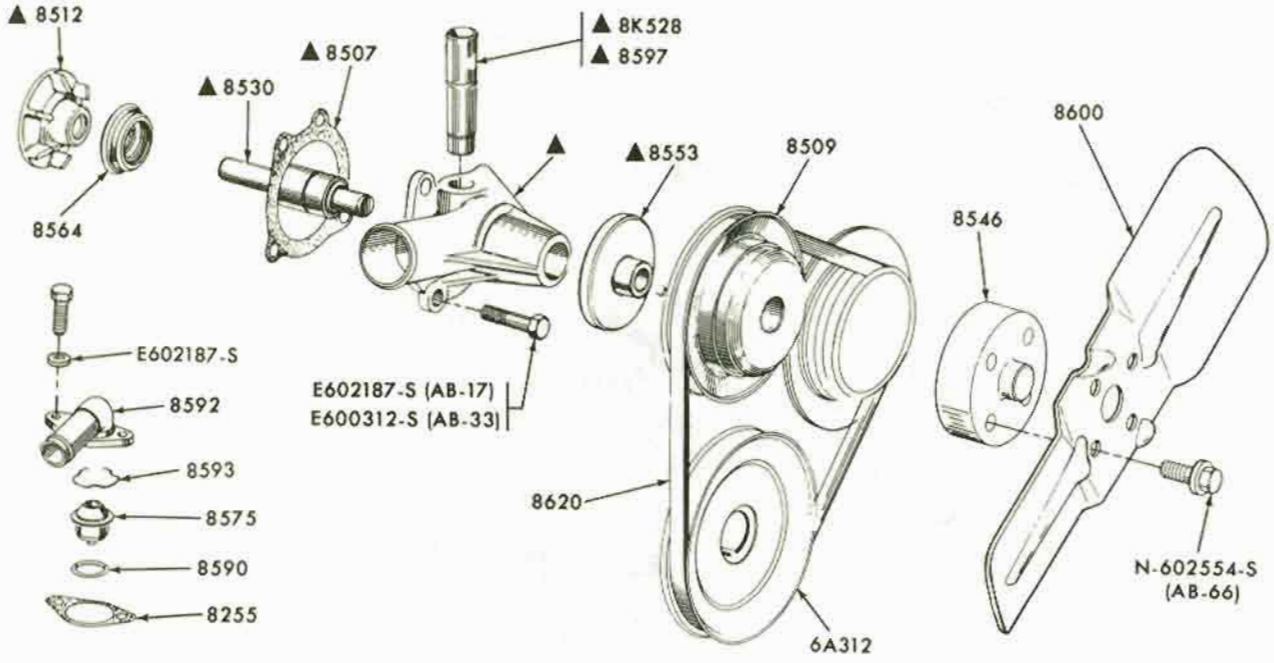

▲ PART OF 8501 ASSY

P-8230

COOLING SYSTEM and RELATED PARTS
1971/72 PINTO - 4 CYLINDER 122 O.H.C. ENGINE

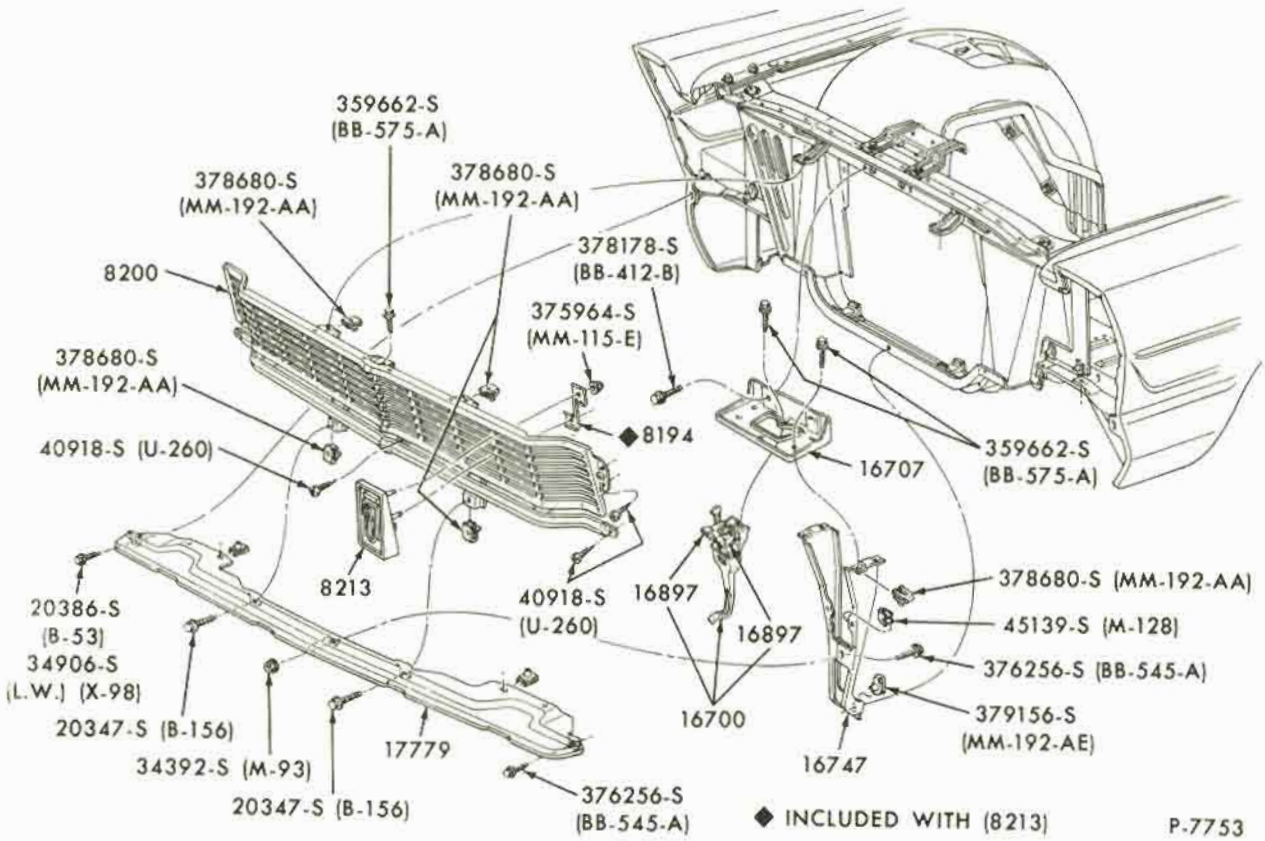

RADIATOR GRILLE and RELATED PARTS
1965 FORD

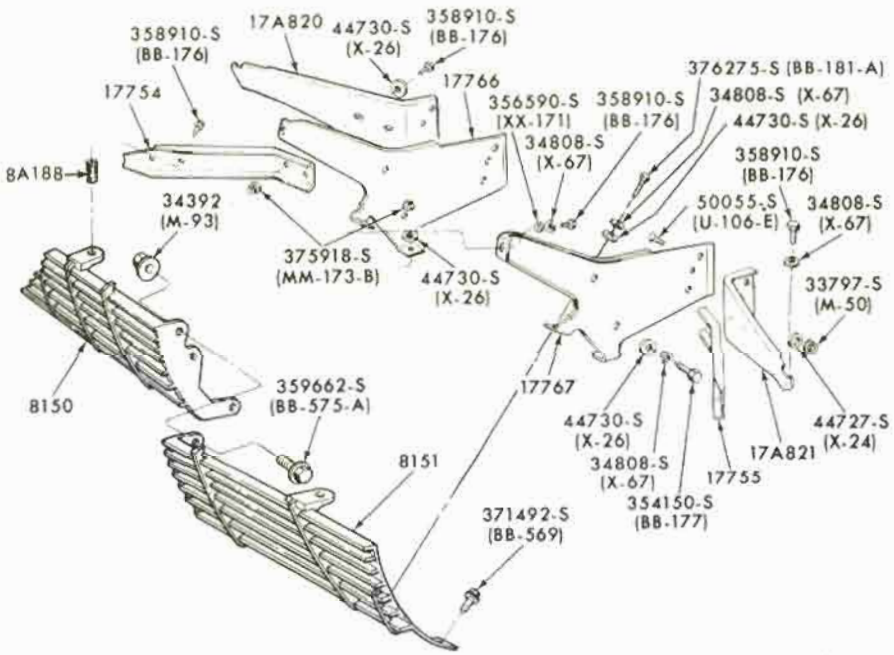

RADIATOR GRILLE and RELATED PARTS
1965 THUNDERBIRD

COPYRIGHT © 1975 — FORD MOTOR COMPANY — DEARBORN, MICHIGAN

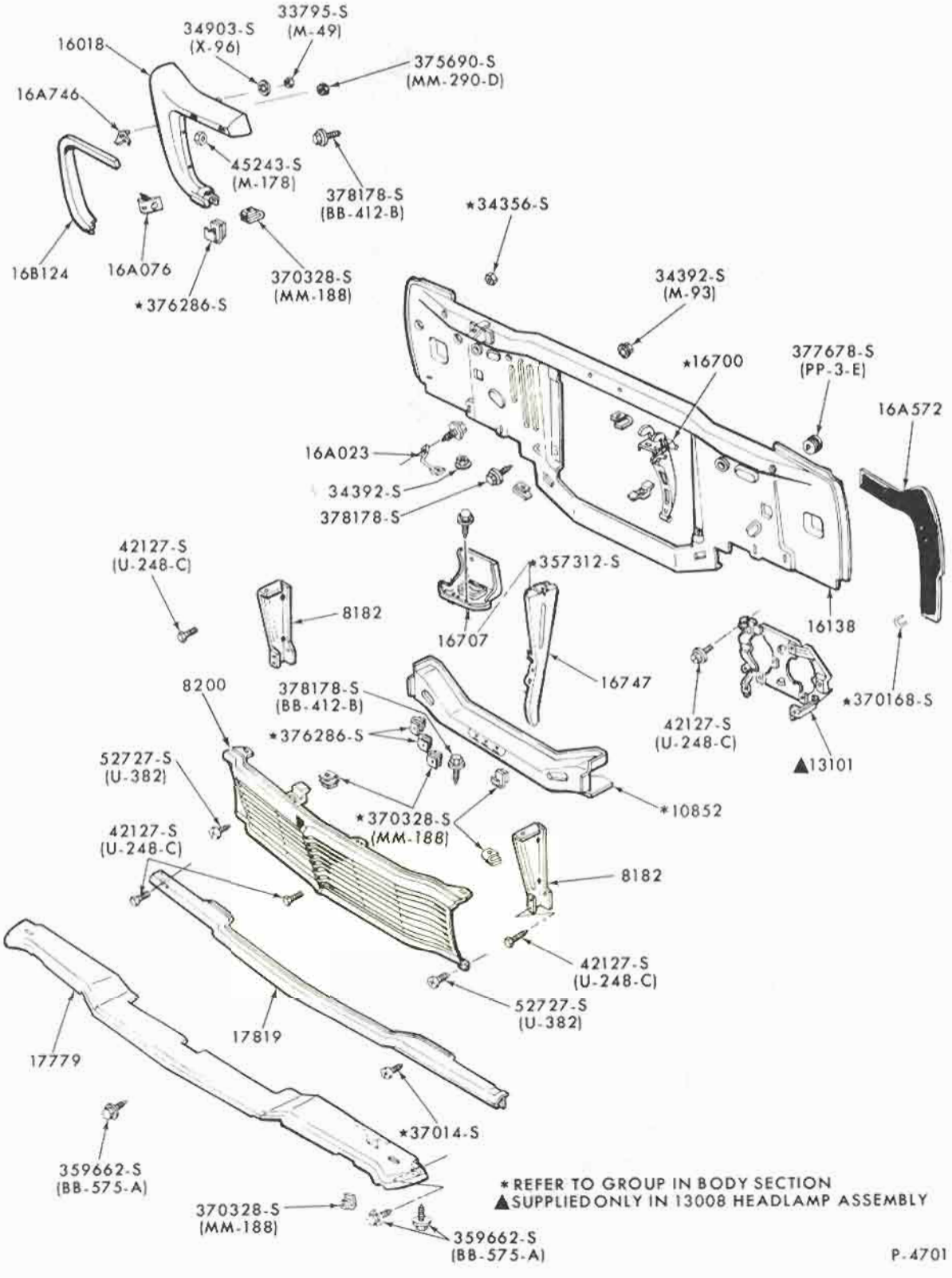

RADIATOR GRILLE and RELATED PARTS
1965 FAIRLANE

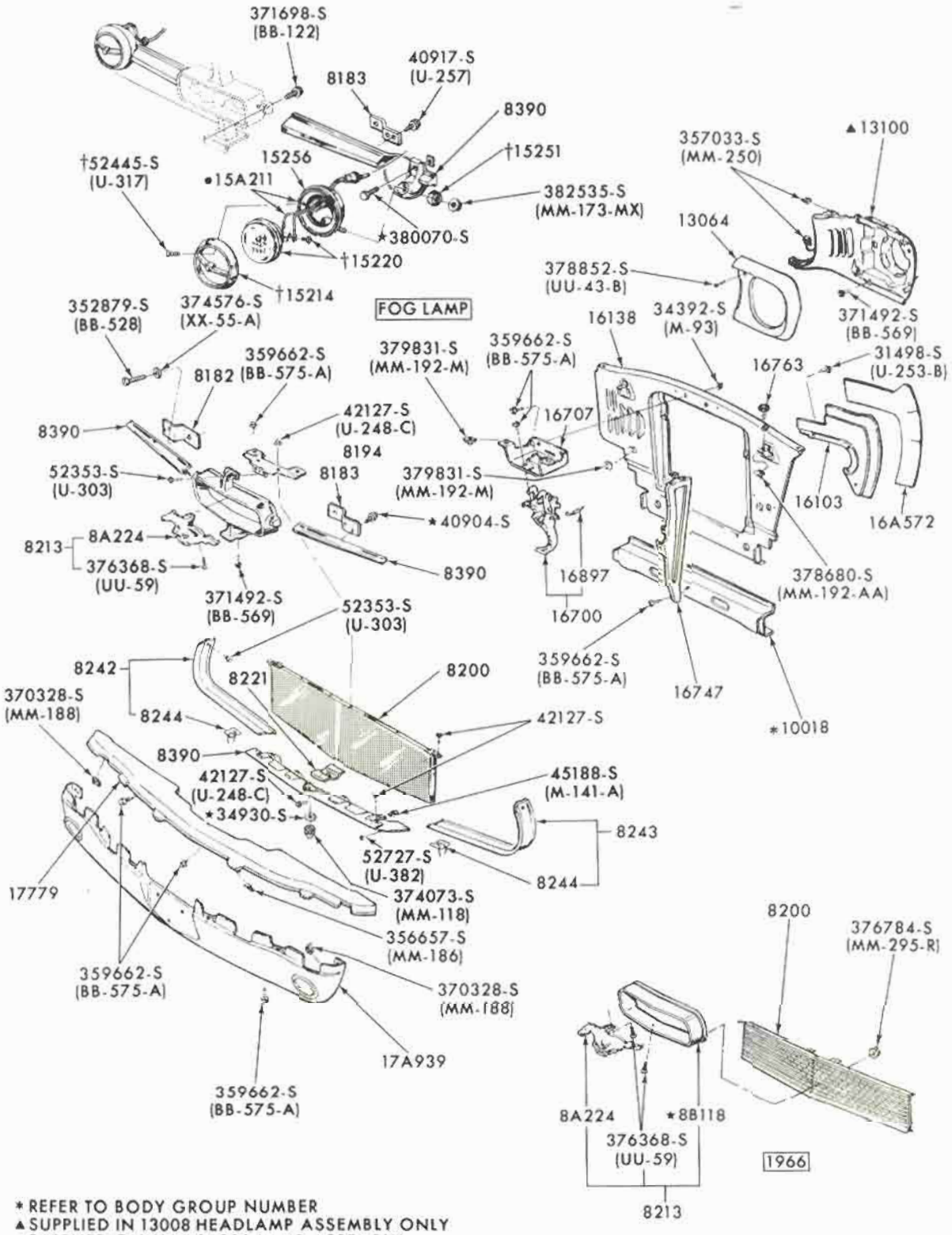

★ REFER TO BODY GROUP NUMBER
▲ SUPPLIED IN 13008 HEADLAMP ASSEMBLY ONLY
• SUPPLIED ONLY IN 15200 LAMP ASSEMBLY
† ALSO SUPPLIED IN 15200 LAMP ASSEMBLY

P-4458

RADIATOR GRILLE and RELATED PARTS
1965/66 MUSTANG

COPYRIGHT © 1975 — FORD MOTOR COMPANY — DEARBORN, MICHIGAN

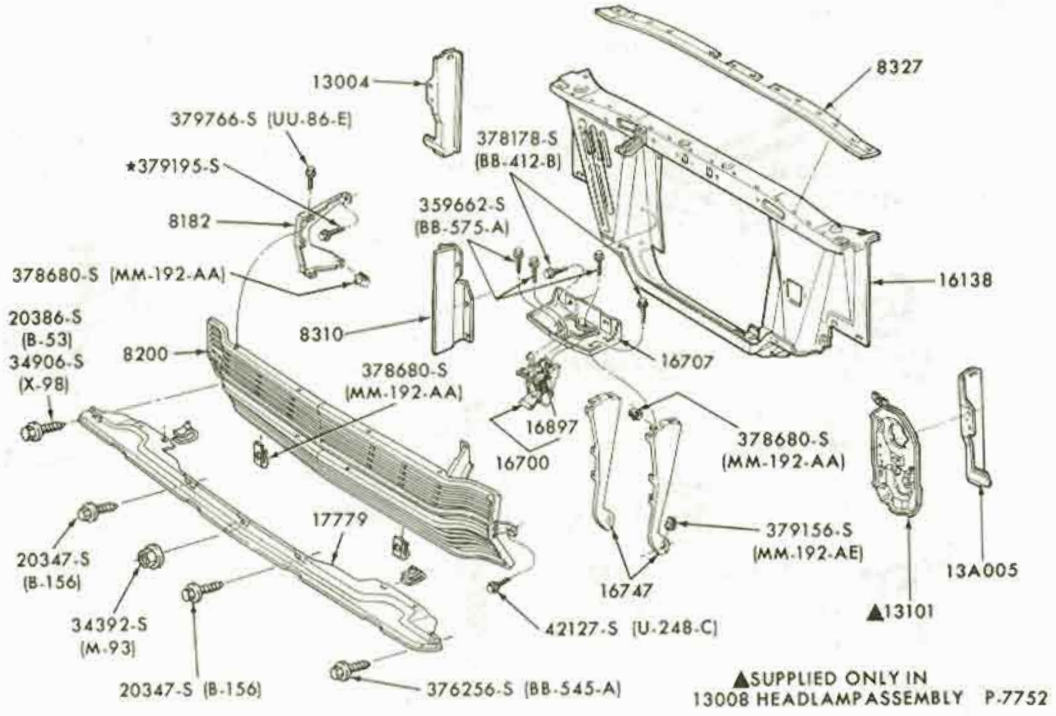

RADIATOR GRILLE and RELATED PARTS
1966 FORD - BODY TYPES 54A, E, 57B, 62B, E, 63B, 71B, C, D, 76A

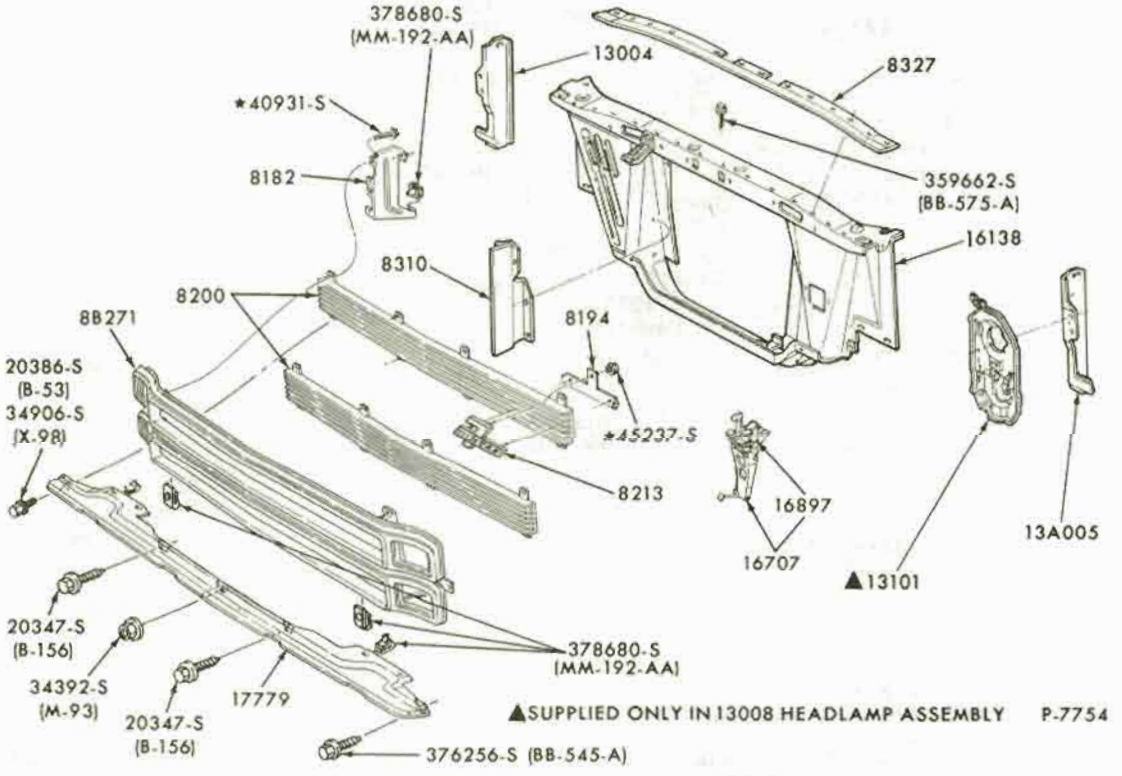

RADIATOR GRILLE and RELATED PARTS
1966 FORD - BODY TYPES 57F, 63C, D, F, 71A, F, 76B, 76D

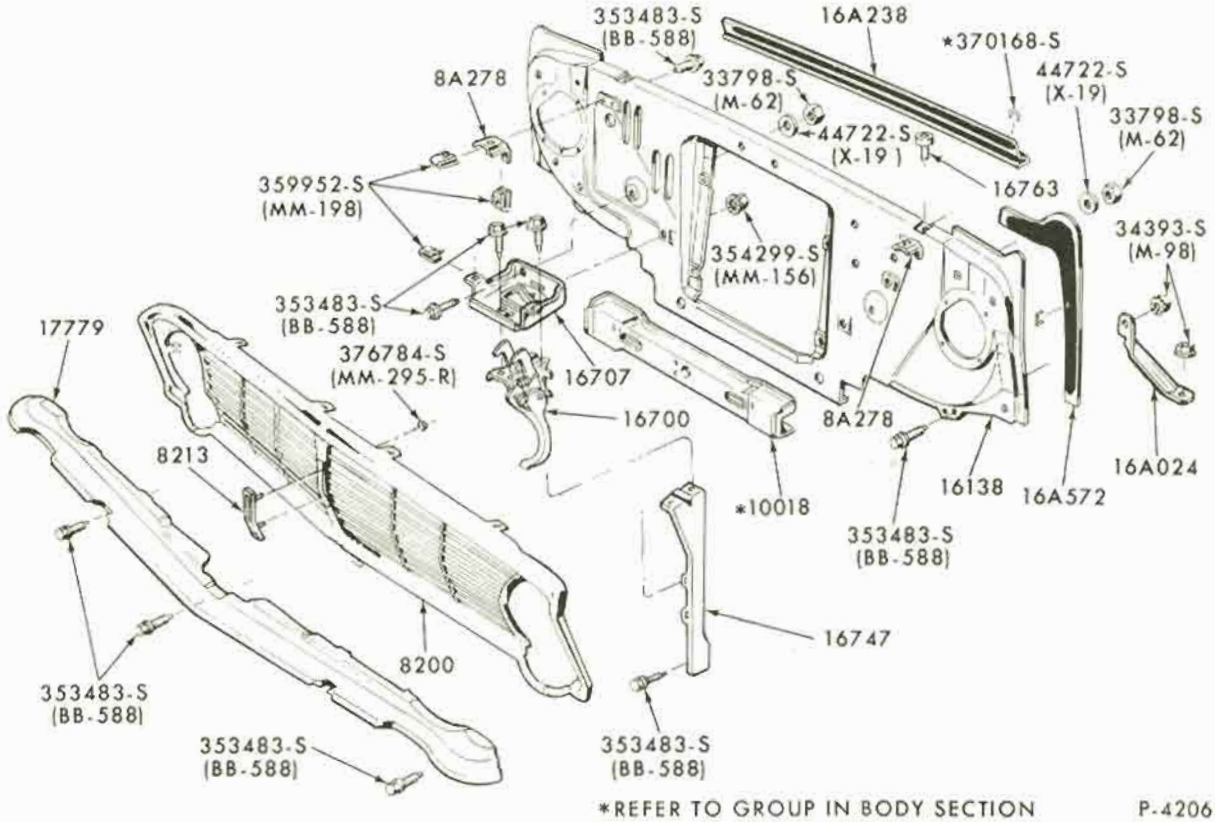

*REFER TO GROUP IN BODY SECTION P-4206

RADIATOR GRILLE and RELATED PARTS
1965 FALCON

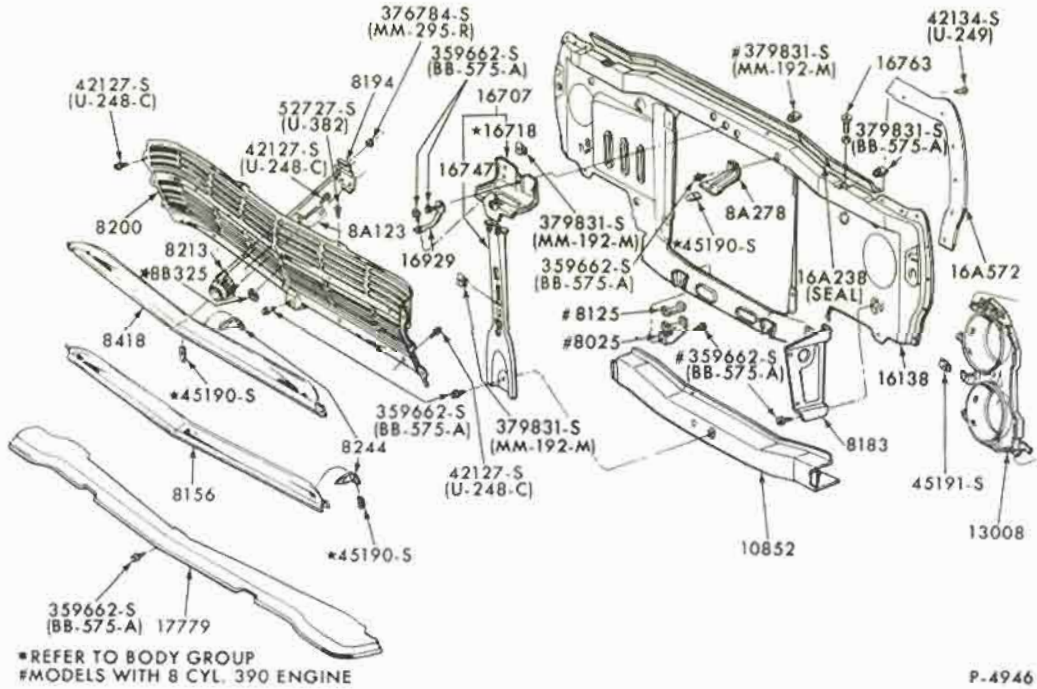

*REFER TO BODY GROUP
#MODELS WITH 8 CYL. 390 ENGINE

P-4946

RADIATOR GRILLE and RELATED PARTS
1966/67 FAIRLANE

COPYRIGHT © 1975 — FORD MOTOR COMPANY — DEARBORN, MICHIGAN

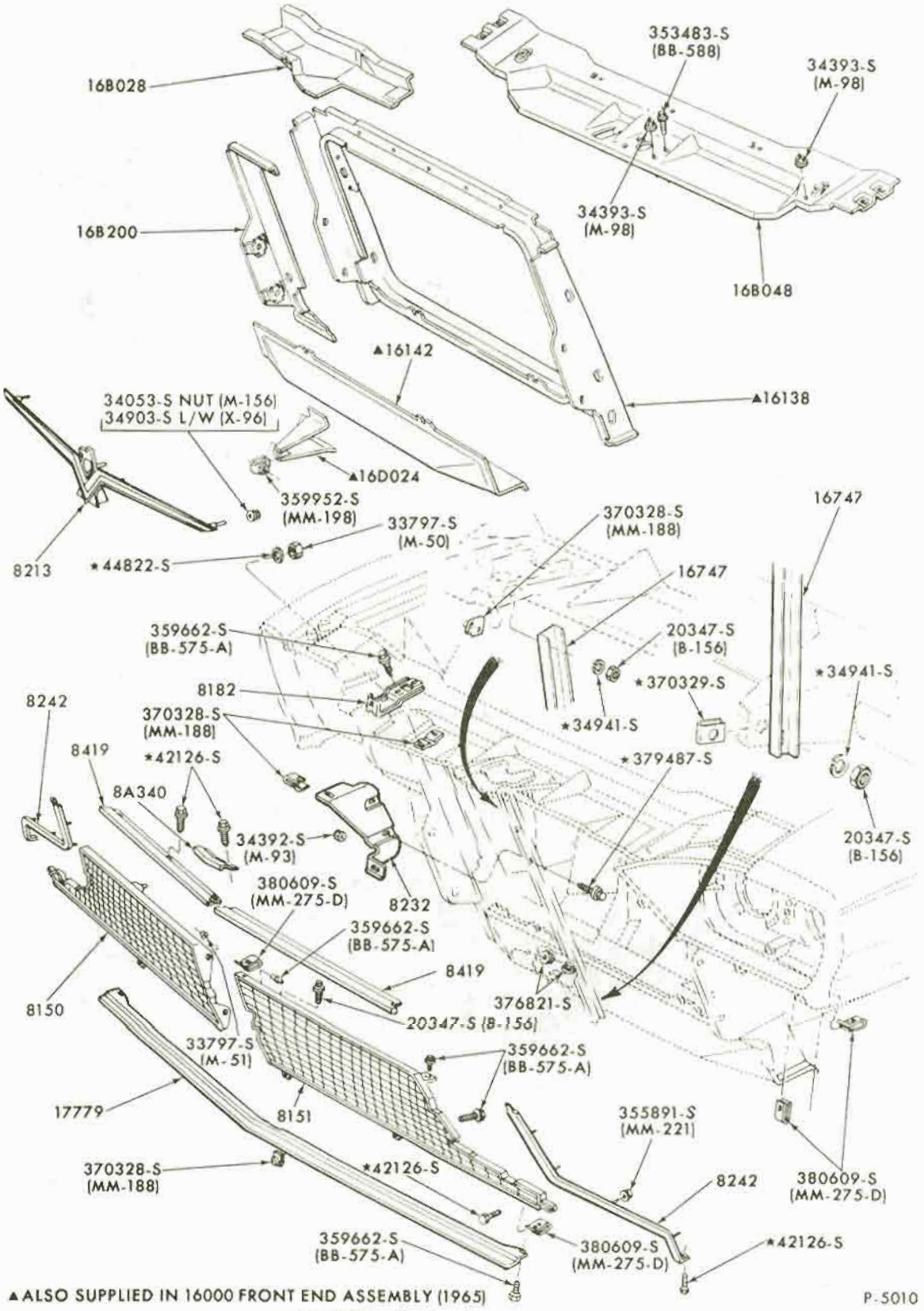

▲ALSO SUPPLIED IN 16000 FRONT END ASSEMBLY (1965)

P-5010

RADIATOR GRILLE and RELATED PARTS
1966 THUNDERBIRD

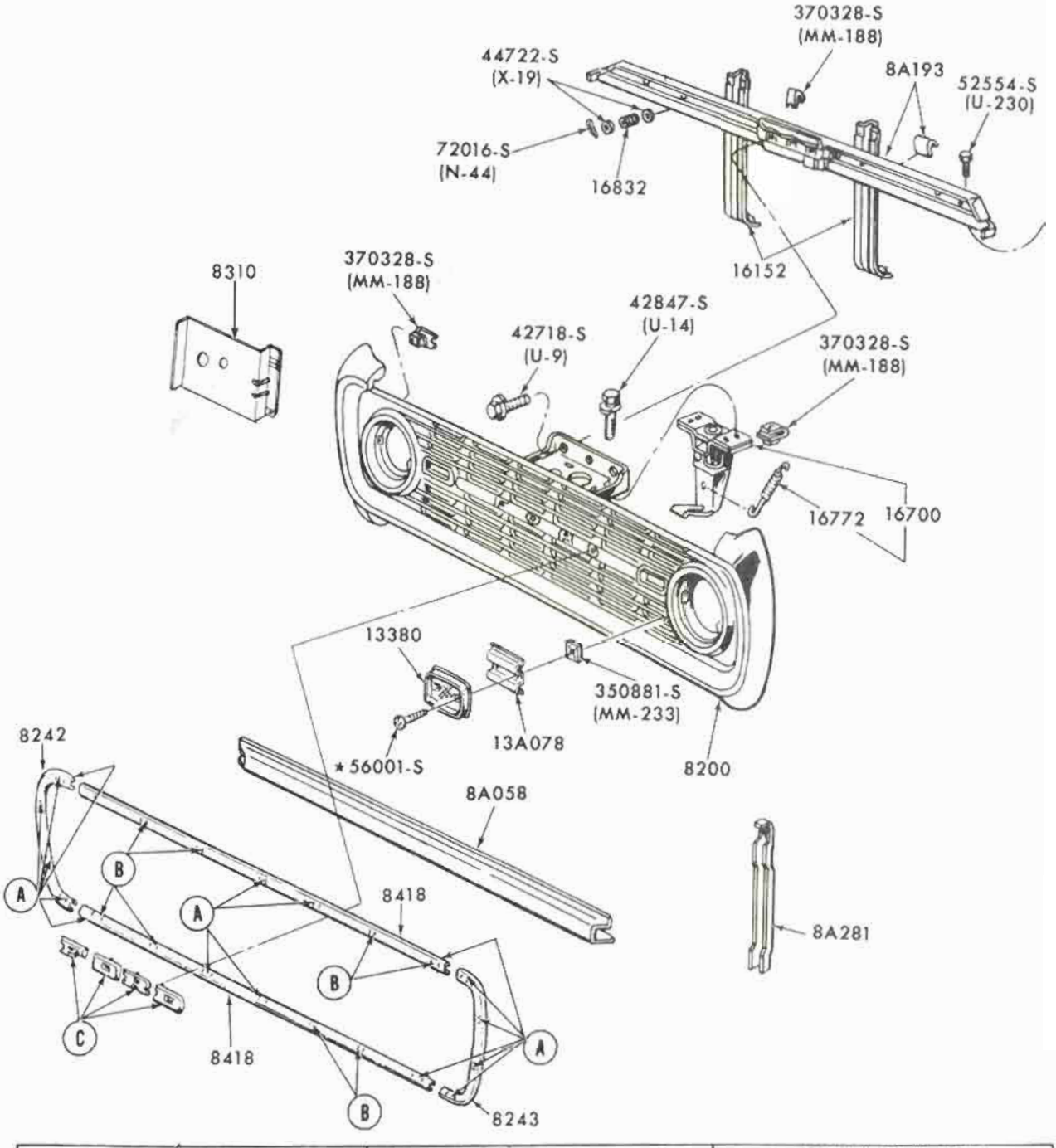

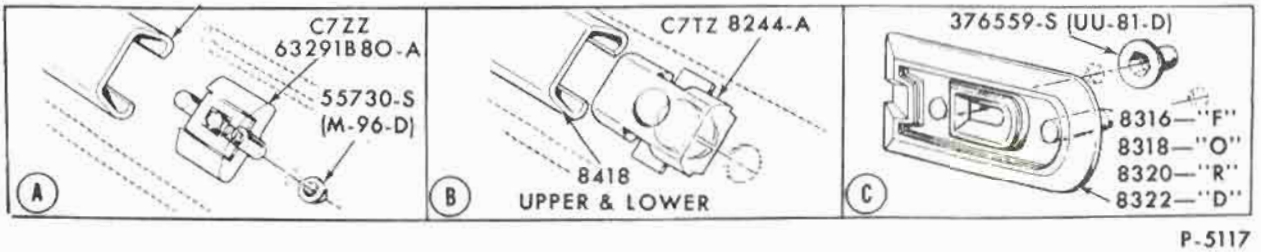

P-5117

RADIATOR GRILLE, MOULDINGS, and RELATED PARTS
1966/72 BRONCO

COPYRIGHT © 1975 — FORD MOTOR COMPANY — DEARBORN, MICHIGAN

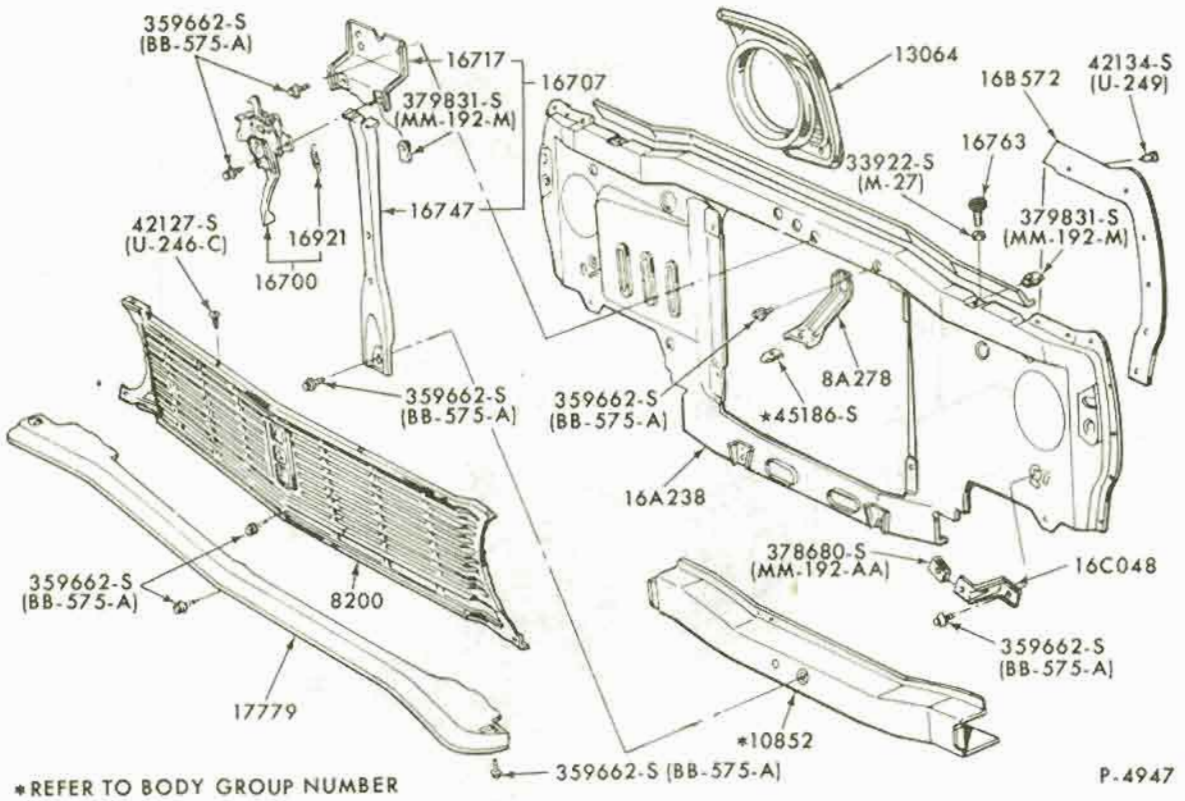

*REFER TO BODY GROUP NUMBER

RADIATOR GRILLE and RELATED PARTS
1966/70 FALCON

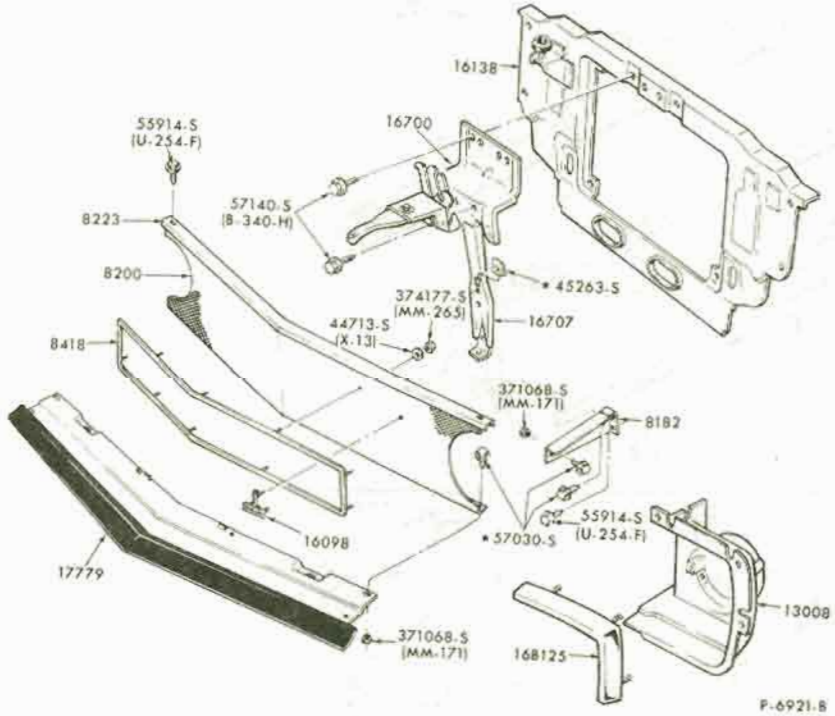

RADIATOR GRILLE and RELATED PARTS
1969/70 MUSTANG-GT 350/500

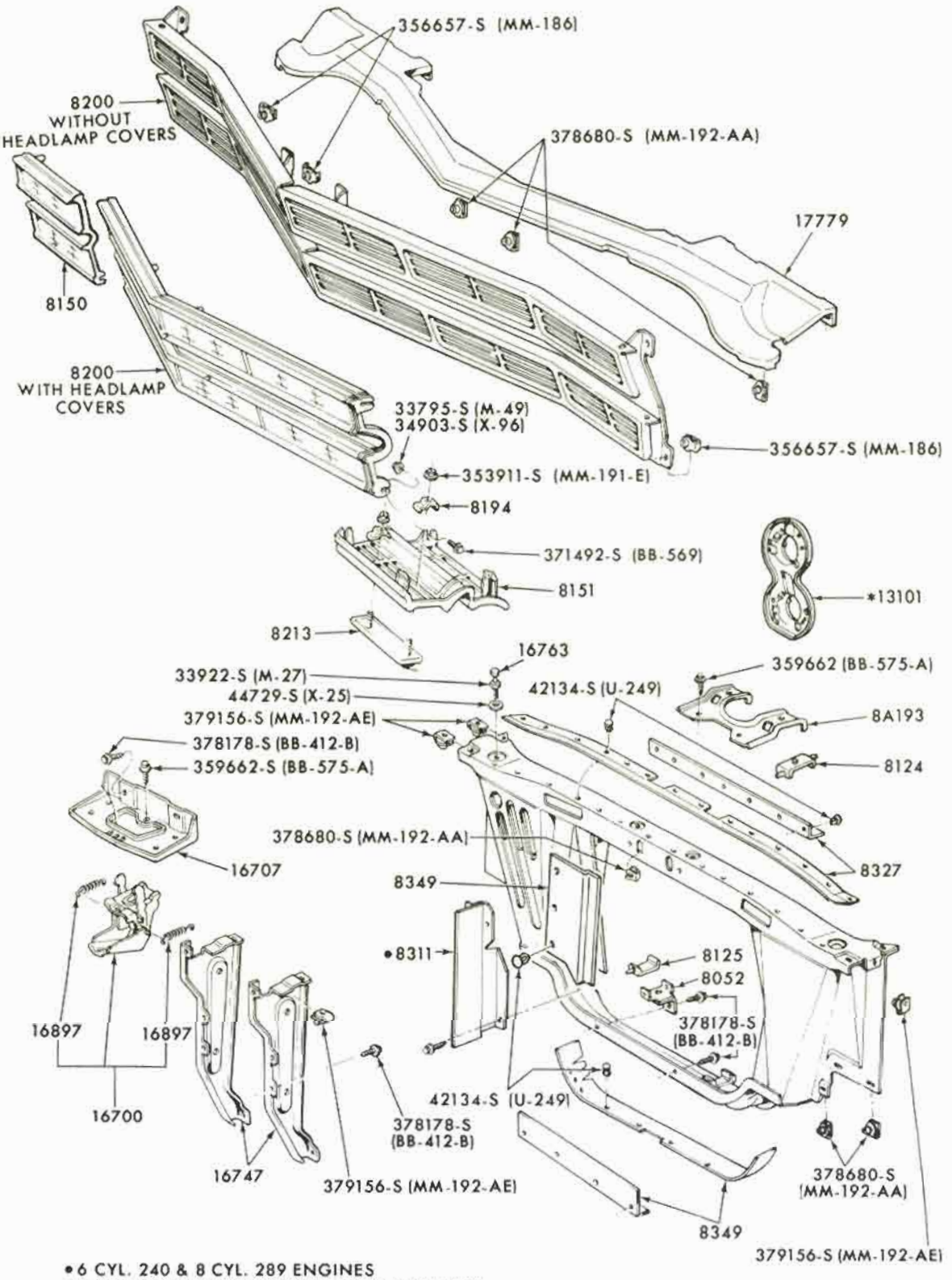

•6 CYL. 240 & 8 CYL. 289 ENGINES
*SUPPLIED ONLY WITH 13008 HEADLAMP ASSY.

P-5605

RADIATOR GRILLE and RELATED PARTS
1967 FORD

COPYRIGHT © 1975 — FORD MOTOR COMPANY — DEARBORN, MICHIGAN

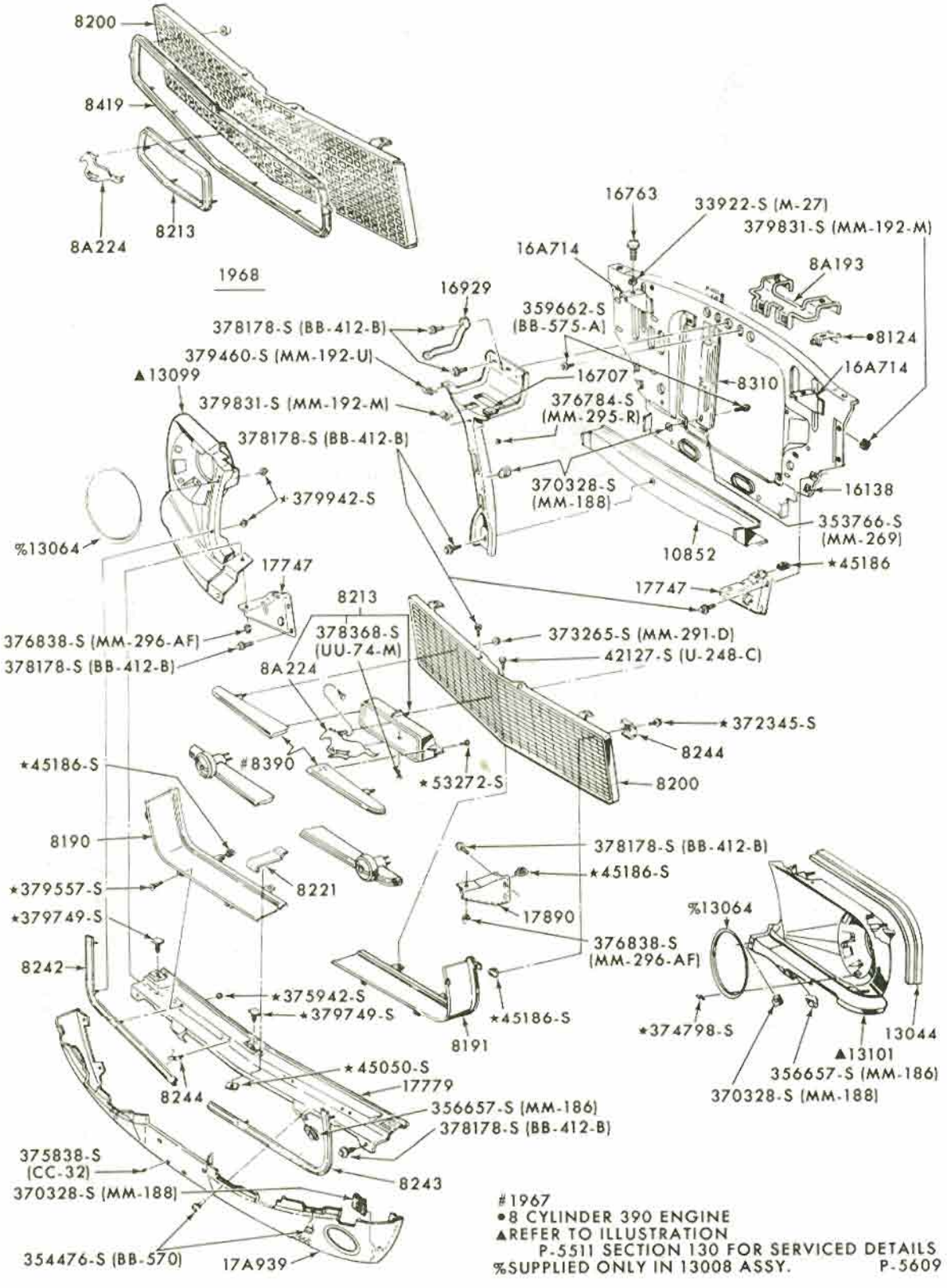

#1967
•8 CYLINDER 390 ENGINE
▲REFER TO ILLUSTRATION P-5511 SECTION 130 FOR SERVICED DETAILS
%SUPPLIED ONLY IN 13008 ASSY. P-5609

RADIATOR GRILLE and RELATED PARTS
1967/68 MUSTANG - EXCEPT GT 350/500

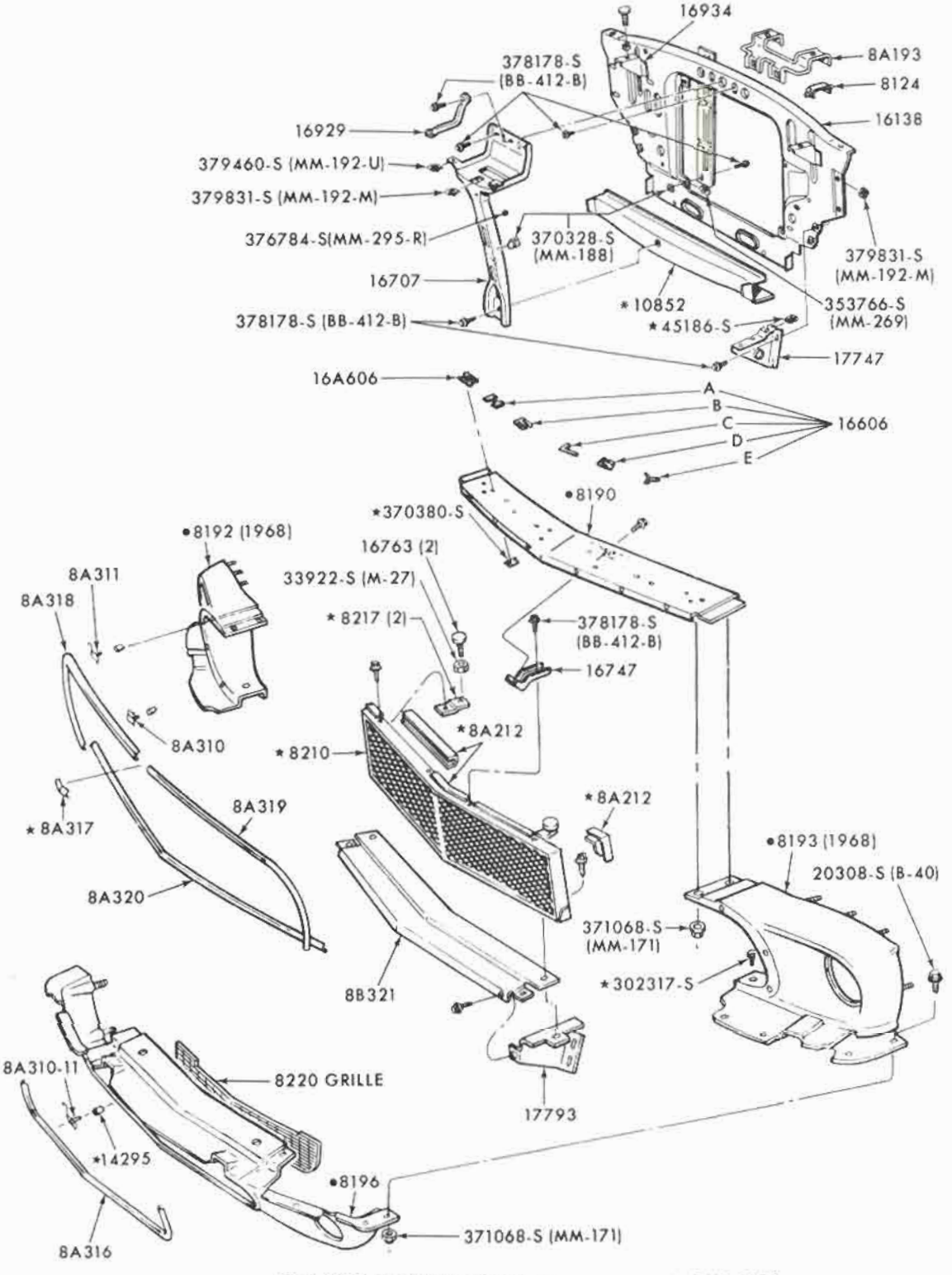

• FOR 1967 SERVICED ONLY IN ASSEMBLY-GROUP 8190.

P-6835

RADIATOR GRILLE and RELATED PARTS
1967/68 MUSTANG GT - 350/500

COPYRIGHT © 1975 — FORD MOTOR COMPANY — DEARBORN, MICHIGAN

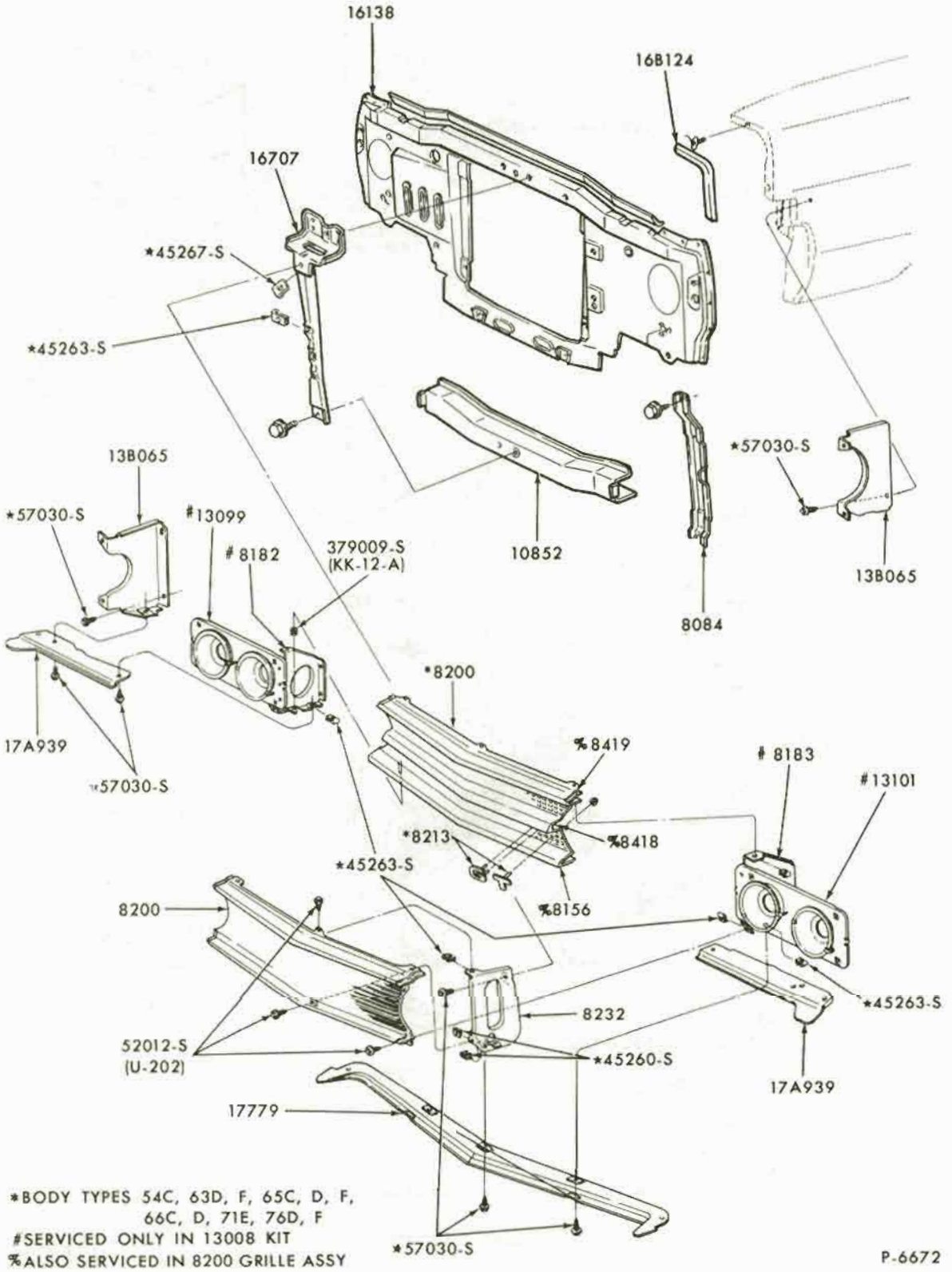

*BODY TYPES 54C, 63D, F, 65C, D, F, 66C, D, 71E, 76D, F
#SERVICED ONLY IN 13008 KIT
%ALSO SERVICED IN 8200 GRILLE ASSY

P-6672

RADIATOR GRILLE and RELATED PARTS
1969 FAIRLANE/TORINO

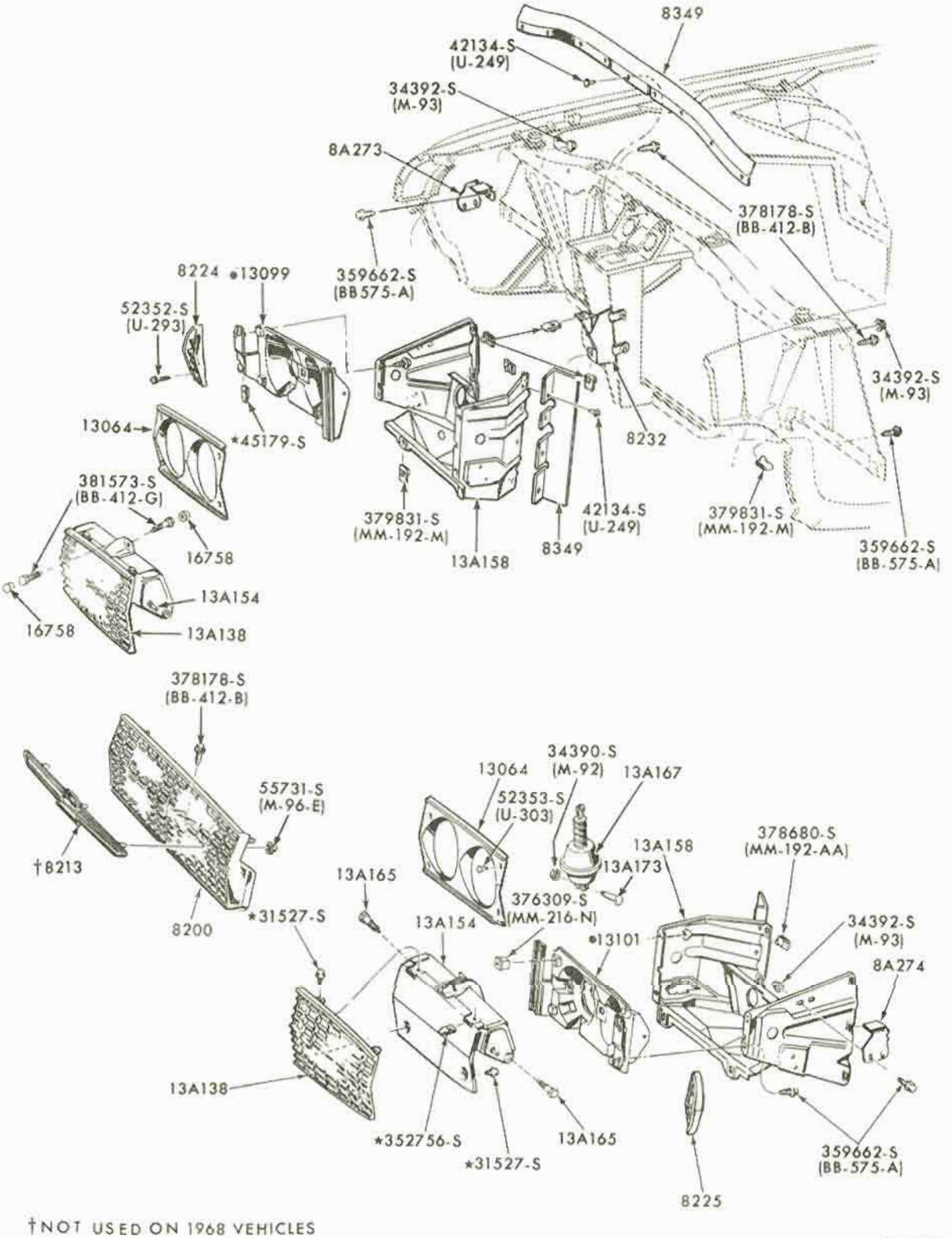

†NOT USED ON 1968 VEHICLES

•SERVICED ONLY IN 13008 HEADLAMP ASSY.

P-5520

RADIATOR GRILLE and RELATED PARTS
1967/69 THUNDERBIRD

COPYRIGHT © 1975 — FORD MOTOR COMPANY — DEARBORN, MICHIGAN

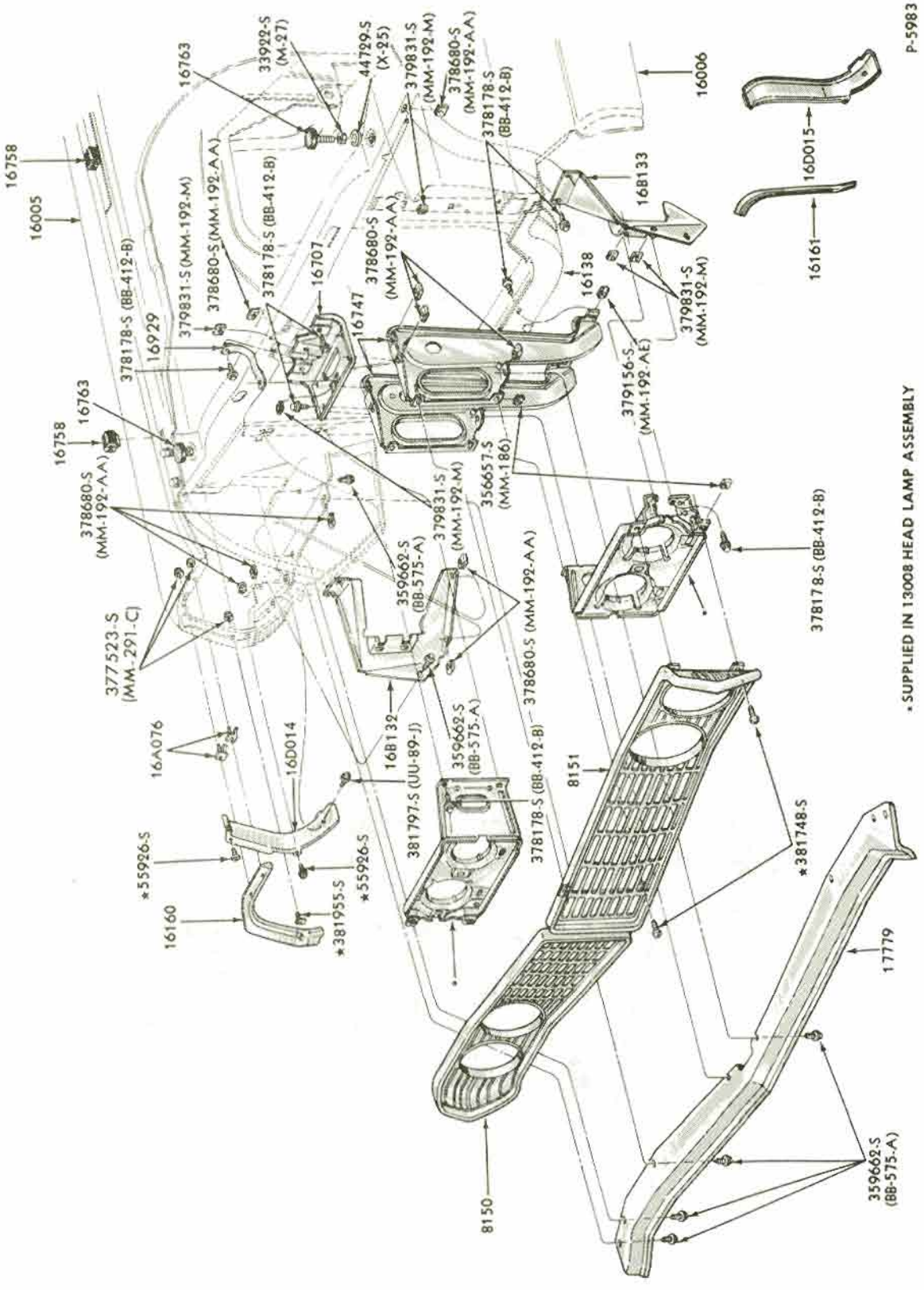

RADIATOR GRILLE and RELATED PARTS
1968 FORD - w/o HEADLAMP COVERS

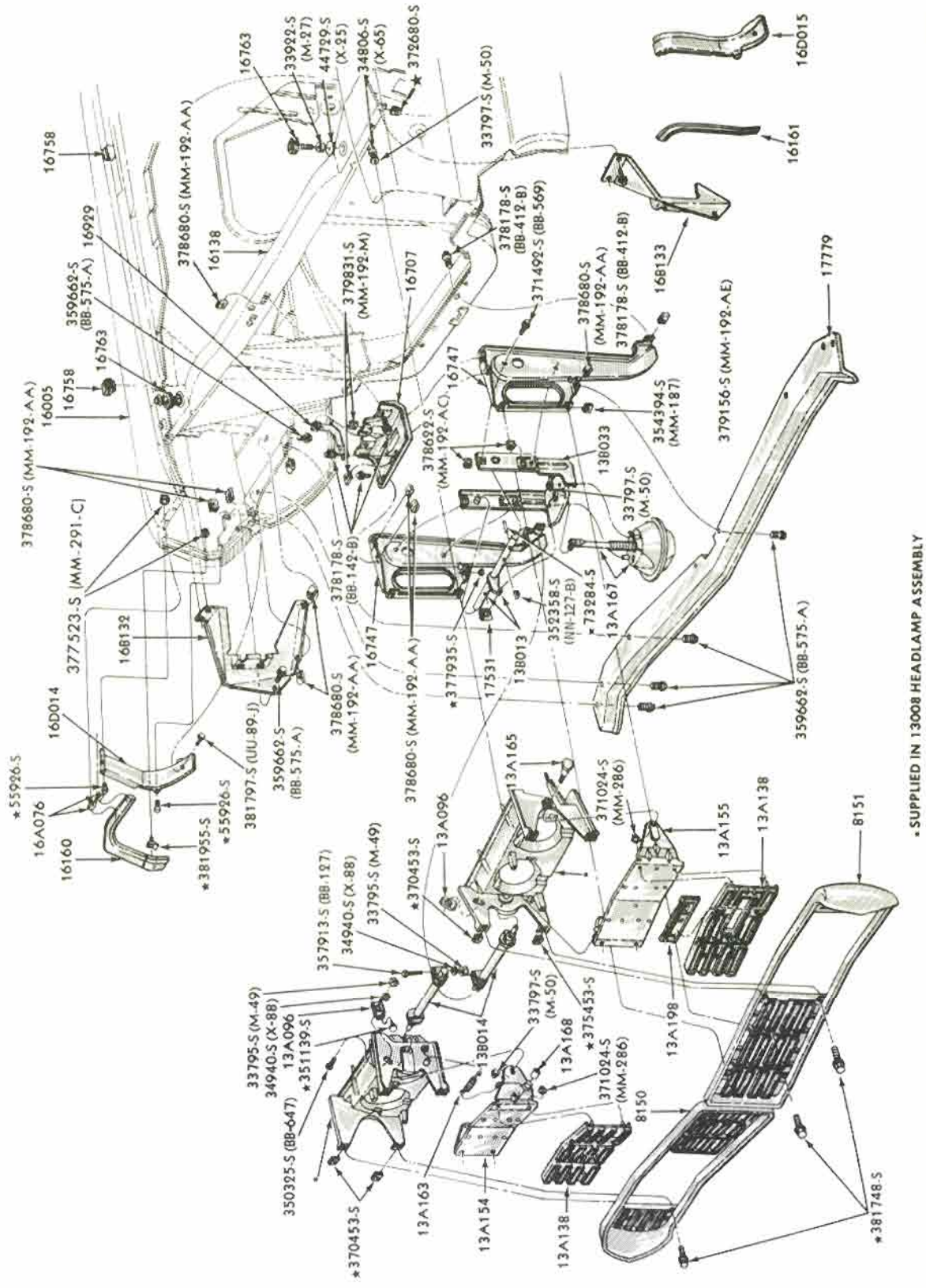

P-5982

*SUPPLIED IN 13008 HEADLAMP ASSEMBLY

RADIATOR GRILLE and RELATED PARTS
1968 FORD - w/HEADLAMP COVERS

COPYRIGHT © 1975— FORD MOTOR COMPANY —DEARBORN, MICHIGAN

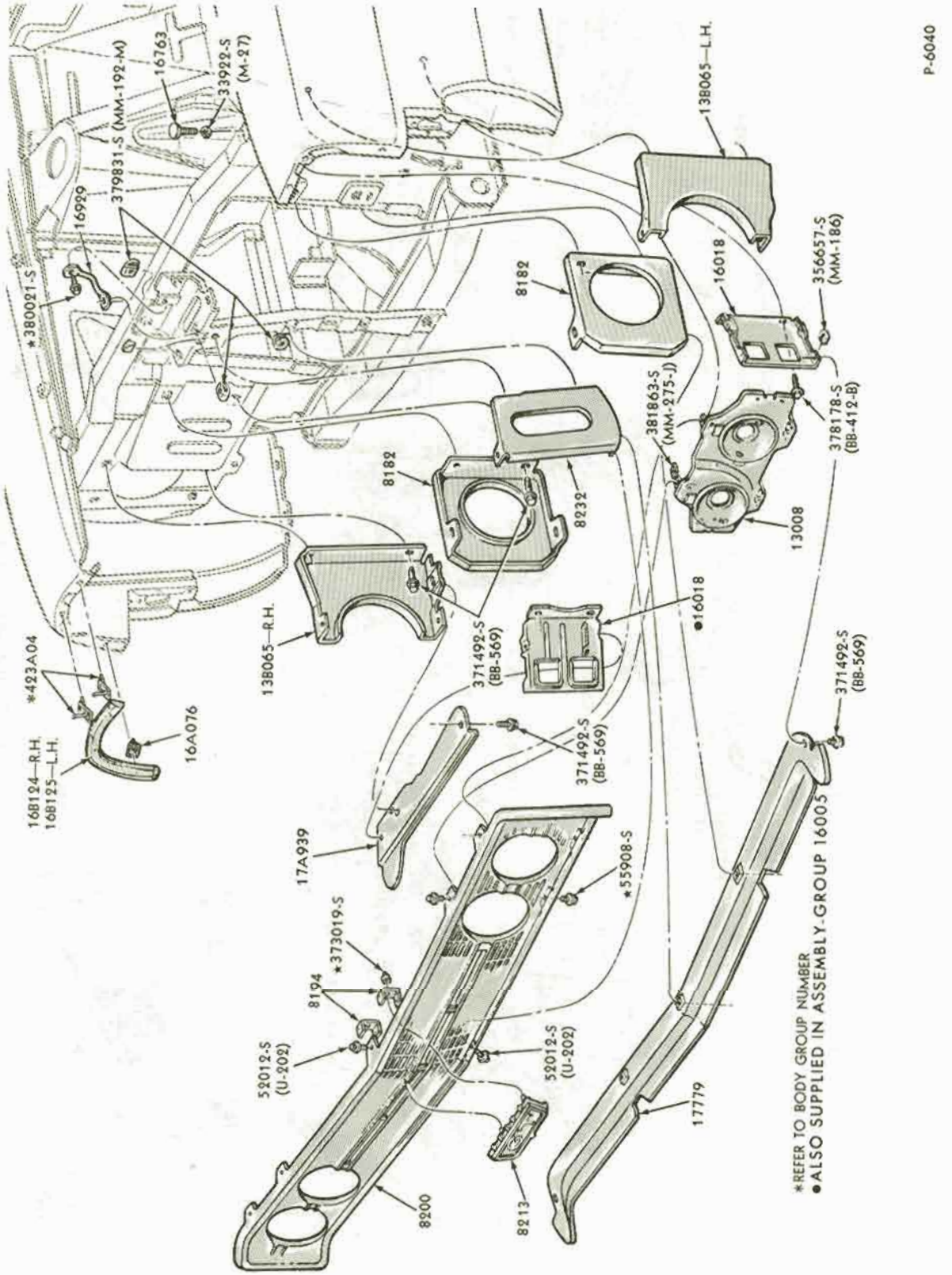

RADIATOR GRILLE and RELATED PARTS
1968 FAIRLANE/TORINO

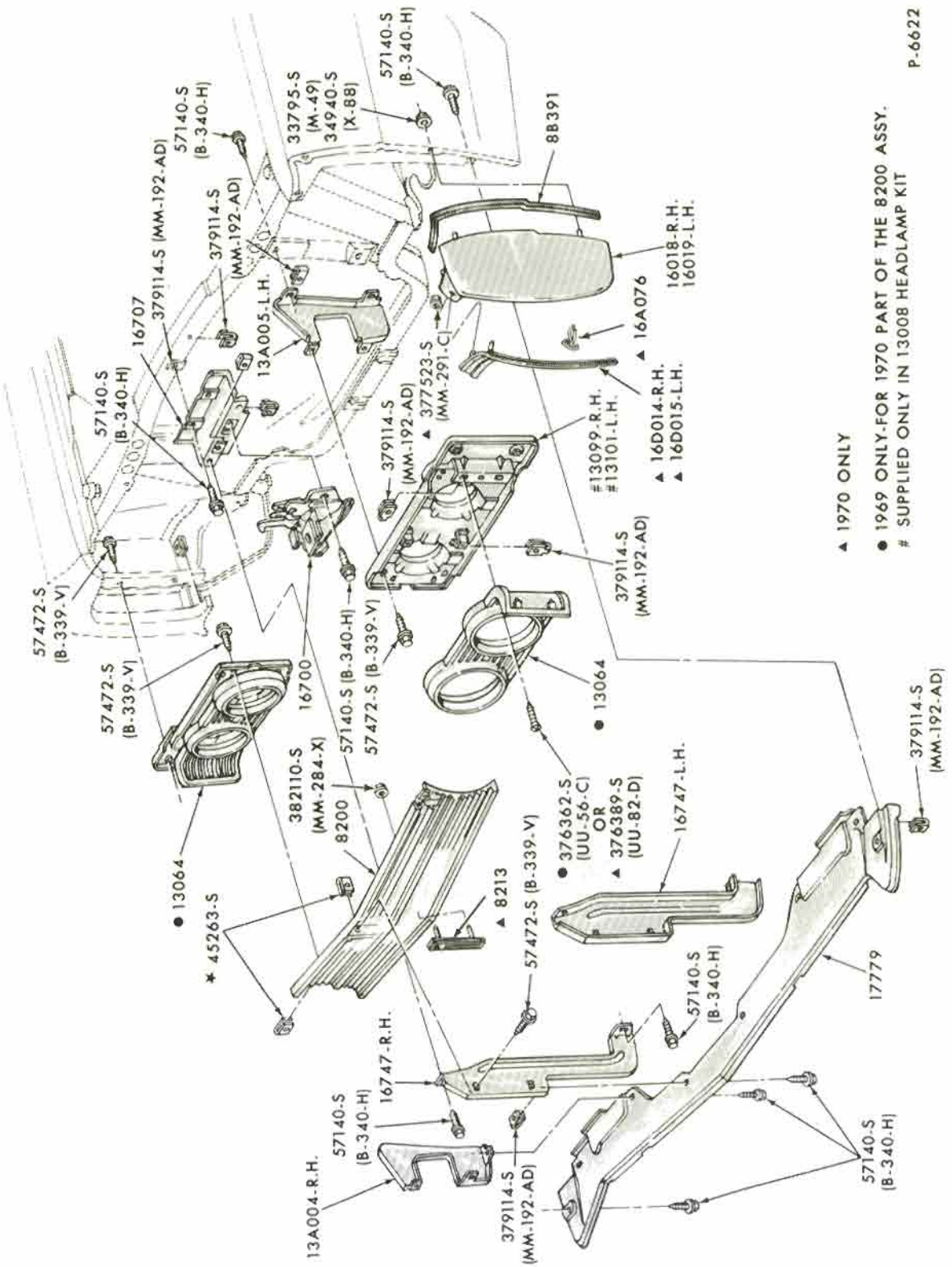

RADIATOR GRILLE and RELATED PARTS
1969/70 FORD - w/o HEADLAMP COVERS

COPYRIGHT © 1975 — FORD MOTOR COMPANY — DEARBORN, MICHIGAN

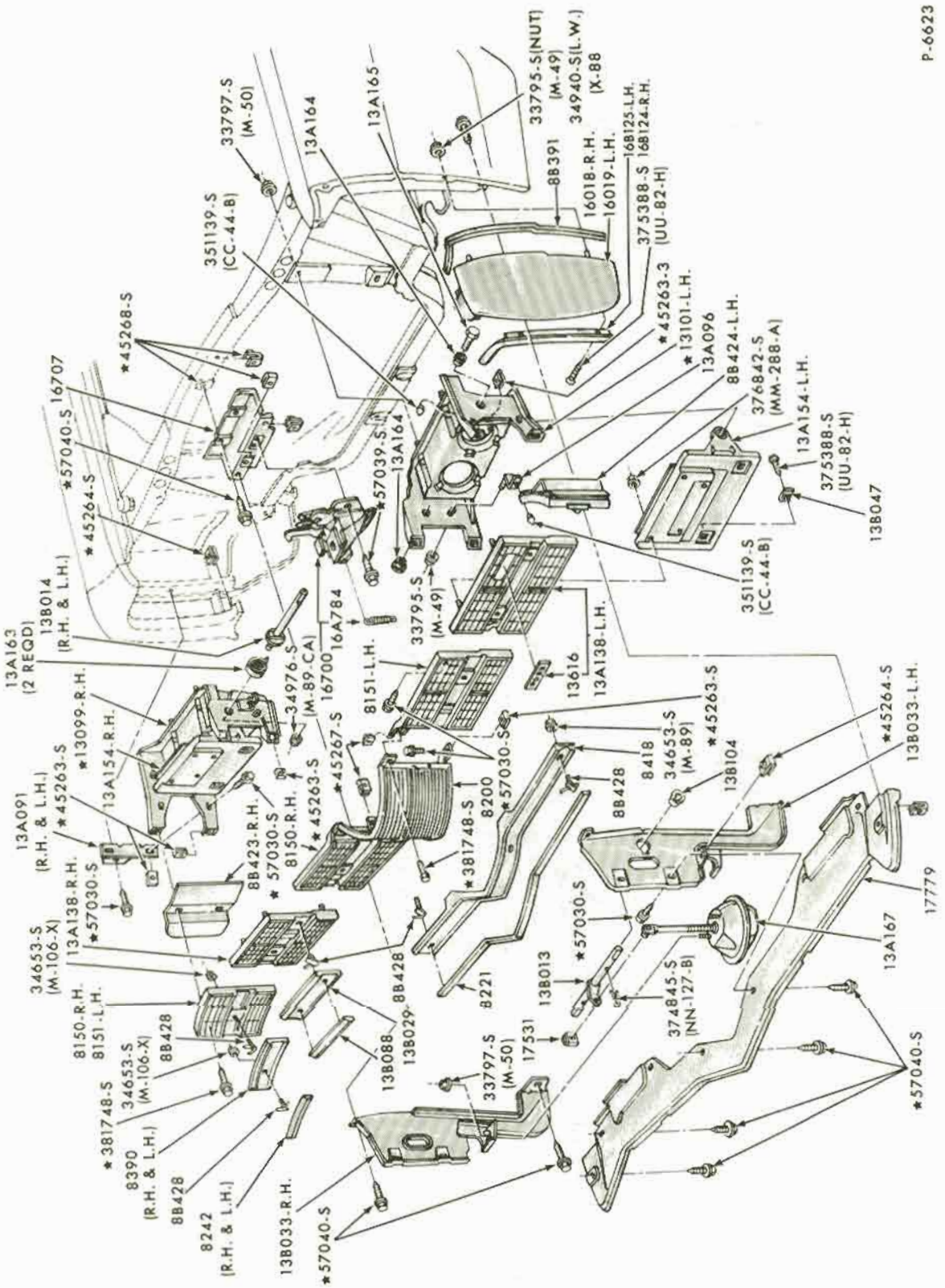

RADIATOR GRILLE and RELATED PARTS
1969 FORD - w/HEADLAMP COVERS

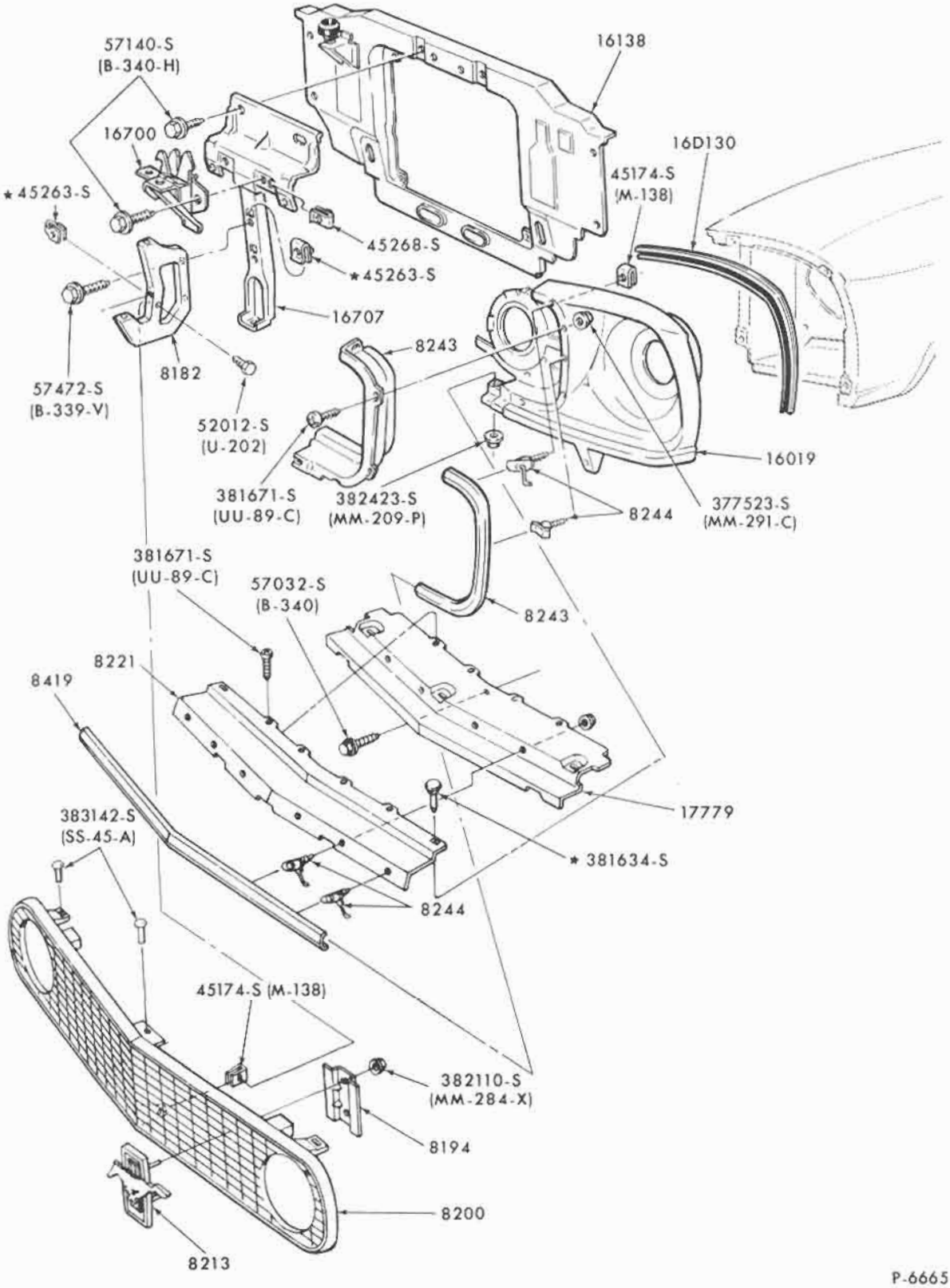

P-6665

RADIATOR GRILLE and RELATED PARTS
1969 MUSTANG - EXCEPT GT350/500

COPYRIGHT © 1975 — FORD MOTOR COMPANY — DEARBORN, MICHIGAN

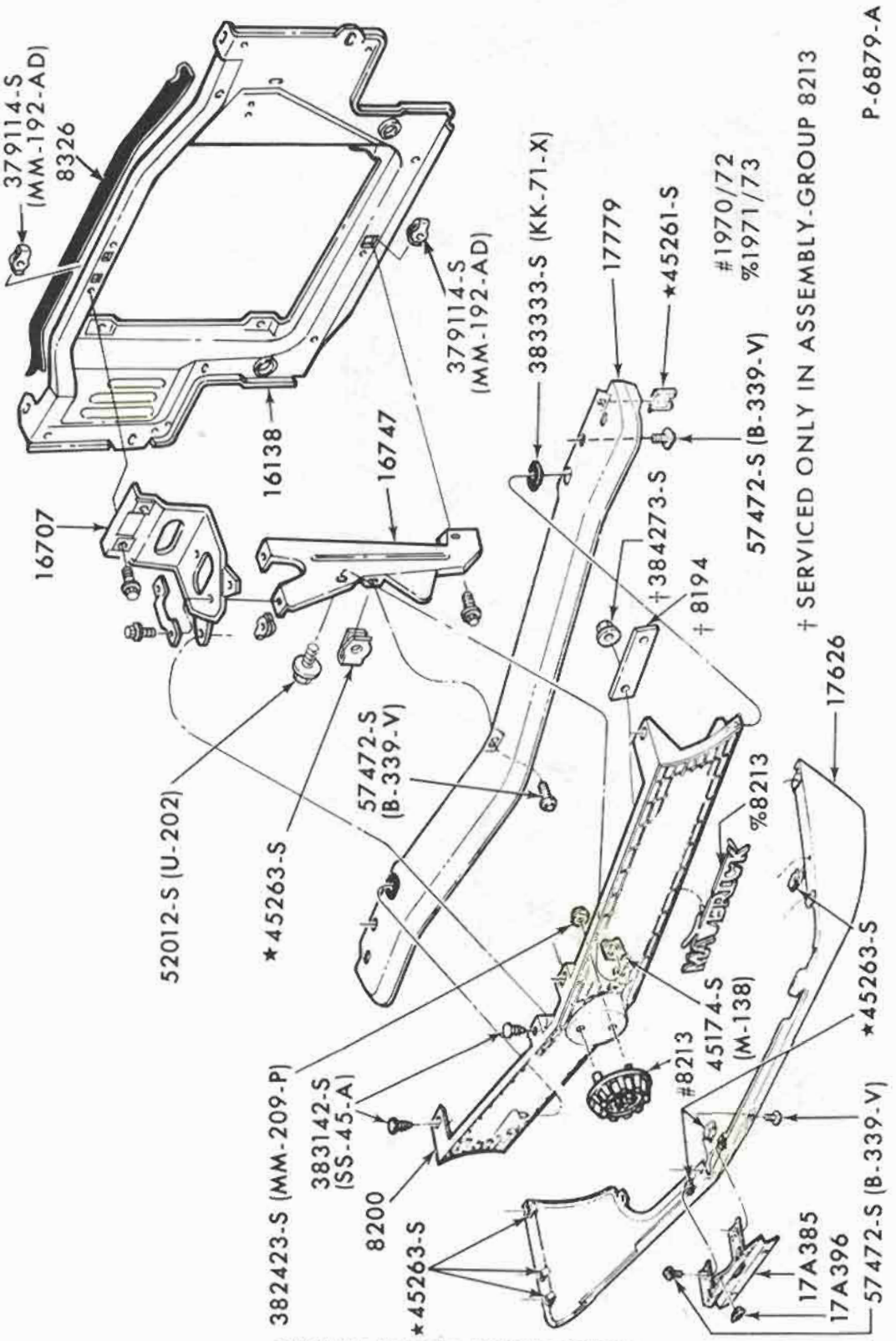

RADIATOR GRILLE and RELATED PARTS
1970/72 MAVERICK

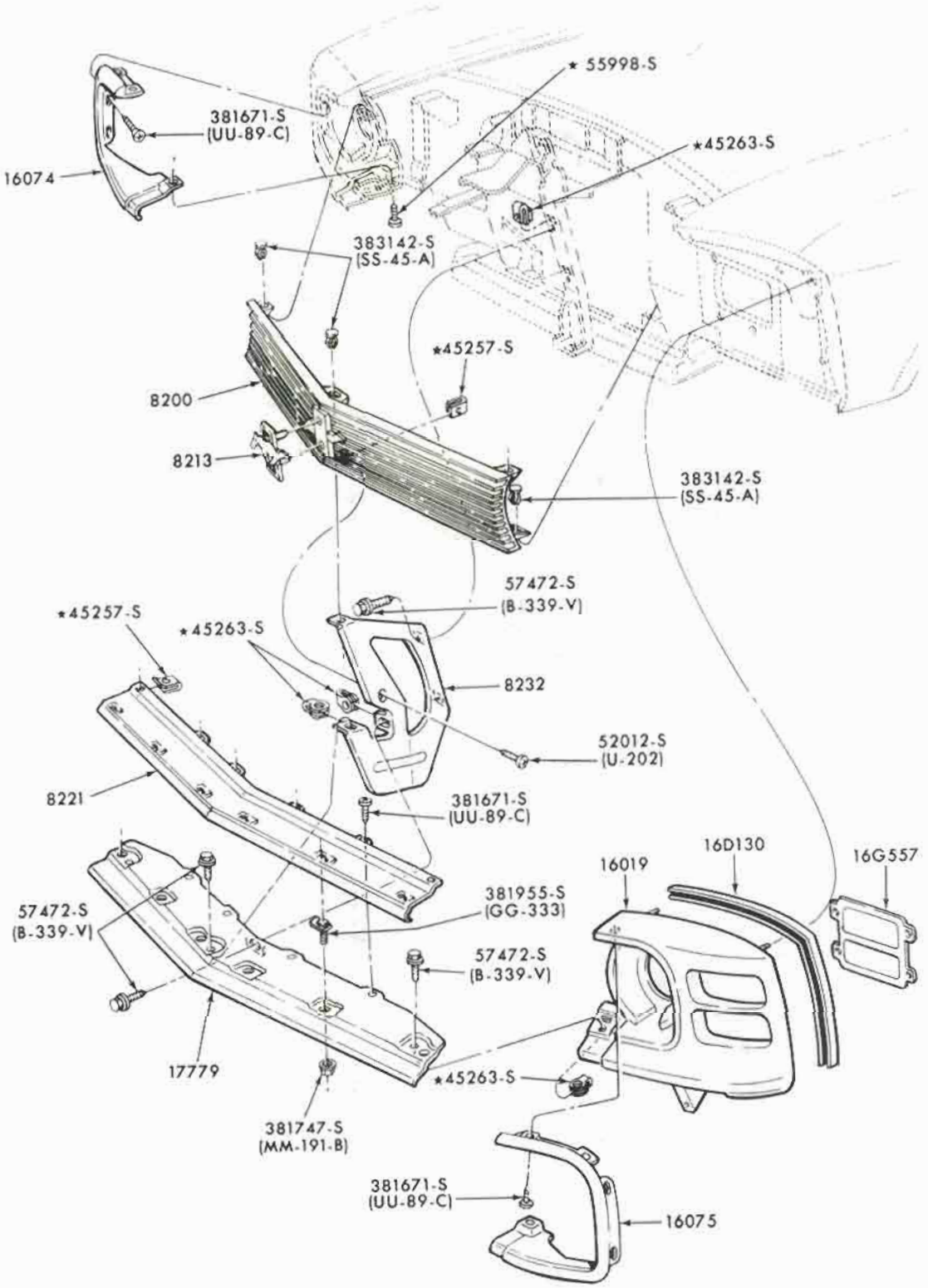

P-7160

RADIATOR GRILLE and RELATED PARTS
1970 MUSTANG-EXCEPT GT350/500

COPYRIGHT © 1975 — FORD MOTOR COMPANY — DEARBORN, MICHIGAN

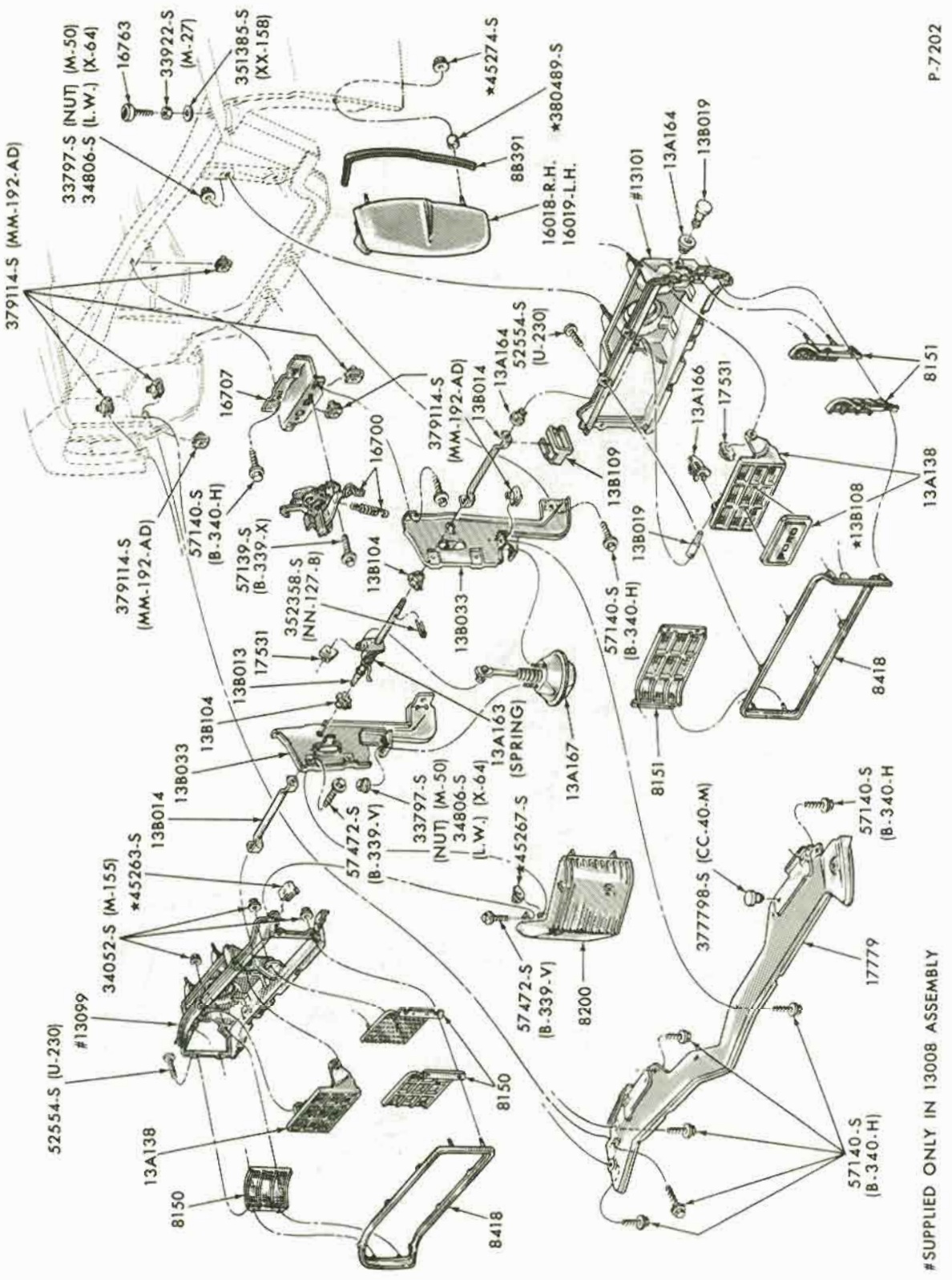

RADIATOR GRILLE and RELATED PARTS
1970 FORD-w/HEADLAMP COVERS

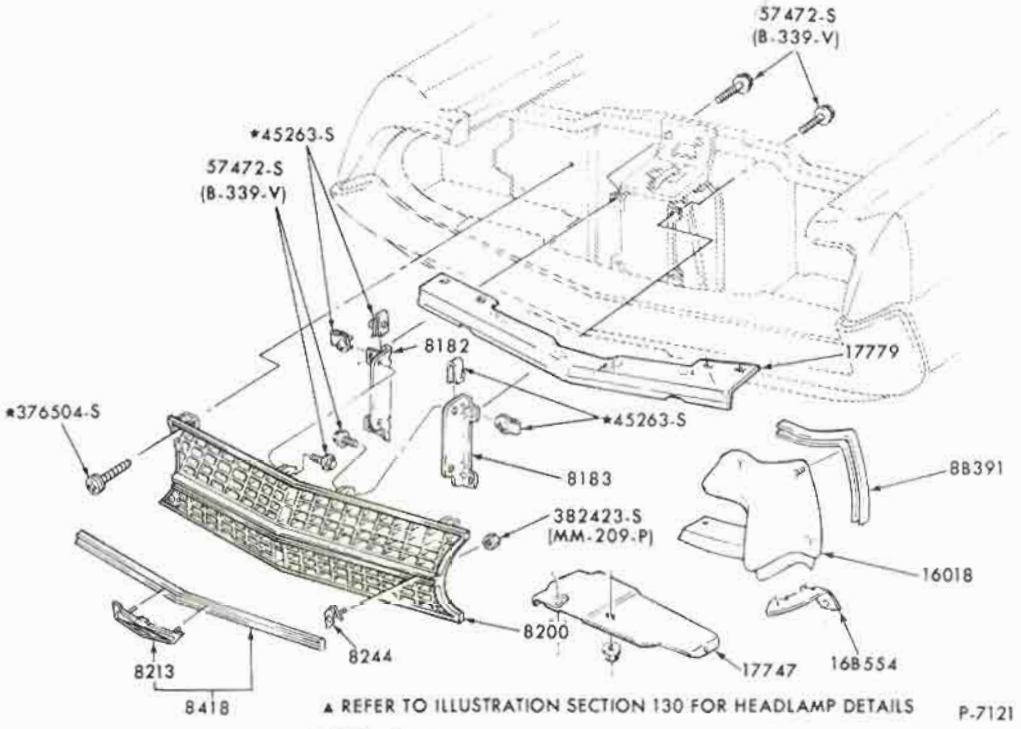

RADIATOR GRILLE and RELATED PARTS
1970 FAIRLANE/TORINO-BODY TYPES 54A,B,62,63H,65B,66A,71B,D
1970 FAIRLANE/TORINO-BODY TYPE 66B-"Before 12/30/69"
1971 TORINO-BODY TYPES 54A,63H,65A,66A,71D

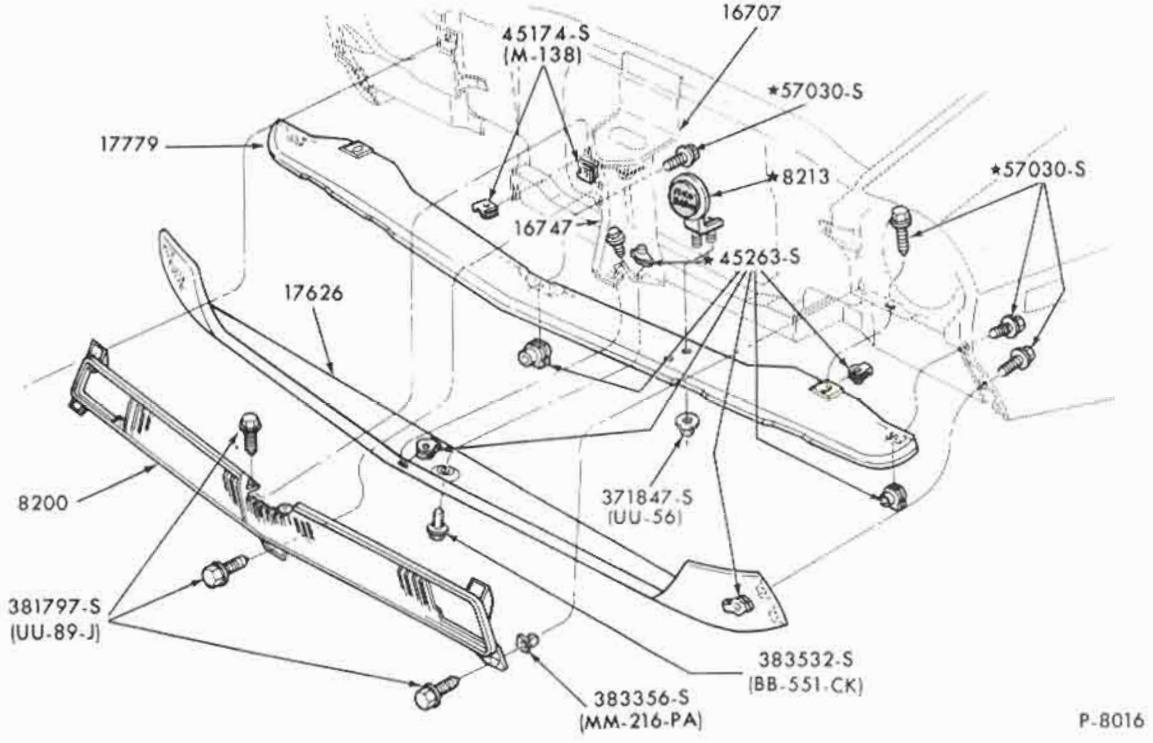

RADIATOR GRILLE and RELATED PARTS
1971/72 PINTO

COPYRIGHT © 1975 — FORD MOTOR COMPANY — DEARBORN, MICHIGAN

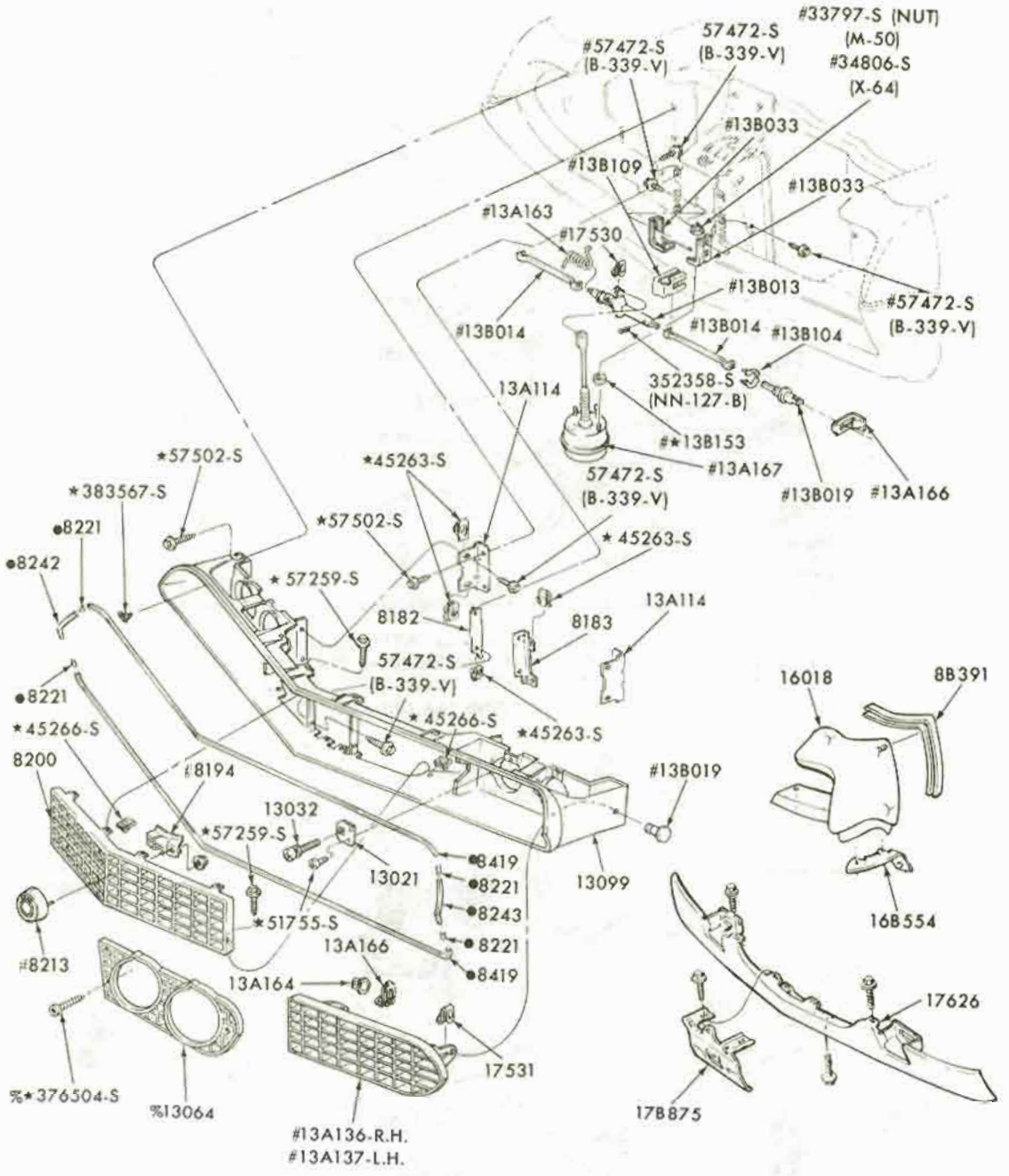

% 1970 ONLY ALL BODY TYPES WITHOUT HIDDEN HEADLAMPS
# ALL BODY TYPES WITH HIDDEN HEADLAMPS
●ALSO SERVICED IN 13099 ASSEMBLY

P-7123

RADIATOR GRILLE, HEADLAMP COVERS and RELATED PARTS
1970 FAIRLANE/TORINO-BODY TYPES 54C,57C,E,63C,F,65C,E,66C,E,71C,E,76
1970 FAIRLANE/TORINO-BODY TYPE 66B-"From 12/30/69"
1971 TORINO BODY TYPES-54C,57,63C,F,65C,E,66B,C,E,71C,E,76F-w/HEADLAMP COVERS

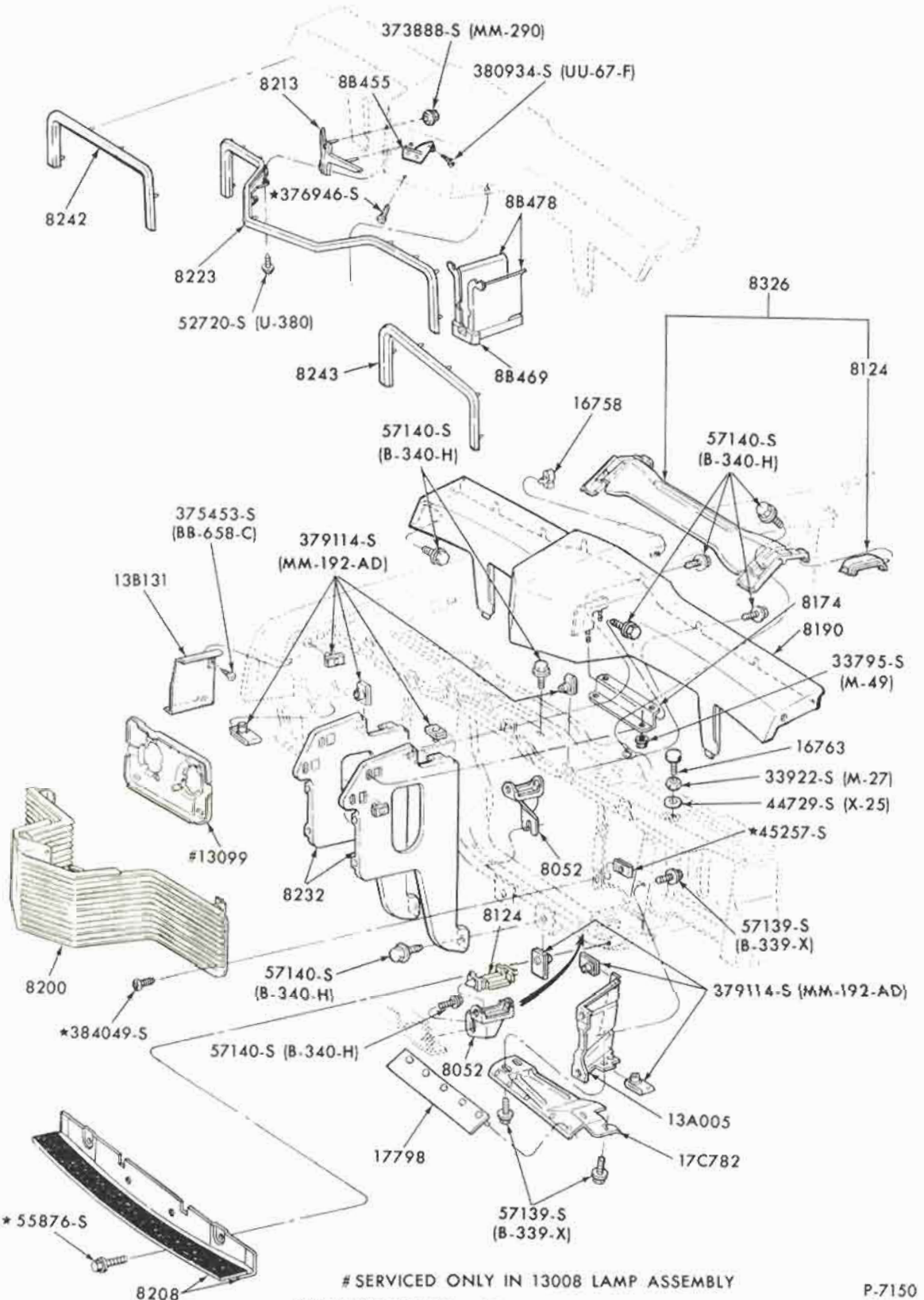

SERVICED ONLY IN 13008 LAMP ASSEMBLY

P-7150

RADIATOR GRILLE and RELATED PARTS
1970/71 THUNDERBIRD

COPYRIGHT © 1975 — FORD MOTOR COMPANY — DEARBORN, MICHIGAN

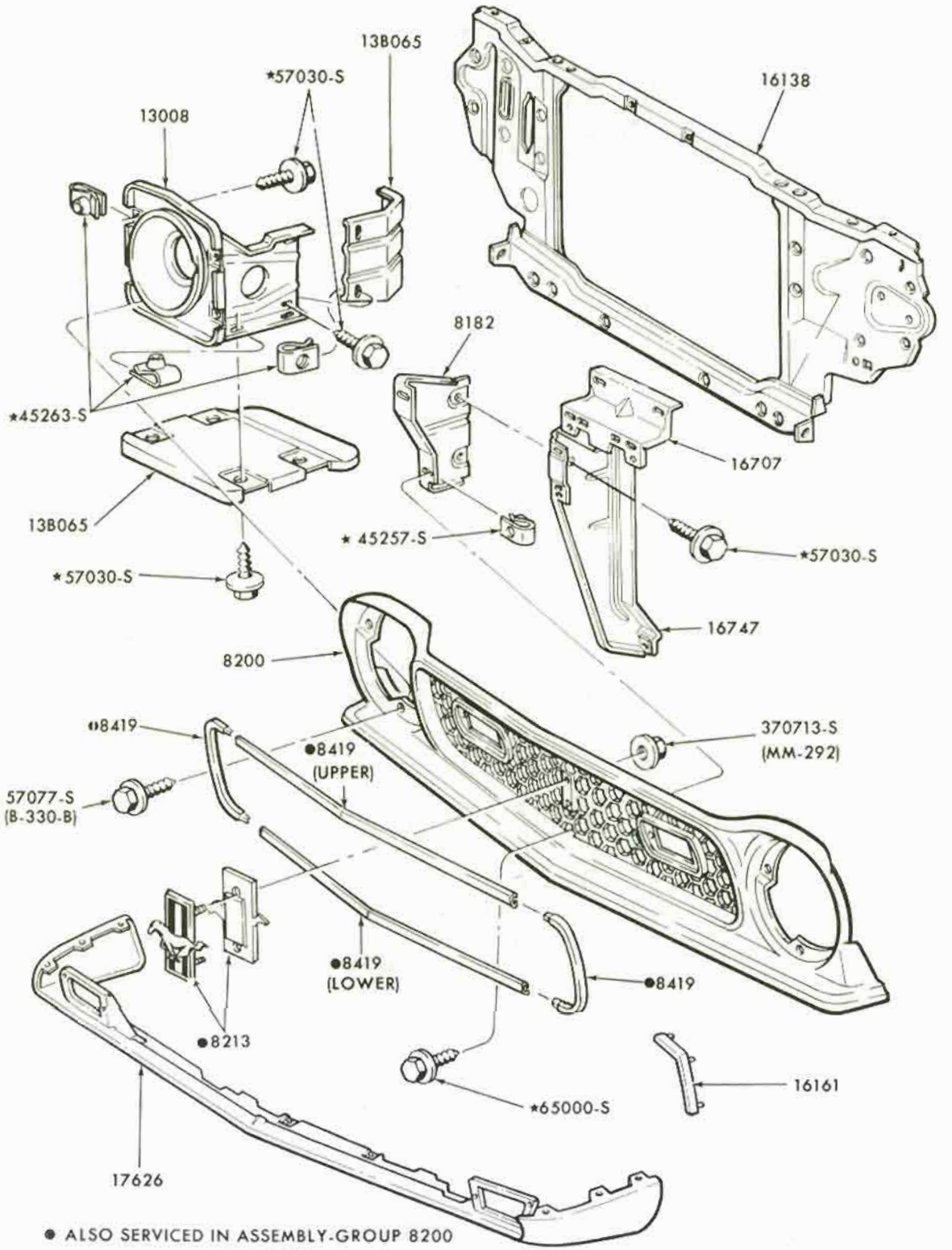

● ALSO SERVICED IN ASSEMBLY-GROUP 8200

P-8090

RADIATOR GRILLE and RELATED PARTS
1971/72 MUSTANG-w/SPORT LAMPS

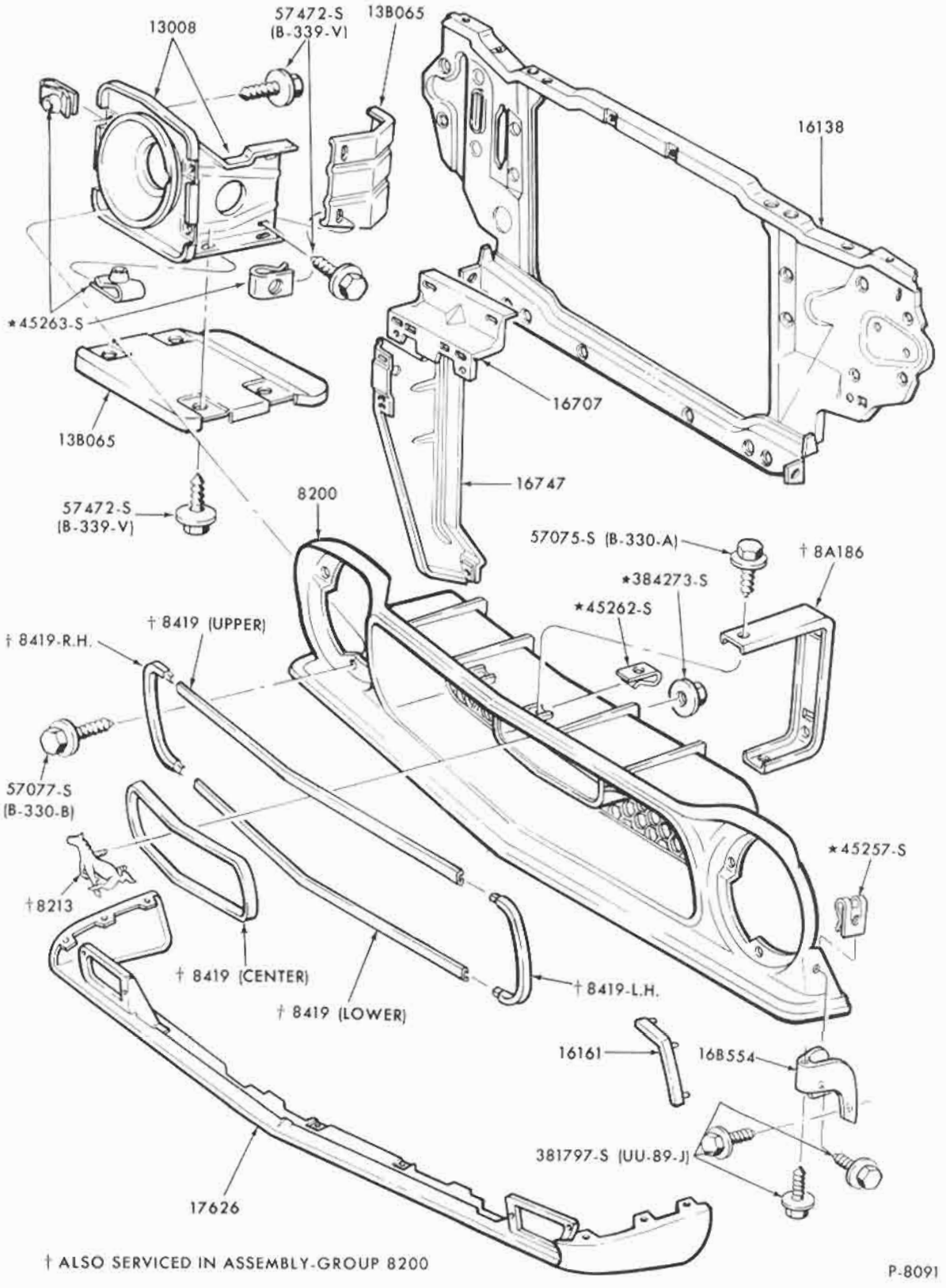

† ALSO SERVICED IN ASSEMBLY-GROUP 8200

P-8091

RADIATOR GRILLE and RELATED PARTS
1971/72 MUSTANG-w/o SPORT LAMPS

COPYRIGHT © 1975 — FORD MOTOR COMPANY — DEARBORN, MICHIGAN

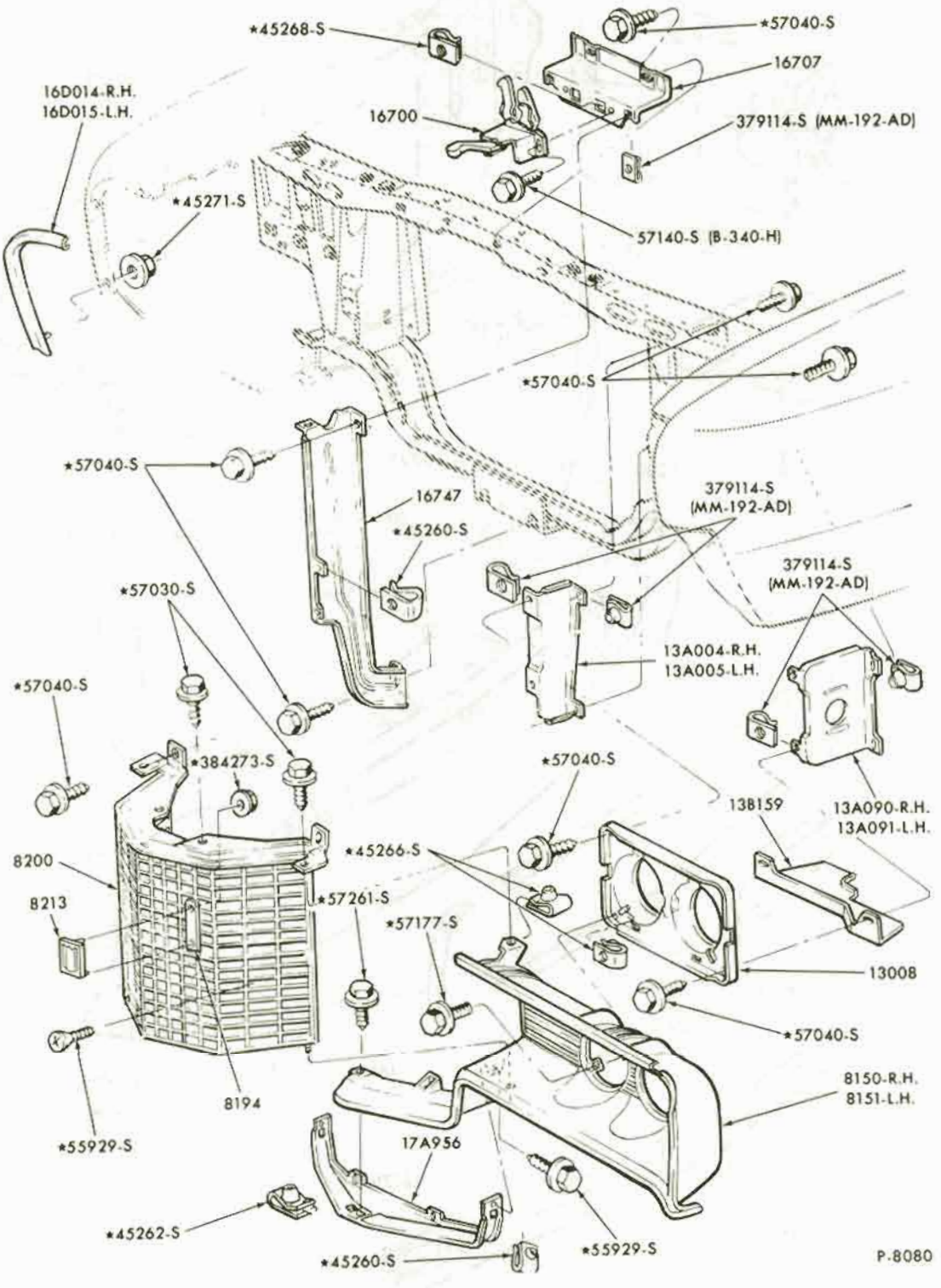

RADIATOR GRILLE and RELATED PARTS
1971 FORD

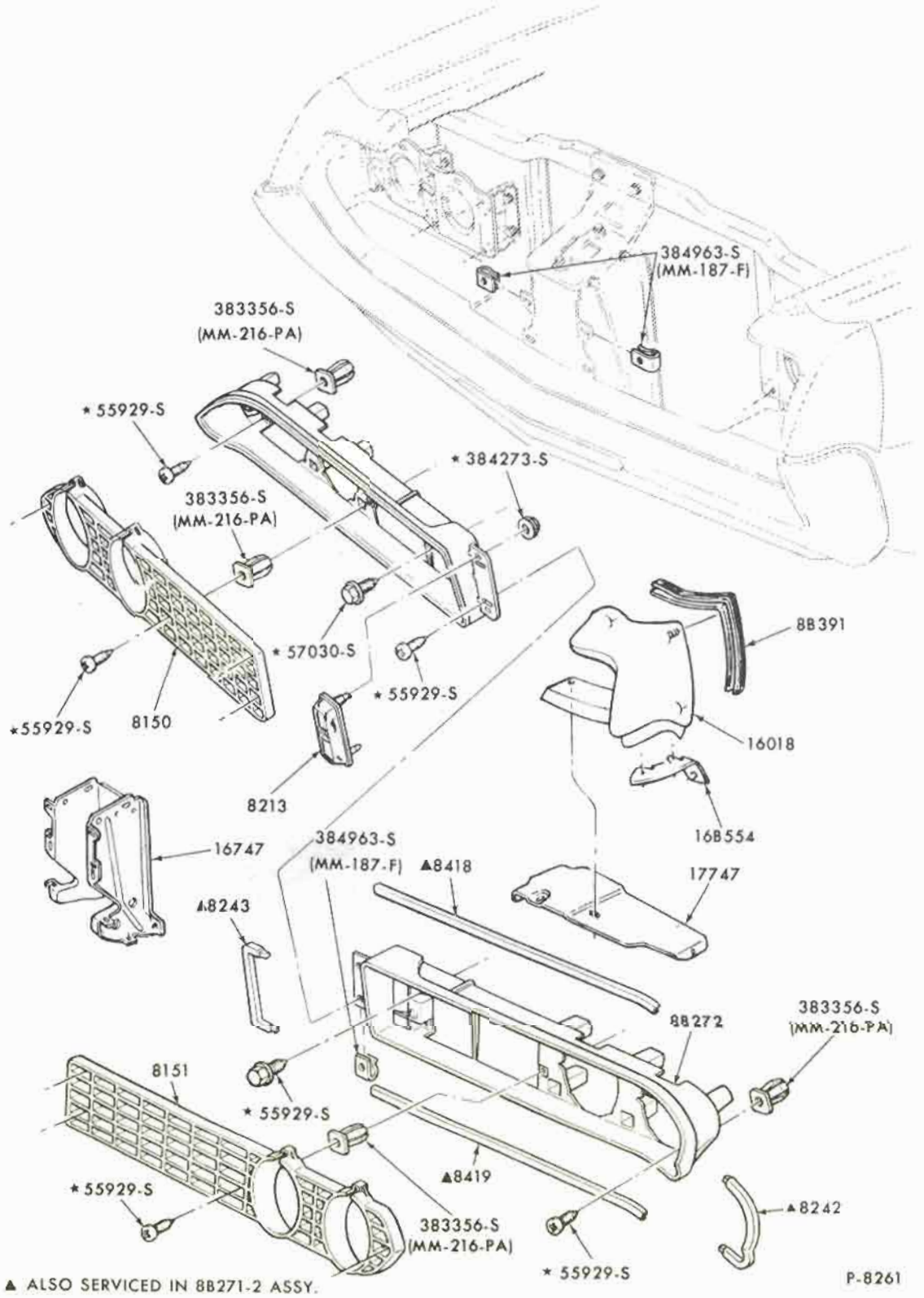

RADIATOR GRILLE and RELATED PARTS
1971 TORINO-BODY TYPES 54C,57C,E,63C,F,65C,E,66B,C,E,71C,E,76F-w/o HEADLAMP COVERS

COPYRIGHT © 1975 — FORD MOTOR COMPANY — DEARBORN, MICHIGAN

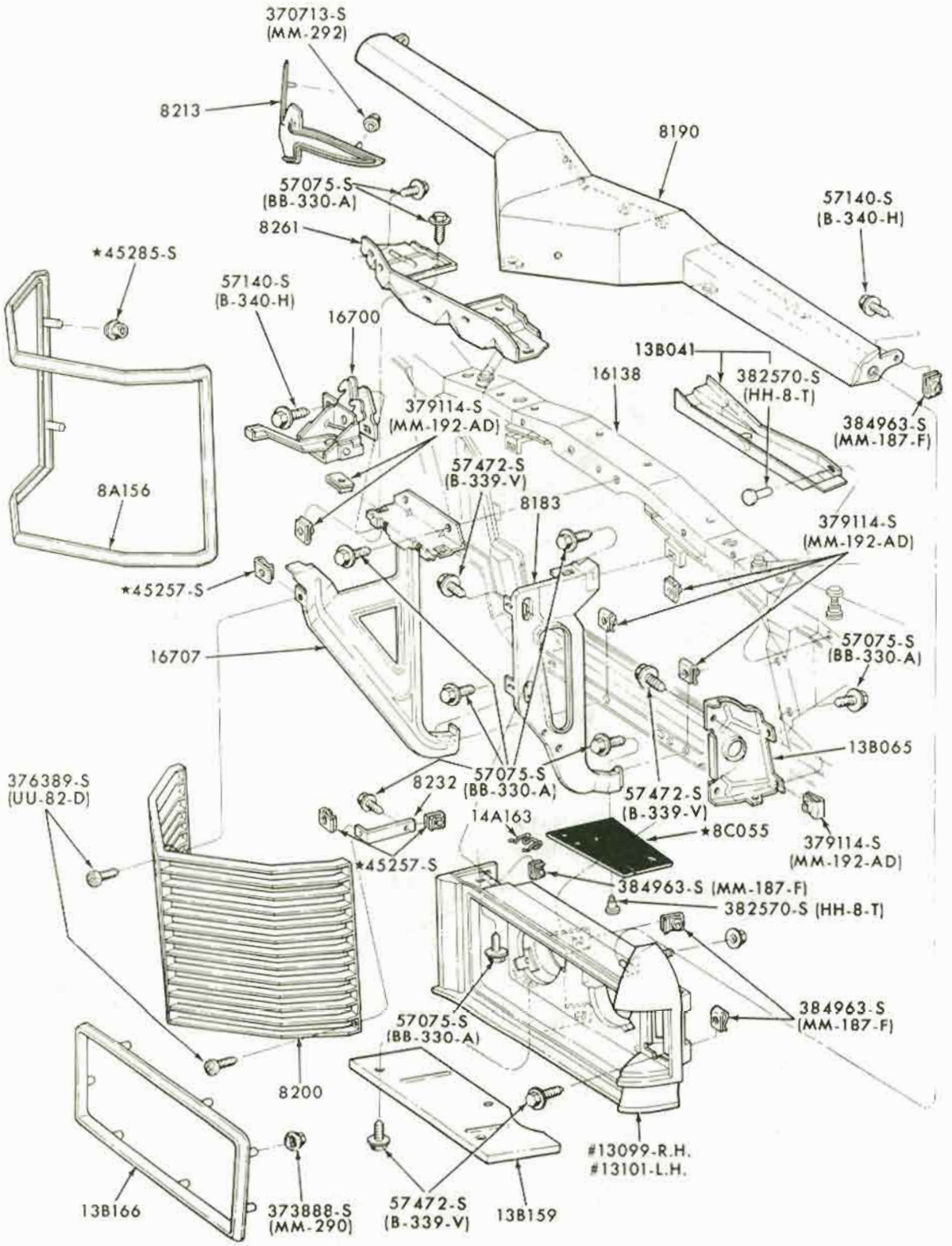

SERVICED ONLY IN 13008 ASSY.

P-8658

RADIATOR GRILLE and RELATED PARTS
1972 THUNDERBIRD

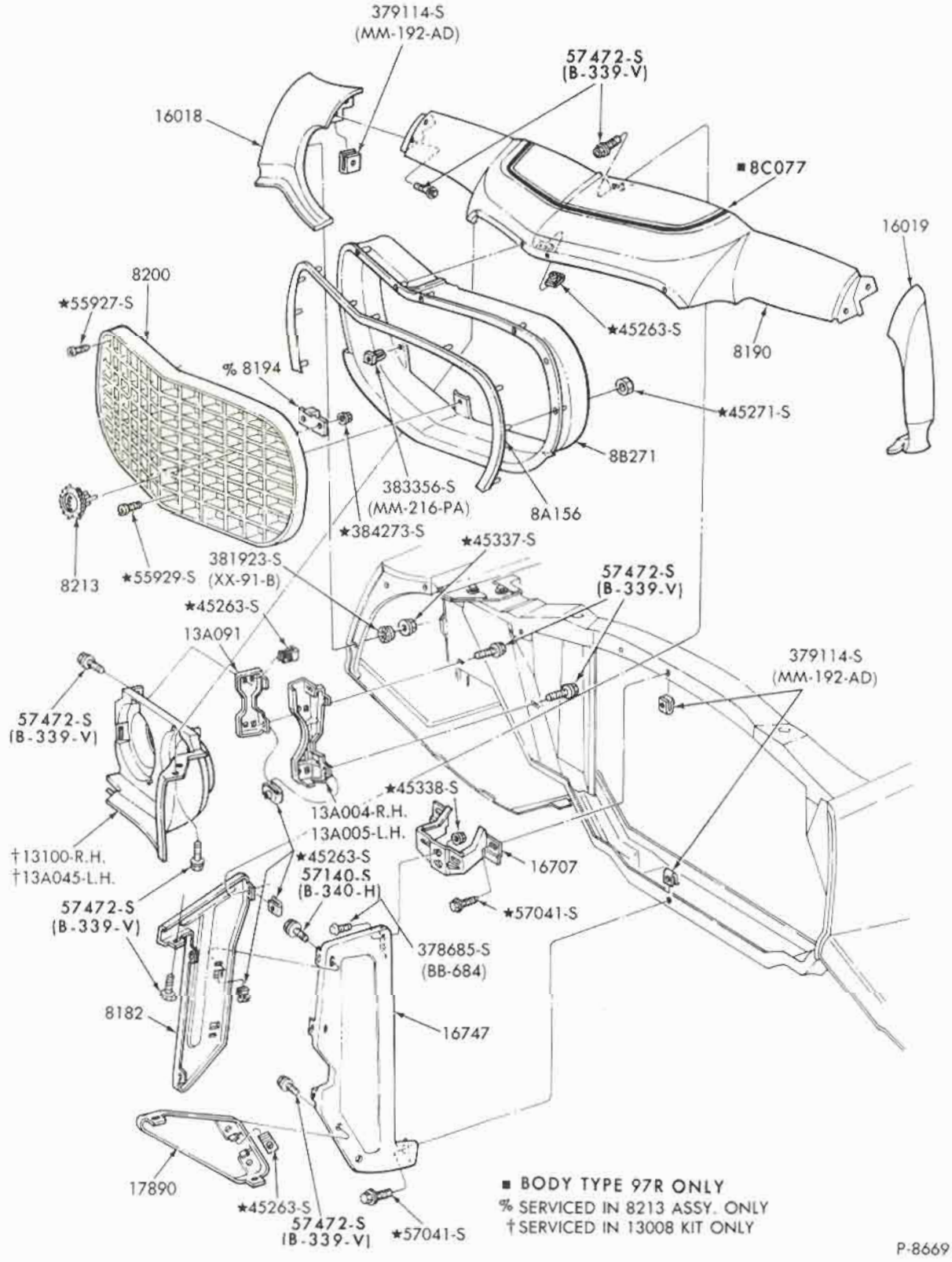

RADIATOR GRILLE and RELATED PARTS
1972 TORINO-BODY TYPES 53D,63R,65D,R,71D,K,97D,K,R

COPYRIGHT © 1975— FORD MOTOR COMPANY —DEARBORN, MICHIGAN

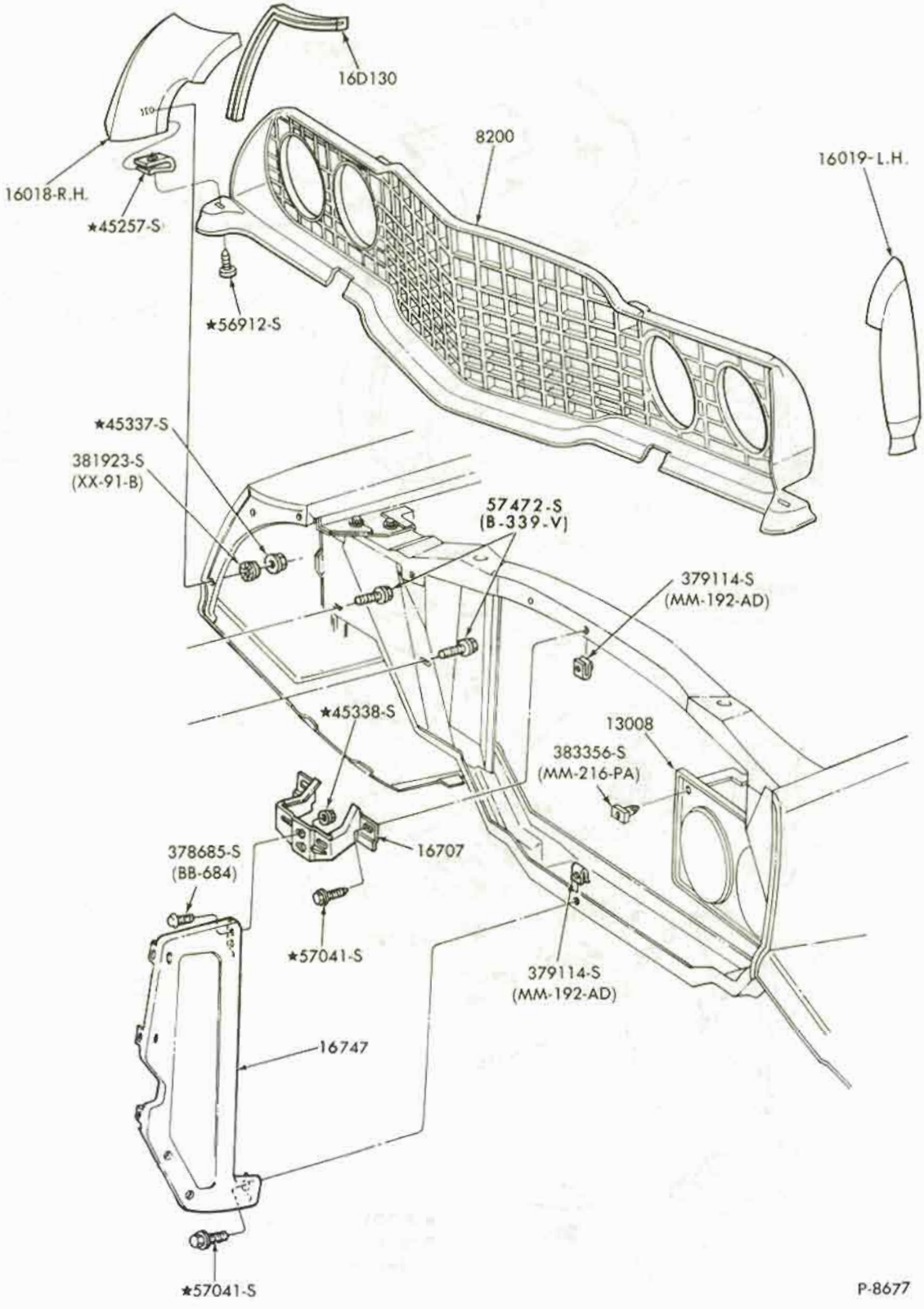

RADIATOR GRILLE and RELATED PARTS
1972 TORINO-BODY TYPES 53B,65B,71B

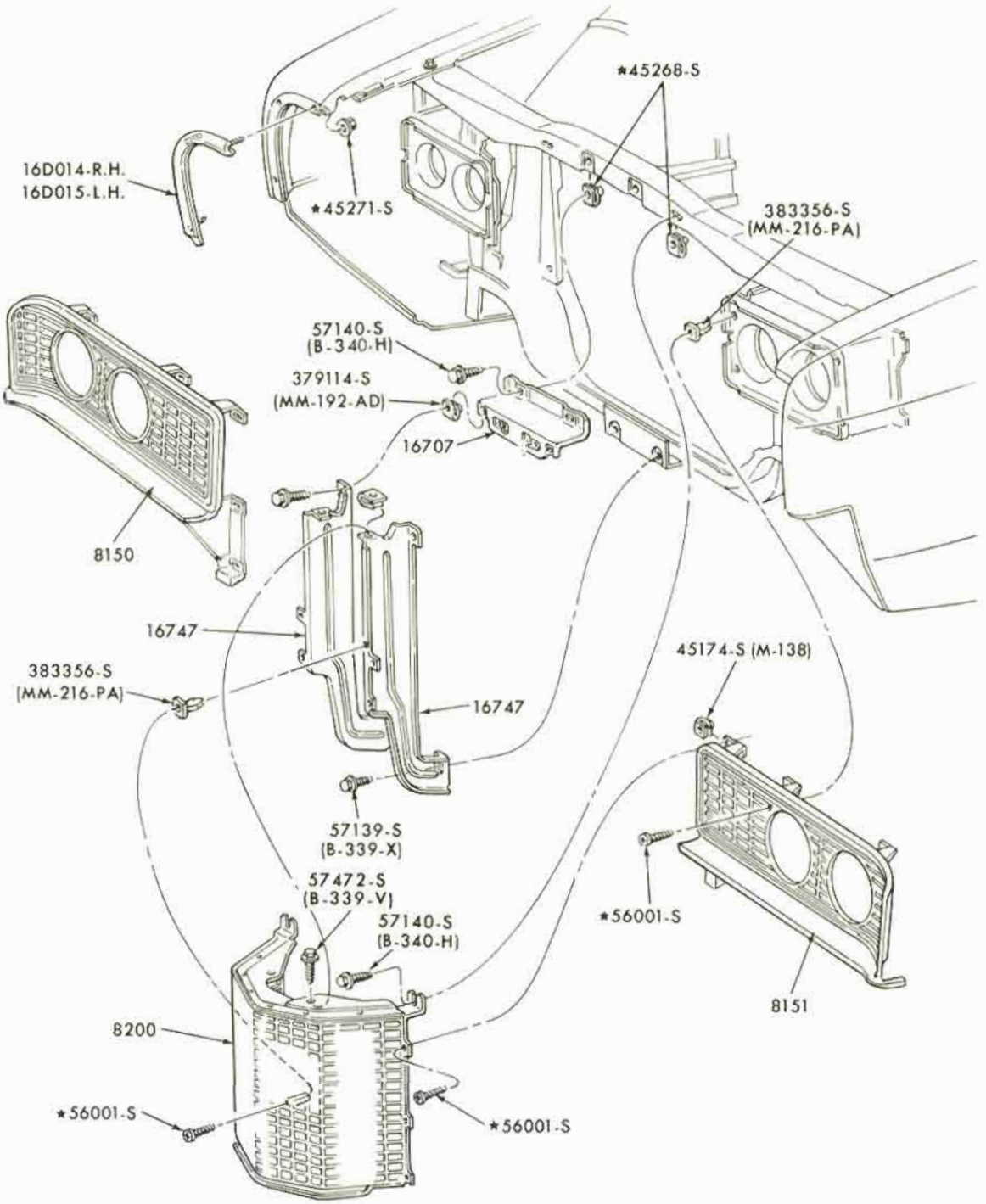

P-8755

RADIATOR GRILLE and RELATED PARTS
1972 FORD

COPYRIGHT © 1975 — FORD MOTOR COMPANY — DEARBORN, MICHIGAN

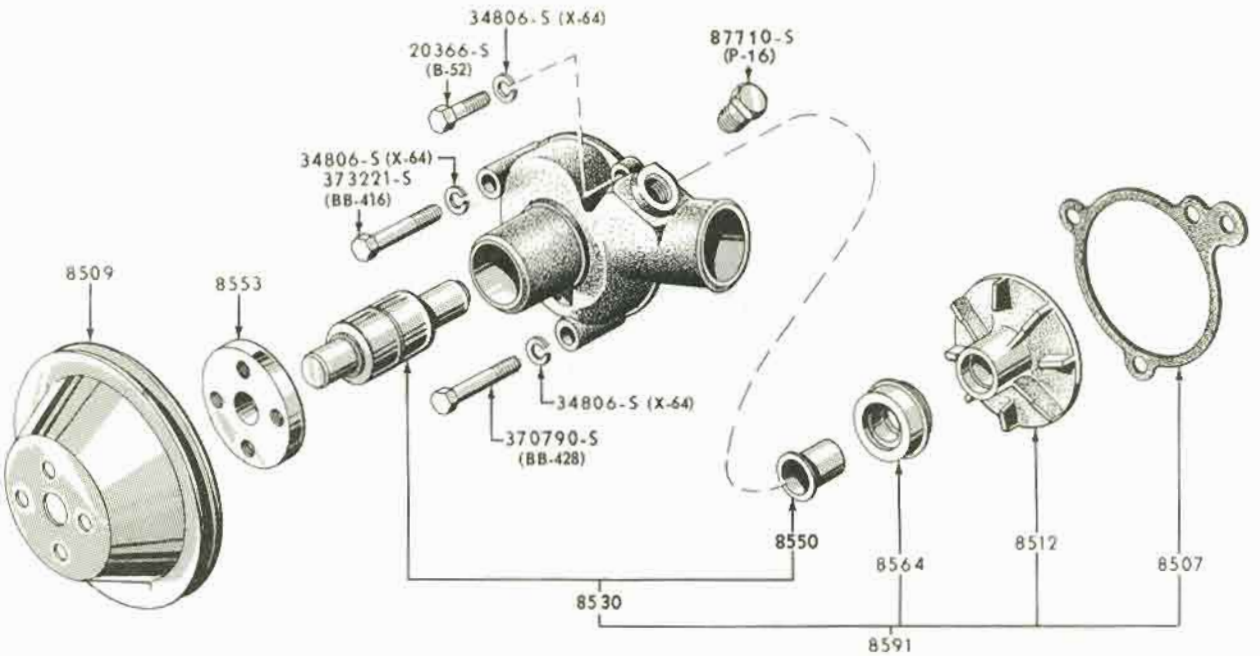

P-2962

WATER PUMP
1965/72 6 CYLINDER 170, 200 and 250

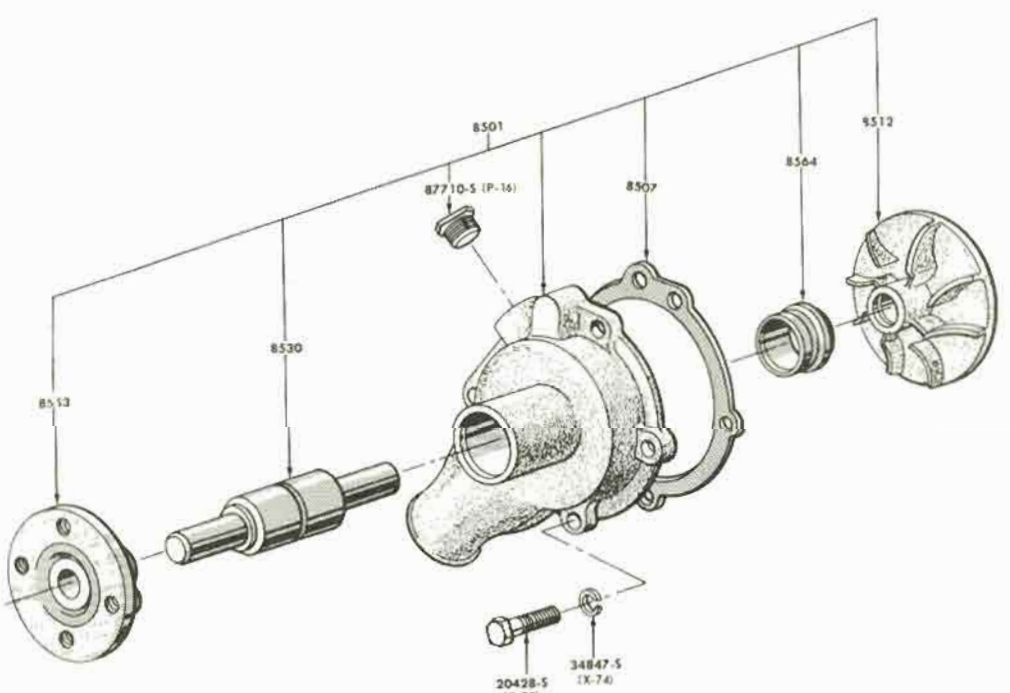

P4731

WATER PUMP
1965/72 6 CYLINDER 240

COPYRIGHT © 1975 — FORD MOTOR COMPANY — DEARBORN, MICHIGAN

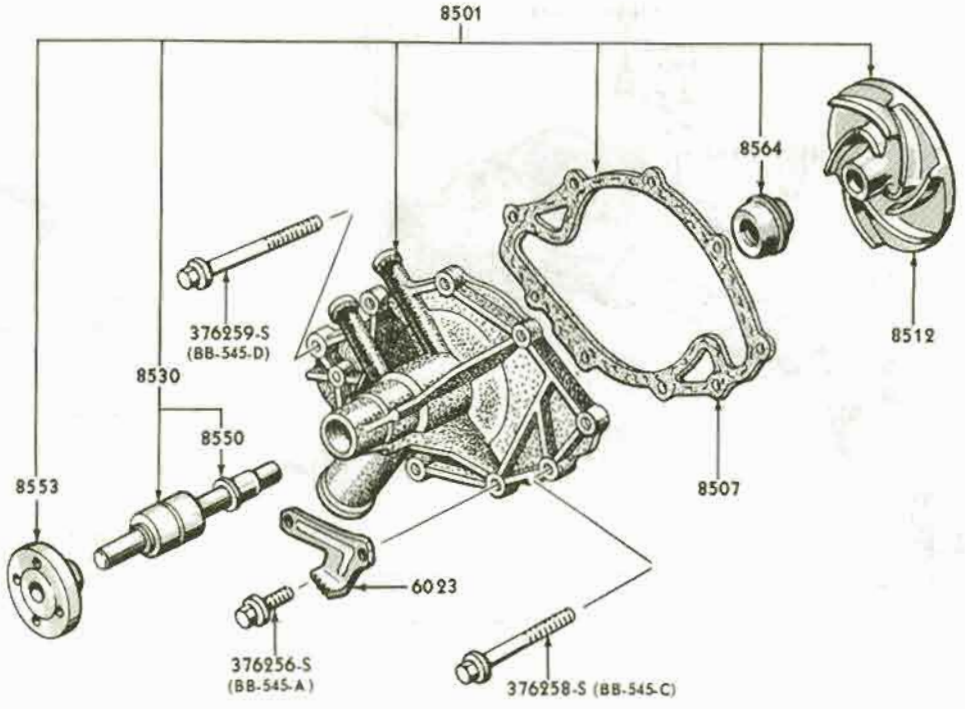

WATER PUMP - WITHOUT COVER P-3772
1965 8 CYLINDER 260 and 289

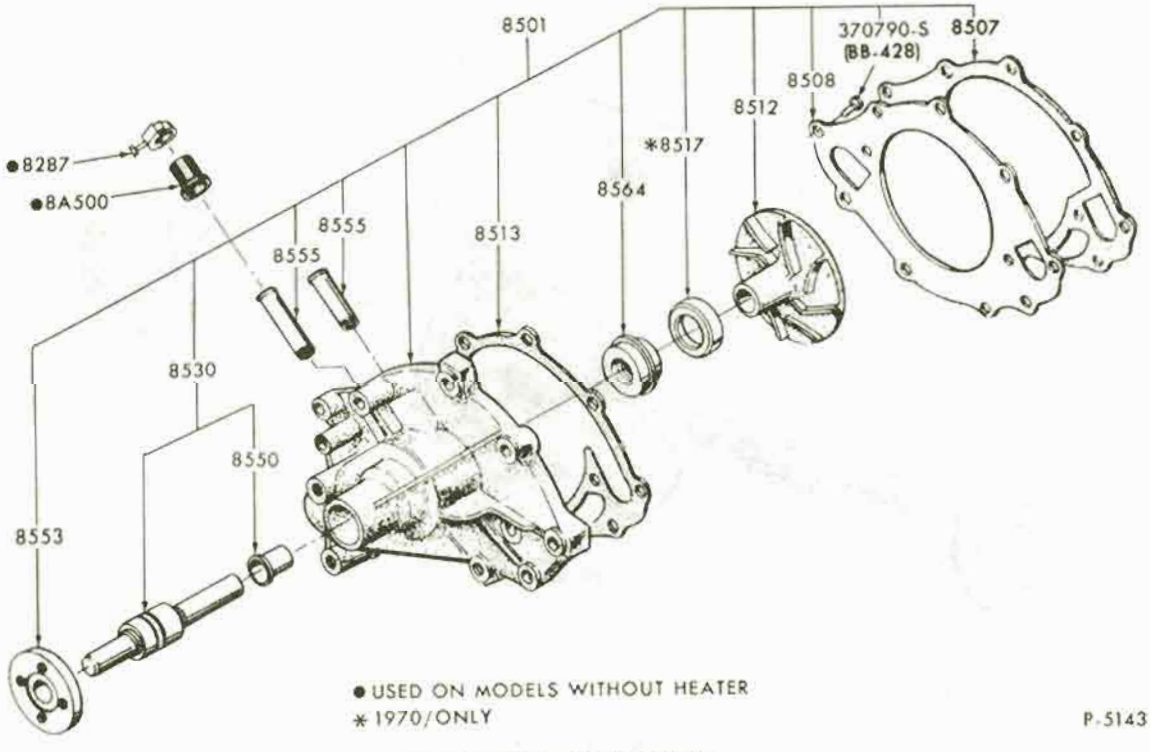

● USED ON MODELS WITHOUT HEATER
* 1970/ONLY P-5143

WATER PUMP - WITH COVER
1965/72 8 CYLINDER 289, 302 and 351W

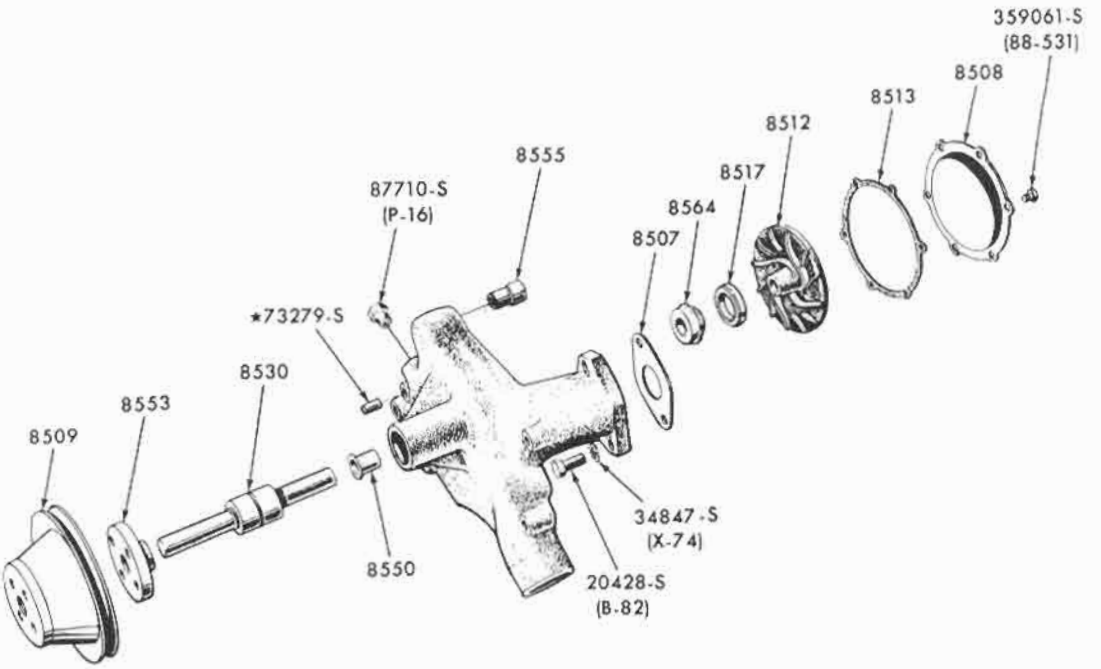

P-9198

WATER PUMP
1965/71 8 CYLINDER 352,390,427 and 428

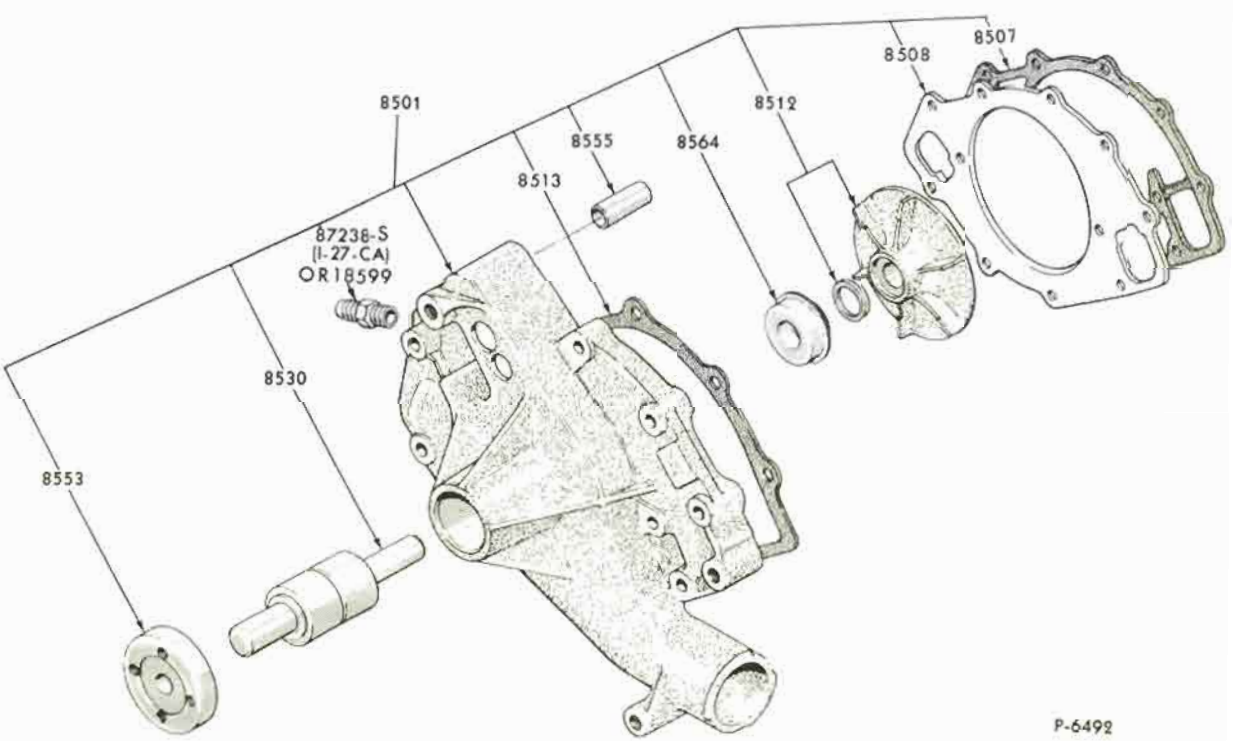

P-6492

WATER PUMP
1968/72 8 CYLINDER 351C,400,429 and 460

COPYRIGHT © 1975 — FORD MOTOR COMPANY — DEARBORN, MICHIGAN

INDEX

THIS INDEX SECTION INCLUDES THE FOLLOWING MAJOR GROUPS:

ACCELERATOR LINKAGE
AIR CLEANER
CARBURETOR
FUEL FILTER
FUEL PUMP
FUEL and VACUUM PUMP
FUEL SYSTEM
MANIFOLD
SPEED CONTROL
THERMACTOR EMISSION CONTROL SYSTEM
THERMOSTATIC CHOKE CONTROL
VALVE - EXHAUST THERMOSTATIC CONTROL

1965

TITLE	SECTION	PAGE	ILLUS. NO.
A (FORD)			
6 CYLINDER 240 C.I.D.			
Accelerator linkage	97	1	P-4622
Carburetor - Ford type	95	2	P-4729
- Holley type	95	14	P-7460
Fuel pump	93	1	P-4367
Fuel system	90	1	P-4618
Manifold	94	1	P-4861
Thermostatic choke control	98	1	P-5631
8 CYLINDER 289 C.I.D.			
Accelerator linkage	97	1	P-4622
Air cleaner	96	1	P-4134
Carburetor - Ford 2V	95	3	P-4526
Fuel system	90	1	P-4618
Intake manifold & related parts	94	1	P-3742
Speed control			
- engine compartment	97.1	1	P-4801
- passenger compartment	97.1	2	P-4800
- steering wheel	97.1	2	P-4800
Thermostatic choke control	98	1	P-4940
8 CYLINDER 352 C.I.D.			
Accelerator linkage	97	1	P-4622
Air cleaner	96	2	P-5783
Fuel pump	93	3	P-3306
Carburetor - Ford 4V	95	4	P-4527
Fuel system	90	1	P-4618
Speed control			
- engine compartment	97.1	1	P-4801
- passenger compartment	97.1	2	P-4800
- steering wheel	97.1	2	P-4800
Thermostatic choke control			
- Hi-Performance	98	2	P-4177
- exc. Hi-Performance	98	3	P-4175
8 CYLINDER 390 C.I.D.			
Accelerator linkage	97	1	P-4622
Air cleaner	96	2	P-5783
Carburetor - Ford 4V	95	4	P-4527
Fuel pump	93	3	P-3306
Fuel system	90	1	P-4618
Speed control			
- engine compartment	97.1	1	P-4801
- passenger compartment	97.1	2	P-4800
- steering wheel	97.1	2	P-4800
Thermostatic choke control			
- Hi-Performance	98	2	P-4177
- exc. Hi-Performance	98	3	P-4175
(continued)			

TITLE	SECTION	PAGE	ILLUS. NO.
A (FORD) - continued			
8 CYLINDER 427 C.I.D.			
Accelerator linkage			
- with dual 4V carb.	97	2	P-4388
Air cleaner	97	2	P-4388
Carburetor - without external fuel transfer tube	95	5	P-3231
- with external fuel transfer tube	95	6	P-5320
Fuel pump	93	3	P-3306
Fuel system	90	1	P-4618
Thermostatic choke control - Hi-Performance	98	2	P-4177
Valve - exhaust thermostatic control - arm type counterweight	94	2	P-3474
- wheel type counterweight	94	2	P-5227
B (FAIRLANE)			
6 CYLINDER 200 C.I.D.			
Accelerator linkage	97	3	P-4724
Air cleaner	96	1	P-3737
Carburetor - Ford type	95	1	P-4728
- Holley type	95	14	P-7460
Fuel pump	93	1	P-4367
Fuel system	90	2	P-3740
8 CYLINDER 289 C.I.D.			
Accelerator linkage	97	4	P-3666
Air cleaner			
- exc. Hi-Performance	96	1	P-4134
- Hi-Performance	96	2	P-5784
Carburetor - Ford 2V	95	3	P-4526
- Ford 4V	95	4	P-4527
Fuel pump	93	2	P-3715
Fuel system	90	2	P-3740
Intake manifold & related parts	94	1	P-3742
Thermostatic choke control - except Hi-Performance	98	1	P-4940

COPYRIGHT © 1975 — FORD MOTOR COMPANY — DEARBORN, MICHIGAN

INDEX

TITLE	SECTION	PAGE	ILLUS. NO.

1965

F (MUSTANG)

TITLE	SECTION	PAGE	ILLUS. NO.
6 CYLINDER 170 C.I.D.			
Accelerator linkage	97	5	P-4466
Air cleaner	96	1	P-3737
Carburetor - Ford type	95	1	P-4728
- Holley type	95	14	P-7460
Fuel pump	93	1	P-4367
Fuel system	90	3	P-4499
6 CYLINDER 200 C.I.D.			
Accelerator linkage	97	5	P-4466
Air cleaner	96	1	P-3737
Carburetor - Ford type	95	1	P-4728
- Holley type	95	14	P-7460
Fuel pump	93	1	P-4367
Fuel system	90	3	P-4499
8 CYLINDER 260 C.I.D.			
Accelerator linkage	97	5	P-4467
Air cleaner	96	1	P-4134
Carburetor - Ford 2V	95	3	P-4526
Fuel pump	93	2	P-3715
Fuel system	90	3	P-4499
Intake manifold & related parts	94	1	P-3742
Thermostatic choke control	98	1	P-4940
8 CYLINDER 289 C.I.D.			
Accelerator linkage	97	5	P-4467
Air cleaner			
- exc. Hi-Performance	96	1	P-4134
- Hi-Performance	96	2	P-5784
Carburetor - Ford 2V	95	3	P-4526
- Ford 4V	95	4	P-4527
Fuel pump	93	2	P-3715
Fuel system	90	3	P-4499
Intake manifold & related parts	94	1	P-3742
Thermostatic choke control - except Hi-Performance	98	1	P-4940

S (THUNDERBIRD)

TITLE	SECTION	PAGE	ILLUS. NO.
8 CYLINDER 390 C.I.D.			
Accelerator linkage	97	6	P-3236
Air cleaner	96	2	P-5783
Carburetor - Ford 4V	95	4	P-4527
- Holley 4V	95	6	P-5320
Fuel pump	93	3	P-3306
Fuel system	90	4	P-4523
Speed control			
- engine compartment	97.1	3	P-4363
- passenger compartment	97.1	4	P-4362

X (FALCON)

TITLE	SECTION	PAGE	ILLUS. NO.
6 CYLINDER 170 C.I.D.			
Accelerator linkage			
- manual transmission	97	7	P-3138
- automatic transmission	97	8	P-3670
Air cleaner	96	1	P-3737
Carburetor - Ford type	95	1	P-4728
- Holley type	95	14	P-7460
Fuel pump	93	1	P-4367
Fuel system	90	5	P-4617
6 CYLINDER 200 C.I.D.			
Accelerator linkage			
- manual transmission	97	7	P-3138
- automatic transmission	97	8	P-3670
Air cleaner	96	1	P-3737
Carburetor - Ford type	95	1	P-4728
- Holley type	95	14	P-7460
Fuel pump	93	1	P-4367
Fuel system	90	5	P-4617
8 CYLINDER 289 C.I.D.			
Accelerator linkage	97	9	P-4732
Air cleaner	96	1	P-4134
Carburetor - Ford 2V	95	3	P-4526
- Ford 4V	95	4	P-4527
Fuel pump	93	2	P-3715
Fuel system	90	5	P-4617
Intake manifold & related parts	94	1	P-3742
Thermostatic choke control - except Hi-Performance	98	1	P-4940

1966

A (FORD)

TITLE	SECTION	PAGE	ILLUS. NO.
6 CYLINDER 240 C.I.D.			
Accelerator linkage	97	1	P-4622
Air cleaner			
- exc. Taxi & Police Car	96	3	P-5781
- Taxi & Police Car	96	3	P-5782
Carburetor - Ford Type	95	2	P-4729
- Holley type	95	14	P-7460
Exhaust air supply pump	94.1	1	P-5009

(continued)

A (FORD) - continued

TITLE	SECTION	PAGE	ILLUS. NO.
6 CYLINDER 240 C.I.D. - continued			
Fuel system	90	1	P-4618
Manifold	94	1	P-4861
Thermostatic choke control	98	1	P-5631
Thermactor emission control system - intake manifold type	94.1	2	P-5127
- exc. intake manifold type	94.1	3	P-5342

(continued)

INDEX

1966

A (FORD) - continued

TITLE	SECTION	PAGE	ILLUS. NO.
8 CYLINDER 289 C.I.D.			
Accelerator linkage	97	1	P-4622
Air cleaner	96	1	P-4134
Carburetor - Ford 2V	95	3	P-4526
Exhaust air supply pump	94.1	1	P-5009
Fuel system	90	1	P-4618
Intake manifold & related parts	94	1	P-3742
Speed control			
- engine compartment	97.1	1	P-4801
- passenger compartment	97.1	2	P-4800
Thermactor emission control system - intake manifold type	94.1	4	P-5128
- exc. intake manifold type	94.1	5	P-5341
Thermostatic choke control - except Hi-Performance	98	1	P-4940
8 CYLINDER 352 C.I.D.			
Accelerator linkage	97	1	P-4622
Air cleaner	96	2	P-5783
Carburetor - Ford 4V	95	4	P-4527
- Holley 4V	95	6	P-5320
Exhaust air supply pump	94.1	1	P-5009
Fuel pump	93	3	P-3306
Fuel system	90	1	P-4618
Speed control			
- engine compartment	97.1	1	P-4801
- passenger compartment	97.1	2	P-4800
Thermostatic choke control			
- Hi-Performance	98	2	P-4177
- exc. Hi-Performance	98	3	P-4125
Thermactor emission control system	94.1	7	P-5131
8 CYLINDER 390 C.I.D.			
Accelerator linkage	97	1	P-4622
Air cleaner	96	2	P-5783
Carburetor - Ford 2V	95	3	P-4526
- Ford 4V	95	4	P-4527
Exhaust air supply pump	94.1	1	P-5009
Fuel pump - with 4V carb.	93	3	P-3306
Fuel system	90	1	P-4618
Speed control			
- engine compartment	97.1	1	P-4801
- passenger compartment	97.1	2	P-4800
Thermactor emission control system	94.1	8	P-5133
Thermostatic choke control			
- Hi-Performance	98	2	P-4177
- exc. Hi-Performance	98	3	P-4175
Thermostatic choke control tubes & related parts	98	4	P-5633
Valve - exhaust thermostatic control - arm type counterweight	94	2	P-3474
- wheel type counterweight	94	2	P-5227

(continued)

A (FORD) - continued

TITLE	SECTION	PAGE	ILLUS. NO.
8 CYLINDER 427 C.I.D.			
Accelerator linkage			
- with dual 4V carb.	97	2	P-4388
- without dual 4V carb.	97	1	P-4622
Air cleaner - without dual 4V carb.	96	2	P-5784
- with dual 4V carb.	97	2	P-4388
Carburetor - without external fuel transfer tube	95	5	P-3231
- with external fuel transfer tube	95	6	P-5320
Exhaust air supply pump	94.1	1	P-5009
Fuel pump	93	3	P-3306
Fuel system	90	1	P-4618
Thermostatic choke control - Hi-Performance	98	2	P-4177
Valve - exhaust thermostatic control - arm type counterweight	94	2	P-3476
- wheel type counterweight	94	2	P-5227
8 CYLINDER 428 C.I.D.			
Accelerator linkage	97	1	P-4622
Air cleaner - Police Car	96	2	P-5784
- except Police Car	96	2	P-5783
Carburetor - with external accelerator pump	95	4	P-4527
- without external accelerator pump	95	7	P-5457
Exhaust air supply pump	94.1	1	P-5009
Fuel system	90	1	P-4618
Speed control			
- engine compartment	97.1	1	P-4801
- passenger compartment	97.1	2	P-4800
Thermactor emission control system - exc. Police Car	94.1	8	P-5133
- Police Car	94.1	9	P-5134
Thermostatic choke control			
- except Police	98	3	P-4175
- Police	98	4	P-5633
Valve - exhaust thermostatic control - arm type counterweight	94	2	P-3474
- wheel type counterweight	94	2	P-5227

B (FAIRLANE)

TITLE	SECTION	PAGE	ILLUS. NO.
6 CYLINDER 200 C.I.D.			
Accelerator linkage	97	10	P-4978
Air cleaner	96	1	P-3737
Carburetor - Ford type	95	1	P-4728
- Holley type	95	14	P-7460
Exhaust air supply pump	94.1	1	P-5009
Fuel system	90	6	P-4956
Thermactor emission control system - intake manifold type	94.1	10	P-5126
- exc. intake manifold type	94.1	11	P-5343

(continued)

COPYRIGHT © 1975 — FORD MOTOR COMPANY — DEARBORN, MICHIGAN

INDEX

1966

B (FAIRLANE) - continued

TITLE	SECTION	PAGE	ILLUS. NO.
8 CYLINDER 289 C.I.D.			
Accelerator linkage	97	11	P-4980
Air cleaner	96	1	P-4134
Carburetor - Ford 2V	95	3	P-4526
Exhaust air supply pump	94.1	1	P-5009
Fuel system	90	6	P-4956
Intake manifold & related parts	94	1	P-3742
Thermactor emission control system - intake manifold type	94.1	4	P-5128
- exc. intake manifold type	94.1	5	P-5341
Thermostatic choke control tubes & related parts	98	3	P-4175
8 CYLINDER 390 C.I.D.			
Accelerator linkage	97	11	P-4981
Air cleaner - except GT & GTA	96	2	P-5783
- GT & GTA	96	5	P-5785
Carburetor - Ford 2V	95	3	P-4526
- Ford 4V	95	4	P-4527
- Holley	95	6	P-5320
Exhaust air supply pump	94.1	1	P-5009
Fuel pump - with 4V carb.	93	3	P-3306
Fuel system	90	6	P-4956
Thermactor emission control system	94.1	12	P-5132
Thermostatic choke control	98	5	P-5632
Valve - exhaust thermostatic control - arm type counterweight	94	2	P-3474
- wheel type counterweight	94	2	P-5227

F (MUSTANG)

TITLE	SECTION	PAGE	ILLUS. NO.
6 CYLINDER 200 C.I.D.			
Accelerator linkage	97	5	P-4466
Air cleaner	96	1	P-3737
Carburetor - Ford type	95	1	P-4728
- Holley type	95	14	P-7460
Exhaust air supply pump	94.1	1	P-5009
Fuel pump	93	1	P-4367
Fuel system	90	3	P-4499
Thermactor emission control system - exc. intake manifold type	94.1	11	P-5343
- intake manifold type	94.1	10	P-5126

(continued)

F (MUSTANG) - continued

TITLE	SECTION	PAGE	ILLUS. NO.
8 CYLINDER 289 C.I.D.			
Accelerator linkage	97	5	P-4467
Air cleaner			
- exc. Hi-Performance	96	1	P-4134
- Hi-Performance	96	2	P-5784
Carburetor - Ford 2V	95	3	P-4526
- Ford 4V	95	4	P-4527
Exhaust air supply pump	94.1	1	P-5009
Fuel system	90	3	P-4499
Intake manifold & related parts	94	1	P-3742
Thermactor emission control system - intake manifold type	94.1	4	P-5128
- exc. intake manifold type	94.1	5	P-5341
Thermostatic choke control - except Hi-Performance	98	1	P-4940

S (THUNDERBIRD)

TITLE	SECTION	PAGE	ILLUS. NO.
8 CYLINDER 390 C.I.D.			
Accelerator linkage	97	6	P-3236
Air cleaner	96	2	P-5783
Carburetor - Ford 4V	95	4	P-4527
Exhaust air supply pump	94.1	1	P-5009
Fuel pump	93	2	P-3715
Fuel system	90	4	P-4523
Speed control - engine compartment	97.1	5	P-5137
- passenger compartment	97.1	6	P-5136
Thermactor emission control system	94.1	16	P-5135
Valve - exhaust thermostat control - arm type counterweight	94	2	P-3474
- wheel type counterweight	94	2	P-5227
8 CYLINDER 428 C.I.D.			
Accelerator linkage	97	6	P-3236
Air Cleaner	96	2	P-5783
Carburetor - Ford 4V	95	7	P-5457
Exhaust air supply pump	94.1	1	P-5009
Fuel pump	93	2	P-3715
Fuel system	90	4	P-4523
Speed control - engine compartment	97.1	5	P-5137
- passenger compartment	97.1	6	P-5136
Thermactor emission control system	94.1	16	P-5633
Thermostatic choke control	98	4	P-5633
Valve - exhaust thermostat control - arm type counterweight	94	2	P-3474
- wheel type counterweight	94	2	P-5227

INDEX

1966

U (BRONCO)

TITLE	SECTION	PAGE	ILLUS. NO.
6 CYLINDER 170 C.I.D.			
Accelerator linkage	97	12	P-4943
Air cleaner - dry type	96	1	P-3737
- oil bath type	96	4	P-5187
Carburetor - Ford type	95	1	P-4728
- Holley type	95	16	P-7586
Exhaust air supply pump	94.1	1	P-5009
Fuel system - standard fuel tank	90	7	P-5012
- auxiliary fuel tank	90	8	P-5393
Thermactor emission control system - intake manifold type	94.1	13	P-5175
- exc. intake manifold type	94.1	14	P-5334
8 CYLINDER 289 C.I.D.			
Accelerator linkage	97	12	P-5499
Air cleaner - oil bath type	96	4	P-5500
Carburetor - Ford 2V	95	3	P-4526
Exhaust air supply pump	94.1	1	P-5009
Fuel system - standard fuel tank	90	7	P-5012
- auxiliary fuel tank	90	8	P-5393
Intake manifold & related parts	94	1	P-3742
Thermactor emission control system	94.1	15	P-5333

X (FALCON)

TITLE	SECTION	PAGE	ILLUS. NO.
6 CYLINDER 170 C.I.D.			
Accelerator linkage	97	10	P-4978
Air cleaner	96	1	P-3737
Carburetor - Ford type	95	1	P-4728
- Holley type	95	14	P-7460
Exhaust air supply pump	94.1	1	P-5009
Fuel system	90	6	P-4956
Thermactor emission control system - intake manifold type	94.1	10	P-5126
- exc. intake manifold type	94.1	11	P-5343
6 CYLINDER 200 C.I.D.			
Accelerator linkage	97	10	P-4978
Air cleaner	96	1	P-3737
Carburetor - Ford type	95	1	P-4728
- Holley type	95	14	P-7460
Exhaust air supply pump	94.1	1	P-5509
Fuel system	90	6	P-4956
Thermactor emission control system - intake manifold type	94.1	10	P-5126
- exc. intake manifold type	94.1	11	P-5343
8 CYLINDER 289 C.I.D.			
Accelerator linkage	97	10	P-4979
Air cleaner	96	1	P-4134
Carburetor - Ford 2V	95	3	P-4526
- Ford 4V	95	4	P-4527
Exhaust air supply pump	94.1	1	P-5009
Fuel system	90	6	P-4956
Intake manifold & related parts	94	1	P-3742
Thermactor emission control system - intake manifold type	94.1	4	P-5128
- exc. intake manifold type	94.1	5	P-5341
Thermostatic choke control - except Hi-Performance	98	1	P-4940

1967

A (FORD)

TITLE	SECTION	PAGE	ILLUS. NO.
6 CYLINDER 240 C.I.D.			
Accelerator linkage	97	1	P-4622
Air cleaner			
- except Taxi & Police Car	96	3	P-5781
- Taxi & Police Car	96	3	P-5782
Carburetor - Ford type	95	9	P-6531
- Holley type	95	14	P-7460
Exhaust air supply pump	94.1	1	P-5009
Fuel system	90	1	P-4618
Manifold	94	1	P-4861
Thermactor emission control system	94.1	3	P-5342
Thermostatic choke control	98	1	P-5631

(continued)

A (FORD) - continued

TITLE	SECTION	PAGE	ILLUS. NO.
8 CYLINDER 289 C.I.D.			
Accelerator linkage	97	1	P-4622
Air cleaner	96	1	P-4134
Carburetor - Ford 2V	95	3	P-4526
Exhaust air supply pump	94.1	1	P-5009
Fuel system	90	1	P-4618
Intake manifold & related parts	94	1	P-3742
Speed control			
- engine compartment	97.1	8	P-5612
- passenger compartment	97.1	7	P-5611

(continued)

COPYRIGHT © 1975 — FORD MOTOR COMPANY — DEARBORN, MICHIGAN

INDEX

1967

A (FORD) - continued

TITLE	SECTION	PAGE	ILLUS. NO.
8 CYLINDER 390 C.I.D.			
Accelerator linkage	97	1	P-4622
Air cleaner	96	2	P-5783
Carburetor - Ford 2V	95	3	P-4526
- Ford 4V w/external accelerator pump	95	4	P-4527
- Ford 4V w/o external accelerator pump	95	7	P-5457
Exhaust air supply pump	94.1	1	P-5009
Fuel pump - with 4V carb.	93	3	P-3306
Fuel system	90	1	P-4618
Speed control			
- engine compartment	97.1	8	P-5612
- passenger compartment	97.1	7	P-5611
Thermactor emission control system	94.1	8	P-5133
Thermostatic choke control			
- Hi-Performance	98	2	P-4177
- except Hi-Performance	98	4	P-5633
Valve - exhaust thermostat control - arm type counterweight	94	2	P-3474
- wheel type counterweight	94	2	P-5227
8 CYLINDER 427 C.I.D.			
Accelerator linkage			
- with dual 4V carb.	97	2	P-4388
- without dual 4V carb.	97	1	P-4622
Air cleaner			
- with dual 4V carb.	97	2	P-4388
- without dual 4V carb.	96	2	P-5784
Carburetor - without external fuel transfer tube	95	5	P-3231
- with external fuel transfer tube	95	6	P-5320
Exhaust air supply pump	94.1	1	P-5009
Fuel pump	93	3	P-3306
Fuel system	90	1	P-4618
Thermactor emission control system	94.1	19	P-6432
Thermostatic choke control - Hi-Performance	98	2	P-4177
Valve - exhaust thermostatic control - arm type counterweight	94	2	P-3474
- wheel type counterweight	94	2	P-5227
8 CYLINDER 428 C.I.D.			
Accelerator linkage	97	1	P-4622
Air cleaner - Police Car	96	2	P-5784
- except Police Car	96	2	P-5783
Carburetor - with external accelerator pump	95	4	P-4527
- without external accelerator pump	95	7	P-5457
Exhaust air supply pump	94.1	1	P-5009
Fuel system	90	1	P-4618
Speed control			
- engine compartment	97.1	8	P-5612
- passenger compartment	97.1	7	P-5611
Thermactor emission control system - except Police Car	94.1	8	P-5133
- Police Car	94.1	9	P-5134
Thermostatic choke control	98	4	P-5633
Valve - exhaust thermostatic control - arm type counterweight	94	2	P-3474
- wheel type counterweight	94	2	P-5227

B (FAIRLANE)

TITLE	SECTION	PAGE	ILLUS. NO.
6 CYLINDER 200 C.I.D.			
Accelerator linkage	97	10	P-4978
Air cleaner	96	1	P-3737
Carburetor - Ford type	95	1	P-4728
- Carter type	95	8	P-5725
- Holley type	95	14	P-7460
Exhaust air supply pump	94.1	1	P-5009
Fuel system	90	6	P-4956
Thermactor emission control system	94.1	11	P-5343
8 CYLINDER 289 C.I.D.			
Accelerator linkage	97	11	P-4980
Air cleaner	96	1	P-4134
Carburetor - Ford 2V	95	3	P-4526
Exhaust air supply pump	94.1	1	P-5009
Fuel system	90	6	P-4956
Intake manifold & related parts	94	1	P-3742
Thermactor emission control system	94.1	15	P-5333
8 CYLINDER 390 C.I.D.			
Accelerator linkage	97	11	P-4981
Air cleaner - exc. GT & GTA	96	2	P-5783
- GT & GTA	96	5	P-5785
Carburetor - Ford 2V	95	3	P-4526
- Ford 4V	95	4	P-4527
- Holley 4V	95	6	P-5320
Exhaust air supply pump	94.1	1	P-5009
Fuel pump - with 4V carb.	93	3	P-3306
Fuel system	90	6	P-4956
Thermactor emission control system	94.1	12	P-5132
Thermostatic choke control	98	5	P-5632
Valve - exhaust thermostat control - arm type counterweight	94	2	P-3474
- wheel type counterweight	94	2	P-5227
8 CYLINDER 427 C.I.D.			
Accelerator linkage	97	11	P-4981
Air cleaner	96	2	P-5784
Carburetor - Holley 4V			
- w/o external fuel transfer tube	95	5	P-3231
- w/external fuel transfer tube	95	6	P-5320
Fuel system	90	6	P-4956
Valve - exhaust thermostat control - arm type counterweight	94	2	P-3474
- wheel type counterweight	94	2	P-5227

INDEX

1967

F (MUSTANG)

TITLE	SECTION	PAGE	ILLUS. NO.
6 CYLINDER 200 C.I.D.			
Accelerator linkage	97	5	P-4466
Air cleaner	96	1	P-3737
Carburetor - Ford type	95	1	P-4728
- Carter type	95	8	P-5725
- Holley type	95	14	P-7460
Exhaust air supply pump	94.1	1	P-5009
Fuel system	90	3	P-4499
Thermactor emission control system	94.1	11	P-5343
8 CYLINDER 289 C.I.D.			
Accelerator linkage	97	13	P-5484
Air cleaner			
- except Hi-Performance	96	1	P-4134
- Hi-Performance	96	2	P-5784
Carburetor - Ford 2V	95	3	P-4526
- Ford 4V - with external accel. pump	95	4	P-4527
- Ford 4V - without external accel. pump	95	7	P-5457
Exhaust air supply pump	94.1	1	P-5009
Fuel system	90	3	P-4499
Intake manifold & related parts	94	1	P-3742
Speed control			
- engine compartment	97.1	10	P-5614
- passenger compartment	97.1	11	P-5613
Thermactor emission control system - Hi-Performance	94.1	5	P-5341
- except Hi-Performance	94.1	6	P-5807
8 CYLINDER 390 C.I.D.			
Accelerator linkage	97	13	P-5484
Air cleaner - 4V GT & GTA	96	5	P-5785
Carburetor - Holley 4V	95	6	P-5320
Exhaust air supply pump	94.1	1	P-5009
Fuel pump - with 4V carb.	93	3	P-3306
Fuel system	90	3	P-4499
Speed control			
- engine compartment	97.1	10	P-5614
- passenger compartment	97.1	11	P-5613
Thermostatic choke control	98	2	P-4177
Valve - exhaust thermostat control - arm type counterweight	94	2	P-3474
- wheel type counterweight	94	2	P-5227

S (THUNDERBIRD)

TITLE	SECTION	PAGE	ILLUS. NO.
8 CYLINDER 390 C.I.D.			
Accelerator linkage	97	13	P-5483
Air cleaner	96	2	P-5783
Carburetor - Ford 4V	95	7	P-5457
Exhaust air supply pump	94.1	1	P-5009
Fuel pump - with 4V carb.	93	3	P-3306
Fuel system	90	9	P-5485
Speed control			
- engine compartment	97.1	13	P-5596
- passenger compartment	97.1	14	P-5595
- steering wheel	97.1	14	P-5595
Thermactor emission control system	94.1	16	P-5135
Valve - exhaust thermostat control - arm type counterweight	94	2	P-3474
- wheel type counterweight	94	2	P-5227
8 CYLINDER 428 C.I.D.			
Accelerator linkage	97	13	P-5483
Air cleaner	96	2	P-5783
Carburetor - Ford 4V	95	7	P-5457
Exhaust air supply pump	94.1	1	P-5009
Fuel system	90	9	P-5485
Speed control			
- engine compartment	97.1	13	P-5596
- passenger compartment	97.1	14	P-5595
- steering wheel	97.1	14	P-5595
Thermactor emission control system	94.1	16	P-5633
Valve - exhaust thermostat control - arm type counterweight	94	2	P-3474
- wheel type counterweight	94	2	P-5227

U (BRONCO)

TITLE	SECTION	PAGE	ILLUS. NO.
6 CYLINDER 170 C.I.D.			
Accelerator linkage	97	12	P-4943
Carburetor - Ford type	95	1	P-4728
- Holley type	95	14	P-7460
Exhaust air supply pump	94.1	1	P-5009
Fuel system - standard fuel tank	90	7	P-5012
- auxiliary fuel tank	90	8	P-5393
Thermactor emission control system	94.1	14	P-5334

(continued)

COPYRIGHT © 1975 — FORD MOTOR COMPANY — DEARBORN, MICHIGAN

INDEX

TITLE	SECTION	PAGE	ILLUS. NO.

1967

U (BRONCO) - continued

8 CYLINDER 289 C.I.D.

Accelerator linkage	97	12	P-5499
Air cleaner - oil bath type	96	4	P-5500
Carburetor - 2V	95	3	P-4526
Exhaust air supply pump	94.1	1	P-5009
Fuel system - standard fuel tank	90	7	P-5012
- auxiliary fuel tank	90	8	P-5393
Intake manifold & related parts	94	1	P-3742
Thermactor emission control system	94.1	15	P-5333

X (FALCON)

6 CYLINDER 170 C.I.D.

Accelerator linkage	97	10	P-4978
Air cleaner	96	1	P-3737
Carburetor - Ford type	95	1	P-4728
- Carter type	95	8	P-5725
- Holley type	95	14	P-7460
Exhaust air supply pump	94.1	1	P-5009
Fuel system	90	6	P-4956
Thermactor emission control system	94.1	11	P-5343

X (FALCON) - continued

6 CYLINDER 200 C.I.D.

Accelerator linkage	97	10	P-4978
Air cleaner	96	1	P-3737
Carburetor - Ford type	95	1	P-4728
- Carter type	95	8	P-5725
- Holley type	95	14	P-7460
Exhaust air supply pump	94.1	1	P-5009
Fuel system	90	6	P-4956
Thermactor emission control system	94.1	11	P-5343

8 CYLINDER 289 C.I.D.

Accelerator linkage	97	10	P-4979
Air cleaner	96	1	P-4134
Carburetor - Ford 2V	95	3	P-4526
- Ford 4V	95	4	P-4527
- Ford 4V	95	7	P-5457
Exhaust air supply pump	94.1	1	P-5009
Fuel system	90	6	P-4956
Intake manifold & related parts	94	1	P-3742

1968

A (FORD)

6 CYLINDER 240 C.I.D.

Accelerator linkage	97	1	P-4622
Air cleaner	96	5	P-6221
Carburetor - Ford	95	9	P-6531
- Carter - thermostatic choke	95	10	P-6209
- Holley type	95	14	P-7460
Exhaust air supply pump	94.1	1	P-5009
Fuel system	90	1	P-4618
Manifold	94	1	P-4861
Thermactor emission control system	94.1	17	P-6429
Thermostatic choke control	98	1	P-5631

8 CYLINDER 302 C.I.D.

Accelerator linkage	97	1	P-4622
Air cleaner	96	6	P-6224
Carburetor - Ford 2V	95	3	P-4526
Exhaust air supply pump	94.1	1	P-5009
Fuel system	90	1	P-4618
Intake manifold and related parts	94	1	P-3742
Speed control - engine compartment	97.1	8	P-5612
- passenger compartment	97.1	9	P-6210
Thermactor emission control system	94.1	18	P-6433

(continued)

A (FORD) - continued

8 CYLINDER 390 C.I.D.

Accelerator linkage	97	1	P-4622
Air cleaner	96	7	P-6222
Carburetor - 2V	95	3	P-4526
- 4V with external accelerator pump	95	4	P-4527
- 4V without external accelerator pump	95	7	P-5457
Exhaust air supply pump	94.1	1	P-5009
Fuel pump - with 4V carb.	93	3	P-3306
Fuel system	90	1	P-4618
Speed control - engine compartment	97.1	8	P-5612
- passenger compartment	97.1	9	P-6210
Thermactor emission control system	94.1	19	P-6432
Thermostatic choke control - Hi-performance	98	2	P-4177
- except Hi-Performance	98	4	P-5633

(continued)

INDEX

1968

A (FORD) - continued

TITLE	SECTION	PAGE	ILLUS. NO.
8 CYLINDER 428 C.I.D.			
Accelerator linkage	97	1	P-4622
Air cleaner - Police Car	96	2	P-5784
- except Police Car	96	7	P-6222
Carburetor - with external accelerator pump	95	4	P-4527
- without external accelerator pump	95	7	P-5457
Exhaust air supply pump	94.1	1	P-5009
Fuel system	90	1	P-4618
Speed control -			
- engine compartment	97.1	8	P-5612
- passenger compartment	97.1	9	P-6210
Thermactor emission control system	94.1	19	P-6432
Thermostatic choke control	98	4	P-5633
Valve - exhaust thermostat control - arm type counterweight	94	2	P-3474
- wheel type counterweight	94	2	P-5227

B (FAIRLANE/TORINO)

TITLE	SECTION	PAGE	ILLUS. NO.
6 CYLINDER 200 C.I.D.			
Accelerator linkage	97	10	P-4978
Air cleaner	96	5	P-6221
Carburetor - Ford type	95	1	P-4728
- Holley type	95	14	P-7460
Exhaust air supply pump	94.1	1	P-5009
Fuel system			
- exc. Ranchero & station wagon	90	10	P-6742
- Ranchero	90	11	P-6743
- station wagon	90	12	P-6744
Thermactor emission control system	94.1	20	P-6426
8 CYLINDER 289 C.I.D.			
Accelerator linkage	97	11	P-4980
Air cleaner	96	6	P-6224
Carburetor - Ford 2V	95	3	P-4526
Exhaust air supply pump	94.1	1	P-5009
Fuel system			
- exc. Ranchero & station wagon	90	10	P-6742
- Ranchero	90	11	P-6743
- station wagon	90	12	P-6744
Intake manifold and related parts	94	1	P-3742
Thermactor emission control system	94.1	21	P-6434

B (FAIRLANE/TORINO) - continued

TITLE	SECTION	PAGE	ILLUS. NO.
8 CYLINDER 302 C.I.D.			
Accelerator linkage	97	11	P-4980
Air cleaner	96	6	P-6224
Carburetor - Ford 2V	95	3	P-4526
Exhaust air supply pump	94.1	1	P-5009
Fuel system			
- exc. Ranchero & station wagon	90	10	P-6742
- Ranchero	90	11	P-6743
- station wagon	90	12	P-6744
Intake manifold and related parts	94	1	P-3742
Thermactor emission control system	94.1	18	P-6433
8 CYLINDER 390 C.I.D.			
Accelerator linkage	97	11	P-4981
Air cleaner - 2V carb.	96	7	P-6222
- 4V carb. GT & GTA	96	7	P-6223
Carburetor - Ford 2V	95	3	P-4526
- 4V w/external accel. pump	95	4	P-4527
- 4V w/o external accel. pump	95	7	P-5457
- Holley 4V	95	6	P-5320
Exhaust air supply pump	94.1	1	P-5009
Fuel pump - with 4V carb.	93	3	P-3306
Fuel system			
- exc. Ranchero & station wagon	90	10	P-6742
- Ranchero	90	11	P-6743
- station wagon	90	12	P-6744
Thermostatic choke control			
- Hi-Performance	98	2	P-4177
- except Hi-Performance	98	5	P-5632
Thermactor emission control system	94.1	19	P-6432
8 CYLINDER 427 C.I.D.			
Accelerator linkage	97	11	P-4981
Air cleaner	96	2	P-5784
Carburetor			
- Holley without external fuel transfer tube	95	5	P-3231
- with external fuel transfer tube	95	6	P-5320
Exhaust air supply pump	94.1	1	P-5009
Fuel pump	93	3	P-3306
Fuel system			
- exc. Ranchero & station wagon	90	10	P-6742
- Ranchero	90	11	P-6743
- station wagon	90	12	P-6744
Thermactor emission control system	94.1	19	P-6432
Thermostatic choke control - Hi-Performance	98	2	P-4177
Valve - exhaust thermostat control - arm type counterweight	94	2	P-3474
- wheel type counterweight	94	2	P-5227

(continued)

COPYRIGHT © 1975 — FORD MOTOR COMPANY — DEARBORN, MICHIGAN

INDEX

1968

TITLE	SECTION	PAGE	ILLUS. NO.
B (FAIRLANE/TORINO) - continued			
8 CYLINDER 428 C.I.D.			
Accelerator linkage	97	11	P-4981
Air cleaner	96	6	P-6889
Carburetor - Holley 4V	95	6	P-5320
Exhaust air supply pump	94.1	1	P-5009
Fuel system			
- exc. Ranchero & station wagon	90	10	P-6742
- Ranchero	90	11	P-6743
- station wagon	90	12	P-6744
Thermactor emission control system	94.1	19	P-6432
Thermostatic choke control	98	4	P-5632
F (MUSTANG)			
6 CYLINDER 200 C.I.D.			
Accelerator linkage	97	5	P-4466
Air cleaner	96	5	P-6221
Carburetor - Ford	95	1	P-4728
- Holley type	95	14	P-7460
Exhaust air supply pump	94.1	1	P-5009
Fuel system	90	3	P-4499
Thermactor emission control system	94.1	20	P-6426
8 CYLINDER 289 C.I.D.			
Accelerator linkage	97	13	P-5484
Air cleaner - exc. Hi-Performance	96	6	P-6224
- Hi-Performance	96	2	P-5784
Carburetor - Ford 2V	95	3	P-4526
- 4V w/external accel. pump	95	4	P-4527
- 4V w/o external accel. pump	95	7	P-5457
Exhaust air supply pump	94.1	1	P-5009
Fuel system	90	3	P-4499
Speed control			
- engine compartment	97.1	11	P-5613
- passenger compartment	97.1	12	P-6172
Thermactor emission control control	94.1	21	P-6434
8 CYLINDER 302 C.I.D.			
Accelerator linkage	97	13	P-5484
Air cleaner	96	6	P-6224
Carburetor - Ford 2V	95	3	P-4526
- 4V w/external accel. pump	95	4	P-4727
- 4V w/o external accel. pump	95	7	P-5457
Exhaust air supply pump	94.1	1	P-5009
Fuel system	90	3	P-4499
Intake manifold and related parts	94	1	P-3742
Speed control			
- engine compartment	97.1	11	P-5613
- passenger compartment	97.1	12	P-6172
Thermactor emission control system	94.1	18	P-6433
(continued)			

TITLE	SECTION	PAGE	ILLUS. NO.
F (MUSTANG) - continued			
8 CYLINDER 390 C.I.D.			
Accelerator linkage	97	13	P-5484
Air cleaner	96	7	P-6223
Carburetor - Ford 2V	95	3	P-4526
- 4V w/external accel. pump	95	4	P-4527
- 4V w/o external accel. pump	95	7	P-5457
- Holley 4V	95	6	P-5320
Exhaust air supply pump	94.1	1	P-5009
Fuel pump - with 4V carb.	93	3	P-3306
Fuel system	90	3	P-4499
Speed control			
- engine compartment	97.1	11	P-5613
- passenger compartment	97.1	12	P-6172
Thermactor emission control system	94.1	19	P-6432
Thermostatic choke control			
- Hi-Performance	98	2	P-4177
- except Hi-Performance	98	4	P-5633
8 CYLINDER 427 C.I.D.			
Air cleaner	96	5	P-6221
Accelerator linkage	97	13	P-5484
Carburetor - w/o external fuel transfer tube	95	5	P-3231
- w/external fuel transfer tube	95	6	P-5320
Exhaust air supply pump	94.1	1	P-5009
Fuel pump	93	3	P-3306
Fuel system	90	3	P-4499
Thermactor emission control system	94.1	19	P-6432
Thermostatic choke control	98	2	P-4177
Valve - exhaust thermostat control - arm type counterweight	94	2	P-3474
- wheel type counterweight	94	2	P-5227
8 CYLINDER 428 C.I.D.			
Accelerator linkage	97	13	P-5484
Air cleaner			
- Cobra Jet - except Ram Air	96	6	P-6889
- Cobra Jet - Ram Air - fixed type	96	8	P-6619
- Cobra Jet - Ram Air - shaker type	96	9	P-6888
Carburetor - Holley 4V	95	6	P-5320
Exhaust air supply pump	94.1	1	P-5009
Fuel system	90	3	P-4499
Speed control			
- engine compartment	97.1	11	P-5613
- passenger compartment	97.1	12	P-6172
Thermactor emission control system	94.1	19	P-6432
Thermostatic choke control	98	4	P-5633
Valve - exhaust thermostat control - arm type counterweight	94	2	P-3474
- wheel type counterweight	94	2	P-5227

INDEX

1968

S (THUNDERBIRD)

TITLE	SECTION	PAGE	ILLUS. NO.
8 CYLINDER 390 C.I.D.			
Accelerator linkage	97	14	P-6234
Air cleaner	96	7	P-6222
Carburetor - Ford 4V	95	7	P-5457
Fuel pump - with 4V carb.	93	3	P-3306
Fuel system	90	9	P-5485
Speed control			
- engine compartment	97.1	15	P-6212
- passenger compartment	97.1	16	P-6211
- steering wheel	97.1	16	P-6211
8 CYLINDER 429 C.I.D.			
Accelerator linkage	97	14	P-6234
Air cleaner	96	8	P-6225
Carburetor - Ford 4V	95	7	P-5457
Fuel system	90	9	P-5485
Speed control			
- engine compartment	97.1	15	P-6212
- passenger compartment	97.1	16	P-6211
- steering wheel	97.1	16	P-6211
Intake manifold	94	3	P-8322

U (BRONCO)

TITLE	SECTION	PAGE	ILLUS. NO.
6 CYLINDER 170 C.I.D.			
Accelerator linkage	97	12	P-4943
Carburetor - Carter - thermostatic choke	95	10	P-6209
- YF type - Bronco	95	11	P-6530
- Holley type	95	16	P-7586
Exhaust air supply pump	94.1	1	P-5009
Fuel system - standard fuel tank	90	7	P-3742
- auxiliary fuel tank	90	8	P-5393
Thermactor emission control system	94.1	22	P-6427
8 CYLINDER 289 C.I.D.			
Accelerator linkage	97	12	P-5499
Air cleaner - oil bath	96	4	P-5500
Carburetor - Ford 2V	95	3	P-4526
Exhaust air supply pump	94.1	1	P-5009
Fuel system - standard fuel tank	90	7	P-5012
- auxiliary fuel tank	90	8	P-5393
Intake manifold and related parts	94	1	P-3742
Thermactor emission control system	94.1	23	P-6443

X (FALCON)

TITLE	SECTION	PAGE	ILLUS. NO.
6 CYLINDER 170 C.I.D.			
Accelerator linkage	97	10	P-4978
Air cleaner	96	5	P-6221
Carburetor - Carter - thermostatic choke	95	10	P-6209
- Holley type	95	14	P-7460
Exhaust air supply pump	94.1	1	P-5009
Fuel system - exc. station wagon	90	10	P-6742
- station wagon	90	11	P-6743
Thermactor emission control system	94.1	20	P-6426
6 CYLINDER 200 C.I.D.			
Accelerator linkage	97	10	P-4978
Air cleaner	96	5	P-6221
Carburetor - Ford	95	1	P-4728
- Holley type	95	14	P-7460
Exhaust air supply pump	94.1	1	P-5009
Fuel system - exc. station wagon	90	10	P-6742
- station wagon	90	12	P-6743
Thermactor emission control system	94.1	20	P-6426
8 CYLINDER 289 C.I.D.			
Accelerator linkage	97	10	P-4979
Air cleaner	96	6	P-6224
Carburetor - Ford 2V	95	3	P-4526
Exhaust air supply pump	94.1	1	P-5009
Fuel system - exc. station wagon	90	10	P-6742
- station wagon	90	12	P-6743
Intake manifold and related parts	94	1	P-3742
Thermactor emission control system	94.1	21	P-6434
8 CYLINDER 302 C.I.D			
Accelerator linkage	97	10	P-4979
Air cleaner	96	6	P-6224
Carburetor - Ford 4V	95	7	P-5457
Exhaust air supply pump	94.1	1	P-5009
Fuel system - exc. station wagon	90	10	P-6742
- station wagon	90	12	P-6743
Intake manifold and related parts	94	1	P-3742
Thermactor emission control system	94.1	18	P-6433

COPYRIGHT © 1975 — FORD MOTOR COMPANY — DEARBORN, MICHIGAN

INDEX

1969

A (FORD)

TITLE	SECTION	PAGE	ILLUS. NO.
6 CYLINDER 240 C.I.D.			
Accelerator linkage	97	1	P-4622
Air cleaner	96	5	P-6221
Carburetor - Ford	95	9	P-6531
- Carter - thermostatic choke	95	10	P-6209
- Holley type	95	14	P-7460
Fuel system	90	13	P-6902
Manifold	94	1	P-4861
Thermostatic choke control	98	1	P-5631
8 CYLINDER 302 C.I.D.			
Accelerator linkage	97	1	P-4622
Air cleaner	96	6	P-6224
Carburetor - Ford 2V	95	3	P-4526
Fuel system	90	13	P-6902
Intake manifold and related parts	94	1	P-3742
Speed control			
- engine compartment	97.1	17	P-6687
- passenger compartment	97.1	18	P-6686
- steering wheel	97.1	18	P-6686
8 CYLINDER 351 C.I.D.			
Accelerator linkage	97	1	P-4622
Air cleaner	96	6	P-6224
Carburetor - Ford 2V	95	3	P-4526
Fuel system	90	13	P-6902
Speed control			
- engine compartment	97.1	17	P-6687
- passenger compartment	97.1	18	P-6686
- steering wheel	97.1	18	P-6686
Intake manifold	94	3	P-8322
8 CYLINDER 390 C.I.D.			
Accelerator - linkage	97	1	P-4622
Air cleaner	96	7	P-6222
Carburetor - Ford 2V	95	3	P-4526
Fuel system	90	13	P-6902
Speed control			
- engine compartment	97.1	17	P-6687
- passenger compartment	97.1	18	P-6686
- steering wheel	97.1	18	P-6686
Thermostatic choke control	98	4	P-5633
8 CYLINDER 428 C.I.D.			
Accelerator linkage	97	1	P-4622
Air cleaner	96	2	P-5784
Carburetor - Ford 4V	95	4	P-4527
Exhaust air supply pump	94.1	1	P-5009
Fuel system	90	13	P-6902
Speed control			
- engine compartment	97.1	17	P-6687
- passenger compartment	97.1	18	P-6686
- steering wheel	97.1	18	P-6686
Thermactor emission control system	94.1	19	P-6432
Thermostatic choke control	98	4	P-5633
Valve - exhaust thermostat control - arm type counterweight	94	2	P-3474
- wheel type counterweight	94	2	P-5227

A (FORD) - continued

TITLE	SECTION	PAGE	ILLUS. NO.
8 CYLINDER 429 C.I.D.			
Accelerator linkage	97	1	P-4622
Air cleaner	96	8	P-6225
Carburetor - Ford 2V	95	3	P-4526
- Ford 4V	95	7	P-5457
Fuel system	90	13	P-6902
Speed control			
- engine compartment	97.1	17	P-6687
- passenger compartment	97.1	18	P-6686
- steering wheel	97.1	18	P-6686
Intake manifold	94	3	P-8322

B (FAIRLANE/TORINO)

TITLE	SECTION	PAGE	ILLUS. NO.
6 CYLINDER 250 C.I.D.			
Accelerator linkage	97	10	P-4978
Air cleaner	96	5	P-6221
Carburetor - Ford type	95	9	P-6531
- Holley type	95	14	P-7460
Fuel system			
- exc. Ranchero & station wagon	90	10	P-6742
- Ranchero	90	11	P-6743
- station wagon	90	12	P-6744
8 CYLINDER 302 C.I.D.			
Accelerator linkage	97	11	P-4980
Air cleaner	96	6	P-6224
Carburetor - Ford 2V	95	3	P-4526
Fuel system			
- exc. Ranchero & station wagon	90	10	P-6742
- Ranchero	90	11	P-6743
- station wagon	90	12	P-6744
Intake manifold and related parts	94	1	P-3742
8 CYLINDER 351 C.I.D.			
Accelerator linkage	97	11	P-4980
Air cleaner	96	6	P-6224
Intake manifold	94	3	P-8322
Carburetor - Ford 2V	95	3	P-4526
- Ford 4V	95	7	P-5457
Fuel system			
- exc. Ranchero & station wagon	90	10	P-6742
- Ranchero	90	11	P-6743
- station wagon	90	12	P-6744

(continued)

INDEX

1969

B (FAIRLANE/TORINO) - continued

TITLE	SECTION	PAGE	ILLUS. NO.
8 CYLINDER 390 C.I.D.			
Accelerator linkage	97	11	P-4981
Air cleaner	96	7	P-6223
Carburetor - Ford 4V	95	7	P-5457
Fuel pump - with 4V carb.	93	3	P-3306
Fuel system			
- exc. Ranchero & station wagon	90	10	P-6742
- Ranchero	90	11	P-6743
- station wagon	90	12	P-6744
Thermostatic choke control			
- Hi-Performance	98	2	P-4177
- except Hi-Performance	98	5	P-5632
8 CYLINDER 428 C.I.D.			
Accelerator linkage	97	11	P-4981
Air cleaner			
- Cobra Jet - exc. Ram Air	96	6	P-6889
- Cobra Jet - Ram Air - fixed type	96	8	P-6619
Carburetor - Holley 4V	95	6	P-5320
Exhaust air supply pump	94.1	1	P-5009
Fuel system			
- exc. Ranchero & station wagon	90	10	P-6742
- Ranchero	90	11	P-6743
- station wagon	90	12	P-6744
Thermostatic choke control	98	4	P-5633

F (MUSTANG)

TITLE	SECTION	PAGE	ILLUS. NO.
6 CYLINDER 200 C.I.D.			
Accelerator linkage	97	14	P-6896
Air cleaner	96	5	P-6221
Carburetor - Ford	95	1	P-4728
- Holley type	95	14	P-7460
Fuel system	90	14	P-6903
6 CYLINDER 250 C.I.D.			
Accelerator linkage	97	14	P-6896
Air cleaner	96	5	P-6221
Carburetor - Ford	95	9	P-6531
- Holley type	95	14	P-7460
Fuel system	90	14	P-6903
8 CYLINDER 302 C.I.D.			
Accelerator linkage	97	15	P-6897
Air cleaner	96	6	P-6224
Carburetor - Ford 2V	95	3	P-4526
- Holley 4V	95	6	P-5320
Fuel system	90	14	P-6903
Intake manifold and related parts	94	1	P-3742
Speed control			
- engine compartment	97.1	19	P-6689
- passenger compartment	97.1	20	P-6688
Thermactor emission control system	94.1	25	P-8523
8 CYLINDER 351 C.I.D.			
Accelerator linkage	97	15	P-6897
Air cleaner - exc. Ram Air	96	6	P-6224
- Ram Air	96	10	P-6888
Carburetor - 2V	95	3	P-4526
4V	95	7	P-5457
Fuel system	90	14	P-6903
Speed control			
- engine compartment	97.1	19	P-6689
- passenger compartment	97.1	20	P-6688
Intake manifold	94	3	P-8322
8 CYLINDER 390 C.I.D.			
Accelerator linkage	97	15	P-6897
Air cleaner			
- GT & GTA	96	7	P-6223
- Cobra Jet - Ram Air design	96	10	P-6888
Carburetor - Ford 4V	95	7	P-5457
Fuel pump - with 4V carb.	93	3	P-3306
Fuel system	90	14	P-6903
Speed control			
- engine compartment	97.1	19	P-6689
- passenger compartment	97.1	20	P-6688
Thermostatic choke control			
- Hi-Performance	98	2	P-4177
- except Hi-Performance	98	4	P-5633

(continued)

COPYRIGHT © 1975 — FORD MOTOR COMPANY — DEARBORN, MICHIGAN

INDEX

1969

F (MUSTANG) - continued

TITLE	SECTION	PAGE	ILLUS. NO.
8 CYLINDER 428 C.I.D.			
Accelerator linkage	97	15	P-6897
Air cleaner			
- Cobra Jet - exc. Ram Air	96	6	P-6889
- Cobra Jet - Ram Air - fixed type	96	8	P-6619
- Cobra Jet - Ram Air - shaker type	96	10	P-6888
Carburetor - Holley 4V	95	6	P-5320
Exhaust air supply pump	94.1	1	P-5009
Fuel system	90	14	P-6903
Speed control			
- engine compartment	97.1	19	P-6689
- passenger compartment	97.1	20	P-6688
Thermostatic choke control	98	4	P-5633
8 CYLINDER 429 C.I.D.			
Carburetor - Holley 4V	95	6	P-5320
Intake manifold	94	3	P-8322
Exhaust air supply pump	94.1	1	P-5009
Fuel system	90	14	P-6903
Heat tube installation	98	6	P-10483
Valve - exhaust thermostat control - arm type counterweight	94	2	P-3474
- wheel type counterweight	94	2	P-5227

S (THUNDERBIRD)

TITLE	SECTION	PAGE	ILLUS. NO.
8 CYLINDER 429 C.I.D.			
Accelerator linkage	97	14	P-6234
Intake manifold	94	3	P-8322
Air cleaner	96	8	P-6225
Carburetor - Ford 4V	95	7	P-5457
Fuel system	90	9	P-5485
Speed control			
- engine compartment	97.1	15	P-6212
- passenger compartment	97.1	16	P-6211
- steering wheel	97.1	16	P-6211

U (BRONCO)

TITLE	SECTION	PAGE	ILLUS. NO.
6 CYLINDER 170 C.I.D.			
Accelerator linkage	97	12	P-4943
Air cleaner	96	9	P-6768
Carburetor - Carter - thermostatic choke	95	10	P-6209
- Carter - YF type	95	11	P-6530
- Holley type	95	16	P-7586
Fuel system - standard fuel tank	90	7	P-5012
- auxiliary fuel tank	90	8	P-5393
8 CYLINDER 302 C.I.D.			
Accelerator linkage	97	12	P-5499
Air cleaner	96	4	P-5500
Carburetor - Ford 2V	95	3	P-4526
Fuel system - standard fuel tank	90	7	P-5012
- auxiliary fuel tank	90	8	P-5393
Intake manifold and related parts	94	1	P-3742

X (FALCON)

TITLE	SECTION	PAGE	ILLUS. NO.
6 CYLINDER 170 C.I.D.			
Accelerator linkage	97	10	P-4978
Air cleaner	96	5	P-6221
Carburetor - Carter - thermostatic choke	95	10	P-6209
- Holley type	95	14	P-7460
Fuel system - exc. station wagon	90	10	P-6742
- station wagon	90	11	P-6743
6 CYLINDER 200 C.I.D.			
Accelerator linkage	97	10	P-4978
Air cleaner	96	5	P-6221
Carburetor - Ford	95	1	P-4728
- Holley type	95	14	P-7460
Fuel system - exc. station wagon	90	10	P-6742
- station wagon	90	11	P-6743
8 CYLINDER 302 C.I.D.			
Accelerator linkage	97	10	P-4979
Air cleaner	96	6	P-6224
Carburetor - Ford 2V	95	3	P-4526
Fuel system - exc. station wagon	90	10	P-6742
- station wagon	90	11	P-6743
Intake manifold and related parts	94	1	P-3742

INDEX

1970

A (FORD)

TITLE	SECTION	PAGE	ILLUS. NO.
6 CYLINDER 240 C.I.D.			
Accelerator linkage	97	1	P-4622
Air cleaner	96	5	P-6221
Carburetor - Carter - thermostatic choke	95	10	P-6209
Fuel system -			
- exc. station wagon-with ev/em	90	19	P-7206
- station wagon-with ev/em	90	18	P-7204
- all-without ev/em	90	17	P-7205
Manifold	94	1	P-4861
Modulator system	120.1	1	P-7564
Thermostatic choke control	98	1	P-5631
8 CYLINDER 302 C.I.D.			
Accelerator linkage	97	1	P-4622
Air cleaner	96	6	P-6224
Carburetor - Ford 2V	95	15	P-7457
Fuel system -			
- exc. station wagon-with ev/em	90	19	P-7206
- station wagon-with ev/em	90	18	P-7204
- all-without ev/em	90	17	P-7205
Intake manifold and related parts	94	1	P-3742
Modulator system	120.1	2	P-7563
Speed control			
- engine compartment	97.1	17	P-6687
- passenger compartment	97.1	18	P-6686
- steering wheel	97.1	18	P-6686
8 CYLINDER 351 C.I.D.			
Accelerator linkage	97	1	P-4622
Air cleaner	96	6	P-6224
Carburetor - 2V	95	15	P-7457
Intake manifold	94	3	P-8322
Fuel system			
- exc. station wagon with ev/em	90	19	P-7206
- station wagon-with ev/em	90	18	P-7204
- all-without ev/em	90	17	P-7205
Speed control			
- engine compartment	97.1	17	P-6687
- passenger compartment	97.1	18	P-6686
8 CYLINDER 390 C.I.D.			
Accelerator - linkage	97	1	P-4622
Air cleaner	96	7	P-6222
Carburetor - 2V	95	15	P-7457
Fuel system			
- exc. station wagon with ev/em	90	19	P-7206
- station wagon-with ev/em	90	18	P-7204
- all-without ev/em	90	17	P-7205
Modulator system	120.1	3	P-7565
Speed control			
- engine compartment	97.1	17	P-6687
- passenger compartment	97.1	18	P-6686
- steering wheel	97.1	18	P-6686
Thermostatic choke control	98	4	P-5633

A (FORD) - continued

TITLE	SECTION	PAGE	ILLUS. NO.
8 CYLINDER 428 C.I.D.			
Accelerator linkage	97	1	P-4622
Air cleaner	96	6	P-6889
Carburetor - Ford 4V	95	7	P-5457
Exhaust air supply pump	94.1	1	P-5009
Fuel system			
- exc. station wagon with ev/em	90	19	P-7206
- station wagon-with ev/em	90	18	P-7204
- all-without ev/em	90	17	P-7205
Speed control			
- engine compartment	97.1	17	P-6687
- passenger compartment	97.1	18	P-6686
- steering wheel	97.1	18	P-6686
Thermactor emission control system	94.1	19	P-6432
Thermostatic choke control	98	4	P-5633
8 CYLINDER 429 C.I.D.			
Accelerator linkage	97	1	P-4622
Intake manifold	94	3	P-8322
Air cleaner	96	8	P-6225
Carburetor - Ford 2V	95	15	P-7457
- Ford 4V	95	7	P-5457
Fuel system			
- exc. station wagon with ev/em	90	19	P-7206
- station wagon-with ev/em	90	18	P-7204
- all-without ev/em	90	17	P-7205
Speed control			
- engine compartment	97.1	17	P-6687
- passenger compartment	97.1	18	P-6686
- steering wheel	97.1	18	P-6686

B (FAIRLANE/TORINO)
B (FALCON) - FROM 1-2-70

TITLE	SECTION	PAGE	ILLUS. NO.
6 CYLINDER 250 C.I.D.			
Accelerator linkage	97	16	P-6885
Air cleaner	96	5	P-6221
Carburetor - Carter	95	12	P-7295
Fuel system			
- exc. Ranchero & station wagon-with ev/em	90	20	P-7214
- exc. Ranchero & station wagon-without ev/em	90	21	P-7213
- Ranchero-with ev/em	90	24	P-7212
- Ranchero-without ev/em	90	23	P-7211
- station wagon-with ev/em	90	22	P-7210
- station wagon-without ev/em	90	25	P-7209

(continued)

COPYRIGHT © 1975 — FORD MOTOR COMPANY — DEARBORN, MICHIGAN

INDEX

1970

B (FAIRLANE/TORINO) - continued

B (FALCON) - FROM 1-2-70

TITLE	SECTION	PAGE	ILLUS. NO.
8 CYLINDER 302 C.I.D.			
Accelerator linkage	97	17	P-6886
Air cleaner	96	6	P-6224
Carburetor - Ford 2V	95	15	P-7457
Fuel system			
- exc. Ranchero & station wagon-with ev/em	90	20	P-7214
- exc. Ranchero & station wagon-without ev/em	90	21	P-7213
- Ranchero-with ev/em	90	24	P-7212
- Ranchero-without ev/em	90	23	P-7211
- station wagon-with ev/em	90	22	P-7210
- station wagon-without ev/em	90	25	P-7209
Intake manifold and related parts	94	1	P-3742
Modulator system	120.1	4	P-7557
8 CYLINDER 351 C.I.D.			
Accelerator linkage	97	17	P-6886
Air cleaner - exc. ram air	96	11	P-7376
- ram air	96	12	P-7374
Carburetor - Ford 2V	95	15	P-7457
- Ford 4V	95	7	P-5457
Intake manifold	94	3	P-8322
Fuel system			
- exc. Ranchero & station wagon-with ev/em	90	20	P-7214
- exc. Ranchero & station wagon-without ev/em	90	21	P-7213
- Ranchero-with ev/em	90	24	P-7212
- Ranchero-without ev/em	90	23	P-7211
- station wagon-with ev/em	90	22	P-7210
- station wagon-without ev/em	90	25	P-7209
Modulator system			
- exc. ram air	120.1	5	P-7559
- ram air	120.1	6	P-7558
8 CYLINDER 429 C.I.D.			
Accelerator linkage	97	17	P-6886
Air Cleaner - exc. Cobra Jet	96	8	P-6225
- Cobra Jet	96	7	P-6223
- Cobra Jet-ram air	96	14	P-7375
Intake manifold	94	3	P-8322
Carburetor - Ford 4V	95	7	P-5457
- Ford 2V	95	15	P-7457
- Rochester 4V	95	13	P-7411
Exhaust air supply pump	94.1	1	P-5009
Fuel system			
- exc. Ranchero & station wagon-with ev/em	90	20	P-7214
- exc. Ranchero & station wagon-without ev/em	90	21	P-7213
- Ranchero-with ev/em	90	24	P-7212
- Ranchero-without ev/em	90	23	P-7211
- station wagon-with ev/em	90	22	P-7210
- station wagon-without ev/em	90	25	P-7209
Thermactor emission control system	94.1	26	P-8525

F (MUSTANG)

TITLE	SECTION	PAGE	ILLUS. NO.
6 CYLINDER 200 C.I.D.			
Accelerator linkage	97	14	P-6896
Air cleaner	96	5	P-6221
Carburetor - Carter - thermostatic choke	95	10	P-6209
Fuel system			
- with ev/em	90	26	P-7207
- without ev/em	90	25	P-7208
6 CYLINDER 250 C.I.D.			
Accelerator linkage	97	14	P-6896
Air cleaner	96	5	P-6221
Carburetor - Carter	95	12	P-7295
Fuel system			
- with ev/em	90	26	P-7207
- without ev/em	90	25	P-7208
8 CYLINDER 302 C.I.D.			
Accelerator linkage	97	15	P-6897
Air cleaner - 2V	96	6	P-6224
- 4V	96	13	P-7373
Carburetor - Ford 2V	95	15	P-7457
- Holley 4V	95	6	P-5320
Fuel system			
- with ev/em	90	26	P-7207
- without ev/em	90	25	P-7208
Intake manifold and related parts	94	1	P-3742
Modulator system	120.1	7	P-7560
Thermactor emission control system	94.1	25	P-8523
8 CYLINDER 351 C.I.D.			
Accelerator linkage	97	15	P-6897
Air cleaner - exc. Ram Air	96	11	P-7376
- Ram Air (W)	96	13	P-7373
- Ram Air (C)	96	12	P-7374
Carburetor - Ford 2V	95	15	P-7457
- Ford 4V	95	7	P-5457
Fuel system			
- with ev/em	90	26	P-7207
- without ev/em	90	25	P-7208
Modulator system			
- exc. ram air	120.1	9	P-7562
- ram air	120.1	8	P-7561
Intake manifold	94	3	P-8322
8 CYLINDER 428 C.I.D.			
Accelerator linkage	97	15	P-6897
Air cleaner			
- Cobra Jet - exc. Ram Air	96	6	P-6889
- Cobra Jet - Ram Air - fixed type	96	8	P-6619
- Cobra Jet - Ram Air - shaker type	96	10	P-6888
Carburetor - Holley 4V	95	6	P-5320
Exhaust air supply pump	94.1	1	P-5009
Fuel system			
- with ev/em	90	26	P-7207
- without ev/em	90	25	P-7208
Thermostatic choke control	98	4	P-5633

INDEX

1970

P (MAVERICK)

TITLE	SECTION	PAGE	ILLUS. NO.
6 CYLINDER 170 C.I.D.			
Accelerator linkage	97	16	P-6885
Air cleaner	96	9	P-6768
Carburetor - Carter	95	10	P-6209
Fuel system			
- with ev/em	90	15	P-6955
- without ev/em	90	16	P-6960
6 CYLINDER 200 C.I.D.			
Accelerator linkage	97	16	P-6885
Air cleaner	96	9	P-6768
Carburetor - Carter	95	10	P-6209
Fuel system			
- with ev/em	90	15	P-6955
- without ev/em	90	16	P-6960
6 CYLINDER 250 C.I.D.			
Accelerator linkage	97	16	P-6885
Air cleaner	96	9	P-6768
Carburetor - Carter	95	12	P-7295
Fuel system			
- with ev/em	90	15	P-6955
- without ev/em	90	16	P-6960

S (THUNDERBIRD)

TITLE	SECTION	PAGE	ILLUS. NO.
8 CYLINDER 429 C.I.D.			
Accelerator linkage	97	18	P-7309
Air cleaner	96	8	P-6225
Intake manifold	94	3	P-8322
Carburetor - Ford 4V	95	7	P-5457
Fuel system			
- with ev/em	90	27	P-7215
- without ev/em	90	9	P-5485
Speed control			
- engine compartment	97.1	21	P-7697
- passenger compartment	97.1	22	P-7698
- steering wheel	97.1	22	P-7698

U (BRONCO)

TITLE	SECTION	PAGE	ILLUS. NO.
6 CYLINDER 170 C.I.D.			
Accelerator linkage	97	12	P-4943
Air cleaner	96	9	P-6768
Carburetor - Carter	95	10	P-6209
Fuel system			
- standard fuel tank-with ev/em	90	30	P-7234
- standard fuel tank-without ev/em	90	7	P-5012
- auxiliary fuel tank - without ev/em	90	28	P-7235
- auxiliary fuel tank - with ev/em	90	29	P-7237

U (BRONCO) - continued

TITLE	SECTION	PAGE	ILLUS. NO.
8 CYLINDER 302 C.I.D.			
Accelerator linkage	97	12	P-5499
Air cleaner	96	23	P-8698
Carburetor - Ford 2V	95	15	P-7457
Fuel system			
- standard fuel tank-with ev/em	90	30	P-7234
- standard fuel tank-without ev/em	90	7	P-5012
- auxiliary fuel tank - without ev/em	90	28	P-7235
- auxiliary fuel tank - with ev/em	90	29	P-7237
Intake manifold and related parts	94	1	P-3742

X (FALCON) - BEFORE 1-2-70
FOR UNITS BUILT FROM 1-2-70 REFER TO B (FALCON)

TITLE	SECTION	PAGE	ILLUS. NO.
6 CYLINDER 200 C.I.D.			
Accelerator linkage	97	10	P-4978
Air cleaner	96	5	P-6221
Carburetor - Carter - thermostatic choke	95	10	P-6209
Fuel system			
- exc. station wagon-with ev/em	90	20	P-7214
- exc. station wagon-without ev/em	90	21	P-7213
- station wagon-with ev/em	90	22	P-7210
- station wagon-without ev/em	90	25	P-7209
8 CYLINDER 302 C.I.D.			
Accelerator linkage	97	10	P-4979
Air cleaner	96	6	P-6224
Carburetor - Ford 2V	95	15	P-7457
Fuel system			
- exc. station wagon-with ev/em	90	20	P-7214
- exc. station wagon-without ev/em	90	21	P-7213
- station wagon-with ev/em	90	22	P-7210
- station wagon-without ev/em	90	25	P-7209
Intake manifold and related parts	94	1	P-3742
Modulator system	120.1	4	P-7557

COPYRIGHT © 1975 — FORD MOTOR COMPANY — DEARBORN, MICHIGAN

INDEX

1971

A (FORD)

TITLE	SECTION	PAGE	ILLUS. NO.
6 CYLINDER 240 C.I.D.			
Accelerator linkage	97	19	P-8137
Air cleaner	96	5	P-6221
Carburetor - Carter - thermostatic choke	95	19	P-8904
Fuel system			
- Police Car	90	31	P-8127
- exc. Police Car	90	32	P-8128
Manifold	94	1	P-4861
Modulator system	120.1	10	P-8454
Thermostatic choke control	98	1	P-5631
8 CYLINDER 302 C.I.D.			
Accelerator linkage	97	20	P-8138
Air cleaner	96	6	P-6224
Carburetor - Ford 2V	95	15	P-7457
Fuel system			
- Police Car	90	31	P-8127
- exc. Police Car	90	32	P-8128
Intake manifold and related parts	94	1	P-3742
Speed control			
- engine compartment	97.1	23	P-8318
- passenger compartment	97.1	24	P-8310
8 CYLINDER 351 C.I.D.			
Accelerator linkage	97	20	P-8138
Air cleaner	96	6	P-6224
Intake manifold	94	3	P-8322
Carburetor - 2V	95	15	P-7457
Fuel system			
- Police Car	90	31	P-8127
- exc. Police Car	90	32	P-8128
Speed control			
- engine compartment	97.1	23	P-8318
- passenger compartment	97.1	24	P-8310
8 CYLINDER 390 C.I.D.			
Accelerator linkage	97	20	P-8138
Air cleaner	96	7	P-6222
Carburetor - 2V	95	15	P-7457
Fuel system			
- Police Car	90	31	P-8127
- exc. Police Car	90	32	P-8128
Speed control			
- engine compartment	97.1	23	P-8318
- passenger compartment	97.1	24	P-8310
Thermostatic choke control	98	4	P-5633
8 CYLINDER 400 C.I.D.			
Accelerator linkage	97	20	P-8138
Air cleaner	96	11	P-7376
Carburetor - Ford 2V	95	15	P-7457
Intake manifold	94	3	P-8322
Fuel system			
- Police Car	90	31	P-8127
- exc. Police Car	90	32	P-8128
Speed control			
- engine compartment	97.1	23	P-8318
- passenger compartment	97.1	24	P-8310

A (FORD) - continued

TITLE	SECTION	PAGE	ILLUS. NO.
8 CYLINDER 429 C.I.D.			
Accelerator linkage	97	20	P-8138
Air cleaner	96	8	P-6225
Intake manifold	94	3	P-8322
Carburetor - Ford 2V	95	15	P-7454
- Ford 4V	95	7	P-5457
Fuel system			
- Police Car	90	31	P-8127
- exc. Police Car	90	32	P-8128
Speed control			
- engine compartment	97.1	23	P-8318
- passenger compartment	97.1	24	P-8310

B (TORINO)

TITLE	SECTION	PAGE	ILLUS. NO.
6 CYLINDER 250 C.I.D.			
Accelerator linkage	97	22	P-8132
Air cleaner	96	5	P-6221
Carburetor - Carter	95	19	P-8094
Fuel system			
- exc. Ranchero & station wagon	90	35	P-8124
- Ranchero	90	33	P-8122
- station wagon	90	34	P-8123
Modulator system	120.1	11	P-8455
8 CYLINDER 302 C.I.D.			
Accelerator linkage	97	21	P-8131
Air cleaner	96	6	P-6224
Carburetor - Ford 2V	95	15	P-7457
Fuel system			
- exc. Ranchero & station wagon	90	35	P-8124
- Ranchero	90	33	P-8122
- station wagon	90	34	P-8123
Intake manifold and related parts	94	1	P-3742
Modulator system	120.1	4	P-7557
8 CYLINDER 351 C.I.D.			
Accelerator linkage	97	21	P-8131
Air cleaner - exc. ram air	96	11	P-7376
- ram air	96	12	P-7374
Intake manifold	94	3	P-8322
Carburetor - Ford 2V	95	15	P-7457
4V	95	7	P-5457
Fuel system			
- exc. Ranchero & station wagon	90	35	P-8124
- Ranchero	90	33	P-8122
- station wagon	90	34	P-8123
8 CYLINDER 429 C.I.D.			
Accelerator linkage	97	21	P-8131
Air cleaner			
- Cobra Jet - exc. ram air	96	17	P-8287
- Cobra Jet-ram air design	96	14	P-7375
Intake manifold	94	3	P-8322
Carburetor - Ford 4V	95	7	P-5457
- Rochester 4V	95	13	P-7411
Fuel system			
-exc. Ranchero & staion wagon	90	35	P-8124
- Ranchero	90	33	P-8122
- station wagon	90	34	P-8123
Thermactor emission control system	94.1	26	P-8525

INDEX

1971

F (MUSTANG)

TITLE	SECTION	PAGE	ILLUS. NO.
6 CYLINDER 250 C.I.D.			
Accelerator linkage	97	23	P-8135
Air cleaner	96	5	P-6221
Carburetor - Carter	95	19	P-8904
Fuel system	90	37	P-8126
Modulator system	120.1	13	P-8453
8 CYLINDER 302 C.I.D.			
Accelerator linkage	97	24	P-8136
Air cleaner - 2V-exc.ram air	96	6	P-6224
- 4V -ram air	96	21	P-8291
- 4V-exc. ram air	96	18	P-8288
Carburetor - Ford 2V	95	15	P-7457
- Ford 4V	95	7	P-5457
Fuel system	90	37	P-8126
Intake manifold and related parts	94	1	P-3742
Thermactor emission control system	94.1	24	P-8523
8 CYLINDER 351 C.I.D.			
Accelerator linkage	97	24	P-8136
Air cleaner - exc. Ram Air	96	11	P-7376
- Ram Air	96	20	P-8290
Carburetor - 2V	95	15	P-7457
4V	95	7	P-5457
Fuel system	90	37	P-8126
Intake manifold	94	3	P-8322
8 CYLINDER 429 C.I.D.			
Accelerator linkage	97	24	P-8136
Air cleaner -exc. ram air	96	17	P-8287
- ram air	96	19	P-8289
Carburetor	95	7	P-5457
Fuel system	90	37	P-8126
Intake Manifold	94	3	P-8322
Thermactor emission control system	94.1	26	P-8524

L (PINTO)

TITLE	SECTION	PAGE	ILLUS. NO.
4 CYLINDER 98 C.I.D. (1600 cc)			
Accelerator linkage	97	25	P-7940
Air cleaner	96	15	P-7938
Carburetor	95	18	P-7967
Exhaust emission and related parts	66.1	8	P-8024
Fuel system	90	38	P-7941
Intake manifold	94	3	P-7610
Thermostatic choke	98	2	P-8414
4 CYLINDER 122 O.H.C. (2000 cc)			
Accelerator linkage	97	25	P-7940
Air cleaner	96	16	P-7939
Carburetor	95	17	P-7695
Exhaust emission and related parts	66.1	8	P-8024
Fuel system	90	38	P-7941
Hot idle compensator	66.1	8	P-10484
Intake manifold	94	3	P-7610
Thermostatic choke	98	6	P-8415

P (MAVERICK)

TITLE	SECTION	PAGE	ILLUS. NO.
6 CYLINDER 170 C.I.D.			
Accelerator linkage	97	26	P-8134
Air cleaner	96	9	P-6768
Carburetor - Carter	95	19	P-8904
Fuel system	90	39	P-8125
Modulator system	120.1	14	P-8451
6 CYLINDER 200 C.I.D.			
Accelerator linkage	97	26	P-8134
Air cleaner	96	9	P-6768
Carburetor - Carter	95	19	P-8904
Fuel system	90	39	P-8125
Modulator system	120.1	14	P-8451
6 CYLINDER 250 C.I.D.			
Accelerator linkage	97	26	P-8134
Air cleaner	96	9	P-6768
Carburetor - Carter	95	19	P-8904
Fuel system	90	39	P-8125
Modulator system	120.1	14	P-8451
8 CYLINDER 302 C.I.D.			
Accelerator linkage	97	27	P-8133
Air cleaner	96	6	P-6224
Carburetor	95	15	P-7457
Fuel system	90	39	P-8125
Intake manifold	94	1	P-3742

S (THUNDERBIRD)

TITLE	SECTION	PAGE	ILLUS. NO.
8 CYLINDER 429 C.I.D.			
Accelerator linkage	97	18	P-7309
Intake manifold	94	3	P-8322
Air cleaner	96	22	P-8292
Carburetor - Ford 4V	95	7	P-5457
Fuel system	90	36	P-8130
Modulator system	120.1	12	P-8452
Speed control			
- engine compartment	97.1	21	P-7697
- passenger compartment	97.1	22	P-7698
- steering wheel	97.1	22	P-7698

U (BRONCO)

TITLE	SECTION	PAGE	ILLUS. NO.
6 CYLINDER 170 C.I.D.			
Accelrator linkage	97	12	P-4943
Air cleaner	96	9	P-6768
Carburetor			
- Carter - YF type	95	19	P-8904
Fuel system - standard fuel tank	90	30	P-7234
- auxiliary fuel tank	90	29	P-7237
8 CYLINDER 302 C.I.D.			
Accelerator linkage	97	12	P-5499
Air cleaner	96	23	P-8698
Carburetor - Ford 2V	95	15	P-7457
Fuel system - standard fuel tank	90	30	P-7234
- auxiliary fuel tank	90	29	P-7237
Intake manifold and related parts	94	1	P-3742

COPYRIGHT © 1975 — FORD MOTOR COMPANY — DEARBORN, MICHIGAN

INDEX

1972

A (FORD)

TITLE	SECTION	PAGE	ILLUS. NO.
6 CYLINDER 240 C.I.D.			
Accelerator linkage	97	19	P-8137
Air cleaner	96	5	P-6221
Carburetor - Carter - thermostatic choke	95	19	P-8904
Fuel system	90	32	P-8128
Manifold	94	1	P-4861
Thermostatic choke control	98	1	P-5631
8 CYLINDER 302 C.I.D.			
Accelerator linkage	97	20	P-8138
Air cleaner			
- exc. California	96	25	P-9120
- California only	96	29	P-9129
Carburetor - Ford 2V	95	21	P-9084
Fuel system	90	32	P-8128
Intake manifold and related parts	94	1	P-3742
Speed control			
- engine compartment	97.1	23	P-8318
- passenger compartment	97.1	24	P-8310
- steering wheel	97.1	24	P-8310
8 CYLINDER 351 C.I.D.			
Accelerator linkage	97	20	P-8138
Air cleaner			
- (351-W)	96	25	P-9120
- (351-C) - exc. California	96	27	P-9122
- (351-C) - California only	96	29	P-9129
Intake manifold	94	3	P-8322
Carburetor - 2V	95	21	P-9084
Fuel system	90	32	P-8128
Speed control			
- engine compartment	97.1	23	P-8318
- passenger compartment	97.1	24	P-8310
- steering wheel	97.1	24	P-8310
8 CYLINDER 400 C.I.D.			
Accelerator linkage	97	20	P-8138
Air cleaner			
- exc. California	96	24	P-9119
- California only	96	29	P-9129
Carburetor - Ford 2V	95	21	P-9084
Intake manifold	94	3	P-8322
Fuel system	90	32	P-8128
Speed control			
- engine compartment	97.1	23	P-8318
- passenger compartment	97.1	24	P-8310
- steering wheel	97.1	24	P-8310
8 CYLINDER 429 C.I.D.			
Accelerator linkage	97	20	P-8138
Air cleaner			
- exc. Police	96	26	P-9121
- Police	96	28	P-9128
Intake manifold	94	3	P-8322
Carburetor - Ford 4V	95	20	P-8934
Fuel system	90	32	P-8128
Speed control			
- engine compartment	97.1	23	P-8318
- passenger compartment	97.1	24	P-8310
- steering wheel	97.1	24	P-8310

B (TORINO)

TITLE	SECTION	PAGE	ILLUS. NO.
6 CYLINDER 250 C.I.D.			
Accelerator linkage	97	23	P-8135
Air cleaner	96	5	P-6221
Carburetor - Carter RBS	95	12	P-7925
Fuel system			
- exc. Ranchero & station wagon	90	40	P-8589
- Ranchero (Body type 97)	90	42	P-8591
- station wagon (Body type 71)	90	41	P-8590
8 CYLINDER 302 C.I.D.			
Accelerator linkage	97	24	P-8136
Air cleaner			
- exc. California	96	25	P-9120
- California only	96	34	P-9125
Carburetor - Ford 2V	95	21	P-9084
Fuel system			
- exc. Ranchero & station wagon	90	40	P-8589
- Ranchero (Body type 97)	90	42	P-8591
- station wagon (Body type 71)	90	41	P-8590
Intake manifold and related parts	94	1	P-3742
8 CYLINDER 351 C.I.D.			
Accelerator linkage	97	24	P-8136
Air cleaner			
- 351-4V - exc. ram air - exc. California	96	32	P-9118
- 351-4V - ram air - exc. California	96	31	P-9117
- 351-4V - exc. ram air - California only	96	33	P-9124
- 351-2V - California only	96	34	P-9125
- 351-2V - exc. California	96	27	P-9122
Intake manifold	94	3	P-8322
Carburetor - Ford 2V	95	20	P-8934
- Ford 4V	95	21	P-9084
Fuel system			
- exc. Ranchero & station wagon	90	40	P-8589
- Ranchero (Body type 97)	90	42	P-8591
- station wagon (Body type 71)	90	41	P-8590
8 CYLINDER 400 C.I.D.			
Accelerator linkage	97	24	P-8136
Air cleaner			
- exc. California	96	24	P-9119
- California only	96	34	P-9125
Carburetor - Ford 2V	95	21	P-9084
Fuel system			
- exc. Ranchero & station wagon	90	40	P-8589
- Ranchero (Body type 97)	90	42	P-8591
- station wagon (Body type 71)	90	41	P-8590
Intake manifold	94	3	P-8322
8 CYLINDER 429 C.I.D.			
Accelerator linkage	97	24	P-8136
Air cleaner			
- exc. ram air - exc. California	96	26	P-9121
- exc. ram air - California only	96	34	P-9125
- ram air design - exc. California	96	30	P-9116
Intake manifold	94	3	P-8322
Carburetor - Ford 4V	95	20	P-8934
Fuel system			
- exc. Ranchero & station wagon	90	40	P-8589
- Ranchero (Body type 97)	90	42	P-8591
- station wagon (Body type 71)	90	41	P-8590

INDEX

1972

TITLE	SECTION	PAGE	ILLUS. NO.
F (MUSTANG)			
6 CYLINDER 250 C.I.D.			
Accelerator linkage	97	23	P-8135
Air cleaner	96	5	P-6221
Carburetor - Carter RBS	95	12	P-7925
Fuel system	90	37	P-8126
8 CYLINDER 302 C.I.D.			
Accelerator linkage	97	24	P-8136
Air cleaner			
- exc. California	96	25	P-9120
- California only	96	35	P-9126
Carburetor - Ford 2V	95	21	P-9084
Fuel system	90	37	P-8126
Intake manifold and related parts	94	1	P-3742
8 CYLINDER 351 C.I.D.			
Accelerator linkage	97	24	P-8136
Air cleaner			
- 351-2V - exc. California	96	27	P-9122
- 351-2V - California only	96	35	P-9126
- 351-4V CJ - exc. ram air exc. California	96	32	P-9118
- 351-4V CJ - exc. ram air California	96	36	P-9127
- 351-4V CJ - ram air	96	20	P-8290
Carburetor - 2V	95	21	P-9084
- 4V	95	20	P-8934
Fuel system	90	37	P-8126
Intake manifold	94	3	P-8322
L (PINTO)			
4 CYLINDER 98 C.I.D. (1600 cc)			
Accelerator linkage	97	25	P-7940
Air cleaner	96	15	P-7938
Carburetor	95	18	P-7967
Exhaust emission and related parts	66.1	8	P-8024
Fuel system	90	38	P-7941
Thermostatic choke	98	2	P-8414
Intake manifold	94	3	P-7610
4 CYLINDER 122 O.H.C. (2000 cc)			
Accelerator linkage	97	25	P-7940
Air cleaner			
- without A/C	96	16	P-7939
- with A/C	96	37	P-9123
Carburetor	95	17	P-7695
Exhaust emission and related parts	66.1	8	P-8024
Fuel system	90	38	P-7941
Hot idle compensator	66.1	8	P-10484
Thermostatic choke	98	6	P-8415
Intake manifold	94	3	P-7610
P (MAVERICK)			
6 CYLINDER 170 C.I.D.			
Accelerator linkage	97	26	P-8134
Air cleaner	96	9	P-6768
Carburetor - Carter	95	19	P-8904
Fuel system	90	39	P-8125
6 CYLINDER 200 C.I.D.			
Accelerator linkage	97	26	P-8134
Air cleaner	96	5	P-6221
Carburetor - Carter	95	19	P-8904
Fuel system	90	39	P-8125

TITLE	SECTION	PAGE	ILLUS. NO.
P (MAVERICK) - continued			
6 CYLINDER 250 C.I.D.			
Accelerator linkage	97	26	P-8134
Air cleaner	96	5	P-6221
Carburetor - Carter RBS	95	12	P-7925
Fuel system	90	39	P-8125
8 CYLINDER 302 C.I.D.			
Accelerator linkage	97	27	P-8133
Air cleaner - exc. California	96	25	P-9120
Carburetor	95	15	P-7457
Fuel system	90	39	P-8125
Intake manifold	94	1	P-3742
S (THUNDERBIRD)			
8 CYLINDER 400 C.I.D.			
Accelerator linkage	97	18	P-7309
Intake manifold	94	3	P-8322
Air cleaner			
- exc. California	96	24	P-9119
- California only	96	29	P-9129
Carburetor - Ford 2V	95	21	P-9084
Fuel system	90	43	P-8681
Speed control			
- engine compartment	97.1	26	P-9918
- passenger compartment	97.1	25	P-9919
8 CYLINDER 429 C.I.D.			
Accelerator linkage	97	18	P-7309
Intake manifold	94	3	P-8322
Air cleaner	96	29	P-9129
Carburetor - Ford 4V	95	20	P-8934
Fuel system	90	43	P-8681
Speed control			
- engine compartment	97.1	26	P-9918
- passenger compartment	97.1	25	P-9919
- steering wheel	97.1	25	P-9919
8 CYLINDER 460 C.I.D.			
Accelerator linkage	97	18	P-7309
Intake manifold	94	3	P-8322
Air cleaner	96	29	P-9129
Carburetor-Ford 4V	95	20	P-8934
Fuel system	90	43	P-8681
Speed control			
- engine compartment	97.1	26	P-9918
- passenger compartment	97.1	25	P-9919
- steering wheel	97.1	25	P-9919
U (BRONCO)			
6 CYLINDER 170 C.I.D.			
Accelerator linkage	97	12	P-4943
Air cleaner	96	9	P-6768
Carburetor			
- Carter - YF type	95	19	P-8904
Fuel system			
- standard fuel tank	90	30	P-7234
- auxiliary fuel tank	90	29	P-7237
8 CYLINDER 302 C.I.D.			
Accelerator linkage	97	12	P-5499
Air cleaner	96	23	P-8698
Carburetor - Ford 2V	95	21	P-9084
Fuel system			
- standard fuel tank	90	30	P-7234
- auxiliary fuel tank	90	29	P-7237
Intake manifold and related parts	94	1	P-3742

COPYRIGHT © 1975 — FORD MOTOR COMPANY — DEARBORN, MICHIGAN

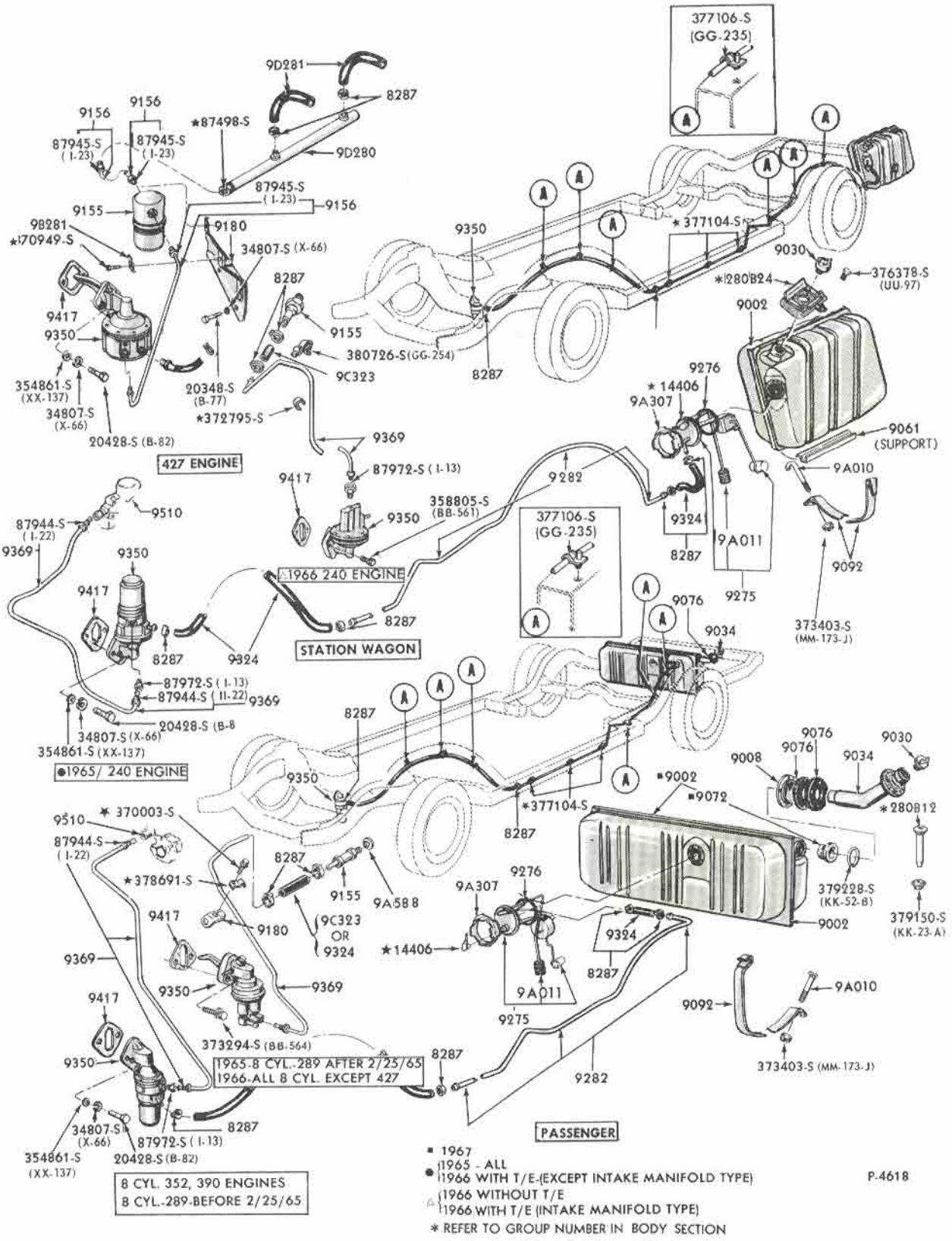

FUEL SYSTEM and RELATED PARTS
1965/68 FORD

COPYRIGHT © 1975 — FORD MOTOR COMPANY — DEARBORN, MICHIGAN

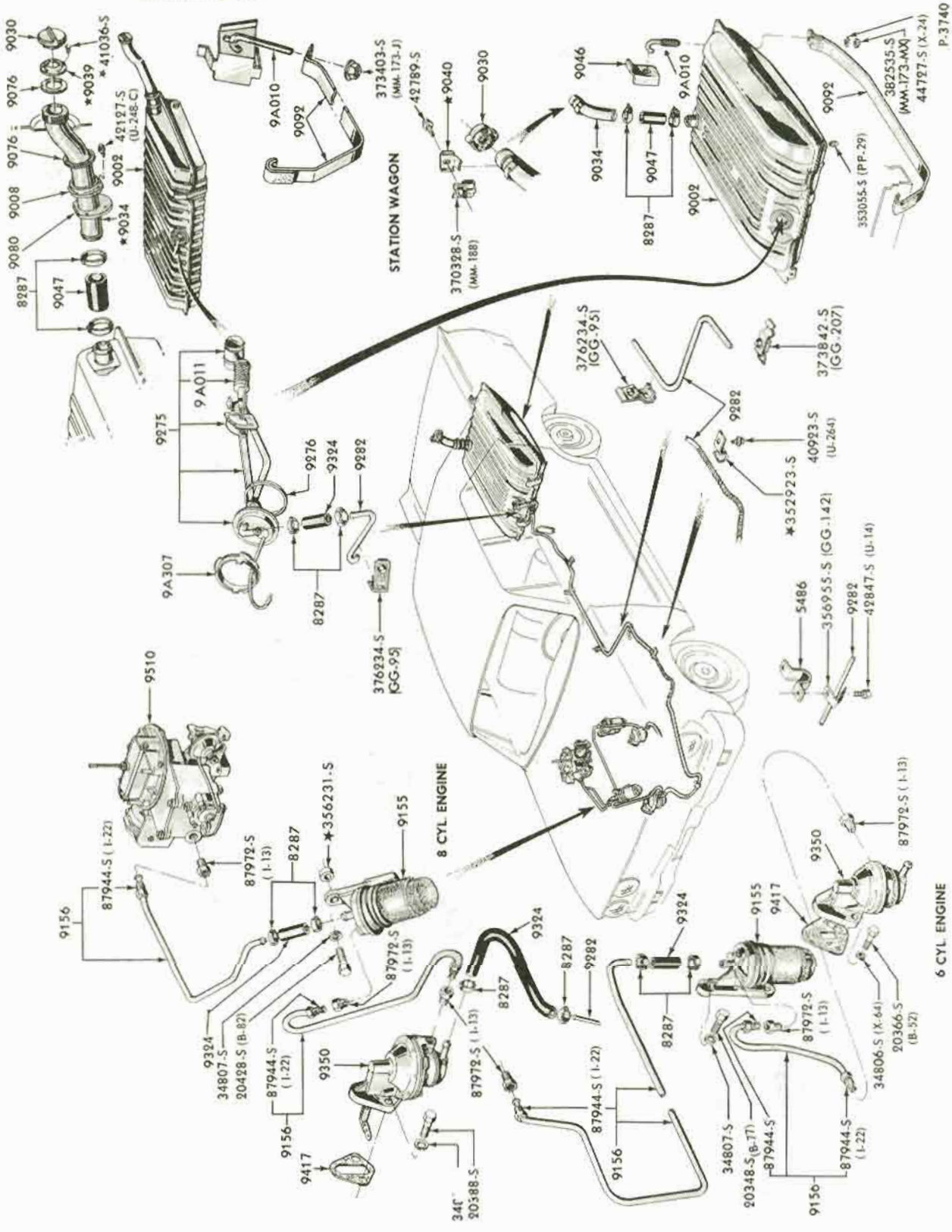

FUEL SYSTEM and RELATED PARTS
1965 FAIRLANE

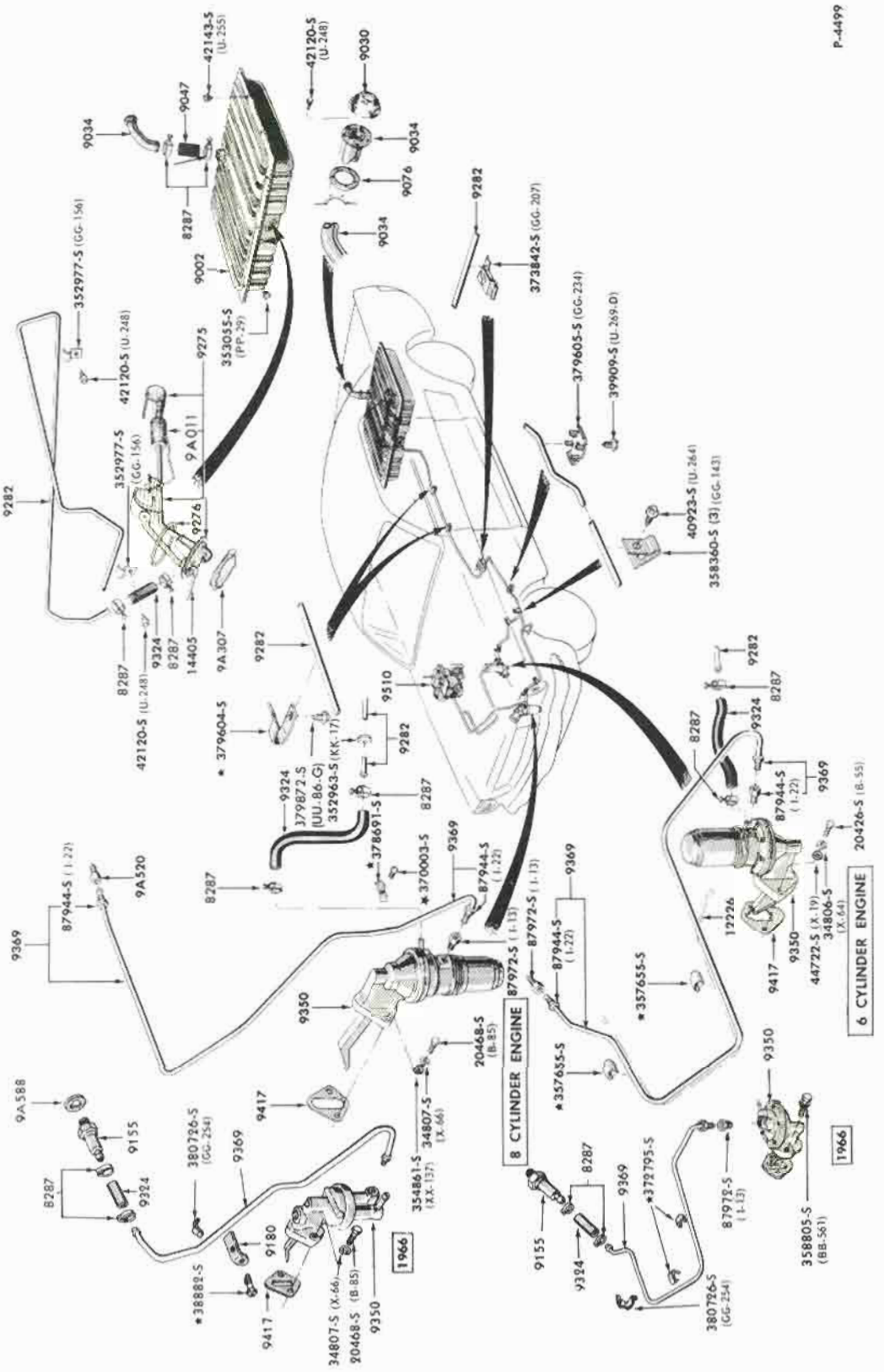

FUEL SYSTEM and RELATED PARTS
1965/68 MUSTANG

COPYRIGHT © 1975 — FORD MOTOR COMPANY — DEARBORN, MICHIGAN

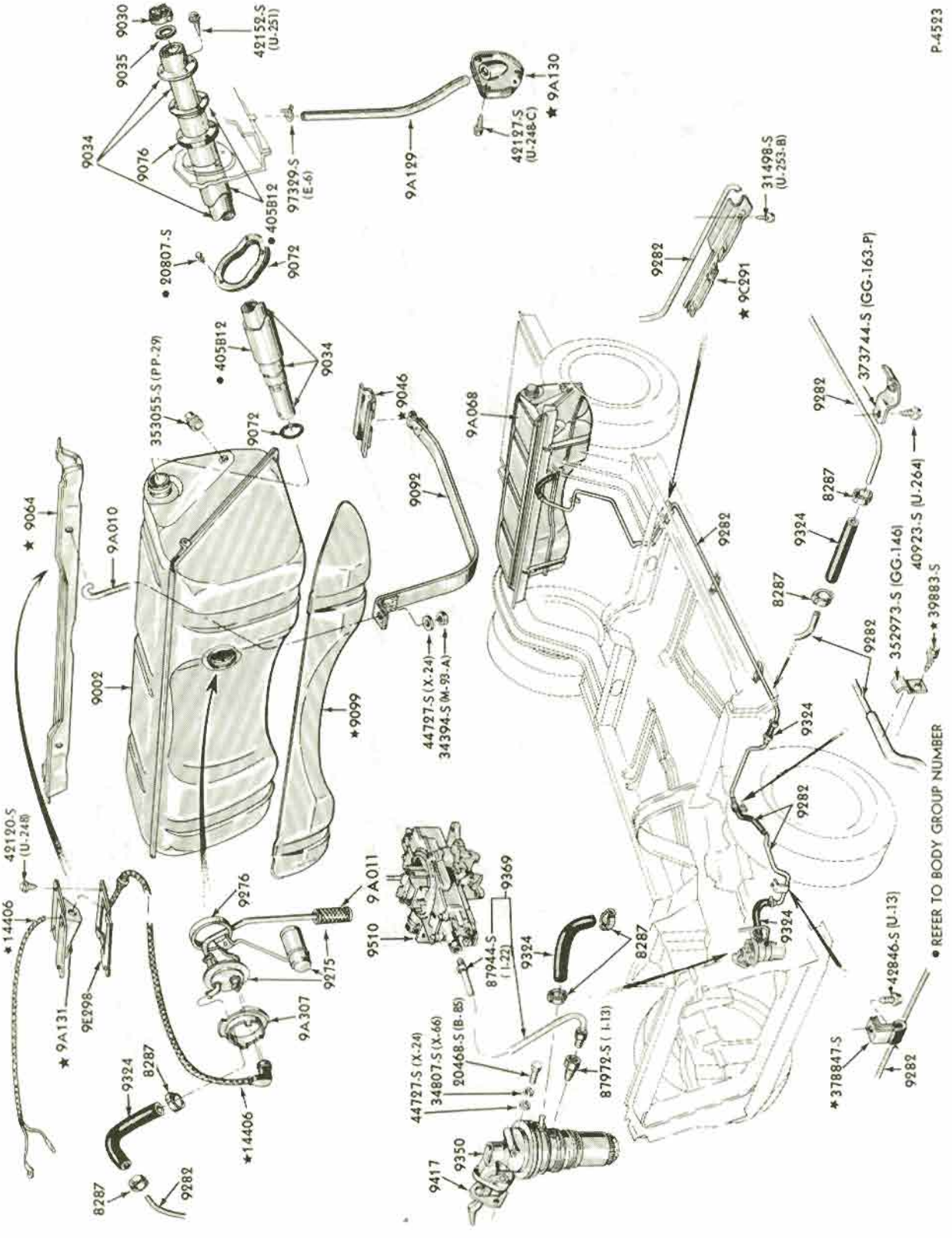

FUEL SYSTEM and RELATED PARTS
1965/66 THUNDERBIRD

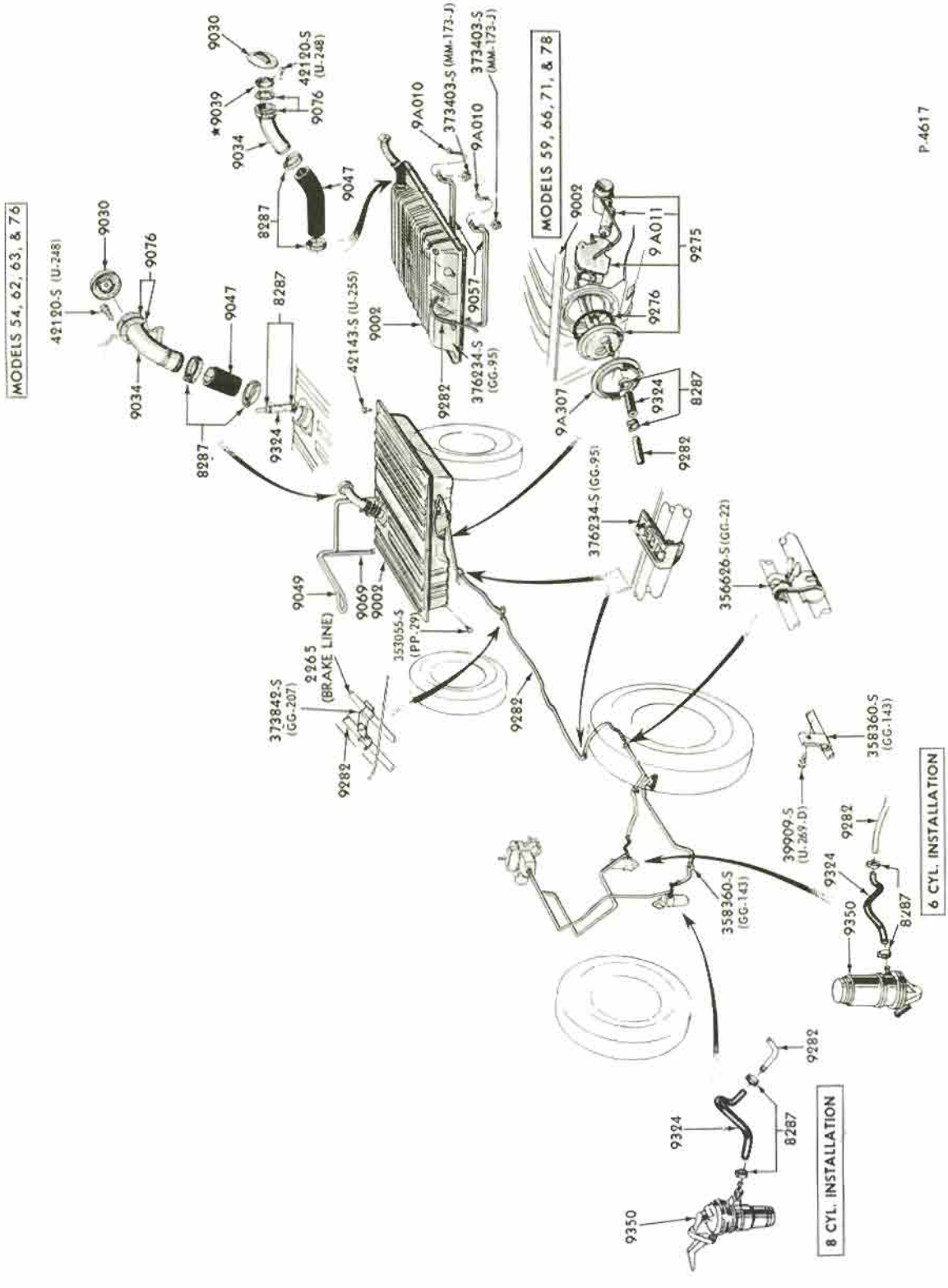

FUEL SYSTEM and RELATED PARTS
1965 FALCON

COPYRIGHT © 1975 — FORD MOTOR COMPANY — DEARBORN, MICHIGAN

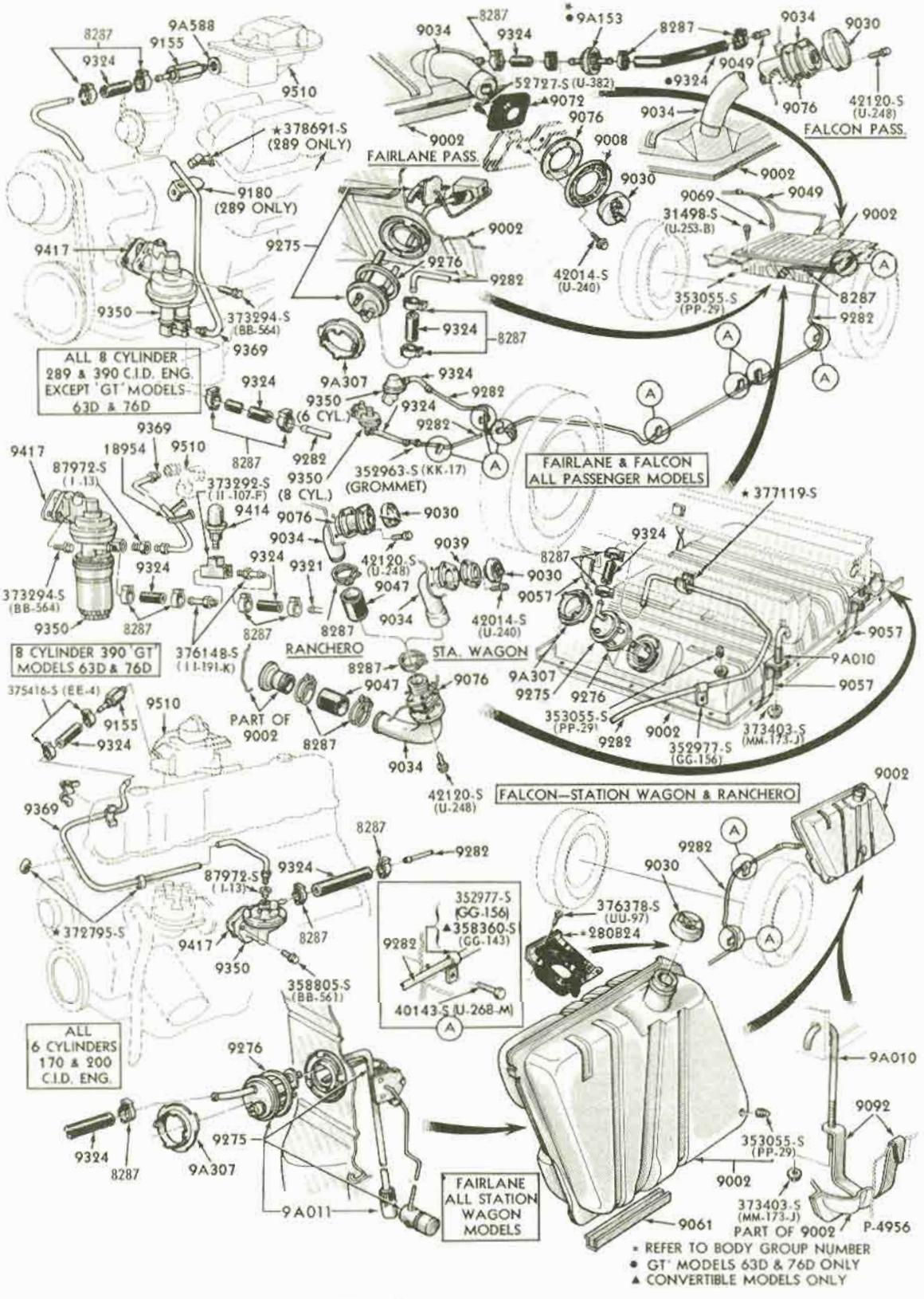
8287
9A588
9155
9324
9510
★378691-S (289 ONLY)
9180 (289 ONLY)
9417
9275
9350
373294-S (BB-564)
9369
ALL 8 CYLINDER 289 & 390 C.I.D. ENG. EXCEPT 'GT' MODELS 63D & 76D
9324
9350 (6 CYL.)
8287
9282
9369
18954
9510
9417
87972-S (I-13)
373292-S (II-107-F)
9350 (8 CYL.)
352963-S (KK-17) (GROMMET)
9414
9076
9030
9034
42120-S (U-248)
9039
9321
9047
42014-S (U-240)
373294-S (BB-564)
9350
8287
8 CYLINDER 390 'GT' MODELS 63D & 76D
376148-S (II-191-K)
RANCHERO
STA. WAGON
PART OF 9002
375416-S (EE-4)
9155
9324
9510
9369
87972-S (I-13)
★372795-S
9417
9350
358805-S (BB-561)
ALL 6 CYLINDERS 170 & 200 C.I.D. ENG.
9276
9275
9324
8287
9A307
9A011
FAIRLANE ALL STATION WAGON MODELS
8287
9034
9324
★9A153
52727-S (U-382)
▲9072
9076
9008
9002
FAIRLANE PASS.
9030
9034
9049
•9324
9076
42120-S (U-248)
FALCON PASS.
9002
9069
9049
31498-S (U-253-B)
9002
42014-S (U-240)
353055-S (PP-29)
8287
9282
9324
8287
9A307
9324
9350
9324
9282
(6 CYL.)
9324
9282
352963-S (KK-17) (GROMMET)
FAIRLANE & FALCON ALL PASSENGER MODELS
★377119-S
9324
8287
9030
9057
9039
42014-S (U-240)
9057
9A010
9057
9A307
9275
9276
353055-S (PP-29)
9282
9002
352977-S (GG-156)
373403-S (MM-173-J)
FALCON—STATION WAGON & RANCHERO
9002
9369
8287
9282
87972-S (I-13)
9324
★372795-S
9417
9350
352977-S (GG-156)
▲358360-S (GG-143)
9282
40143-S (U-268-M)
9282
9030
376378-S (UU-97)
•280824
9A010
9092
353055-S (PP-29)
9002
373403-S (MM-173-J)
PART OF 9002
9061
P-4956
★ REFER TO BODY GROUP NUMBER
• GT' MODELS 63D & 76D ONLY
▲ CONVERTIBLE MODELS ONLY

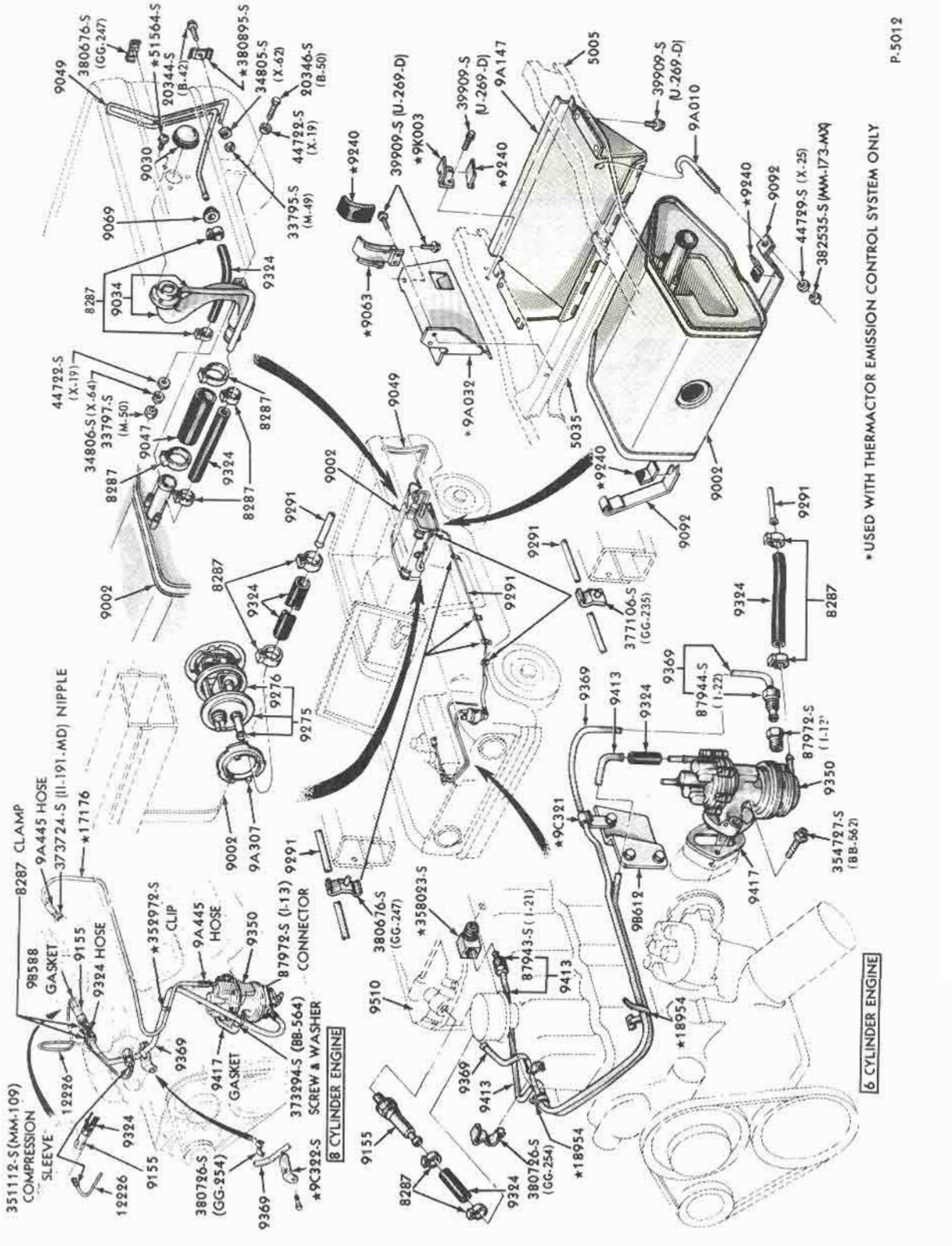

FUEL SYSTEM and RELATED PARTS--(WITHOUT EVAPORATIVE EMISSION CONTROL)
1966/70 BRONCO

COPYRIGHT © 1975 — FORD MOTOR COMPANY — DEARBORN, MICHIGAN

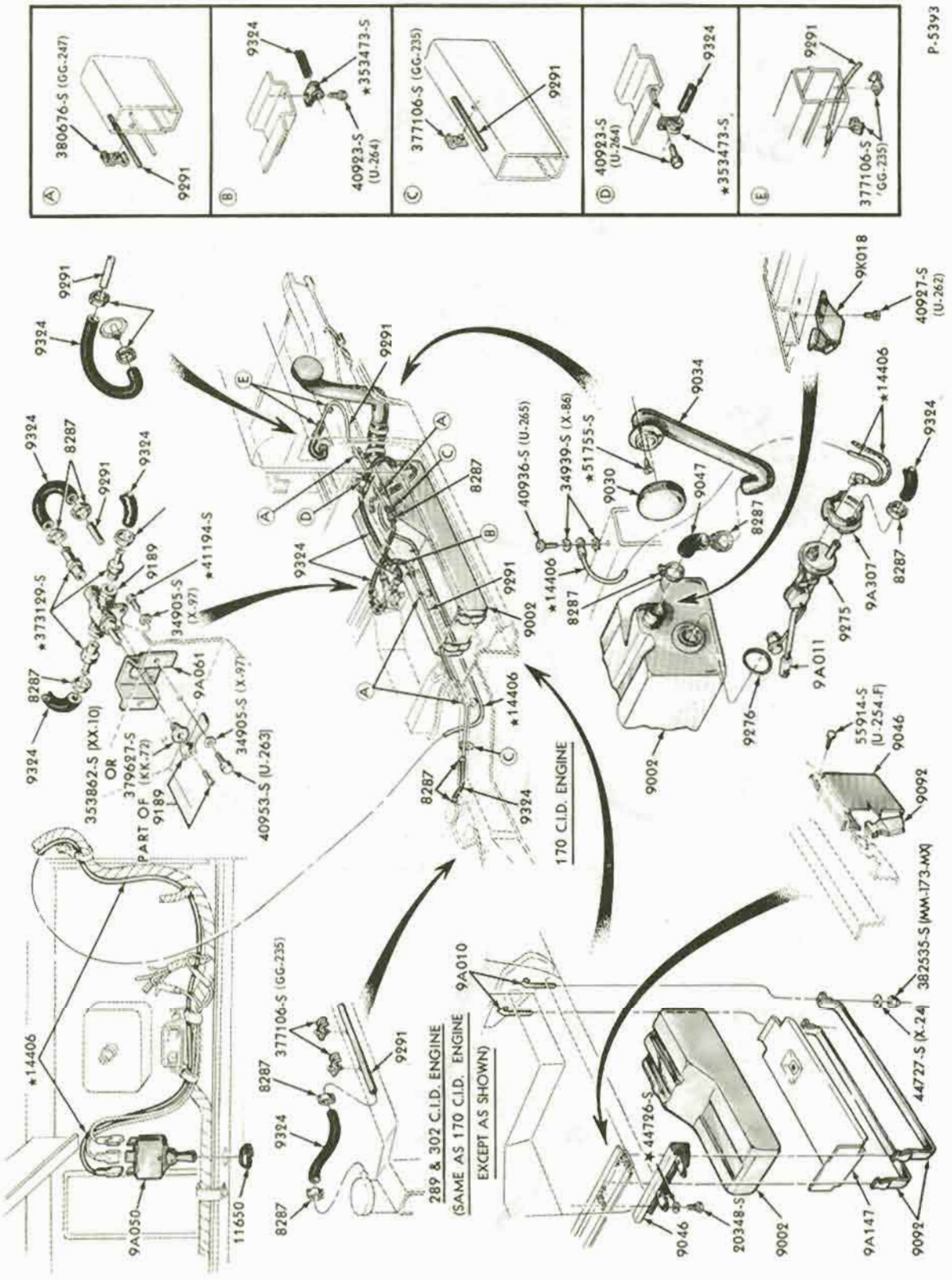

FUEL TANK - AUXILIARY (12 GALLON CAPACITY)
1966/69 BRONCO

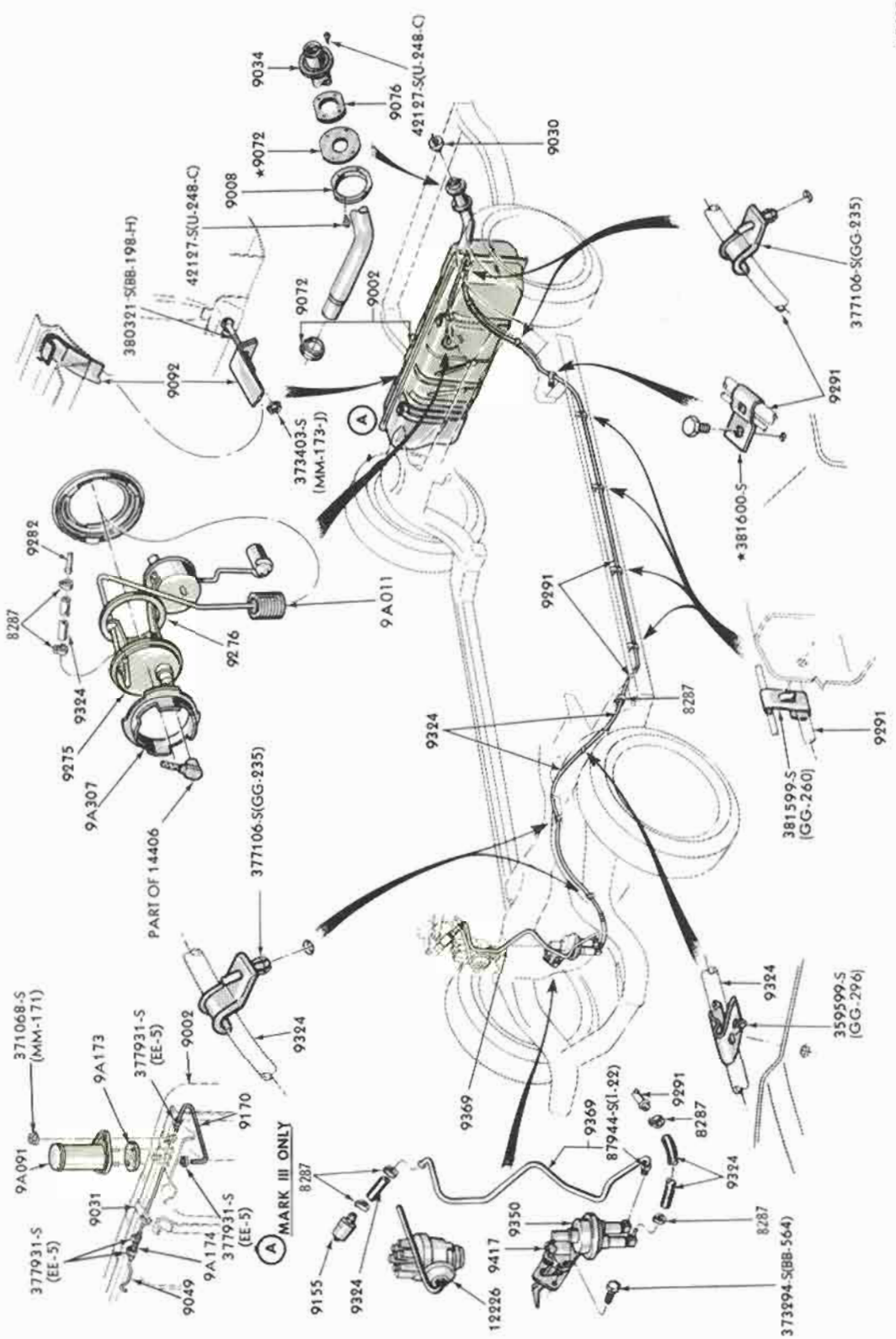

FUEL SYSTEM and RELATED PARTS--(WITHOUT EVAPORATIVE EMISSION CONTROL)
1967/70 THUNDERBIRD

COPYRIGHT © 1975 — FORD MOTOR COMPANY — DEARBORN, MICHIGAN

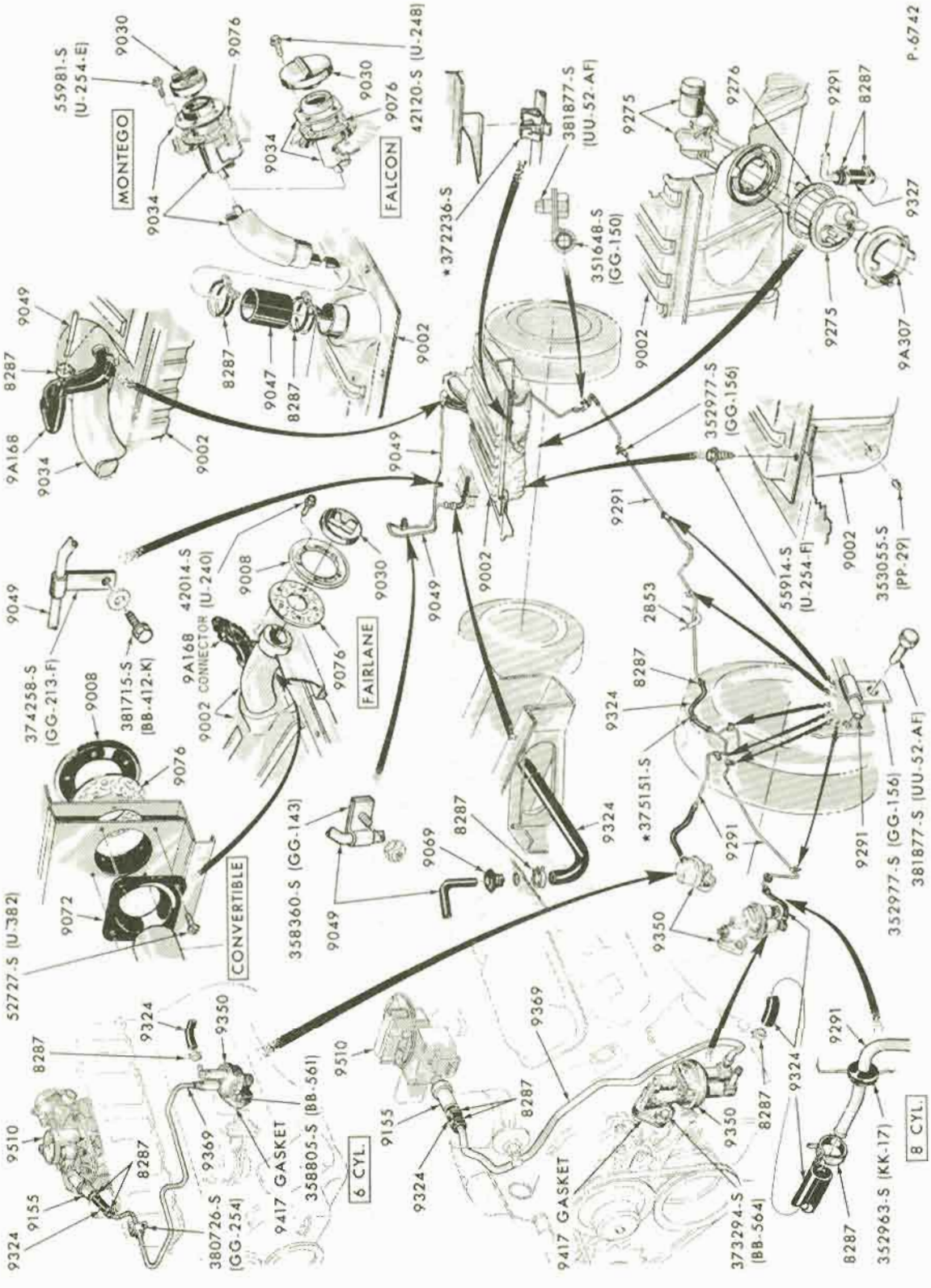

FUEL SYSTEM and RELATED PARTS
1968/69 FAIRLANE/TORINO, FALCON - ALL EXCEPT STATION WAGON & RANCHERO

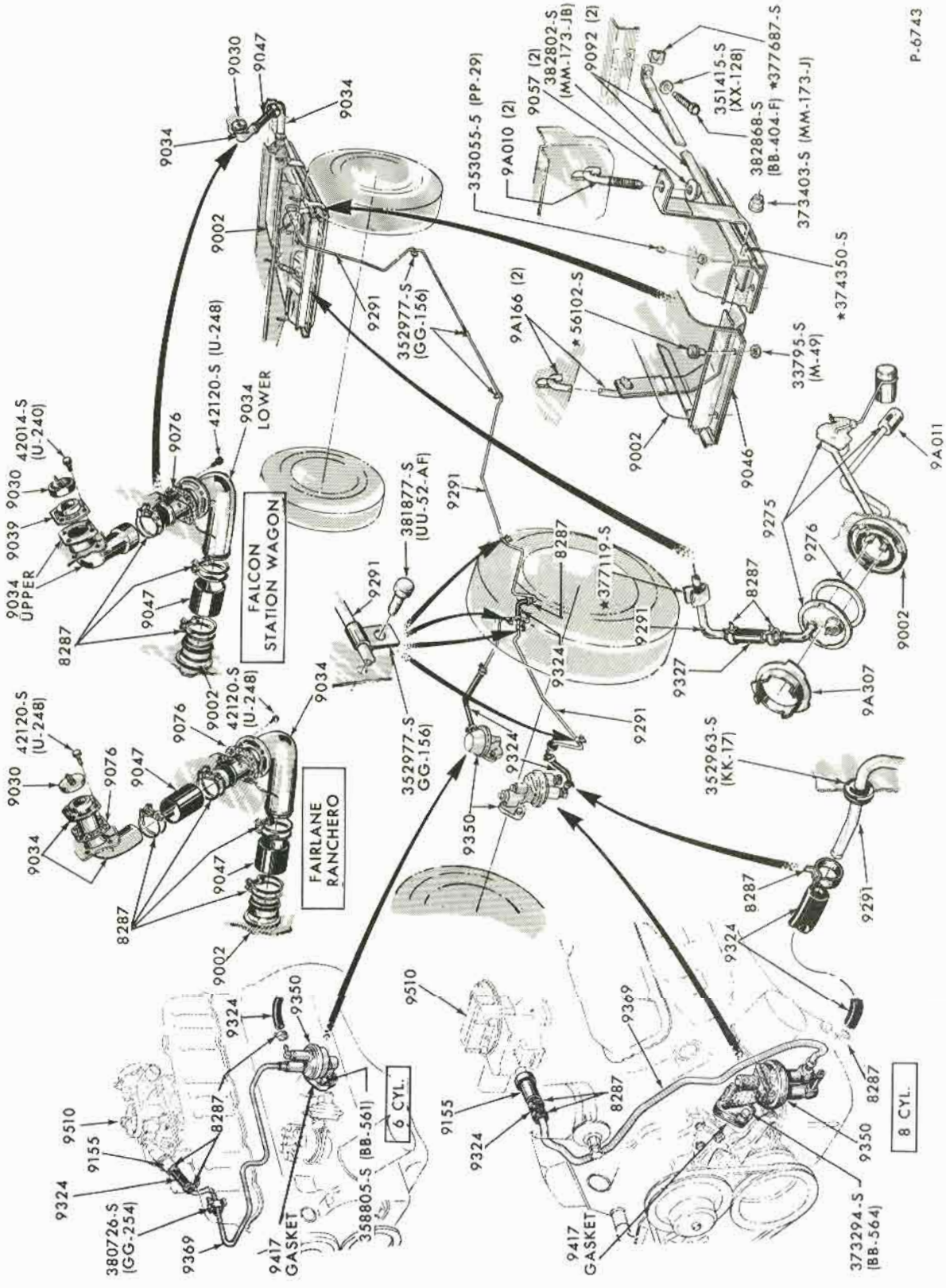

FUEL SYSTEM and RELATED PARTS
1968/69 FAIRLANE RANCHERO and FALCON STATION WAGON

COPYRIGHT © 1975 — FORD MOTOR COMPANY — DEARBORN, MICHIGAN

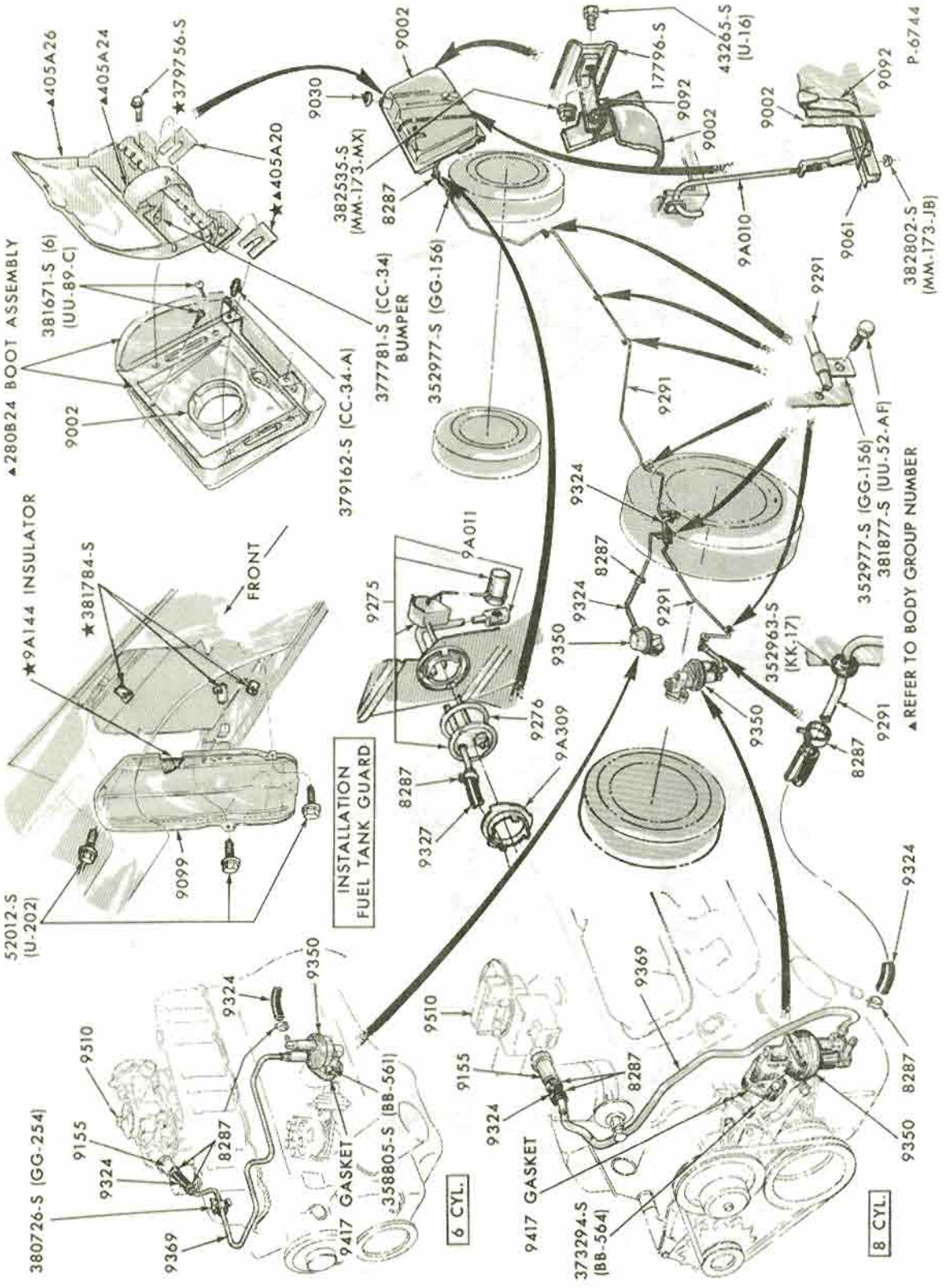

FUEL SYSTEM and RELATED PARTS
1968/69 FAIRLANE/TORINO - STATION WAGON

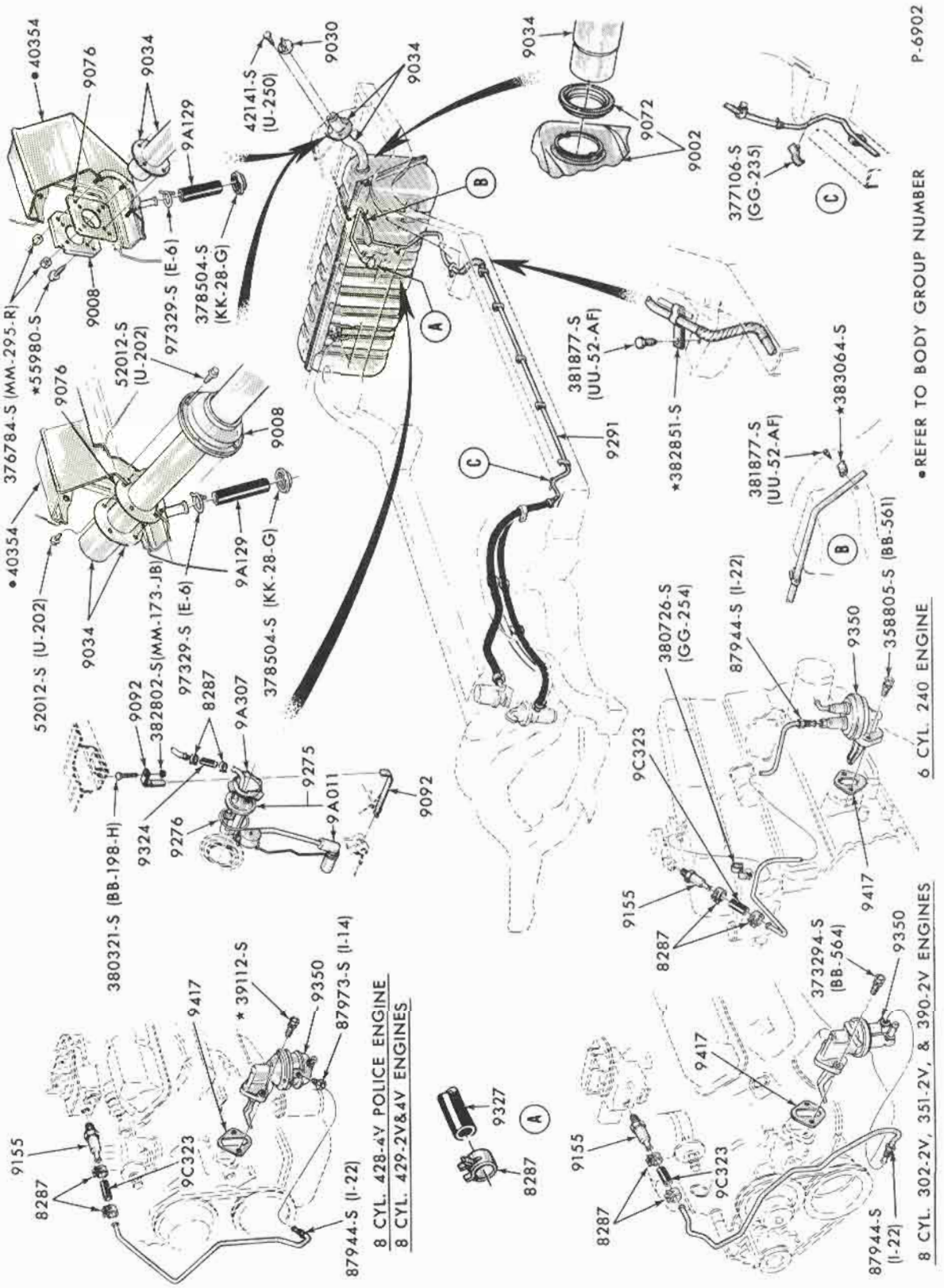

FUEL SYSTEM and RELATED PARTS
1969 FORD

COPYRIGHT © 1975 — FORD MOTOR COMPANY — DEARBORN, MICHIGAN

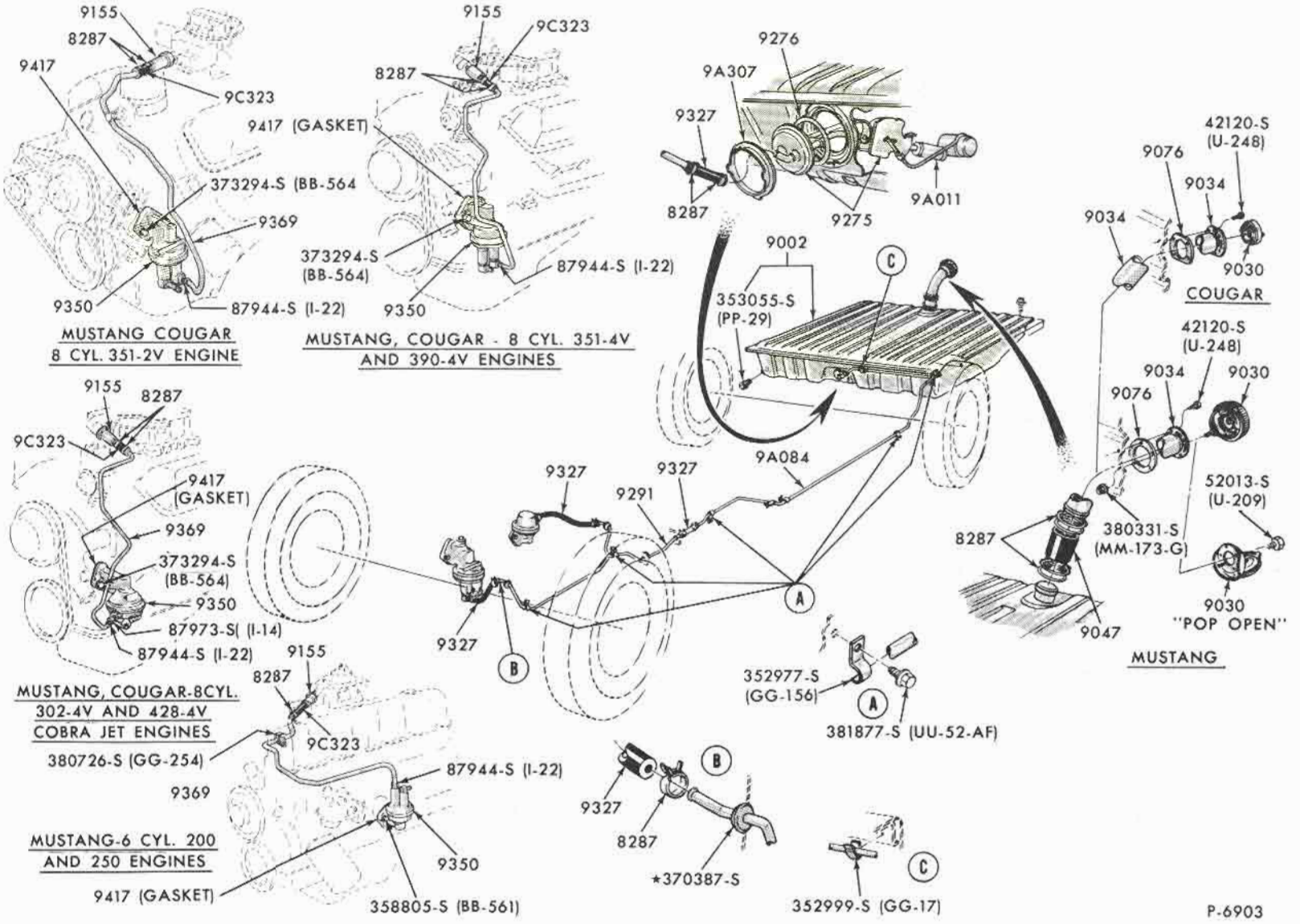
9155
8287
9417
9C323
373294-S (BB-564
9369
9350
87944-S (I-22)
MUSTANG COUGAR
8 CYL. 351-2V ENGINE
9155
9C323
8287
9417 (GASKET)
373294-S
(BB-564)
87944-S (I-22)
9350
MUSTANG, COUGAR - 8 CYL. 351-4V
AND 390-4V ENGINES
9276
9A307
9327
8287
9275
9A011
9002
C
353055-S
(PP-29)
9A084
42120-S
(U-248)
9076
9034
9030
COUGAR
9155
8287
9C323
9417
(GASKET)
9369
373294-S
(BB-564)
9350
87973-S((I-14)
87944-S (I-22)
9327
9291
A
B
52013-S
(U-209)
380331-S
(MM-173-G)
9047
"POP OPEN"
MUSTANG
MUSTANG, COUGAR-8CYL.
302-4V AND 428-4V
COBRA JET ENGINES
380726-S (GG-254)
9155
8287
9C323
9369
87944-S (I-22)
9350
MUSTANG-6 CYL. 200
AND 250 ENGINES
9417 (GASKET)
358805-S (BB-561)
352977-S
(GG-156)
381877-S (UU-52-AF)
★370387-S
352999-S (GG-17)
P-6903

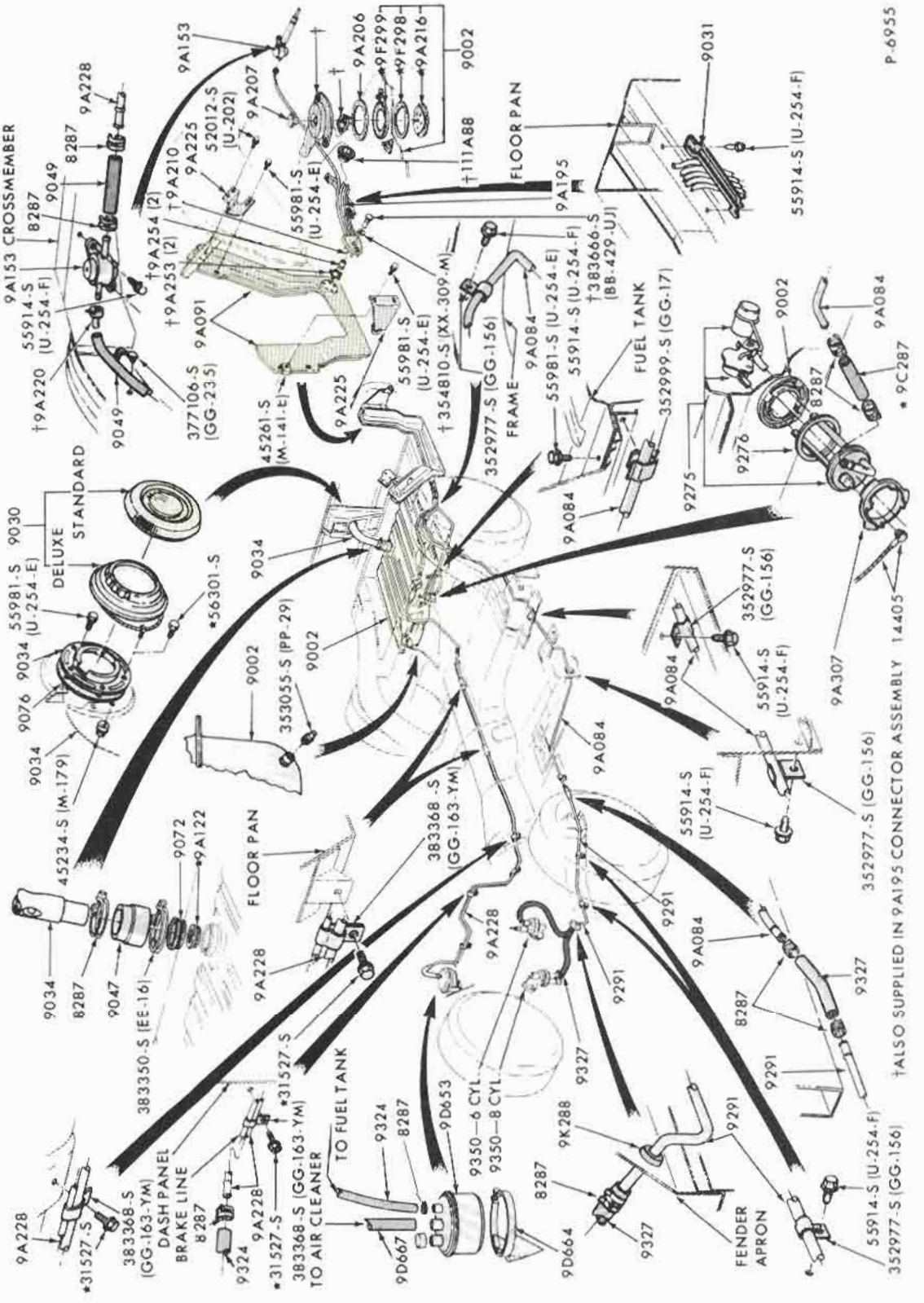

FUEL SYSTEM and RELATED PARTS--(WITH EVAPORATIVE EMISSION CONTROL)
1970 MAVERICK

COPYRIGHT © 1975 — FORD MOTOR COMPANY — DEARBORN, MICHIGAN

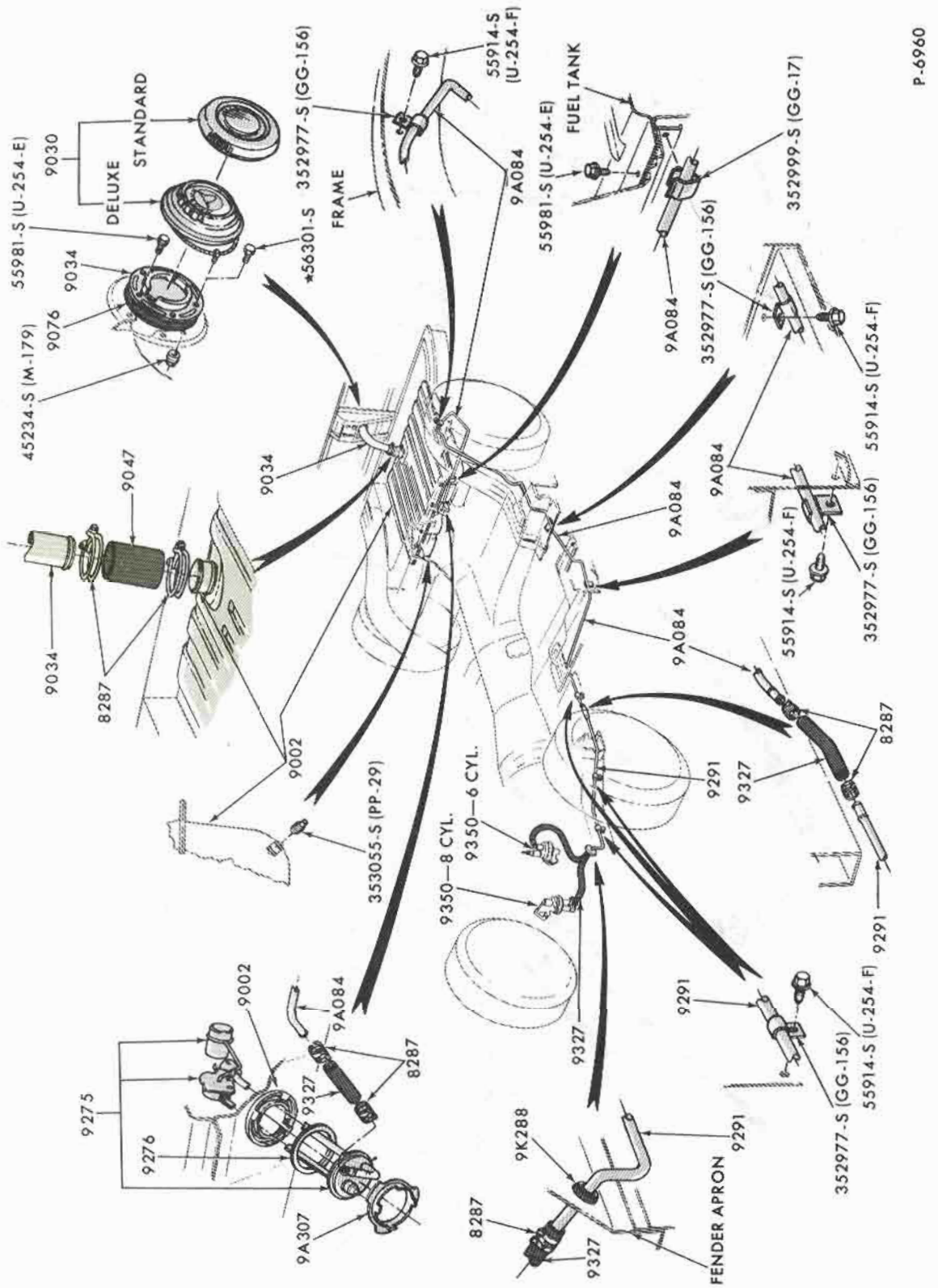

FUEL SYSTEM and RELATED PARTS--(WITHOUT EVAPORATIVE EMISSION CONTROL)
1970 MAVERICK

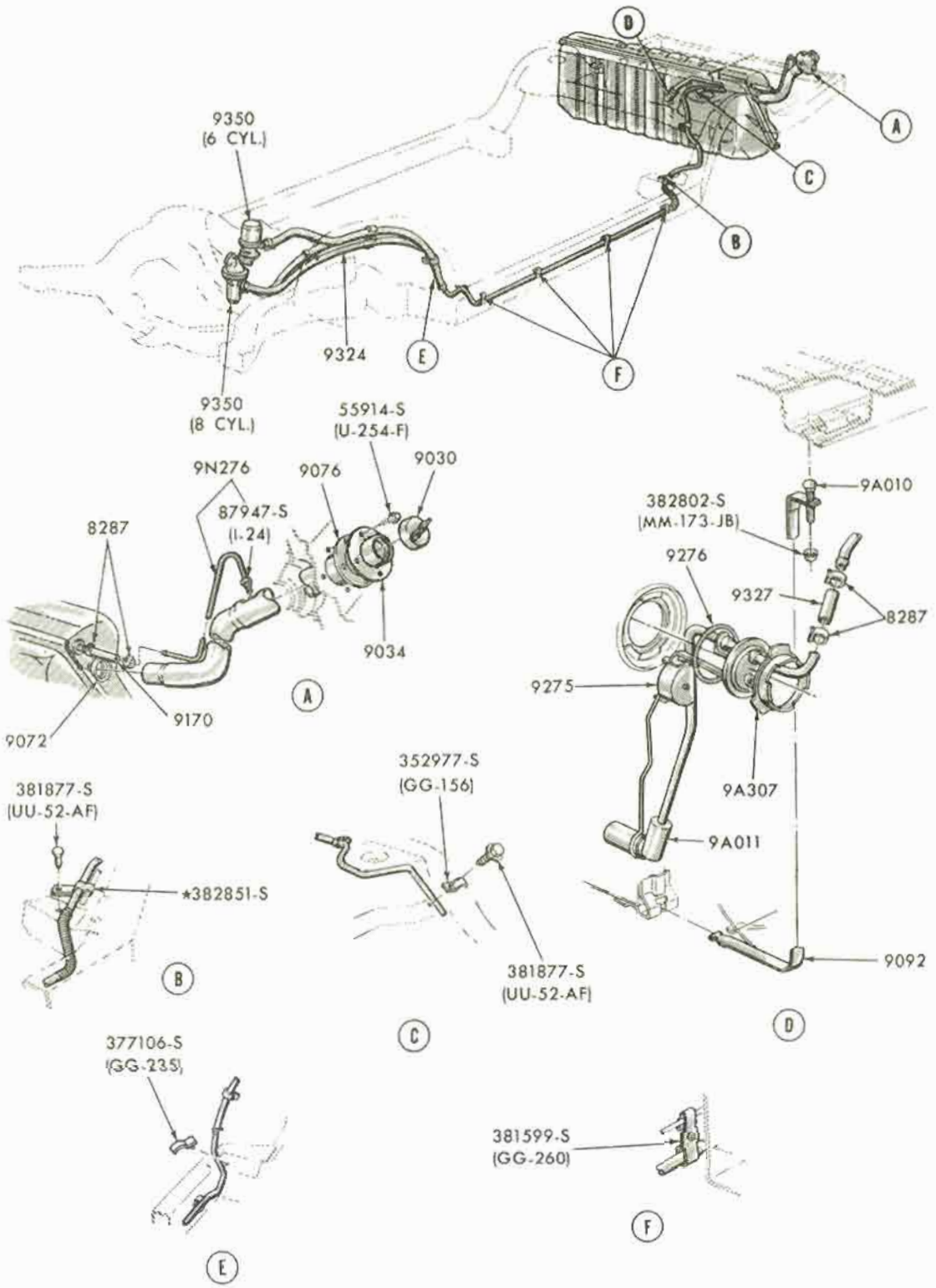

P-7205

FUEL SYSTEM and RELATED PARTS--(WITHOUT EVAPORATIVE EMISSION CONTROL)
1970 FORD

COPYRIGHT © 1975 — FORD MOTOR COMPANY — DEARBORN, MICHIGAN

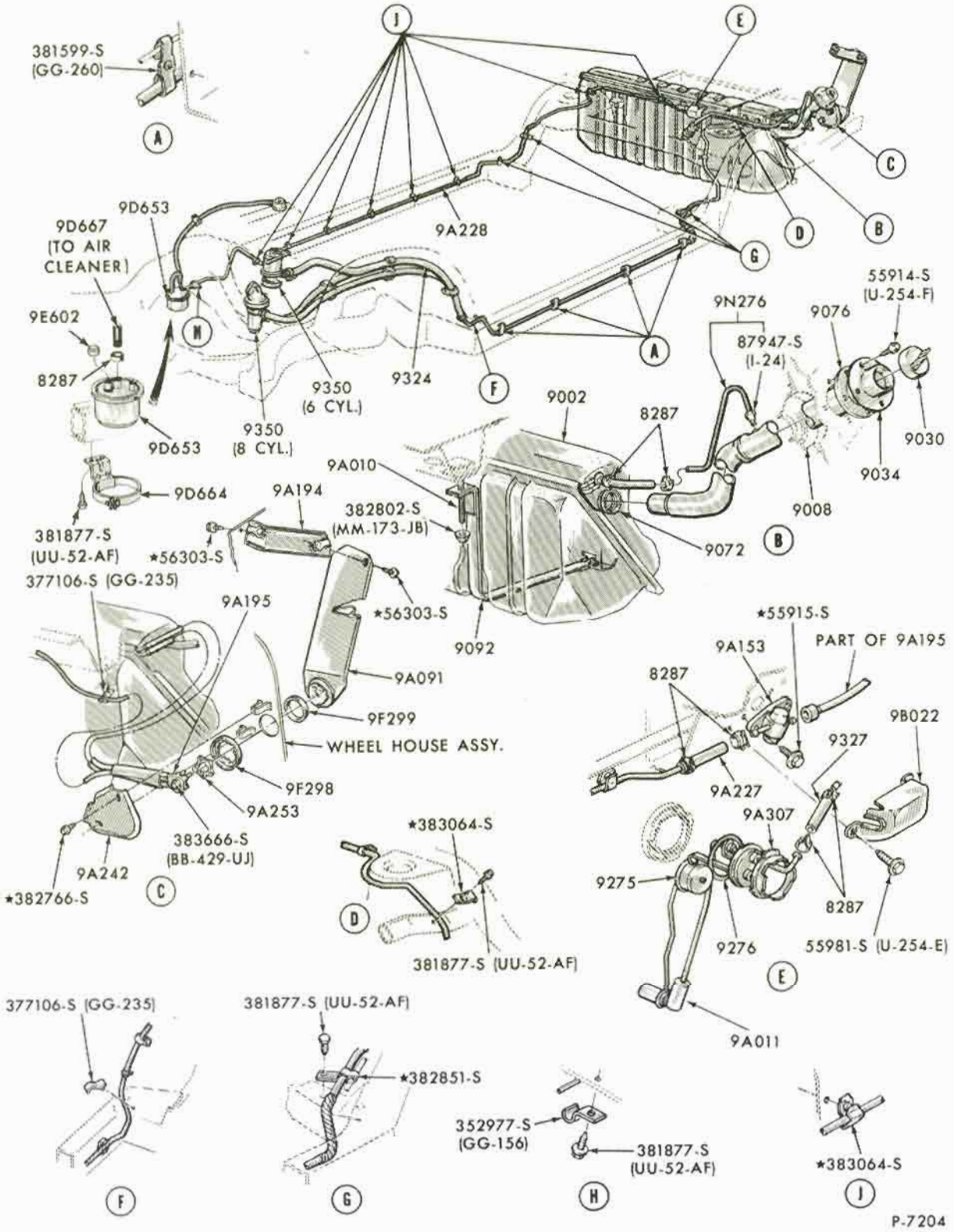

FUEL SYSTEM and RELATED PARTS--(WITH EVAPORATIVE EMISSION CONTROL)
1970 FORD - STATION WAGON

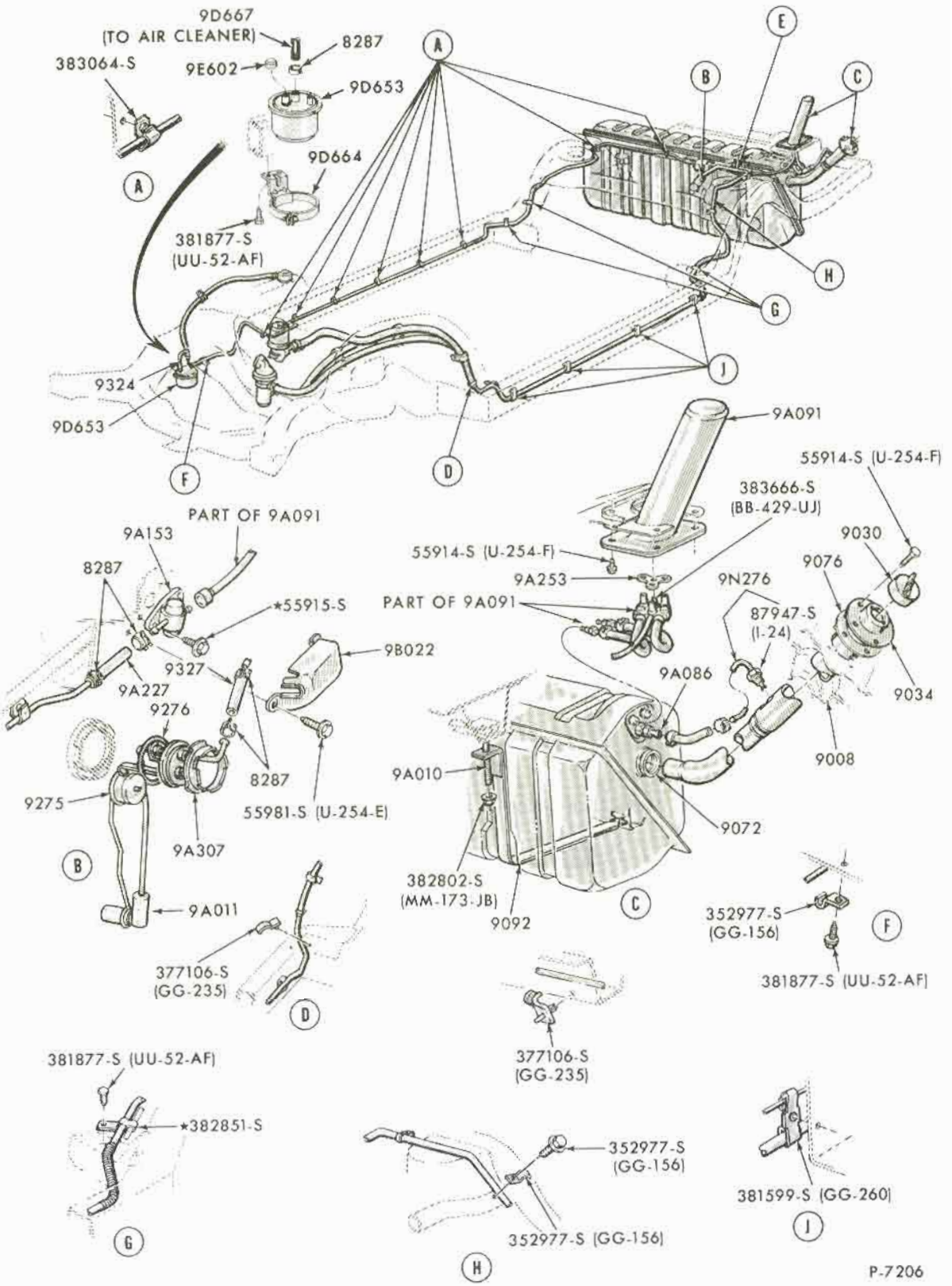

FUEL SYSTEM and RELATED PARTS--(WITH EVAPORATIVE EMISSION CONTROL)
1970 FORD - EXCEPT STATION WAGON

COPYRIGHT © 1975 — FORD MOTOR COMPANY — DEARBORN, MICHIGAN

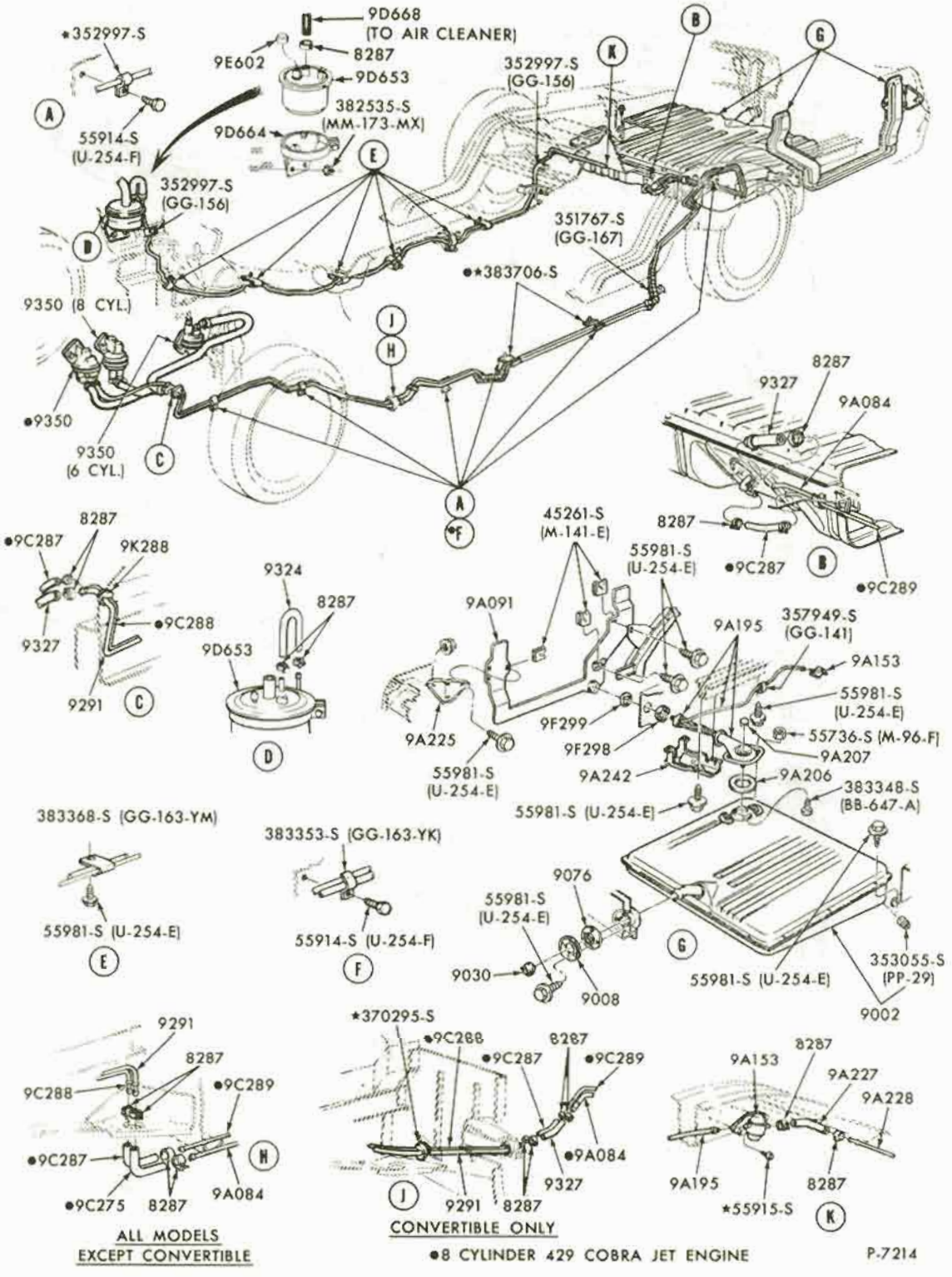

FUEL SYSTEM and RELATED PARTS--(WITH EVAPORATIVE EMISSION CONTROL)
1970 FAIRLANE/TORINO, FALCON - EXCEPT STATION WAGON & RANCHERO

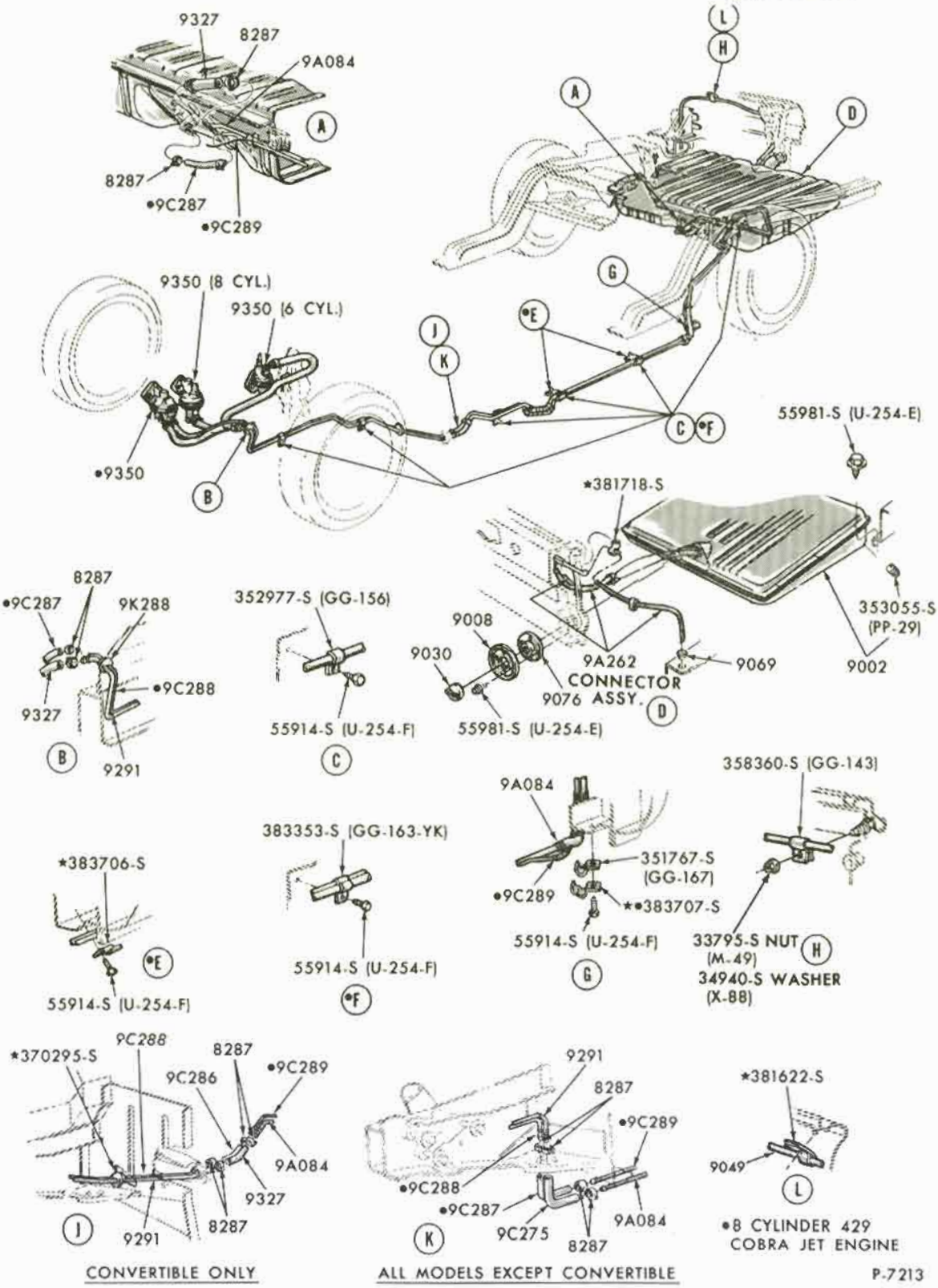

CONVERTIBLE ONLY

ALL MODELS EXCEPT CONVERTIBLE

P-7213

FUEL SYSTEM and RELATED PARTS--(WITHOUT EVAPORATIVE EMISSION CONTROL)
1970 FAIRLANE/TORINO, FALCON - EXCEPT STATION WAGON & RANCHERO

COPYRIGHT © 1975 — FORD MOTOR COMPANY — DEARBORN, MICHIGAN

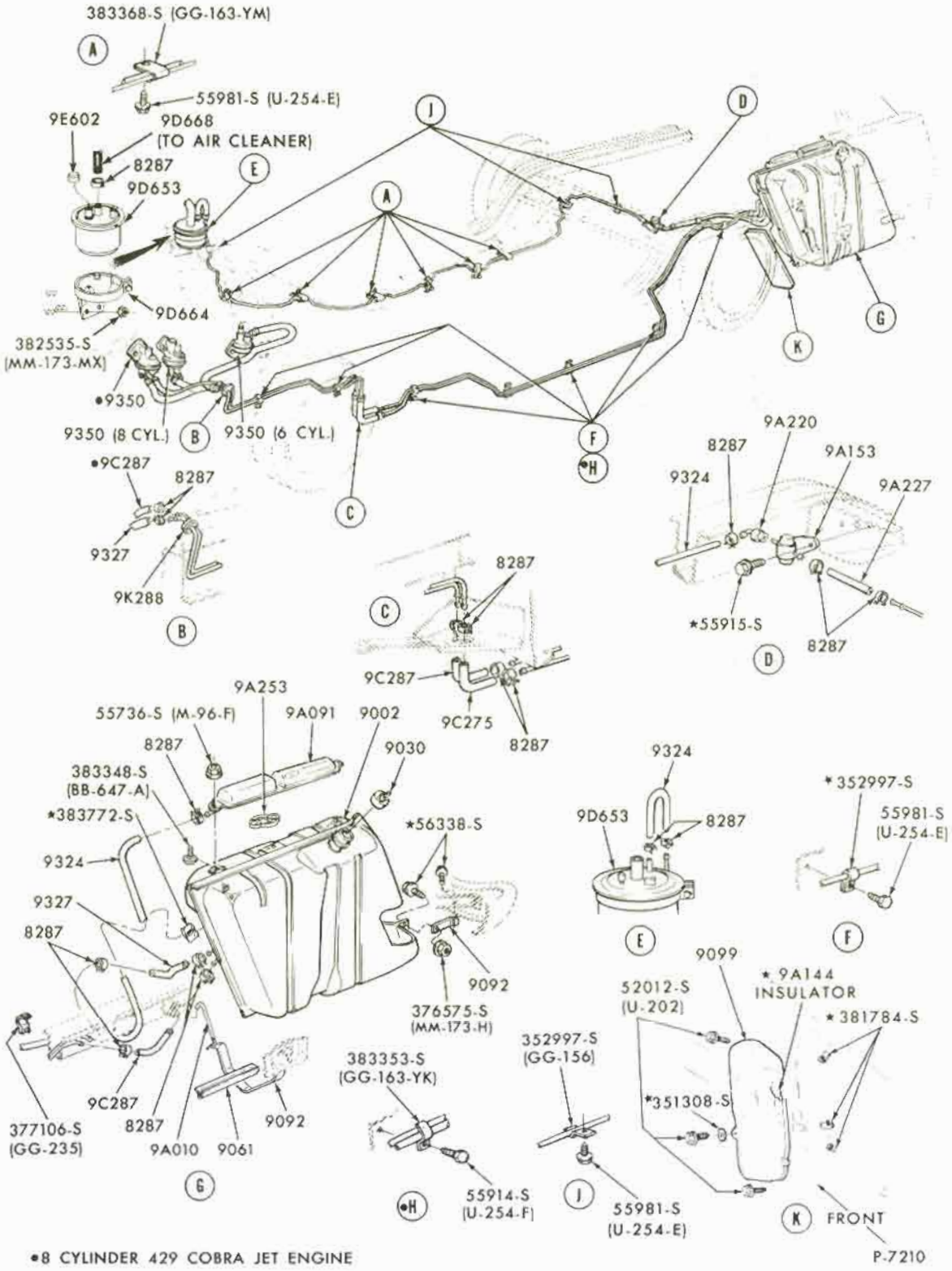

•8 CYLINDER 429 COBRA JET ENGINE

FUEL SYSTEM and RELATED PARTS--(WITH EVAPORATIVE EMISSION CONTROL)
1970 FAIRLANE/TORINO, FALCON - STATION WAGON

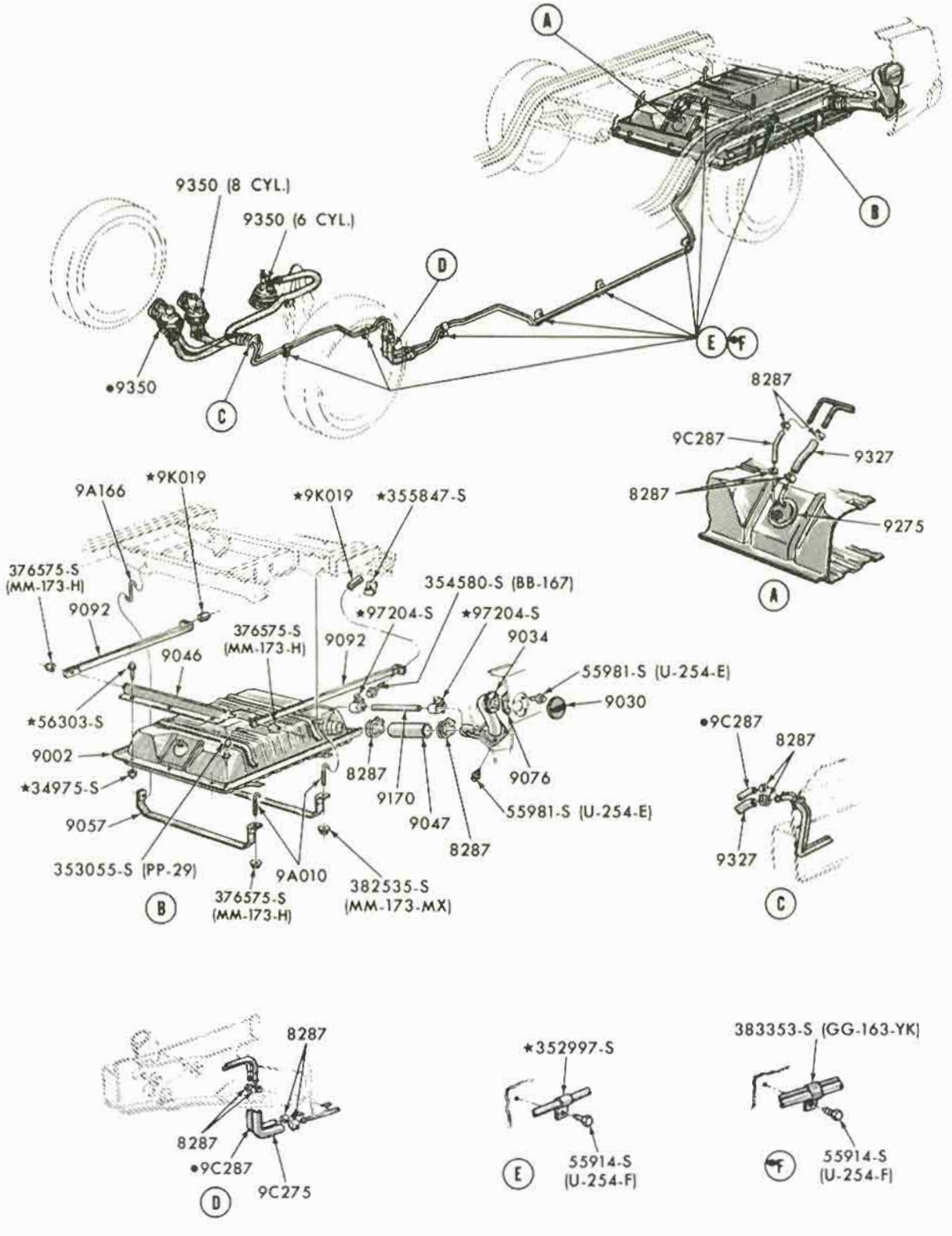

•8 CYLINDER 429 COBRA JET ENGINE P-7211

FUEL SYSTEM and RELATED PARTS--(WITHOUT EVAPORATIVE EMISSION CONTROL)
1970 FAIRLANE/TORINO - RANCHERO

COPYRIGHT © 1975 — FORD MOTOR COMPANY — DEARBORN, MICHIGAN

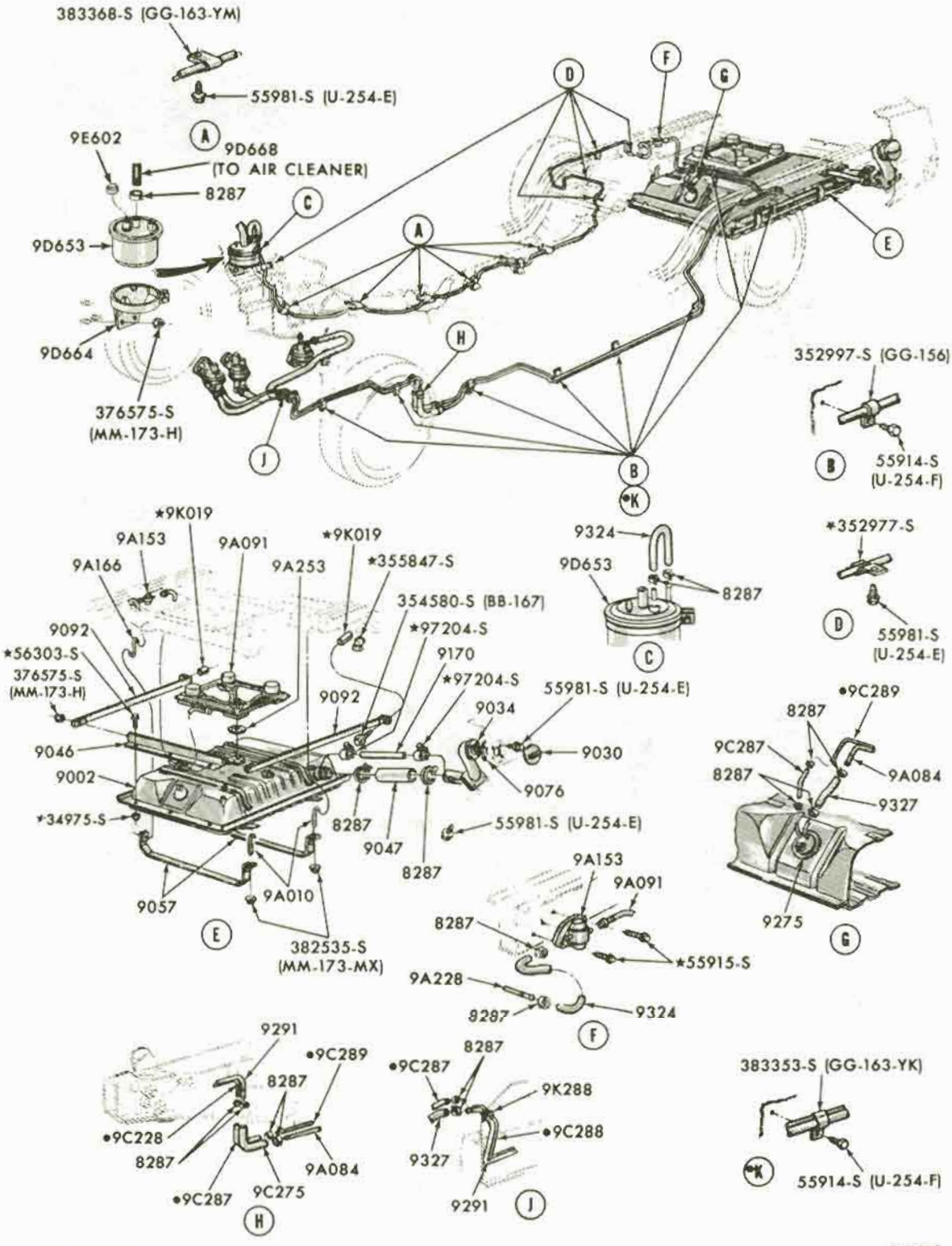

*8 CYLINDER 429 COBRA JET ENGINE

P-7212

FUEL SYSTEM and RELATED PARTS--(WITH EVAPORATIVE EMISSION CONTROL)
1970 FAIRLANE/TORINO - RANCHERO

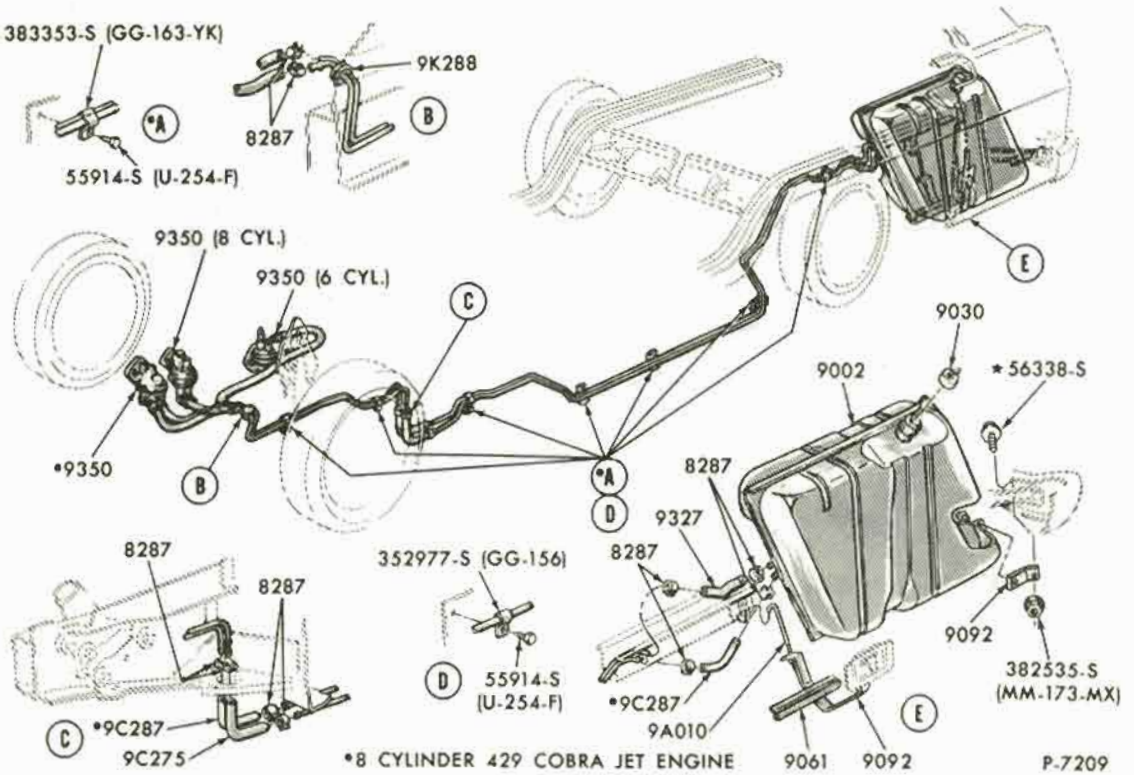

FUEL SYSTEM and RELATED PARTS--(WITHOUT EVAPORATIVE EMISSION CONTROL)
1970 FAIRLANE/TORINO, FALCON - STATION WAGON

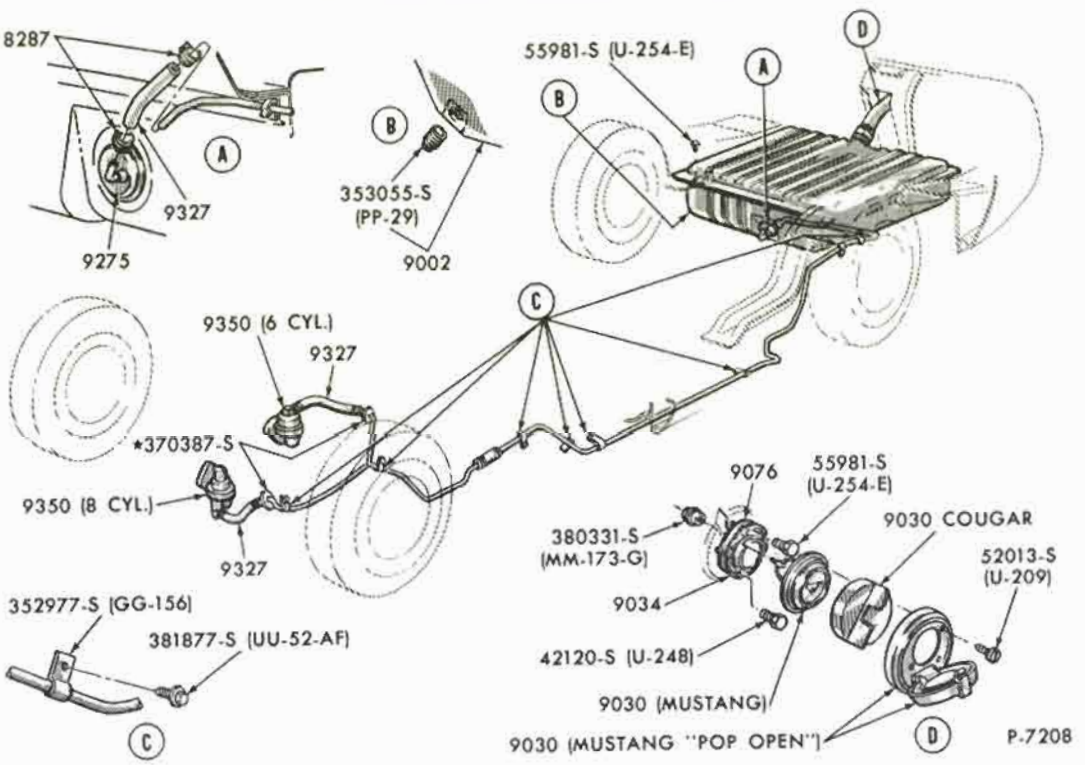

FUEL SYSTEM and RELATED PARTS--(WITHOUT EVAPORATIVE EMISSION CONTROL)
1970 MUSTANG

COPYRIGHT © 1975 — FORD MOTOR COMPANY — DEARBORN, MICHIGAN

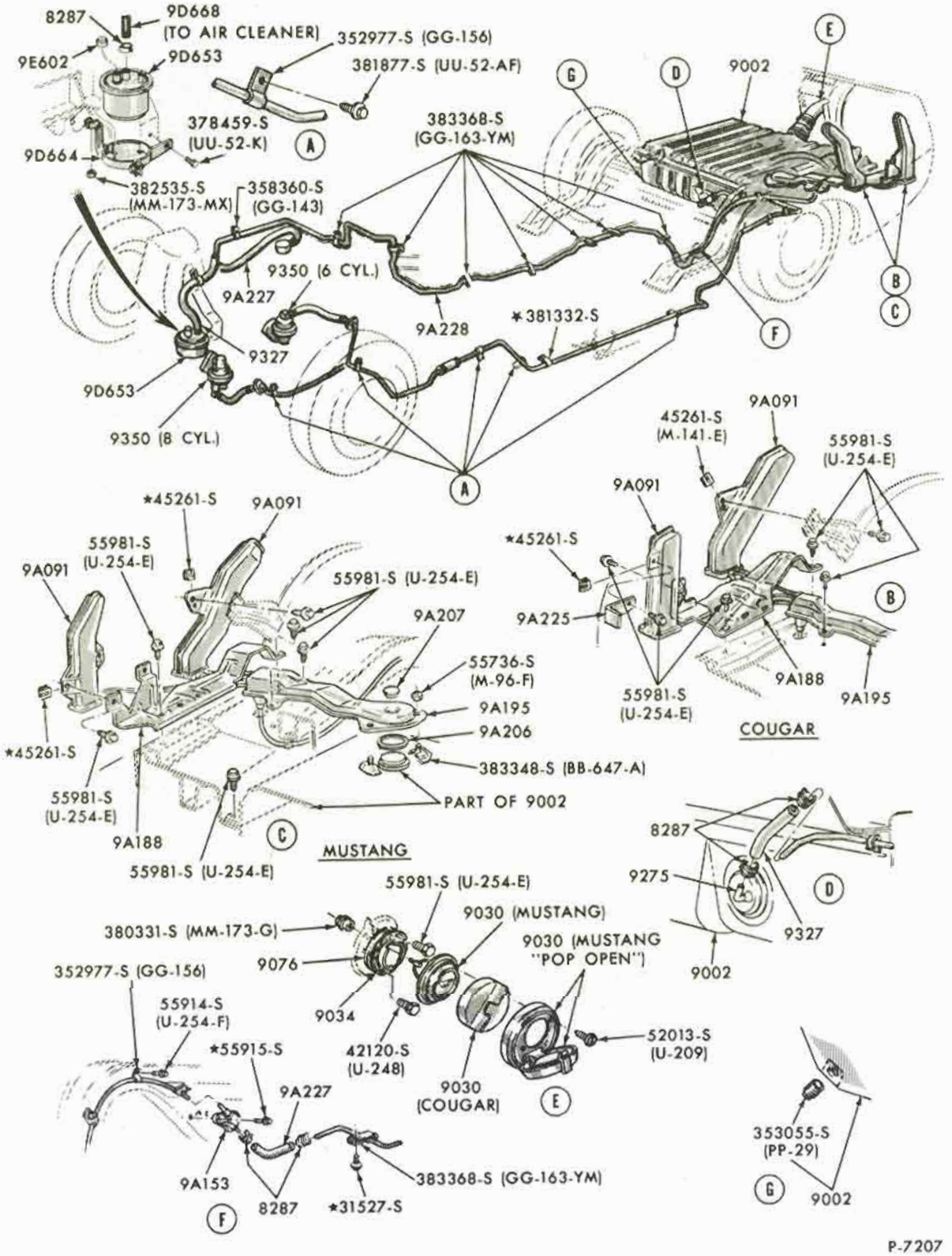

P-7207

FUEL SYSTEM and RELATED PARTS--(WITH EVAPORATIVE EMISSION CONTROL)
1970 MUSTANG

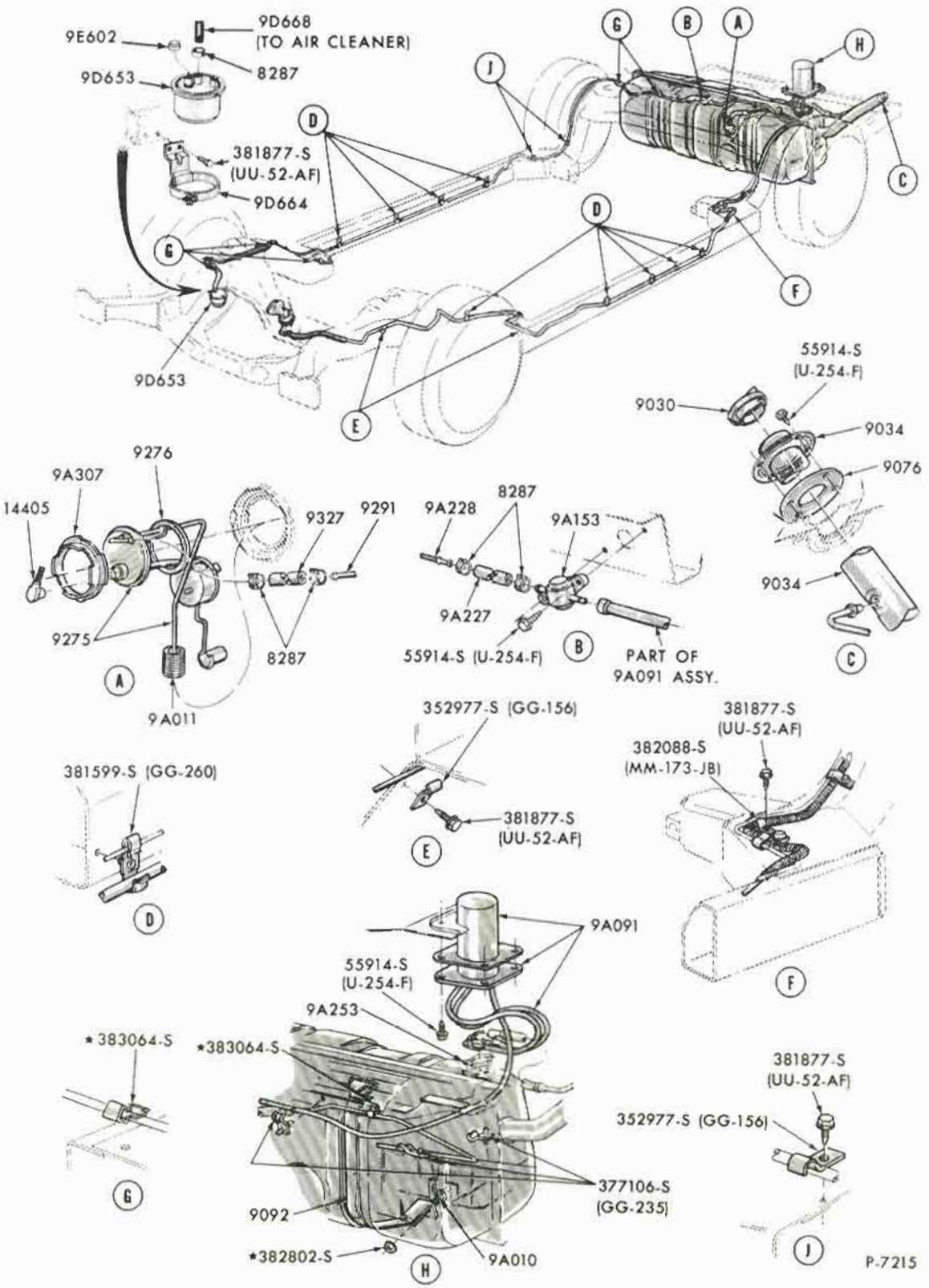

FUEL SYSTEM and RELATED PARTS--(WITH EVAPORATIVE EMISSION CONTROL)
1970 THUNDERBIRD

COPYRIGHT © 1975 — FORD MOTOR COMPANY — DEARBORN, MICHIGAN

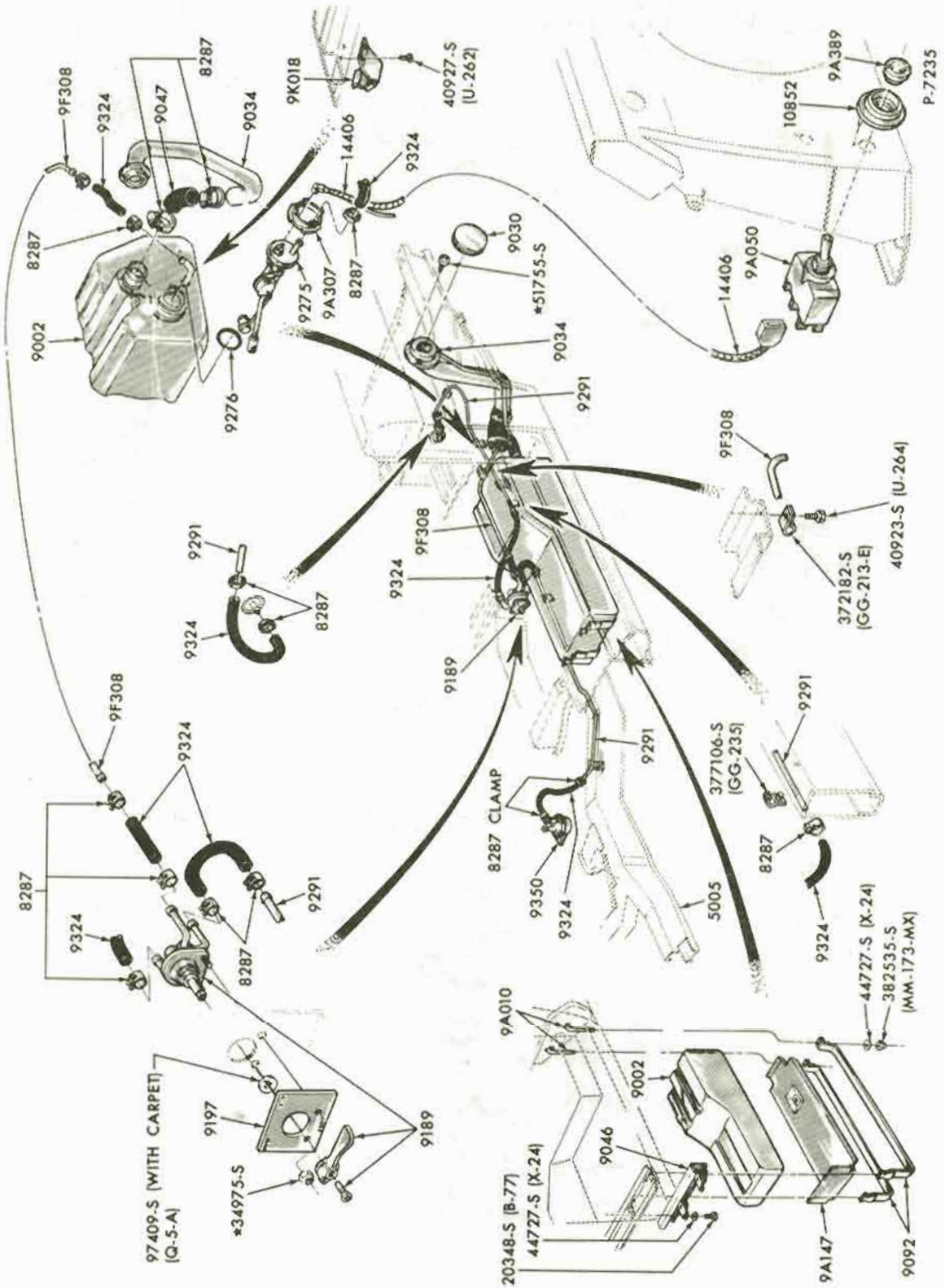

FUEL TANK - AUXILIARY and RELATED PARTS--(WITHOUT EVAPORATIVE EMISSION CONTROL)
1970 BRONCO

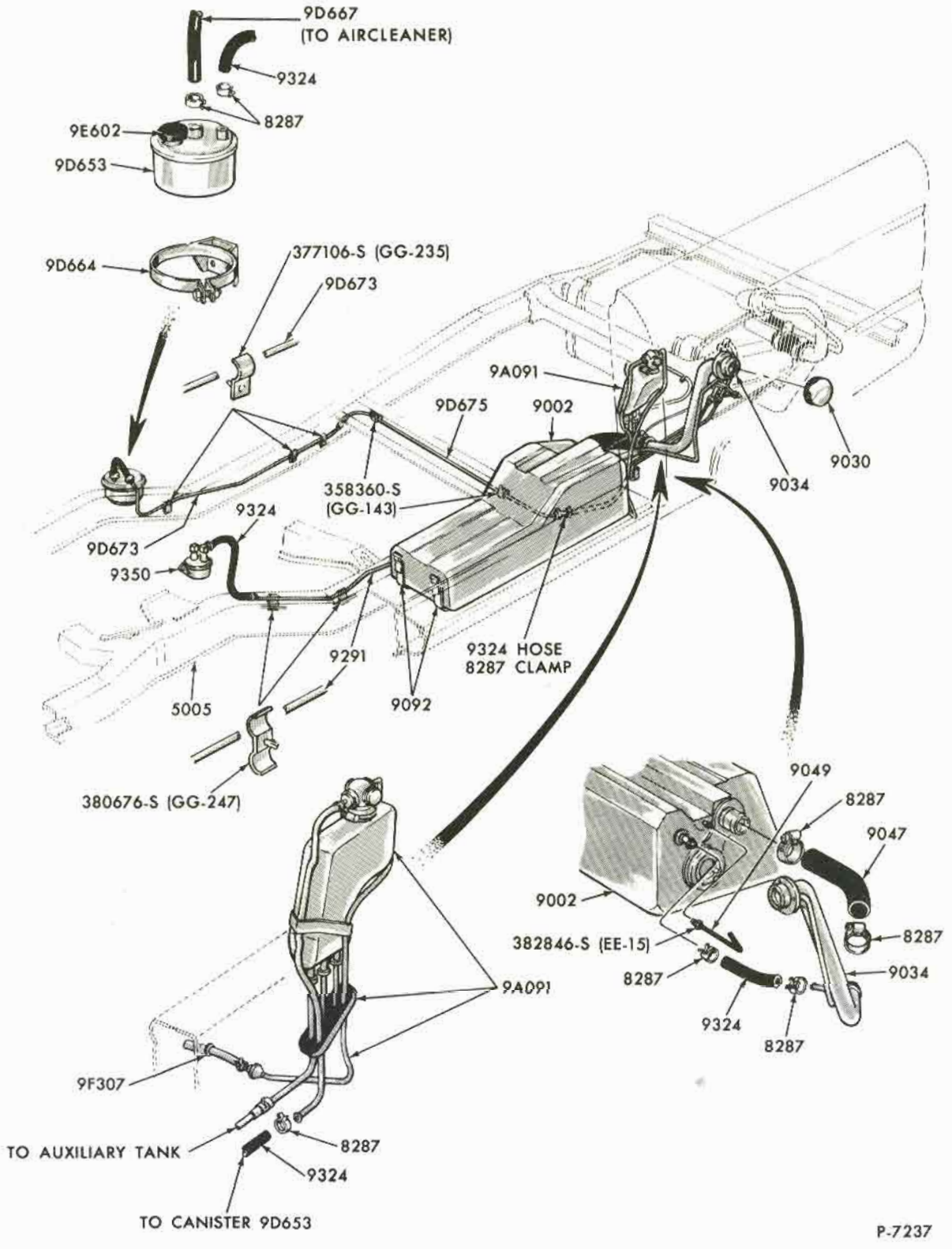

FUEL TANK - AUXILIARY and RELATED PARTS--(WITH EVAPORATIVE EMISSION CONTROL)
1970/72 BRONCO

COPYRIGHT © 1975 — FORD MOTOR COMPANY — DEARBORN, MICHIGAN

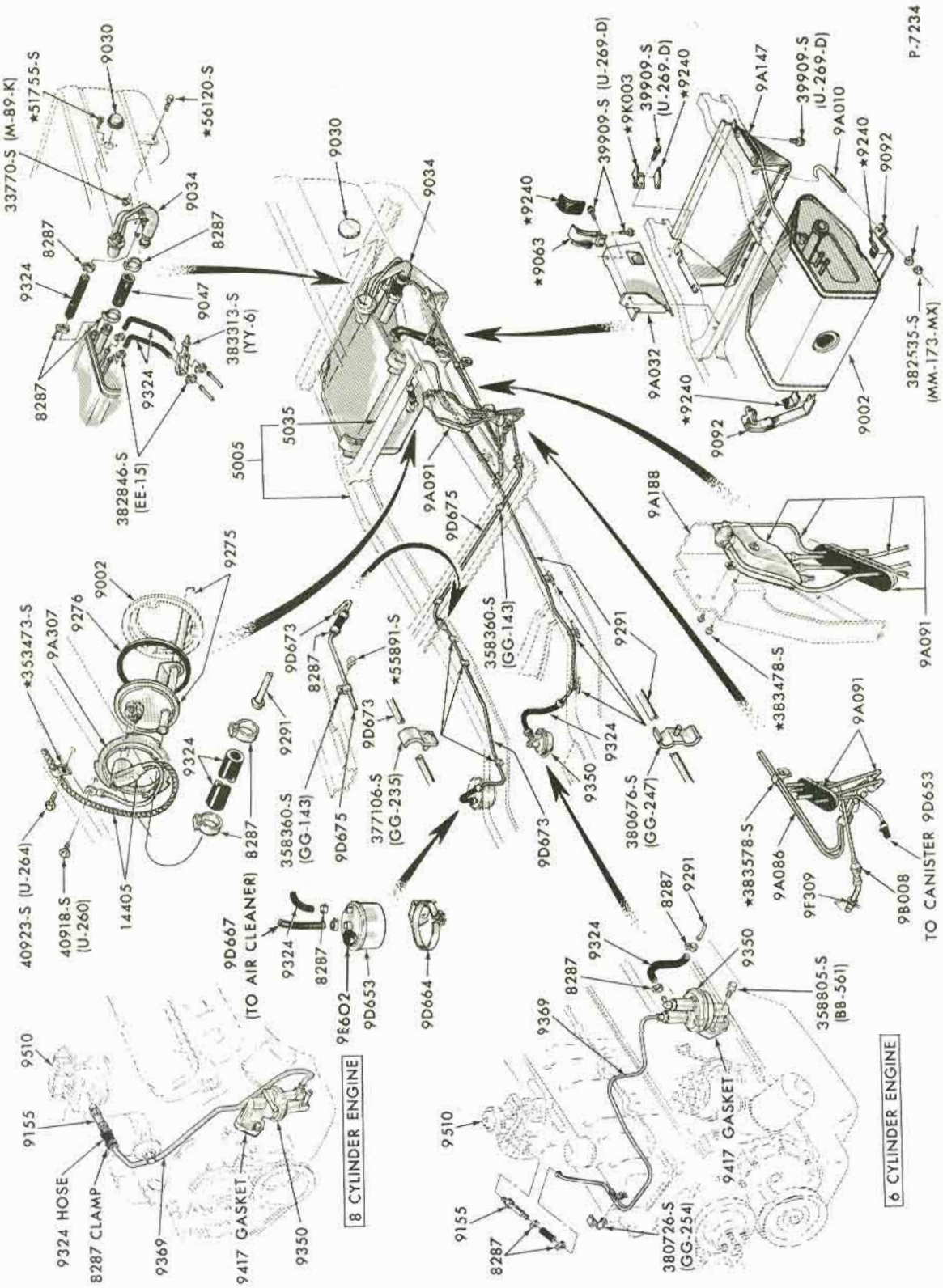

FUEL SYSTEM and RELATED PARTS--(WITH EVAPORATIVE EMISSION CONTROL)
1970/72 BRONCO

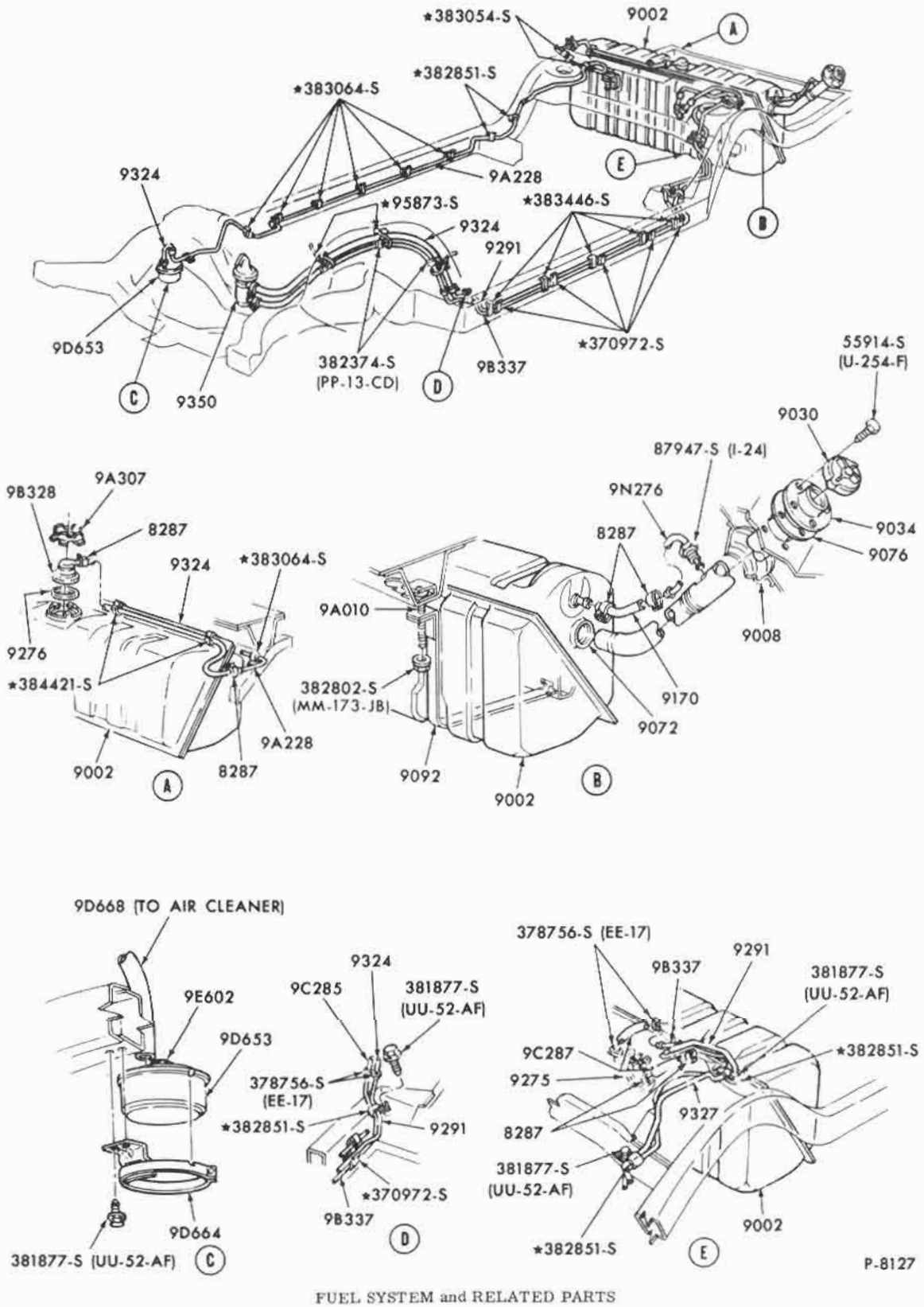

FUEL SYSTEM and RELATED PARTS
1971 FORD - ALL POLICE VEHICLES

COPYRIGHT © 1975 — FORD MOTOR COMPANY — DEARBORN, MICHIGAN

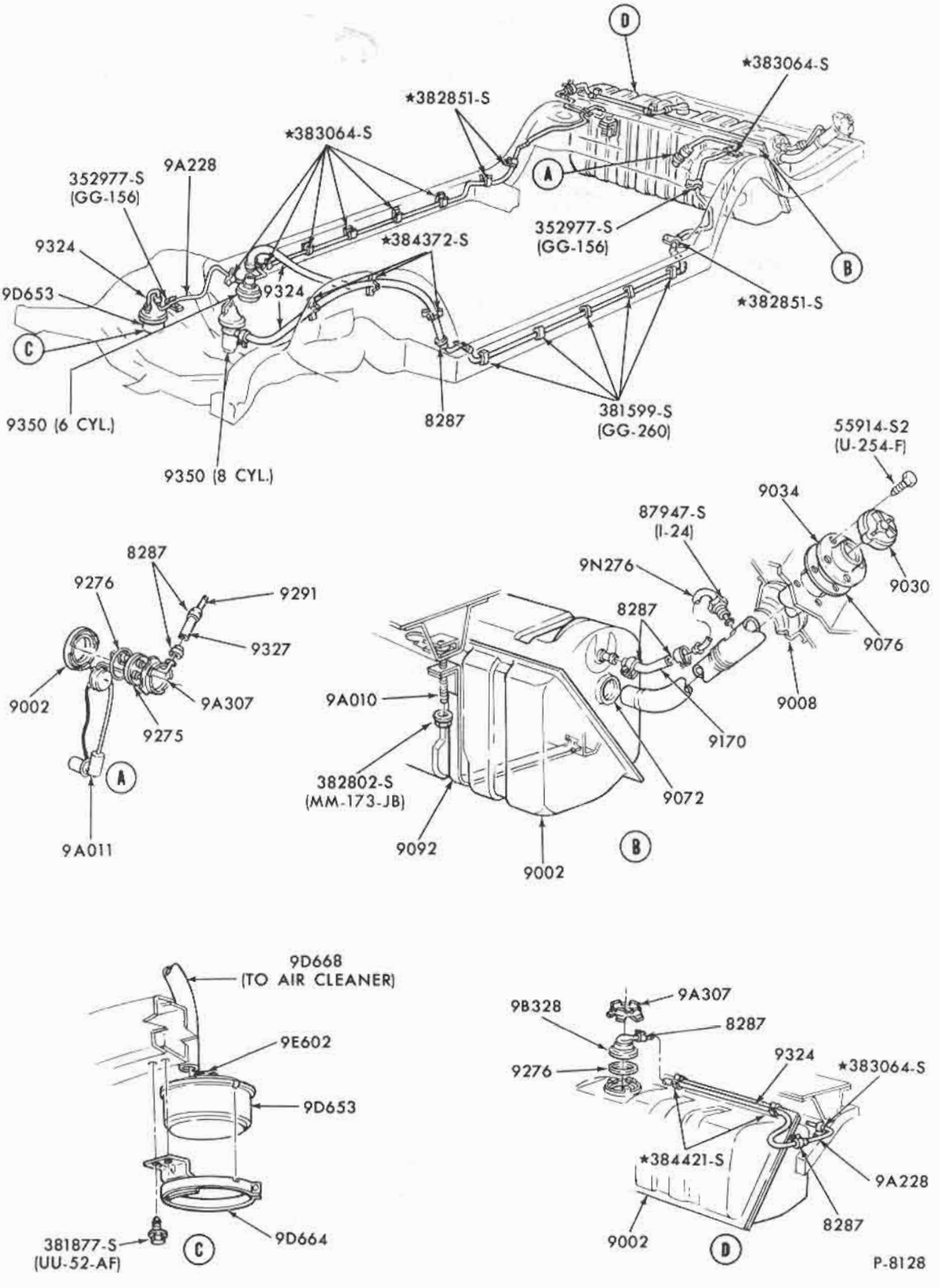

FUEL SYSTEM and RELATED PARTS

1971/72 FORD - ALL EXCEPT POLICE VEHICLES

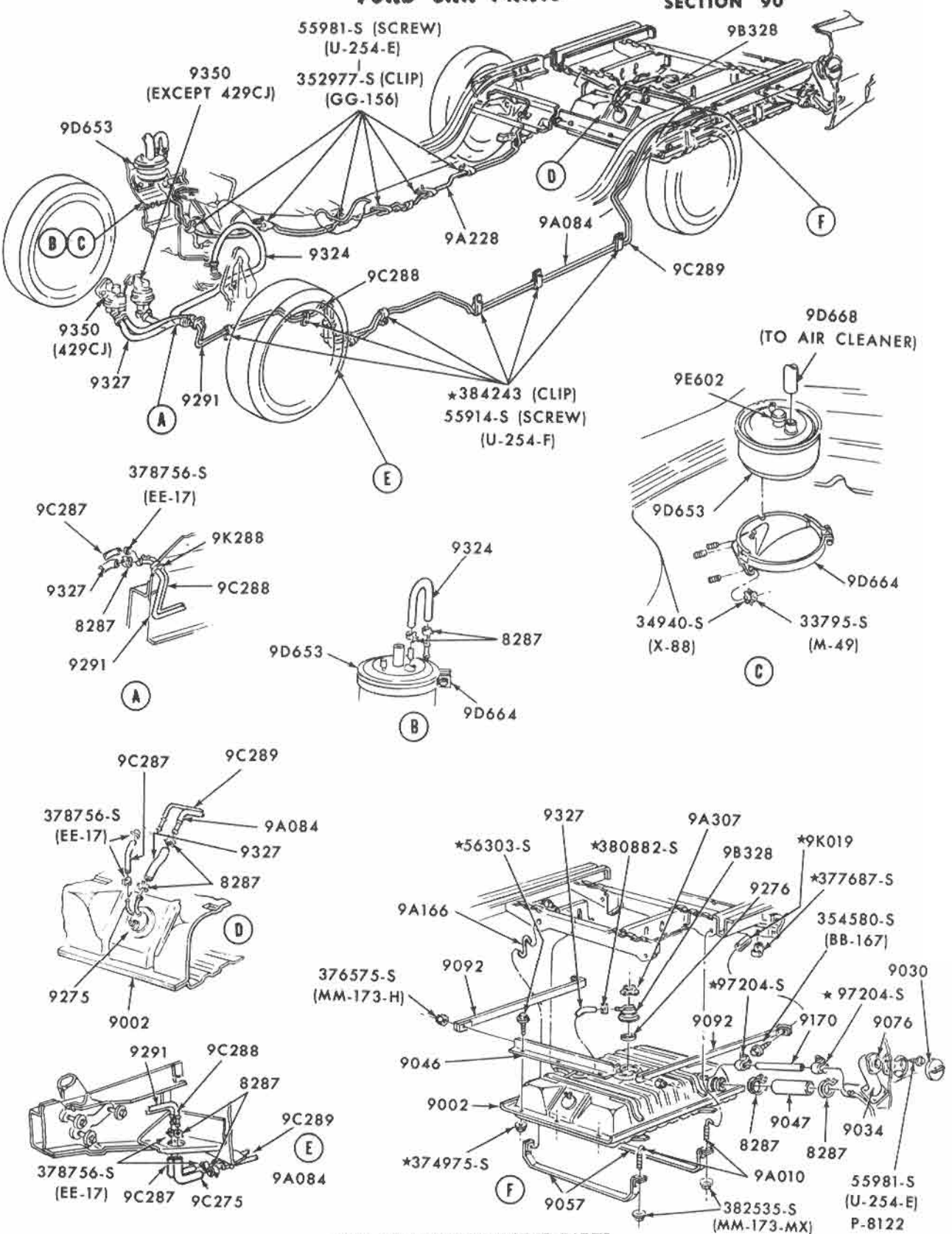

FUEL SYSTEM and RELATED PARTS

1971 TORINO - RANCHERO

COPYRIGHT © 1975 — FORD MOTOR COMPANY — DEARBORN, MICHIGAN

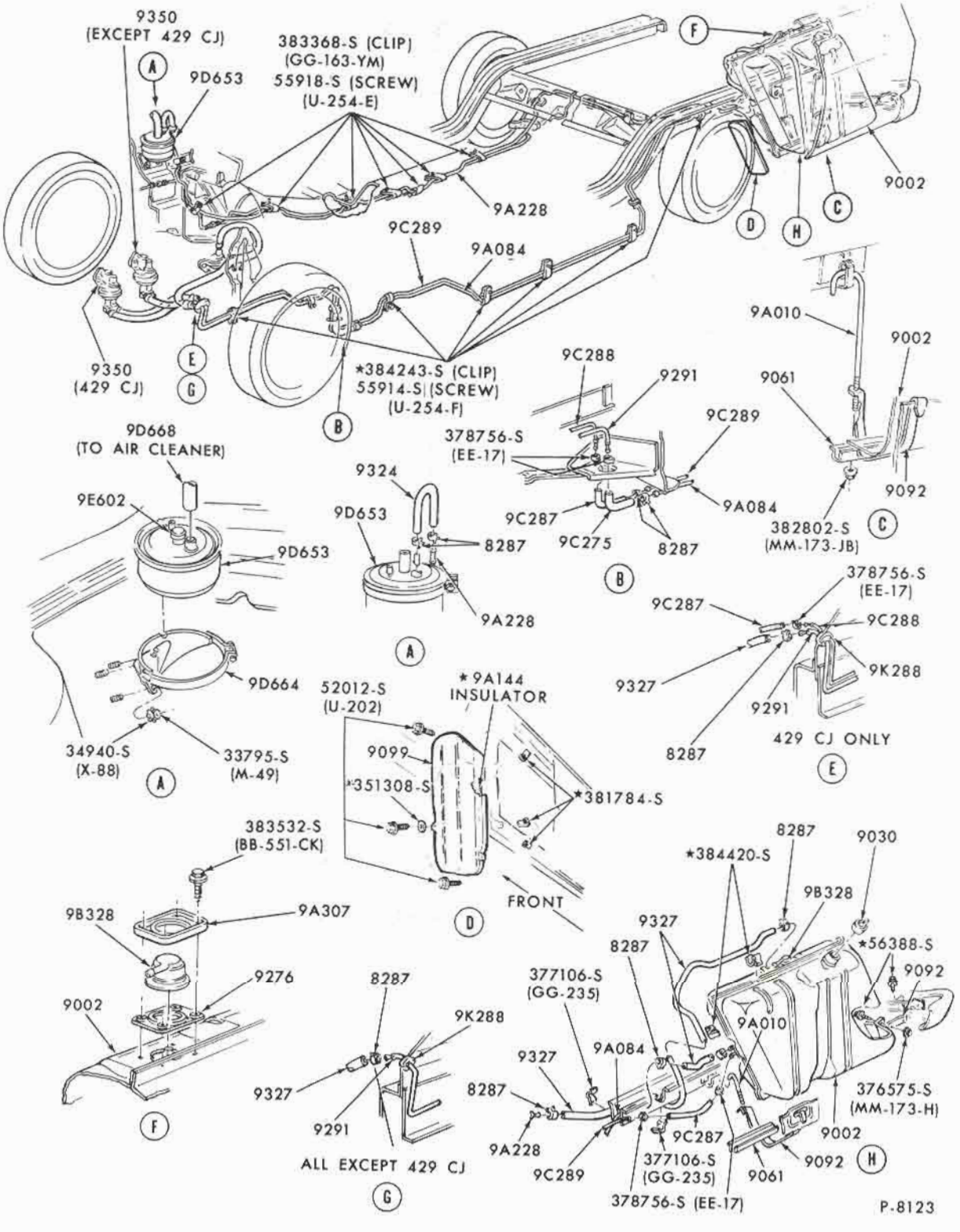

FUEL SYSTEM and RELATED PARTS

1971 TORINO - STATION WAGON

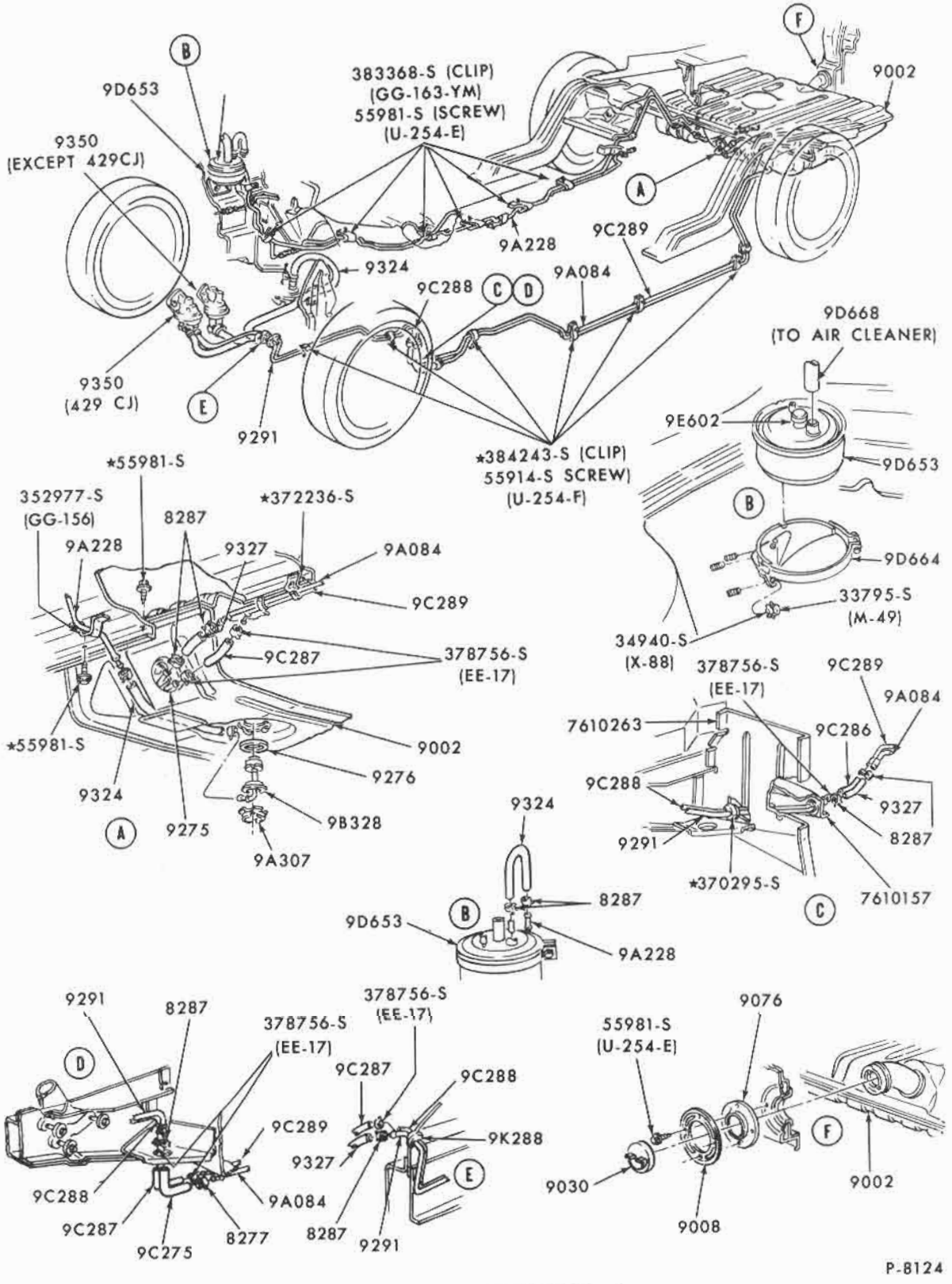

FUEL SYSTEM and RELATED PARTS

1971 TORINO - EXCEPT STATION WAGON & RANCHERO

COPYRIGHT © 1975 — FORD MOTOR COMPANY — DEARBORN, MICHIGAN

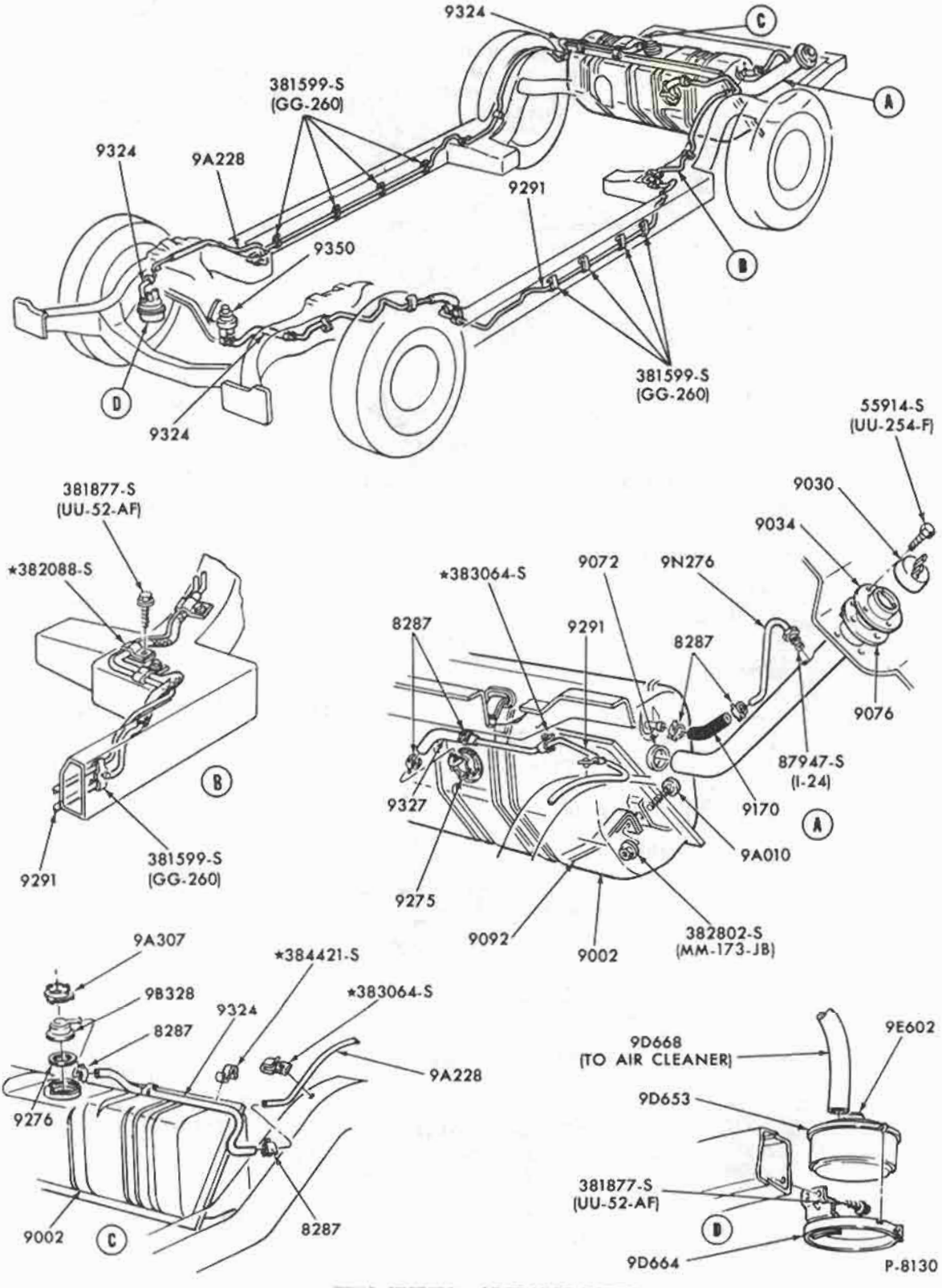

FUEL SYSTEM and RELATED PARTS

1971 THUNDERBIRD

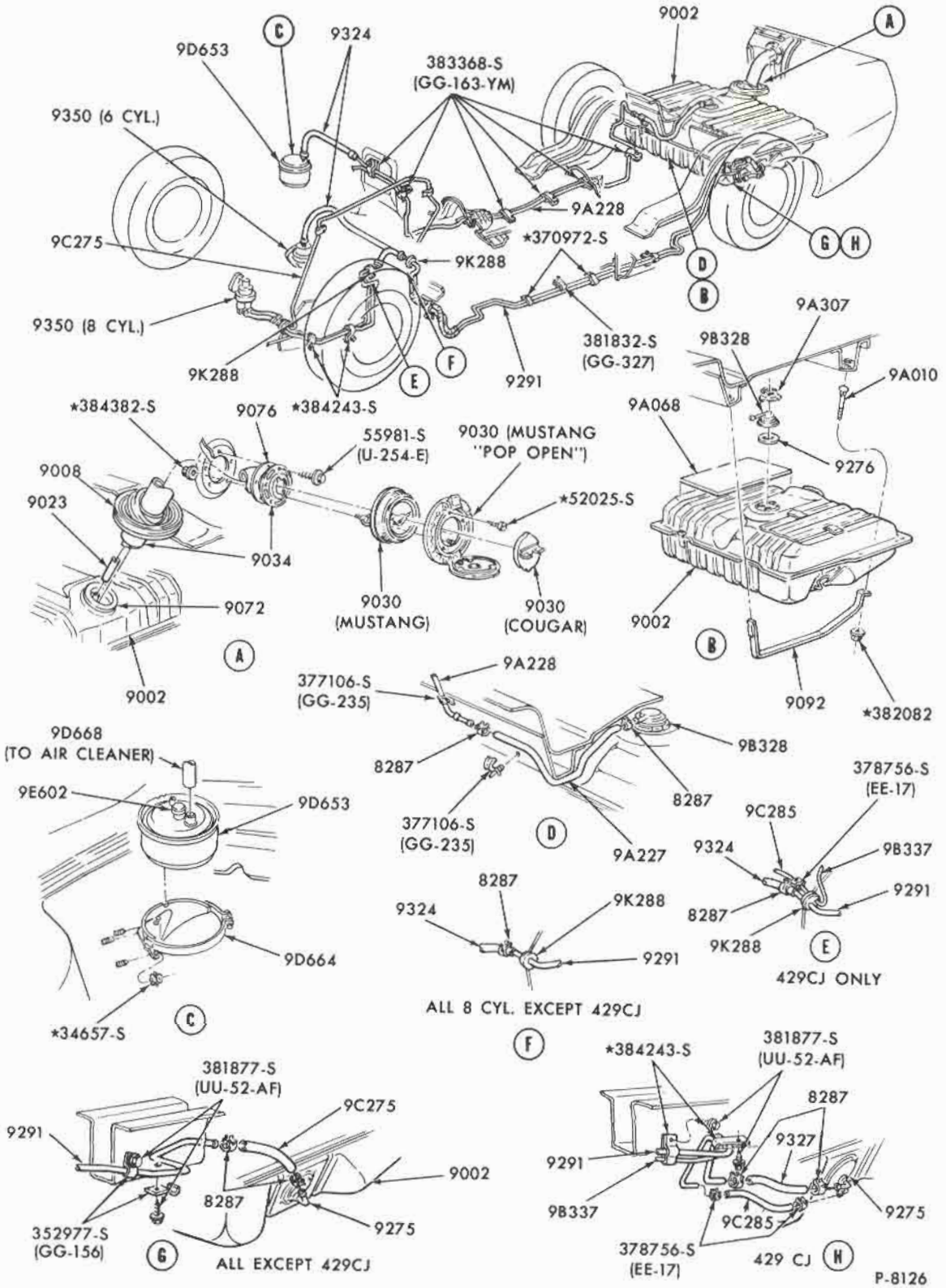

FUEL SYSTEM and RELATED PARTS
1971/72 MUSTANG

COPYRIGHT © 1975— FORD MOTOR COMPANY — DEARBORN, MICHIGAN

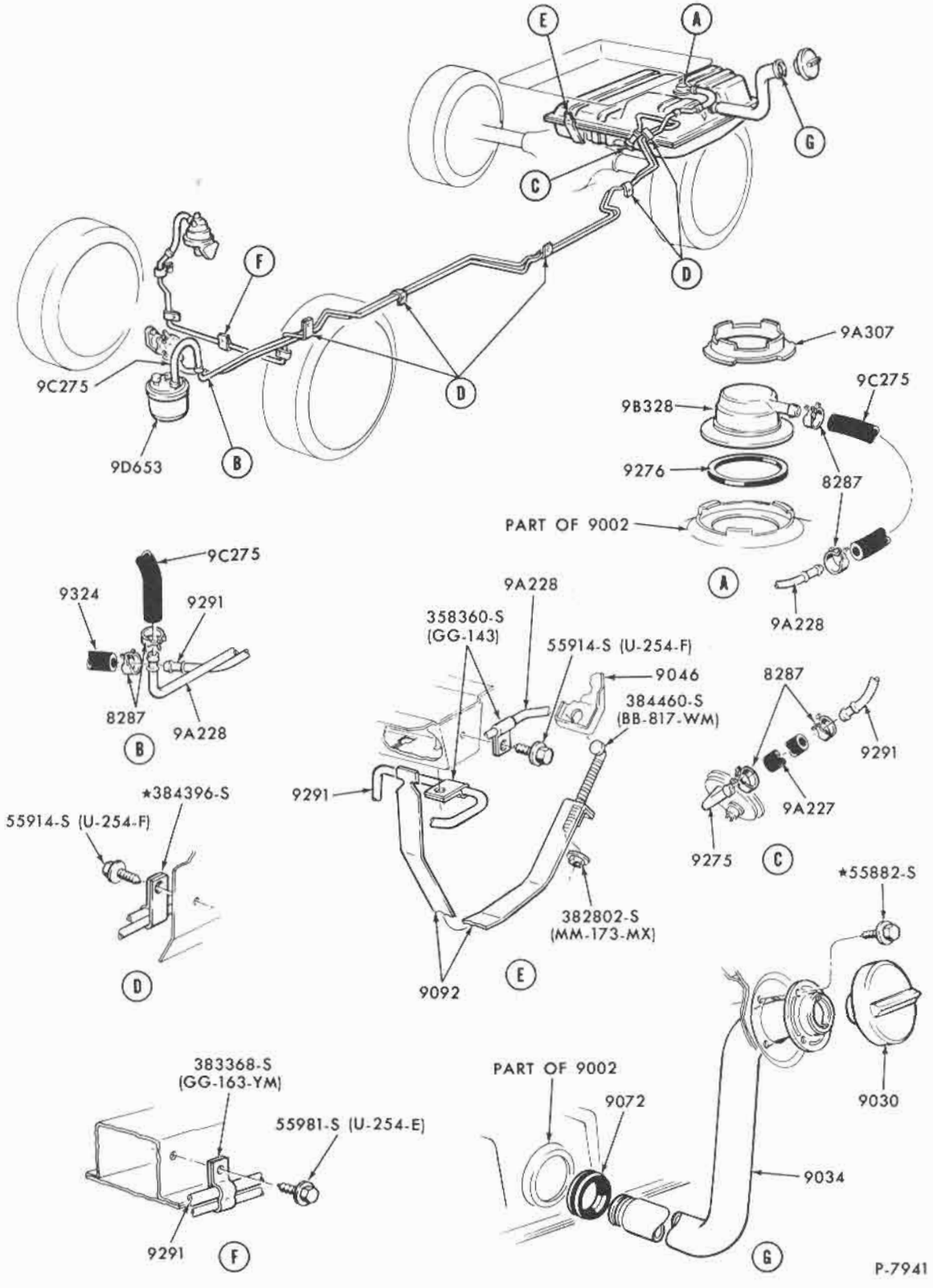

FUEL SYSTEM and RELATED PARTS

1971/72 PINTO

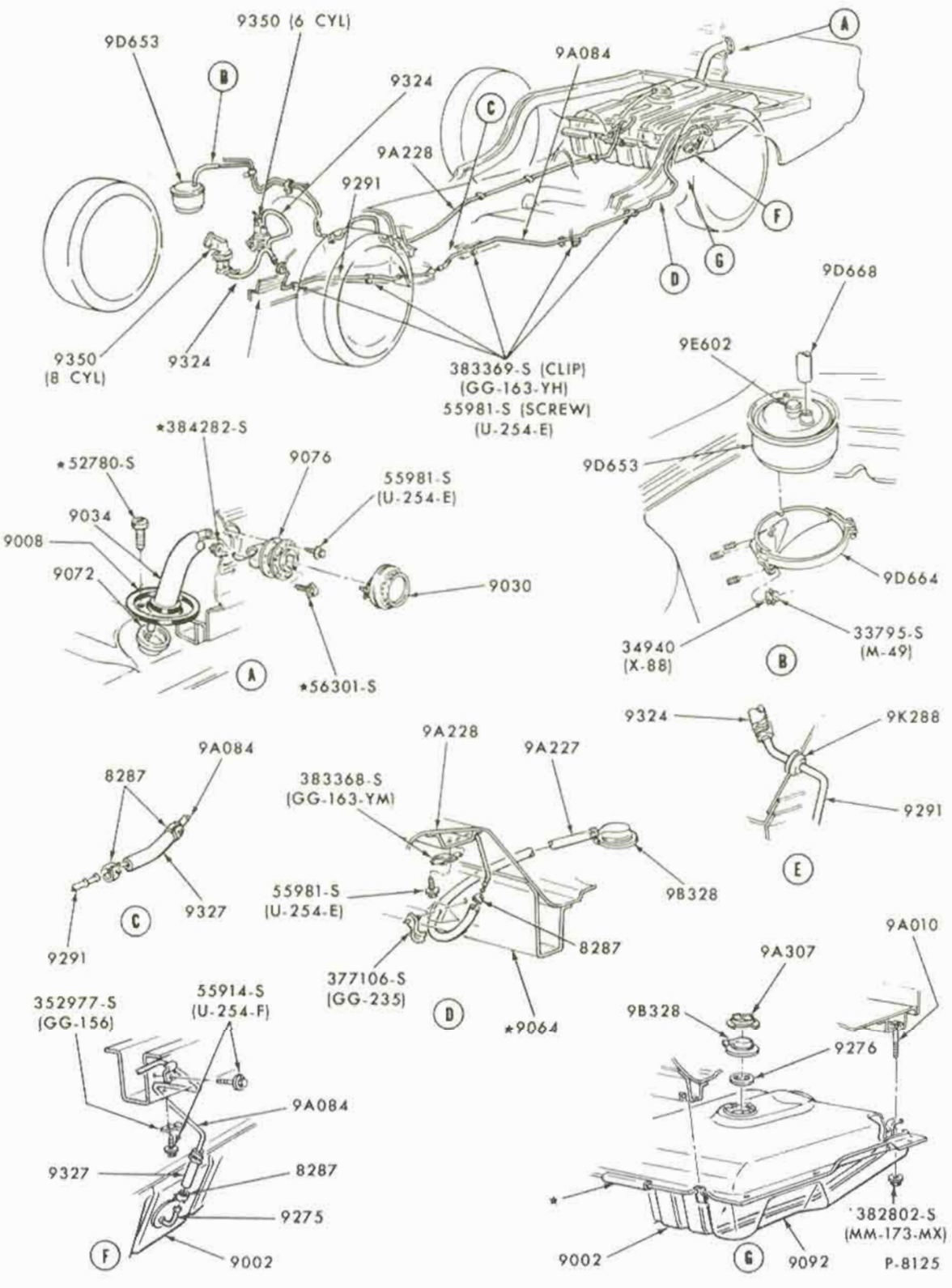

FUEL SYSTEM and RELATED PARTS
1971/72 MAVERICK

COPYRIGHT © 1975 — FORD MOTOR COMPANY — DEARBORN, MICHIGAN

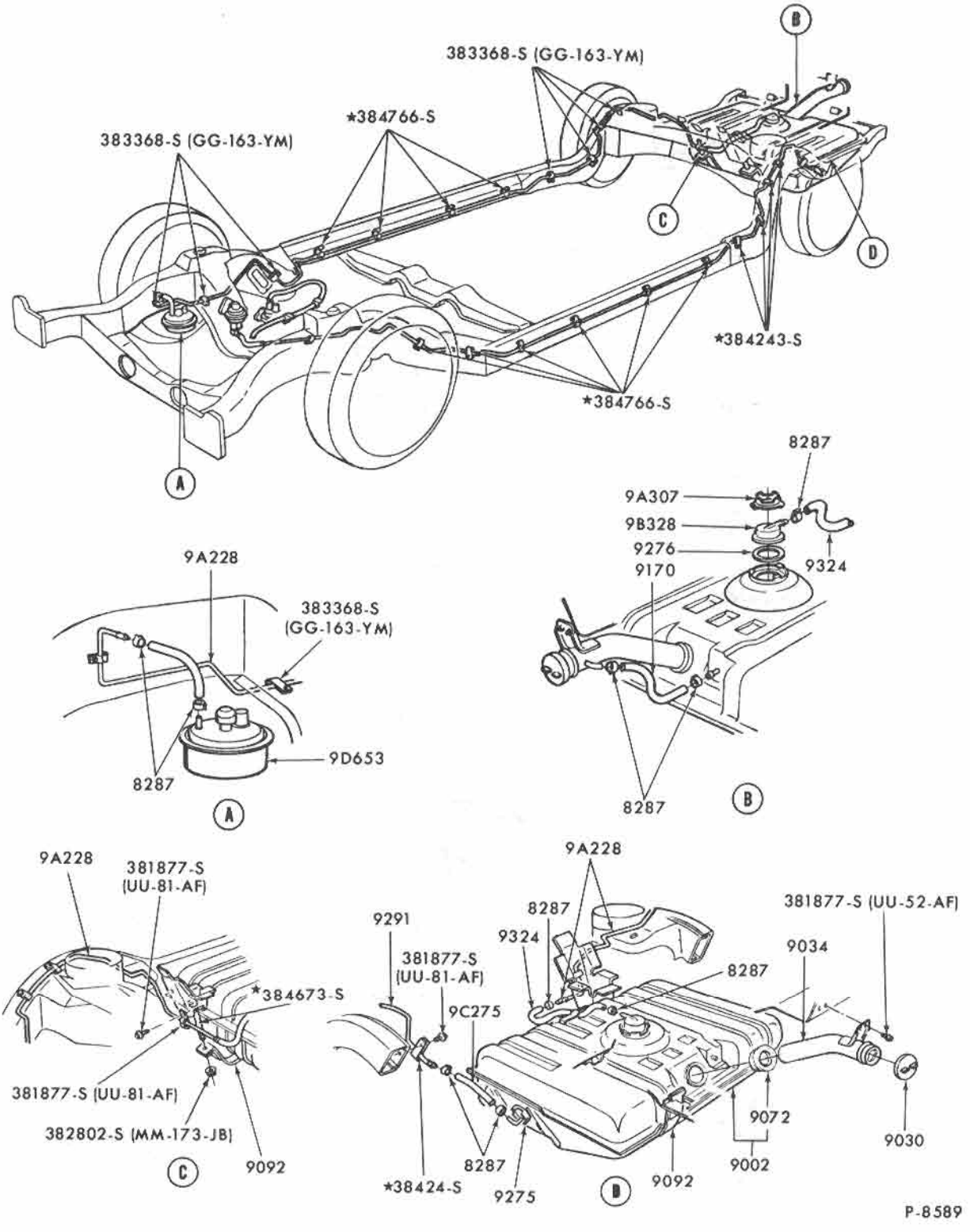

FUEL SYSTEM and RELATED PARTS
1972 TORINO - ALL EXCEPT BODY TYPES 71,97

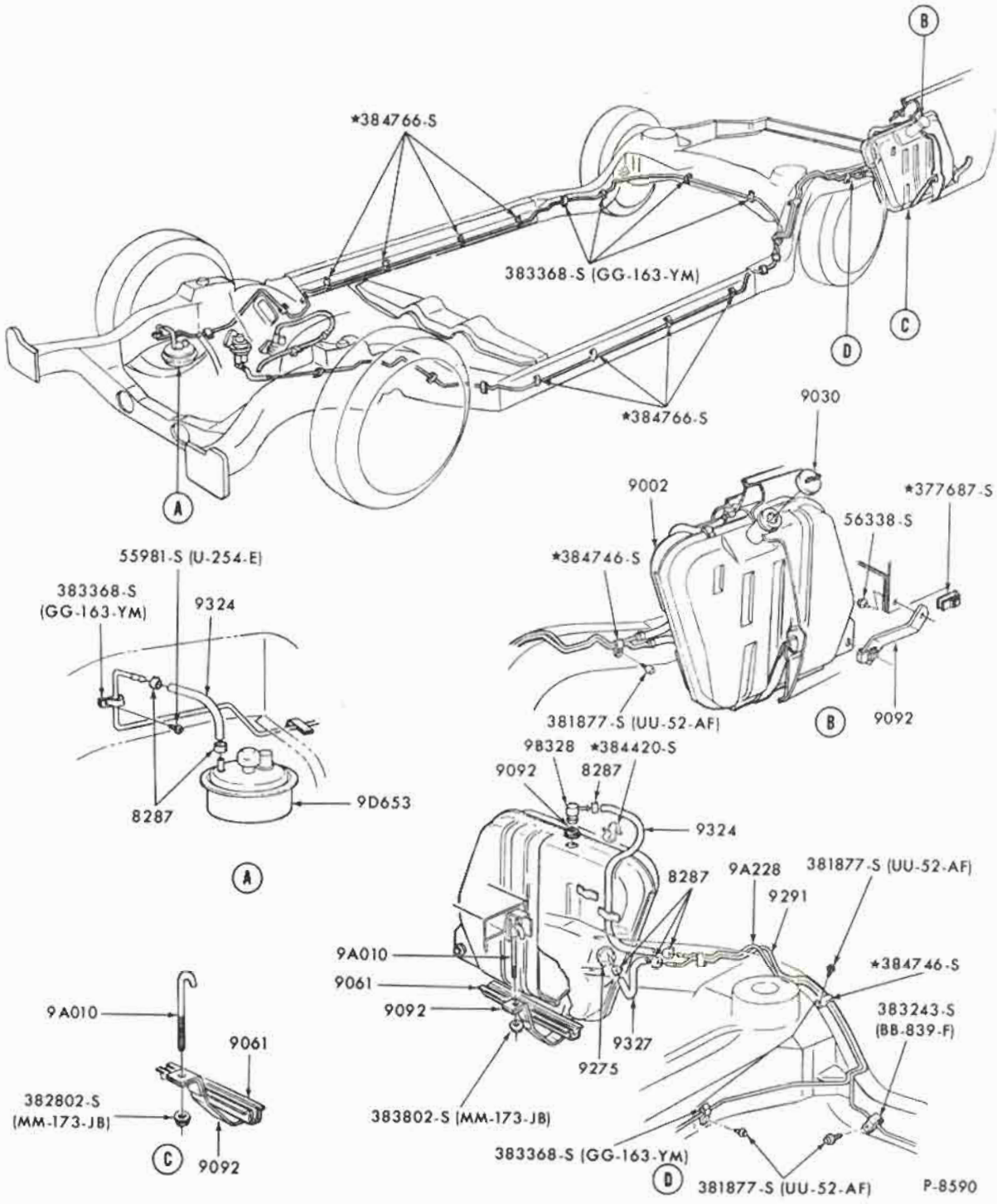

FUEL SYSTEM and RELATED PARTS
1972 TORINO - BODY TYPE 71

COPYRIGHT © 1975 — FORD MOTOR COMPANY — DEARBORN, MICHIGAN

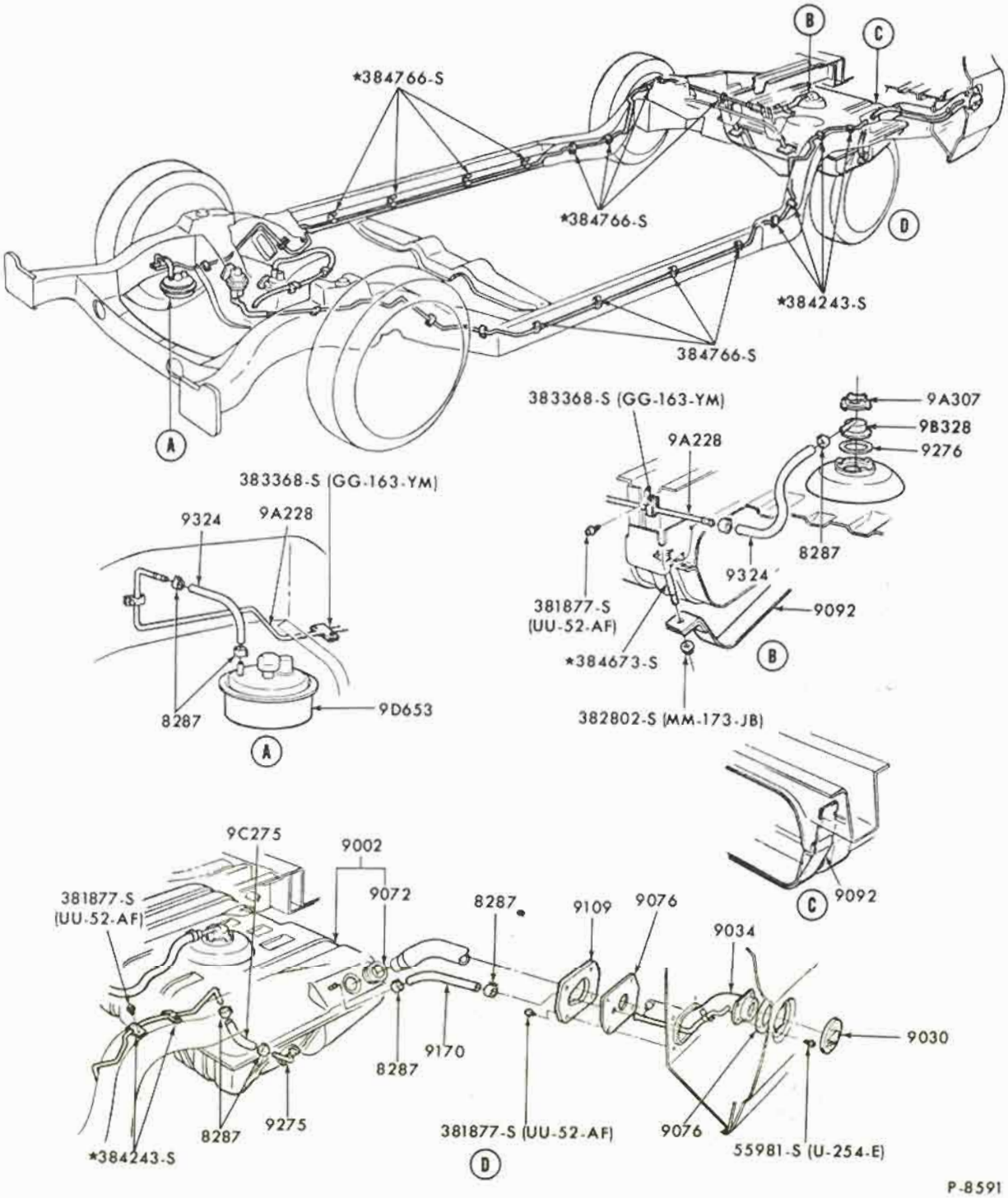

FUEL SYSTEM and RELATED PARTS
1972 TORINO - BODY TYPE 97

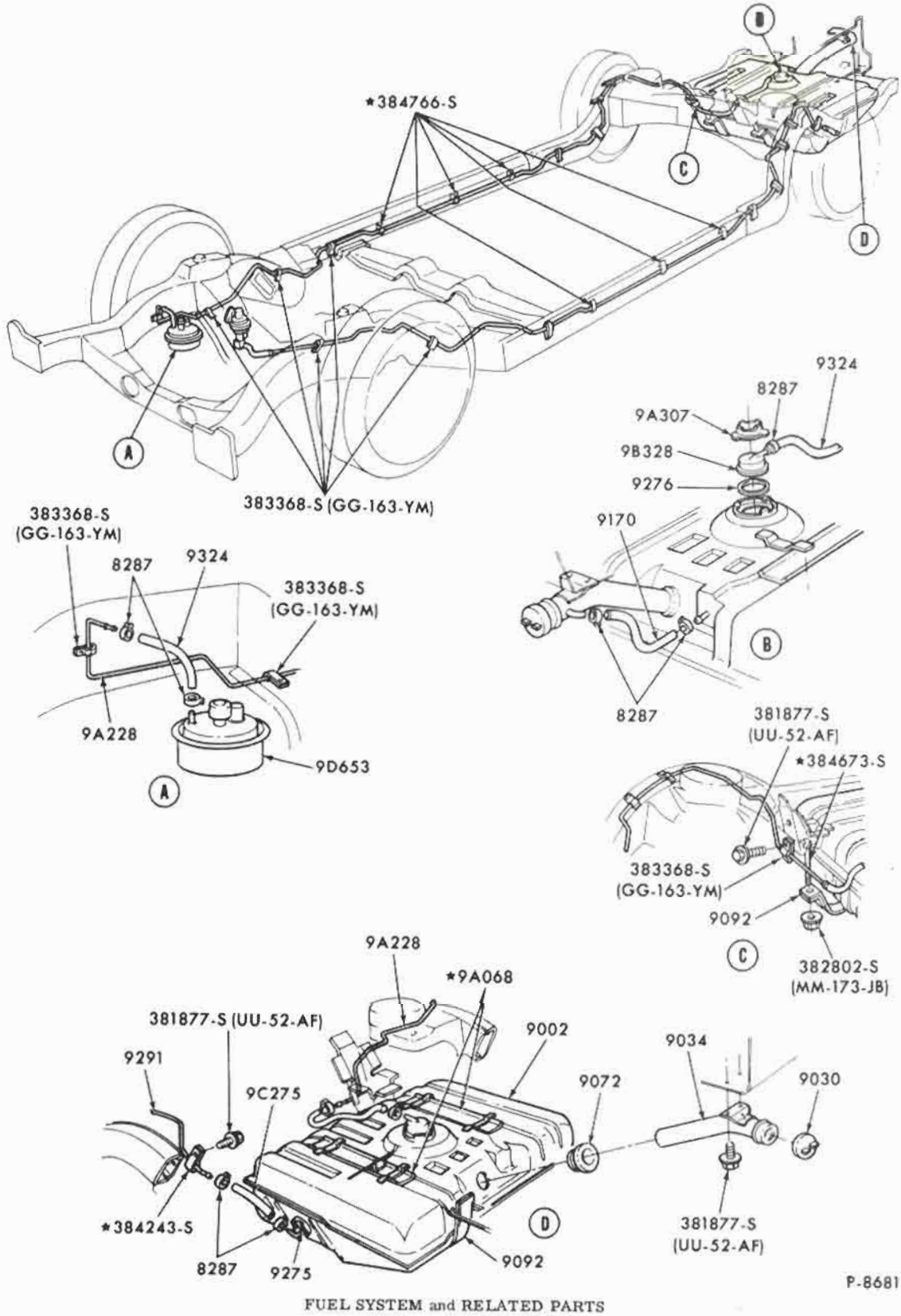

P-8681

FUEL SYSTEM and RELATED PARTS
1972 THUNDERBIRD

COPYRIGHT © 1975 — FORD MOTOR COMPANY — DEARBORN, MICHIGAN

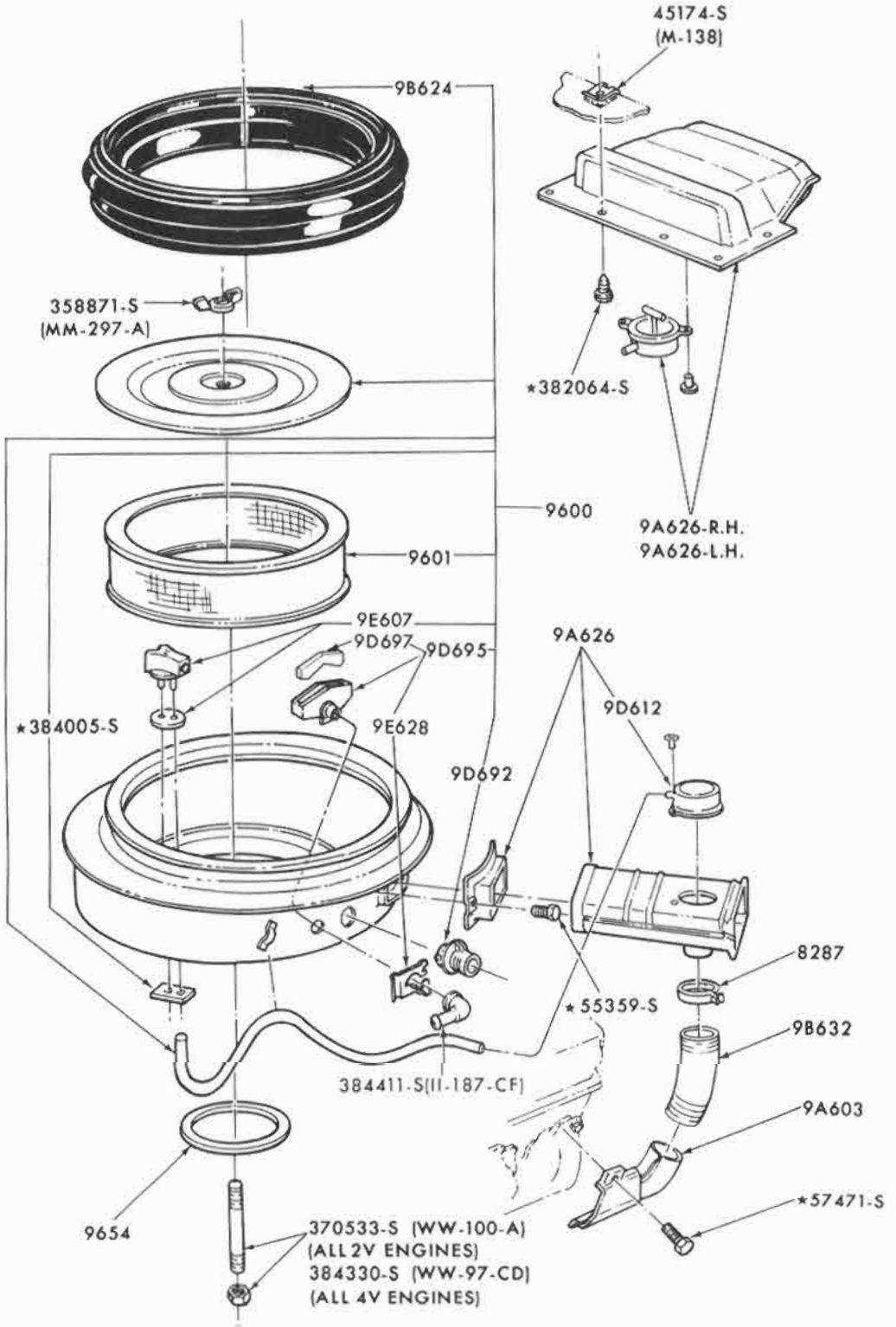

P-8290

AIR CLEANER - 8 CYLINDER - RAM AIR
1971/72 MUSTANG (351 ENGINE)

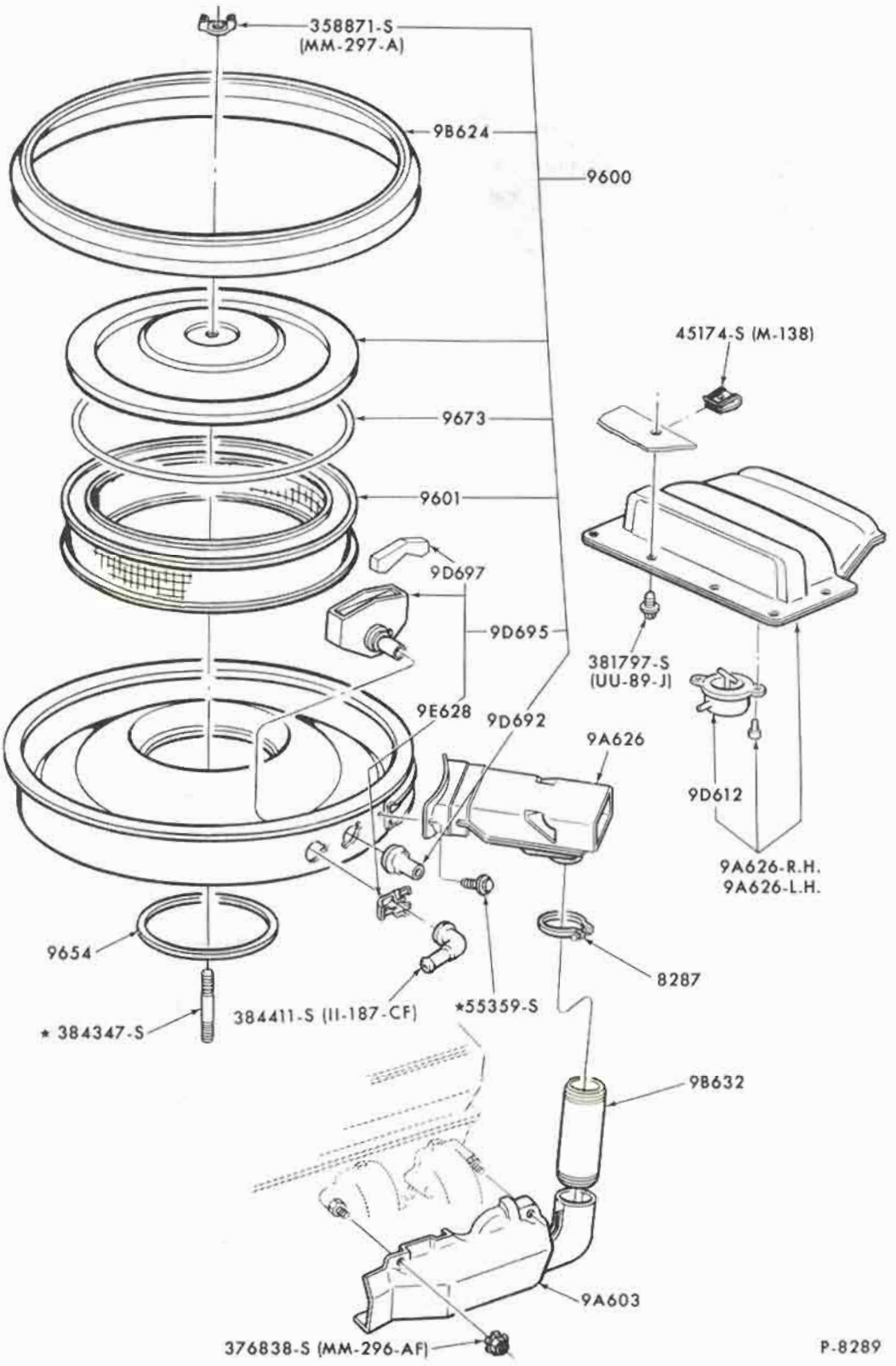

AIR CLEANER - 8 CYLINDER - RAM AIR
1971 MUSTANG (429 COBRA JET ENGINE)

COPYRIGHT © 1975 — FORD MOTOR COMPANY — DEARBORN, MICHIGAN

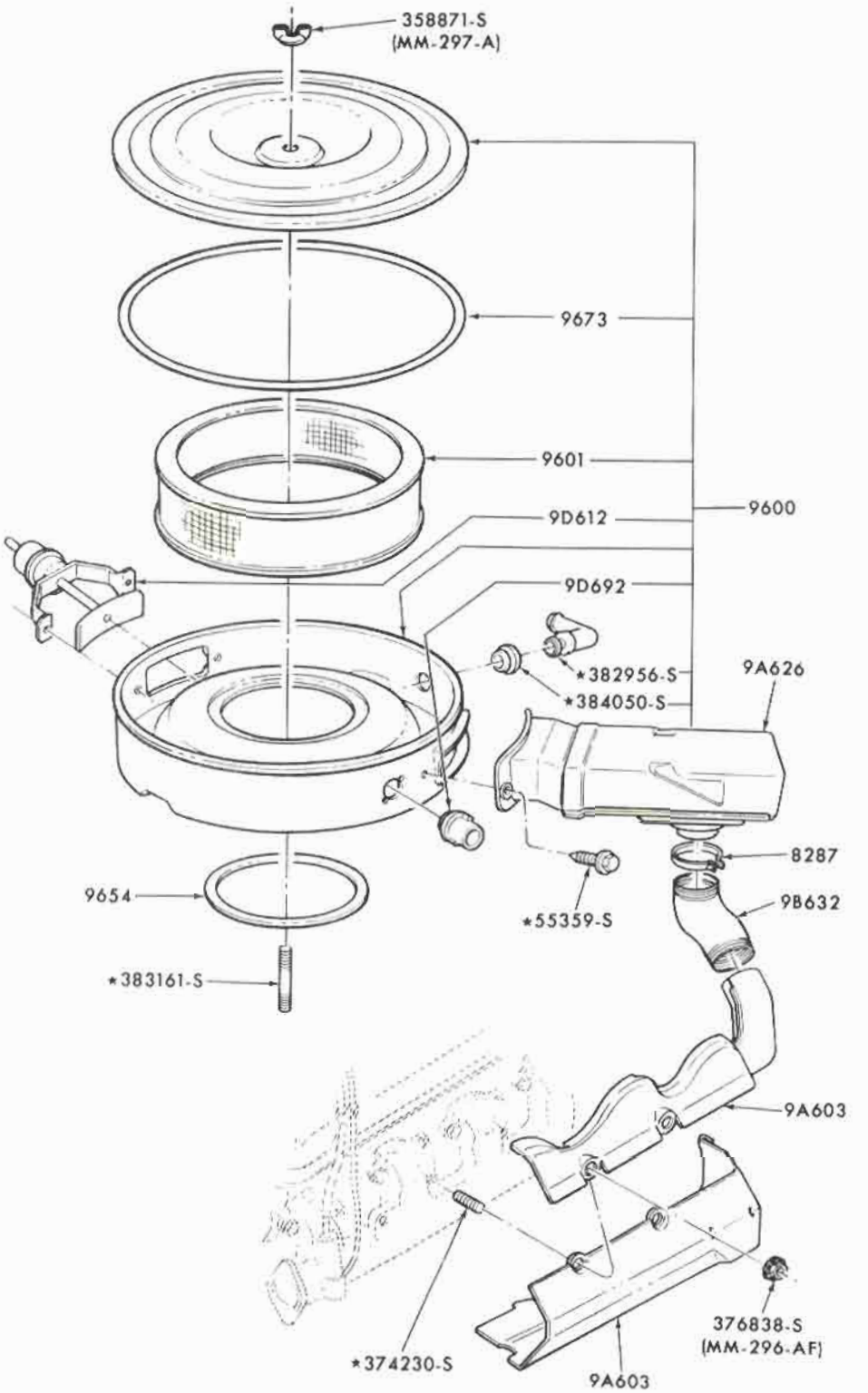

P-8288

AIR CLEANER - 8 CYLINDER - EXCEPT RAM AIR
1971 MUSTANG (302-4V BOSS ENGINE)

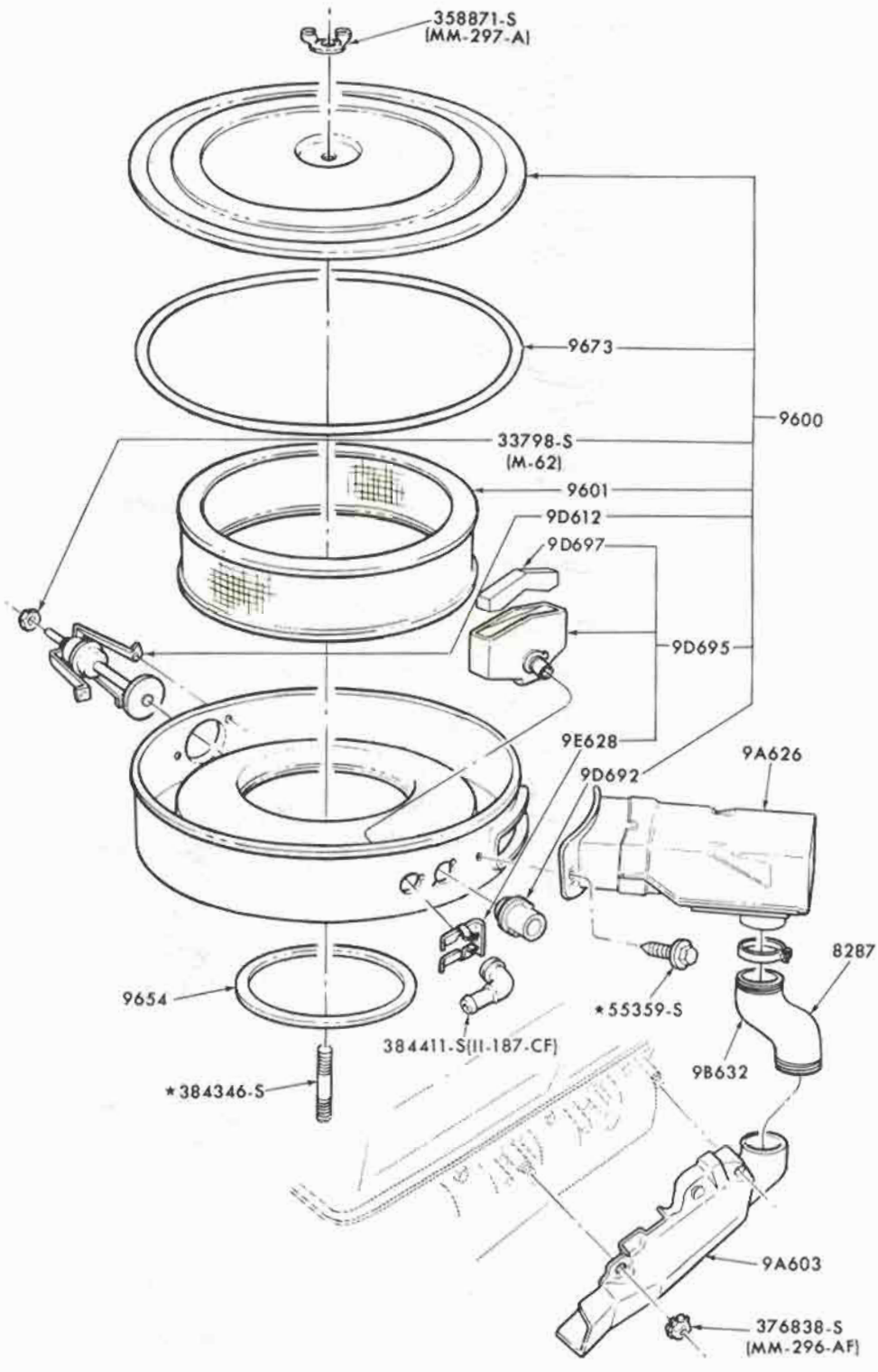

P-8287

AIR CLEANER - 8 CYLINDER - EXCEPT RAM AIR
1971 MUSTANG, TORINO (429 ENGINE)

COPYRIGHT © 1975 — FORD MOTOR COMPANY — DEARBORN, MICHIGAN

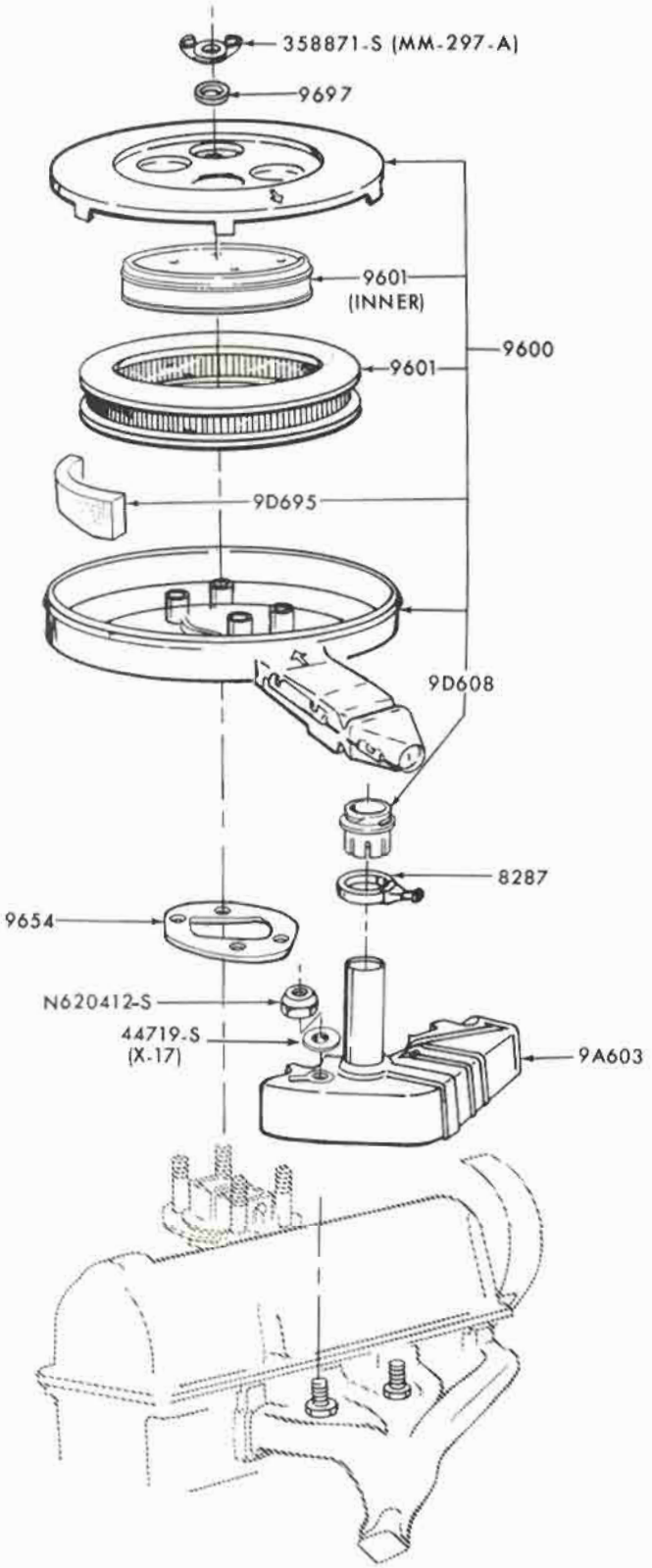

AIR CLEANER - 4 CYLINDER

1971/72 PINTO (122 2000 cc ENGINE

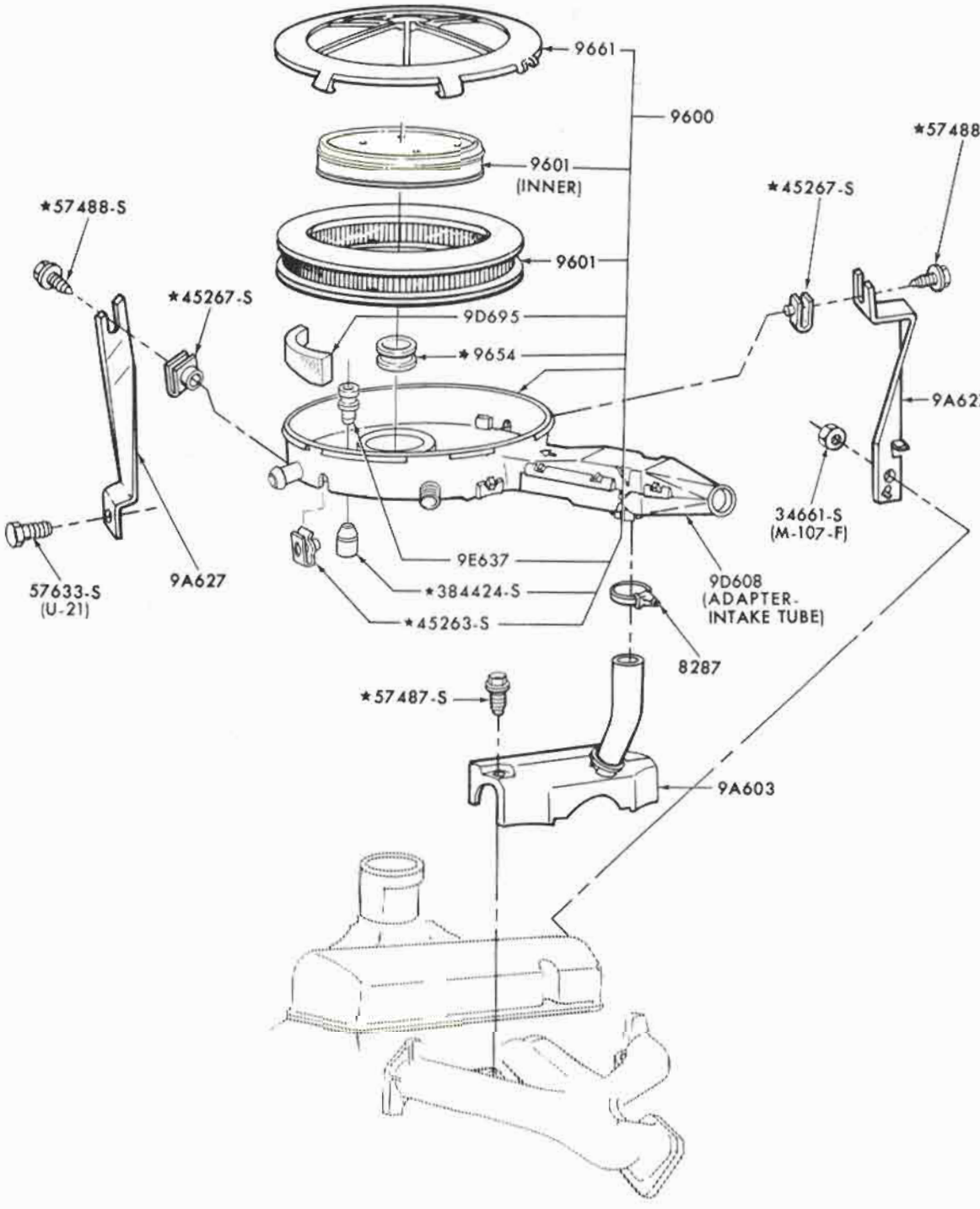

P-7938

AIR CLEANER - 4 CYLINDER

1971/72 PINTO (98 1600 cc ENGINE)

COPYRIGHT © 1975 — FORD MOTOR COMPANY — DEARBORN, MICHIGAN

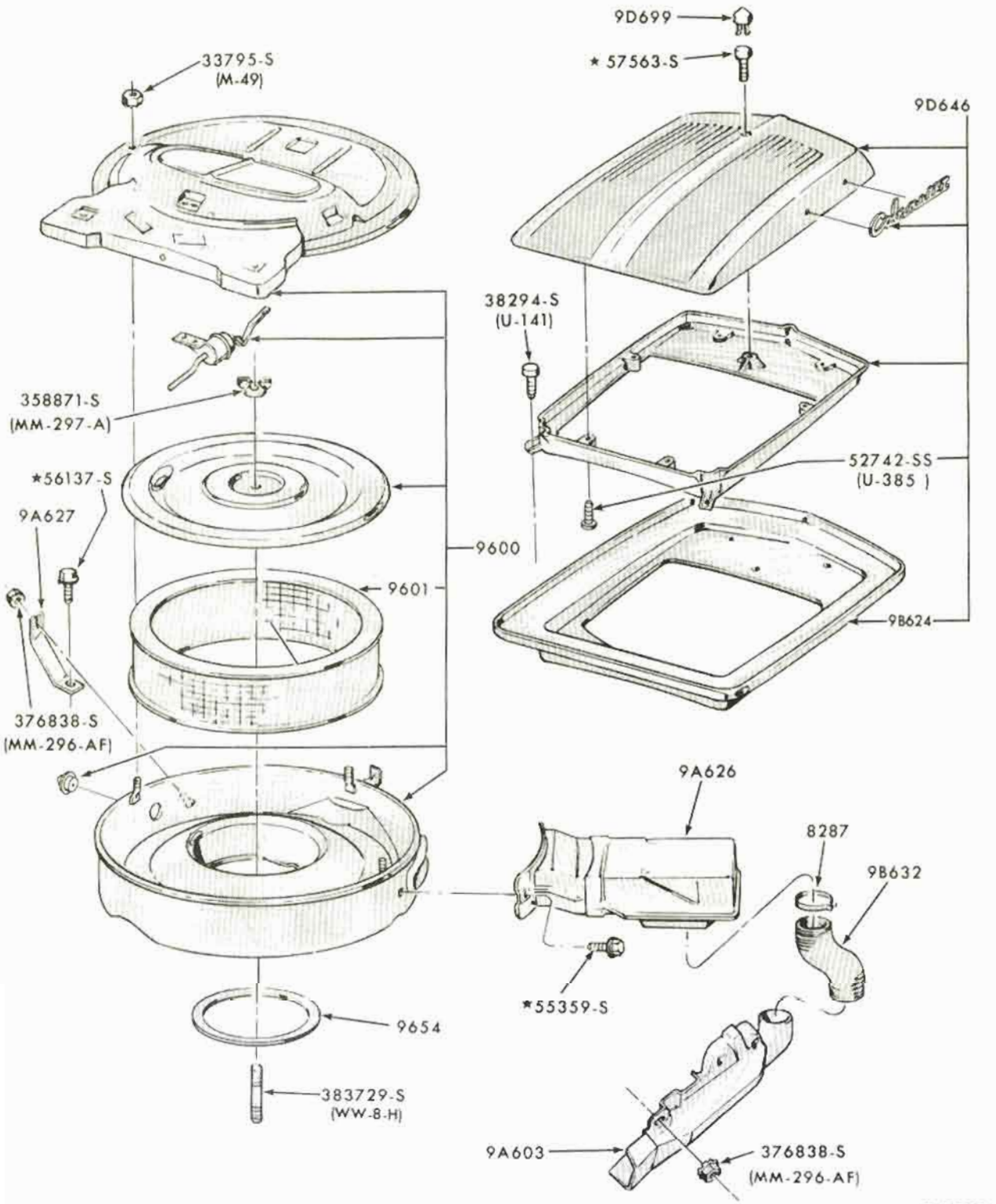

P-7375

AIR CLEANER - 8 CYLINDER - RAM AIR

1970/71 FAIRLANE/TORINO (429 COBRA JET ENGINE)

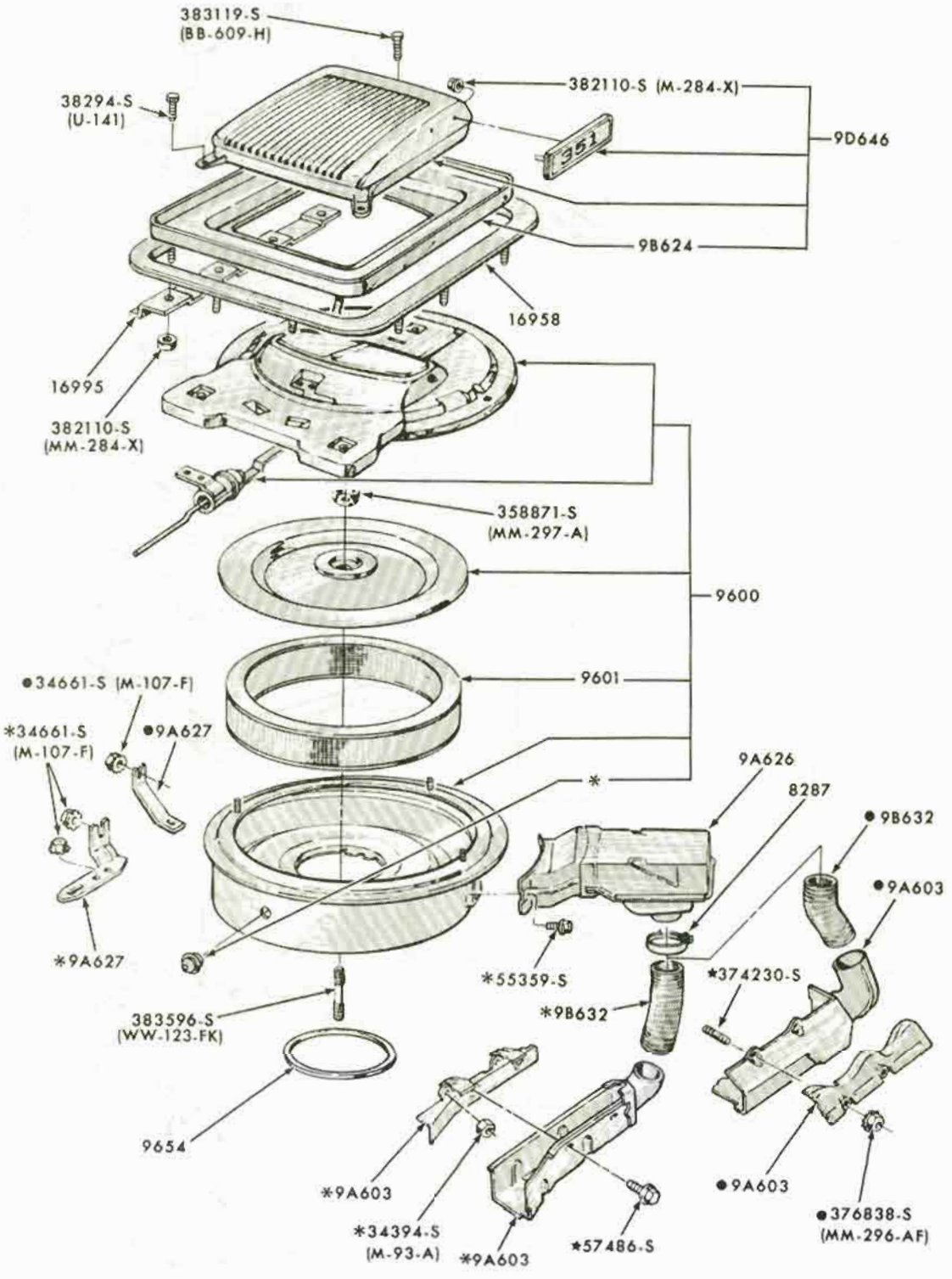

●8 CYLINDER 302-4V 'BOSS' ENGINE ONLY
*8 CYLINDER 351-2V 'W' ENGINE ONLY

P-7373

AIR CLEANER - 8 CYLINDER - RAM AIR
1970 MUSTANG (302-4V, 351(W) ENGINES)

COPYRIGHT © 1975 — FORD MOTOR COMPANY — DEARBORN, MICHIGAN

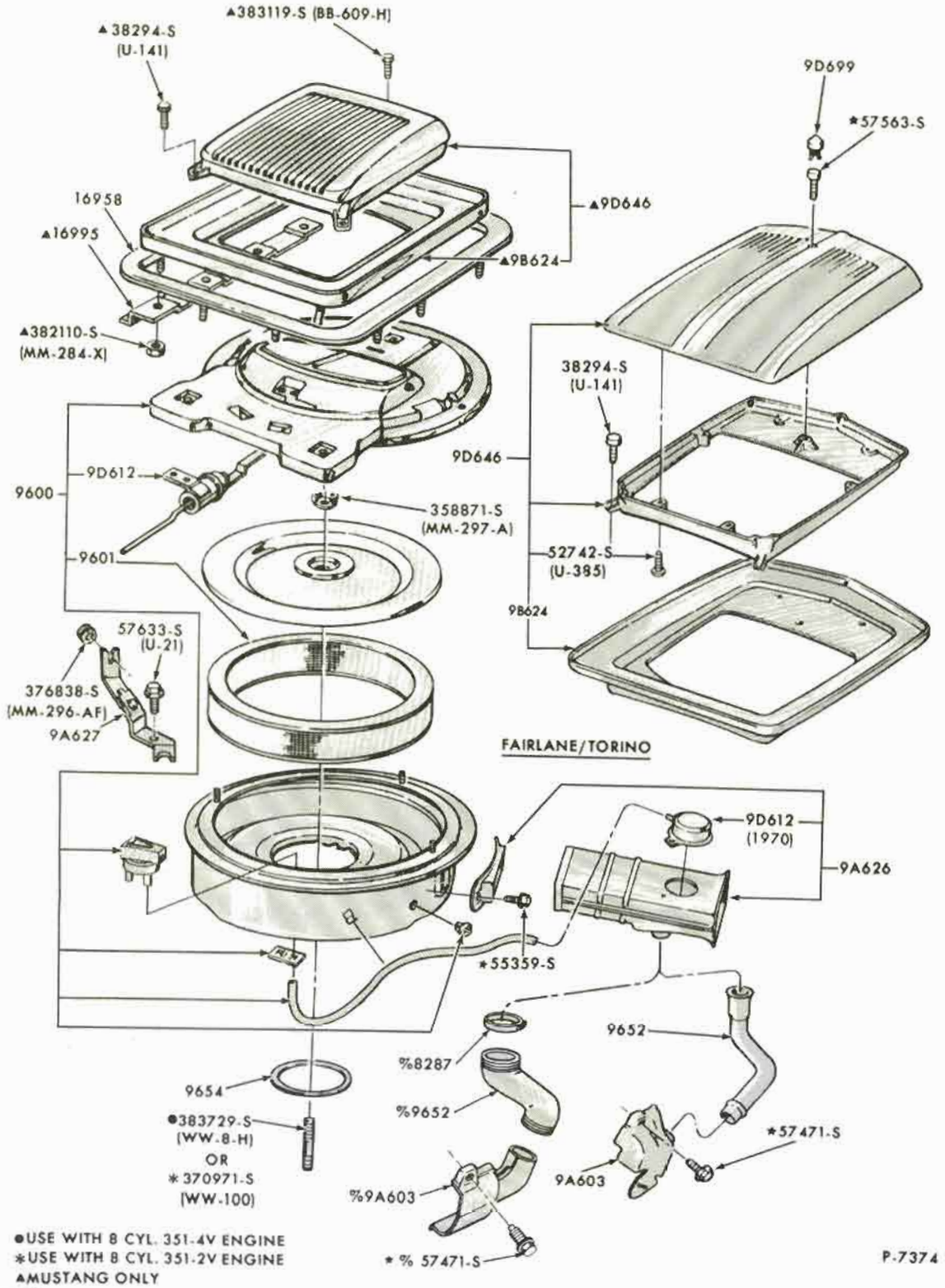

●USE WITH 8 CYL. 351-4V ENGINE
*USE WITH 8 CYL. 351-2V ENGINE
▲MUSTANG ONLY
% 1971 ONLY

AIR CLEANER - 8 CYLINDER - RAM AIR
1970/71 FAIRLANE/TORINO (351 ENGINE) 1970 MUSTANG (351-C ENGINE)

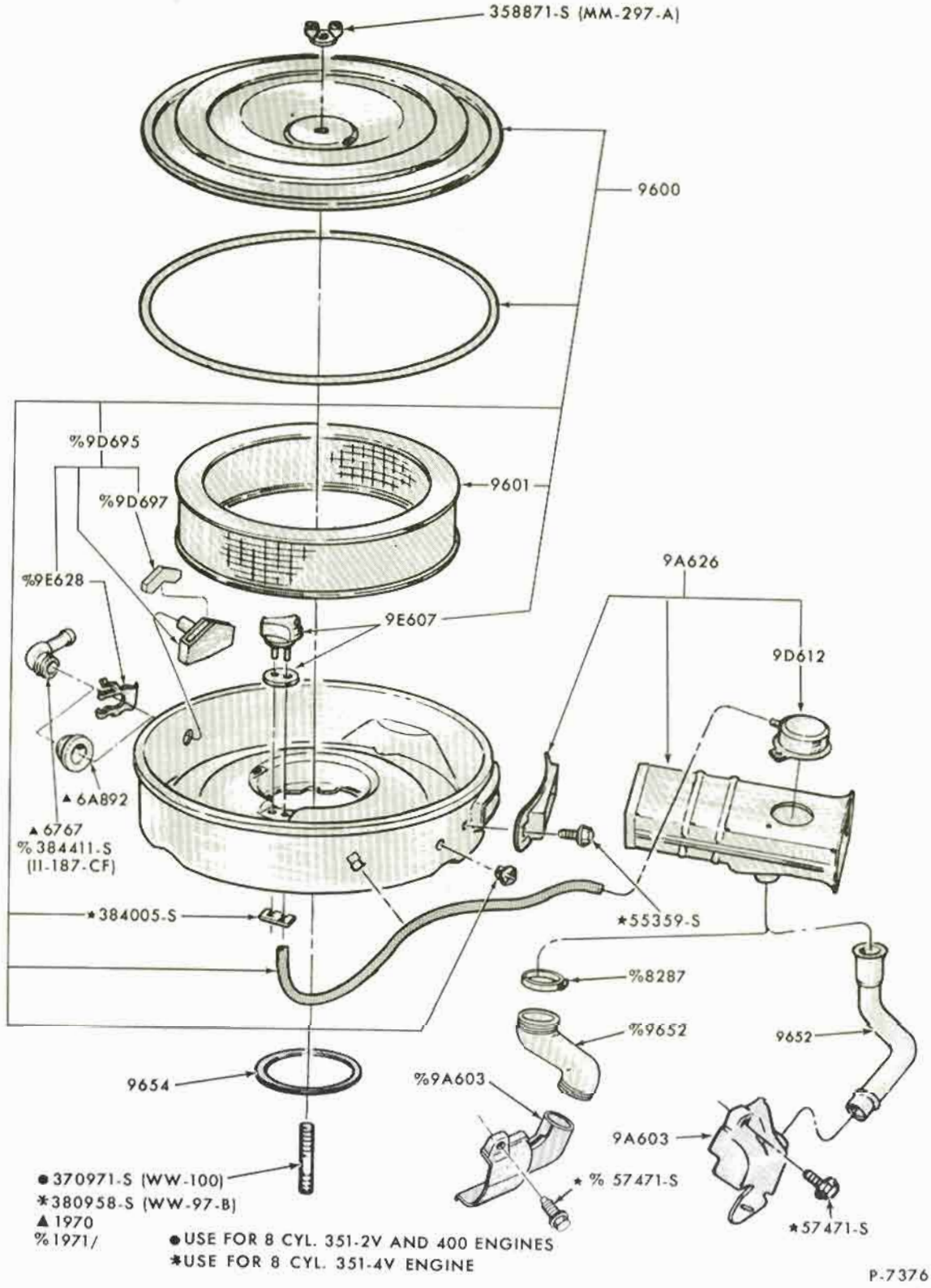

AIR CLEANER - 8 CYLINDER

1970/71 FAIRLANE/TORINO, MUSTANG (351 ENGINE) 1971 FORD (400 ENGINE)

COPYRIGHT © 1975 — FORD MOTOR COMPANY — DEARBORN, MICHIGAN

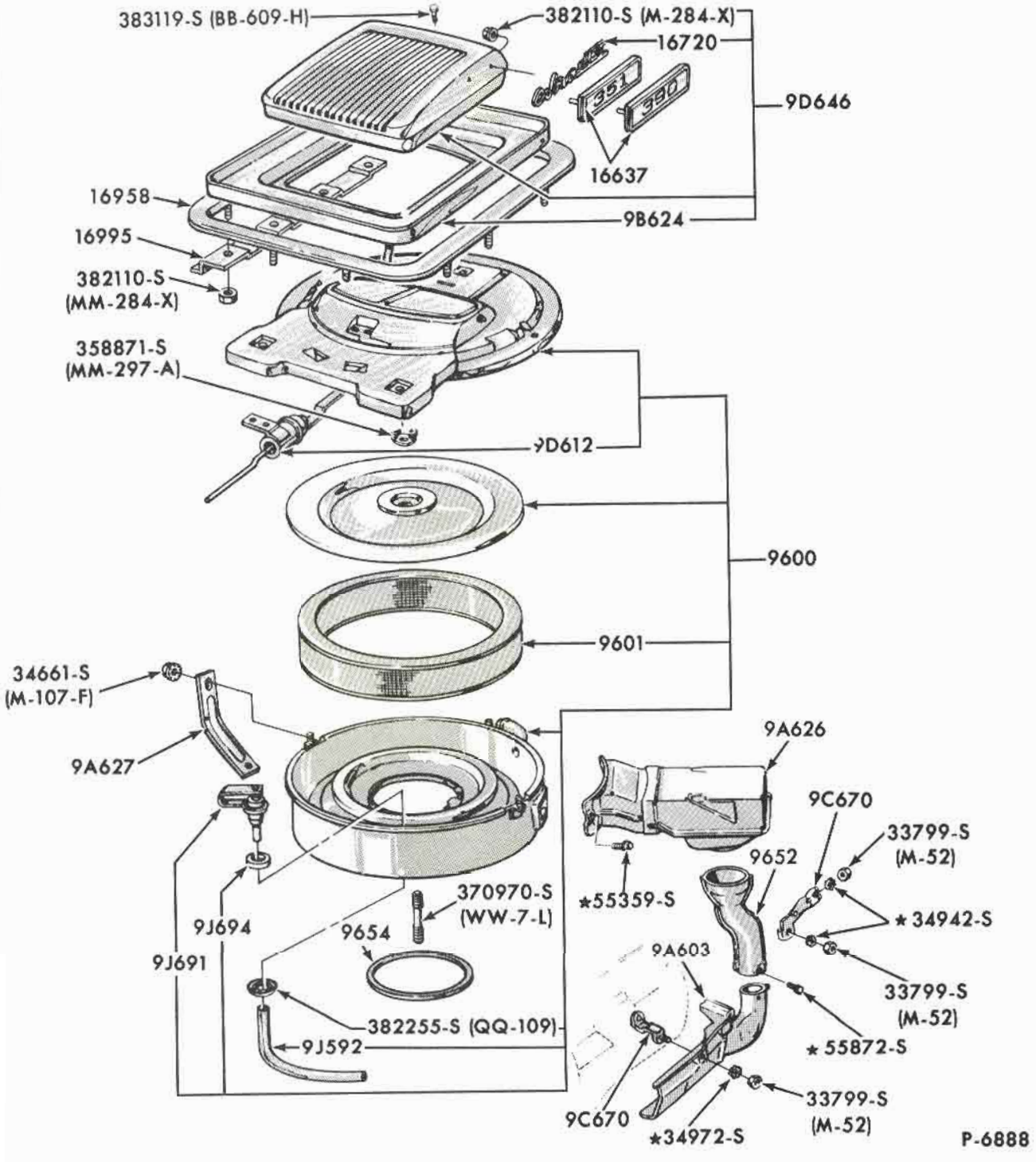

AIR CLEANER - 8 CYLINDER - RAM AIR
1969 MUSTANG (351, 390, 428 COBRA JET ENGINES)
1970 MUSTANG - 8 CYLINDER 428 ENGINE

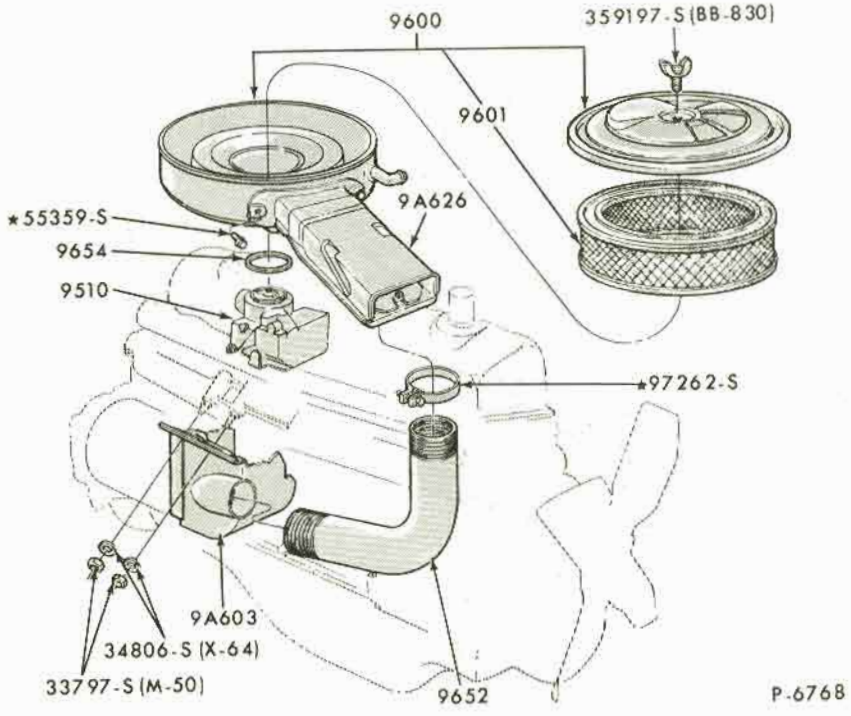

AIR CLEANER - 6 CYLINDER
1969/71 BRONCO (170 ENGINE) - WITHOUT OIL BATH
1970/71 MAVERICK (170,200,250 ENGINES)

COPYRIGHT © 1975 — FORD MOTOR COMPANY — DEARBORN, MICHIGAN

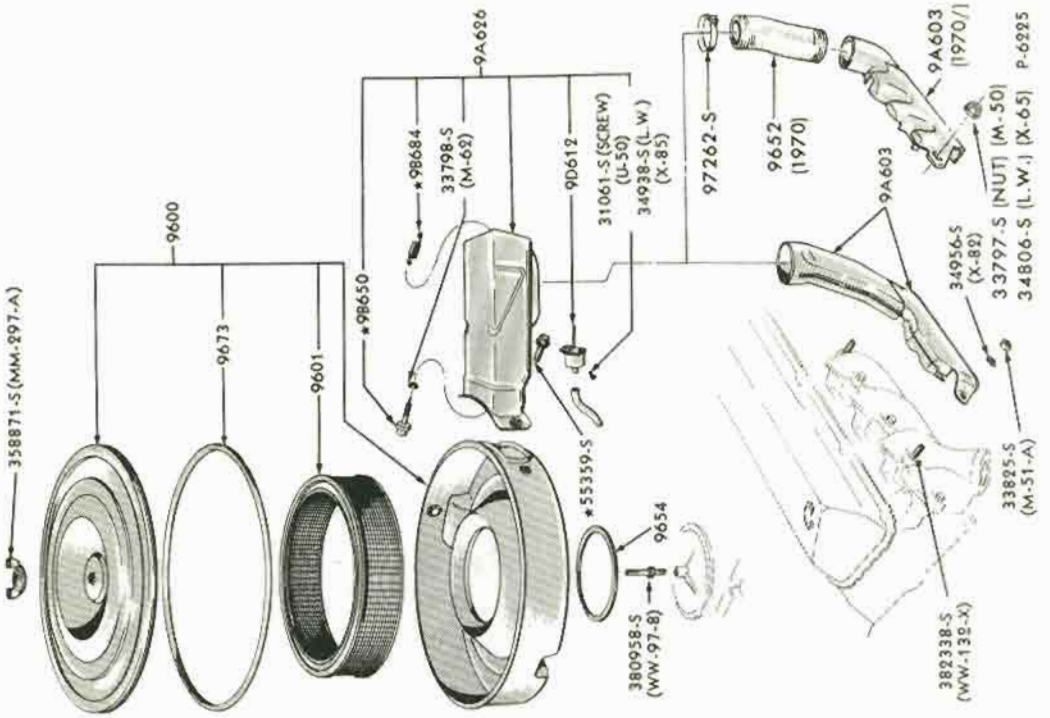

AIR CLEANER - 8 CYLINDER
1968/70 THUNDERBIRD, FAIRLANE/TORINO (429 ENGINE)
1970/71 FORD (429-2V, 4V ENGINES)

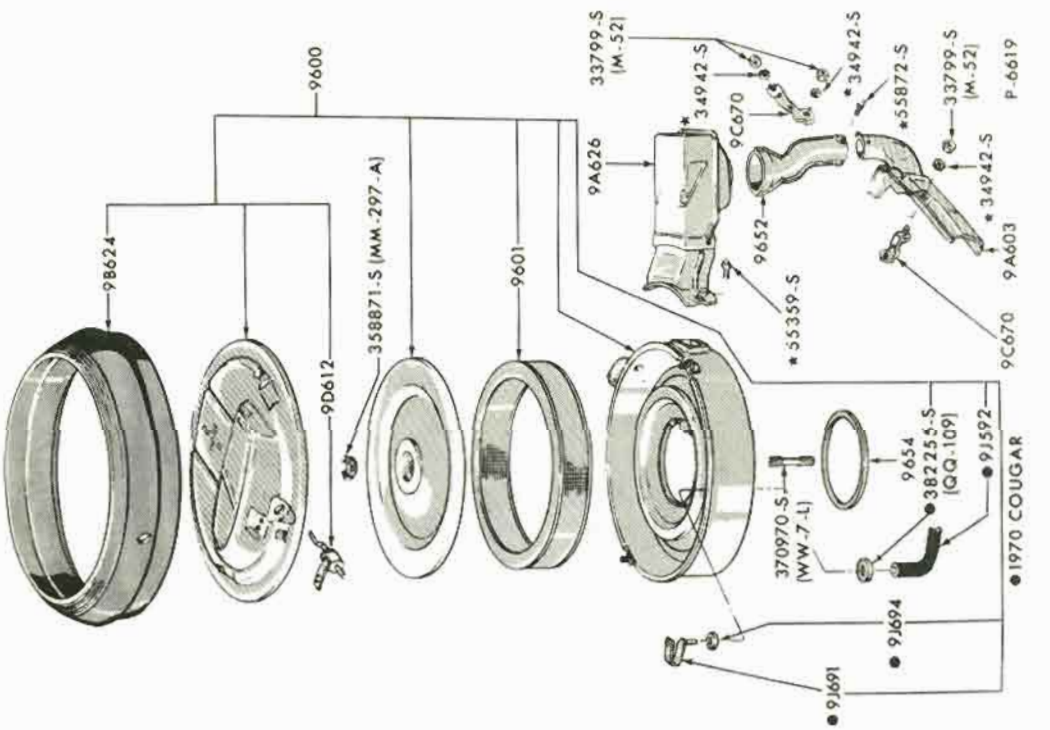

AIR CLEANER - 8 CYLINDER - RAM AIR
1969 FAIRLANE/TORINO (428 COBRA JET ENGINE)
1969/70 MUSTANG (428 COBRA JET ENGINE)

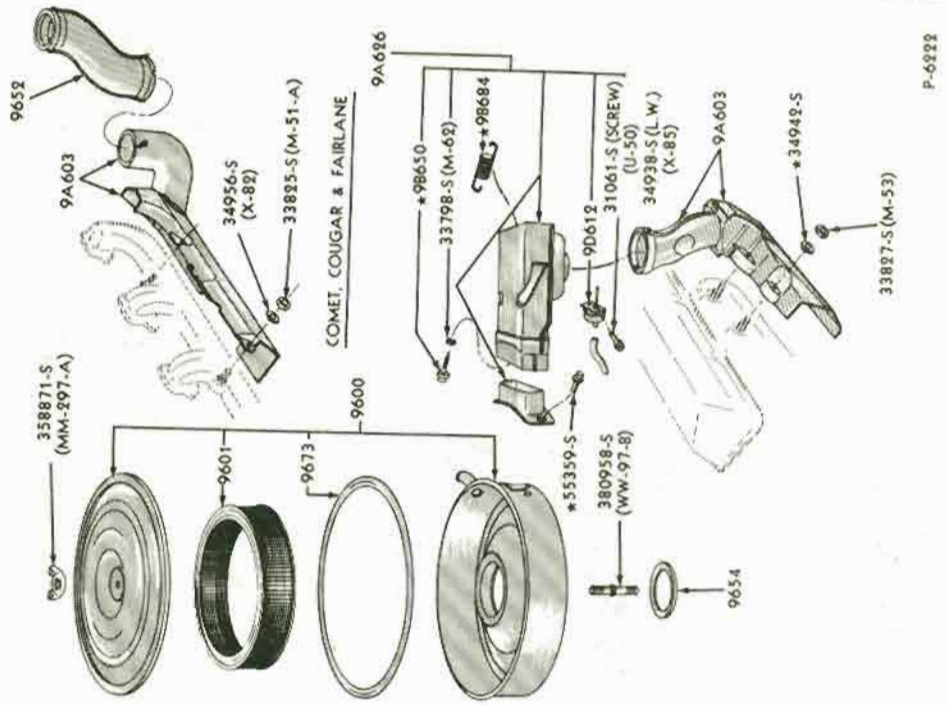

AIR CLEANER - 8 CYLINDER
1968/ FORD (390-2V, 4V, 428-4V ENGINES)
1968 FAIRLANE (390 ENGINE) 1968 THUNDERBIRD (390-4V ENGINE)

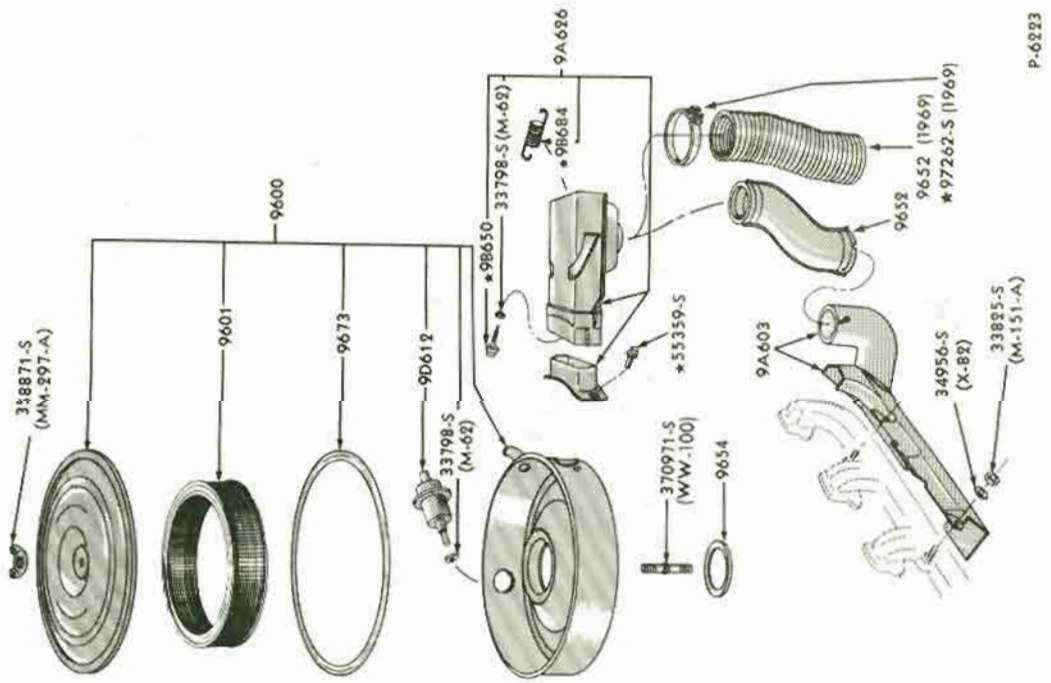

AIR CLEANER - 8 CYLINDER
1968/69 FAIRLANE (390-4V GT and GTA ENGINES) 1968/69 MUSTANG (390-2V, 4V ENGINES
1970 FAIRLANE/TORINO (429 COBRA JET ENGINE)

COPYRIGHT © 1975 — FORD MOTOR COMPANY — DEARBORN, MICHIGAN

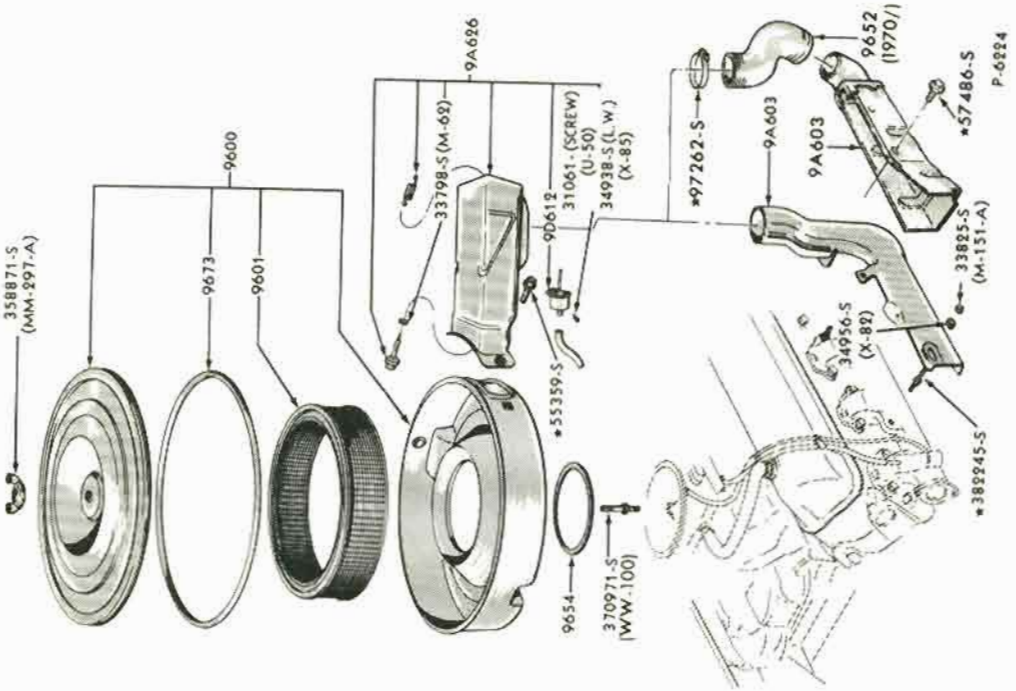

AIR CLEANER - 8 CYLINDER
1968/71 FALCON, FORD, MAVERICK (289, 302, 351 ENGINES)
1968/71 FAIRLANE/TORINO, MUSTANG (289,302 ENGINES)
1969 FAIRLANE, MUSTANG (351 ENGINE)

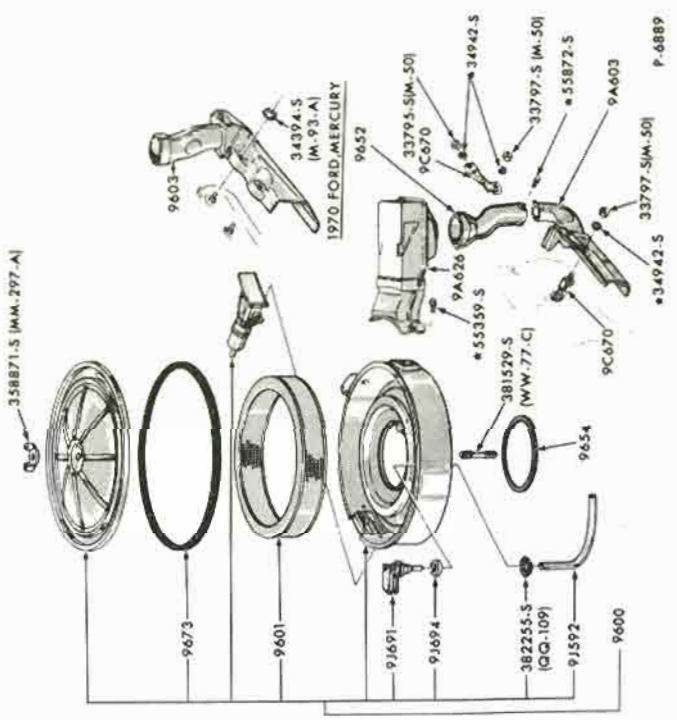

AIR CLEANER - 8 CYLINDER - except RAM AIR
1968/70 FAIRLANE/TORINO, MUSTANG (428 ENGINE)
1970 FORD (428 PC ENGINE)

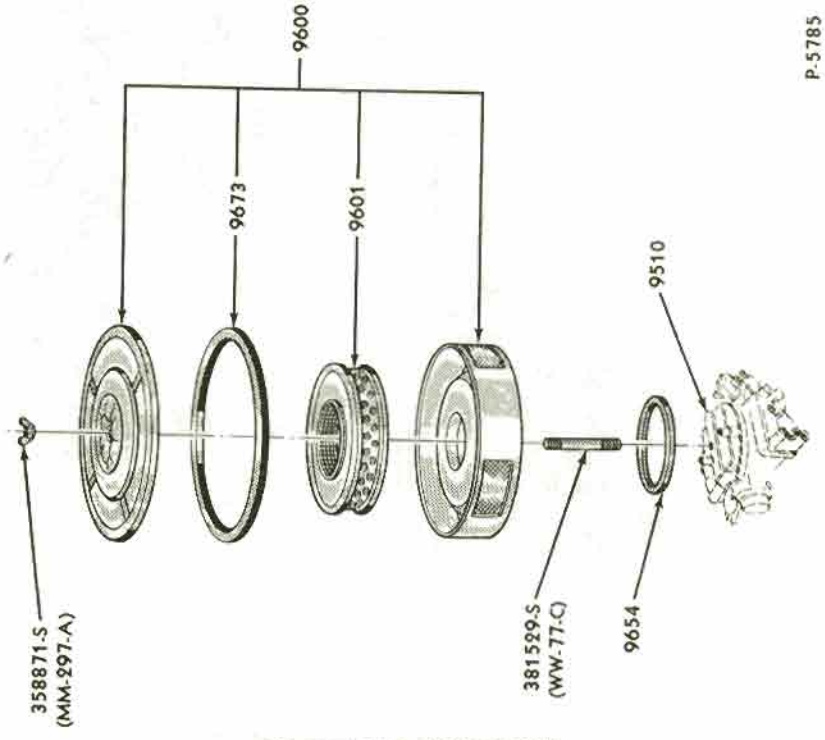

AIR CLEANER - 8 CYLINDER
1966/67 FAIRLANE, MUSTANG (390-4V, GT and GTA ENGINES)

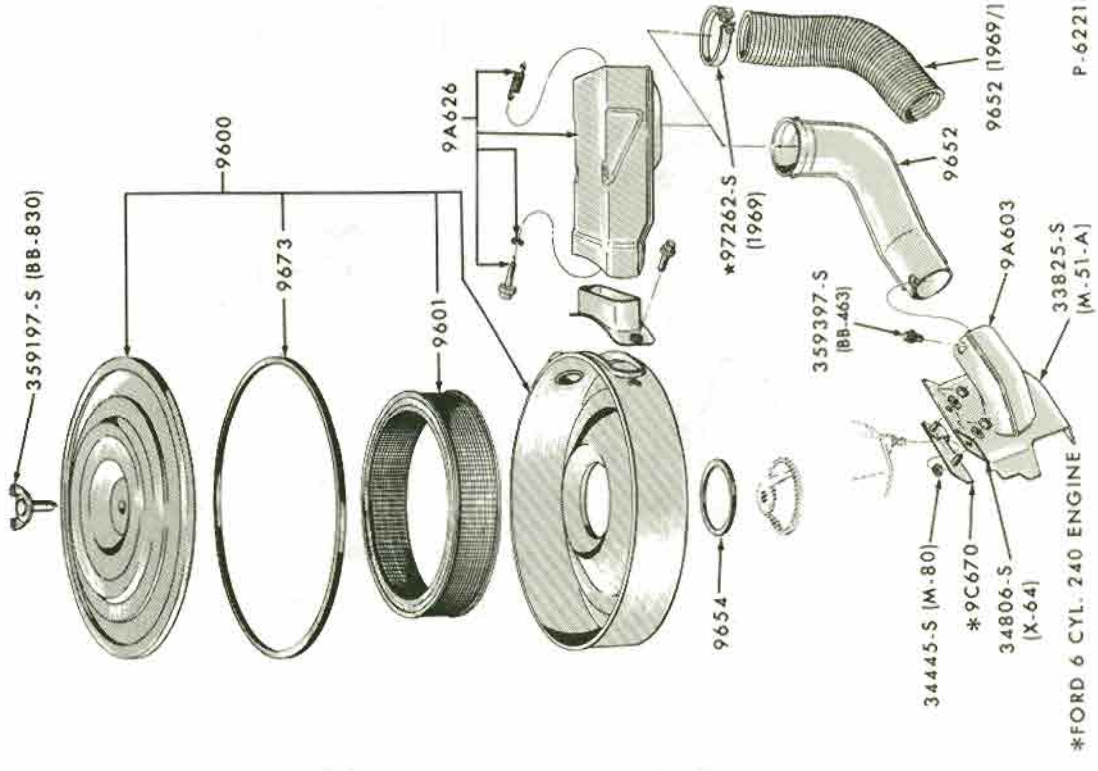

AIR CLEANER - 6 CYLINDER
1968/72 FORD, FAIRLANE/TORINO, FALCON, MUSTANG

COPYRIGHT © 1975 — FORD MOTOR COMPANY — DEARBORN, MICHIGAN

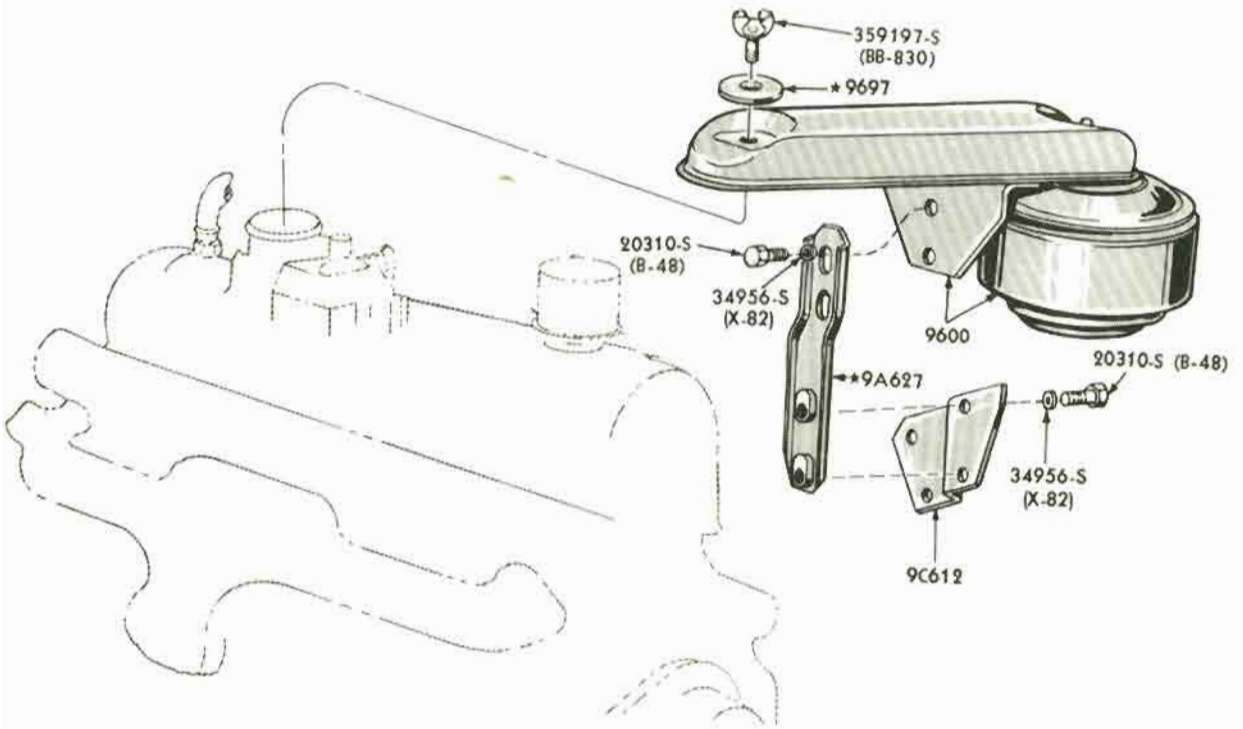

AIR CLEANER - OIL BATH TYPE - 6 CYLINDER
1966 BRONCO (170 ENGINE)

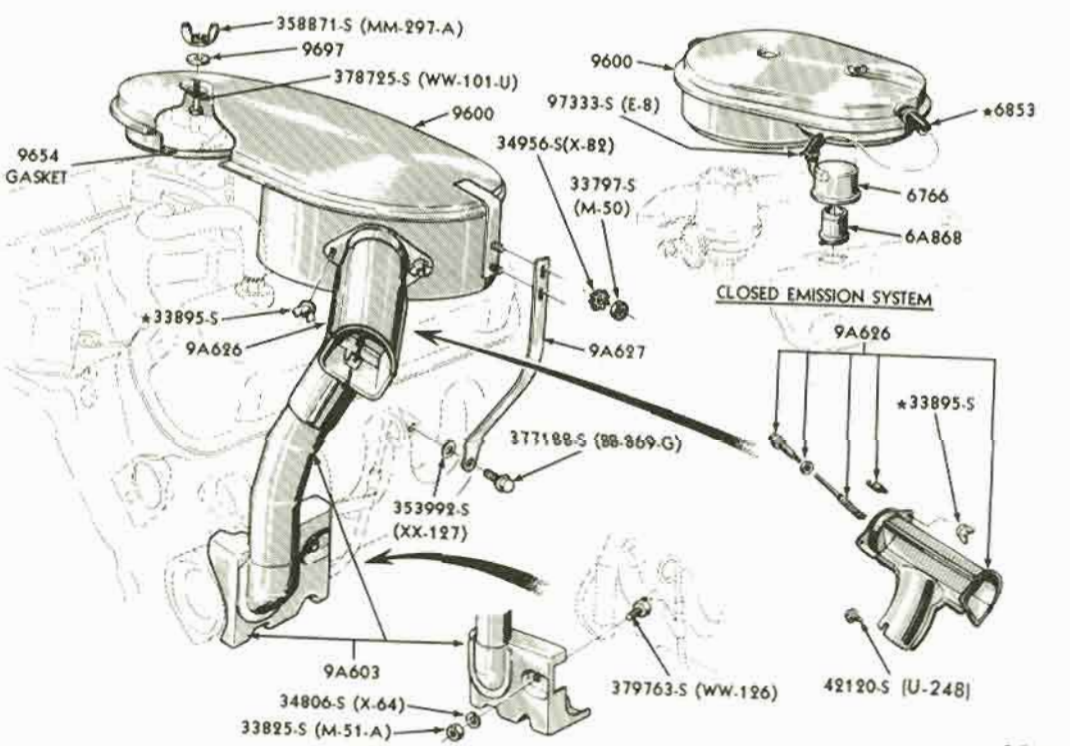

AIR CLEANER - OIL BATH TYPE - 8 CYLINDER
1966/69 BRONCO (289, 302 ENGINES)

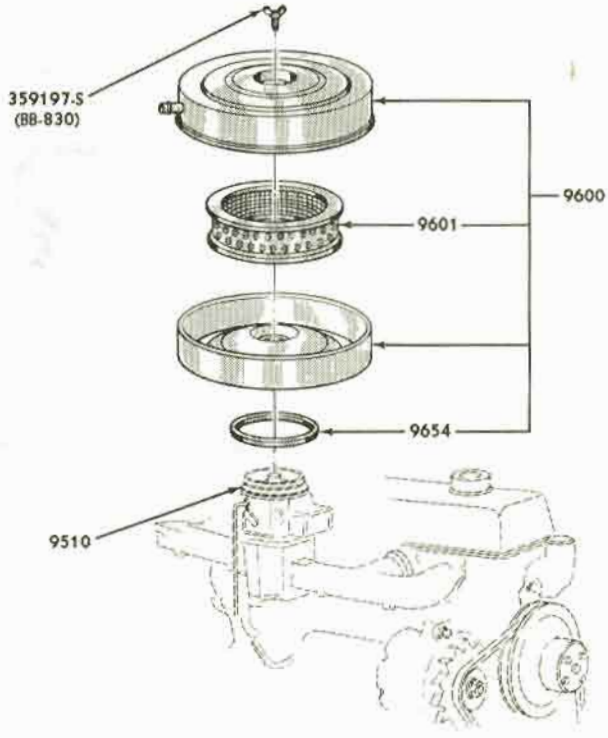

P-5781

AIR CLEANER - 6 CYLINDER
1966/67 FORD (240 ENGINE except TAXI and POLICE)

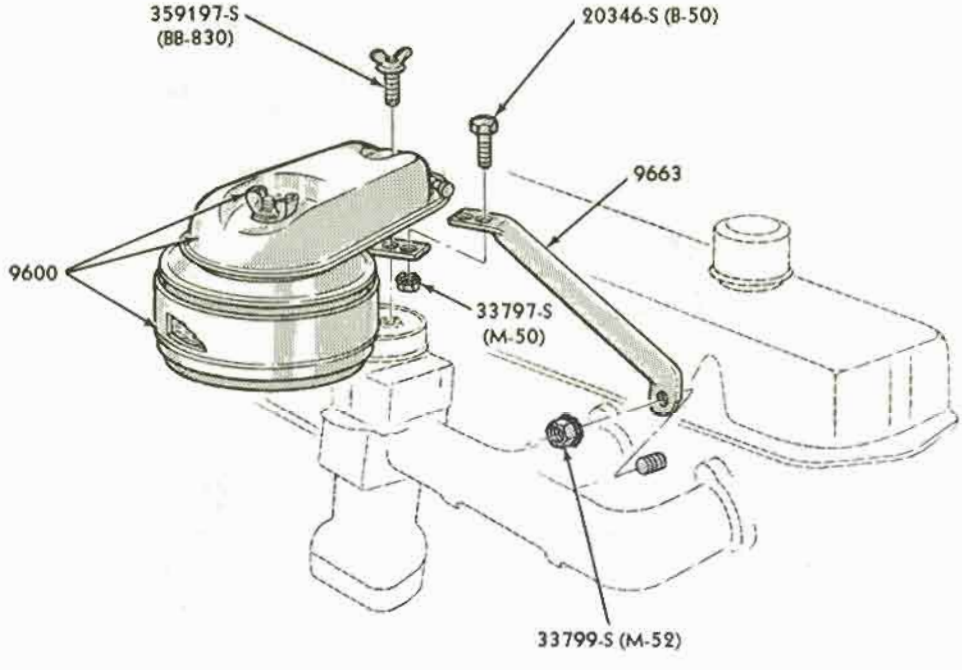

P-5782

AIR CLEANER - OIL BATH TYPE - 6 CYLINDER
1966/67 FORD (240 ENGINE TAXI and POLICE)

COPYRIGHT © 1975 — FORD MOTOR COMPANY — DEARBORN, MICHIGAN

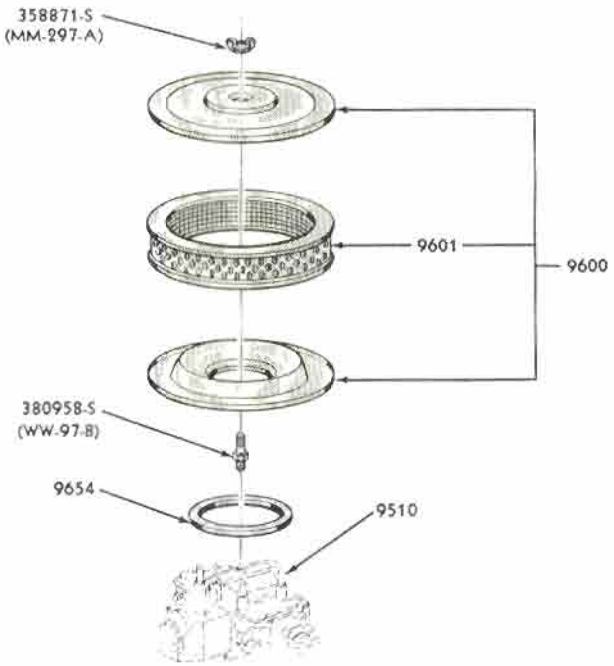

P-5784

AIR CLEANER - 8 CYLINDER

1965/67 FAIRLANE, MUSTANG (289-4V HIGH PERFORMANCE)
1966/68 FORD (427-4V and 428-4V P.C.) 1967/68 FAIRLANE (427-4V)
1968 MUSTANG (427-4V)

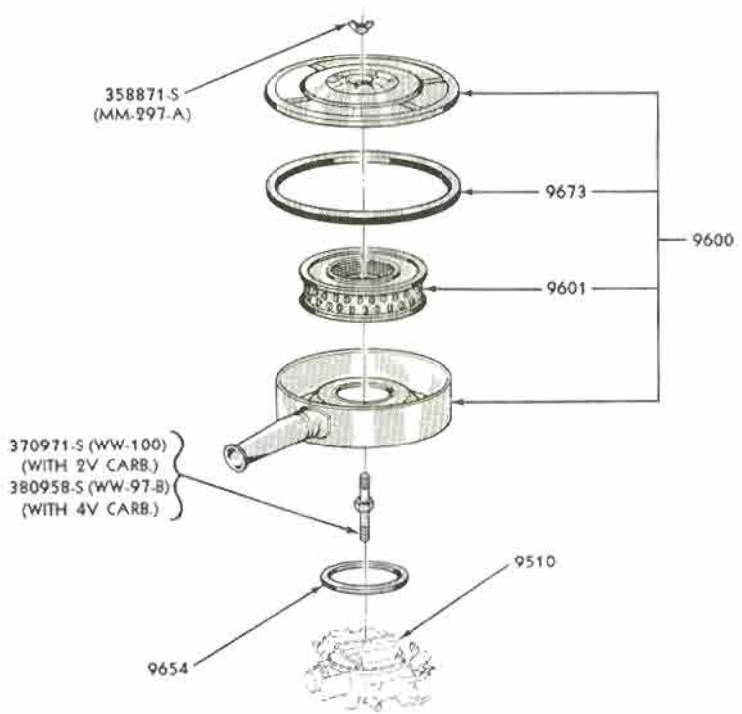

P-5783

AIR CLEANER - 8 CYLINDER

1965/67 FORD (352-4V, 390-2V, 390-4V, 428-4V) 1965 FORD (390-4V P. C.)
1966/67 FAIRLANE (390-2V, 390-4V) 1965/67 THUNDERBIRD (390-4V, 428-4V)

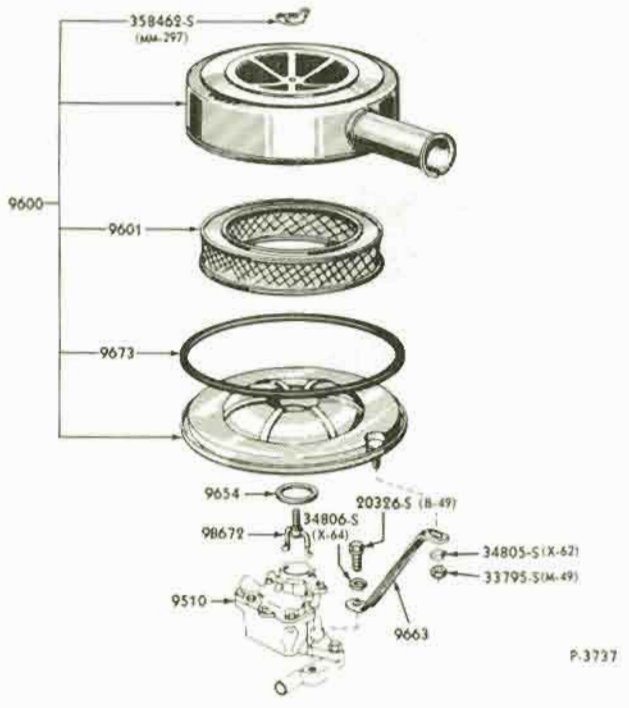

AIR CLEANER - 6 CYLINDER
1965/67 FAIRLANE, FALCON and MUSTANG
1966 BRONCO

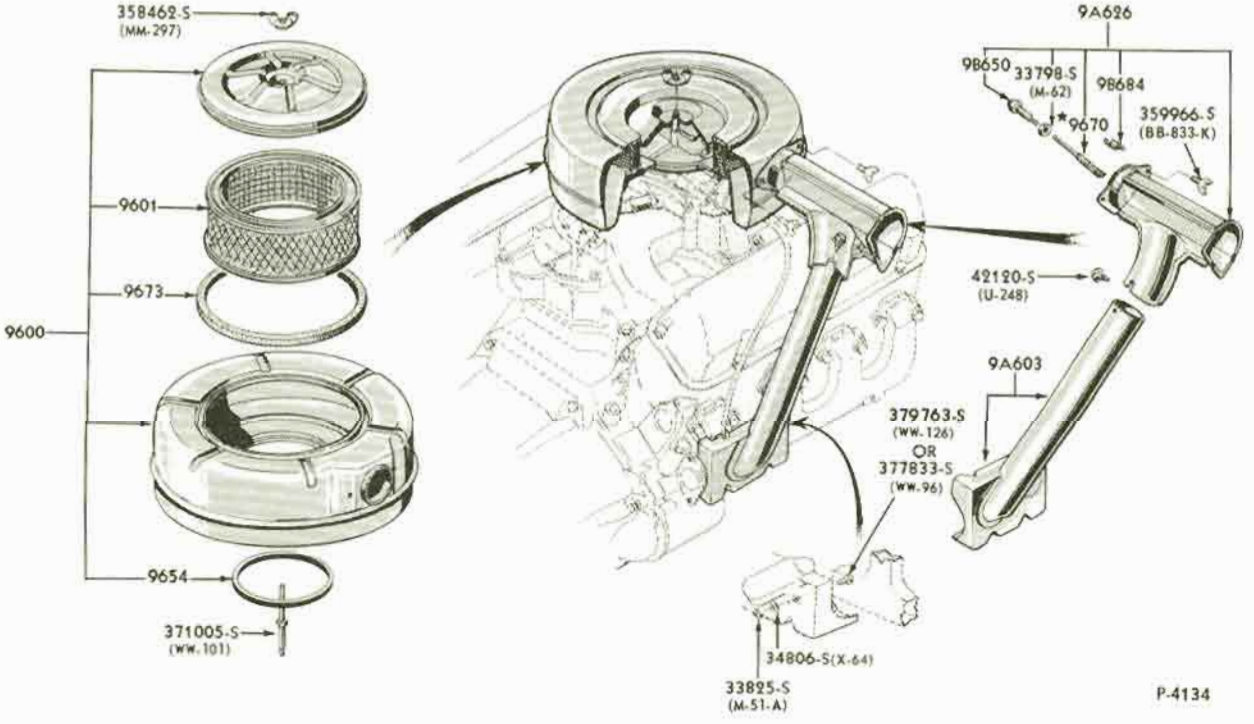

AIR CLEANER - 8 CYLINDER
1965/67 FORD, FAIRLANE and FALCON (289 ENGINES)
1965/67 MUSTANG (260, 289 ENGINES - except F SPECIAL)

COPYRIGHT © 1975 — FORD MOTOR COMPANY — DEARBORN, MICHIGAN

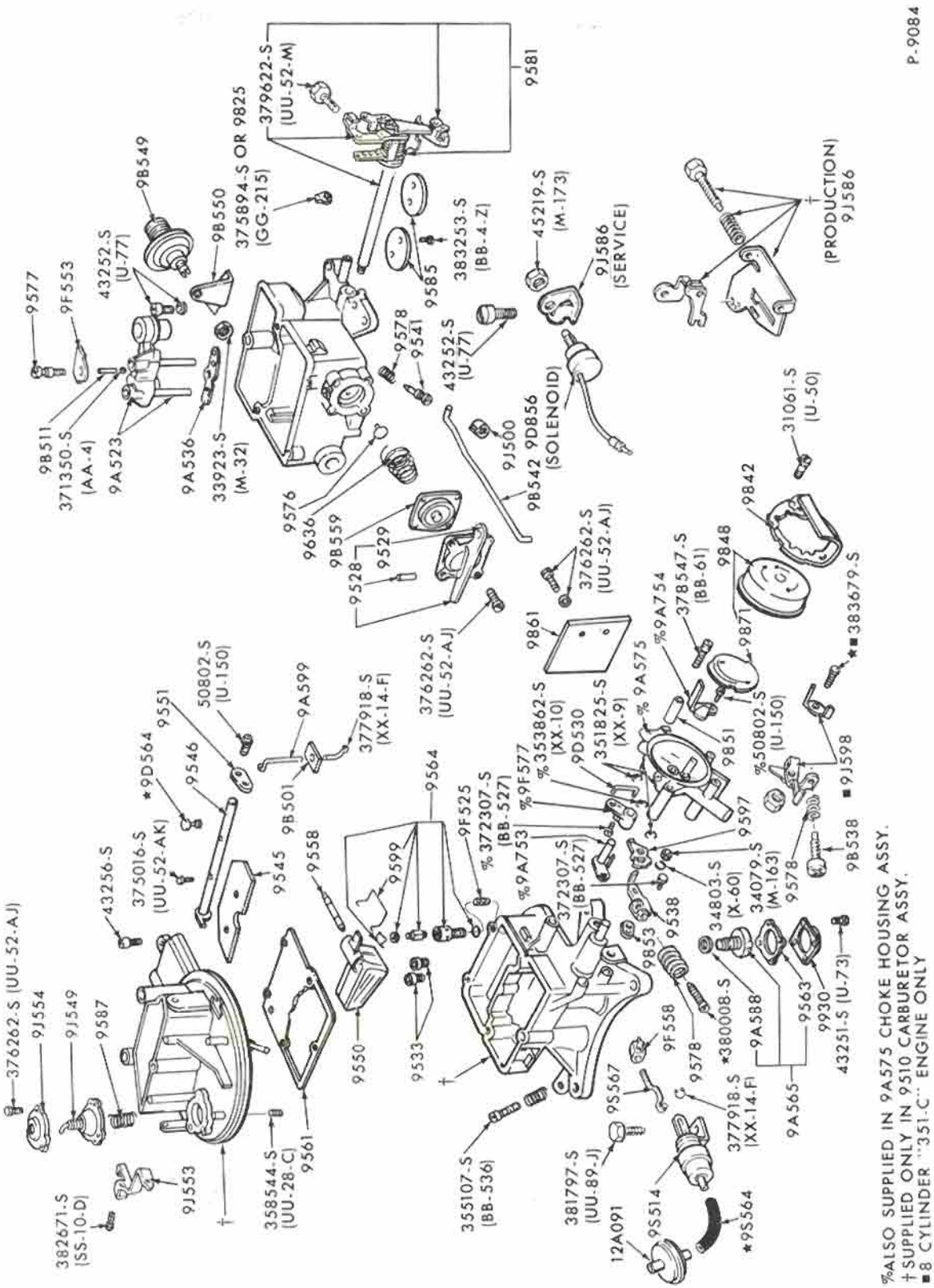

CARBURETOR - FORD 2V

1972 BRONCO, FORD, MAVERICK, MUSTANG, TORINO, THUNDERBIRD - 8 CYL., 302, 351, 400 ENGINES

COPYRIGHT © 1975 — FORD MOTOR COMPANY — DEARBORN, MICHIGAN

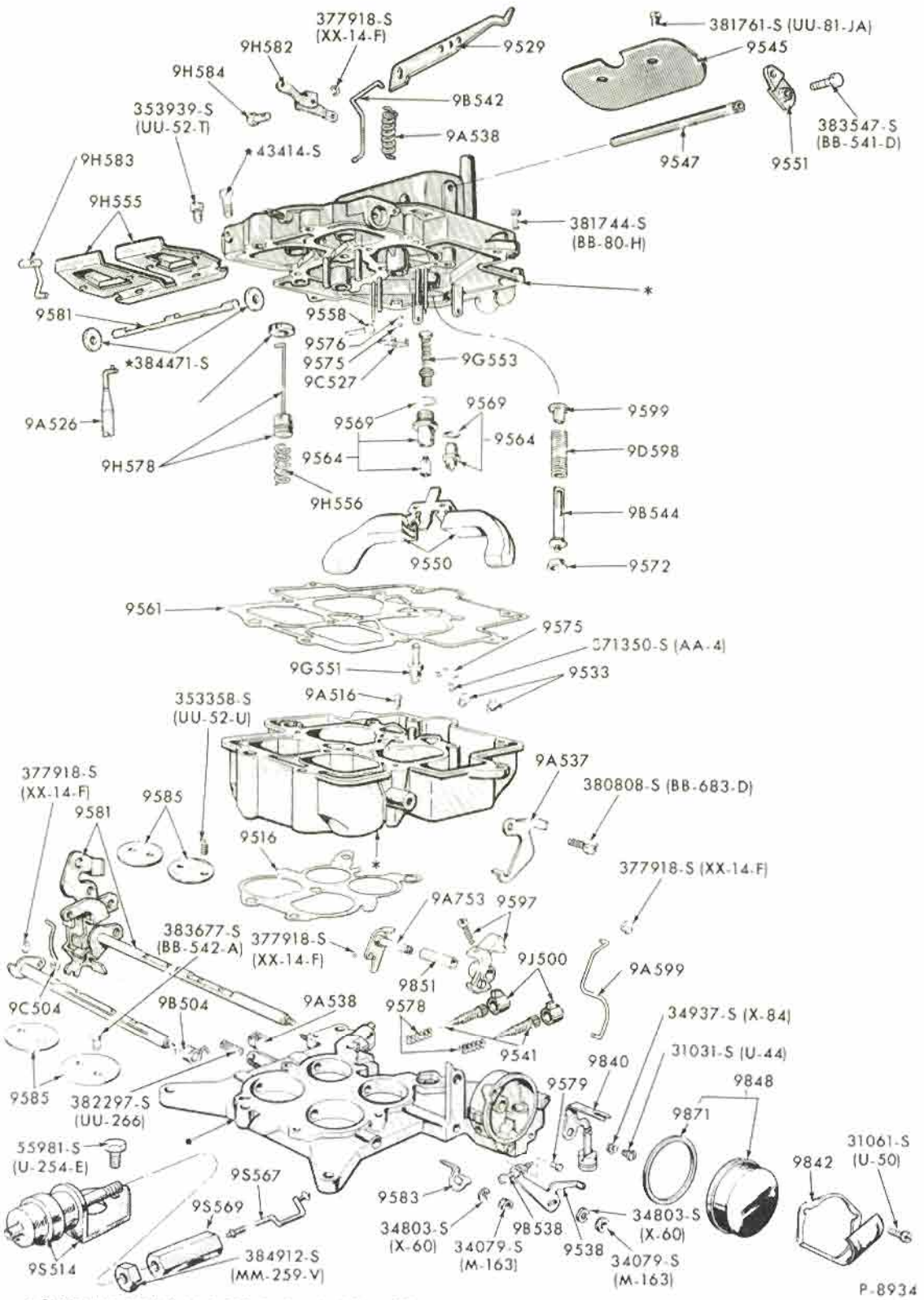

• SUPPLIED ONLY IN 9510 CARBURETOR ASSY.

CARBURETOR - FORD 4V (4300)

1972 FORD, MUSTANG, THUNDERBIRD, TORINO - 8 CYL. 351-C, 429, 460 ENGINES

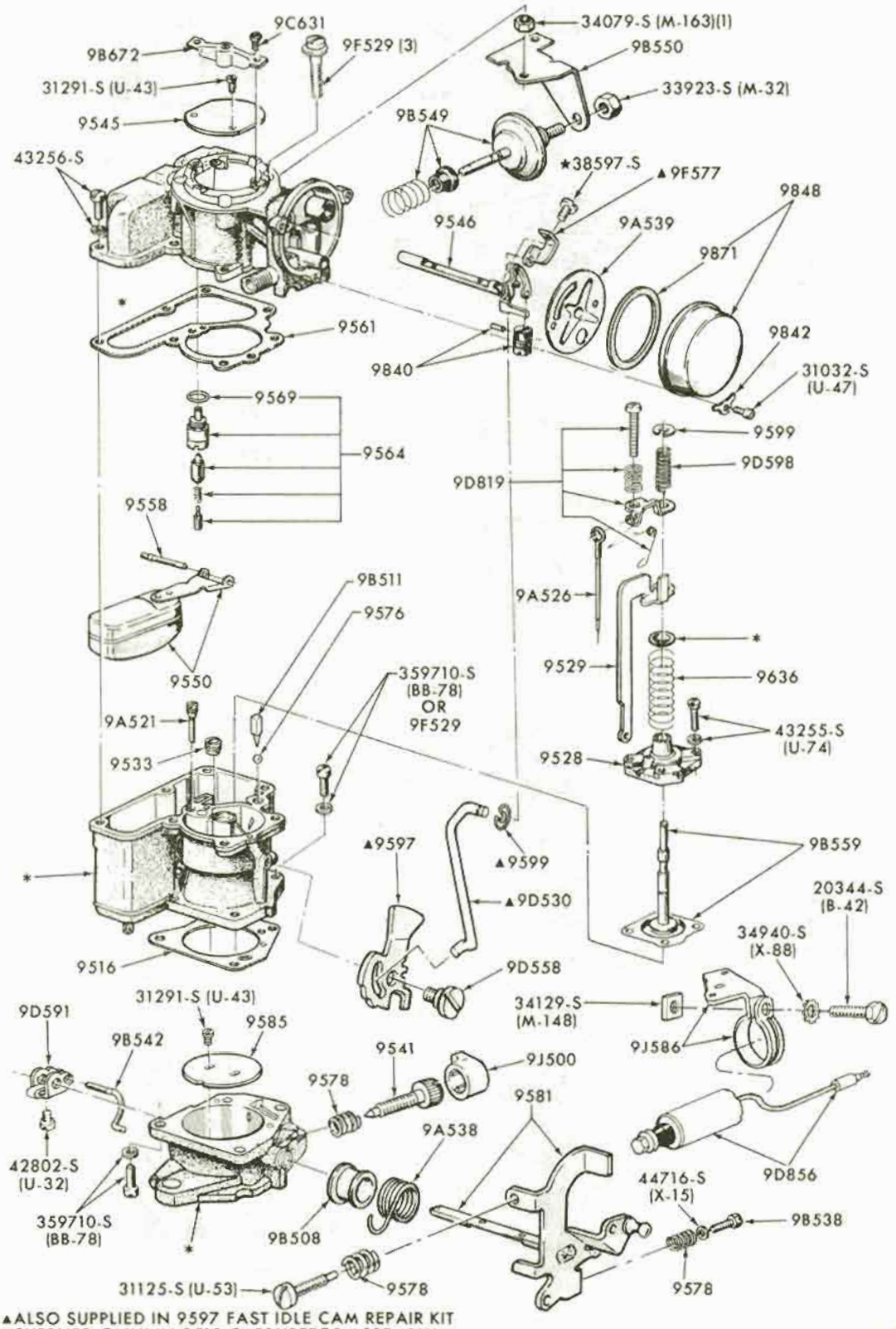

▲ALSO SUPPLIED IN 9597 FAST IDLE CAM REPAIR KIT
*SUPPLIED ONLY IN 9510 CARBURETOR ASSEMBLY

P-8904

CARBURETOR - CARTER 1V
1971/72 BRONCO, MAVERICK, MUSTANG, TORINO - 6 CYL. 170, 200, 240 ENGINES

COPYRIGHT © 1975 — FORD MOTOR COMPANY — DEARBORN, MICHIGAN

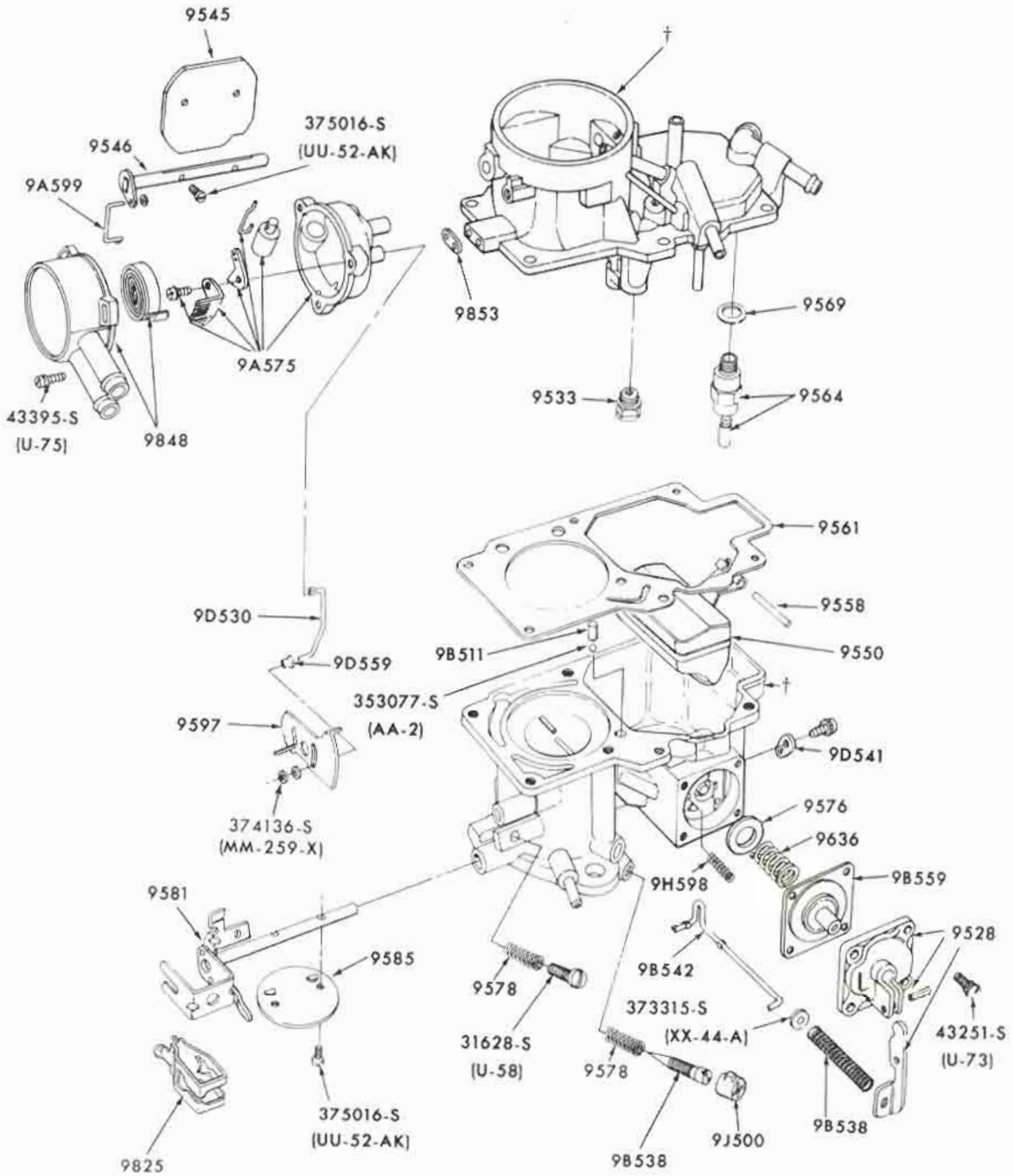

† SUPPLIED IN 9510 CARBURETOR ASSEMBLY

P-7967

CARBURETOR - FORD IV

1971/72 PINTO - 4 CYLINDER 98 (1600 cc) ENGINE

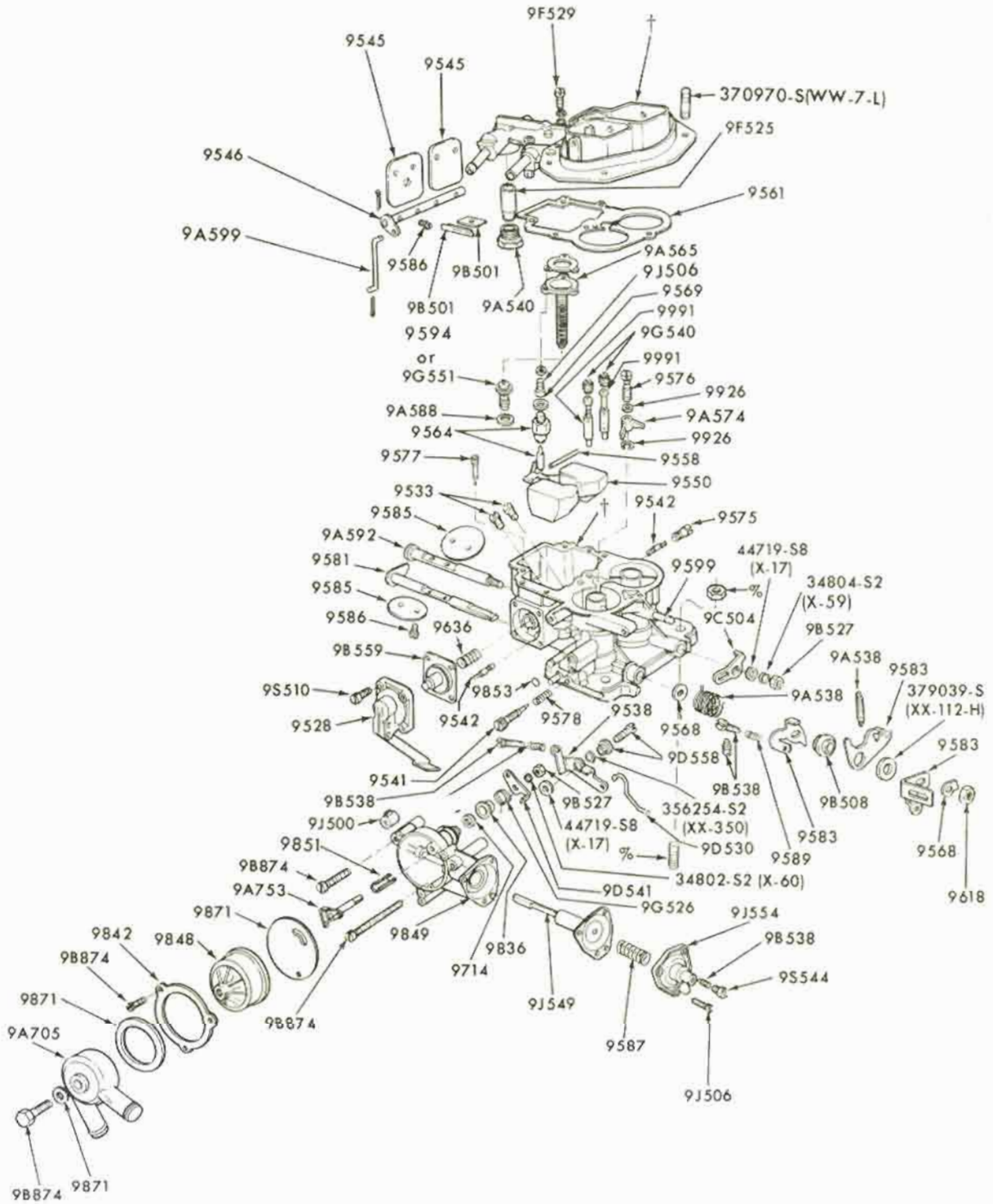

† SUPPLIED ONLY IN 9510 CARBURETOR ASSEMBLY
% REFER TO APPROPRIATE CARBURETOR PARTS LIST

P-7965

CARBURETOR - HOLLEY 2V
1971/72 PINTO - 4 CYLINDER 122 (2000 cc) ENGINE

COPYRIGHT © 1975 — FORD MOTOR COMPANY — DEARBORN, MICHIGAN

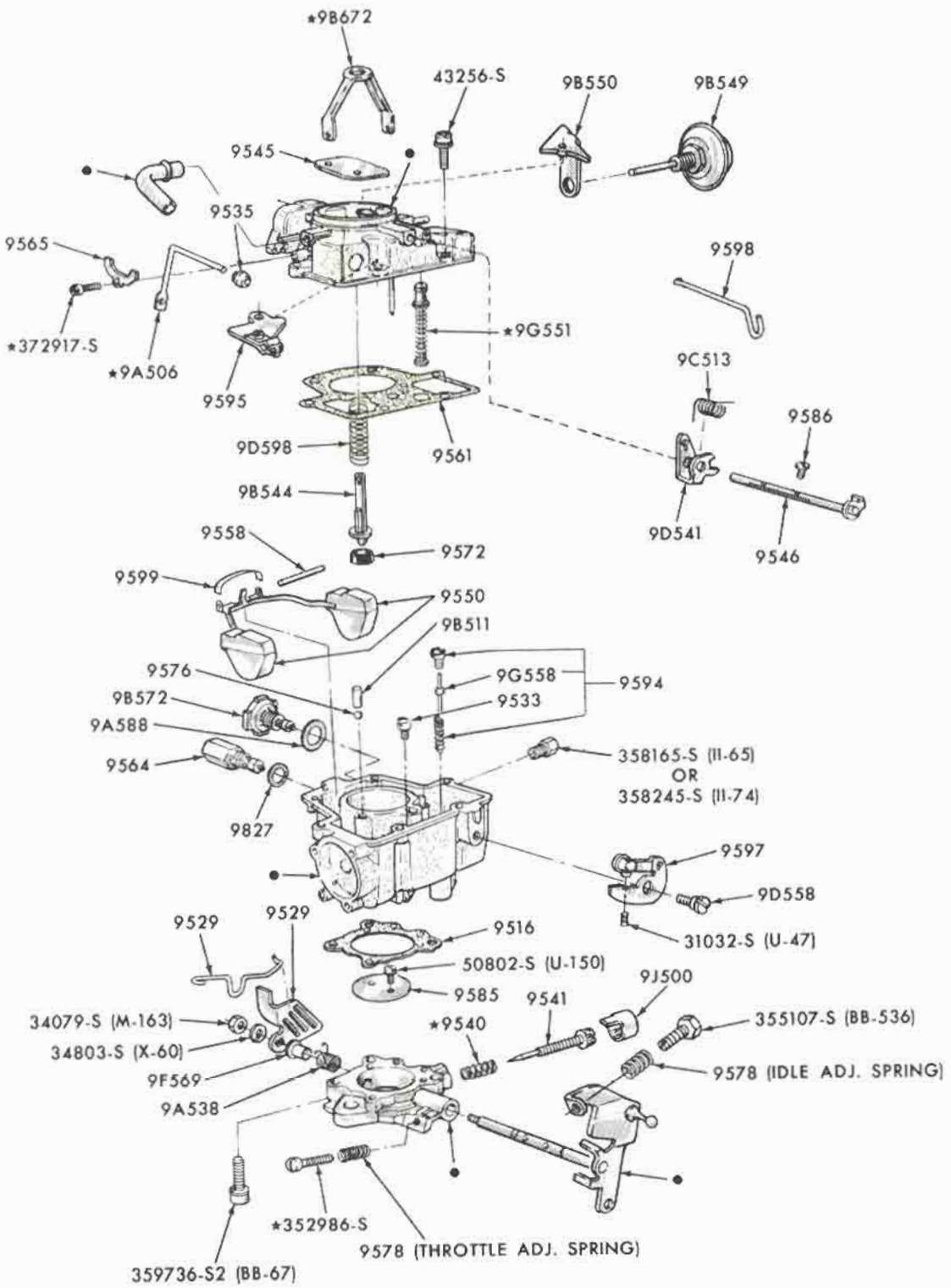

•SUPPLIED ONLY IN 9510 CARBURETOR ASSY.

P-7586

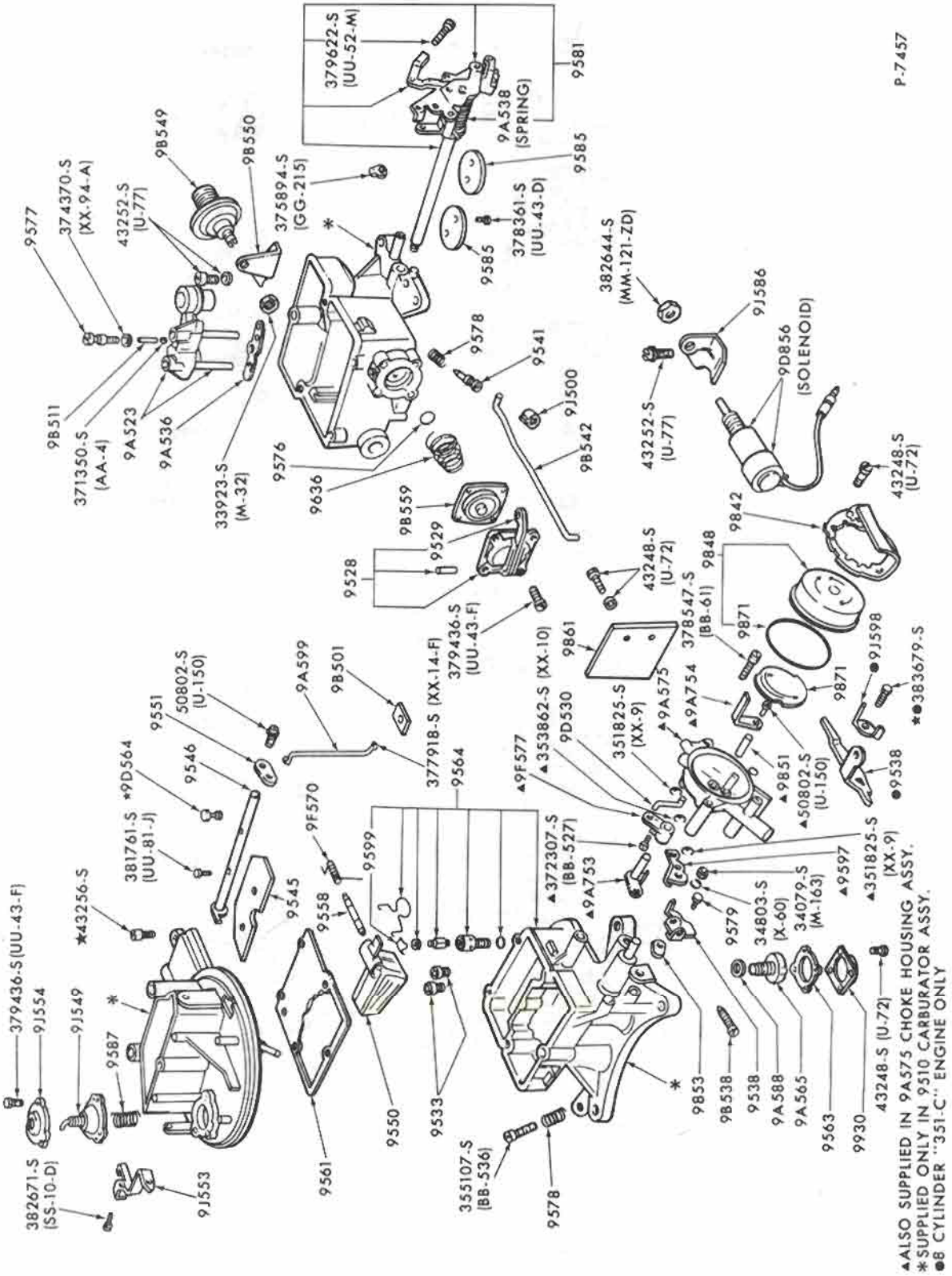

▲ALSO SUPPLIED IN 9A575 CHOKE HOUSING ASSY.
*SUPPLIED ONLY IN 9510 CARBURATOR ASSY.
●8 CYLINDER "351-C" ENGINE ONLY

CARBURETOR - FORD 2V

1970/71 FORD, FAIRLANE, MAVERICK, MUSTANG, BRONCO, FALCON (8 CYL. 302,351,390,400,429 ENGINES)

COPYRIGHT © 1975 — FORD MOTOR COMPANY — DEARBORN, MICHIGAN

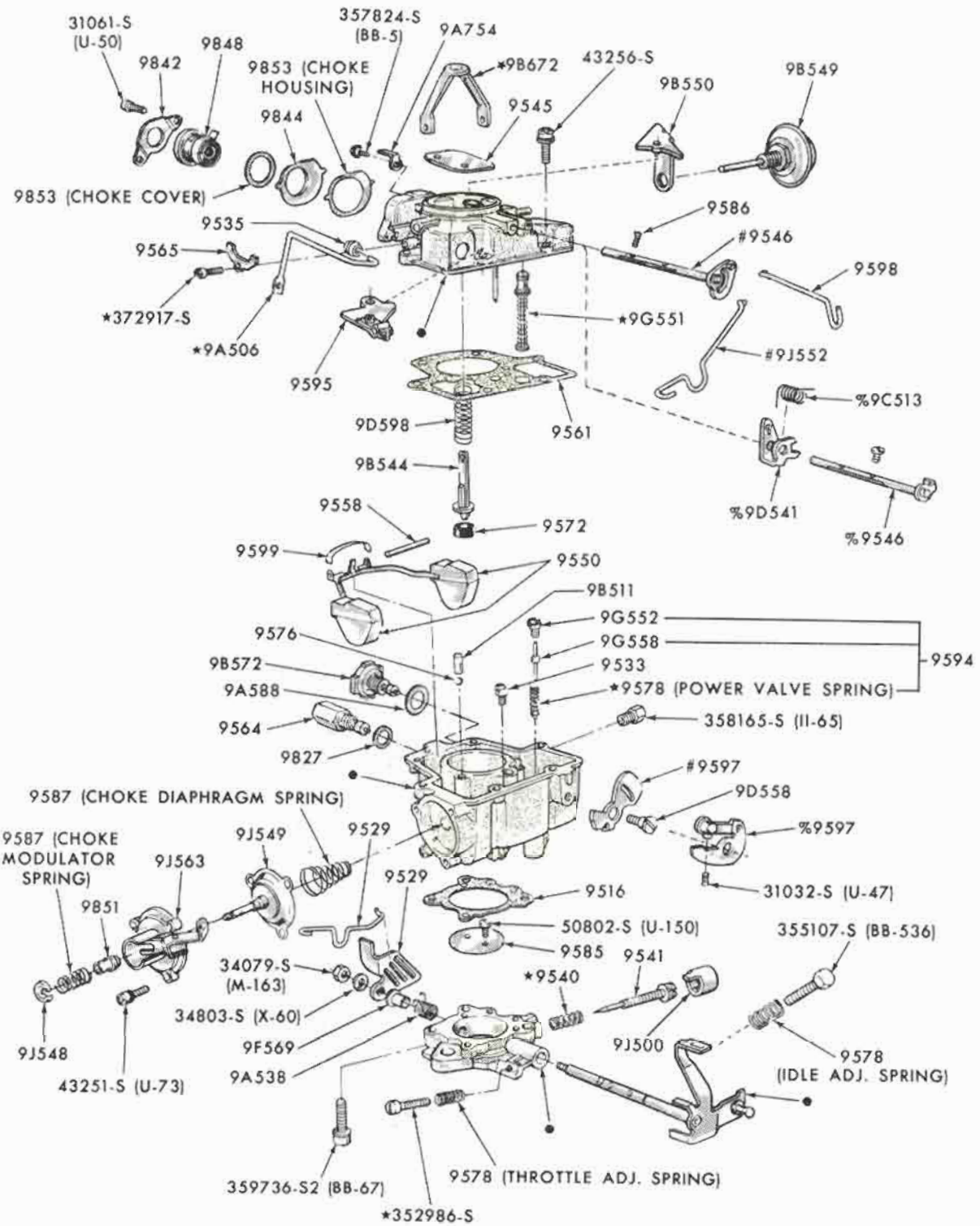

• SUPPLIED ONLY IN 9510 CARBURETOR ASSY.
%MANUAL CHOKE
AUTOMATIC CHOKE

P-7460

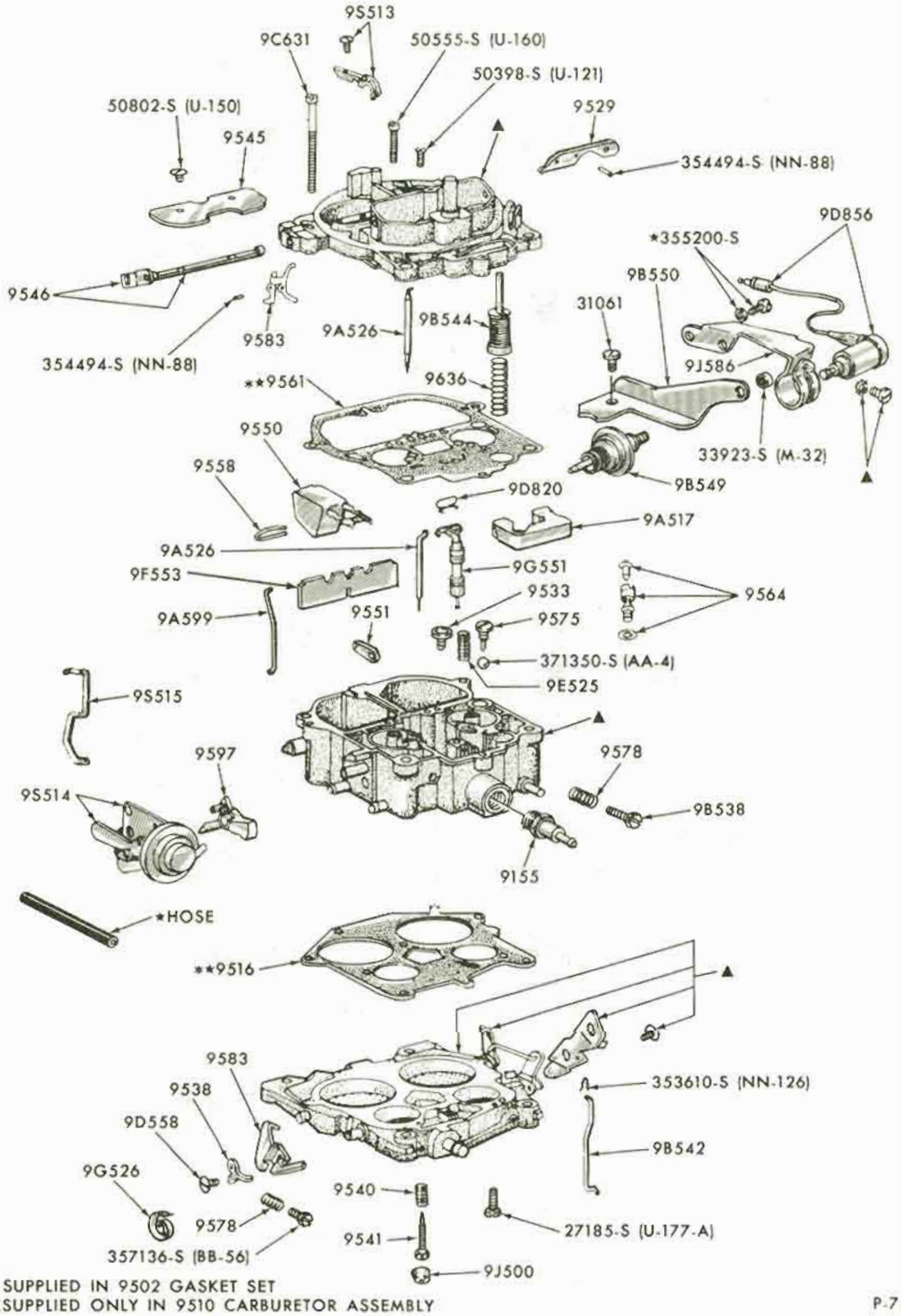

*SUPPLIED IN 9502 GASKET SET
▲SUPPLIED ONLY IN 9510 CARBURETOR ASSEMBLY

P-7411

CARBURETOR - ROCHESTER 4V - QUADRAJET
1970/71 FAIRLANE (8 CYLINDER 429 ENGINE)

COPYRIGHT © 1975 — FORD MOTOR COMPANY — DEARBORN, MICHIGAN

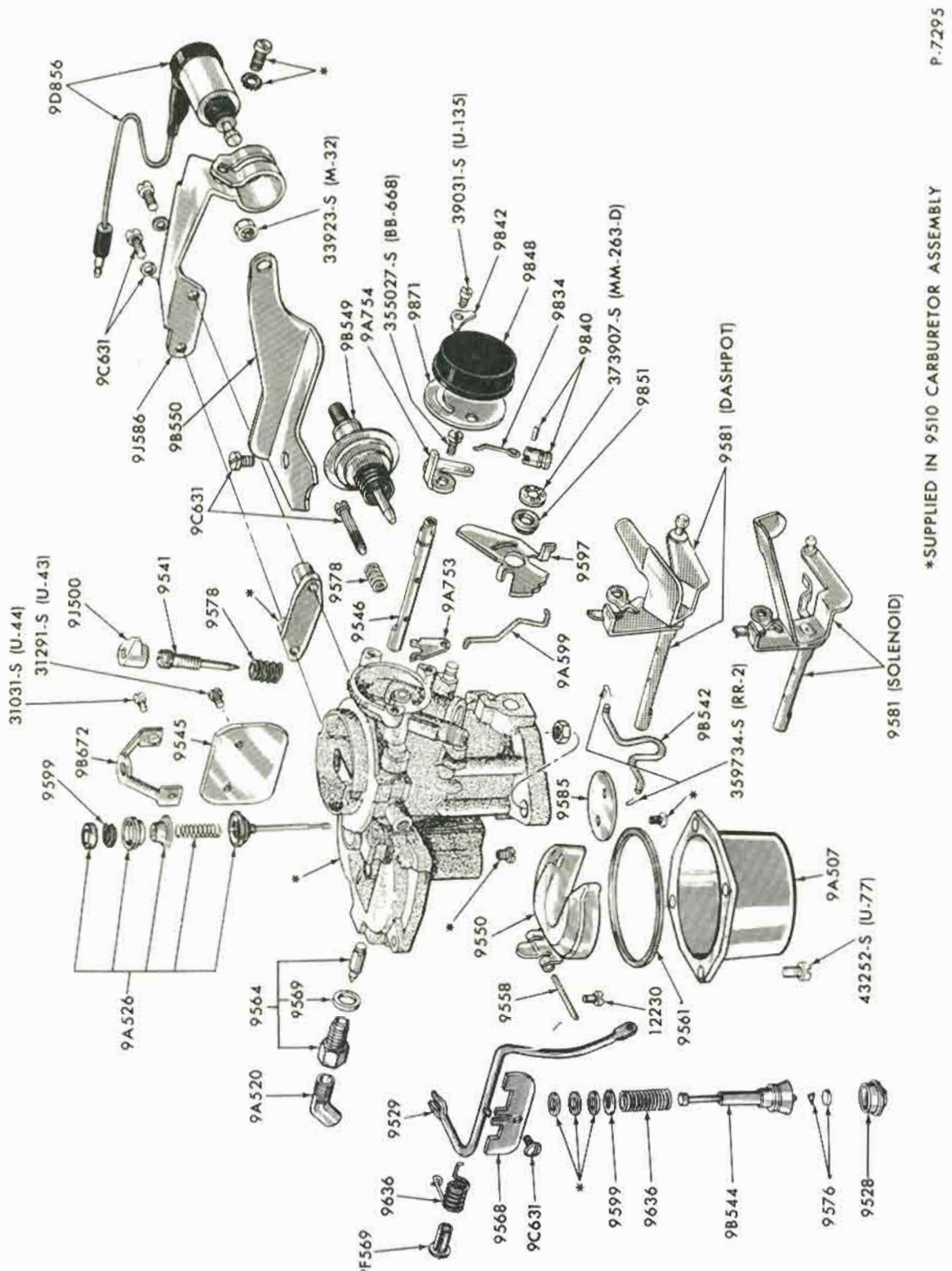

CARBURETOR - CARTER RBS
1970/72 FAIRLANE/TORINO, MAVERICK, MUSTANG (6 CYLINDER 250 ENGINE)

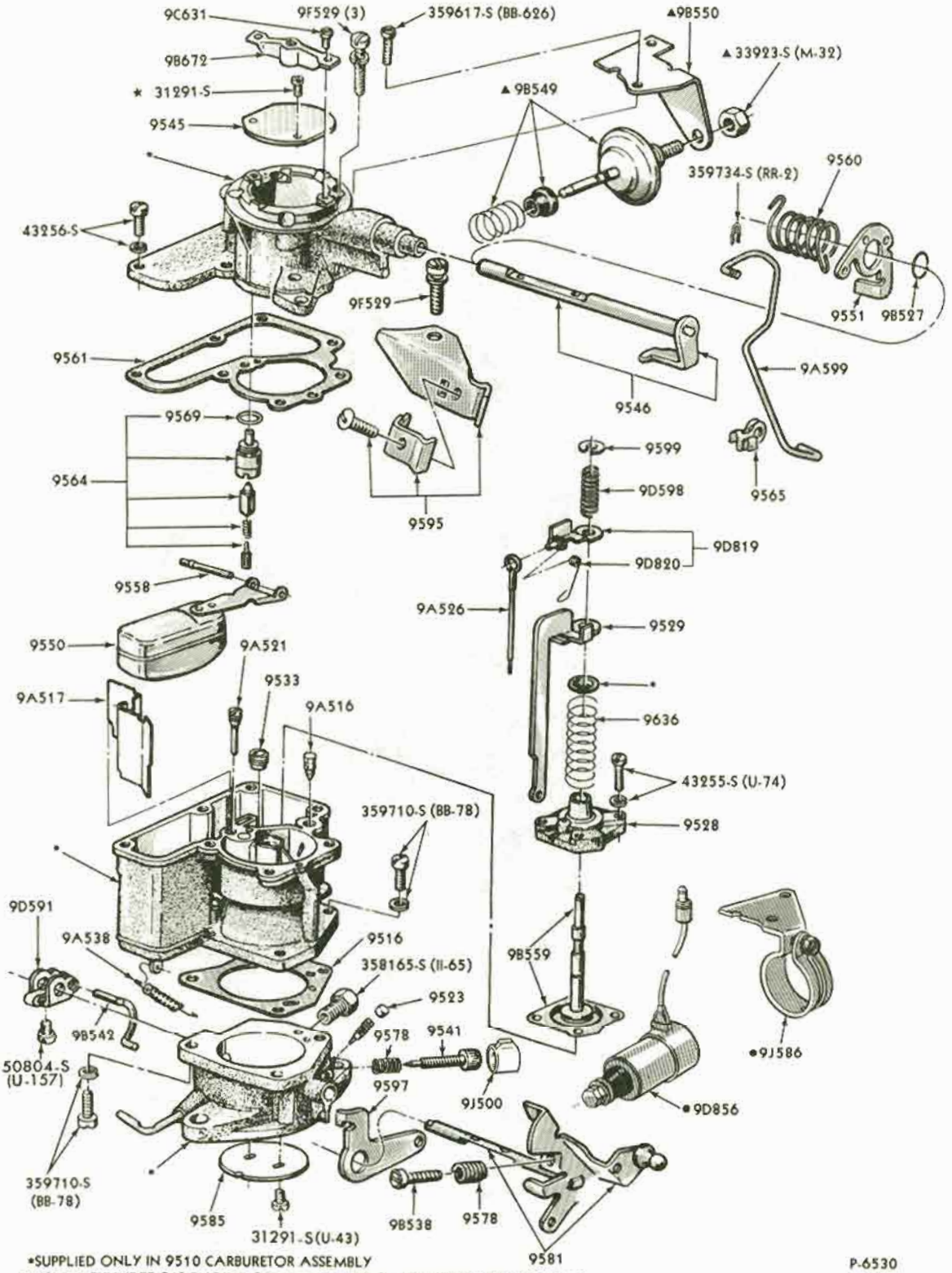

•SUPPLIED ONLY IN 9510 CARBURETOR ASSEMBLY
•USED 6 CYLINDER 240 ENGINE ONLY WHEN 9B549 DASHPOT IS NOT INSTALLED
▲USED WHEN 9D856 SOLENOID IS NOT INSTALLED

P-6530

CARBURETOR - CARTER YF
1968/70 BRONCO (6 CYLINDER 170 ENGINE)

COPYRIGHT © 1975 — FORD MOTOR COMPANY — DEARBORN, MICHIGAN

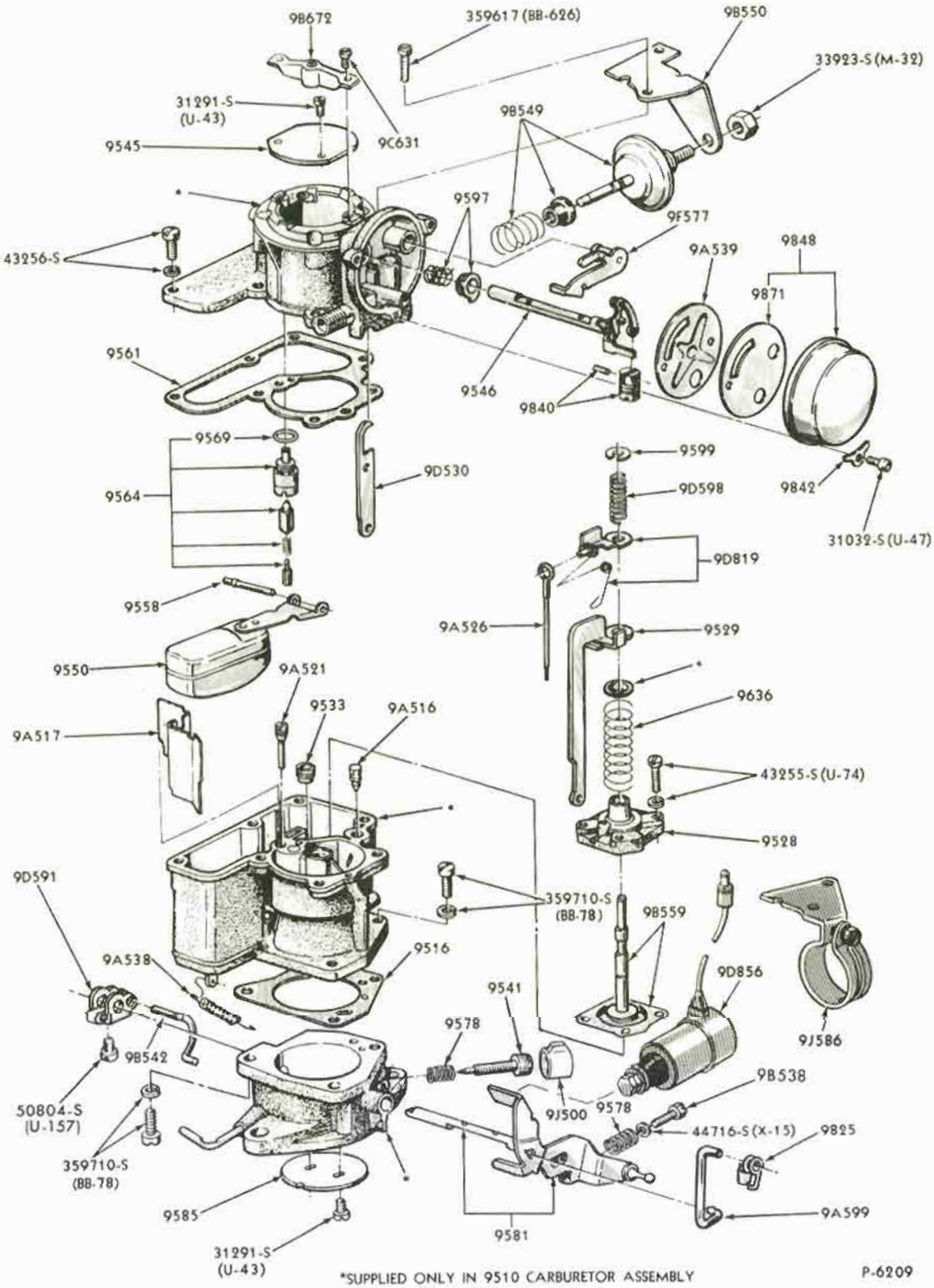

*SUPPLIED ONLY IN 9510 CARBURETOR ASSEMBLY

P-6209

CARBURETOR - CARTER (THERMOSTATIC CHOKE)
1968/70 (6 CYLINDER 170, 200, 240 ENGINES)

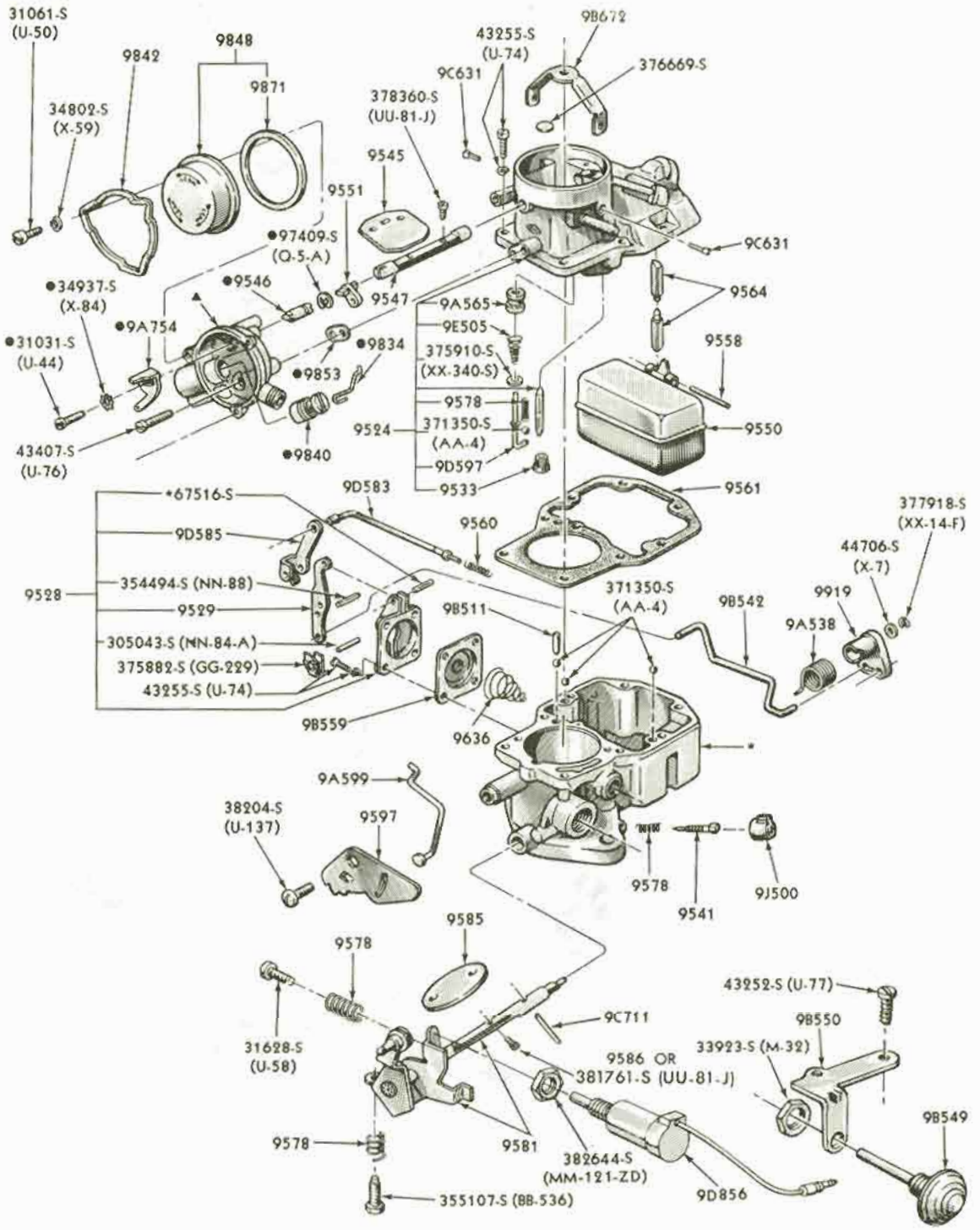

*SUPPLIED IN 9510 CARBURETOR ASSEMBLY
●ALSO SUPPLIED IN 9A575 CHOKE HOUSING ASSEMBLY
▲SUPPLIED ONLY IN 9A575 CHOKE HOUSING ASSEMBLY

P-6531

CARBURETOR - FORD
1967/69 (6 CYLINDER 240,250 ENGINES)

COPYRIGHT © 1975 — FORD MOTOR COMPANY — DEARBORN, MICHIGAN

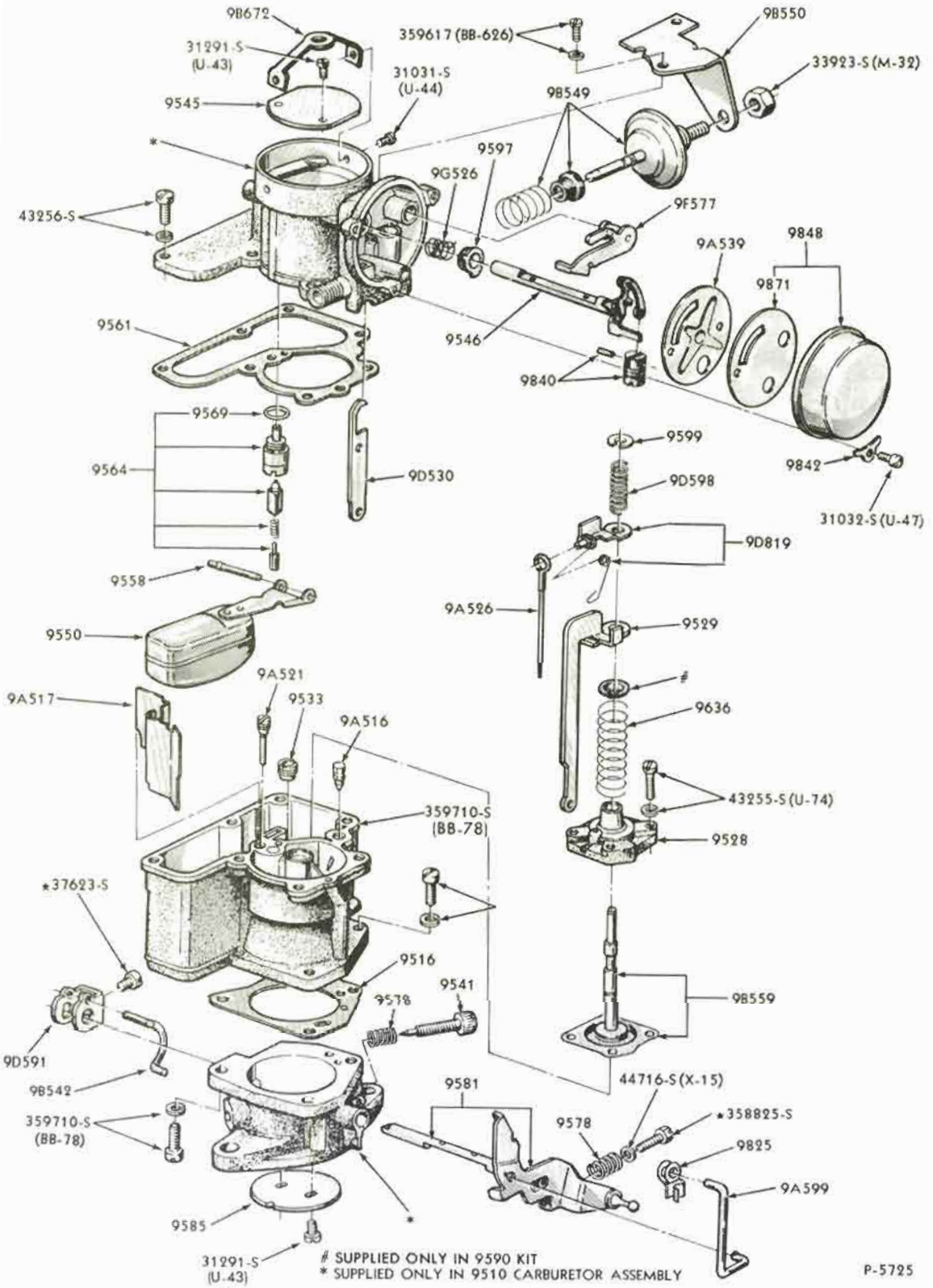

CARBURETOR - CARTER
1967 (6 CYLINDER 170, 200 ENGINES) with IMCO

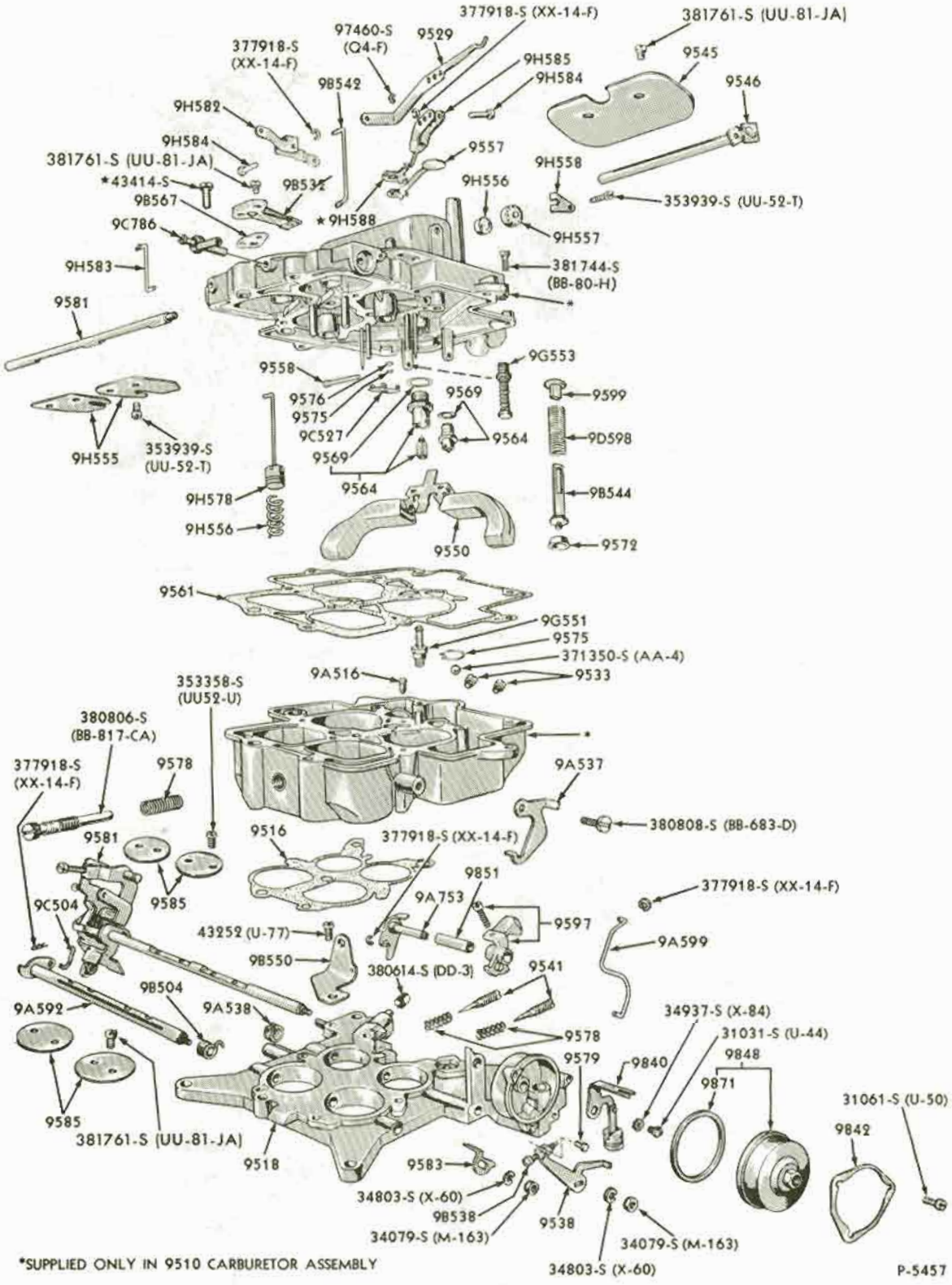

*SUPPLIED ONLY IN 9510 CARBURETOR ASSEMBLY

P-5457

CARBURETOR - FORD 4V
1966/70 (8 CYLINDER 428 ENGINE)
1967/71 (8 CYLINDER 289,302,351,390,429 ENGINES)

COPYRIGHT © 1975 — FORD MOTOR COMPANY — DEARBORN, MICHIGAN

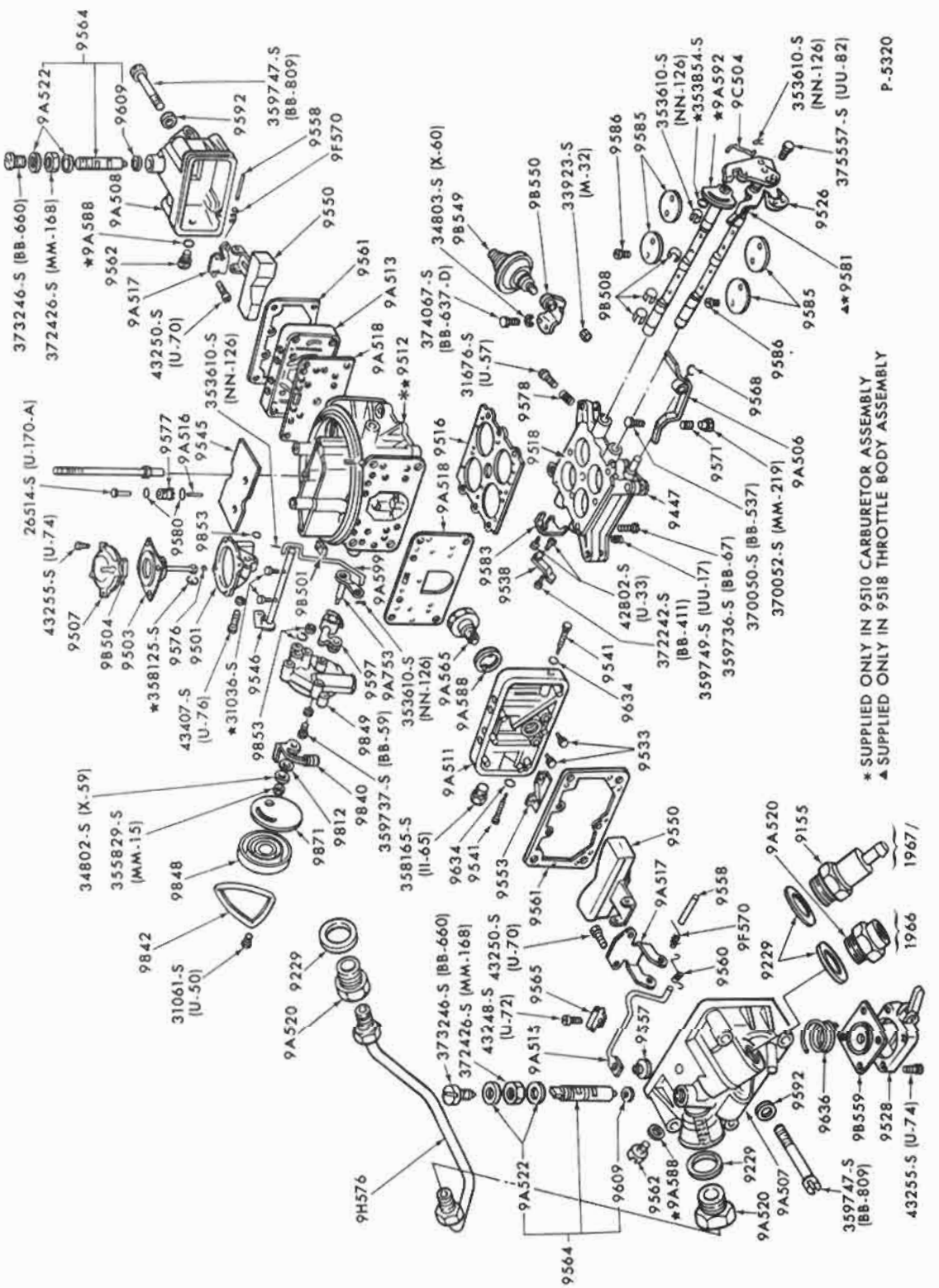

CARBURETOR - HOLLEY 4V
1966/68 FAIRLANE GT & GTA (8 CYLINDER 390 ENGINE)
1967/68 FAIRLANE & MUSTANG (8 CYLINDER 390 ENGINE)
1968/ FAIRLANE & MUSTANG (8 CYLINDER 302 BOSS, 427 SPECIAL & 428 COBRA JET, 429 ENGINES)

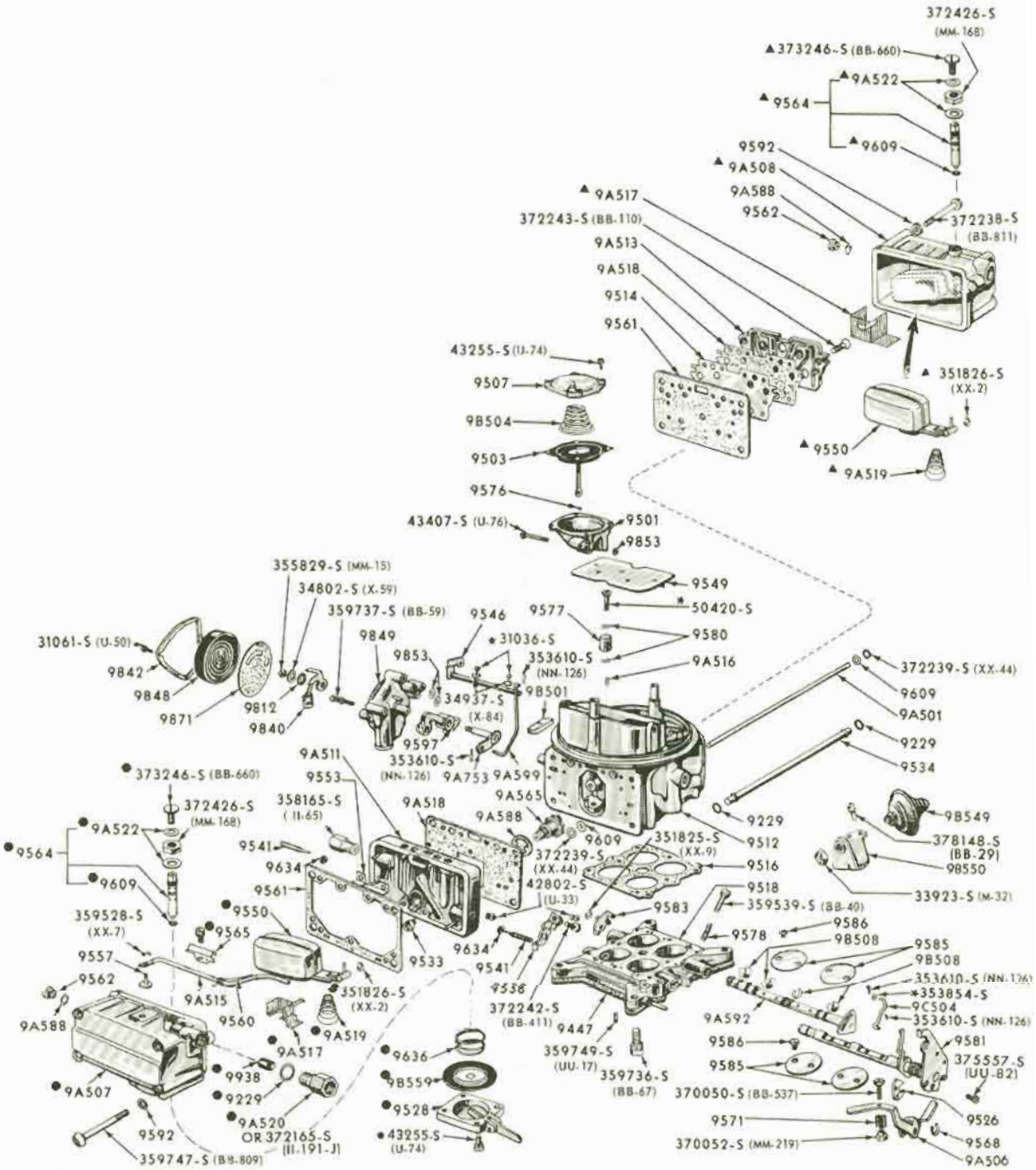

● ALSO SUPPLIED IN B8AZ-9A507-A BOWL AND FLOAT ASS'Y. (COMPLETE)

▲ ALSO SUPPLIED IN B8AZ-9A508-A BOWL AND FLOAT ASS'Y. (COMPLETE)

P-3231

CARBURETOR - HOLLEY 4V (WITH ADJ. NEEDLE & SEAT ASSY. - FUEL INLET)
1965/69 (8 CYLINDER 427 ENGINE)

COPYRIGHT © 1975 — FORD MOTOR COMPANY — DEARBORN, MICHIGAN

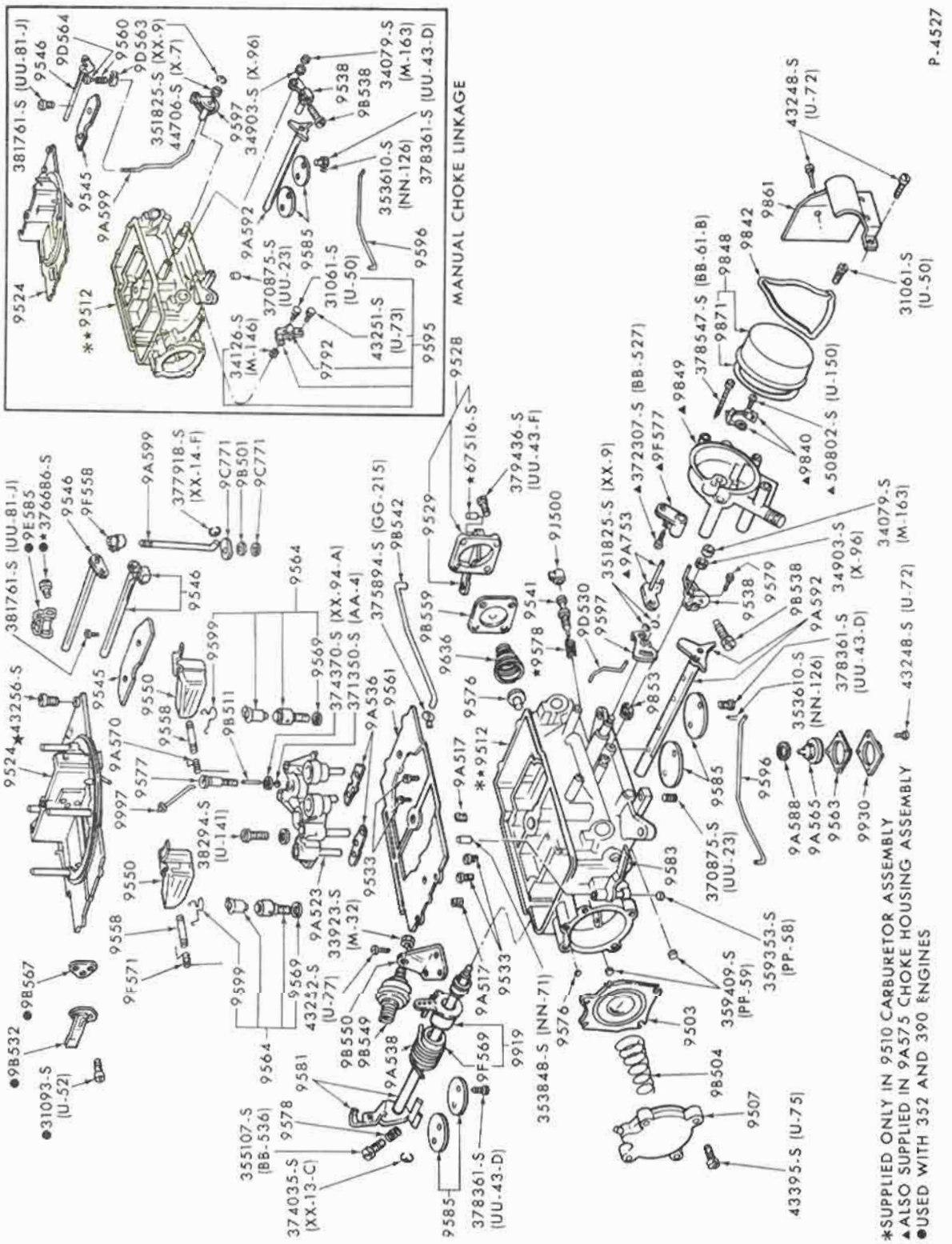

CARBURETOR - FORD 4V (WITH PISTON TYPE CHOKE and ACCELERATOR PUMP CHECK VALVE)
1965/69 (8 CYLINDER 289,302,352,390,428 ENGINES)

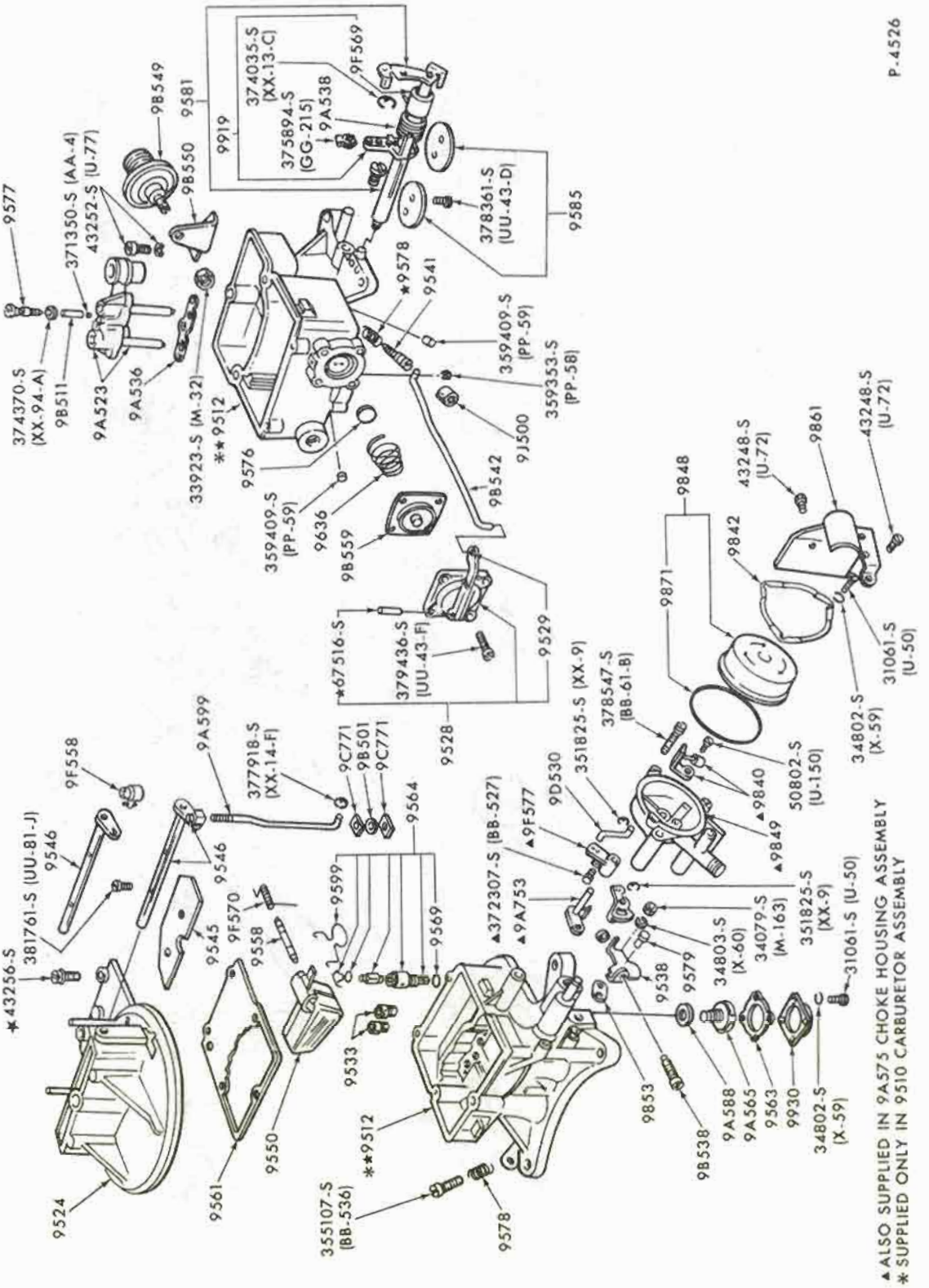

CARBURETOR - FORD 2V (WITH PISTON TYPE CHOKE and ACCELERATOR PUMP CHECK VALVE)
1965/69 (8 CYLINDER 260, 289, 302, 351, 390, 429 ENGINES)

COPYRIGHT © 1975 — FORD MOTOR COMPANY — DEARBORN, MICHIGAN

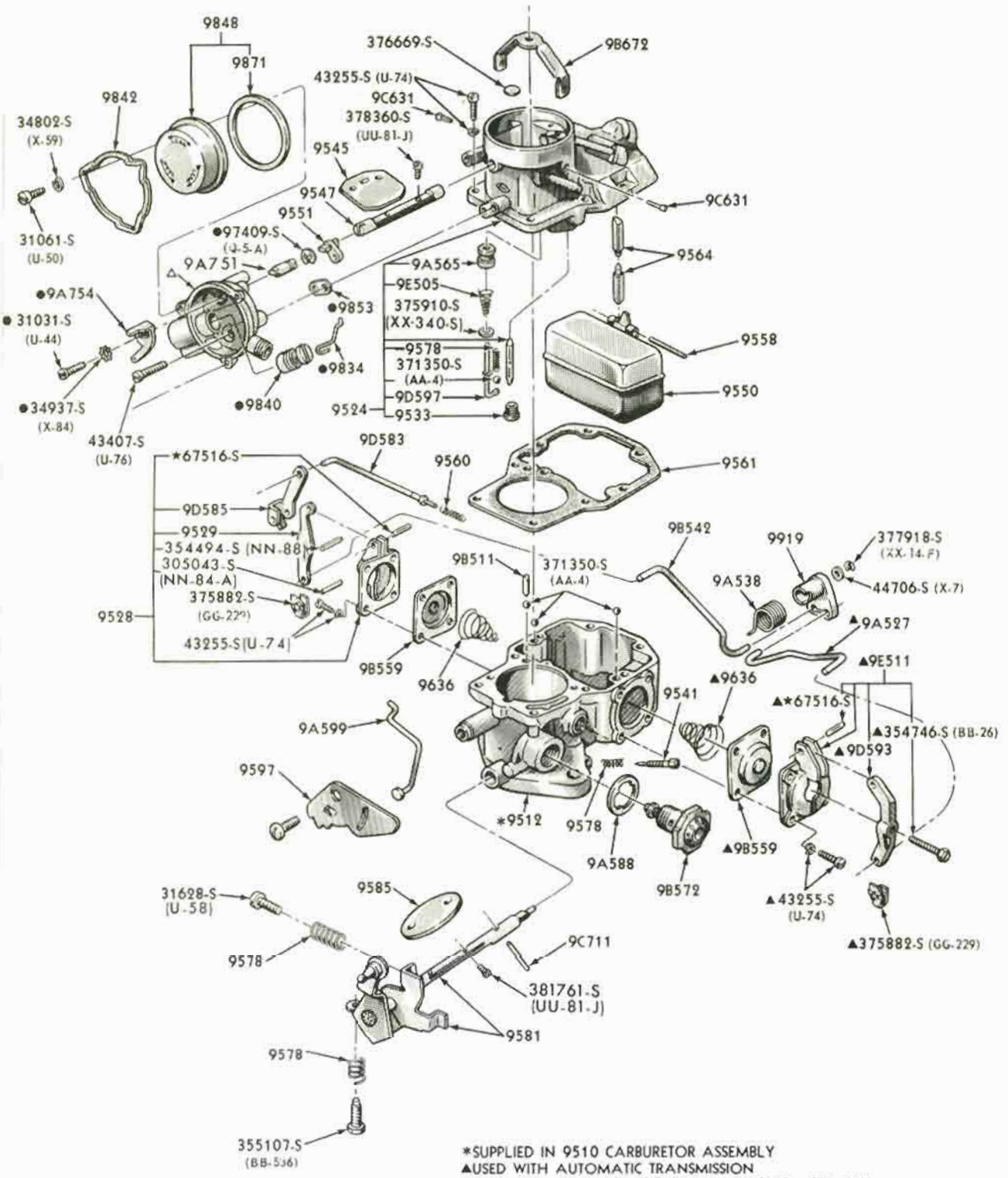

*SUPPLIED IN 9510 CARBURETOR ASSEMBLY
▲USED WITH AUTOMATIC TRANSMISSION
●ALSO SUPPLIED IN 9A575 CHOKE HOUSING ASSEMBLY
△SUPPLIED ONLY IN 9A575 CHOKE HOUSING ASSEMBLY P-4729

CARBURETOR - FORD
1965/66 (6 CYLINDER 240 ENGINE)

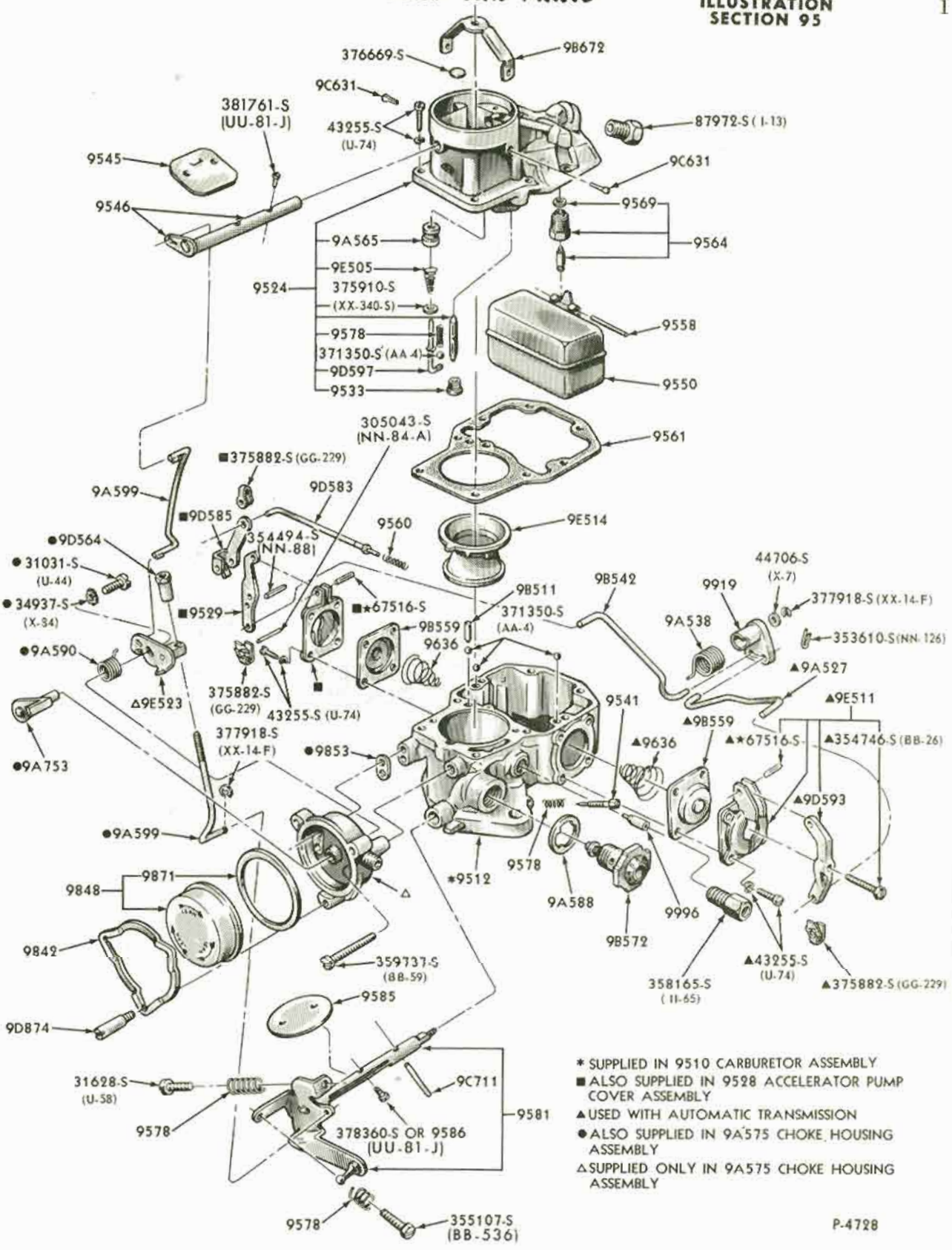

* SUPPLIED IN 9510 CARBURETOR ASSEMBLY
■ ALSO SUPPLIED IN 9528 ACCELERATOR PUMP COVER ASSEMBLY
▲ USED WITH AUTOMATIC TRANSMISSION
● ALSO SUPPLIED IN 9A575 CHOKE HOUSING ASSEMBLY
Δ SUPPLIED ONLY IN 9A575 CHOKE HOUSING ASSEMBLY

P-4728

CARBURETOR - FORD
1965/69 (6 CYLINDER 170, 200 ENGINES)

COPYRIGHT © 1975 — FORD MOTOR COMPANY — DEARBORN, MICHIGAN

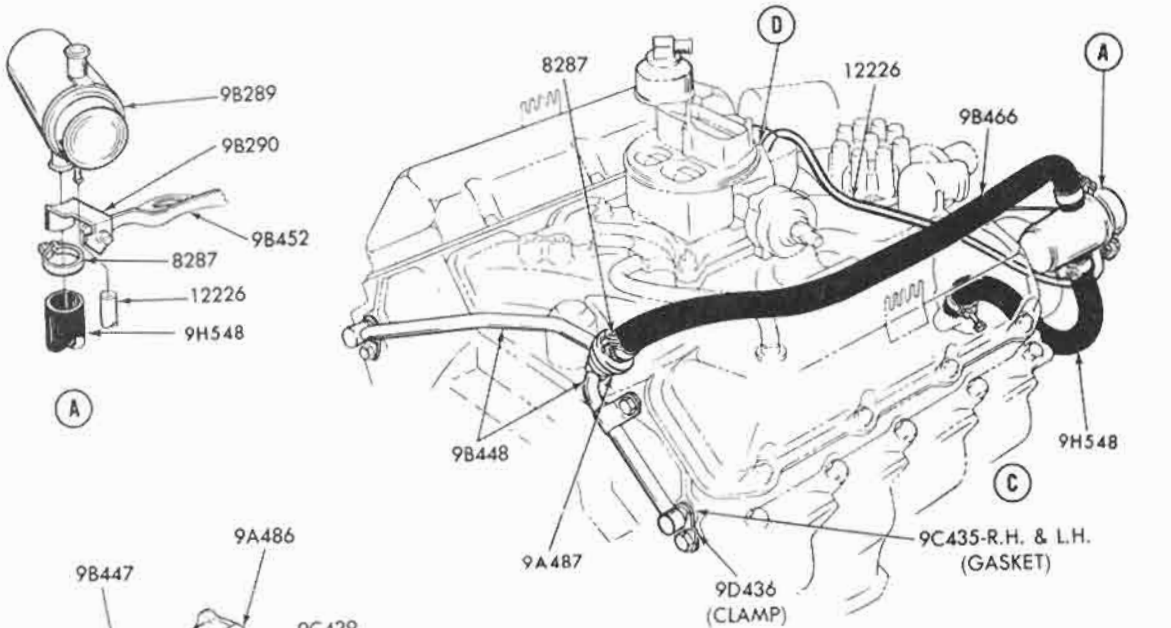

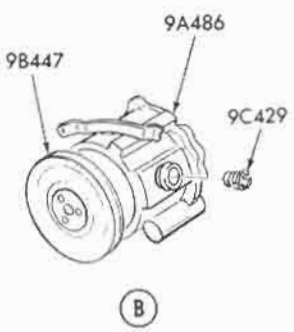

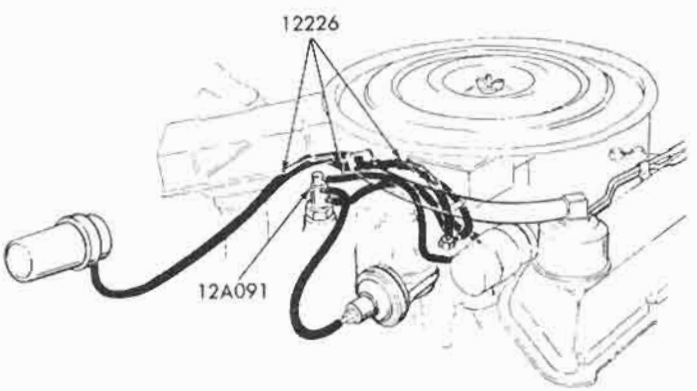

DISTRIBUTOR VACUUM HOSES

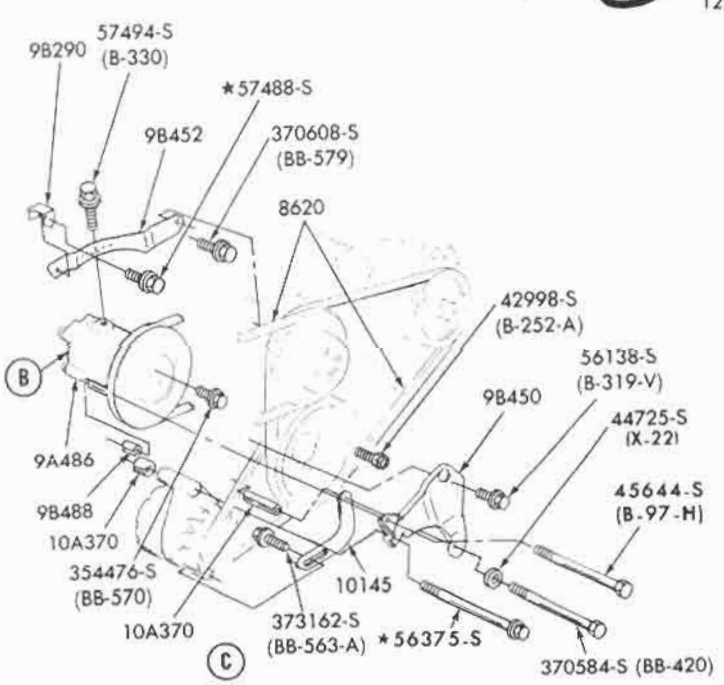

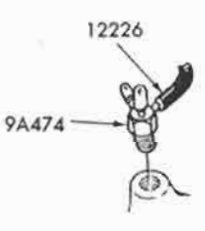

P-8525

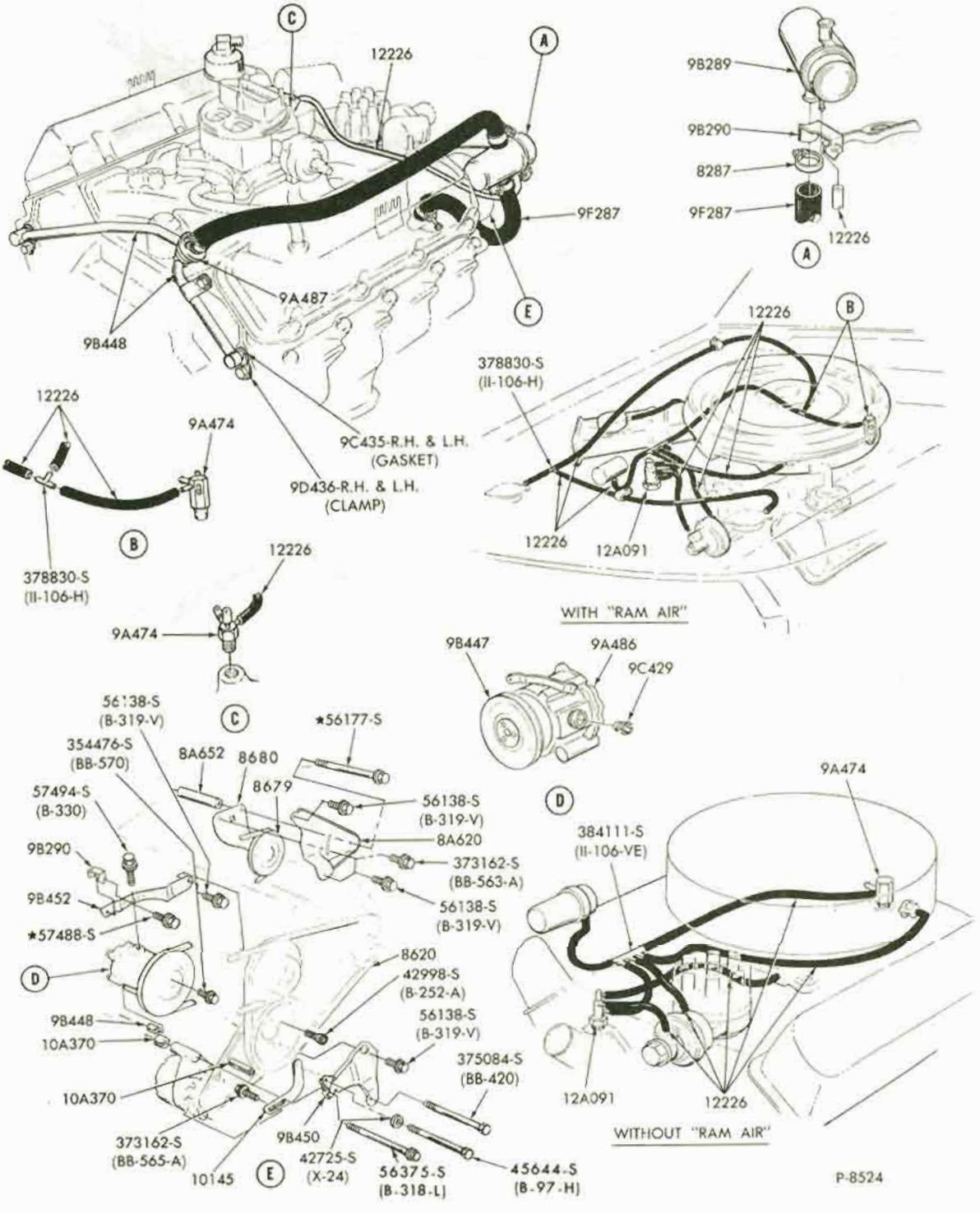

THERMACTOR EMISSION CONTROL SYSTEM
1971 MUSTANG 8 CYLINDER 429 COBRA JET ENGINE

COPYRIGHT © 1975 — FORD MOTOR COMPANY — DEARBORN, MICHIGAN

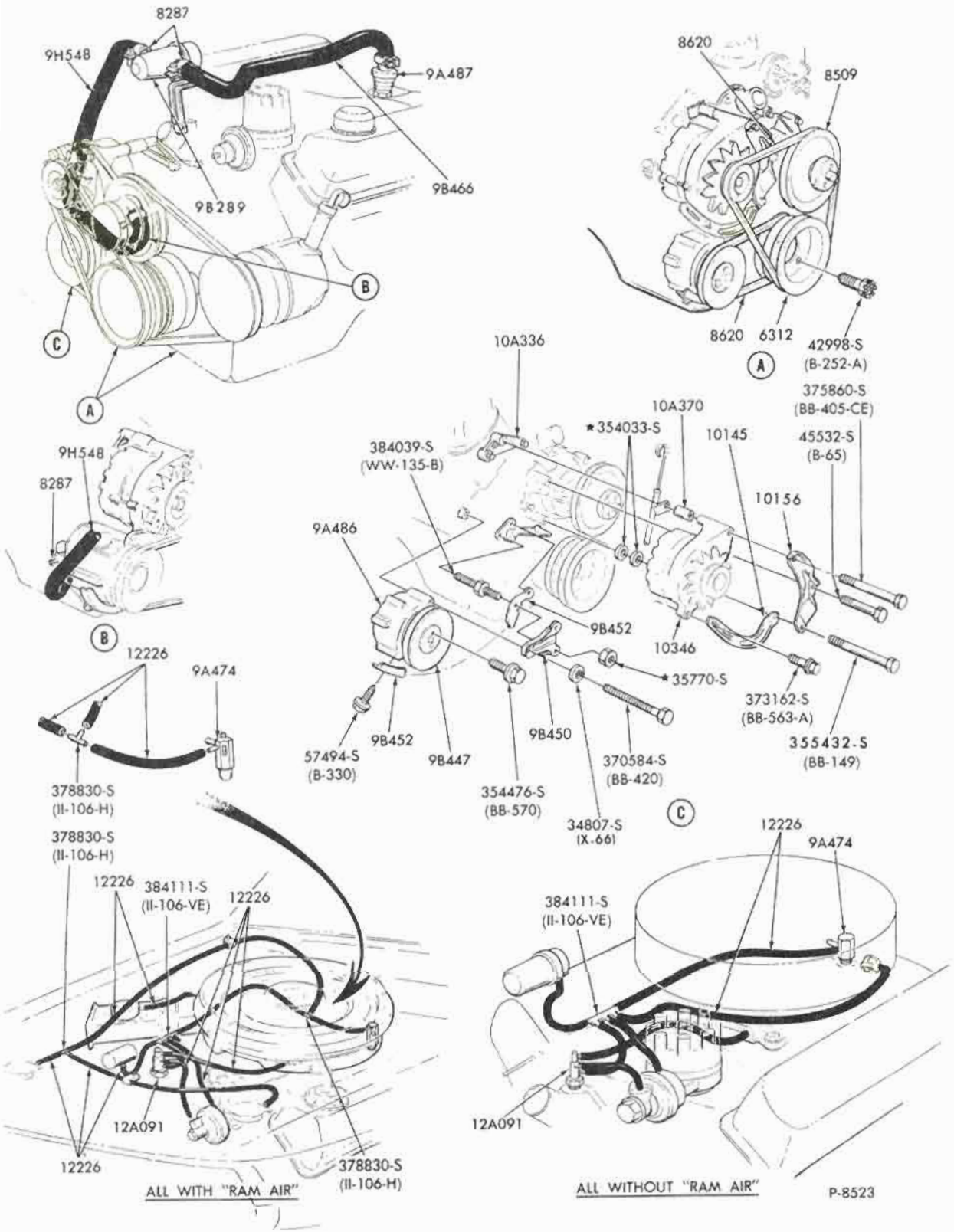

THERMACTOR EMISSION CONTROL SYSTEM
1969/72 MUSTANG 8 CYLINDER "BOSS 302" ENGINE

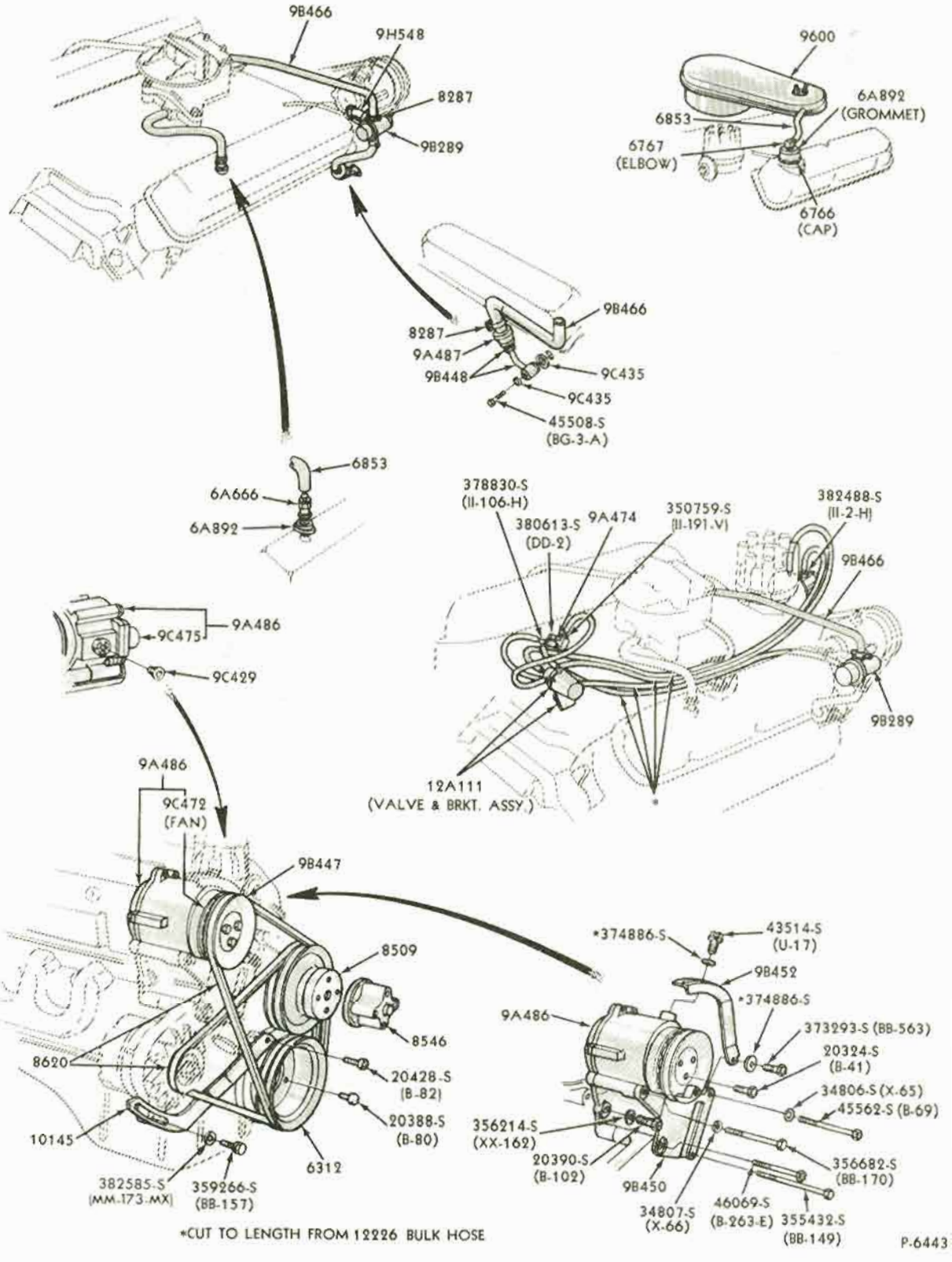

*CUT TO LENGTH FROM 12226 BULK HOSE

P-6443

THERMACTOR EMISSION CONTROL SYSTEM
1968 BRONCO (8 CYLINDER 289 ENGINE)

COPYRIGHT © 1975 — FORD MOTOR COMPANY — DEARBORN, MICHIGAN

ILLUSTRATION
SECTION 94.1

FORD CAR PARTS

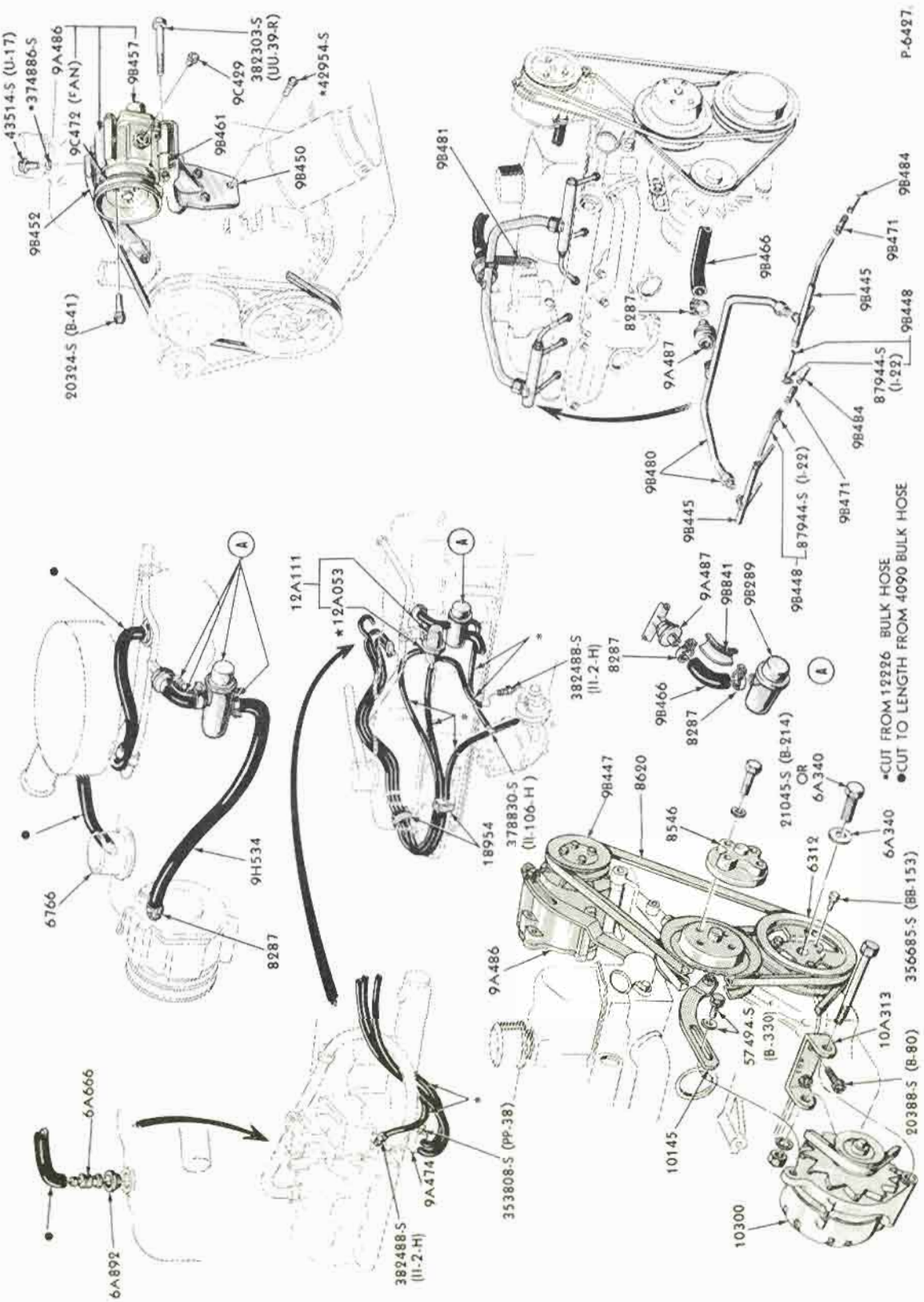

THERMACTOR EMISSION CONTROL SYSTEM
1968 BRONCO (6 CYLINDER 170 ENGINE)

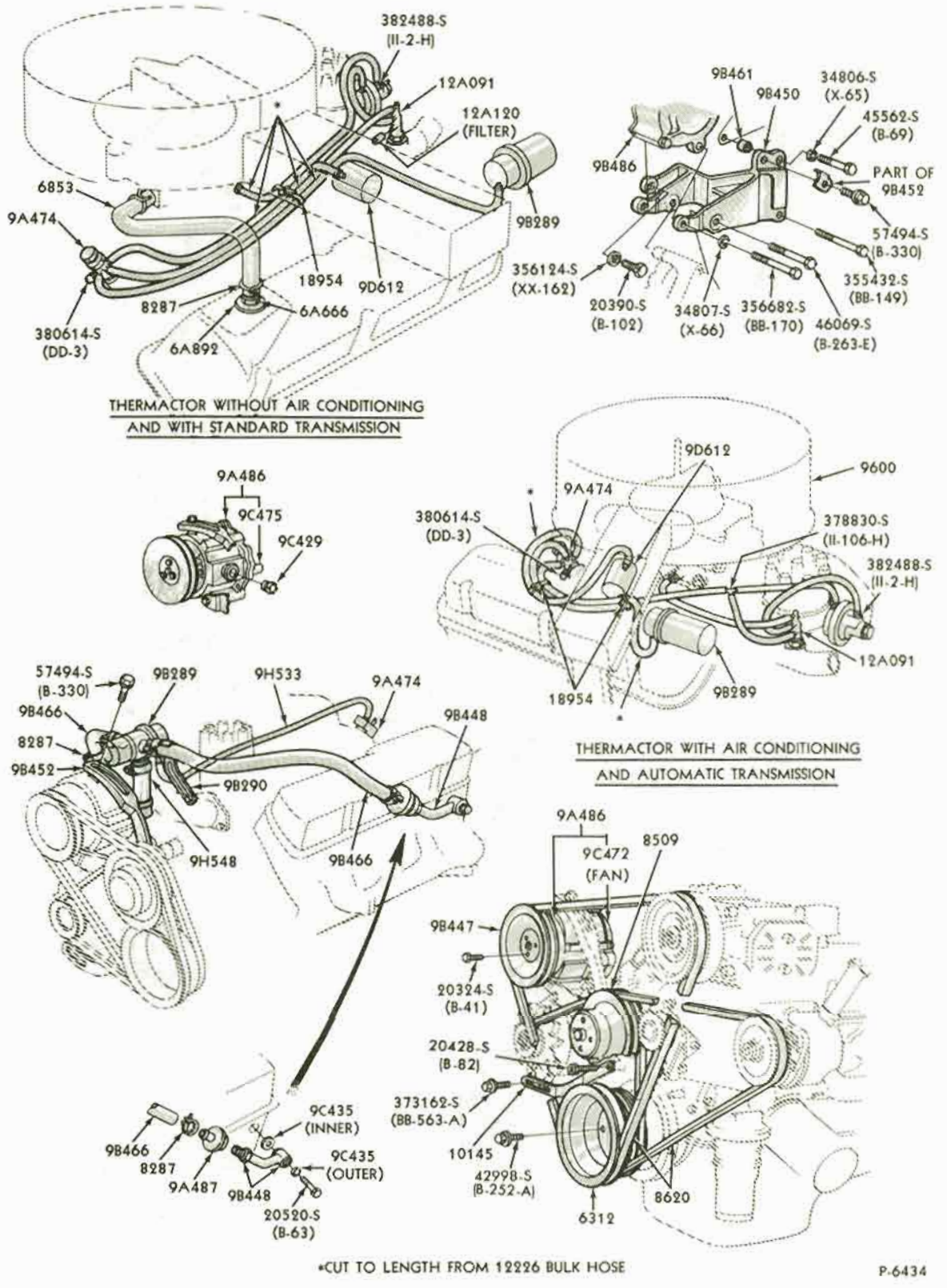

*CUT TO LENGTH FROM 12226 BULK HOSE

P-6434

THERMACTOR EMISSION CONTROL SYSTEM
1968 FAIRLANE, FALCON & MUSTANG (8 CYLINDER 289 ENGINE)

COPYRIGHT © 1975— FORD MOTOR COMPANY — DEARBORN, MICHIGAN

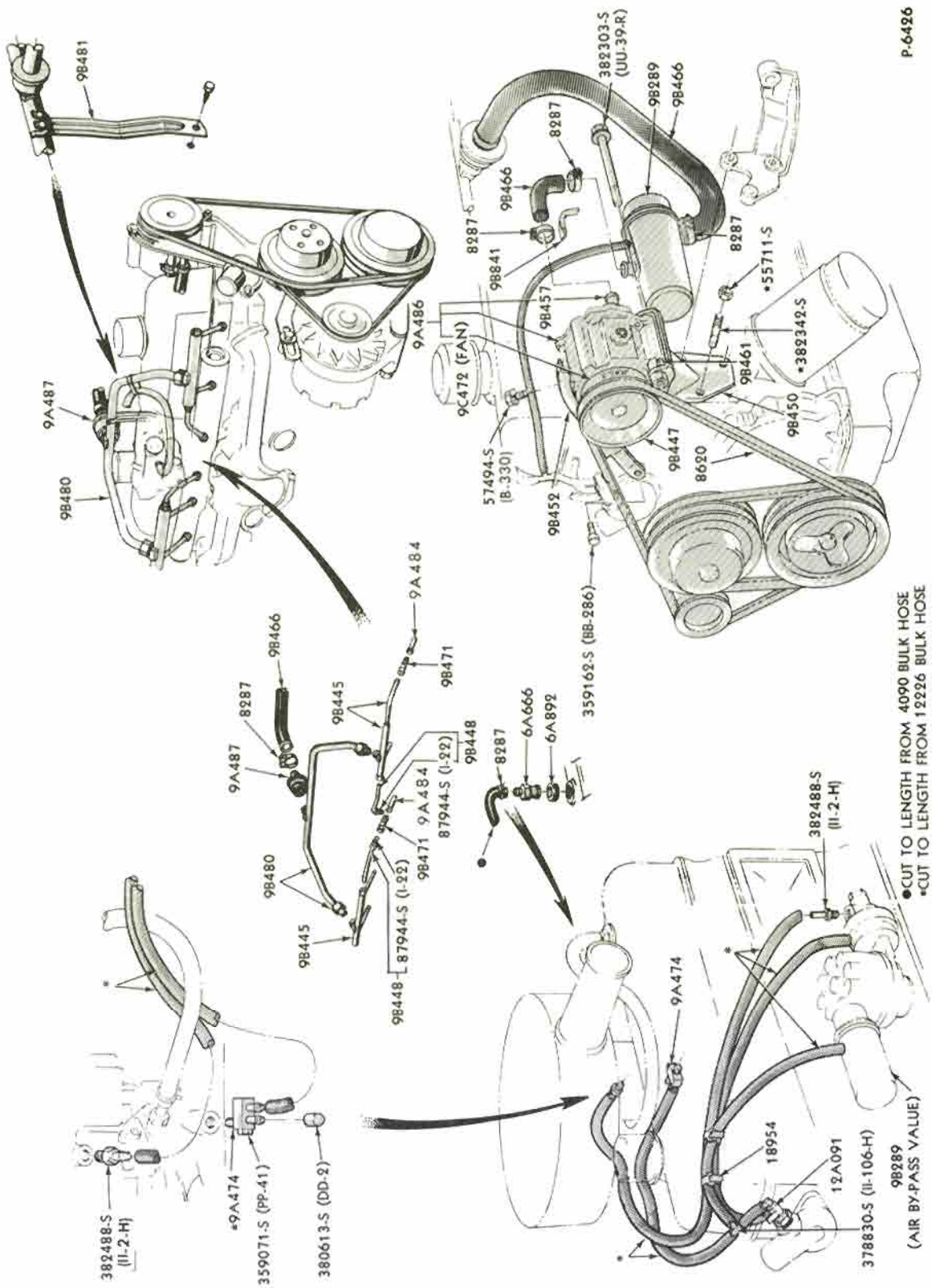

THERMACTOR EMISSION CONTROL SYSTEM
1968 FAIRLANE, FALCON & MUSTANG (6 CYLINDER 170, 200 ENGINES)

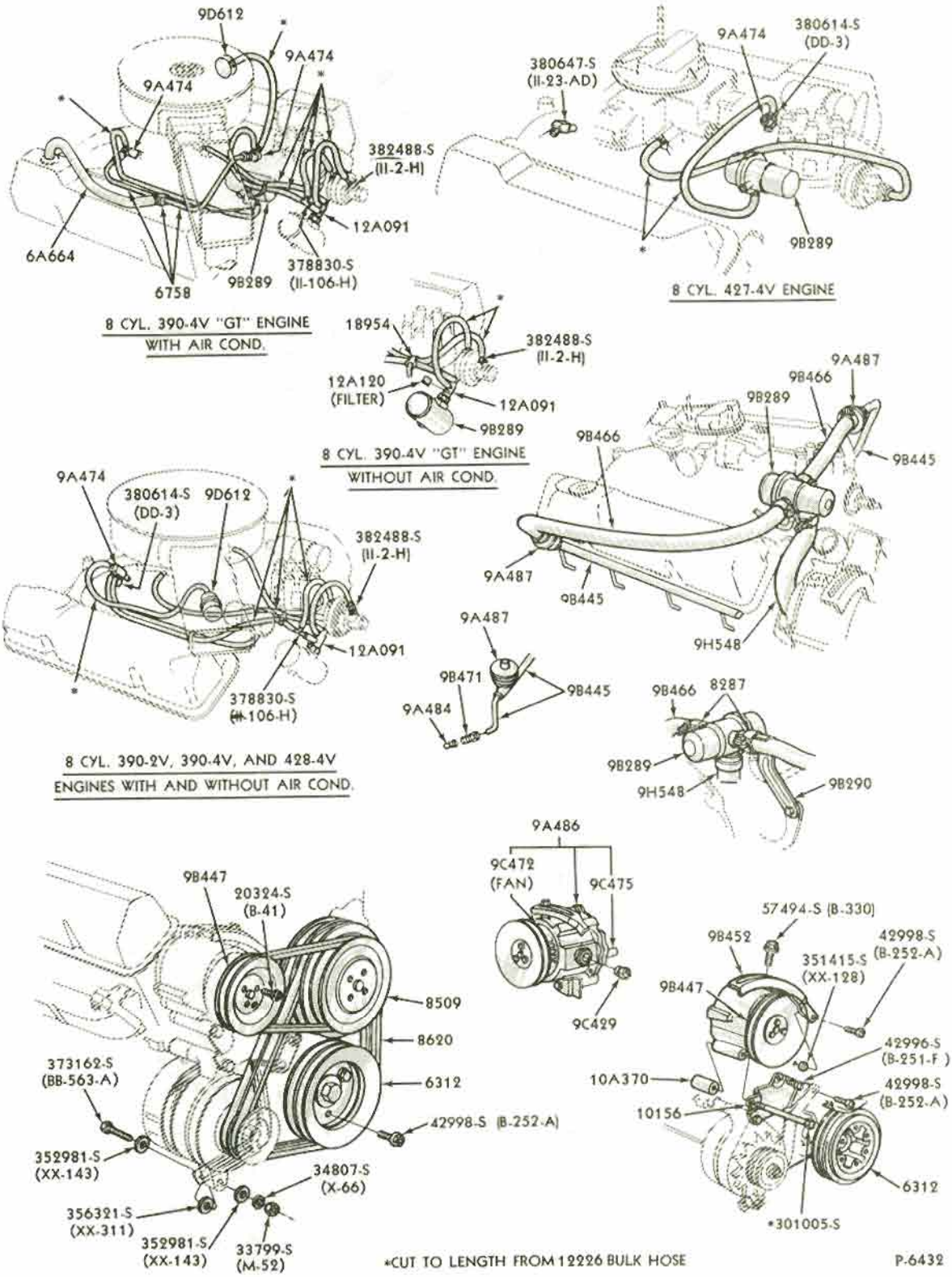

*CUT TO LENGTH FROM 12226 BULK HOSE

P-6432

THERMACTOR EMISSION CONTROL SYSTEM

1968/70 FORD, FAIRLANE & MUSTANG (8 CYLINDER 390, 427, 428 ENGINES)

COPYRIGHT © 1975 — FORD MOTOR COMPANY — DEARBORN, MICHIGAN

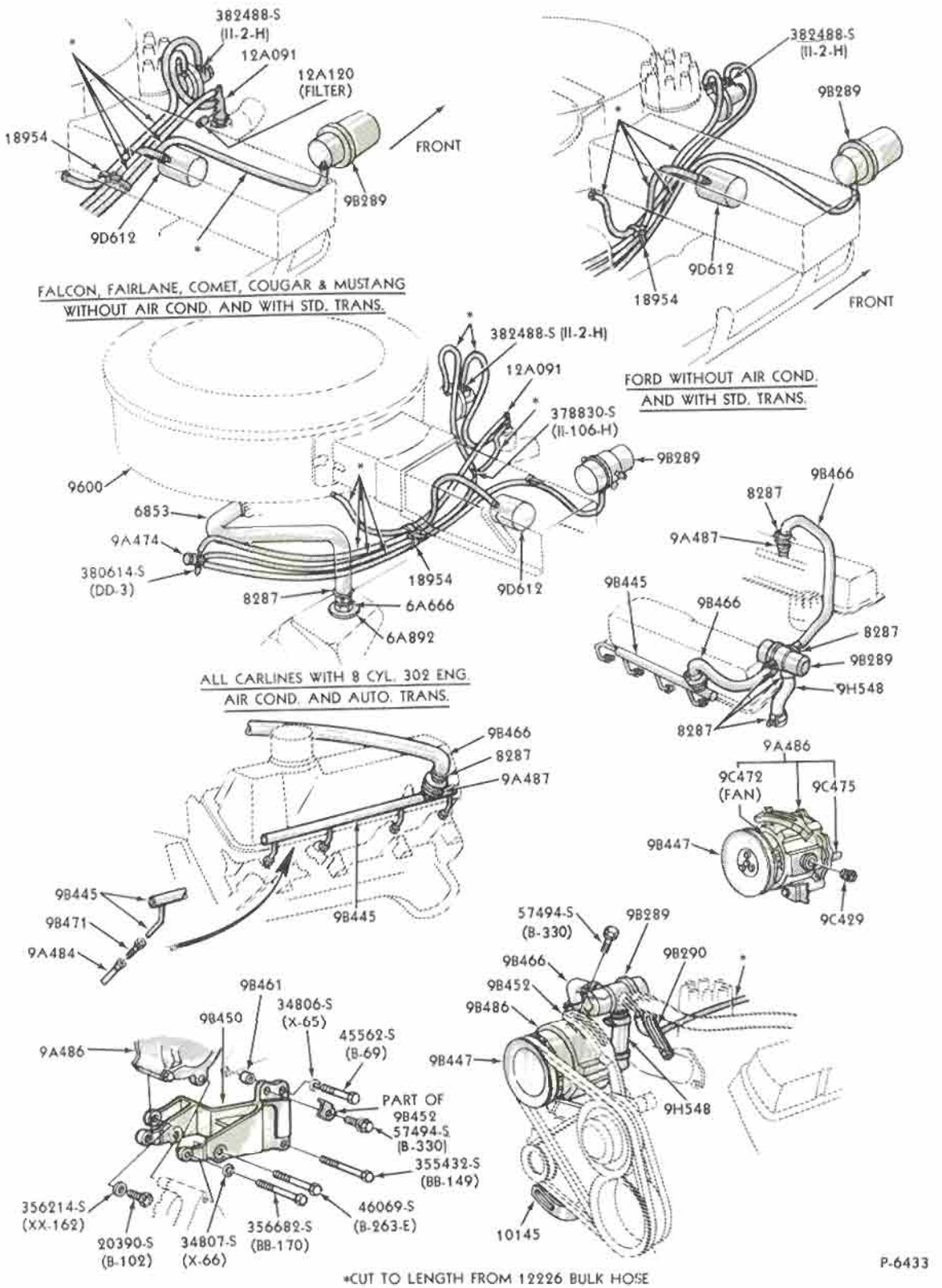

*CUT TO LENGTH FROM 12226 BULK HOSE

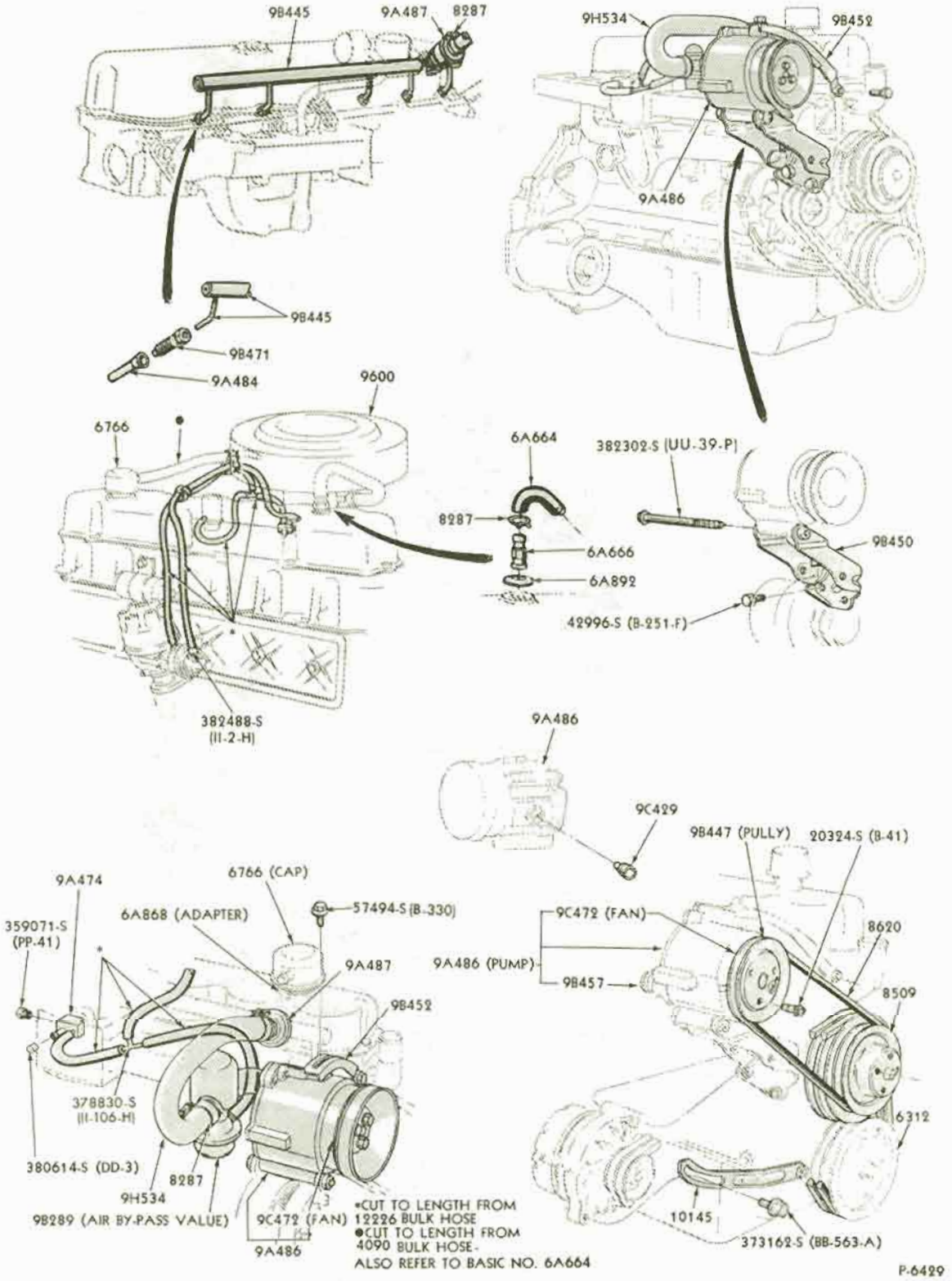

THERMACTOR EMISSION CONTROL SYSTEM
1968 FORD (6 CYLINDER 240 ENGINE)

COPYRIGHT © 1975 — FORD MOTOR COMPANY — DEARBORN, MICHIGAN

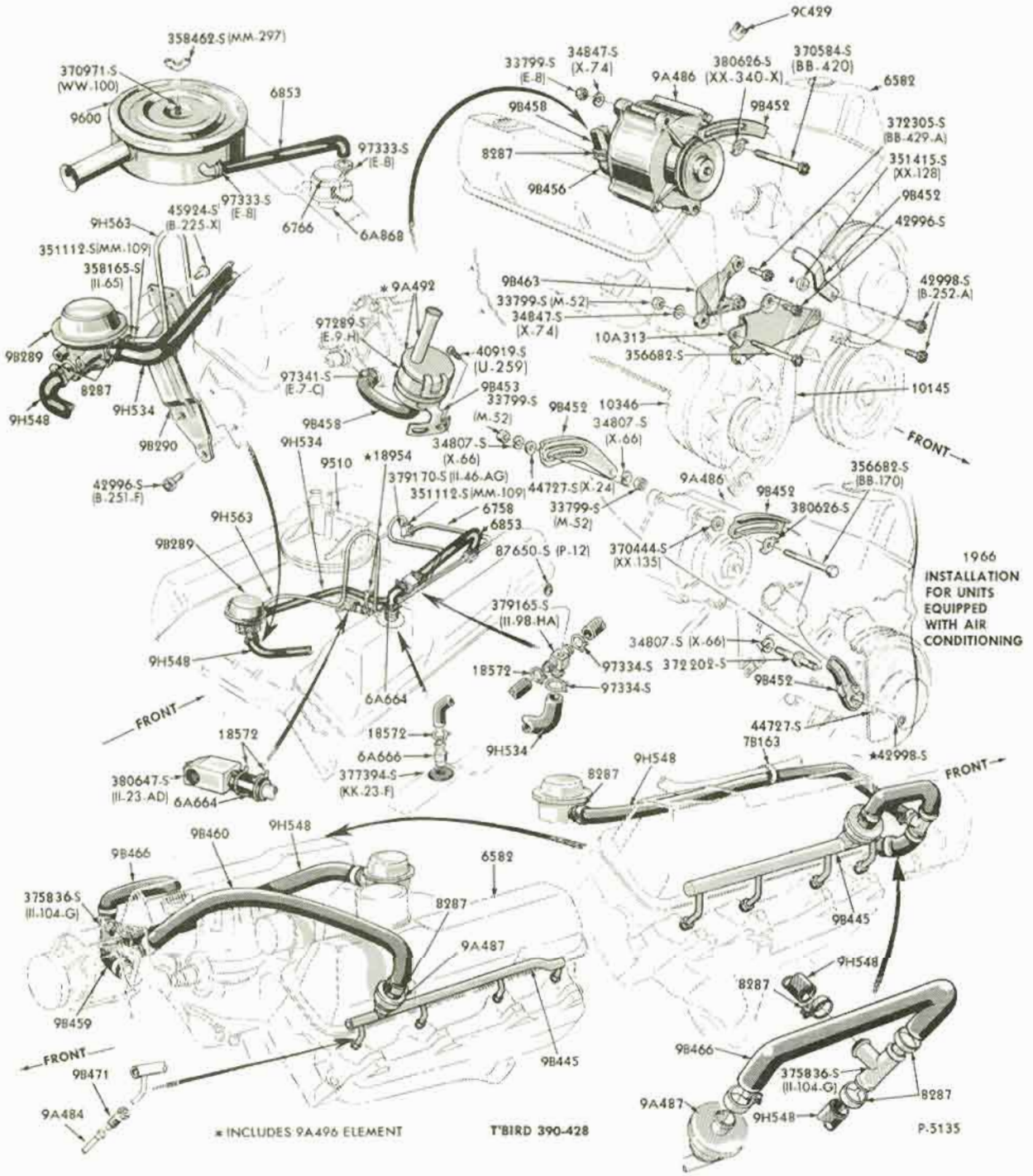
358462-S (MM-297)
370971-S (WW-100)
9600
6853
97333-S (E-8)
97333-S (E-8)
6766
6A868
9H563
45924-S (B-225-X)
351112-S (MM-109)
358165-S (II-65)
9B289
8287
9H548
9H534
9B290
42996-S (B-251-F)
*9A492
97289-S (E-9-H)
97341-S (E-7-C)
40919-S (U-259)
9B458
9B453
33799-S (M-52)
34807-S (X-66)
9H534
9510
*18954
379170-S (II-46-AG)
351112-S (MM-109)
6758
6853
9H563
9B289
9H548
87650-S (P-12)
379165-S (II-98-HA)
18572
97334-S
6A664
18572
6A666
377394-S (KK-23-F)
380647-S (II-23-AD)
6A664
FRONT
9B460
9H548
9B466
375836-S (II-104-G)
6582
8287
9A487
9B459
9B445
FRONT
9B471
9A484
* INCLUDES 9A496 ELEMENT
T'BIRD 390-428
9C429
33799-S (E-8)
34847-S (X-74)
9A486
380626-S (XX-340-X)
370584-S (BB-420)
6582
9B458
9B452
8287
9B456
372305-S (BB-429-A)
351415-S (XX-128)
9B452
42996-S
9B463
33799-S (M-52)
34847-S (X-74)
10A313
356682-S
42998-S (B-252-A)
10145
FRONT
9B452
10346
34807-S (X-66)
44727-S (X-24)
33799-S (M-52)
9A486
9B452
380626-S
356682-S (BB-170)
370444-S (XX-135)
1966 INSTALLATION FOR UNITS EQUIPPED WITH AIR CONDITIONING
34807-S (X-66)
372202-S
9B452
44727-S
7B163
*42998-S
FRONT
9H548
8287
9B445
9H548
8287
9B466
375836-S (II-104-G)
8287
9A487
9H548
P-5135

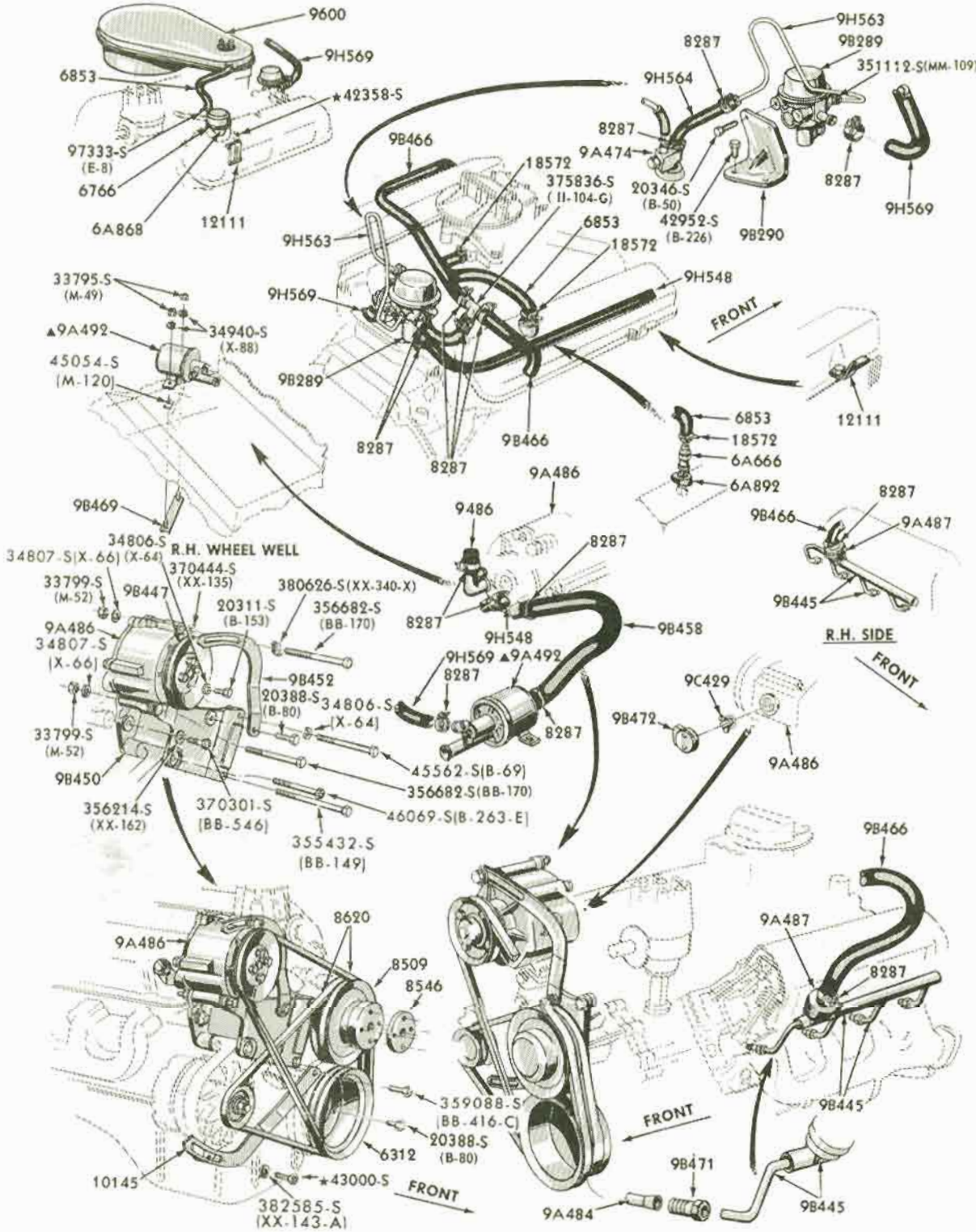

▲INCLUDES 9A496 ELEMENT

P-5333

THERMACTOR EMISSION CONTROL SYSTEM
1966/67 BRONCO (8 CYLINDER 289 ENGINE)

COPYRIGHT © 1975 — FORD MOTOR COMPANY — DEARBORN, MICHIGAN

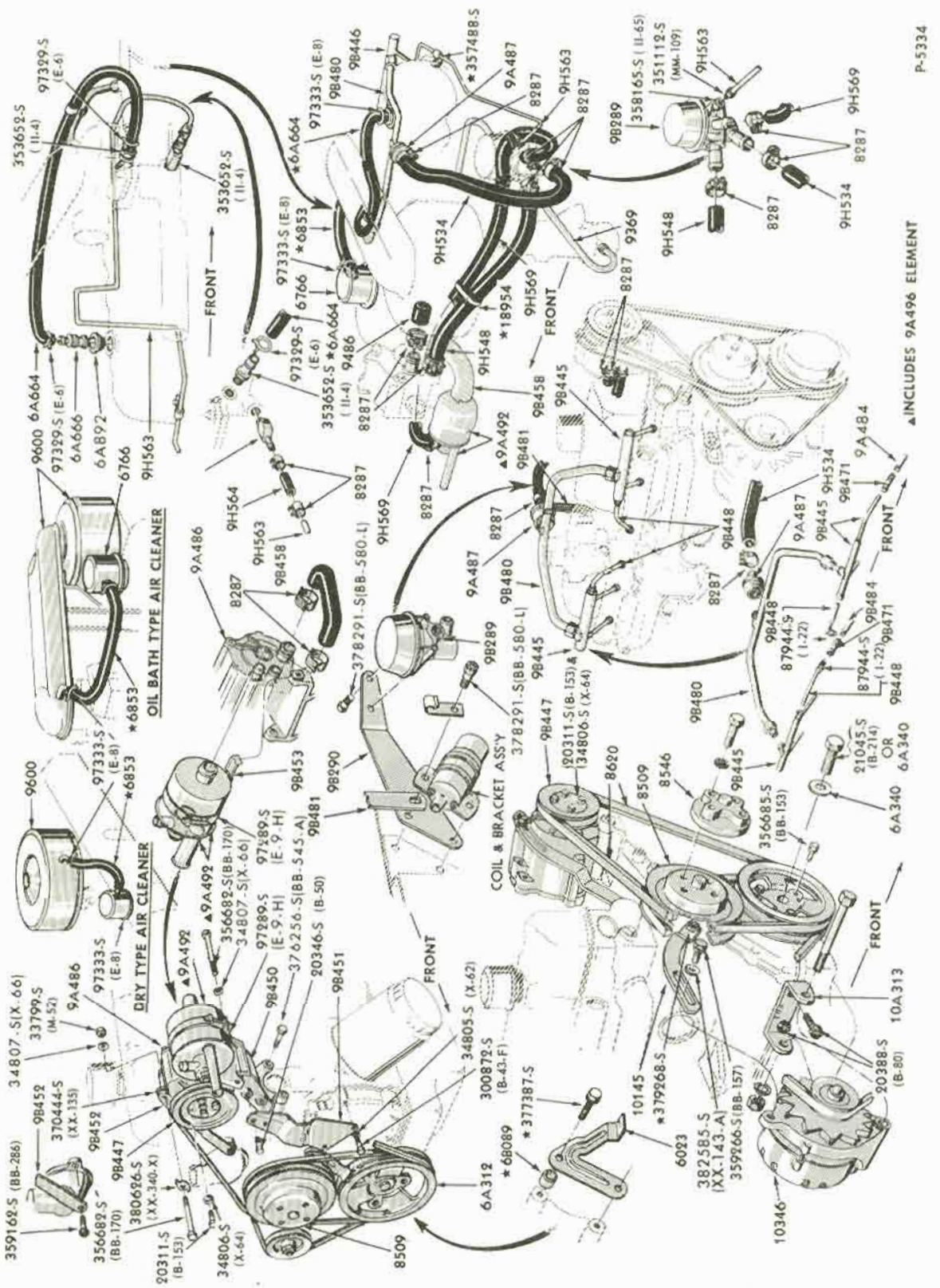

THERMACTOR EMISSION CONTROL SYSTEM (EXCEPT INTAKE MANIFOLD TYPE)
1966/67 BRONCO (6 CYLINDER 170 ENGINE)

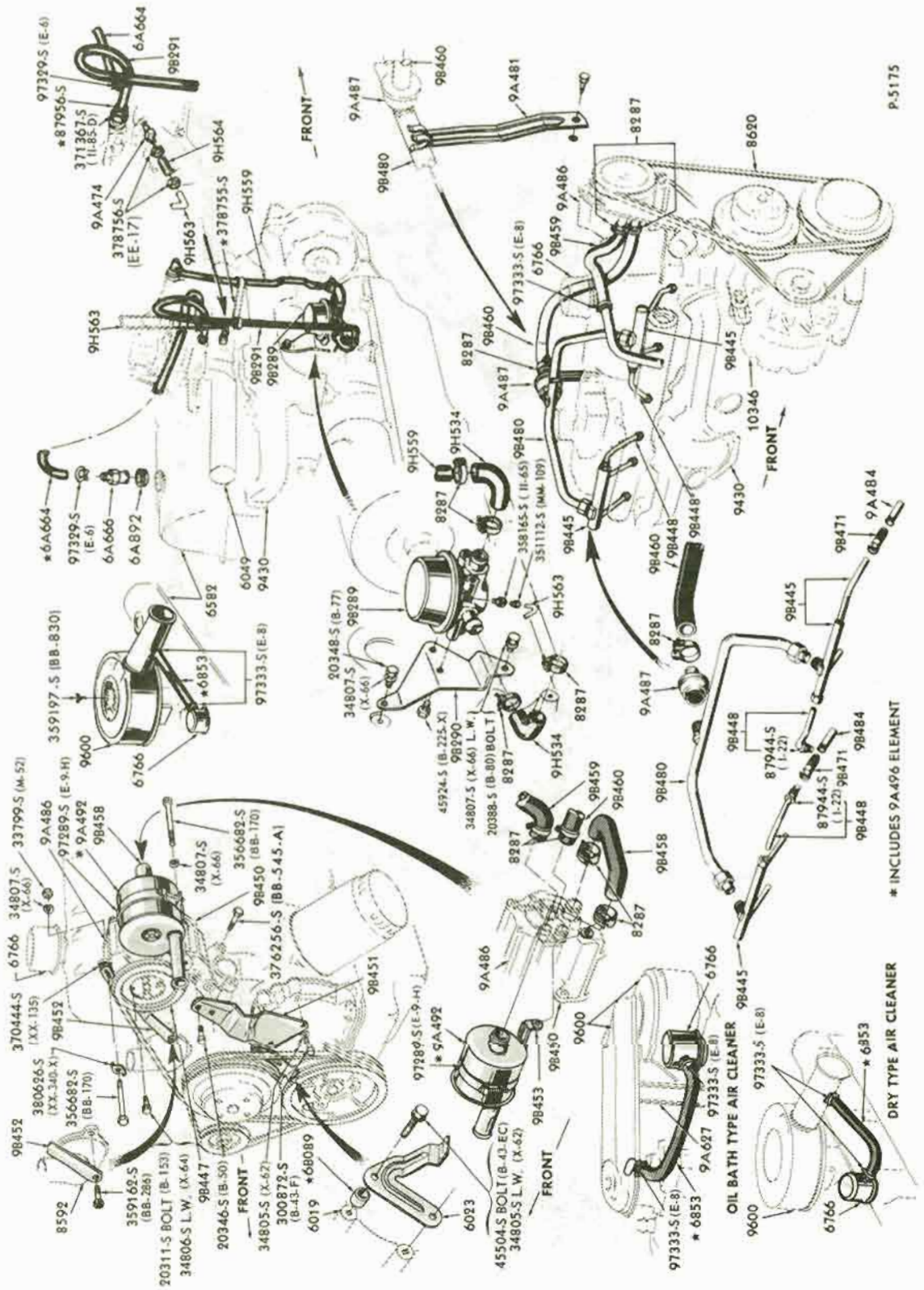

THERMACTOR EMISSION CONTROL SYSTEM (INTAKE MANIFOLD TYPE)
1966 BRONCO (6 CYLINDER 170 ENGINE)

COPYRIGHT © 1975— FORD MOTOR COMPANY —DEARBORN, MICHIGAN

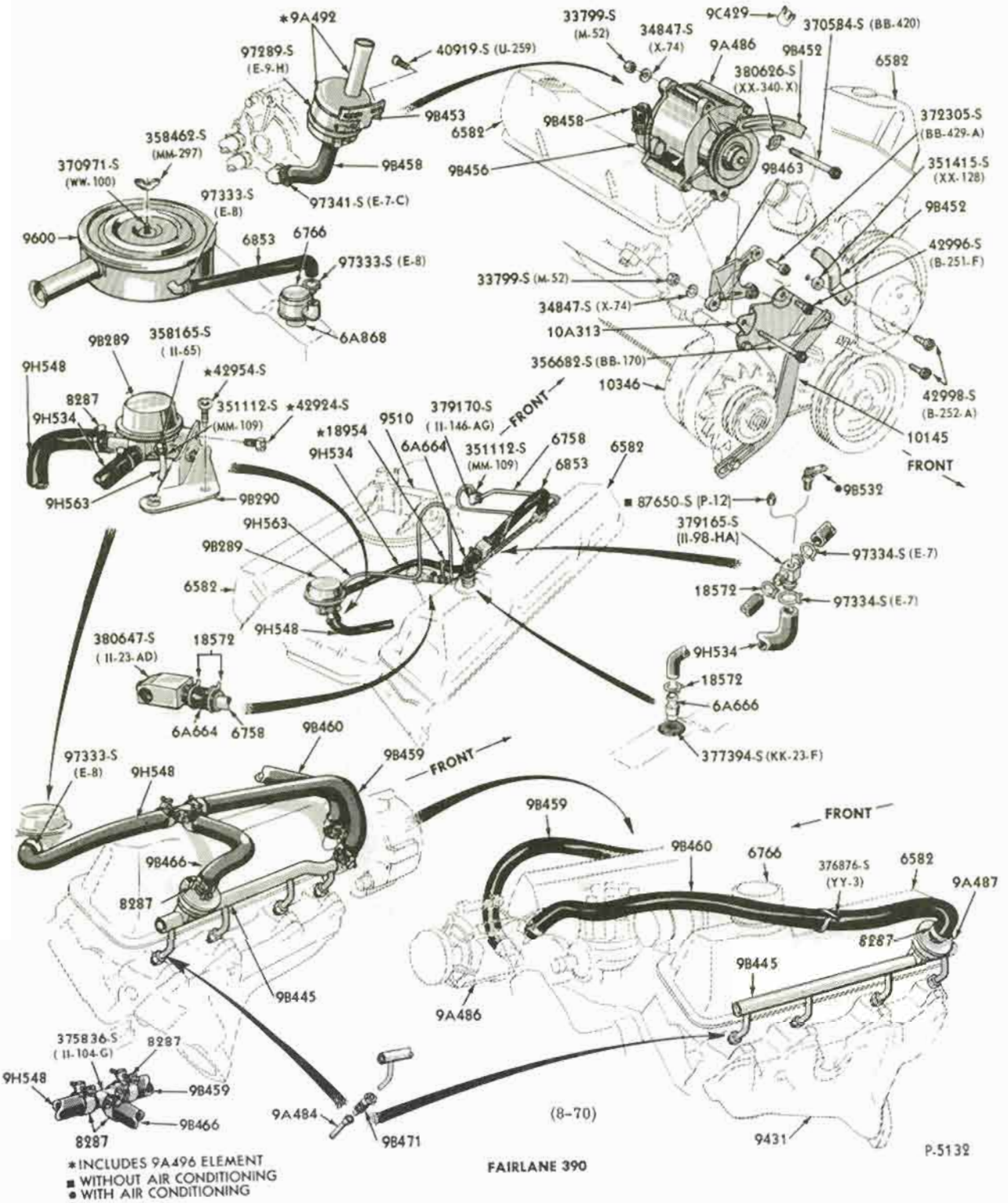
*9A492
97289-S (E-9-H)
40919-S (U-259)
9B453
9B458
97341-S (E-7-C)
358462-S (MM-297)
370971-S (WW-100)
97333-S (E-8)
9600
6853
6766
97333-S (E-8)
6A868
33799-S (M-52)
34847-S (X-74)
9A486
9B452
9C429
370584-S (BB-420)
380626-S (XX-340-X)
6582
372305-S (BB-429-A)
9B458
9B456
9B463
351415-S (XX-128)
9B452
42996-S (B-251-F)
33799-S (M-52)
34847-S (X-74)
10A313
356682-S (BB-170)
10346
42998-S (B-252-A)
10145
FRONT
9B532
9B289
358165-S (II-65)
9H548
*42954-S
8287
9H534
351112-S (MM-109)
*42924-S
9H563
9B290
*18954
9510
379170-S (II-146-AG)
FRONT
9H534
6A664
351112-S (MM-109)
6758
6853
6582
■ 87650-S (P-12)
379165-S (II-98-HA)
97334-S (E-7)
18572
97334-S (E-7)
9H563
9B289
6582
9H548
380647-S (II-23-AD)
18572
6A664
6758
9H534
18572
6A666
377394-S (KK-23-F)
9B460
9B459
FRONT
97333-S (E-8)
9H548
9B466
8287
9B445
9B459
FRONT
9B460
6766
376876-S (YY-3)
6582
9A487
8287
9B445
9A486
375836-S (II-104-G)
8287
9H548
9B459
9B466
8287
9A484
9B471
(8-70)
9431
P-5132
*INCLUDES 9A496 ELEMENT
■ WITHOUT AIR CONDITIONING
● WITH AIR CONDITIONING
FAIRLANE 390

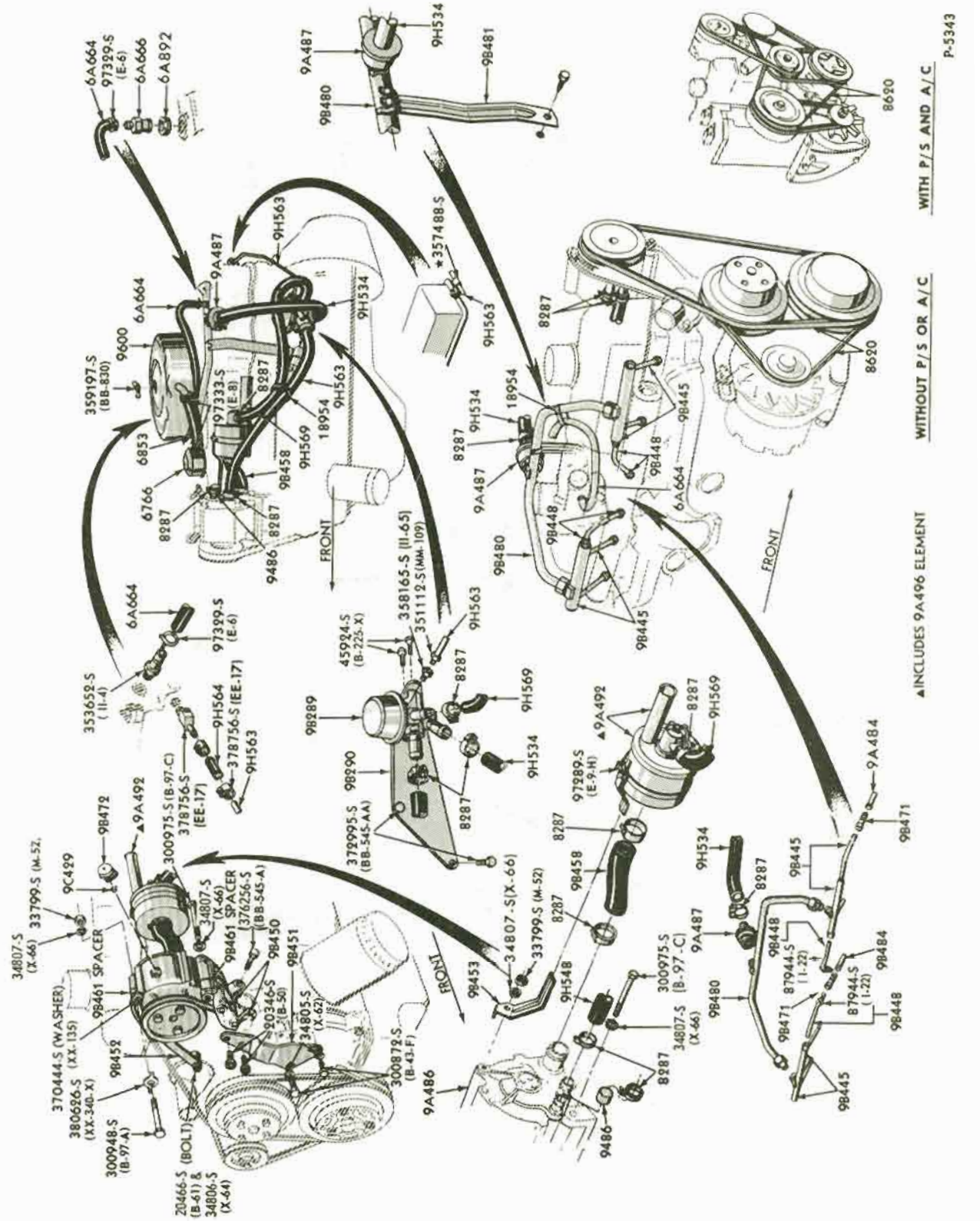

THERMACTOR EMISSION CONTROL SYSTEM (EXCEPT INTAKE MANIFOLD TYPE)

1966/67 FAIRLANE, FALCON & MUSTANG (6 CYLINDER 170, 200 ENGINES)

COPYRIGHT © 1975 — FORD MOTOR COMPANY — DEARBORN, MICHIGAN

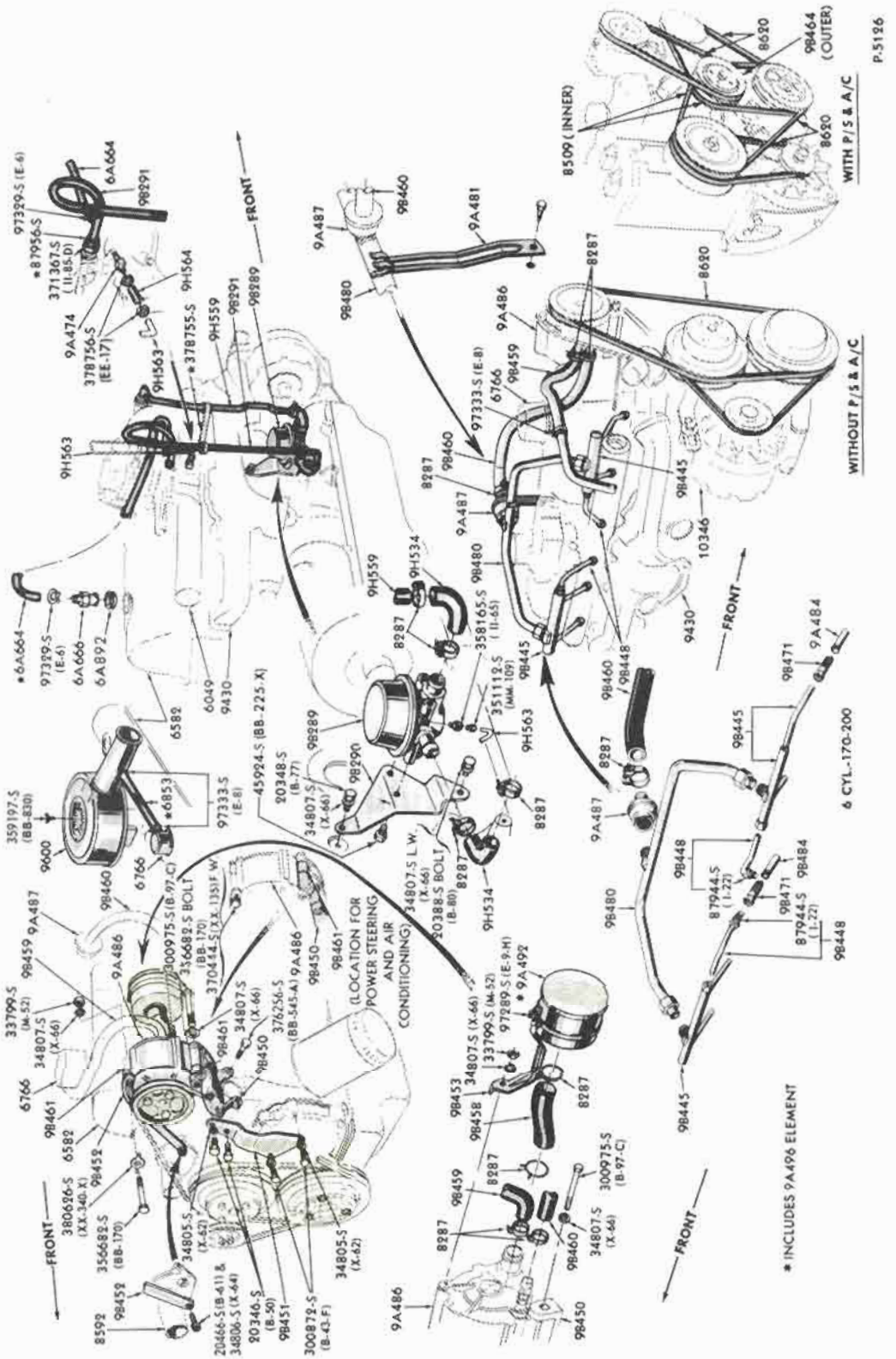

THERMACTOR EMISSION CONTROL SYSTEM (INTAKE MANIFOLD TYPE)
1966 FAIRLANE, FALCON & MUSTANG (6 CYLINDER 170, 200 ENGINES)

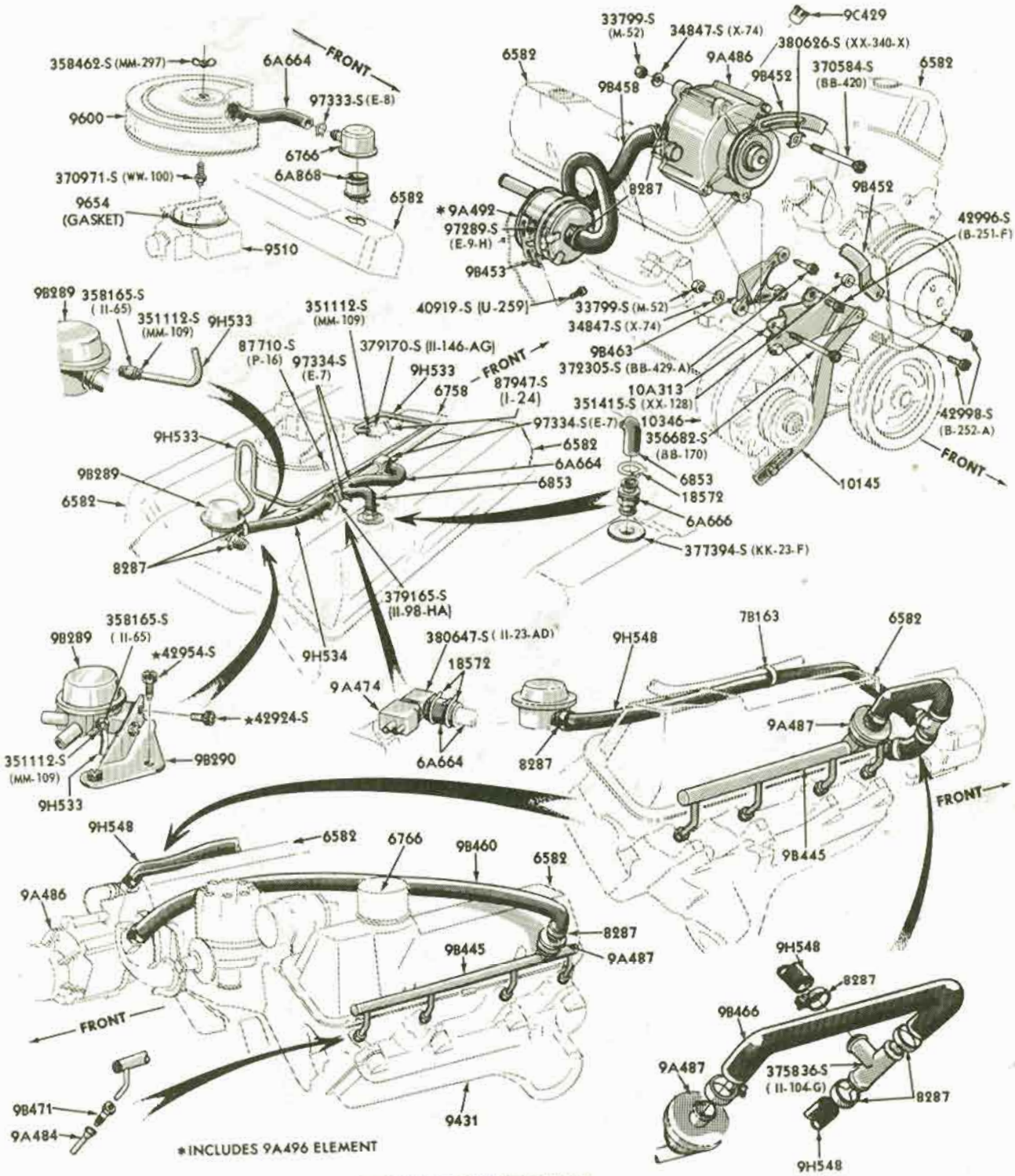

FORD-428 (POLICE INTERCEPTOR)

P-5134

May, 1975 COPYRIGHT © 1975 — FORD MOTOR COMPANY — DEARBORN, MICHIGAN

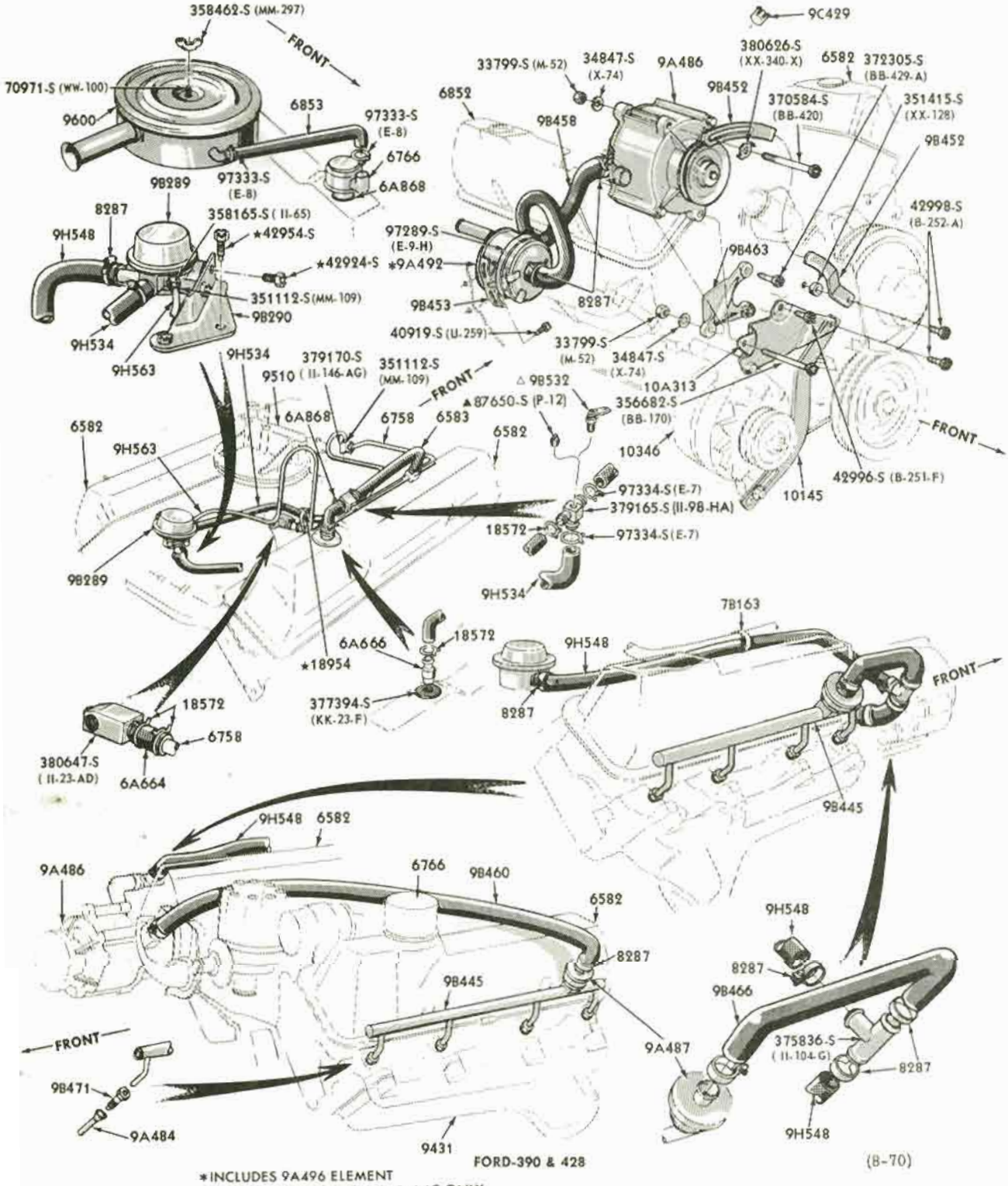

FORD-390 & 428

(8-70)

★INCLUDES 9A496 ELEMENT
△ ENGINES WITH 2/B CARB. & A/C ONLY
▲ ENGINES WITH 4/B CARB. & A/C & ALL ENGINES 2/B & 4/B CARB. WITHOUT A/C

P-5133

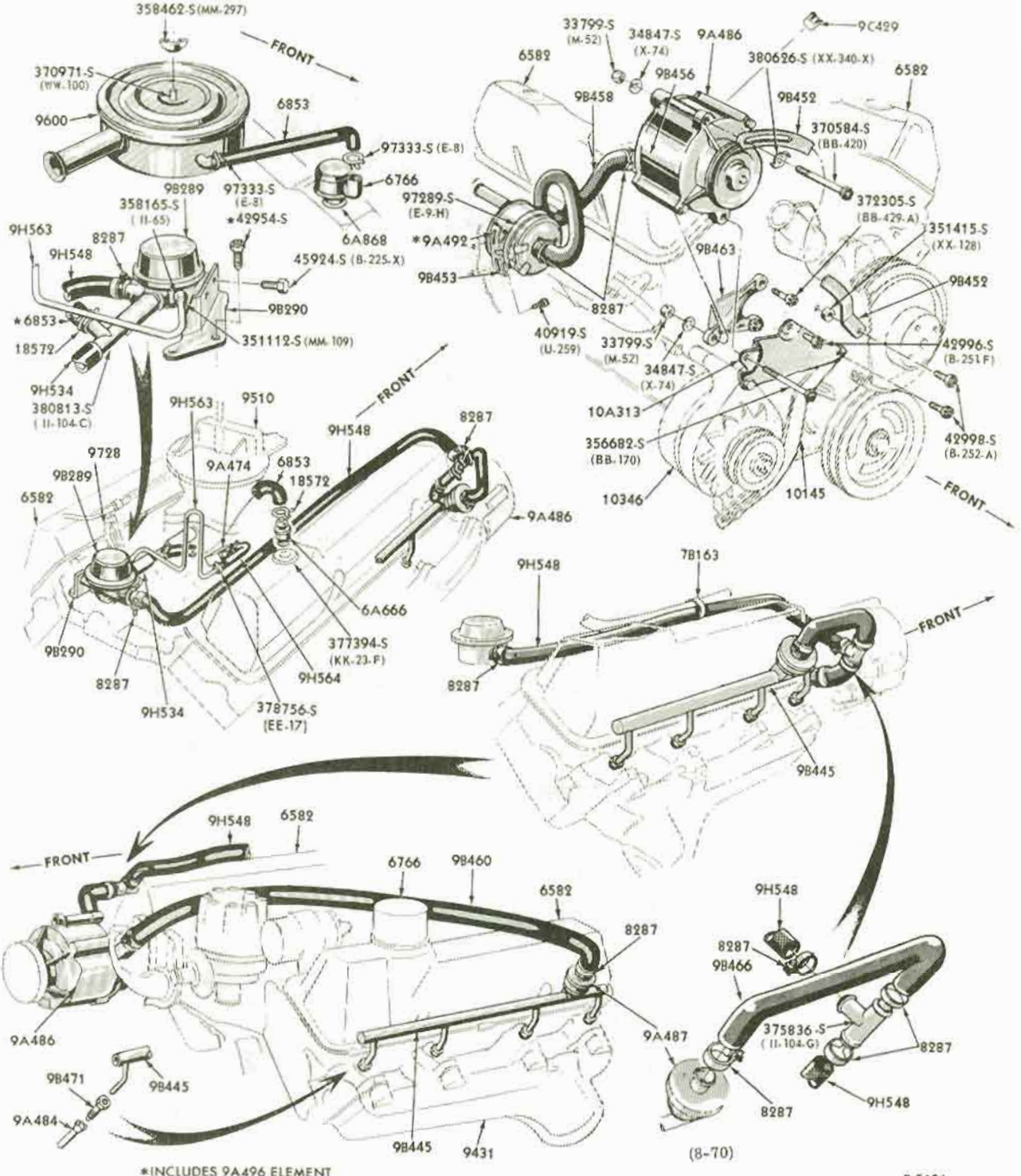

FORD-352

May, 1975 COPYRIGHT © 1975 — FORD MOTOR COMPANY — DEARBORN, MICHIGAN

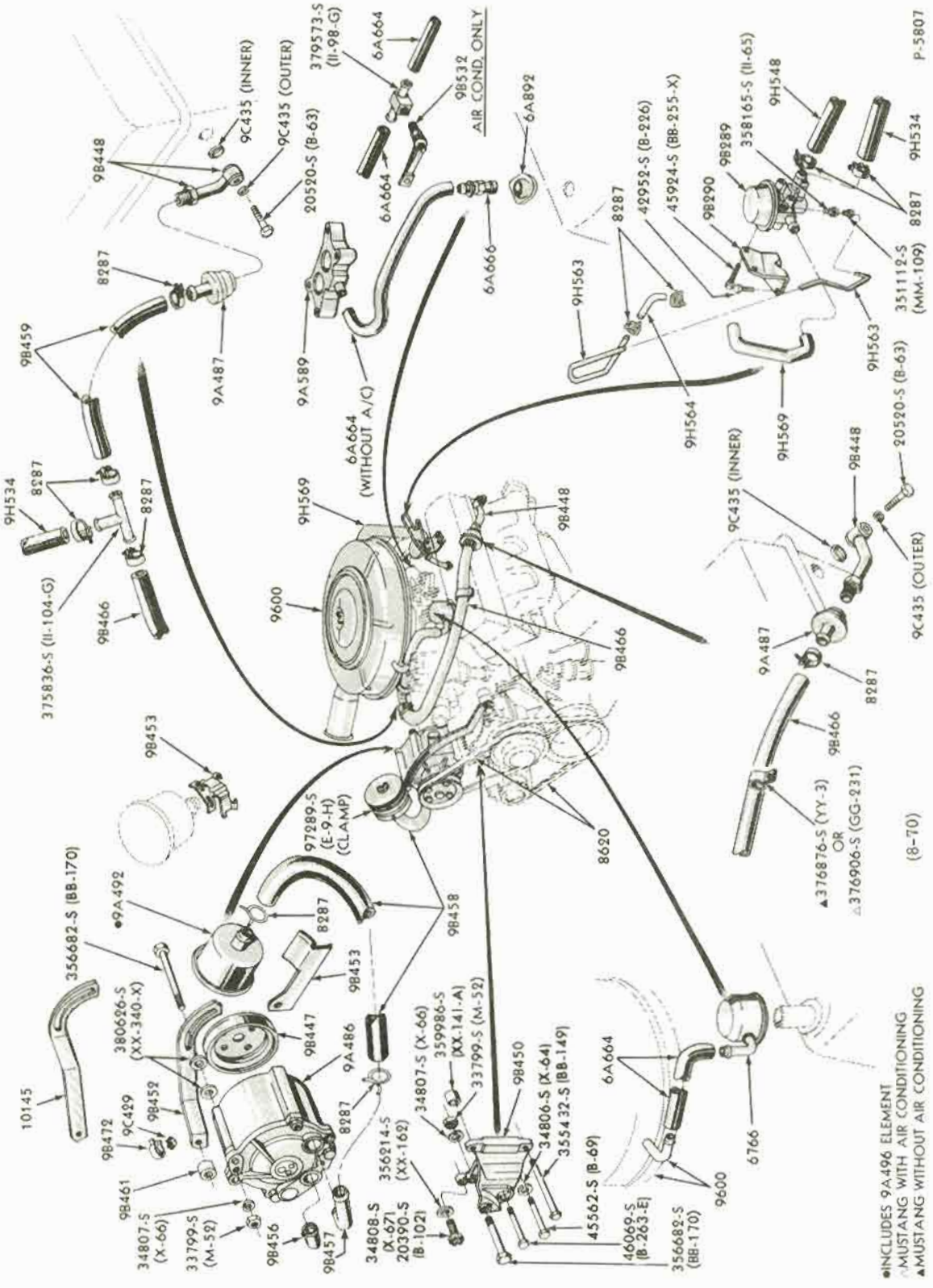

THERMACTOR EMISSION CONTROL SYSTEM
1967 MUSTANG (8 CYLINDER 289 ENGINE EXCEPT HIGH PERFORMANCE)

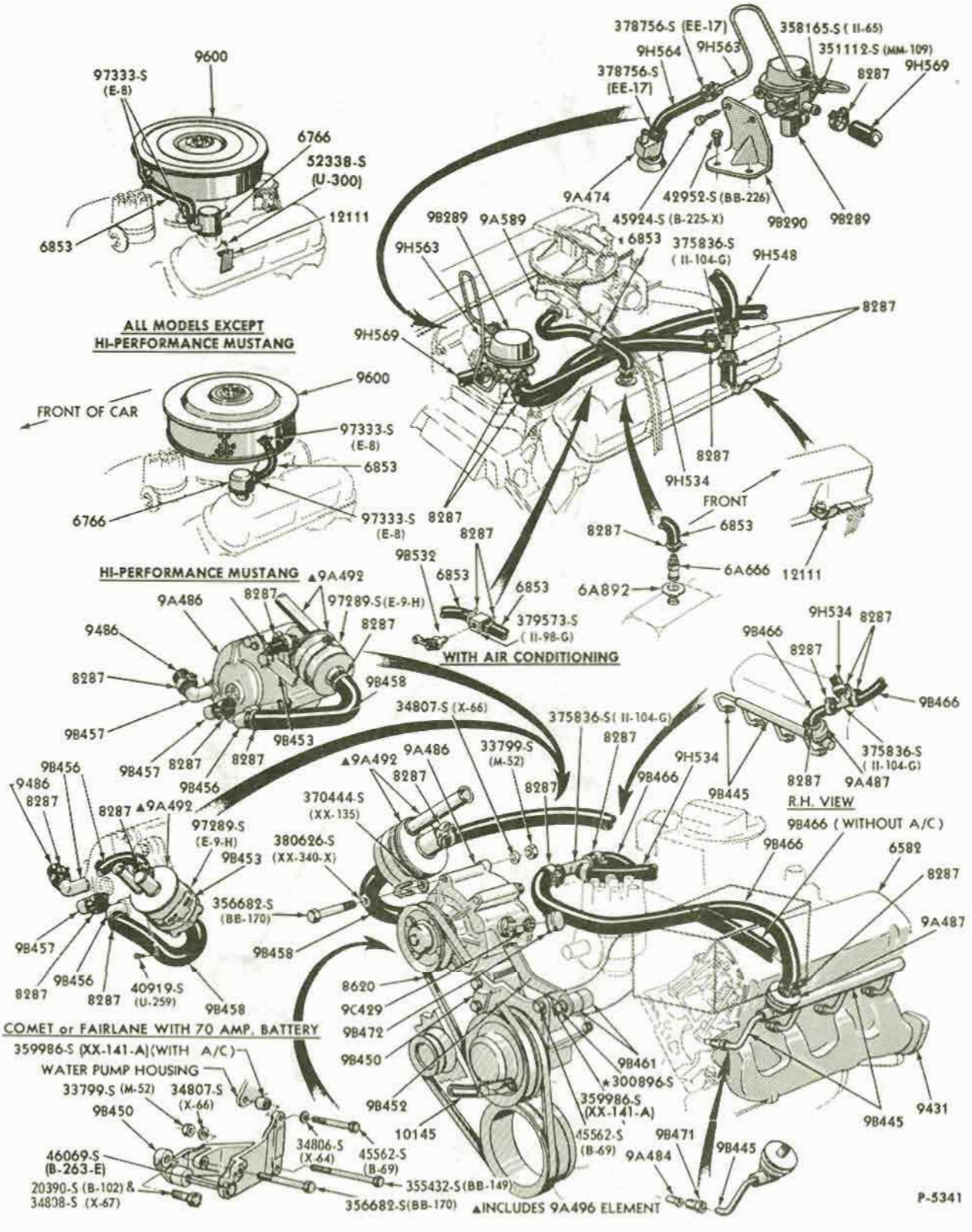

THERMACTOR EMISSION CONTROL SYSTEM
1966 FORD, FAIRLANE, FALCON & MUSTANG (8 CYLINDER 289 ENGINE) (EXCEPT INTAKE MANIFOLD TYPE)
1967 MUSTANG (8 CYLINDER 289 HIGH PERFORMANCE ENGINE)

COPYRIGHT © 1975 — FORD MOTOR COMPANY — DEARBORN, MICHIGAN

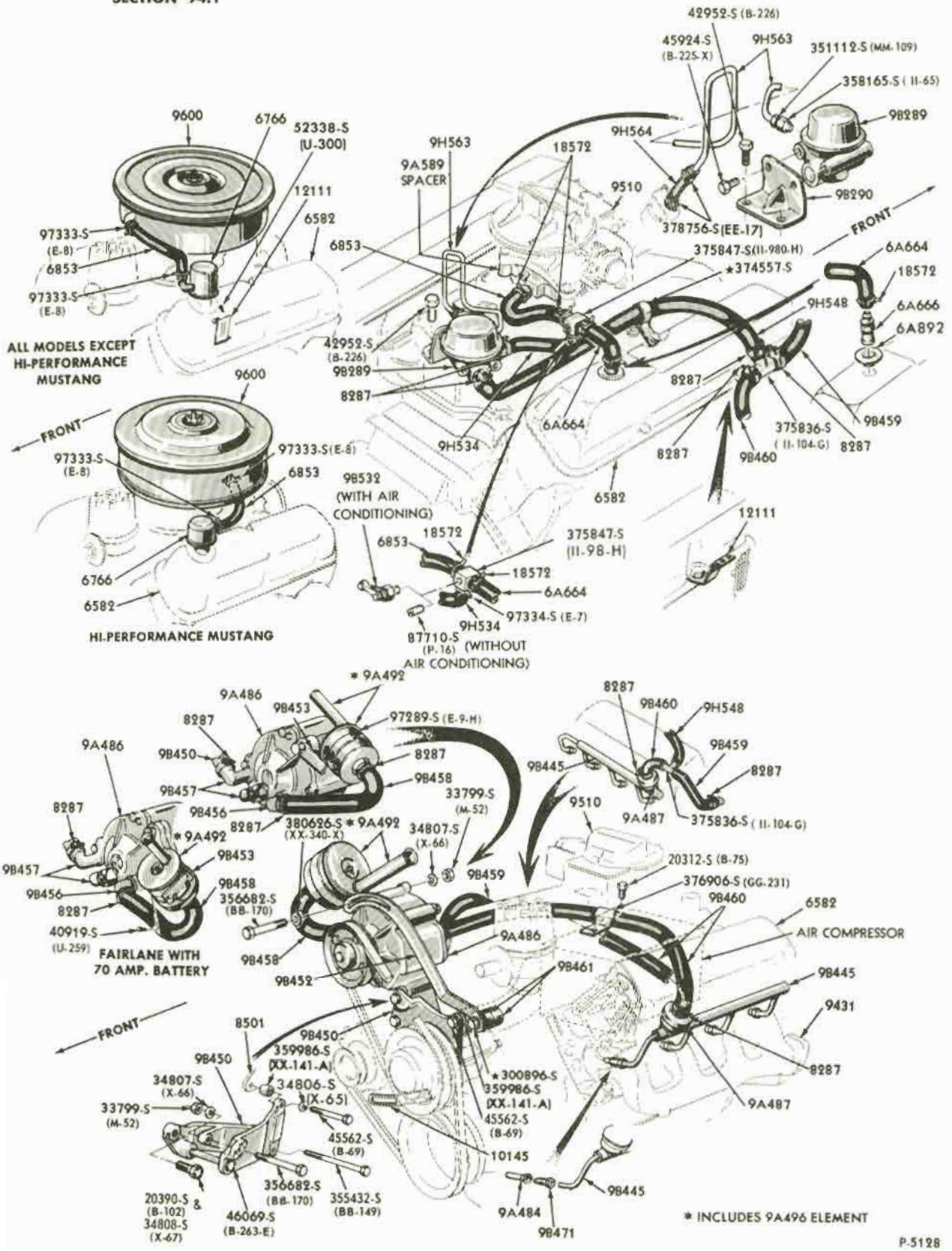

THERMACTOR EMISSION CONTROL SYSTEM (INTAKE MANIFOLD TYPE)
1966 FORD, FAIRLANE, FALCON & MUSTANG (8 CYLINDER 289 ENGINE)

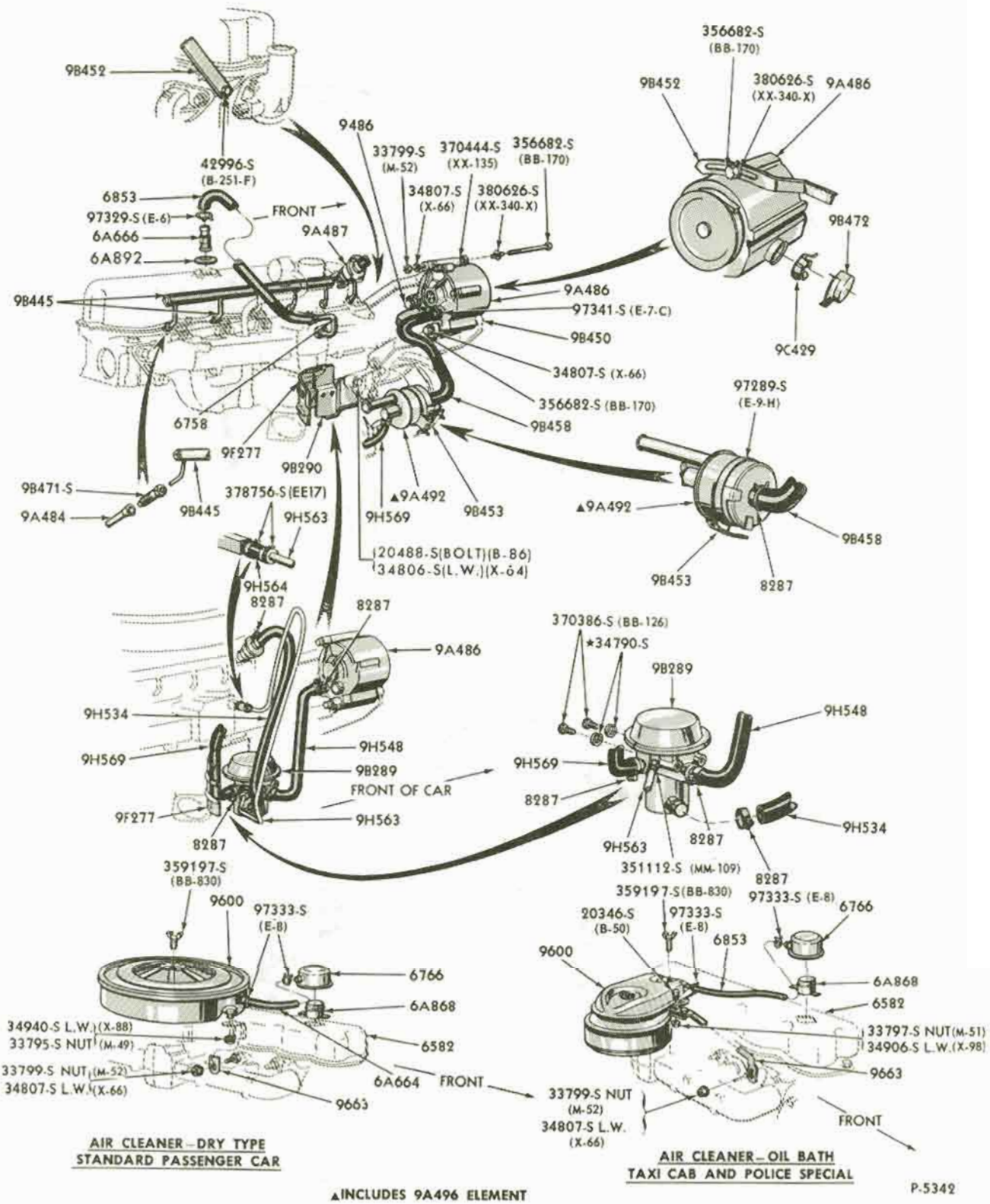

▲INCLUDES 9A496 ELEMENT

COPYRIGHT © 1975 — FORD MOTOR COMPANY — DEARBORN, MICHIGAN

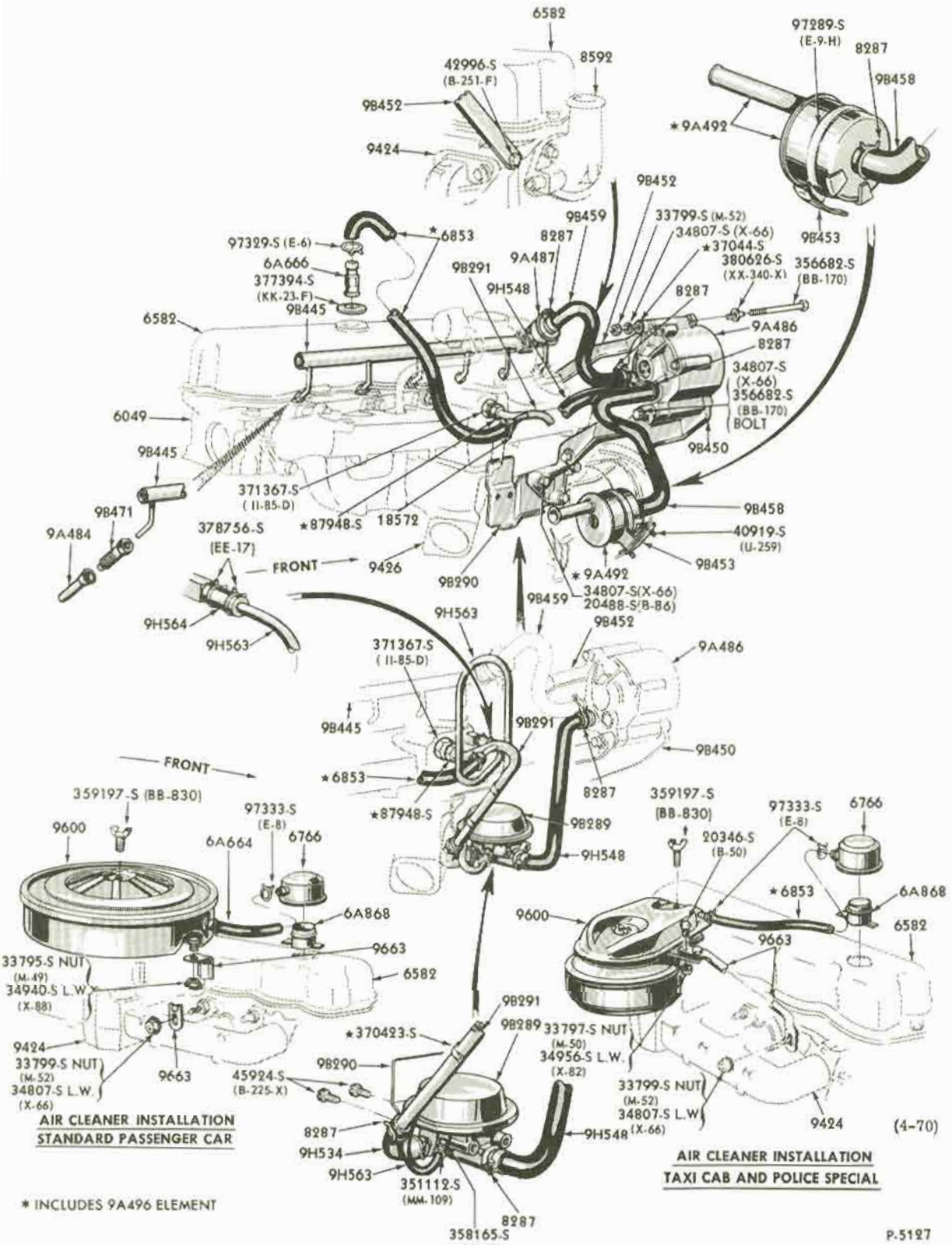

THERMACTOR EMISSION CONTROL SYSTEM - INTAKE MANIFOLD TYPE
1966 FORD (6 CYLINDER 240 ENGINE)

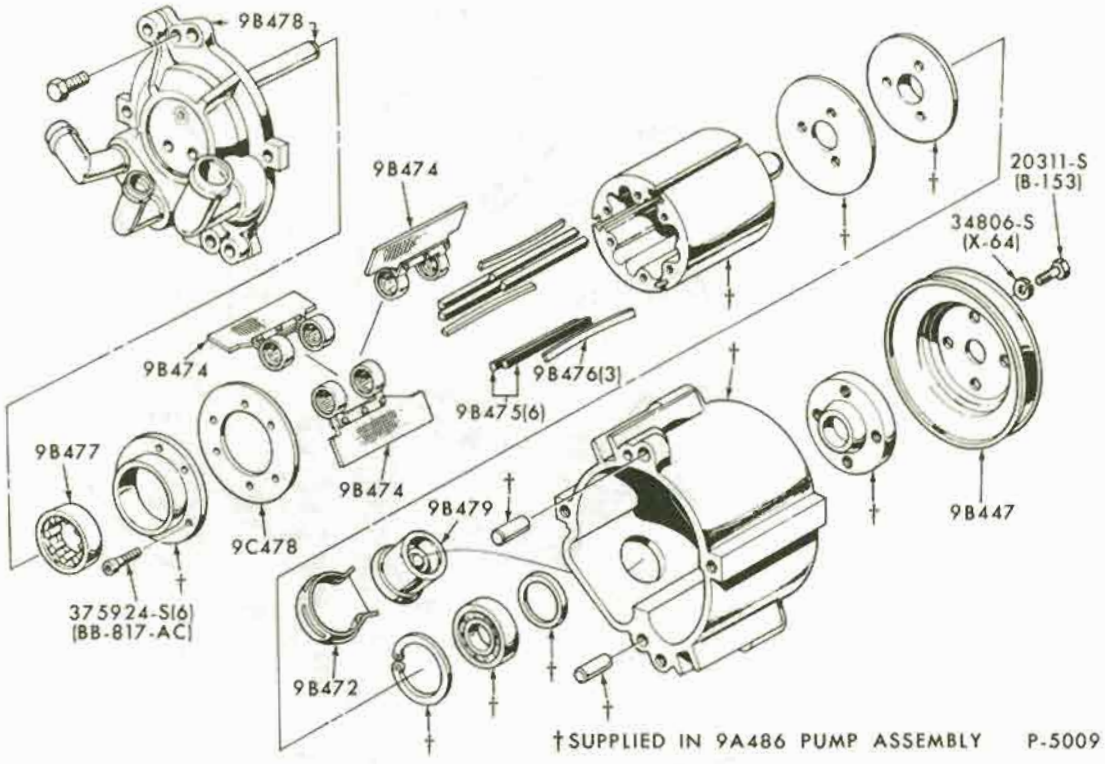

EXHAUST AIR SUPPLY PUMP - THERMACTOR EMISSION CONTROL SYSTEM
1966/67 (6 & 8 CYLINDER ENGINES)

COPYRIGHT © 1975 — FORD MOTOR COMPANY — DEARBORN, MICHIGAN

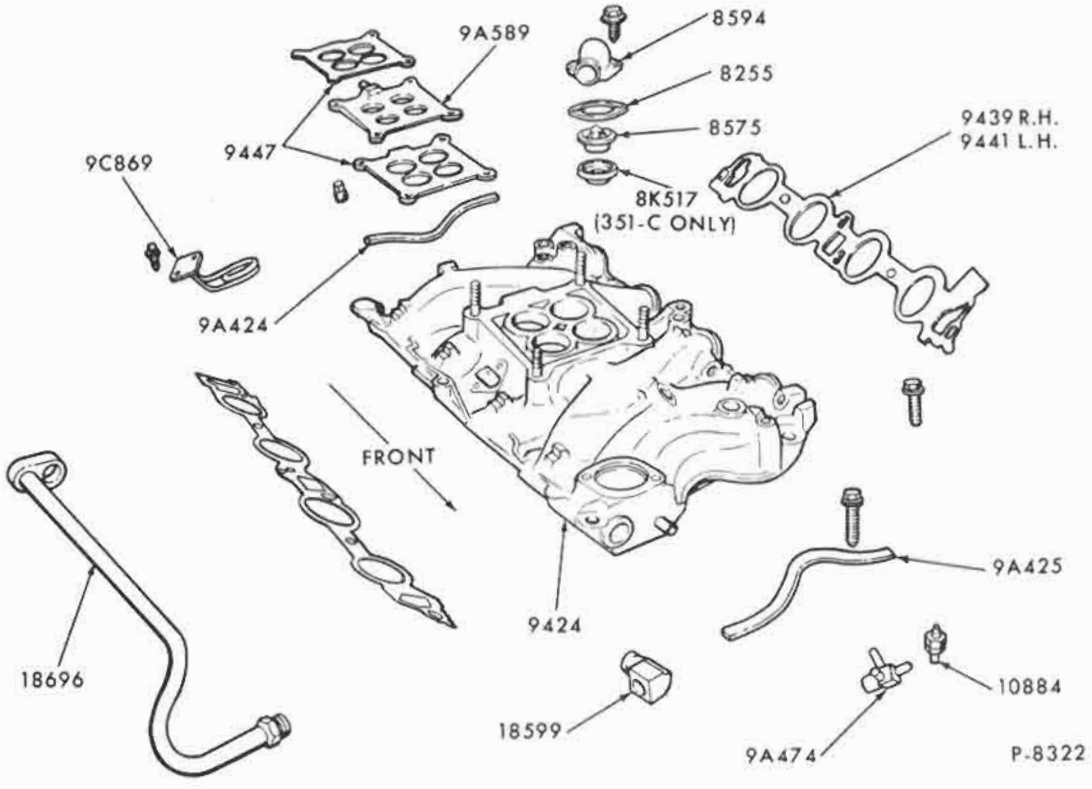

MANIFOLD and RELATED PARTS - INTAKE
1968/72 (8 CYL. 351, 400, 429, 460 ENGINES)

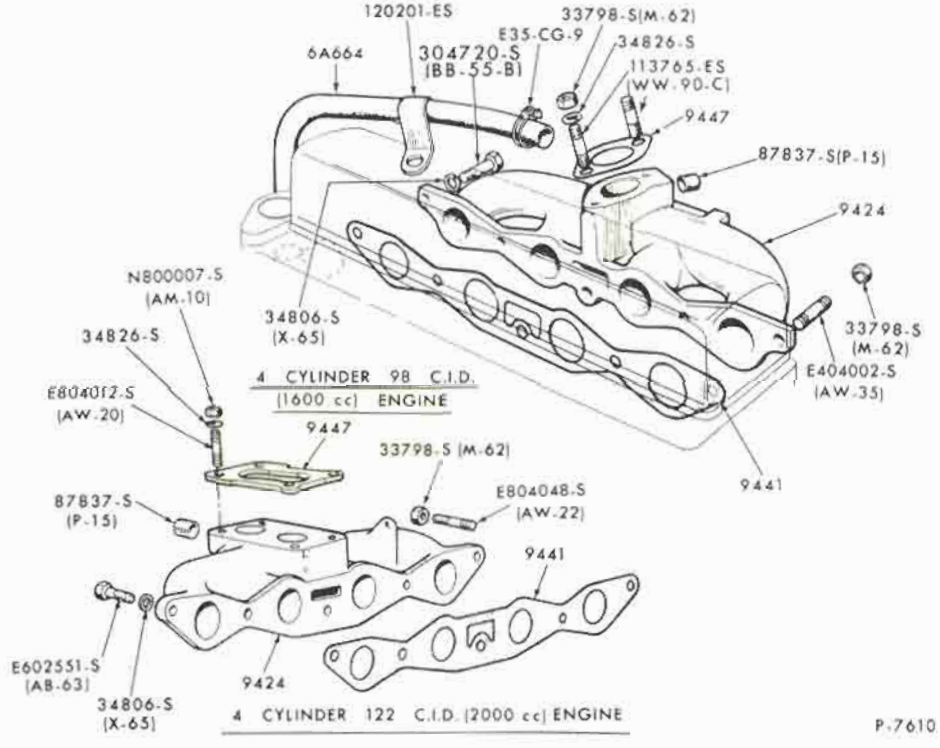

MANIFOLD and RELATED PARTS - INTAKE
1971/72 PINTO

COPYRIGHT © 1975 — FORD MOTOR COMPANY — DEARBORN, MICHIGAN

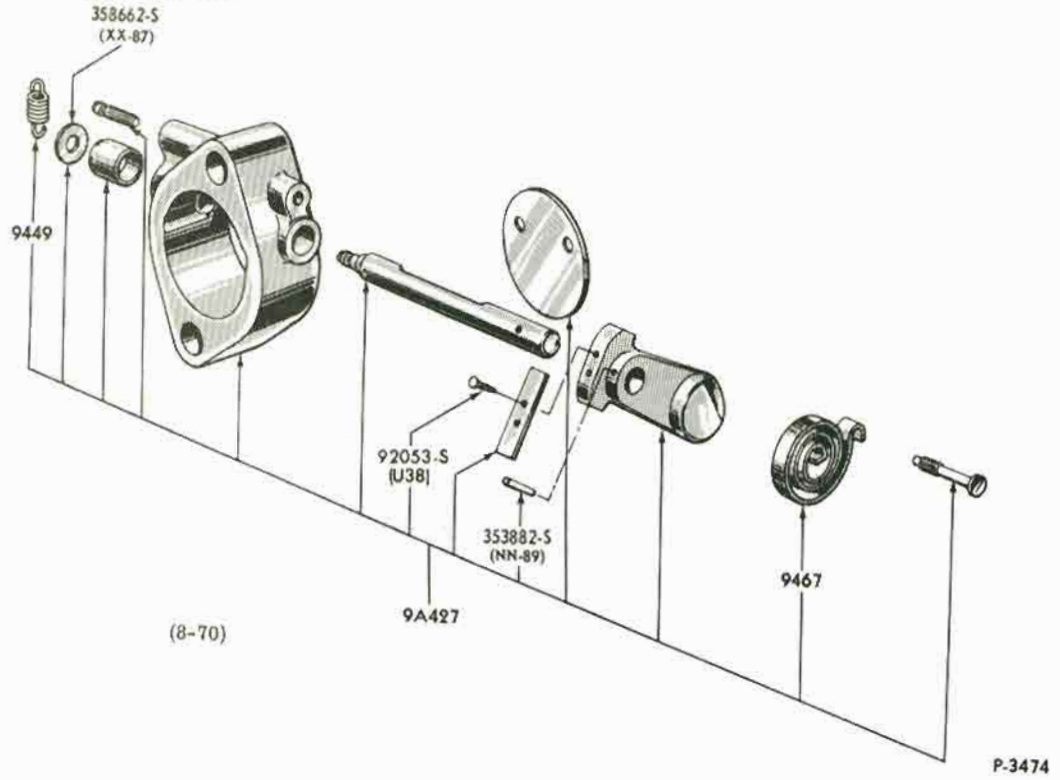

VALVE ASSY.
(EXHAUST THERMOSTAT CONTROL) - 8 CYLINDER (ARM COUNTERWEIGHT) - TYPICAL

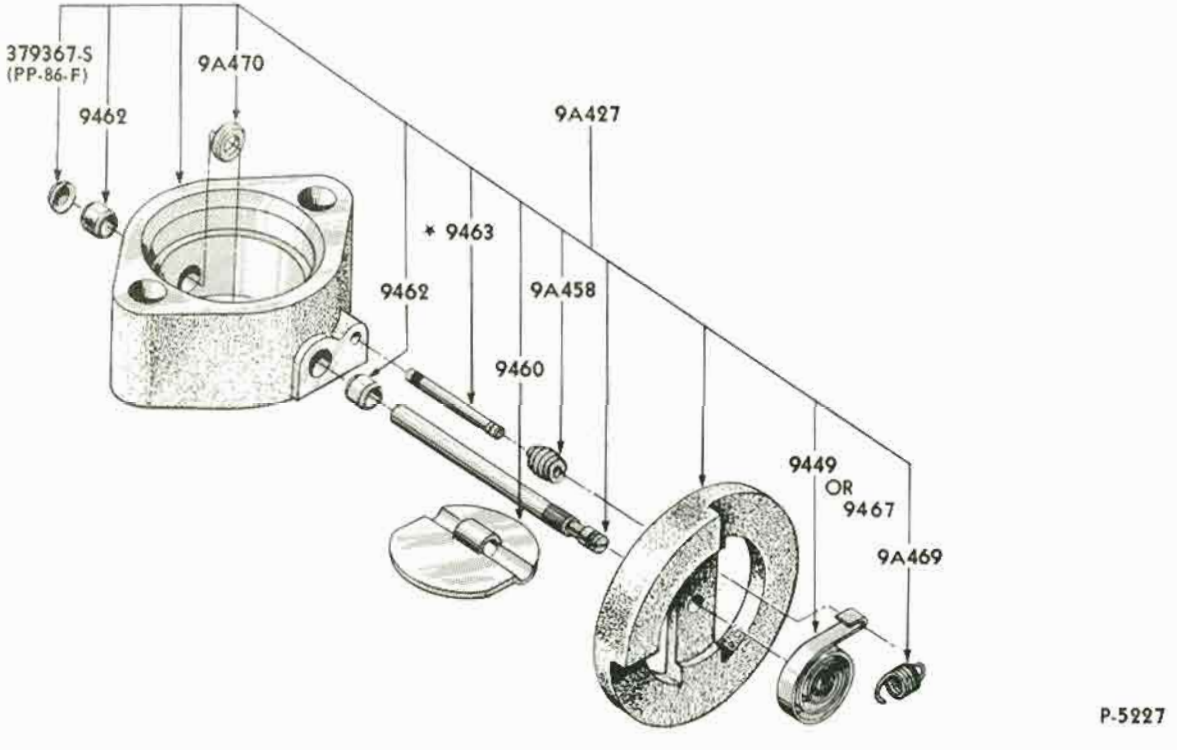

VALVE ASSY.
(EXHAUST THERMOSTAT CONTROL)-8 CYLINDER (WHEEL TYPE COUNTERWEIGHT)-TYPICAL

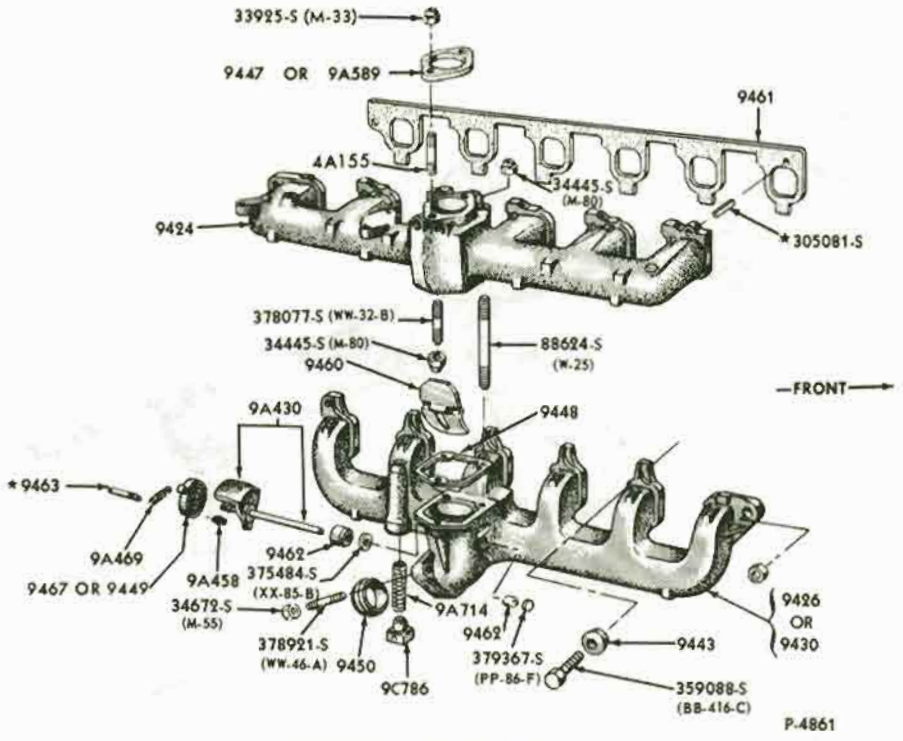

MANIFOLD and RELATED PARTS
1965/ (6 CYLINDER 240 ENGINES)

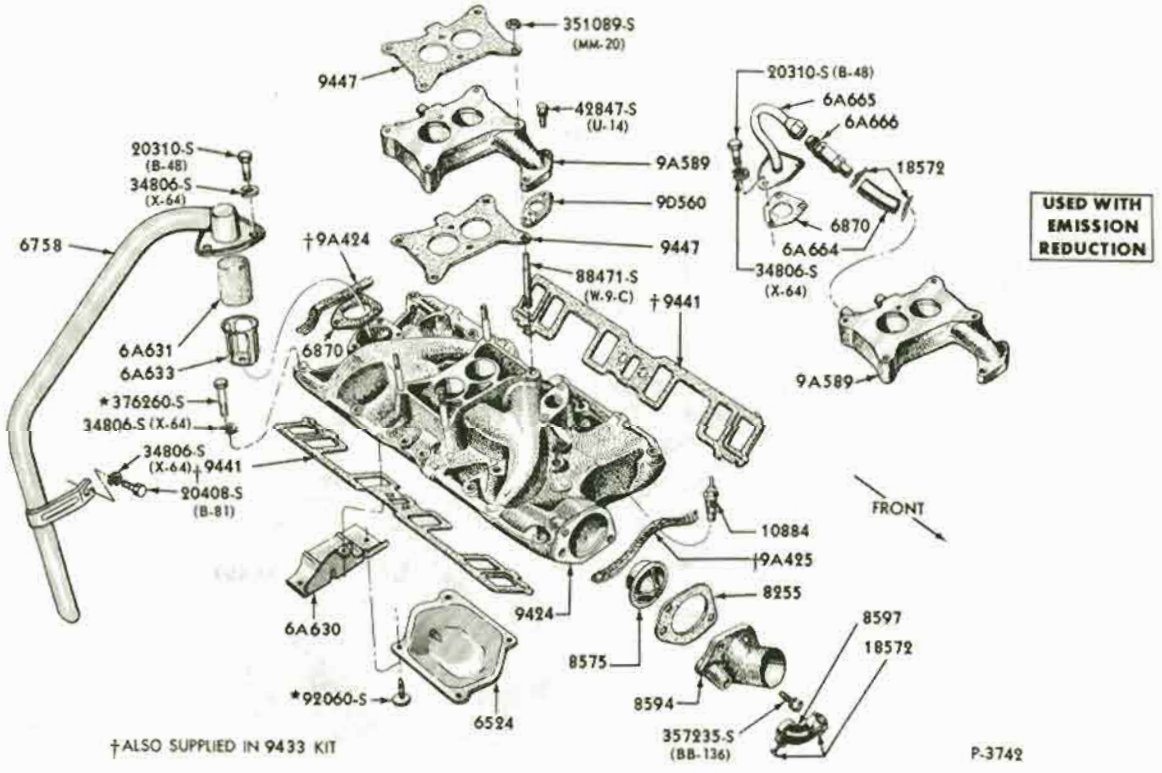

MANIFOLD and RELATED PARTS - INTAKE
1965/72 (8 CYLINDER 260, 289, 302 ENGINES)-TYPICAL

COPYRIGHT © 1975 — FORD MOTOR COMPANY — DEARBORN, MICHIGAN

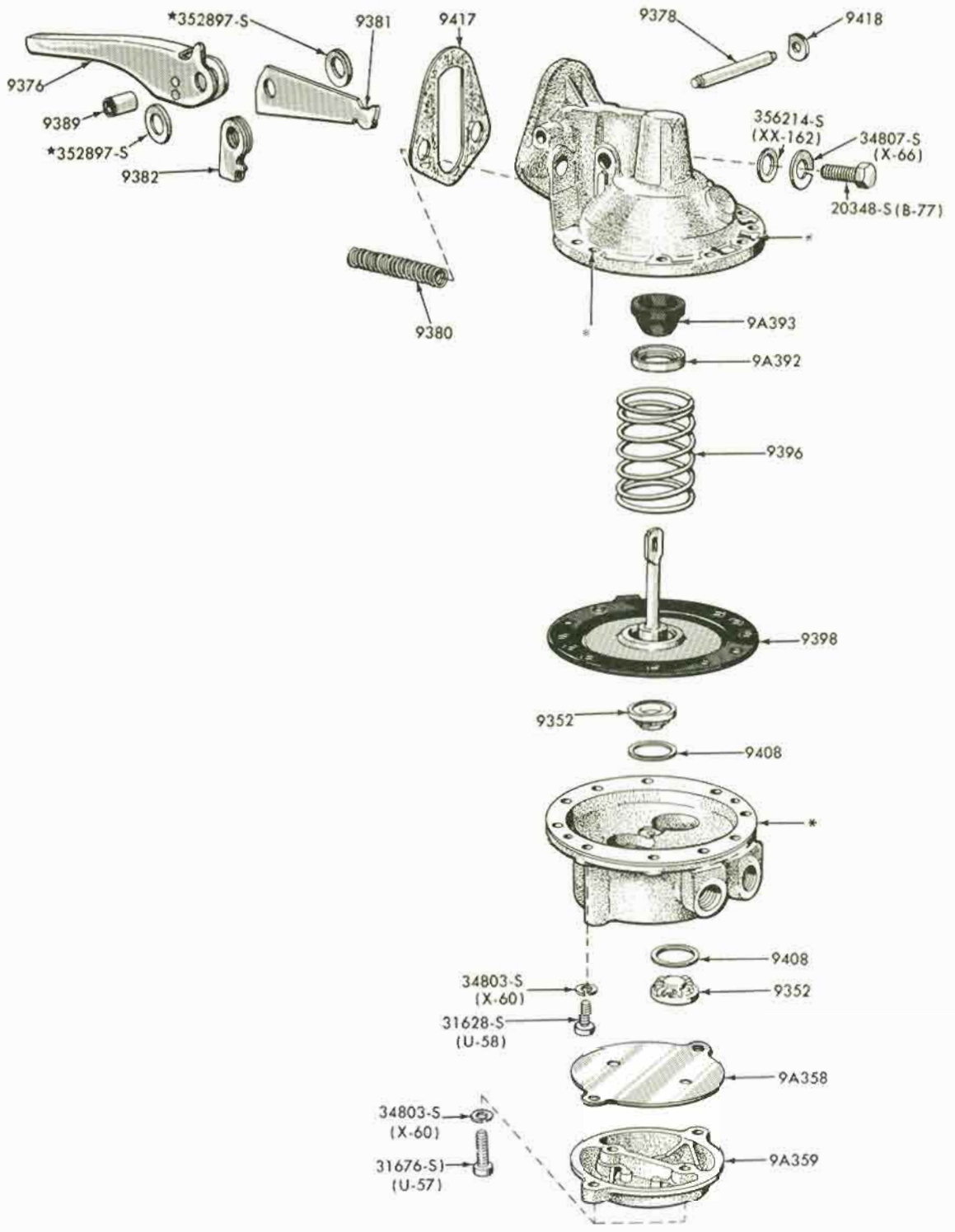

P-3306

*SUPPLIED IN 9350 FUEL PUMP ASSEMBLY

FUEL PUMP

1965/71 FORD (8 CYLINDER 352, 390, 427 ENGINES - SPECIAL with 4V, 6V or 8V CARB.)

COPYRIGHT © 1975 — FORD MOTOR COMPANY — DEARBORN, MICHIGAN

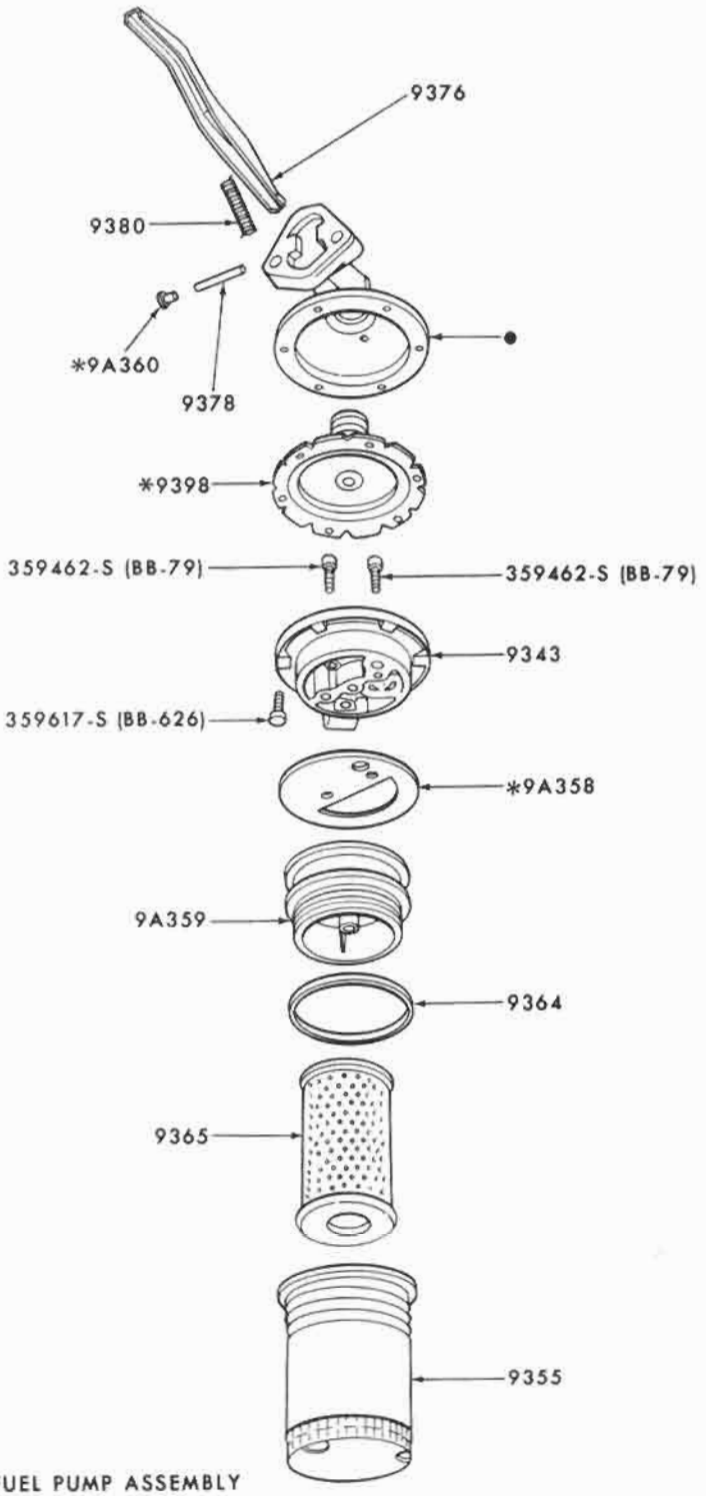

●SUPPLIED IN 9350 FUEL PUMP ASSEMBLY
*ALSO SUPPLIED IN 9349 REPAIR KIT

P-3715

FUEL PUMP and FILTER
1965 (8 CYLINDER 260, 289, 352, 390 ENGINES EXCEPT SPECIAL)
1966 THUNDERBIRD (8 CYLINDER 390, 428 ENGINES)

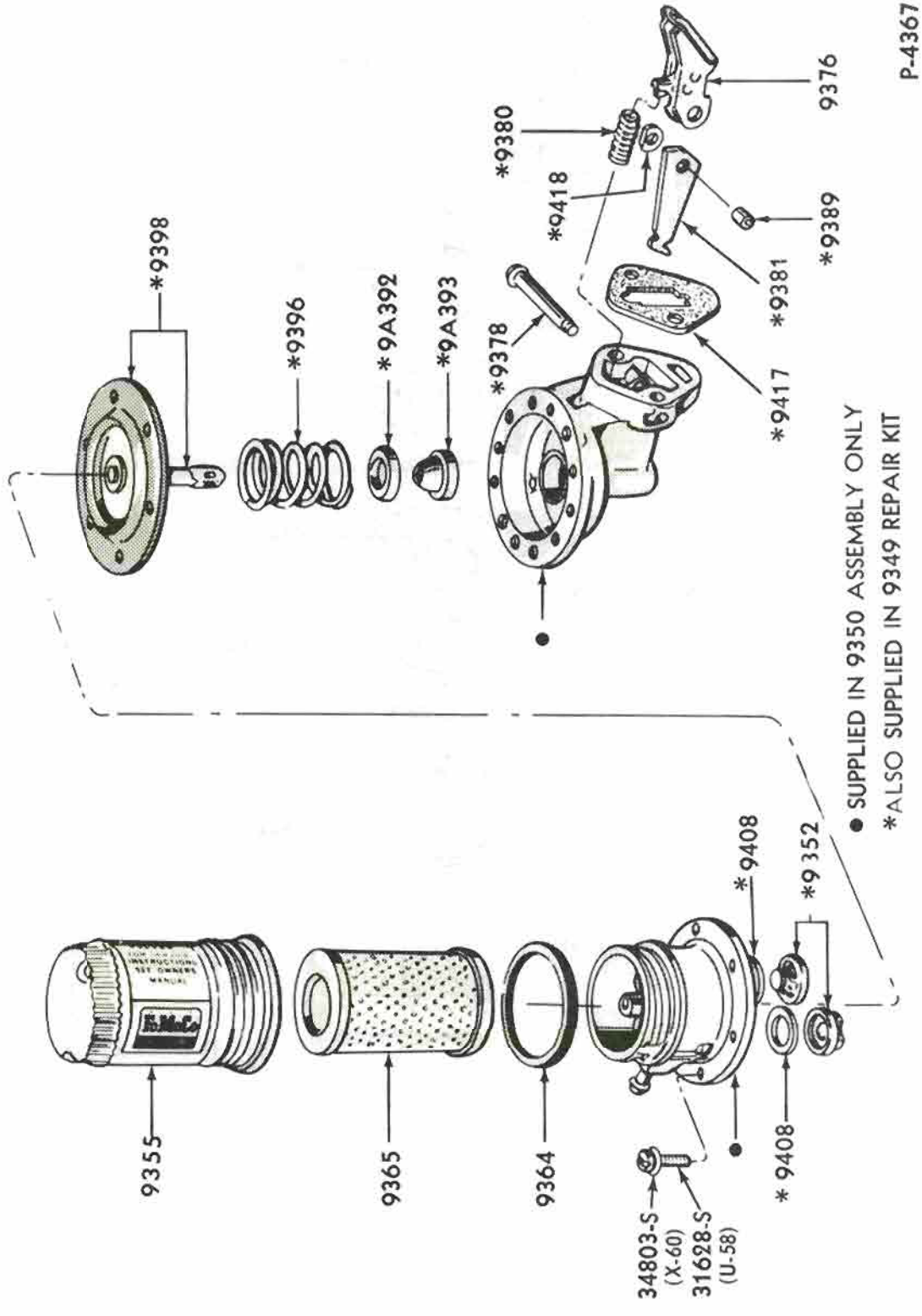

FUEL PUMP and FILTER ASSY.
1965 (6 CYLINDER 170, 200, 240 ENGINES)

COPYRIGHT © 1975 — FORD MOTOR COMPANY — DEARBORN, MICHIGAN

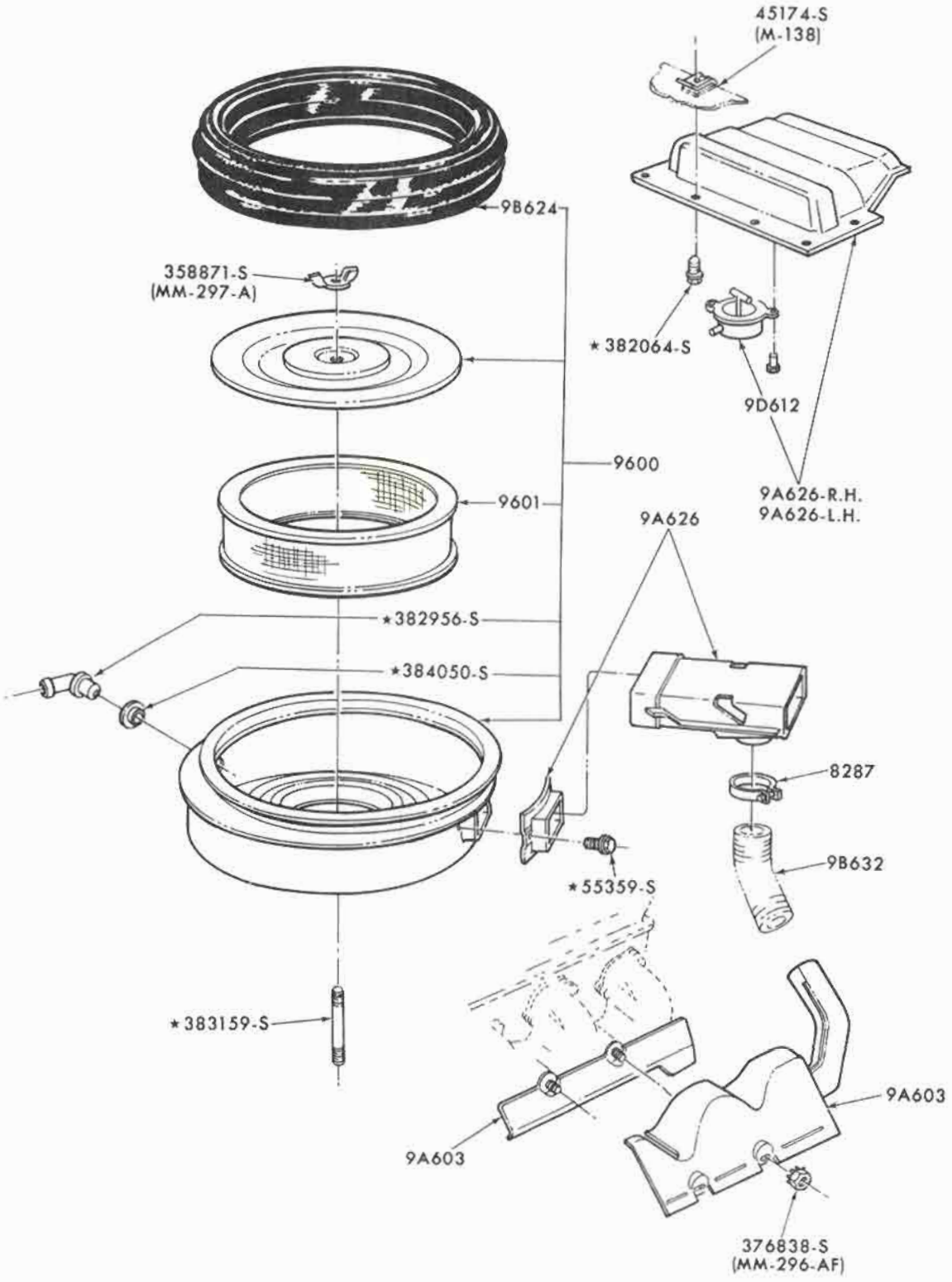

P-8291

AIR CLEANER - 8 CYLINDER - RAM AIR
1971 MUSTANG (302-4V BOSS ENGINE)

COPYRIGHT © 1975 — FORD MOTOR COMPANY — DEARBORN, MICHIGAN

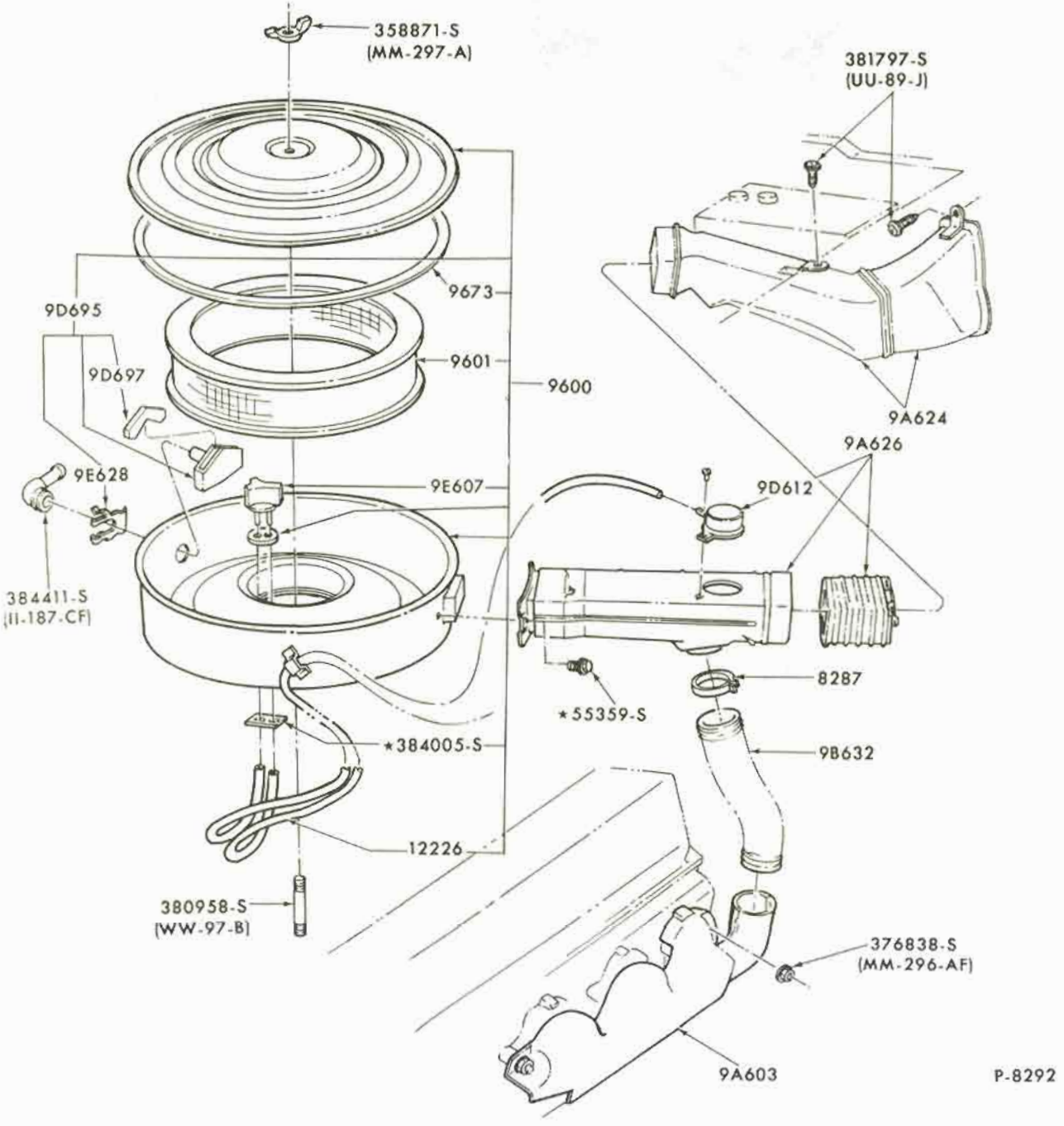

AIR CLEANER - 8 CYLINDER
1971 THUNDERBIRD (429 ENGINE)

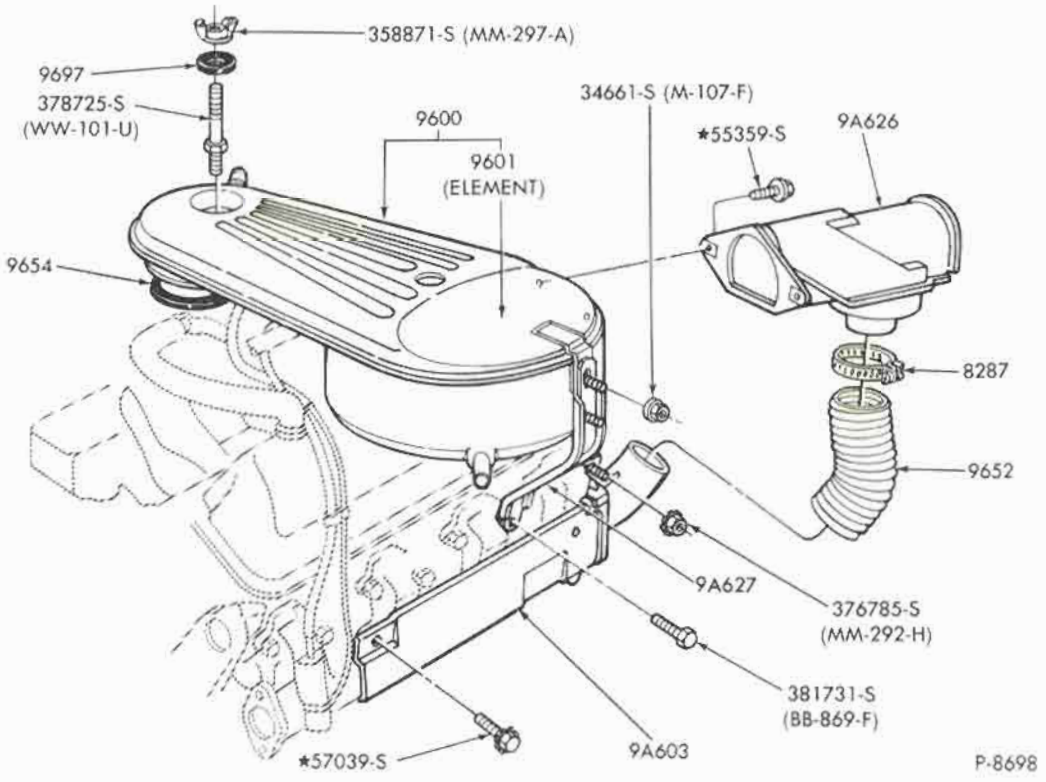

AIR CLEANER - DRY and OIL BATH TYPE - 8 CYLINDER
1970/72 BRONCO

COPYRIGHT © 1975 — FORD MOTOR COMPANY — DEARBORN, MICHIGAN

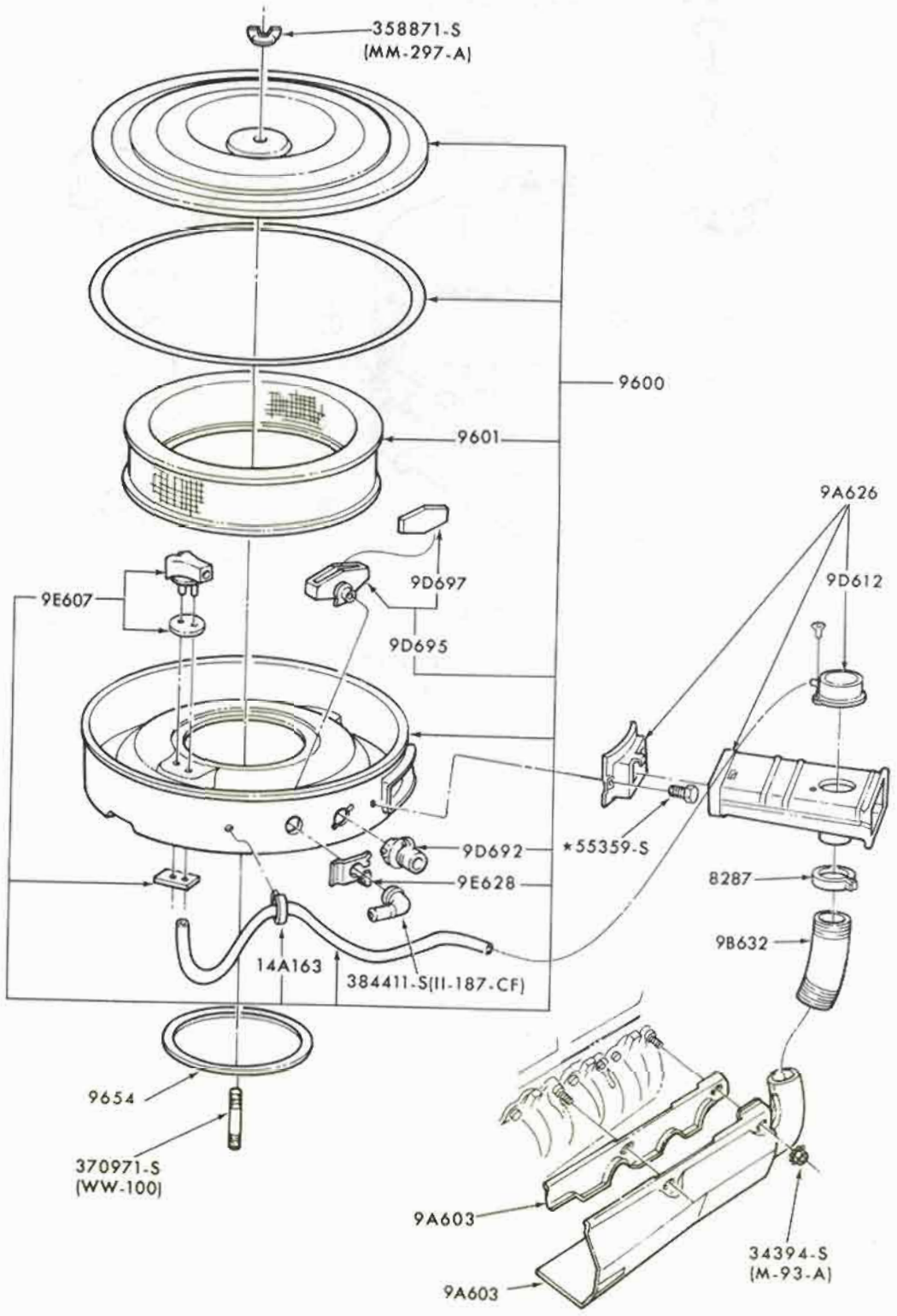

P-9119

AIR CLEANER - 8 CYLINDER
1972 FORD, THUNDERBIRD, TORINO (400 ENGINE) - EXCEPT CALIFORNIA

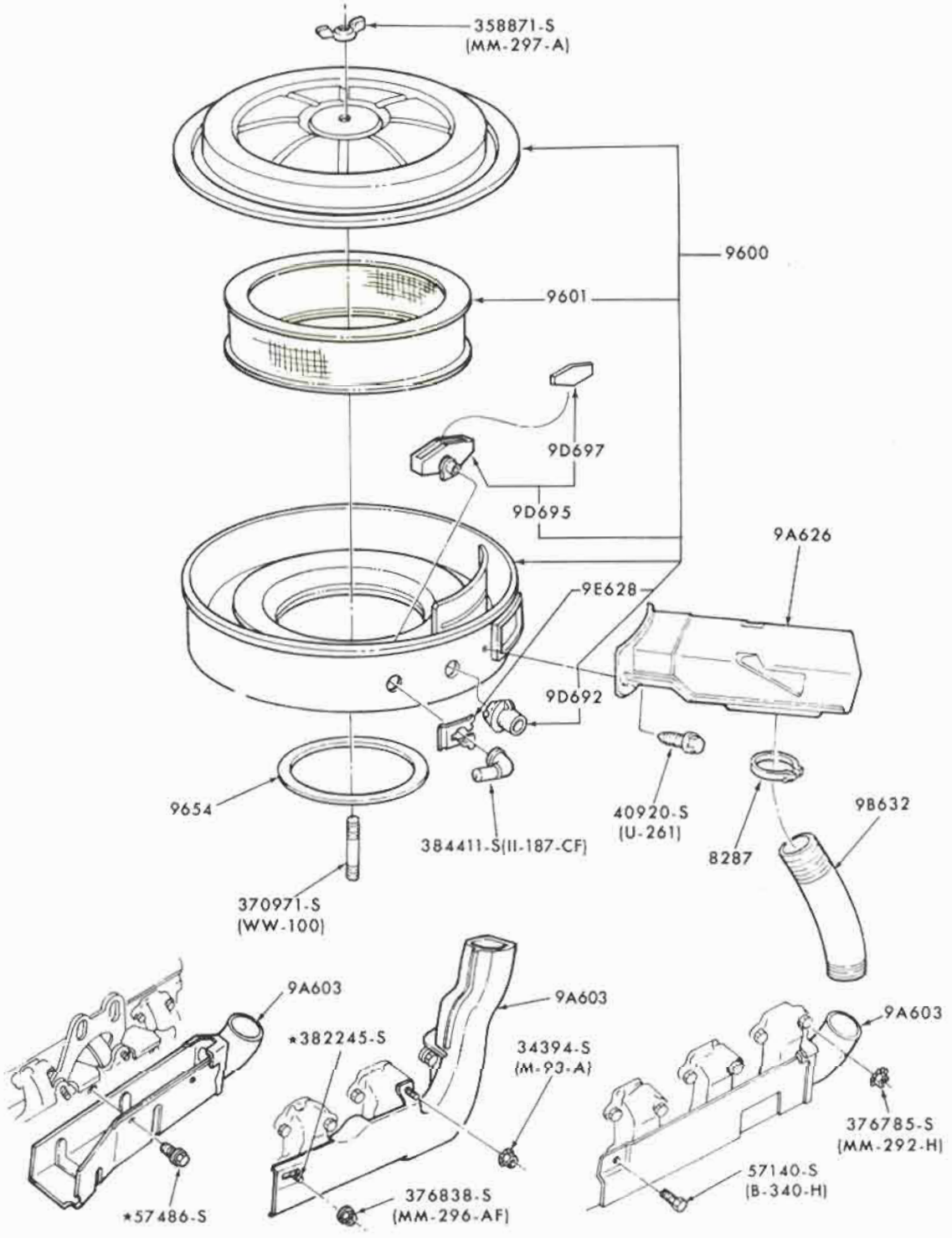

P-9120

AIR CLEANER - 8 CYLINDER
1972 FORD (351-W ENGINE)
1972 FORD, MAVERICK, MUSTANG, TORINO (302 ENGINE) - EXCEPT CALIFORNIA

COPYRIGHT © 1975 — FORD MOTOR COMPANY — DEARBORN, MICHIGAN

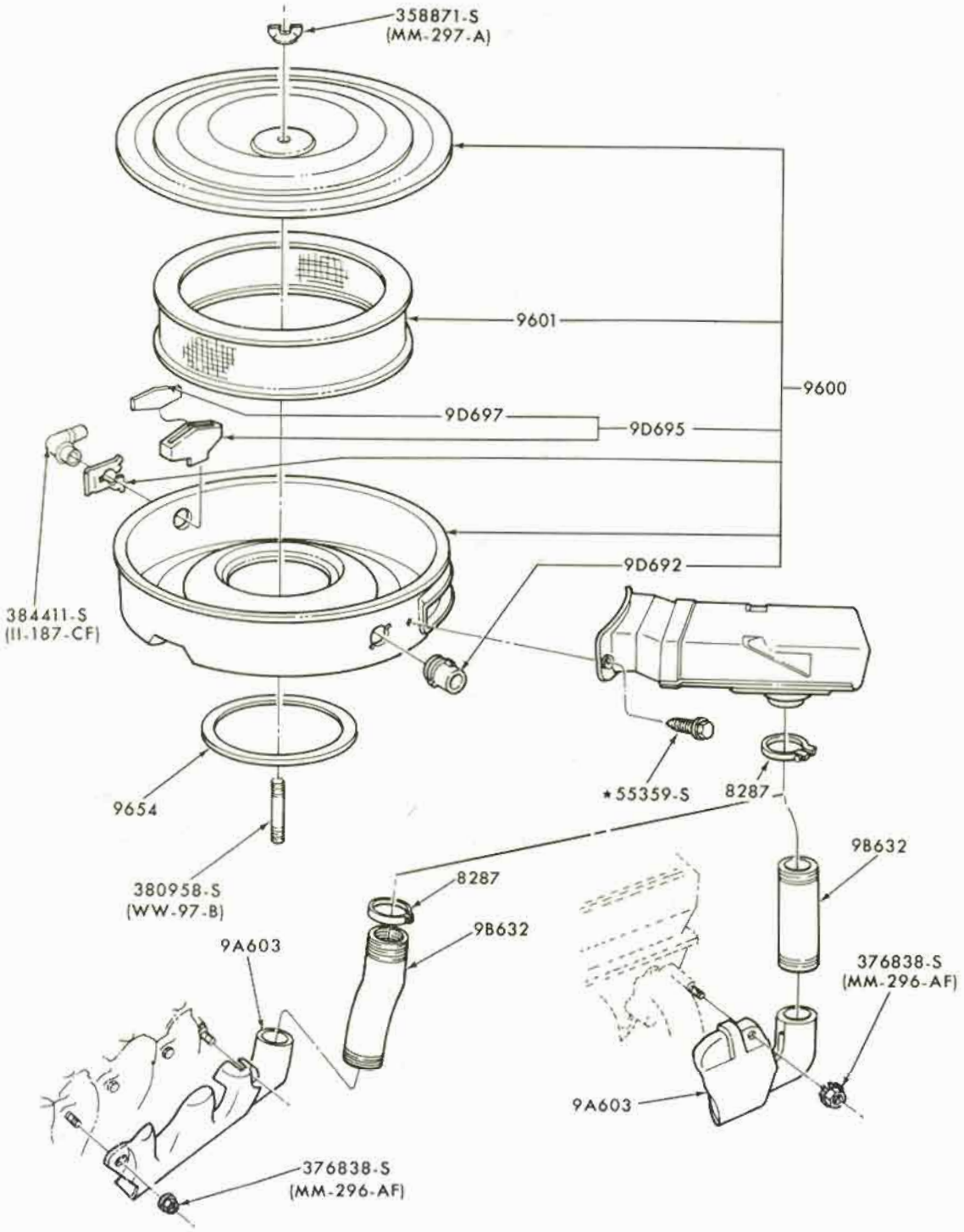

FORD, MERCURY, METEOR

TORINO, MONTEGO

P-9121

AIR CLEANER - 8 CYLINDER
1972 FORD (EXCEPT 429 POLICE ENGINE)
1972 TORINO (429-4V-EXC. RAM AIR) - EXCEPT CALIFORNIA

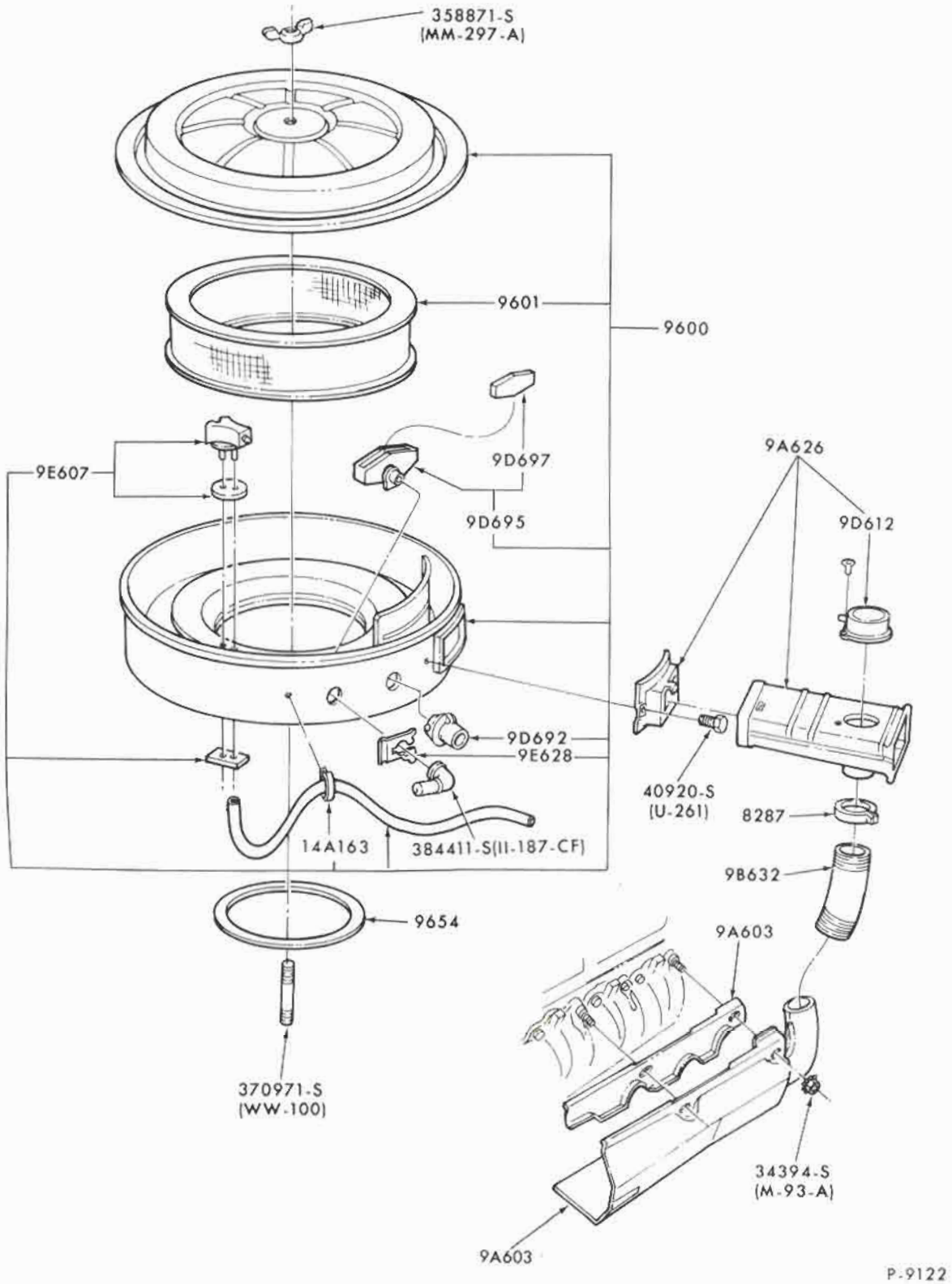

AIR CLEANER - 8 CYLINDER
1972 FORD (351-C ENGINE) - (EXCEPT CALIFORNIA)
1972 MUSTANG, TORINO (351-2V ENGINE)-EXC. CALIFORNIA

COPYRIGHT © 1975 — FORD MOTOR COMPANY — DEARBORN, MICHIGAN

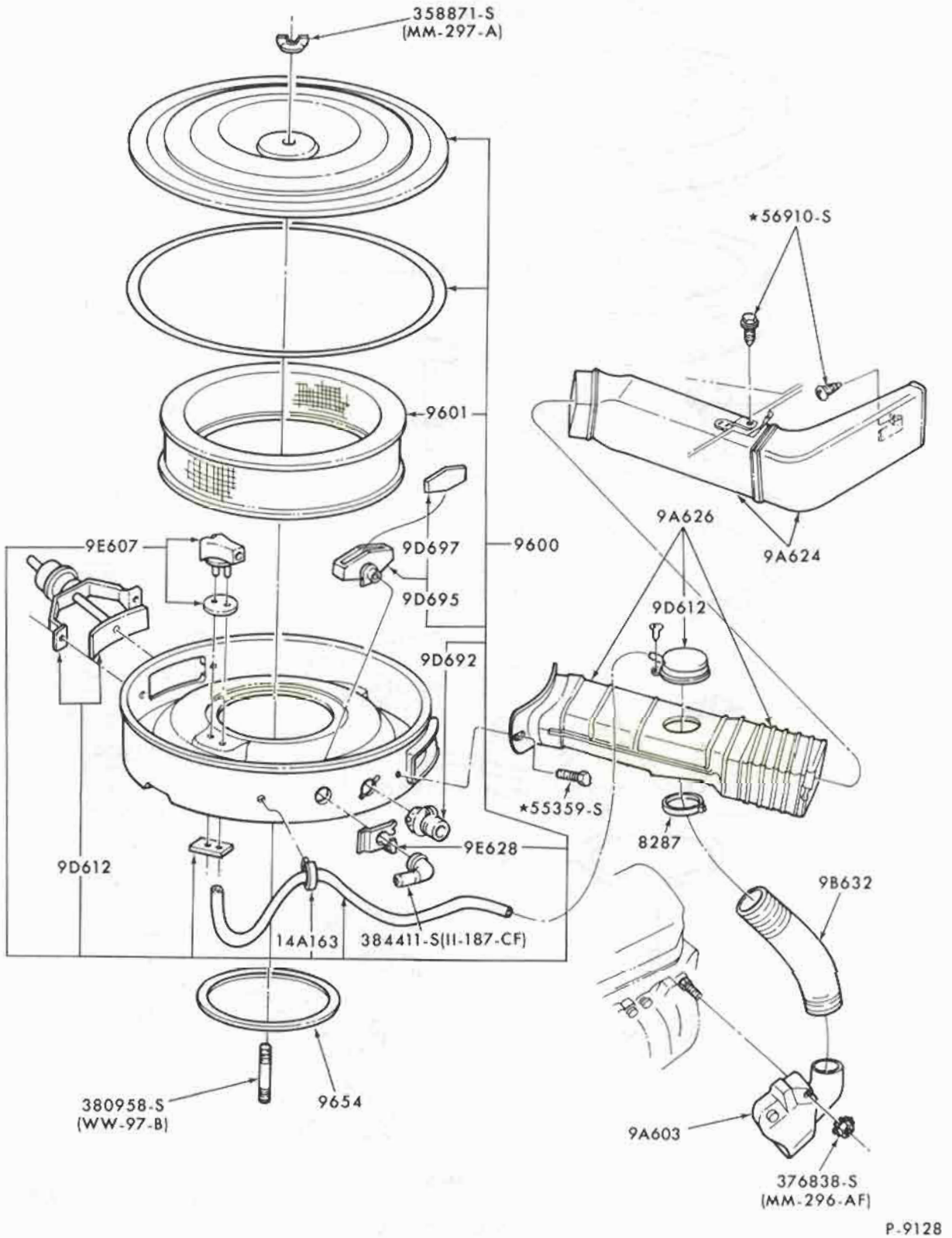

AIR CLEANER - 8 CYLINDER
1972 FORD (429-4V POLICE ENGINE)

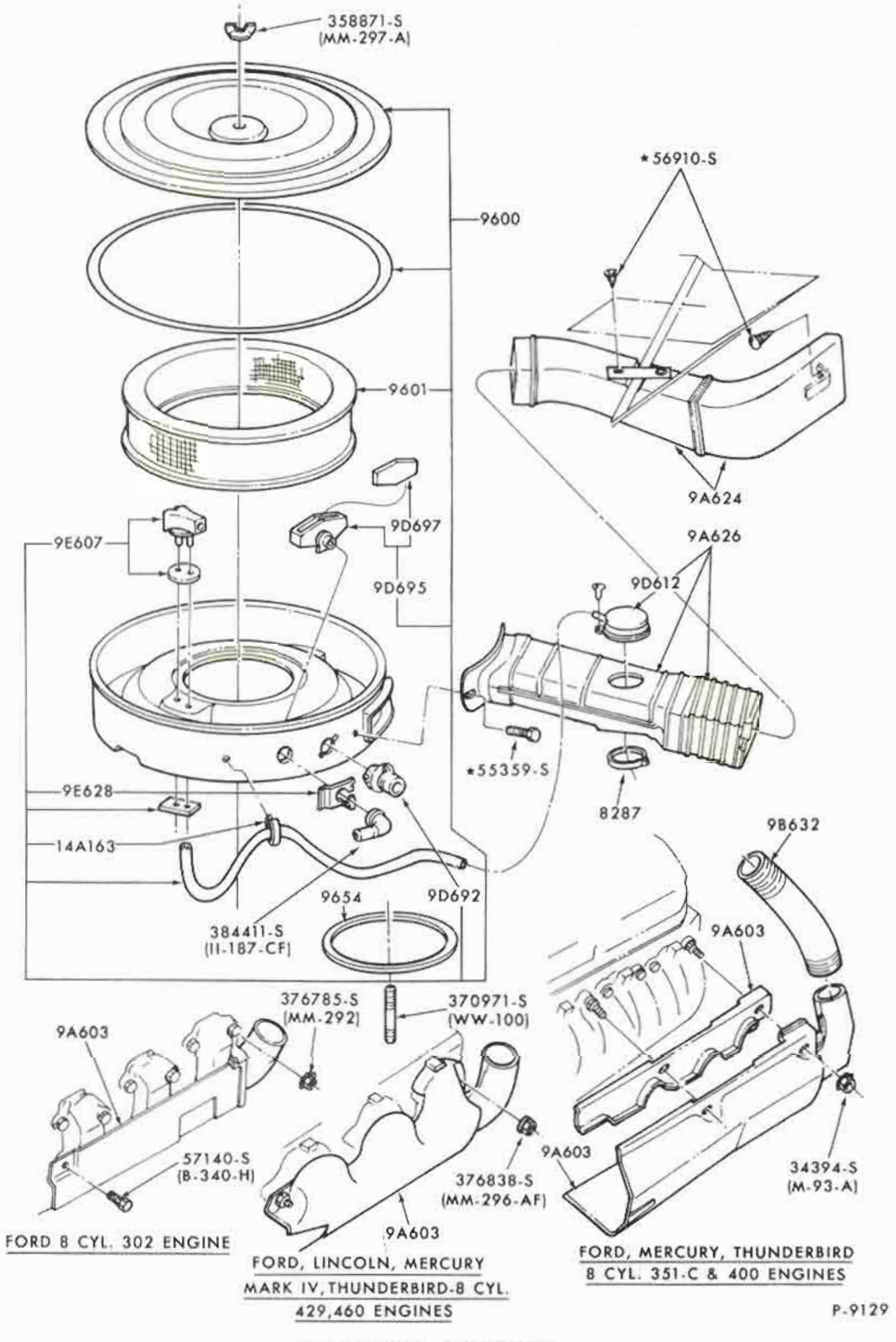

AIR CLEANER - 8 CYLINDER
1972 FORD (302,351-C,400 ENGINES) - CALIFORNIA ONLY
1972 THUNDERBIRD (400 CALIFORNIA ONLY 429 and 460 ENGINES)

COPYRIGHT © 1975 — FORD MOTOR COMPANY — DEARBORN, MICHIGAN

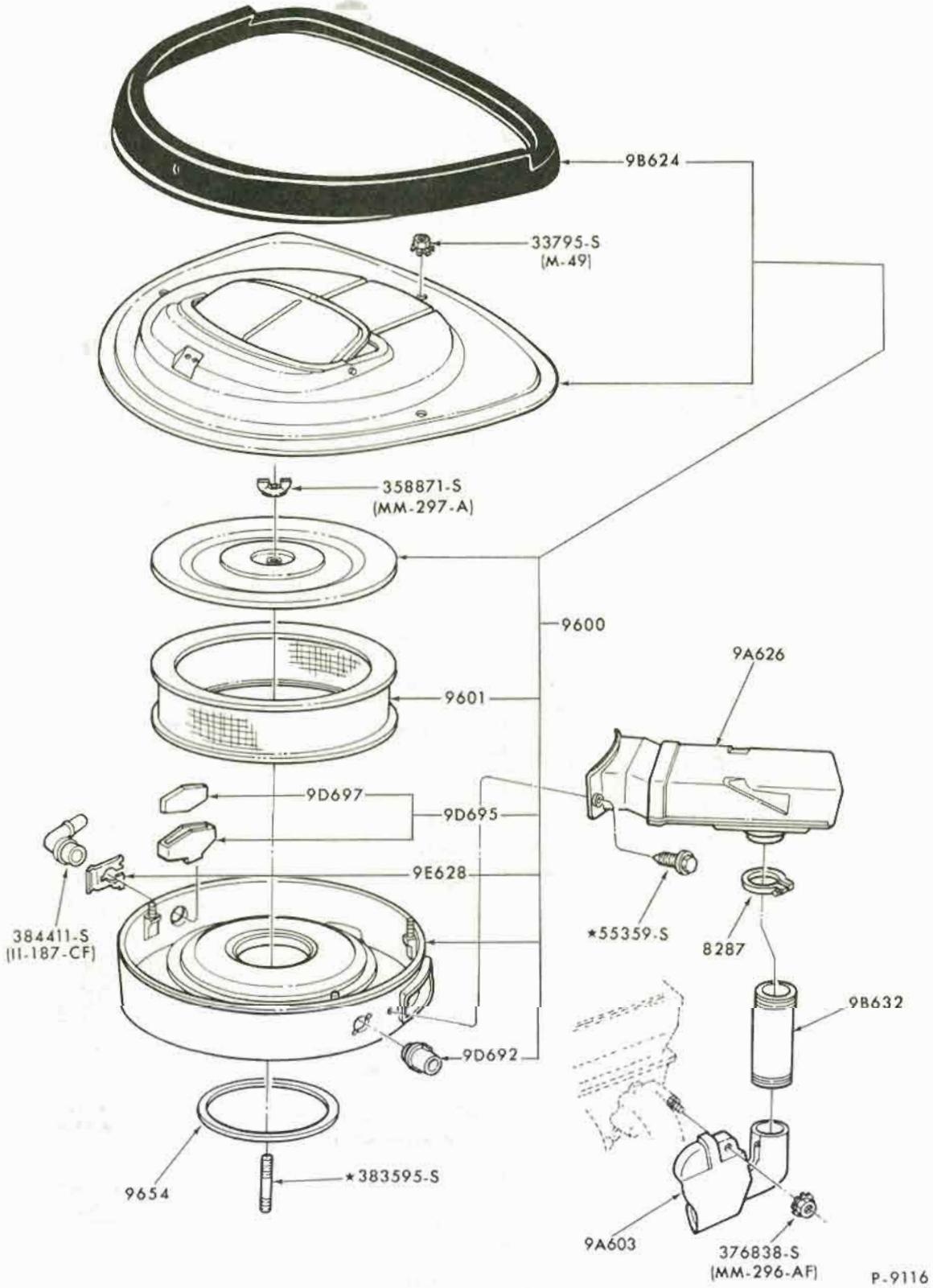

AIR CLEANER - 8 CYLINDER - RAM AIR
1972 TORINO (429 ENGINE)

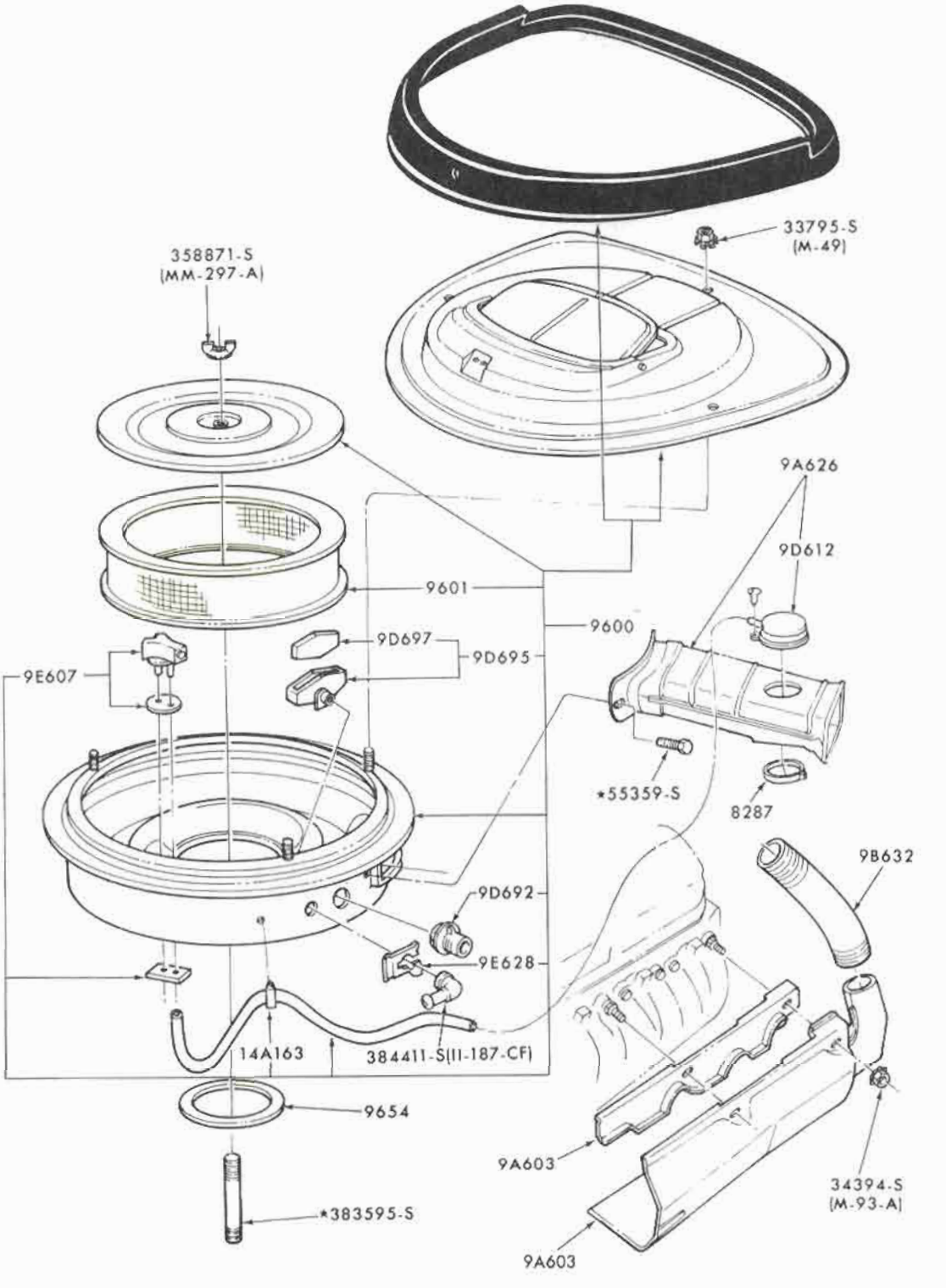

P-9117

AIR CLEANER - 8 CYLINDER - RAM AIR

1972 TORINO (351-4V-COBRA JET ENGINE)-EXC. CALIFORNIA

COPYRIGHT © 1975 — FORD MOTOR COMPANY — DEARBORN, MICHIGAN

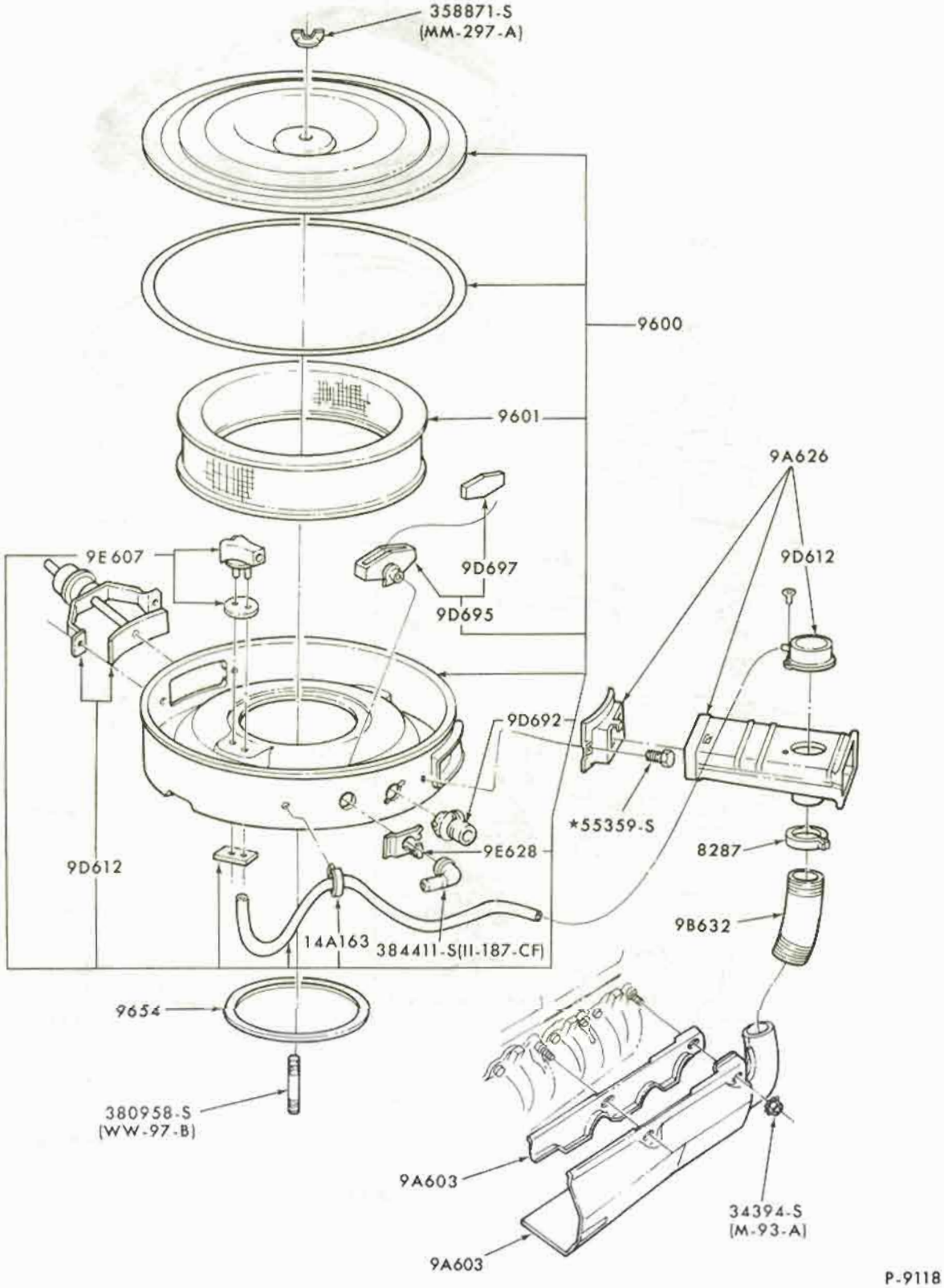

AIR CLEANER - 8 CYL. - EXC. RAM AIR

1972 MUSTANG, TORINO (351-4V COBRA JET ENGINE)-EXC. CALIFORNIA

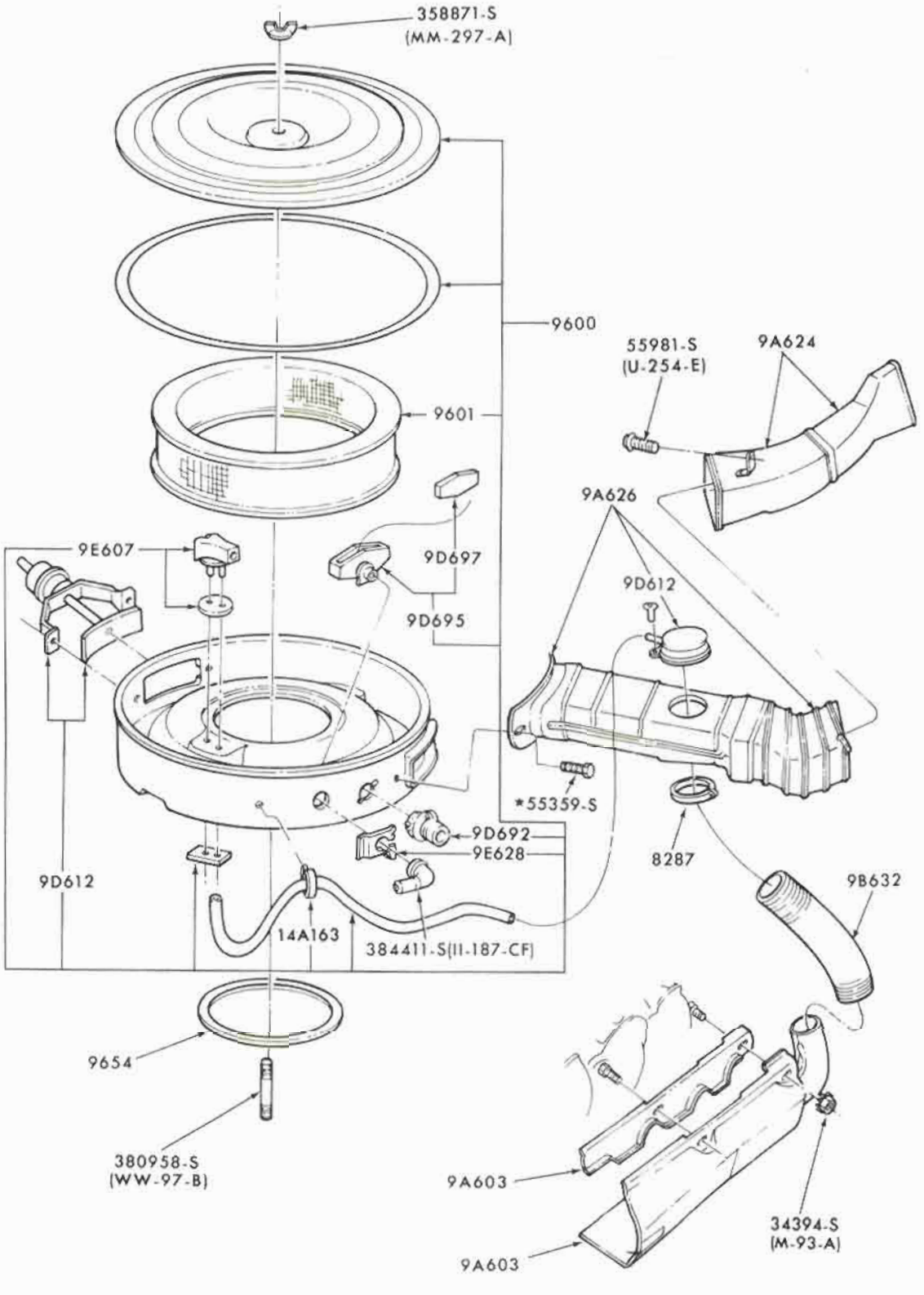

P-9124

AIR CLEANER - 8 CYL. - EXC. RAM AIR
1972 TORINO (351-4V COBRA JET ENGINE) - CALIFORNIA ONLY

COPYRIGHT © 1975— FORD MOTOR COMPANY —DEARBORN, MICHIGAN

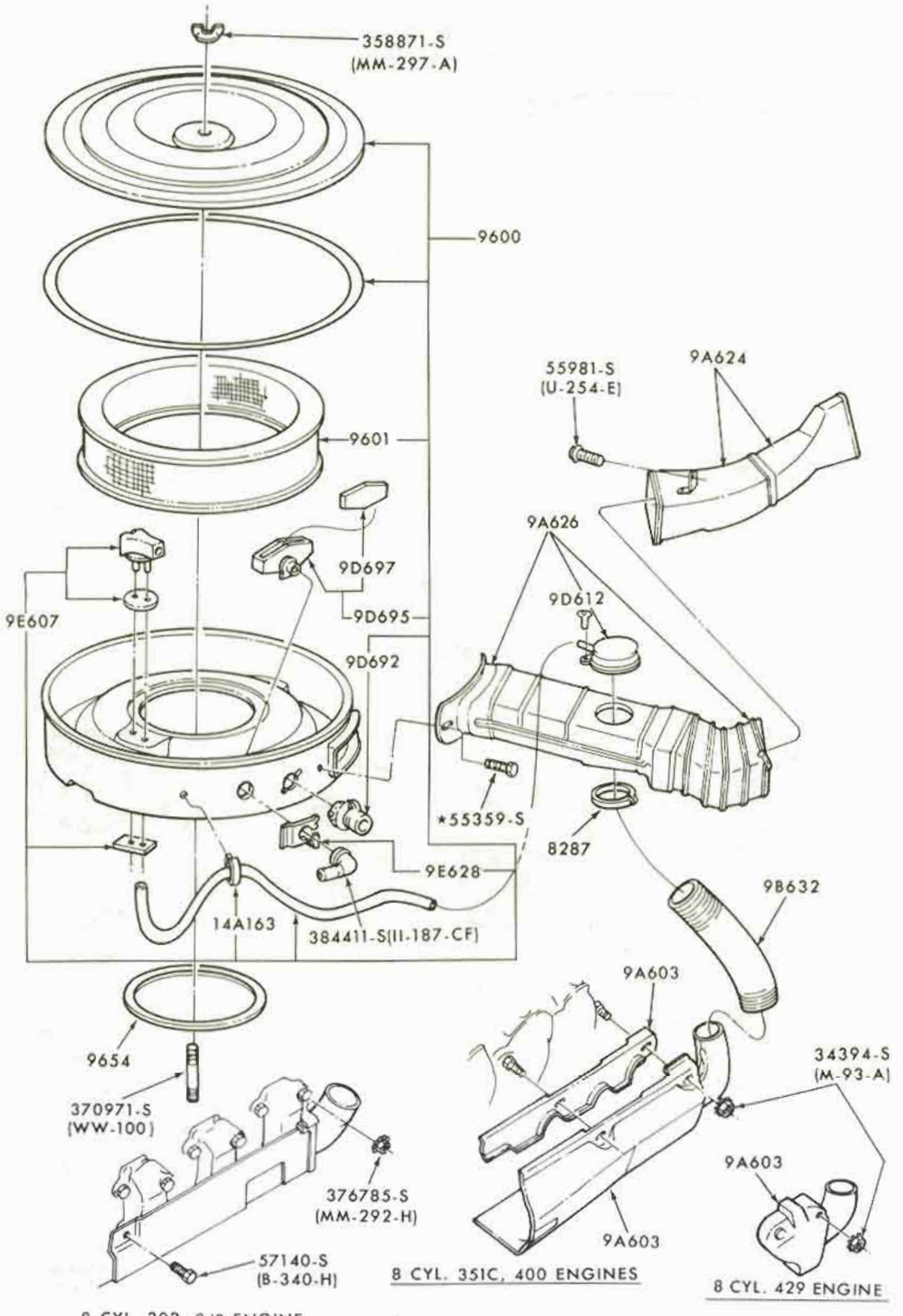

AIR CLEANER - 8 CYL. - EXC. RAM AIR
1972 TORINO (302,351-2V,400,429 ENGINES)- CALIFORNIA ONLY

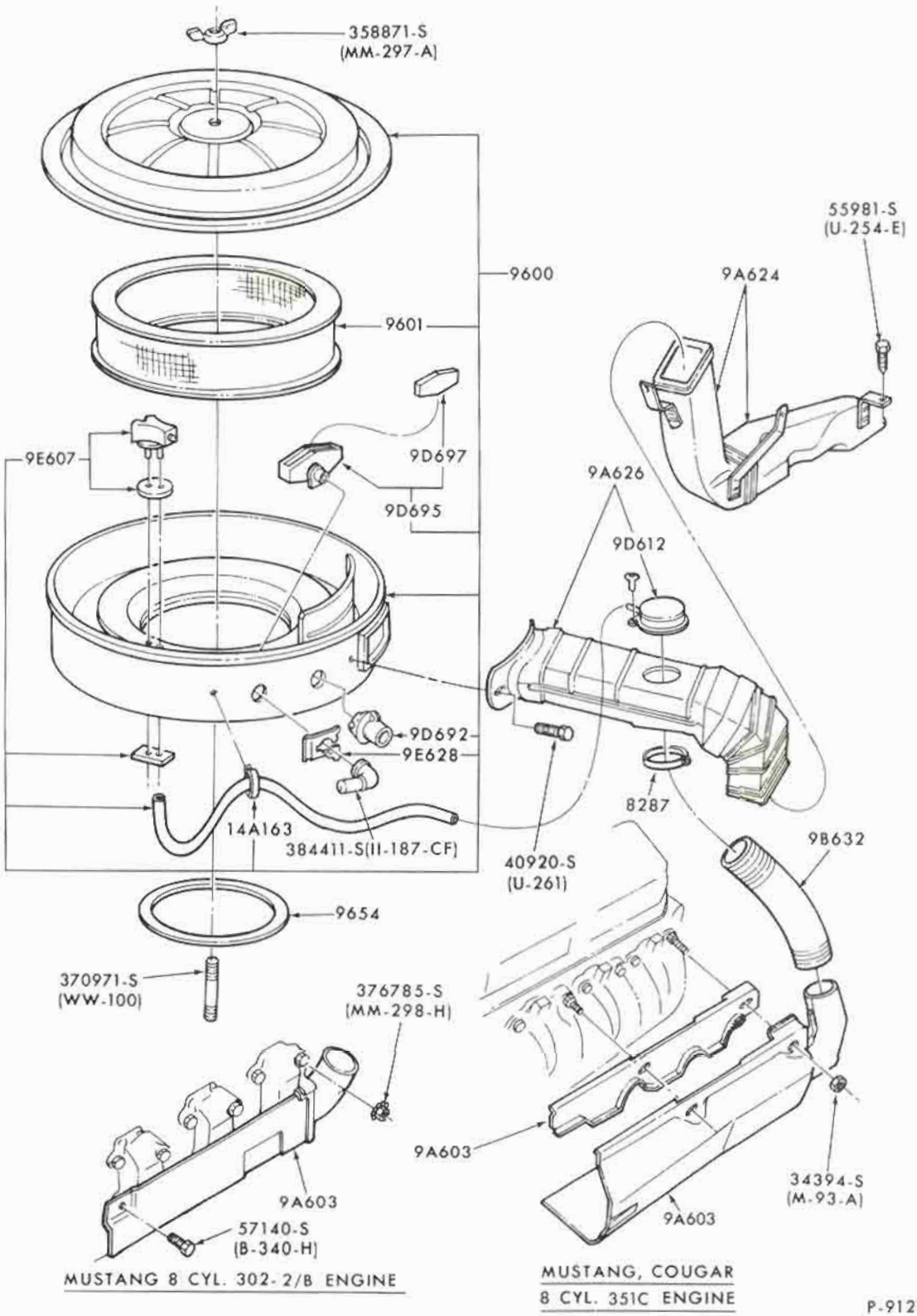

AIR CLEANER - 8 CYLINDER
1972 MUSTANG (302-2V,351-2V ENGINES)-CALIFORNIA ONLY

COPYRIGHT © 1975 — FORD MOTOR COMPANY — DEARBORN, MICHIGAN

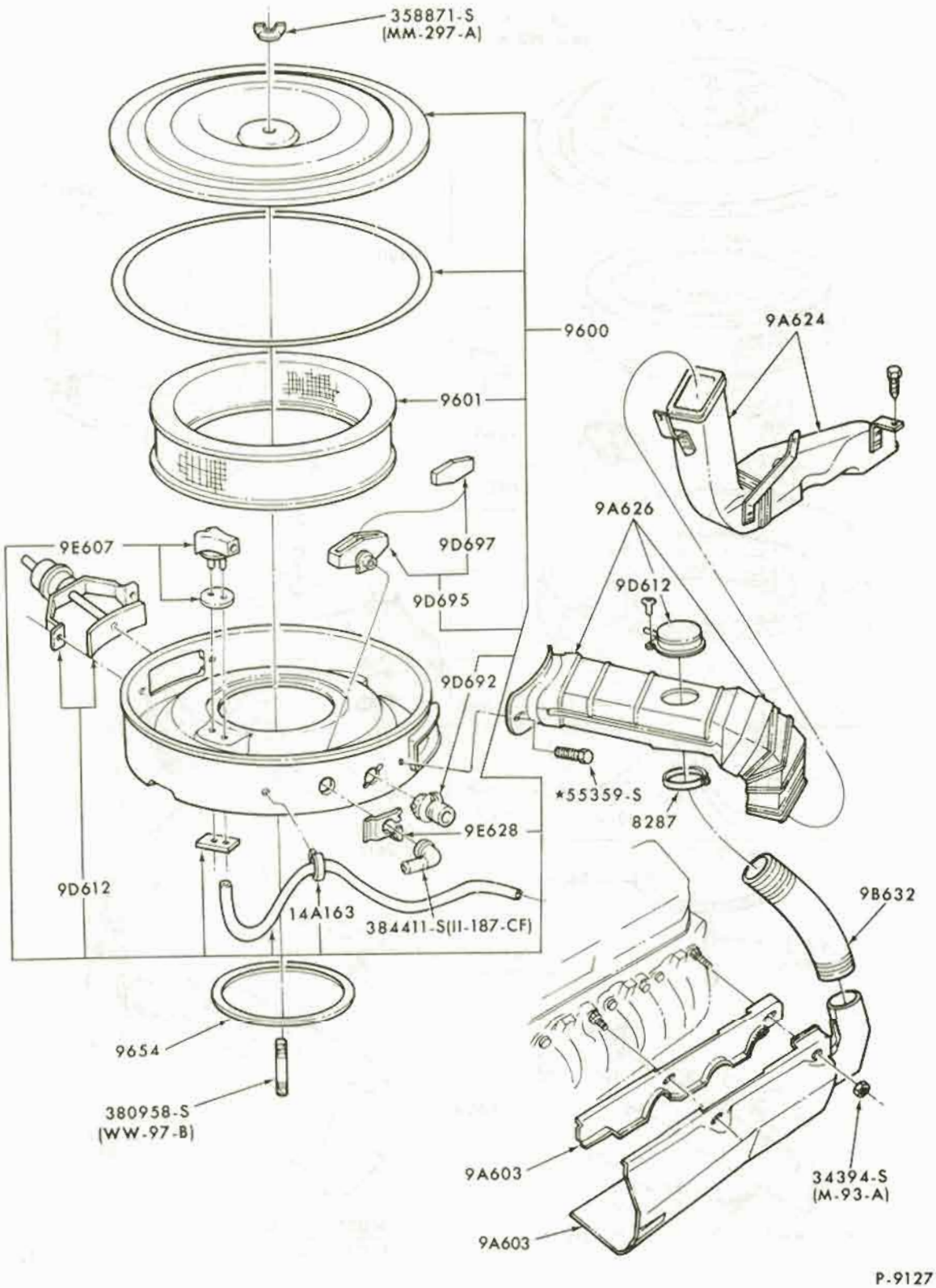

AIR CLEANER - 8 CYL. - EXC. RAM AIR

1972 MUSTANG (351-4V COBRA JET ENGINE) - CALIFORNIA ONLY

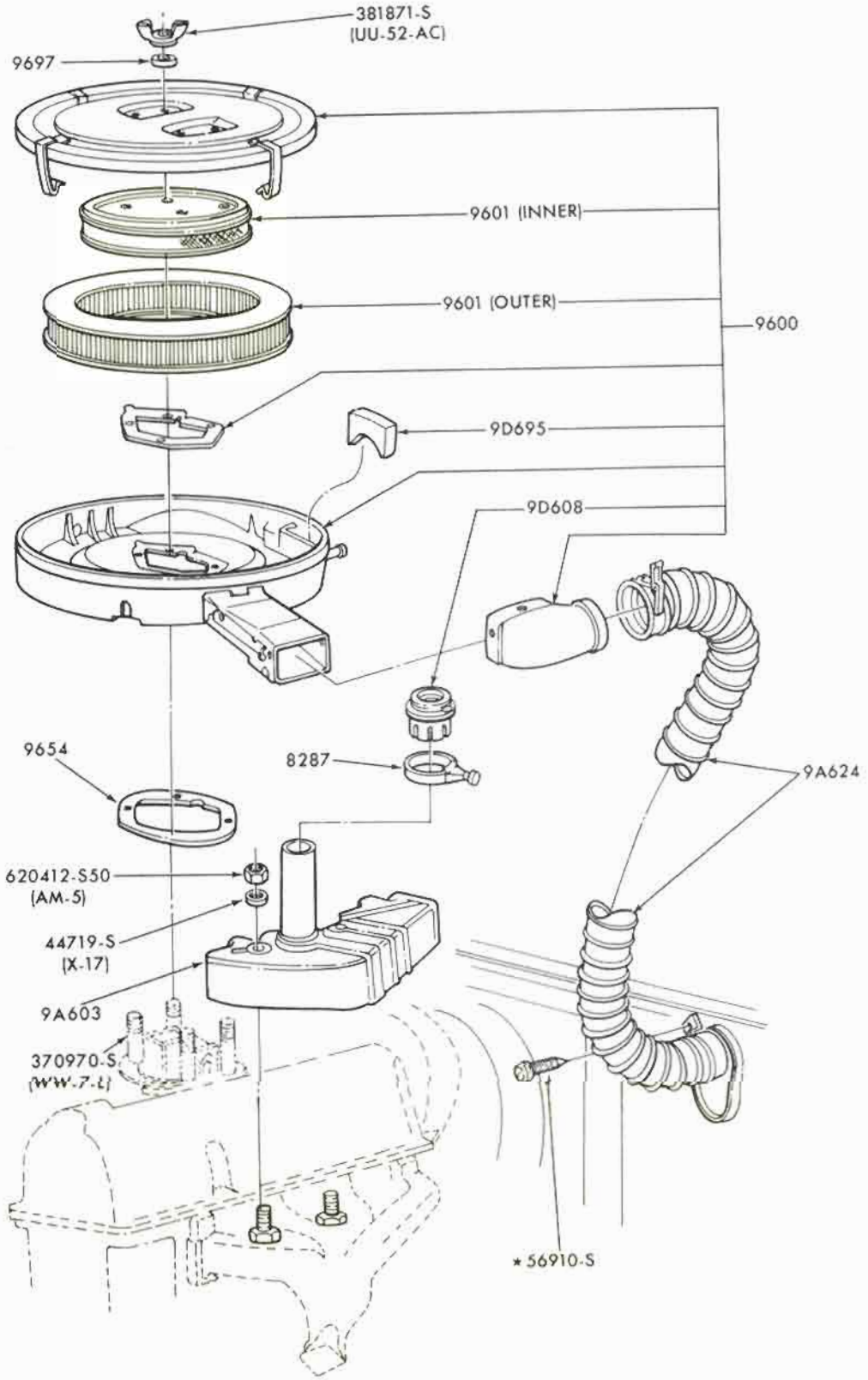

P-9123

AIR CLEANER - 4 CYLINDER 122 (2000 cc) ENGINE)
1971/ PINTO - WITH AIR CONDITIONING

COPYRIGHT © 1975 — FORD MOTOR COMPANY — DEARBORN, MICHIGAN

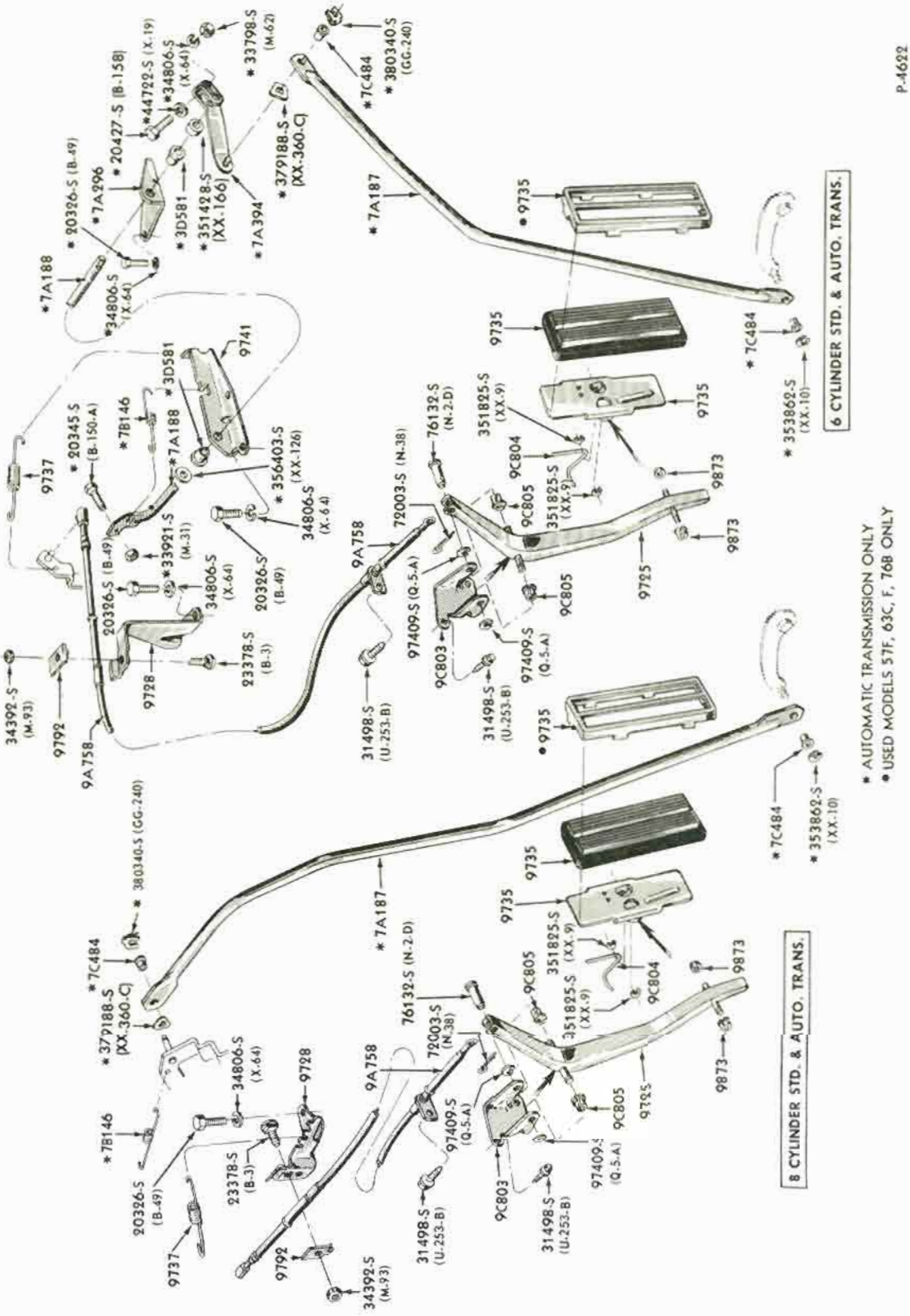

ACCELERATOR LINKAGE
1965/70 FORD (6 & 8 CYLINDER)

COPYRIGHT © 1975 — FORD MOTOR COMPANY — DEARBORN, MICHIGAN

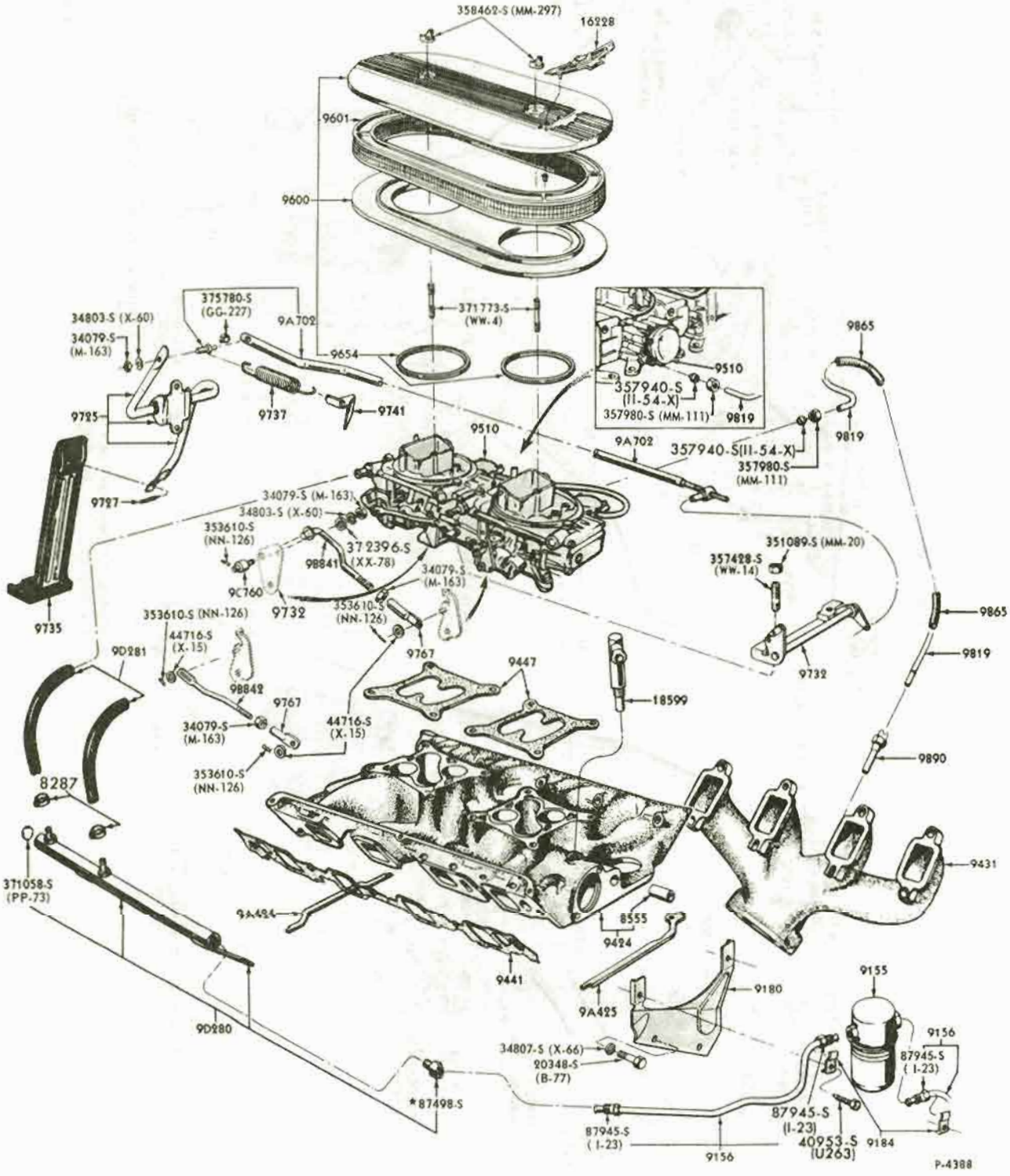

ACCELERATOR LINKAGE
1965/67 FORD (8 CYLINDER 427 ENGINE) with DUAL 4/B CARB.

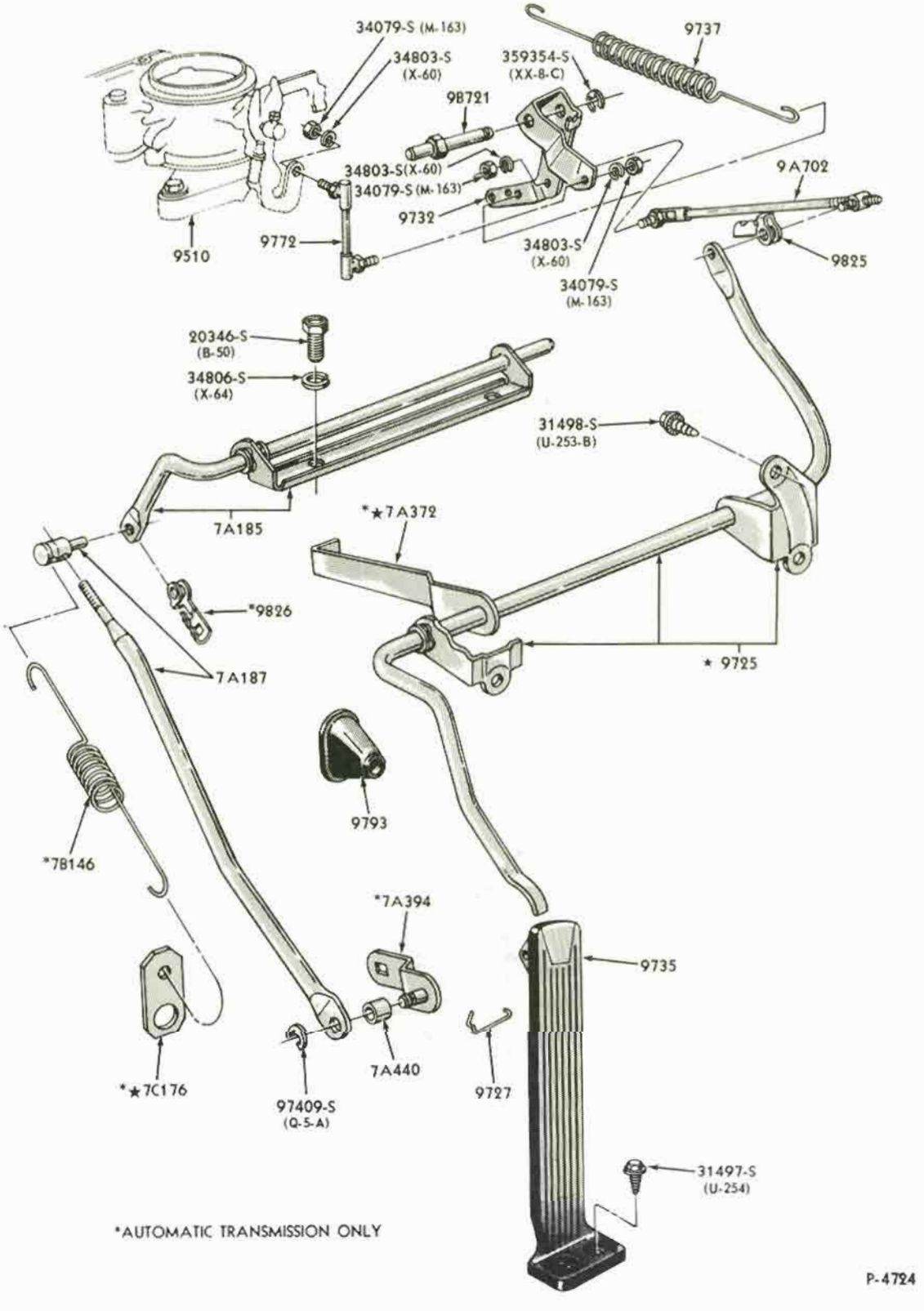

ACCELERATOR LINKAGE
1965 FAIRLANE (6 CYLINDER 200 ENGINE)

COPYRIGHT © 1975 — FORD MOTOR COMPANY — DEARBORN, MICHIGAN

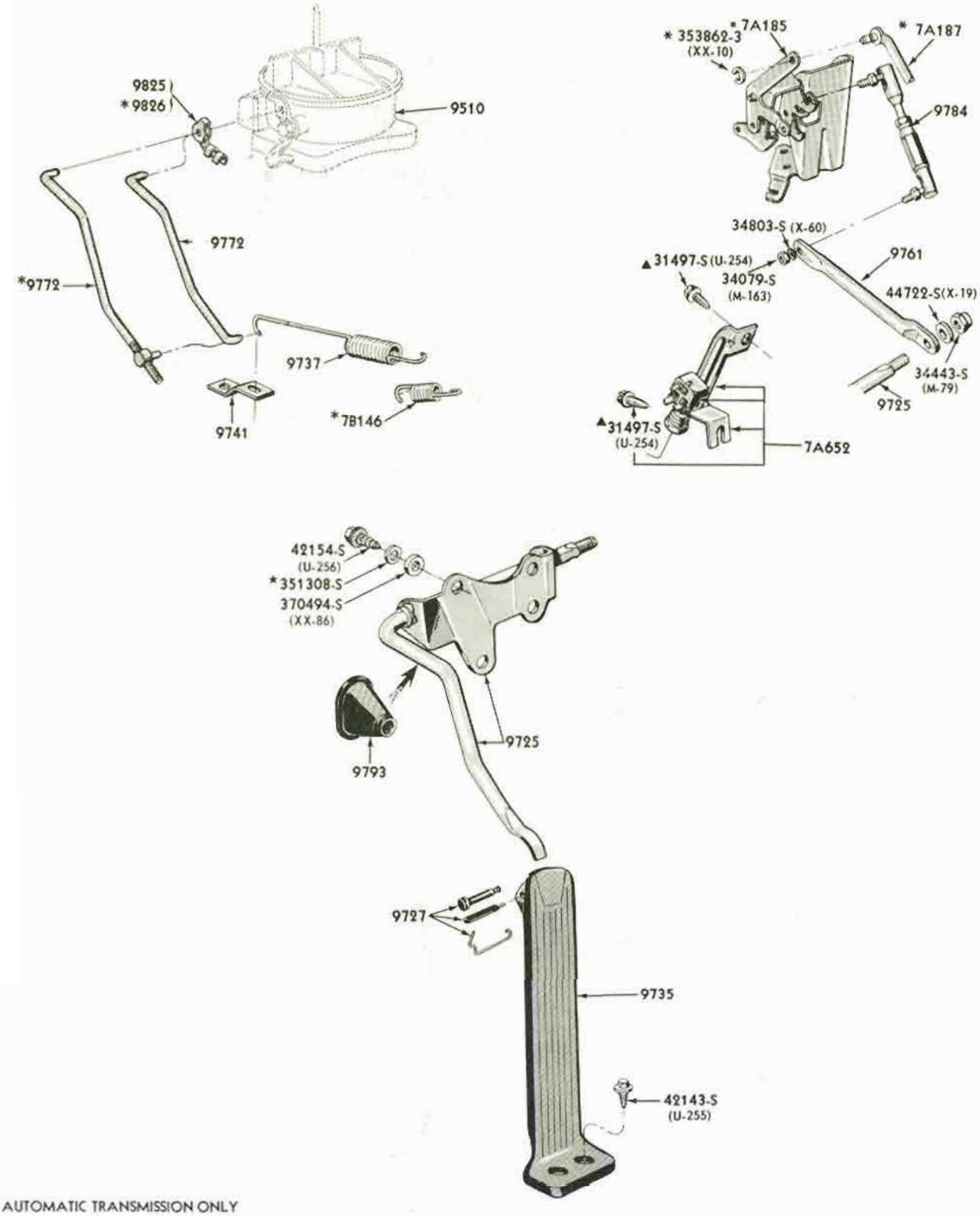

*AUTOMATIC TRANSMISSION ONLY
▲OVERDRIVE TRANSMISSION ONLY

P-3666

ACCELERATOR LINKAGE
1965 FAIRLANE (8 CYLINDER 289 ENGINE)

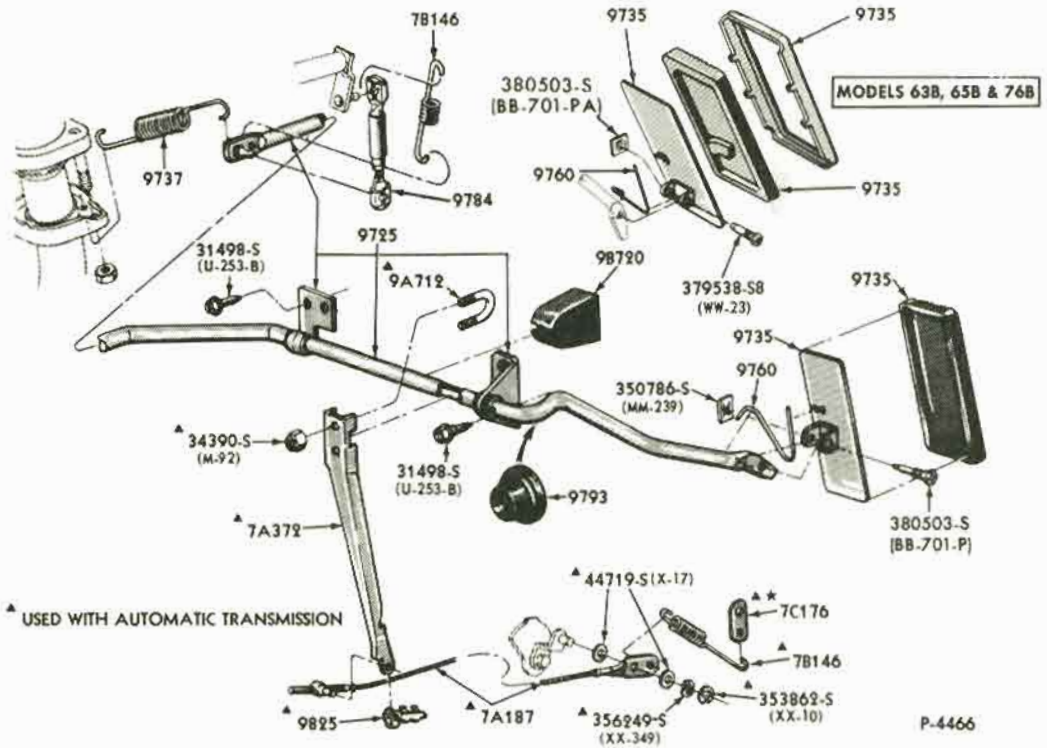

ACCELERATOR LINKAGE
1965/68 MUSTANG (6 CYLINDER 170, 200 ENGINES)

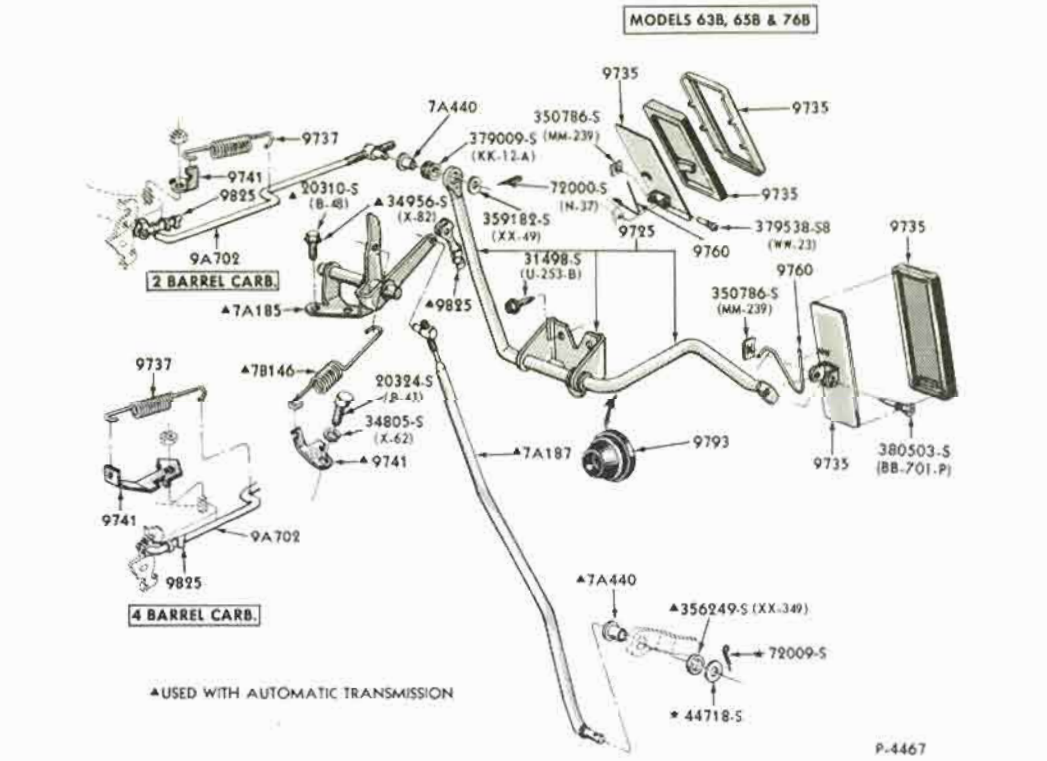

ACCELERATOR LINKAGE
1965/66 MUSTANG (8 CYLINDER 260, 289 ENGINES)

COPYRIGHT © 1975 — FORD MOTOR COMPANY — DEARBORN, MICHIGAN

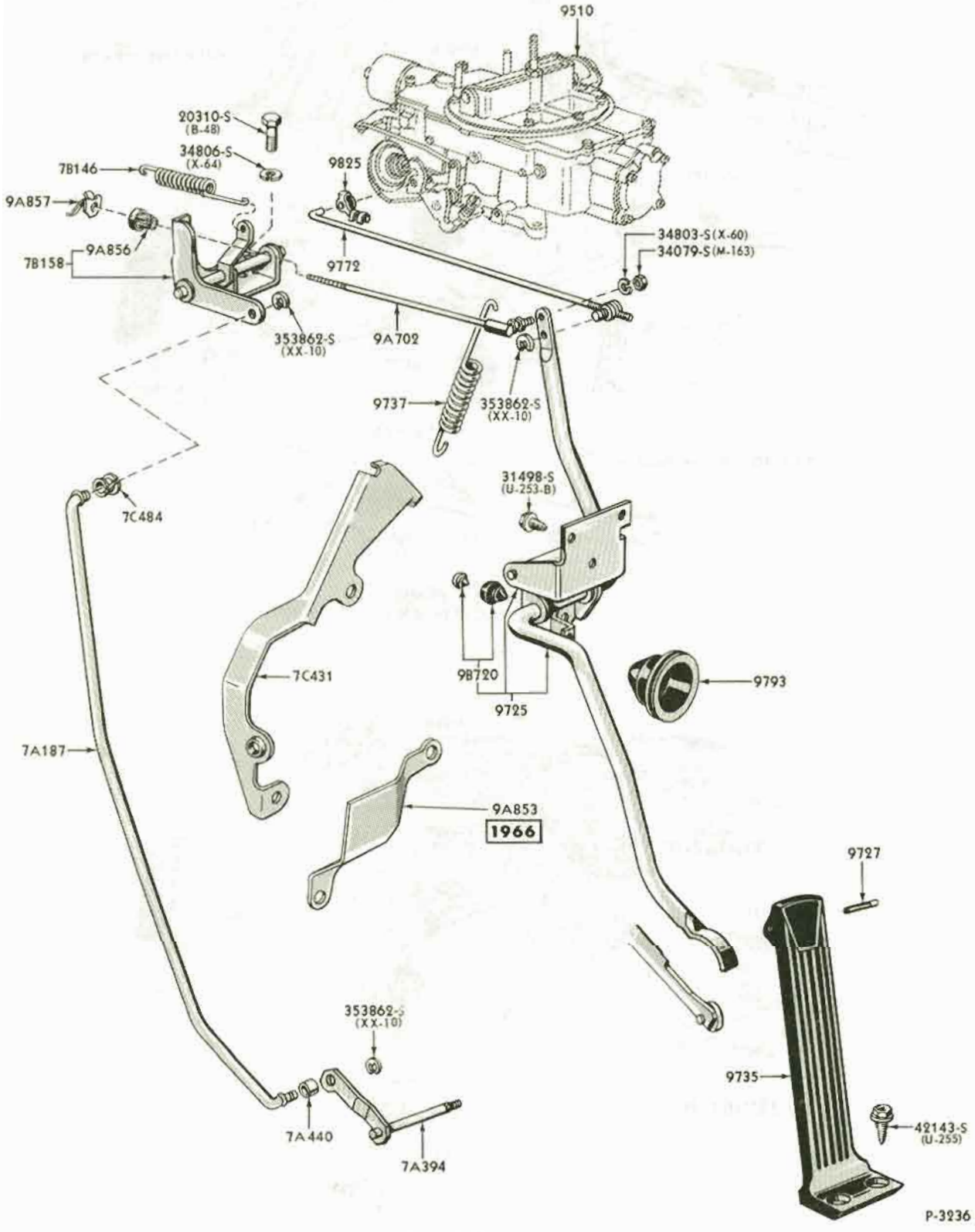

ACCELERATOR LINKAGE
1965/66 THUNDERBIRD (8 CYLINDER 390, 428 ENGINES)

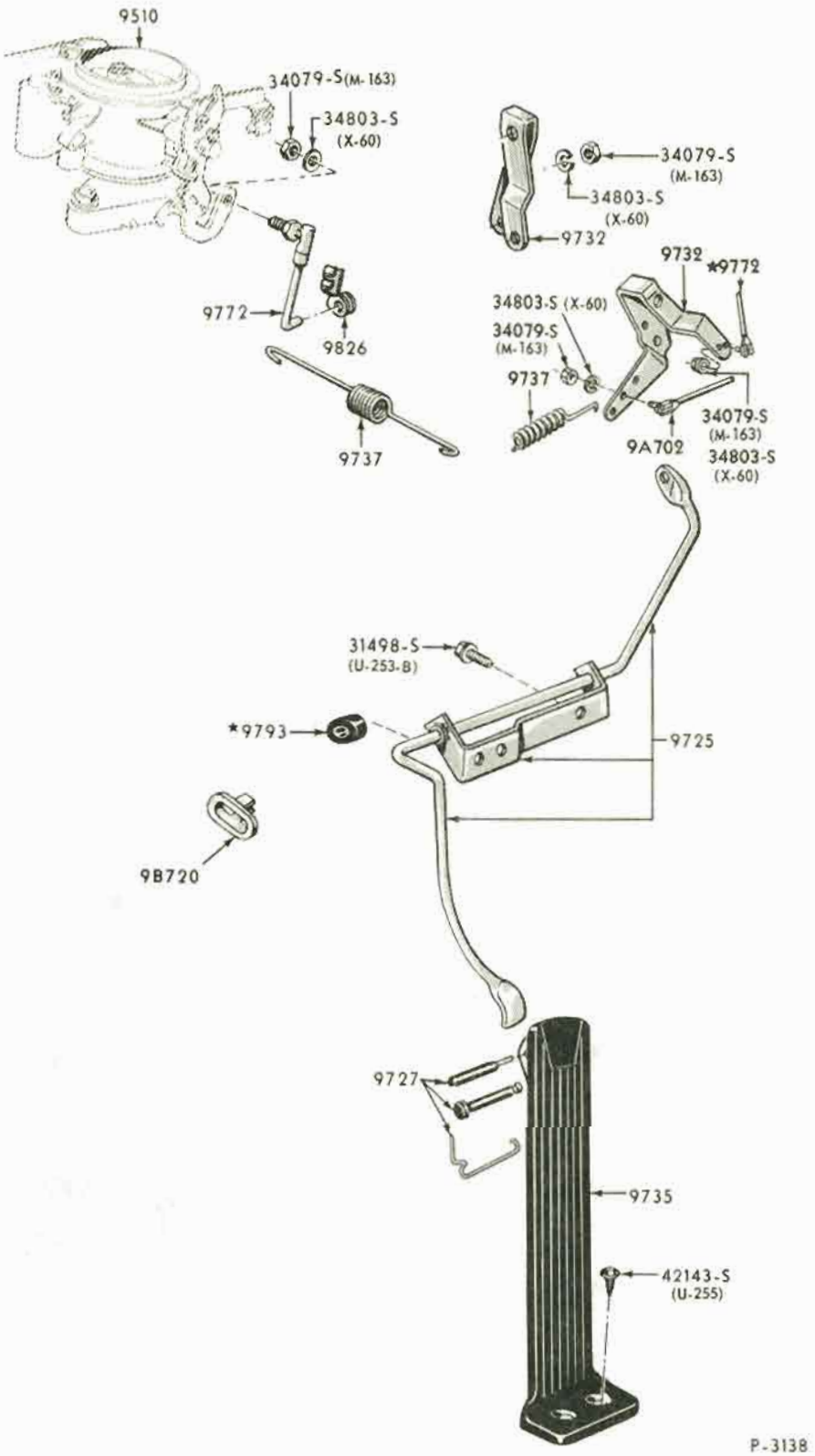

ACCELERATOR LINKAGE
1965 FALCON (6 CYLINDER) - STANDARD TRANSMISSION

COPYRIGHT © 1975 — FORD MOTOR COMPANY — DEARBORN, MICHIGAN

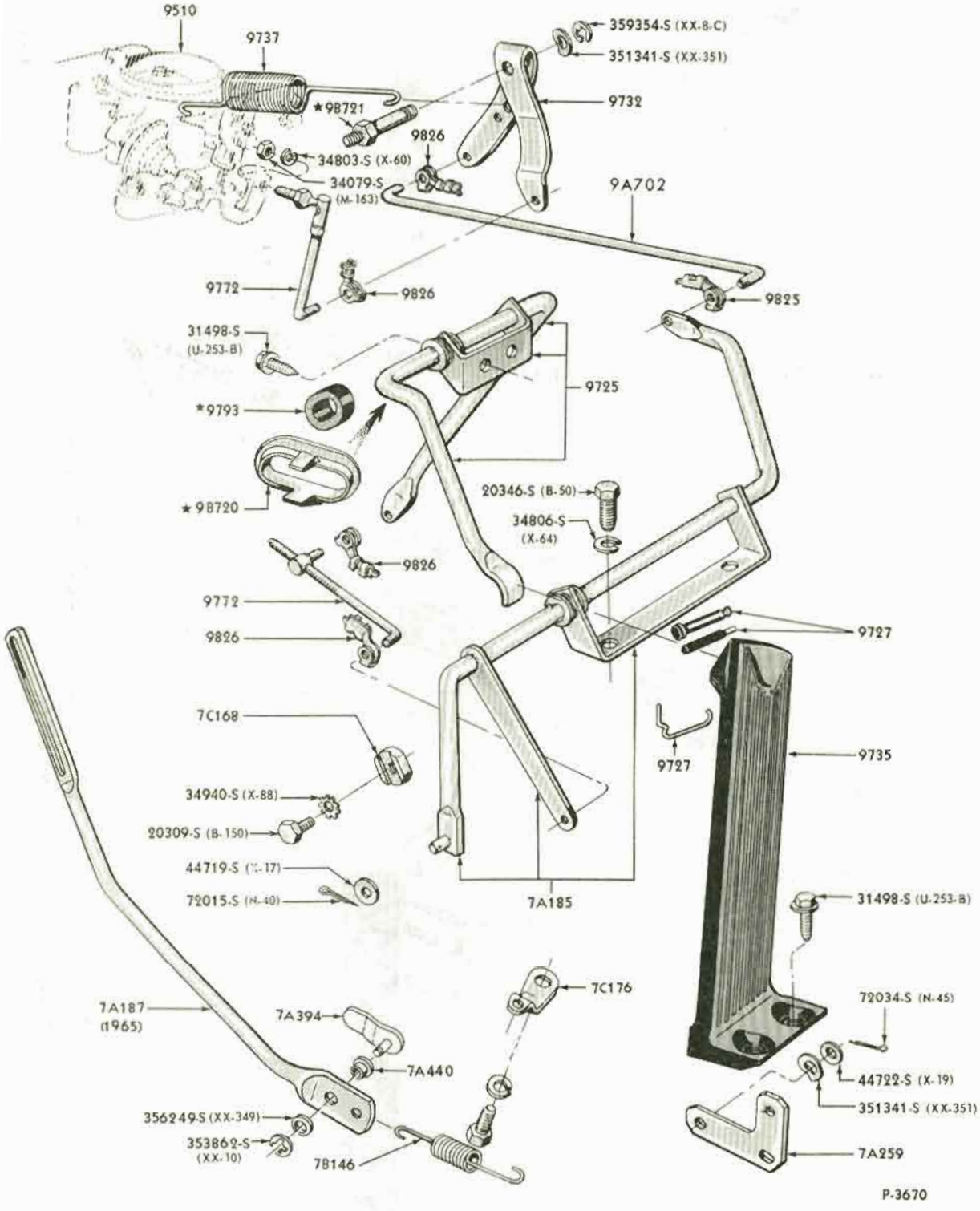

ACCELERATOR LINKAGE
1965 FALCON (6 CYLINDER) AUTOMATIC TRANSMISSION

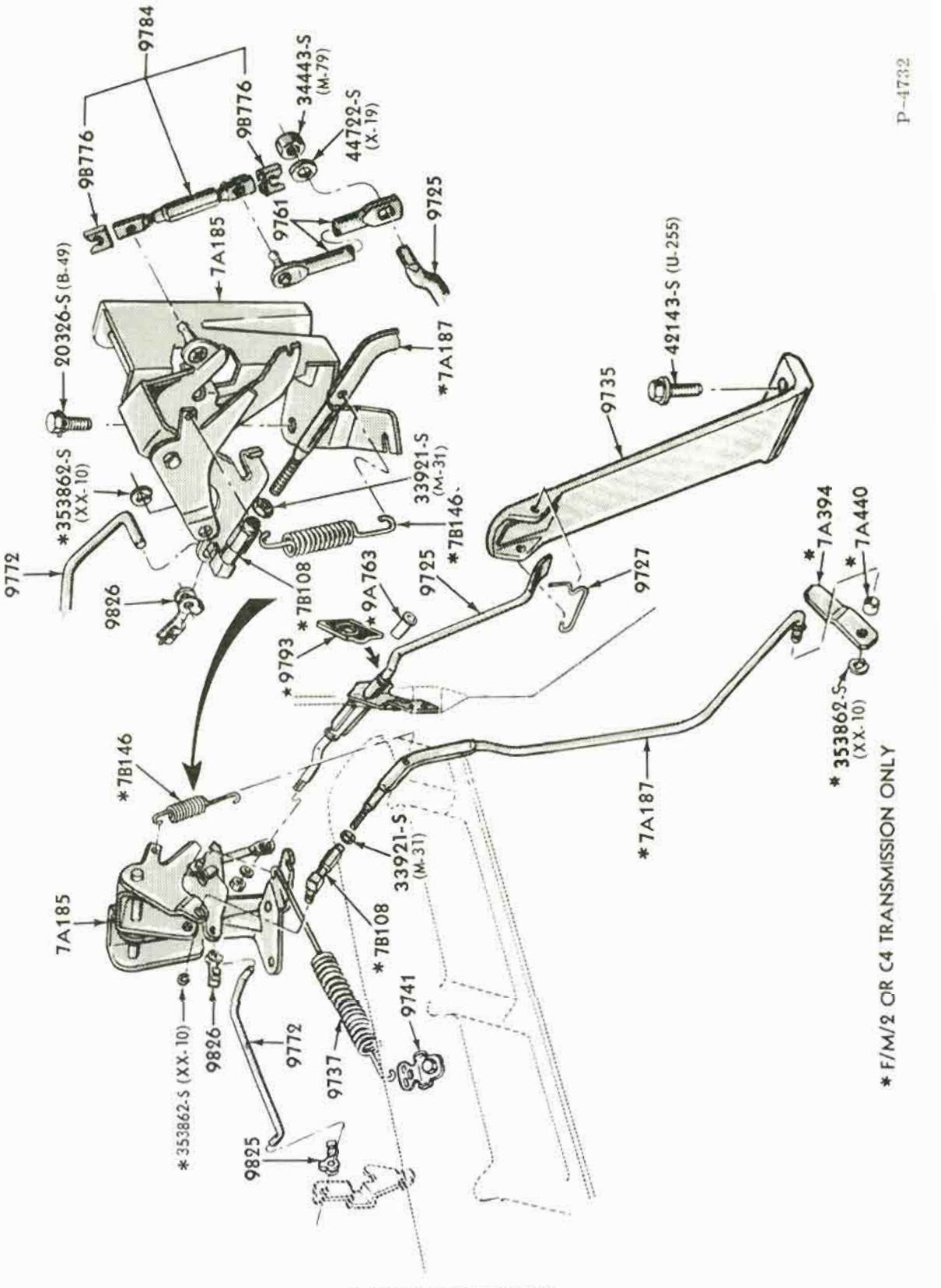

ACCELERATOR LINKAGE
1965 FALCON (8 CYLINDER)

COPYRIGHT © 1975 — FORD MOTOR COMPANY — DEARBORN, MICHIGAN

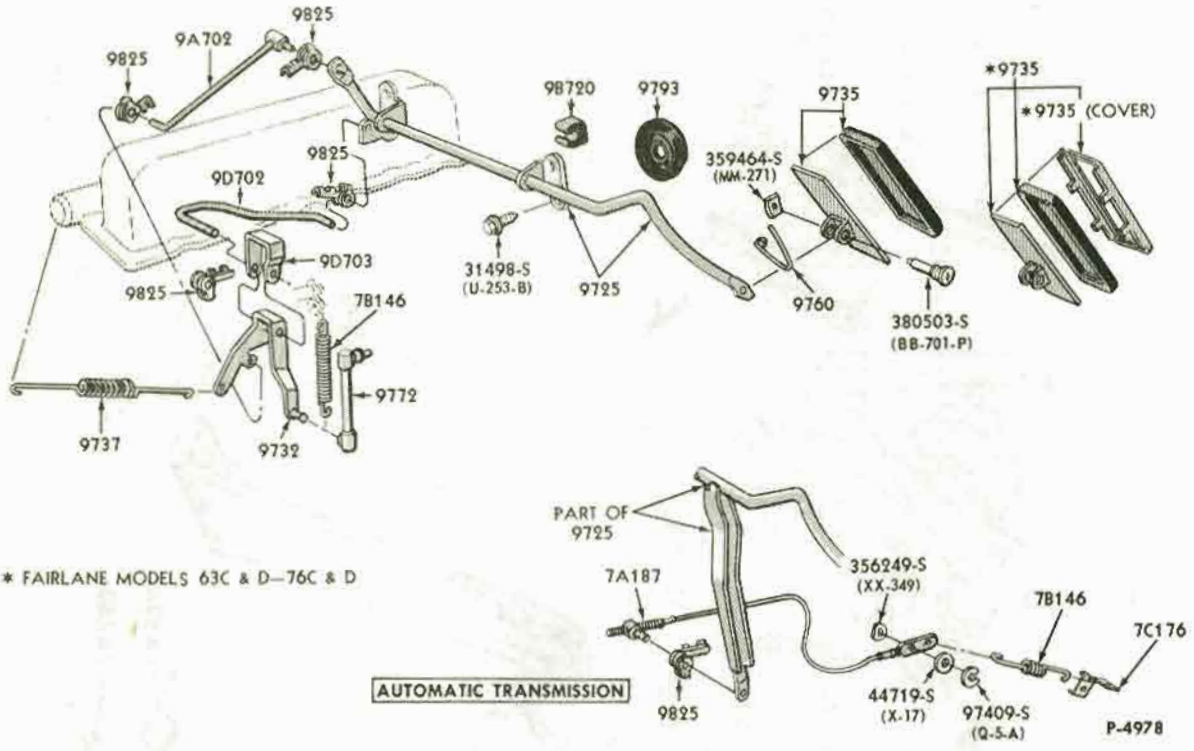

* FAIRLANE MODELS 63C & D—76C & D

ACCELERATOR LINKAGE
1966/69 FAIRLANE/TORINO (6 CYLINDER)
1966/70 FALCON (6 CYLINDER)

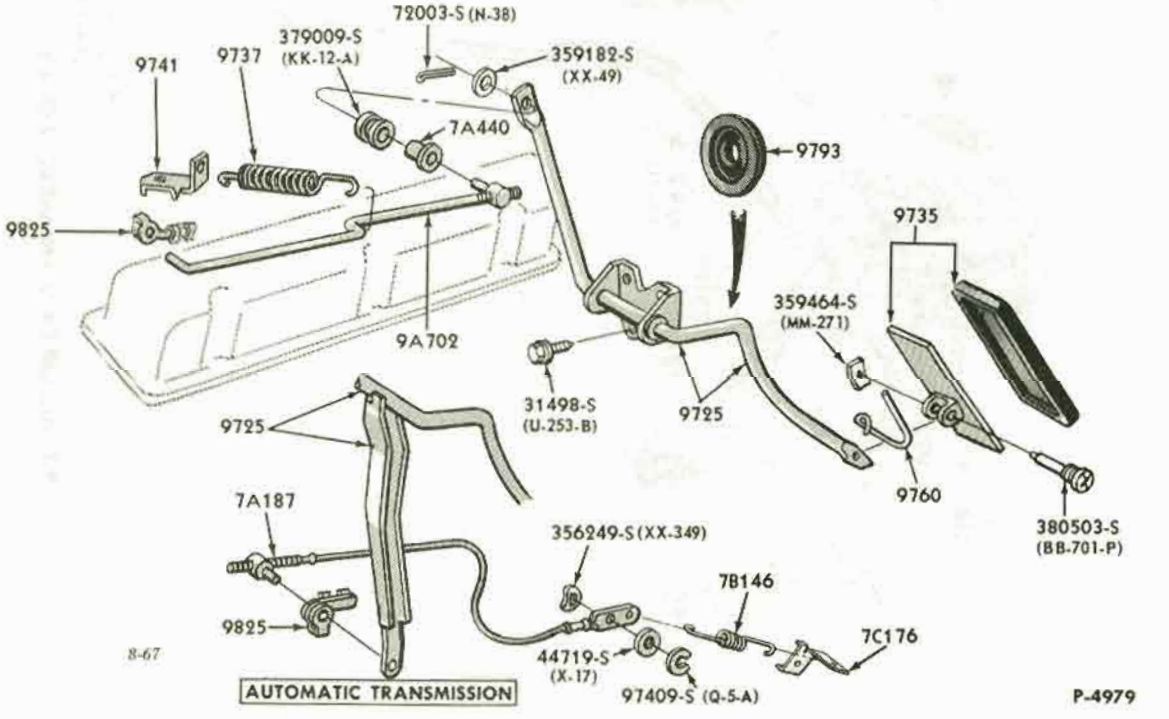

8-67

ACCELERATOR LINKAGE
1966/70 FALCON (8 CYLINDER)

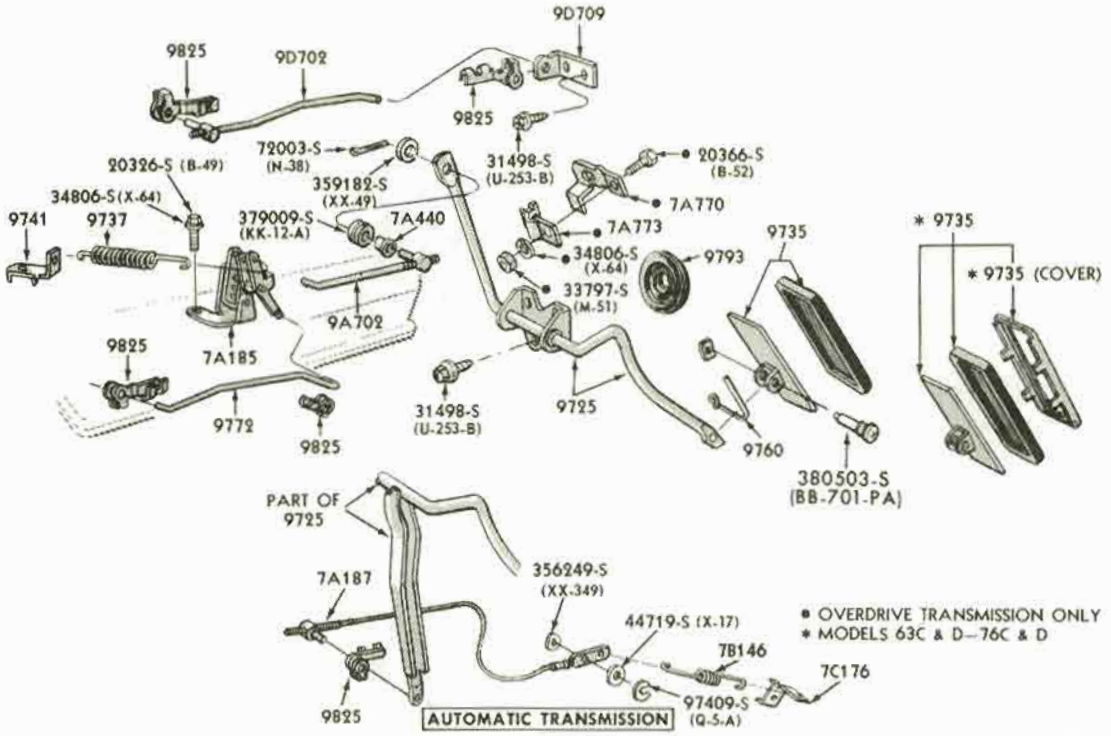

ACCELERATOR LINKAGE
1966/69 FAIRLANE (8 CYLINDER 289, 302, 351 ENGINES)

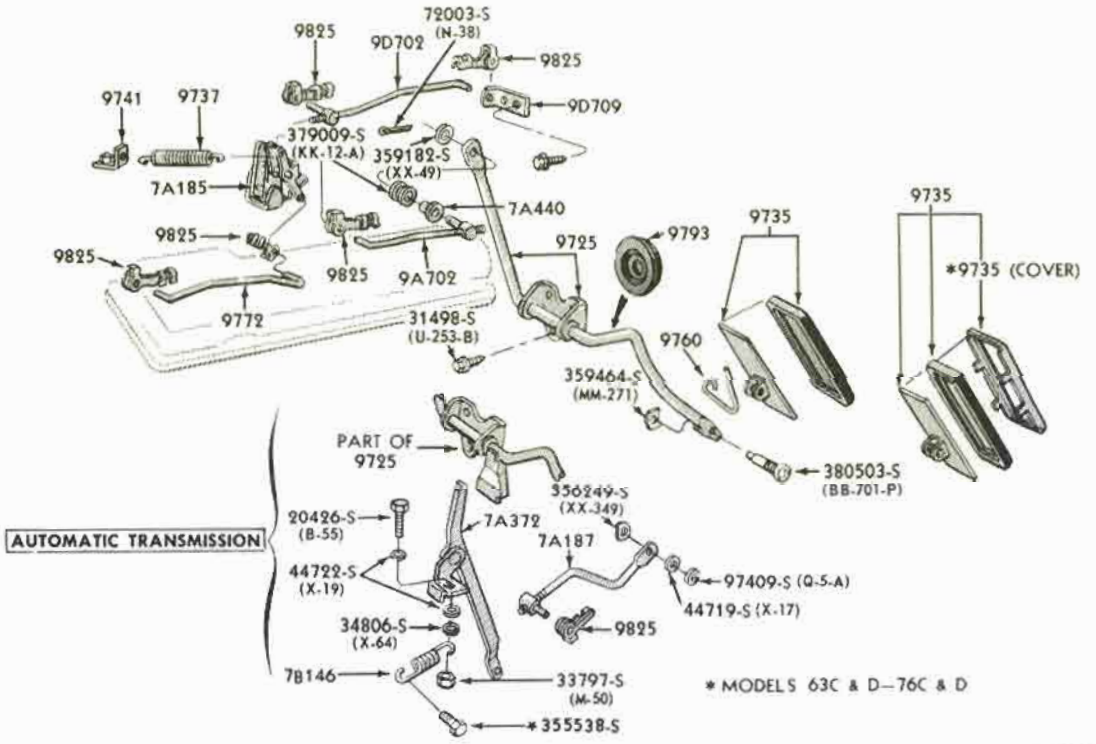

ACCELERATOR LINKAGE
1966/69 FAIRLANE (8 CYLINDER 390, 427, 428 ENGINES)

COPYRIGHT © 1975 — FORD MOTOR COMPANY — DEARBORN, MICHIGAN

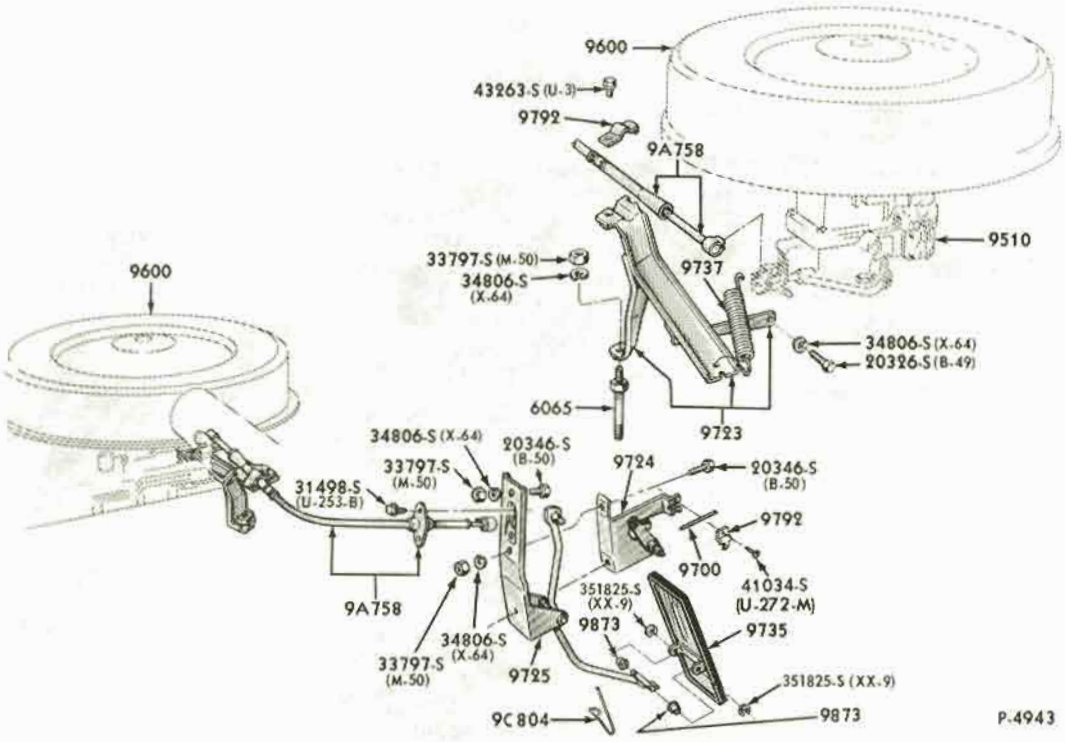

ACCELERATOR LINKAGE
1966/72 BRONCO (6 CYLINDER ENGINE)

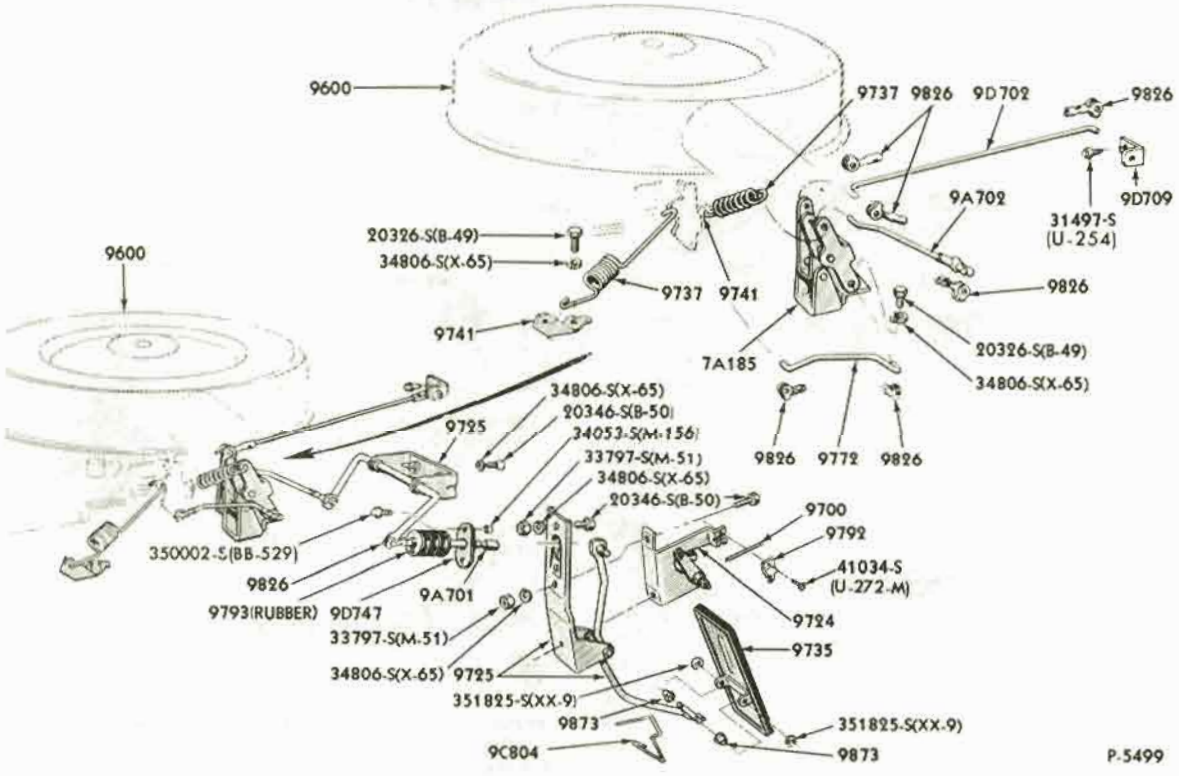

ACCELERATOR LINKAGE
1966/72 BRONCO (8 CYLINDER 289, 302 ENGINES)

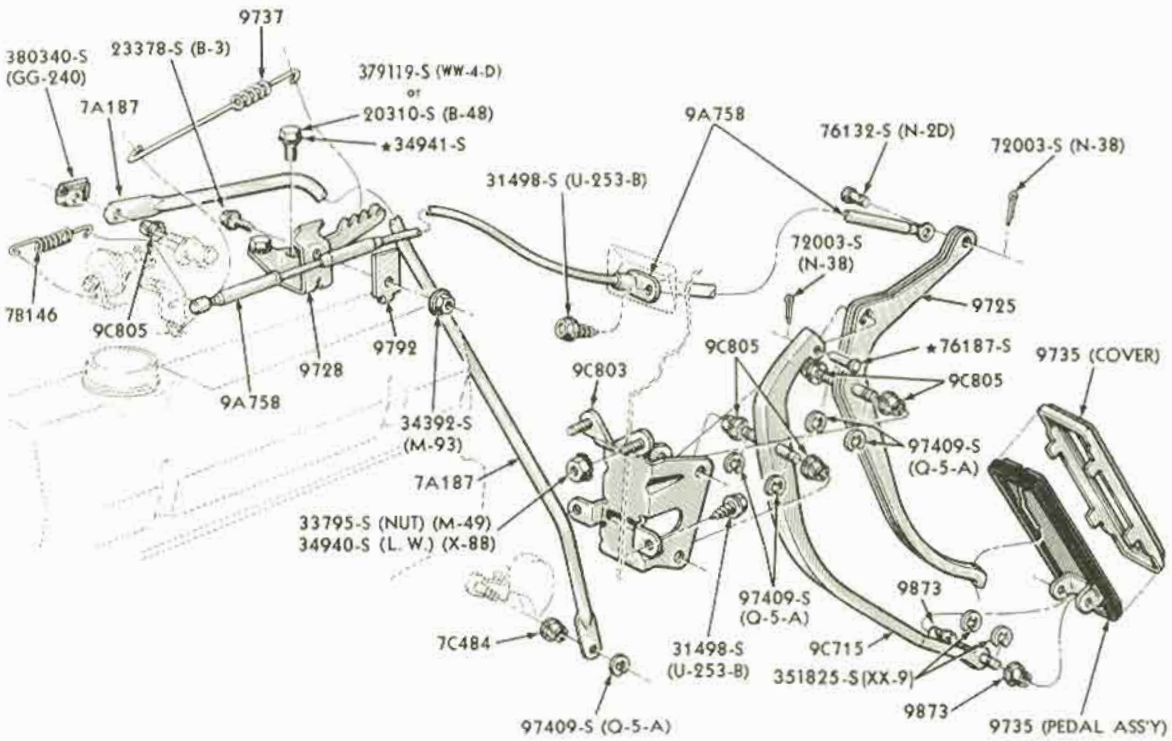

ACCELERATOR LINKAGE
1967 THUNDERBIRD (8 CYLINDER 390, 428 ENGINES)

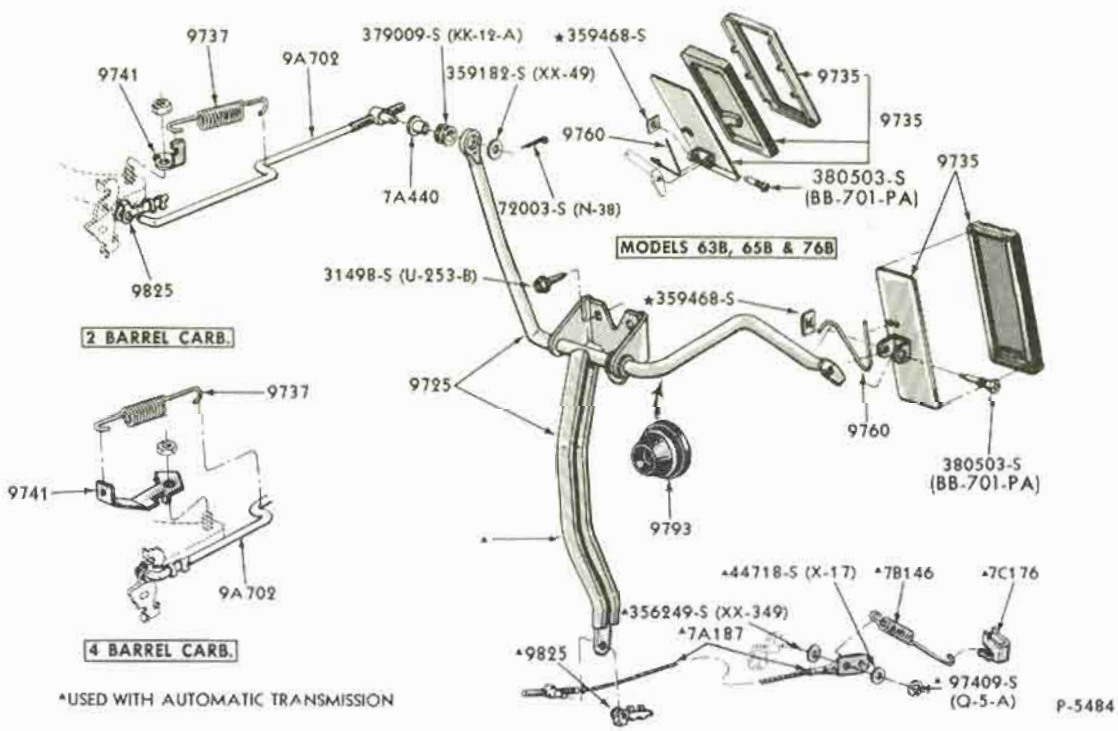

ACCELERATOR LINKAGE
1967/68 MUSTANG (8 CYLINDER 289, 302, 390, 427, 428 ENGINES)

COPYRIGHT © 1975 — FORD MOTOR COMPANY — DEARBORN, MICHIGAN

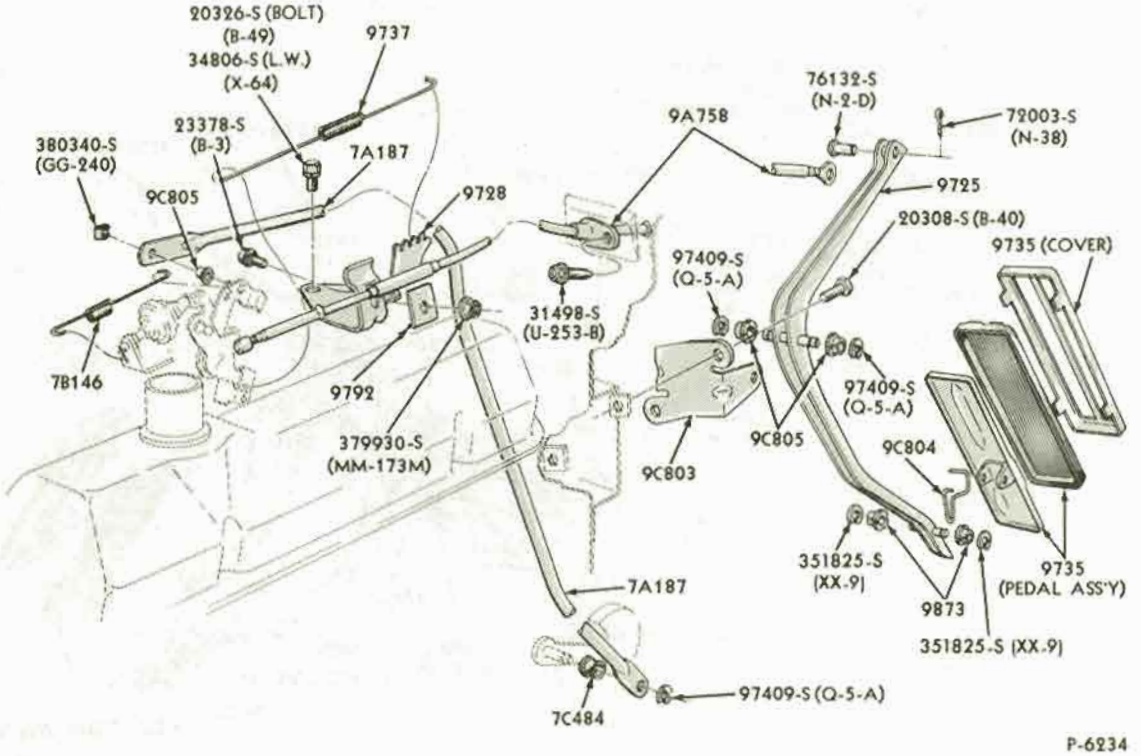

ACCELERATOR LINKAGE
1968/69 THUNDERBIRD (8 CYLINDER 390, 429 ENGINES)

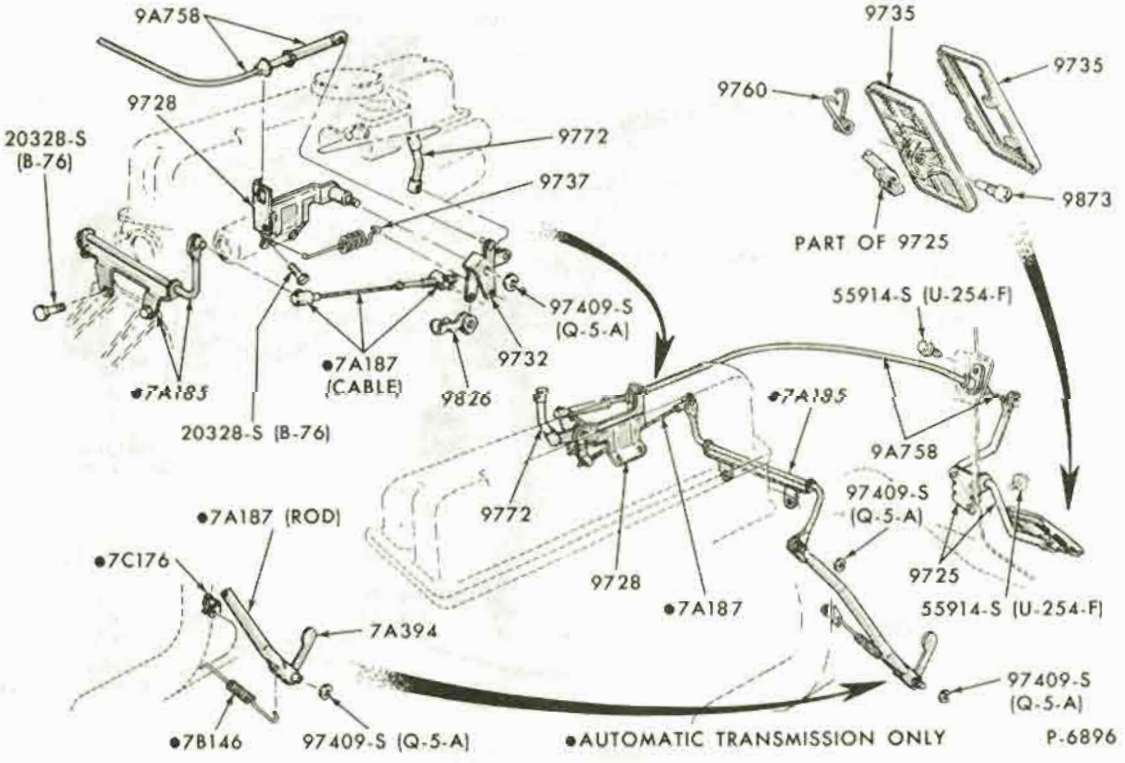

ACCELERATOR LINKAGE
1969/70 MUSTANG (6 CYLINDER 200, 250 ENGINES)

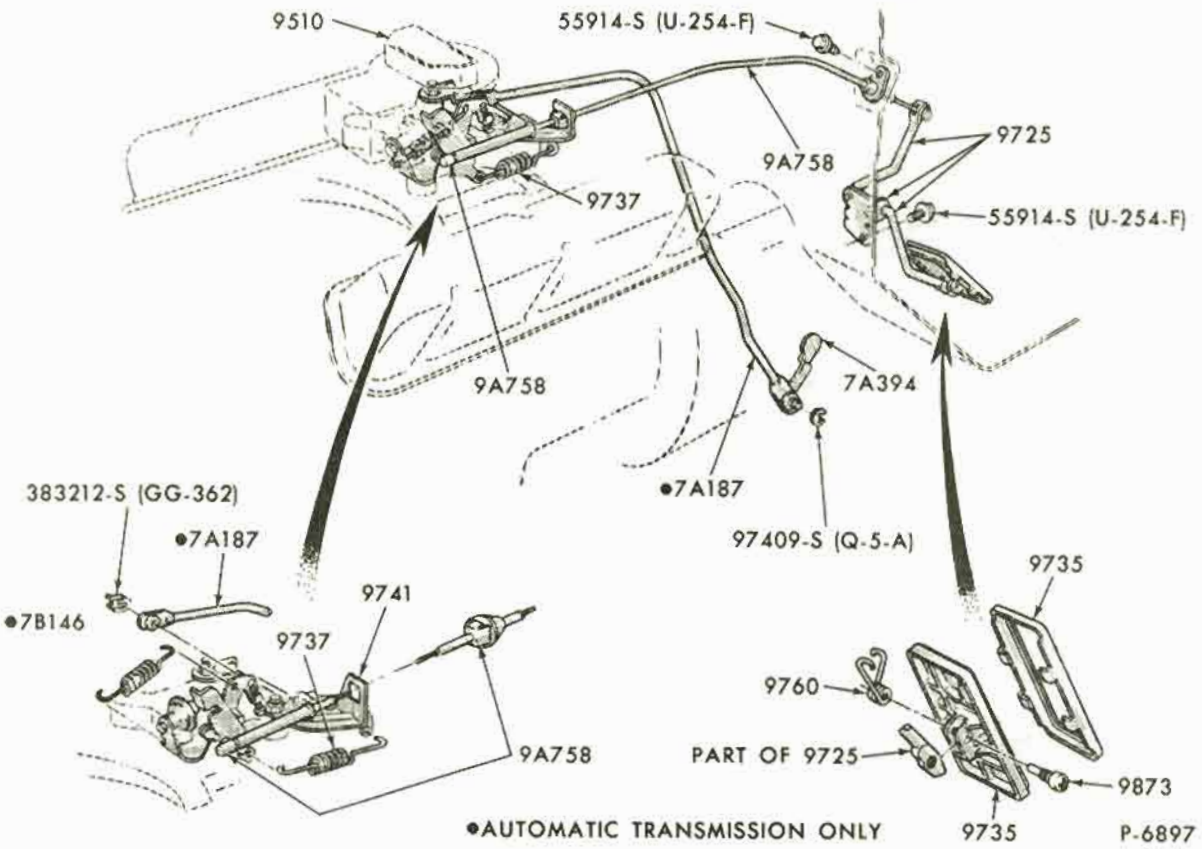

ACCELERATOR LINKAGE
1969/70 MUSTANG (8 CYLINDER 302, 351, 390, 428 ENGINES)

COPYRIGHT © 1975— FORD MOTOR COMPANY —DEARBORN, MICHIGAN

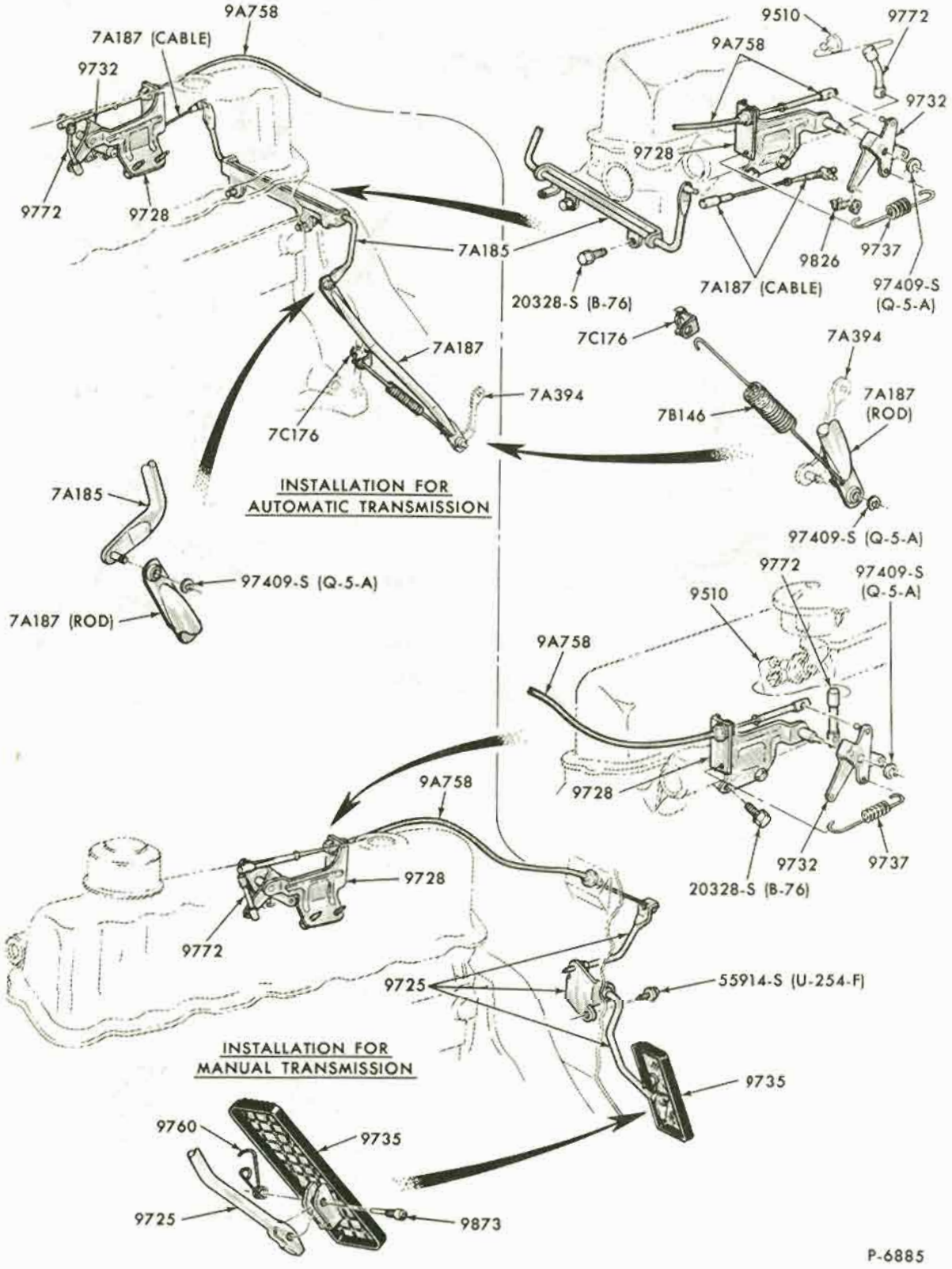

ACCELERATOR LINKAGE

1970 MAVERICK (6 CYLINDER 170, 200, 250 ENGINES) FAIRLANE (6 CYLINDER 250 ENGINE)

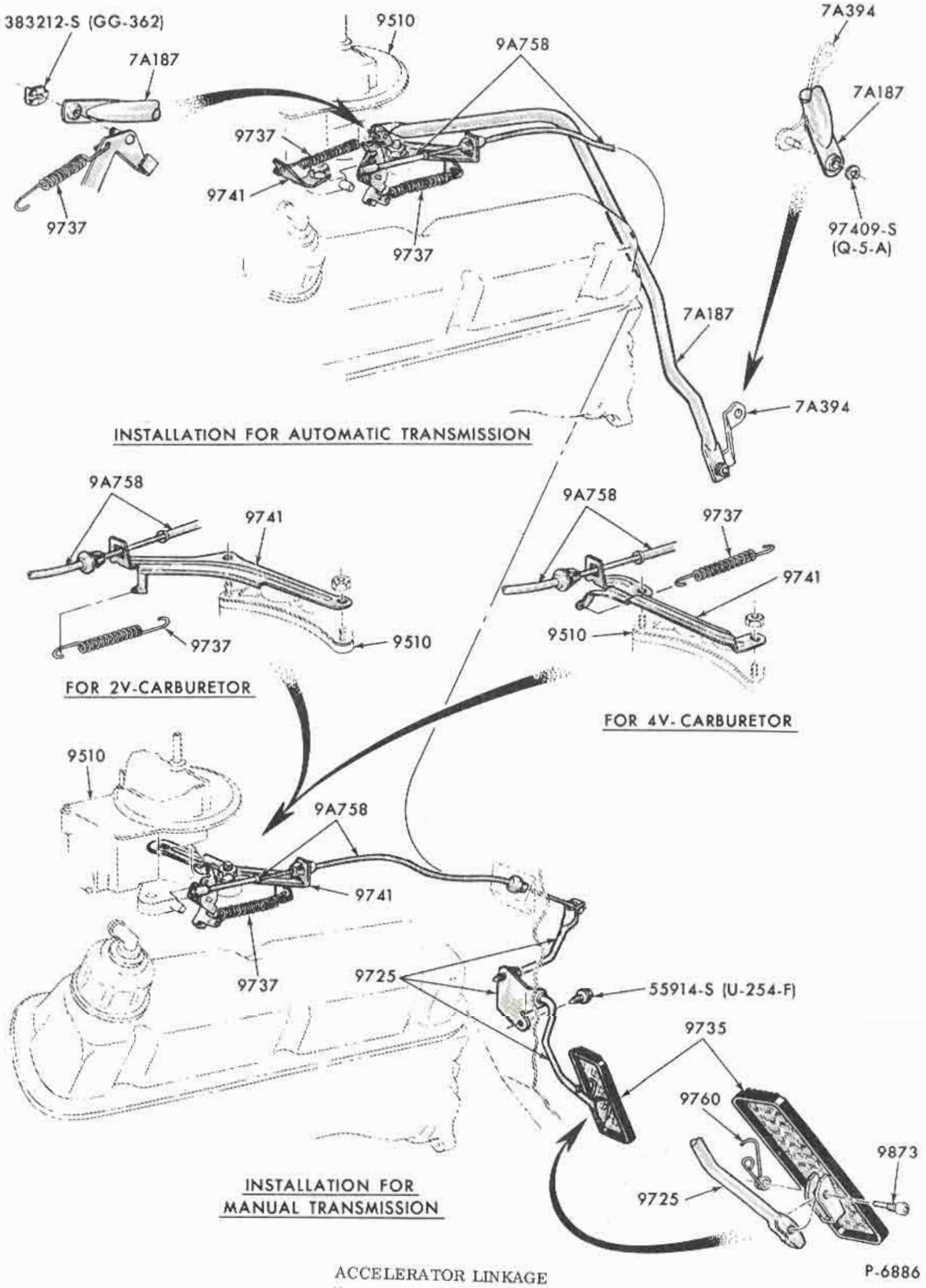

ACCELERATOR LINKAGE
(8 CYLINDER 302, 351, 429)
1970/71 FAIRLANE/TORINO

COPYRIGHT © 1975 — FORD MOTOR COMPANY — DEARBORN, MICHIGAN

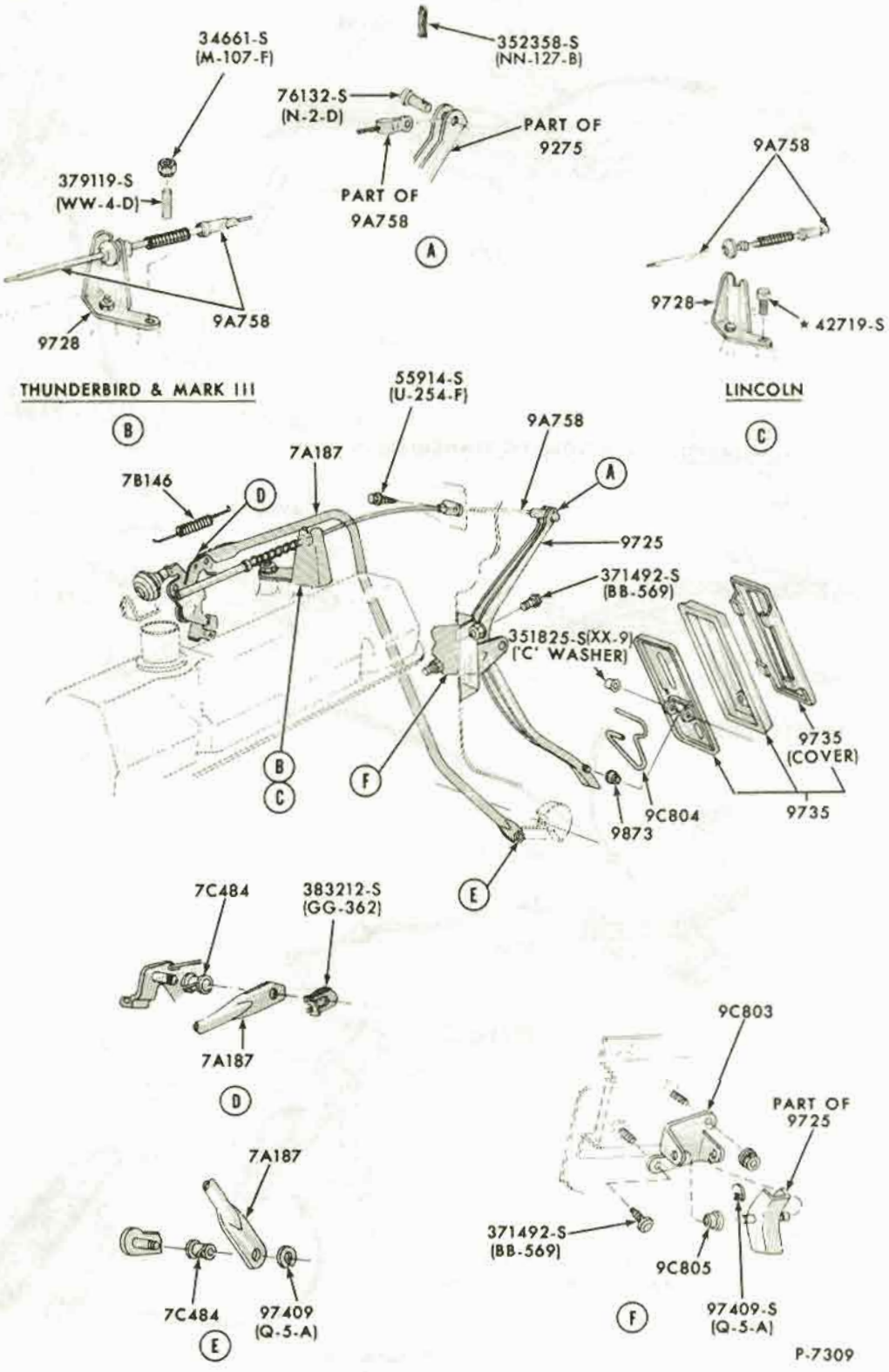

ACCELERATOR LINKAGE

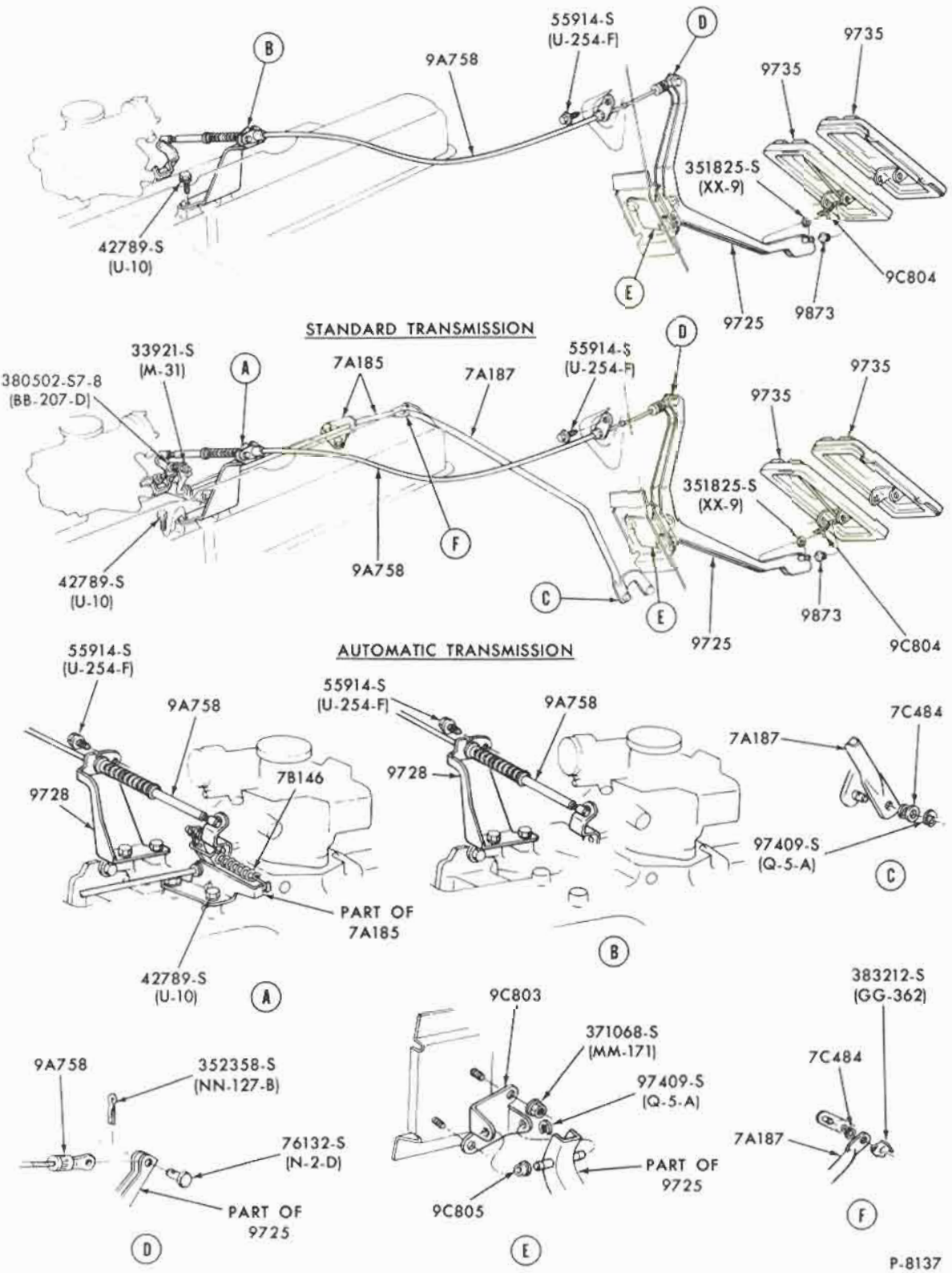

ACCELERATOR LINKAGE

1971/72 FORD (6 CYLINDER 240 ENGINE)

COPYRIGHT © 1975 — FORD MOTOR COMPANY — DEARBORN, MICHIGAN

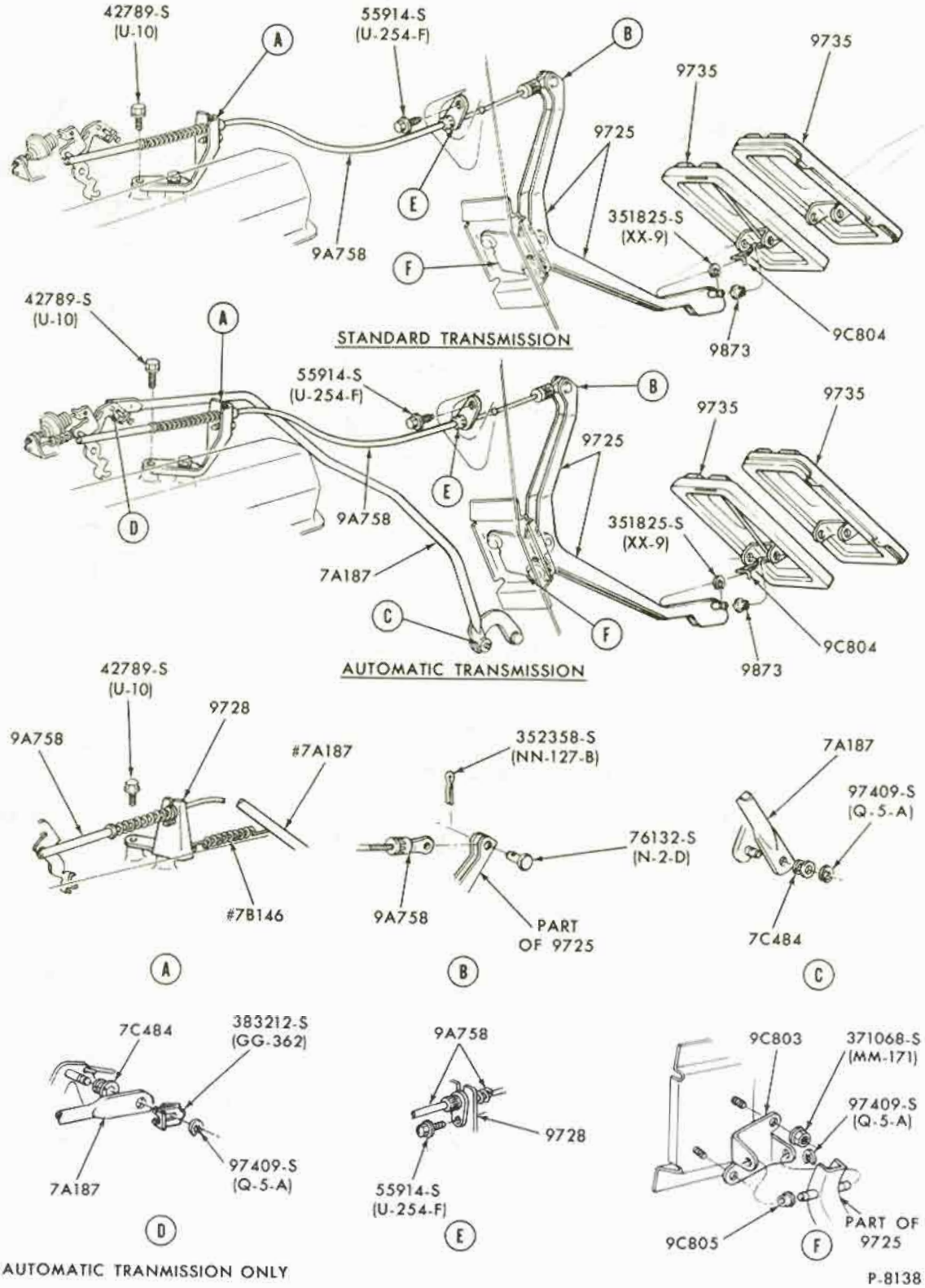

#AUTOMATIC TRANMISSION ONLY

P-8138

ACCELERATOR LINKAGE

1971/72 FORD (8 CYLINDER 302,351,390,400,429 ENGINES)

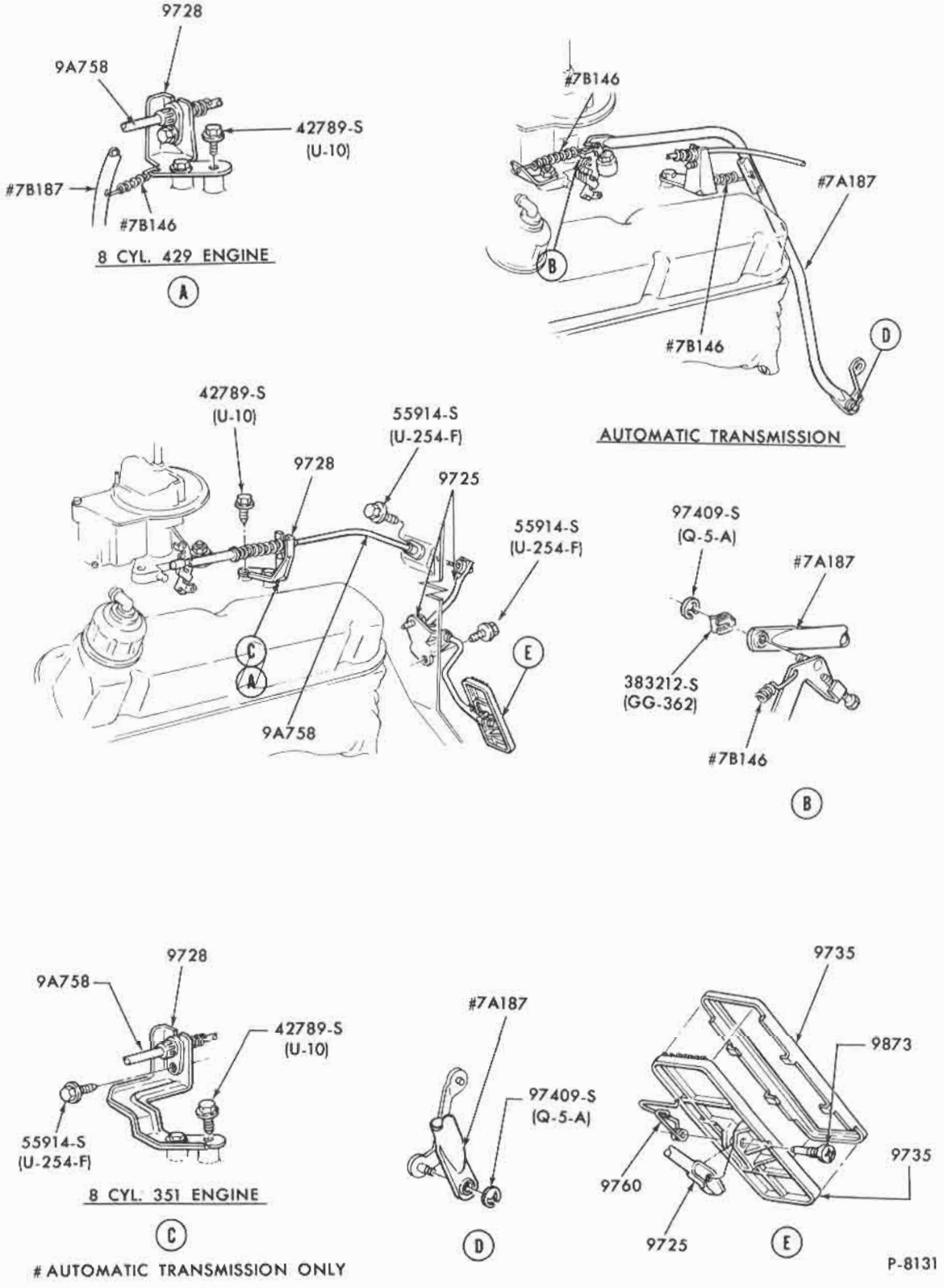

ACCELERATOR LINKAGE

1971 TORINO (8 CYLINDER 302,351,429 ENGINES)

COPYRIGHT © 1975 — FORD MOTOR COMPANY — DEARBORN, MICHIGAN

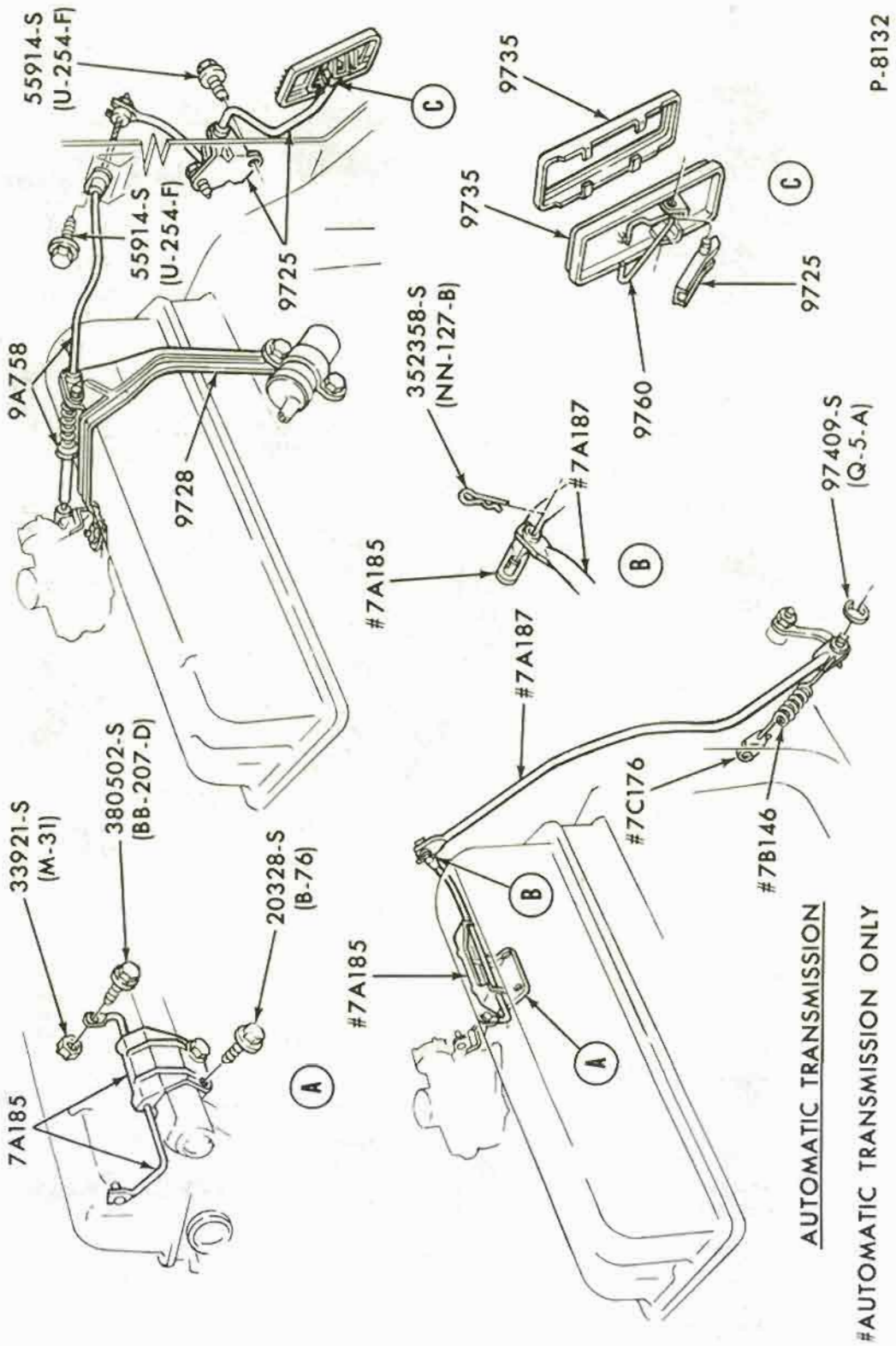

ACCELERATOR LINKAGE

1971 TORINO (6 CYLINDER 250 ENGINE)

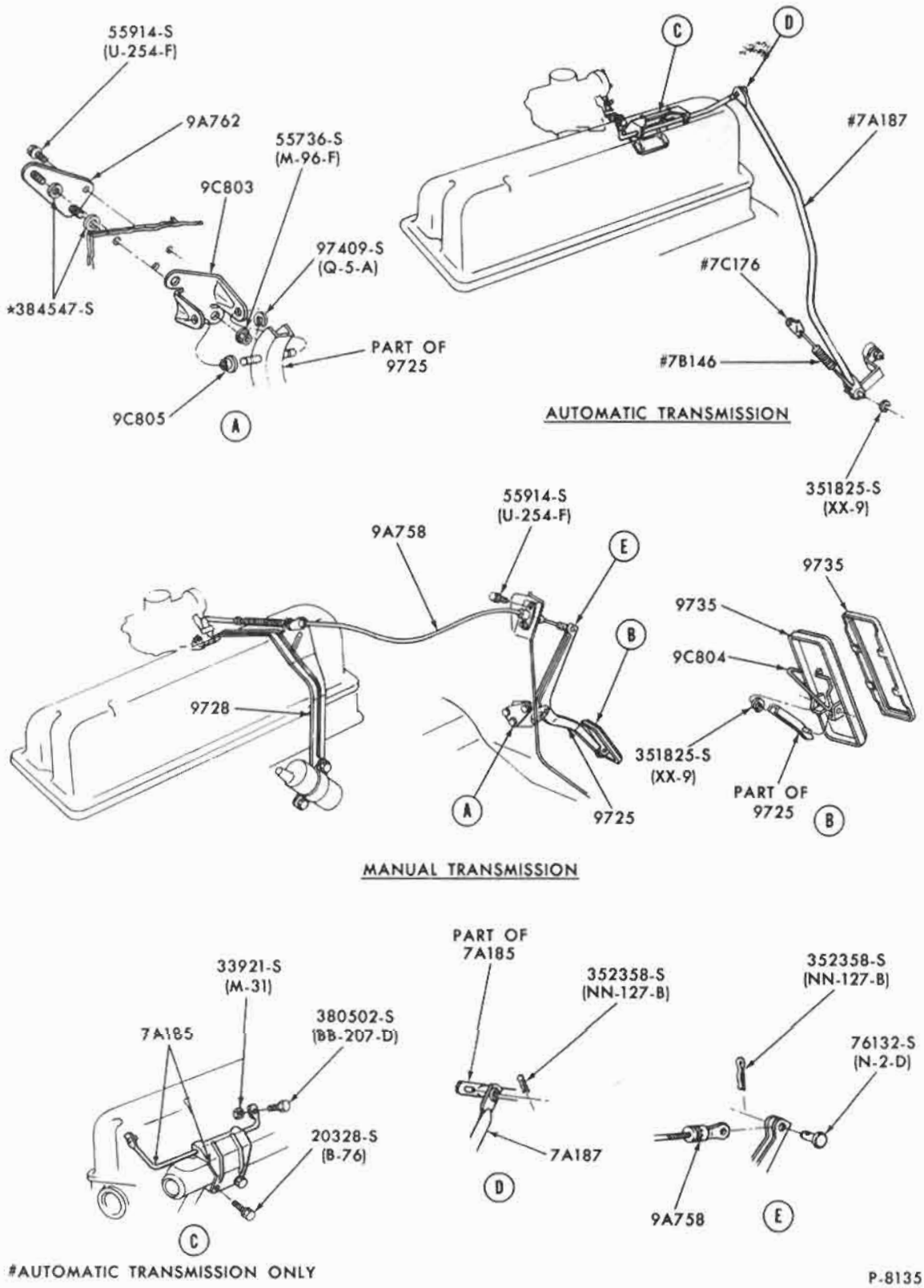

#AUTOMATIC TRANSMISSION ONLY

P-8135

ACCELERATOR LINKAGE
(6 CYLINDER 250 ENGINE)
1971/72 MUSTANG, 1972 TORINO

COPYRIGHT © 1975 — FORD MOTOR COMPANY — DEARBORN, MICHIGAN

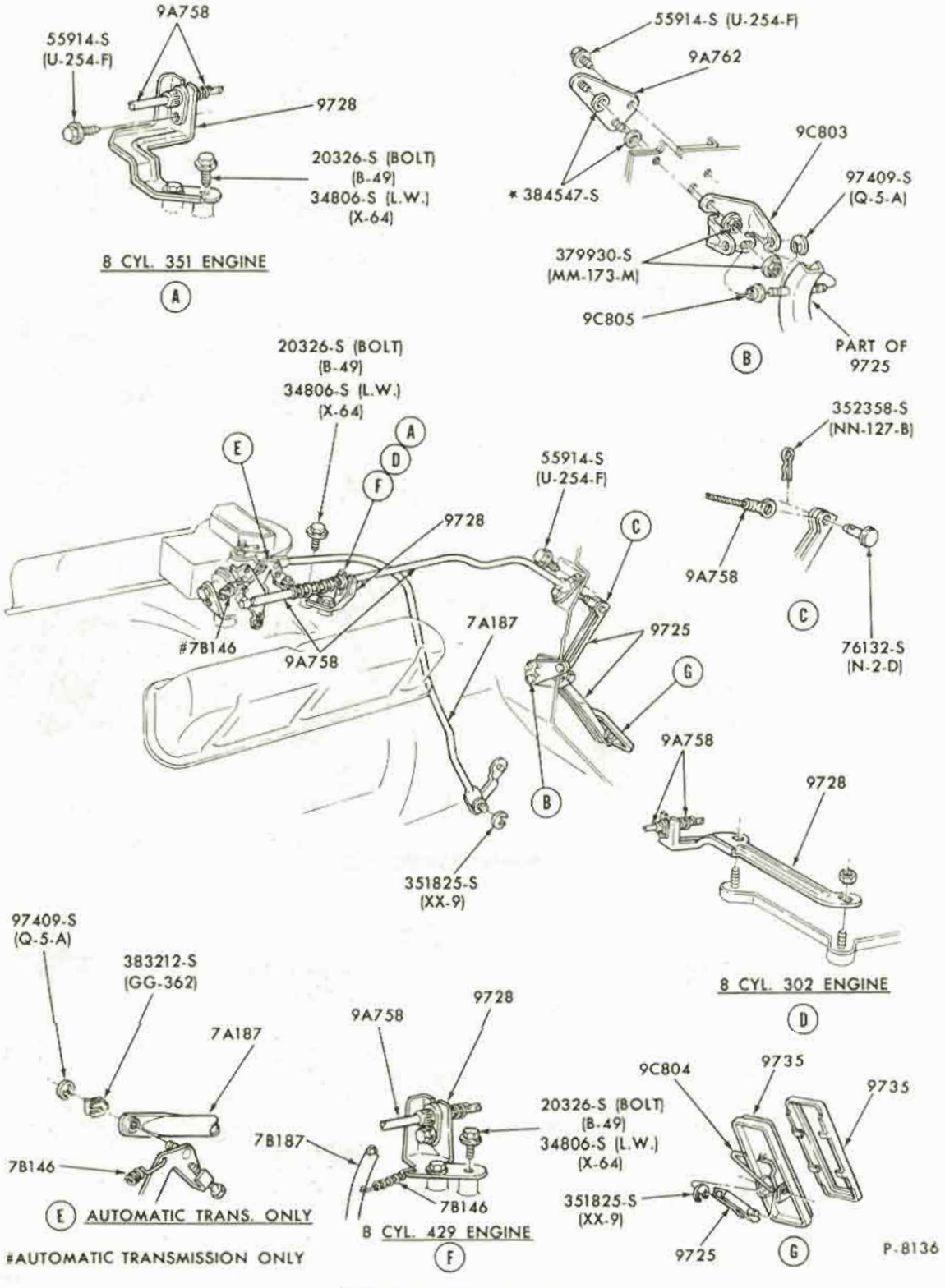

ACCELERATOR LINKAGE
(8 CYLINDER 302,351,400,429 ENGINES)
1971/72 MUSTANG, 1972 TORINO

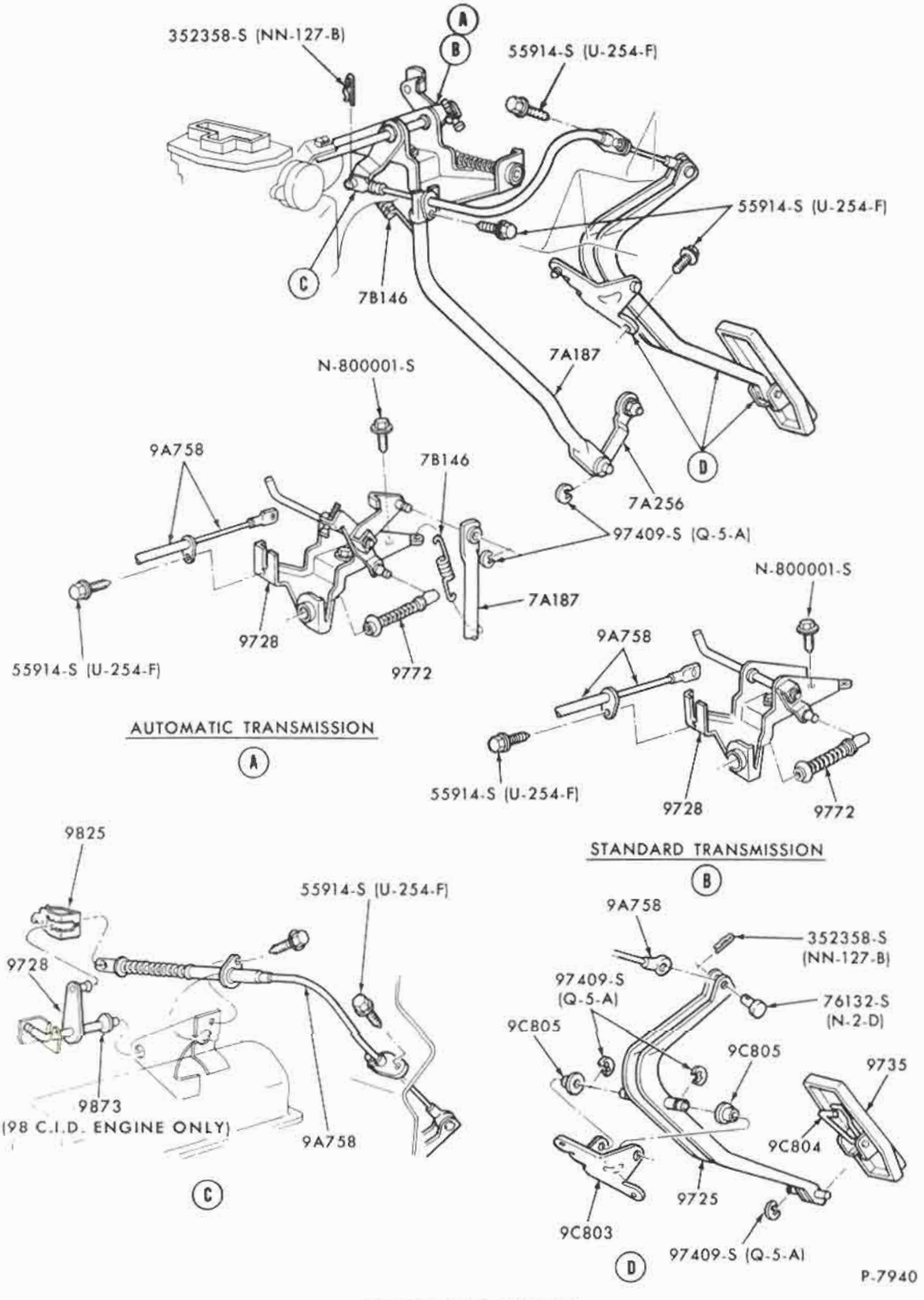

ACCELERATOR LINKAGE

1971/72 PINTO (4 CYLINDER 98, 122 O.H.C. ENGINES)

COPYRIGHT © 1975 — FORD MOTOR COMPANY — DEARBORN, MICHIGAN

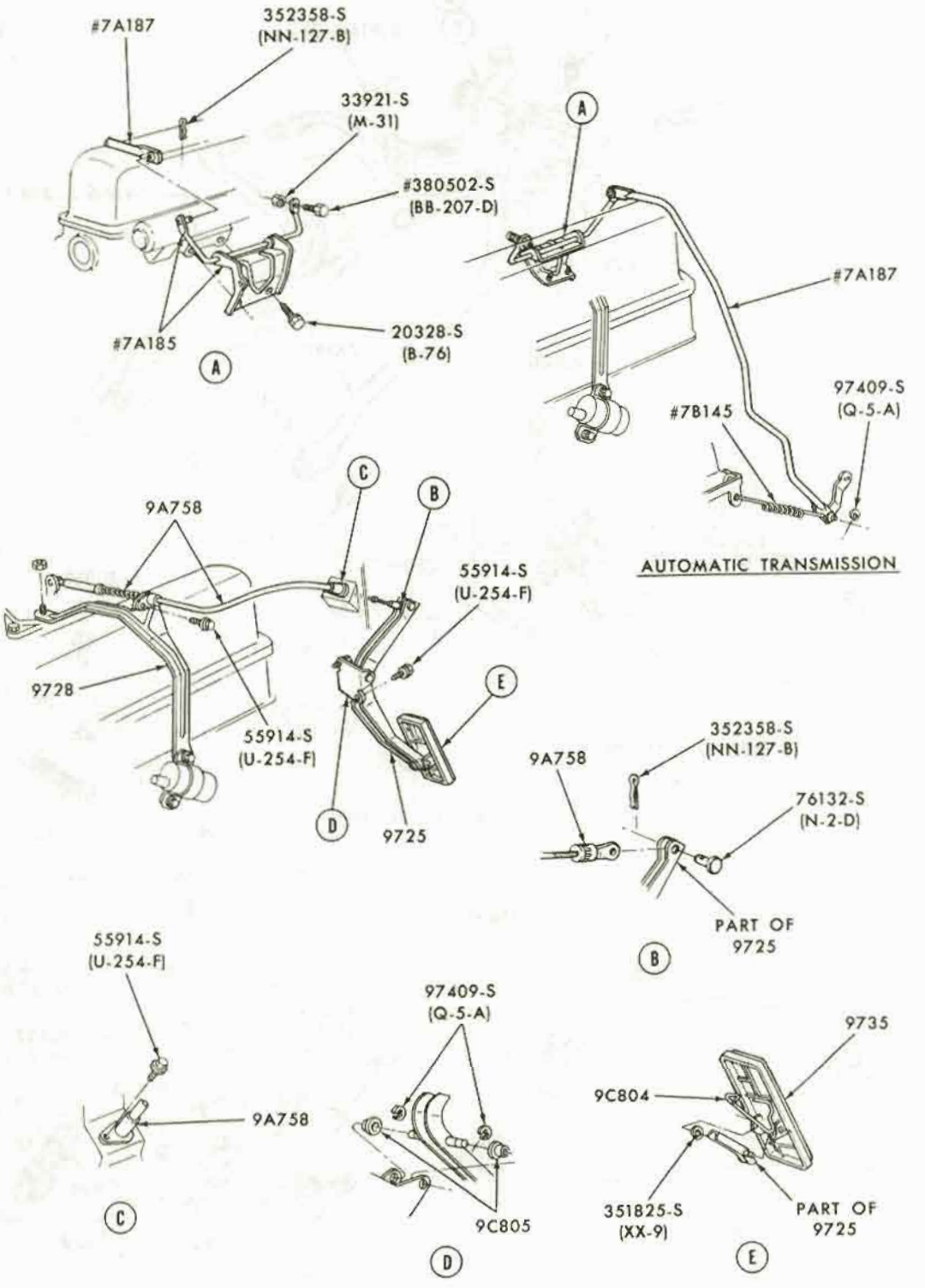

#AUTOMATIC TRANSMISSION ONLY

P-8134

ACCELERATOR LINKAGE

1971/72 MAVERICK (6 CYLINDER 170,200,250 ENGINES)

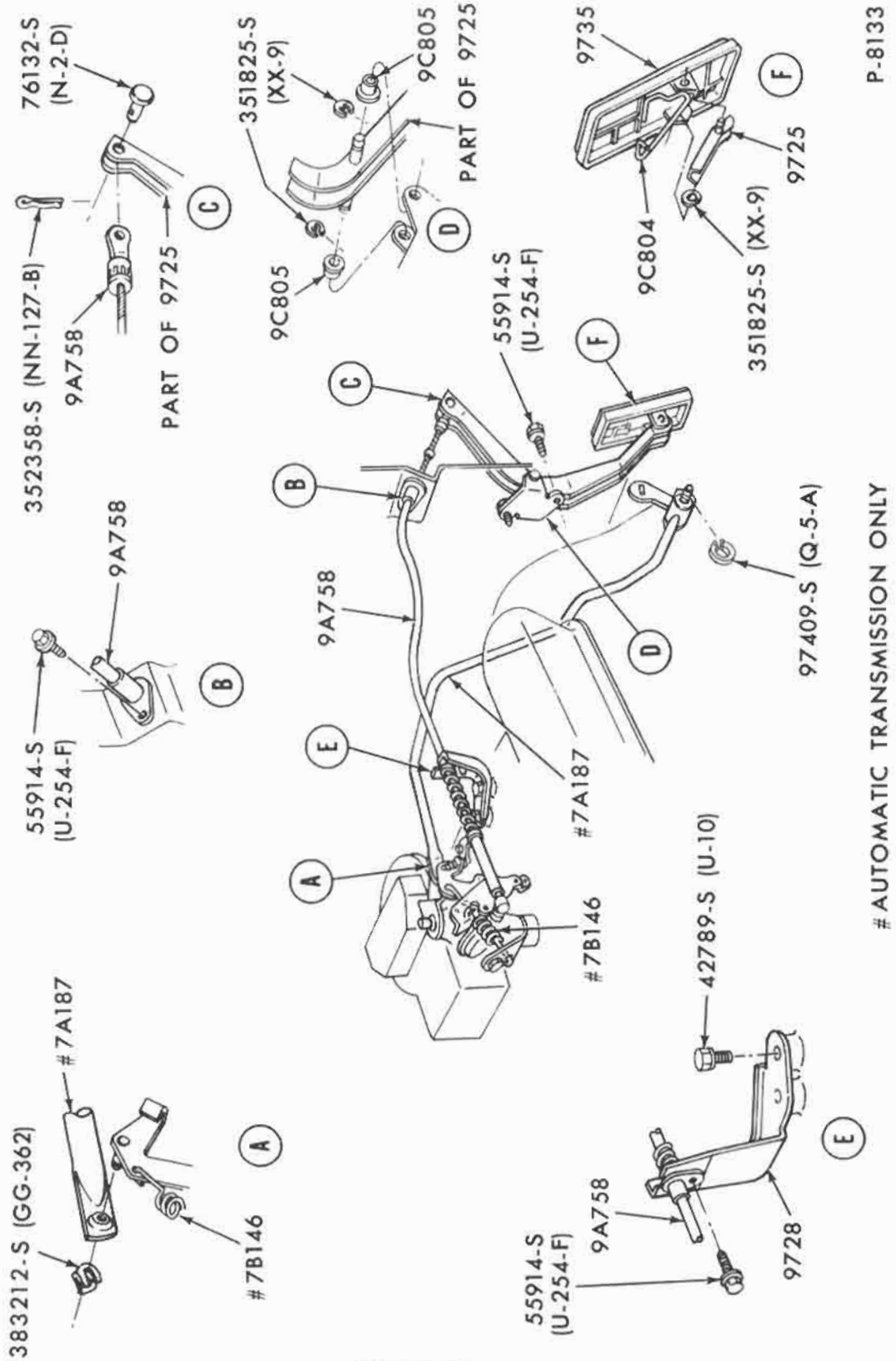

ACCELERATOR LINKAGE
1971/72 MAVERICK (8 CYLINDER 302 ENGINE)

COPYRIGHT © 1975 — FORD MOTOR COMPANY — DEARBORN, MICHIGAN

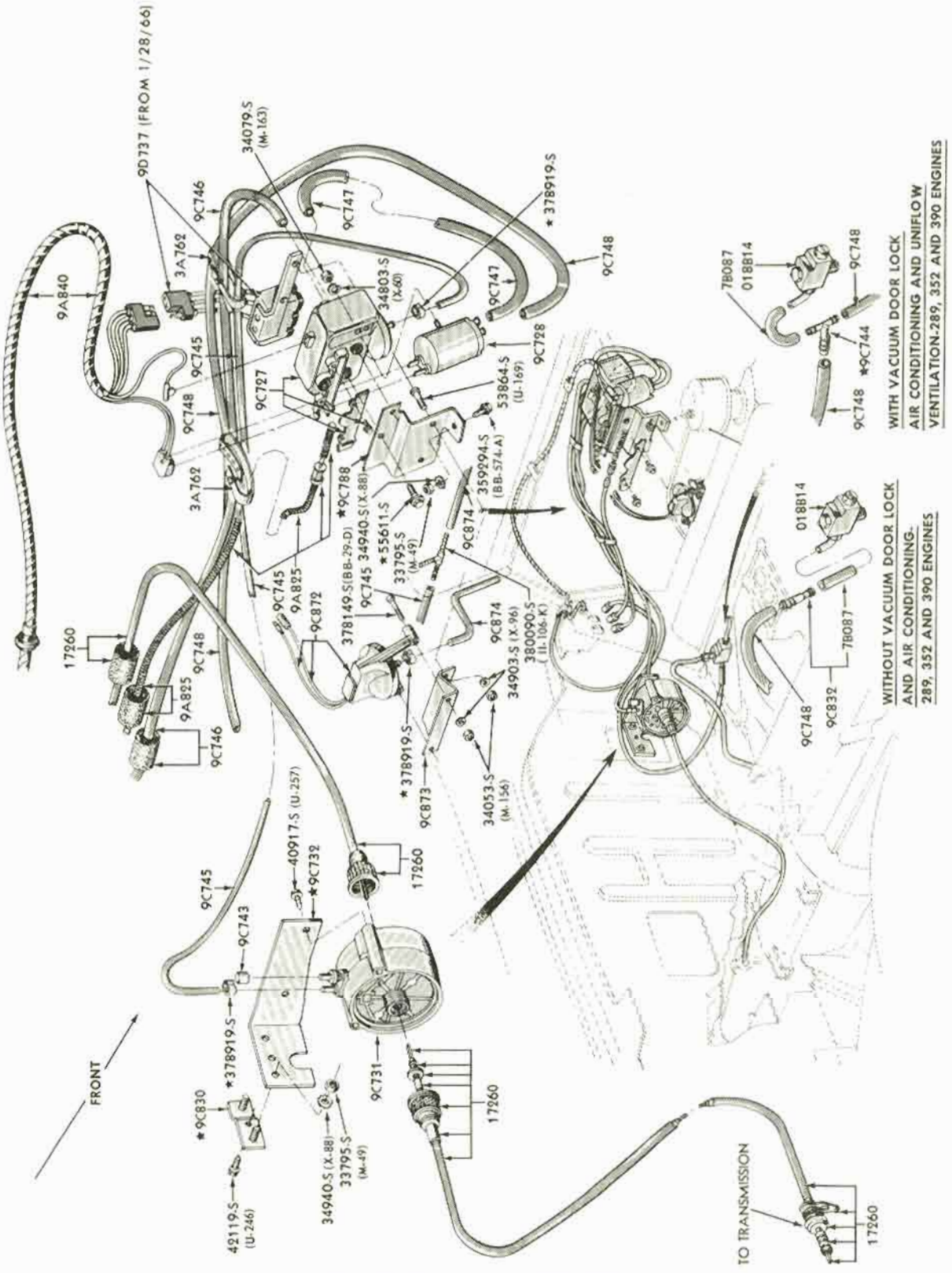

SPEED CONTROL - ENGINE COMPARTMENT

1965/66 FORD

COPYRIGHT © 1975 — FORD MOTOR COMPANY — DEARBORN, MICHIGAN

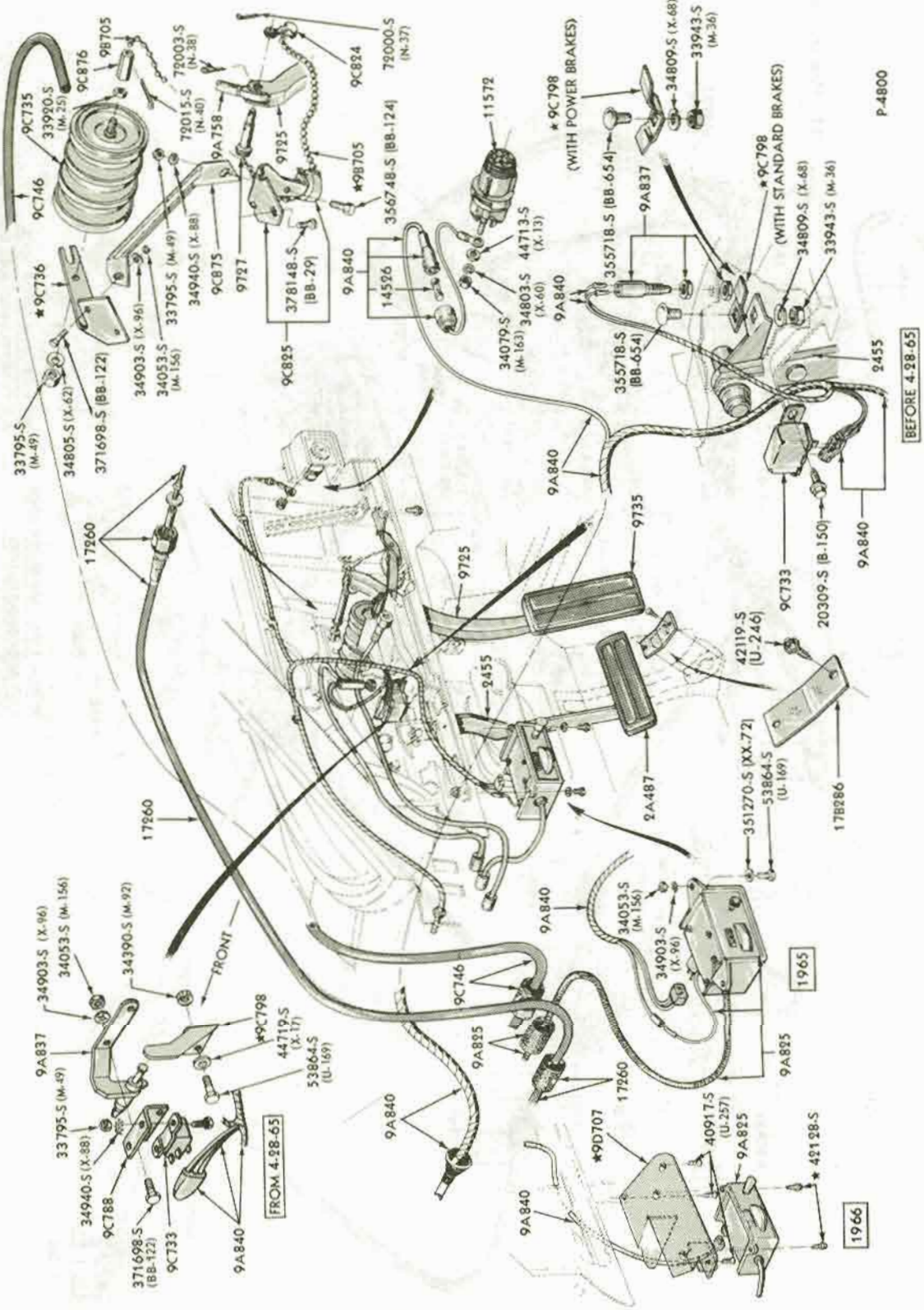

SPEED CONTROL - PASSENGER COMPARTMENT
1965/66 FORD

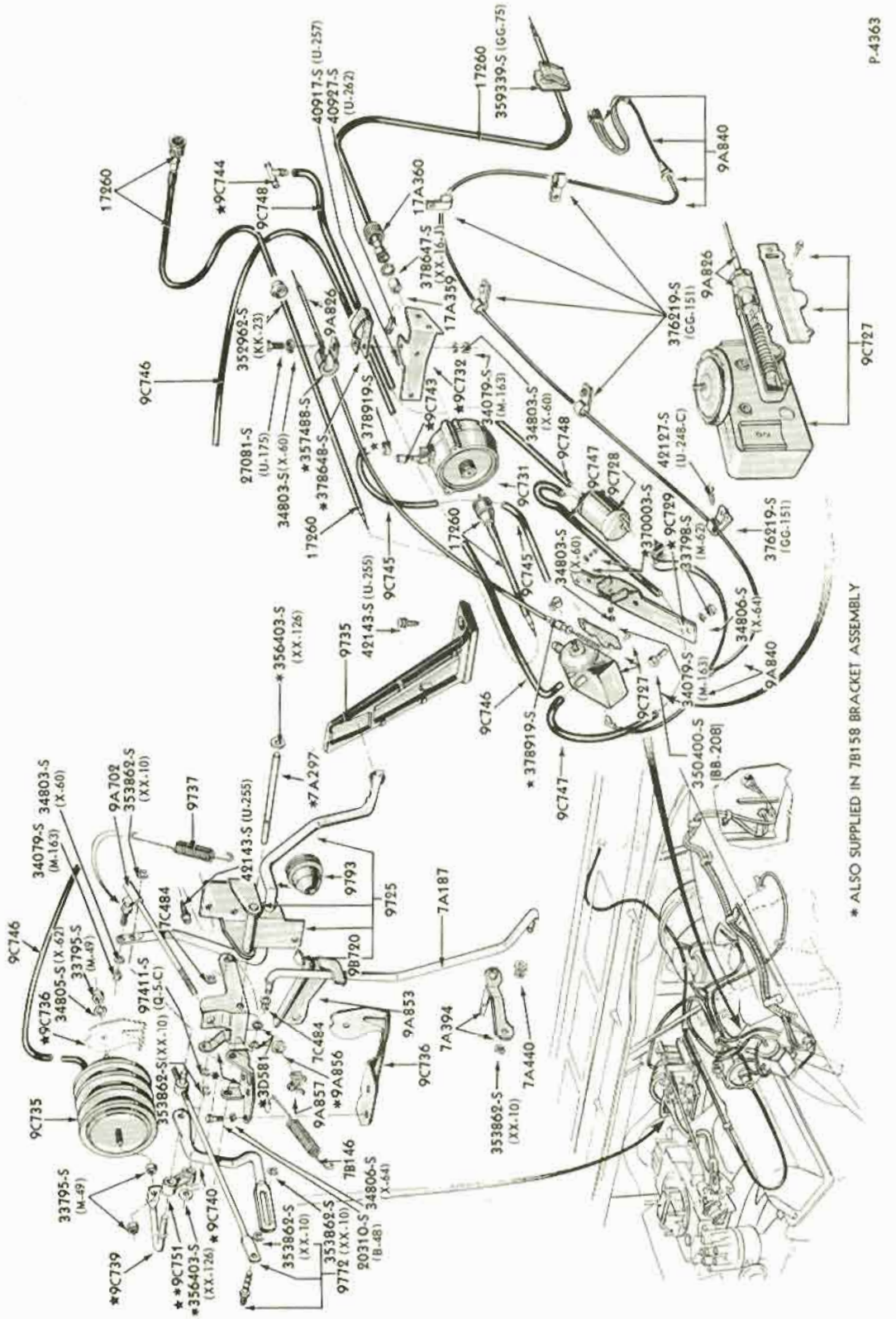

SPEED CONTROL - ENGINE COMPARTMENT
1965 THUNDERBIRD

COPYRIGHT © 1975 — FORD MOTOR COMPANY — DEARBORN, MICHIGAN

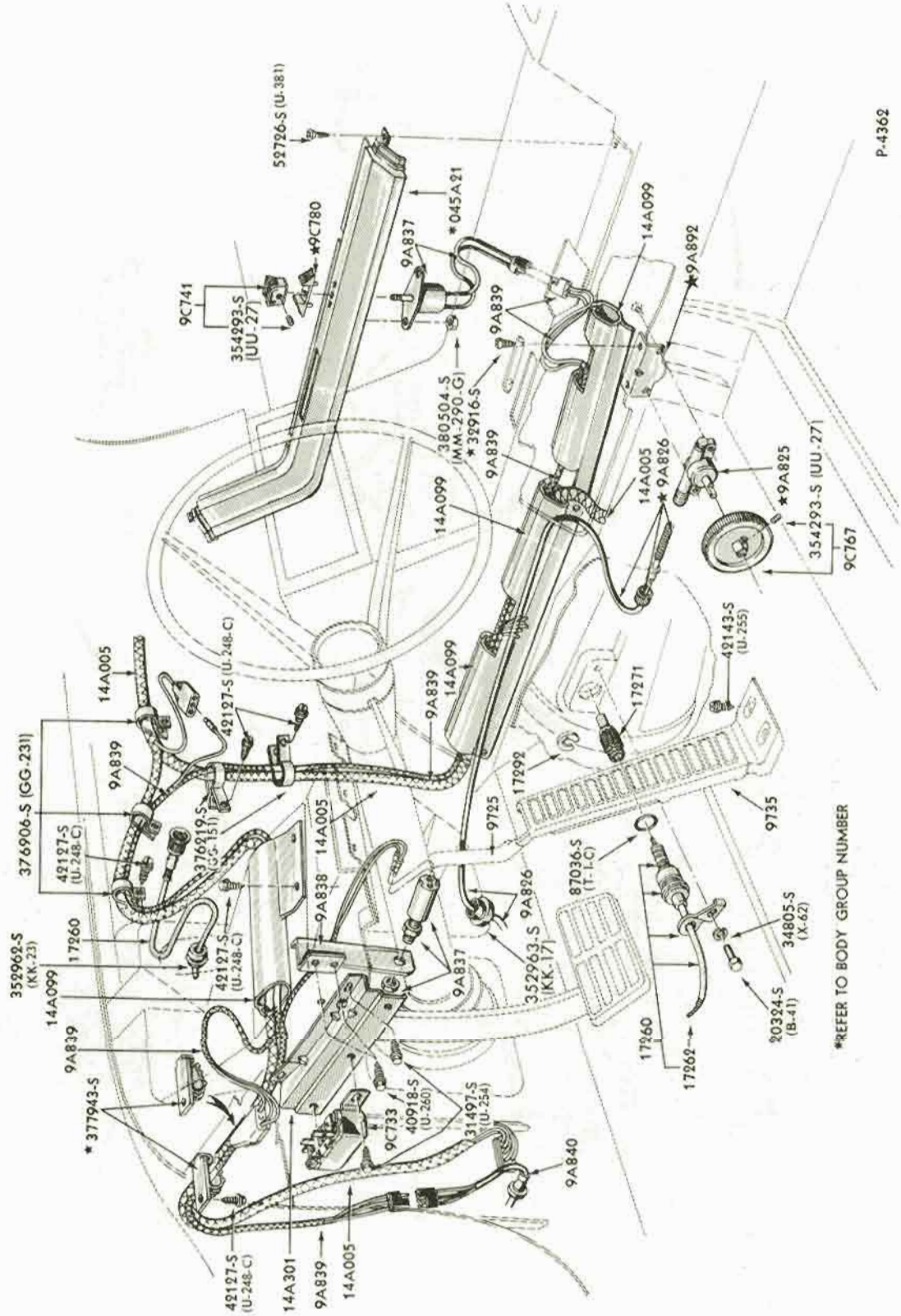

SPEED CONTROL - PASSENGER COMPARTMENT
1965 THUNDERBIRD

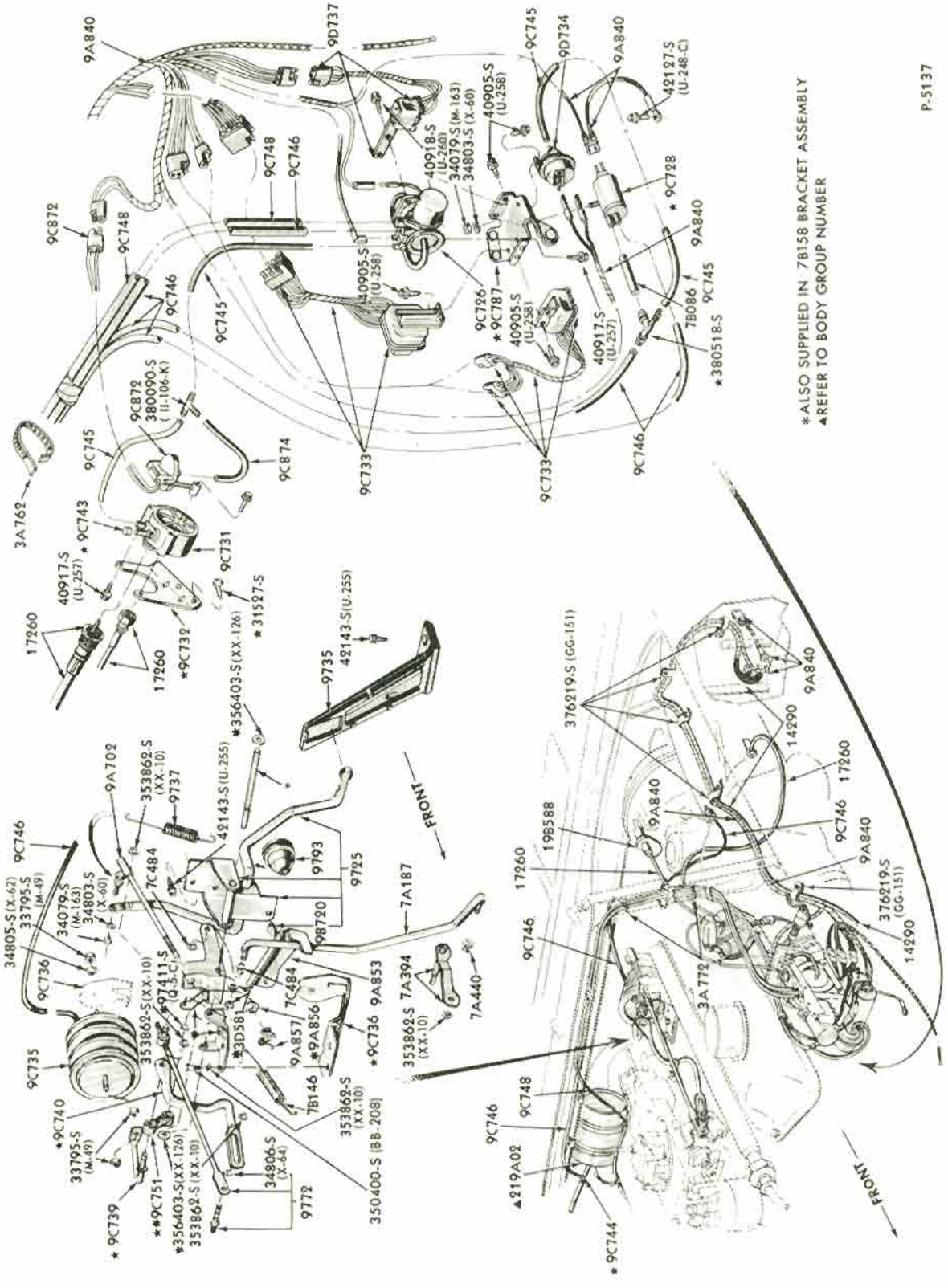

SPEED CONTROL - ENGINE COMPARTMENT
1966 THUNDERBIRD

COPYRIGHT © 1975 — FORD MOTOR COMPANY — DEARBORN, MICHIGAN

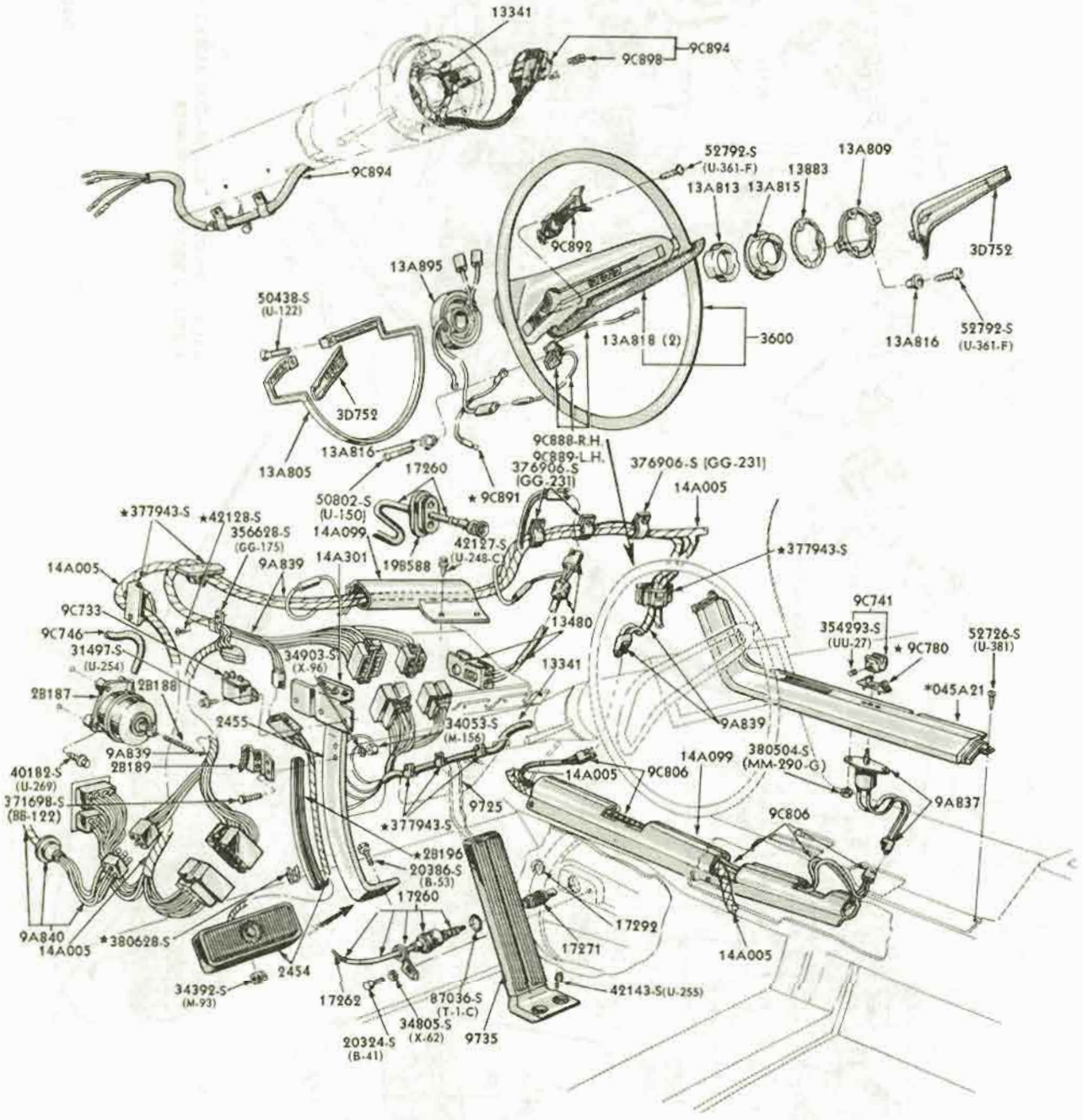

*REFER TO BODY GROUP NUMBER

P-5136

P-5611

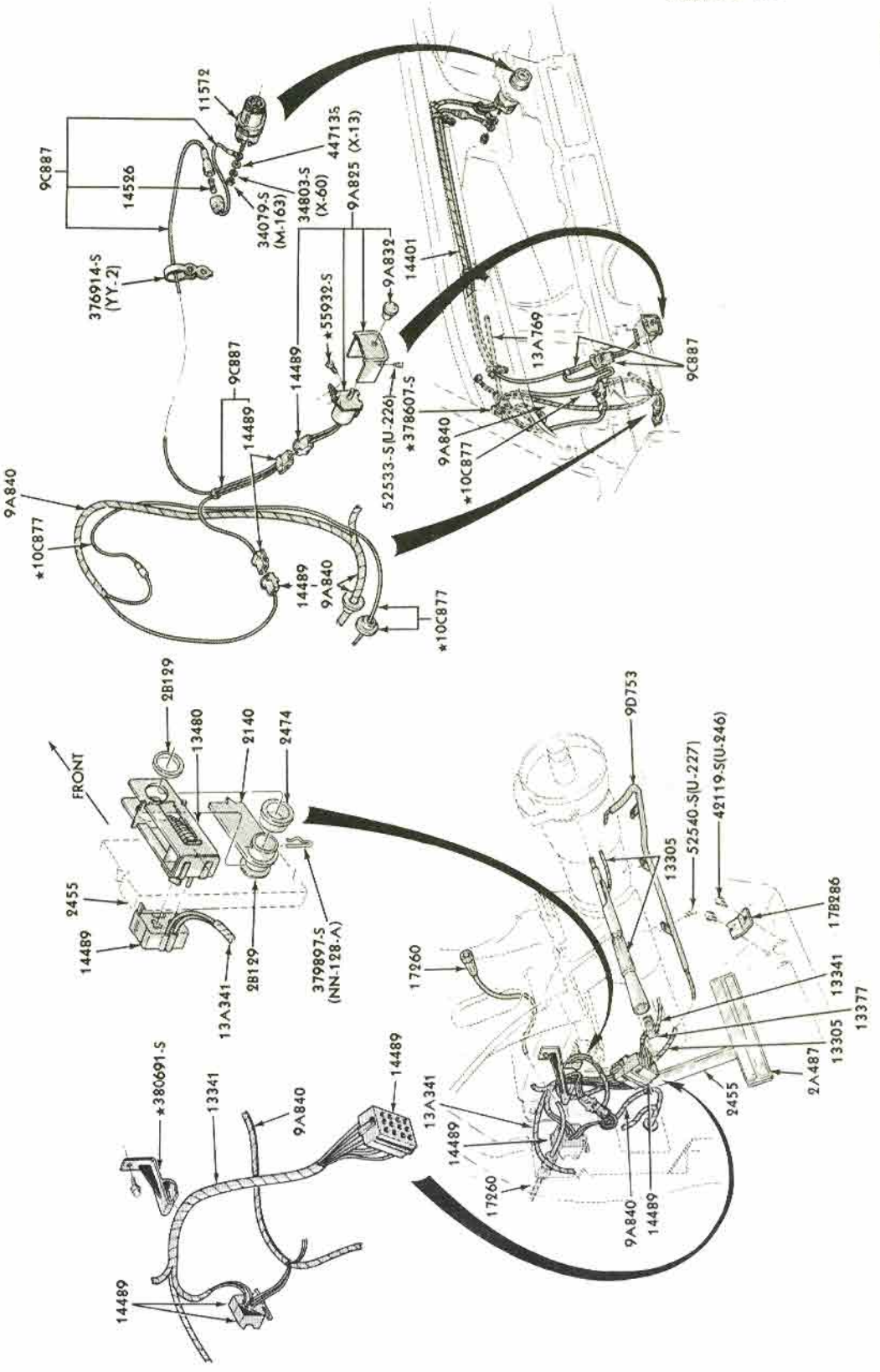

SPEED CONTROL - PASSENGER COMPARTMENT
1967 - FORD

COPYRIGHT © 1975 — FORD MOTOR COMPANY — DEARBORN, MICHIGAN

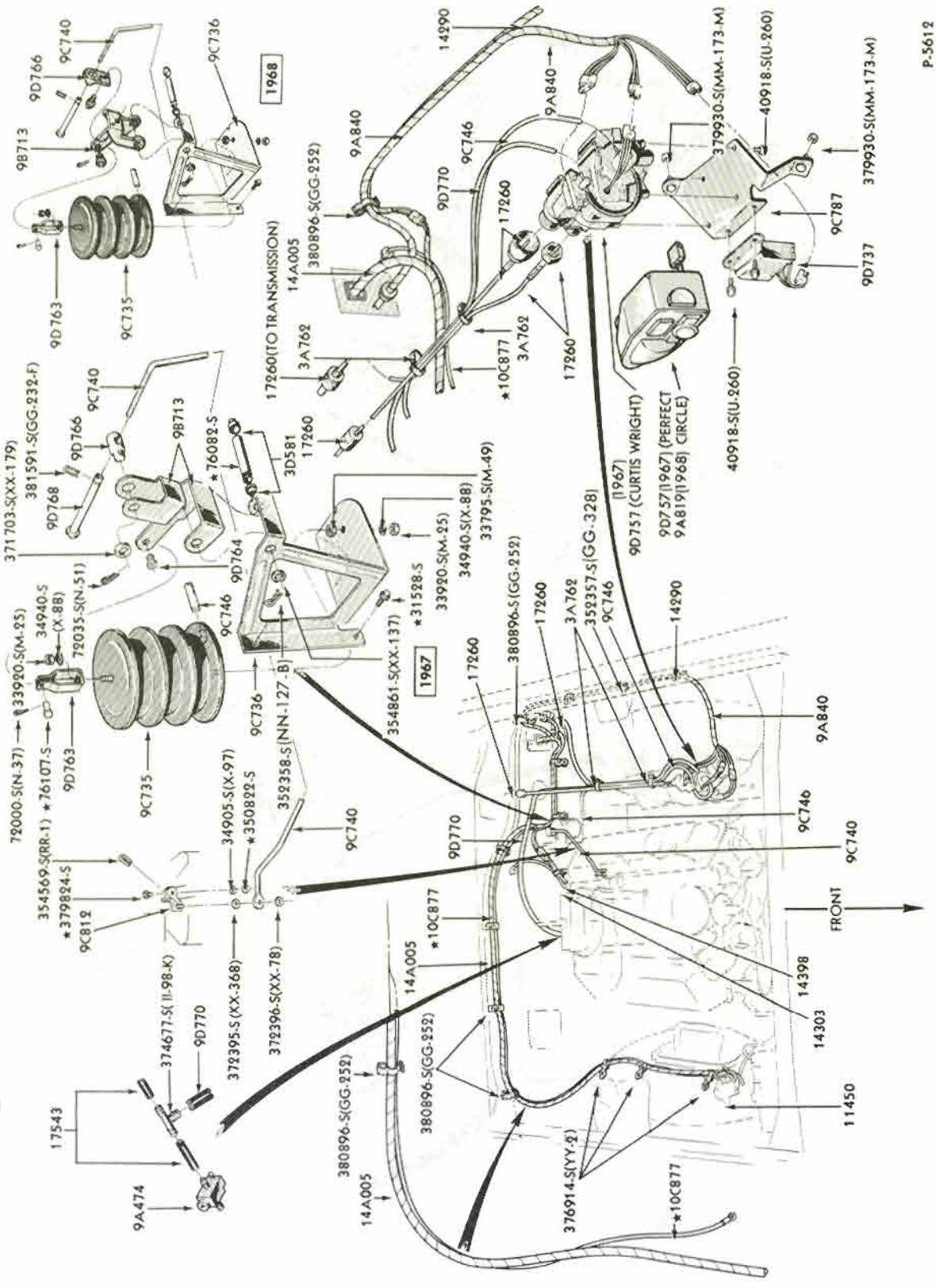

SPEED CONTROL - ENGINE COMPARTMENT
1967/68 FORD

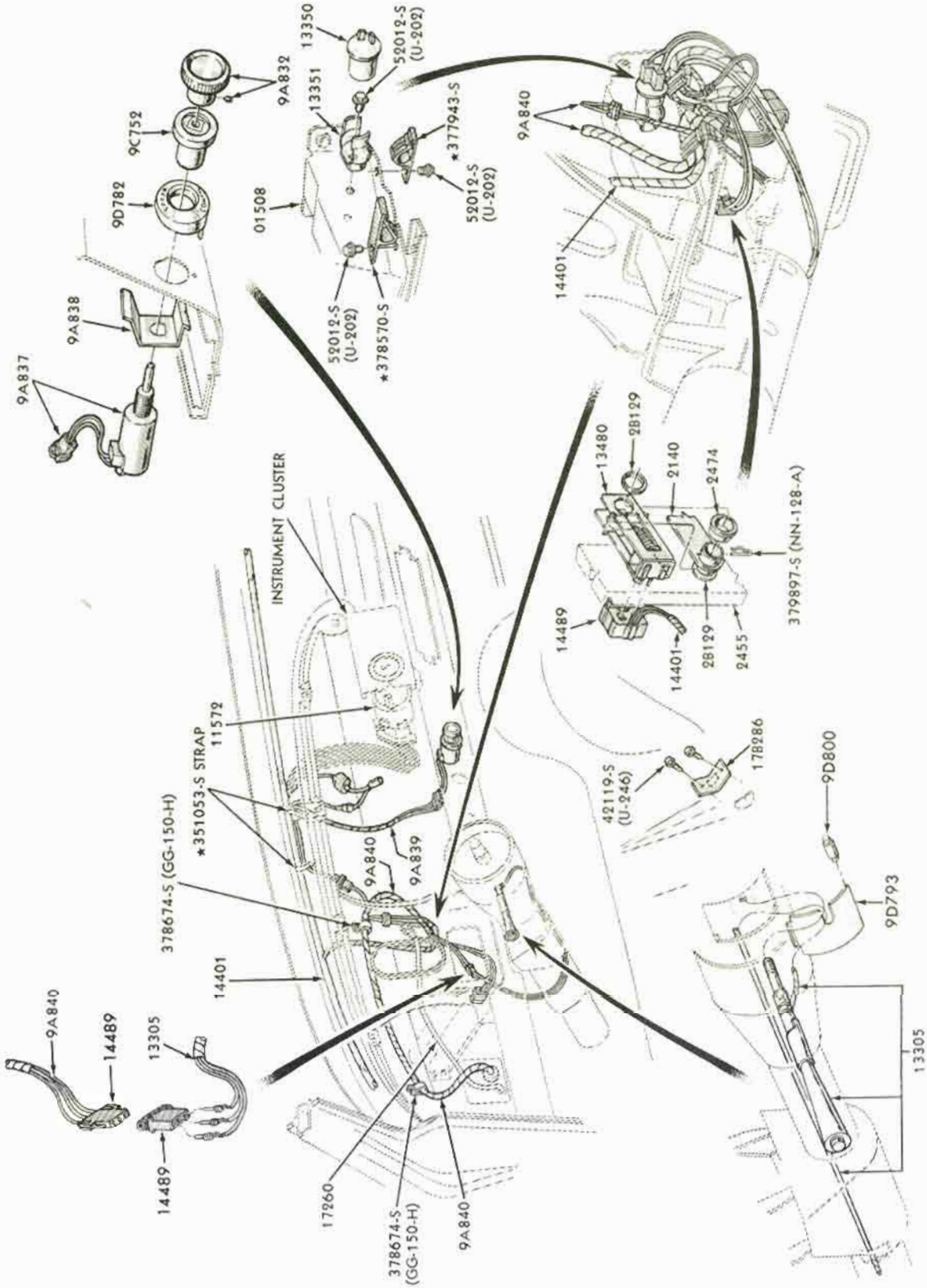

SPEED CONTROL - PASSENGER COMPARTMENT
1968 FORD

COPYRIGHT © 1975 — FORD MOTOR COMPANY — DEARBORN, MICHIGAN

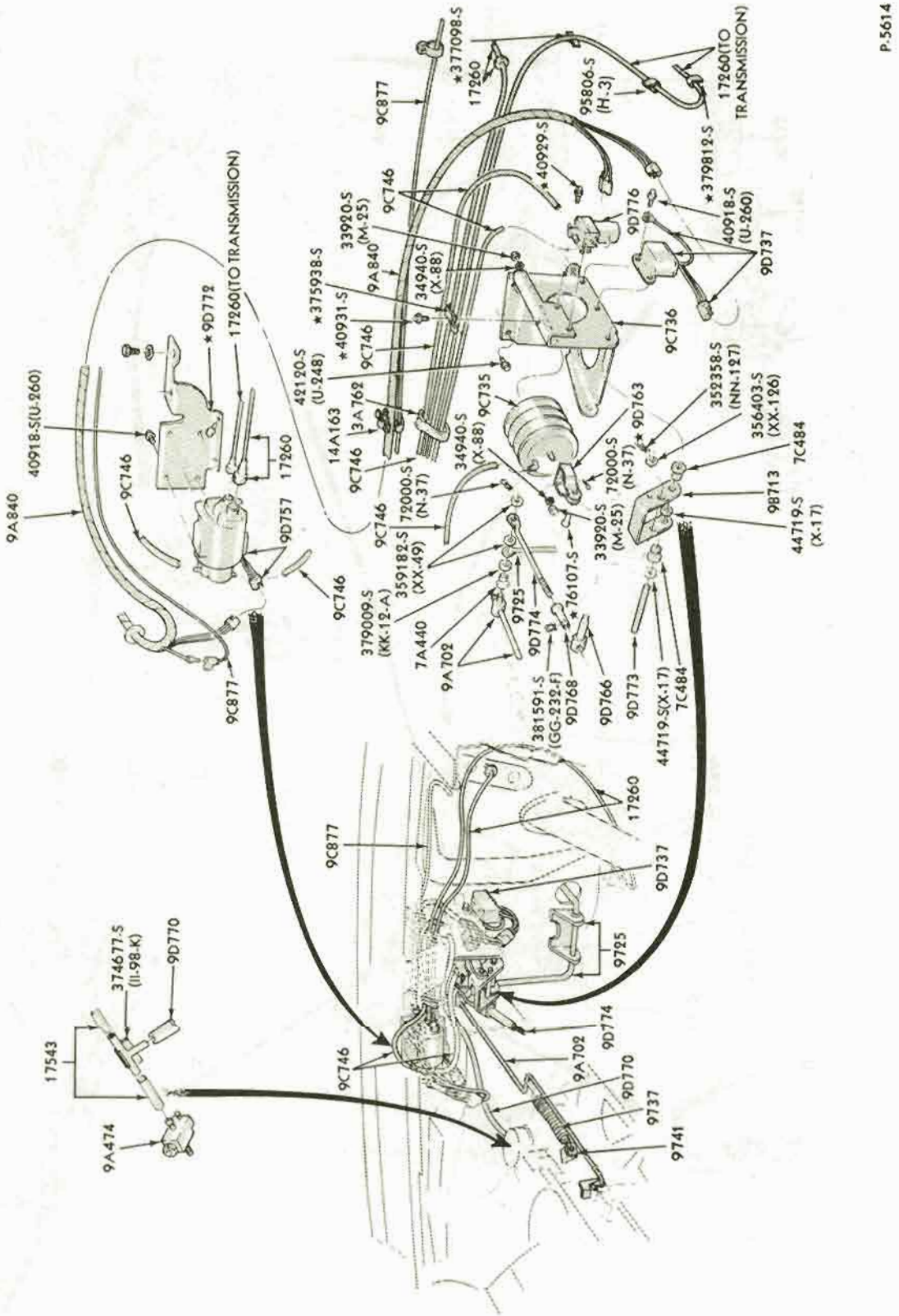

SPEED CONTROL - ENGINE COMPARTMENT
1967 MUSTANG

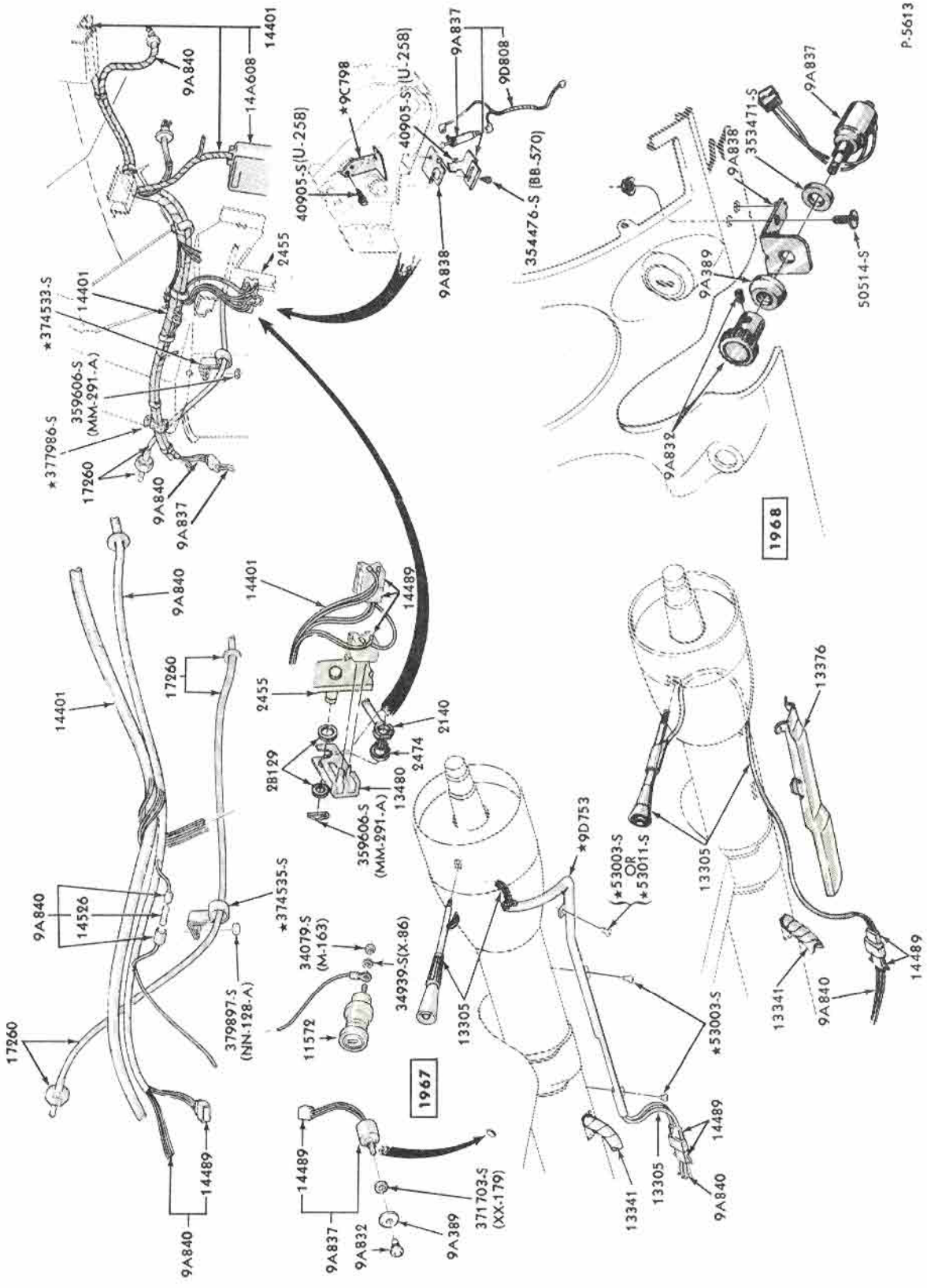

SPEED CONTROL - PASSENGER COMPARTMENT
1967/68 MUSTANG

COPYRIGHT © 1975 — FORD MOTOR COMPANY — DEARBORN, MICHIGAN

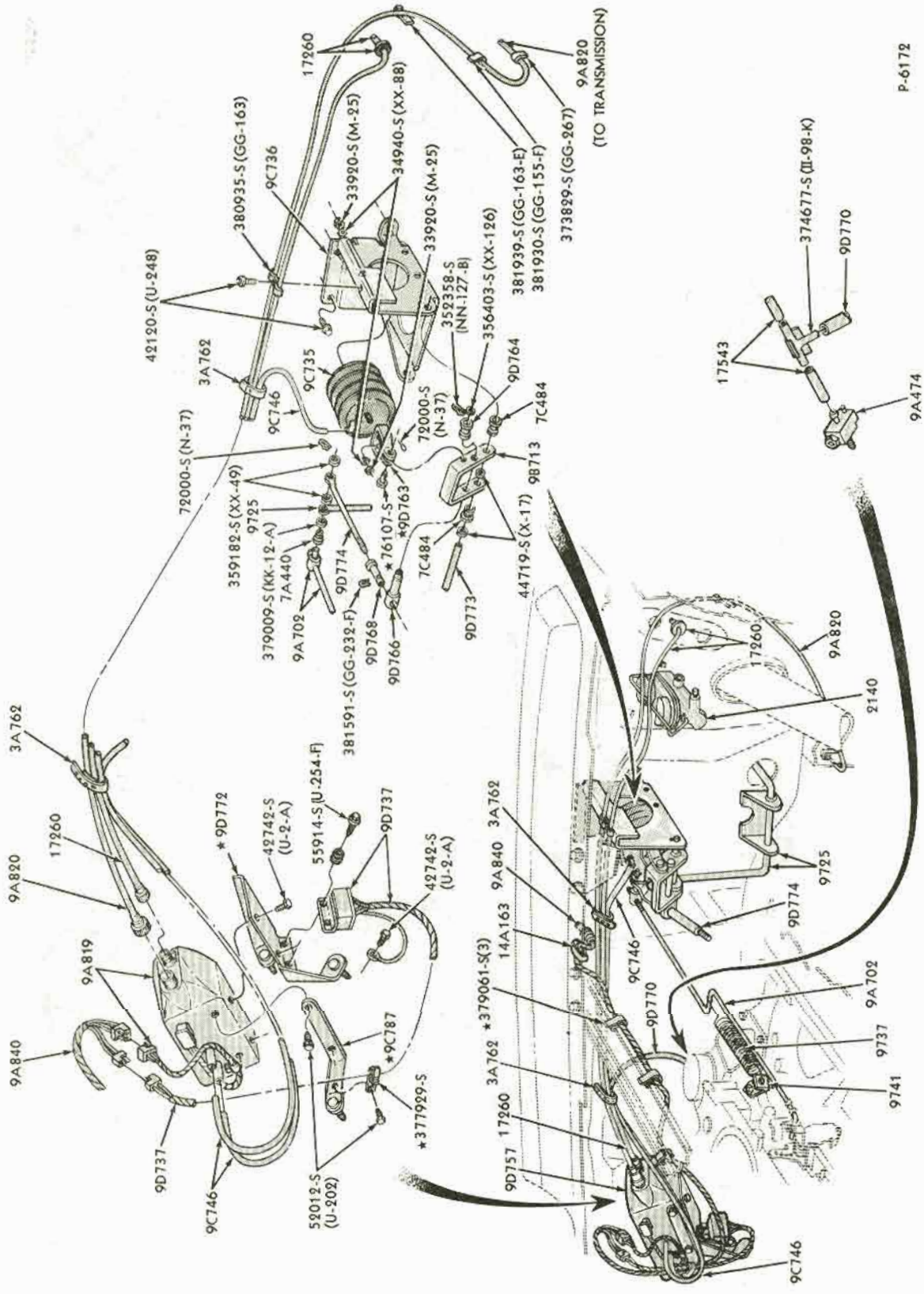

SPEED CONTROL - ENGINE COMPARTMENT
1968 - MUSTANG

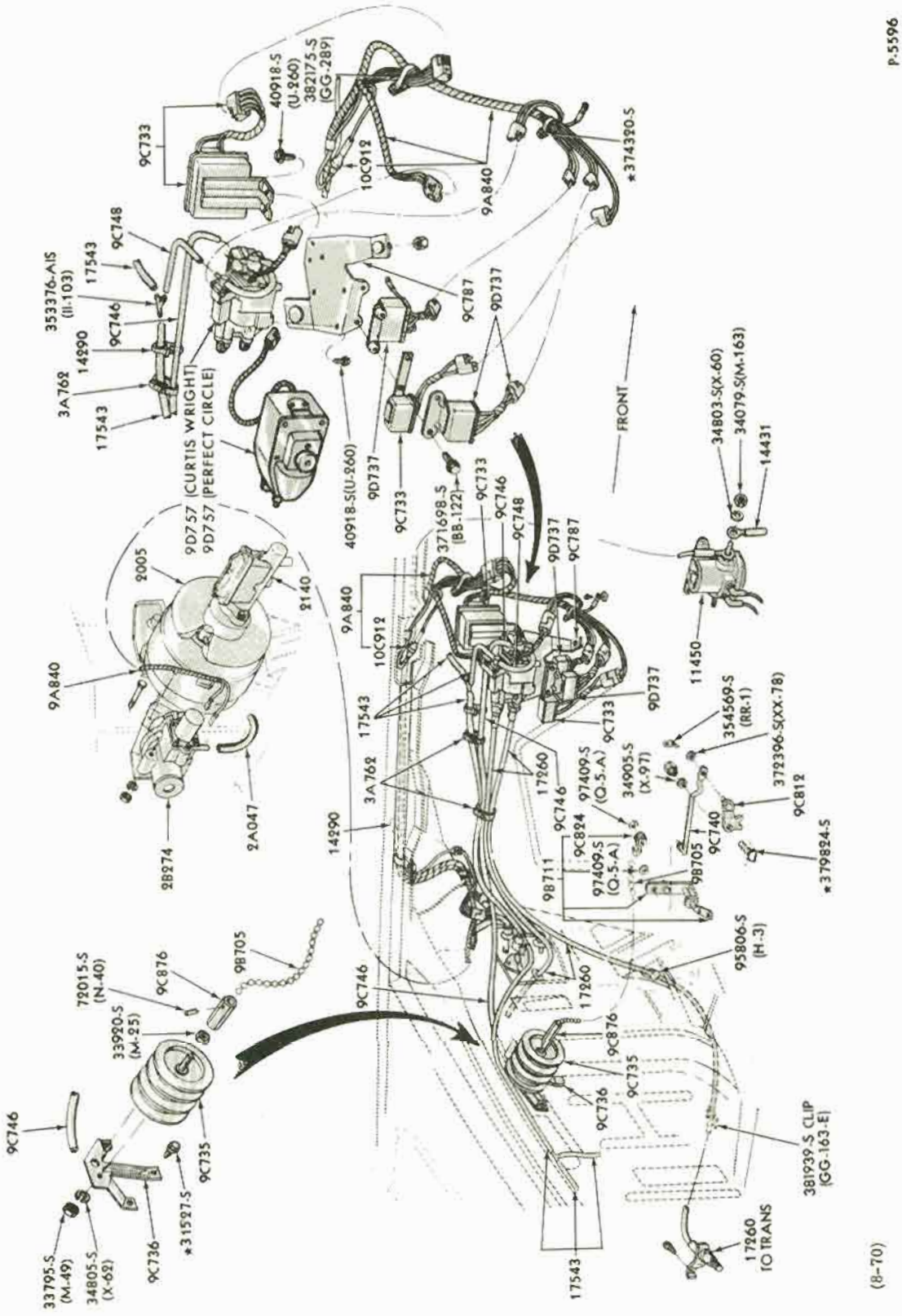

SPEED CONTROL - ENGINE COMPARTMENT
1967 THUNDERBIRD

COPYRIGHT © 1975 — FORD MOTOR COMPANY — DEARBORN, MICHIGAN

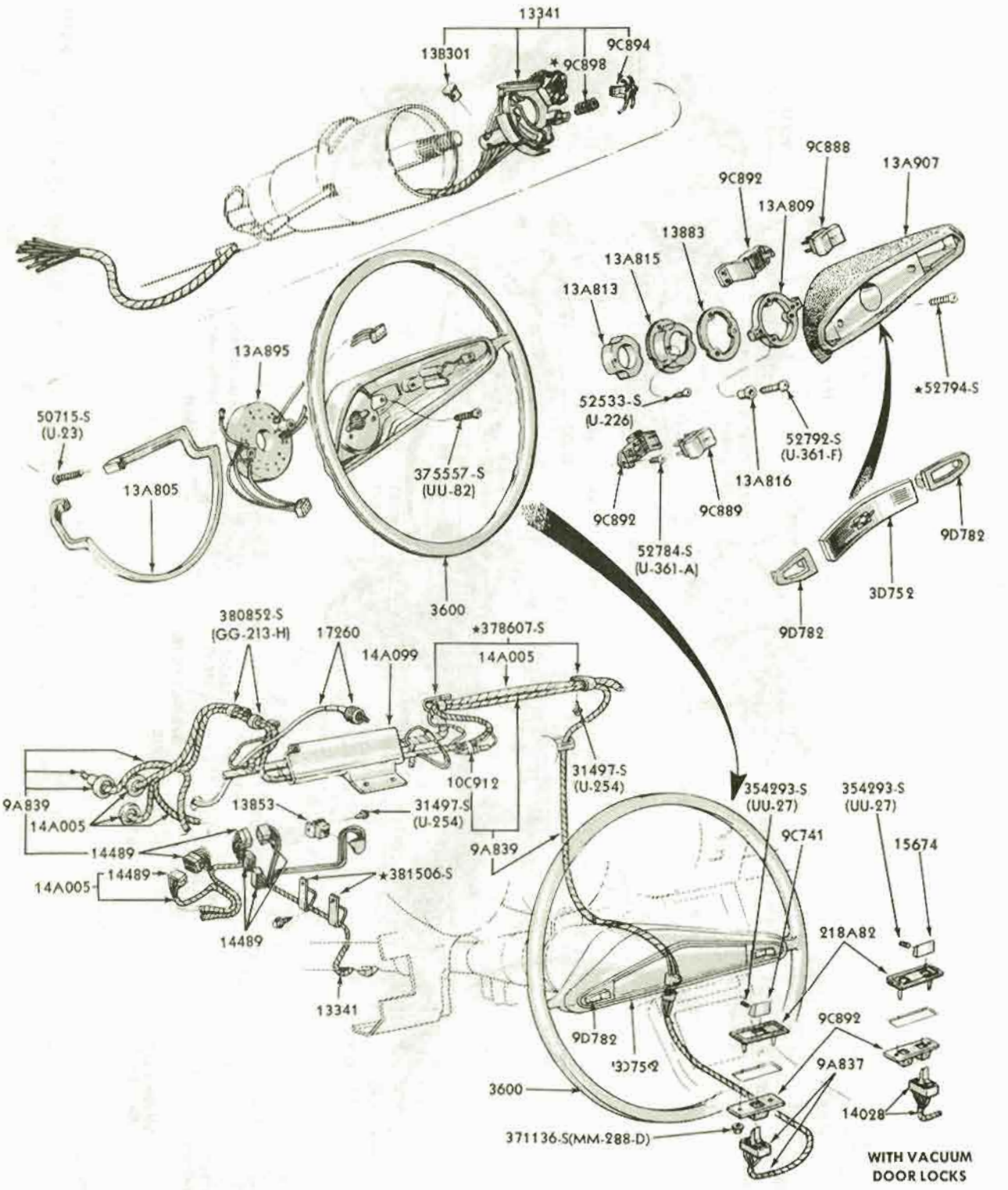

P-5595

SPEED CONTROL - PASSENGER COMPARTMENT
1967 THUNDERBIRD

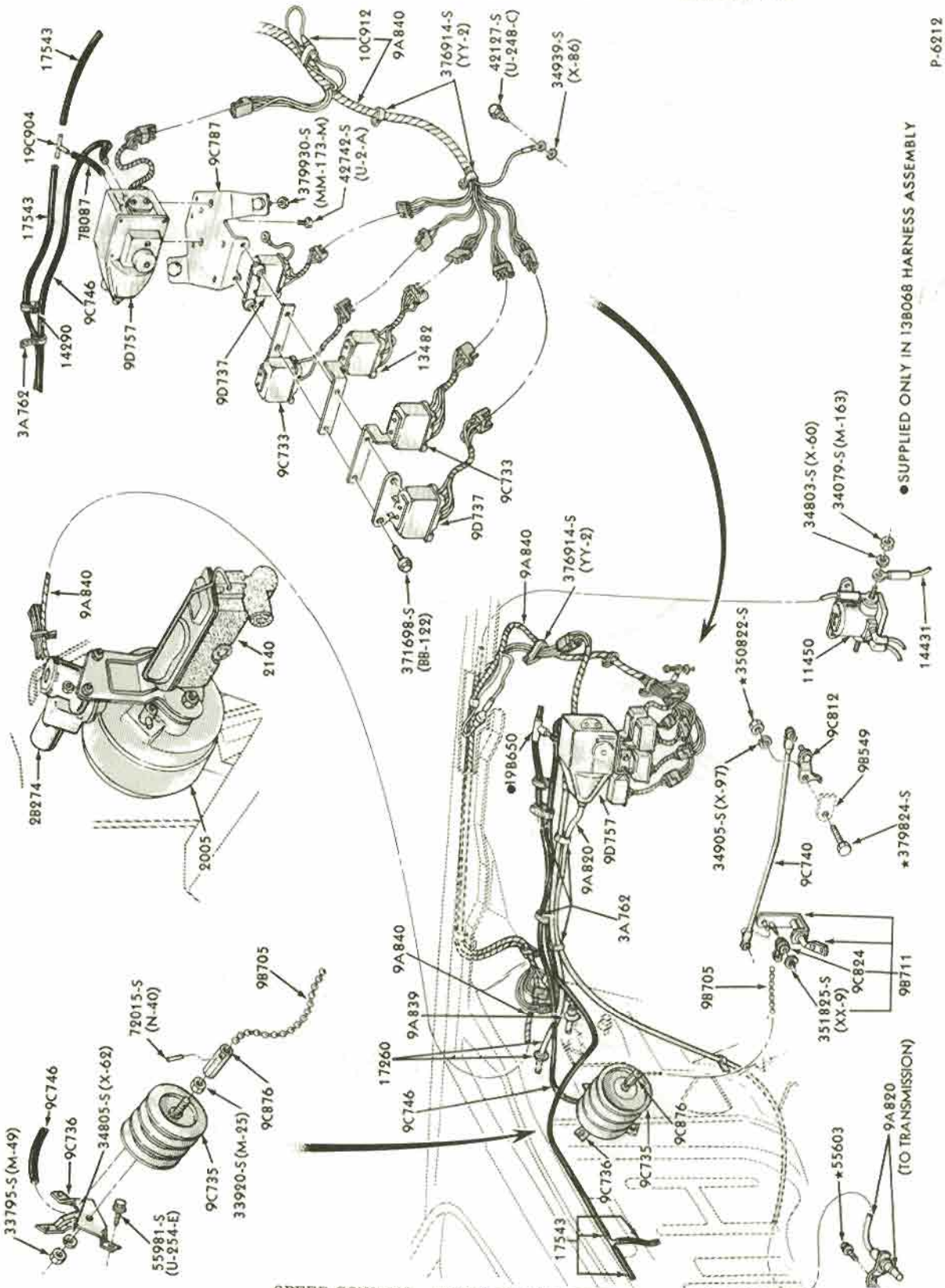

SPEED CONTROL - ENGINE COMPARTMENT
1968/69 THUNDERBIRD

COPYRIGHT © 1975 — FORD MOTOR COMPANY — DEARBORN, MICHIGAN

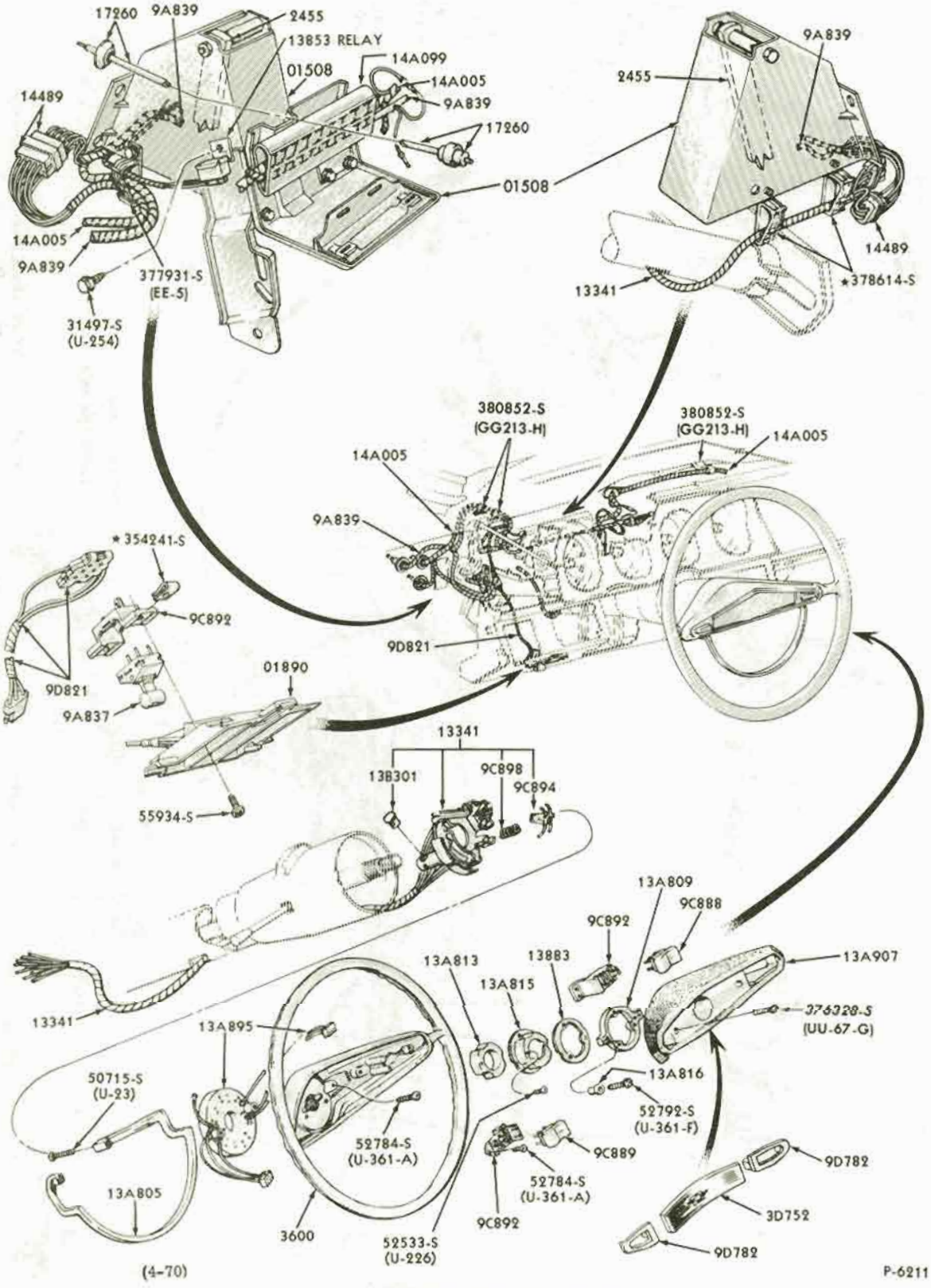

SPEED CONTROL - PASSENGER COMPARTMENT
1968/69 THUNDERBIRD

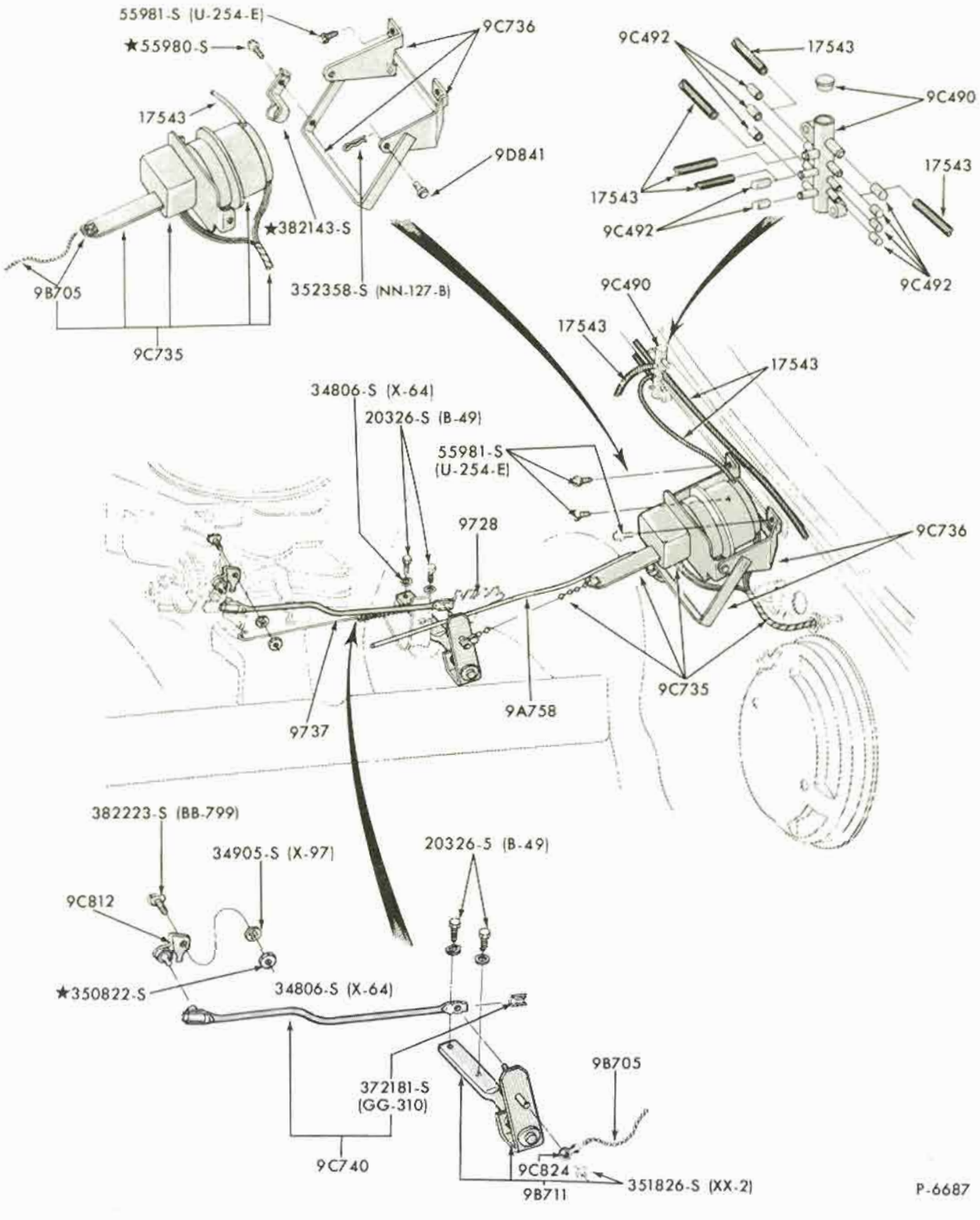

SPEED CONTROL - ENGINE COMPARTMENT
1969/70 FORD

COPYRIGHT © 1975 — FORD MOTOR COMPANY — DEARBORN, MICHIGAN

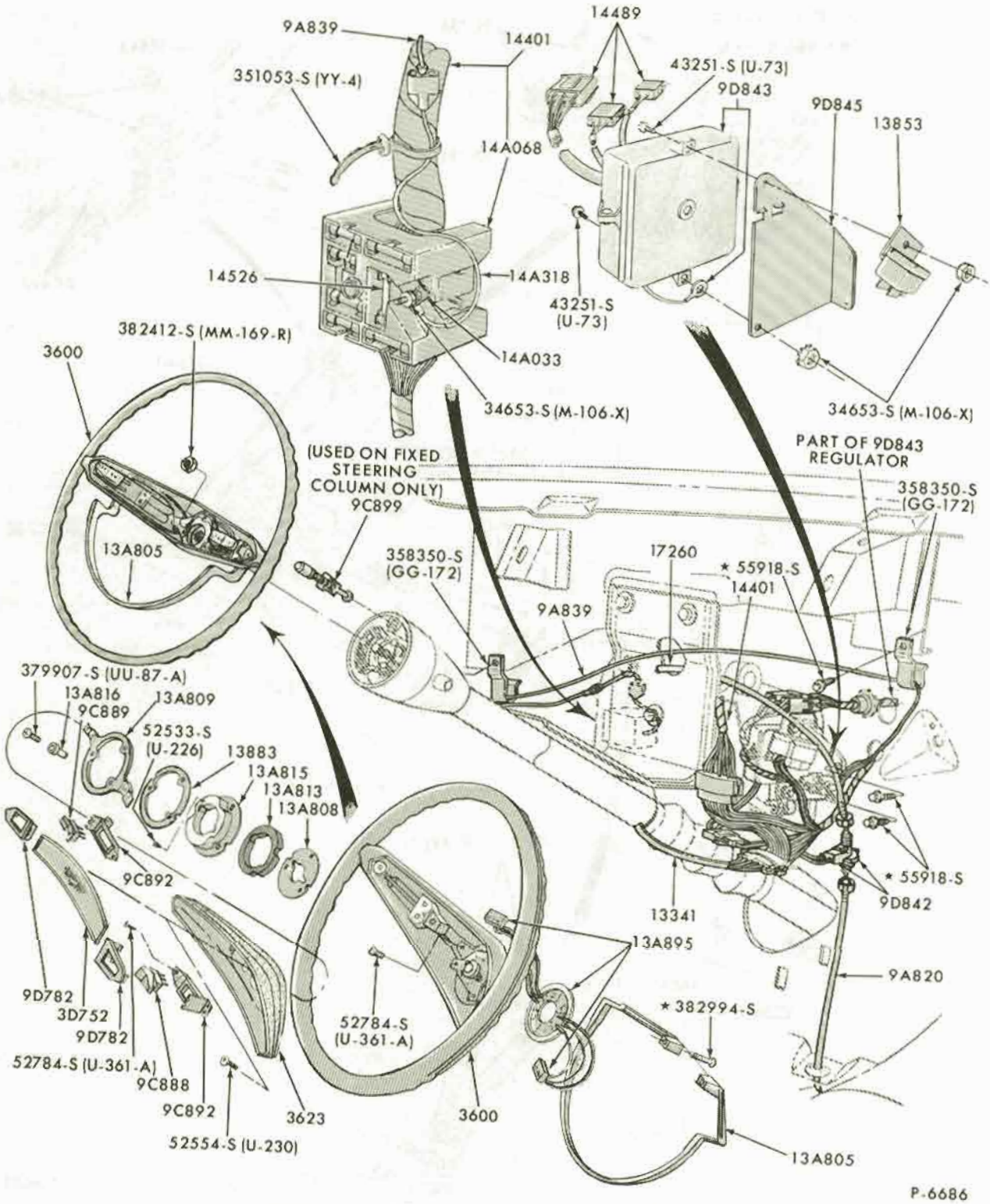

SPEED CONTROL - PASSENGER COMPARTMENT
1969/70 FORD

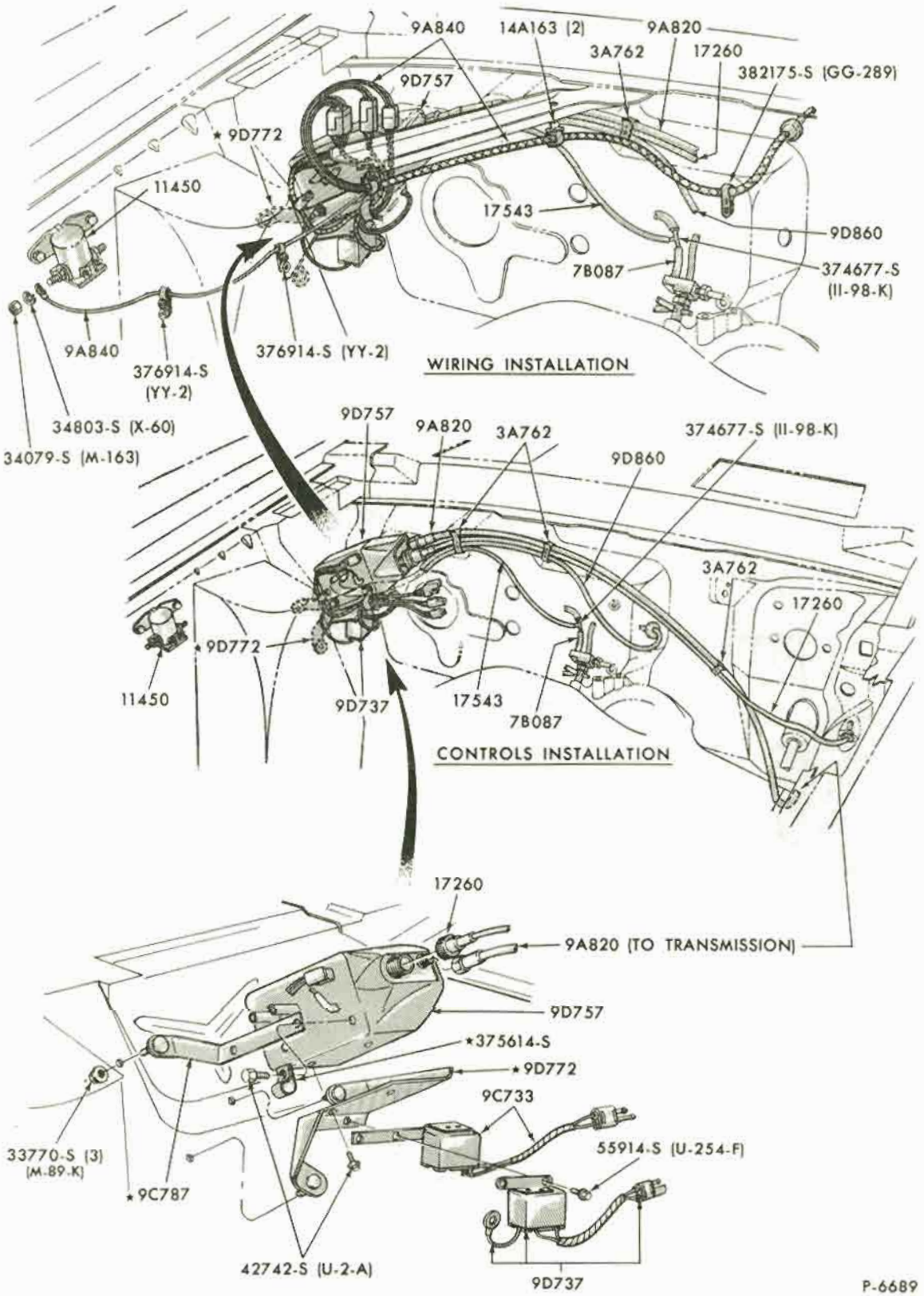

SPEED CONTROL - ENGINE COMPARTMENT
1969 MUSTANG

COPYRIGHT © 1975 — FORD MOTOR COMPANY — DEARBORN, MICHIGAN

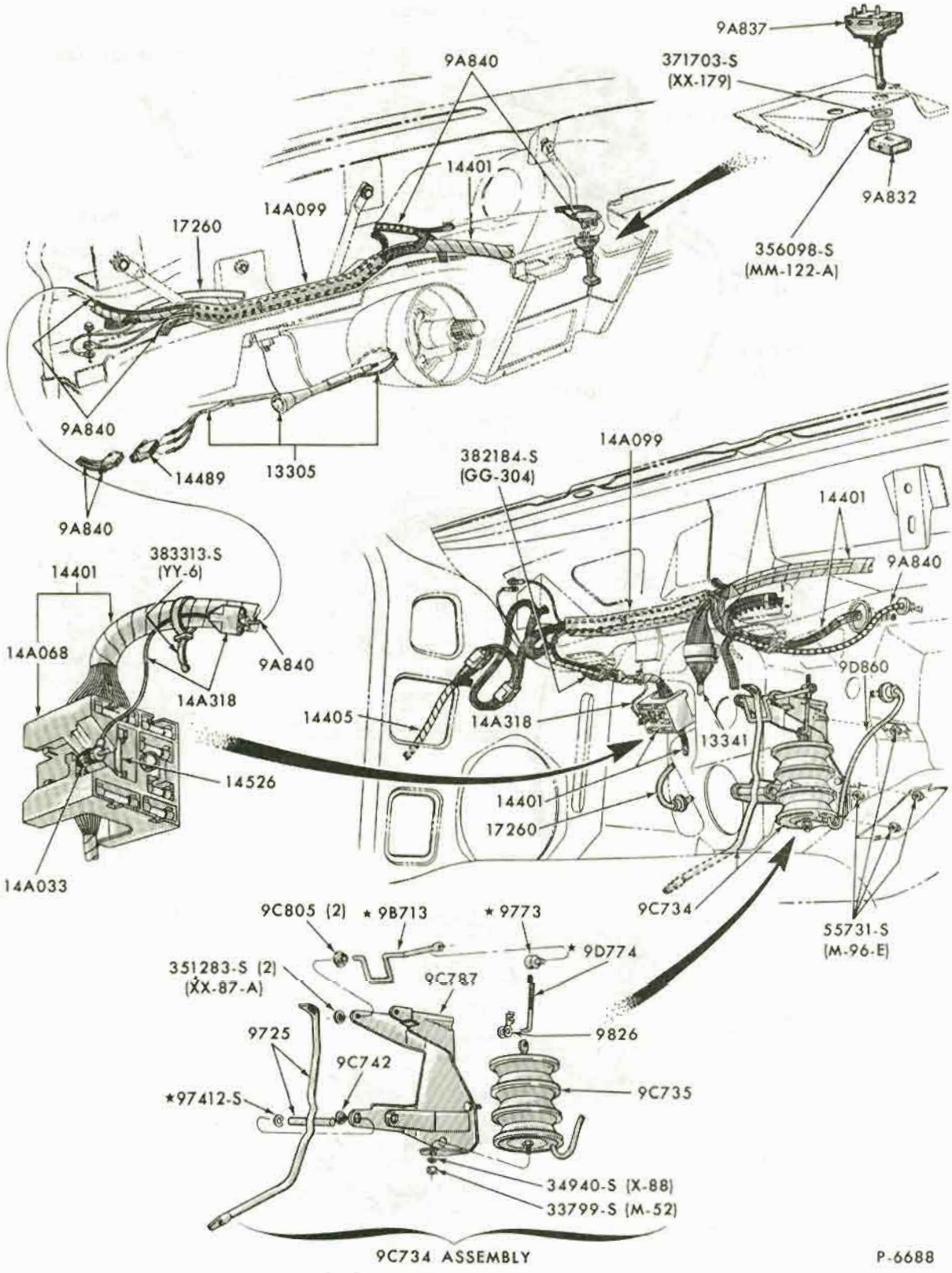

SPEED CONTROL - PASSENGER COMPARTMENT
1969 MUSTANG

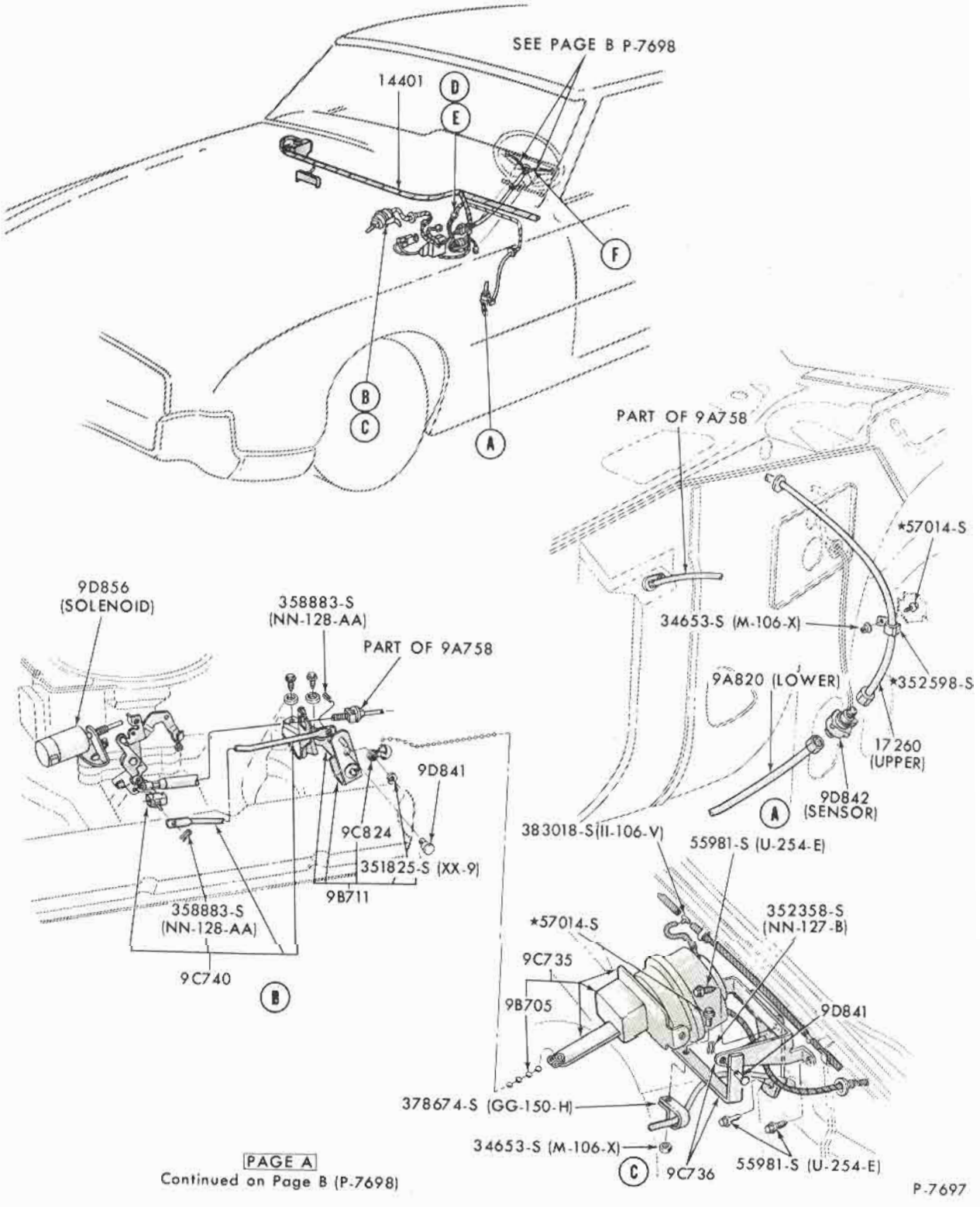

PAGE A
Continued on Page B (P-7698)

SPEED CONTROL - ENGINE COMPARTMENT
1970/71 THUNDERBIRD

COPYRIGHT © 1975— FORD MOTOR COMPANY — DEARBORN, MICHIGAN

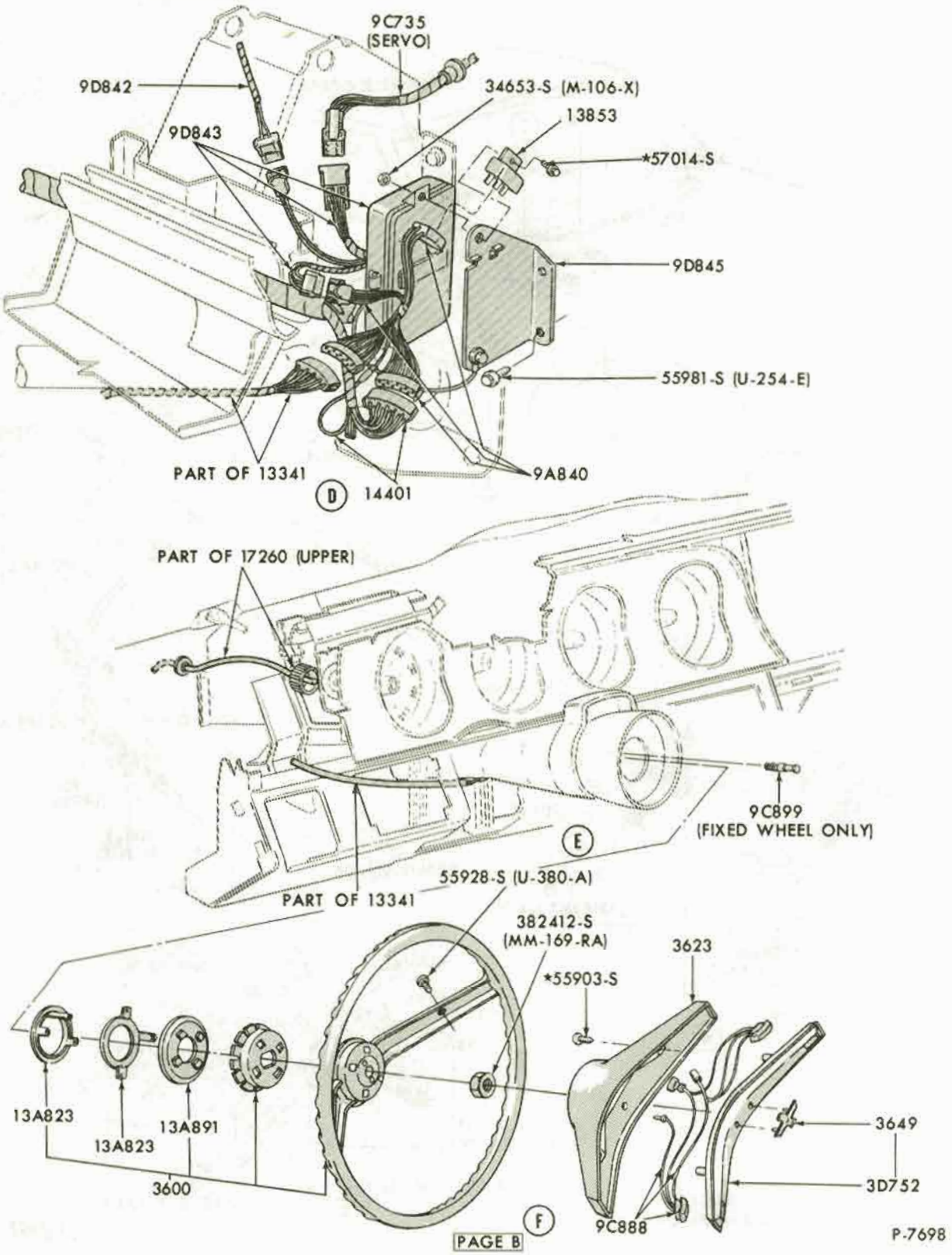

SPEED CONTROL - PASSENGER COMPARTMENT
1970/71 THUNDERBIRD

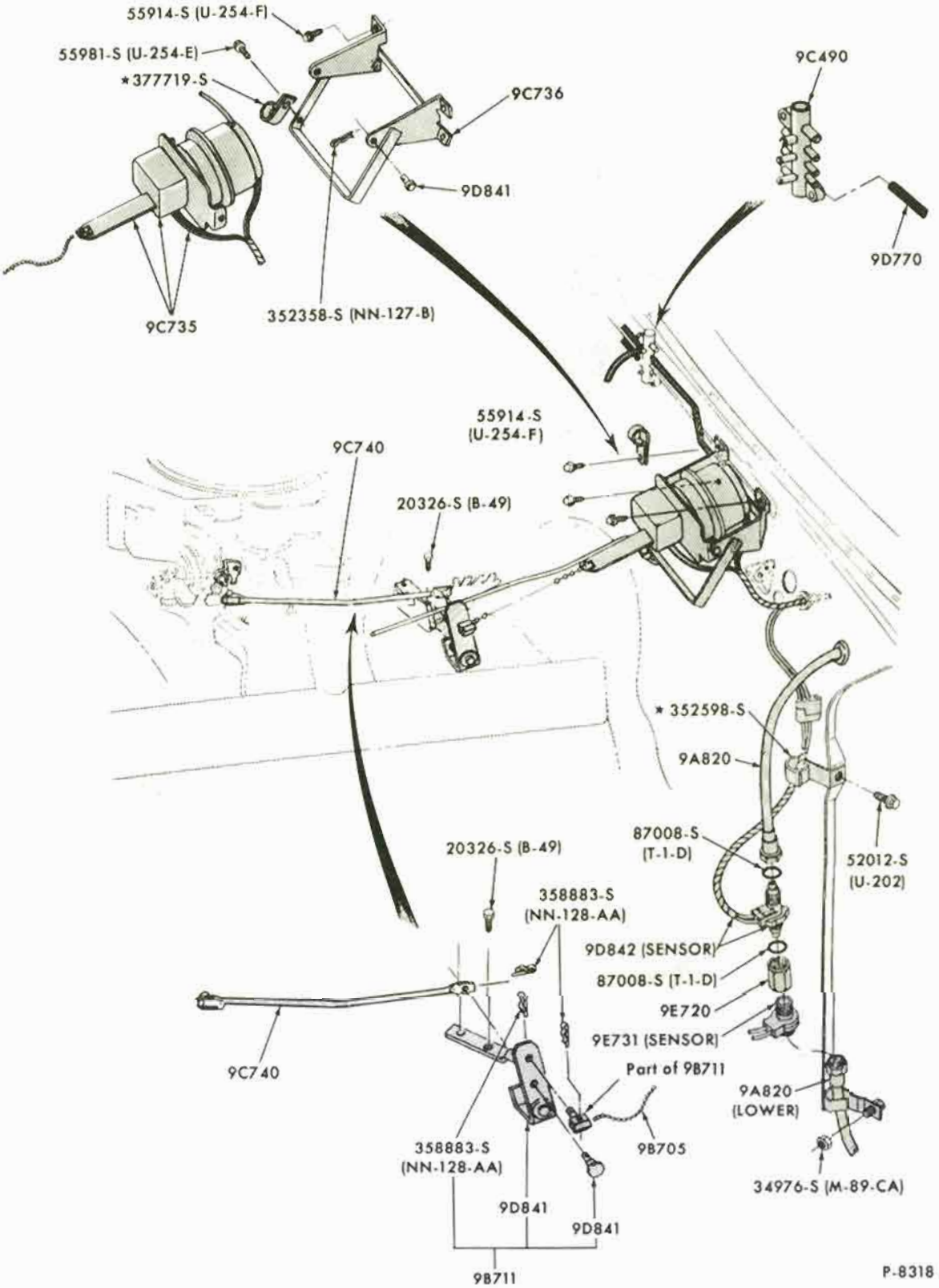

SPEED CONTROL - ENGINE COMPARTMENT
1971/72 FORD

COPYRIGHT © 1975 — FORD MOTOR COMPANY — DEARBORN, MICHIGAN

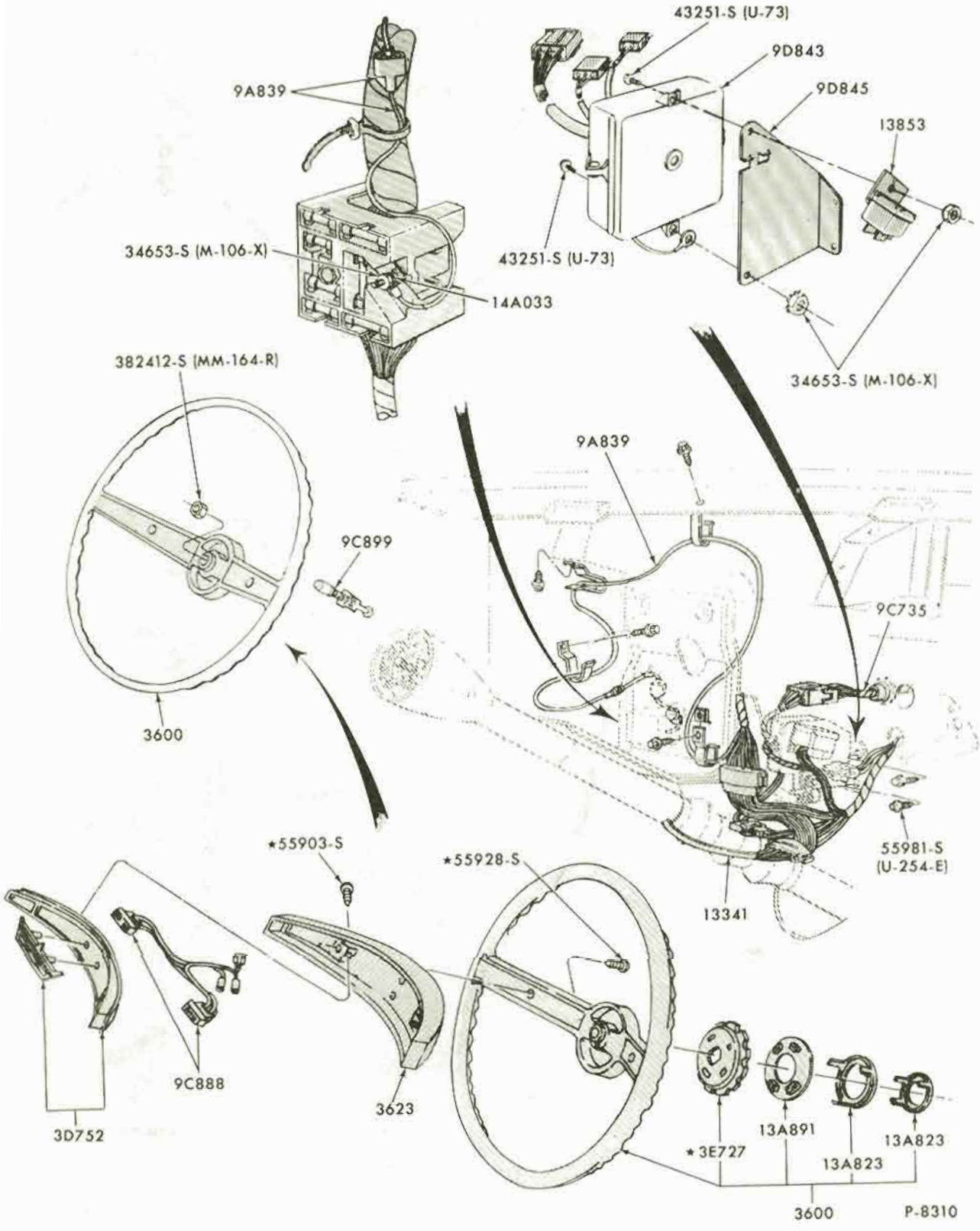

SPEED CONTROL - PASSENGER COMPARTMENT
1971/ FORD

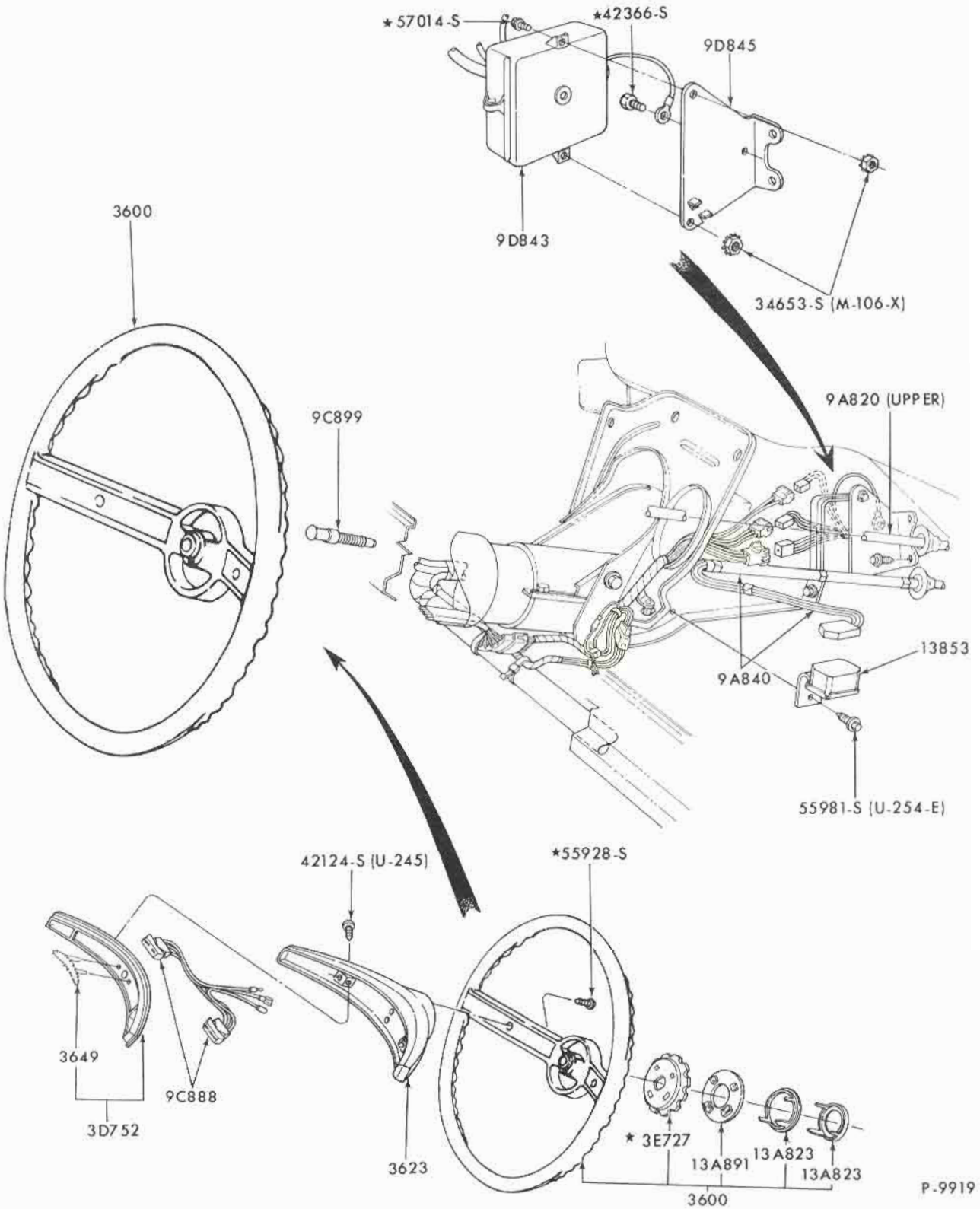

SPEED CONTROL - PASSENGER COMPARTMENT
1972 THUNDERBIRD

COPYRIGHT © 1975 — FORD MOTOR COMPANY — DEARBORN, MICHIGAN

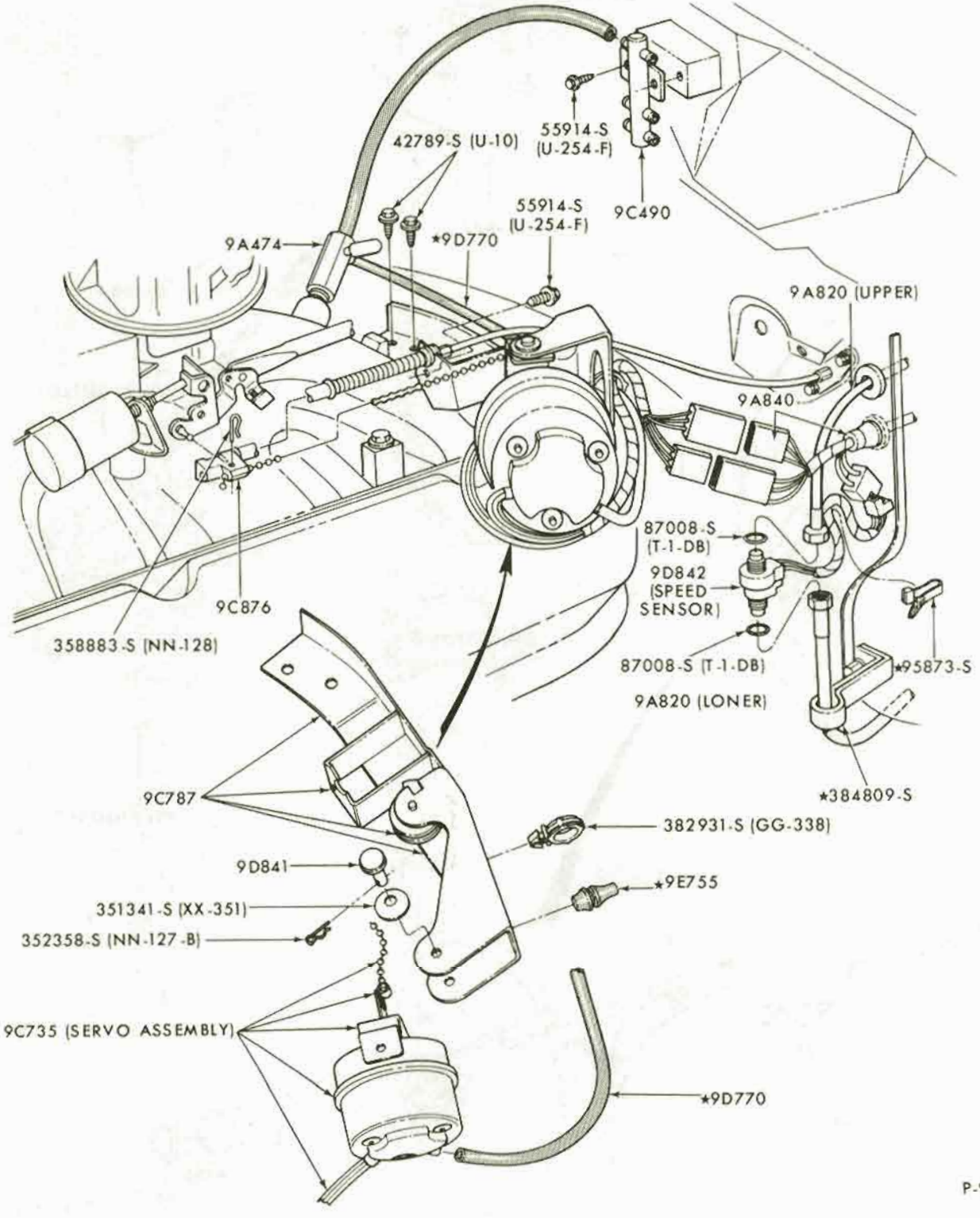

SPEED CONTROL - ENGINE COMPARTMENT
1972 THUNDERBIRD

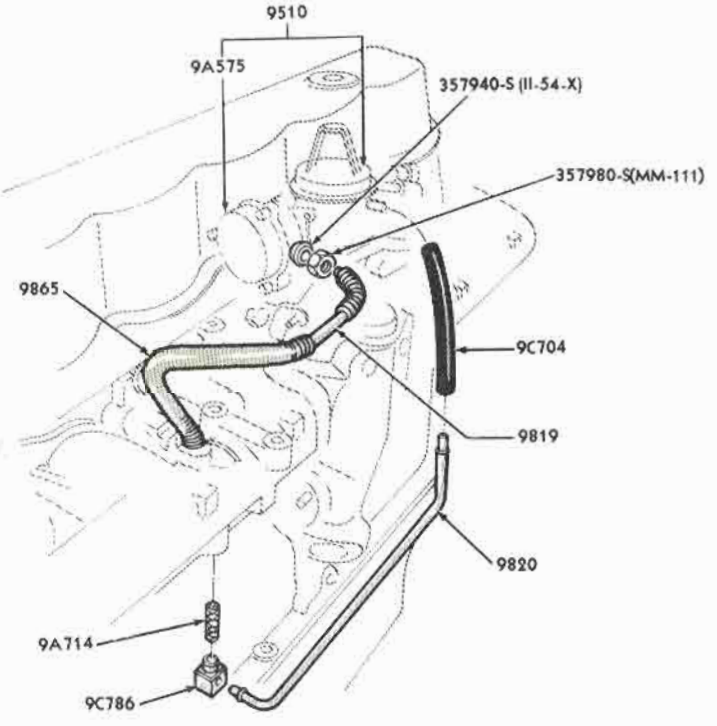

THERMOSTATIC CHOKE CONTROL TUBES and RELATED PARTS
1965/ FORD (6 CYLINDER 240 ENGINE)

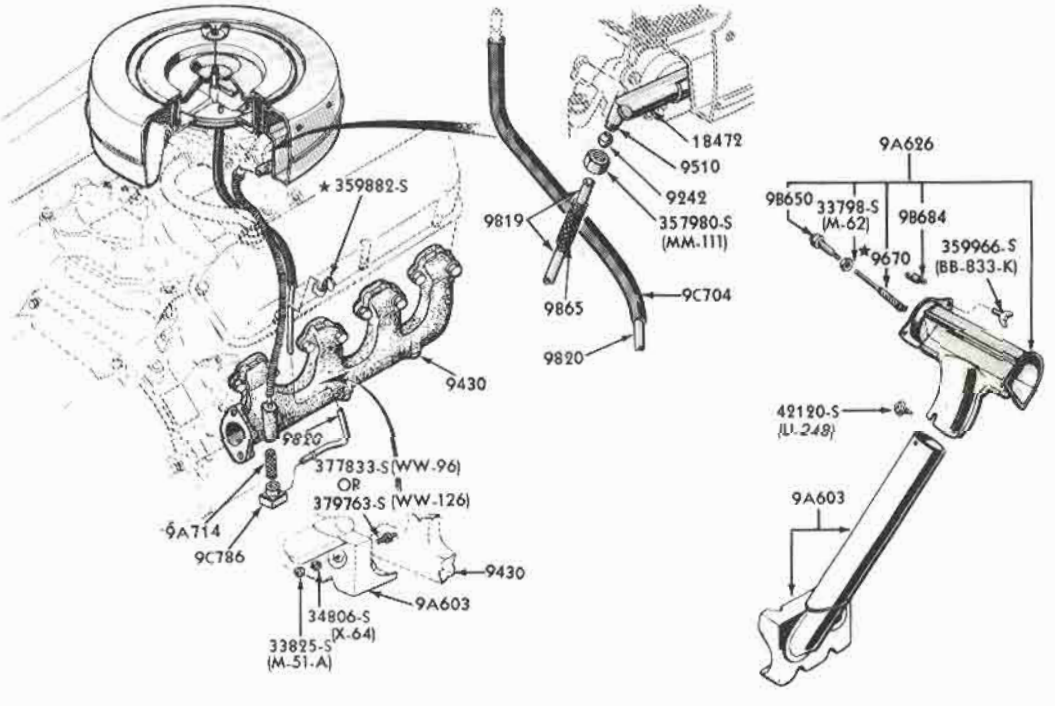

THERMOSTATIC CHOKE CONTROL TUBES and RELATED PARTS
1965/66 FAIRLANE, MUSTANG, FALCON, FORD (8 CYLINDER· 260,289 ENGINE - except HIGH PERFORMANCE)

COPYRIGHT © 1975 — FORD MOTOR COMPANY — DEARBORN, MICHIGAN

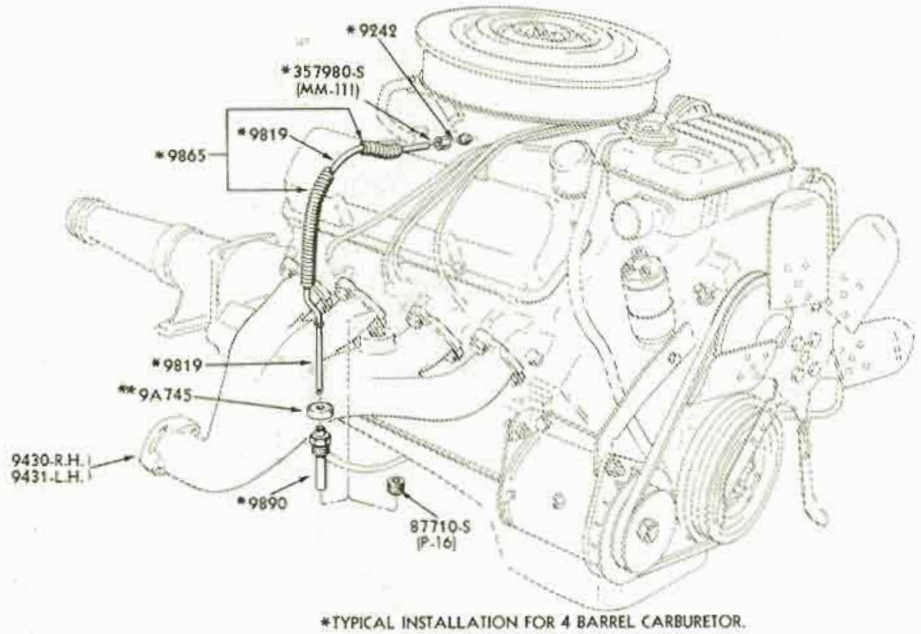

*TYPICAL INSTALLATION FOR 4 BARREL CARBURETOR.

P-4177

THERMOSTATIC CHOKE CONTROL TUBE and RELATED PARTS
1965/69 FORD (8 CYLINDER 352, 390, 427 HIGH PERFORMANCE ENGINES)

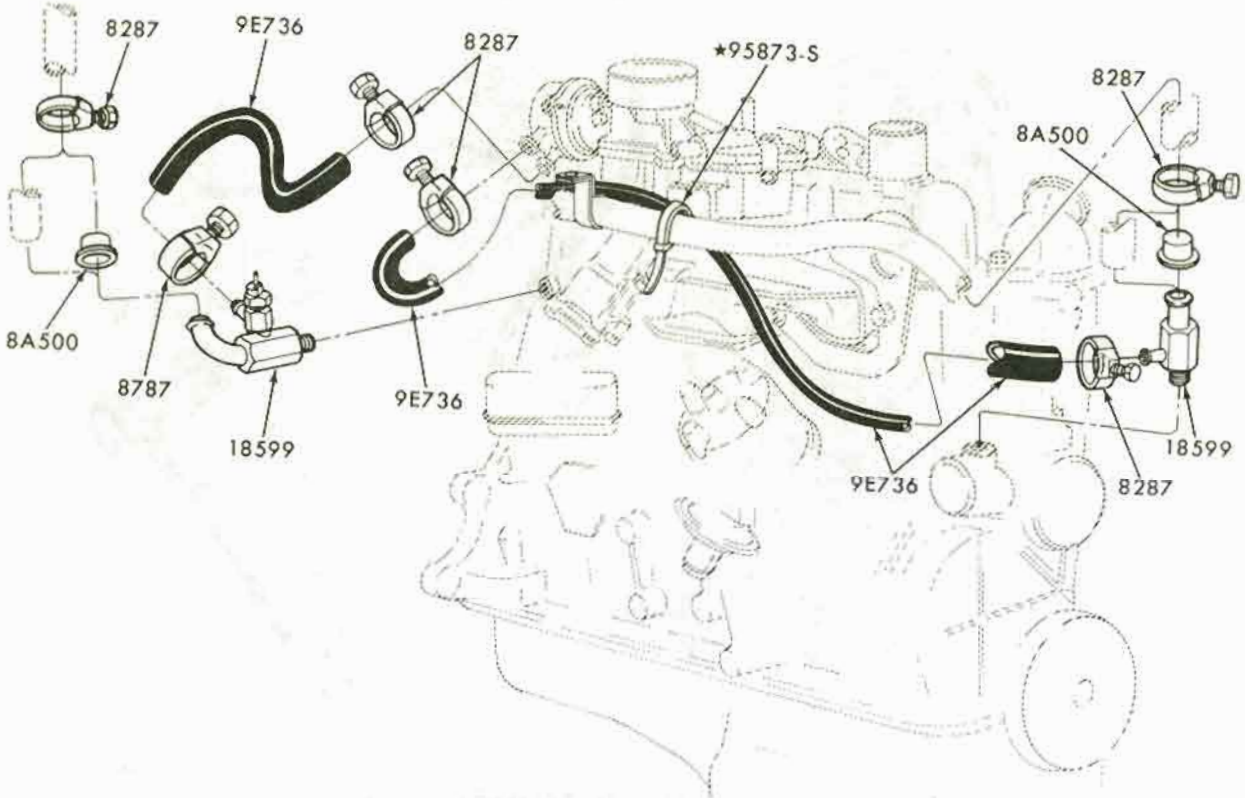

THERMOSTATIC CHOKE CONTROL TUBES and RELATED PARTS P-8414
1971/72 PINTO (4 CYLINDER 98 ENGINE)

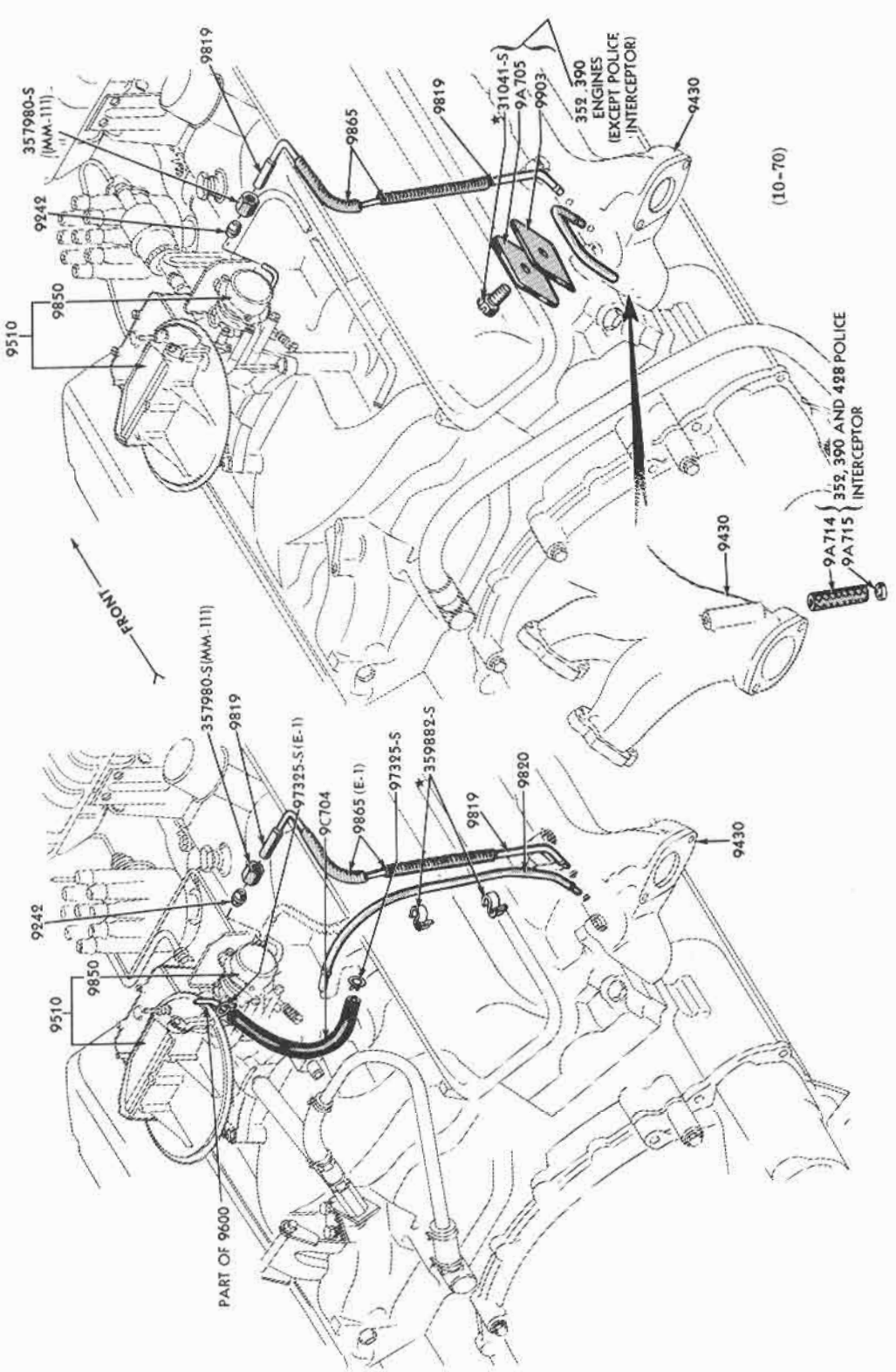

THERMOSTATIC CHOKE CONTROL TUBES and RELATED PARTS
1965/66 FORD (8 CYLINDER 352, 390, 428 ENGINES except HIGH PERFORMANCE)
1965/66 FAIRLANE (8 CYLINDER except 390 ENGINE)

COPYRIGHT © 1975 — FORD MOTOR COMPANY — DEARBORN, MICHIGAN

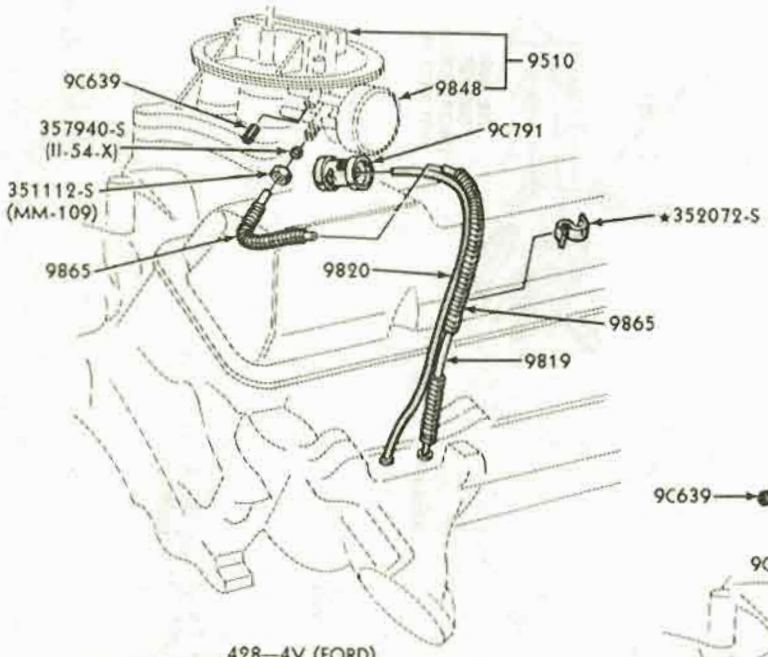

428—4V (FORD)
1966 POLICE INTERCEPTOR AND 7 LITRE FORD

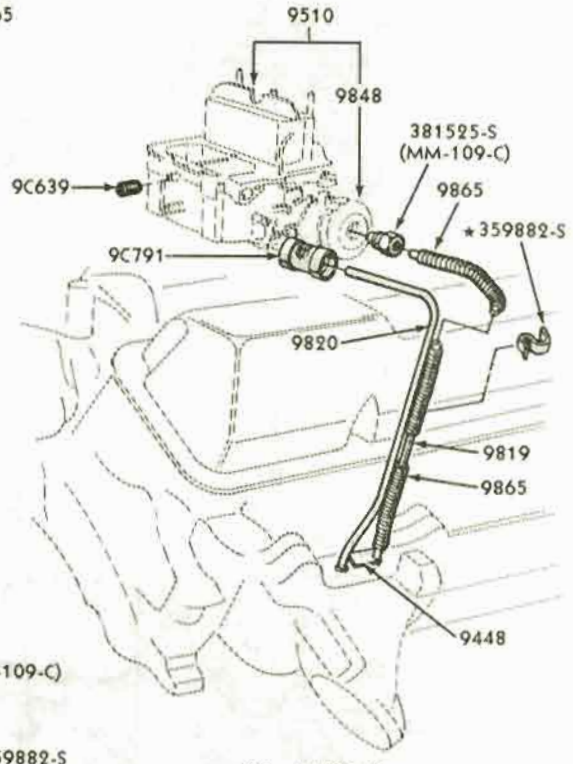

428—4V (FORD)
1967 POLICE INTERCEPTOR AND 7 LITRE FORD

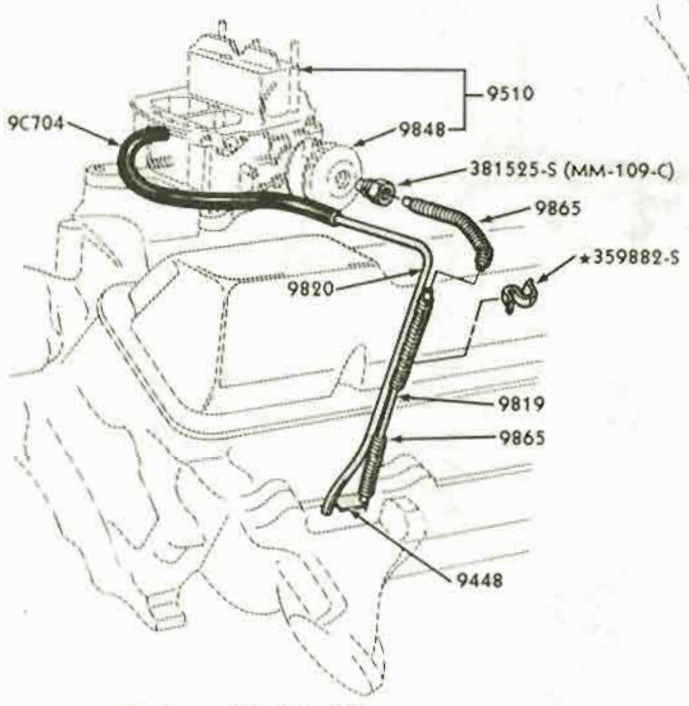

1966/	428—4V (FORD)
1967	390—4V (FORD)

P5633

THERMOSTATIC CHOKE CONTROL TUBES and RELATED PARTS
1966/70 FORD, MUSTANG (8 CYLINDER 390, 428 ENGINES)

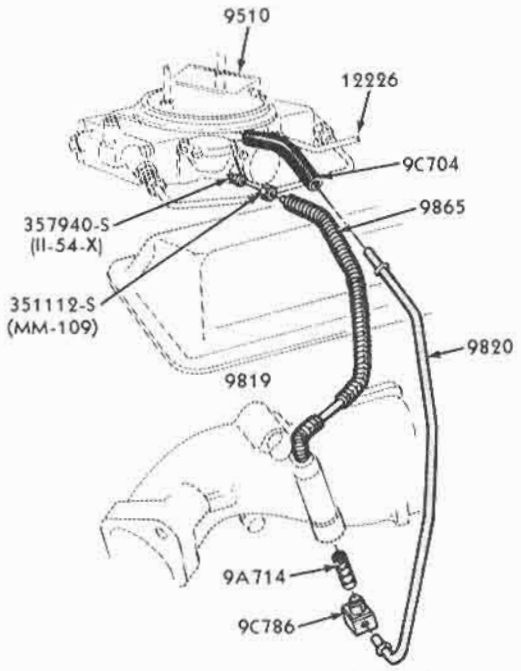

390—4V (HOLLEY)

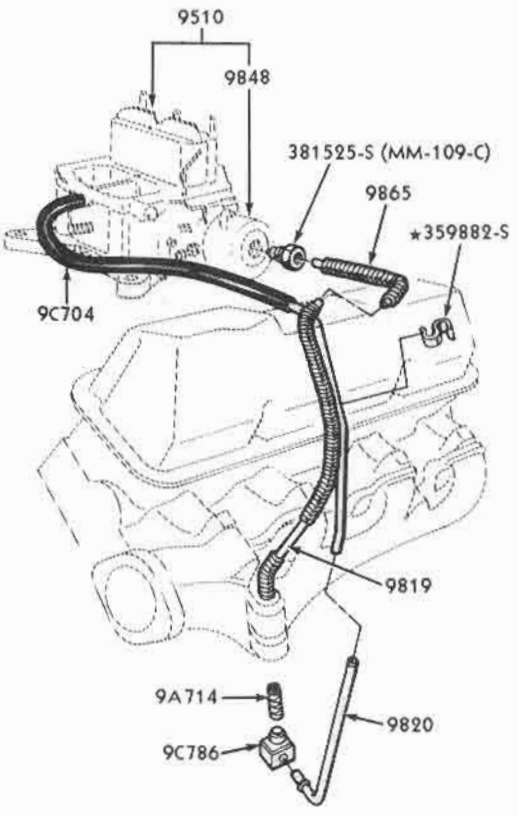

390—4V (FORD)

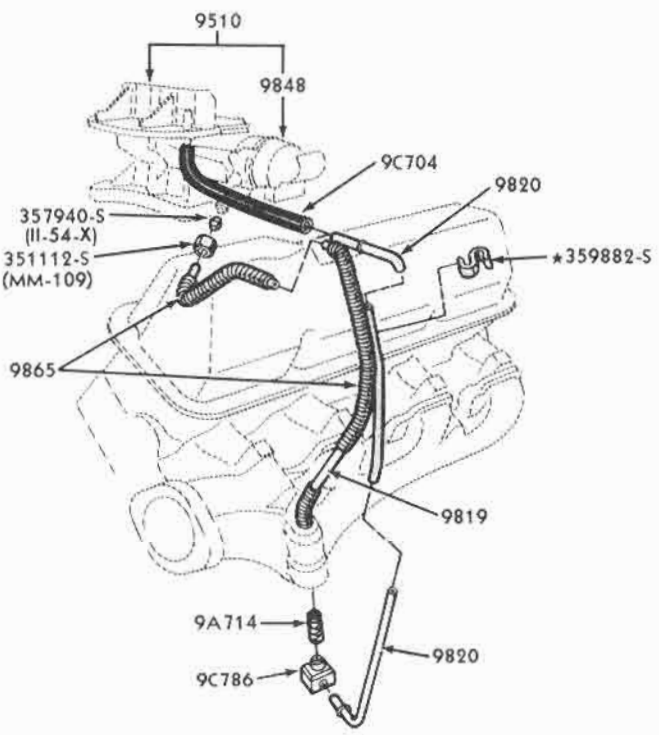

390—2V (FORD)

P5632

THERMOSTATIC CHOKE CONTROL TUBES and RELATED PARTS
1966/69 FAIRLANE (8 CYLINDER 390 ENGINE)

COPYRIGHT © 1975— FORD MOTOR COMPANY —DEARBORN, MICHIGAN

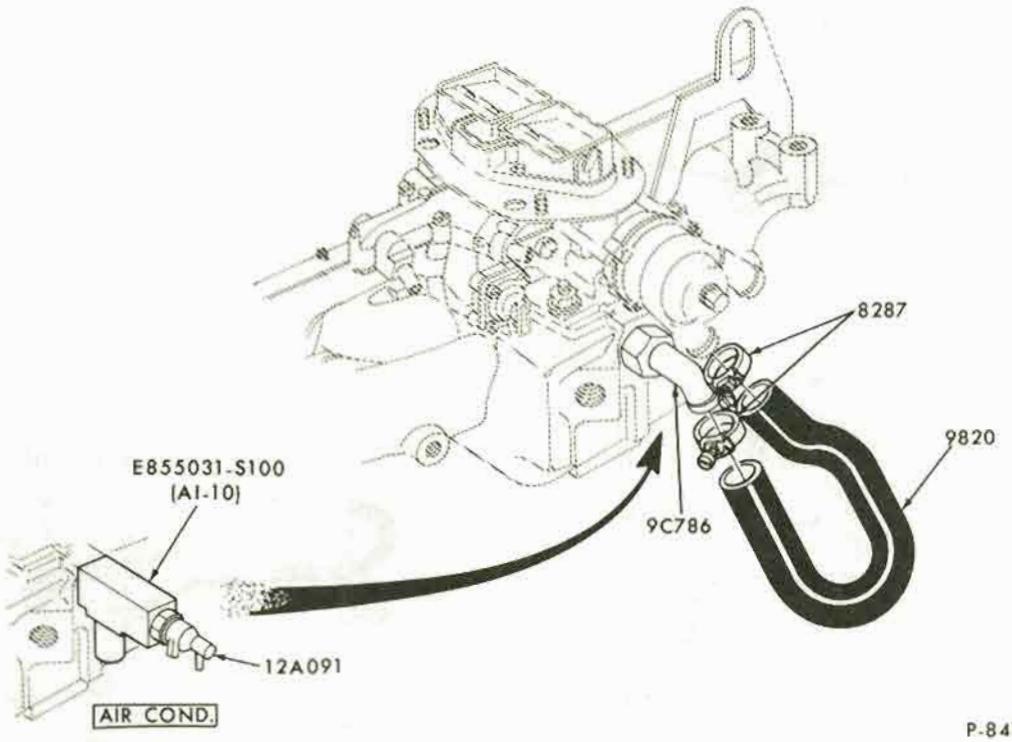

THERMOSTATIC CHOKE CONTROL TUBES and RELATED PARTS
1971/72 PINTO (122 2000 cc ENGINE)

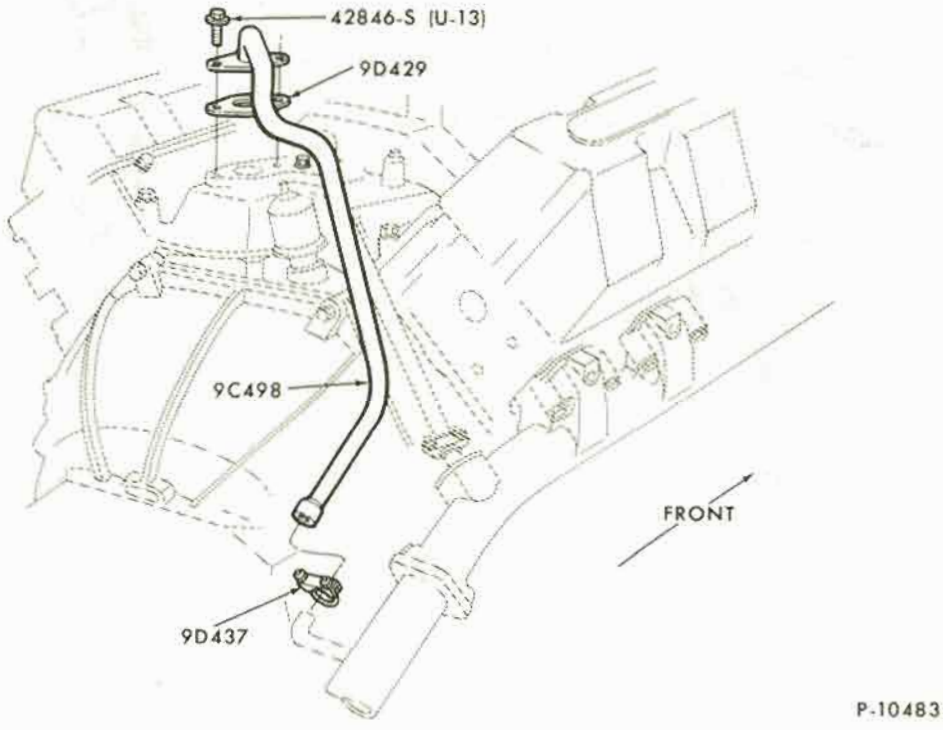

EXHAUST MANIFOLD HEAT TUBE INSTALLATION
1969 MUSTANG-8 CYLINDER 429 ENGINE

INDEX

YEAR	TITLE	ILLUS. NO.	SECTION	PAGE
	ALTERNATOR			
1965/67	Alternator (Leece Neville 15 volt-60, 65 amp)	P-3843	100	2
1965/67	Alternator (Leece Neville 15 volt-40, 53 amp.)	P-3849	100	3
1965/70	Alternator (Leece Neville 15 volt 53, 60, 65 amp.)	P-5741	100	4
1965/72	Alternator (Ford 15 volt-38, 42, 45, 55, 60 amp.)	P-4508	100	5
1967/72	Alternator (Ford 15 volt-65 amp.)	P-5394	100	6
1969/70	Alternator (Ford 15 volt-55 amp.)-Integral Type (Thunderbird)	P-6461	100	7
1972	Alternator (Motorcraft 15 volt 70 amp.)	P-10328	100	10
	BATTERY CARRIER			
1965/68	Battery Carrier and Related Parts (Mustang)	P-4459	106.1	1
1965	Battery Carrier and Related Parts (Falcon)	P-3106	106.1	1
	INSTRUMENT PANEL CLUSTER			
	A (FORD)			
1965/66	Instrument Cluster and Related Parts	P-8991	106	1
1967	Instrument Cluster and Related Parts	P-8993	106	7
1968	Instrument Cluster and Related Parts	P-5993	106	10
1969/70	Instrument Cluster and Related Parts	P-6652	106	14
1971/72	Instrument Cluster and Related Parts	P-8095	106	18
	B (FAIRLANE/TORINO)			
1965	Instrument Cluster and Related Parts	P-8989	106	2
1966/67	Instrument Cluster and Related Parts	P-8977	106	6
1968/69	Instrument Cluster and Related Parts	P-6188	106	11
1970/71	Instrument Cluster and Related Parts	P-7079	106	17
1972	Instrument Cluster - w/Rallye Instrumentation Group	P-8768	106	21
1972	Instrument Cluster - w/o Rallye Instrumentation Group	P-8769	106	22
	F (MUSTANG)			
1965	Instrument Cluster and Related Parts - w/Warning Lights	P-8985	106	4
1965/66	Instrument Cluster and Related Parts - w/Gauges	P-8973	106	3
1967/68	Instrument Cluster and Related Parts	P-8975	106	8
1969/70	Instrument Cluster and Related Parts	P-6658	106	15
1971/72	Instrument Cluster and Related Parts	P-8205	106	19
1971/72	Auxiliary instrument cluster-w/gauges	P-10207	106	16
	L (PINTO)			
1971/72	Instrument Cluster and Related Parts	P-8035	106	20
	P (MAVERICK)			
1970/72	Instrument Cluster and Related Parts	P-6849	106	16
	S (THUNDERBIRD)			
1965/66	Instrument Cluster and Related Parts	P-8983	106	5
1967	Instrument Cluster and Related Parts	P-8979	106	9
1968/71	Instrument Cluster and Related Parts	P-6035	106	12
1972	Instrument Cluster and Related Parts	P-8766	106	23
	X (FALCON)			
1965	Instrument Cluster and Related Parts	P-8995	106	2
1966/67	Instrument Cluster and Related Parts	P-8987	106	7
1968/70	Instrument Cluster and Related Parts	P-6187	106	13
	U (BRONCO)			
1966/67	Instrument Cluster and Related Parts	P-8981	106	6
1968/72	Instrument Cluster and Related Parts	P-8997	106	8

COPYRIGHT © 1975 — FORD MOTOR COMPANY — DEARBORN, MICHIGAN

INDEX

YEAR	TITLE	ILLUS. NO.	SECTION	PAGE
	DISTRIBUTOR			
1965/69	Distributor (6 cylinder 170,200 engines)	P-2961	120	3
1965/67	Distributor (6 cylinder 240 engine)	P-3475	120	4
1969/71	Distributor (6 cylinder 250 engine)	P-5825	120	7
1972	Distributor (6 cylinder 170,200, 240, 250 engines)	P-10451	120	13
1965/67	Distributor (8 cylinder)(Pivot Plate Type-exc. with Stamped Weights)	P-2926	120	5
1965/71	Distributor (8 cylinder) (with Stamped Weights)	P-4924	120	6
1971/72	Distributor (4 cylinder 98 engine)	P-7617	120	10
1971/72	Distributor (4 cylinder 122 O. H. C. engine)	P-9029	120	9
1972	Distributor-single point (8 cylinder)	P-9288	120	11
1972	Distributor-dual point (8 cylinder)	P-10590	120	12
	DISTRIBUTOR MODULATOR SYSTEM			
1970	Distributor Modulator-6 cylinder 240 engines (Ford)	P-7564	120.1	1
1970	Distributor Modulator-8 cylinder 302 engine (Ford)	P-7563	120.1	2
1970	Distributor Modulator-8 cylinder 390 engine (Ford)	P-7565	120.1	3
1971	Distributor Modulator-6 cylinder 240 engine (Ford)	P-8454	120.1	10
1970	Distributor Modulator-8 cylinder 302 engine (Fairlane/Torino)	P-7557	120.1	4
1970	Distributor Modulator-8 cylinder 351-4V engine-w/o Ram Air (Fairlane/ Torino)	P-7559	120.1	5
1970	Distributor Modulator-8 cylinder 351-4V engine-Ram Air (Fairlane/Torino)	P-7558	120.1	6
1971	Distributor Modulator-6 cylinder 250 engine (Torino)	P-8455	120.1	11
1970	Distributor Modulator-8 cylinder 302 engine (Mustang)	P-7560	120.1	7
1970	Distributor Modulator-8 cylinder 351-4V engine-Ram Air (Mustang)	P-7561	120.1	8
1970	Distributor Modulator-8 cylinder 351-4V engine-w/o Ram Air (Mustang)	P-7562	120.1	9
1971	Distributor Modulator-6 cylinder 250 engine (Mustang)	P-8453	120.1	13
1971	Distributor Modulator-6 cylinder 170,200,250 engines (Maverick)	P-8451	120.1	14
1971	Distributor Modulator-8 cylinder 429 engine (Thunderbird)	P-8452	120.1	12
1970	Distributor Modulator - 8 cylinder 302 engine (Falcon)	P-7557	120.1	4
	DISTRIBUTOR VACUUM HOSES			
1969/72	Distributor Vacuum Hose Installation-6 cylinder 170 engine (Bronco)	P-8373	120.4	1
1970/72	Distributor Vacuum Hose Installation-8 cylinder 302 engine (Bronco)	P-8382	120.4	1
	ELECTRONIC SPARK CONTROL SYSTEM (E.S.C.)			
1972	Electronic Spark Control System (E.S.C.)-8 cylinder 302-2V engine (Ford)	P-9048	120.2	8
1972	Electronic Spark Control System (E.S.C.)-8 cylinder 351-W-2V engine (Ford)	P-9051	120.2	10
1972	Electronic Spark Control System (E.S.C.-8 cylinder, 351-C-2V, 400-2V engine (Ford)	P-9056	120.2	15
1972	Electronic Spark Control System (E.S.C.)-6 cylinder 250 engine (Torino)	P-9042	120.2	2
1972	Electronic Spark Control System (E.S.C.)-8 cylinder 302-2V engine (Torino)	P-9047	120.2	7
1972	Electronic Spark Control System (E.S.C.)-8 cylinder 351-4V engine w/Ram Air (Torino)	P-9052	120.2	11
1972	Electronic Spark Control System (E.S.C.)-8 cylinder 351-4V engine w/o Ram Air (Torino)	P-9054	120.2	13
1972	Electronic Spark Control System (E.S.C.)-8 cylinder 351-2V,400-2V engine (Torino)	P-9057	120.2	16
1972	Electronic Spark Control System (E.S.C.)-6 cylinder 250 engine (Mustang)	P-9043	120.2	3
1972	Electronic Spark Control System (E.S.C.)-8 cylinder 302-2V engine (Mustang)	P-9046	120.2	6
1972	Electronic Spark Control System (E.S.C.)-8 cylinder 351-4V engine w/Ram Air (Mustang)	P-9050	120.2	9
1972	Electronic Spark Control System (E.S.C.)-8 cylinder 351-4V engine w/o Ram Air (Mustang)	P-9053	120.2	12
1972	Electronic Spark Control System (E.S.C.)-4 cylinder 122 engine (Pinto)	P-9041	120.2	1
1972	Electronic Spark Control System (E.S.C.)-6 cylinder 170,200,250 engines (Maverick)	P-9044	120.2	4
1972	Electronic Spark Control System (E.S.C.)-8 cylinder 302-2V engine (Maverick)	P-9045	120.2	5
1972	Electronic Spark Control System (E.S.C.)-8 cylinder 400-2V engine (Thunderbird)	P-9055	120.2	14
1972	Electronic Spark Control System (E.S.C.)-8 cylinder 429, 460 engine (Thunderbird)	P-9058	120.2	17

INDEX

YEAR	TITLE	ILLUS. NO.	SECTION	PAGE
	ENGINE GOVERNOR			
1969/71	Engine Governor Transistorized - 428, 429CJ & SCJ engines (Fairlane/Torino)	P-7589	120	8
1969/72	Engine Governor Transistorized - 302, 428, 429CJ & SCJ engines (Mustang)	P-7589	120	8
	GENERATOR			
1965	Generator and Related Parts (Ford 15 volt-25, 30 amp.)-Mustang	P-3192	100	1
	IGNITION WIRING			
1965	Transistorized Ignition System, Oil Temperature Warning System and Related Parts (8 cylinder 427 engine)(Ford)	P-4190	120	1
1965/66	Transistorized Ignition System and Related Parts (8 cylinder 390,428 engines)(Thunderbird)	P-4868	120	2
	STARTER			
1965/72	Starter and Drive Assy.-Positive Engagement	P-3191	110	2
1965/72	Starter Drive (Ford 12 Volt-Positive Engagement)	P-5526	110	1
1968/72	Starter and Solenoid (Ford 12 Volt-Positive Engagement)	P-5952	110	3
	VOLTAGE REGULATOR			
1965	Voltage Regulator-Typical (Generator)	P-1535	100	8
1965/72	Voltage Regulator (Ford 15 volt, Negative Ground)(Alternator)	P-5525	100	9
	WARNING INDICATORS			
	A (FORD)			
1965/66	Warning Indicator Panel Installation (Ford)	P-5276	106.1	2
1966	Seat Belt and Parking Brake Warning Lamp Installation (Ford)	P-5275	106.1	5
1967	Warning Indicator Panel Installion (Ford)	P-5716	106.1	8
1968	Warning Indicator Panel and Wiring System (Ford)	P-6260	106.1	11
1969/70	Warning Indicator Panel and Wiring System (Ford)	P-6866	106.1	14
1971	Seat Belt and Parking Brake Warning Lamp Installation (Ford)	P-8438	106.1	16
1972	Seat Belt Warning System	P-9260	106.1	19
	B (FAIRLANE/TORINO), B(FALCON)-"From 1-2-70"			
1966/69	Seat Belt Warning Lamp Installation (Fairlane/Torino)	P-5278	106.1	6
1968/69	Warning Indicator Panel (Fairlane/Torino)	P-6247	106.1	12
1970/71	Warning Indicator Panel (Fairlane/Torino)	P-7675	106.1	15
1972	Seat Belt Warning System	P-9259	106.1	20
1972	Headlamp On Warning Indicator and Visibility Group Wiring (Torino)	P-9948	106.1	25
	F (MUSTANG)			
1967/68	Warning Indicator Panel Installation (Mustang)	P-5852	106.1	9
1966/68	Seat Belt Warning Lamp Installation (Mustang)	P-5278	106.1	6
1969/70	Seat Belt and Parking Brake Warning Lamp Installation (Mustang)	P-6869	106.1	13
1971/72	Warning Indicator System-Safety Convenience	P-8429	106.1	17
1971	Seat Belt Warning Lamp and Related Parts (Mustang)	P-8434	106.1	18
1972	Seat Belt Warning System	P-9266	106.1	21
	L (PINTO)			
1972	Seat Belt Warning System	P-9262	106.1	24
	S (THUNDERBIRD)			
1965	Seat Belt Warning Lamp Installation (Thunderbird) -Before 10/5/64	P-4405	106.1	3
1965/66	Seat Belt Warning Lamp Installation (Thunderbird)-From 10/5/64	P-5279	106.1	3
1965/66	Warning Indicator Panel and Wiring System - Door Ajar, Low Fuel, Flasher (Thunderbird)	P-4843	106.1	4
1966	Warning Lamp Installation-Roof Console Panel (Thunderbird-Body type 63C, 63D)	P-5139	106.1	7
1967/71	Warning Lamp Installation-Roof Console Panel (Thunderbird)	P-5658	106.1	10
1968/69	Monitor System - Tail Lamp Failure (Thunderbird)	P-6255	106.1	13
1972	Seat Belt Warning System	P-9264	106.1	22
	P (MAVERICK)			
1972	Seat Belt Warning System	P-9261	106.1	23
	X (FALCON) -"Before 1-2-70"-For Units Built From 1-2-70-Refer to B(FALCON)			
1968/70	Warning Indicator Panel (Falcon)	P-6247	106.1	12
1966/69	Seat Belt Warning Lamp Installation (Falcon)	P-5278	106.1	6

COPYRIGHT © 1975 — FORD MOTOR COMPANY — DEARBORN, MICHIGAN

INDEX

YEAR	TITLE	ILLUS. NO.	SECTION	PAGE
	TRANSMISSION REGULATED SPARK CONTROL SYSTEM (T.R.S.)			
1972	Transmission Regulated Spark Control System (T.R.S.)-6 cylinder 240 engine (Ford)	P-9064	120.3	5
1972	Transmission Regulated Spark Control System (T.R.S.)-8 cylinder 302-2V engine (Ford)	P-9065	120.3	6
1972	Transmission Regulated Spark Control System (T.R.S.)-8 cylinder 351-2V engine (Ford)	P-9071	120.3	12
1972	Transmission Regulated Spark Control System (T.R.S.)-8 cylinder 400-2V engine (Ford)	P-9074	120.3	15
1972	Transmission Regulated Spark Control System (T.R.S.)-6 cylinder 250 engine (Torino)	P-9062	120.3	3
1972	Transmission Regulated Spark Control System (T.R.S.)-8 cylinder 302-2V engine (Torino)	P-9068	120.3	9
1972	Transmission Regulated Spark Control System (T.R.S.)-8 cylinder 351-4V engine w/Ram Air (Torino)	P-9069	120.3	10
1972	Transmission Regulated Spark Control System (T.R.S.)-8 cylinder 351-4V engine w/o Ram Air (Torino)	P-9073	120.3	14
1972	Transmission Regulated Spark Control System (T.R.S.)-8 cylinder 351-2V, 400-2V engine (Torino)	P-9075	120.3	16
1972	Transmission Regulated Spark Control System (T.R.S.)-6 cylinder 250 engine (Mustang)	P-9063	120.3	4
1972	Transmission Regulated Spark Control System (T.R.S.)-8 cylinder 302-2V engine (Mustang)	P-9067	120.3	8
1972	Transmission Regulated Spark Control System (T.R.S.)-8 cylinder 351-2V engine (Mustang)	P-9076	120.3	17
1972	Transmission Regulated Spark Control System (T.R.S.)-8 cylinder 351-4V engine w/Ram Air (Mustang)	P-9070	120.3	11
1972	Transmission Regulated Spark Control System (T.R.S.)-8 cylinder 351-4V engine (Mustang) w/o Ram Air (Mustang)	P-9072	120.3	13
1972	Transmission Regulated Spark Control System (T.R.S.)-4 cylinder 122 engine (Pinto)	P-9060	120.3	1
1972	Transmission Regulated Spark Control System (T.R.S.)-6 cylinder 170,200,250 engines (Maverick)	P-9061	120.3	2
1972	Transmission Regulated Spark Control System (T.R.S.)-8 cylinder 302-2V engine (Maverick)	P-9066	120.3	7

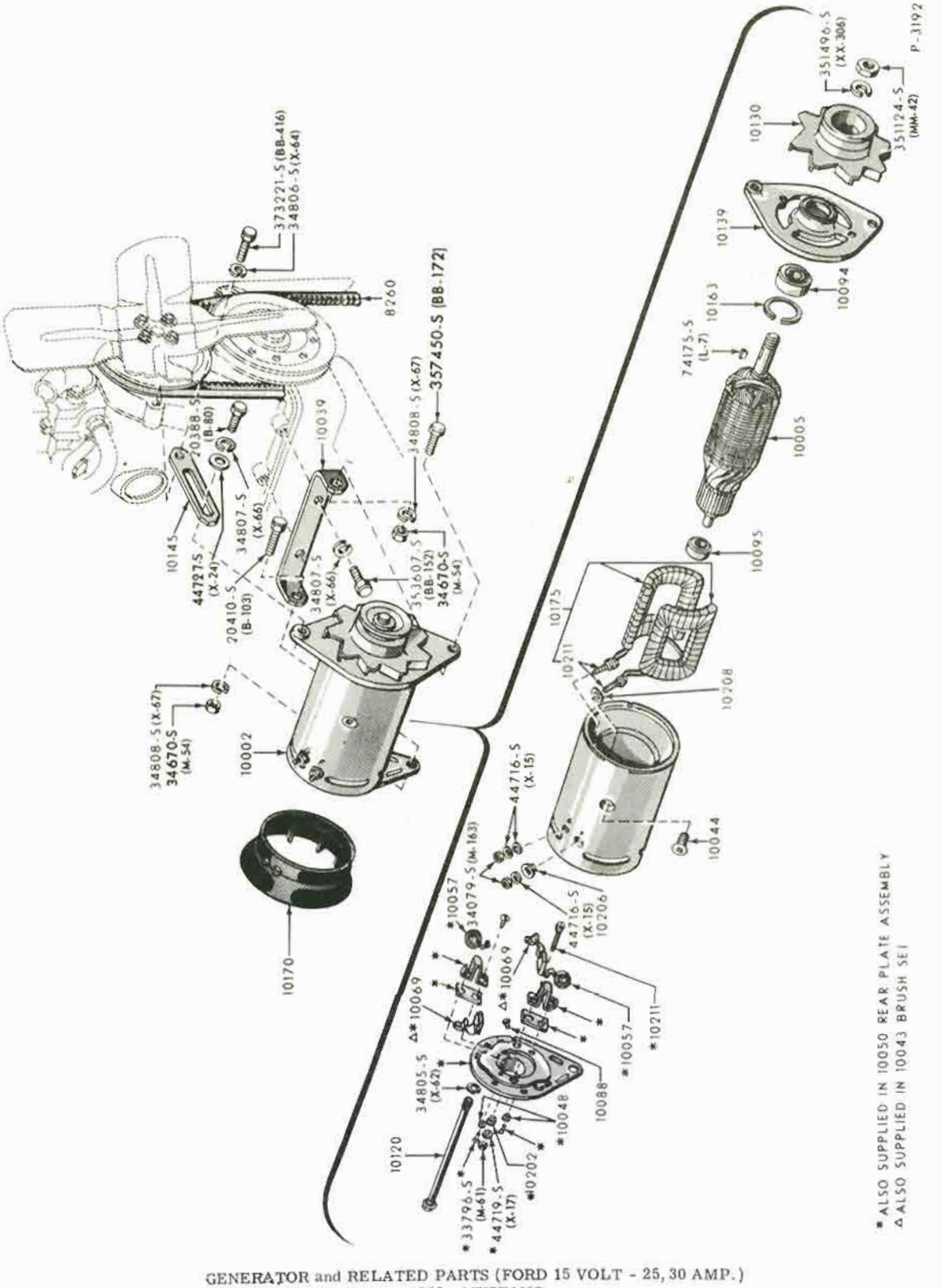

GENERATOR and RELATED PARTS (FORD 15 VOLT - 25, 30 AMP.)
1965 MUSTANG

COPYRIGHT © 1975— FORD MOTOR COMPANY —DEARBORN, MICHIGAN

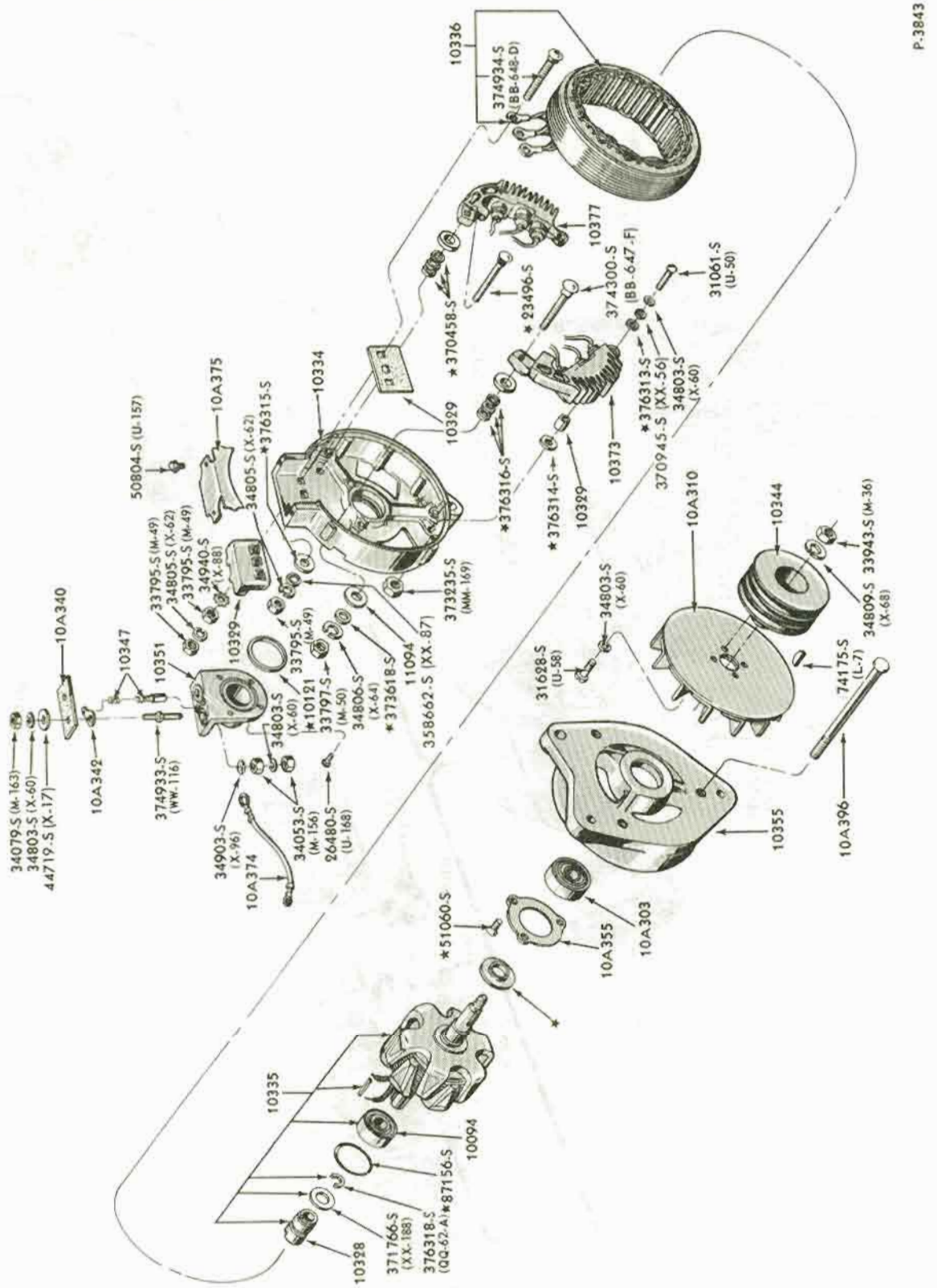

ALTERNATOR (LEECE NEVILLE 15 VOLT - 60,65 AMP.)

1965/67

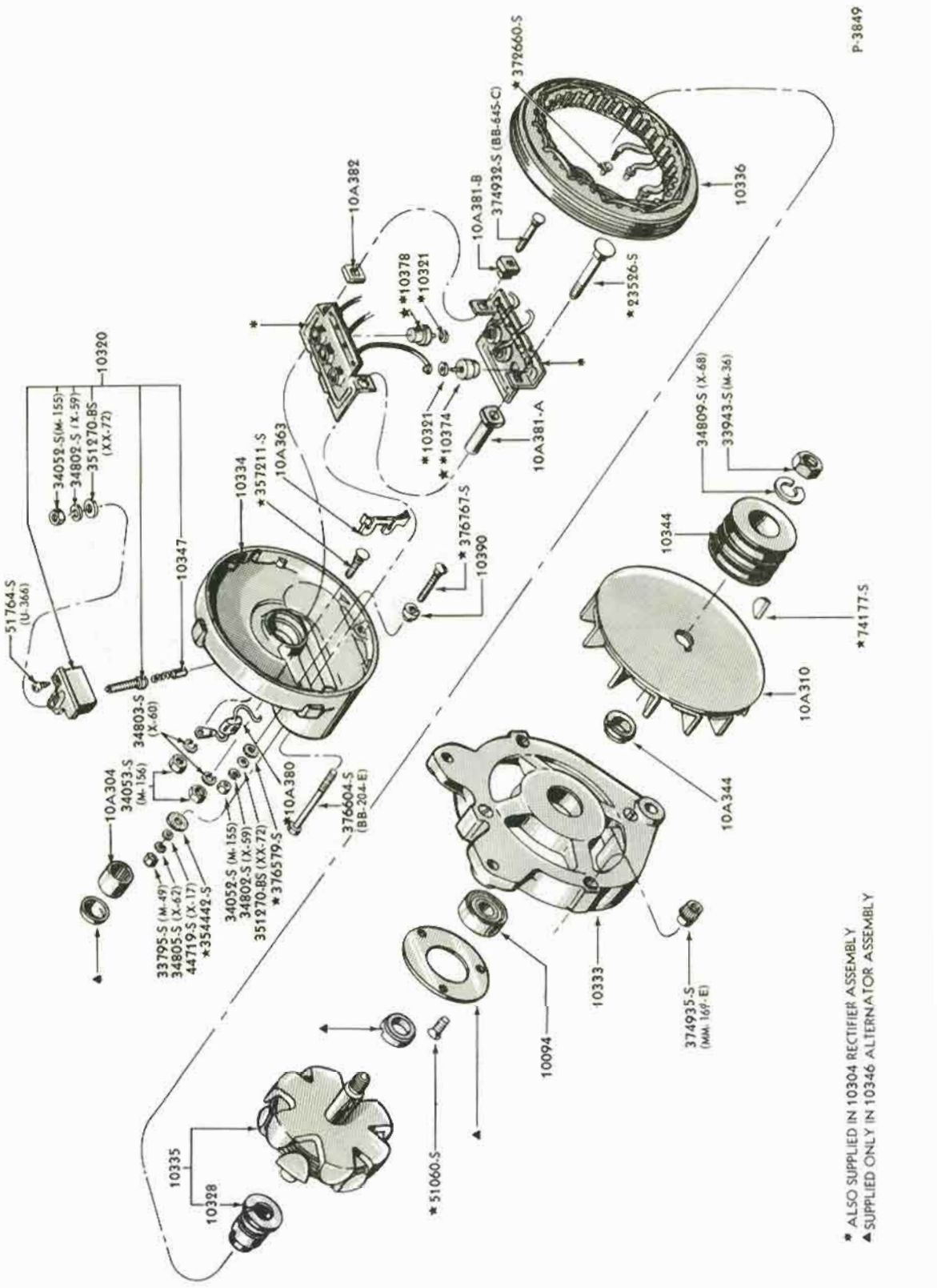

ALTERNATOR (LEECE NEVILLE 15 VOLT - 40,53 AMP.)
1965/67

COPYRIGHT © 1975 — FORD MOTOR COMPANY — DEARBORN, MICHIGAN

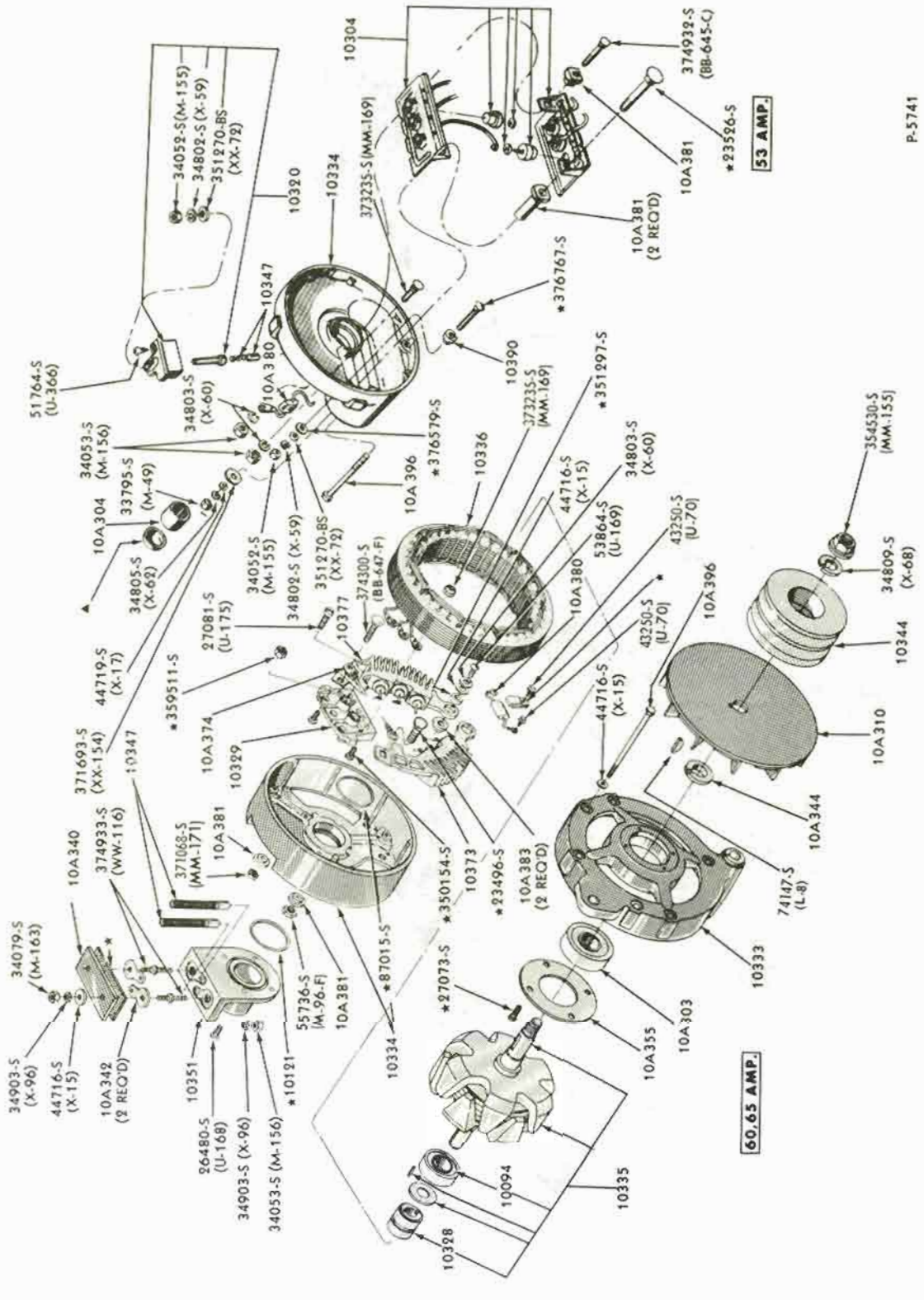

ALTERNATOR (LEECE NEVILLE 15 VOLT - 53, 60, 65 AMP.) - TYPICAL
1965/70

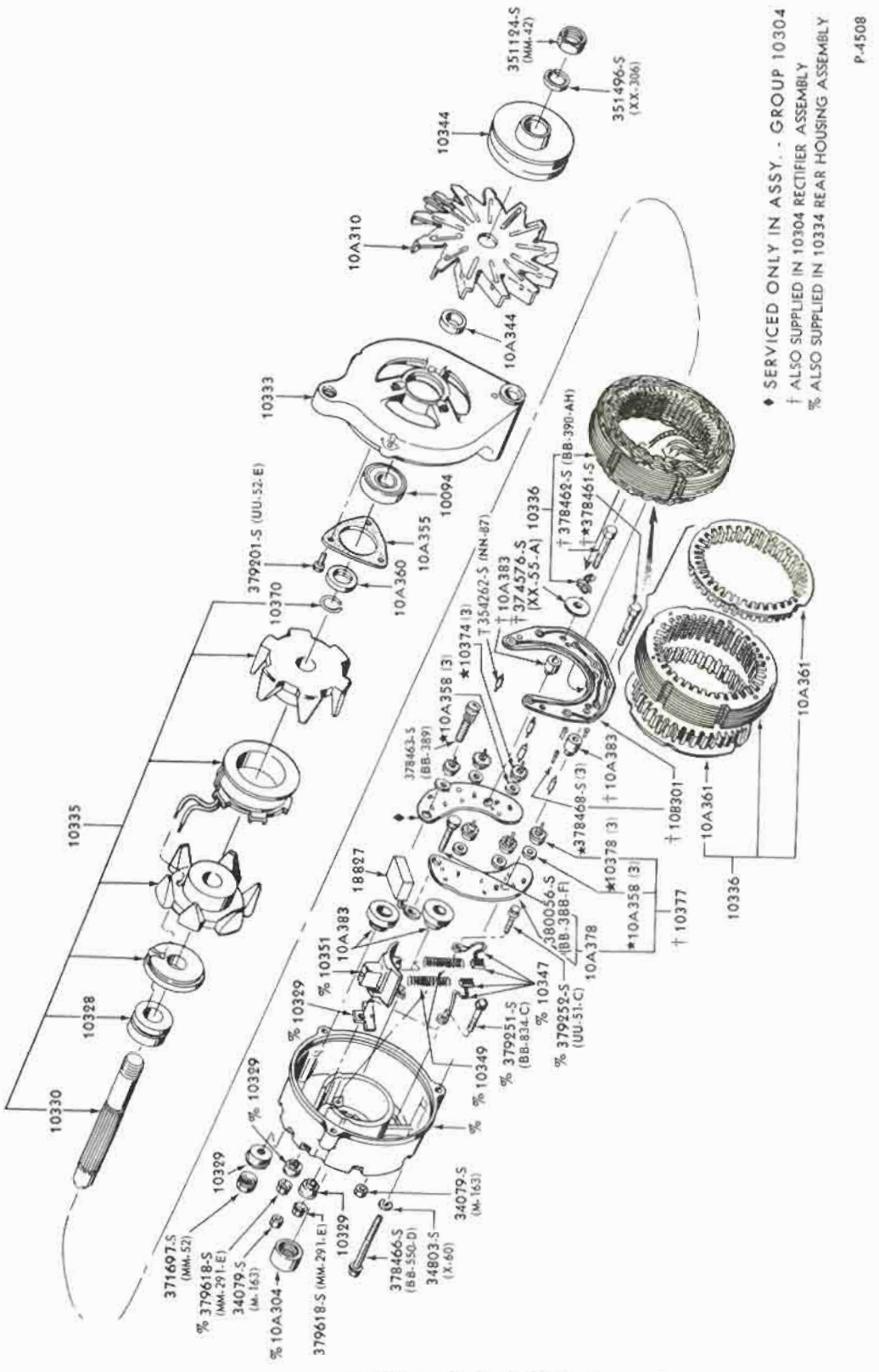

ALTERNATOR (FORD 15 VOLT - 38,42,45,55,60,61 AMP.)
1965/72

COPYRIGHT © 1975 — FORD MOTOR COMPANY — DEARBORN, MICHIGAN

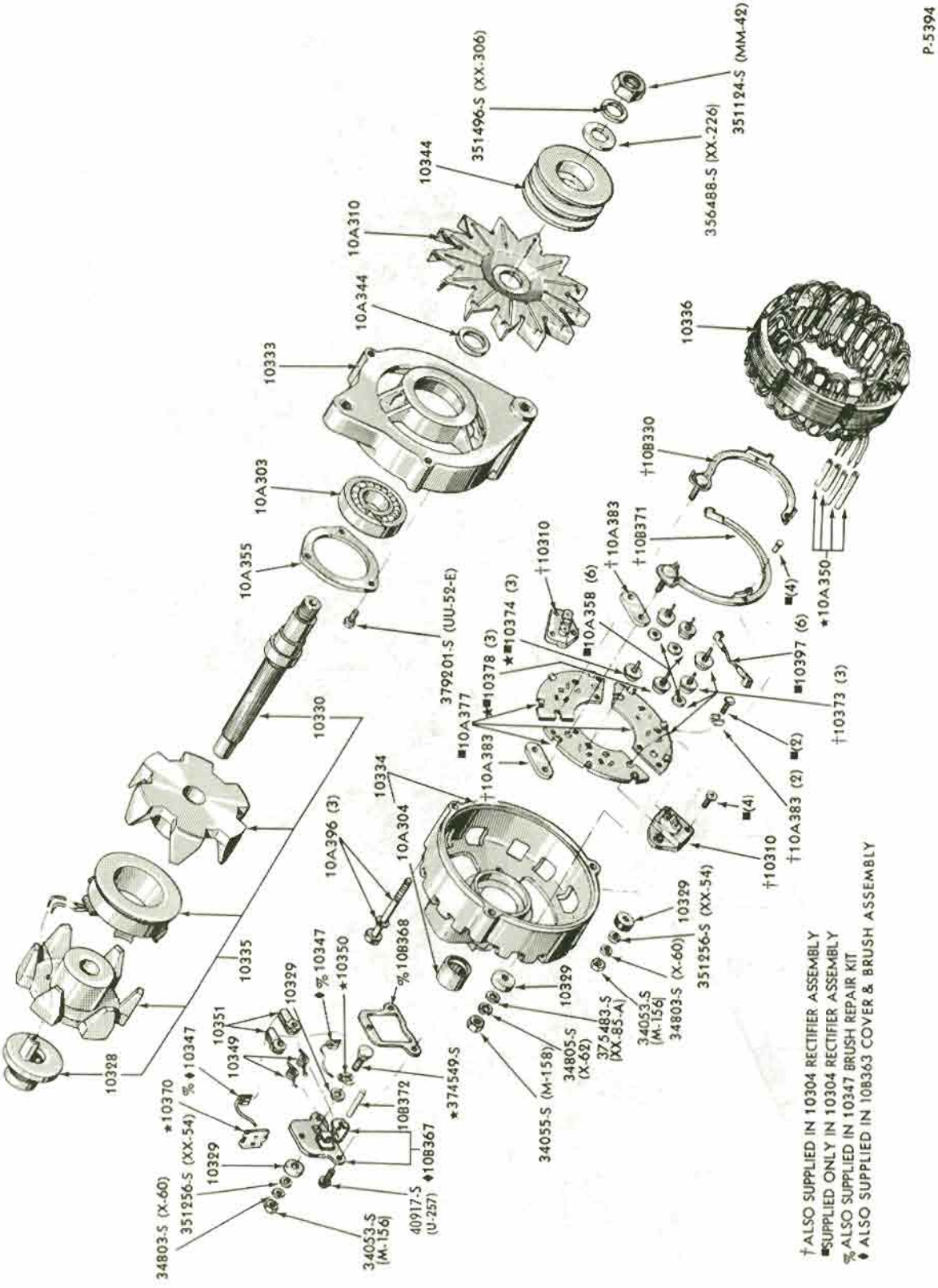

ALTERNATOR (FORD 15 VOLT - 65 AMP.)
1967/72

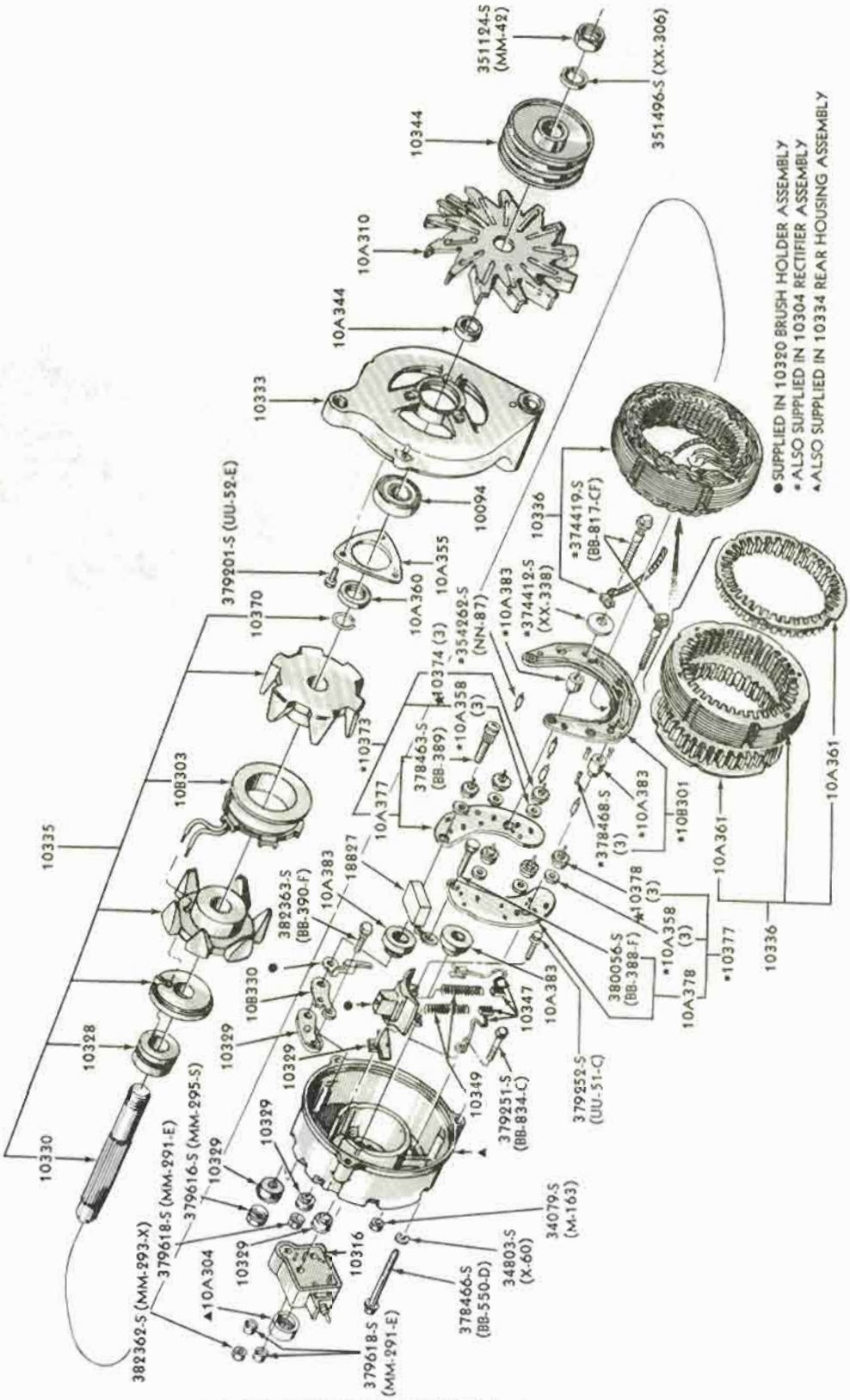

ALTERNATOR (15 VOLT 55 AMP.) - INTEGRAL TYPE

1969/70 THUNDERBIRD

COPYRIGHT © 1975 — FORD MOTOR COMPANY — DEARBORN, MICHIGAN

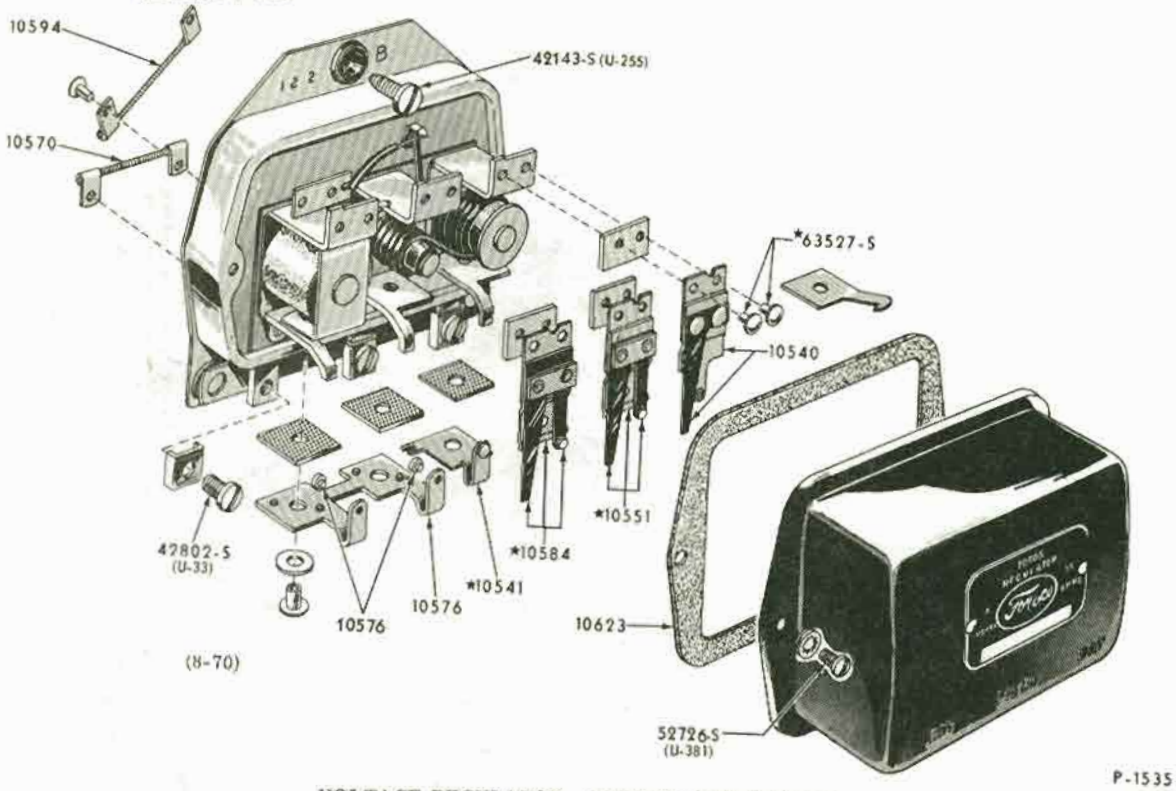

VOLTAGE REGULATOR - TYPICAL (GENERATOR)
1965

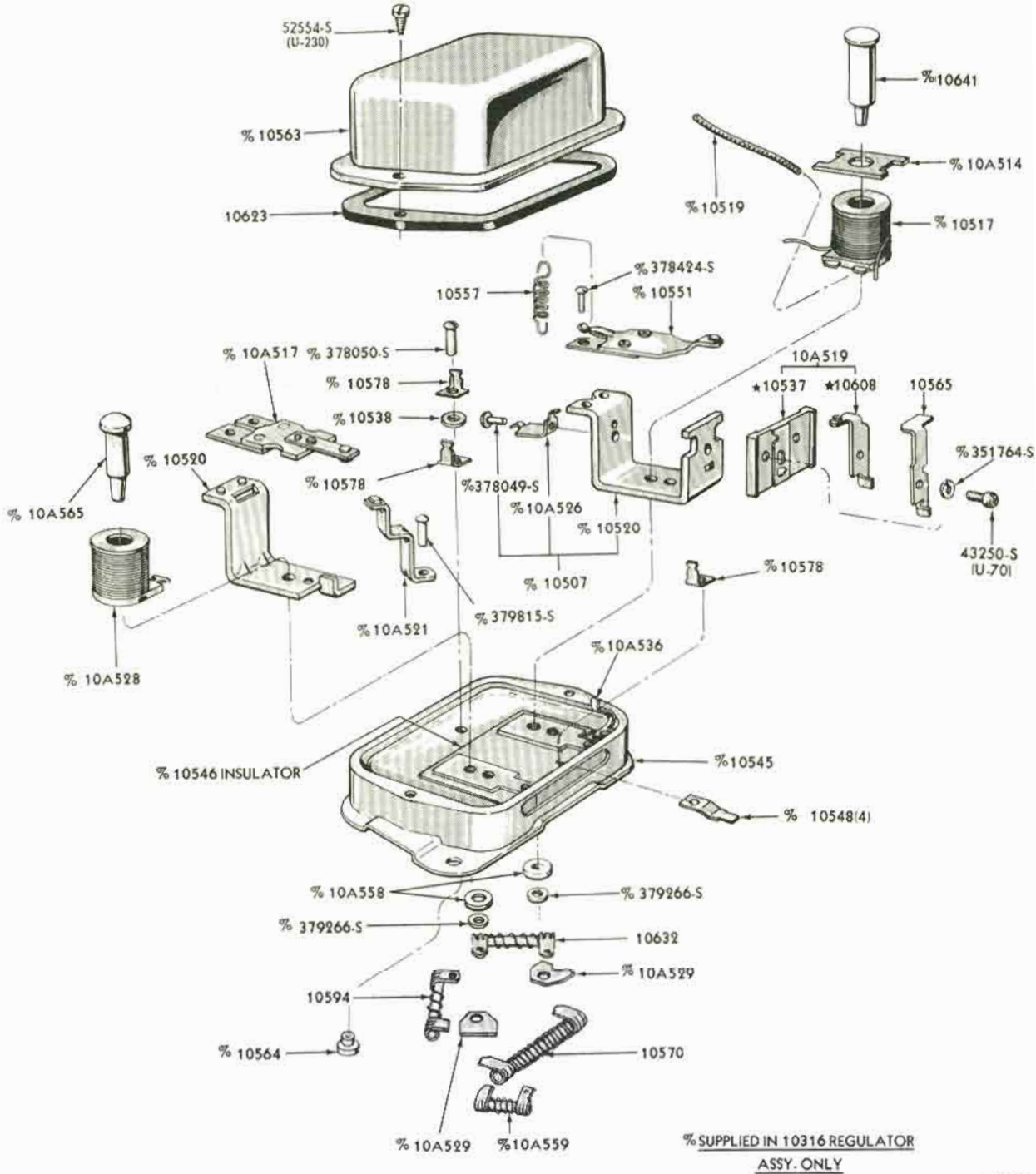

VOLTAGE REGULATOR (FORD 15 VOLT, NEGATIVE GROUND) - ALTERNATOR
1965/72

COPYRIGHT © 1975 — FORD MOTOR COMPANY — DEARBORN, MICHIGAN

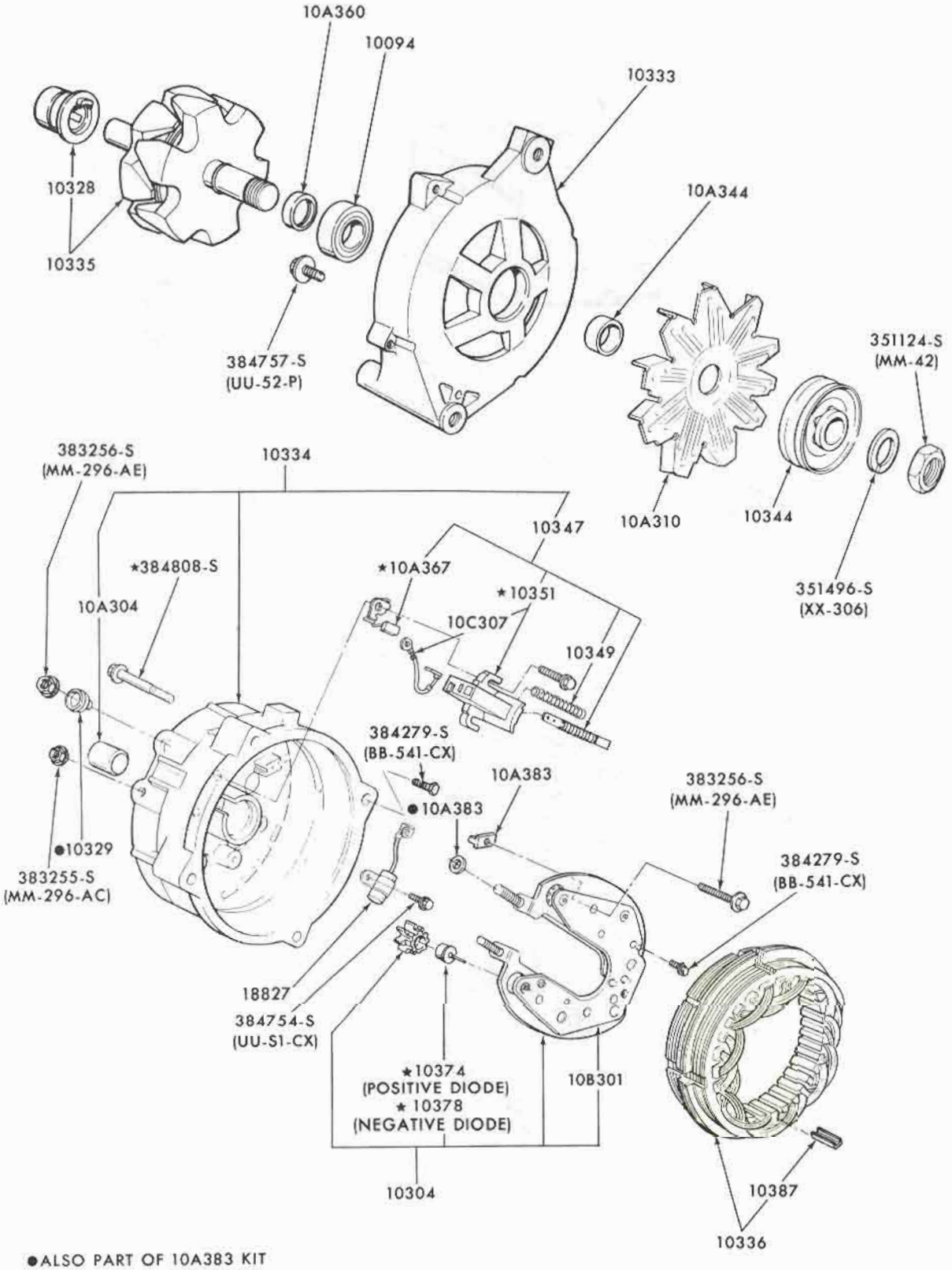

●ALSO PART OF 10A383 KIT

P-10328

ALTERNATOR (MOTORCRAFT 15 VOLT - 70 AMP.).
1972

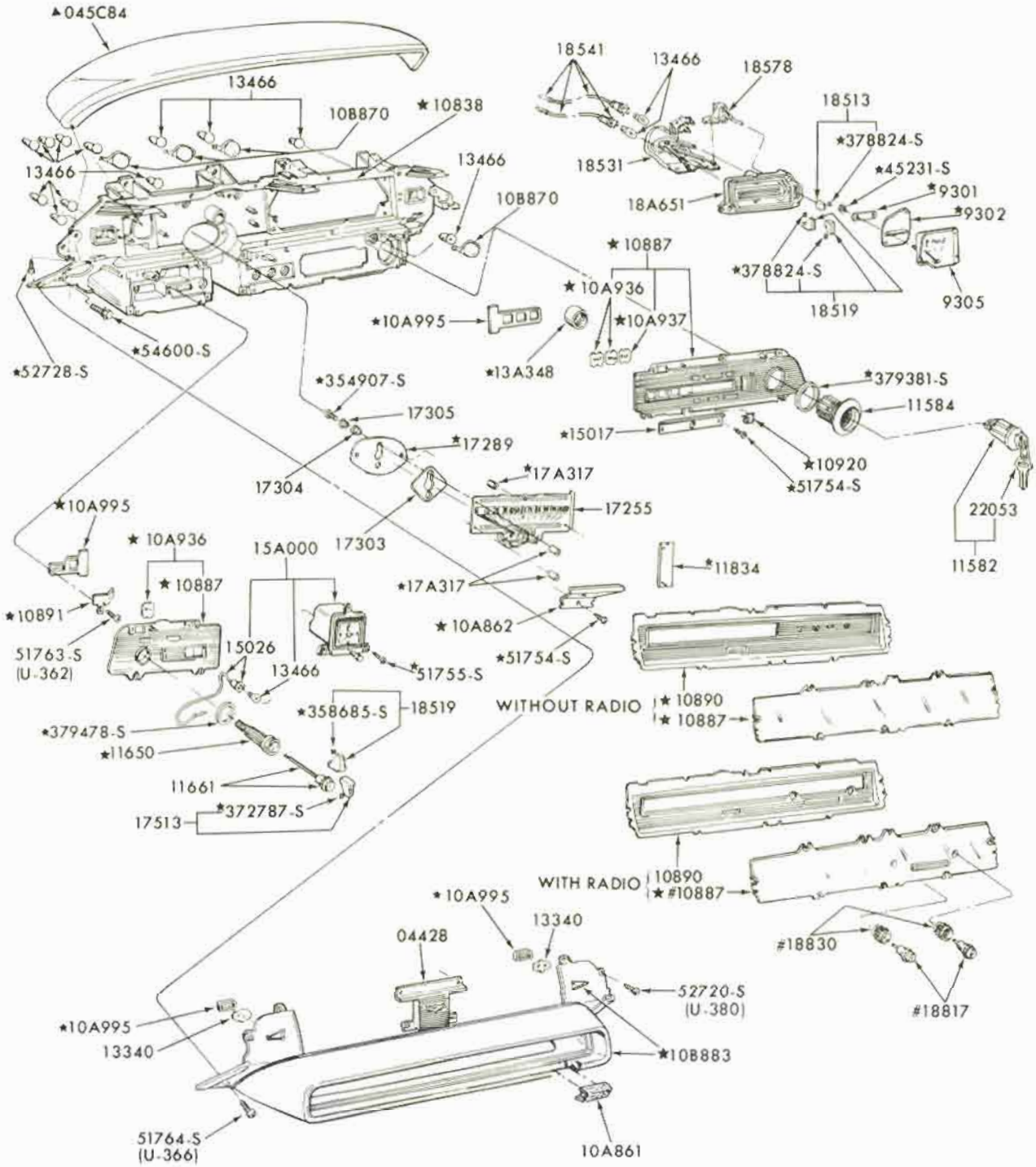

#ALSO SUPPLIED IN 18805 RADIO RELIEVER KIT
▲REFER TO GROUP IN SOFT TRIM SECTION

P-8991

May, 1975 COPYRIGHT © 1975 — FORD MOTOR COMPANY — DEARBORN, MICHIGAN FINAL ISSUE

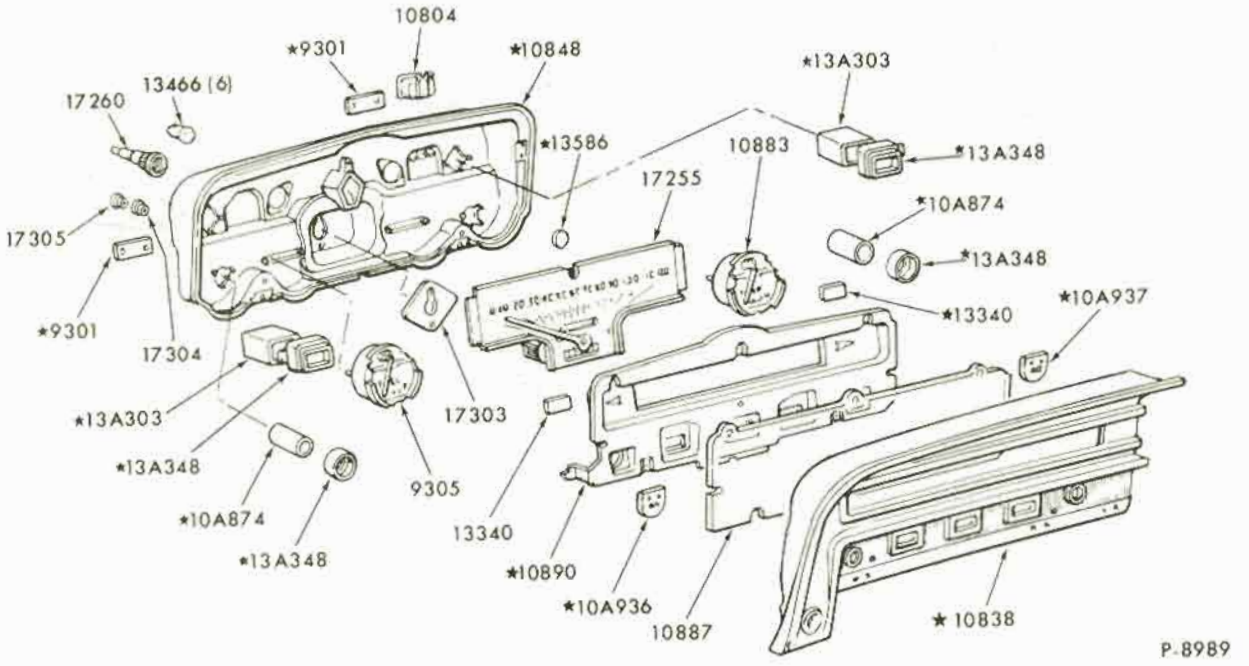

INSTRUMENT CLUSTER and RELATED PARTS
1965 FAIRLANE

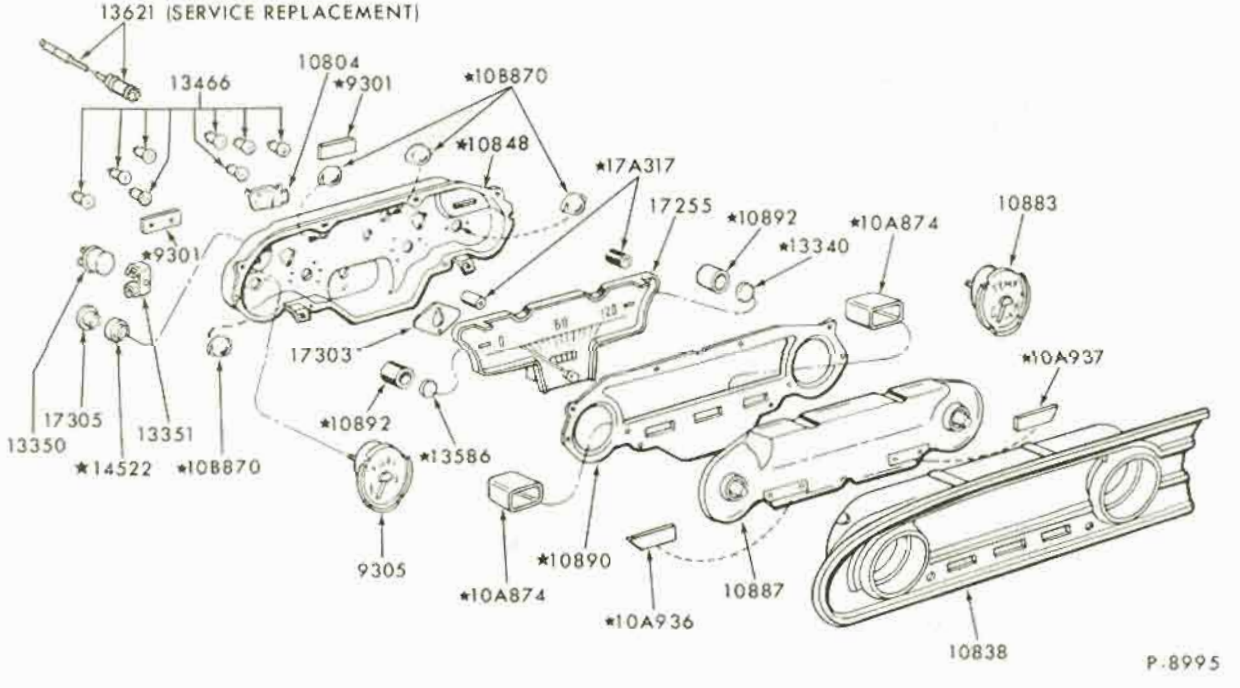

INSTRUMENT CLUSTER and RELATED PARTS
1965 FALCON

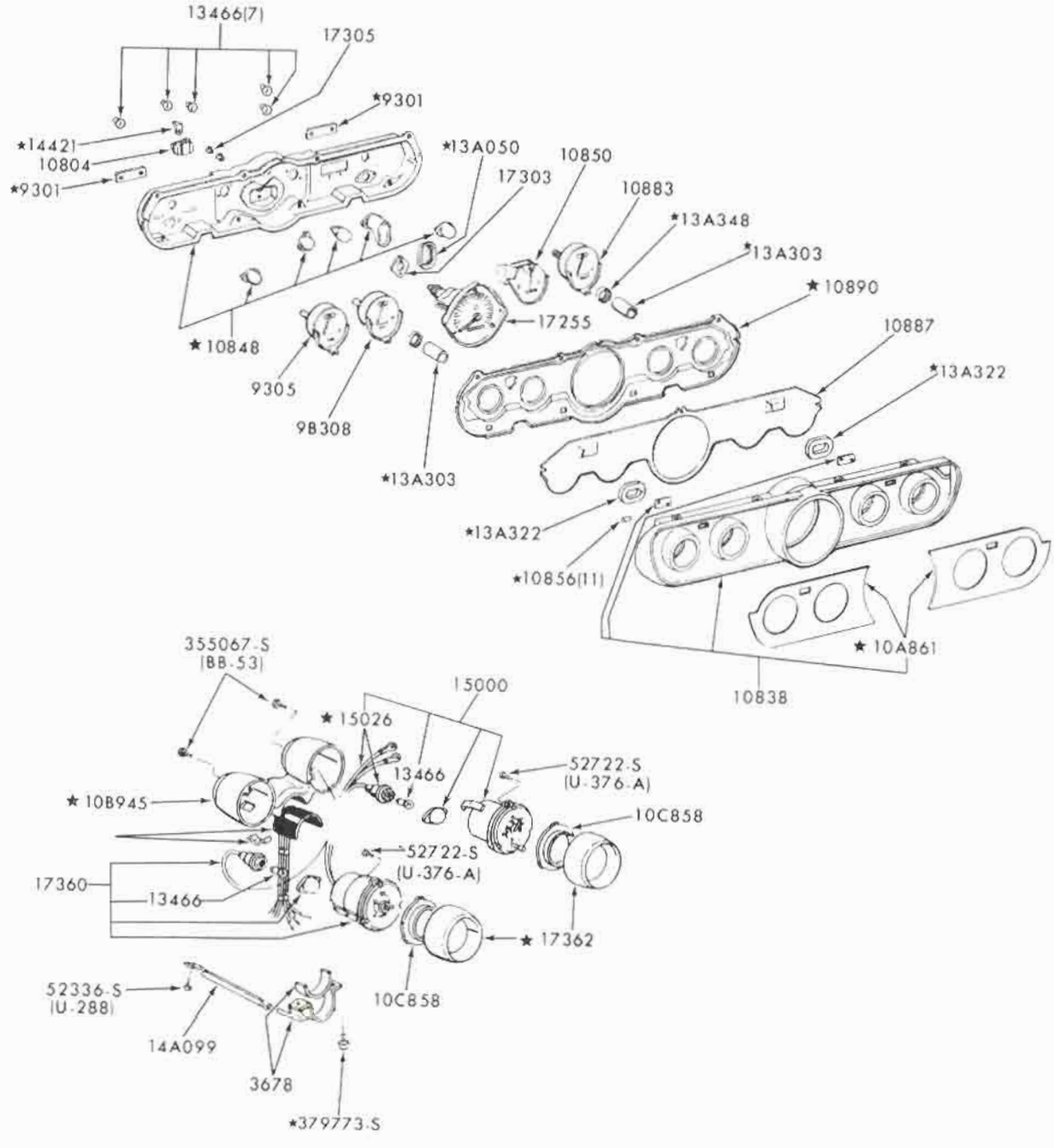

P-8973

INSTRUMENT CLUSTER and RELATED PARTS
1965/66 MUSTANG WITH GAUGES

COPYRIGHT © 1975 — FORD MOTOR COMPANY — DEARBORN, MICHIGAN

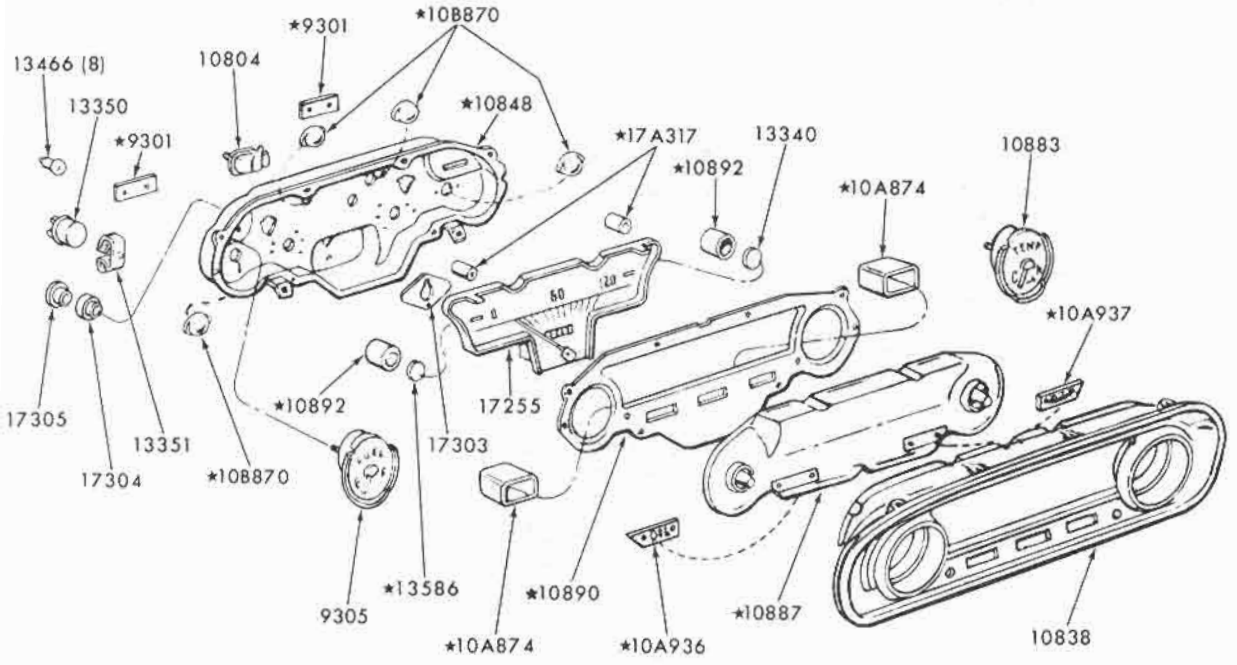

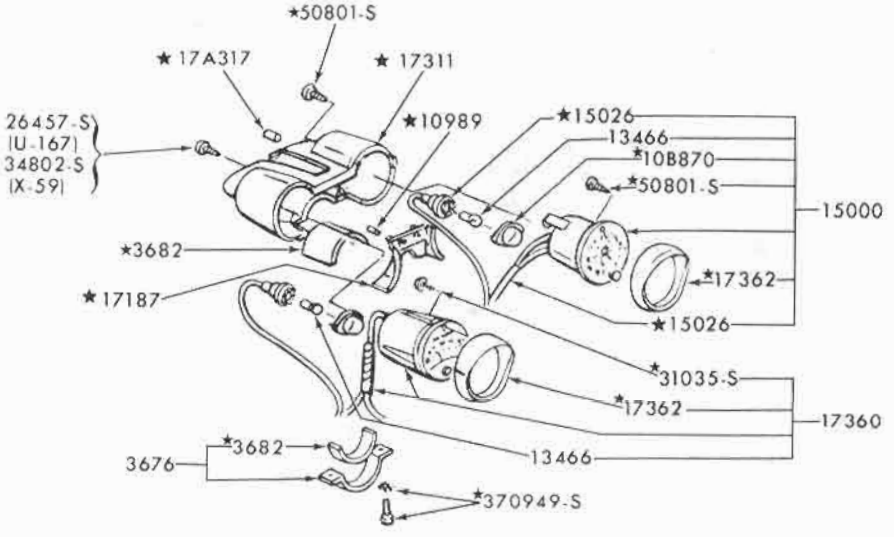

P-8985

INSTRUMENT CLUSTER and RELATED PARTS
1965 MUSTANG - WITH WARNING LIGHTS

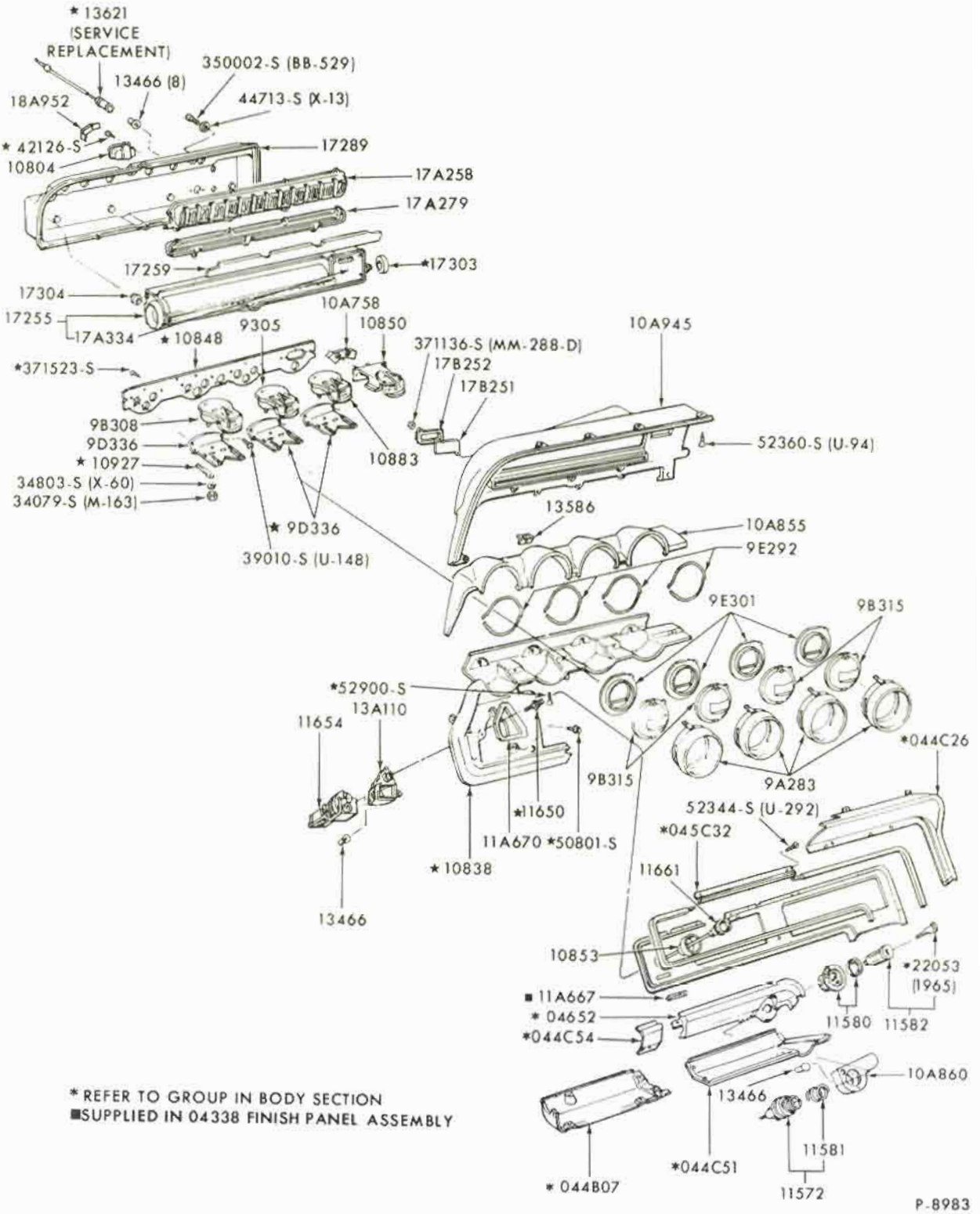

* REFER TO GROUP IN BODY SECTION
■ SUPPLIED IN 04338 FINISH PANEL ASSEMBLY

May, 1975 COPYRIGHT © 1975 — FORD MOTOR COMPANY — DEARBORN, MICHIGAN

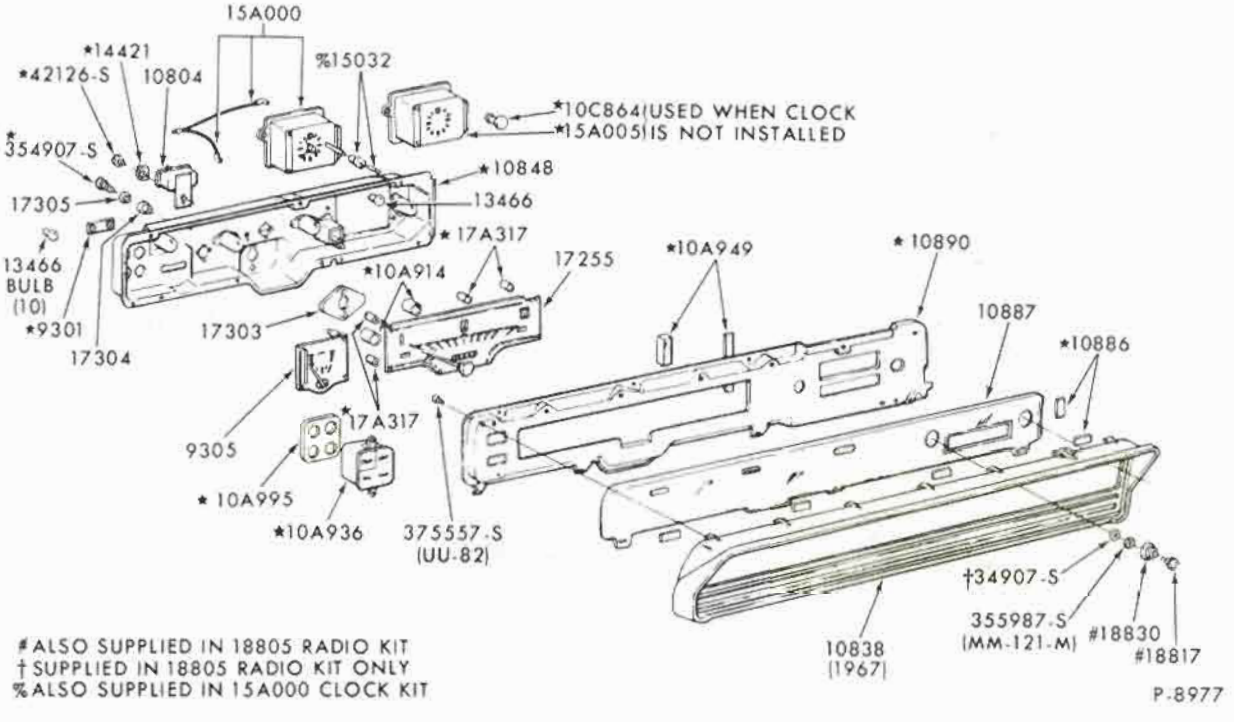

INSTRUMENT CLUSTER and RELATED PARTS
1966/67 FAIRLANE

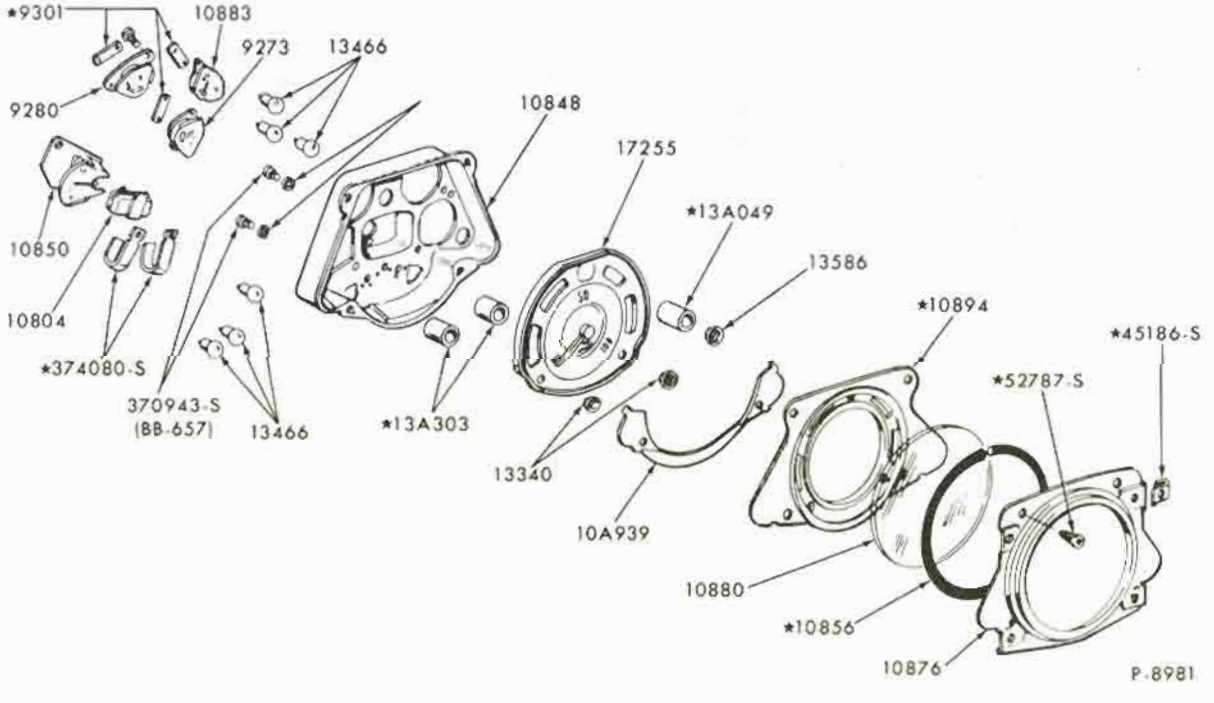

INSTRUMENT CLUSTER and RELATED PARTS
1966/67 BRONCO

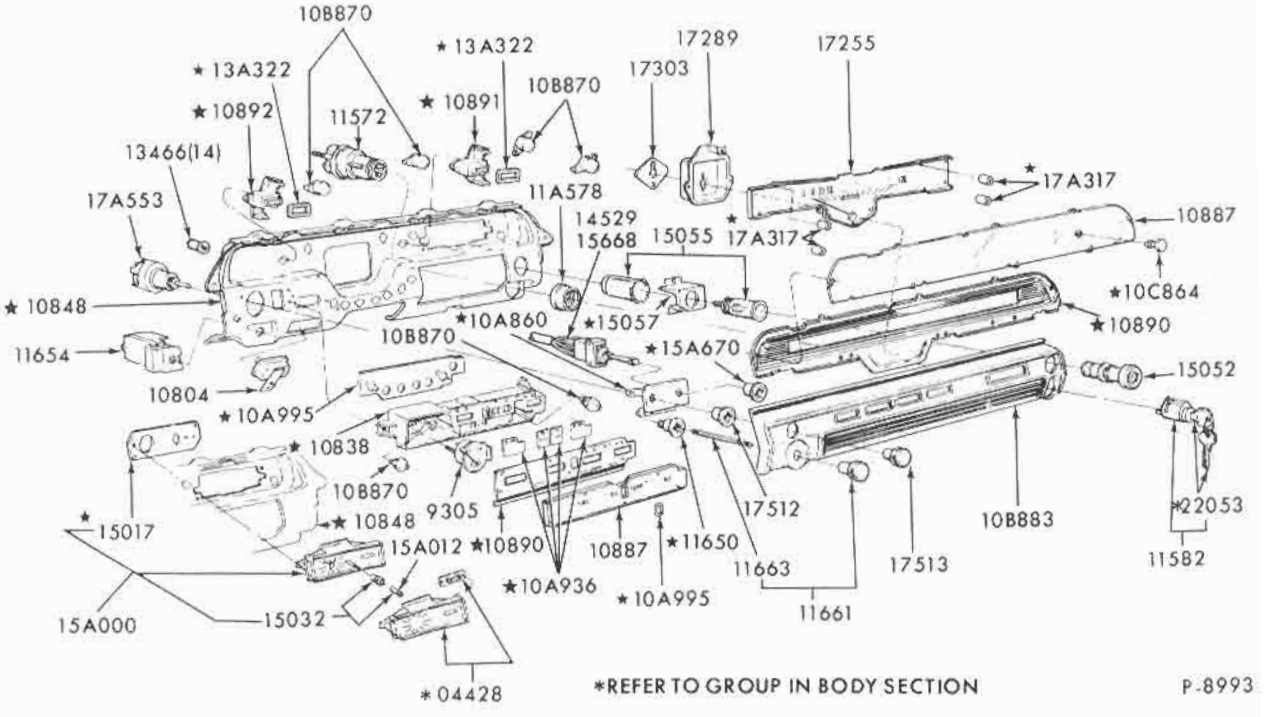

INSTRUMENT CLUSTER and RELATED PARTS
1967 FORD

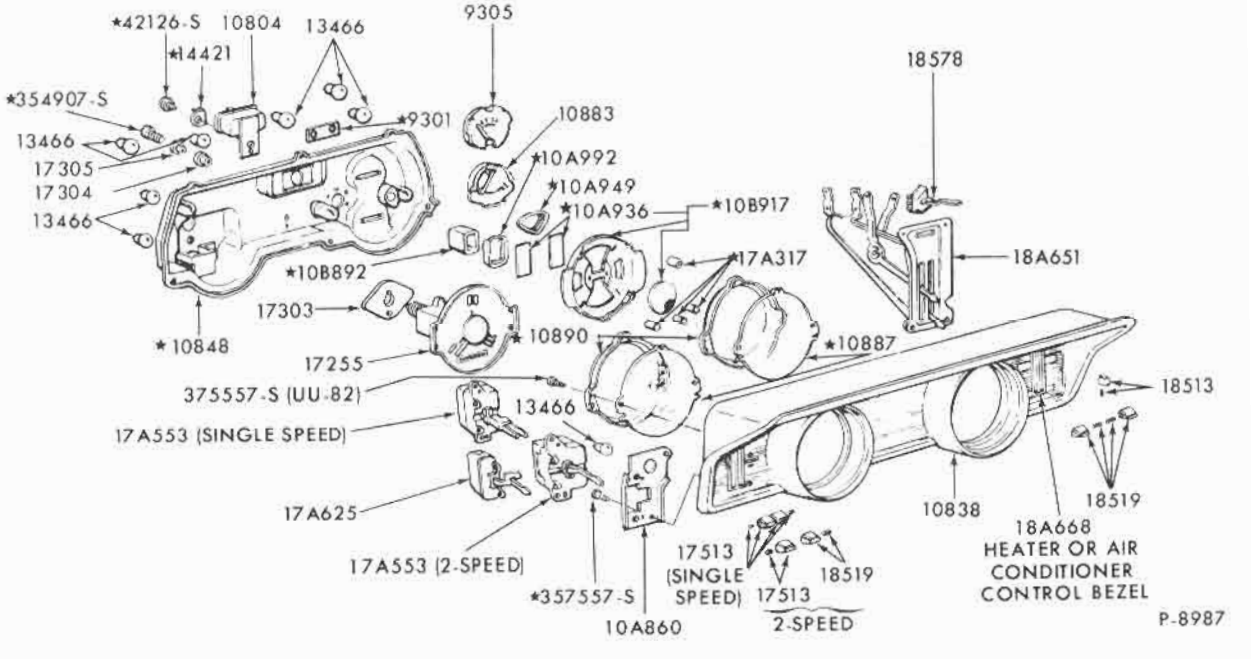

INSTRUMENT CLUSTER and RELATED PARTS
1966/67 FALCON

COPYRIGHT © 1975 — FORD MOTOR COMPANY — DEARBORN, MICHIGAN

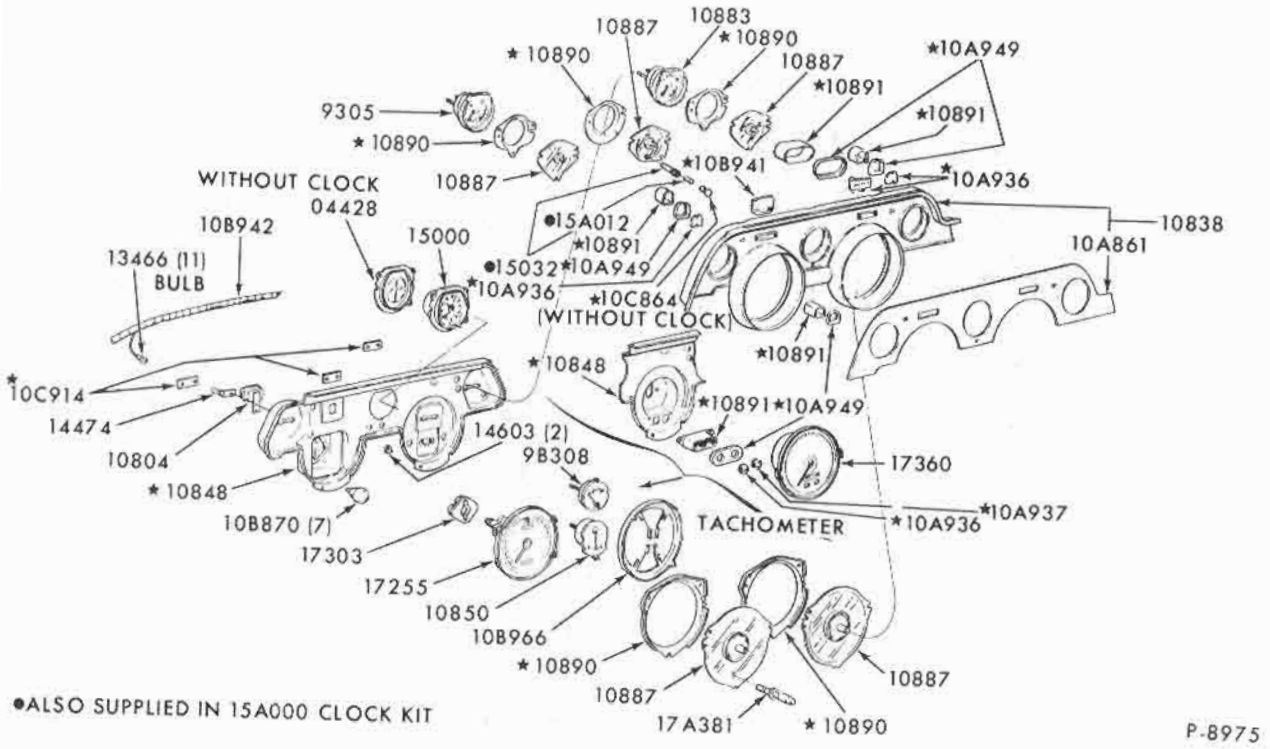

INSTRUMENT CLUSTER and RELATED PARTS
1967/68 MUSTANG

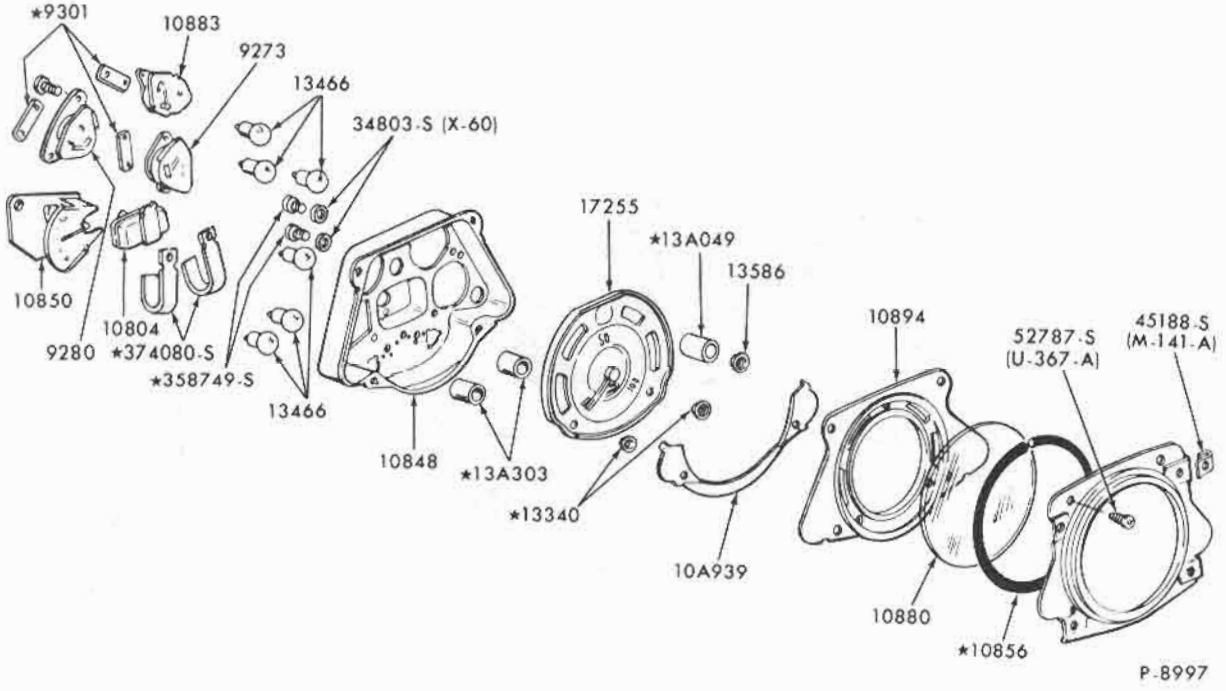

INSTRUMENT CLUSTER and RELATED PARTS
1968/72 BRONCO

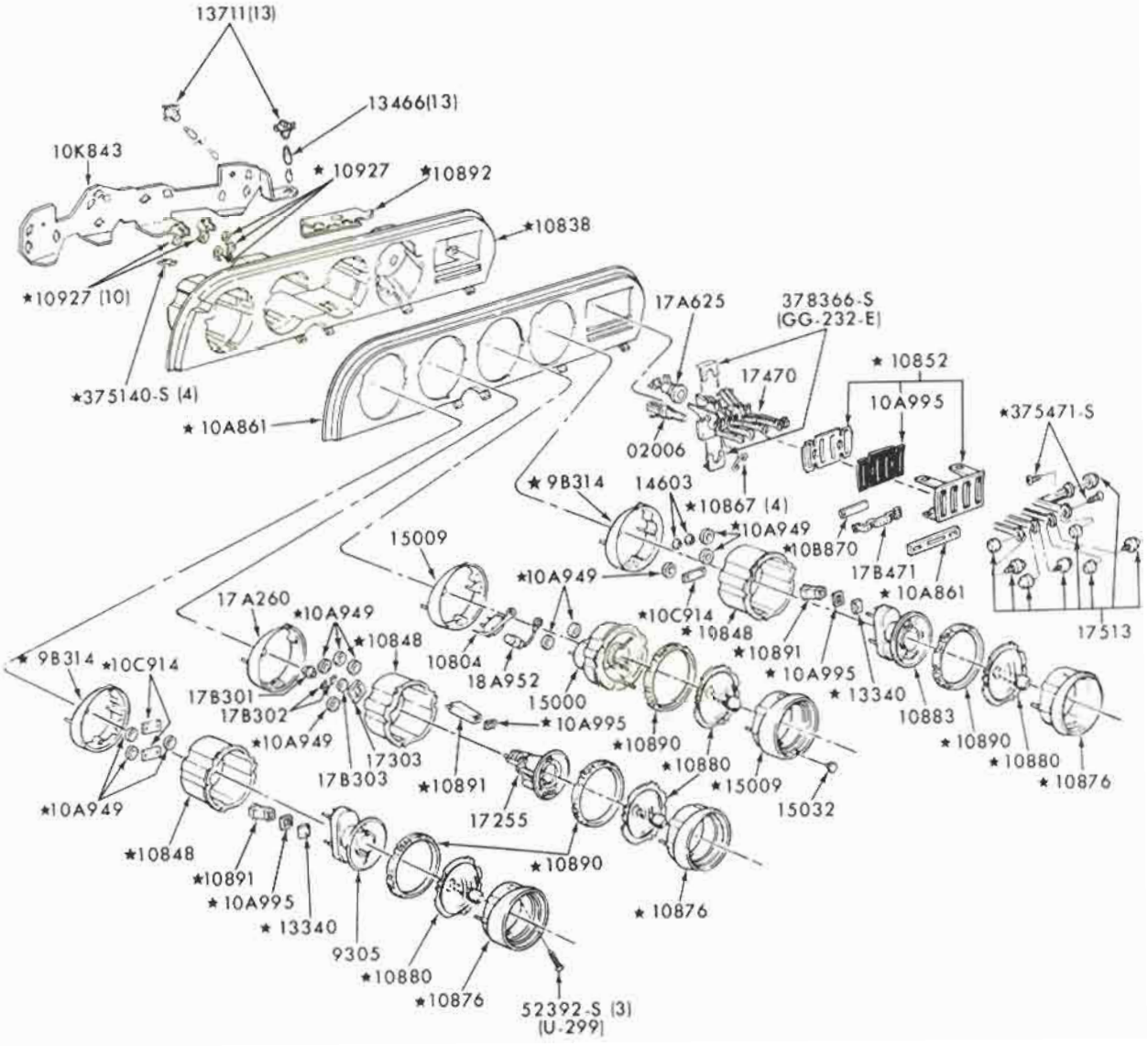

P-8979

May, 1975 COPYRIGHT © 1975 — FORD MOTOR COMPANY — DEARBORN, MICHIGAN FINAL ISSUE

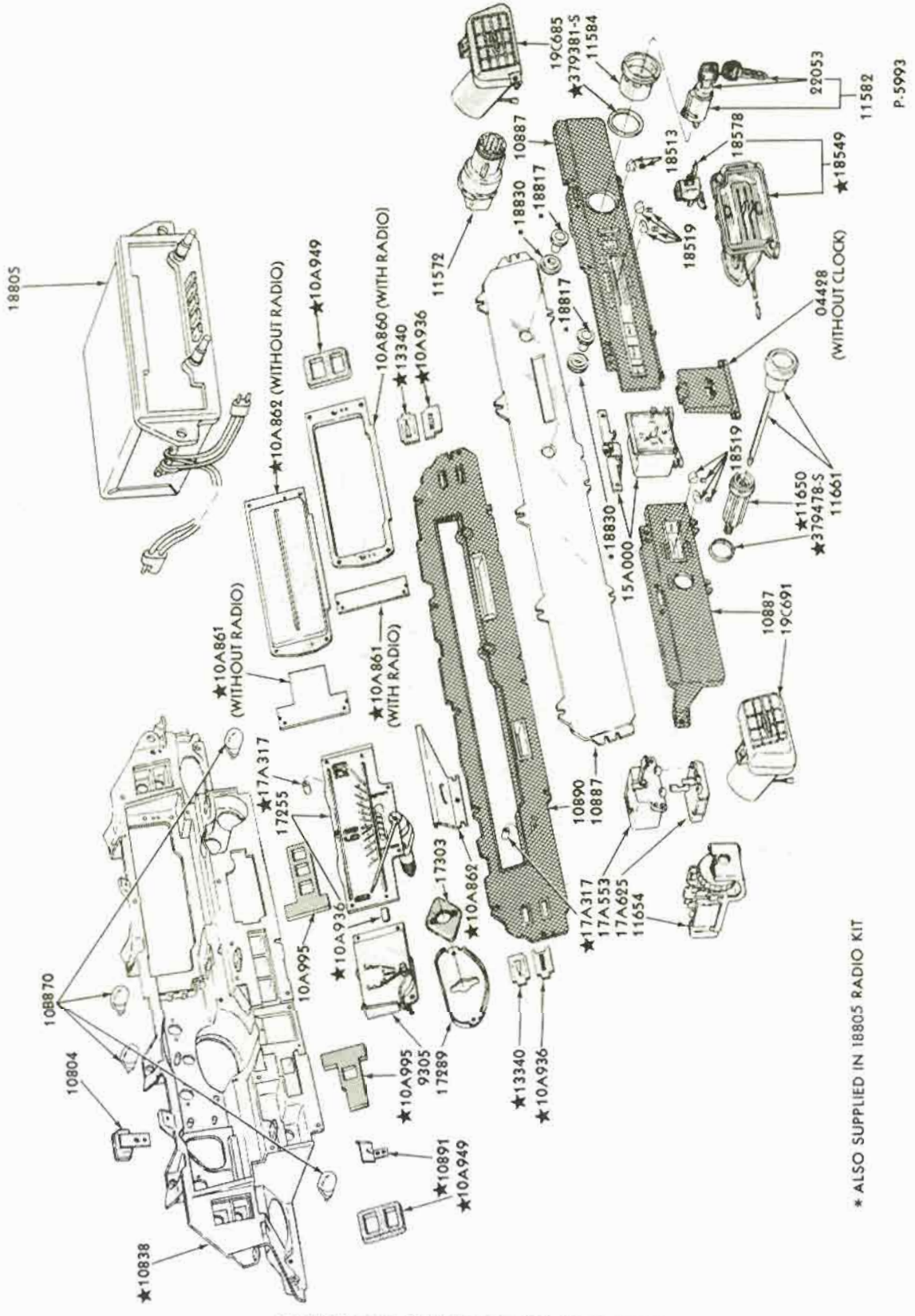

INSTRUMENT CLUSTER and RELATED PARTS
1968 FORD

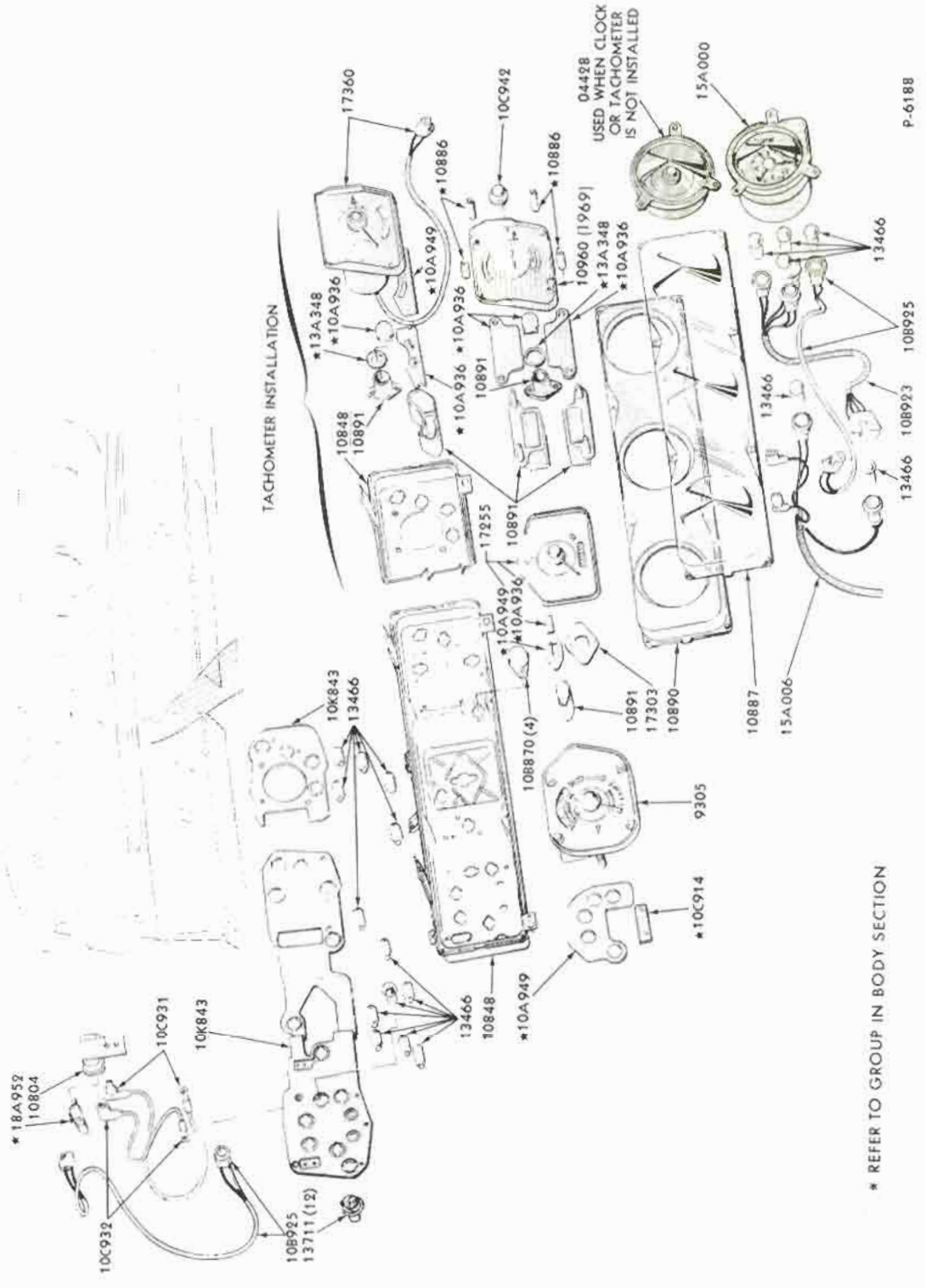

INSTRUMENT CLUSTER and RELATED PARTS
1968/69 FAIRLANE/TORINO

COPYRIGHT © 1975 — FORD MOTOR COMPANY — DEARBORN, MICHIGAN

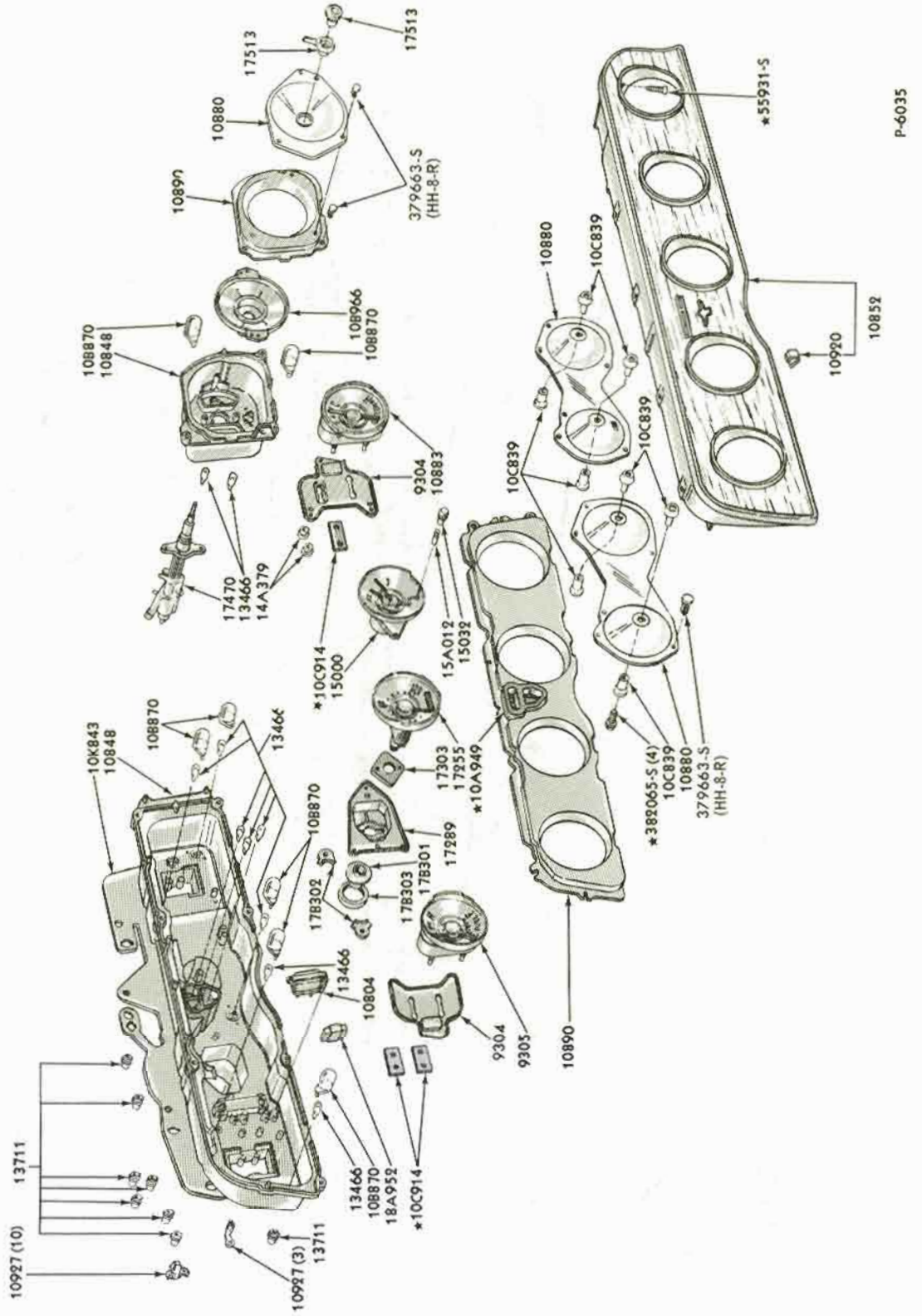

INSTRUMENT CLUSTER and RELATED PARTS
1968/71 THUNDERBIRD

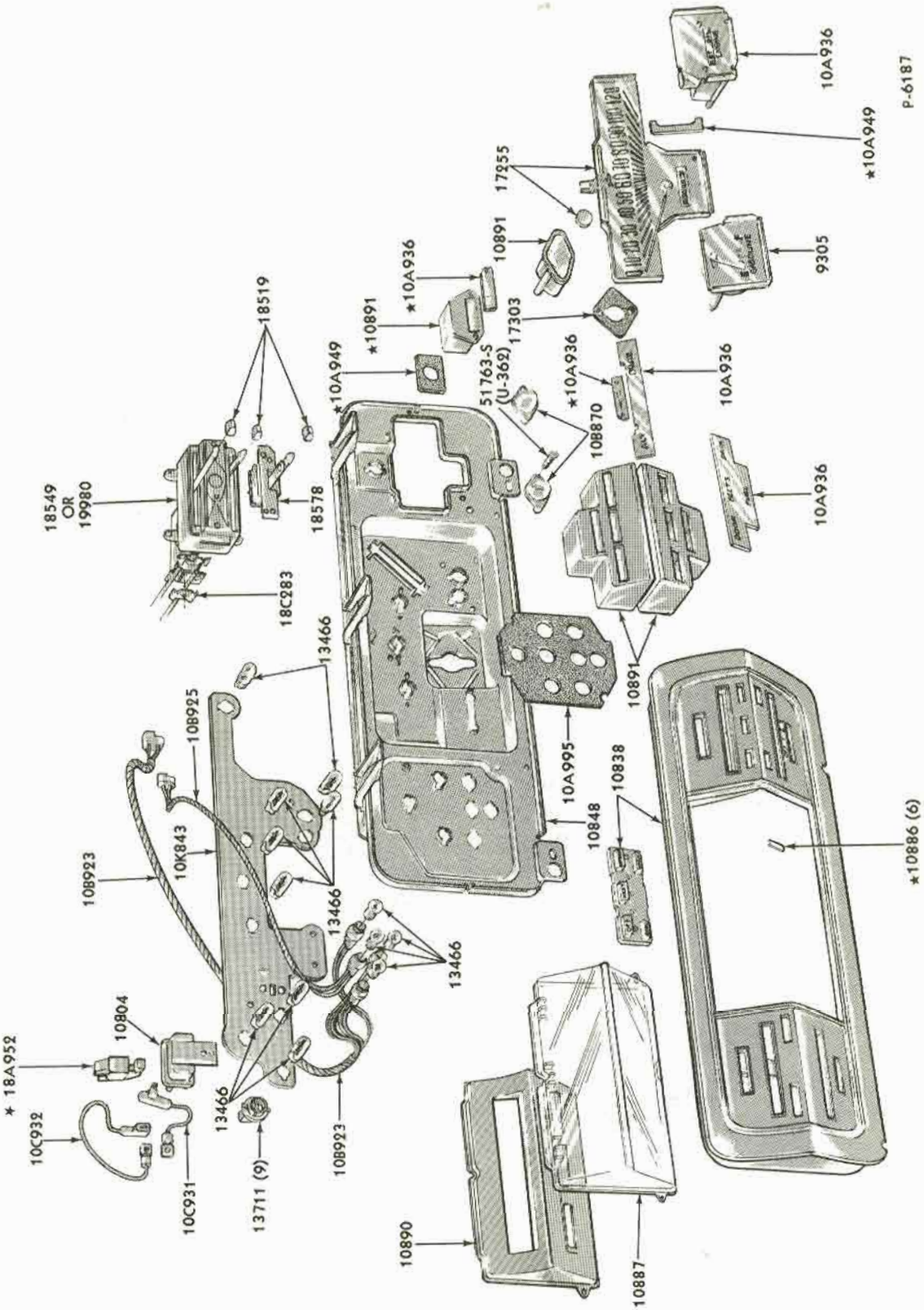

INSTRUMENT CLUSTER and RELATED PARTS
1968/70 FALCON

COPYRIGHT © 1975 — FORD MOTOR COMPANY — DEARBORN, MICHIGAN

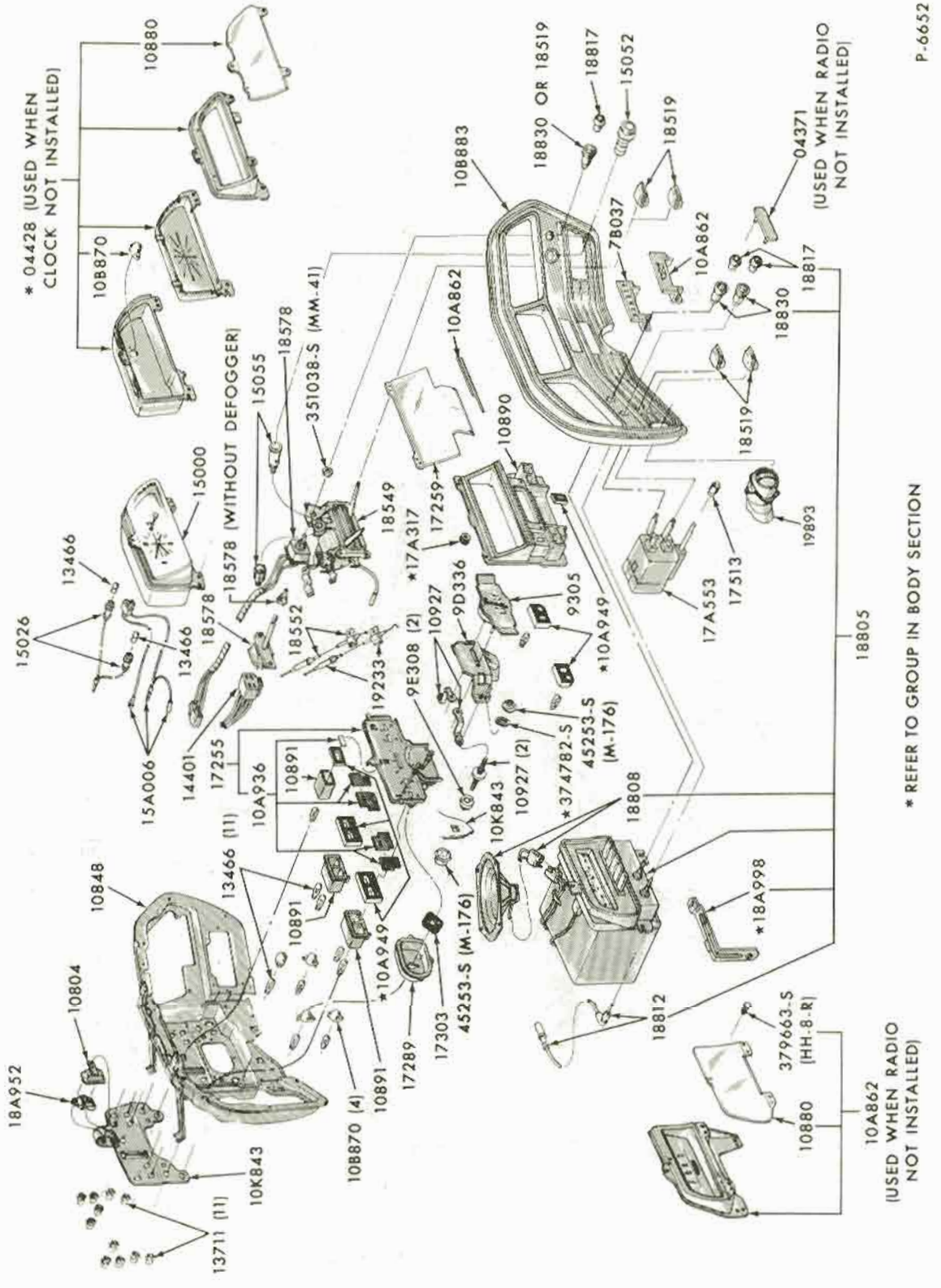

INSTRUMENT CLUSTER and RELATED PARTS
1969/70 FORD

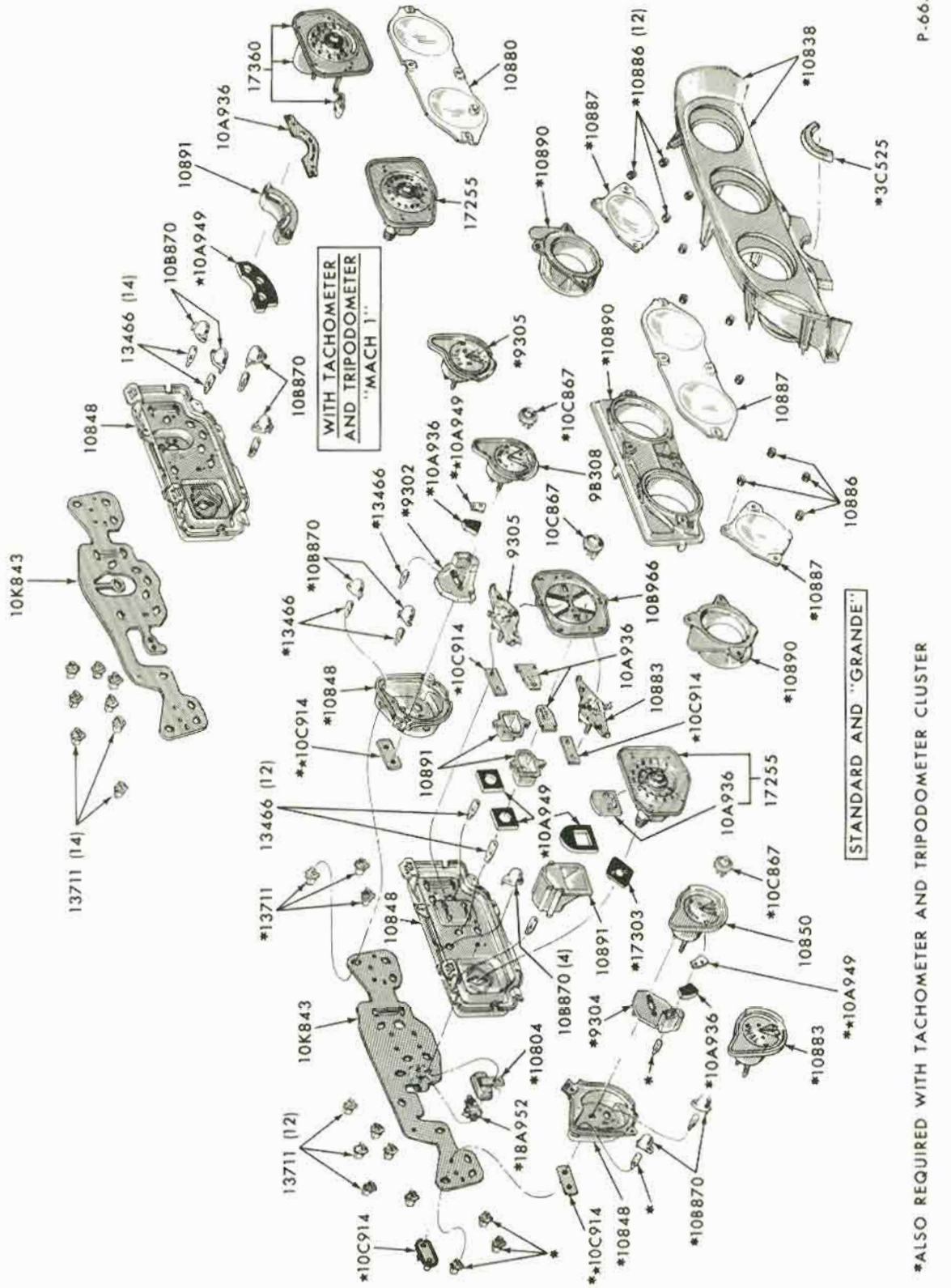

INSTRUMENT CLUSTER and RELATED PARTS
1969/70 MUSTANG

COPYRIGHT © 1975 — FORD MOTOR COMPANY — DEARBORN, MICHIGAN

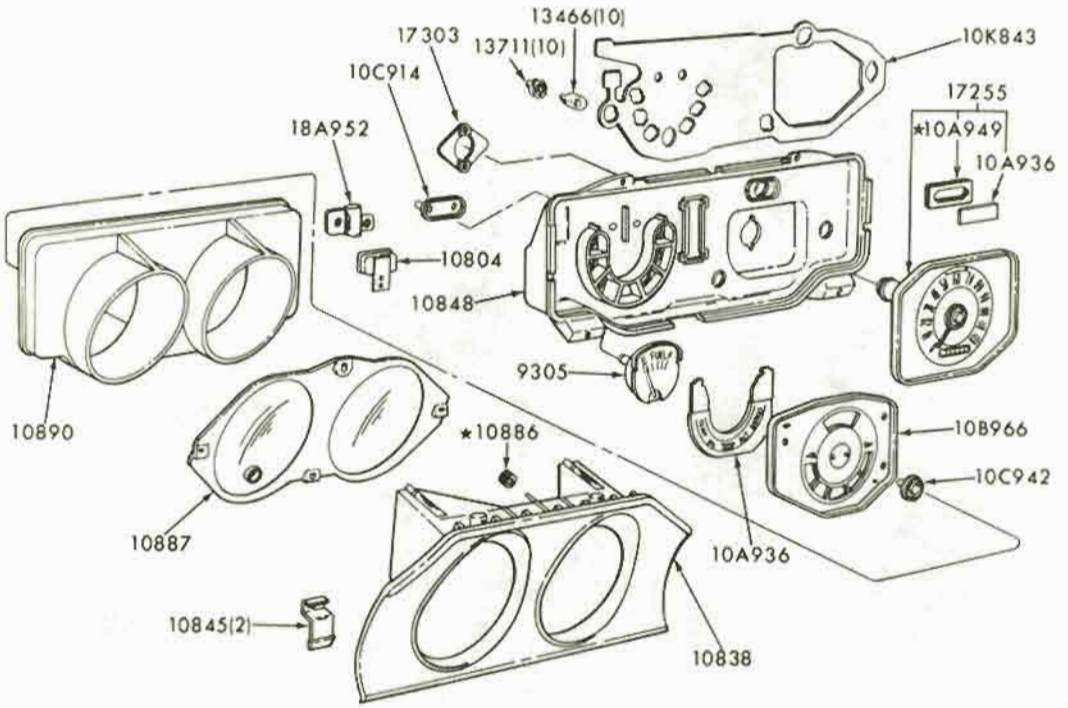

INSTRUMENT CLUSTER and RELATED PARTS
1970/72 MAVERICK

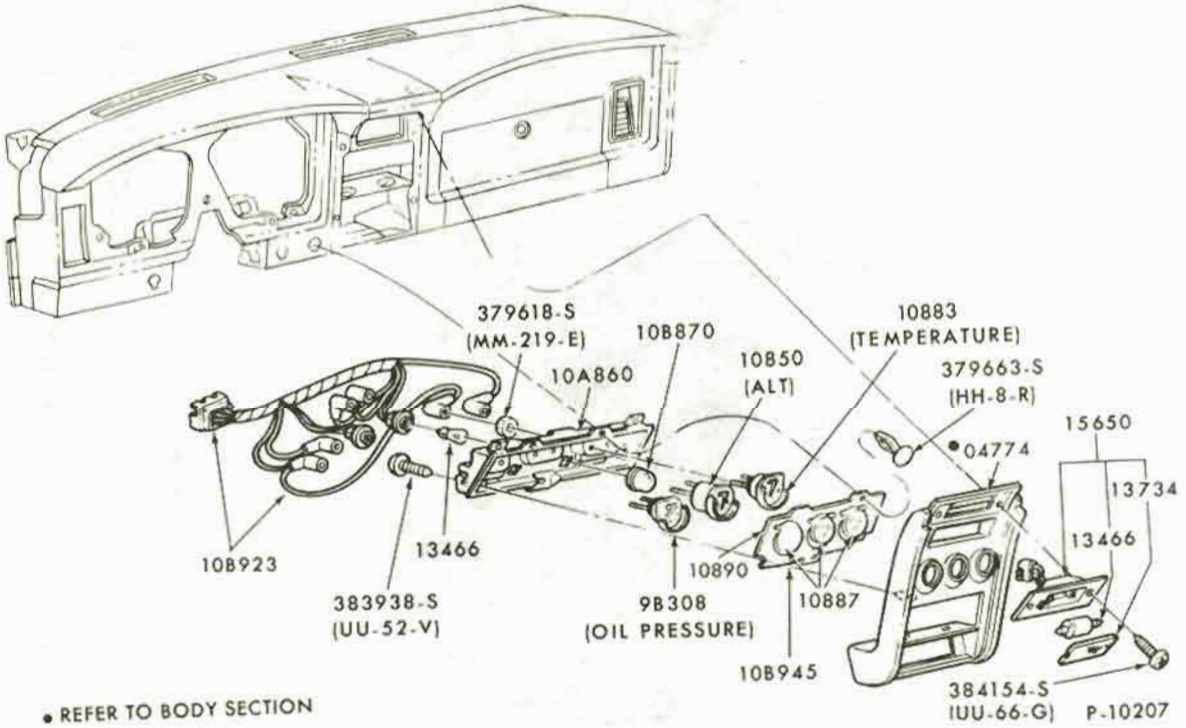

• REFER TO BODY SECTION

AUXILIARY INSTRUMENT CLUSTER-WITH GAUGES
1971/72 MUSTANG

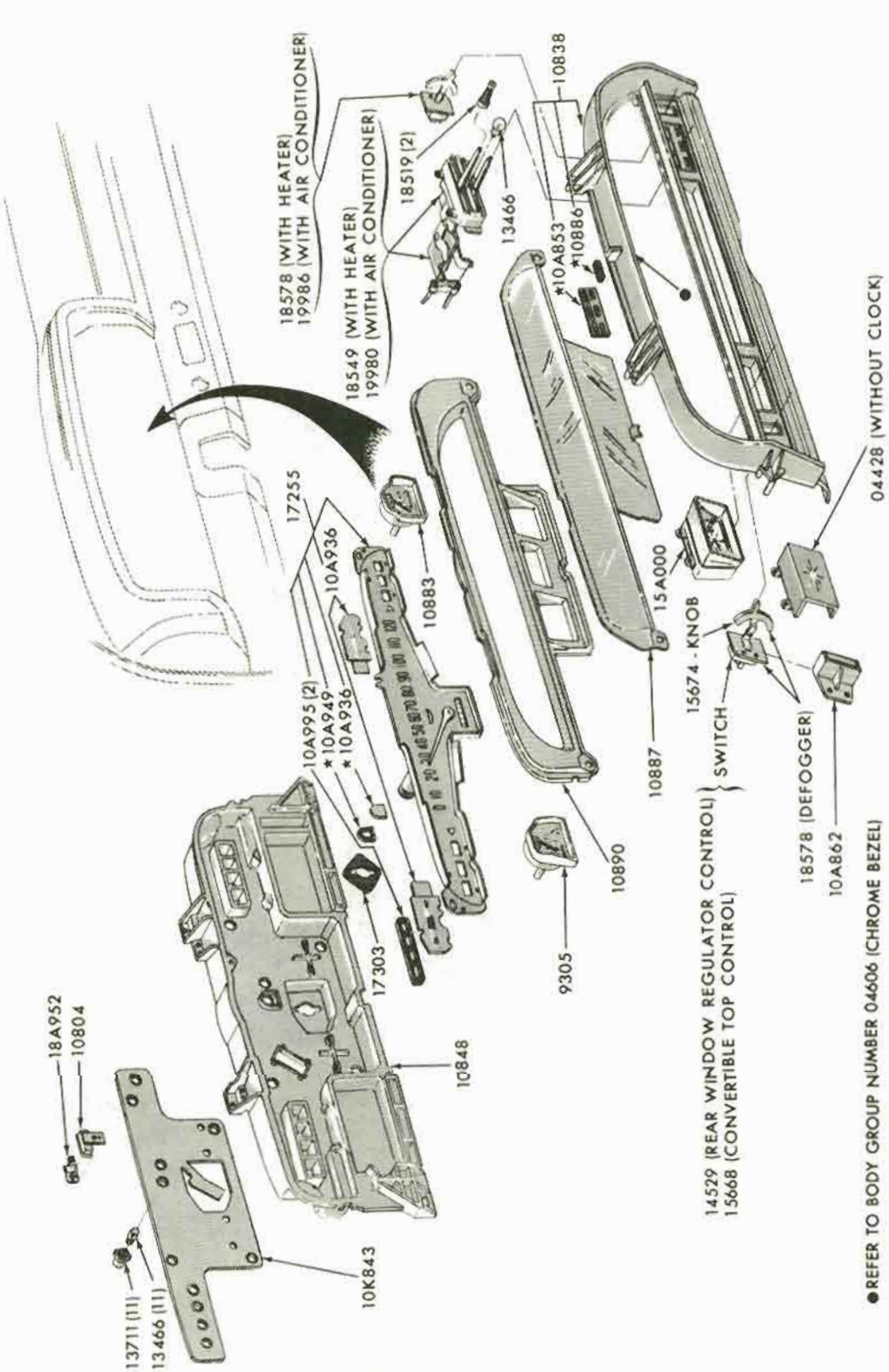

INSTRUMENT CLUSTER and RELATED PARTS
1970/71 FAIRLANE/TORINO

COPYRIGHT © 1975 — FORD MOTOR COMPANY — DEARBORN, MICHIGAN

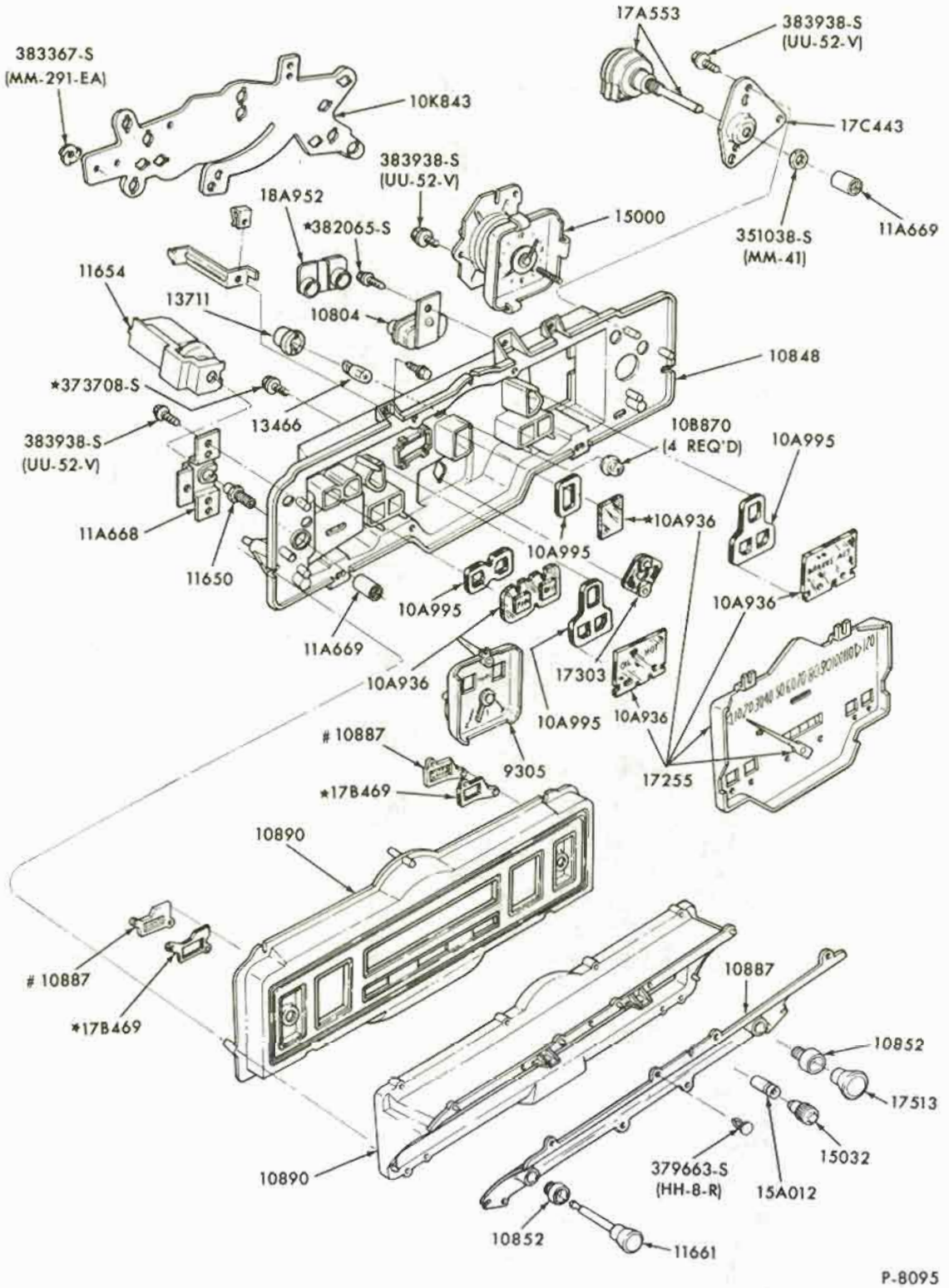

P-8095

FROM 6/1/71 PART OF 10890

INSTRUMENT CLUSTER and RELATED PARTS
1971/72 FORD

COPYRIGHT © 1975— FORD MOTOR COMPANY — DEARBORN, MICHIGAN

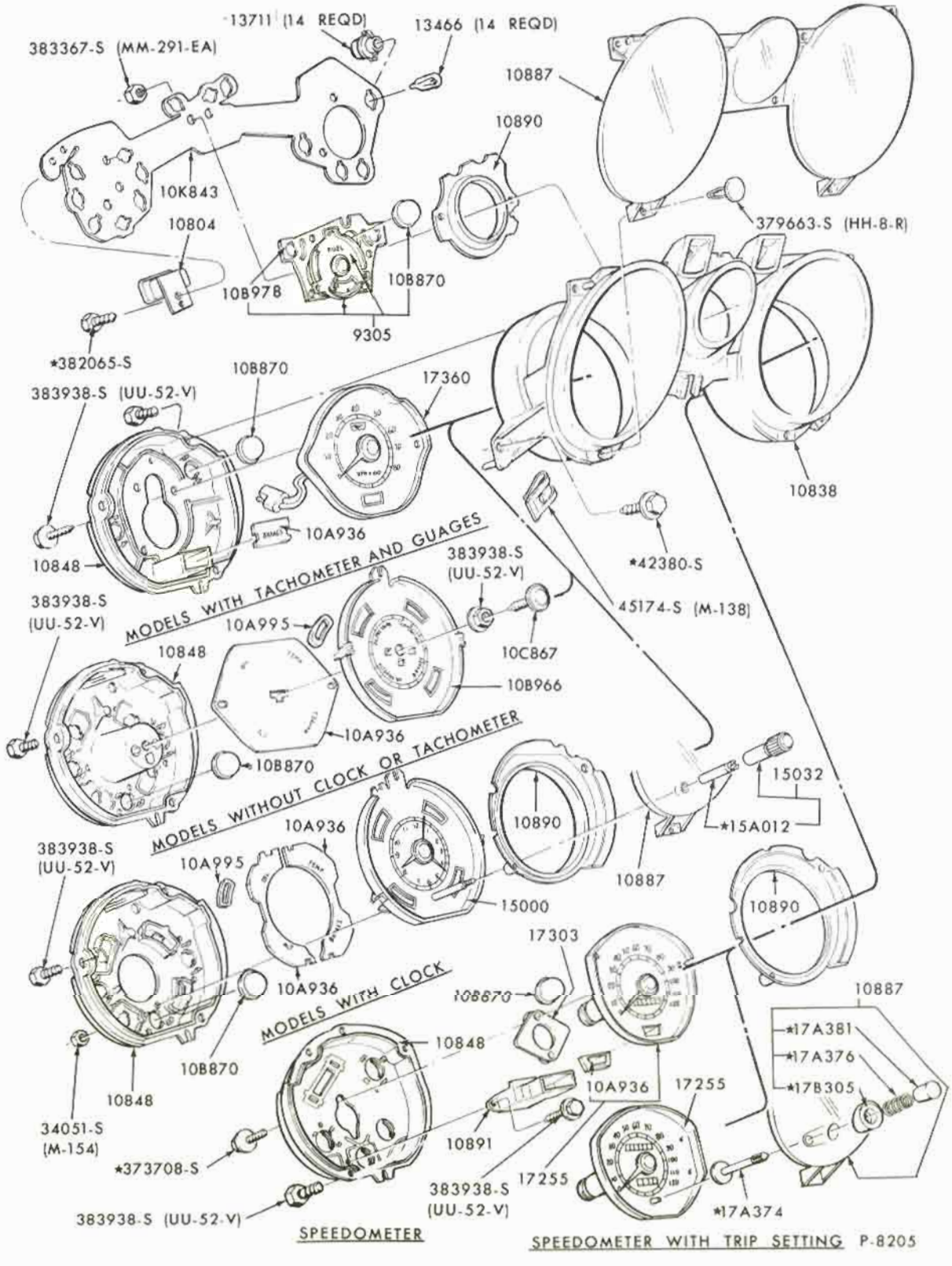

INSTRUMENT CLUSTER and RELATED PARTS
1971/72 MUSTANG

COPYRIGHT © 1975 — FORD MOTOR COMPANY — DEARBORN, MICHIGAN

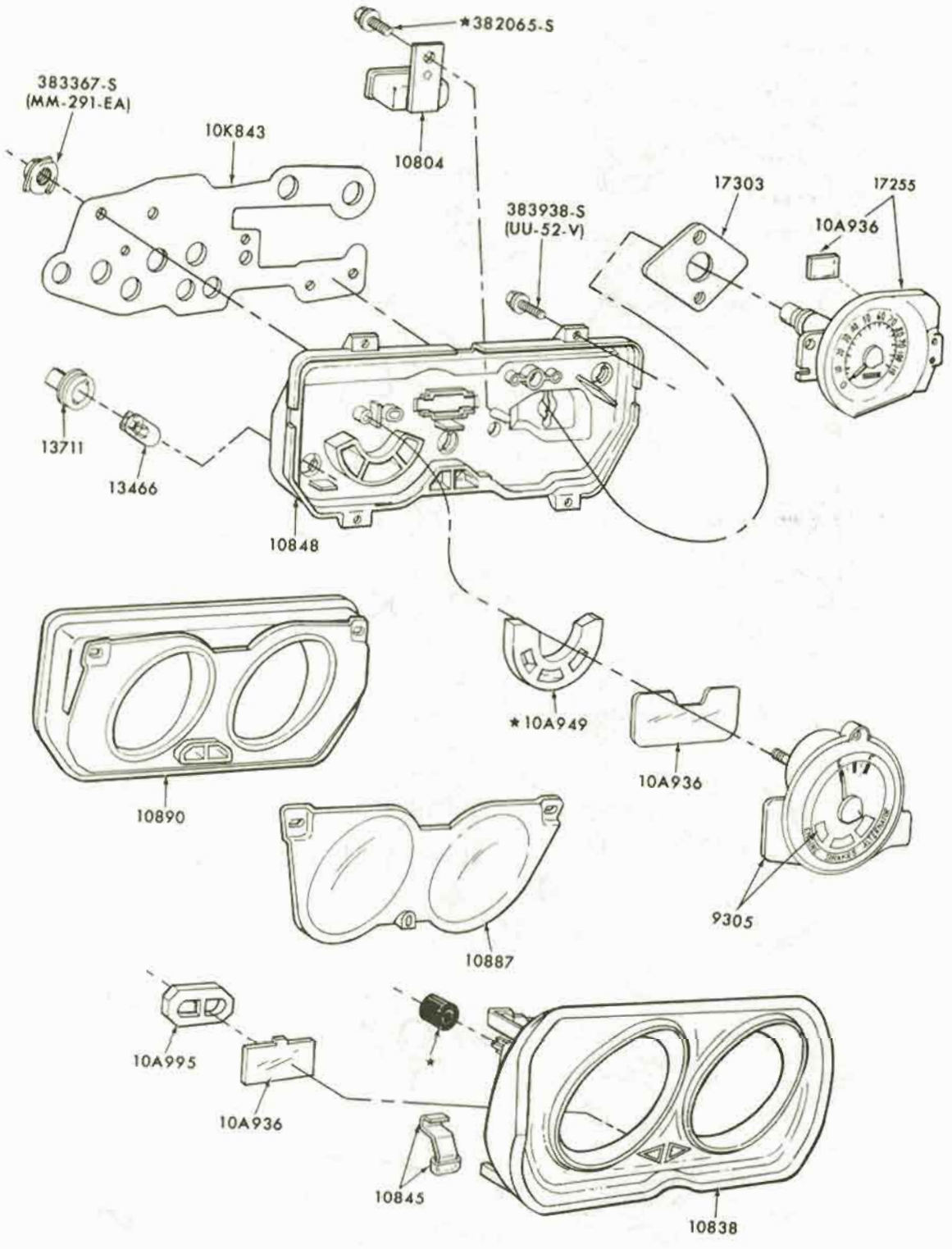

INSTRUMENT CLUSTER and RELATED PARTS
1971/72 PINTO

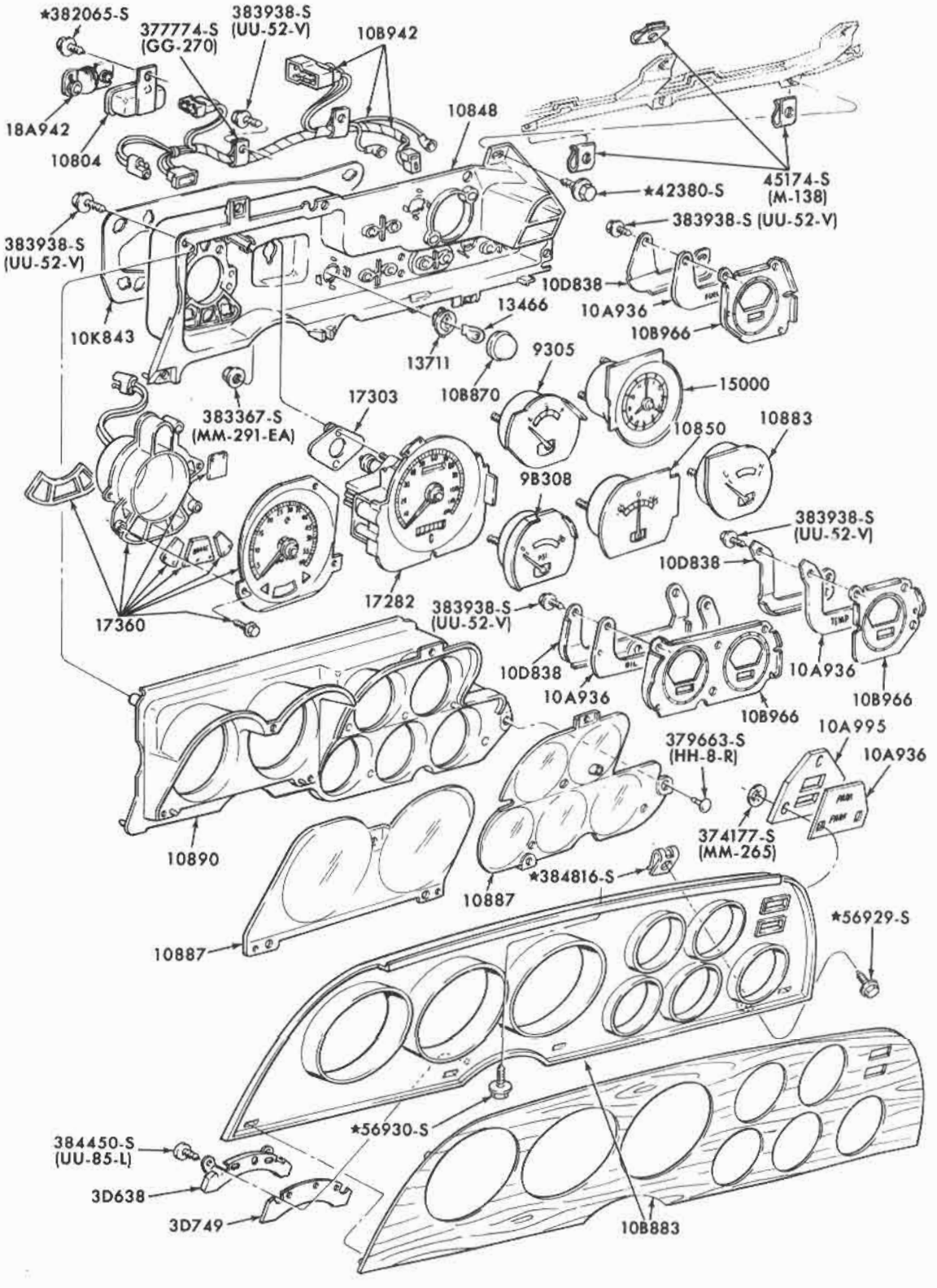

P-8768

INSTRUMENT CLUSTER and RELATED PARTS
1972 TORINO - WITH RALLYE INSTRUMENTATION GROUP

COPYRIGHT © 1975 — FORD MOTOR COMPANY — DEARBORN, MICHIGAN

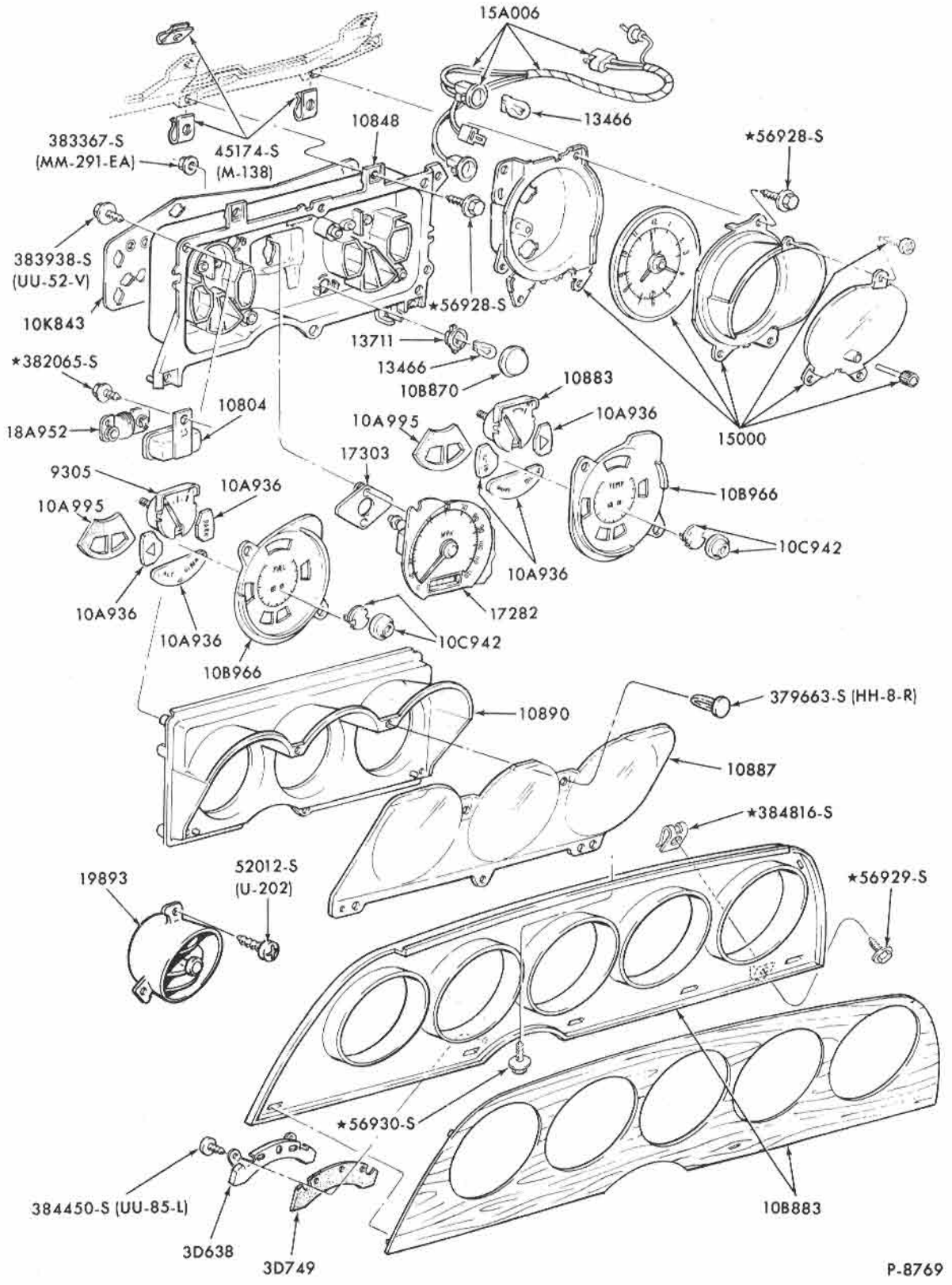

INSTRUMENT CLUSTER and RELATED PARTS
1972 TORINO - WITHOUT RALLYE INSTRUMENTATION GROUP

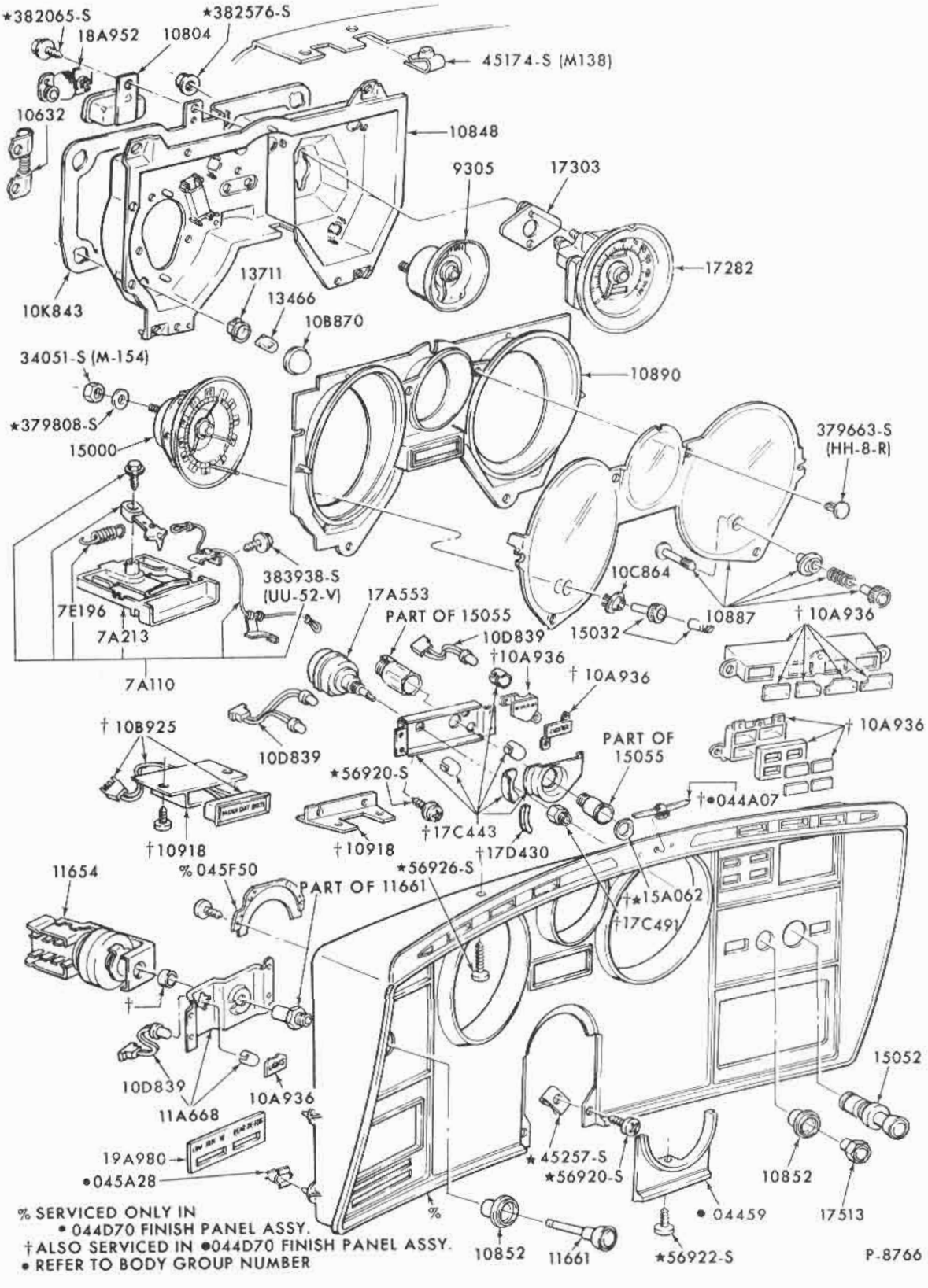

INSTRUMENT CLUSTER and RELATED PARTS
1972 THUNDERBIRD

COPYRIGHT © 1975 — FORD MOTOR COMPANY — DEARBORN, MICHIGAN

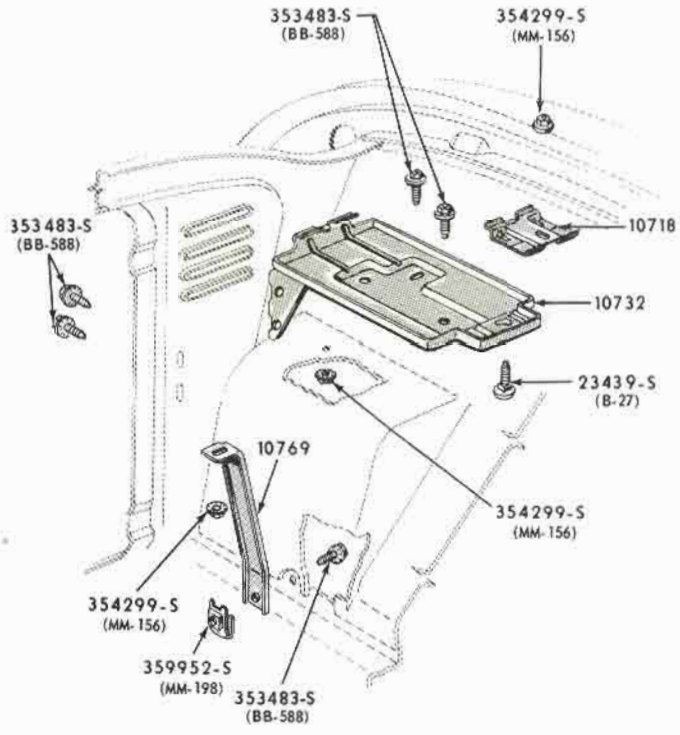

P-3106

BATTERY CARRIER and RELATED PARTS
1965 FALCON

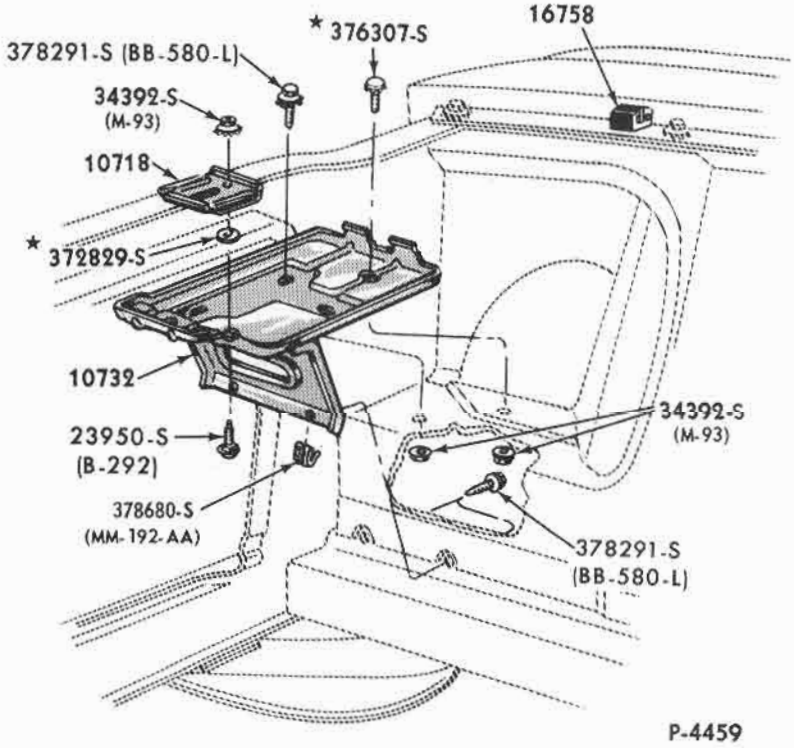

P-4459

BATTERY CARRIER and RELATED PARTS
1965/68 MUSTANG

COPYRIGHT © 1975 — FORD MOTOR COMPANY — DEARBORN, MICHIGAN

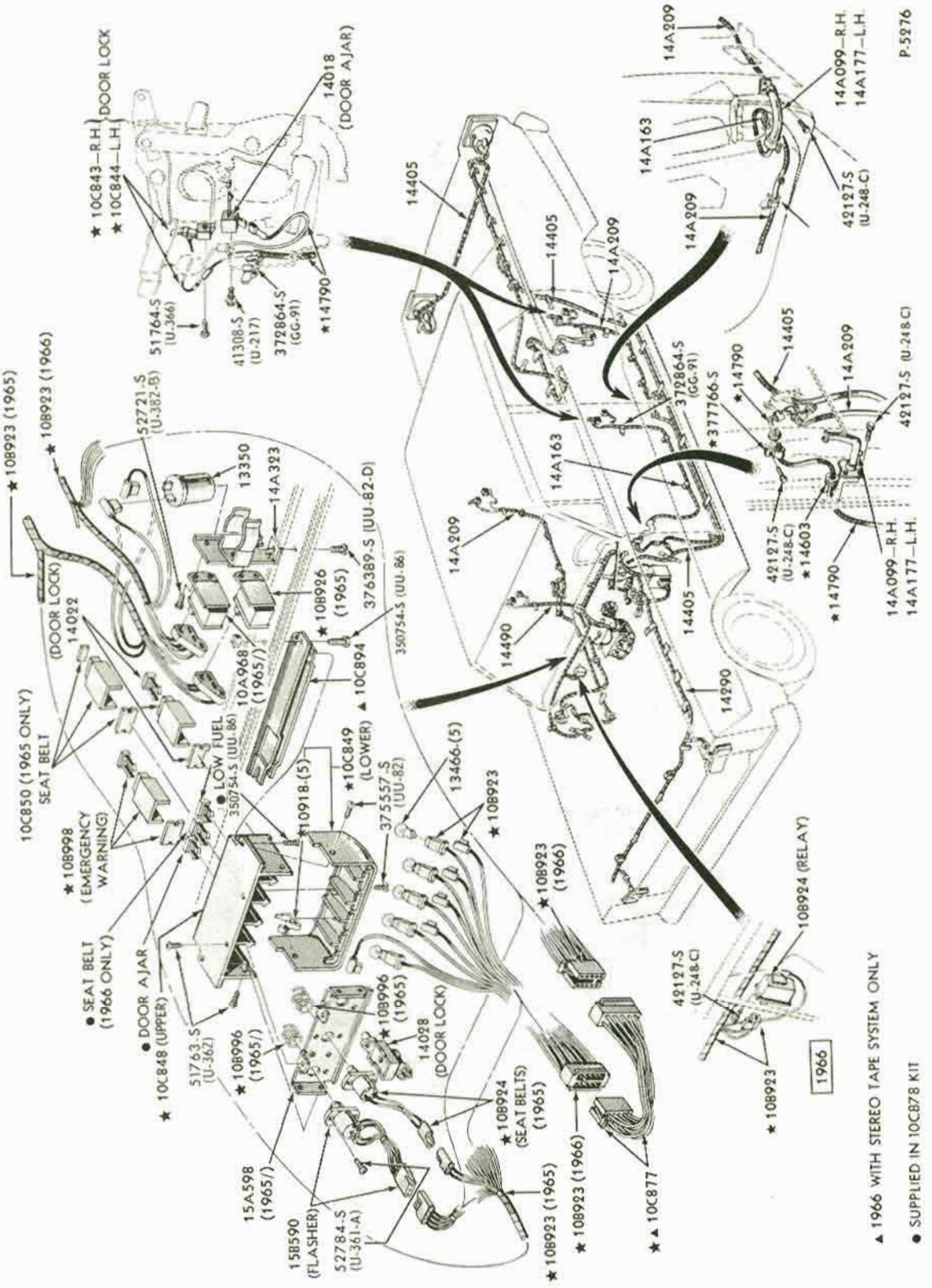

WARNING INDICATOR PANEL INSTALLATION
1965/66 FORD

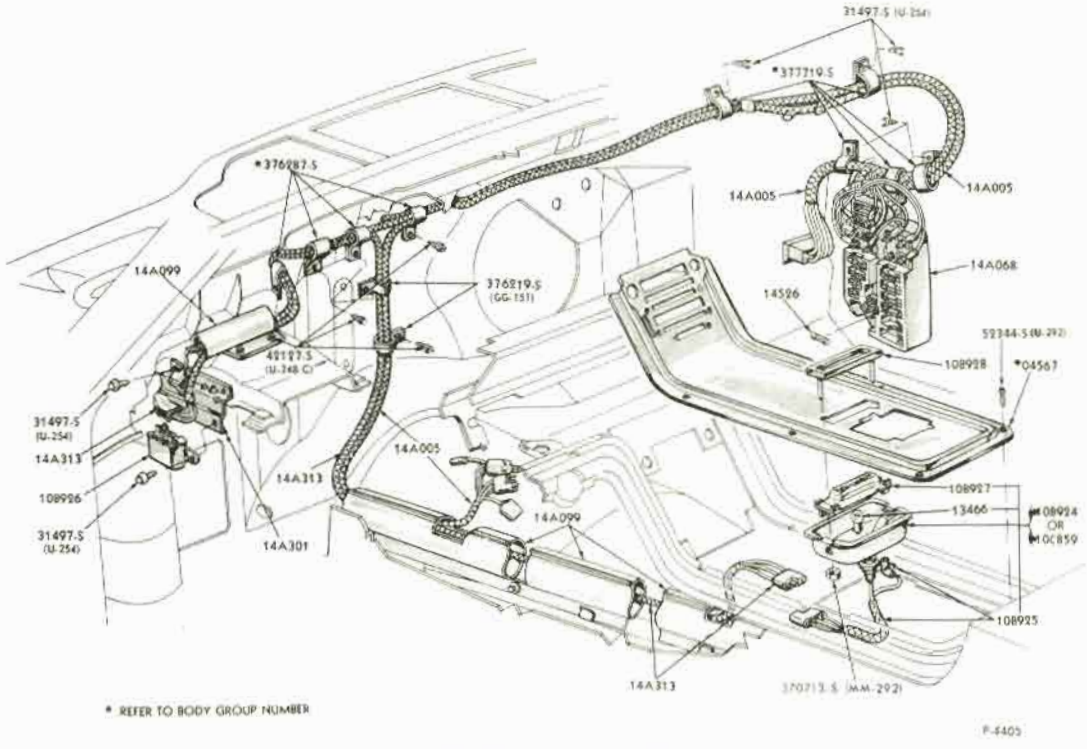

SEAT BELT WARNING LAMP INSTALLATION
1965 THUNDERBIRD - BEFORE 10/5/64

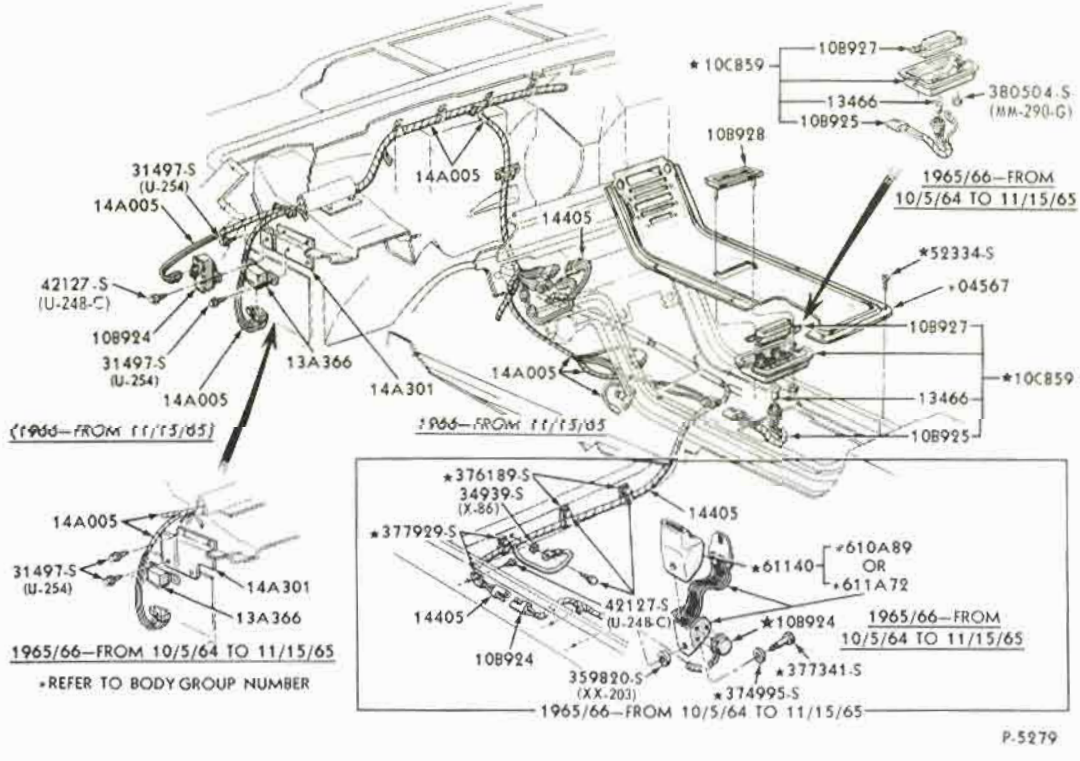

SEAT BELT WARNING LAMP INSTALLATION
1965/66 THUNDERBIRD - FROM 10/5/64

COPYRIGHT © 1975 — FORD MOTOR COMPANY — DEARBORN, MICHIGAN

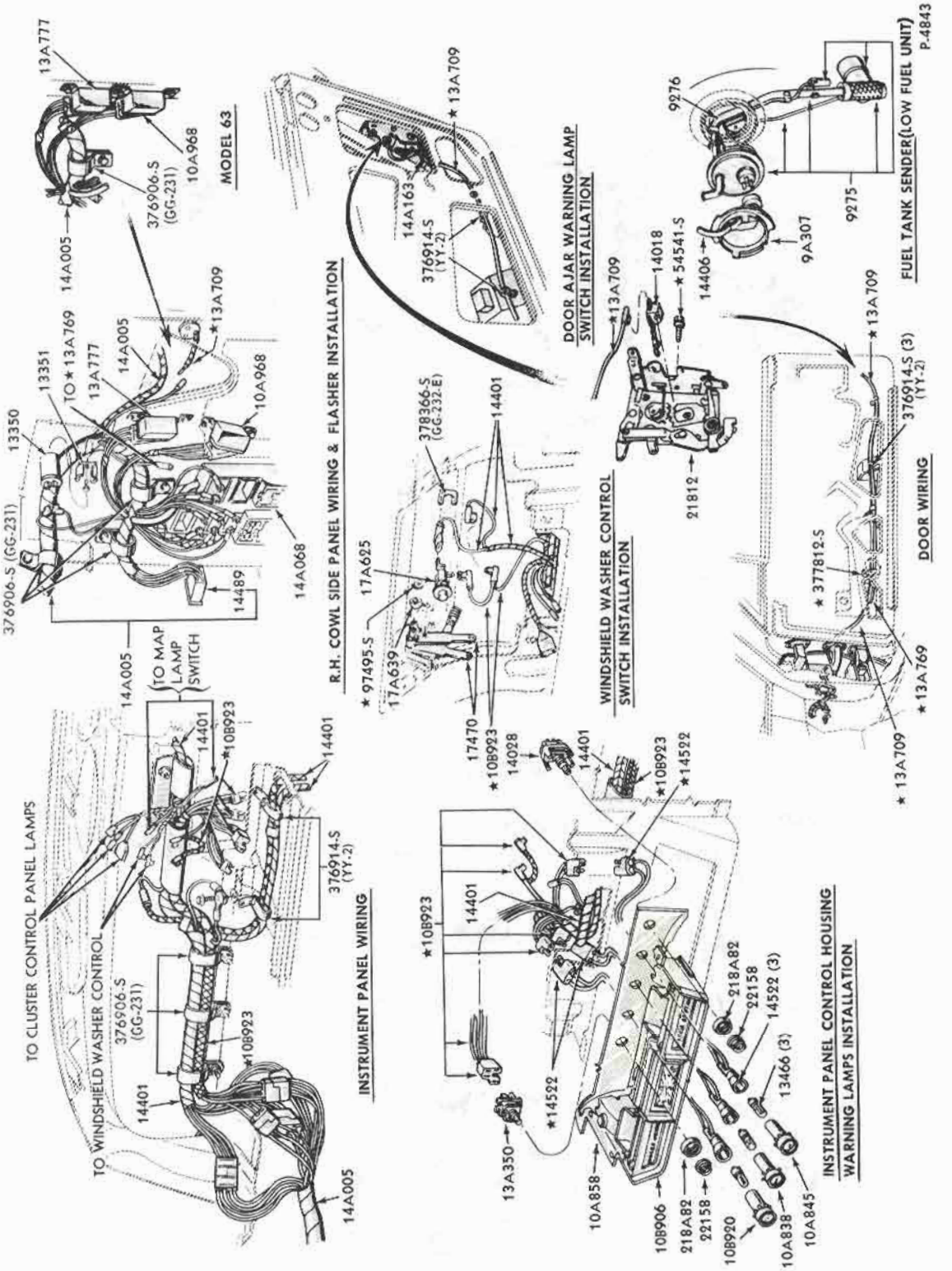

WARNING INDICATOR PANEL and WIRING SYSTEM
DOOR AJAR, LOW FUEL, FLASHER
1965/66 THUNDERBIRD

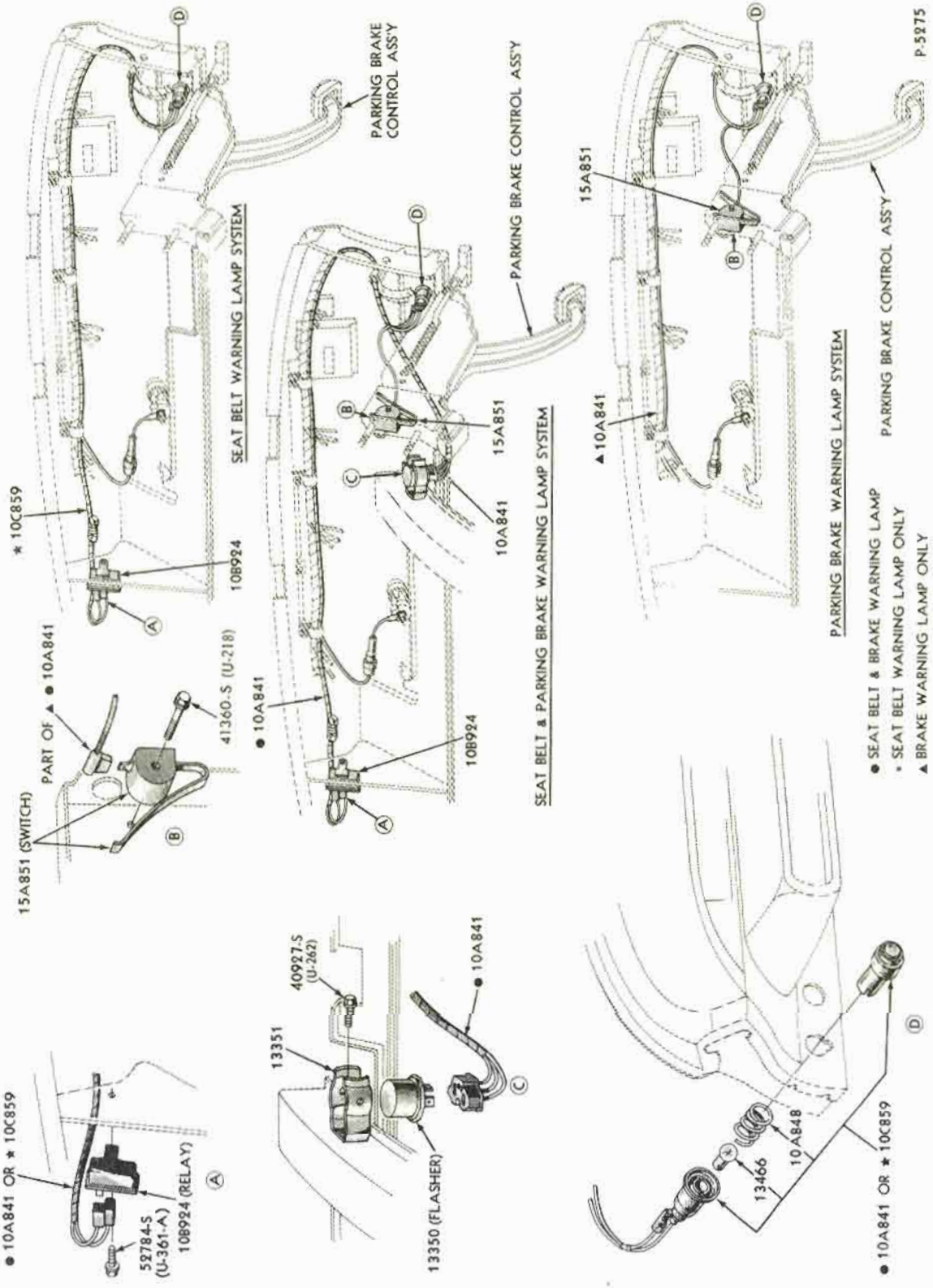

SEAT BELT and PARKING BRAKE WARNING LAMP INSTALLATION
1966 FORD

COPYRIGHT © 1975 — FORD MOTOR COMPANY — DEARBORN, MICHIGAN

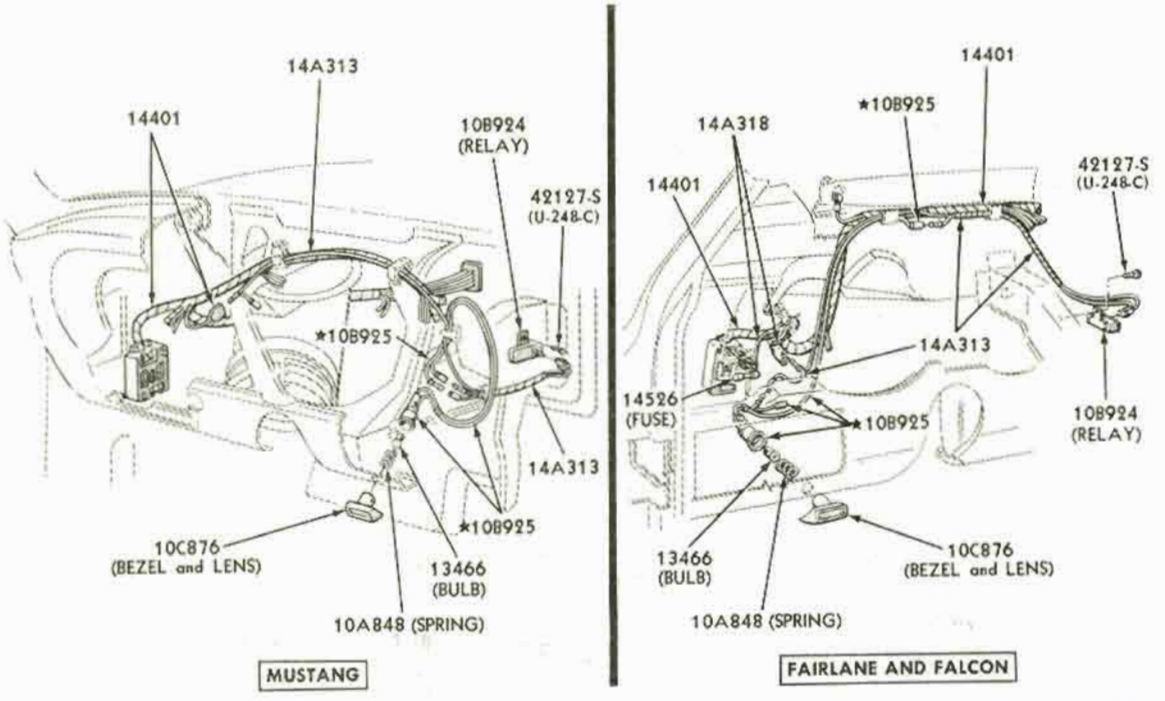

SEAT BELT WARNING LAMP INSTALLATION
1966/69 FAIRLANE/TORINO, MUSTANG, FALCON

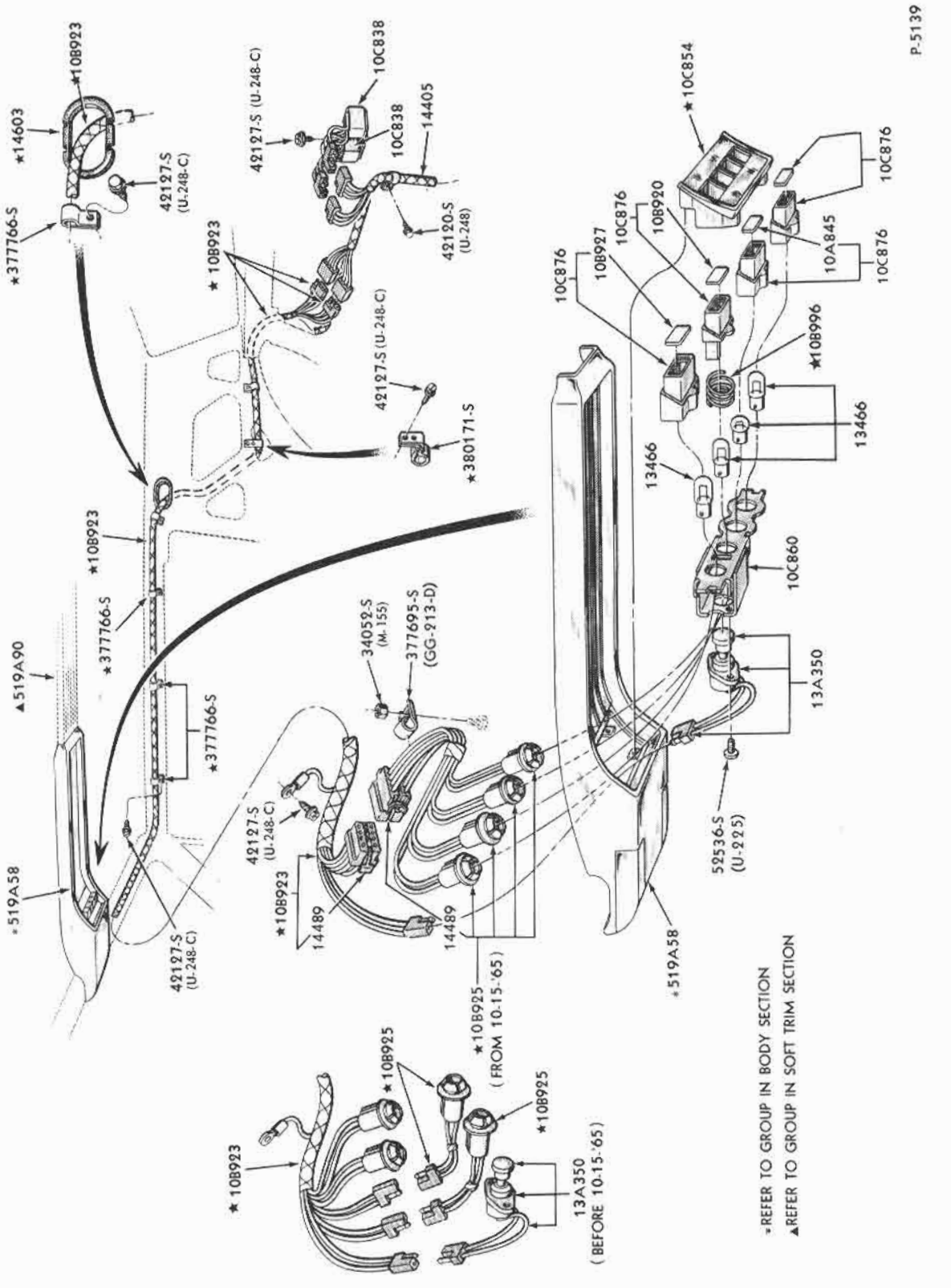

WARNING LAMP INSTALLATION - ROOF CONSOLE PANEL
1966 THUNDERBIRD - BODY TYPE 63C,63D

COPYRIGHT © 1975 — FORD MOTOR COMPANY — DEARBORN, MICHIGAN

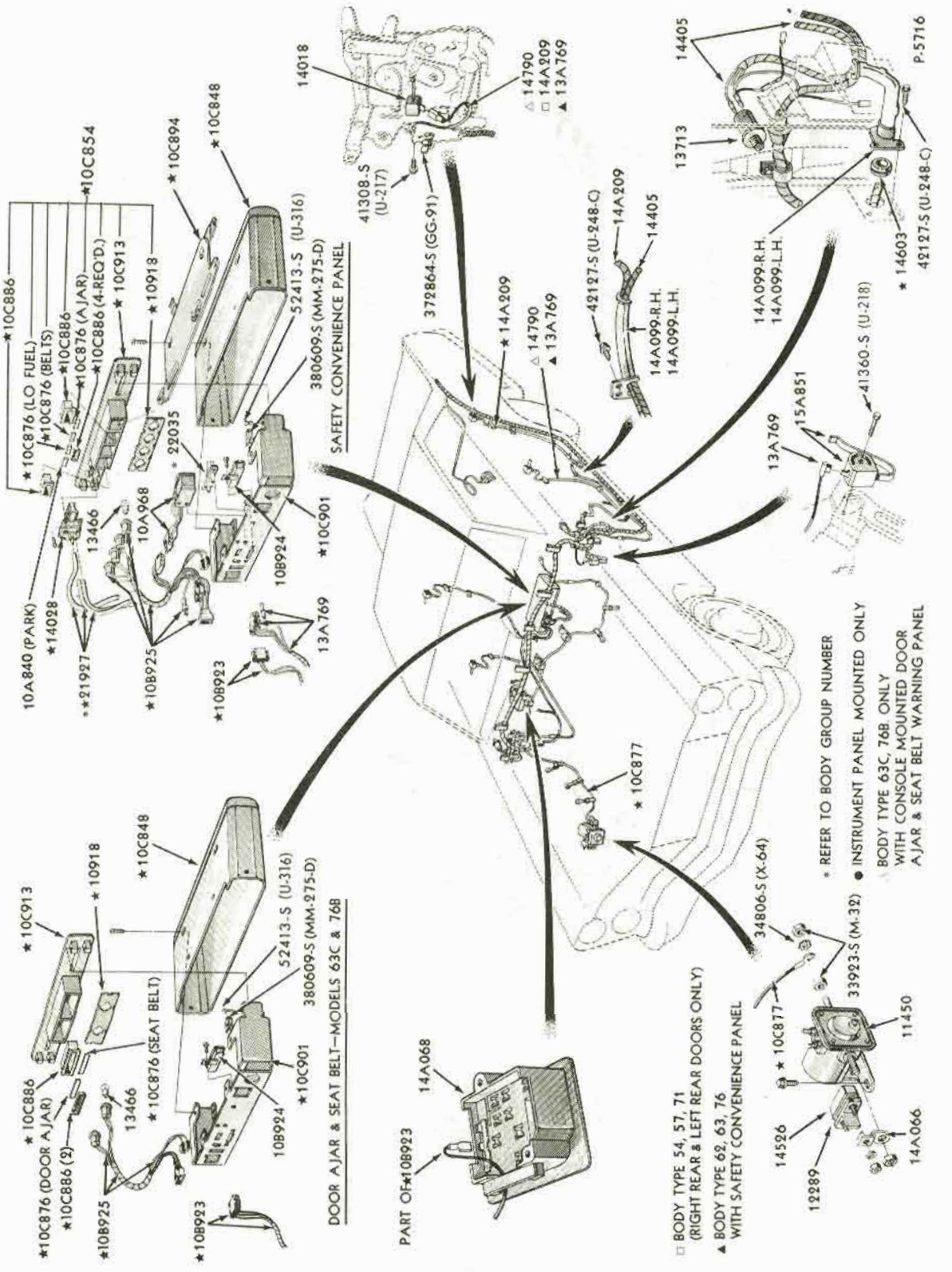

WARNING INDICATOR PANEL INSTALLATION
1967 FORD

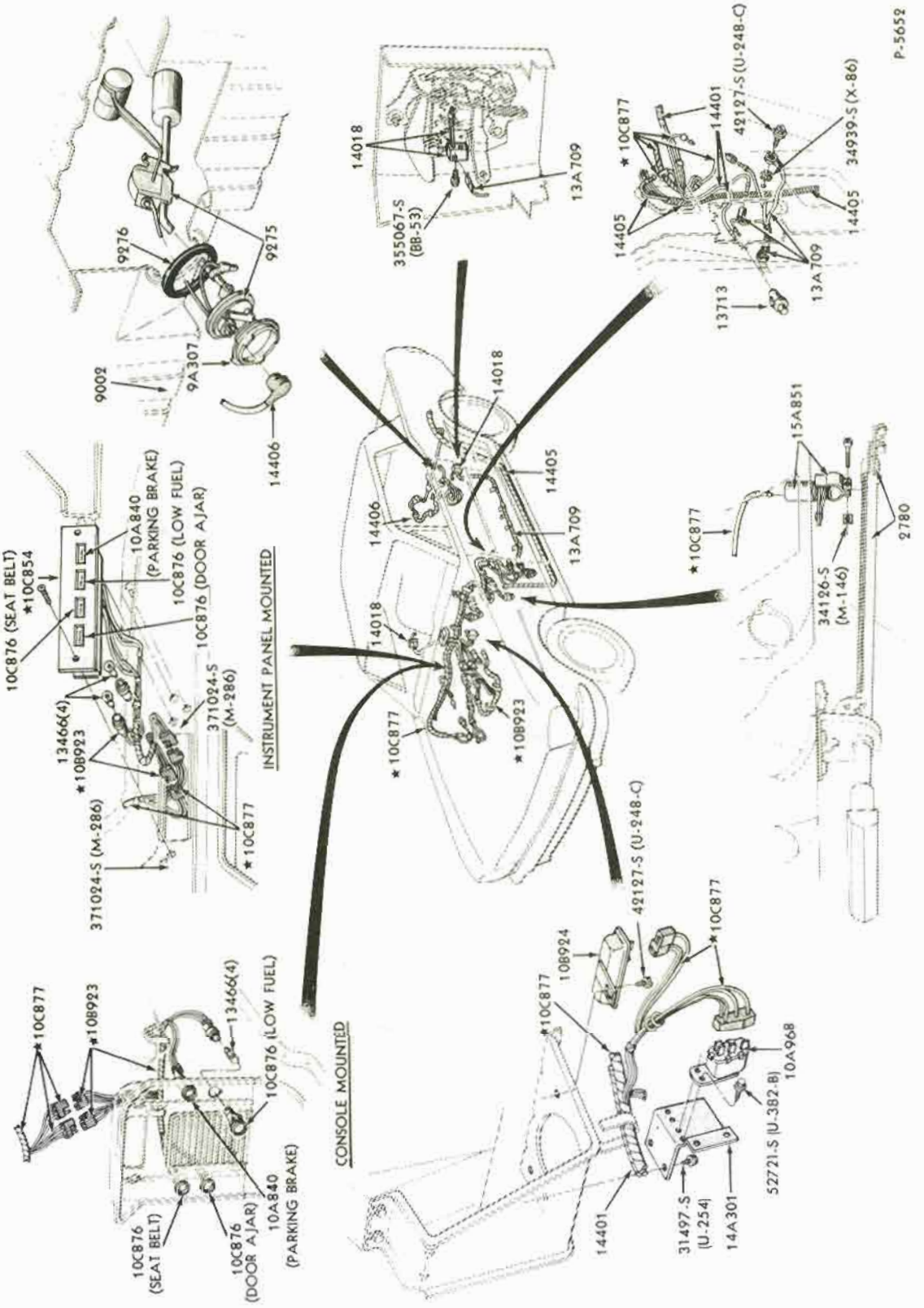

WARNING INDICATOR PANEL INSTALLATION
1967/68 MUSTANG

COPYRIGHT © 1975 — FORD MOTOR COMPANY — DEARBORN, MICHIGAN

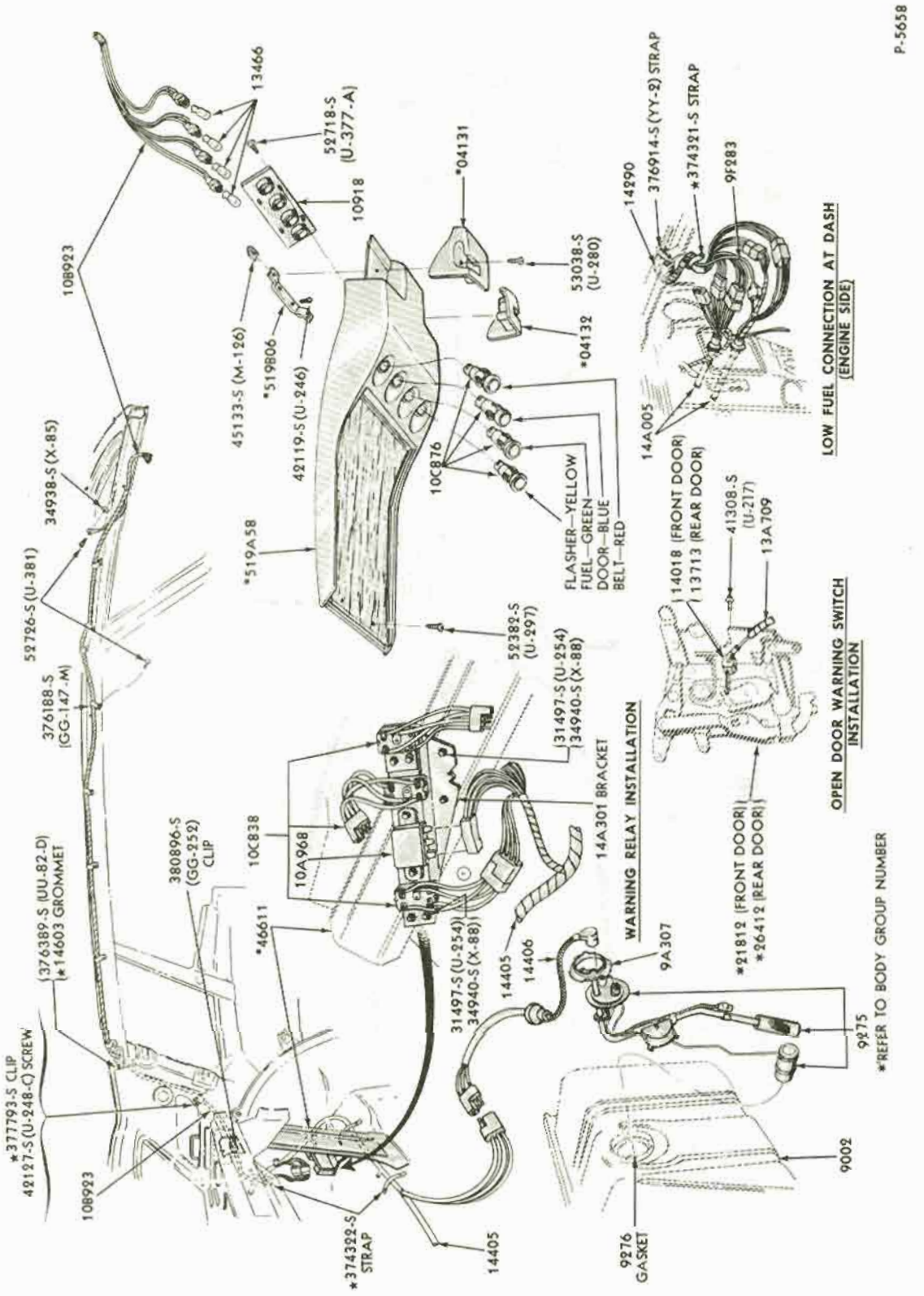

WARNING LAMP INSTALLATION - ROOF CONSOLE PANEL
1967/71 THUNDERBIRD

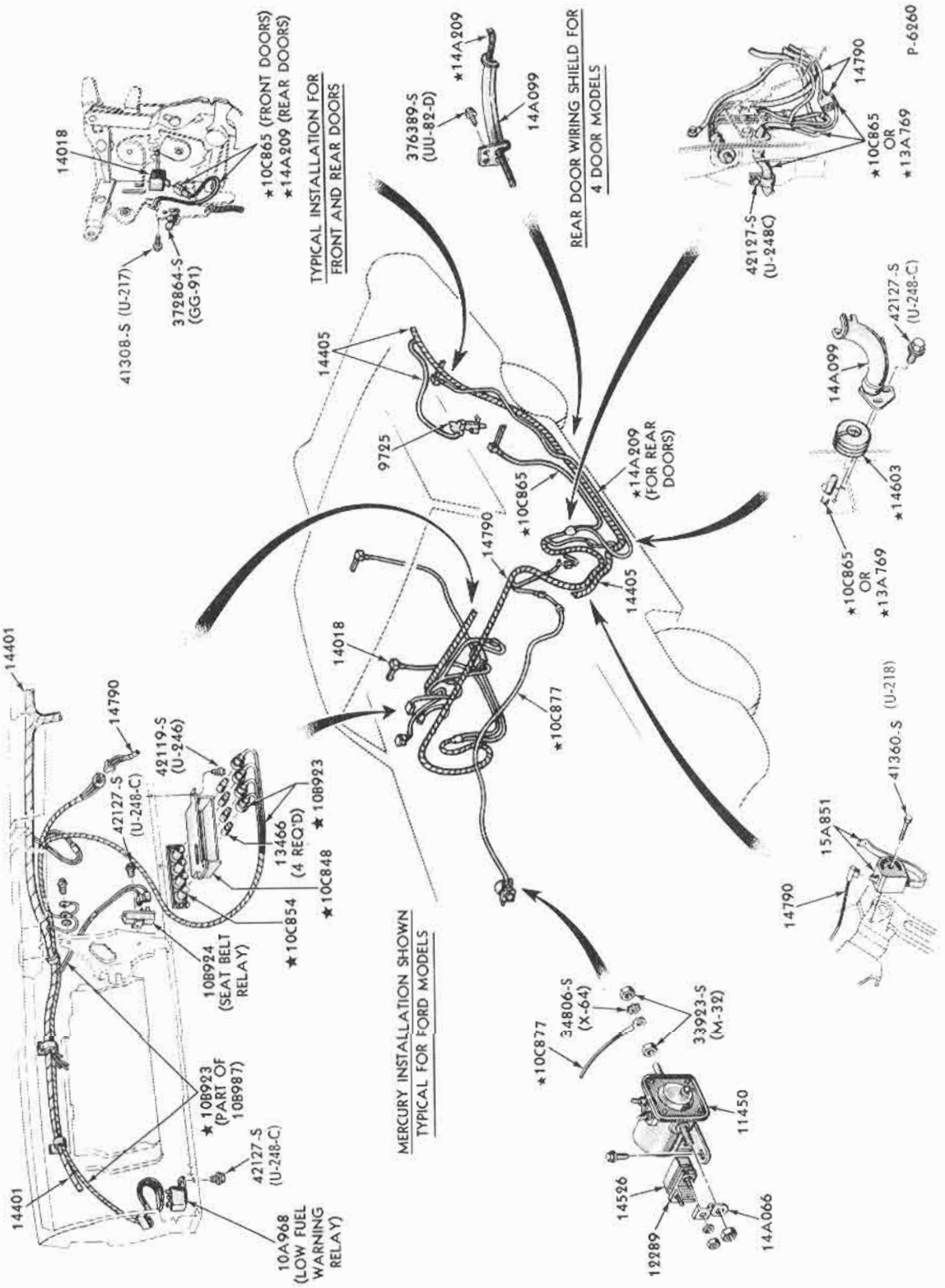

WARNING INDICATOR PANEL and WIRING SYSTEM
1968 FORD

COPYRIGHT © 1975 — FORD MOTOR COMPANY — DEARBORN, MICHIGAN

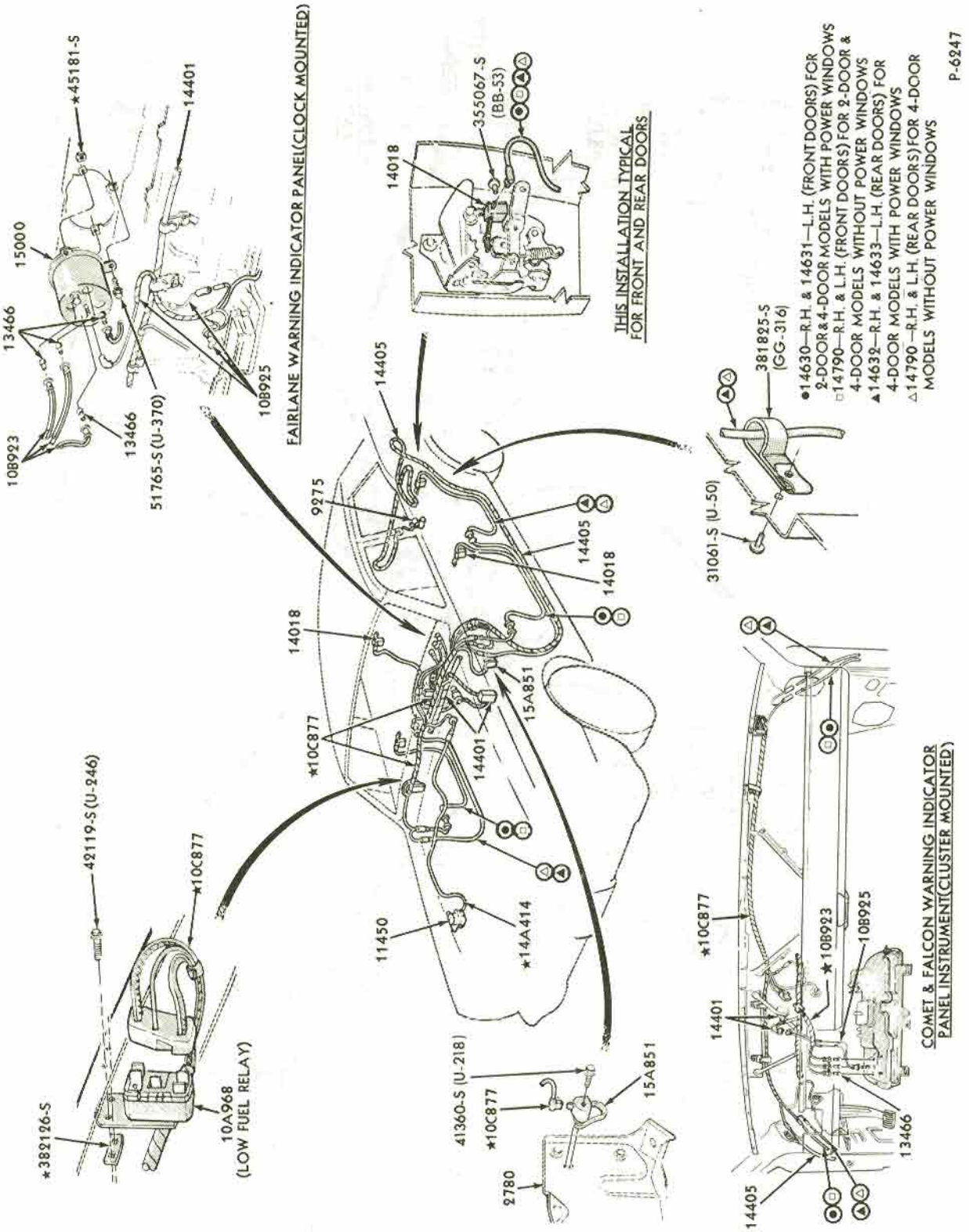

WARNING INDICATOR PANEL and WIRING SYSTEM
1968/69 FAIRLANE/TORINO 1968/70 FALCON

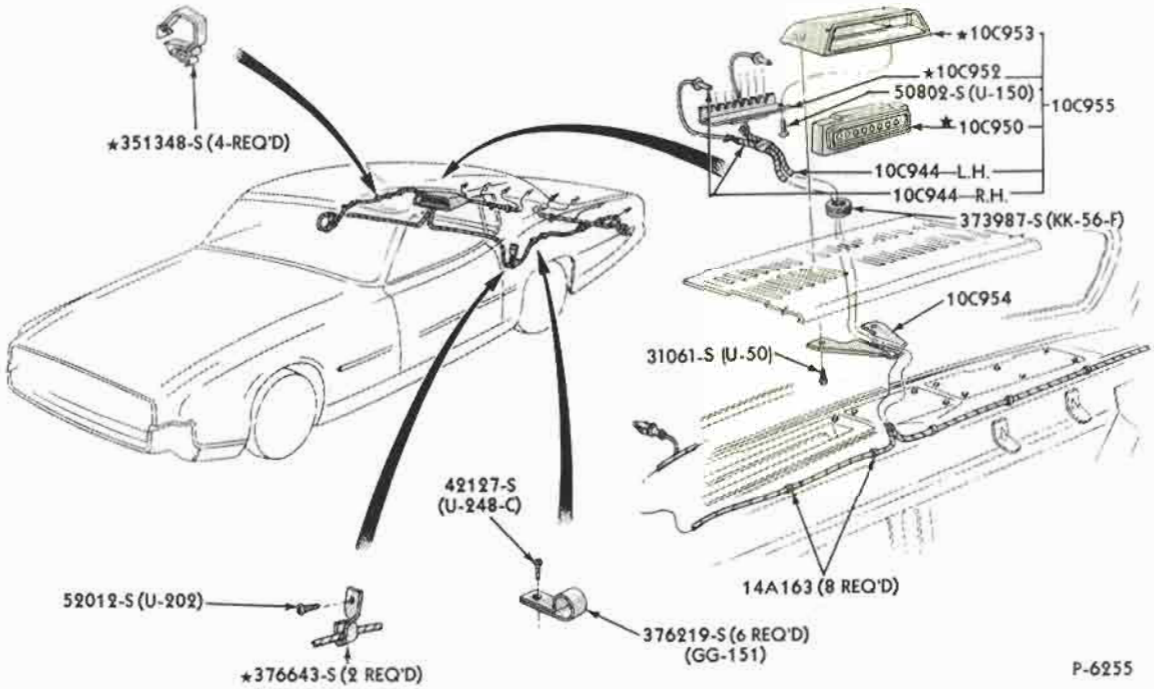

MONITOR SYSTEM - TAIL LAMP FAILURE
1968/69 THUNDERBIRD

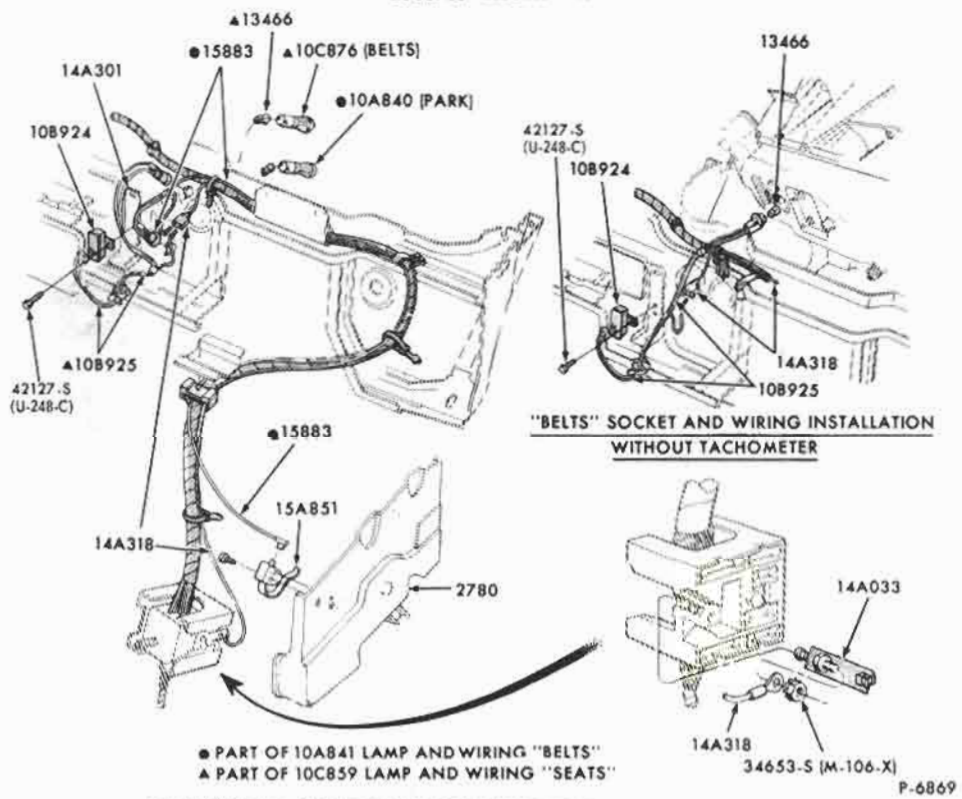

SEAT BELT and PARKING BRAKE WARNING LAMP INSTALLATION
1969/70 MUSTANG

COPYRIGHT © 1975— FORD MOTOR COMPANY —DEARBORN, MICHIGAN

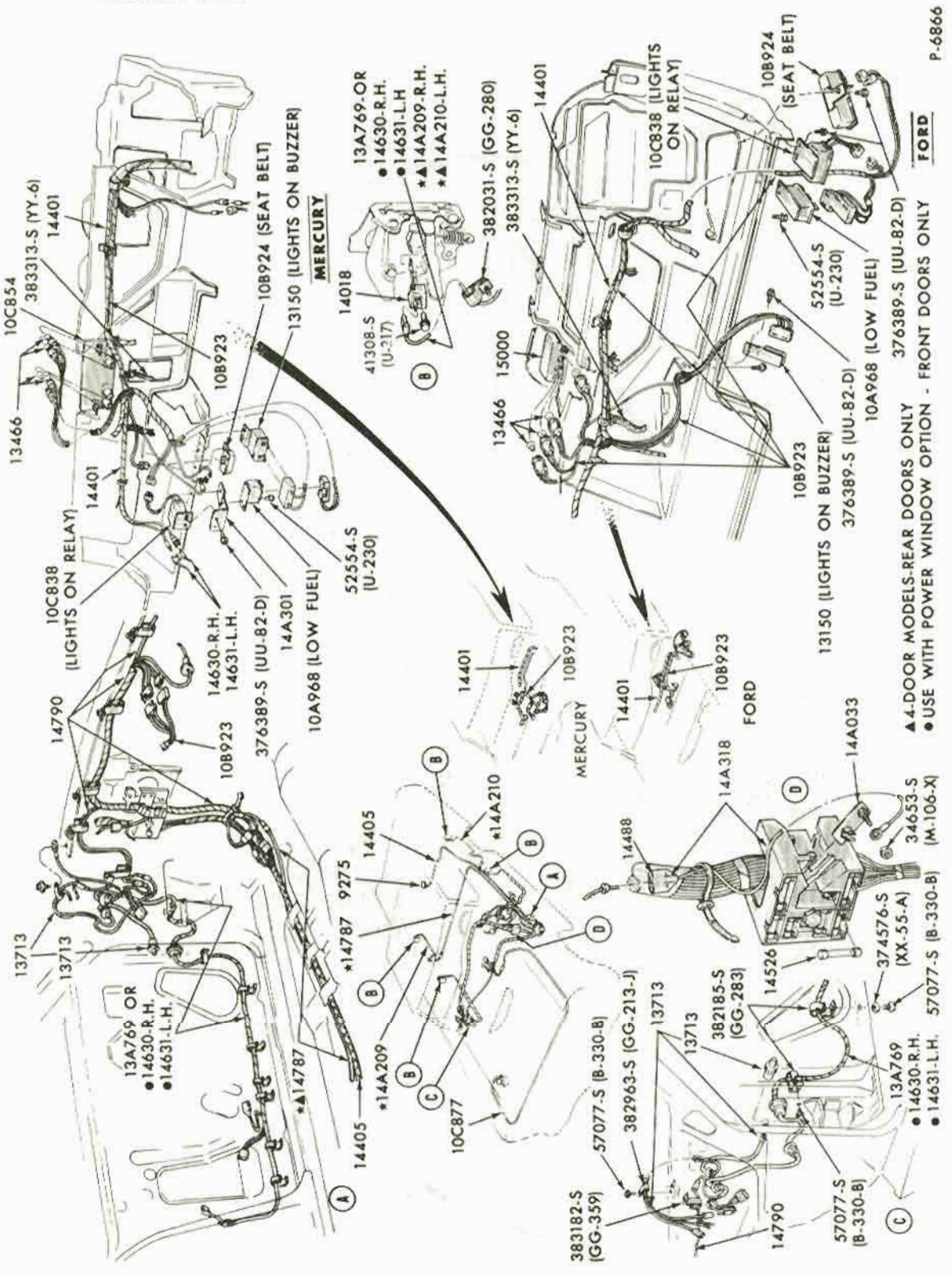

WARNING INDICATOR PANEL and WIRING SYSTEM
1969/70 FORD

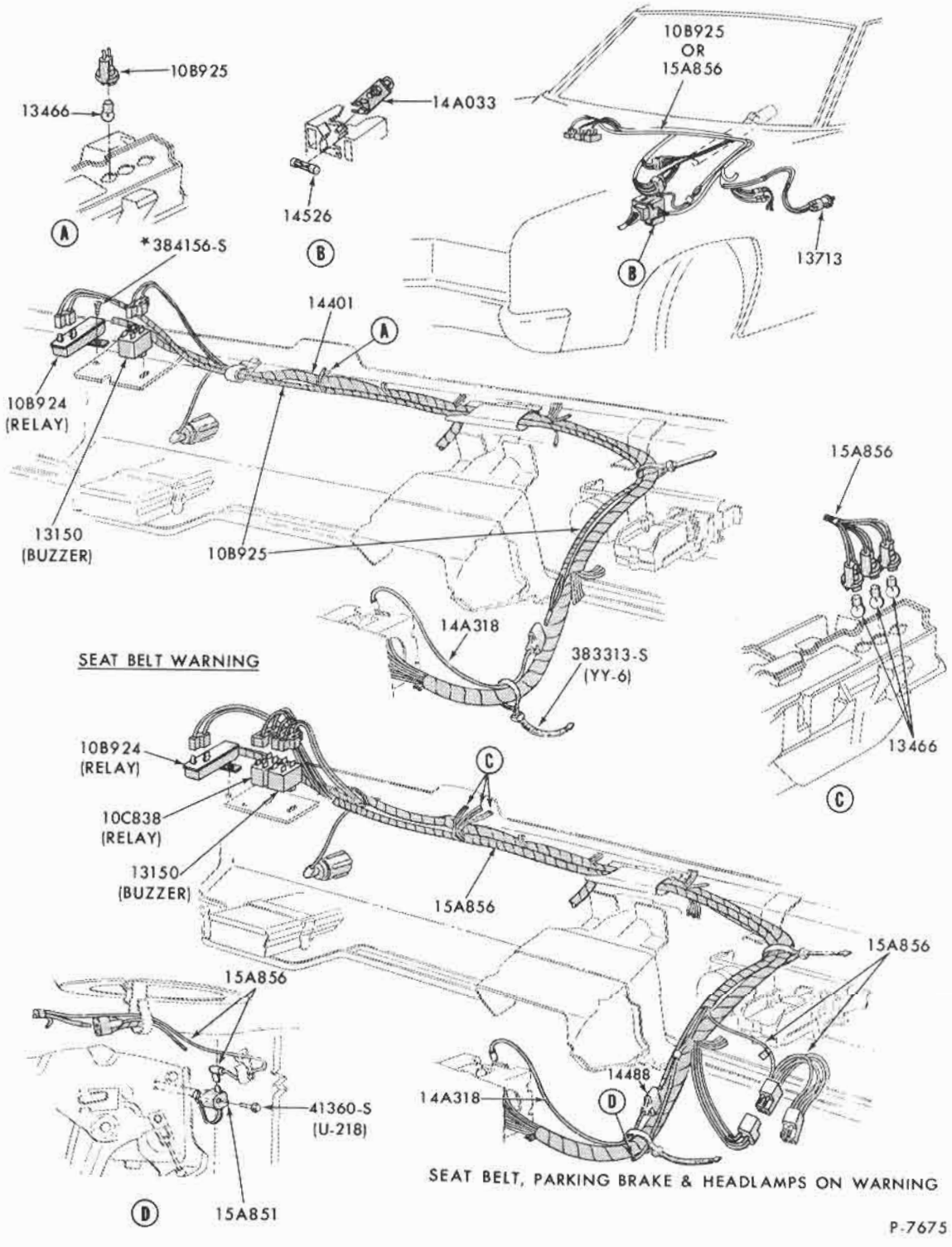

SEAT BELT, PARKING BRAKE & HEADLAMPS ON WARNING

P-7675

WARNING INDICATOR PANEL
1970/71 FAIRLANE/TORINO

COPYRIGHT © 1975 — FORD MOTOR COMPANY — DEARBORN, MICHIGAN

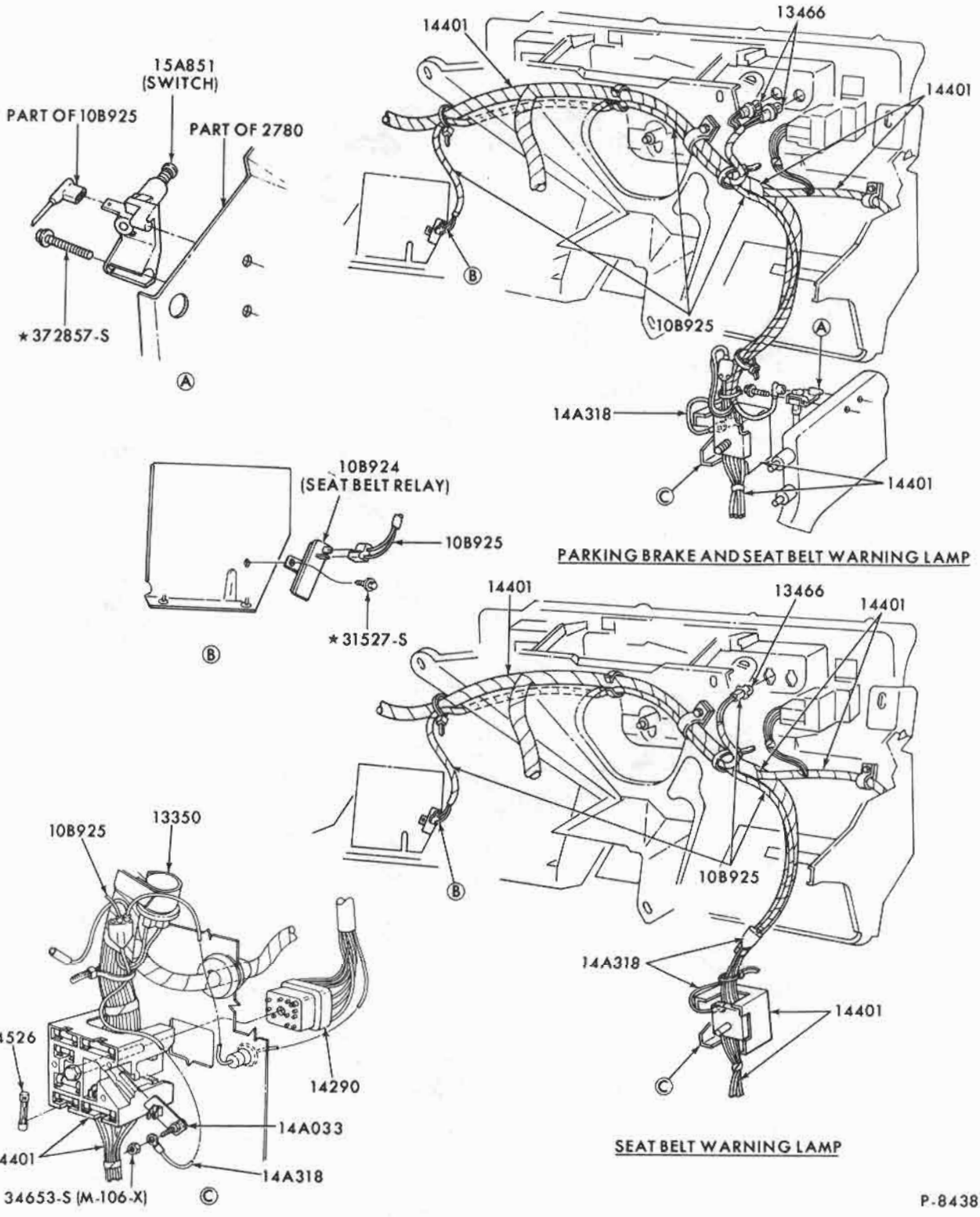

P-8438

SEAT BELT, PARKING BRAKE WARNING LAMP and RELATED PARTS
1971 FORD

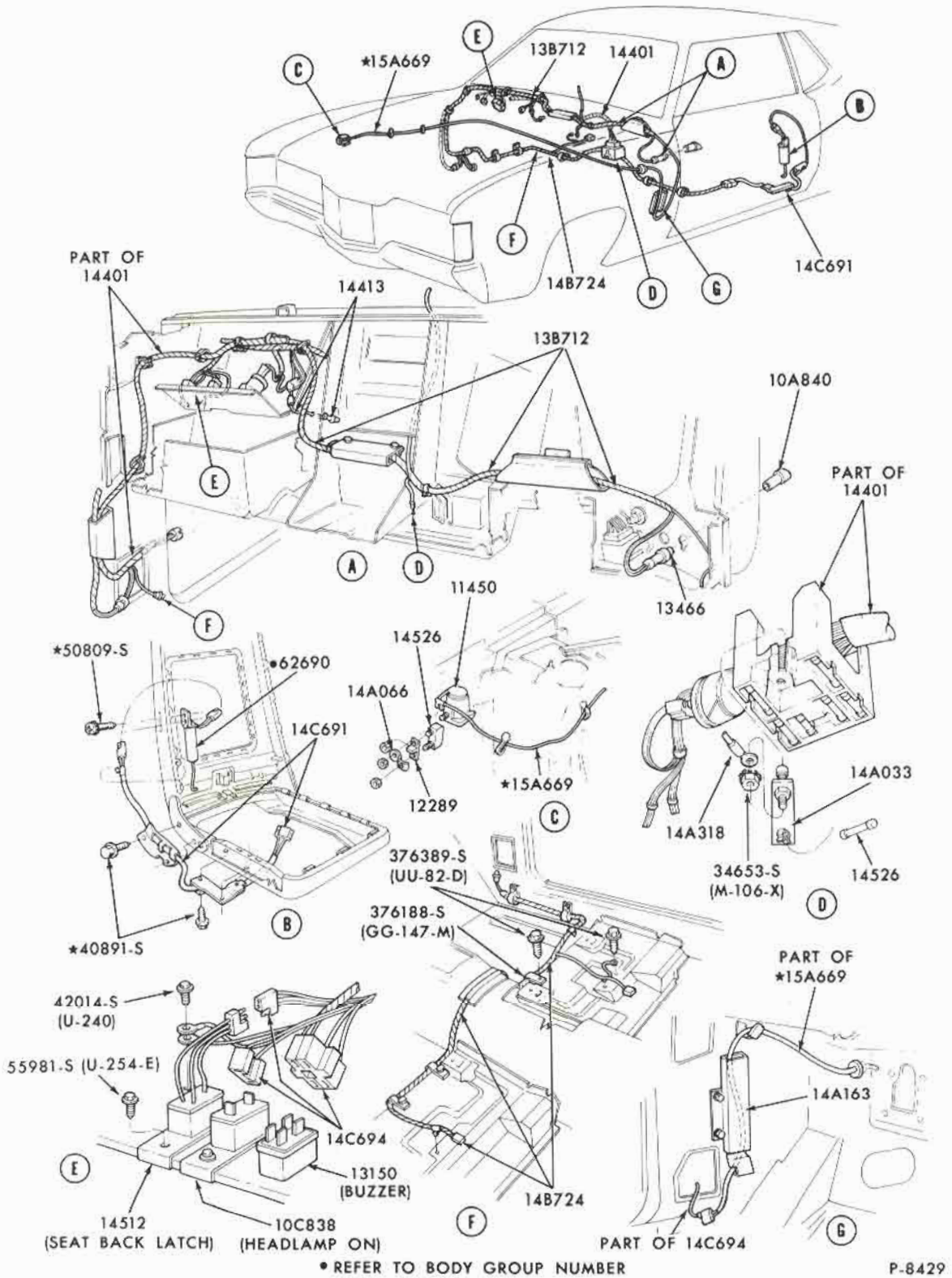

• REFER TO BODY GROUP NUMBER

P-8429

WARNING INDICATOR SYSTEM-SAFETY CONVENIENCE
1971/72 MUSTANG

COPYRIGHT © 1975 — FORD MOTOR COMPANY — DEARBORN, MICHIGAN

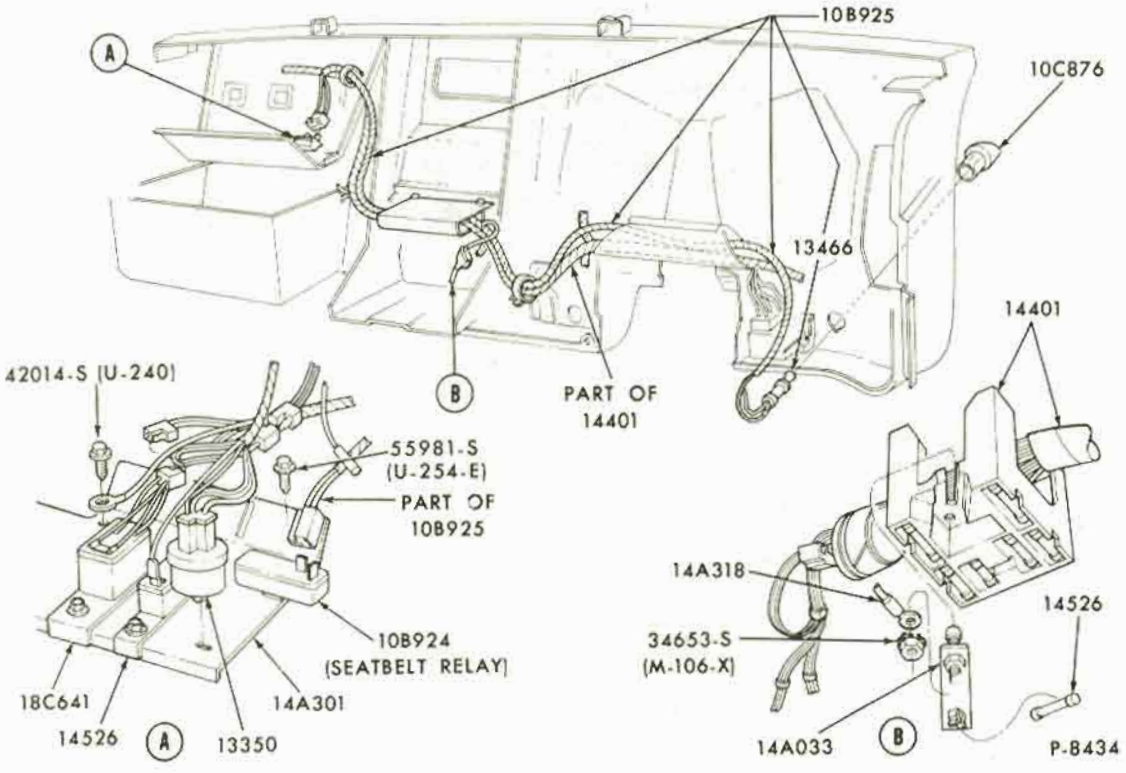

SEAT BELT WARNING LAMP INSTALLATION
1971/72 MUSTANG

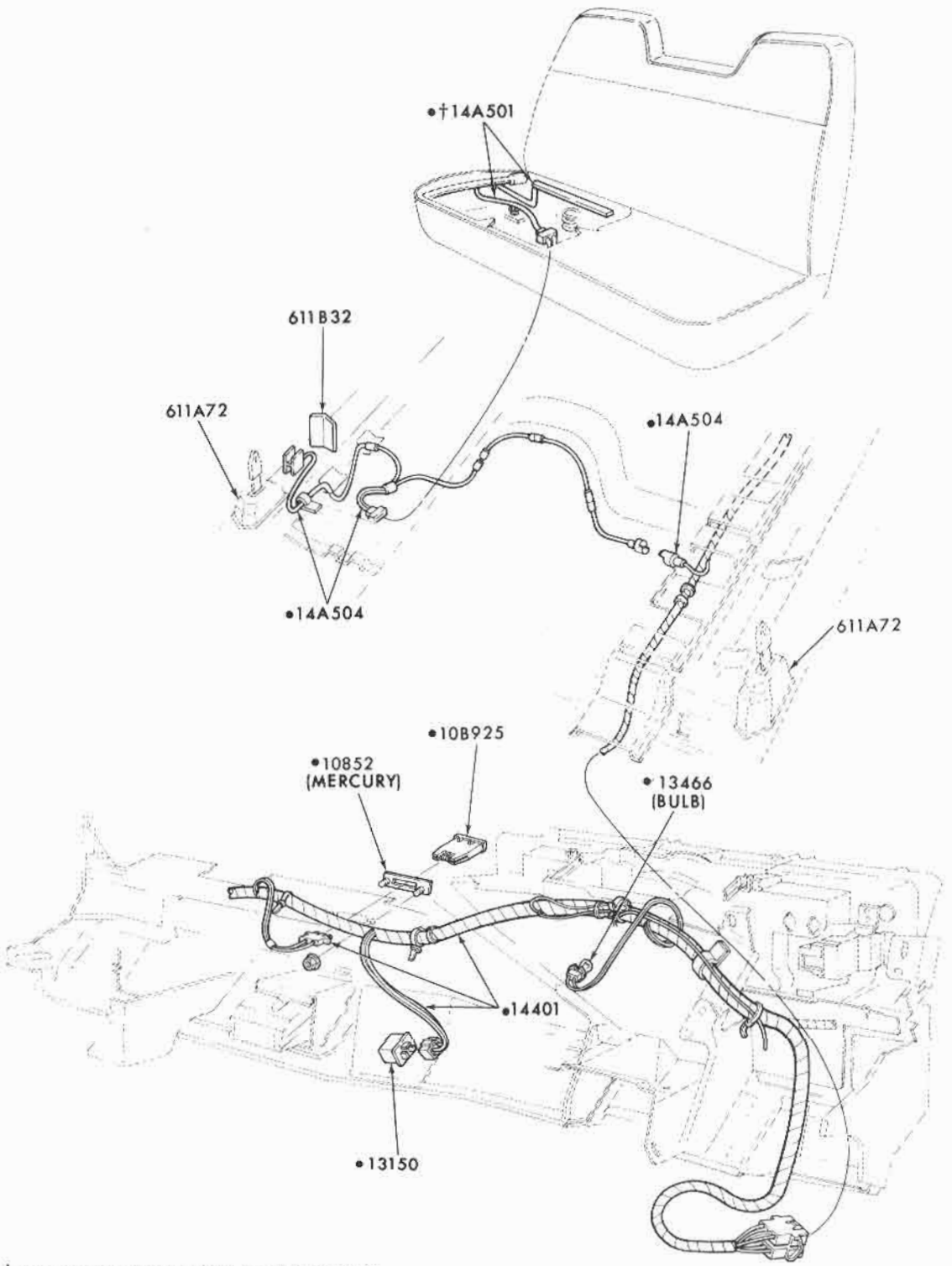

† ALSO SERVICED IN PAD-GROUP▲60050
• REFER TO CHASSIS SECTION
▲REFER TO SOFT TRIM SECTION

P-9260

SEAT BELT WARNING SYSTEM
1972 FORD

COPYRIGHT © 1975 — FORD MOTOR COMPANY — DEARBORN, MICHIGAN

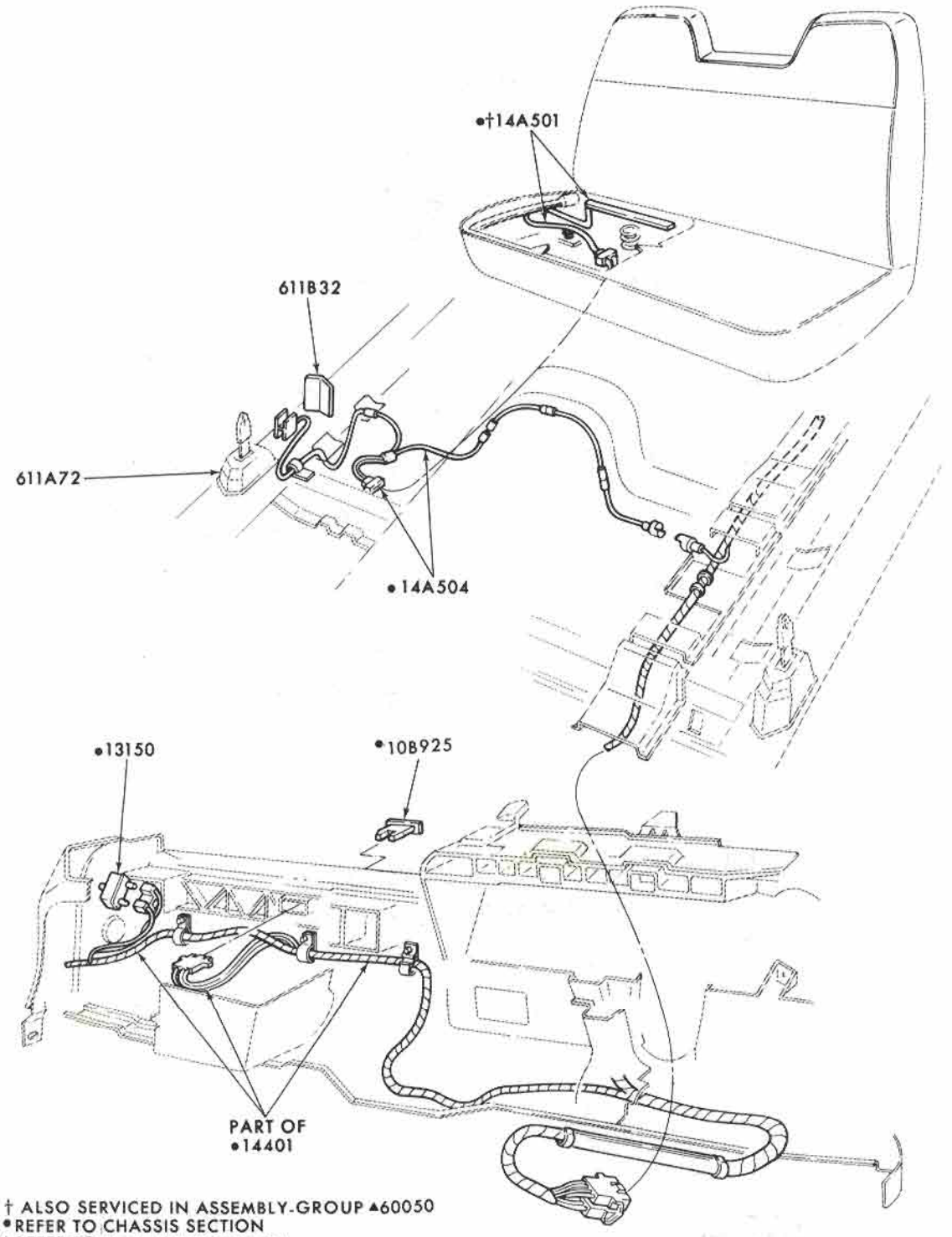

† ALSO SERVICED IN ASSEMBLY-GROUP ▲60050
• REFER TO CHASSIS SECTION
▲ REFER TO SOFT TRIM SECTION

P-9259

SEAT BELT WARNING SYSTEM
1972 TORINO

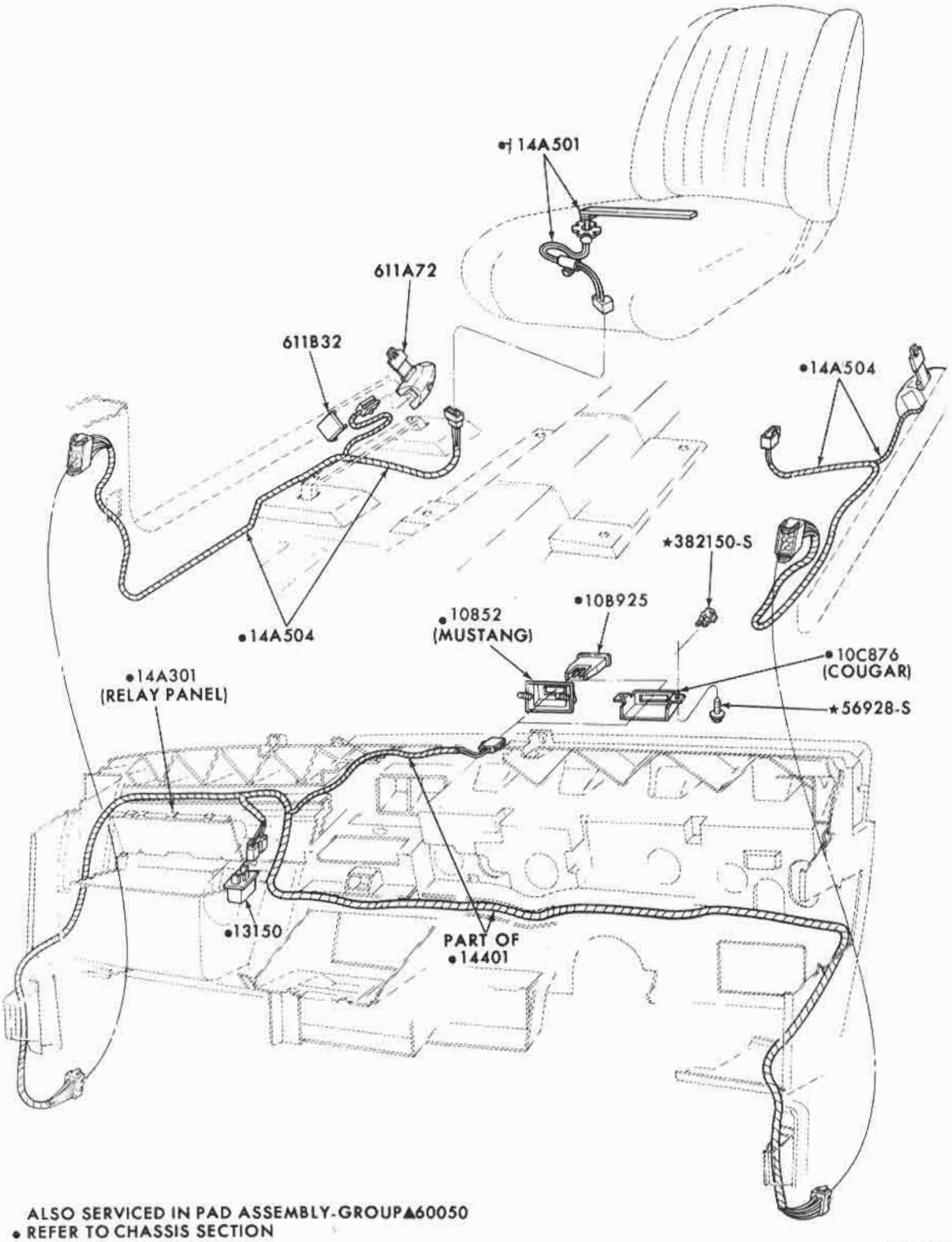

ALSO SERVICED IN PAD ASSEMBLY-GROUP▲60050
• REFER TO CHASSIS SECTION
▲REFER TO BODY SECTION

P-9266

SEAT BELT WARNING SYSTEM
1972 MUSTANG

COPYRIGHT © 1975 — FORD MOTOR COMPANY — DEARBORN, MICHIGAN

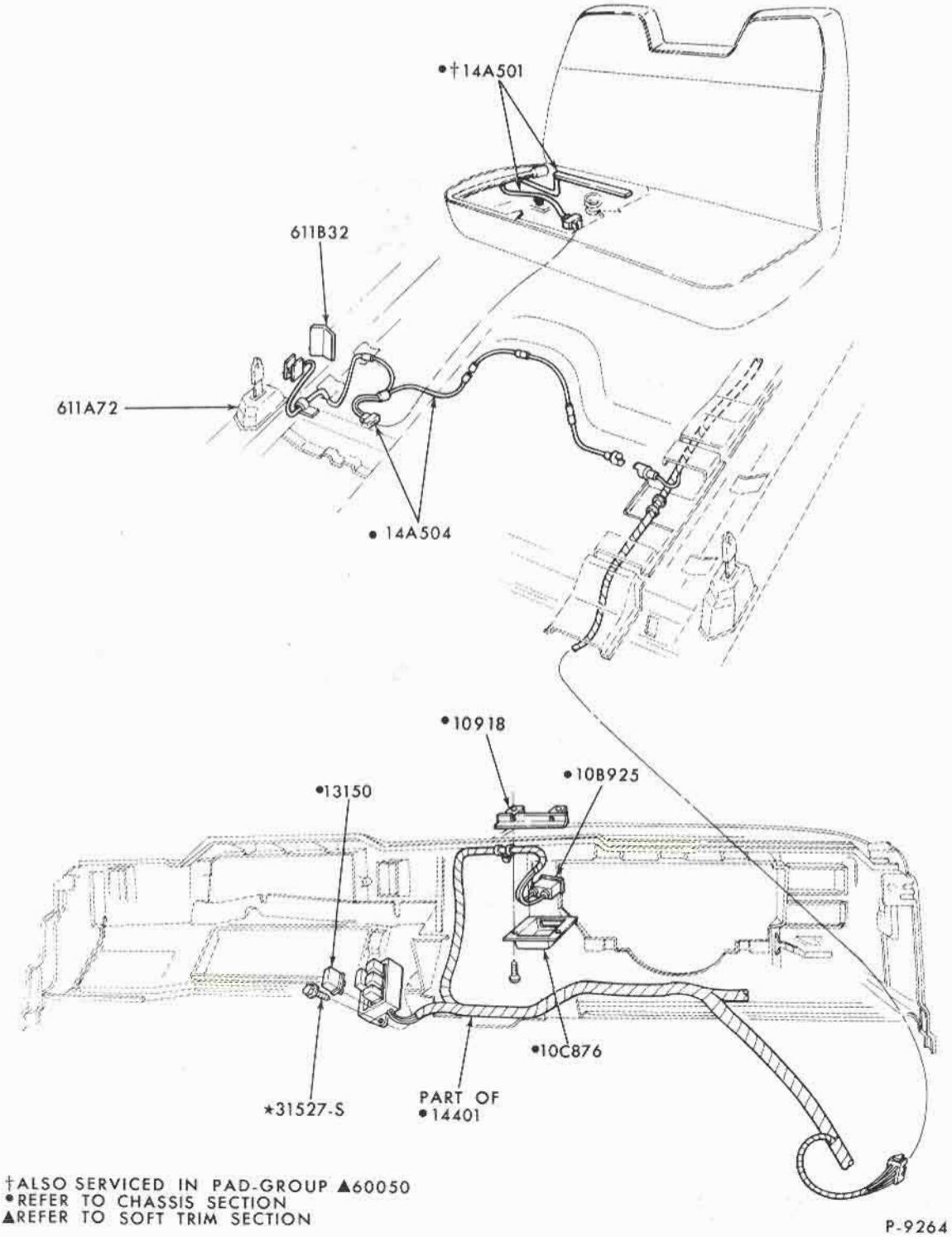

†ALSO SERVICED IN PAD-GROUP ▲60050
•REFER TO CHASSIS SECTION
▲REFER TO SOFT TRIM SECTION

P-9264

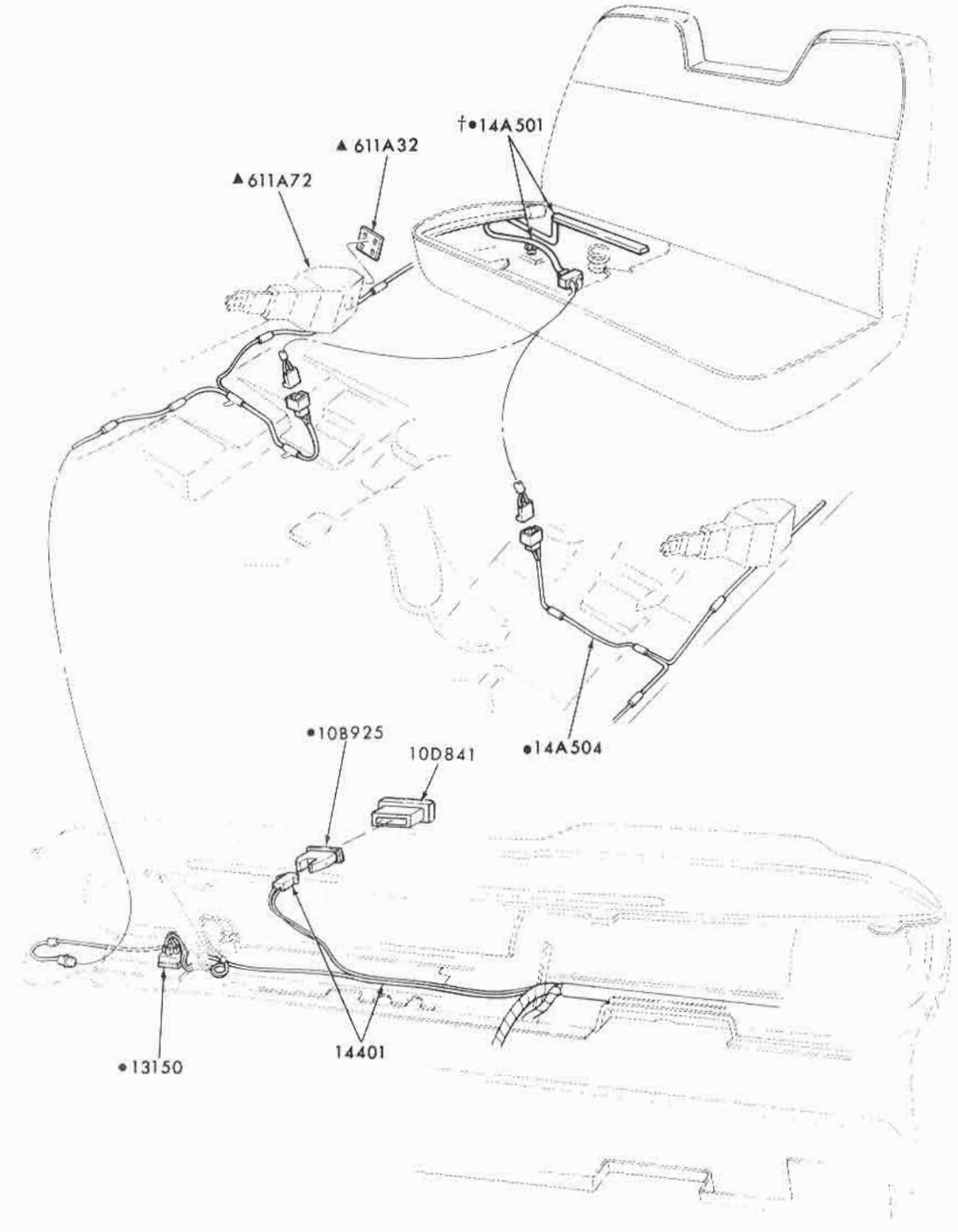

†ALSO SERVICED IN PAD-GROUP ▲60050
• REFER TO CHASSIS SECTION
▲ REFER TO SOFT TRIM SECTION

P-9261

SEAT BELT WARNING SYSTEM
1972 MAVERICK

COPYRIGHT © 1975 — FORD MOTOR COMPANY — DEARBORN, MICHIGAN

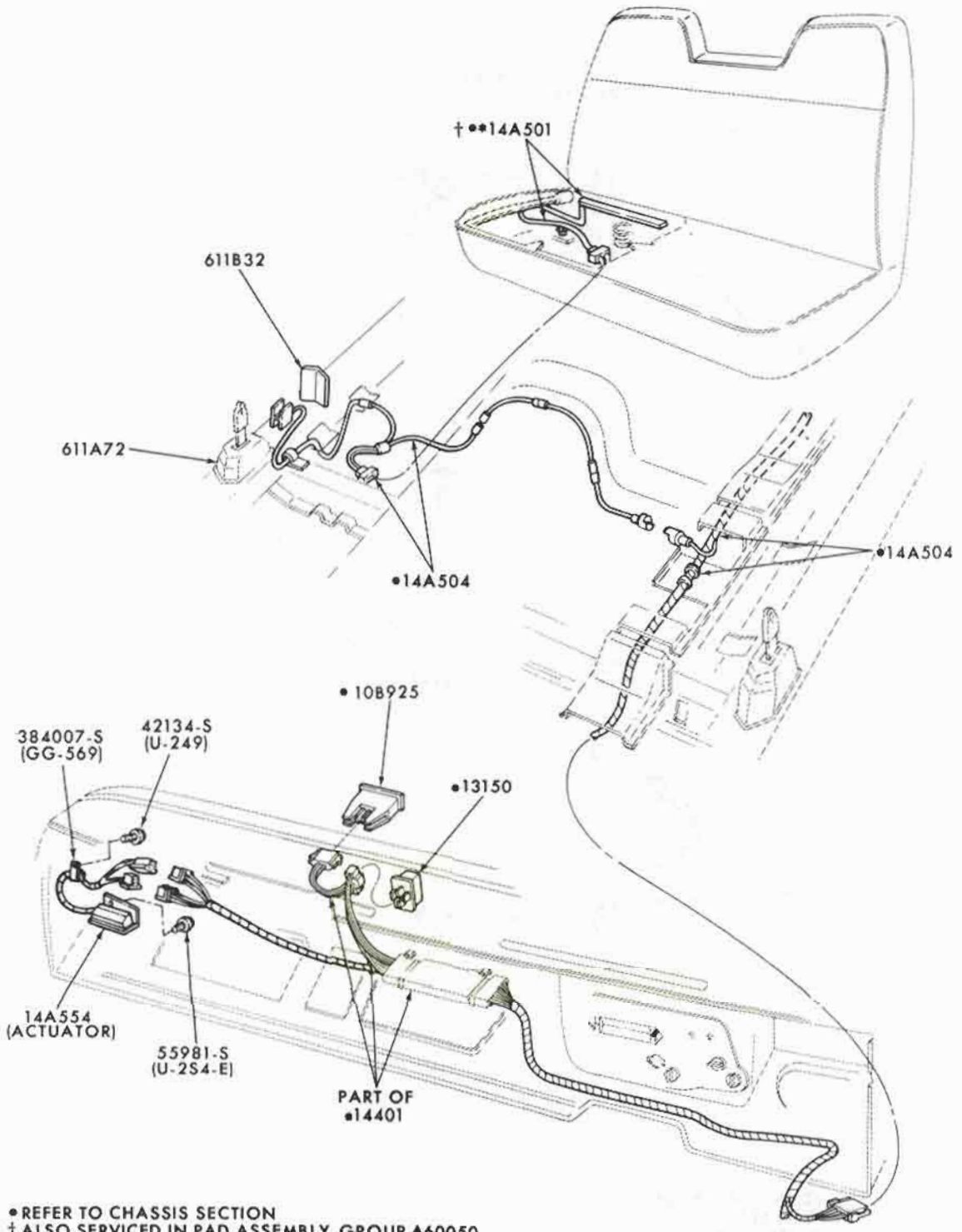

● REFER TO CHASSIS SECTION
† ALSO SERVICED IN PAD ASSEMBLY-GROUP ▲60050
▲ REFER TO SOFT TRIM SECTION

P-9262

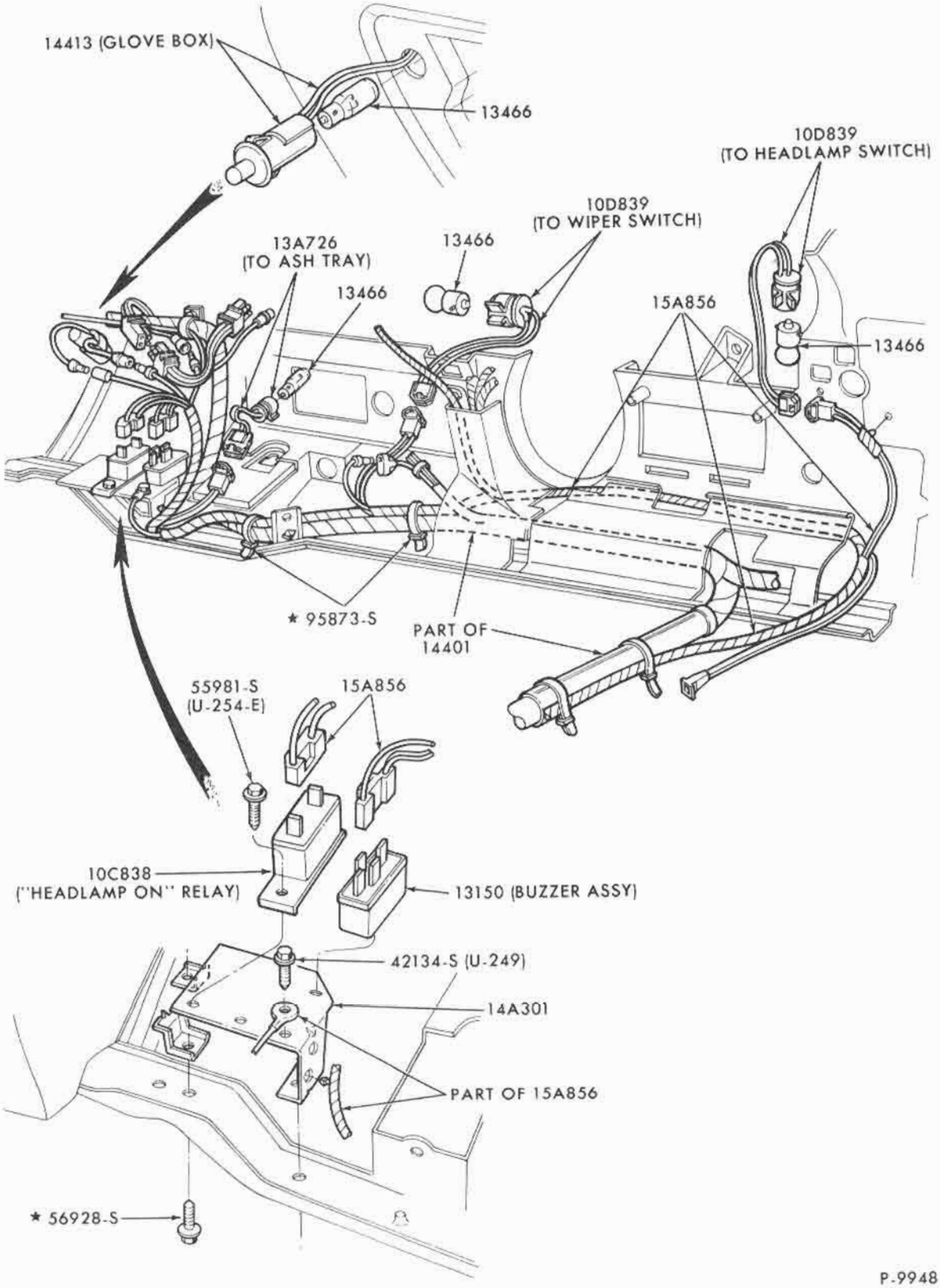

P-9948

HEADLAMP ON WARNING INDICATOR and VISIBILITY GROUP WIRING
1972 TORINO

COPYRIGHT © 1975 — FORD MOTOR COMPANY — DEARBORN, MICHIGAN

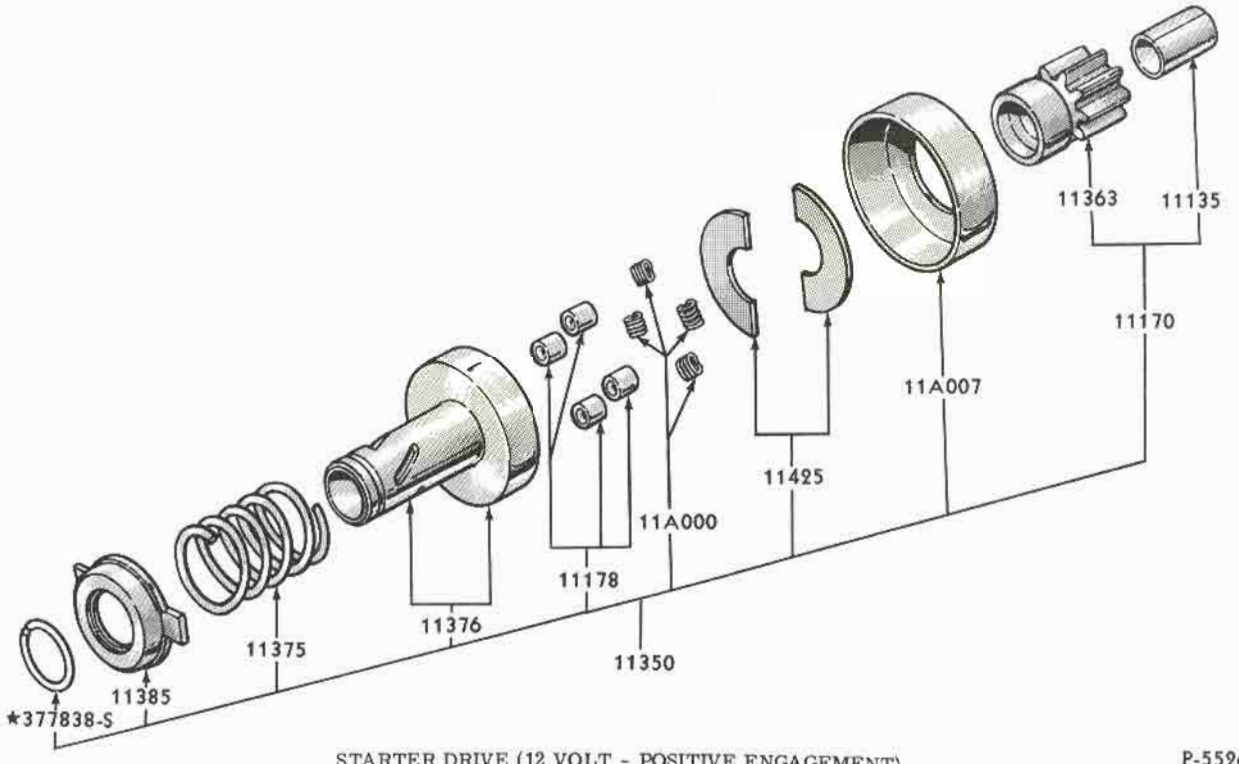

STARTER DRIVE (12 VOLT - POSITIVE ENGAGEMENT)
1965/72 FORD

P-5526

COPYRIGHT © 1975 — FORD MOTOR COMPANY — DEARBORN, MICHIGAN

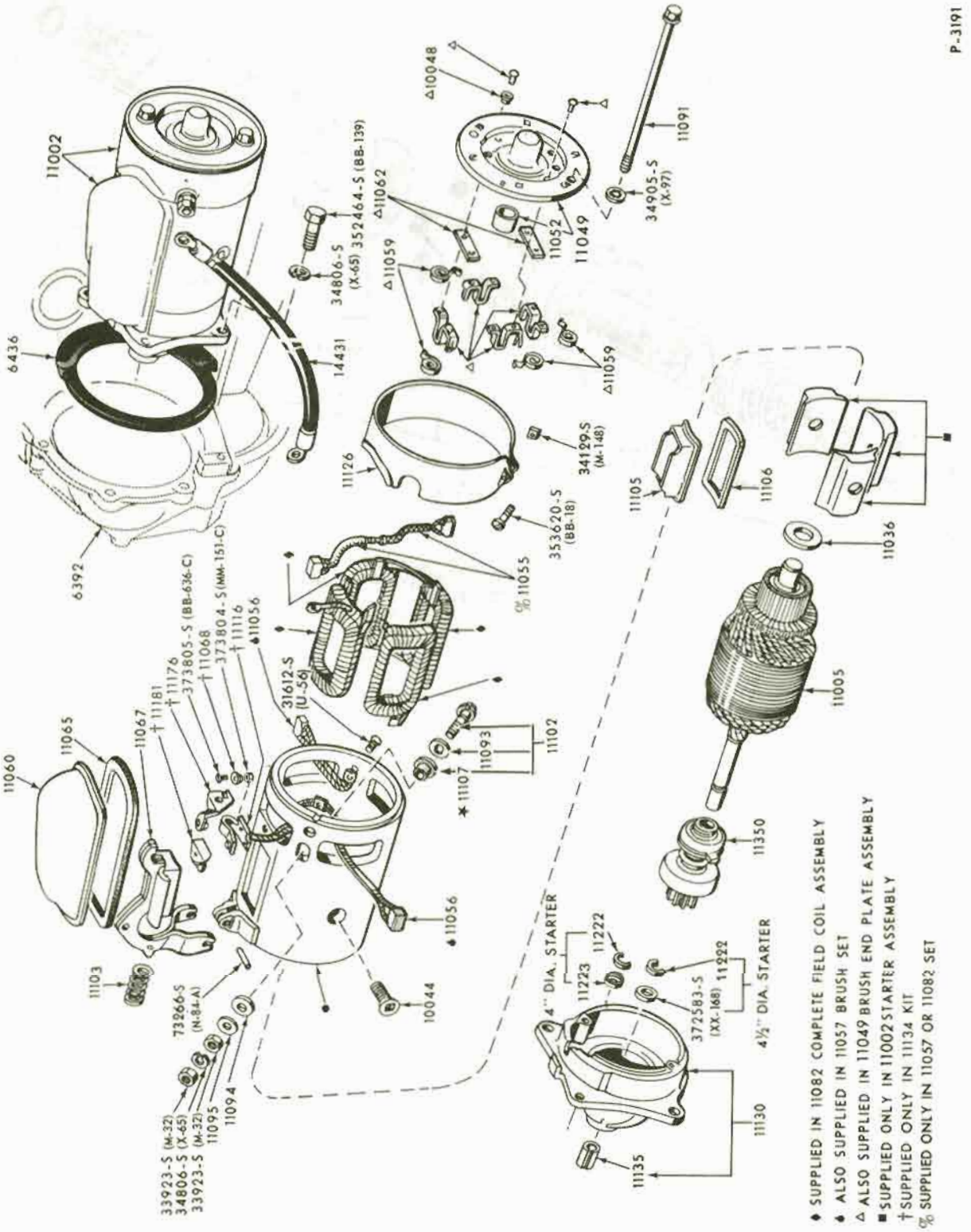

STARTER and DRIVE ASSY. - POSITIVE ENGAGEMENT
1965/72

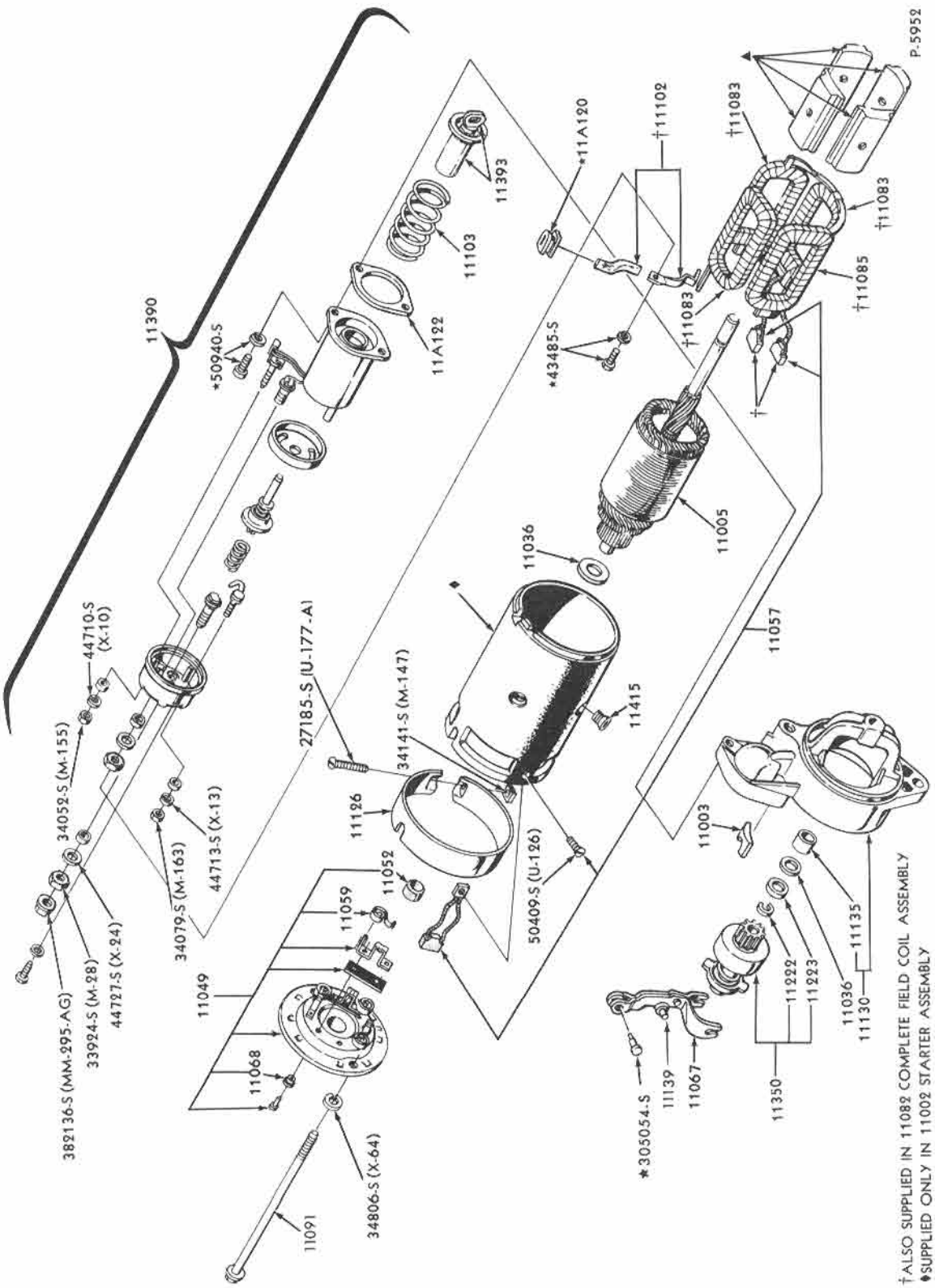

STARTER and SOLENOID (FORD 12 VOLT - POSITIVE ENGAGEMENT)
1968/72

COPYRIGHT © 1975 — FORD MOTOR COMPANY — DEARBORN, MICHIGAN

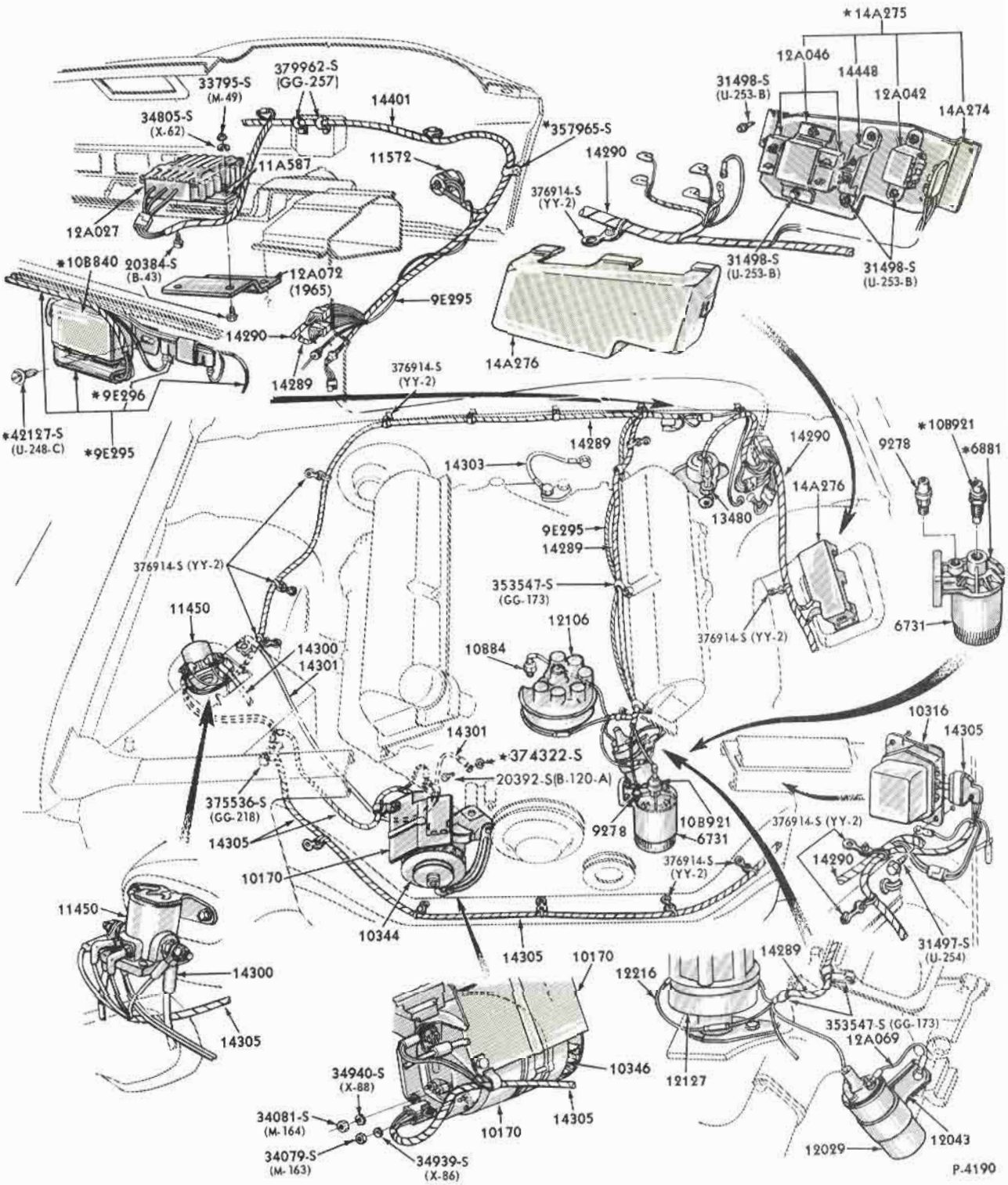

* USED WITH ENGINE OIL TEMPERATURE WARNING SYSTEM

TRANSISTORIZED IGNITION SYSTEM, OIL TEMPERATURE WARNING SYSTEM and RELATED PARTS
1965 FORD (8 CYLINDER 427 ENGINE)

COPYRIGHT © 1975 — FORD MOTOR COMPANY — DEARBORN, MICHIGAN

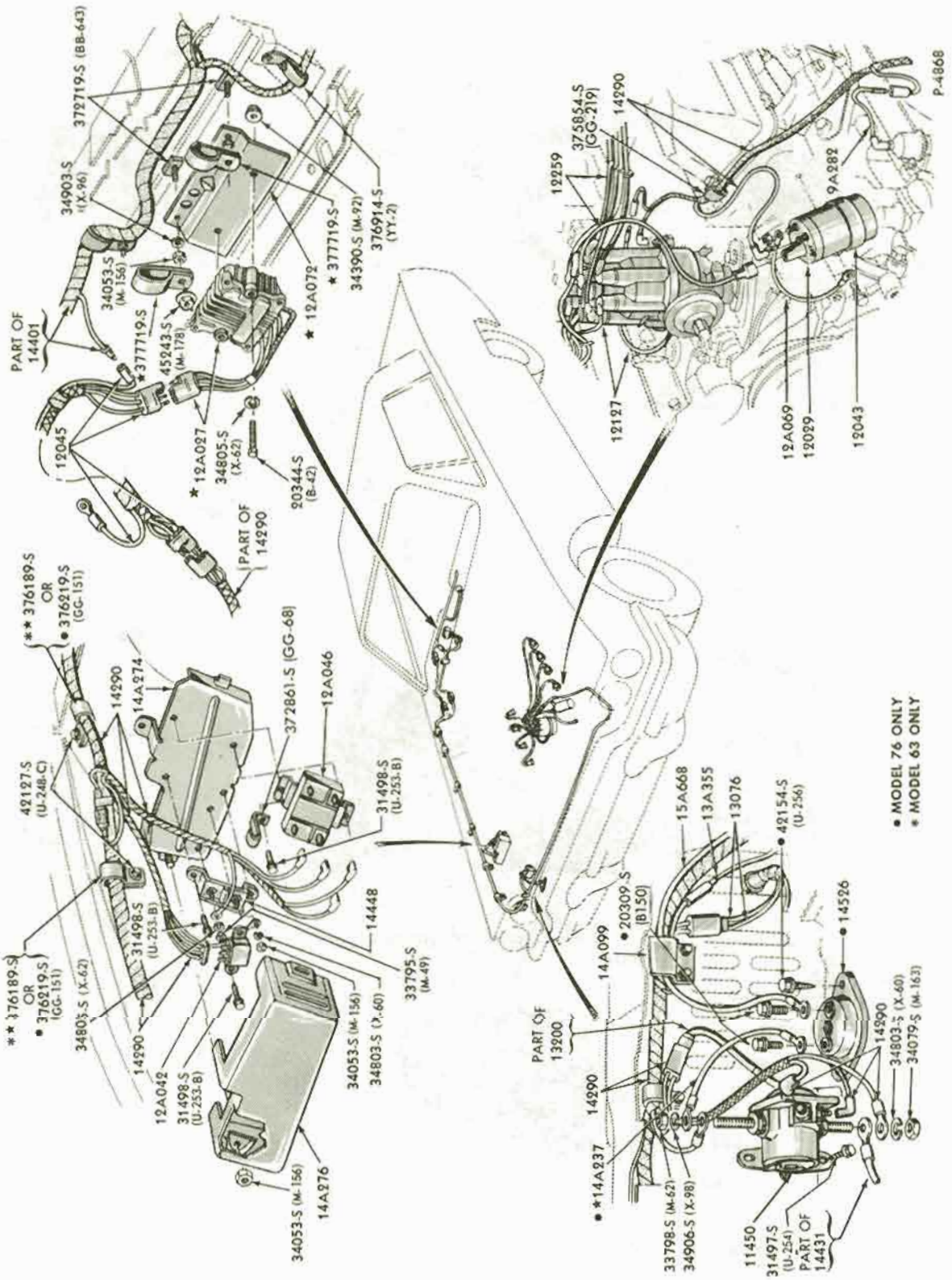

TRANSISTORIZED IGNITION SYSTEM and RELATED PARTS
1965/66 THUNDERBIRD (8 CYLINDER 390, 428 ENGINE)

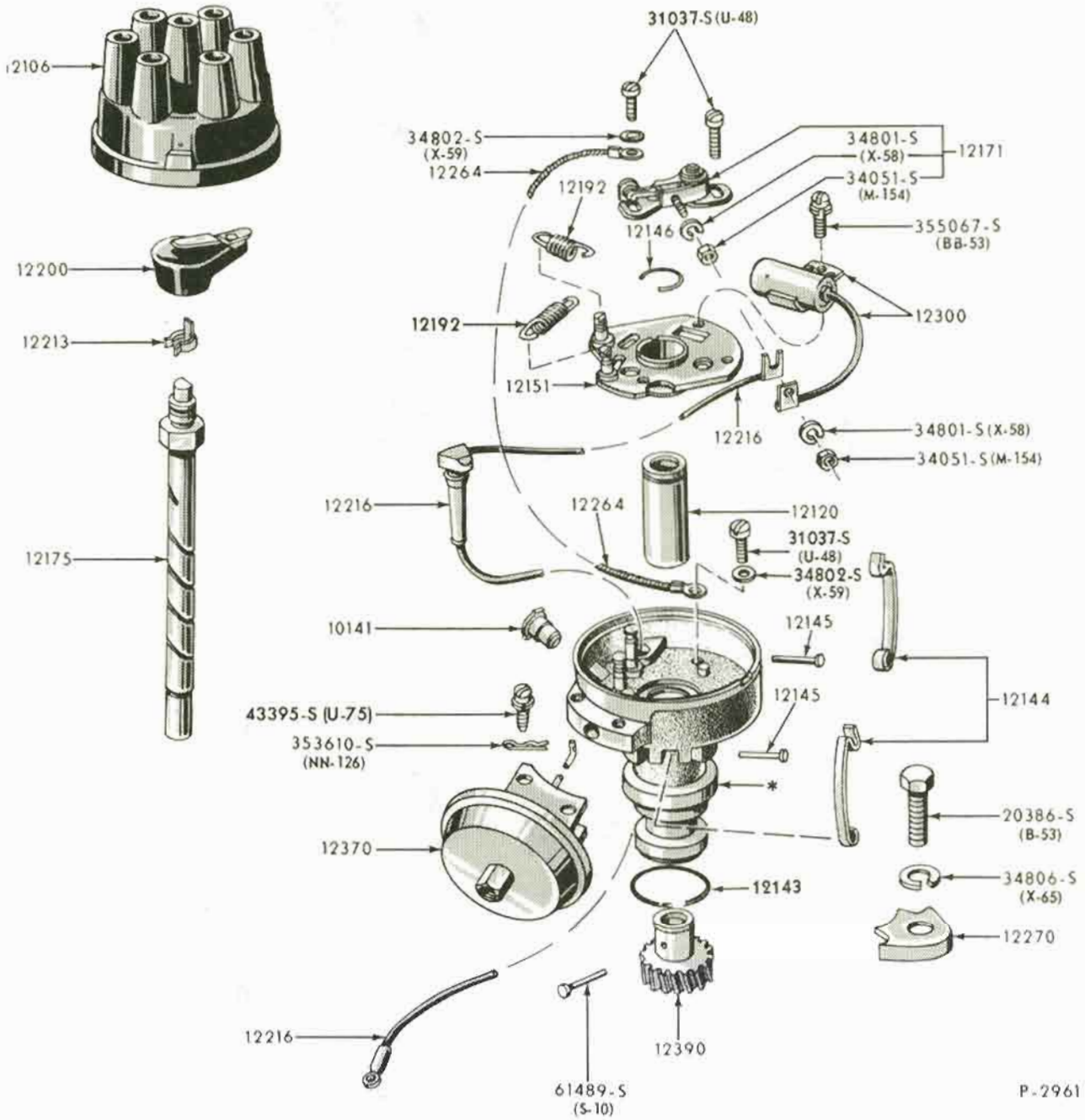

DISTRIBUTOR
1965/69 6 CYLINDER 170,200 ENGINES

COPYRIGHT © 1975 — FORD MOTOR COMPANY — DEARBORN, MICHIGAN

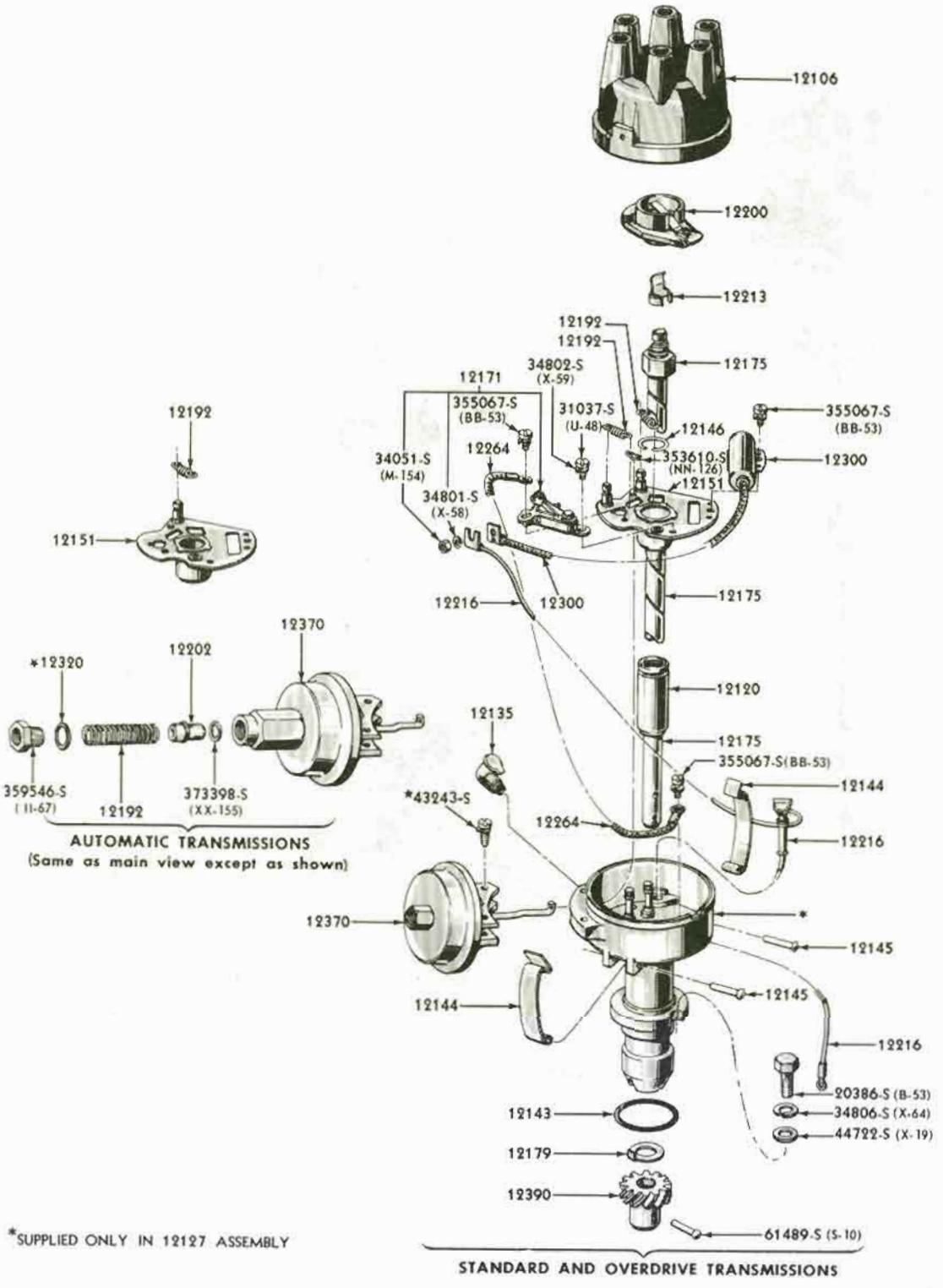

*SUPPLIED ONLY IN 12127 ASSEMBLY

P-3475

DISTRIBUTOR
1965/67 6 CYLINDER 240 ENGINE

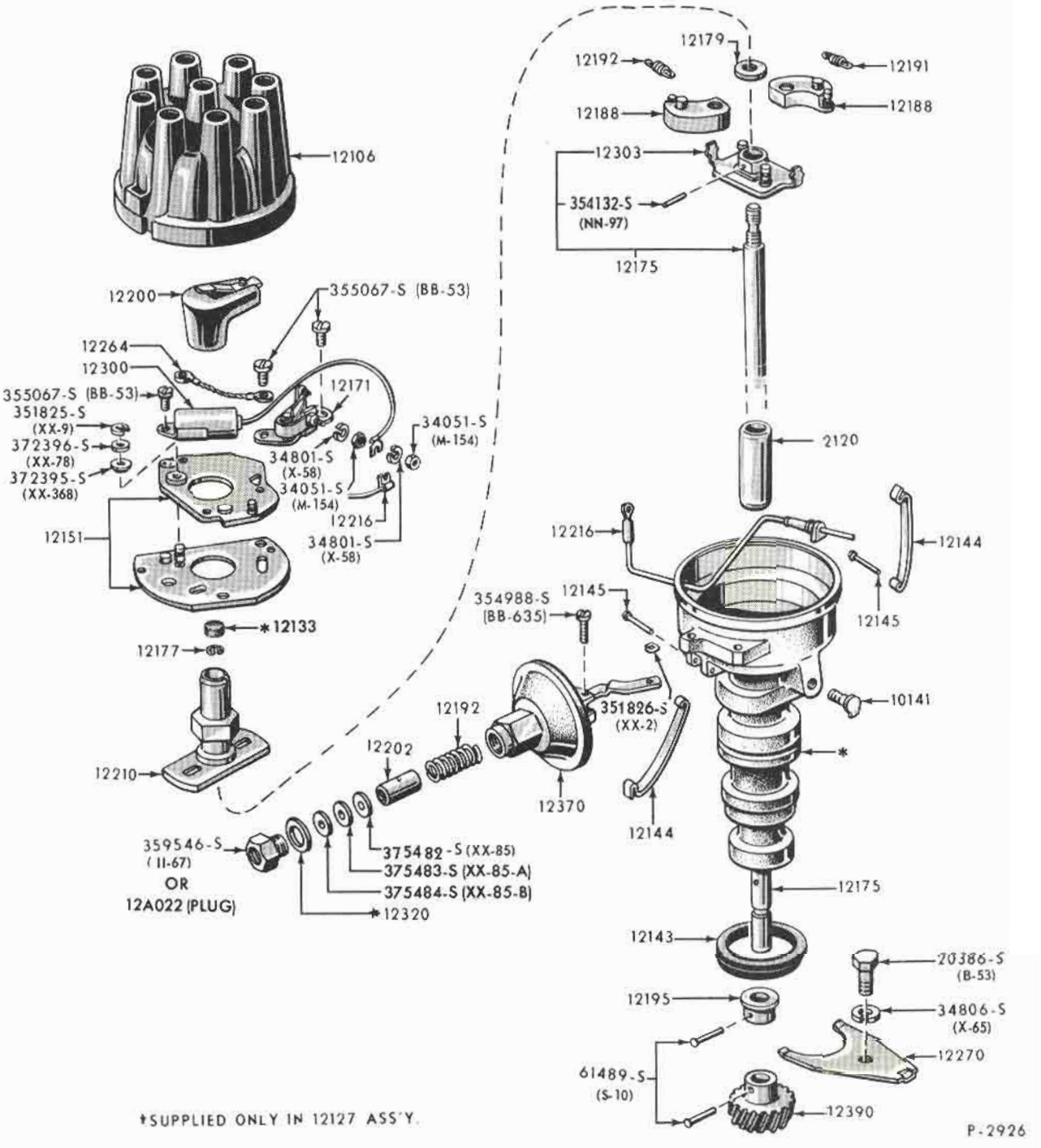

DISTRIBUTOR - (PIVOT PLATE except WITH STAMPED WEIGHTS)
1965/67 8 CYLINDER - ALL

COPYRIGHT © 1975 — FORD MOTOR COMPANY — DEARBORN, MICHIGAN

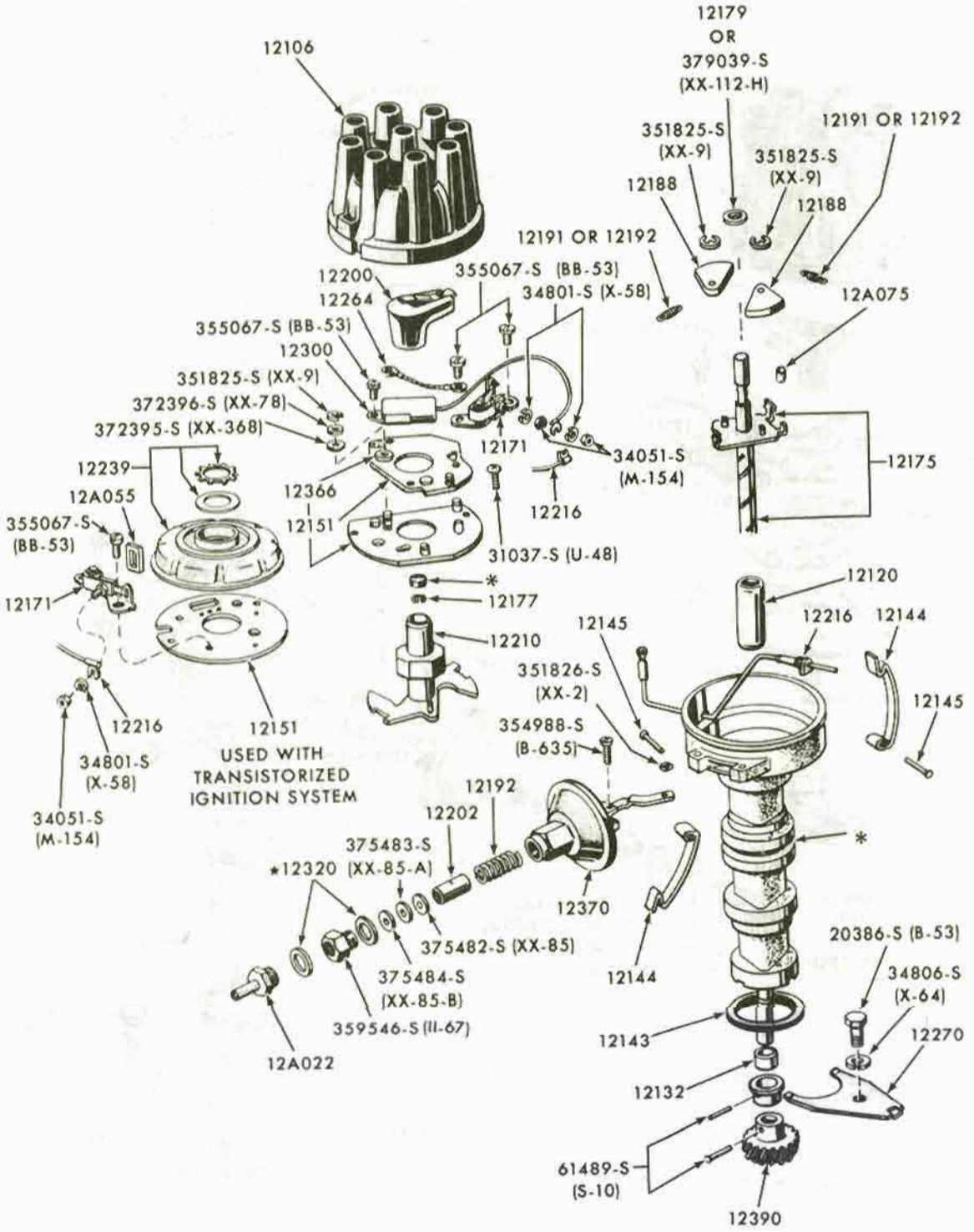

*SUPPLIED IN 12127 ASSEMBLY ONLY

P-4924

DISTRIBUTOR - (WITH STAMPED WEIGHTS)
1965/71 8 CYLINDER - ALL

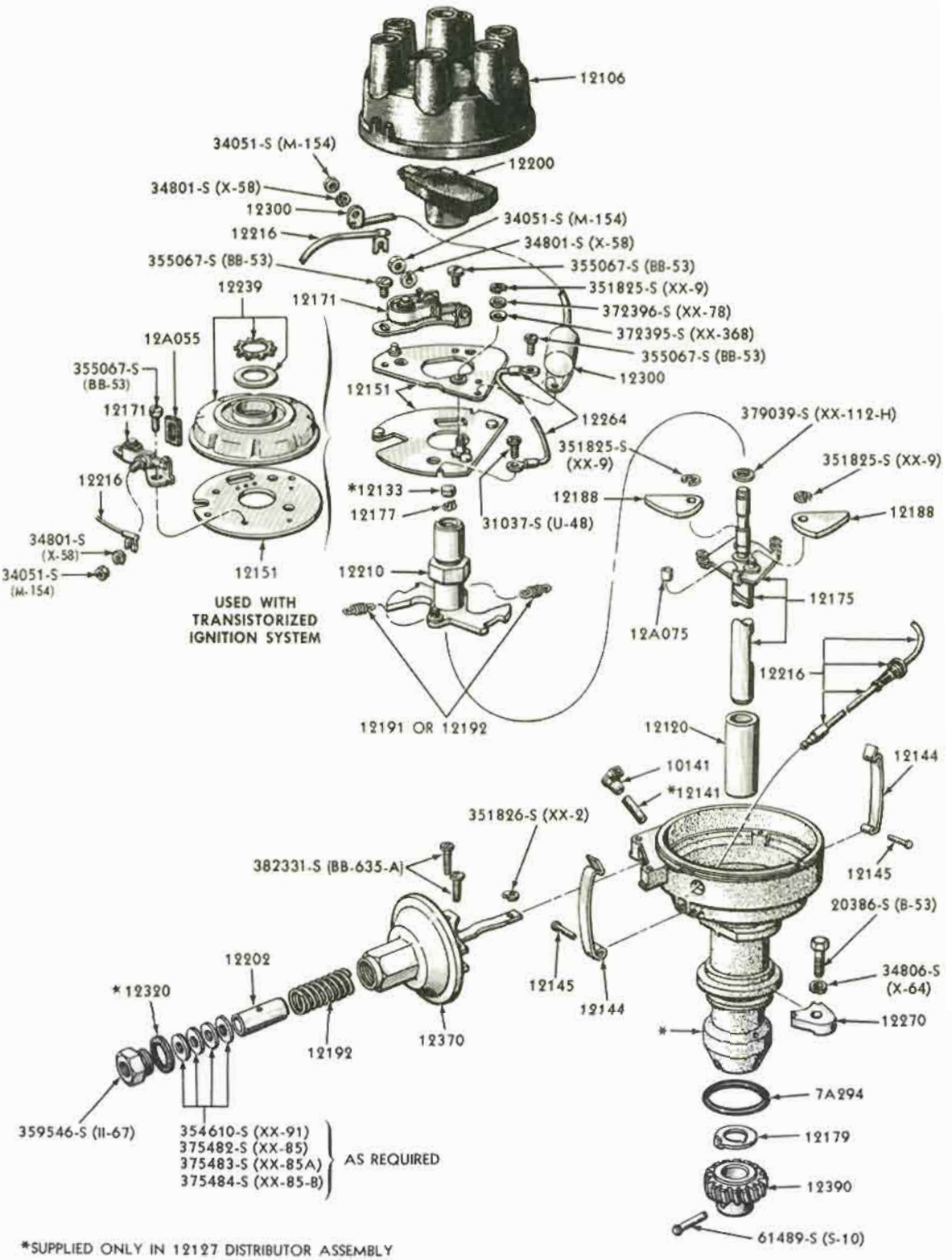

*SUPPLIED ONLY IN 12127 DISTRIBUTOR ASSEMBLY

P-5825

DISTRIBUTOR - DUAL ADVANCE
1969/71 6 CYLINDER 250 ENGINE

COPYRIGHT © 1975 — FORD MOTOR COMPANY — DEARBORN, MICHIGAN

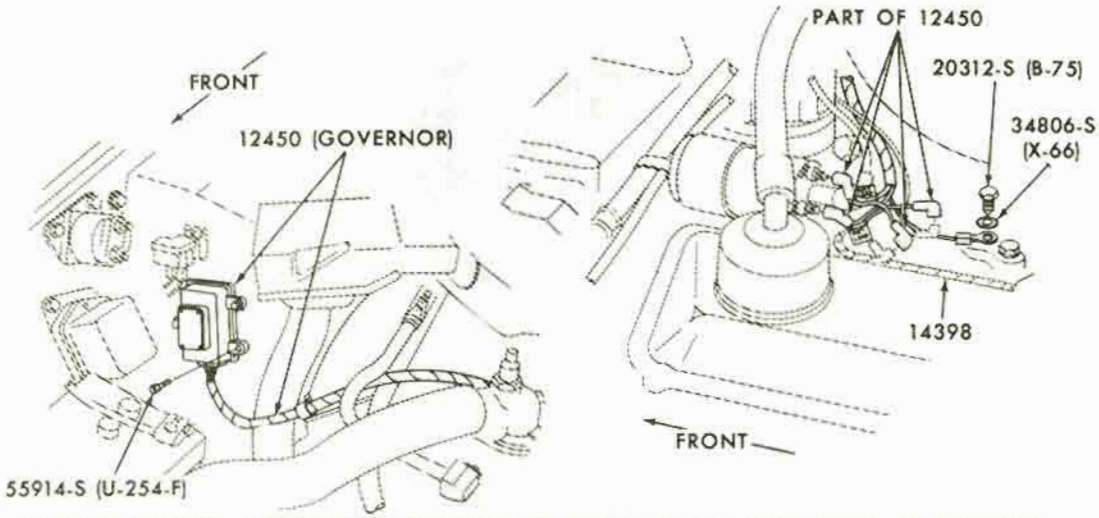

FAIRLANE/TORINO, MONTEGO 8 CYLINDER 429 COBRA JET & SUPER COBRA JET ENGINES

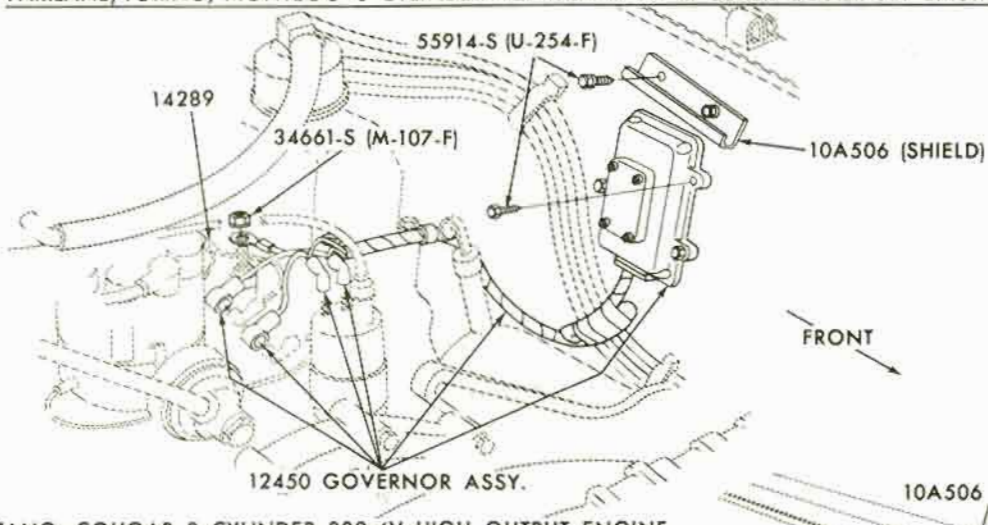

MUSTANG, COUGAR 8 CYLINDER 302-4V HIGH OUTPUT ENGINE

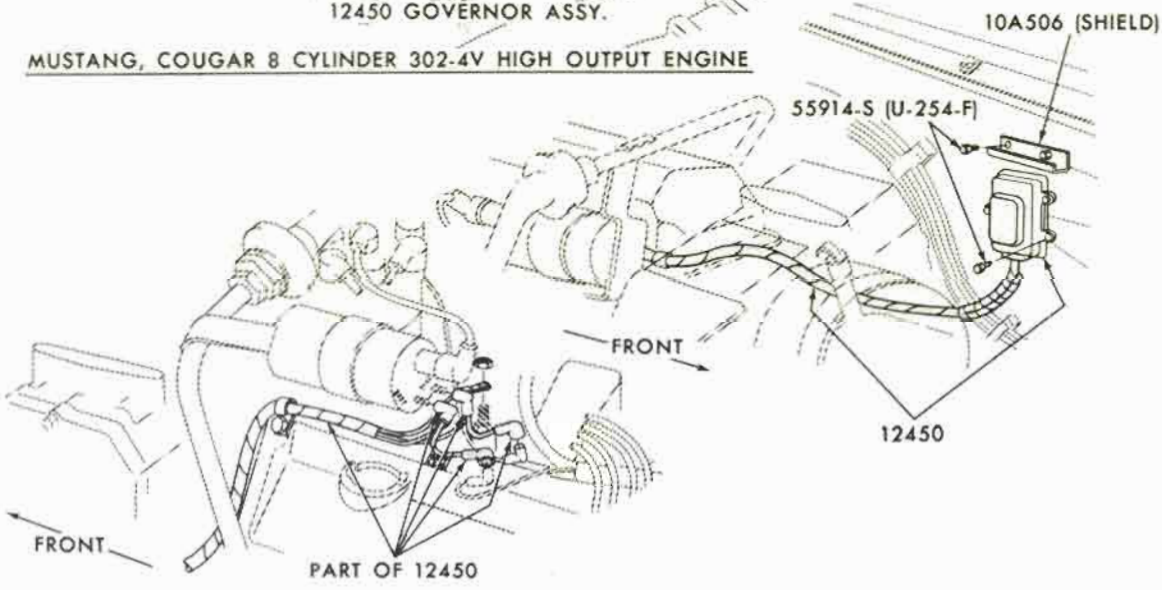

MUSTANG, COUGAR 8 CYLINDER 428 COBRA JET & SUPER COBRA JET ENGINES P-7589

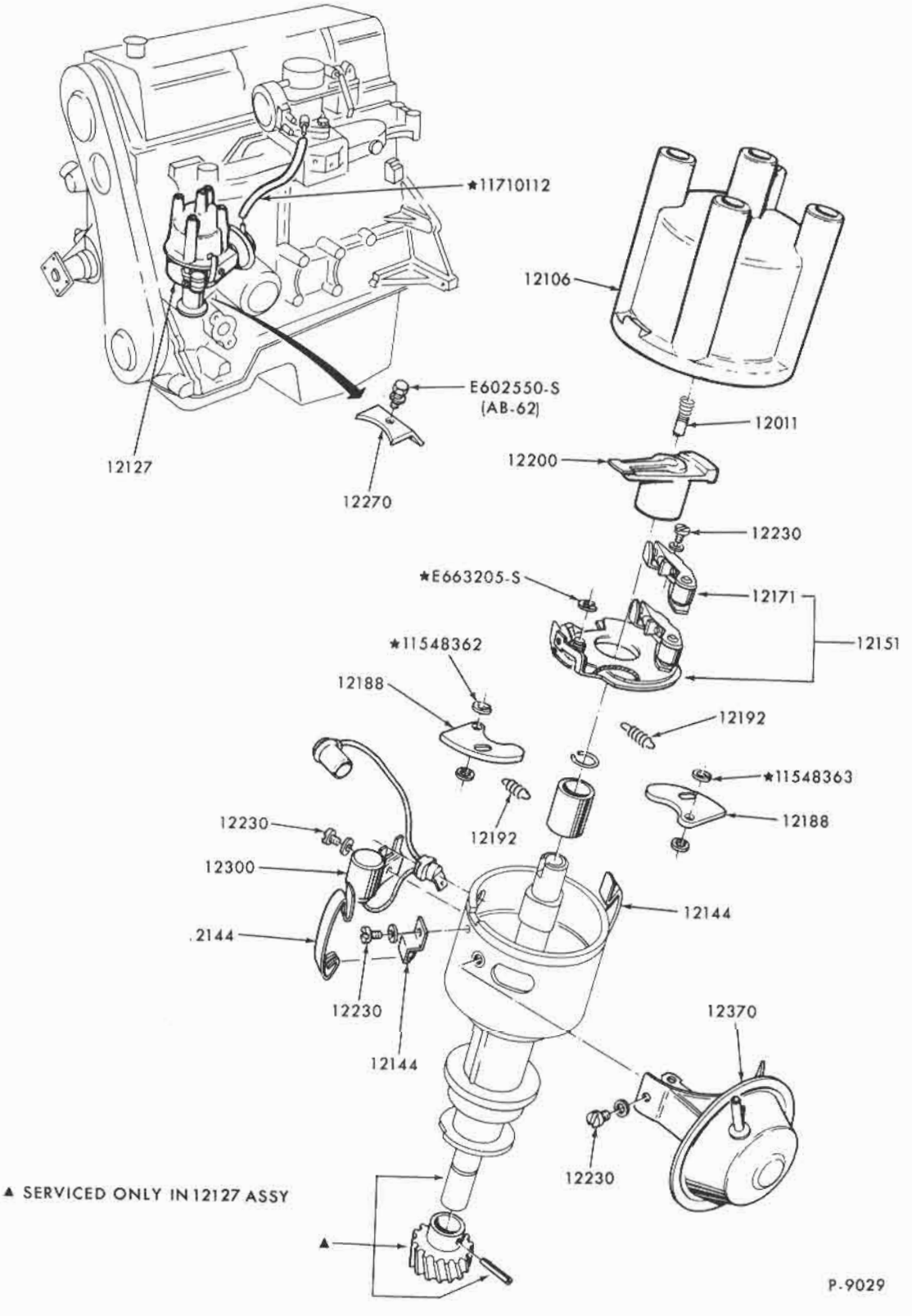

DISTRIBUTOR
1971/72 PINTO (4 CYLINDER 122 O.H.C. ENGINE)

COPYRIGHT © 1975 — FORD MOTOR COMPANY — DEARBORN, MICHIGAN

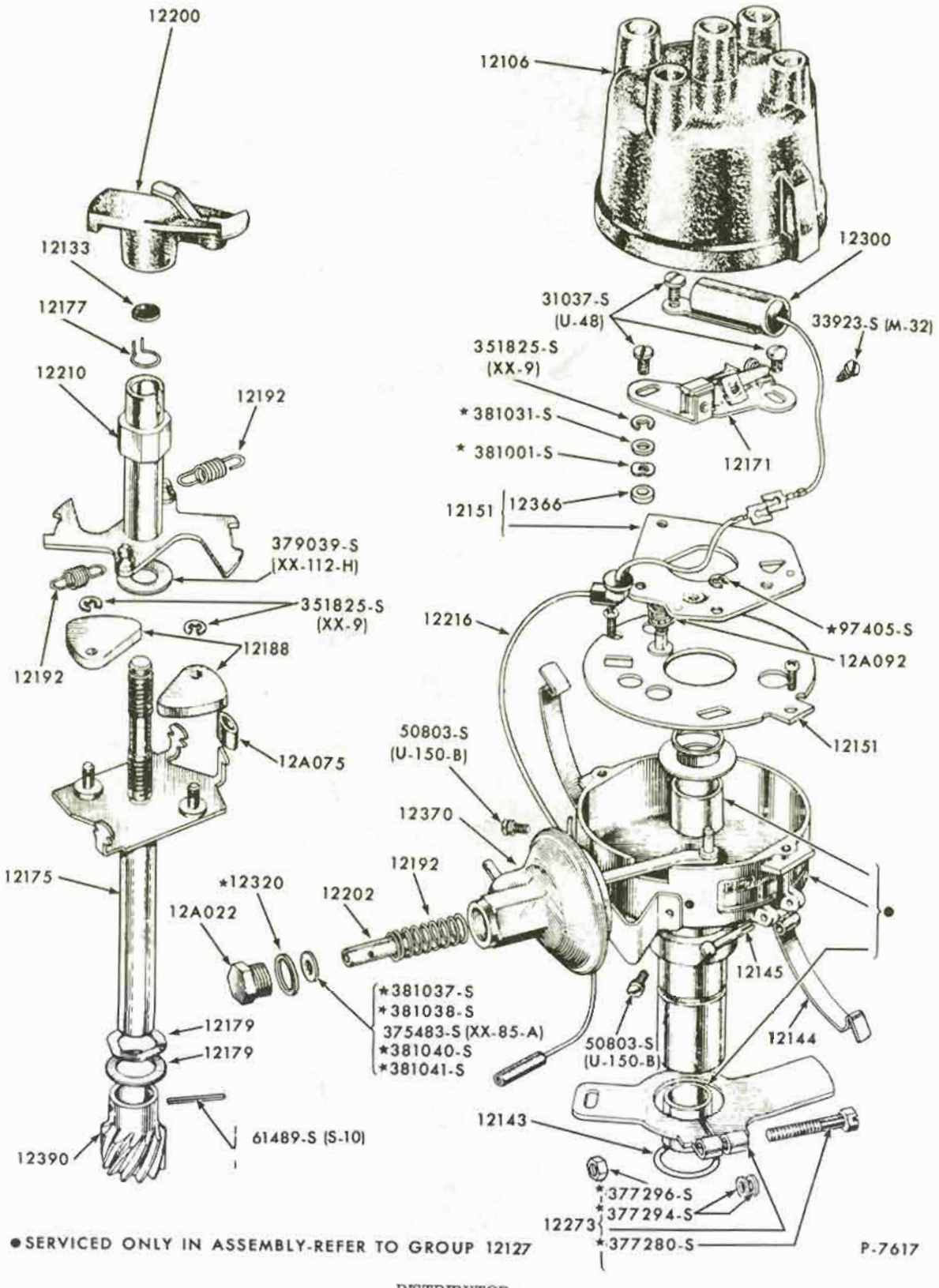

● SERVICED ONLY IN ASSEMBLY-REFER TO GROUP 12127

DISTRIBUTOR
1971/72 PINTO (4 CYLINDER 98 ENGINE)

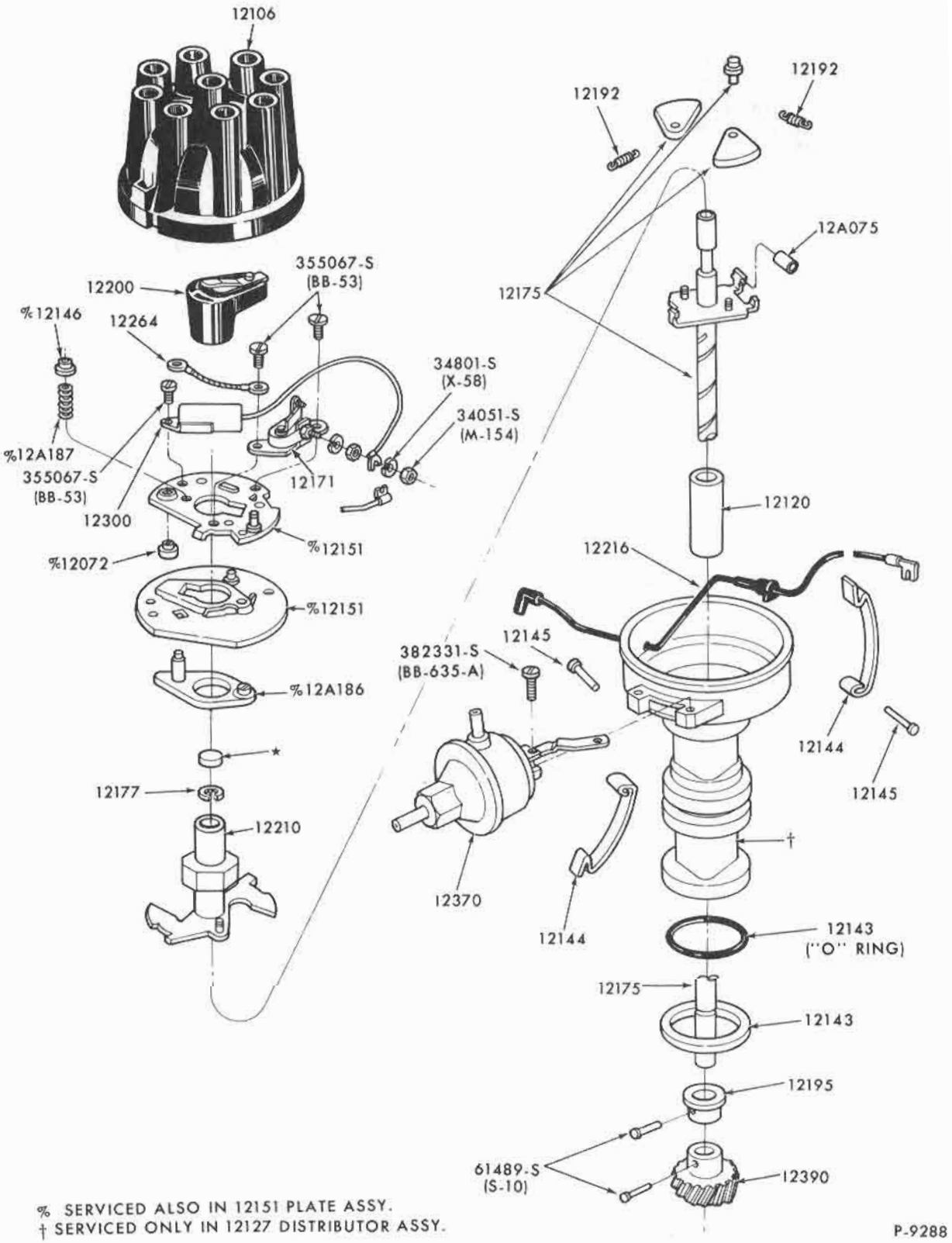

% SERVICED ALSO IN 12151 PLATE ASSY.
† SERVICED ONLY IN 12127 DISTRIBUTOR ASSY.

P-9288

DISTRIBUTOR - SINGLE POINT
1972 8 CYLINDER - ALL

COPYRIGHT © 1975 — FORD MOTOR COMPANY — DEARBORN, MICHIGAN

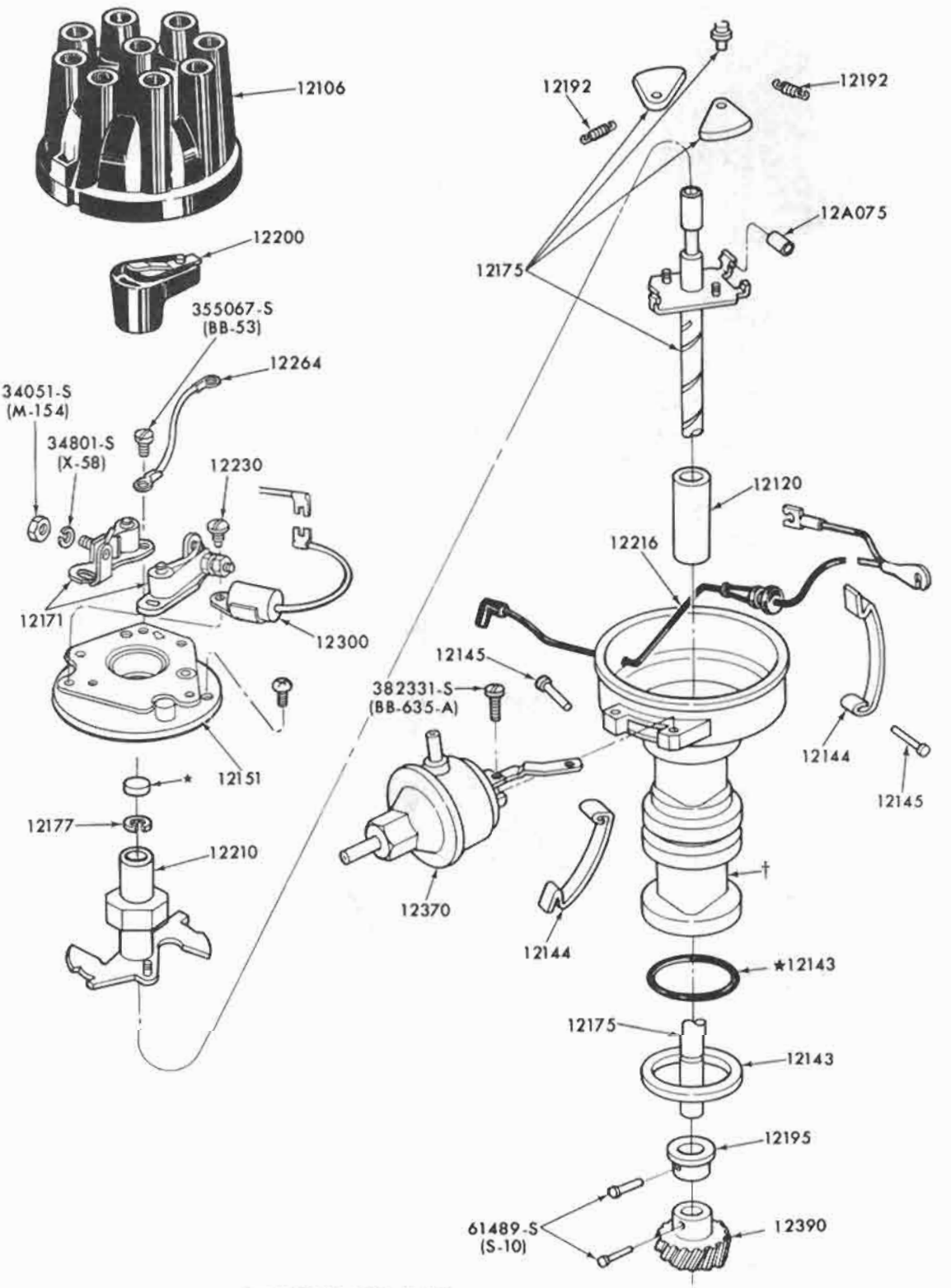

† SERVICED ONLY IN DISTRIBUTOR ASSY.-12127

P-10590

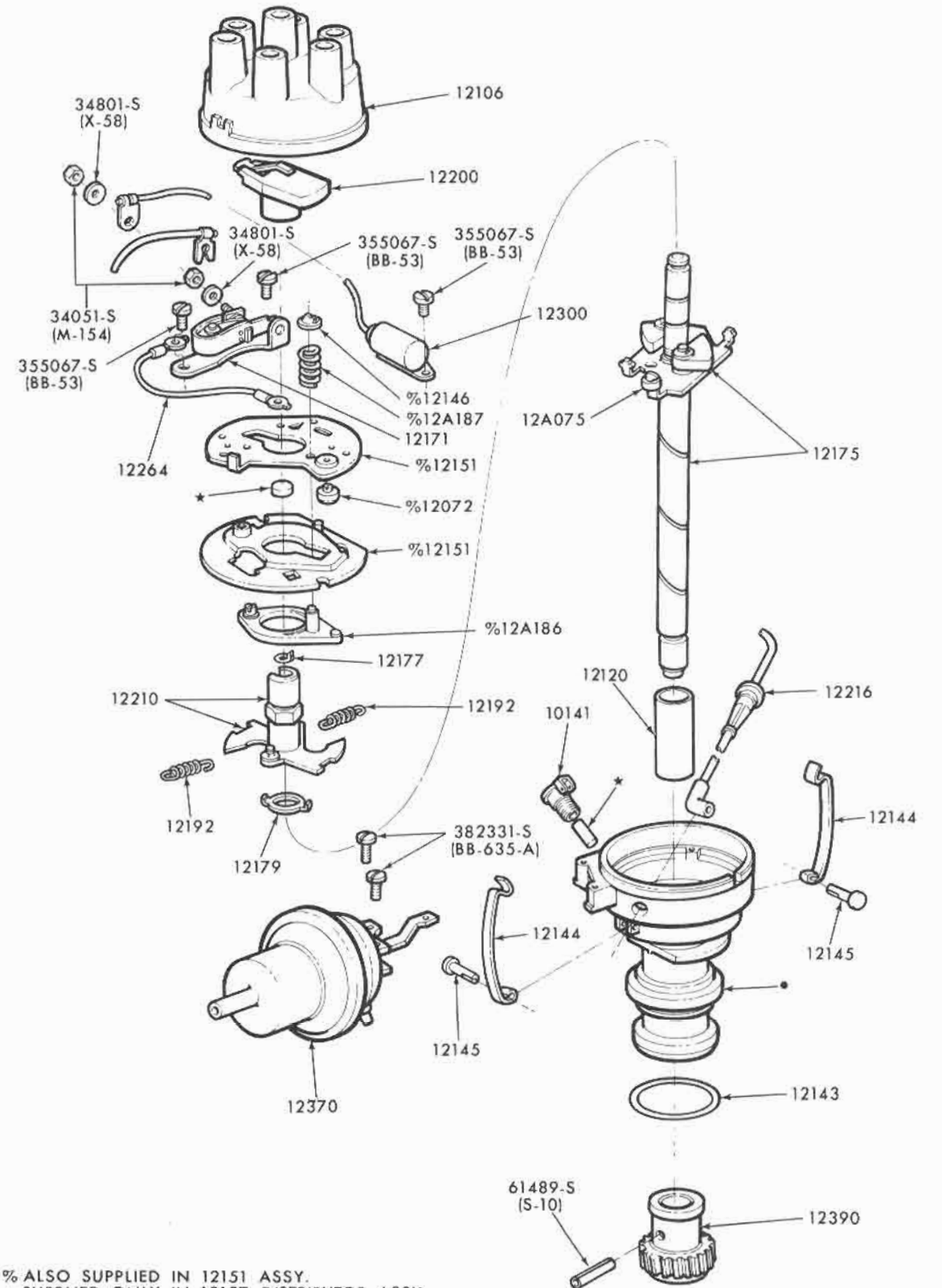

% ALSO SUPPLIED IN 12151 ASSY.
• SUPPLIED ONLY IN 12127 DISTRIBUTOR ASSY.

P-10451

DISTRIBUTOR - TYPICAL
1972 6 CYLINDER - ALL

COPYRIGHT © 1975 — FORD MOTOR COMPANY — DEARBORN, MICHIGAN

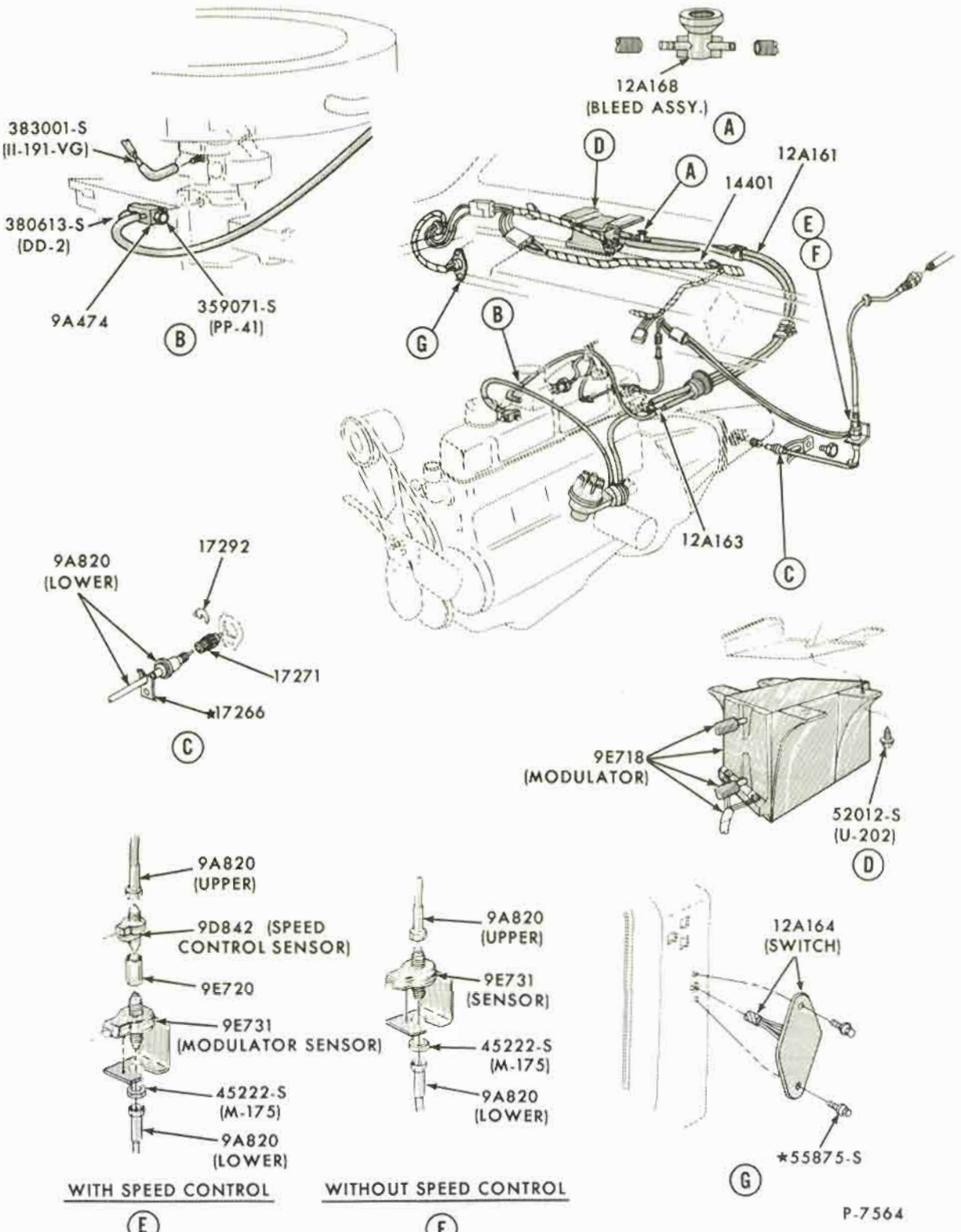

DISTRIBUTOR MODULATOR-6 CYL. 240 C.I.D. ENGINE
1970 FORD

COPYRIGHT © 1975 — FORD MOTOR COMPANY — DEARBORN, MICHIGAN

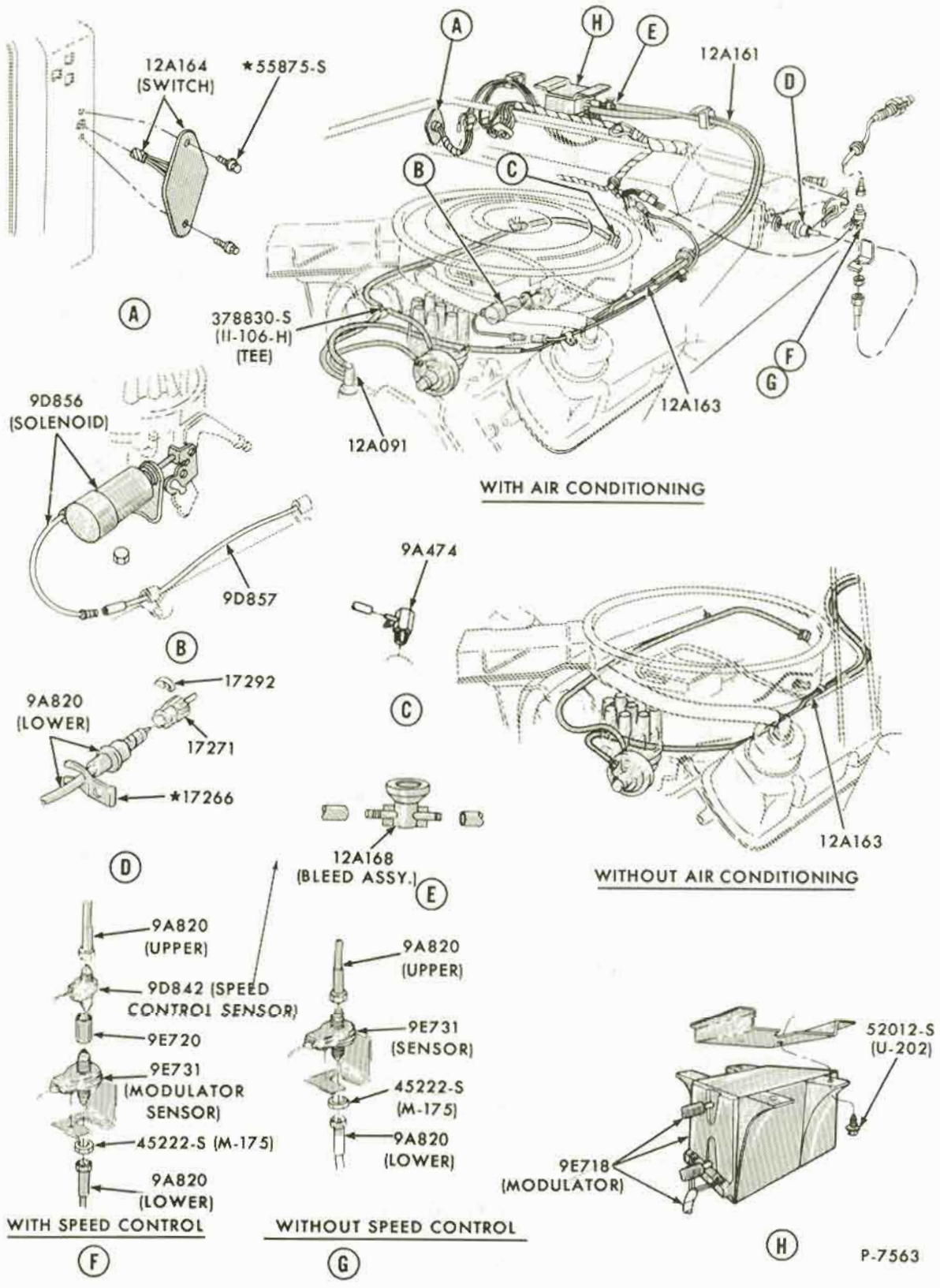

DISTRIBUTOR MODULATOR - 8 CYL, 302 C.I.D. ENGINE
1970 FORD

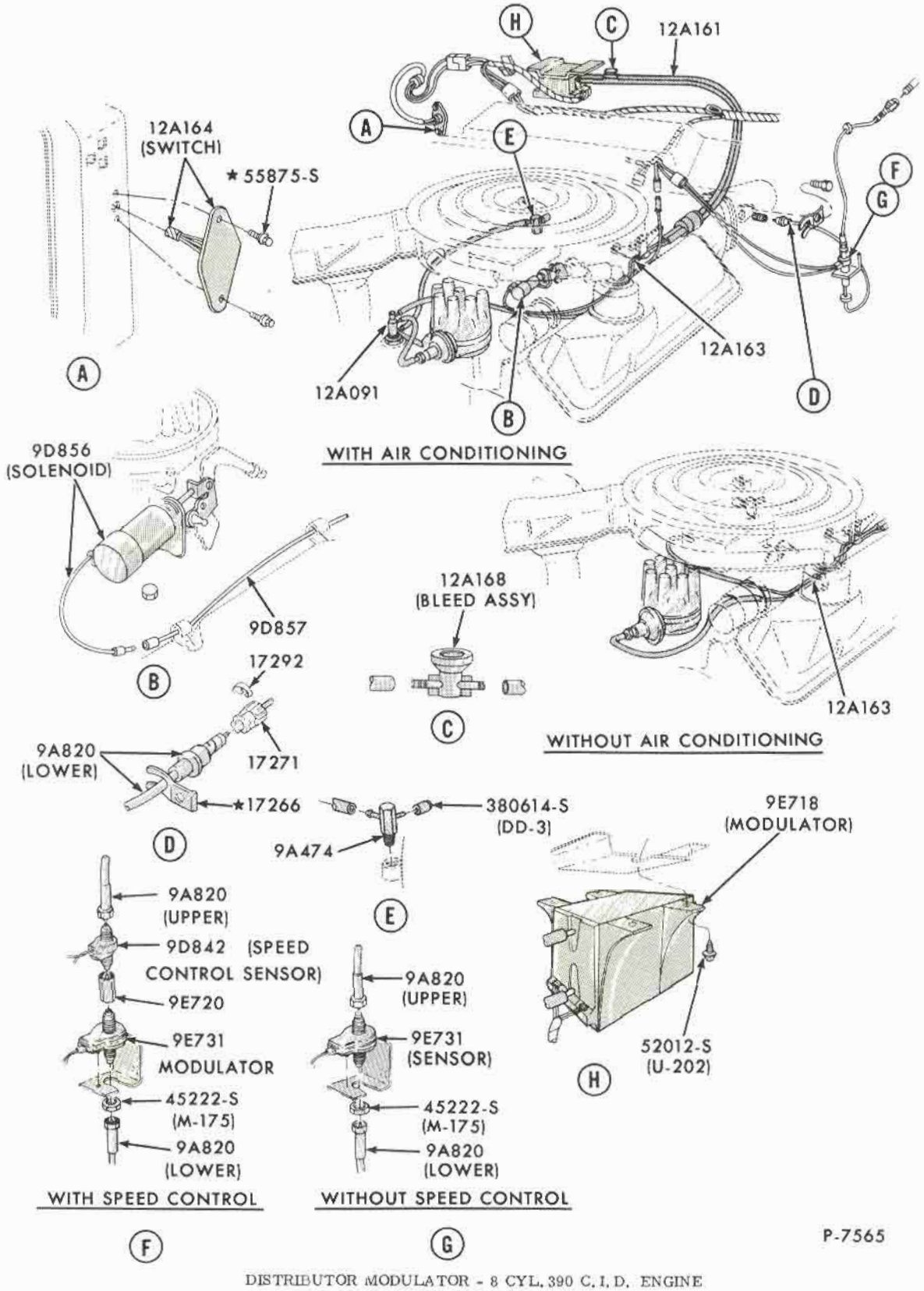

DISTRIBUTOR MODULATOR - 8 CYL. 390 C.I.D. ENGINE
1970 FORD

COPYRIGHT © 1975 — FORD MOTOR COMPANY — DEARBORN, MICHIGAN

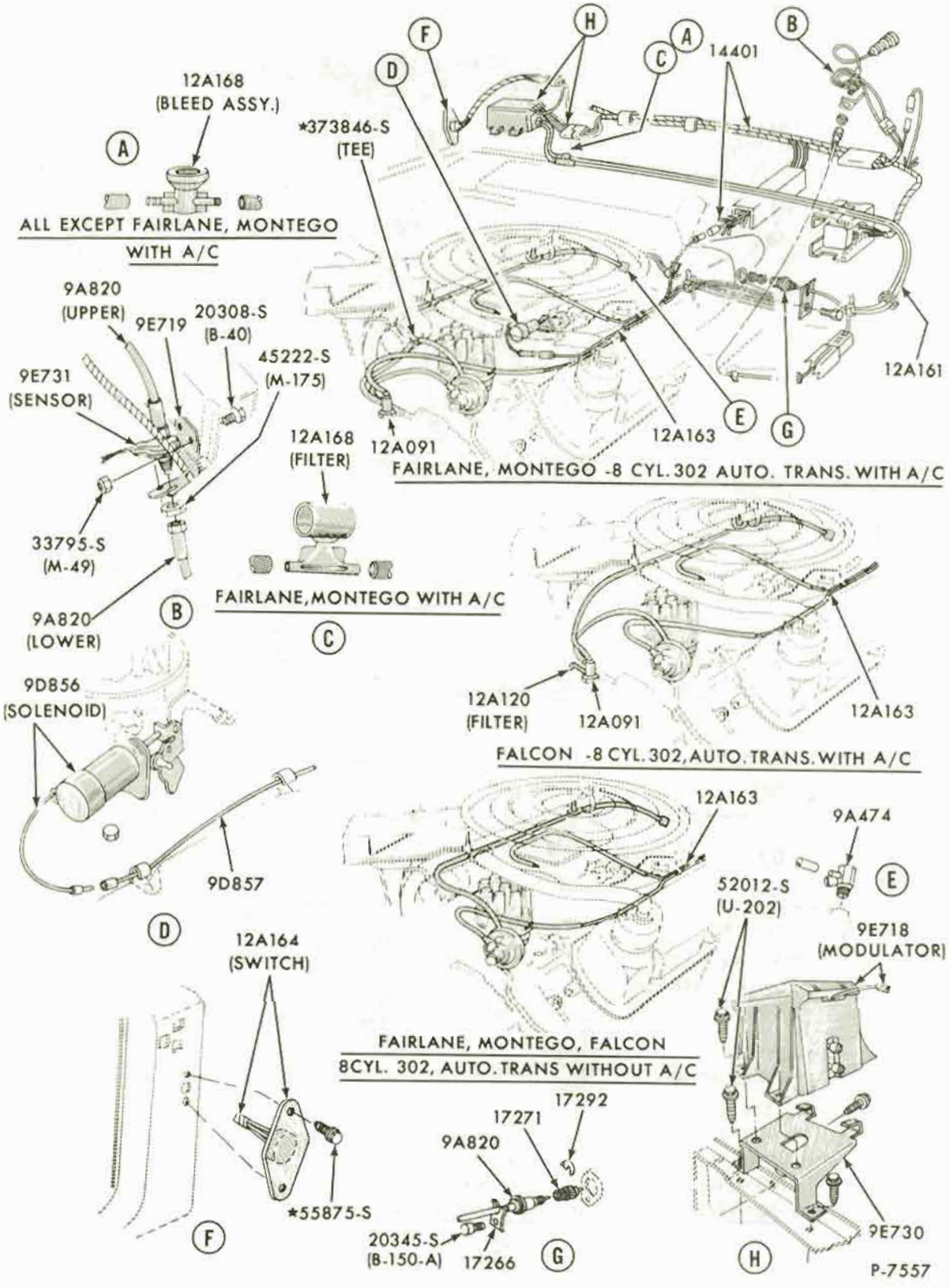

DISTRIBUTOR MODULATOR - 8 CYL. 302 C.I.D. ENGINE
1970 FAIRLANE/TORINO 1970 FALCON

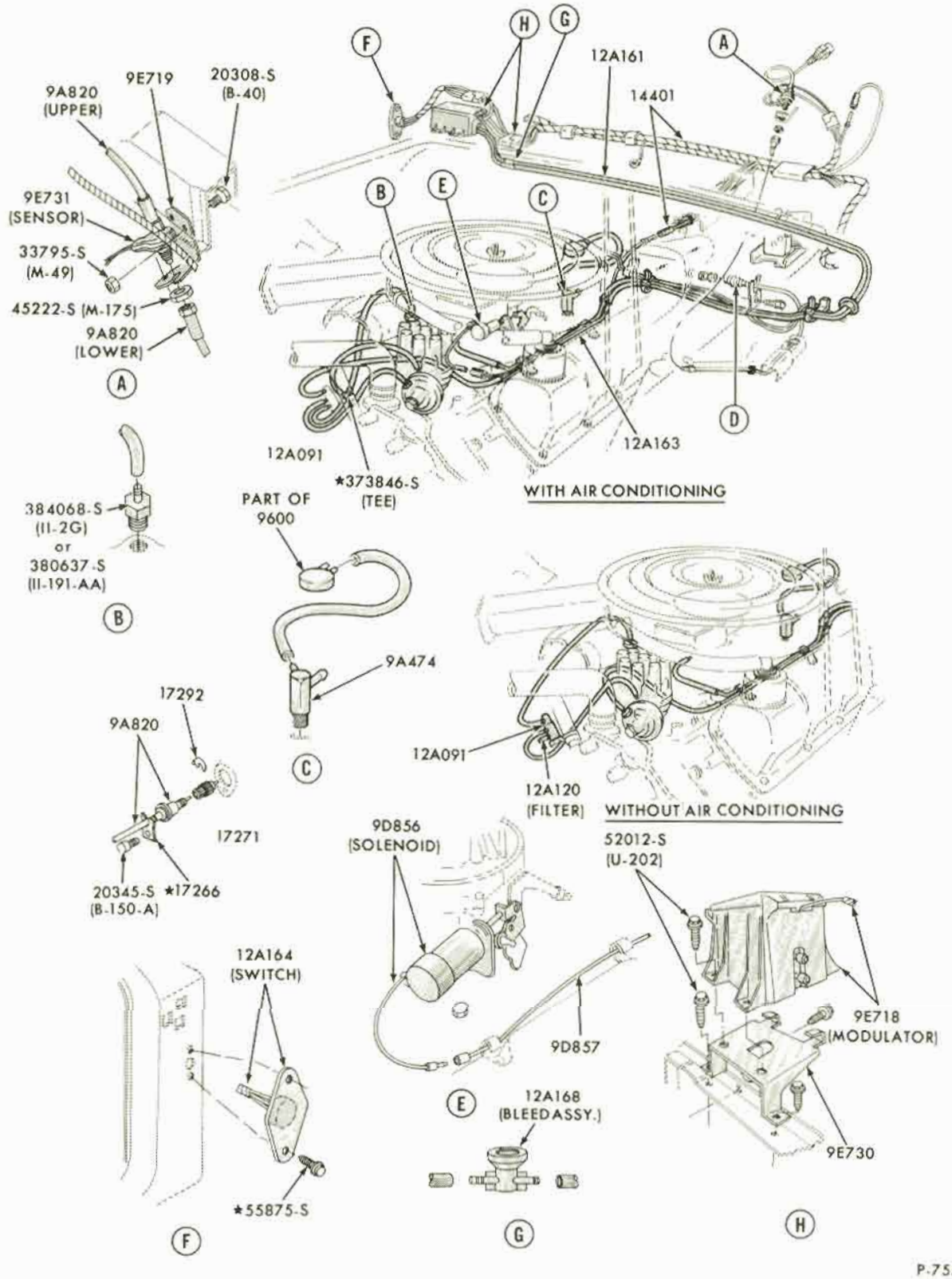

P-7559

DISTRIBUTOR MODULATOR - 8 CYL. 351-4V C.I.D. ENGINE WITHOUT RAM AIR
1970 FAIRLANE/TORINO

COPYRIGHT © 1975 — FORD MOTOR COMPANY — DEARBORN, MICHIGAN

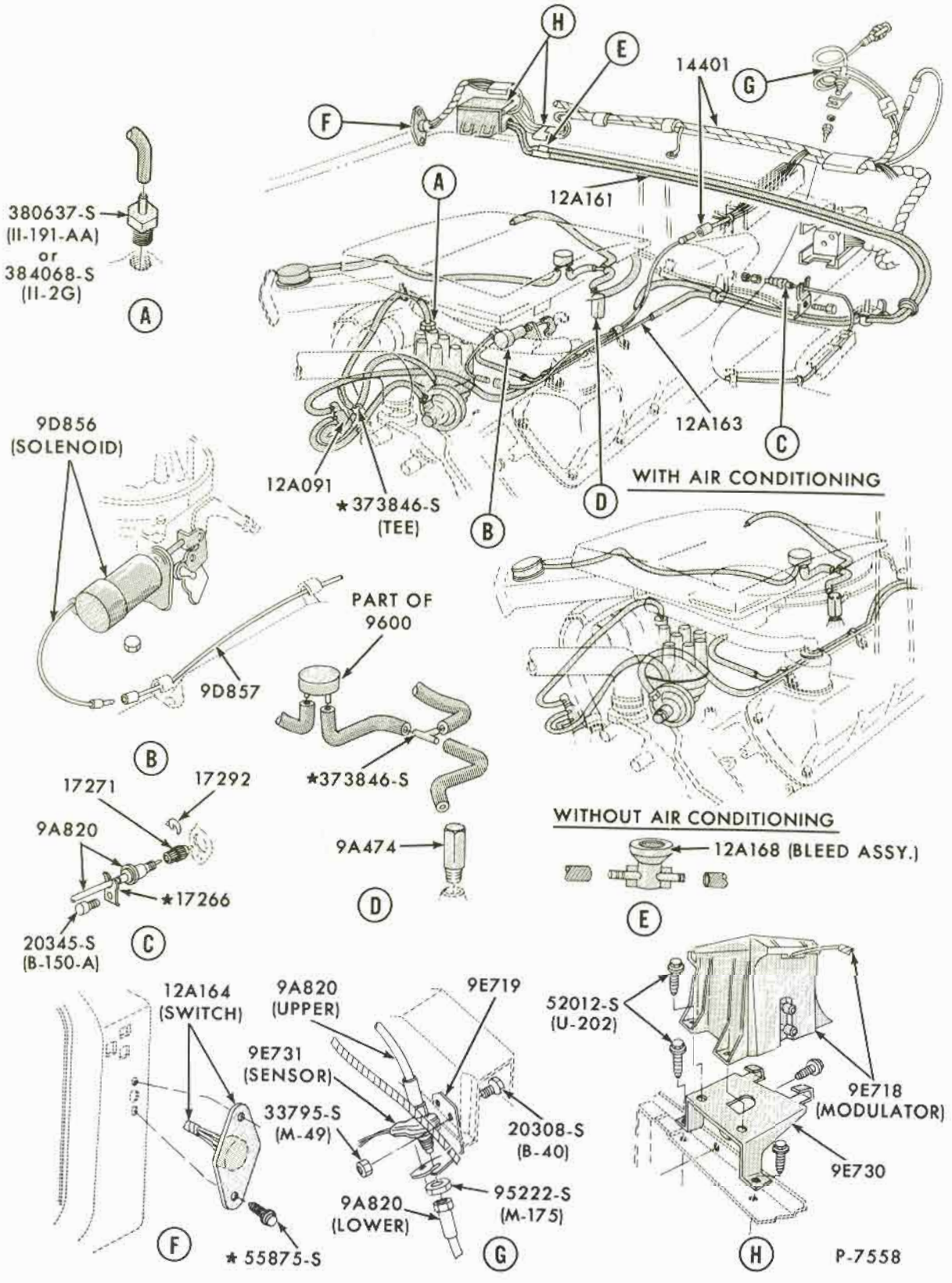

DISTRIBUTOR MODULATOR - 8 CYL. 351-4V C.I.D. ENGINE WITH RAM AIR
1970 FAIRLANE/TORINO

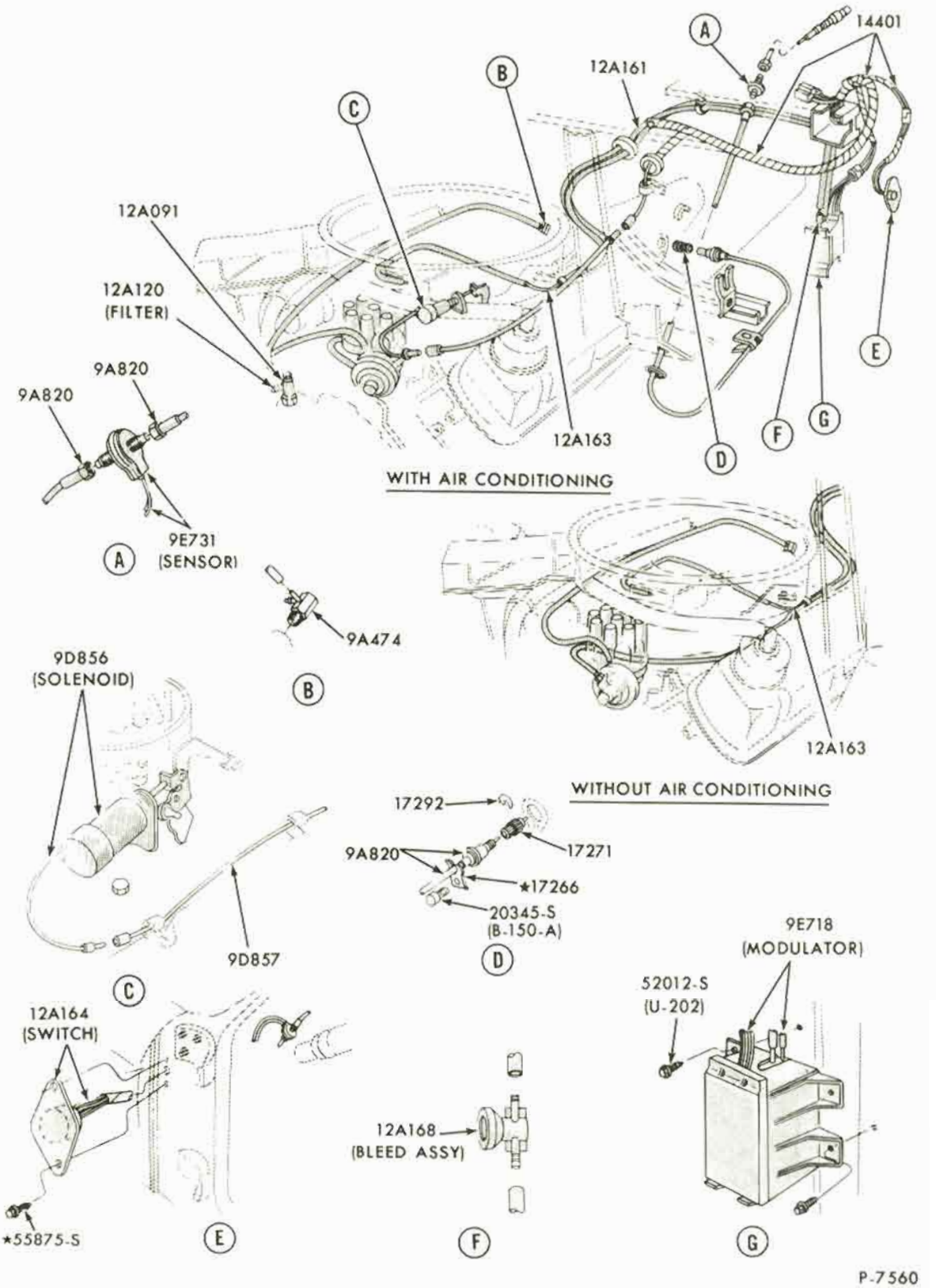

DISTRIBUTOR MODULATOR - 8 CYL. 302 C.I.D. ENGINE
1970 MUSTANG

COPYRIGHT © 1975 — FORD MOTOR COMPANY — DEARBORN, MICHIGAN

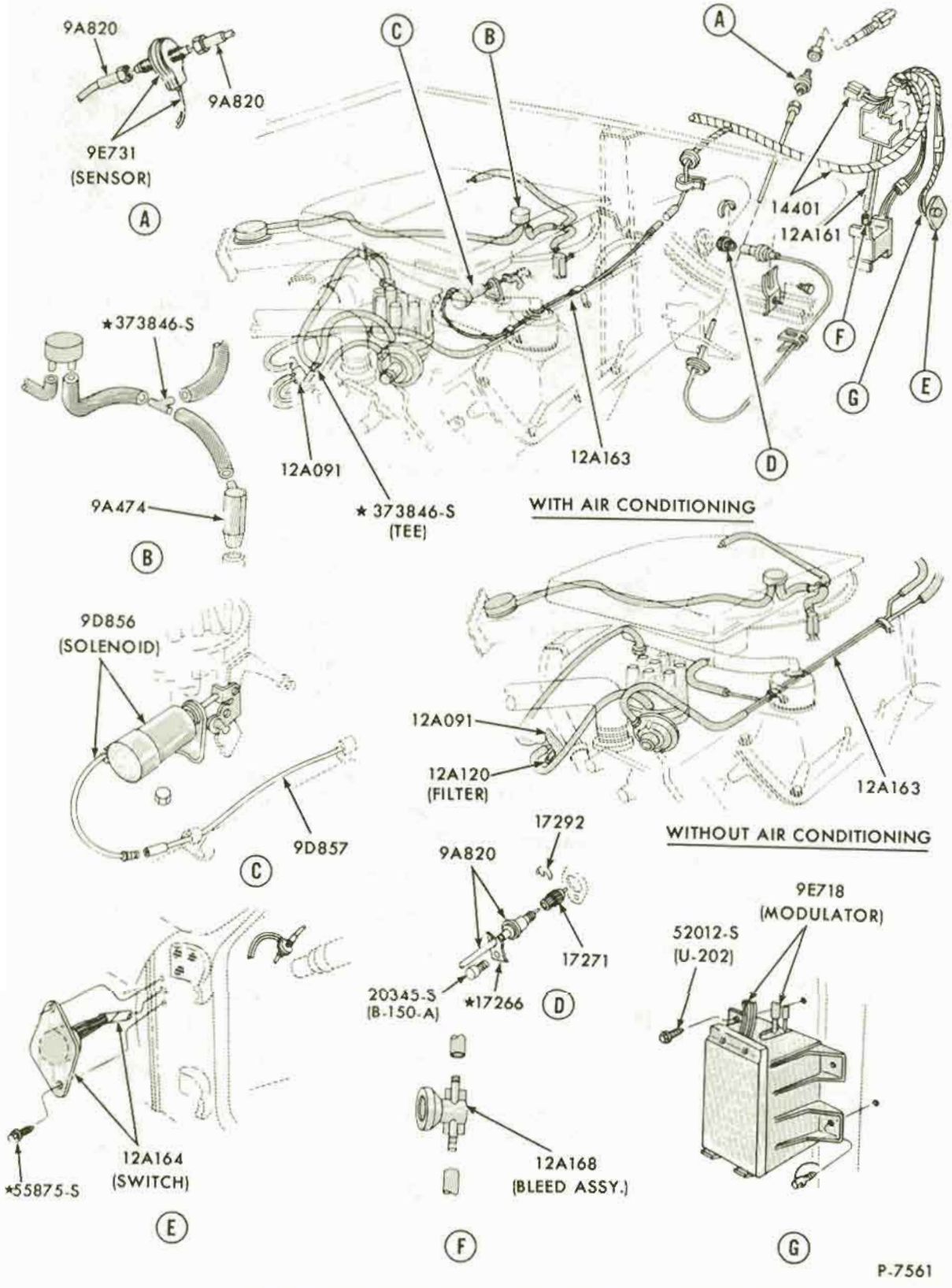

DISTRIBUTOR MODULATOR - 8 CYL. 351-4V C.I.D. ENGINE WITH RAM AIR
1970 MUSTANG

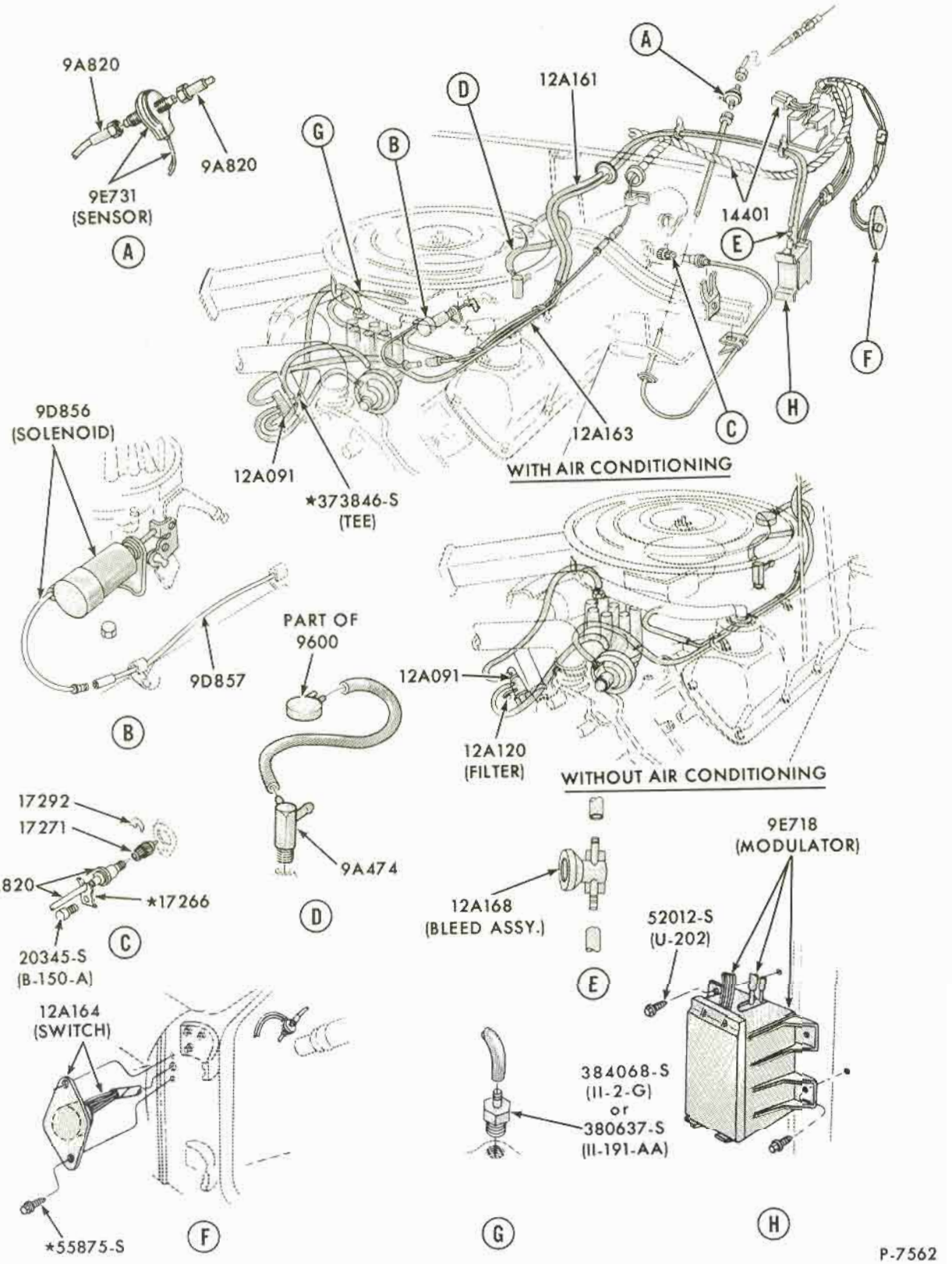

DISTRIBUTOR MODULATOR - 8 CYL. 351-4V ENGINE WITHOUT RAM AIR
1970 MUSTANG

COPYRIGHT © 1975 — FORD MOTOR COMPANY — DEARBORN, MICHIGAN

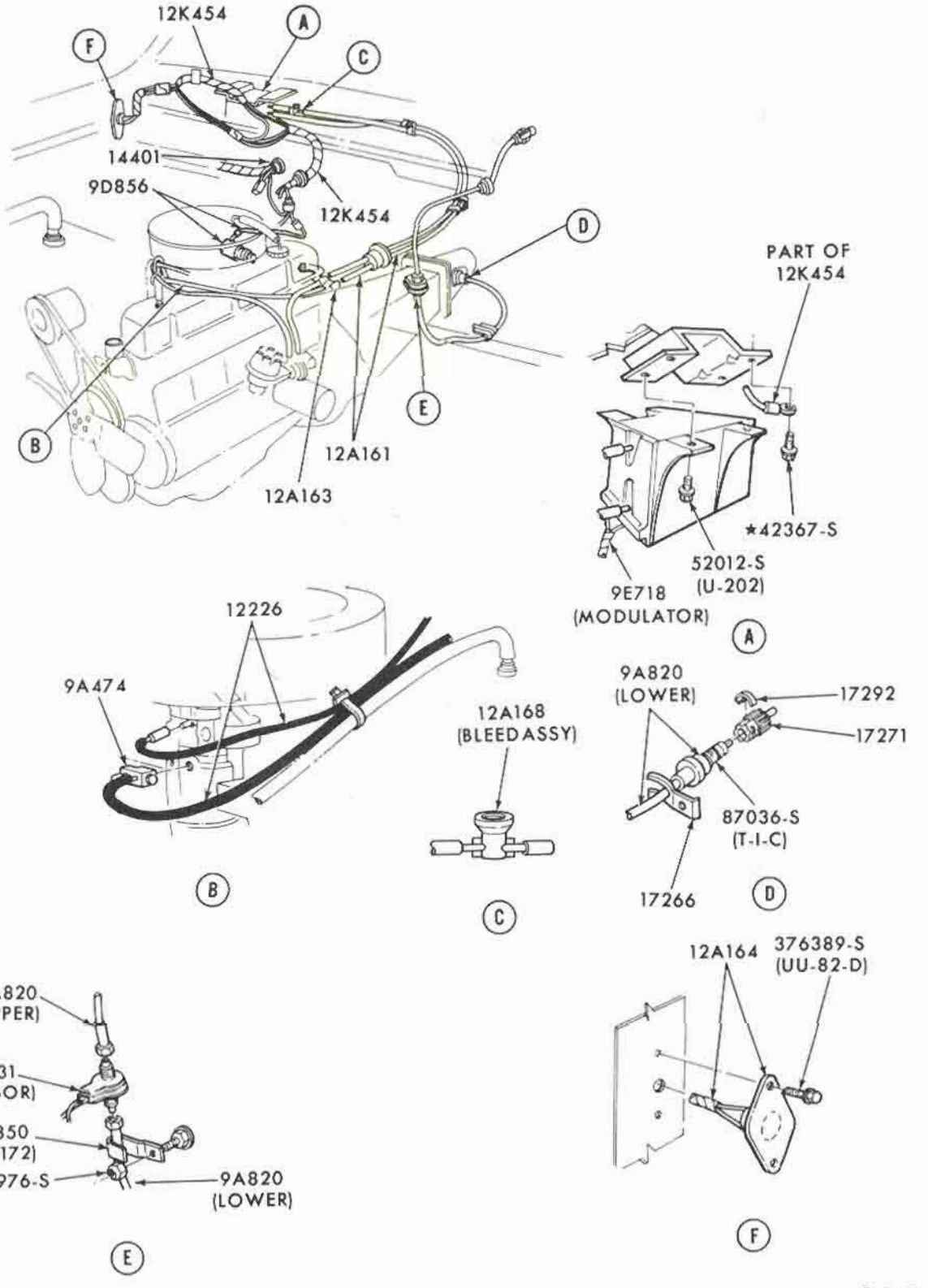

P-8454

DISTRIBUTOR MODULATOR-6 CYLINDER 240 C.I.D. ENGINE
1971 FORD

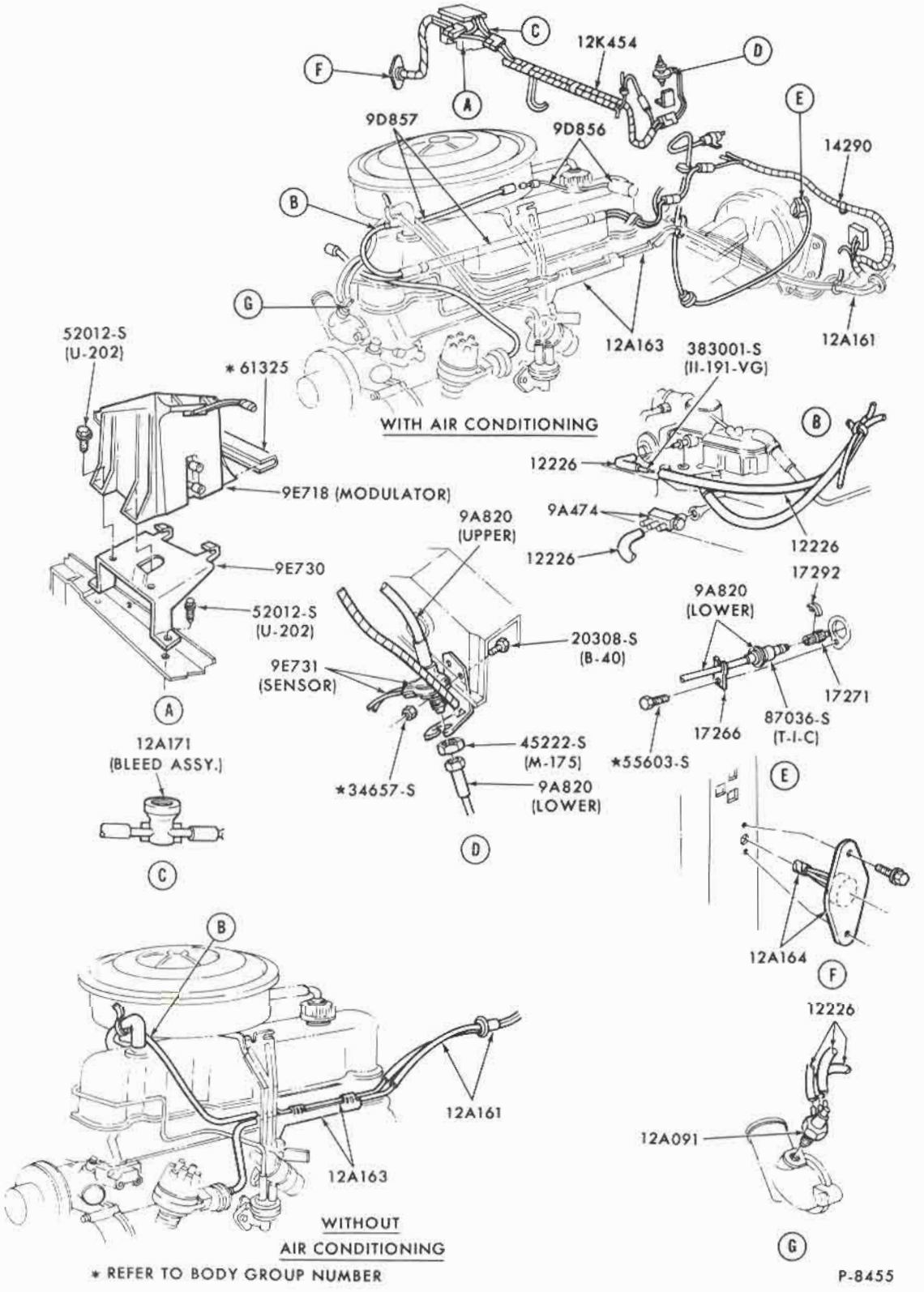

DISTRIBUTOR MODULATOR-6 CYLINDER 250 C.I.D. ENGINE
1971 TORINO

COPYRIGHT © 1975 — FORD MOTOR COMPANY — DEARBORN, MICHIGAN

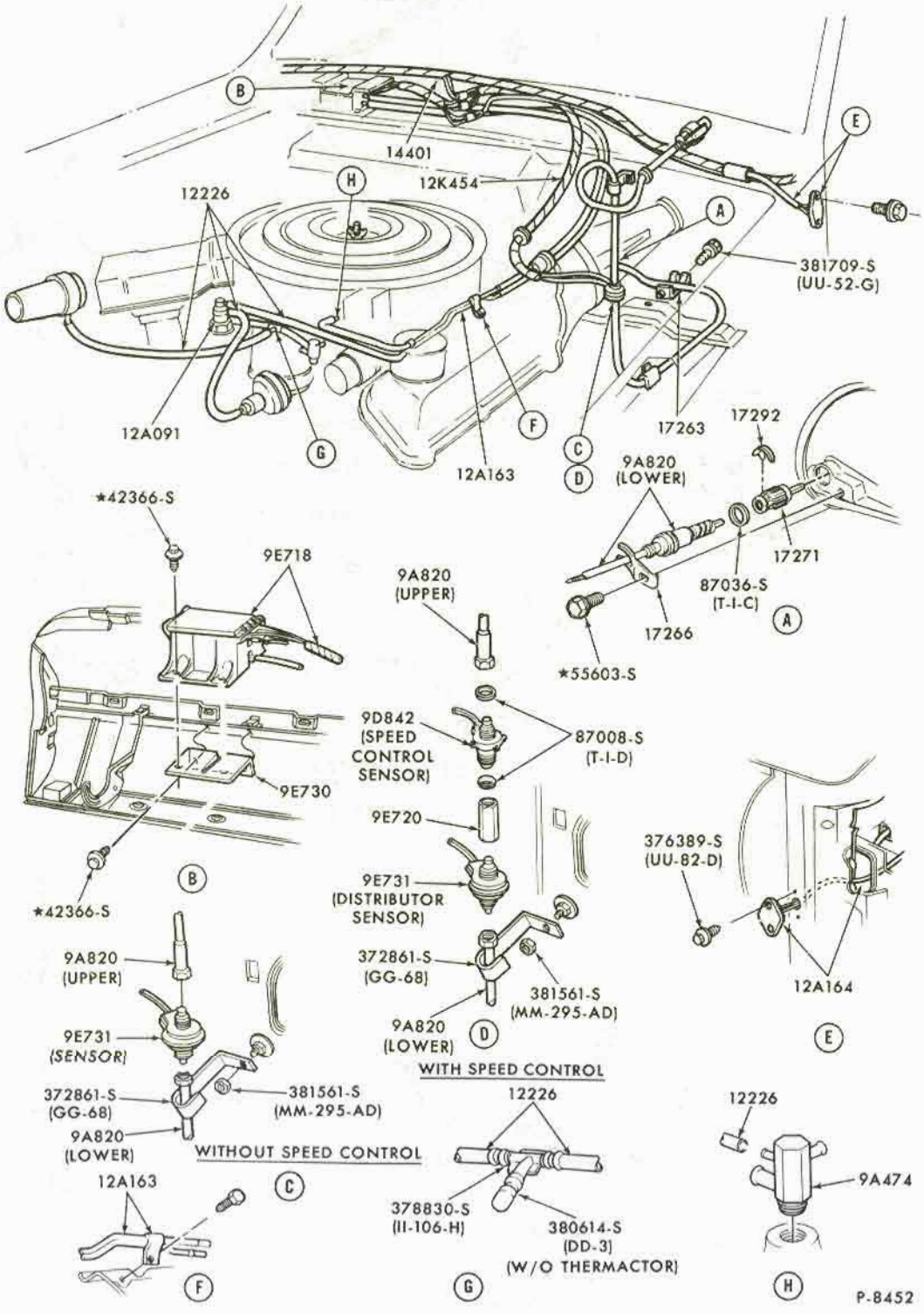

DISTRIBUTOR MODULATOR-8 CYLINDER 429 C.I.D. ENGINE
1971 THUNDERBIRD

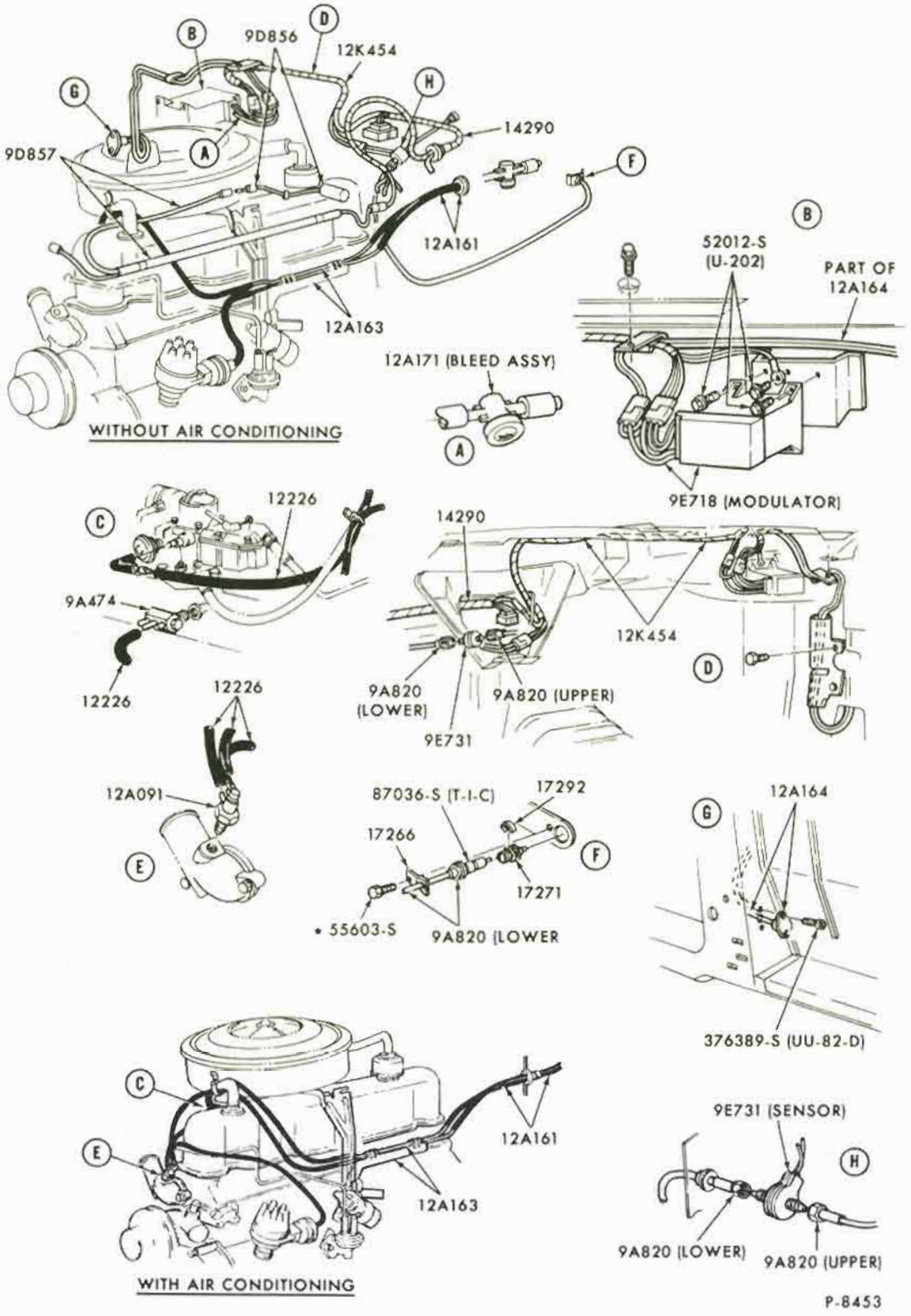

DISTRIBUTOR MODULATOR-6 CYLINDER 250 C.I.D. ENGINE
1971 MUSTANG

COPYRIGHT © 1975 — FORD MOTOR COMPANY — DEARBORN, MICHIGAN

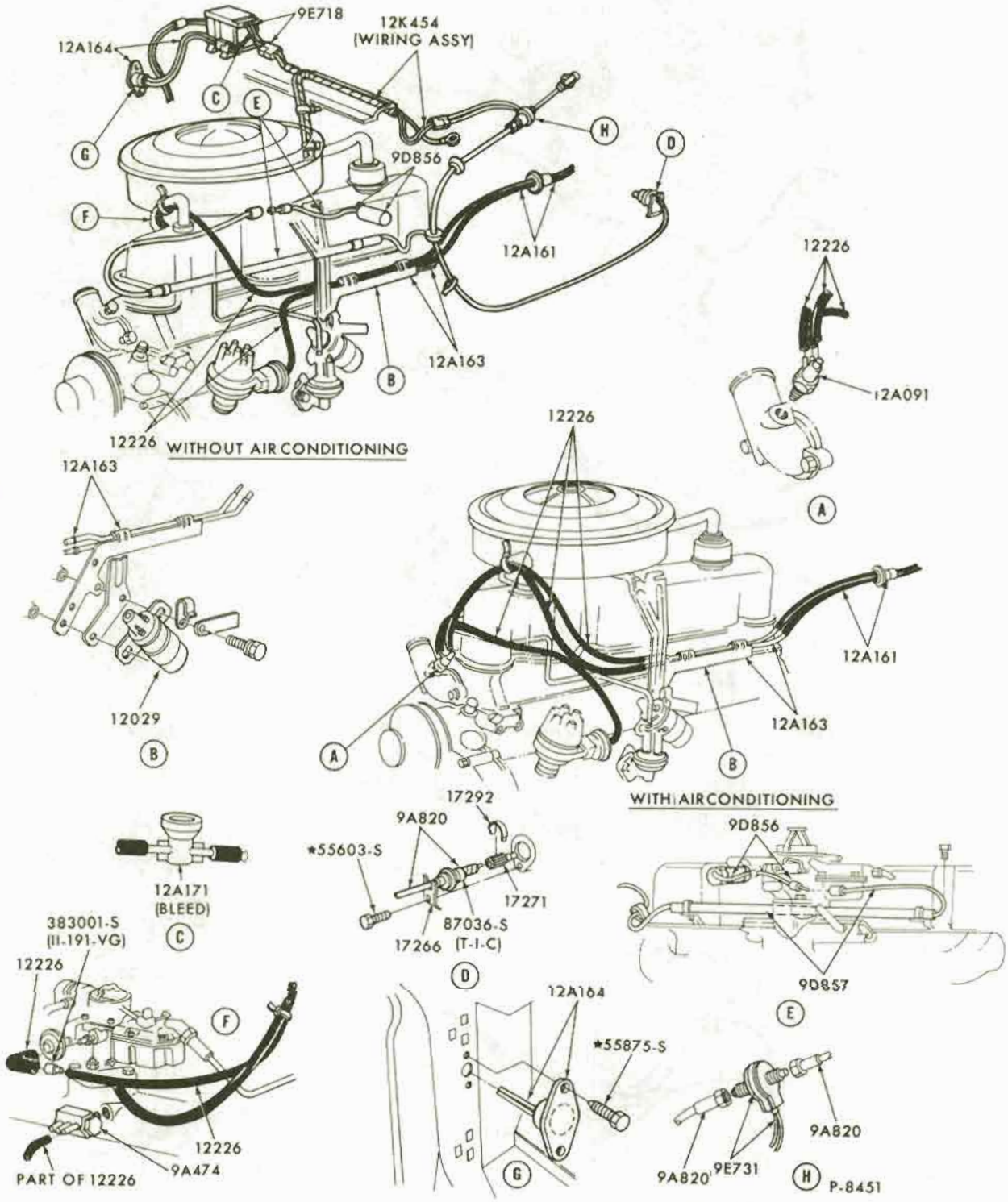

DISTRIBUTOR MODULATOR-6 CYLINDER 170,200,250 C.I.D. ENGINES
1971 MAVERICK

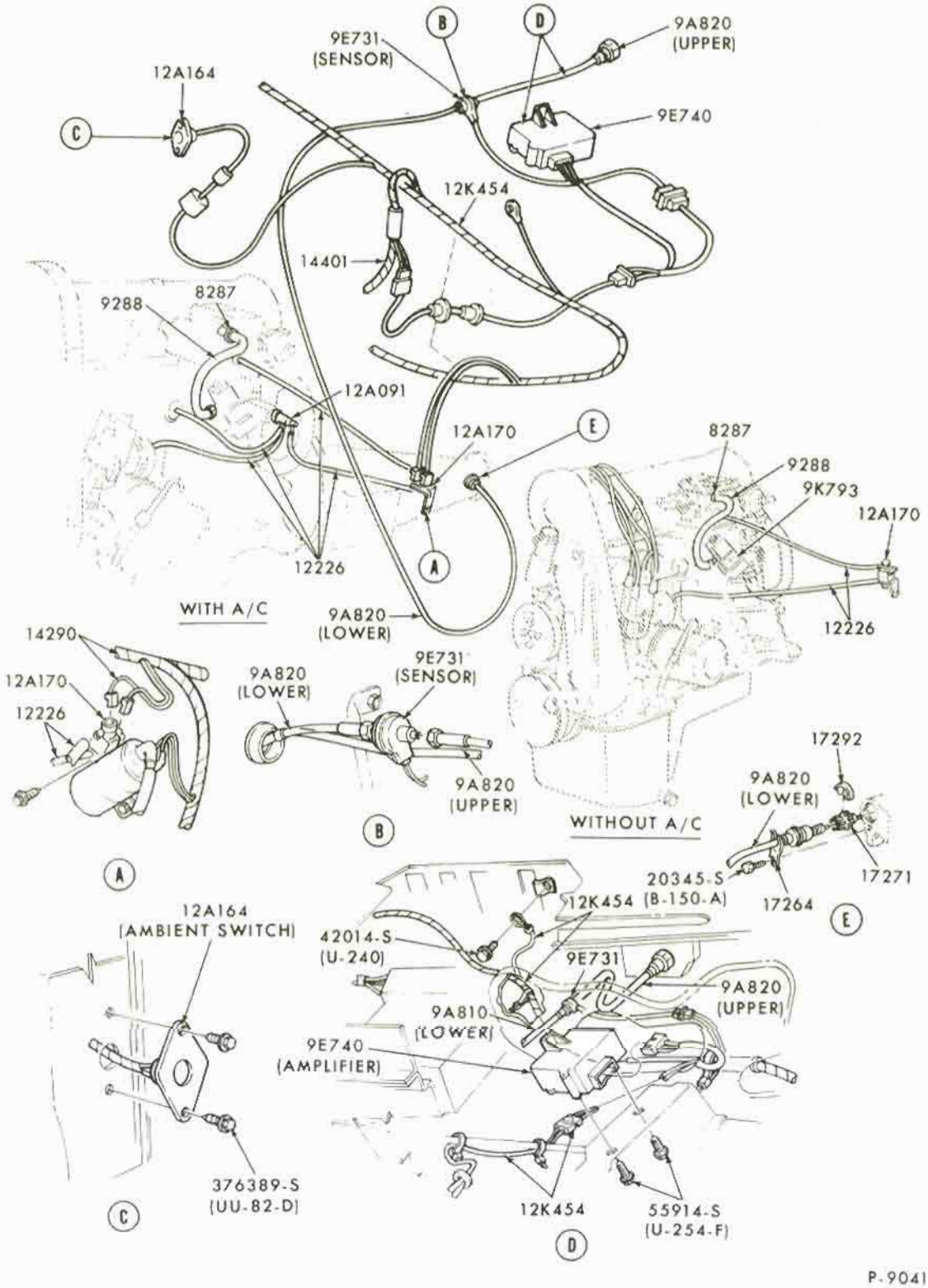

P-9041

ELECTRONIC SPARK CONTROL SYSTEM (E.S.C.)-4 CYL. 122 C.I.D. ENGINE
1972 PINTO

COPYRIGHT © 1975— FORD MOTOR COMPANY —DEARBORN, MICHIGAN

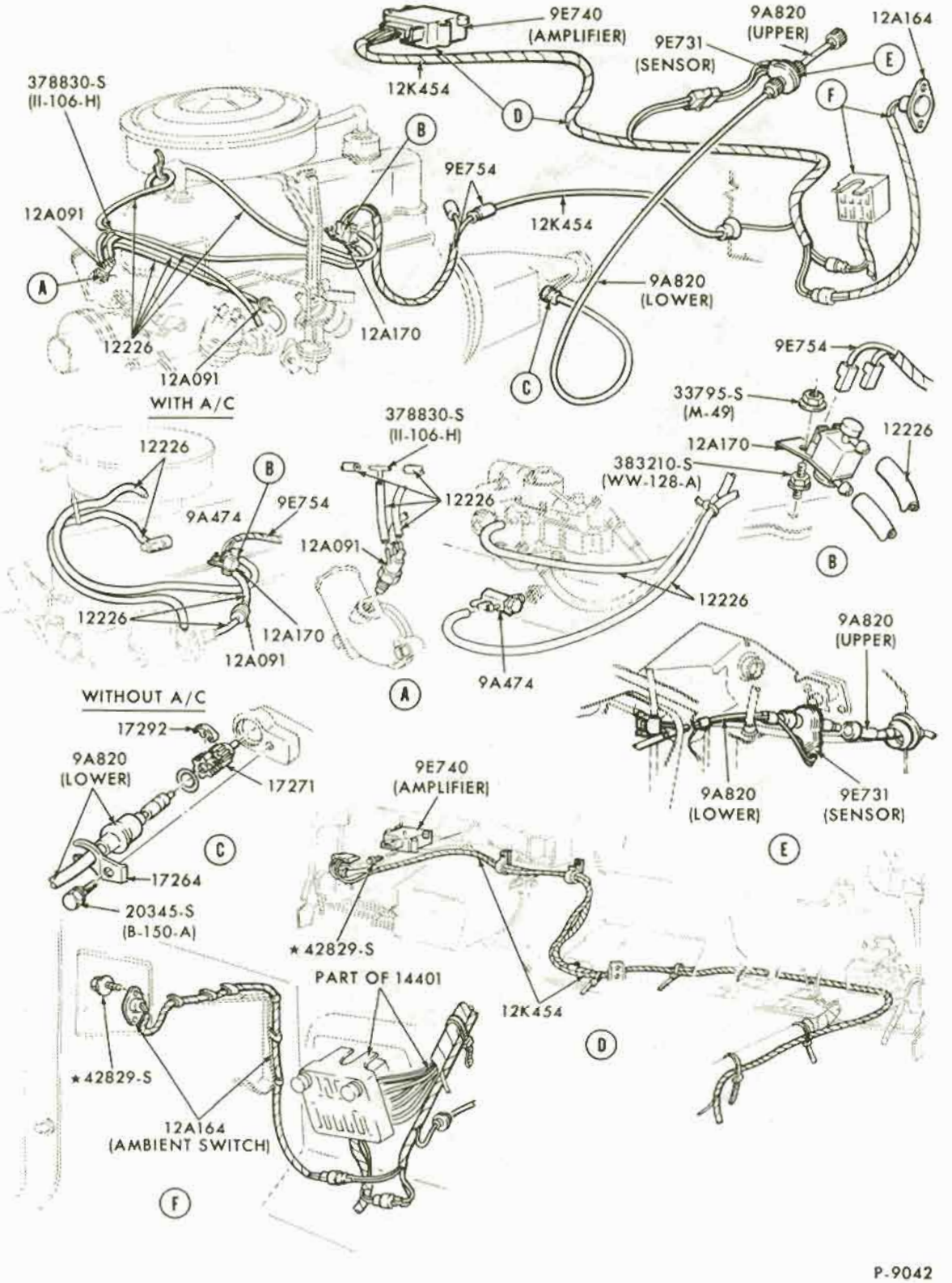

P-9042

ELECTRONIC SPARK CONTROL SYSTEM (E.S.C.)-6 CYL. 250 C.I.D. ENGINE
1972 TORINO

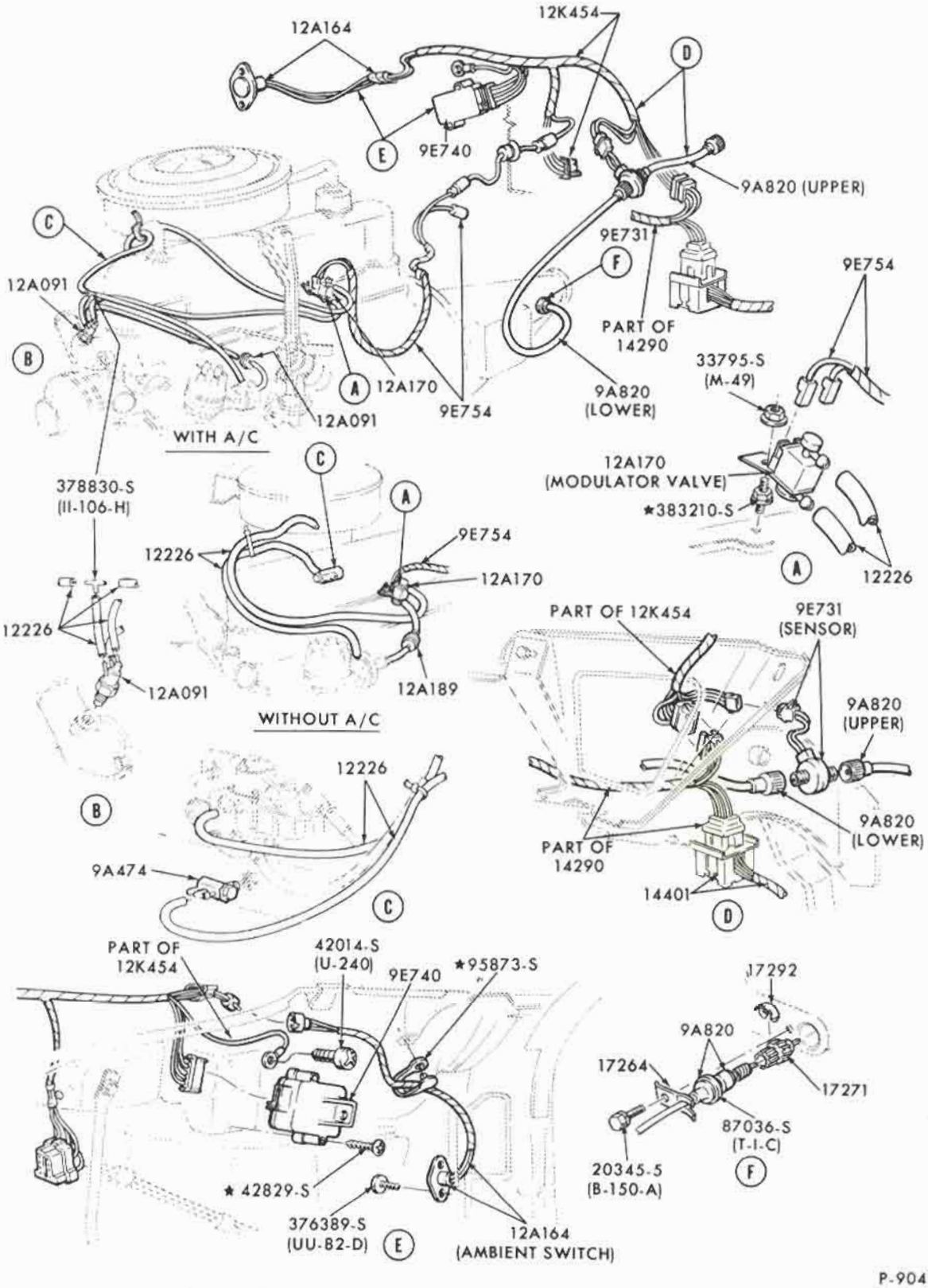

P-9043

ELECTRONIC SPARK CONTROL SYSTEM (E.S.C.)-6 CYL. 250 C.I.D. ENGINE
1972 MUSTANG

COPYRIGHT © 1975 — FORD MOTOR COMPANY — DEARBORN, MICHIGAN

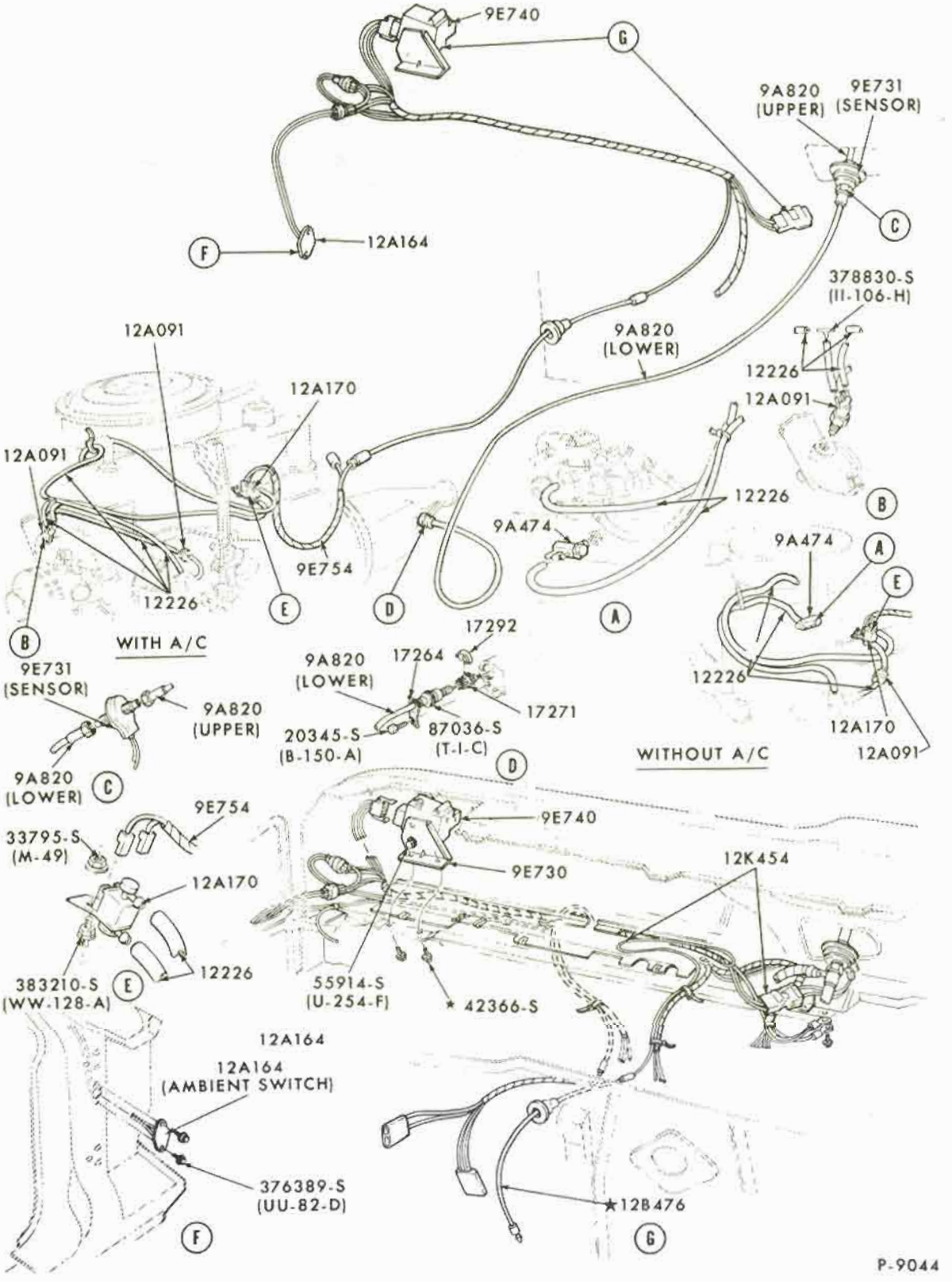

ELECTRONIC SPARK CONTROL SYSTEM (E.S.C.)-6 CYL. 170, 200, 250 C.I.D. ENGINES
1972 MAVERICK

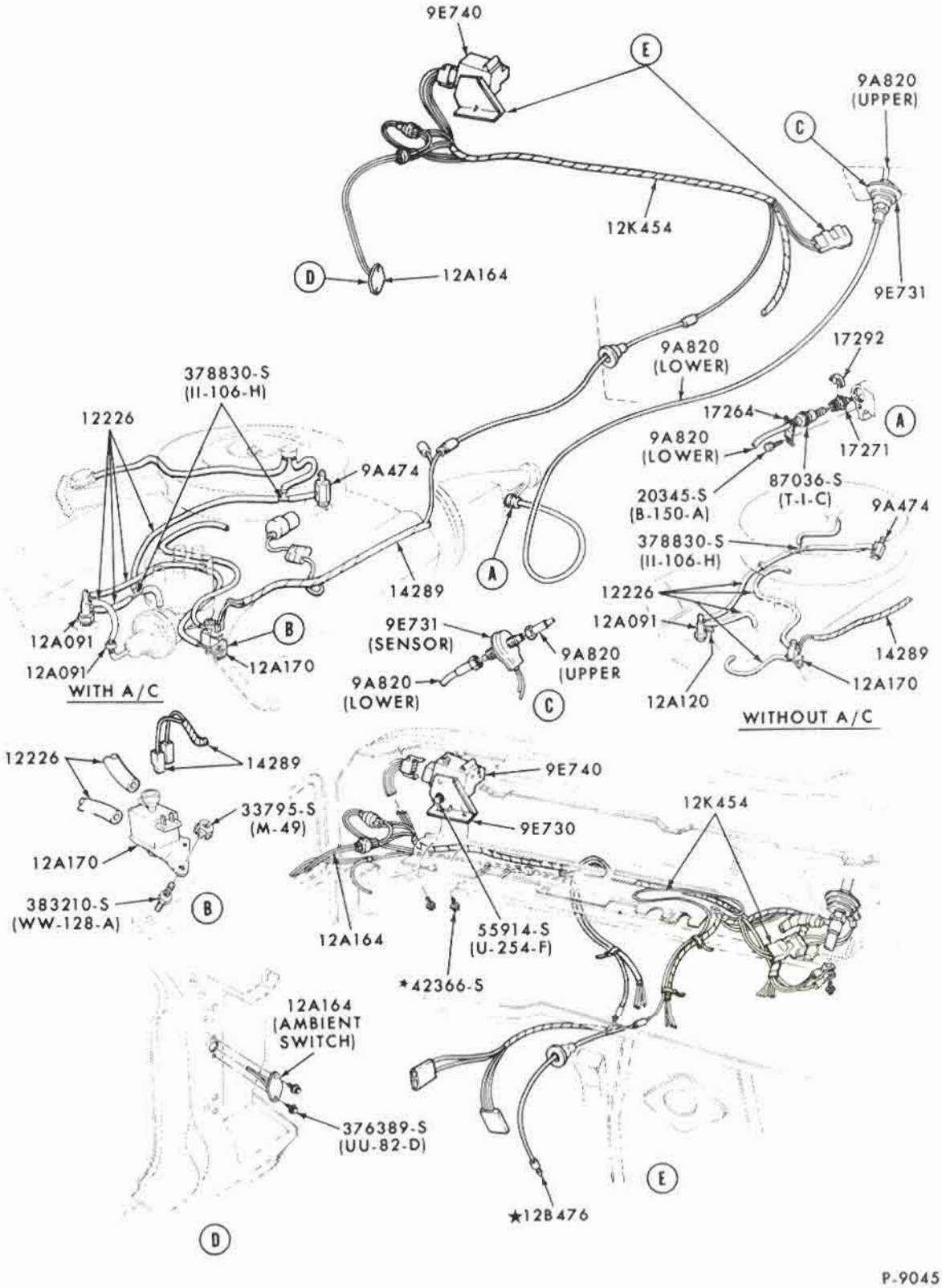

P-9045

ELECTRONIC SPARK CONTROL SYSTEM (E.S.C.)-8 CYL. 302-2V C.I.D. ENGINE
1972 MAVERICK

COPYRIGHT © 1975 — FORD MOTOR COMPANY — DEARBORN, MICHIGAN

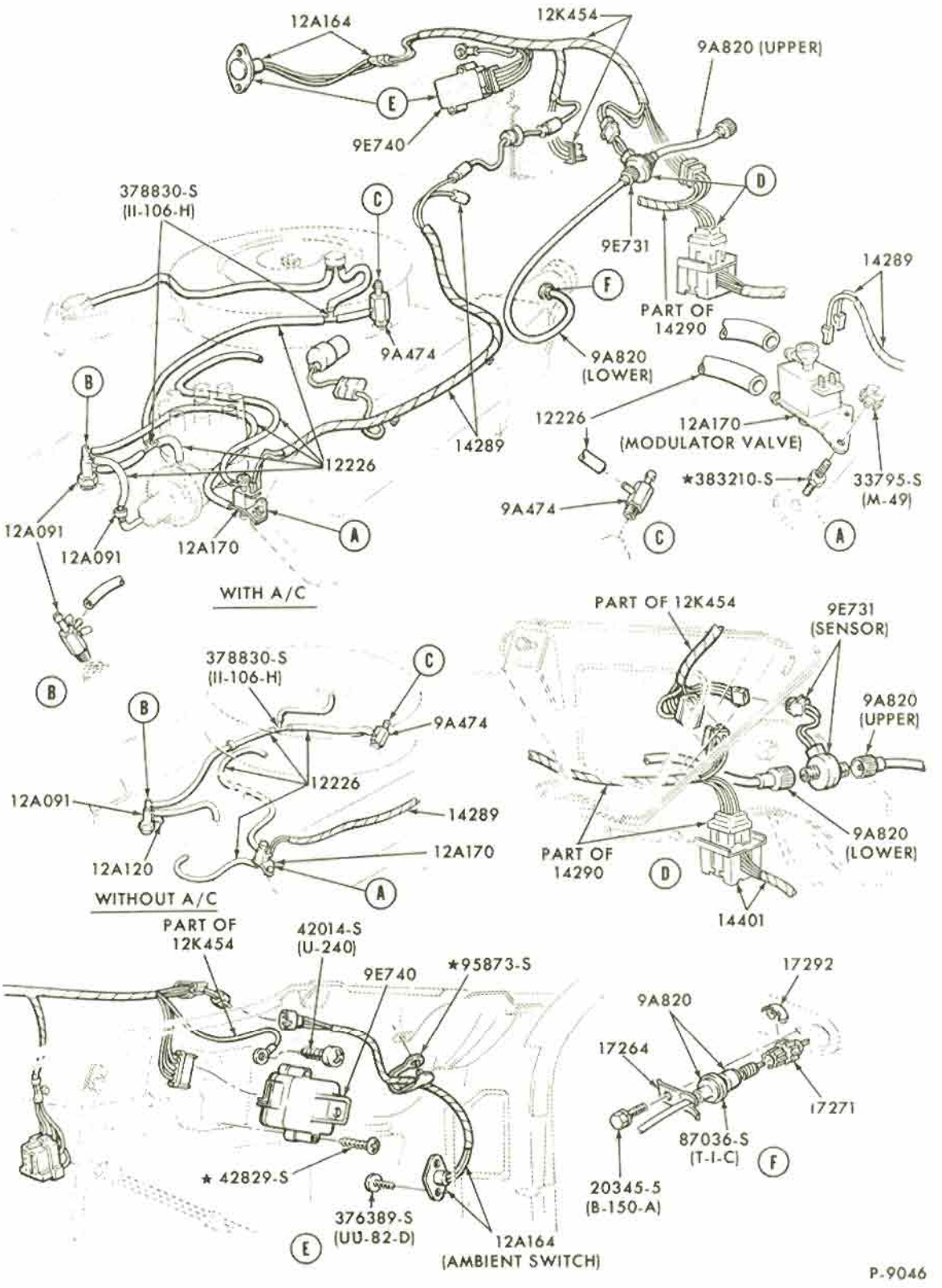

ELECTRONIC SPARK CONTROL SYSTEM (E.S.C.)-8 CYL. 302-2V C.I.D. ENGINE

1972 MUSTANG

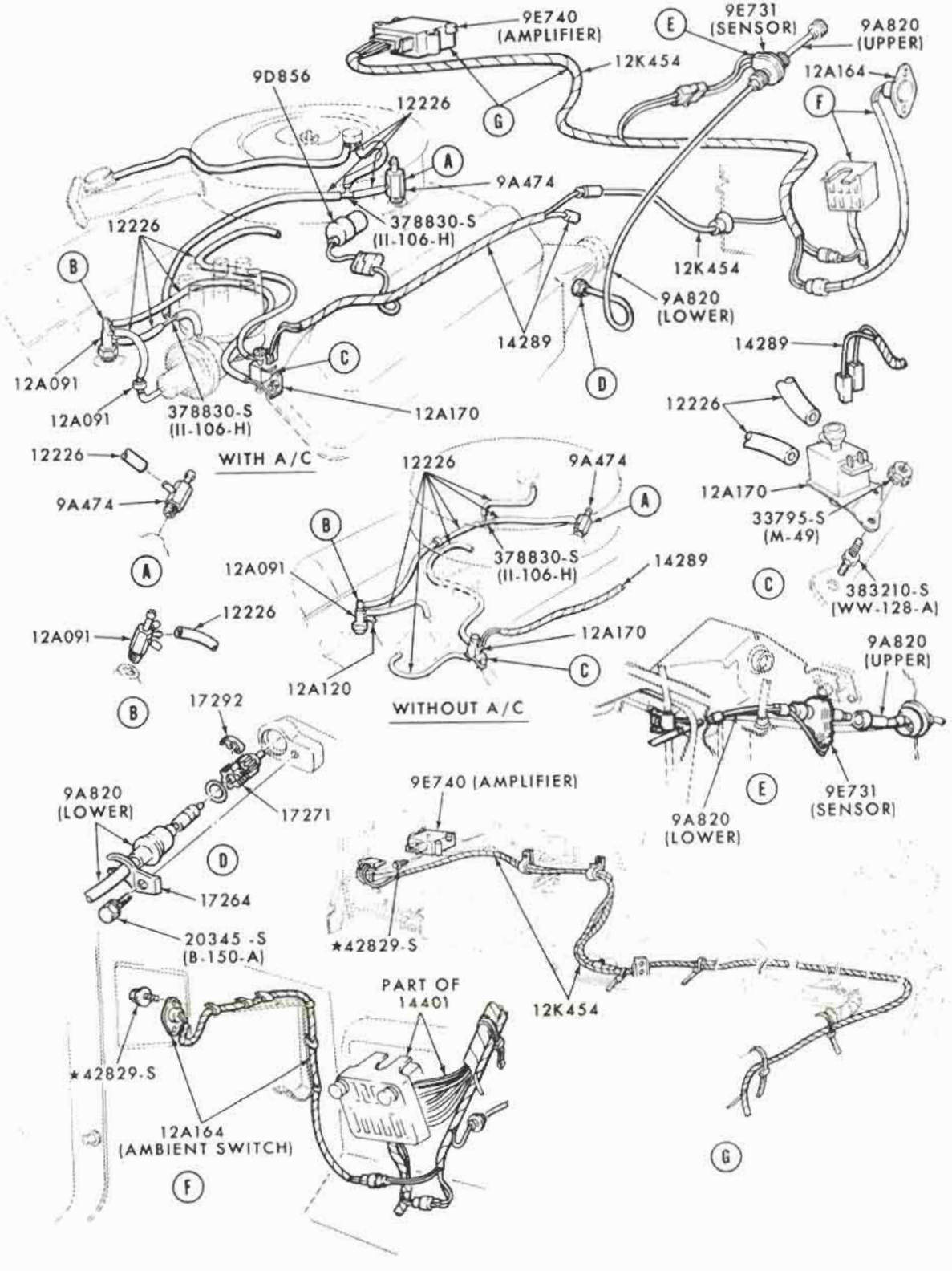

P-9047

ELECTRONIC SPARK CONTROL SYSTEM (E.S.C.)-8 CYL. 302-2V C.I.D. ENGINE
1972 TORINO

COPYRIGHT © 1975 — FORD MOTOR COMPANY — DEARBORN, MICHIGAN

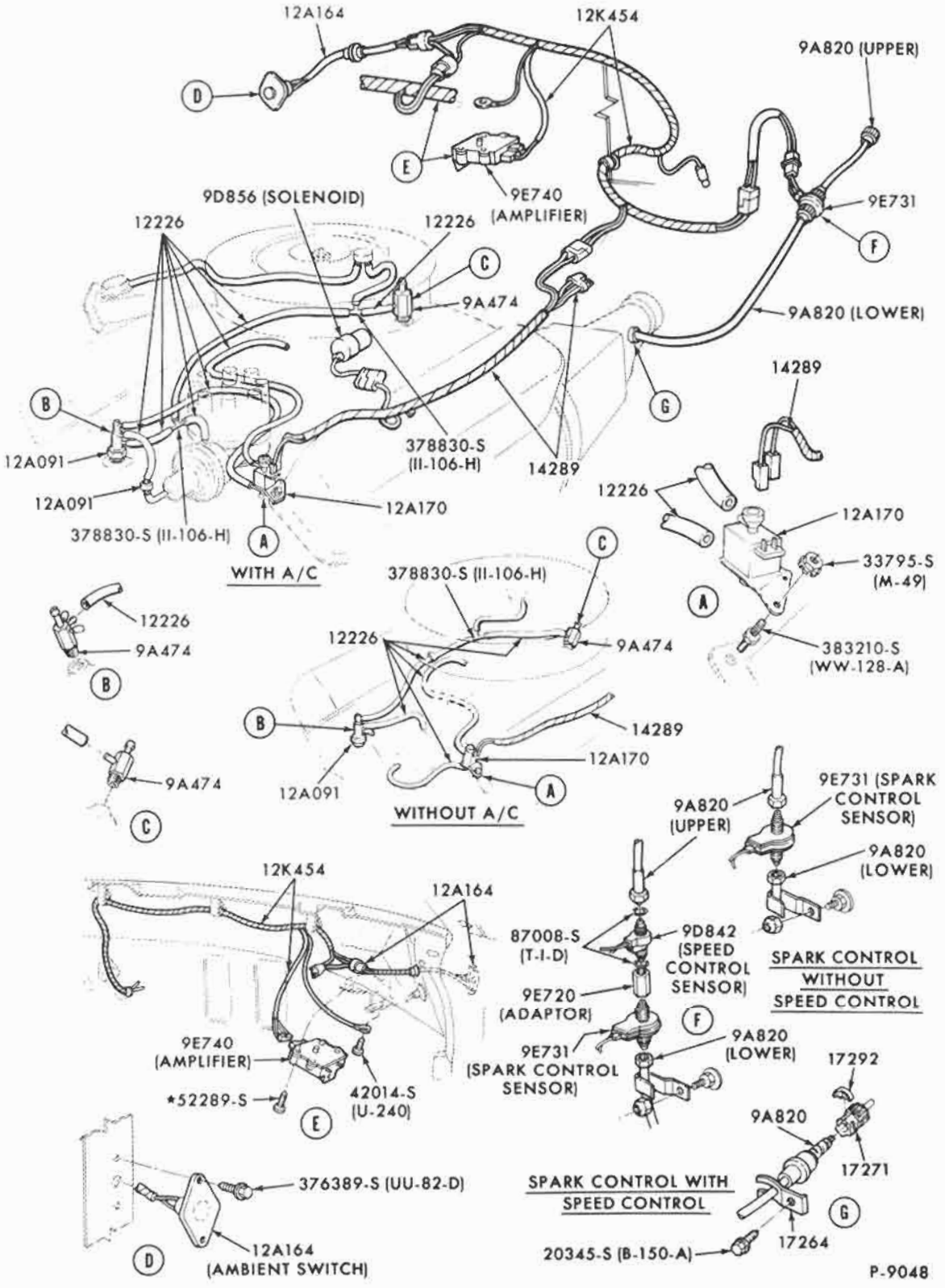

ELECTRONIC SPARK CONTROL SYSTEM (E.S.C.)-8 CYL. 302-2V C.I.D. ENGINE

1972 FORD

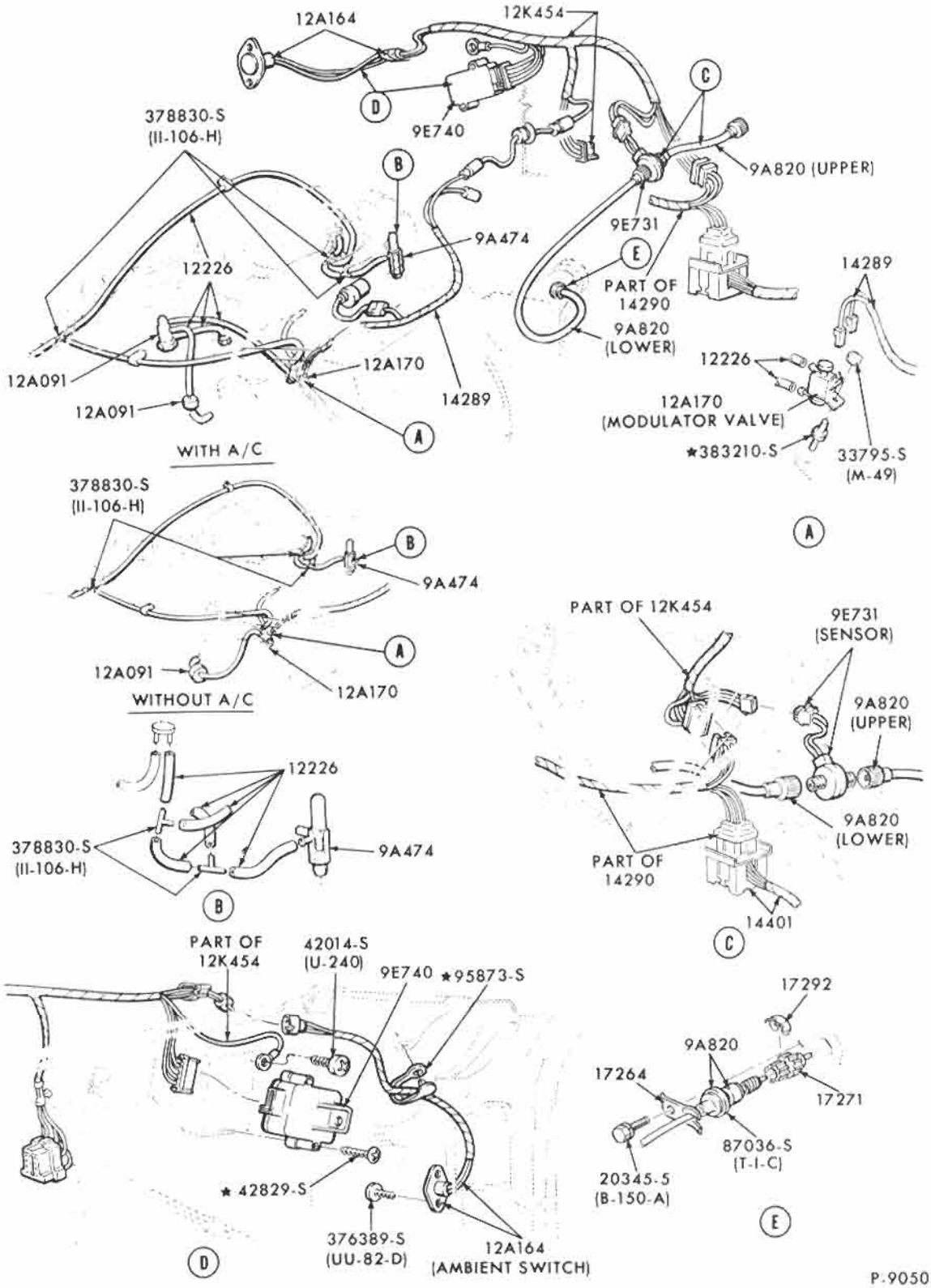

ELECTRONIC SPARK CONTROL SYSTEM (E.S.C.)-8 CYL. 351-4V CJ ENGINE
1972 MUSTANG - WITH RAM AIR HOOD

COPYRIGHT © 1975 — FORD MOTOR COMPANY — DEARBORN, MICHIGAN

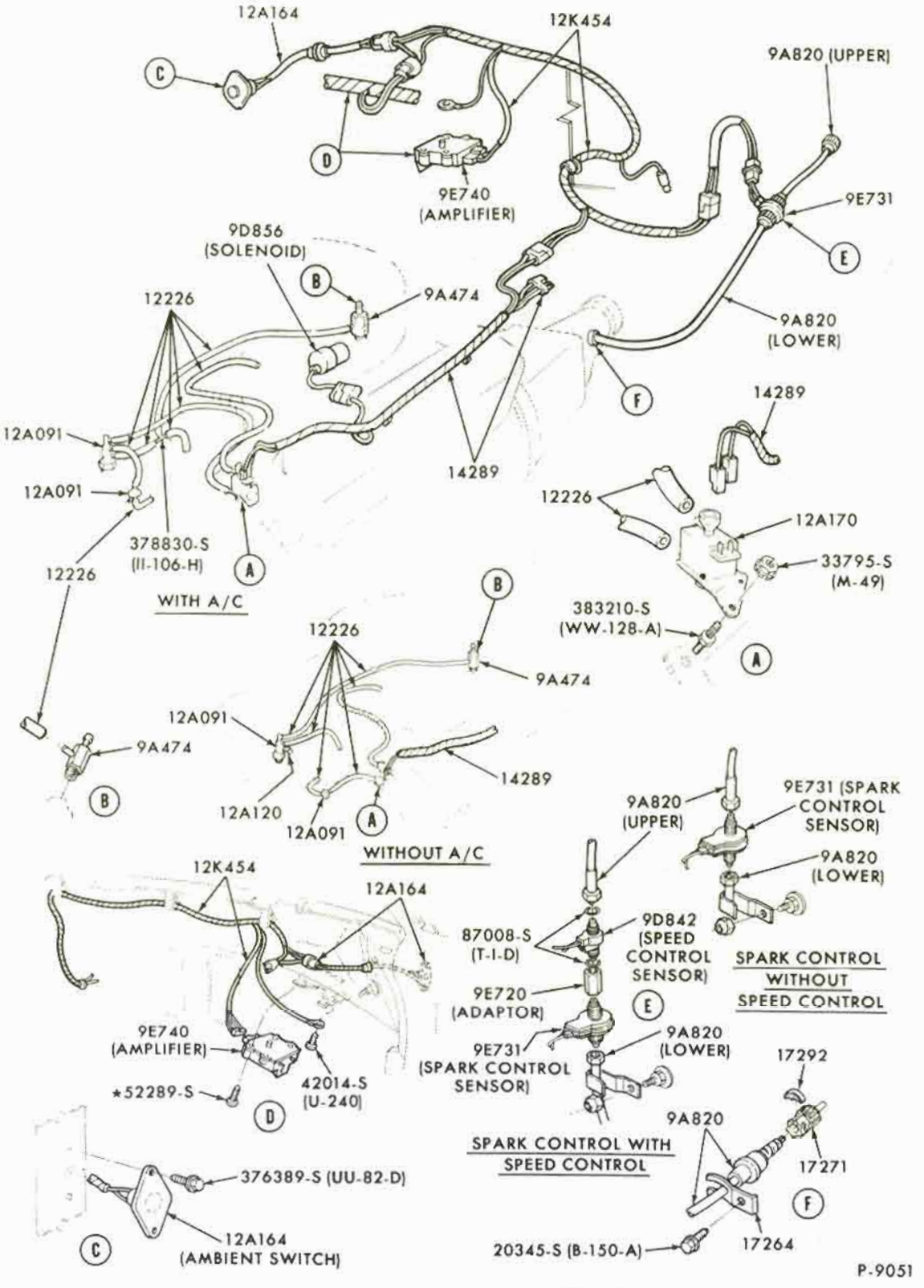

ELECTRONIC SPARK CONTROL SYSTEM (E.S.C.)-8 CYL. 351-W C.I.D. ENGINE

1972 FORD

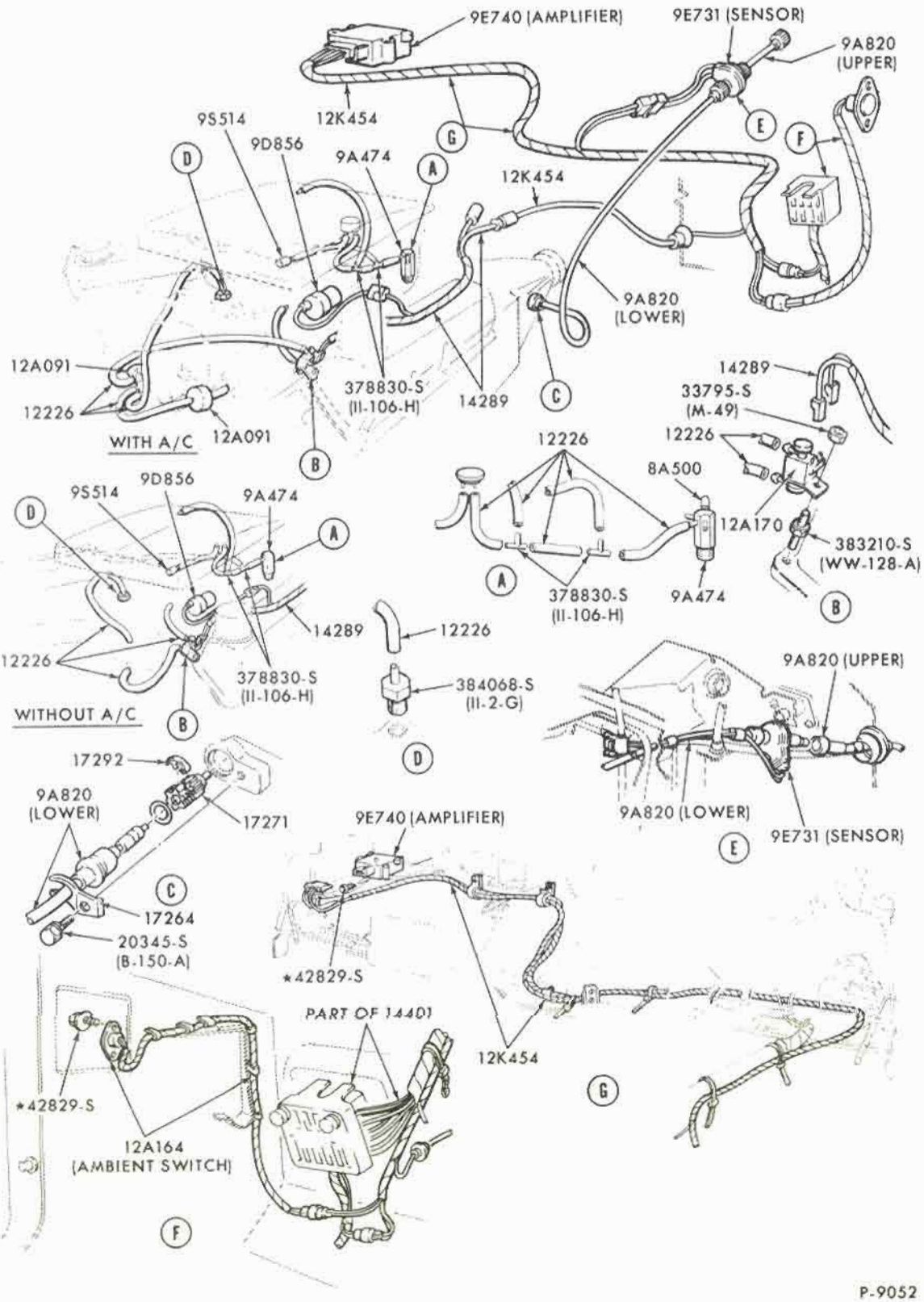

P-9052

ELECTRONIC SPARK CONTROL SYSTEM (E.S.C.)-8 CYL. 351-4V CJ ENGINE

1972 TORINO - WITH RAM AIR HOOD

COPYRIGHT © 1975 — FORD MOTOR COMPANY — DEARBORN, MICHIGAN

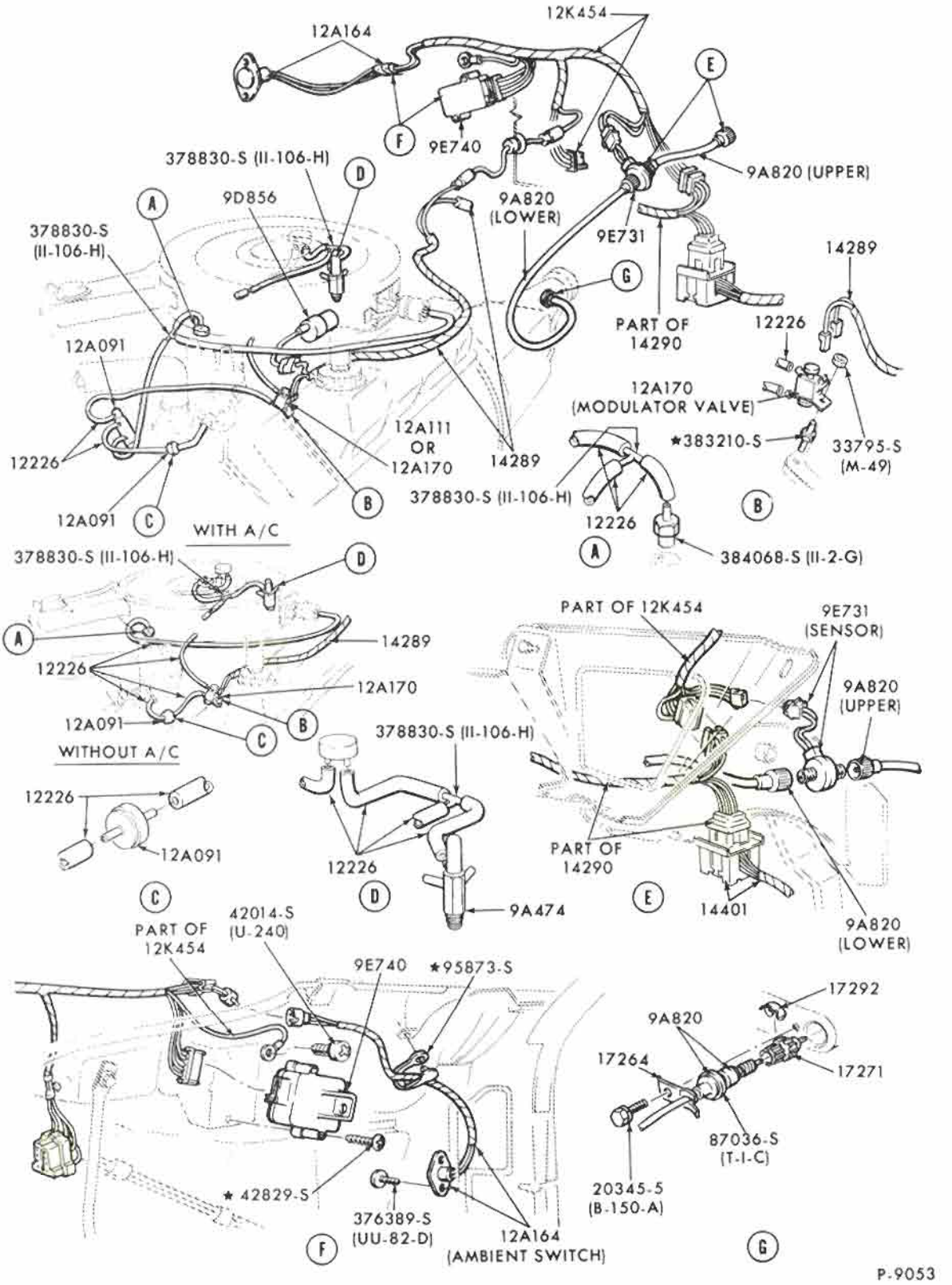

ELECTRONIC SPARK CONTROL SYSTEM (E.S.C.)-8 CYL. 351-4V CJ ENGINE
1972 MUSTANG - WITHOUT RAM AIR HOOD

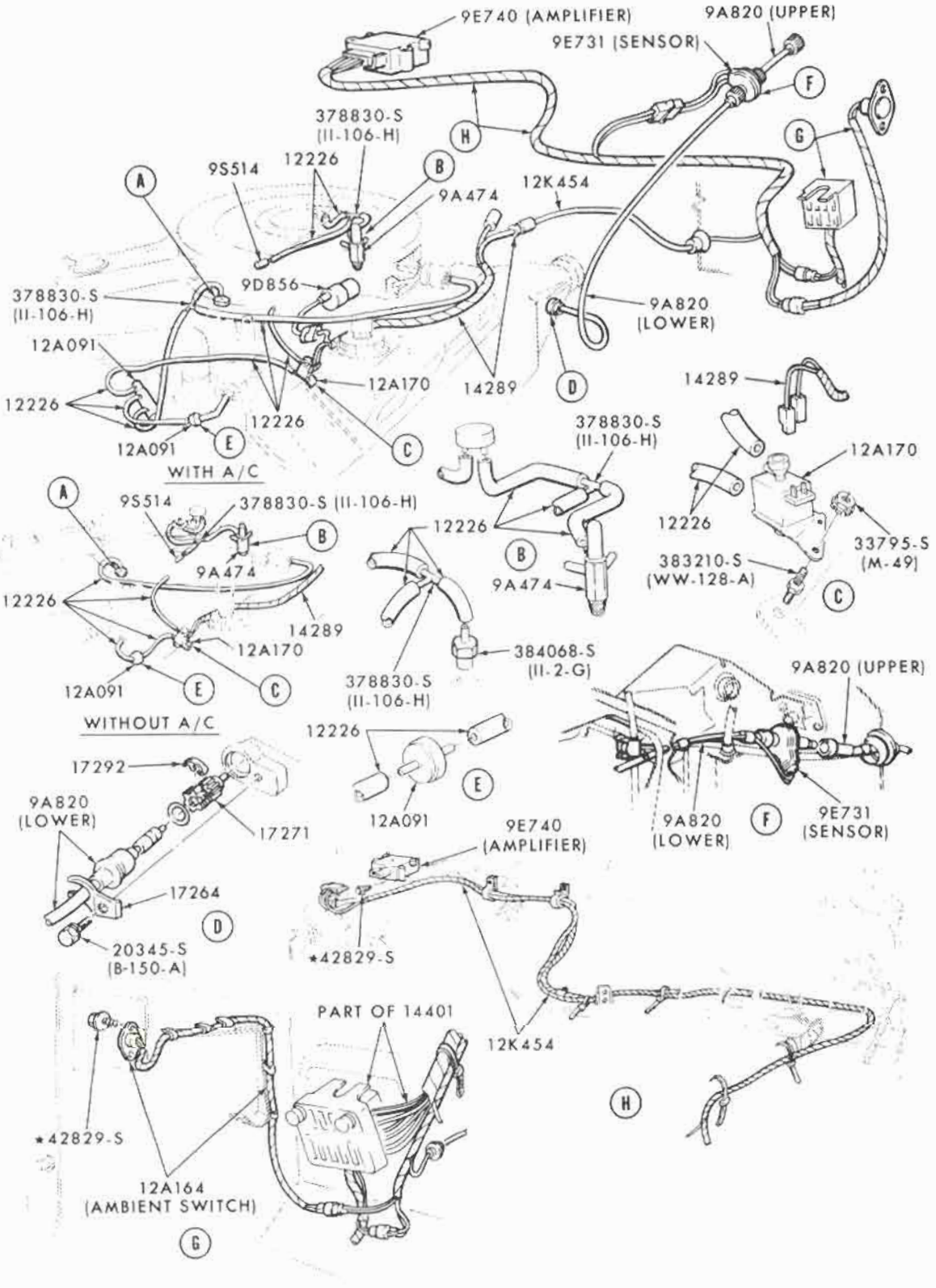

P-9054

ELECTRONIC SPARK CONTROL SYSTEM (E.S.C.)-8 CYL. 351-4V CJ ENGINE

1972 TORINO - WITHOUT RAM AIR HOOD

COPYRIGHT © 1975 — FORD MOTOR COMPANY — DEARBORN, MICHIGAN

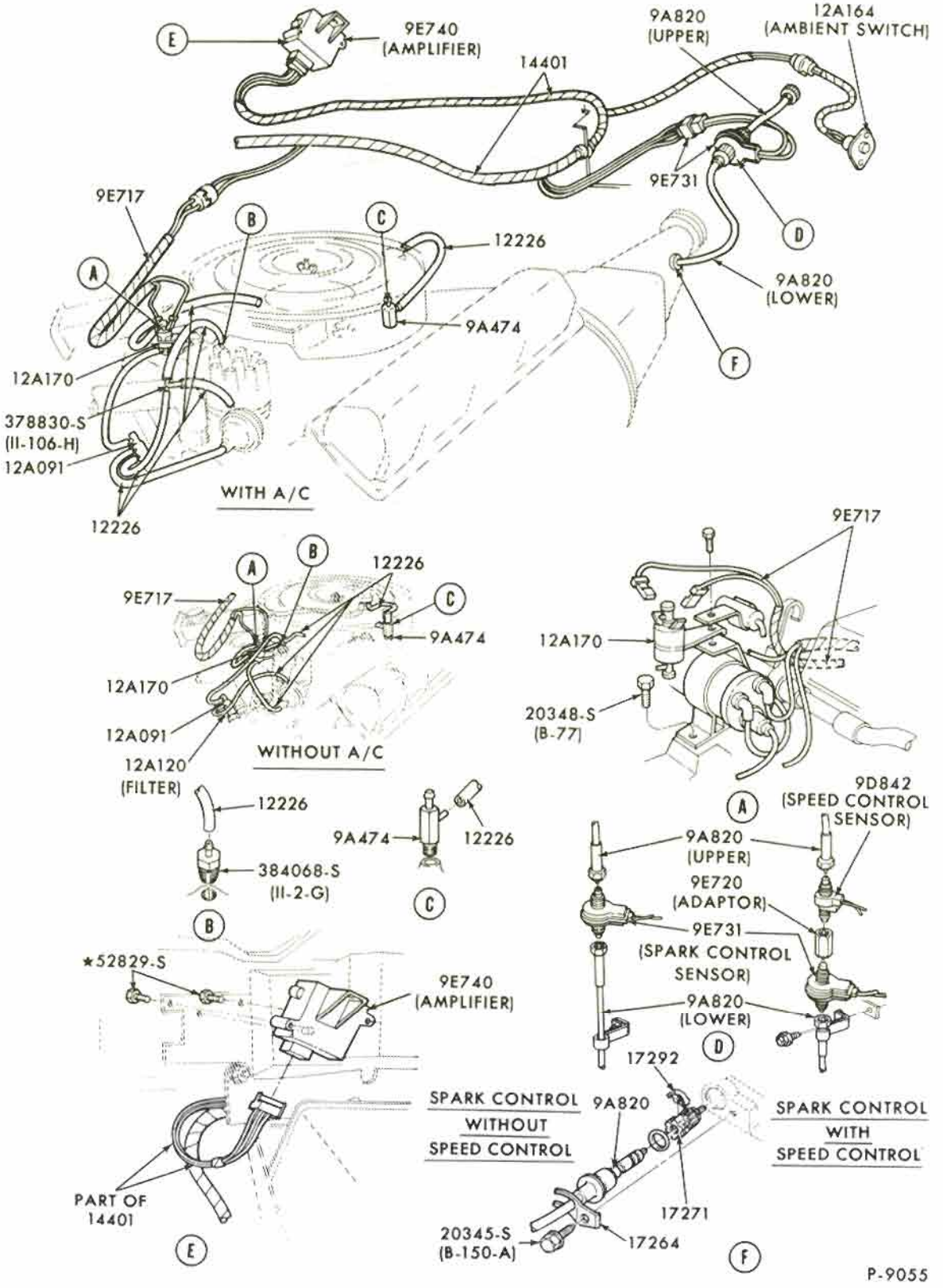

ELECTRONIC SPARK CONTROL SYSTEM (E.S.C.)-8 CYL. 400 C.I.D. ENGINE
1972 THUNDERBIRD

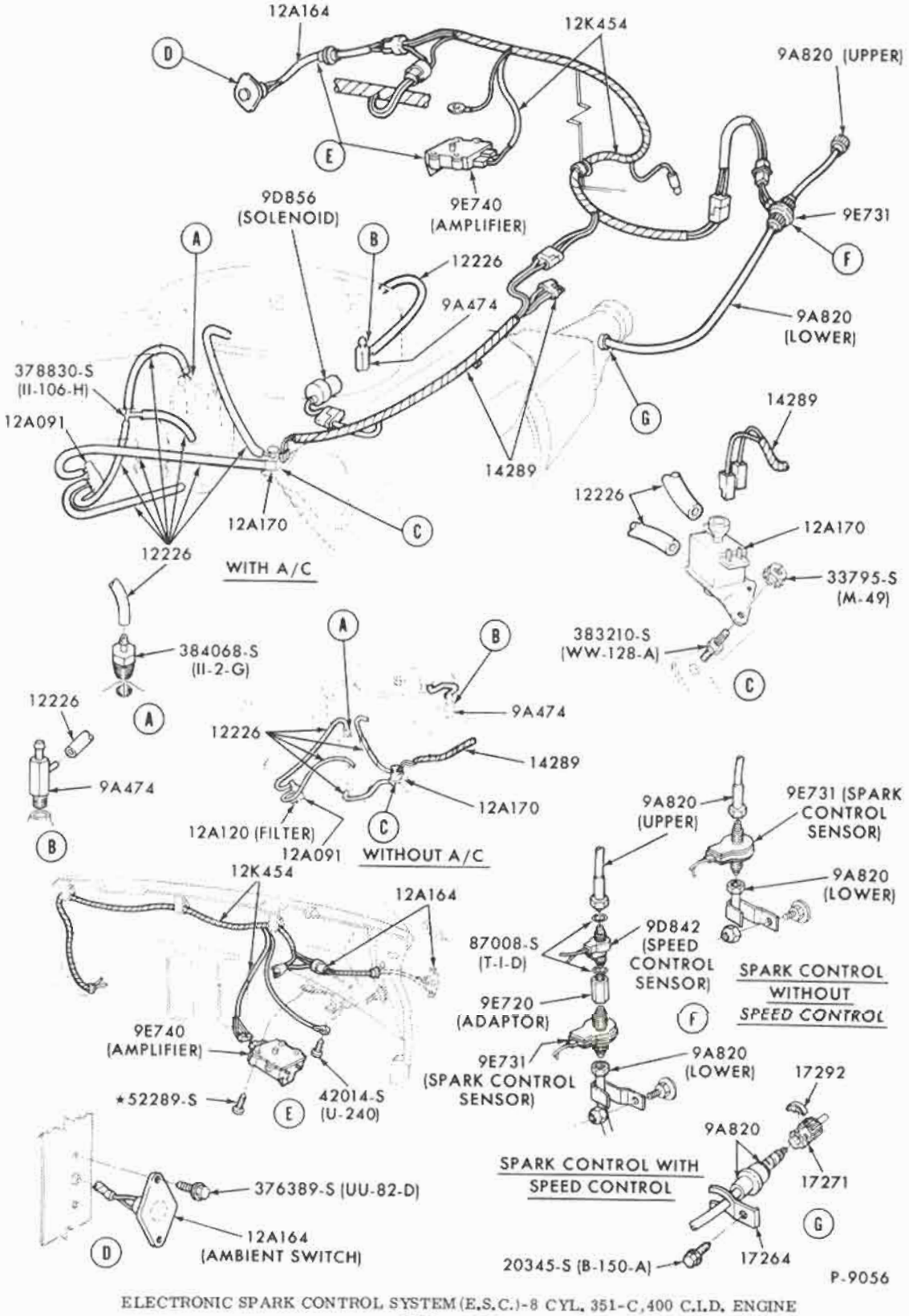

ELECTRONIC SPARK CONTROL SYSTEM (E.S.C.)-8 CYL. 351-C, 400 C.I.D. ENGINE
1972 FORD

COPYRIGHT © 1975 — FORD MOTOR COMPANY — DEARBORN, MICHIGAN

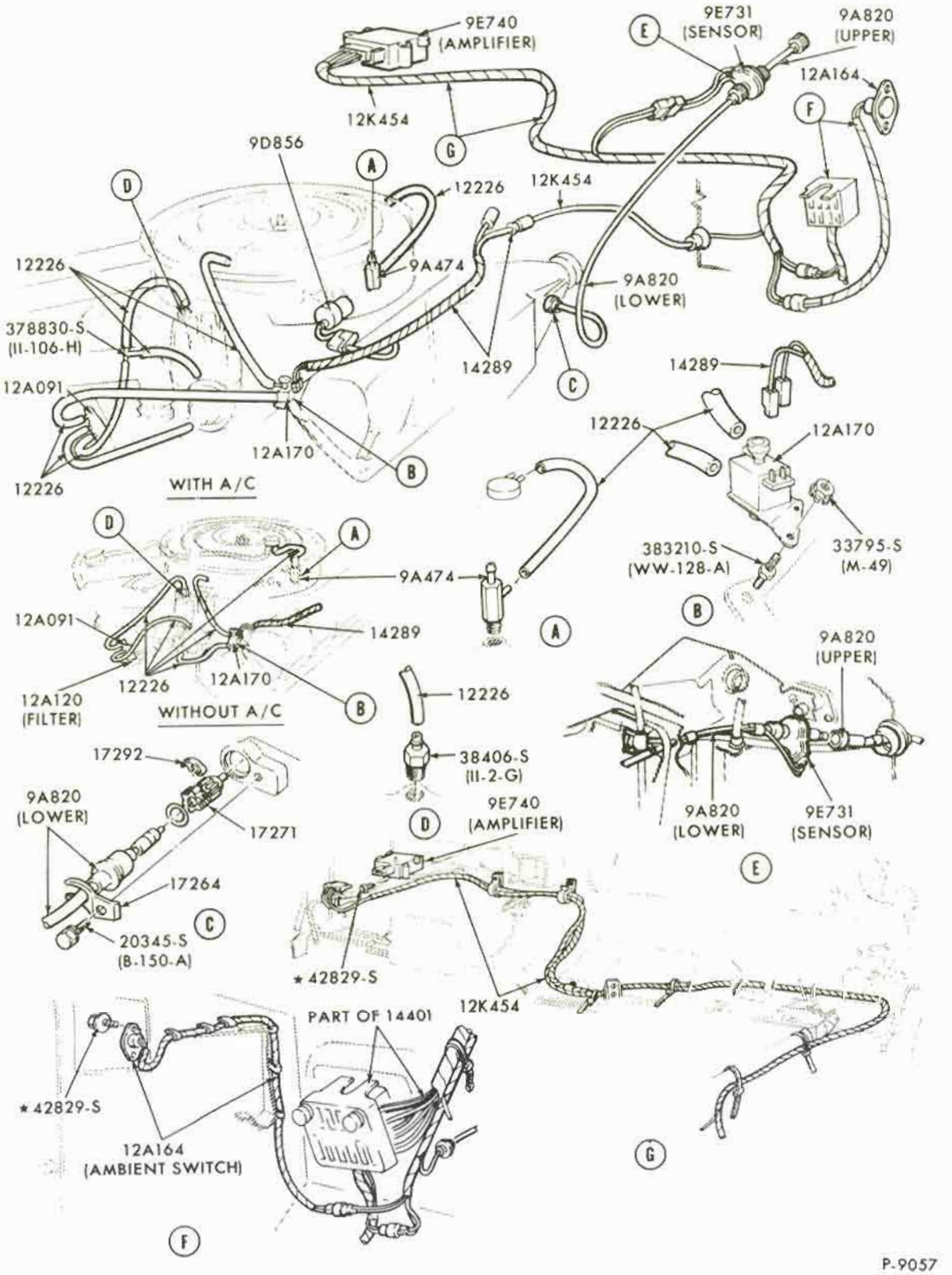

P-9057

ELECTRONIC SPARK CONTROL SYSTEM (E.S.C.)-8 CYL. 351-2V, 400-2V C.I.D. ENGINES
1972 TORINO

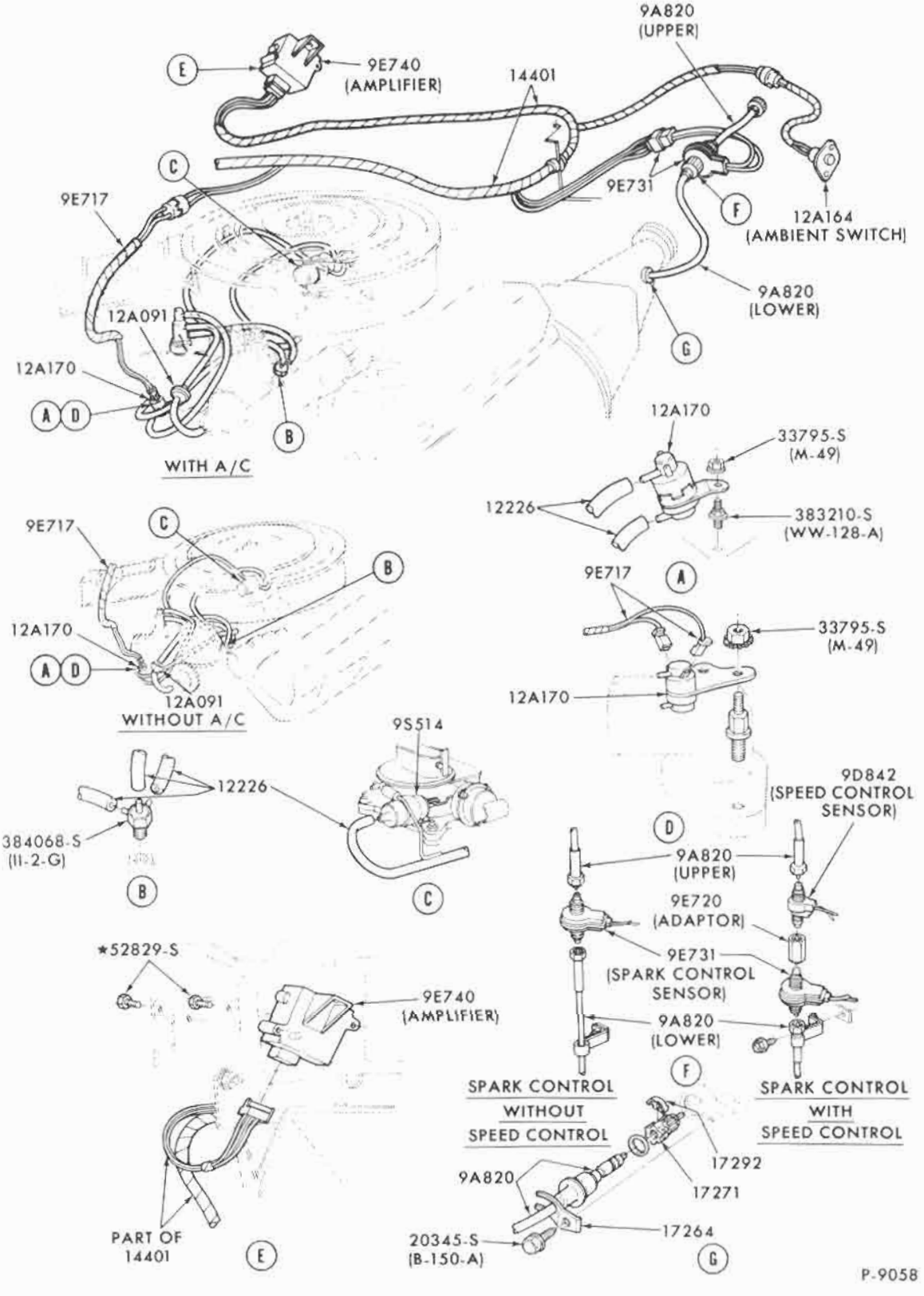

ELECTRONIC SPARK CONTROL SYSTEM (E.S.C.)-8 CYLINDER 429, 460 ENGINE
1972 THUNDERBIRD

COPYRIGHT © 1975 — FORD MOTOR COMPANY — DEARBORN, MICHIGAN

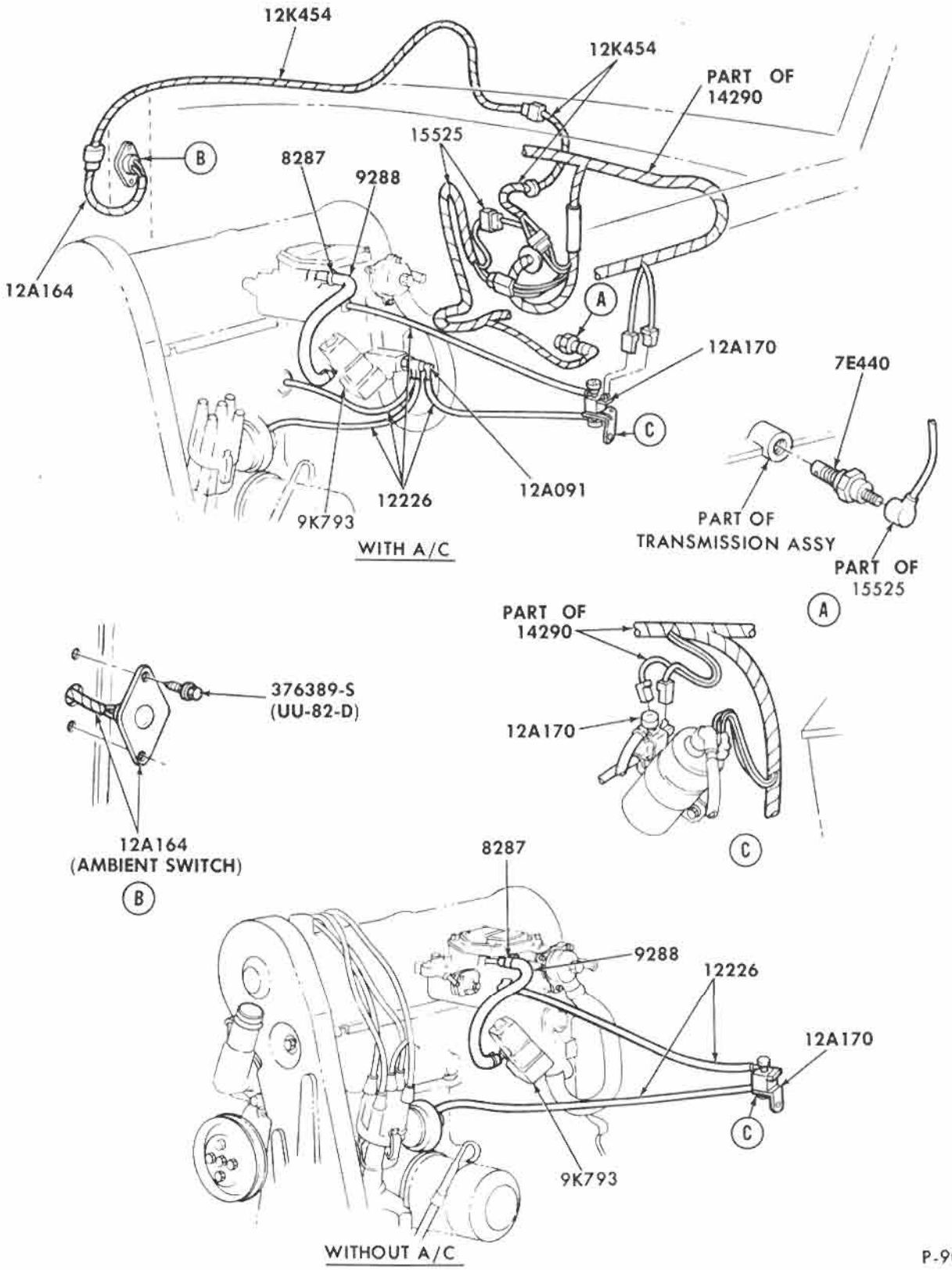

P-9060

TRANSMISSION REGULATED SPARK CONTROL SYSTEM (T.R.S.)-4 CYL. 122 C.I.D. ENGINE

1972 PINTO

COPYRIGHT © 1975 — FORD MOTOR COMPANY — DEARBORN, MICHIGAN

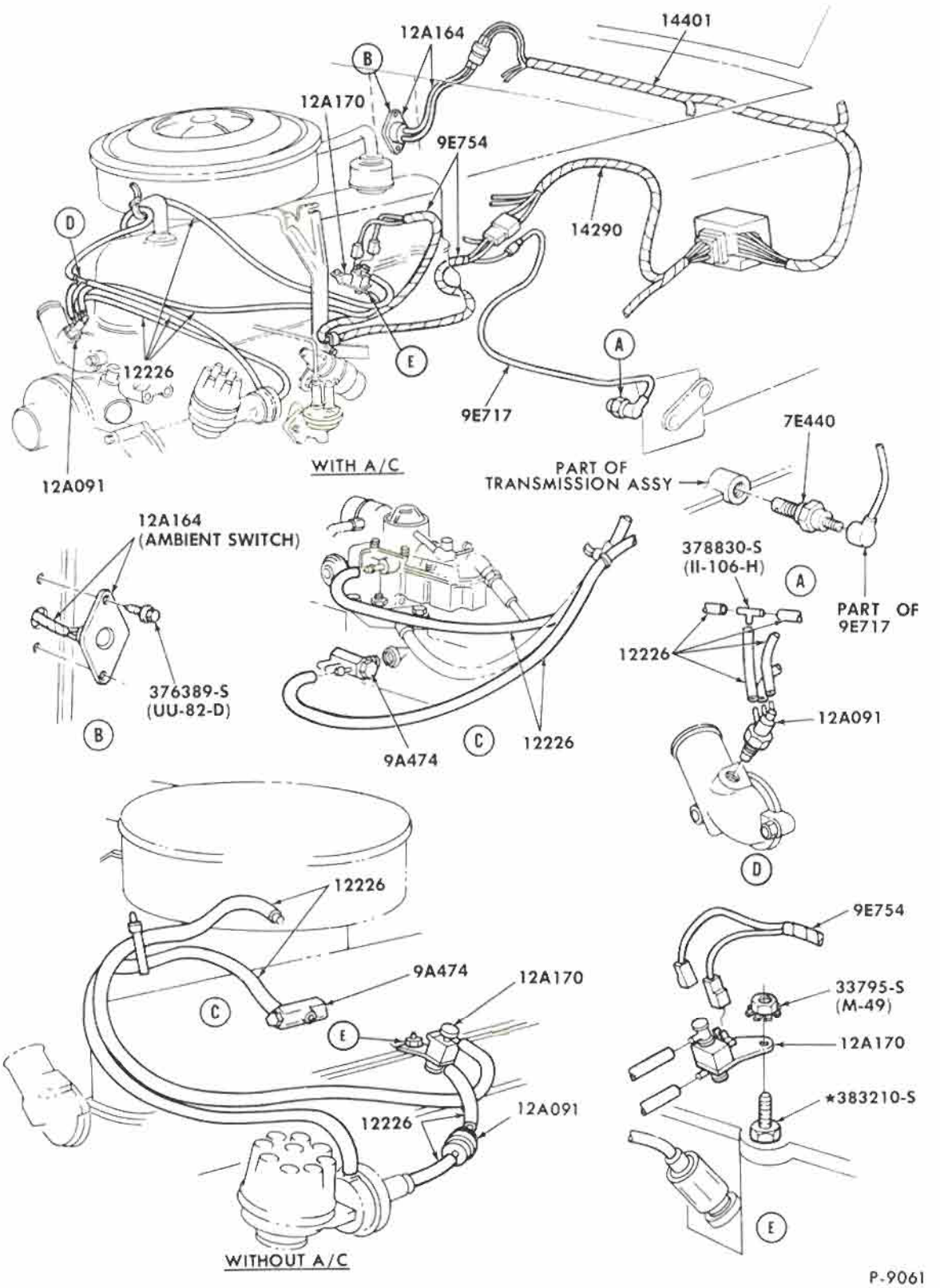

TRANSMISSION REGULATED SPARK CONTROL SYSTEM (T.R.S.)-6 CYL. 170,200, 250 C.I.D. ENGINES
1972 MAVERICK

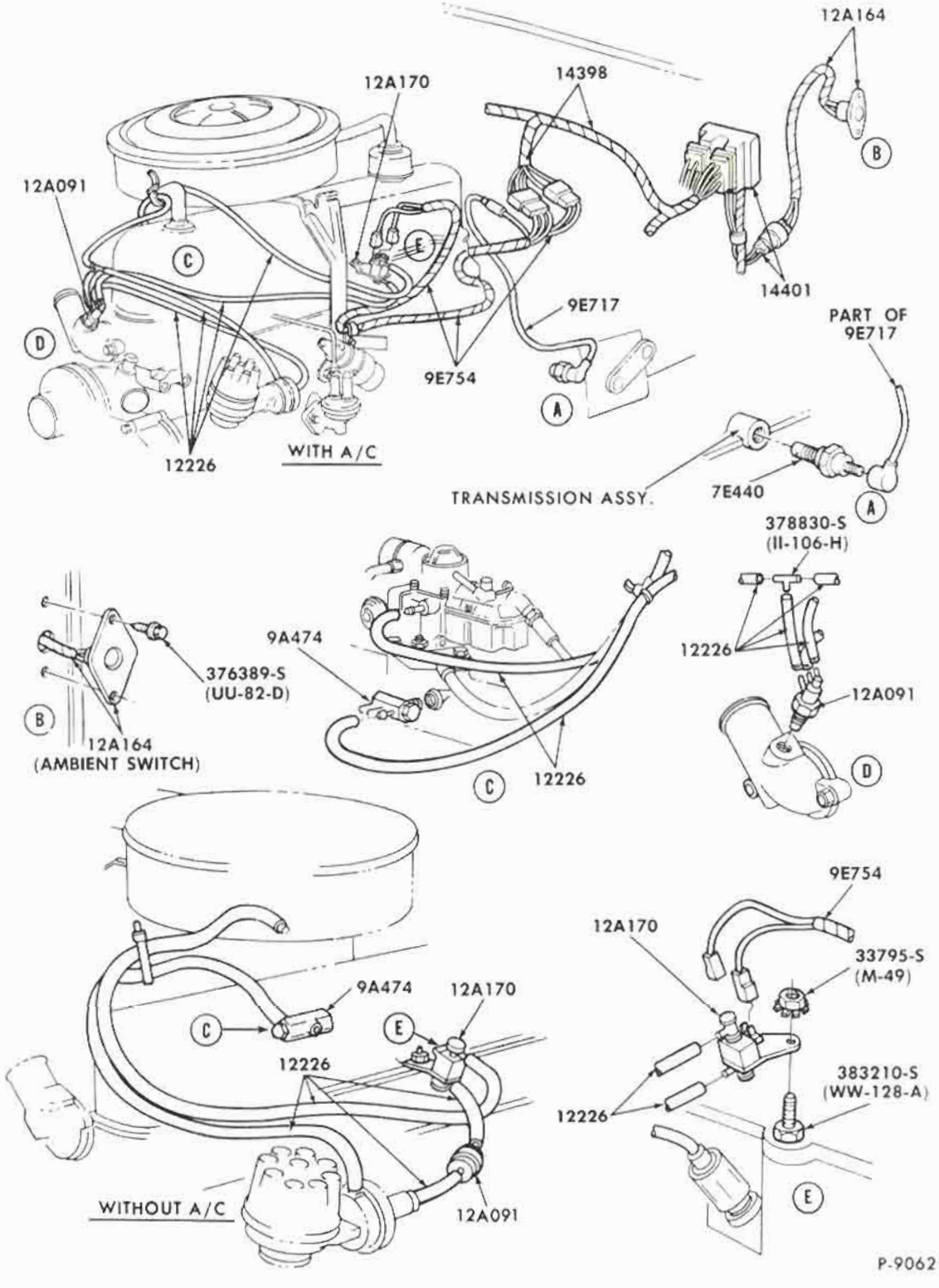

TRANSMISSION REGULATED SPARK CONTROL SYSTEM (T.R.S.)-6 CYL. 250 C.I.D. ENGINE
1972 TORINO

COPYRIGHT © 1975 — FORD MOTOR COMPANY — DEARBORN, MICHIGAN

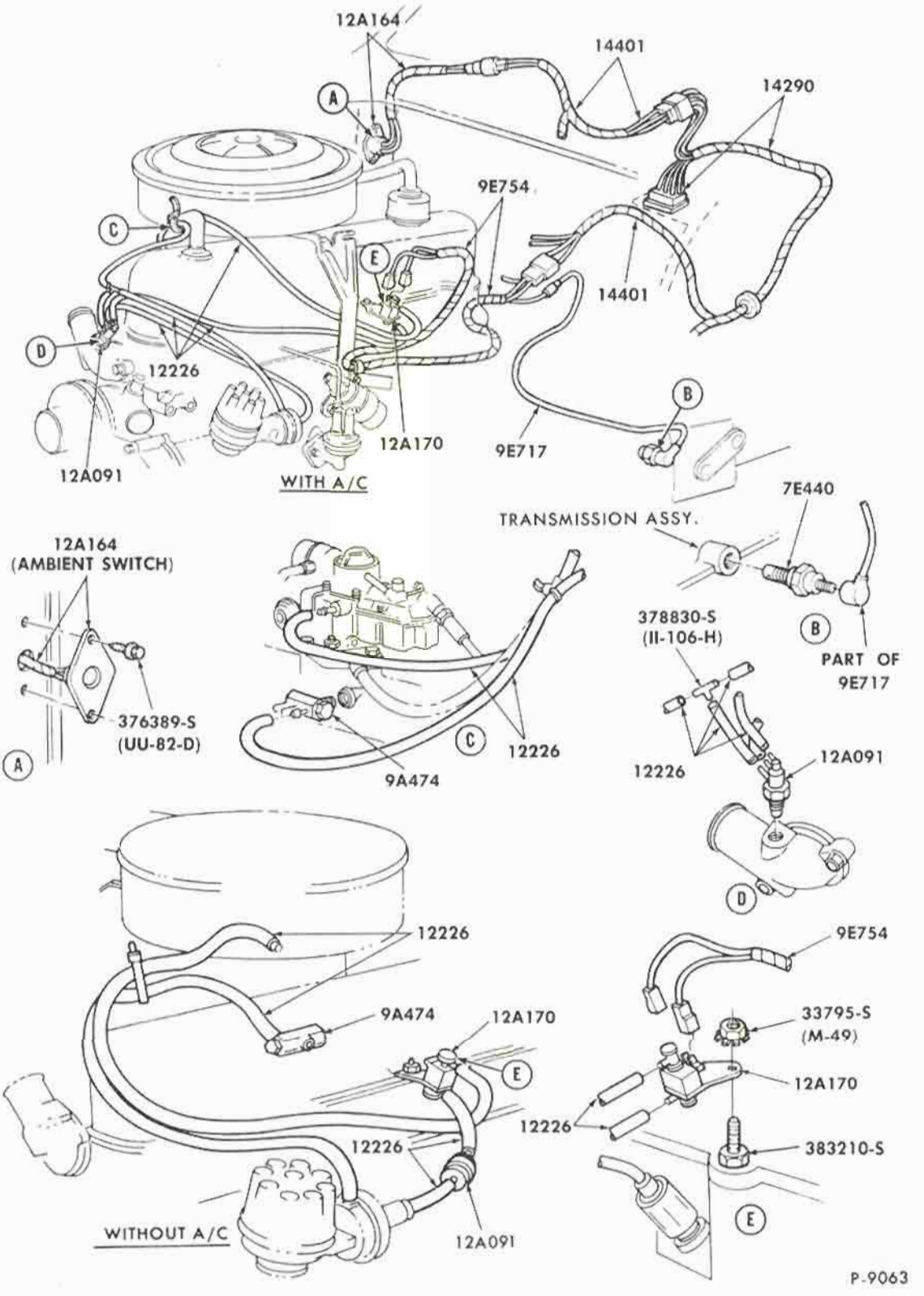

TRANSMISSION REGULATED SPARK CONTROL SYSTEM (T.R.S.)-6 CYL. 250 .I.D. ENGINE
1972 MUSTANG

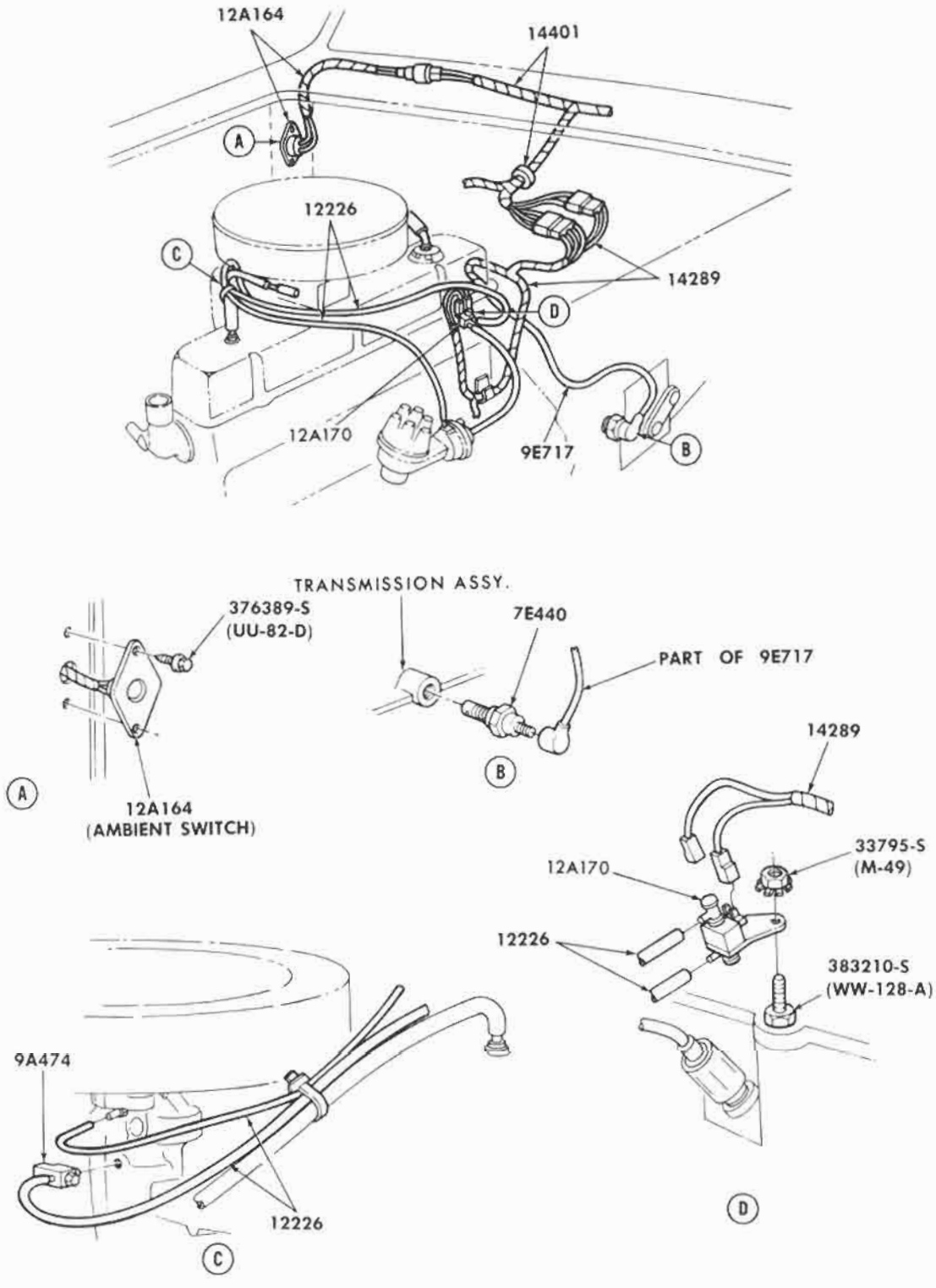

TRANSMISSION REGULATED SPARK CONTROL SYSTEM (T.R.S.)-6 CYL. 240 C.I.D. ENGINE
1972 FORD

COPYRIGHT © 1975 — FORD MOTOR COMPANY — DEARBORN, MICHIGAN

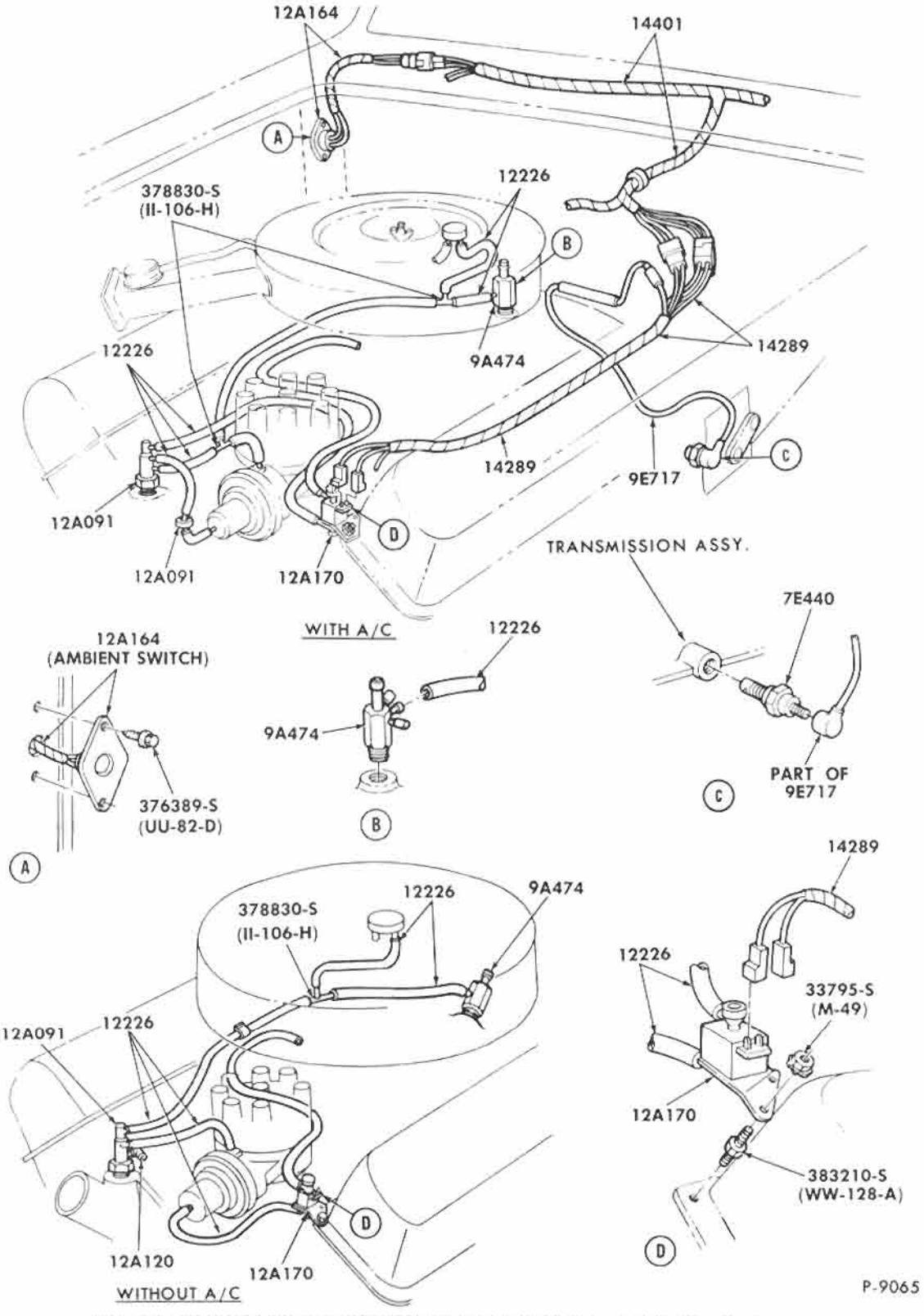

TRANSMISSION REGULATED SPARK CONTROL SYSTEM (T.R.S.)-8 CYL. 302-2V ENGINE

1972 FORD

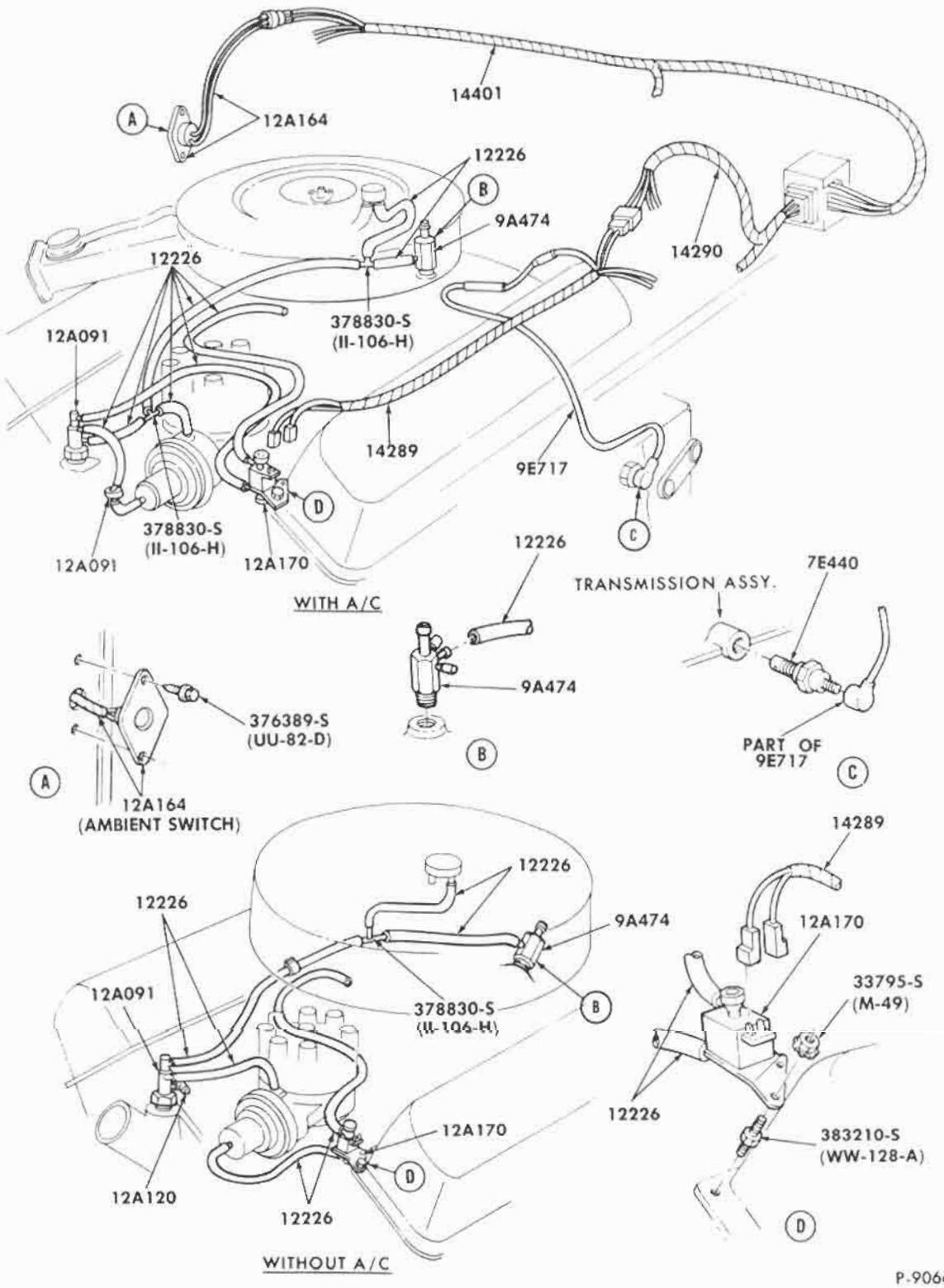

P-9066

TRANSMISSION REGULATED SPARK CONTROL SYSTEM (T.R.S.)-8 CYL. 302-2V C.I.D. ENGINE
1972 MAVERICK

COPYRIGHT © 1975 — FORD MOTOR COMPANY — DEARBORN, MICHIGAN

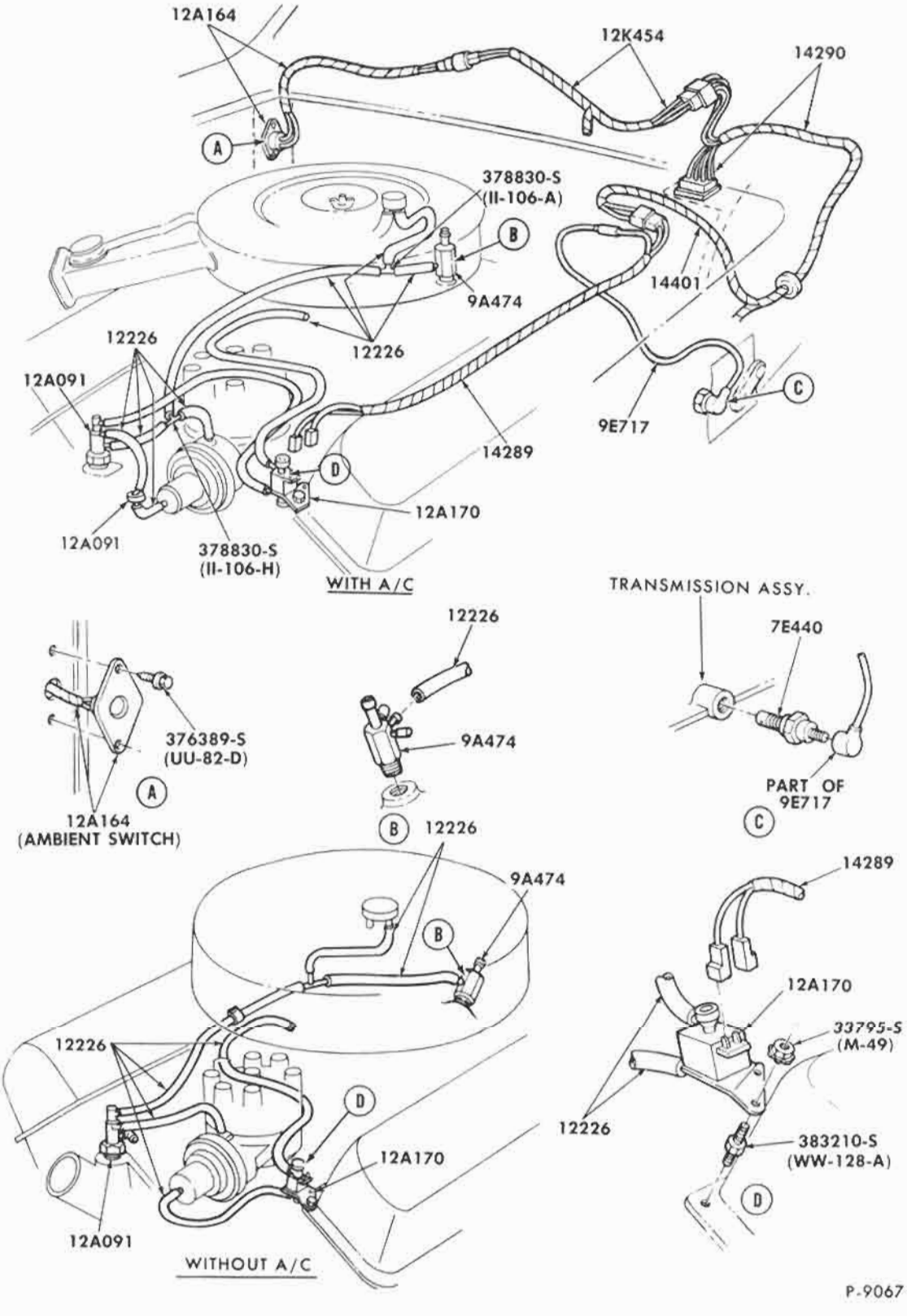

TRANSMISSION REGULATED SPARK CONTROL SYSTEM (T.R.S.)-8 CYL. 302-2V ENGINE

1972 MUSTANG

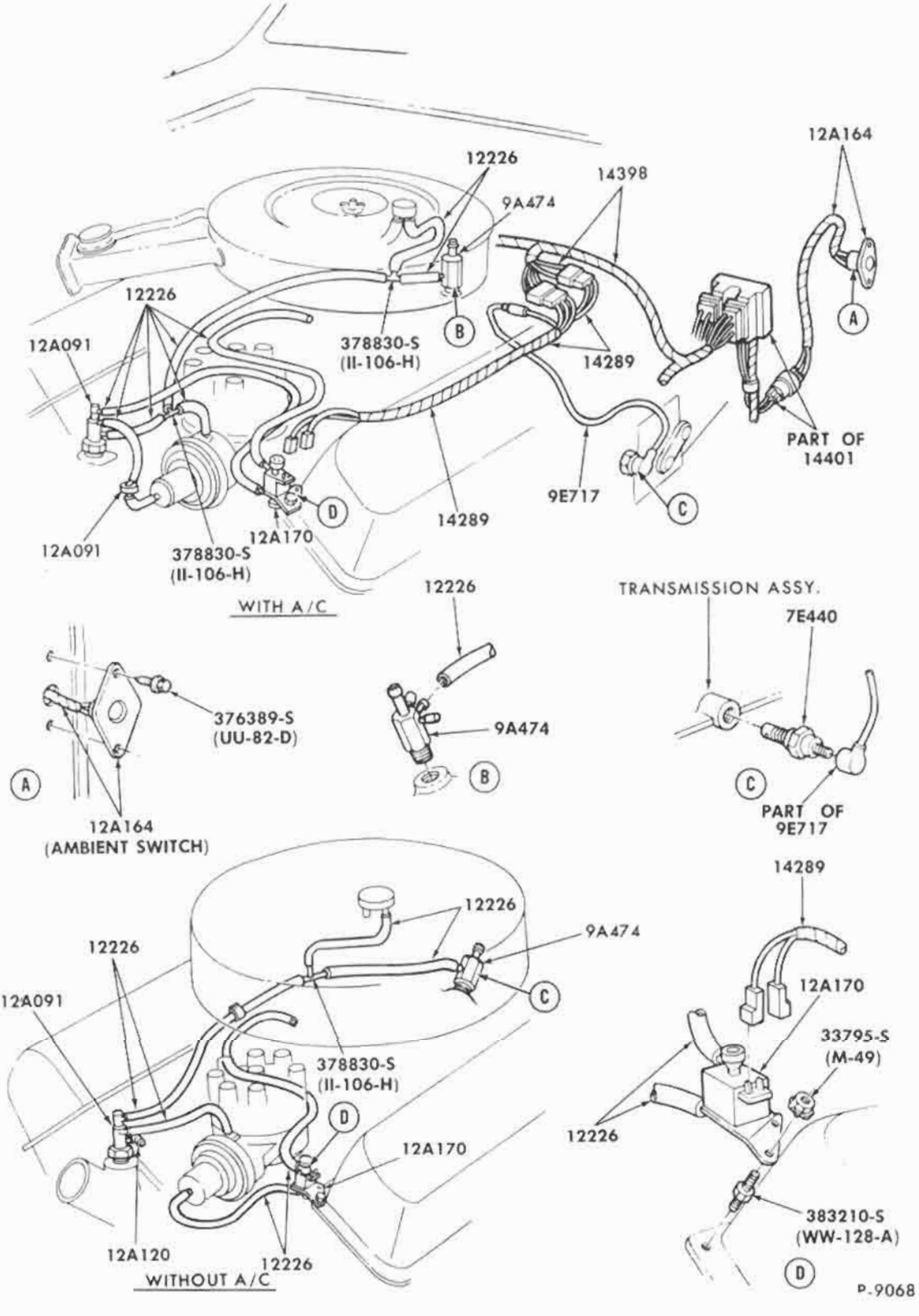

TRANSMISSION REGULATED SPARK CONTROL SYSTEM (T.R.S.)-8 CYL. 302-2V ENGINE
1972 TORINO

COPYRIGHT © 1975 — FORD MOTOR COMPANY — DEARBORN, MICHIGAN

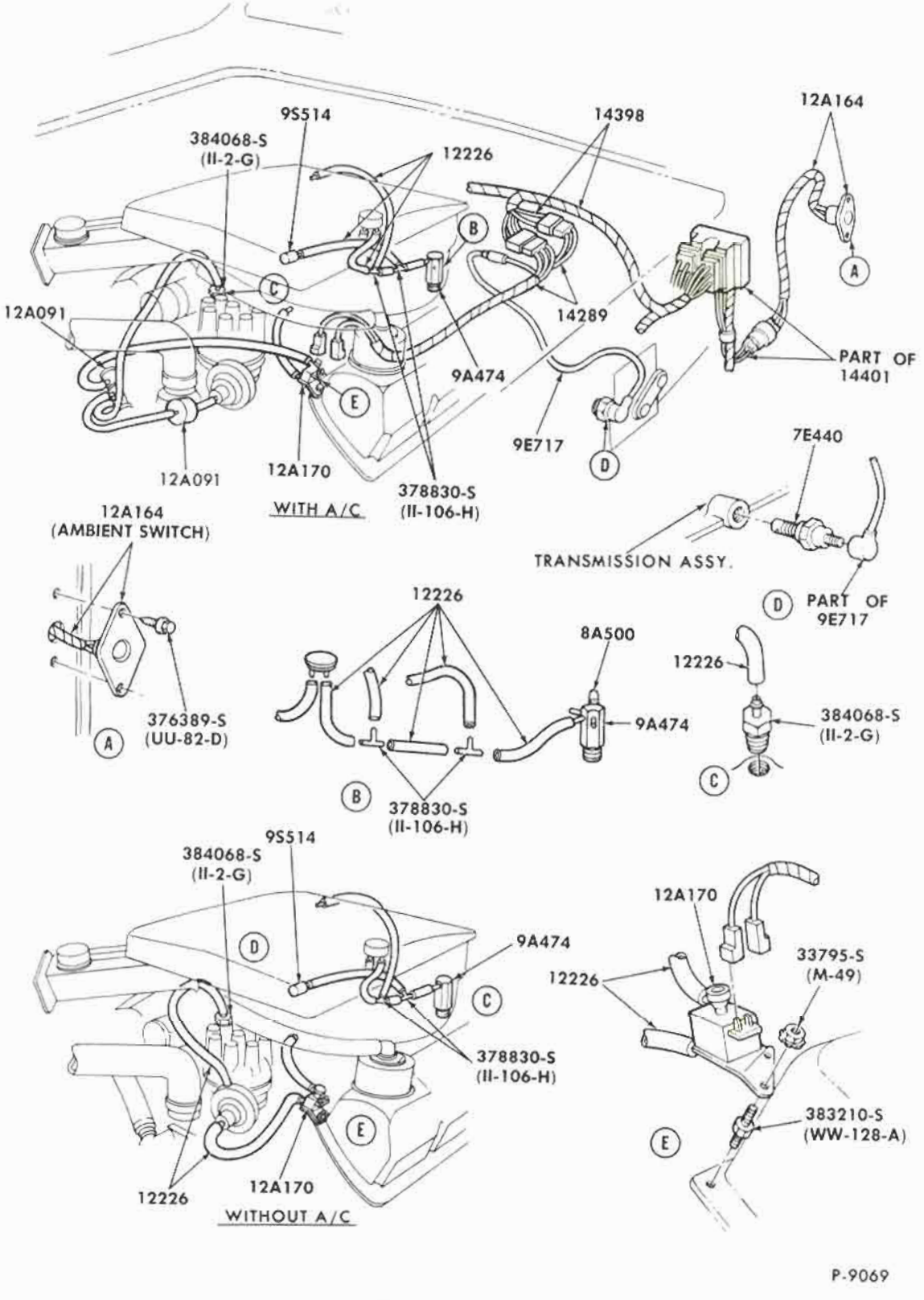

P-9069

TRANSMISSION REGULATED SPARK CONTROL SYSTEM (T.R.S.)-8 CYL. 351-4V CJ ENGINE
1972 TORINO - WITH RAM AIR HOOD

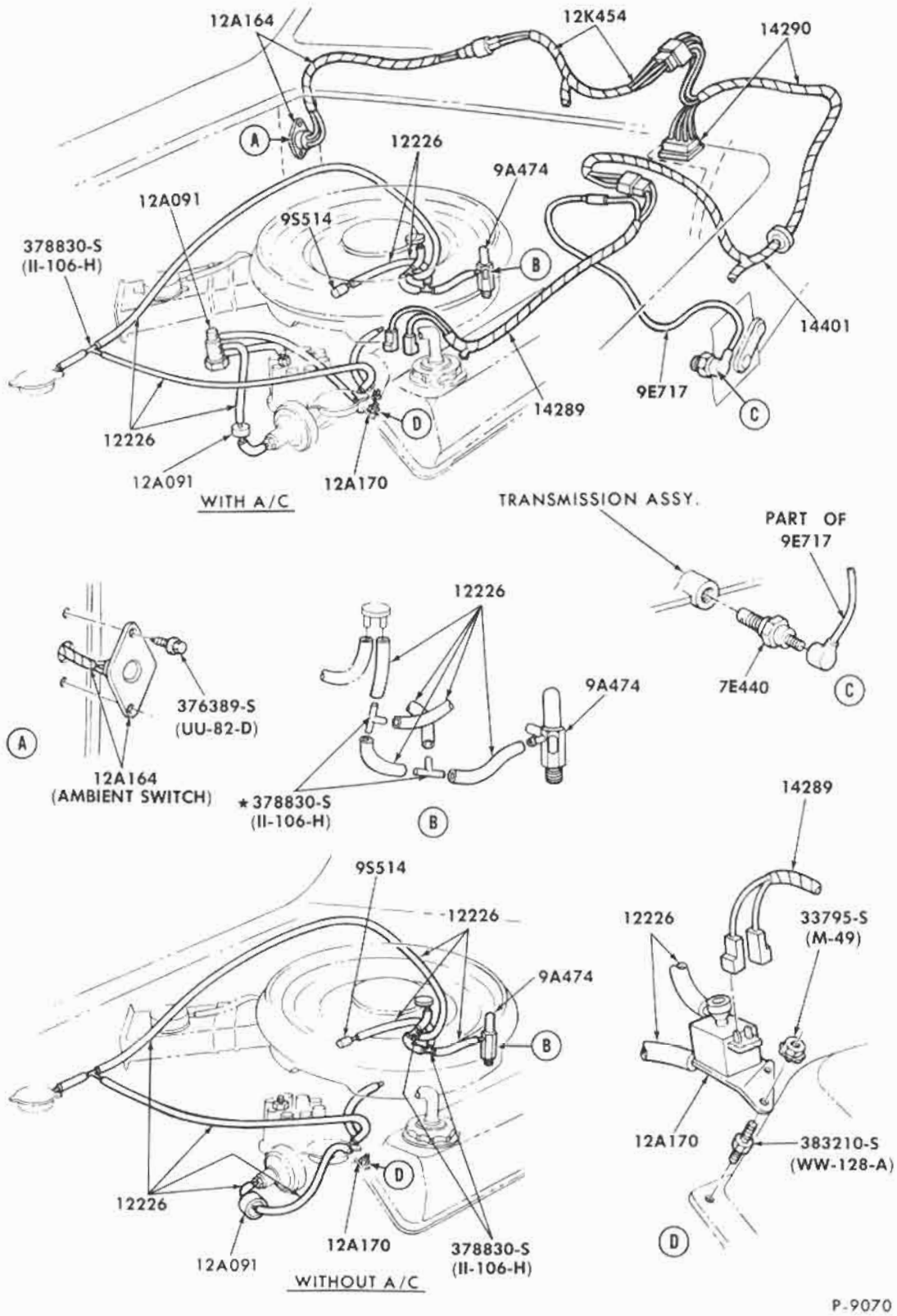

TRANSMISSION REGULATED SPARK CONTROL SYSTEM (T.R.S.)-8 CYL. 351-4V CJ ENGINE
1972 MUSTANG - WITH RAM AIR HOOD

COPYRIGHT © 1975 — FORD MOTOR COMPANY — DEARBORN, MICHIGAN

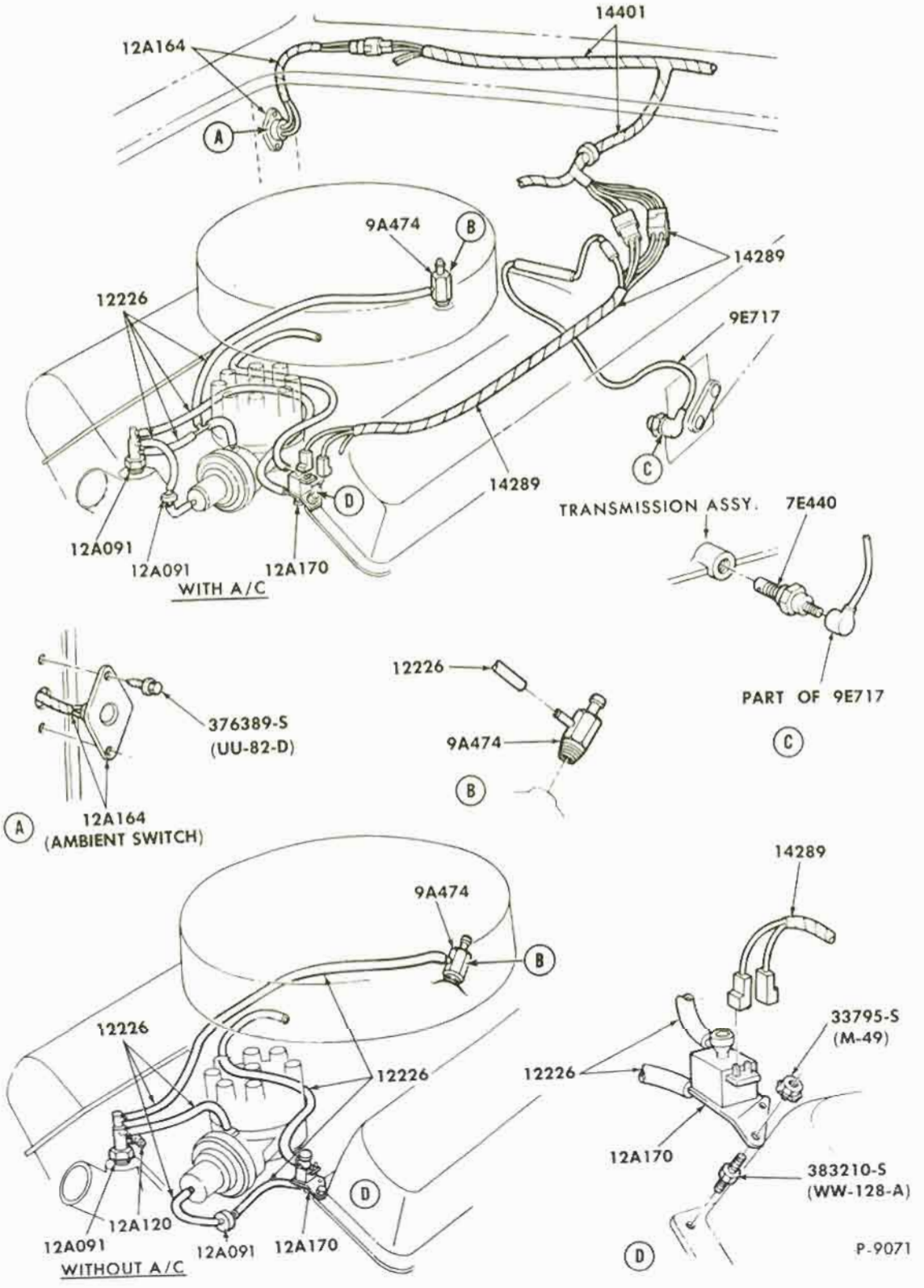

TRANSMISSION REGULATED SPARK CONTROL SYSTEM (T.R.S.)-8 CYL. 351-2V C.I.D. ENGINE

1972 FORD

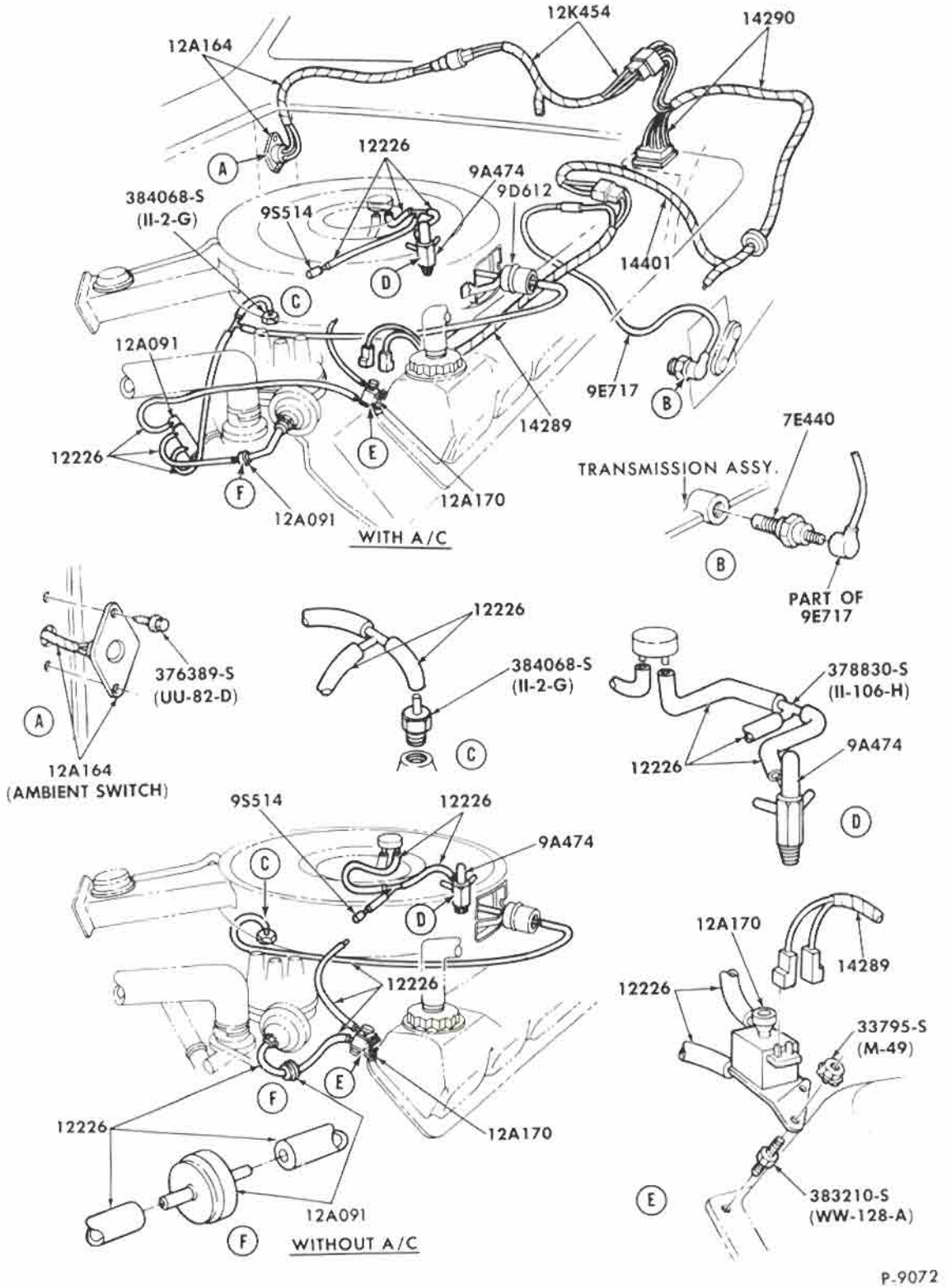

TRANSMISSION REGULATED SPARK CONTROL SYSTEM (T.R.S.)-8 CYL. 351-4V CJ ENGINE

1972 MUSTANG - WITHOUT RAM AIR HOOD

COPYRIGHT © 1975 — FORD MOTOR COMPANY — DEARBORN, MICHIGAN

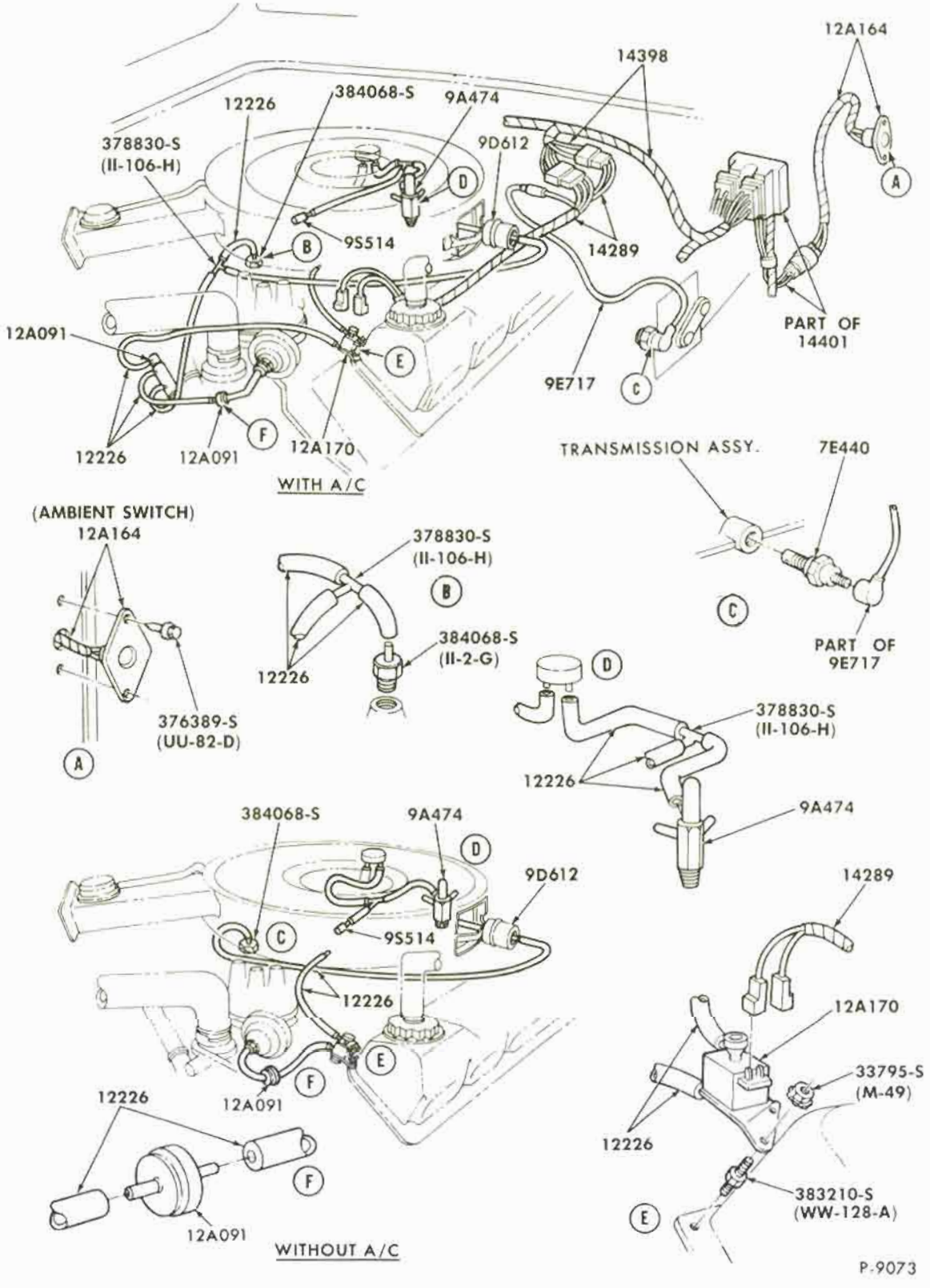

TRANSMISSION REGULATED SPARK CONTROL SYSTEM (T.R.S.)-8 CYL. 351-4V CJ ENGINE
1972 TORINO - WITHOUT RAM AIR HOOD

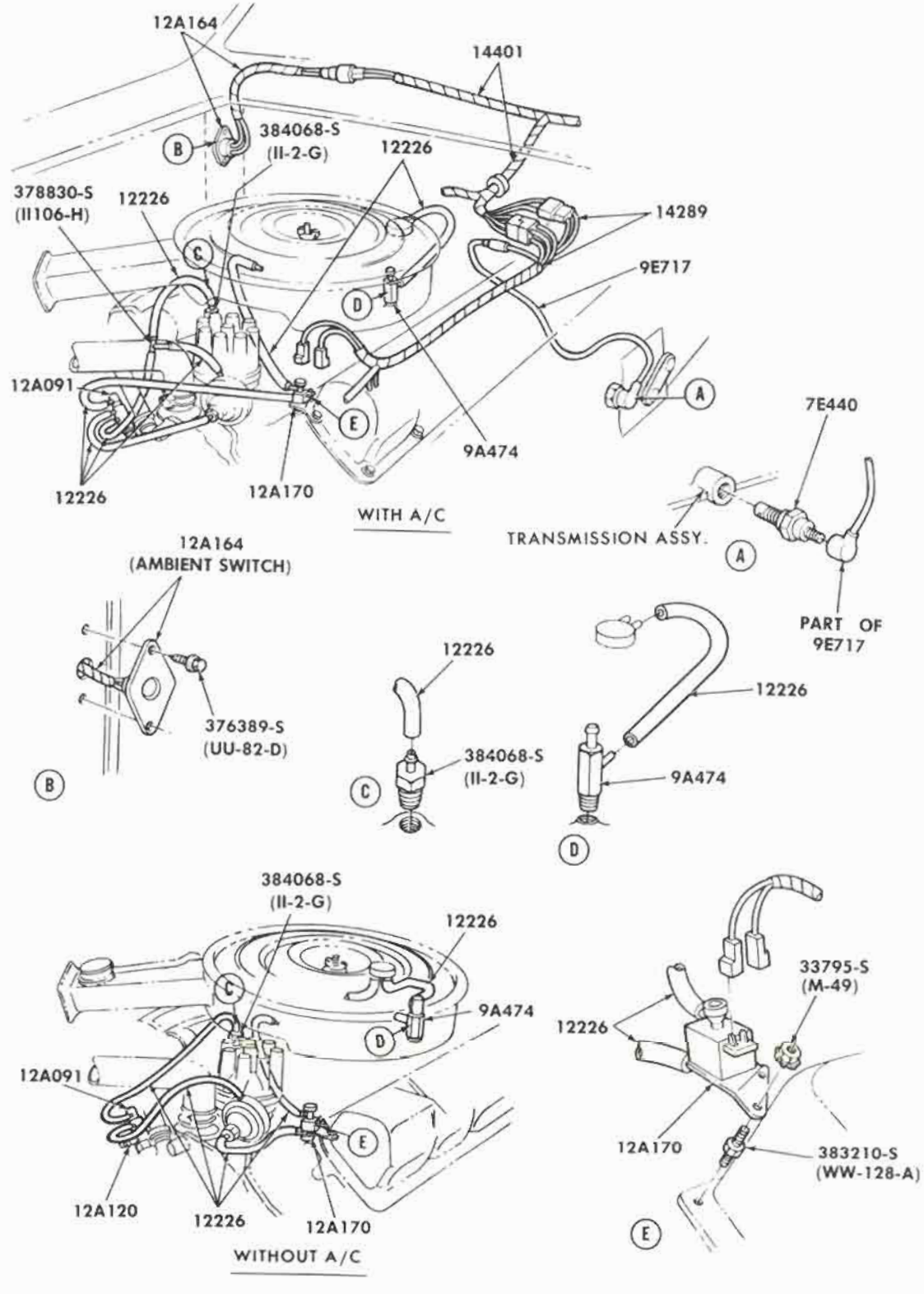

P-9074

TRANSMISSION REGULATED SPARK CONTROL SYSTEM (T.R.S.)-8 CYL. 400-2V C.I.D. ENGINE
1972 FORD

COPYRIGHT © 1975— FORD MOTOR COMPANY —DEARBORN, MICHIGAN

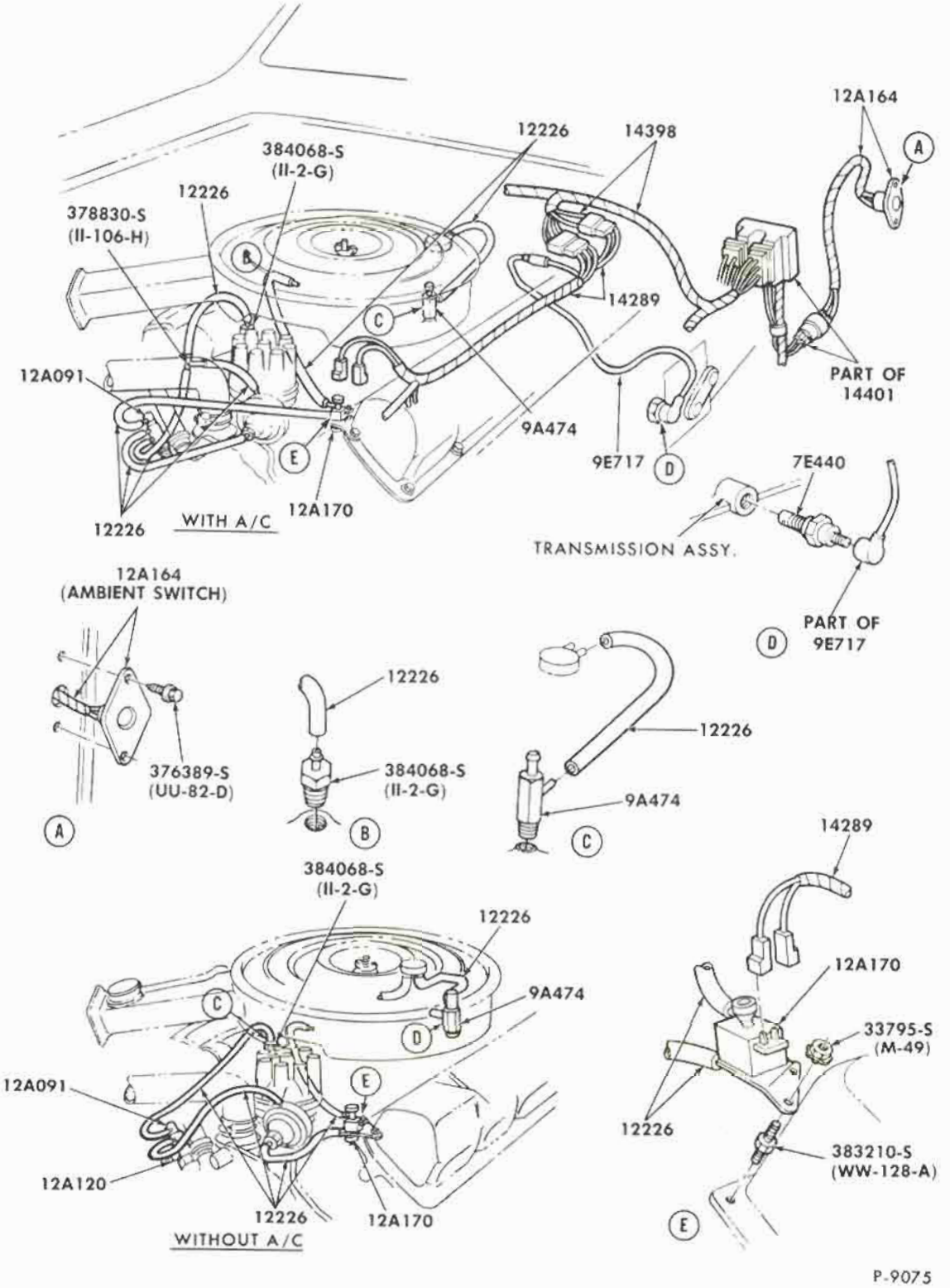

TRANSMISSION REGULATED SPARK CONTROL SYSTEM (T.R.S.)-8 CYL. 351-2V, 400-2V C.I.D. ENGINES
1972 TORINO

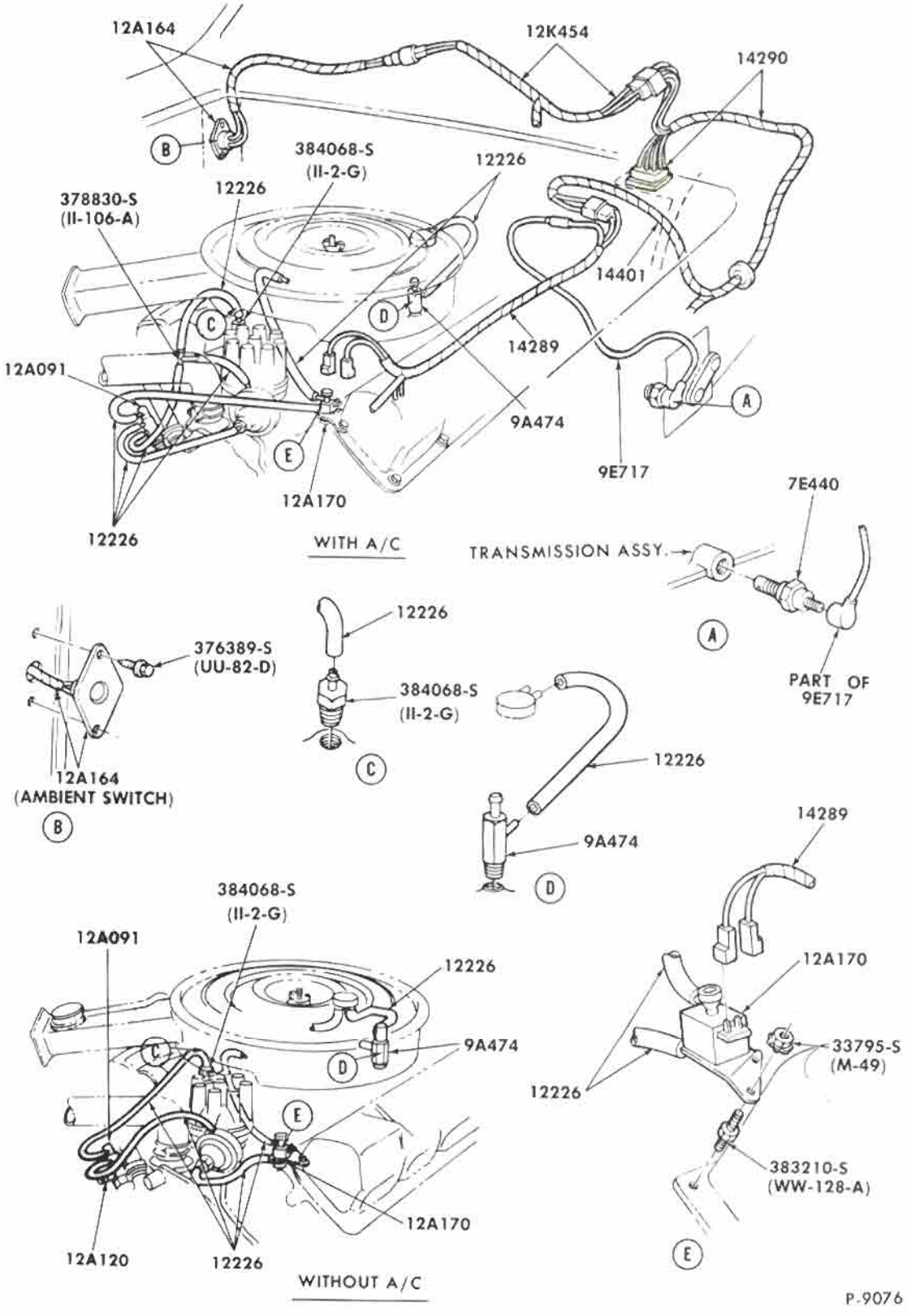

TRANSMISSION REGULATED SPARK CONTROL SYSTEM (T.R.S.)-8 CYL. 351-2V C.I.D. ENGINE
1972 MUSTANG

COPYRIGHT © 1975 — FORD MOTOR COMPANY — DEARBORN, MICHIGAN

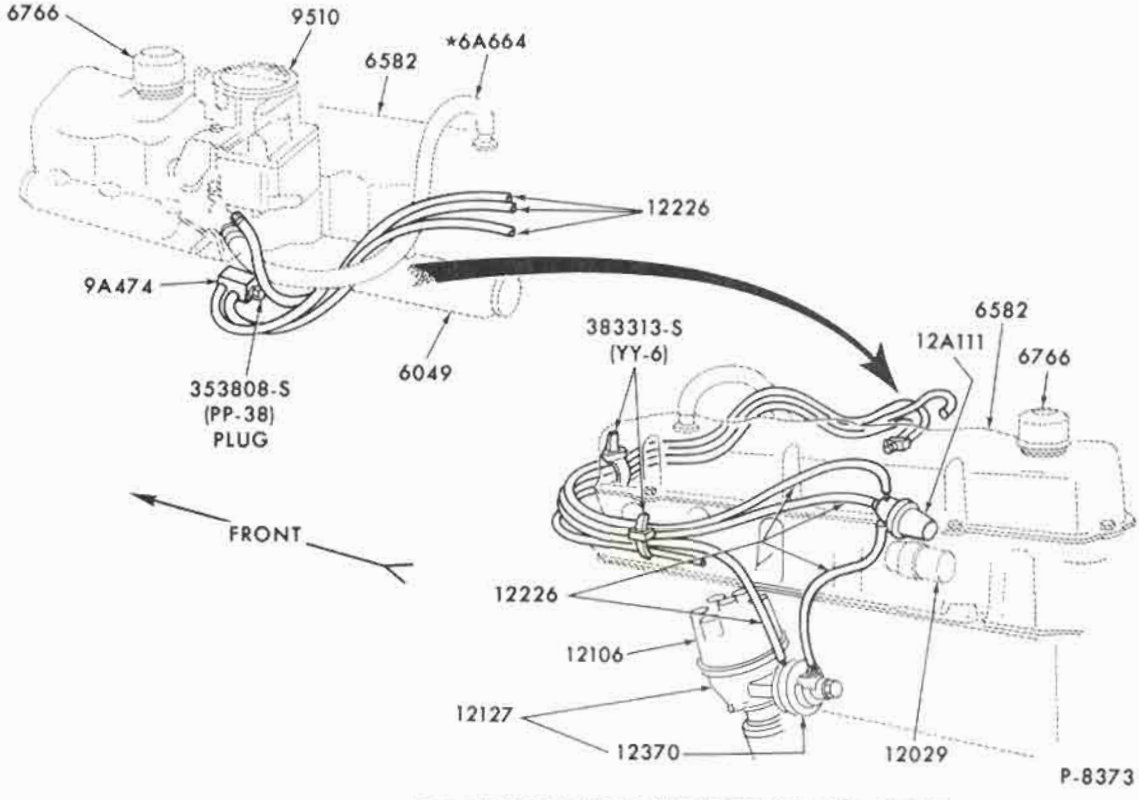

DISTRIBUTOR VACUUM HOSE INSTALLATION-6 CYLINDER 170 C.I.D. ENGINE
1969/72 BRONCO

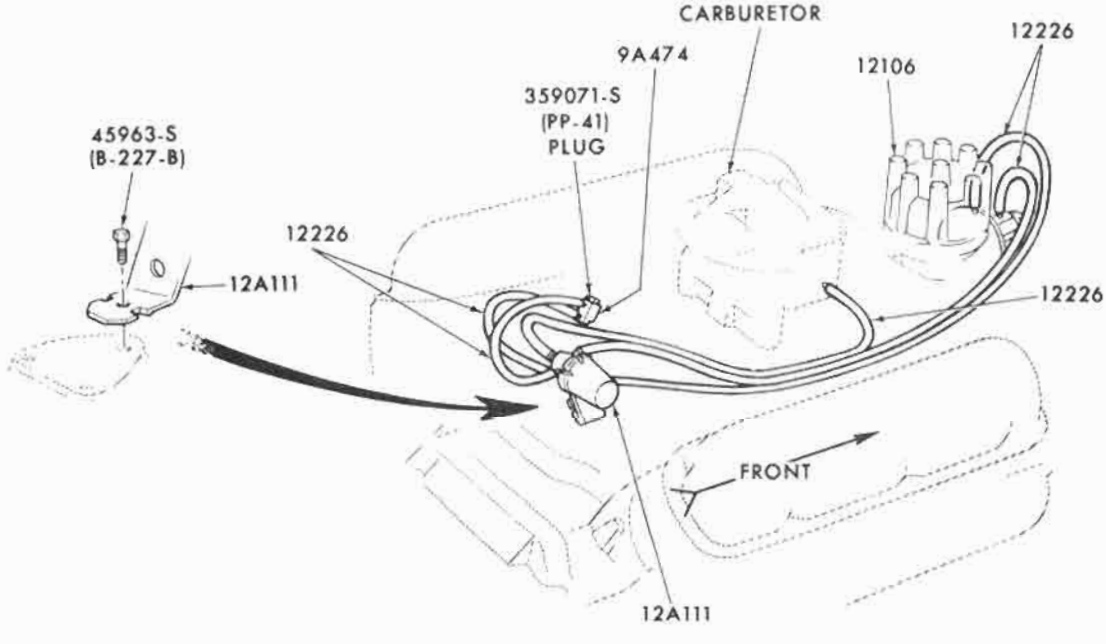

DISTRIBUTOR VACUUM HOSE INSTALLATION-8 CYLINDER 302 ENGINE
1970/72 BRONCO

COPYRIGHT © 1975 — FORD MOTOR COMPANY — DEARBORN, MICHIGAN

INDEX

THIS INDEX SECTION INCLUDES THE FOLLOWING MAJOR GROUPS:

BACK-UP LAMPS
CONVERTIBLE TOP ELECTRICAL SYSTEM
COURTESY LAMPS
DOME LAMPS
ELECTRIC SEAT CONTROLS
ELECTRIC WINDOW CONTROLS
HEADLAMPS
HORN BUTTON OR RING
LICENSE LAMPS
PARKING LAMPS
PILLAR OR INTERIOR LAMPS
REAR LAMPS
TRANSISTORIZED IGN. SYSTEM
TURN INDICATOR
WIRING SYSTEM

TITLE	SECTION	PAGE	ILLUS. NO.
1965			
A (FORD)			
ELECTRICAL SYSTEMS			
Convertible top	140.5	1	P-4784
Emergency warning flasher	130.4	1	P-4921
Seat regulator - (4 way bucket)	140.2	2	P-4860
Seat regulator - (6 way bench)	140.2	1	P-4841
Tailgate window regulator--Station Wagon	140.4	1	P-4797
Window regulator--Custom & Galaxie (exc. XL500)	140.3	1	P-4856
Window regulator--Galaxie-XL500	140.3	2	P-4860
Wiring system - (Page A)	140	2	P-4782-A
Wiring system - (Page B)	140	3	P-4782-B
LAMPS			
Cargo--Station Wagon	137	2	P-4722
Courtesy lamp - front door	137	5	P-4706
Courtesy lamp - rear door	137	5	P-5006
Dome	137	1	P-2996
Headlamp and parking	130	1	P-4611
Pillar	137	6	P-4705
Rear lamp, back up & license plate--Custom (except Station Wagon)	134	1	P-4707
Rear lamp, back up & license plate--Galaxie (except Station Wagon)	134	2	P-4594
Rear lamp, back up & license plate--Station Wagon	134	3	P-4708
STEERING WHEEL and HORN RING	138	1	P-4864
B (FAIRLANE/TORINO)			
ELECTRICAL SYSTEMS			
Emergency warning flasher	130.4	1	P-4921
Tailgate window regulator--Station Wagon	140.4	2	P-4791
Wiring system	140	4	P-4064
LAMPS			
Cargo--Station Wagon	137	3	P-4509
Courtesy lamp--door mounted	137	7	P-4534
Courtesy lamp--Instrument panel mounted	137	4	P-4593
Dome	137	1	P-2996
Headlamp	130	2	P-4712
Parking	130	5	P-4203
Rear lamp, back up & license plate--except Station Wagon	134	4	P-4591
Rear lamp, back up & license plate--Station Wagon	134	5	P-4599
STEERING WHEEL and HORN RING	138	1	P-4864

COPYRIGHT © 1975 — FORD MOTOR COMPANY — DEARBORN, MICHIGAN

INDEX

TITLE	SECTION	PAGE	ILLUS. NO.
1965			
F (MUSTANG)			
ELECTRICAL SYSTEMS			
Convertible top	140.5	2	P-4548
Emergency warning flasher	130.4	1	P-4921
Wiring system	140	5	P-4498
LAMPS			
Courtesy lamp - door mounted	137	10	P-4926
Courtesy lamp - instrument panel mounted	137	7	P-4734
Courtesy lamp - quarter panel mounted	137	8	P-4735
Fog	130.3	1	P-4889
Headlamp	130	3	P-4460
Parking	130	6	P-4461
Rear lamp, back up & license plate	134	8	P-4463
STEERING WHEEL and HORN RING			
3 - spoke -- non - woodgrain wheel	138	2	P-4514
3 - spoke -- woodgrain wheel	138	1	P-4955
S (THUNDERBIRD)			
ELECTRICAL SYSTEMS			
Convertible top - (composite)	140.5	4	P-4786
Convertible top - (luggage compartment - forward section)	140.5	6	P-4787
Convertible top - (luggage compartment - rear section)	140.5	5	P-4788
Seat regulator	140.2	3	P-4855
Sequential wiring - rear lamp turn indicator	134.1	1	P-4715
Window regulator	140.3	3	P-4855
Wiring system (Page A)	140	6	P-4781-A
Wiring system (Page B)	140	7	P-4781-B
LAMPS			
Courtesy lamp - door mounted	137	8	P-4828
Headlamp	130	3	P-4219
Interior roof--Body Type 76	137	6	P-4895
Parking	130	6	P-3243
Pillar--Body Type 63	137	9	P-4890
Rear lamp, back up & license plate	134	6	P-4213
Turn indicator - fender mounted	130.2	1	P-4380
STEERING WHEEL and HORN RING	138	2	P-4544
X (FALCON)			
ELECTRICAL SYSTEMS			
Convertible top	140.5	3	P-4783
Emergency warning flasher	130.4	1	P-4921
Tailgate window regulator--Station Wagon	140.4	3	P-3205
Wiring system	140	1	P-4080
LAMPS			
Cargo-- Station Wagon	137	3	P-4509
Courtesy lamp - instrument panel mounted	137	4	P-4417
Dome	137	1	P-2996
Headlamp	130	4	P-3632
Parking	130	5	P-3631
Rear lamp, back up and license plate	134	7	P-4709
STEERING WHEEL and HORN RING	138	1	P-4864

INDEX

TITLE	SECTION	PAGE	ILLUS. NO.
1966			
A (FORD)			
ELECTRICAL SYSTEMS			
Convertible top	140.5	1	P-4784
Emergency warning flasher	130.4	1	P-4921
Seat regulator - (6 way bench)	140.2	1	P-4841
Seat regulator - (6 way bucket)	140.2	2	P-4860
Tailgate window regulator --Station Wagon	140.4	4	P-5130
Window regulator--Custom & Galaxie - (exc."XL500")	140.3	1	P-4856
Window regulator--Galaxie "XL500"	140.3	2	P-4860
Wiring system (Page A)	140	2	P-4782-A
Wiring system (Page B)	140	3	P-4782-B
LAMPS			
Cargo--Station Wagon	137	2	P-4722
Courtesy lamp - front door	137	5	P-4706
Courtesy lamp - rear door	137	5	P-5006
Dome	137	1	P-2996
Headlamp and parking	130	7	P-5004
Pillar	137	6	P-4705
Rear lamp, back up & license plate--except Station Wagon	134	8	P-4976
Rear lamp, back up & license plate--Station Wagon	134	9	P-4977
STEERING WHEEL and HORN RING			
2 - spoke--non - woodgrain wheel	138	1	P-4864
3 - spoke--woodgrain wheel	138	1	P-4955
B (FAIRLANE/TORINO)			
ELECTRICAL SYSTEMS			
Convertible top	140.5	7	P-5008
Emergency warning flasher	130.4	1	P-4921
Tailgate window regulator--Station Wagon	140.4	5	P-5128
Wiring system (Page A)	140	8	P-5303-A
Wiring system (Page B)	140	9	P-5303-B
LAMPS			
Cargo --Station Wagon	137	3	P-4984
Courtesy lamp - door arm rest mounted	137	11	P-5147
Dome lamp	137	16	P-9687
Headlamp	130	8	P-4950
Parking	130	9	P-4952
Rear lamp, back up & license plate--except Station Wagon	134	9	P-4973
Rear lamp, back up & license plate--Station Wagon	134	10	P-5119
STEERING WHEEL and HORN RING			
2 - spoke--non - woodgrain wheel	138	3	P-5145
3 - spoke--woodgrain wheel	138	1	P-4955
F (MUSTANG)			
ELECTRICAL SYSTEM			
Convertible top	140.5	2	P-4548
Emergency warning flasher	130.4	1	P-4921
Wiring system	140	5	P-4498
LAMPS			
Headlamp	130	3	P-4460
Parking	130	6	P-4461
Fog	130.3	2	P-5378
Courtesy lamp - instrument panel mounted	137	7	P-4734
Courtesy lamp - quarter panel mounted	137	8	P-4735
Courtesy lamp - door mounted	137	10	P-4926
Rear lamp, back up & license plate	134	8	P-4463
STEERING WHEEL and HORN RING			
3 - spoke--non - woodgrain wheel	138	2	P-4514
3 - spoke--woodgrain wheel	138	1	P-4955

COPYRIGHT © 1975 — FORD MOTOR COMPANY — DEARBORN, MICHIGAN

INDEX

TITLE	SECTION	PAGE	ILLUS. NO.
1966			
S (THUNDERBIRD)			
ELECTRICAL SYSTEMS			
Convertible top - (composite)	140.5	4	P-4786
Convertible top - (luggage compartment - forward section)	140.5	6	P-4787
Convertible top - (luggage compartment - rear section)	140.5	5	P-4788
Seat regulator	140.2	3	P-4855
Sequential wiring - rear lamp turn indicator - "Before 11/17/65"	134.1	1	P-4715
Sequential wiring - rear lamp turn indicator - "From 11/17/65"	134.1	1	P-5351
Window regulator	140.3	3	P-4855
Wiring system (Page A)	140	6	P-4781-A
Wiring system (Page B)	140	7	P-4781-B
LAMPS			
Courtesy lamp - door mounted	137	8	P-4828
Headlamp and parking	130	11	P-5005
Interior roof -- Body Type 76	137	6	P-4895
Pillar -- Body Type 63A	137	9	P-4890
Pillar -- Body Types 63C, D	137	9	P-5007
Rear lamp, back up & license plate	134	11	P-4987
Turn indicator - fender mounted	130.2	1	P-4380
STEERING WHEEL and HORN			
2 - spoke wheel -- except with speed control	138	2	P-4544
2 - spoke wheel -- with speed control	97.1	6	P-5136
U (BRONCO)			
ELECTRICAL SYSTEM			
Wiring system	140	19	P-5122
LAMPS			
Headlamp and parking	130	9	P-5096
Rear lamp & license plate	134	12	P-5097
STEERING WHEEL and HORN RING	138	3	P-4593
X (FALCON)			
ELECTRICAL SYSTEMS			
Emergency warning flasher	130.4	1	P-4921
Tailgate window regulator -- Station Wagon	140.4	5	P-5129
Wiring system (Page A)	140	10	P-5304-A
Wiring system (Page B)	140	11	P-5304-B
LAMPS			
Cargo -- Station Wagon	137	3	P-4984
Dome lamp -- exc. Body Type 66 - Ranchero	137	16	P-9687
Dome -- Body Type 66 - Ranchero	137	1	P-3115
Headlamp	130	10	P-4951
Parking	130	9	P-4952
Rear lamp, back up & license plate -- except Station Wagon & Ranchero	134	10	P-4975
Rear lamp, back up & license plate -- Ranchero	134	12	P-5118
Rear lamp, back up & license plate -- Station Wagon	134	12	P-5118
STEERING WHEEL and HORN	138	3	P-5145

INDEX

TITLE	SECTION	PAGE	ILLUS. NO.
1967			
A (FORD)			
ELECTRICAL SYSTEMS			
Convertible top	140.5	1	P-4784
Seat regulator - (6 way bucket)	600	18	P-5703
Seat regulator - (6 way full bench) (upper half)	600	12	P-5707
Seat regulator - (6 way full bench) (lower half)	600	13	P-5843
Seat regulator - (6 way split bench - driver seat)	600	14	P-5709
Seat regulator - (6 way split bench - passenger seat)	600	15	P-5705
Tailgate window regulator -- Station Wagon	140.4	4	P-5130
Window regulator -- Custom and Galaxie	140.3	4	P-5715
Wiring systems - (Page A)	140	12	P-5748-A
Wiring systems - (Page B)	140	13	P-5748-B
LAMPS			
Cargo -- Station Wagon	137	2	P-4722
Courtesy lamp - front door	137	5	P-4706
Courtesy lamp - rear door	137	5	P-5006
Dome - standard type	137	1	P-2996
Dome - swivel type	137	2	P-5653
Headlamp and parking	130	11	P-5510
Pillar	137	6	P-4705
Rear lamp, back up & license plate -- except Station Wagon	134	13	P-5501
Rear lamp, back up & license plate -- Station Wagon	134	13	P-5502
STEERING WHEEL and HORN RING			
2 - spoke -- non - woodgrain wheel	138	4	P-5744
3 - spoke -- woodgrain wheel	138	6	P-5747
B (FAIRLANE/TORINO)			
ELECTRICAL SYSTEMS			
Convertible top	140.5	7	P-5008
Tailgate window regulator -- Station Wagon	140.4	5	P-5129
Wiring system (Page A)	140	8	P-5303-A
Wiring system (Page B)	140	9	P-5303-B
LAMPS			
Cargo -- Station Wagon	137	3	P-4984
Courtesy lamp - door mounted	137	11	P-5638
Dome lamp -- exc. Body Type 66 - Ranchero	137	16	P-9687
Dome -- Body Type 66 - Ranchero	137	1	P-3115
Headlamp	130	8	P-4950
Parking	130	9	P-4952
Turn indicator - hood mounted	130.2	2	P-5699
Rear lamp, back up & license plate -- Ranchero - w/o reflectors	134	14	P-5507
Rear lamp, back up & license plate -- Ranchero - w/reflectors	134	18	P-5761
Rear lamp, back up & license plate -- except Station Wagon & Ranchero	134	14	P-5506
Rear lamp, back up & license plate -- Station Wagon	134	14	P-5507
STEERING WHEEL and HORN RING			
2 - spoke -- non - woodgrain wheel	138	5	P-5745
3 - spoke -- woodgrain wheel	138	6	P-5747

COPYRIGHT © 1975 — FORD MOTOR COMPANY — DEARBORN, MICHIGAN

INDEX

TITLE	SECTION	PAGE	ILLUS. NO.
1967			
F (MUSTANG)			
ELECTRICAL SYSTEMS			
Convertible top	140.5	8	P-5639
Wiring system (Page A)	140	14	P-5749-A
Wiring system (Page B)	140	15	P-5749-B
Wiring system - instrument panel	140.1	4	P-6206
LAMPS			
Courtesy lamp - door mounted	137	10	P-5637
Courtesy lamp - instrument panel mounted	137	7	P-4734
Courtesy lamp - quarter panel mounted	137	8	P-4735
Dome	137	1	P-2996
Fog -- except GT350/500	130.3	2	P-5378
Fog -- GT350/500	130	12	P-6830
Headlamp and parking -- except GT350/500	130	12	P-5511
Headlamp and parking -- GT350/500	130	12	P-6830
Map lamp - roof console	137	13	P-5620
Rear lamp, back up & license plate -- except GT350/500	134	15	P-5503
Rear lamp, back up & license plate -- GT350/500	134	15	P-6831
Turn indicator - hood mounted	130.2	2	P-5651
STEERING WHEEL and HORN RING			
3 - spoke -- non - woodgrain wheel	138	5	P-5746
3 - spoke -- woodgrain wheel	138	6	P-5747
S (THUNDERBIRD)			
ELECTRICAL SYSTEMS			
Seat regulator - (6 way bucket) (lower half)	600	22	P-5702
Sequential wiring - rear lamp turn indicator	134.1	1	P-5351
Window regulator	140.3	5	P-5750
Wiring system (Page A)	140	16	P-5742-A
Wiring system (Page B)	140	17	P-5742-B
Wiring system (Page C)	140	18	P-5742-C
LAMPS			
Courtesy lamp - door mounted	137	12	P-5635
Headlamp and parking	130	13	P-5509
Headlamp covers (vacuum control-solenoid, reservoir and hose routing)	130.1	2	P-5648
Pillar lamp	137	12	P-5635
Rear lamp, back up & license plate	134	16	P-5508
STEERING WHEEL and HORN RING			
2 - spoke wheel -- except with speed control	138	4	P-5743
2 - spoke wheel -- with speed control	97.1	14	P-5595
U (BRONCO)			
ELECTRICAL SYSTEMS			
Wiring system	140	19	P-5122
LAMPS			
Headlamp and parking	130	9	P-5096
Rear lamp, back up & license plate	134	12	P-5097
STEERING WHEEL and HORN RING	138	3	P-4953

INDEX

TITLE	SECTION	PAGE	ILLUS. NO.
1967			
X (FALCON)			
ELECTRICAL SYSTEMS			
Tailgate window regulator -- Station Wagon	140.4	5	P-5129
Wiring system (Page A)	140	10	P-5304-A
Wiring system (Page B)	140	11	P-5304-B
LAMPS			
Cargo -- Station Wagon	137	3	P-4984
Dome lamp	137	16	P-9687
Headlamp	130	10	P-4951
Parking	130	9	P-4952
Rear lamp, back up & license plate -- except Station Wagon	134	17	P-5504
Rear lamp, back up & license plate -- Station Wagon	134	17	P-5505
STEERING WHEEL and HORN RING			
2 - spoke -- non - woodgrain wheel	138	5	P-5745
3 - spoke -- woodgrain wheel	138	6	P-5747
1968			
A (FORD)			
ELECTRICAL SYSTEMS			
Convertible top	140.5	8	P-6507
Seat regulator - (6 way bucket)	600	26	P-6168
Seat regulator - (6 way full bench) (upper half)	600	12	P-5707
Seat regulator - (6 way full bench) (lower half)	600	13	P-5843
Seat regulator - (6 way split bench - driver seat)	600	14	P-5709
Seat regulator - (6 way split bench - passenger seat)	600	15	P-5705
Tailgate window regulator	140.4	6	P-6261
Window regulator	140.3	6	P-6259
Wiring system (Page A)	140	12	P-5748-A
Wiring system (Page B)	140	13	P-5748-B
Wiring system - instrument panel	140.1	1	P-6006
LAMPS			
Cargo -- Station Wagon	137	2	P-4722
Courtesy lamp - door mounted	137	14	P-6263
Dome	137	1	P-2996
Headlamp and parking -- w/o headlamp covers	130	15	P-6049
Headlamp and parking -- with headlamp covers	130	14	P-6096
Headlamp covers (covers, hinges, housing and related parts)	82	15	P-5982
Headlamp covers (vacuum control)	130.1	1	P-6181
Pillar	137	14	P-6263
Rear lamp, back up & license plate -- except Station Wagon	134	19	P-6043
Rear lamp, back up & license plate -- Station Wagon	134	18	P-6026
STEERING WHEEL and HORN RING	138	7	P-6025
B (FAIRLANE/TORINO)			
ELECTRICAL SYSTEMS			
Convertible top	140.5	7	P-6506
Tailgate window regulator	140.4	7	P-6244-A
Window regulator	140.3	7	P-6246
Wiring system (Page A)	140	22	P-6510
Wiring system (Page B)	140	23	P-6511
Wiring system - instrument panel	140.1	3	P-6048
LAMPS			
Cargo -- Station Wagon	137	3	P-4984
Dome lamp	137	16	P-9687
Headlamp and parking	130	16	P-5968
Rear lamp, back up & license plate -- Body Types 54, 65, 76	134	20	P-6044
Rear lamp, back up & license plate -- Body Type 63	134	20	P-6045
Rear lamp, back up & license plate -- Ranchero	134	19	P-5971
Rear lamp, back up & license plate -- Station Wagon	134	22	P-5970
Turn indicator - fender mounted -- Ranchero	130.2	1	P-6245
STEERING WHEEL and HORN RING	138	7	P-6025

COPYRIGHT © 1975 — FORD MOTOR COMPANY — DEARBORN, MICHIGAN

INDEX

TITLE	SECTION	PAGE	ILLUS. NO.
1968			
F (MUSTANG)			
ELECTRICAL SYSTEMS			
Convertible top	140.5	8	P-5639
Wiring system (Page A)	140	14	P-5749-A
Wiring system (Page B)	140	15	P-5749-B
Wiring system - instrument panel	140.1	4	P-6206
LAMPS			
Courtesy lamp - door mounted	137	10	P-5637
Courtesy lamp - instrument panel mounted	137	7	P-4734
Courtesy lamp - quarter panel mounted	137	8	P-4735
Dome	137	1	P-2996
Fog -- except GT350/500	130.3	2	P-5378
Fog -- GT350/500	130	12	P-6830
Front fender side marker lamp -- except GT350/500	130	12	P-5511
Front fender side marker lamp -- GT350/500	130	12	P-6830
Headlamp and parking -- except GT350/500	130	12	P-5511
Headlamp and parking -- GT350/500	130	12	P-6830
Map lamp - roof console	137	13	P-5620
Rear lamp, back up & license plate -- except GT350/500	134	15	P-5503
Rear lamp, back up & license plate -- GT350/500	134	15	P-6831
Turn indicator - hood mounted	130.2	2	P-5651
STEERING WHEEL and HORN RING	138	7	P-6025
S (THUNDERBIRD)			
ELECTRICAL SYSTEMS			
Seat regulator - (6 way bucket)	600	31	P-6169
Seat regulator - (6 way full bench) (upper half)	600	28	P-6156
Seat regulator - (6 way full bench) (lower half)	600	29	P-6157
Window regulator	140.3	8	P-6250
Wiring system (Page A)	140	16	P-5742-A
Wiring system (Page B)	140	17	P-5742-B
Wiring system (Page C)	140	18	P-5742-C
Wiring system - instrument panel	140.1	2	P-6037
LAMPS			
Courtesy lamp - door mounted	137	12	P-5635
Headlamp, parking & front fender side marker	130	13	P-5509
Headlamp covers (covers, hinges, housing and related parts)	82	13	P-5520
Headlamp covers (vacuum control - reservoir & hose routing)	130.1	3	P-6182
Pillar	137	12	P-5635
Rear lamp, back up & license plate	134	16	P-5508
STEERING WHEEL and HORN RING			
2 - spoke wheel -- except with speed control	138	7	P-6025
2 - spoke wheel -- with speed control	97.1	16	P-6211
U (BRONCO)			
ELECTRIC SYSTEMS			
Wiring system	140	19	P-5122
LAMPS			
Headlamp and parking	130	9	P-5096
Rear lamp, back up & license plate	134	12	P-5097
STEERING WHEEL and HORN RING	138	3	P-4953

INDEX

TITLE	SECTION	PAGE	ILLUS. NO.
1968			
X (FALCON)			
ELECTRICAL SYSTEMS			
Tailgate window regulator - dual action	140.4	7	P-6244-A
Tailgate window regulator - single action	140.4	8	P-6244-B
Wiring system (Page A)	140	20	P-6508
Wiring system (Page B)	140	21	P-6509
Wiring system - instrument panel	140.1	3	P-6048
LAMPS			
Dome lamp	137	16	P-9687
Cargo lamp -- Station Wagon	137	3	P-4984
Headlamp and parking	130	10	P-4951
Rear lamp, back up & license plate -- except Station Wagon	134	21	P-5969
Rear lamp, back up & license plate -- Station Wagon	134	22	P-5970
STEERING WHEEL and HORN RING	138	7	P-6025
1969			
A (FORD)			
ELECTRICAL SYSTEMS			
Convertible top	140.5	9	P-6894
Seat regulator - (6 way full bench) (lower half)	600	13	P-5843
Seat regulator - (6 way split bench - driver seat)	600	14	P-5709
Seat regulator - (6 way split bench - passenger seat)	600	15	P-5705
Tailgate window regulator	140.4	9	P-6892
Window regulator	140.3	9	P-6857
Wiring system (Page A)	140	24	P-7029
Wiring system (Page B)	140	25	P-7028
Wiring system - instrument panel	140.1	6	P-6651
LAMPS			
Cargo -- Station Wagon	137	2	P-4722
Courtesy lamp - door mounted	137	17	P-7037
Dome	137	16	P-7039
Headlamp, parking & front fender side marker -- w/o headlamp cover	130	16	P-6606
Headlamp, parking & front fender side marker -- with headlamp cover	130	17	P-6605
Headlamp covers (covers, hinges, housing and related parts)	82	19	P-6623
Headlamp covers (vacuum control - reservoir & hose routing)	130.1	2	P-6729
Pillar	137	17	P-7038
Rear lamp, back up, license plate & body side marker -- except Station Wagon	134	22	P-6607
Rear lamp, back up & license plate -- Station Wagon	134	23	P-6610
STEERING WHEEL and HORN RING			
2 - spoke wheel -- except with speed control	138	7	P-6025
2 - spoke wheel -- with speed control	97.1	18	P-6686
3 - spoke wheel - rim blow horn design	138	7	P-6823

COPYRIGHT © 1975 — FORD MOTOR COMPANY — DEARBORN, MICHIGAN

INDEX

1969

B (FAIRLANE/TORINO)

TITLE	SECTION	PAGE	ILLUS. NO.
ELECTRICAL SYSTEMS			
Convertible top	140.5	7	P-6506
Seat regulator	600	27	P-9904
Tailgate window regulator	140.4	7	P-6244-A
Window regulator	140.3	7	P-6246
Wiring system (Page A)	140	22	P-6510
Wiring system (Page B)	140	23	P-6511
Wiring system - instrument panel	140.1	3	P-6048
LAMPS			
Cargo -- Station Wagon	137	3	P-4984
Dome lamp	137	16	P-9687
Headlamp and parking	130	19	P-6676
Rear lamp, back up, license plate & body side marker -- Body Types 54, 65, 76	134	23	P-6813
Rear lamp, back up, license plate & body side marker -- Body Type 63	134	20	P-6045
Rear lamp, back up, license plate & body side marker -- Ranchero	134	19	P-5971
Rear lamp, back up, license plate & body side marker -- Station Wagon	134	22	P-5970
Turn indicator - hood mounted	130.2	3	P-6964
STEERING WHEEL and HORN RING	138	7	P-6025
STEERING WHEEL - RIM BLOW HORN DESIGN	138	7	P-6823

F (MUSTANG)

ELECTRICAL SYSTEMS			
Convertible top	140.5	9	P-6895
Wiring system (Page A)	140	26	P-6996
Wiring system (Page B)	140	27	P-7026
Wiring system - instrument panel -- except GT350/500	140.1	5	P-6657
Wiring system - instrument panel -- GT350/500	140.1	8	P-6926
LAMPS			
Courtesy lamp - door mounted	137	18	P-6971
Courtesy lamp - pillar mounted	137	18	P-7040
Courtesy lamp - quarter panel mounted	137	8	P-4735
Dome	137	1	P-2996
Fog -- GT350/500	130	17	P-6919
Headlamp, parking & front fender side marker -- exc. GT350/500	130	17	P-6669
Headlamp, parking & front fender side marker -- GT350/500	130	18	P-6919
Rear lamp, back up, license plate & body side marker -- except GT350/500	134	24	P-6641
Rear lamp, back up, license plate & body side marker -- GT350/500	134	25	P-6922-A
Turn indicator - hood mounted	130.2	3	P-6964
STEERING WHEEL and HORN RING	138	7	P-6025
STEERING WHEEL - RIM BLOW HORN DESIGN	138	7	P-6823

INDEX

1969

TITLE	SECTION	PAGE	ILLUS. NO.
S (THUNDERBIRD)			
ELECTRICAL SYSTEMS			
Seat regulator - (6 way bucket)	600	31	P-6169
Seat regulator - (6 way full bench) (upper half)	600	28	P-6156
Seat regulator - (6 way full bench) (lower half)	600	29	P-6157
Window regulator	140.3	8	P-6250
Wiring system (Page A)	140	16	P-5742-A
Wiring system (Page B)	140	17	P-5742-B
Wiring system (Page C)	140	18	P-5742-C
Wiring system - instrument panel	140.1	2	P-6037
LAMPS			
Auxiliary stop lamps - package tray mounted	134.1	2	P-6283
Courtesy lamp - door mounted	137	12	P-5635
Headlamp, parking & front fender side marker	130	13	P-5509
Headlamp covers (covers, hinges, housing and related parts)	82	13	P-5520
Headlamp covers (vacuum control - reservoir & hose routing)	130.1	3	P-6182
Pillar lamp	137	12	P-5635
Rear lamp, back up, license plate & body side marker lamp	134	26	P-6671
STEERING WHEEL and HORN RING			
2 - spoke wheel -- except with speed control	138	7	P-6025
2 - spoke wheel -- with speed control	97.1	16	P-6211
U (BRONCO)			
ELECTRICAL SYSTEMS			
Wiring system	140	19	P-5122
LAMPS			
Headlamp and parking	130	9	P-5096
Rear lamp, back up & license plate	134	12	P-5097
STEERING WHEEL and HORN RING	138	3	P-4953
X (FALCON)			
ELECTRICAL SYSTEMS			
Tailgate window regulator - dual action	140.4	7	P-6244-A
Tailgate window regulator - single action	140.4	8	P-6244-B
Wiring system (Page A)	140	20	P-6508
Wiring system (Page B)	140	21	P-6509
Wiring system - instrument panel	140.1	3	P-6048
LAMPS			
Cargo lamp -- Station Wagon	137	3	P-4984
Dome lamp	137	16	P-9687
Headlamp, parking and front fender side marker	130	10	P-4951
Rear lamp, back up, license plate and body side marker -- except Station Wagon	134	21	P-5969
Rear lamp, back up, license plate and body side marker -- Station Wagon	134	22	P-5970
STEERING WHEEL and HORN RING	138	7	P-6025

COPYRIGHT © 1975 — FORD MOTOR COMPANY — DEARBORN, MICHIGAN

INDEX

1970

TITLE	SECTION	PAGE	ILLUS. NO.
A (FORD)			
ELECTRICAL SYSTEMS			
Automatic seat back latch wiring	140.6	3	P-7470
Convertible top	140.5	9	P-6894
Seat regulator - (6 way full bench) (lower half)	600	13	P-5843
Seat regulator - (6 way split bench - driver seat)	600	14	P-5709
Seat regulator - (6 way split bench - passenger seat)	600	15	P-5705
Tailgate window regulator	140.4	9	P-6892
Window regulator	140.3	9	P-6857
Wiring system (Page A)	140	24	P-7029
Wiring system (Page B)	140	25	P-7028
Wiring system - instrument panel	140.1	6	P-6651
LAMPS			
Cargo -- Station Wagon	137	2	P-4722
Courtesy lamp - door mounted	137	17	P-7037
Dome	137	16	P-7039
Headlamp, parking and front fender side marker-- without headlamp covers	130	20	P-7175
Headlamp, parking and front fender side marker-- with headlamp covers	130	21	P-7199
Headlamp covers (covers, hinges, housing and related parts)	82	24	P-7202
Headlamp covers (vacuum control-reservoir and hose routing)	130.1	2	P-6729
Pillar	137	17	P-7038
Rear lamp, back up, license plate and body side marker-- except Station Wagon	134	27	P-7200
Rear lamp, back up and license plate -- Station Wagon	134	23	P-6610
STEERING WHEEL			
2 - spoke wheel -- except with speed control	138	8	P-7513
2 - spoke wheel -- with speed control	97.1	18	P-6686
3 - spoke wheel - rim blow design	138	8	P-7514
B (FAIRLANE/TORINO) **B (FALCON) - FROM 1/2/70**			
ELECTRICAL SYSTEMS			
Automatic seat back latch wiring	140.6	1	P-7461
Convertible top	140.5	7	P-6506
Seat regulator	600	27	P-9904
Tailgate window regulator	140.4	7	P-6244-A
Window regulator	140.3	7	P-6246
Wiring system (Page A)	140	30	P-7666
Wiring system (Page B)	140	31	P-7667
Wiring system - instrument panel	140.1	9	P-7151
LAMPS			
Cargo -- Station Wagon	137	3	P-4984
Dome lamp	137	16	P-9687
Head lamp, parking and front fender side marker-- Body types 54A, B, 62A, 63H, 65A, B, 66A, 71B, D	130	22	P-7122
Headlamp, parking and front fender side marker-- Body types 54C, 57C, E, 63F, 65C, E, 66B, C, E, 71C, E, 76	130	22	P-7124
Headlamp covers (covers, hinges, housing and related parts)	82	26	P-7123
Headlamp covers (vacuum control), reservoir and hoses	130.1	4	P-7147
Rear lamp, back up, license plate and body side marker-- Station Wagon and Ranchero	134	30	P-7120
Rear lamp, back up, license plate and body side marker-- Body types 63F, 76F	134	29	P-7119
Rear lamp, back up, license plate and body side marker-- Body types 54, 57, 62, 63C, H, 65	134	28	P-7118
STEERING WHEEL			
2 - spoke wheel	138	8	P-7513
3 - spoke wheel - rim blow design - "Before 1/5/70"	138	8	P-7514
3 - spoke wheel - rim blow design - "From 1/5/70"	138	9	P-10685

INDEX

1970

TITLE	SECTION	PAGE	ILLUS. NO.
F (MUSTANG)			
ELECTRICAL SYSTEMS			
Convertible top	140.5	9	P-6895
Wiring system (Page A)	140	26	P-6996
Wiring system (Page B)	140	27	P-7026
Wiring system - instrument panel -- exc. GT350/500	140.1	5	P-6657
Wiring system - instrument panel -- GT 350/500	140.1	8	P-6926
LAMPS			
Courtesy lamp - door mounted	137	18	P-6971
Courtesy lamp - pillar mounted	137	18	P-7040
Courtesy lamp - quarter panel mounted	137	8	P-4735
Headlamp, parking & front fender side marker -- except GT 350/500	130	23	P-7173
Headlamp, parking & front fender side marker -- GT 350/500	130	18	P-6919
Rear lamp, back up, license plate and body side marker -- except GT350/500	134	31	P-7172
Rear lamp, back up, license plate and body side marker-- GT350/500	134	25	P-6922-A
Sport lamps - grille mounted	130.3	3	P-7474
Turn indicator - hood mounted	130.2	3	P-6964
STEERING WHEEL			
2 - spoke wheel	138	8	P-7513
3 - spoke wheel - rim blow design - GT350/500	138	8	P-7514
3 - spoke wheel - rim blow design - except GT350/500	138	9	P-10685
P (MAVERICK)			
ELECTRICAL SYSTEMS			
Wiring system (Page A)	140	28	P-7030
Wiring system (Page B)	140	29	P-7031
Wiring system - instrument panel	140.1	7	P-6834
LAMPS			
Dome	137	15	P-6872
Headlamp, parking and front fender side marker	130	25	P-6870
Luggage compartment	137	15	P-6872
Rear lamp, back up, license plate and body side marker	134	33	P-6871
STEERING WHEEL			
2 - spoke wheel and horn ring - without locking steering column	138	7	P-6025
2 - spoke wheel - with locking steering column	138	8	P-7513
3 - spoke wheel - rim blow design - w/locking steering column	138	8	P-7514
3 - spoke wheel - rim blow design - w/o locking steering column	138	7	P-6823

COPYRIGHT © 1975 — FORD MOTOR COMPANY — DEARBORN, MICHIGAN

INDEX

1970

TITLE	SECTION	PAGE	ILLUS. NO.
S (THUNDERBIRD)			
ELECTRICAL SYSTEMS			
Automatic seat back latch wiring	140.6	2	P-7464
Power seat controls and wiring	140.2	4	P-7692
Window regulator	140.3	10	P-7696
Wiring system (Page A)	140	32	P-7682
Wiring system (Page B)	140	33	P-7683
Wiring system (Page C)	140	34	P-7684
Wiring system - instrument panel	140.1	2	P-6037
LAMPS			
Auxiliary stop lamps - package tray mounted	134.1	2	P-6283
Courtesy lamp - door mounted	137	12	P-5635
Headlamp, parking and front fender side marker	130	24	P-7157
Pillar lamp	137	12	P-5635
Rear lamp, back up, license plate and body side marker	134	32	P-7158
STEERING WHEEL			
2 - spoke wheel -- except with speed control	138	8	P-7513
2 - spoke wheel - rim blow design--with speed control	97.1	22	P-7698
3 - spoke wheel - rim blow design	138	8	P-7514
U (BRONCO)			
ELECTRICAL SYSTEMS			
Wiring system	140	19	P-5122
LAMPS			
Headlamp, parking and front fender side marker	130	9	P-5096
Rear lamp, back up and license plate	134	12	P-5097
STEERING WHEEL and HORN RING	138	3	P-4953
X (FALCON) - BEFORE 1/2/70 FOR UNITS BUILT FROM 1/2/70 REFER TO B (FALCON)			
ELECTRICAL SYSTEMS			
Tailgate window regulator - dual action	140.4	7	P-6244-A
Tailgate window regulator - single action	140.4	8	P-6244-B
Wiring system (Page A)	140	20	P-6508
Wiring system (Page B)	140	21	P-6509
Wiring system - instrument panel	140.1	3	P-6048
LAMPS			
Cargo lamp -- Station Wagon	137	3	P-4984
Dome lamp	137	16	P-9687
Headlamp, parking and front fender side marker	130	10	P-4951
Rear lamp, back up, license plate and body side marker -- exc. Station Wagon	134	21	P-5969
Rear lamp, back up, license plate and body side marker -- Station Wagon	134	22	P-5970
STEERING WHEEL			
2 - spoke wheel	138	8	P-7513

INDEX

1971

TITLE	SECTION	PAGE	ILLUS. NO.
A (FORD)			
ELECTRICAL SYSTEMS			
Automatic seat back latch wiring	140.6	2	P-7470
Convertible top	140.5	10	P-8421
Seat regulator - (6 way full width seat)	600	47	P-7233-A
Seat regulator - (6 way split seat)	600	46	P-7232-A
Tailgate window regulator & washer (Page A)	140.4	10	P-8320
Tailgate window regulator & washer (Page B)	140.4	11	P-8321
Window regulator (Page A)	140.3	12	P-8423
Window regulator (Page B)	140.3	13	P-8424
Wiring system (Page A)	140	37	P-8417
Wiring system (Page B)	140	38	P-8418
Wiring system (Page C)	140	39	P-8419
Wiring system - instrument panel	140.1	10	P-8140
LAMPS			
Cargo - Station Wagon	137	2	P-4722
Courtesy lamp - door mounted	137	19	P-8422
Domes	137	16	P-7039
Headlamp, parking and front fender side marker	130	26	P-8154
Pillar	137	17	P-7038
Rear lamp, back up, license plate and body side marker -- except Station Wagon	134	34	P-8116
Rear lamp, back up, license plate and body side marker -- Station Wagon	134	35	P-8115
STEERING WHEEL			
2 - spoke wheel - except with speed control	138	8	P-7513
2 - spoke wheel - with speed control	97.1	24	P-8310
3 - spoke wheel - rim blow design	138	8	P-7514
B (TORINO)			
ELECTRICAL SYSTEMS			
Automatic seat back latch wiring	140.6	1	P-7461
Convertible top	140.5	7	P-6506
Seat regulator	600	27	P-9904
Tailgate window regulator	140.4	7	P-6244-A
Window regulator	140.3	7	P-6246
Wiring system (Page A)	140	30	P-7666
Wiring system (Page B)	140	31	P-7667
Wiring system - instrument panel	140.1	9	P-7151
LAMPS			
Cargo - Station Wagon	137	3	P-4984
Dome lamp	137	16	PGC-2070
Headlamp, parking and front fender side marker - Body types 54A, 63H, 65A, 66A, 71D	130	22	P-7122
Headlamp, parking and front fender side marker - - with headlamp covers Body types 54C,57C,E, 63C,F, 65C,E, 66B,C,E,71C,E, 76F	130	22	P-7124
Headlamp, parking and front side marker -- without headlamp covers Body types 54C.57C.E.63C.F.65C.E.66B.C.E.71C.E.76F	130	27	P-8260
Headlamp covers (covers, hinges, housing and related parts)	82	26	P-7123
Headlamp covers (vacuum control), reservoir and hoses	130.1	4	P-7147
Rear lamp, back up, license plate and body side marker - Station Wagon and Ranchero	134	30	P-7120
Rear lamp, back up, license plate and body side marker - Body types 63F, 76F	134	29	P-7119
Rear lamp, back up, license plate and body side marker - Body types 54, 57, 63C, H, 65	134	28	P-7118
STEERING WHEEL			
2 - spoke wheel	138	8	P-7513
3 - spoke wheel - rim blow design	138	9	P-10685

COPYRIGHT © 1975 — FORD MOTOR COMPANY — DEARBORN, MICHIGAN

INDEX

1971

TITLE	SECTION	PAGE	ILLUS. NO.
F (MUSTANG)			
ELECTRICAL SYSTEMS			
Convertible top	140.5	10	P-8426
Window regulator	140.3	11	P-8426
Wiring system (Page A)	140	40	P-8406
Wiring system (Page B)	140	41	P-8411
Wiring system (Page C)	140	42	P-8410
Wiring system - instrument panel	140.1	12	P-8206
LAMPS			
Courtesy lamp - pillar mounted	137	18	P-7040
Headlamp, parking and front fender side marker	130	28	P-8147
Rear lamp, backup, license plate and body side marker	134	36	P-8098
Sport lamps - grille mounted	130	28	P-8147
STEERING WHEEL			
2 - spoke wheel - button blow	138	9	P-8309
2 - spoke wheel - pad blow	138	8	P-7513
3 - spoke wheel - rim blow design	138	9	P-10685
L (PINTO)			
ELECTRICAL SYSTEMS			
Wiring system (Page A)	140	35	P-8061
Wiring system (Page B)	140	36	P-8062
Wiring system - instrument panel	140.1	11	P-8022
LAMPS			
Dome	137	13	P-8063
Headlamp, parking and front fender side marker	130	25	P-7963
Rear lamp, back up, license plate and body side marker	134	33	P-6871
STEERING WHEEL			
2 - spoke wheel - button blow	138	9	P-8309
2 - spoke wheel - pad blow	138	8	P-7513
P (MAVERICK)			
ELECTRICAL SYSTEMS			
Wiring system (Page A)	140	28	P-7030
Wiring system (Page B)	140	29	P-7031
Wiring system - instrument panel	140.1	7	P-6834
LAMPS			
Dome	137	15	P-6872
Headlamp, parking and front fender side marker	130	25	P-6870
Luggage compartment	137	15	P-6872
Rear lamp, back up, license plate and body side marker	134	33	P-6871
Sports lamp - grille mounted	130.3	3	P-7474
STEERING WHEEL			
2 - spoke wheel - button blow	138	9	P-8309
2 - spoke wheel - with locking steering column	138	8	P-7513
3 - spoke wheel - rim blow design - w/ locking steering column	138	8	P-7514

INDEX

1971

TITLE	SECTION	PAGE	ILLUS. NO.
S (THUNDERBIRD)			
ELECTRICAL SYSTEMS			
Automatic seat back latch wiring	140.6	2	P-7464
Power seat controls and wiring	140.2	4	P-7692
Window regulator	140.3	10	P-7696
Wiring system (Page A)	140	32	P-7682
Wiring system (Page B)	140	33	P-7683
Wiring system (Page C)	140	34	P-7684
Wiring system - instrument panel	140.1	2	P-6037
LAMPS			
Courtesy lamp - door mounted	137	12	P-5635
Headlamp, parking and front fender side marker	130	24	P-7157
Pillar lamp	137	12	P-5635
Rear lamp, back up, license plate and body side marker	134	32	P-7158
STEERING WHEEL			
2 - spoke wheel - except with speed control	138	8	P-7513
2 - spoke wheel - rim blow design - with speed control	97.1	22	P-7698
3 - spoke wheel - rim blow design	138	8	P-7514
U (BRONCO)			
ELECTRICAL SYSTEMS			
Wiring system	140	19	P-5122
LAMPS			
Headlamp, parking and front fender side marker	130	9	P-5096
Rear lamp, back up and license plate	134	12	P-5097
STEERING WHEEL and HORN RING	138	3	P-4953

1972

TITLE	SECTION	PAGE	ILLUS. NO.
A (FORD)			
ELECTRICAL SYSTEMS			
Automatic seat back latch wiring	140.6	3	P-7470
Convertible top	140.5	10	P-8421
Seat regulator - (6 way full width seat)	#600	56	P-8673
Seat regulator - (6 way split seat)	#600	64	P-8861
Tailgate window regulator & washer (Page A)	140.4	10	P-8320
Tailgate window regulator & washer (Page B)	140.4	11	P-8321
Window regulator (Page A)	140.3	12	P-8423
Window regulator (Page B)	140.3	13	P-8424
Wiring system (Page A)	140	37	P-8417
Wiring system (Page B)	140	38	P-8418
Wiring system (Page C)	140	39	P-8419
Wiring system - instrument panel	140.1	10	P-8140
LAMPS			
Cargo - Station Wagon	137	2	P-4722
Courtesy lamp - door mounted	137	20	P-9949
Domes	137	16	P-7039
Headlamp, parking and front fender side marker	130	29	P-8772
Pillar	137	17	P-7038
Rear lamp, back up, license plate and body side marker--except Station Wagon	134	37	P-8757
Rear lamp, back up, license plate and body side marker--Station Wagon	134	35	P-8115
STEERING WHEEL			
2 - spoke wheel - except with speed control	138	8	P-7513
2 - spoke wheel - with speed control	97.1	24	P-8310
3 - spoke wheel - rim blow design	138	8	P-7514

Refer to Body Illustration Section

COPYRIGHT © 1975 — FORD MOTOR COMPANY — DEARBORN, MICHIGAN

INDEX

1972

B (TORINO)

TITLE	SECTION	PAGE	ILLUS. NO.
ELECTRICAL SYSTEMS			
Automatic seat back latch wiring	#600	60	P-8733
Tailgate window regulator	140.4	12	P-9967
Window regulator (Page A)	140.3	14	P-9943
Window regulator (Page B)	140.3	15	P-9944
Wiring system (Page A)	140	43	P-9956
Wiring system (Page B)	140	44	P-9957
Wiring system (Page C)	140	45	P-9958
Wiring system - instrument panel	140.1	14	P-8825
LAMPS			
Cargo - Station Wagon	137	3	P-4984
Dome lamp -adjustable	137	20	P-9197
Headlamp, parking and front fender side marker - Body Types 53D, 63, 65D, R, 71D, K, 97	130	31	P-8774
Headlamp, parking and front side marker-Body Types 53B, 65B, 71B	130	30	P-8775
Rear lamp, back up, license plate and body side marker - Station Wagon	134	39	P-8759
Rear lamp, back up, license plate and body side marker - Ranchero	134	40	P-8760
Rear lamp, back up, license plate and body side marker - except Ranchero and Station Wagon	134	38	P-8761
Dome lamp	137	16	P-7039
STEERING WHEEL			
2 - spoke wheel	138	8	P-7513
3 - spoke wheel - rim blow design	138	9	P-10685

F (MUSTANG)

TITLE	SECTION	PAGE	ILLUS. NO.
ELECTRICAL SYSTEMS			
Automatic seat back latch system	#600	54	P-8534
Convertible top	140.5	10	P-8246
Window regulator	140.3	11	P-8426
Wiring system (Page A)	140	40	P-8406
Wiring system (Page B)	140	41	P-8411
Wiring system (Page C)	140	42	P-8410
Wiring system - instrument panel	140.1	12	P-8206
LAMPS			
Courtesy lamp - pillar mounted	137	18	P-7040
Headlamp, parking and front fender side marker	130	28	P-8147
Rear lamp, back up, license plate and body side marker	134	36	P-8098
Sport lamps - grille mounted	130	28	P-8147
STEERING WHEEL			
2 - spoke wheel - button blow	138	9	P-8309
2 - spoke wheel - pad blow	138	8	P-7513
3 - spoke wheel - rim blow design	138	9	P-10685

Refer to Body Illustration Section

INDEX

1972

TITLE	SECTION	PAGE	ILLUS. NO.
L (PINTO)			
ELECTRICAL SYSTEMS			
Wiring system (Page A)	140	35	P-8061
Wiring system (Page B)	140	36	P-8062
Wiring system - instrument panel	140.1	11	P-8022
LAMPS			
Cargo - Body type 73	137	19	P-8765
Dome	137	13	P-8063
Headlamp, parking and front fender side marker	130	25	P-7963
Rear lamp, back up, license plate and body side marker - Body types 62, 64	134	33	P-6871
Rear lamp, back up, license plate and body side marker - Body type 73	134	41	P-8764
STEERING WHEEL			
2 - spoke wheel - button blow	138	9	P-8309
2 - spoke wheel - pad blow	138	8	P-7513
P (MAVERICK)			
ELECTRICAL SYSTEMS			
Wiring system (Page A)	140	28	P-7030
Wiring system (Page B)	140	29	P-7031
Wiring system - instrument panel	140.1	15	P-8826
LAMPS			
Dome	137	15	P-6872
Headlamp, parking and front fender side marker	130	25	P-6870
Luggage compartment	137	15	P-6872
Rear lamp, back up, license plate and body side marker	134	33	P-6871
Sports lamp - grille mounted	130.3	3	P-7474
STEERING WHEEL			
2 - spoke wheel - button blow	138	9	P-8309
2 - spoke wheel - with locking steering column	138	8	P-7513
S (THUNDERBIRD)			
ELECTRICAL SYSTEMS			
Automatic seat back latch wiring	#600	60	P-8733
Power seat controls and wiring	140.3	16	P-9945
Window regulator	140.3	16	P-9945
Wiring system (Page A)	140	46	P-9950
Wiring system (Page B)	140	47	P-9951
Wiring system (Page C)	140	48	P-9952
Wiring system - instrument panel	140.1	13	P-8824
Electric door latch system	#230.2	14	P-8817
LAMPS			
Courtesy lamp - door mounted	137	20	P-9949
Headlamp, parking and front fender side marker	130	32	P-8777
Rear lamp, back up, license plate and body side marker	134	42	P-8763
Dome lamp	137	20	P-9197
STEERING WHEEL			
2 - spoke wheel - except with speed control	138	8	P-7513
2 - spoke wheel - rim blow design - with speed control	97.1	25	P-9919
3 - spoke wheel - rim blow design	138	8	P-7514

Refer to Body Illustration Section

COPYRIGHT © 1975 — FORD MOTOR COMPANY — DEARBORN, MICHIGAN

INDEX

1972

TITLE	SECTION	PAGE	ILLUS. NO.
U (BRONCO)			
ELECTRICAL SYSTEMS			
Wiring system	140	19	P-5122
LAMPS			
Headlamp, parking and front fender side marker	130	9	P-5096
Rear lamp, back up and license plate	134	12	P-5097
STEERING WHEEL and HORN RING	138	3	P-4953

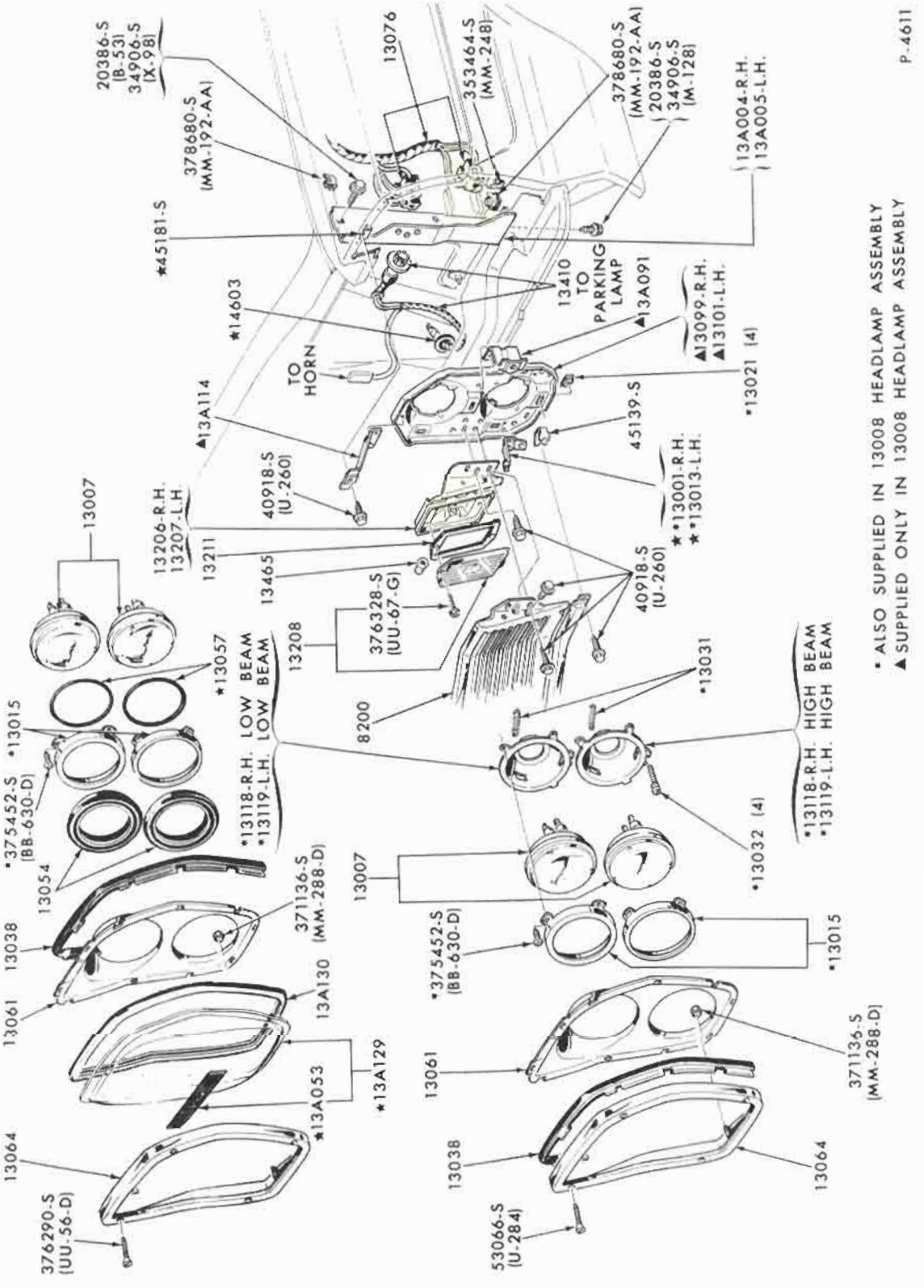

HEADLAMP, PARKING LAMP and RELATED PARTS
1965 FORD

COPYRIGHT © 1975 — FORD MOTOR COMPANY — DEARBORN, MICHIGAN

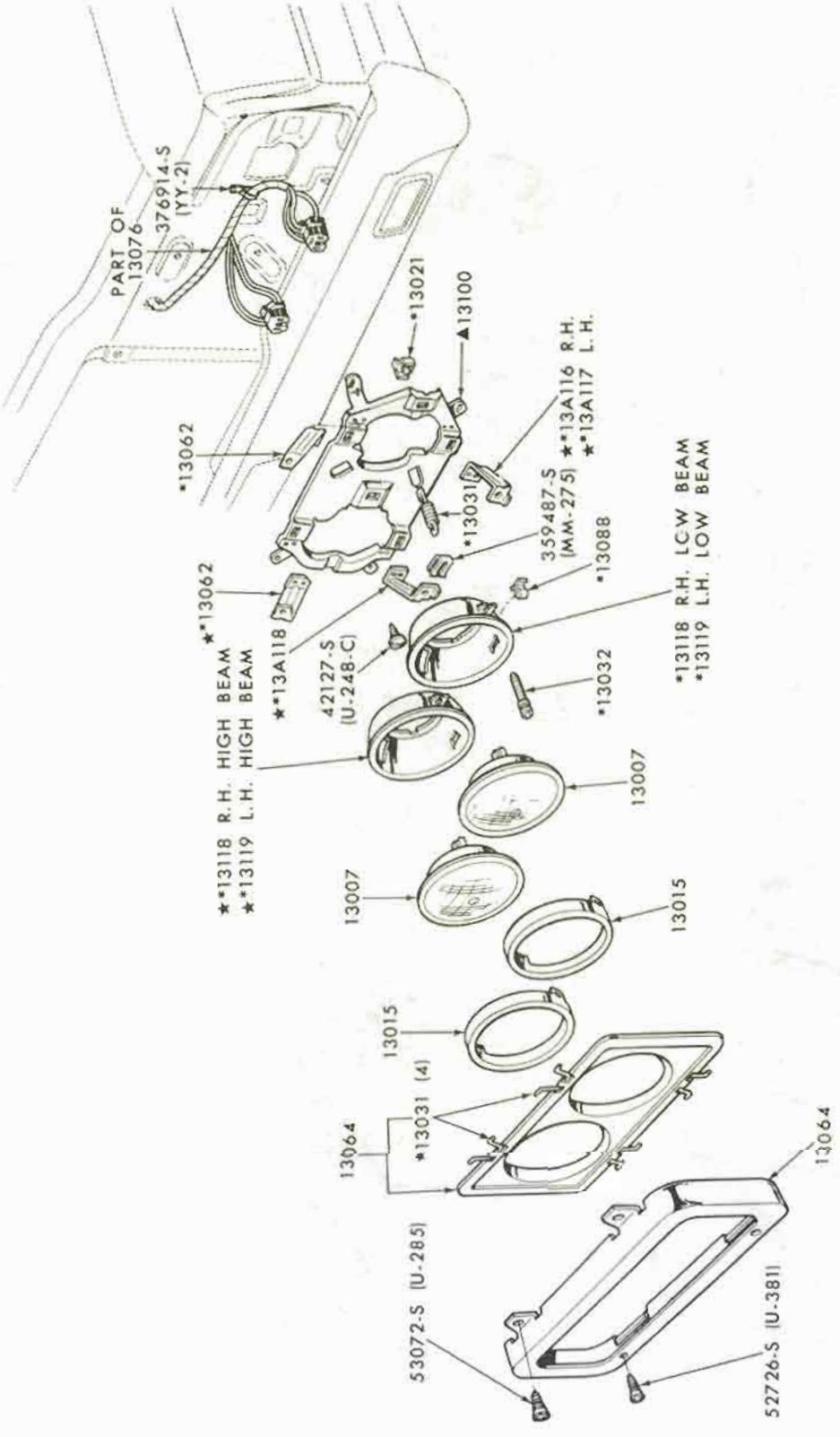

P-4712

*ALSO SUPPLIED IN 13008 HEADLAMP ASSEMBLY
▲SUPPLIED ONLY IN 13008 HEADLAMP ASSEMBLY

HEADLAMP PARTS
1965 FAIRLANE

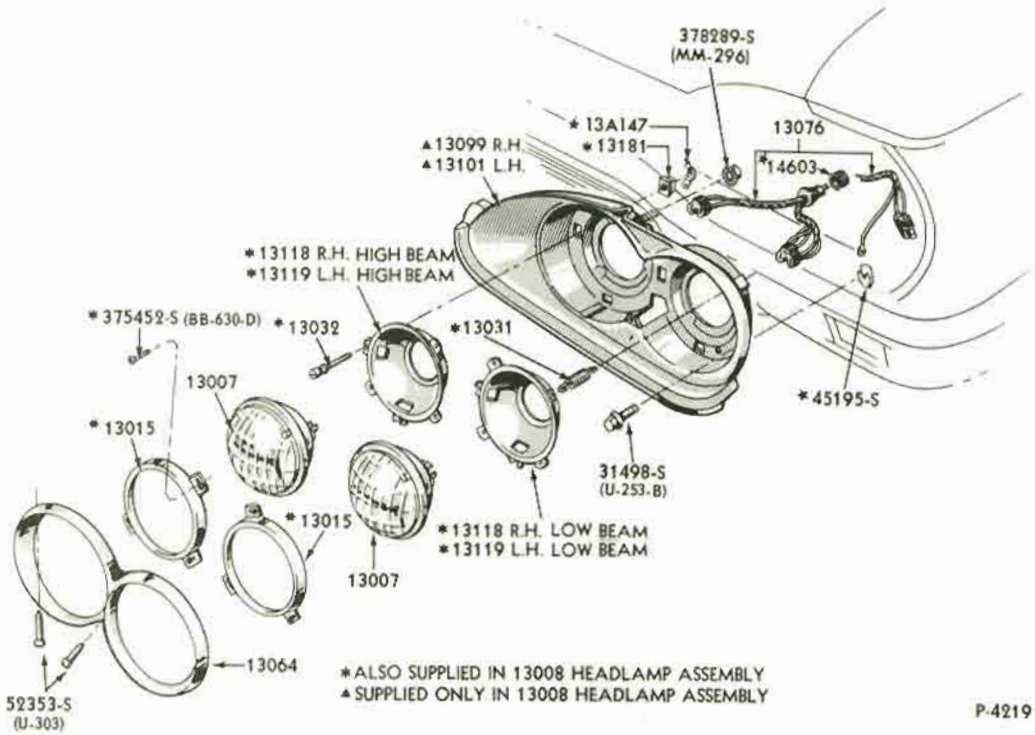

HEADLAMP PARTS
1965 THUNDERBIRD

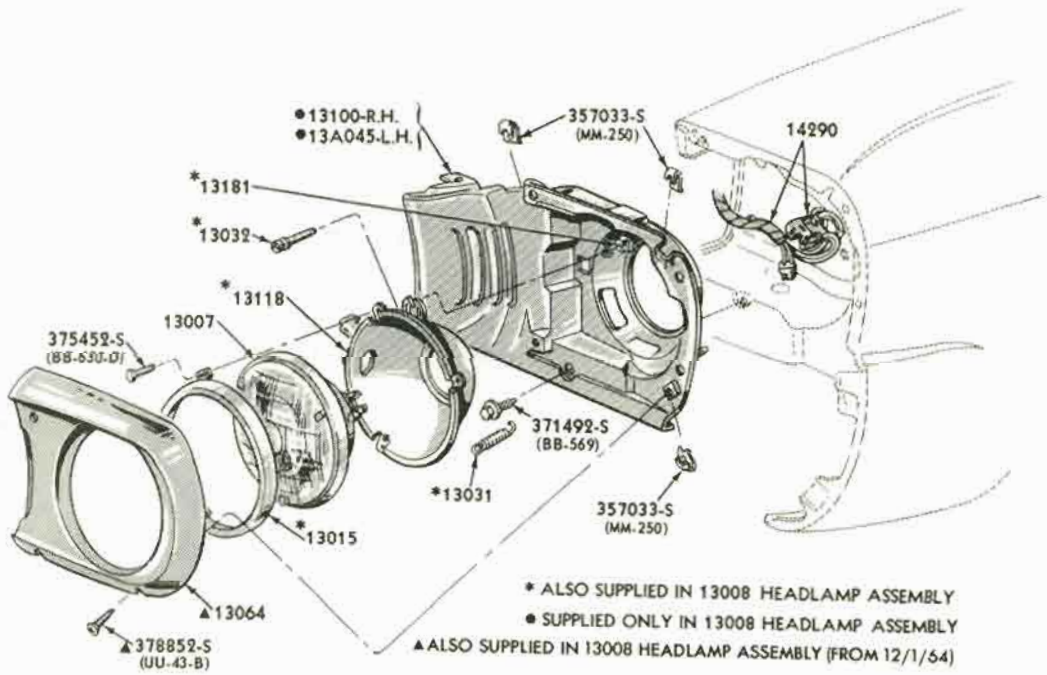

HEADLAMP PARTS
1965/66 MUSTANG

COPYRIGHT © 1975 — FORD MOTOR COMPANY — DEARBORN, MICHIGAN

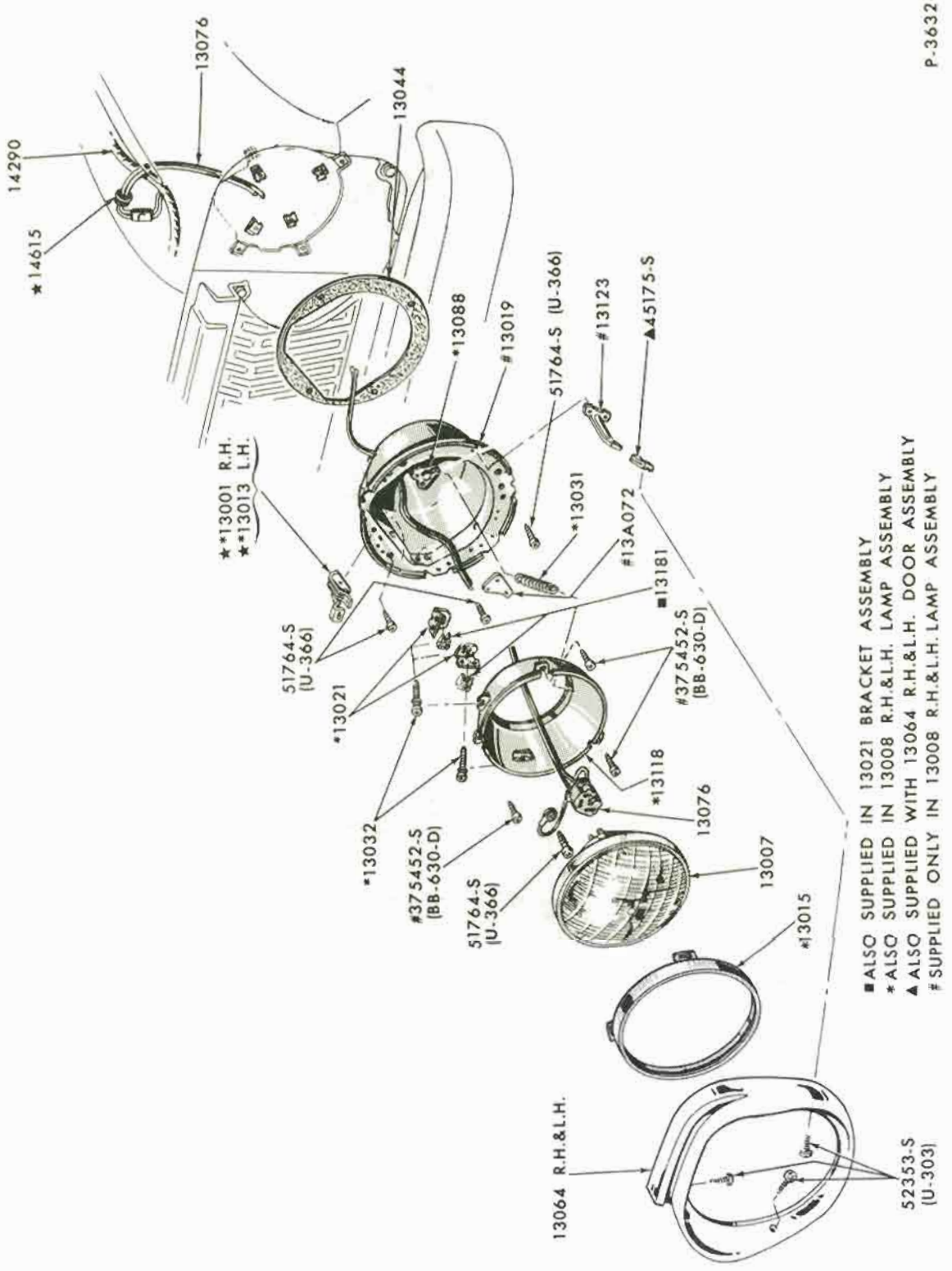
14290
★14615
13076
13044
★*13001 R.H.
★*13013 L.H.
*13088
#13019
51764-S (U-366)
#13123
▲45175-S
*13031
#13A072
■13181
#375452-S (BB-630-D)
51764-S (U-366)
*13021
*13032
#375452-S (BB-630-D)
51764-S (U-366)
*13118
13076
13007
*13015
13064 R.H.&L.H.
52353-S (U-303)
P-3632
■ALSO SUPPLIED IN 13021 BRACKET ASSEMBLY
★ALSO SUPPLIED IN 13008 R.H.&L.H. LAMP ASSEMBLY
▲ALSO SUPPLIED WITH 13064 R.H.&L.H. DOOR ASSEMBLY
#SUPPLIED ONLY IN 13008 R.H.&L.H. LAMP ASSEMBLY

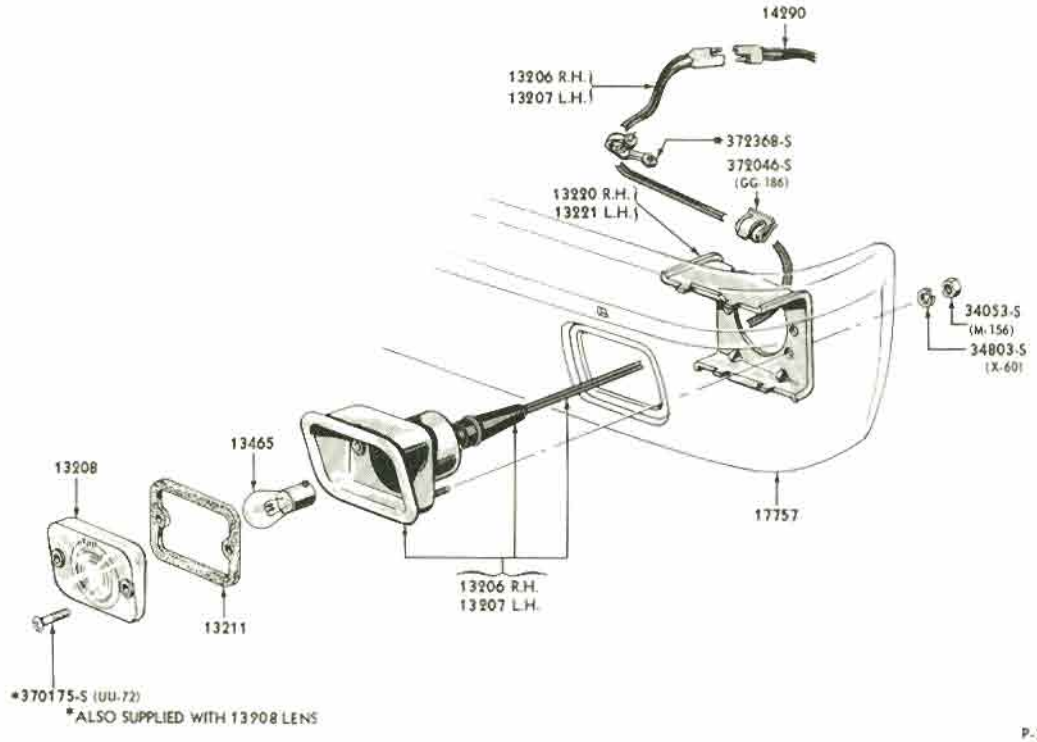

PARKING LAMP
1965 FALCON

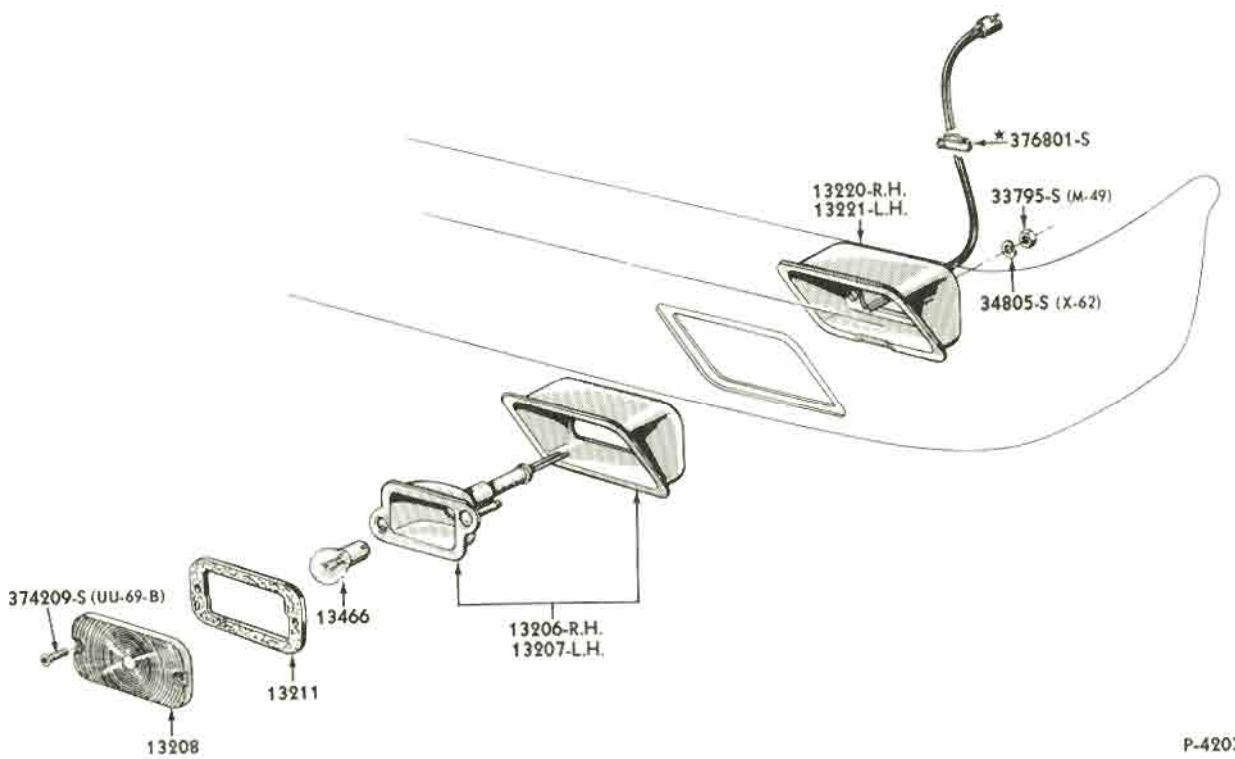

PARKING LAMP
1965 FAIRLANE

COPYRIGHT © 1975 — FORD MOTOR COMPANY — DEARBORN, MICHIGAN

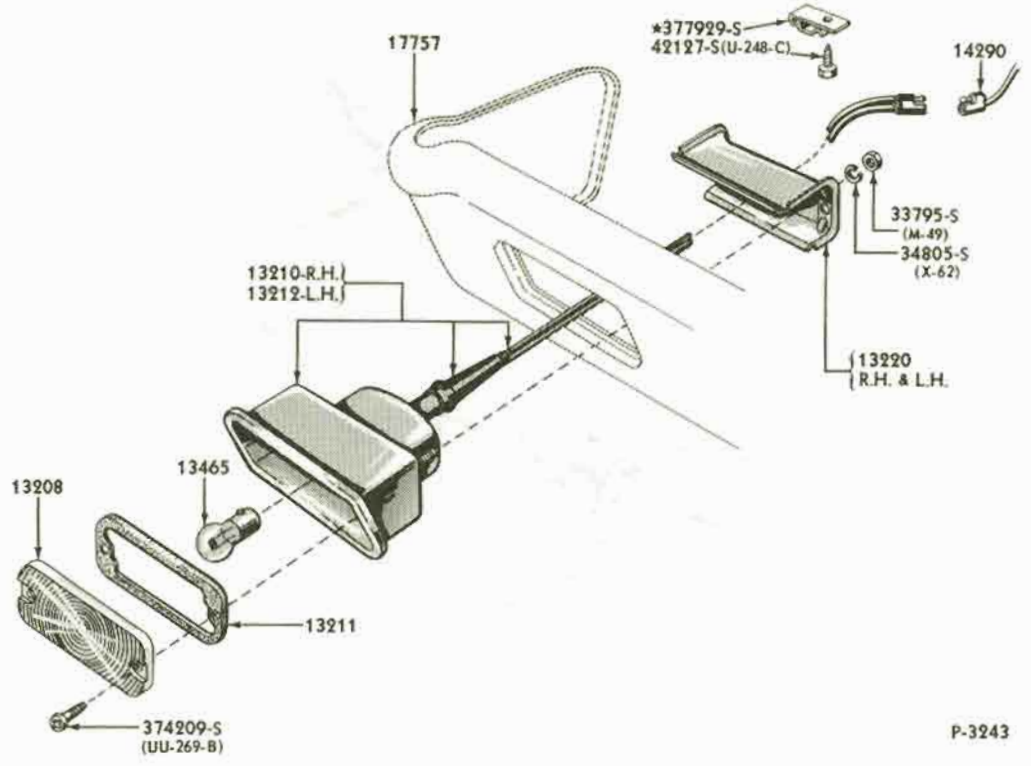

PARKING LAMP
1965 THUNDERBIRD

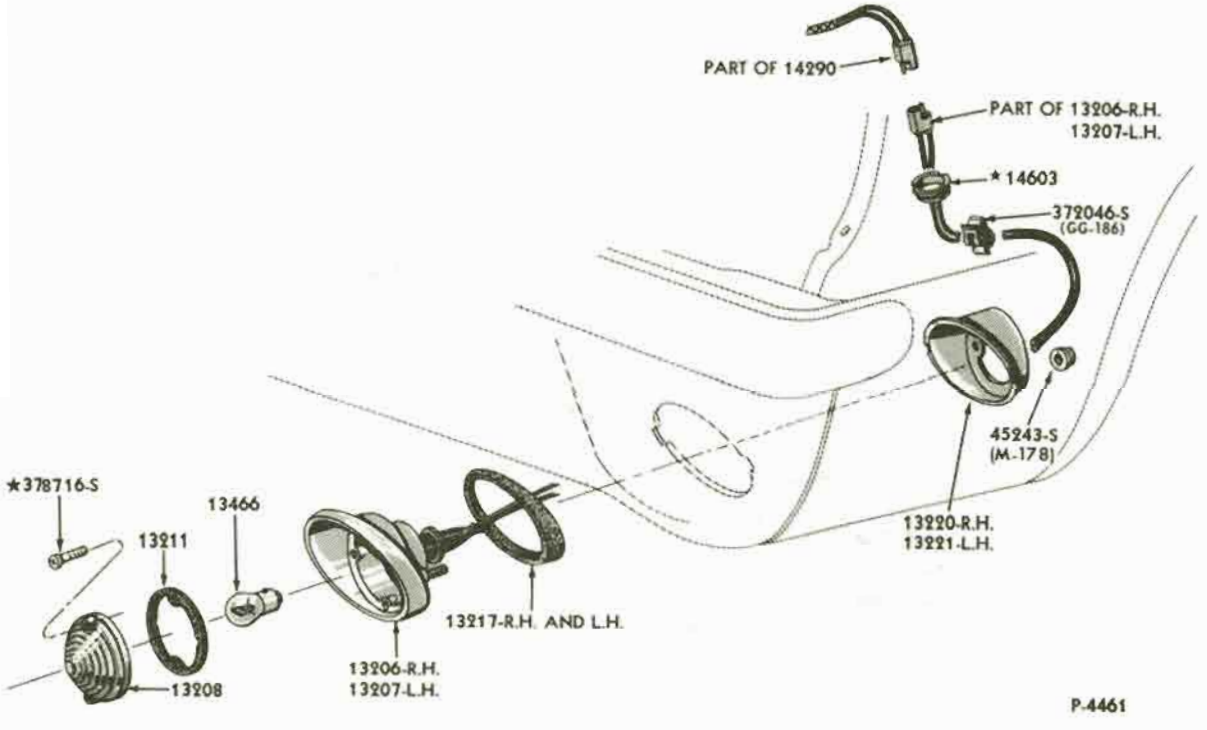

PARKING LAMP
1965/66 MUSTANG

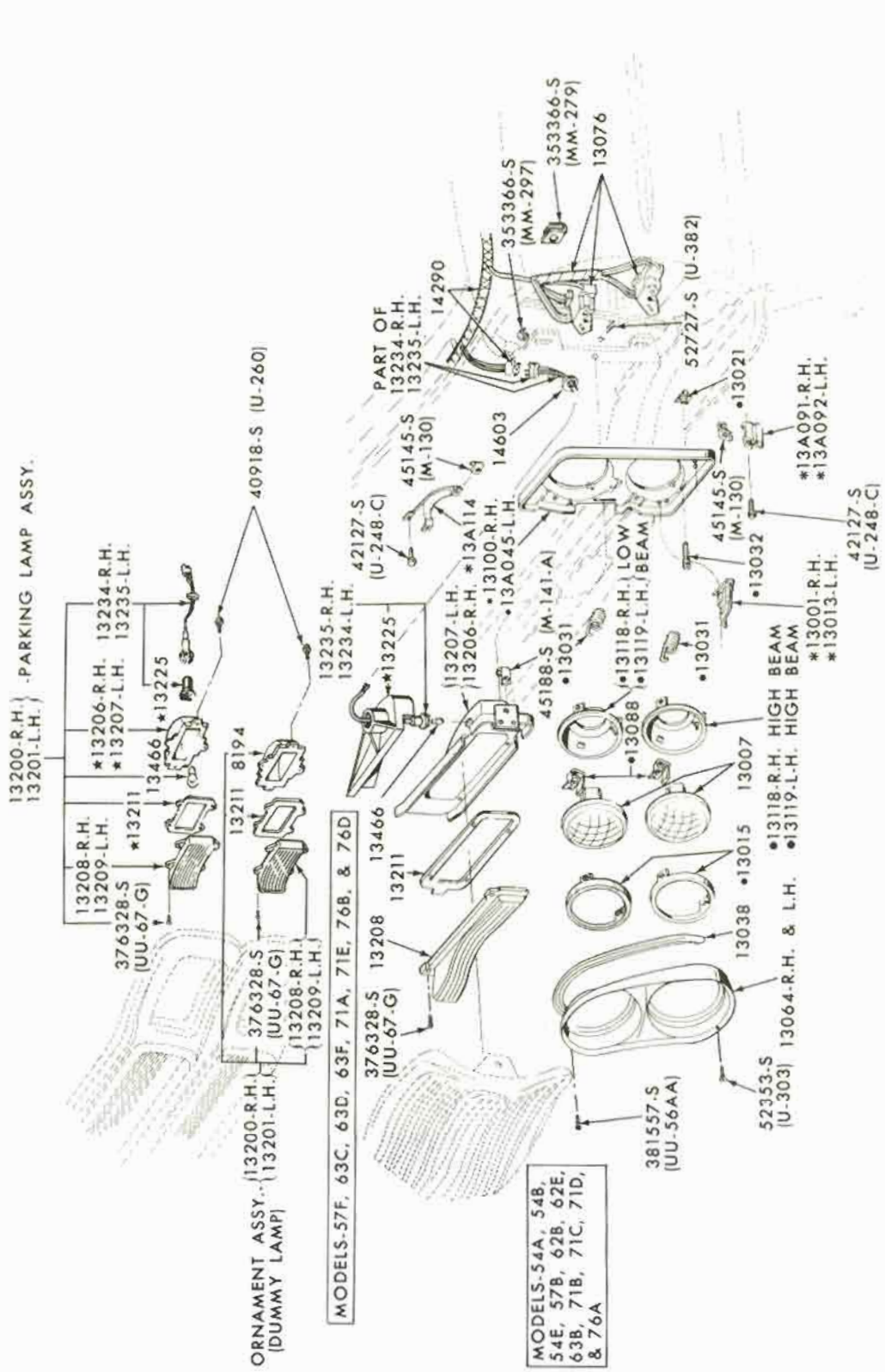

HEADLAMP, PARKING LAMP and RELATED PARTS
1966 FORD

COPYRIGHT © 1975 — FORD MOTOR COMPANY — DEARBORN, MICHIGAN

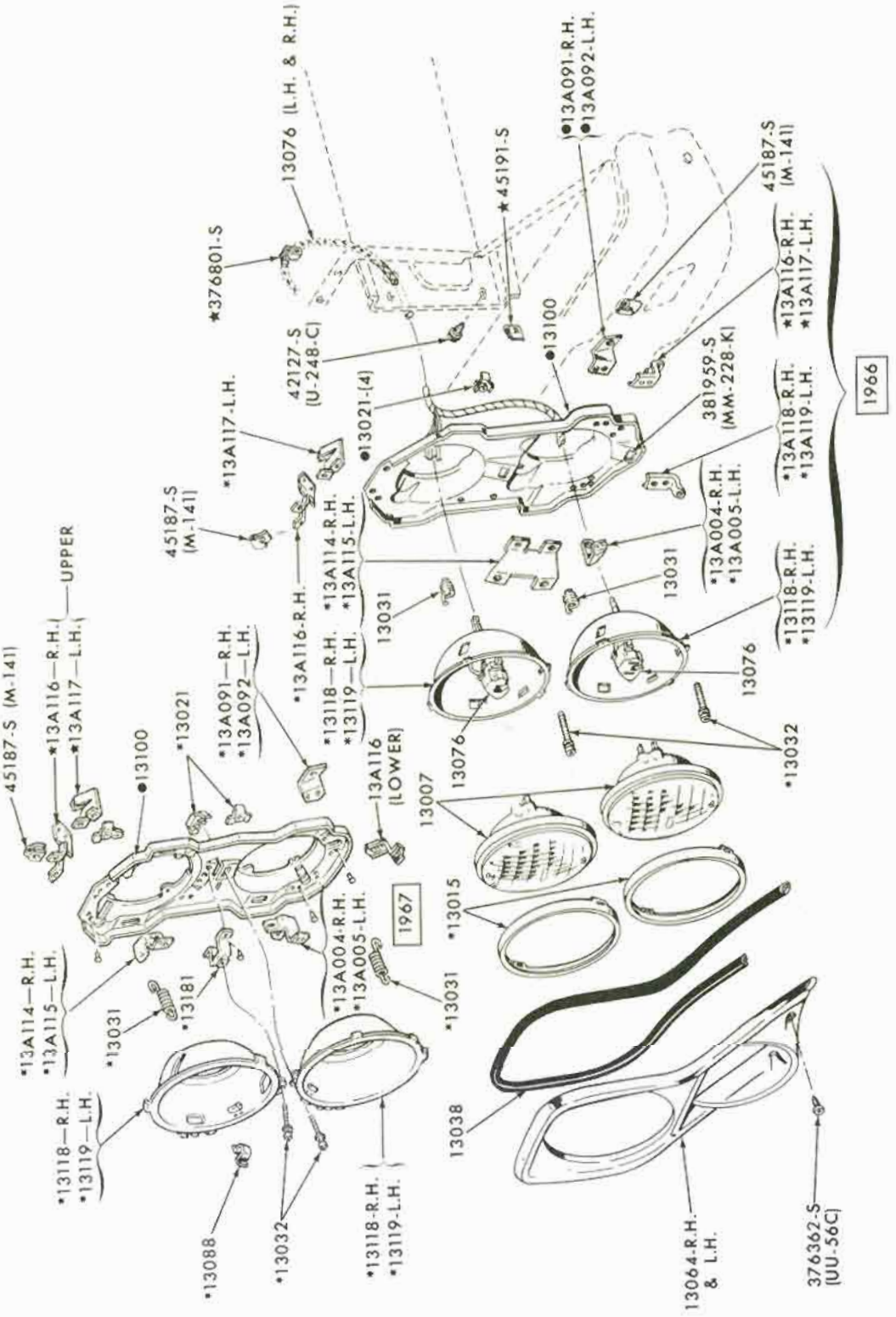

P-4950

*ALSO SUPPLIED IN 13008 HEADLAMP ASS'Y.
● SUPPLIED ONLY IN 13008 HEADLAMP ASS'Y.

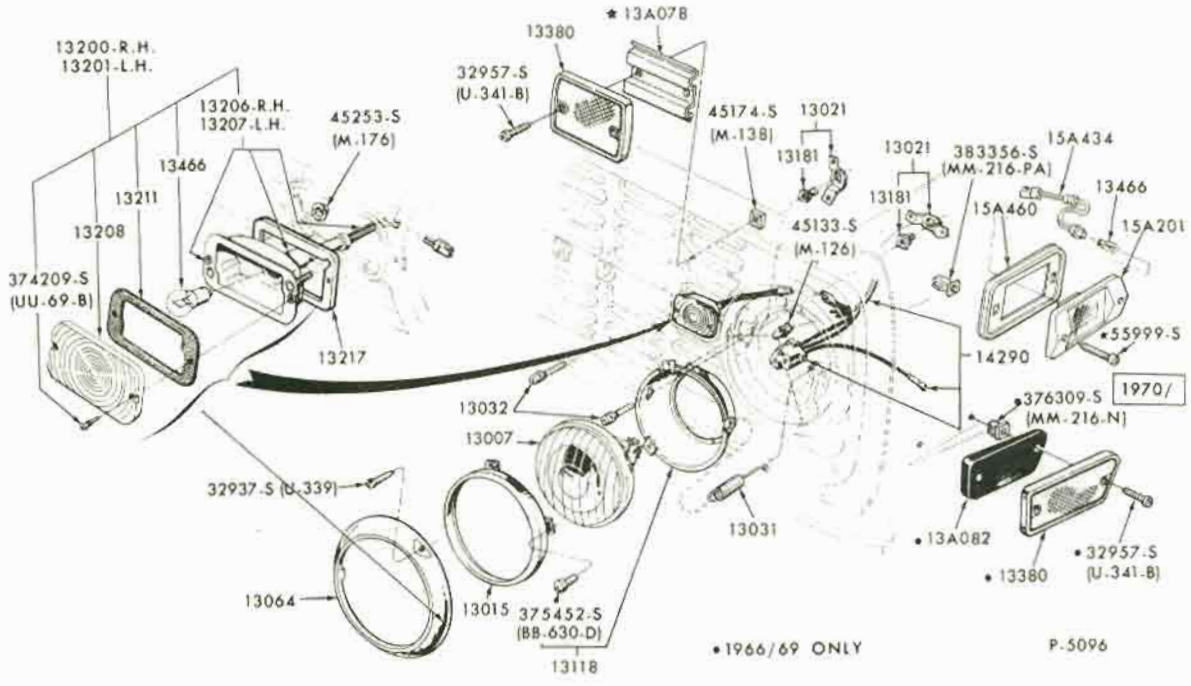

HEADLAMP, PARKING and FENDER SIDE MARKER LAMP and RELATED PARTS
1966/72 BRONCO

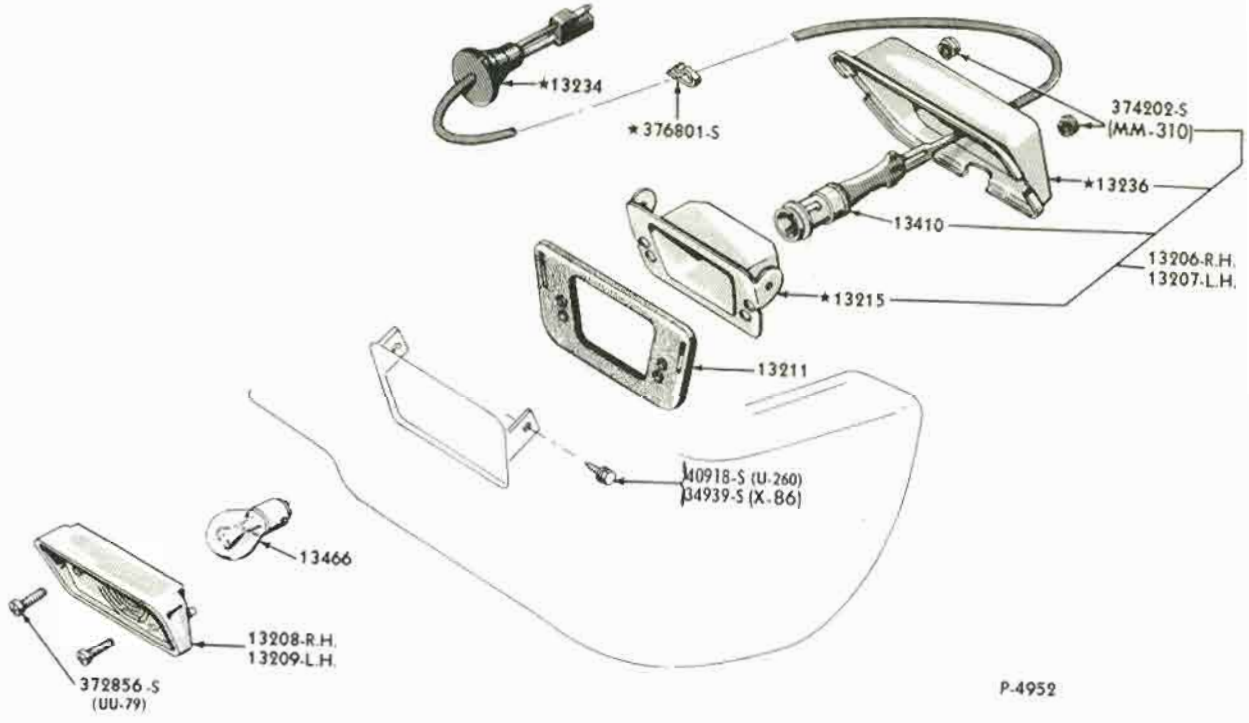

PARKING LAMP - TYPICAL
1966/67 FAIRLANE 1966/67 FALCON

COPYRIGHT © 1975 — FORD MOTOR COMPANY — DEARBORN, MICHIGAN

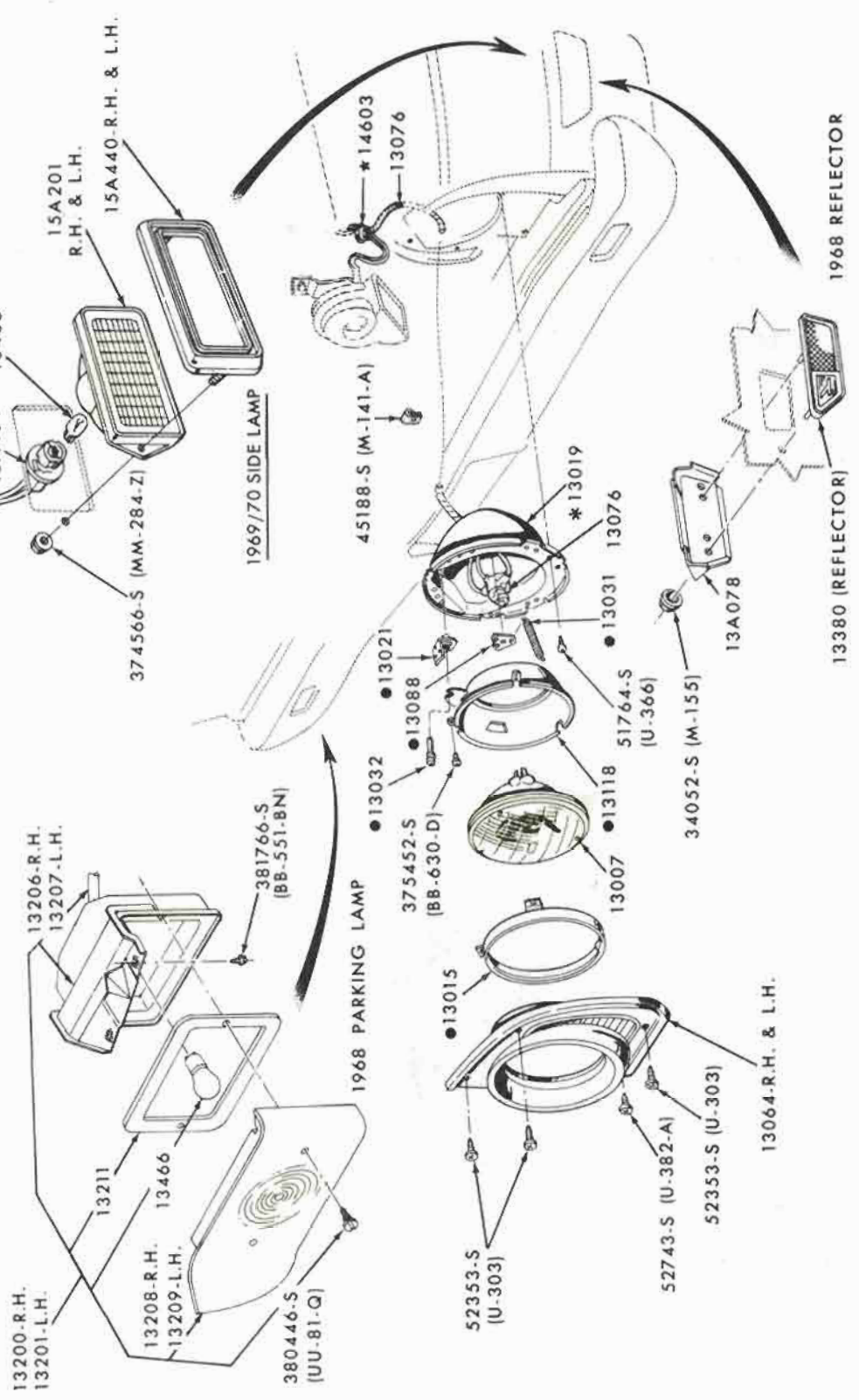

HEADLAMP, PARKING LAMP, FENDER SIDE MARKER LAMP and RELATED PARTS
1966/70 FALCON

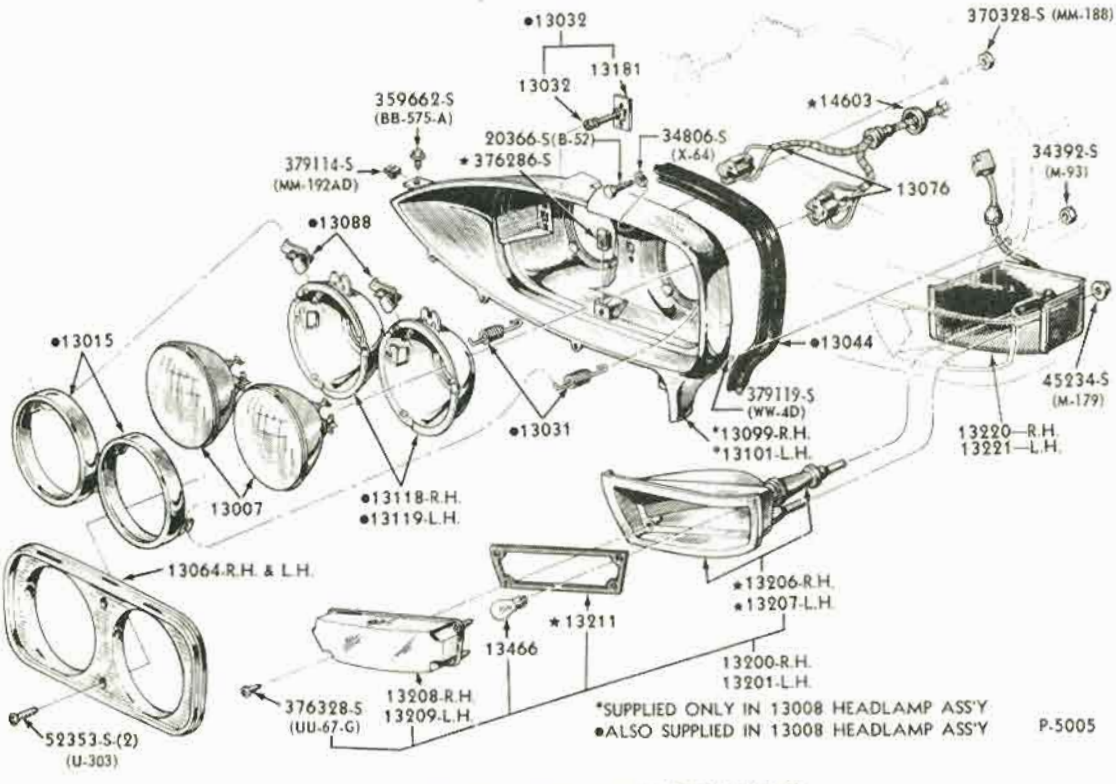

HEADLAMP, PARKING LAMP and RELATED PARTS
1966 THUNDERBIRD

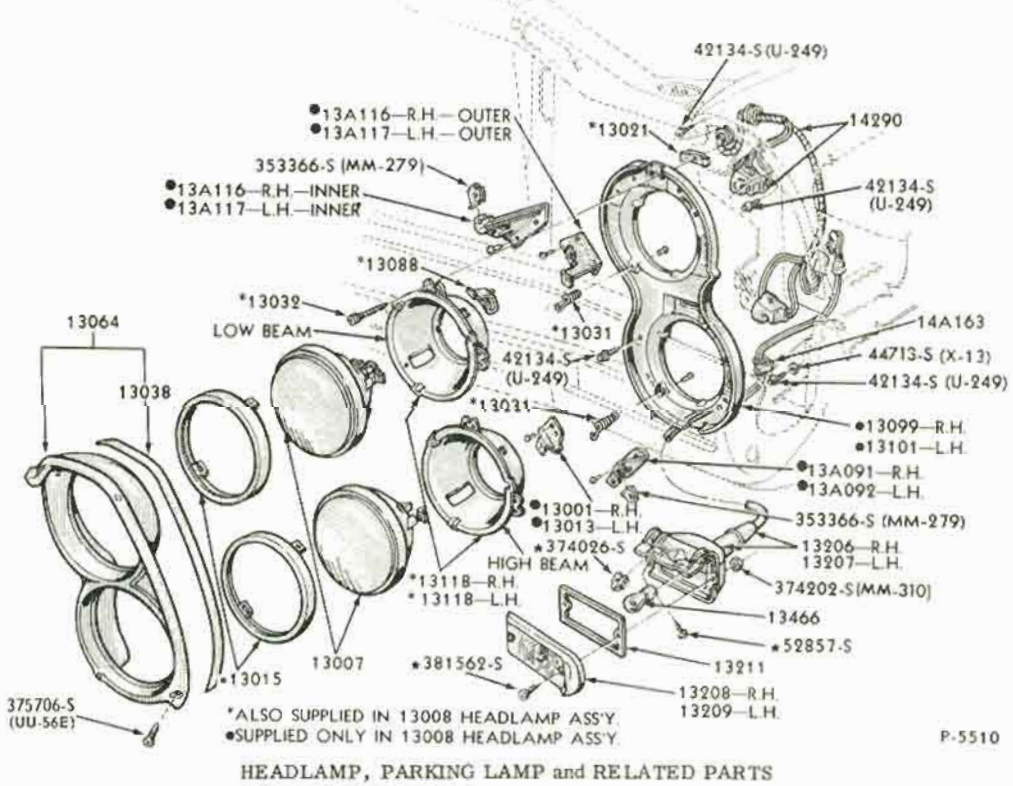

HEADLAMP, PARKING LAMP and RELATED PARTS
1967 FORD

COPYRIGHT © 1975 — FORD MOTOR COMPANY — DEARBORN, MICHIGAN

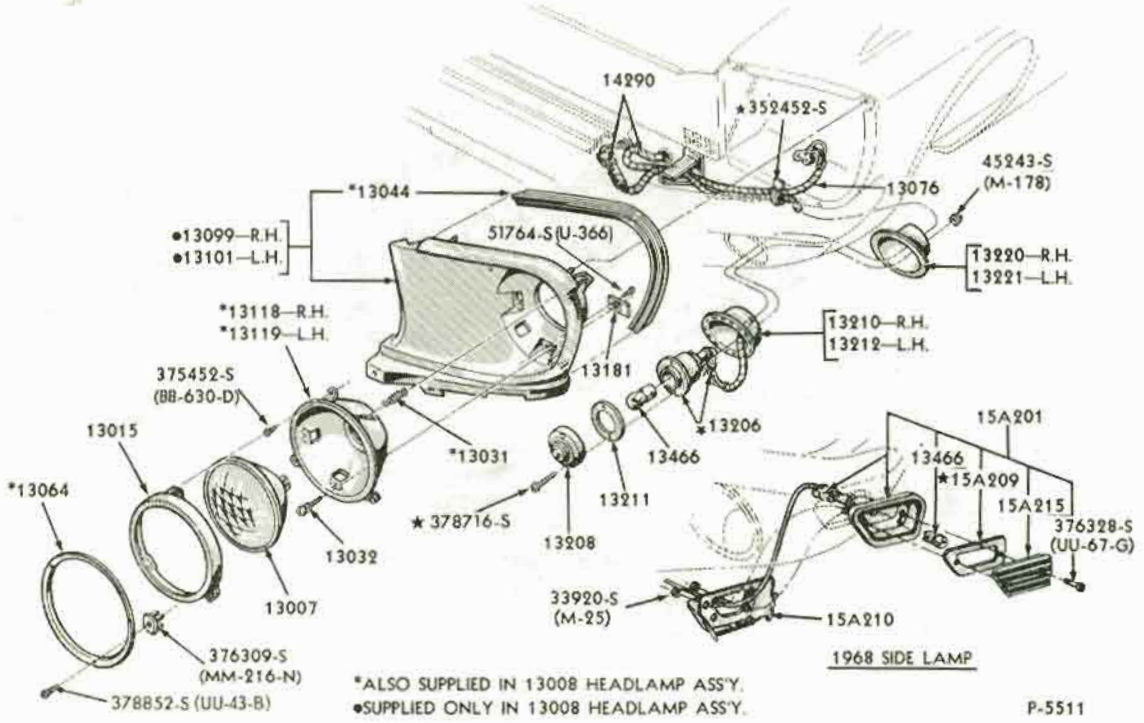

HEADLAMP, PARKING LAMP, FENDER SIDE MARKER LAMP and RELATED PARTS
1967/68 MUSTANG - except GT 350/500

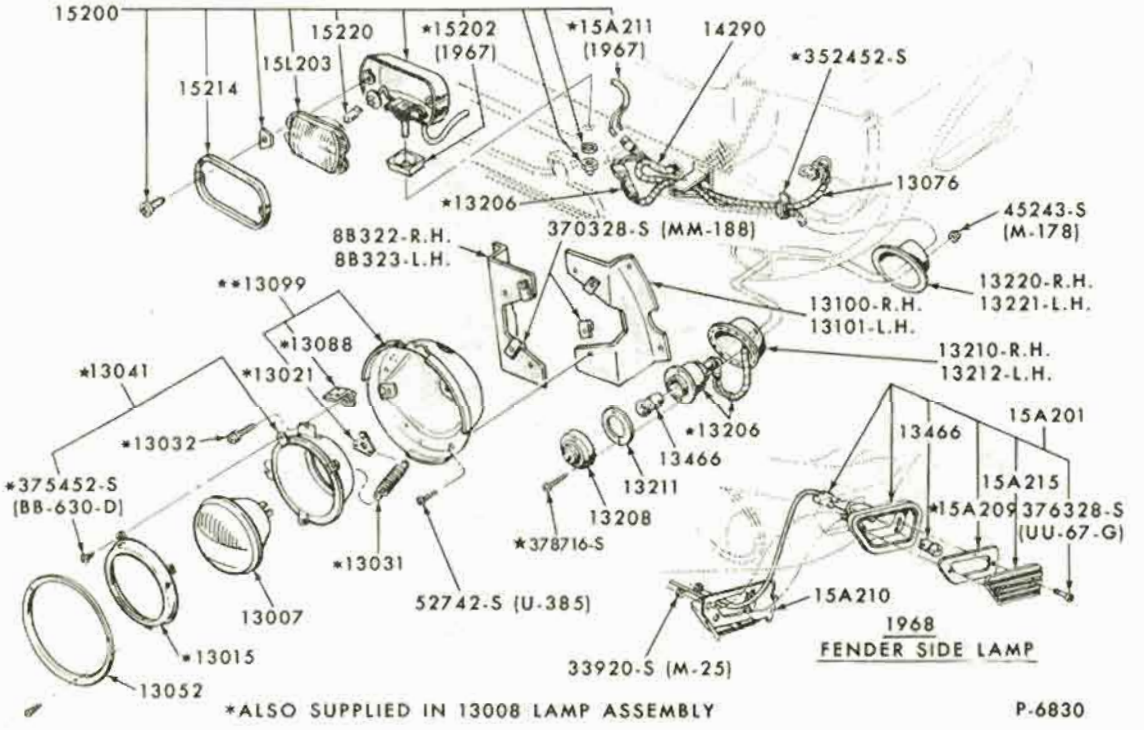

HEADLAMP, PARKING LAMP, FENDER SIDE MARKER LAMP and FOG LAMP
1967/68 MUSTANG - GT 350/500

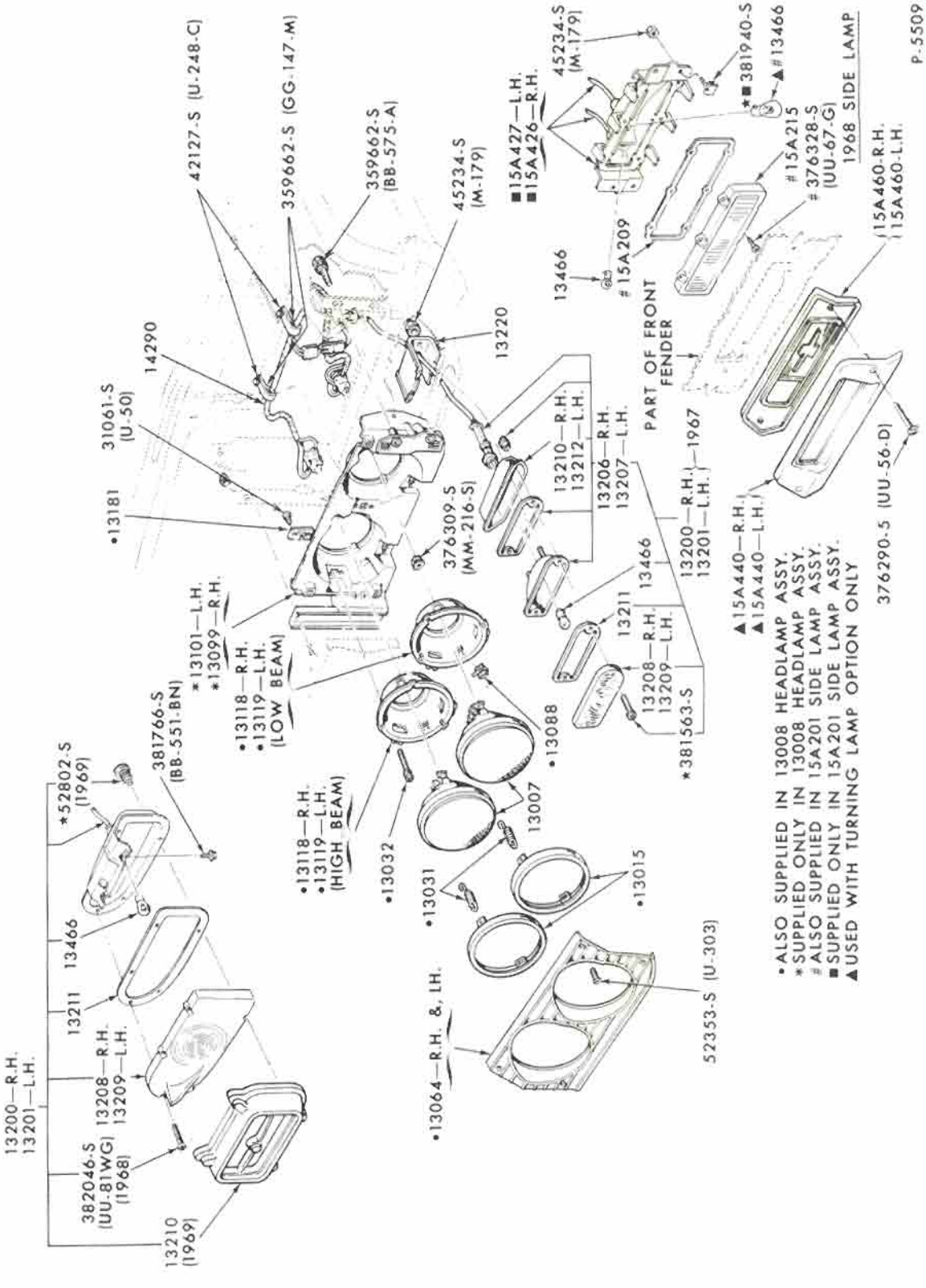

HEADLAMP, PARKING LAMP, FENDER SIDE MARKER LAMP and RELATED PARTS

1967/69 THUNDERBIRD

COPYRIGHT © 1975 — FORD MOTOR COMPANY — DEARBORN, MICHIGAN

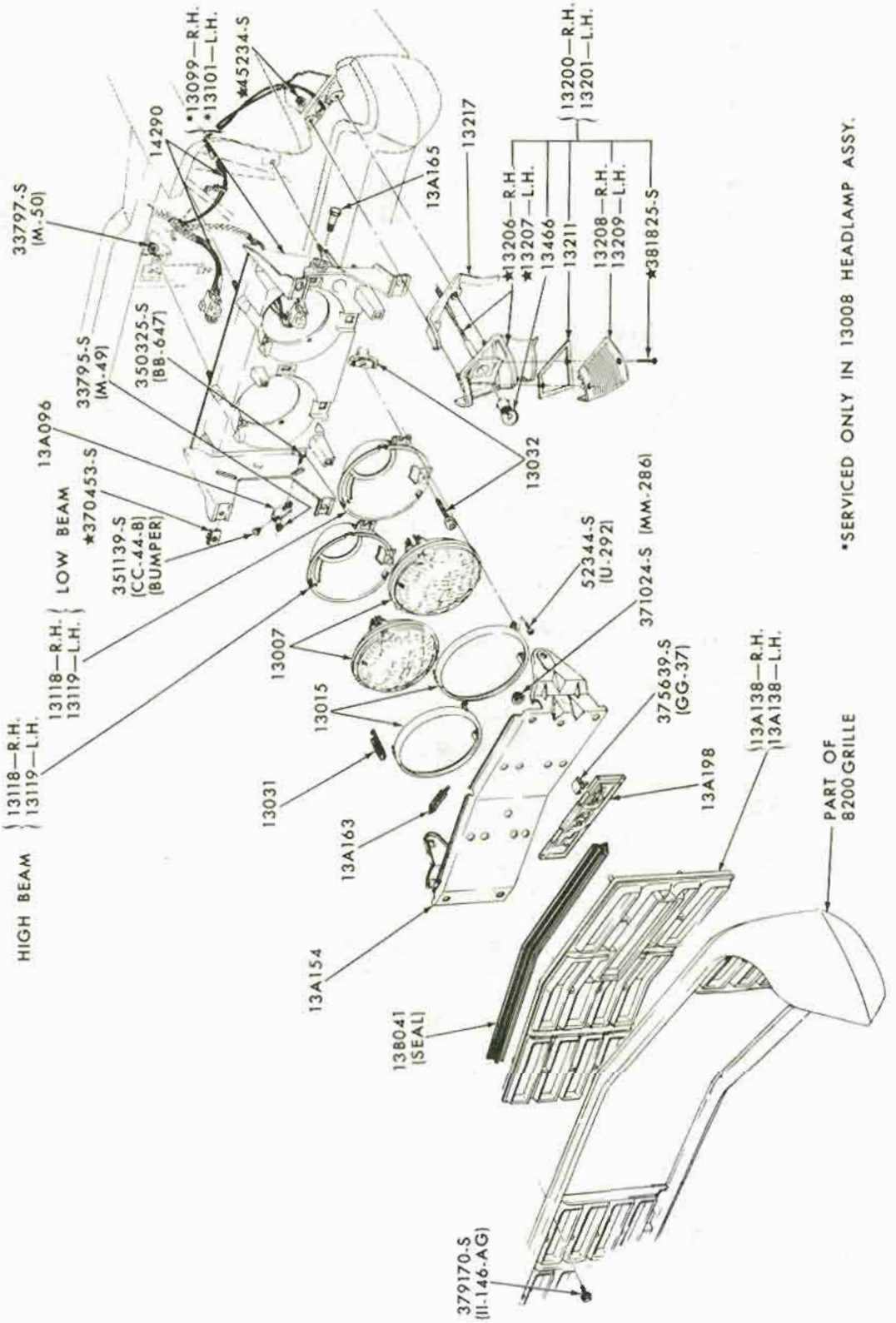

HEADLAMP, PARKING LAMP and RELATED PARTS
1968 FORD - with HEADLAMP COVER

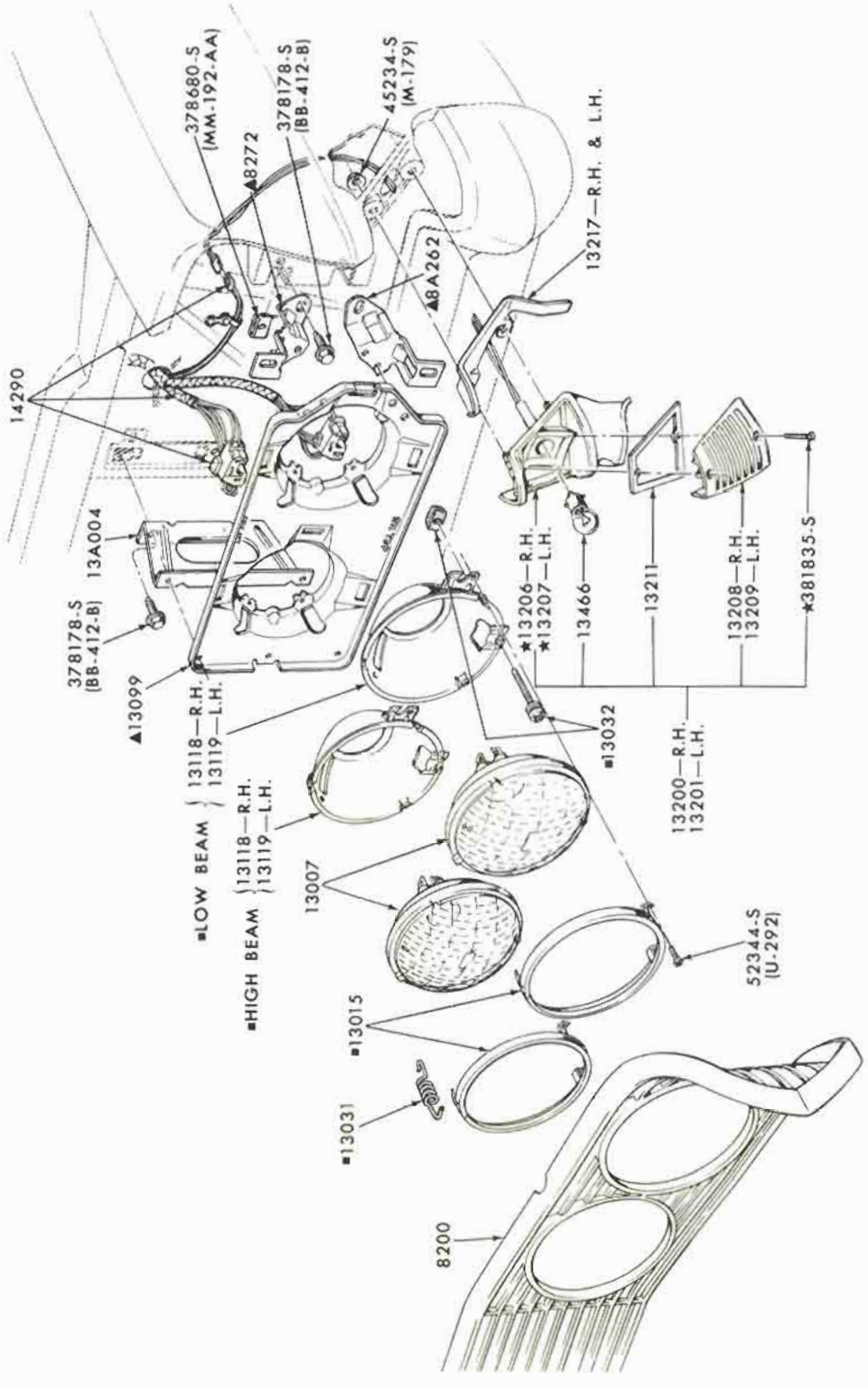

HEADLAMP, PARKING LAMP and RELATED PARTS
1968 FORD - without HEADLAMP COVER

COPYRIGHT © 1975 — FORD MOTOR COMPANY — DEARBORN, MICHIGAN

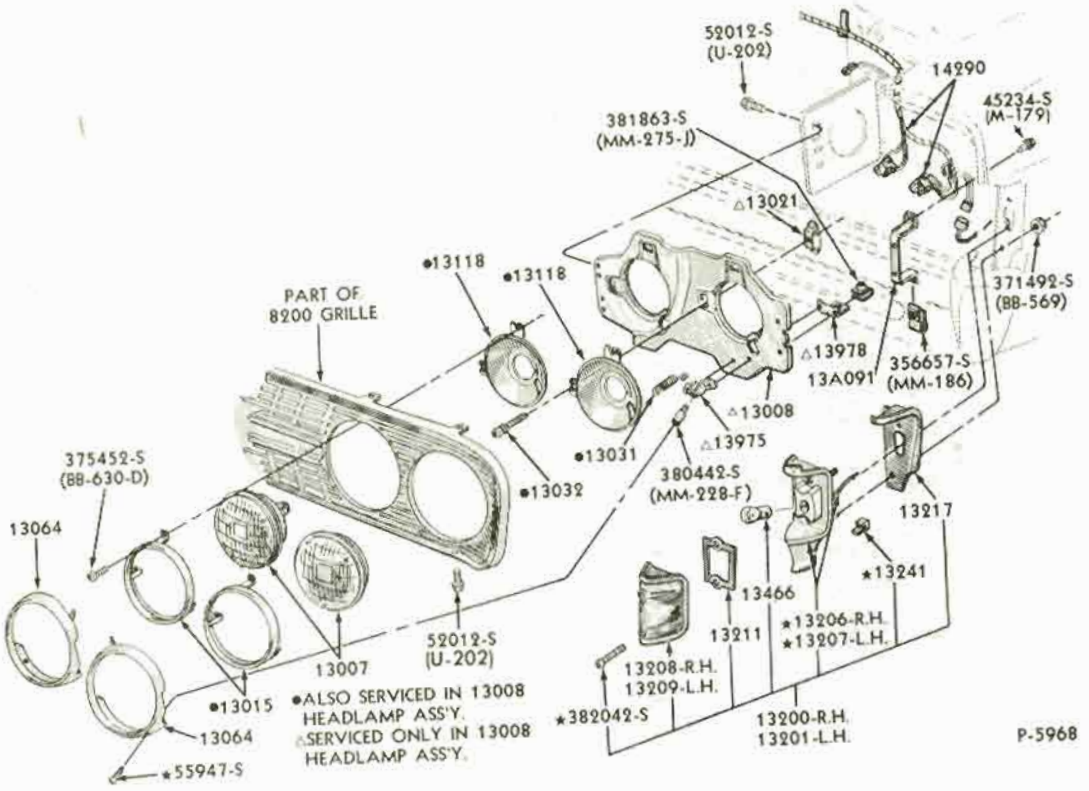

HEADLAMP, PARKING LAMP and RELATED PARTS
1968 FAIRLANE/TORINO

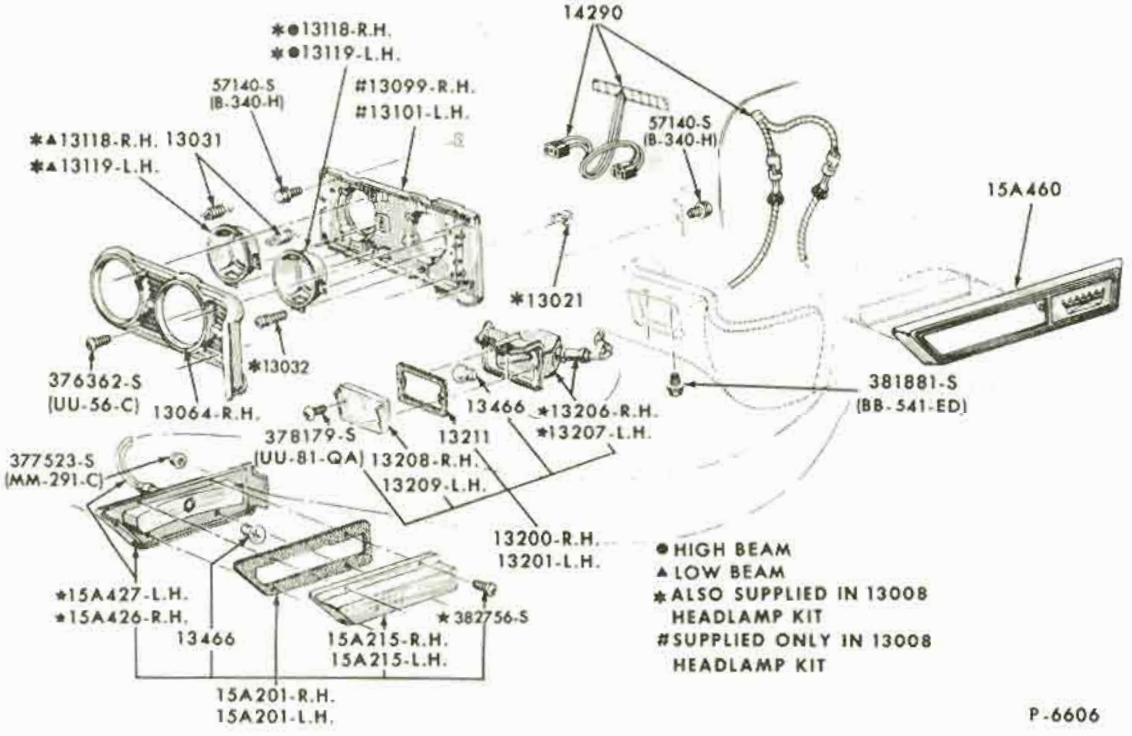

HEADLAMP, PARKING LAMP, FENDER SIDE MARKER LAMP and RELATED PARTS
1969 FORD - without HEADLAMP COVER

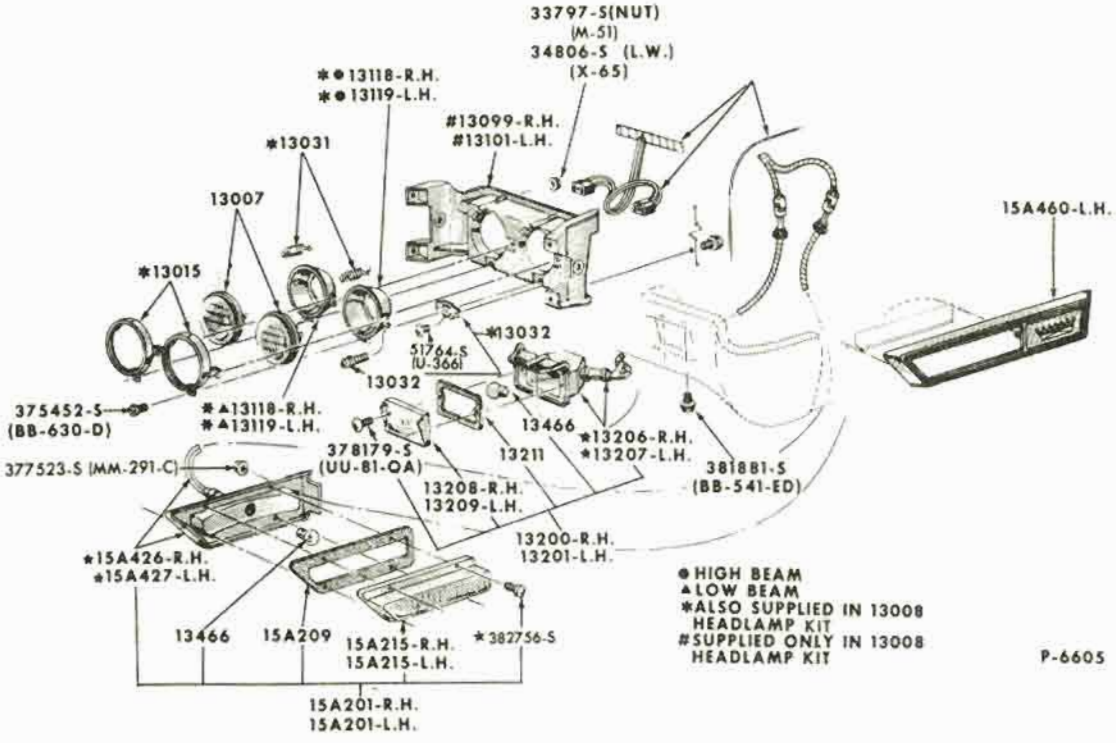

HEADLAMP, PARKING LAMP, FENDER SIDE MARKER LAMP and RELATED PARTS
1969 FORD - with HEADLAMP COVER

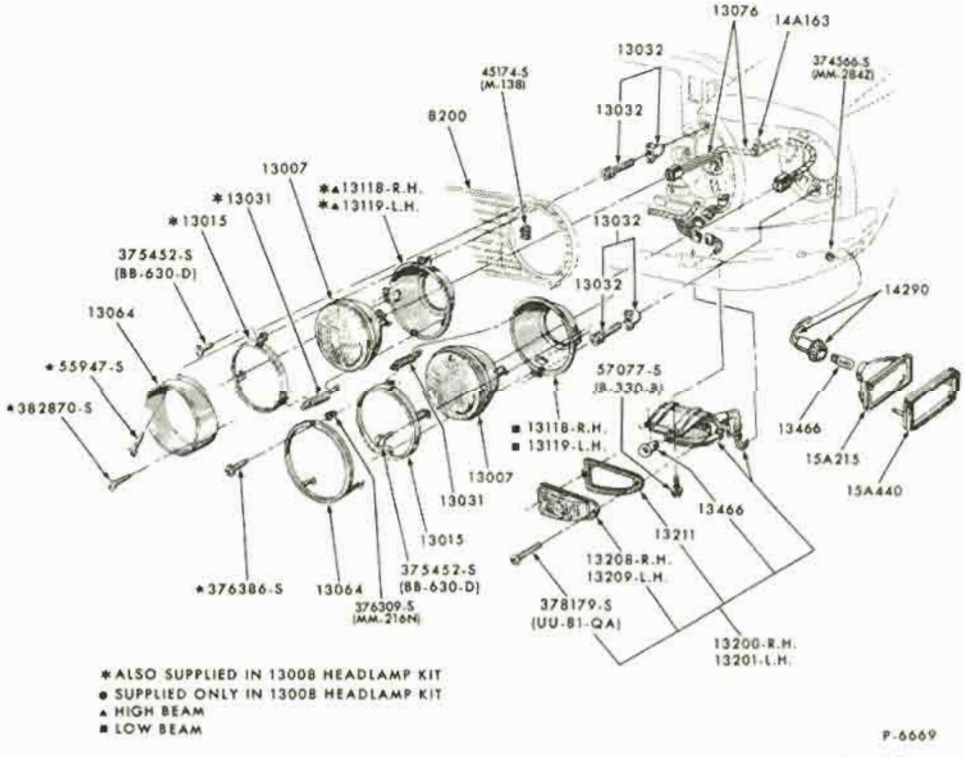

HEADLAMP, PARKING LAMP, FENDER SIDE MARKER LAMP and RELATED PARTS
1969 MUSTANG - except GT 350/500

COPYRIGHT © 1975 — FORD MOTOR COMPANY — DEARBORN, MICHIGAN

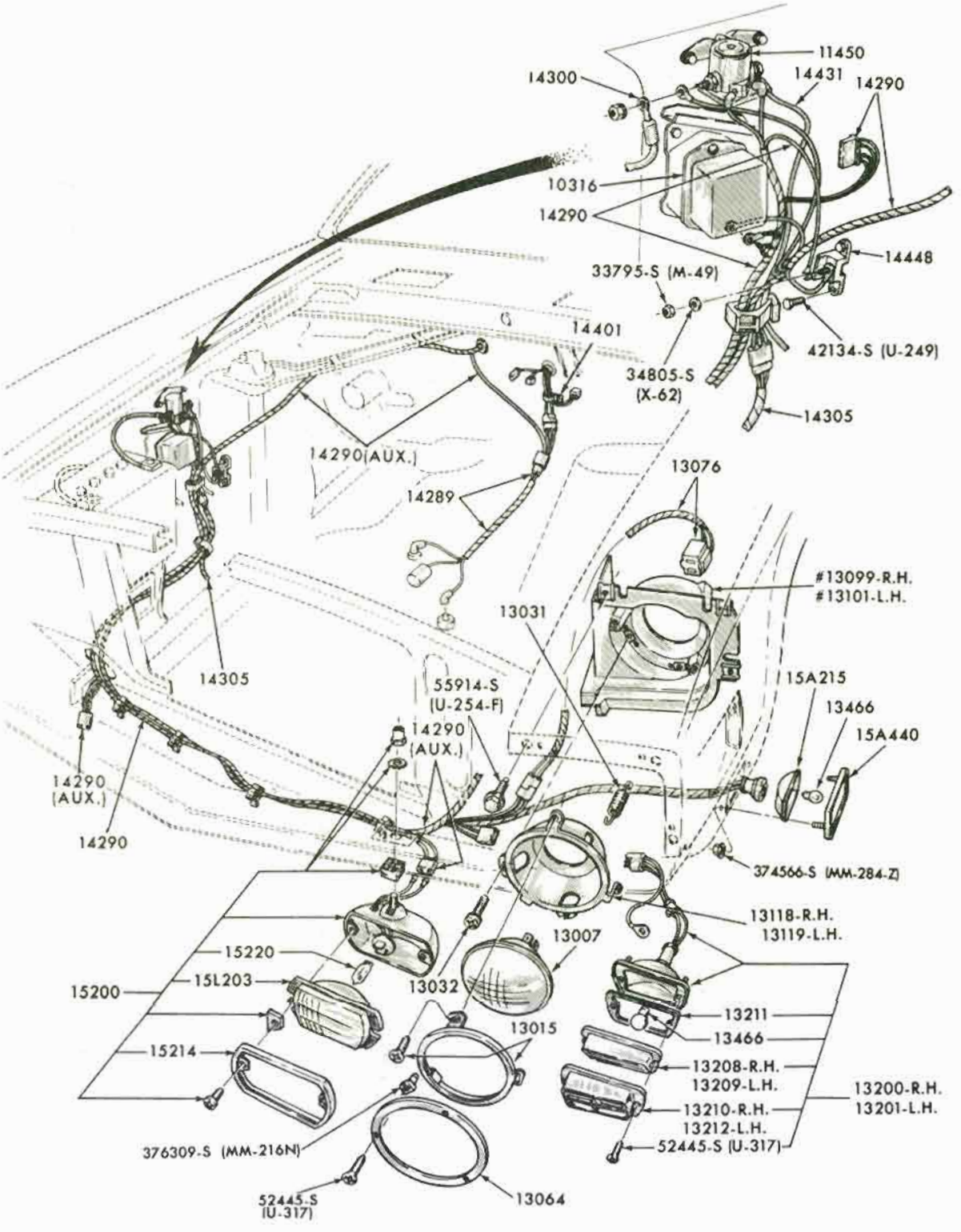

#SERVICED ONLY IN 13008 HEADLAMP ASSEMBLEY

P-6919

HEADLAMP, PARKING LAMP, FENDER SIDE MARKER LAMP and FOG LAMP
1969/70 MUSTANG-GT350/500

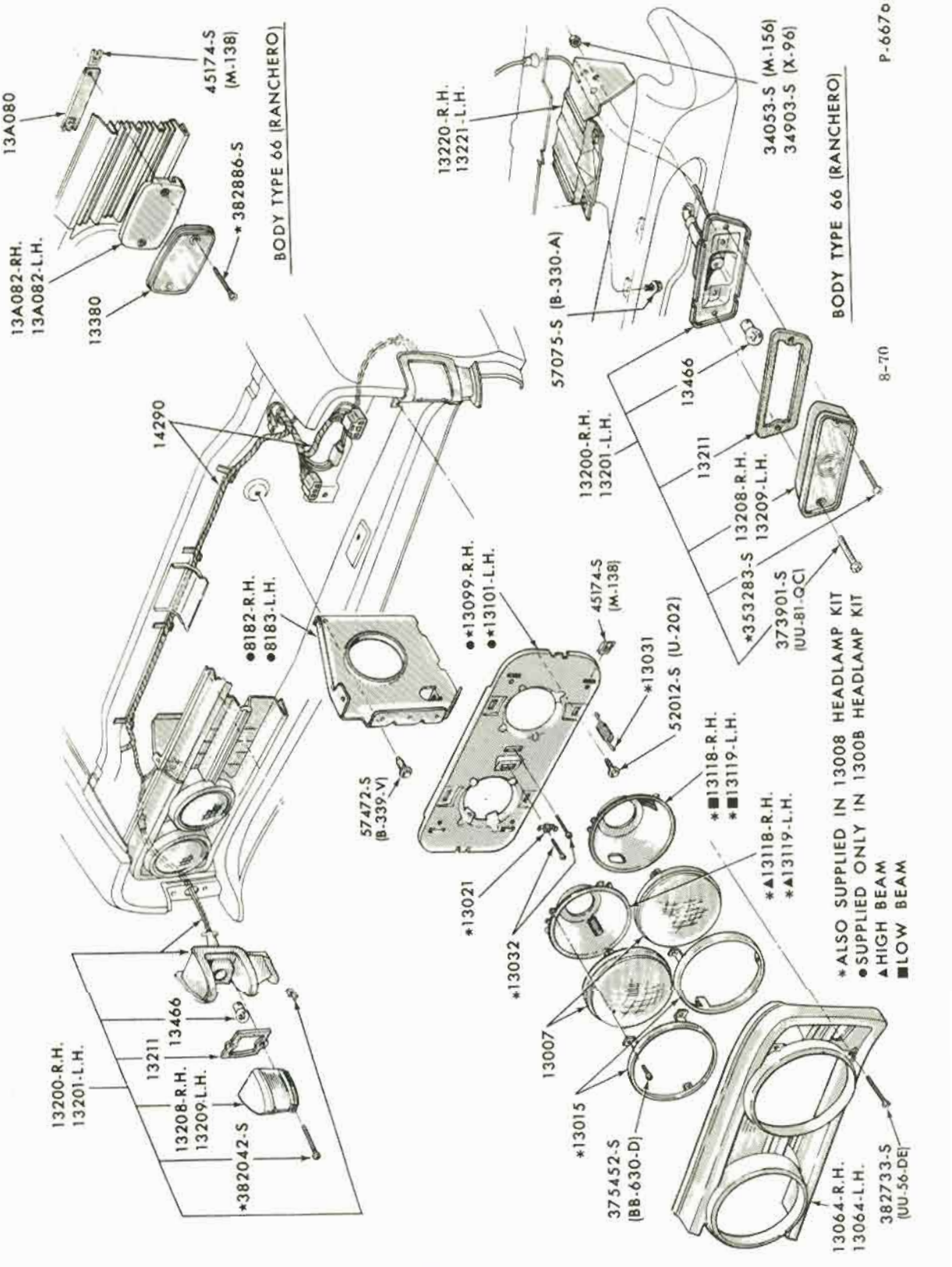

HEADLAMP, PARKING LAMP and RELATED PARTS
1969 FAIRLANE/ TORINO

COPYRIGHT © 1975 — FORD MOTOR COMPANY — DEARBORN, MICHIGAN

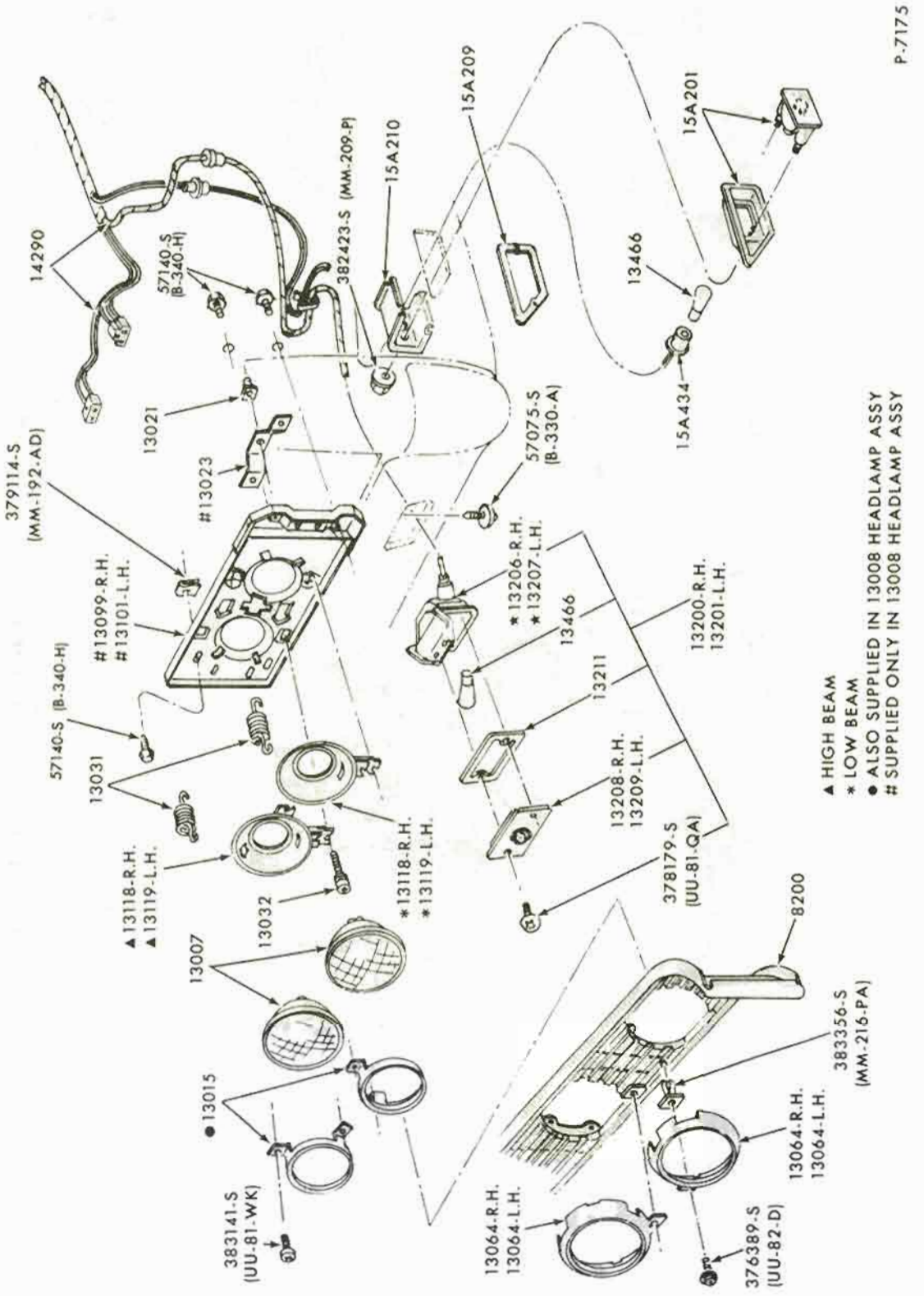

HEADLAMP, PARKING LAMP, FENDER SIDE MARKER LAMP and RELATED PARTS
1970 FORD - WITHOUT HEADLAMP COVERS

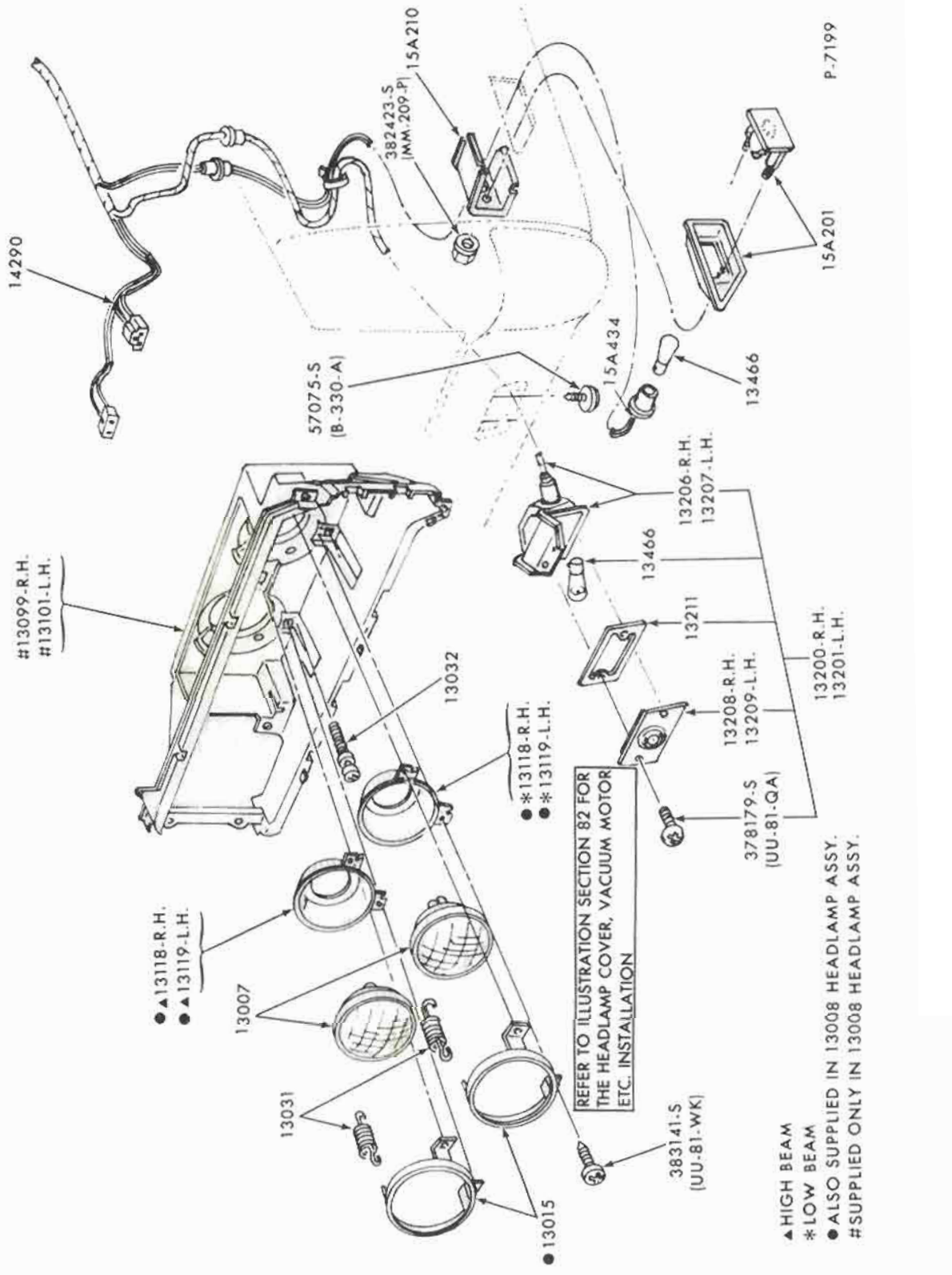

HEADLAMP, PARKING LAMP, FENDER SIDE MARKER LAMP and RELATED PARTS
1970 FORD - WITH HEADLAMP COVERS

COPYRIGHT © 1975 — FORD MOTOR COMPANY — DEARBORN, MICHIGAN

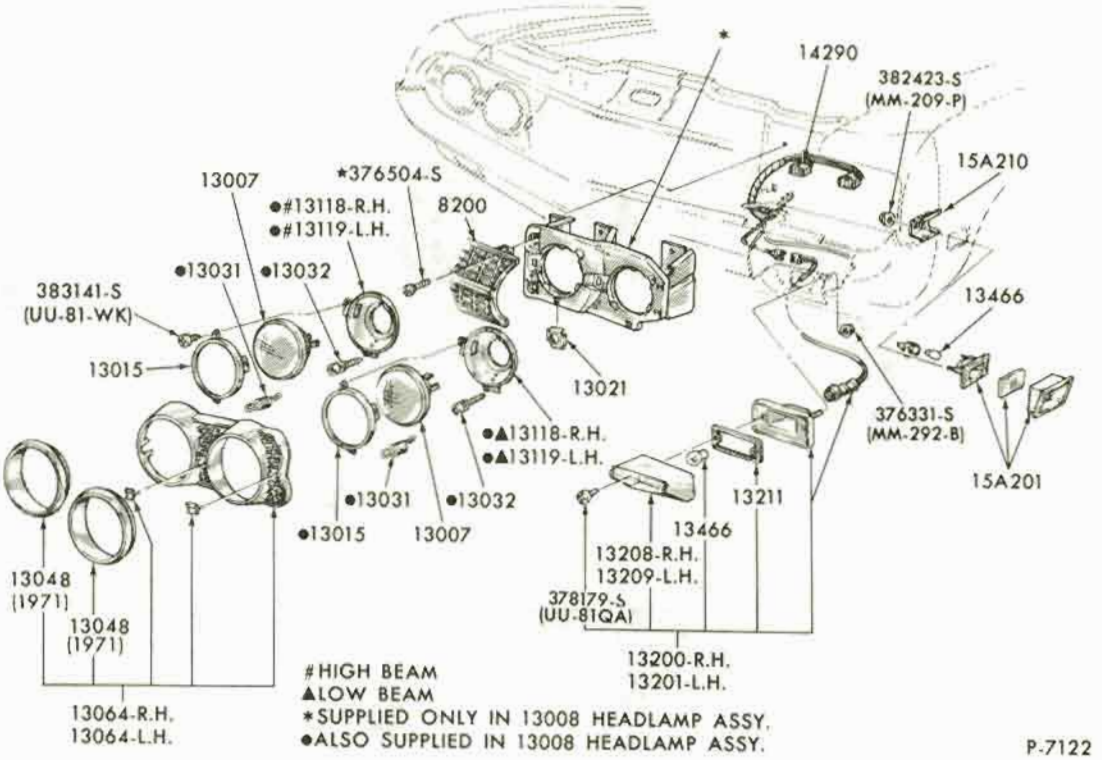

HEADLAMP, PARKING LAMP, FENDER SIDE MARKER LAMP and RELATED PARTS
1970/71 FAIRLANE - BODY TYPES 54A,B,62A,63H,65A,B,66A,71B,D
1970 FAIRLANE BODY TYPE 66B - "BEFORE 12/30/69"

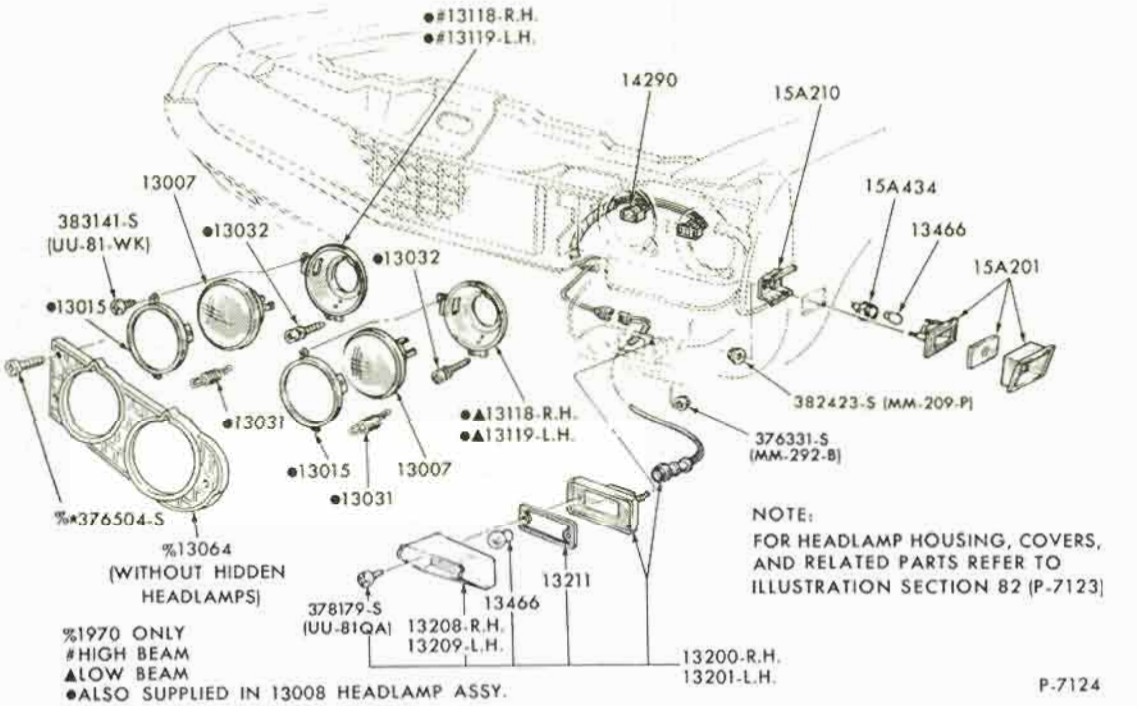

HEADLAMP, PARKING LAMP, FENDER SIDE MARKER LAMP and RELATED PARTS
1970 FAIRLANE/TORINO BODY TYPE 66B - "FROM 12/30/69"
1970 FAIRLANE/TORINO-BODY TYPES 54C,57C,E,63F,65C,E, 66C,E,71C,E,76 (WITH & WITHOUT HEADLAMP COVERS)
1971 TORINO-BODY TYPES 54C,57C,E,63C,F,65C,E,66B,C,E,71C,E,76F(WITH HEADLAMP COVERS)

P-7173

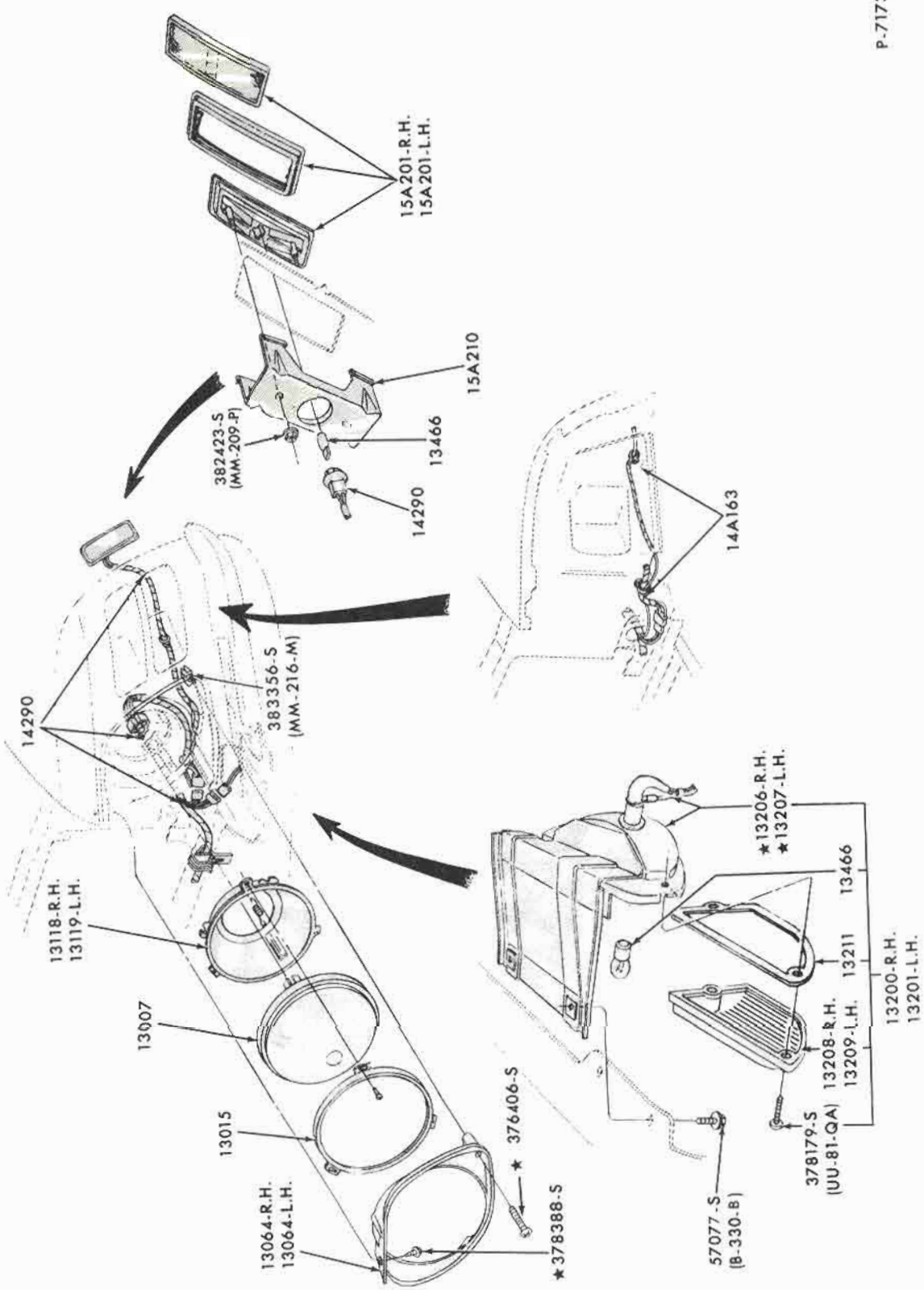

HEADLAMP, PARKING LAMP, FENDER SIDE MARKER LAMP and RELATED PARTS

1970 MUSTANG-except GT350/500

COPYRIGHT © 1975 — FORD MOTOR COMPANY — DEARBORN, MICHIGAN

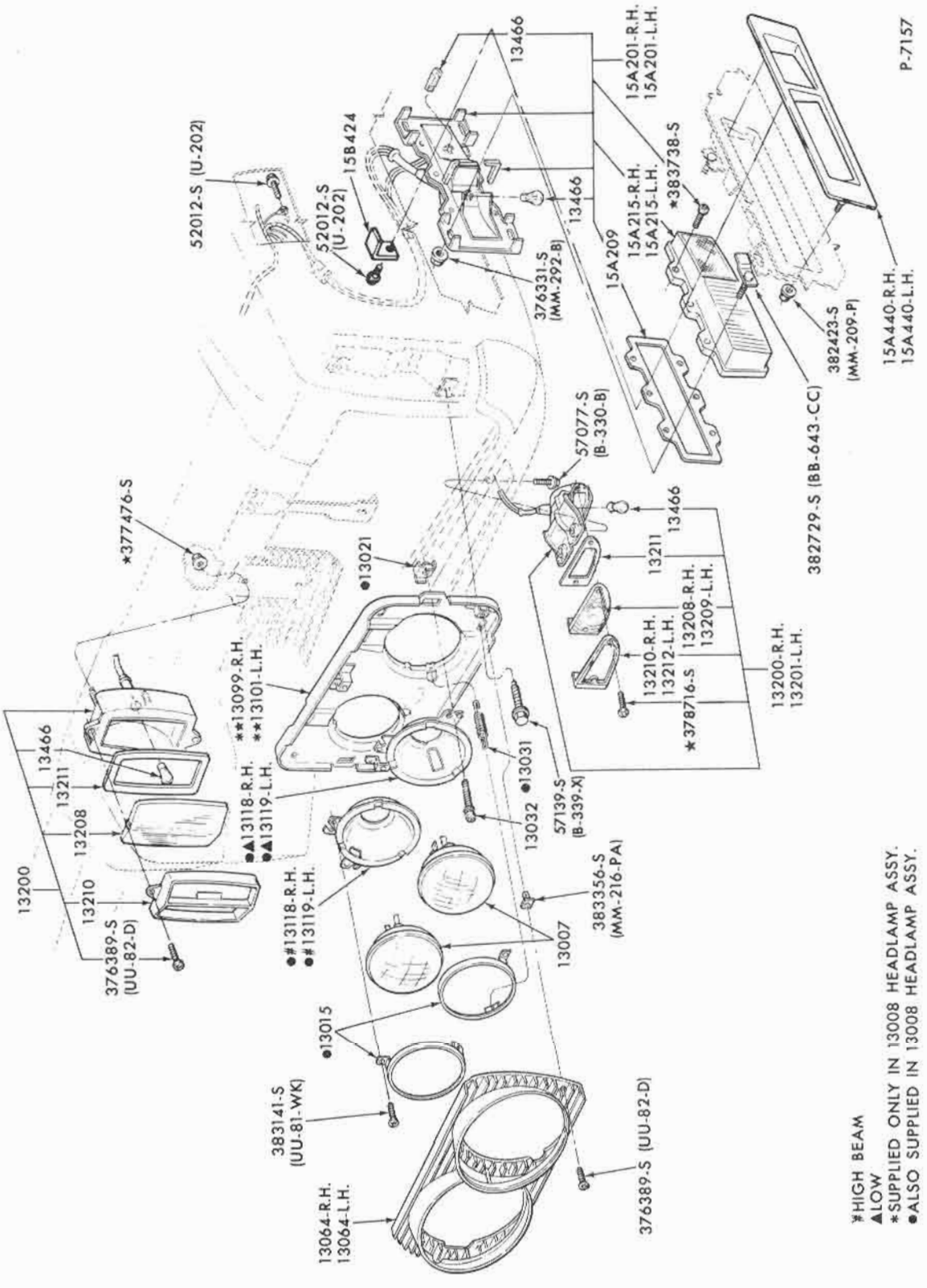

HEADLAMP, PARKING LAMP, FENDER SIDE MARKER LAMP and RELATED PARTS
1970/71 THUNDERBIRD

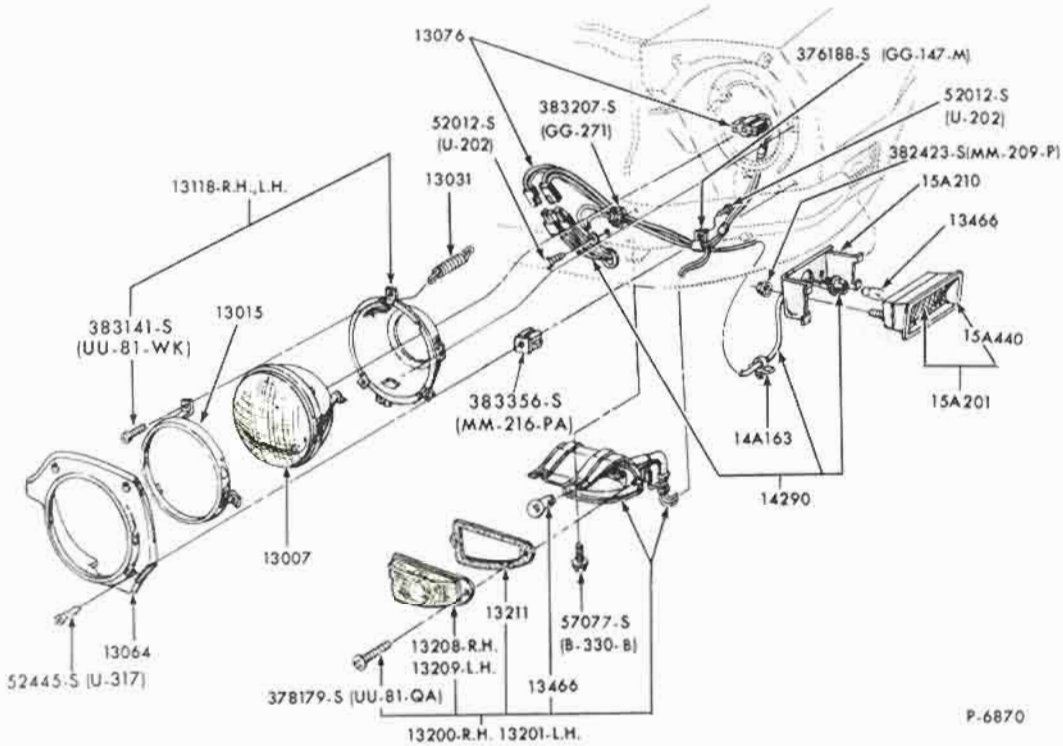

HEADLAMP, PARKING LAMP and FENDER SIDE MARKER LAMP
1970/72 MAVERICK

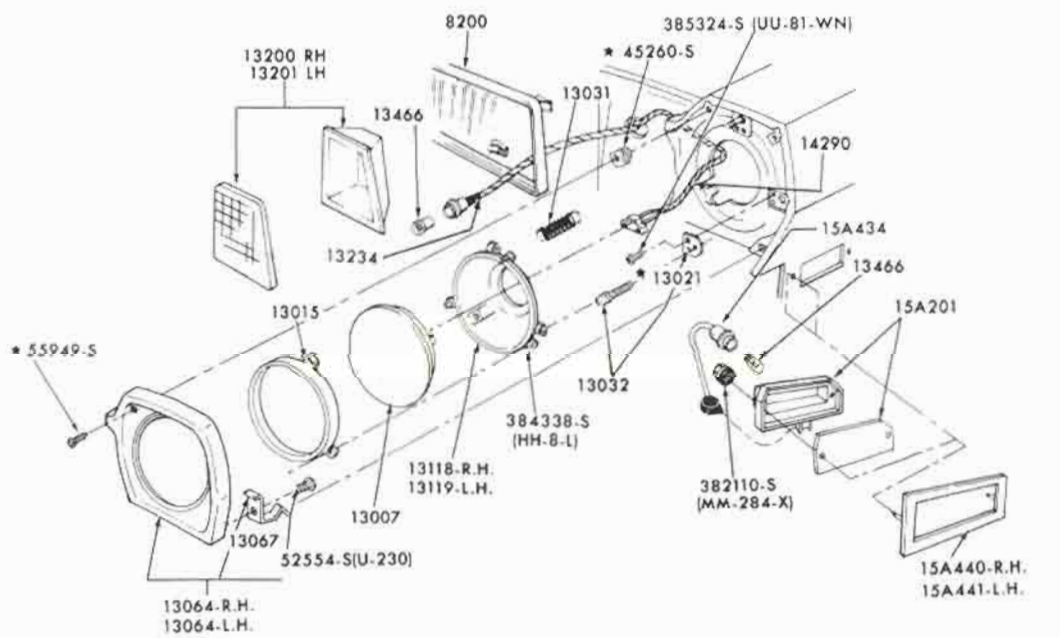

HEADLAMP, PARKING LAMP, FENDER SIDE MARKER LAMP and RELATED PARTS
1971/72 PINTO

COPYRIGHT © 1975 — FORD MOTOR COMPANY — DEARBORN, MICHIGAN

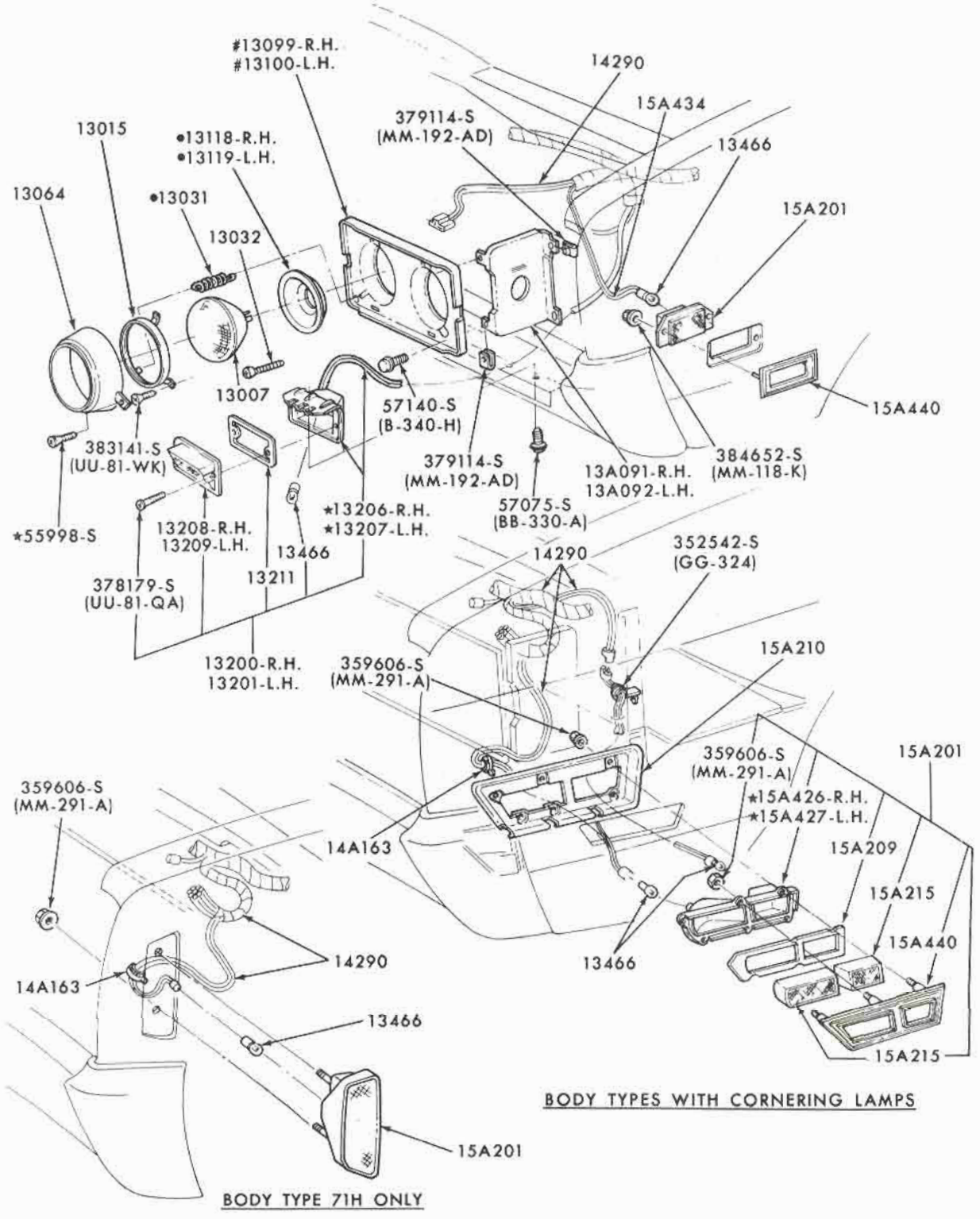

BODY TYPES WITH CORNERING LAMPS

BODY TYPE 71H ONLY

#SUPPLIED ONLY IN 13008 HEADLAMP ASSY.
•ALSO SUPPLIED IN 13008 HEADLAMP ASSY.

P-8154

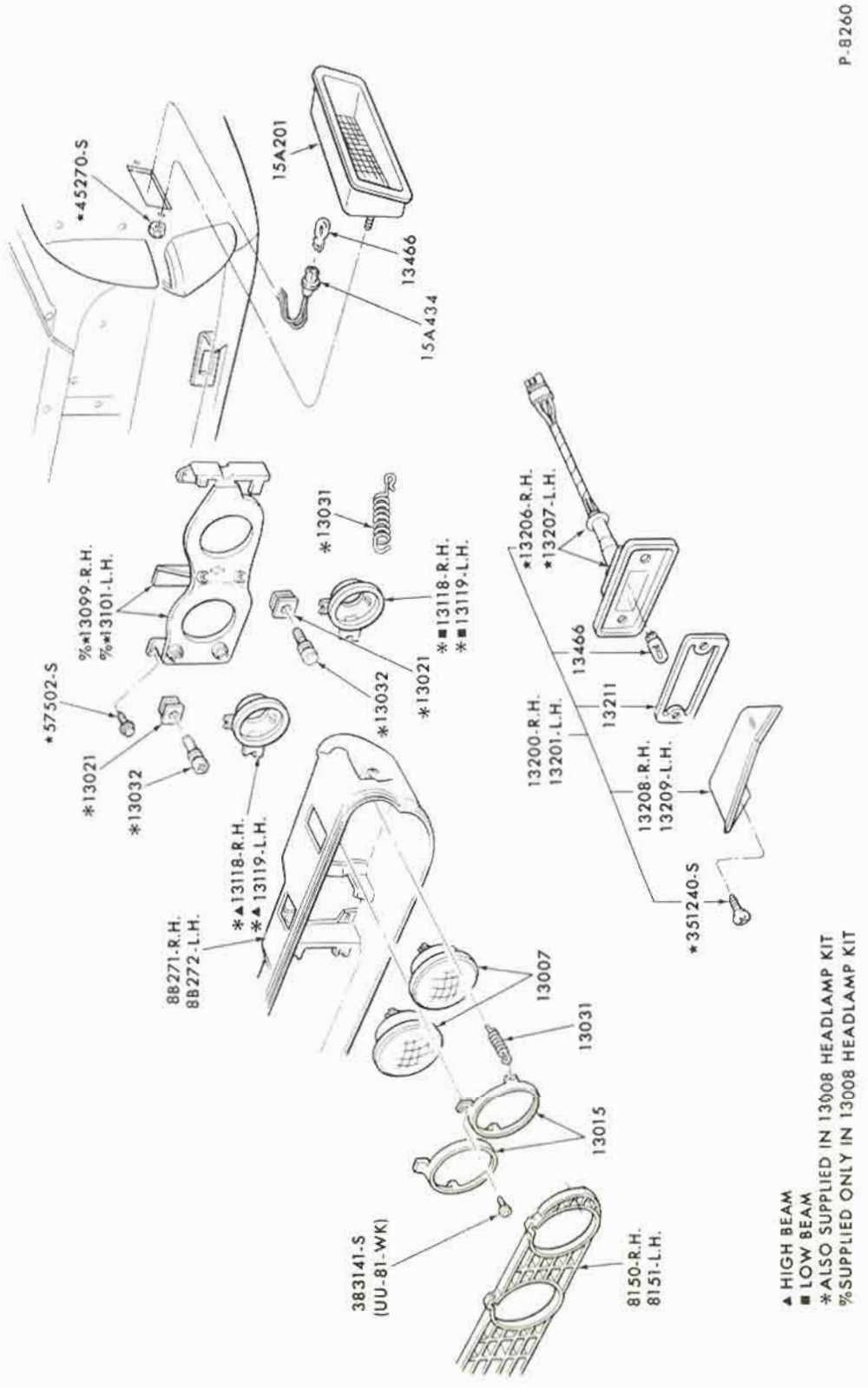

HEADLAMP, PARKING LAMP, FENDER SIDE MARKER LAMP and RELATED PARTS
1971 TORINO - BODY TYPES 54C,57C,E,63C,F,65C,E,66B,C,E,71C,E,76F (WITHOUT HEADLAMP COVERS)

COPYRIGHT © 1975 — FORD MOTOR COMPANY — DEARBORN, MICHIGAN

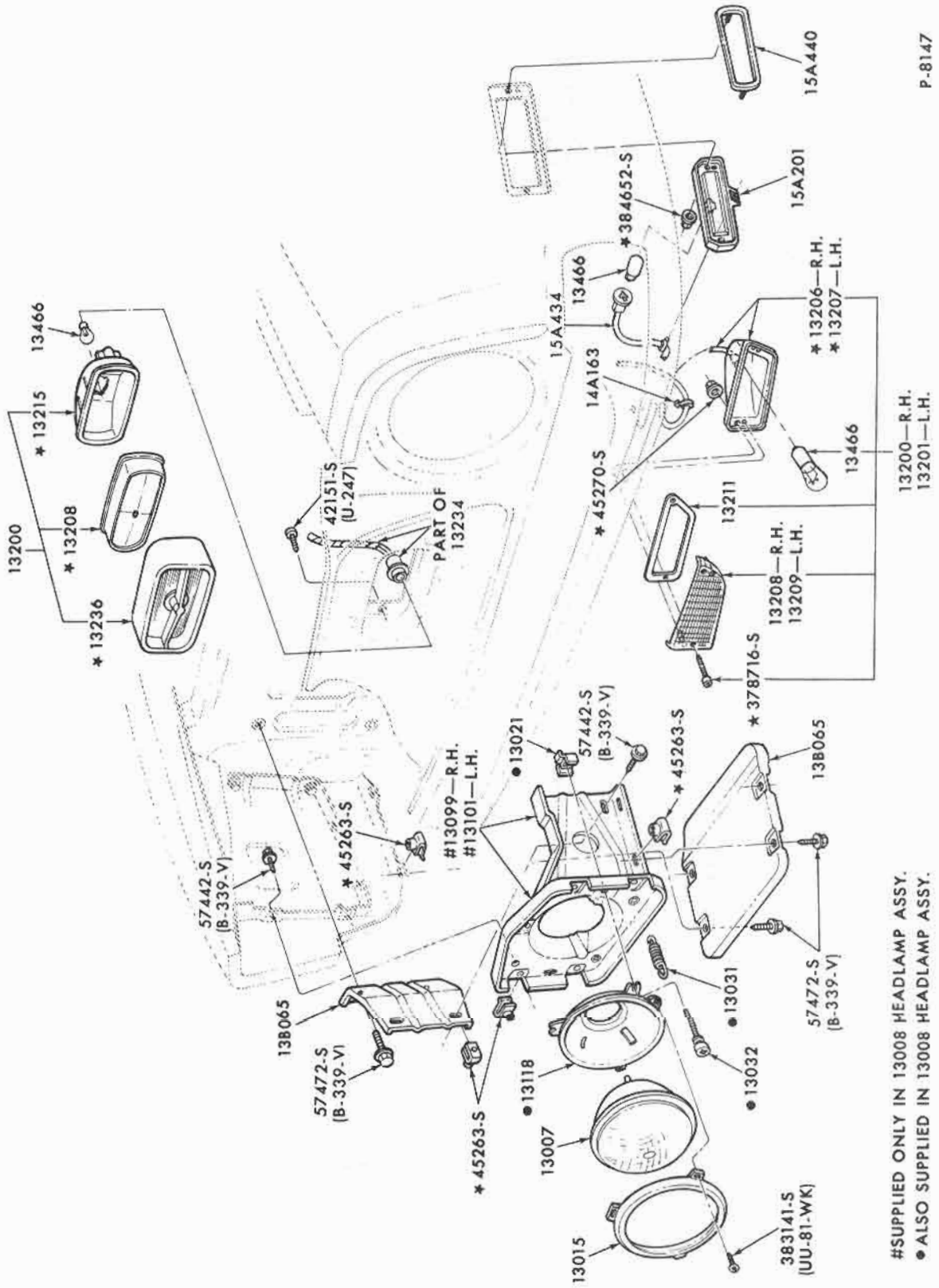

HEADLAMP, PARKING LAMP, FENDER SIDE MARKER LAMP and RELATED PARTS
1971/72 MUSTANG

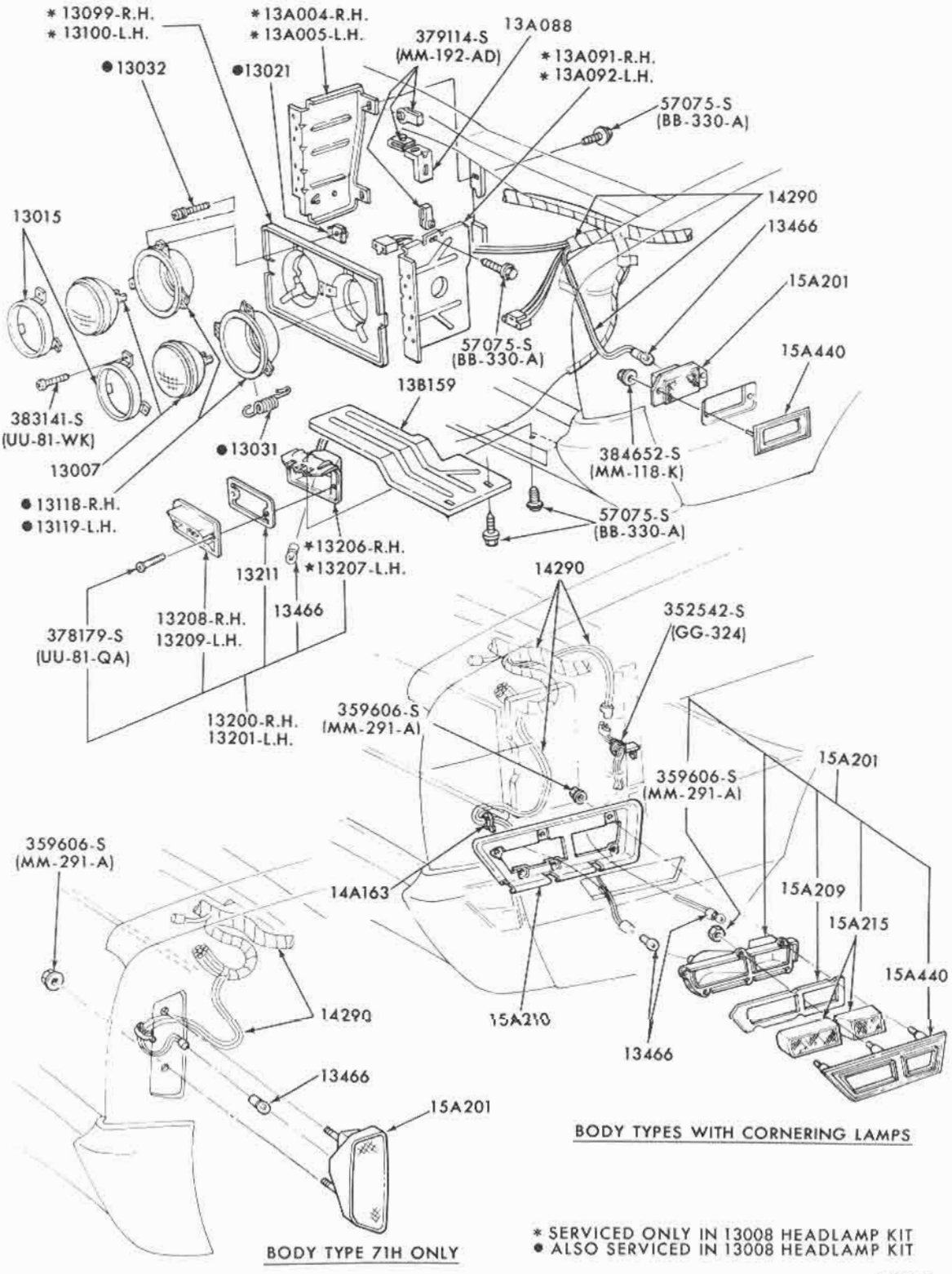

HEADLAMP, PARKING LAMP, FENDER SIDE MARKER LAMP and RELATED PARTS
1972 FORD

COPYRIGHT © 1975 — FORD MOTOR COMPANY — DEARBORN, MICHIGAN

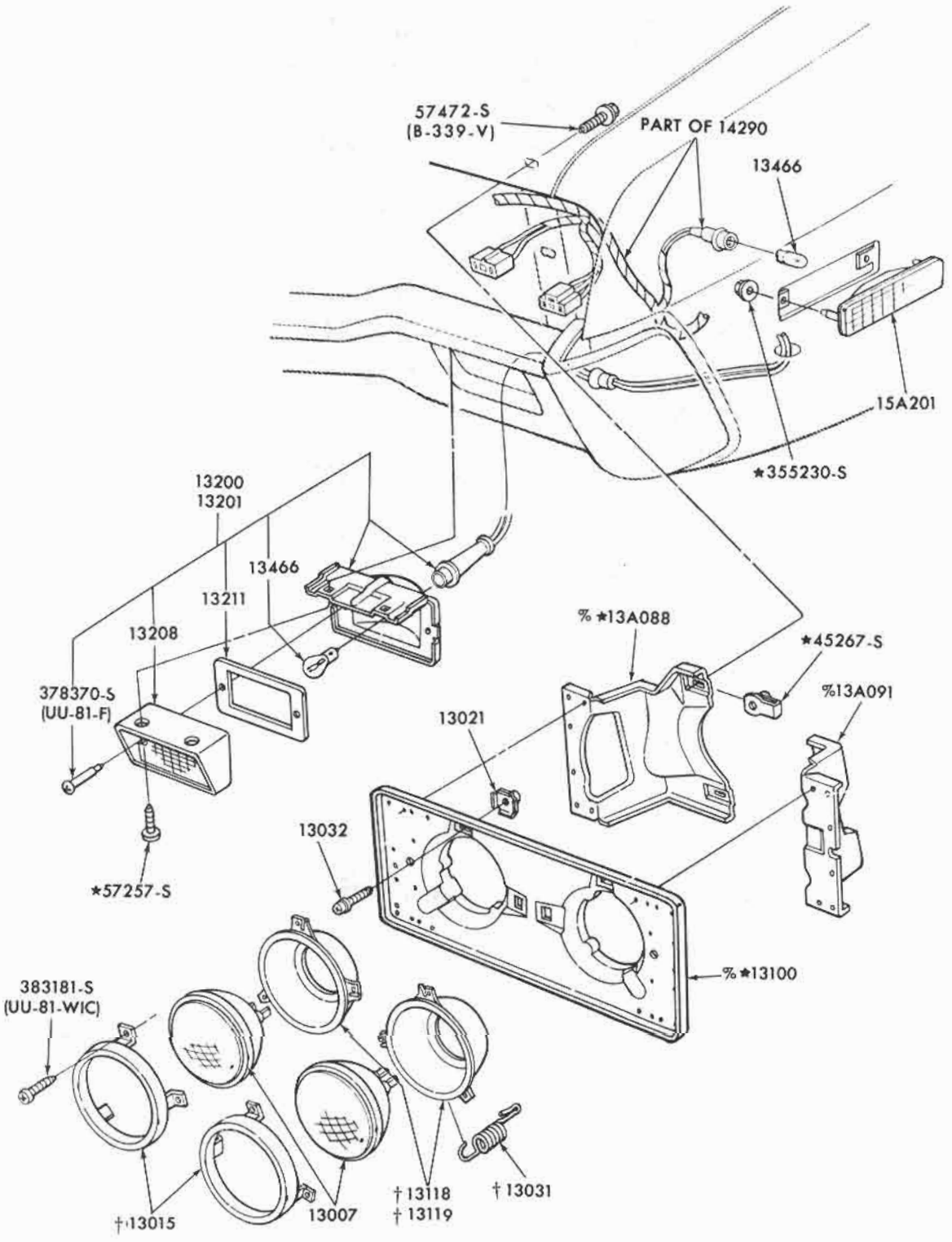

† ALSO SUPPLIED IN 13008 HEADLAMP ASSY.
% ONLY SUPPLIED IN 13008 HEADLAMP ASSY.

P-8775

HEADLAMP, PARKING LAMP, FENDER SIDE MARKER LAMP and RELATED PARTS
1972 TORINO - BODY TYPES 53B, 65B, 71B

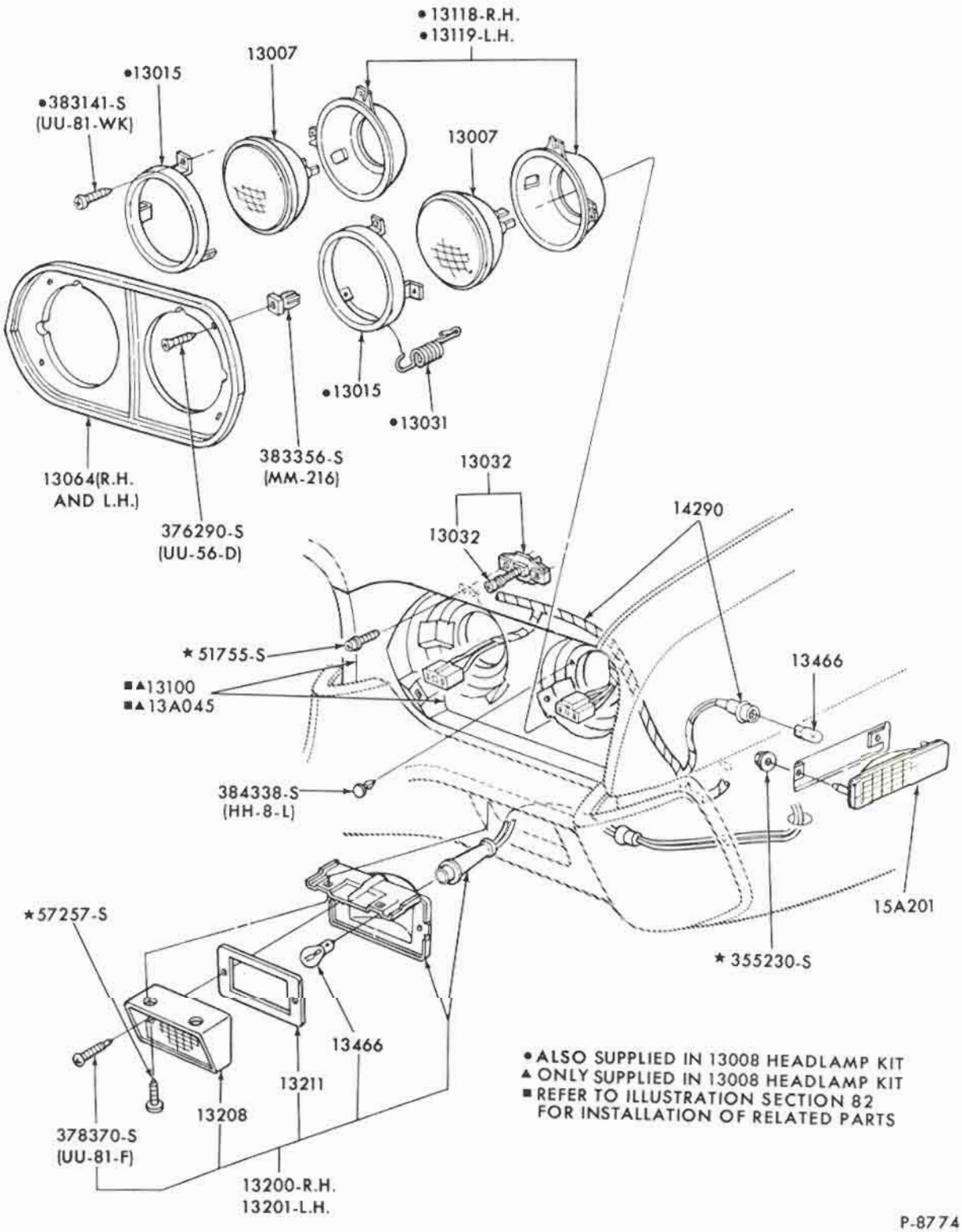

•ALSO SUPPLIED IN 13008 HEADLAMP KIT
▲ ONLY SUPPLIED IN 13008 HEADLAMP KIT
■ REFER TO ILLUSTRATION SECTION 82 FOR INSTALLATION OF RELATED PARTS

P-8774

HEADLAMP, PARKING LAMP, FENDER SIDE MARKER LAMP and RELATED PARTS
1972 TORINO - BODY TYPES 53D, 63, 65D, R, 71D, K, 97

COPYRIGHT © 1975 — FORD MOTOR COMPANY — DEARBORN, MICHIGAN

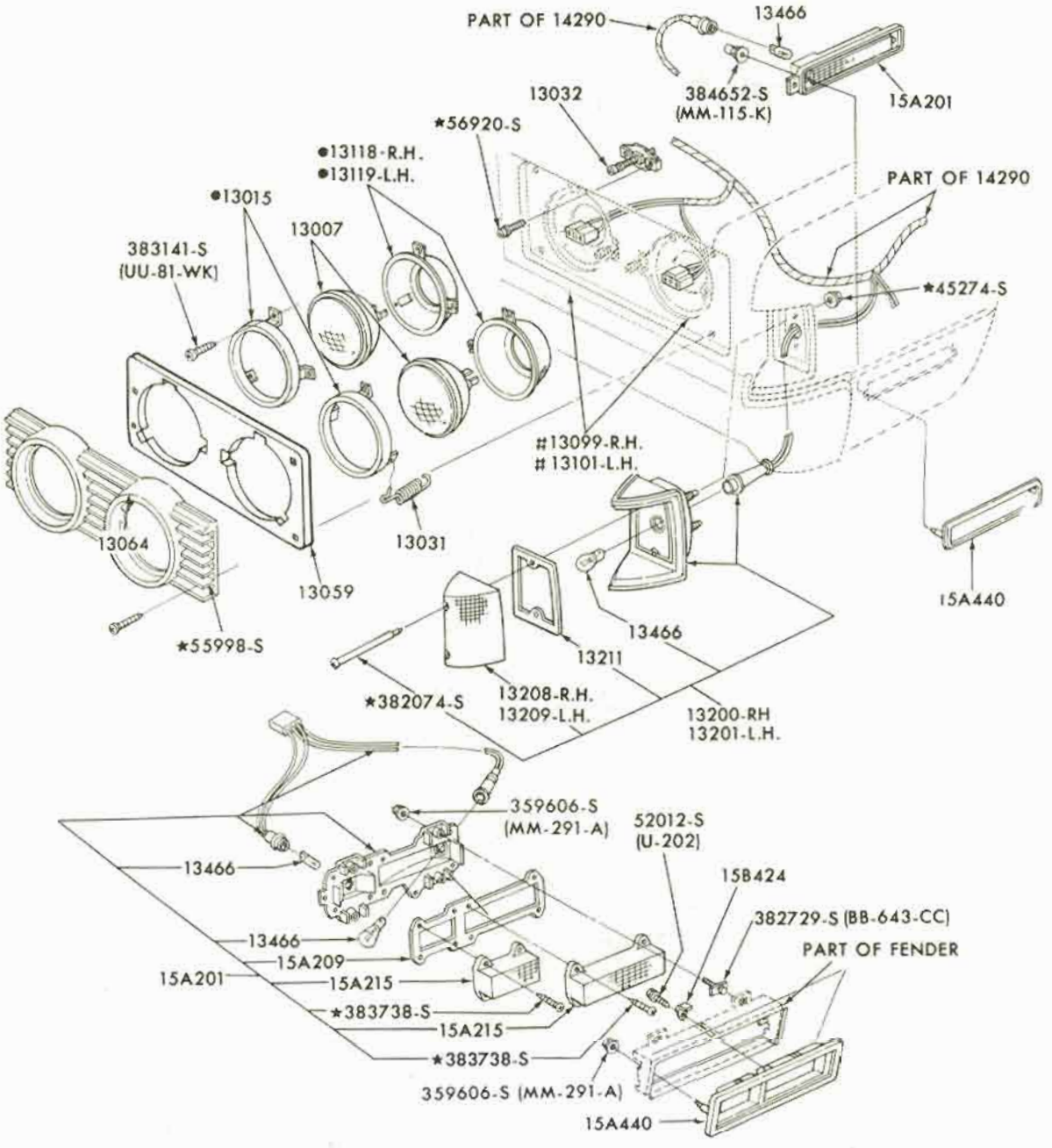

ALL BODY TYPES WITH TURNING LAMP

● ALSO SUPPLIED IN 13008 HEADLAMP KIT
ONLY SUPPLIED IN 13008 HEADLAMP KIT

P-8777

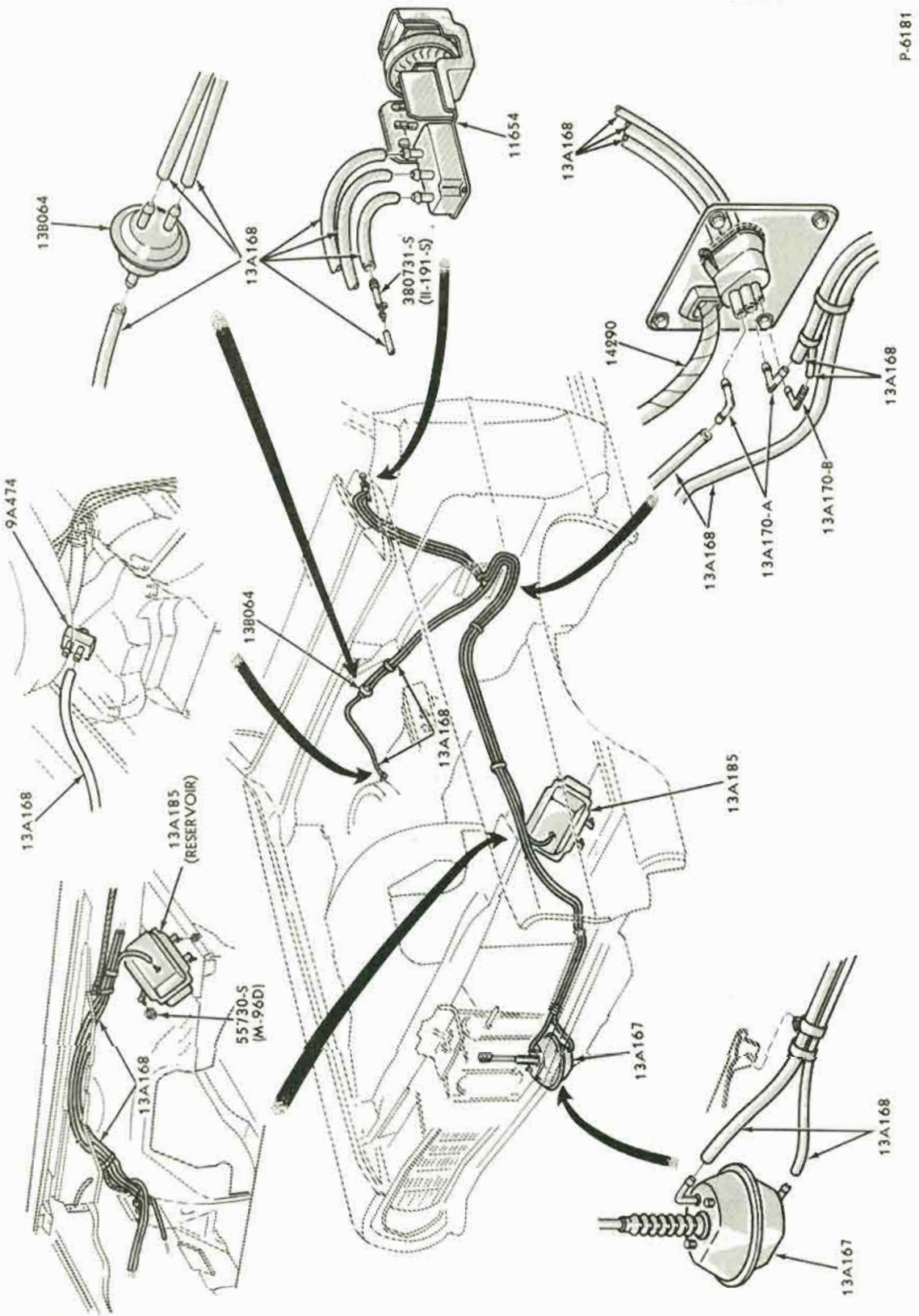

HEADLAMP COVER (VACUUM CONTROL) - RESERVOIR, HOSE ROUTING and RELATED PARTS
1968 FORD

COPYRIGHT © 1975 — FORD MOTOR COMPANY — DEARBORN, MICHIGAN

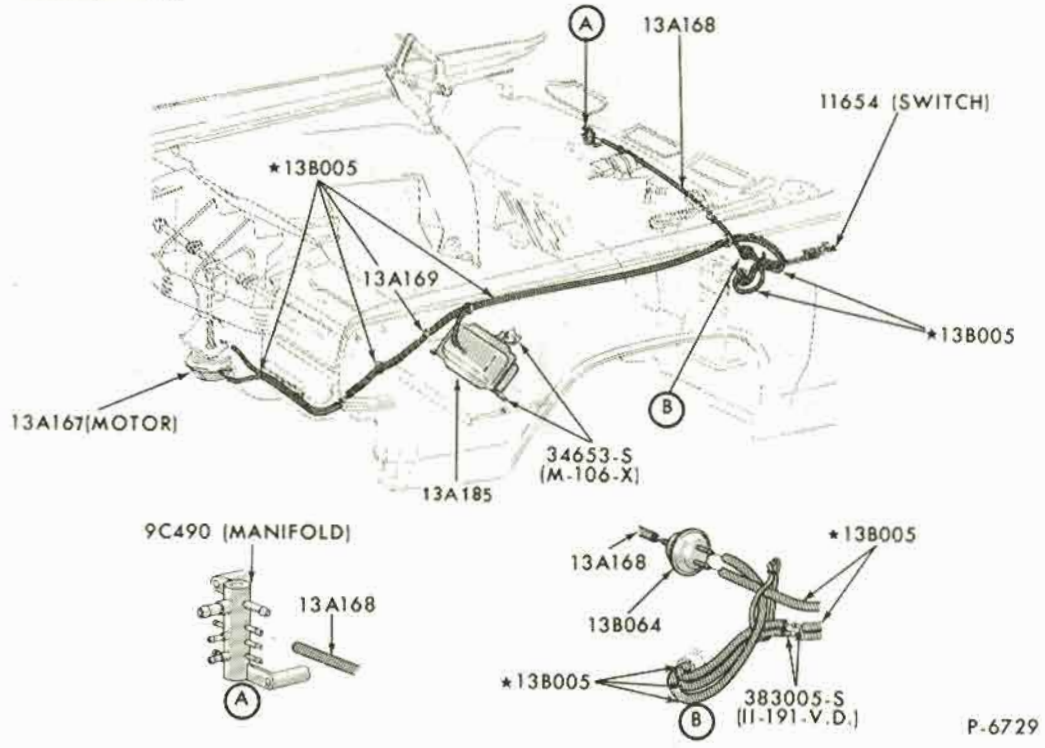

HEADLAMP COVER (VACUUM CONTROL) - RESERVOIR, HOSE ROUTING and RELATED PARTS
1969/70 FORD

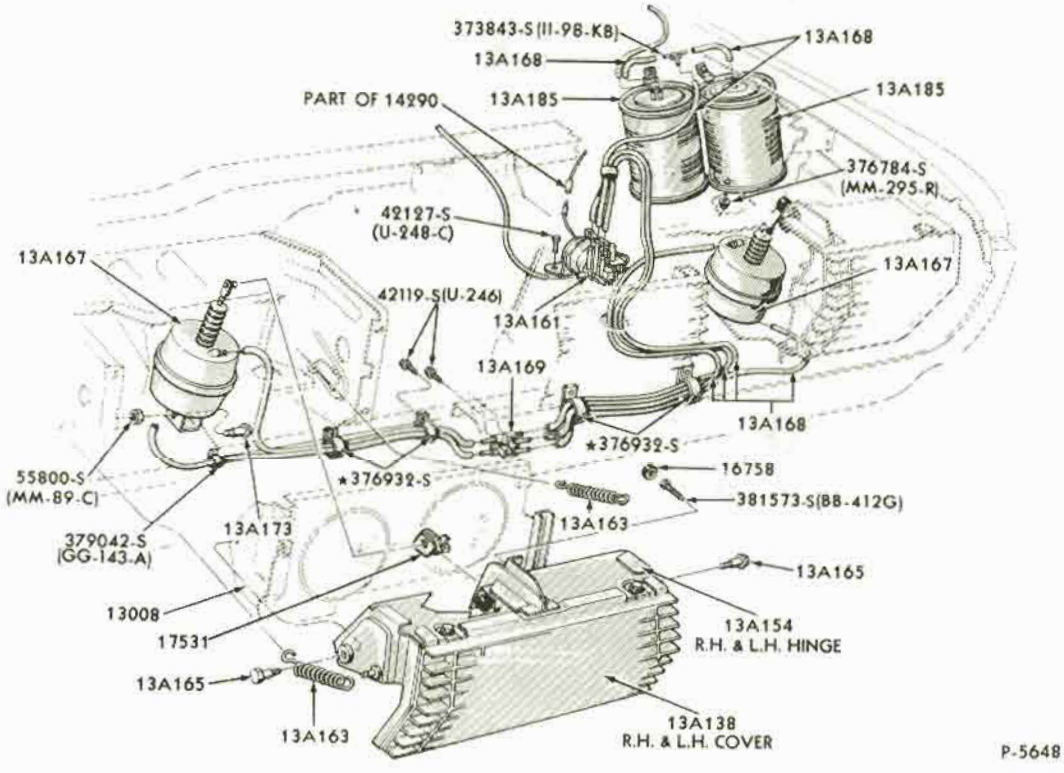

HEADLAMP COVER (VACUUM CONTROL) - SOLENOID, RESERVOIR, HOSE ROUTING, and RELATED PARTS
1967 THUNDERBIRD

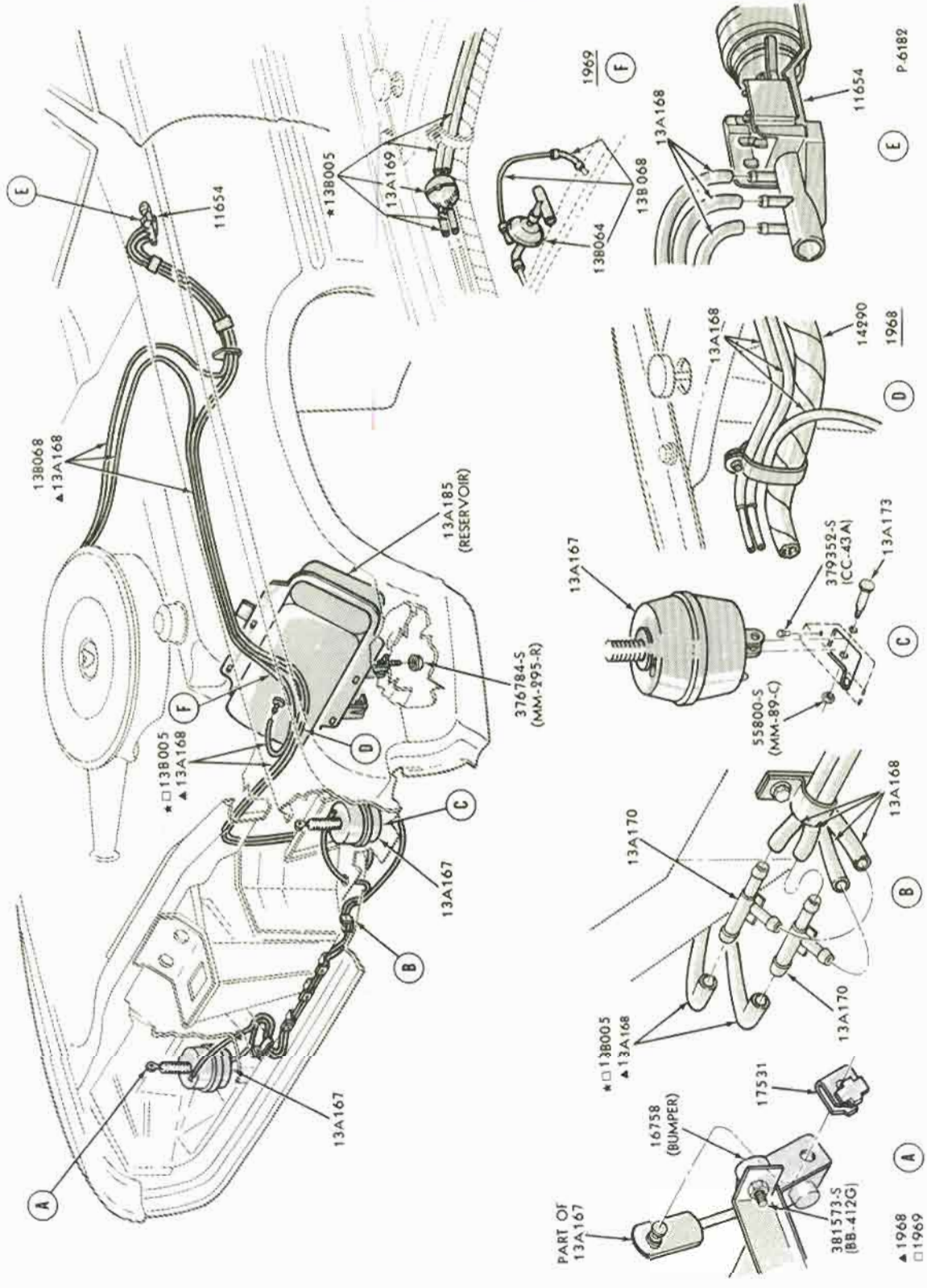

HEADLAMP COVER (VACUUM CONTROL) - RESERVOIR, HOSE ROUTING and RELATED PARTS
1968/69 THUNDERBIRD

COPYRIGHT © 1975 — FORD MOTOR COMPANY — DEARBORN, MICHIGAN

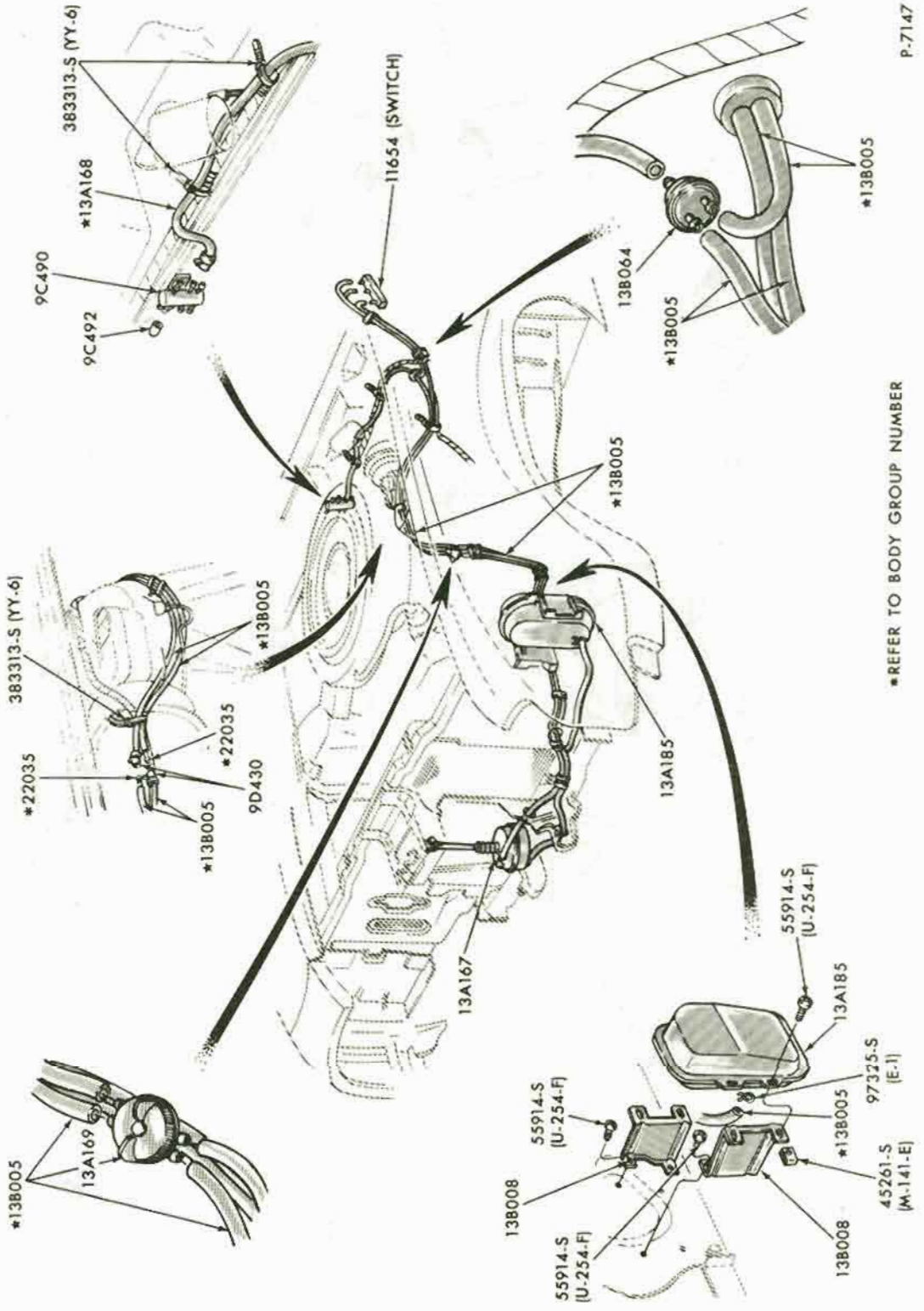

HEADLAMP COVERS (VACUUM CONTROL) RESERVOIR, HOSES and RELATED PARTS
1970/71 FAIRLANE/TORINO

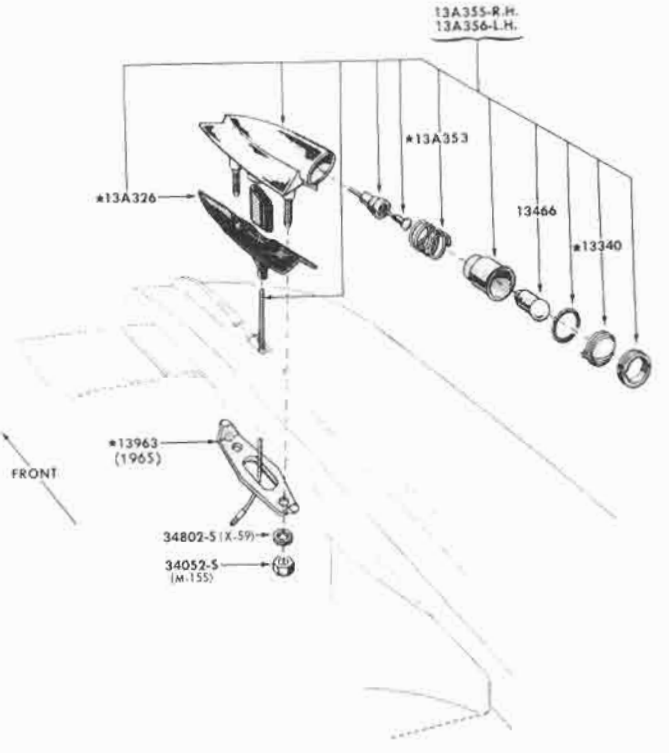

TURN INDICATOR LAMP - FENDER MOUNTED
1965/66 THUNDERBIRD

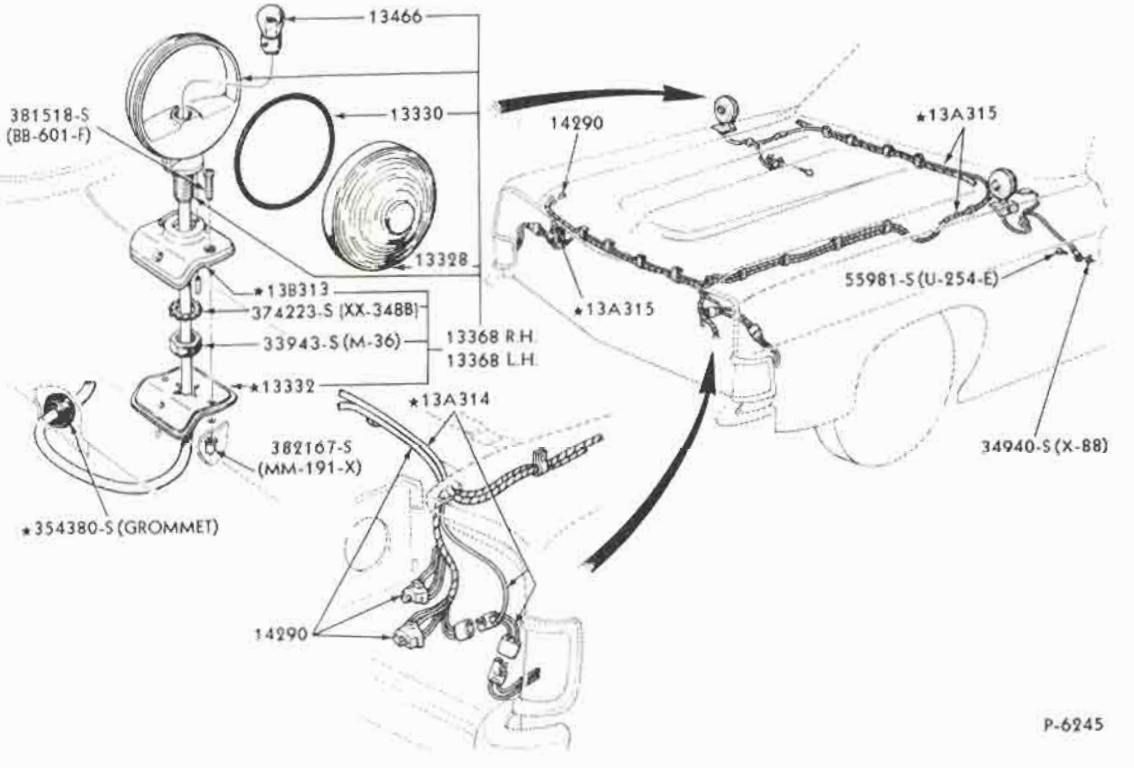

TURN INDICATOR LAMP - FRONT FENDER MOUNTED
1968 FAIRLANE - RANCHERO

COPYRIGHT © 1975 — FORD MOTOR COMPANY — DEARBORN, MICHIGAN

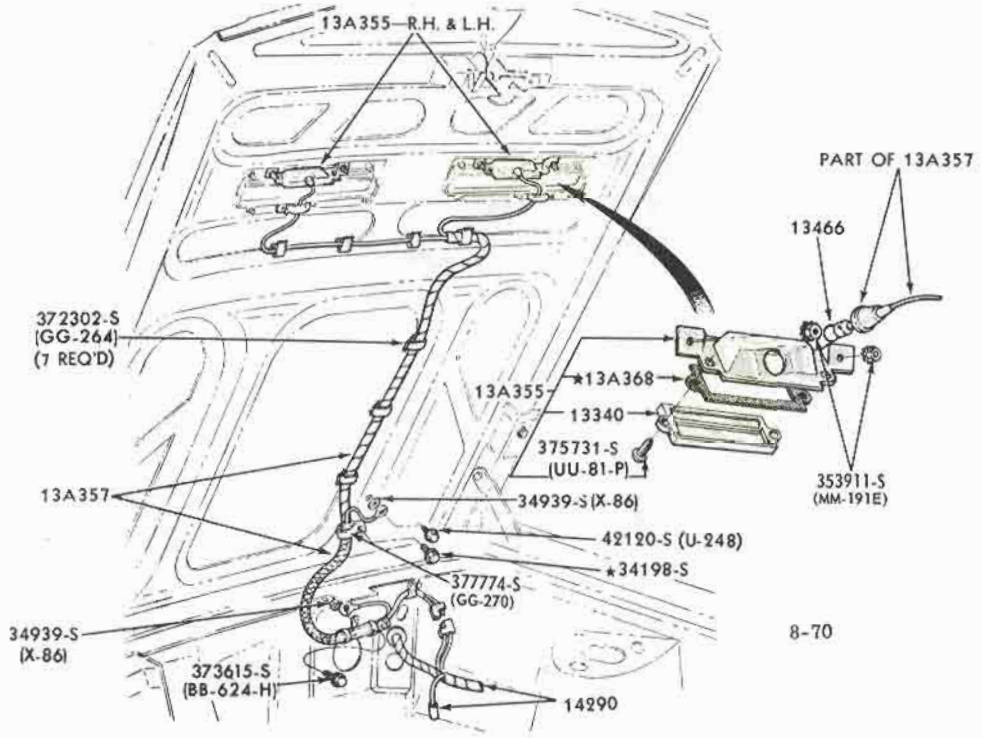

TURN INDICATOR LAMP - HOOD MOUNTED
1967/68 MUSTANG

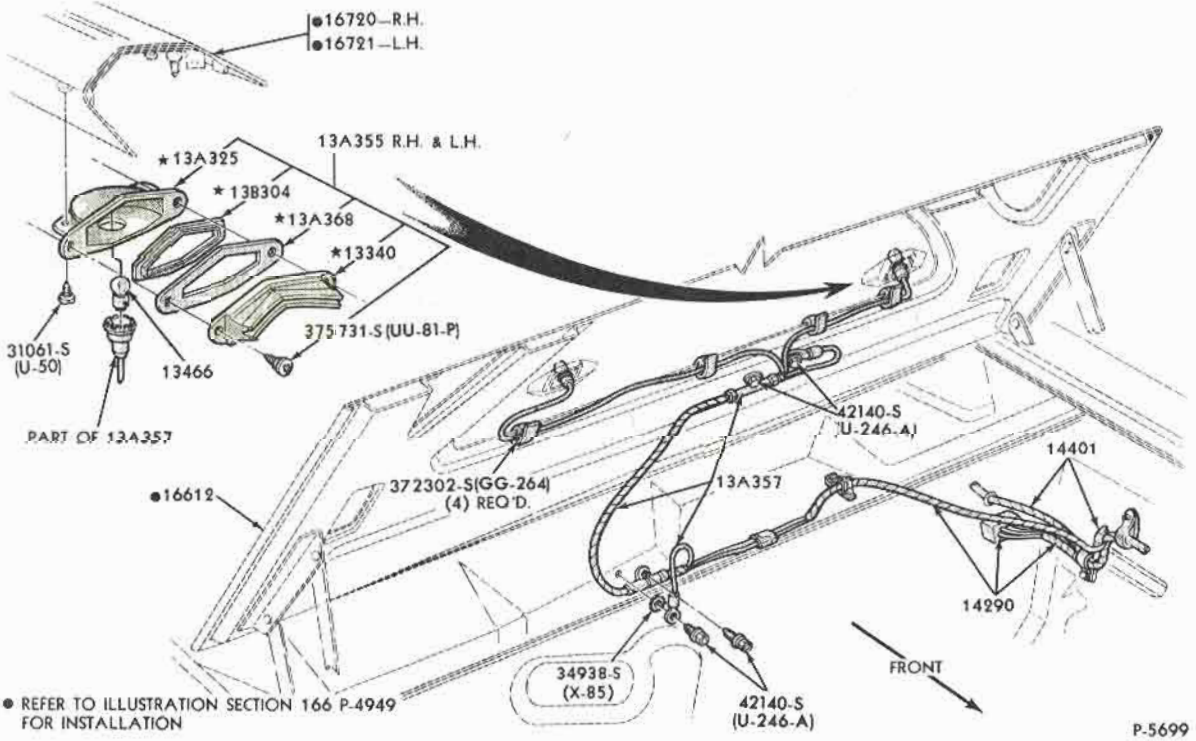

TURN INDICATOR LAMP - HOOD MOUNTED
1967 FAIRLANE

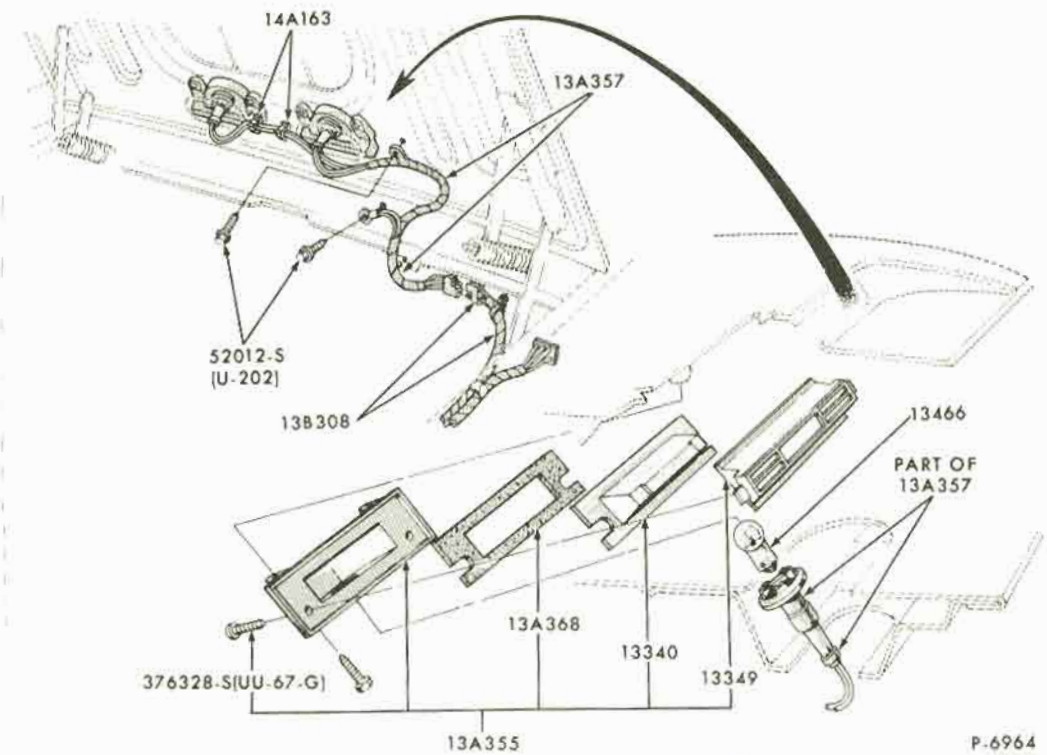

TURN INDICATOR LAMP - HOOD MOUNTED
1969 FAIRLANE/TORINO 1969/70 MUSTANG

COPYRIGHT © 1975 — FORD MOTOR COMPANY — DEARBORN, MICHIGAN

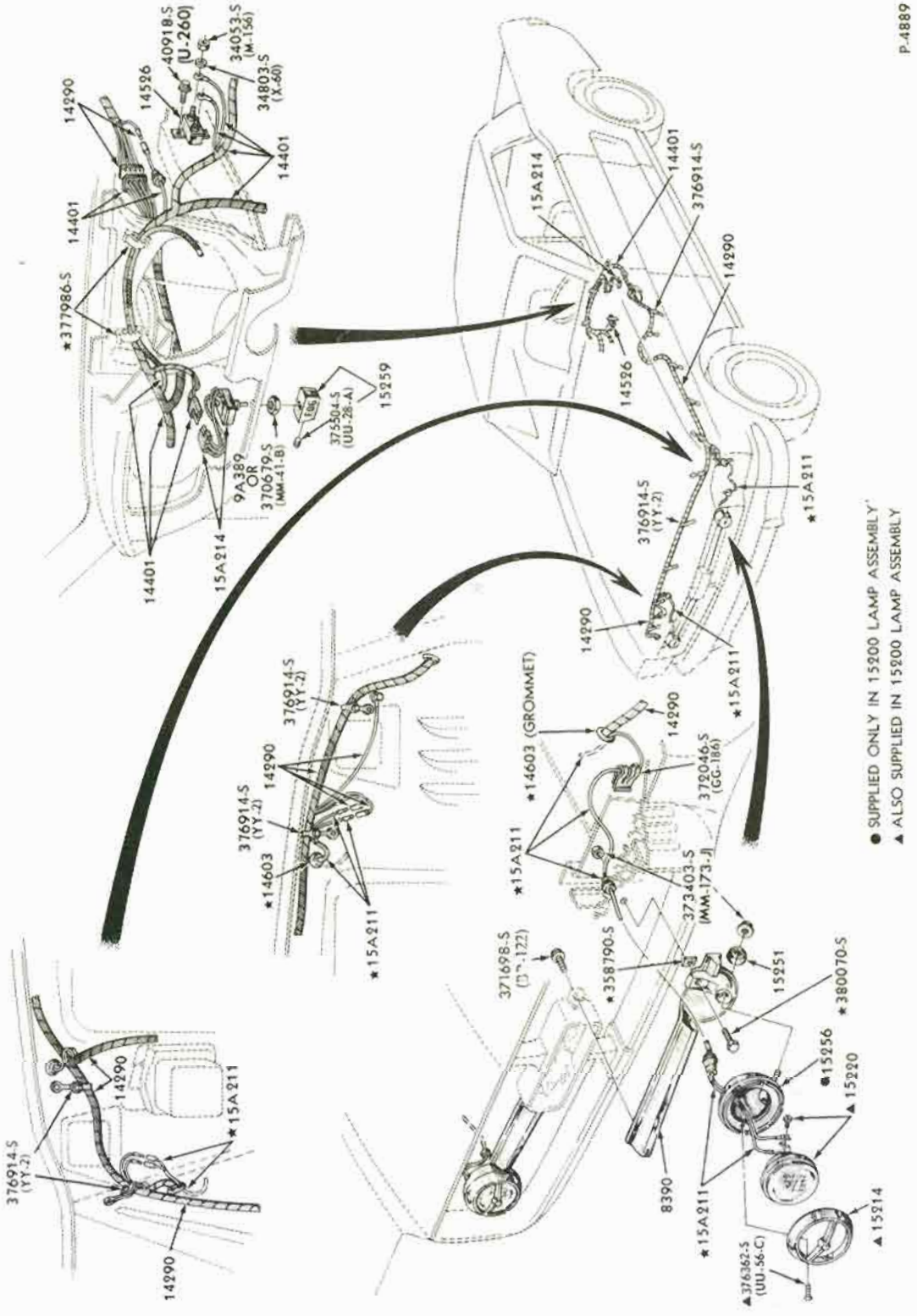

FOG LAMP, WIRING SYSTEM and RELATED PARTS
1965 MUSTANG

COPYRIGHT © 1975 — FORD MOTOR COMPANY — DEARBORN, MICHIGAN

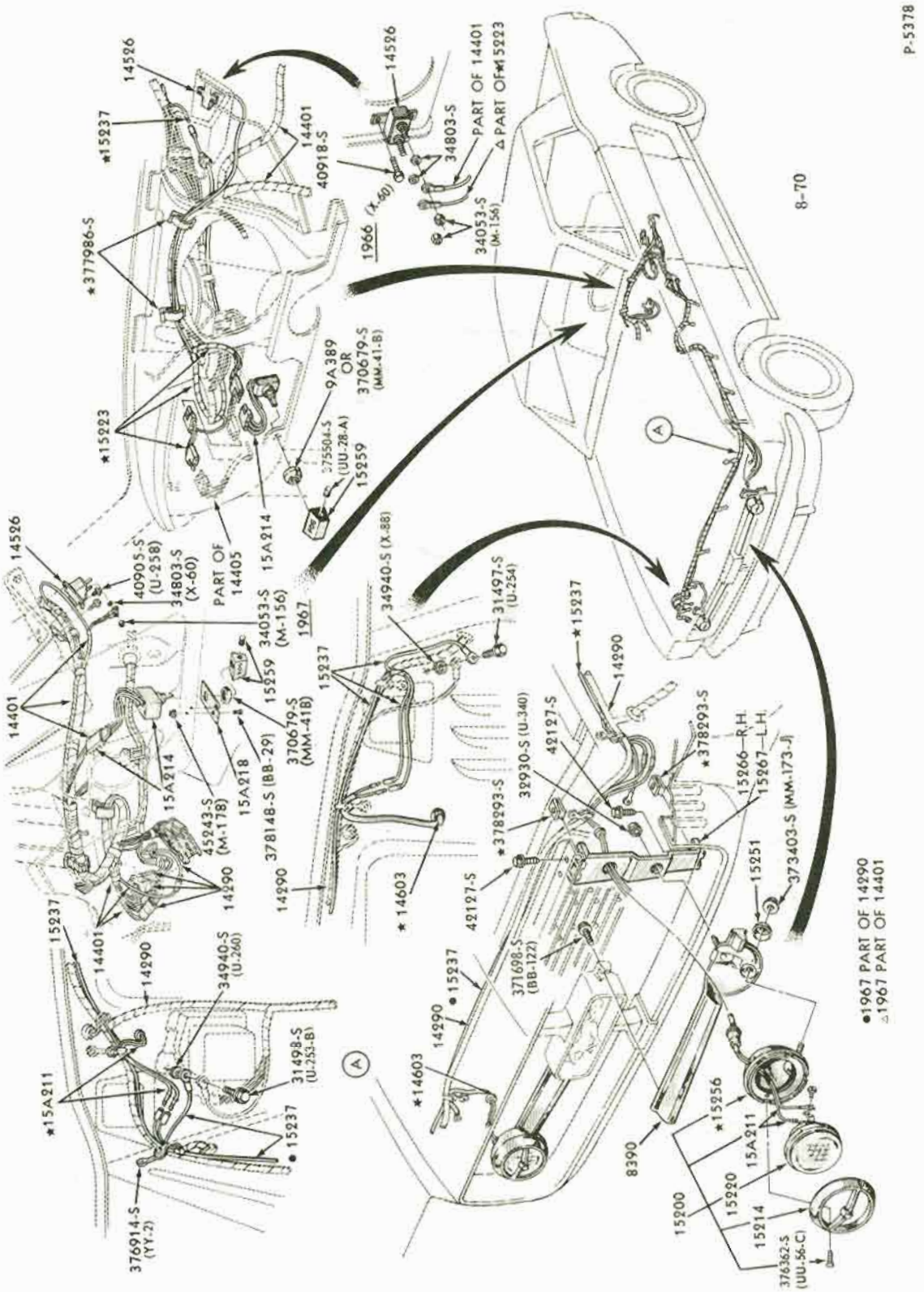

FOG LAMP, WIRING SYSTEM and RELATED PARTS
1966/68 MUSTANG - except GT 350/500

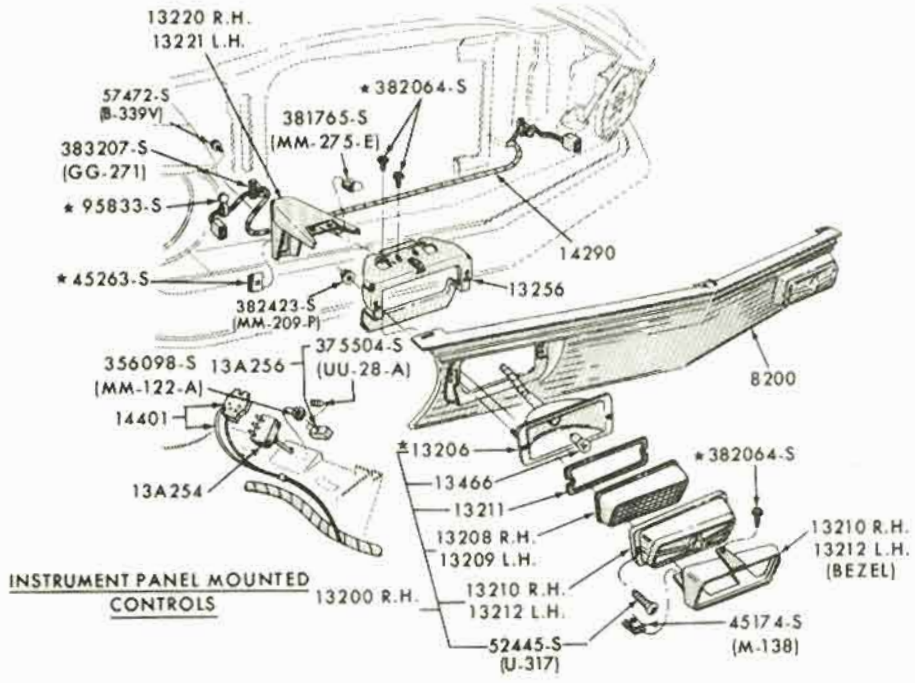

P-7474

SPORTS LAMPS - GRILLE MOUNTED
1970 MUSTANG 1971/72 MAVERICK

COPYRIGHT © 1975 — FORD MOTOR COMPANY — DEARBORN, MICHIGAN

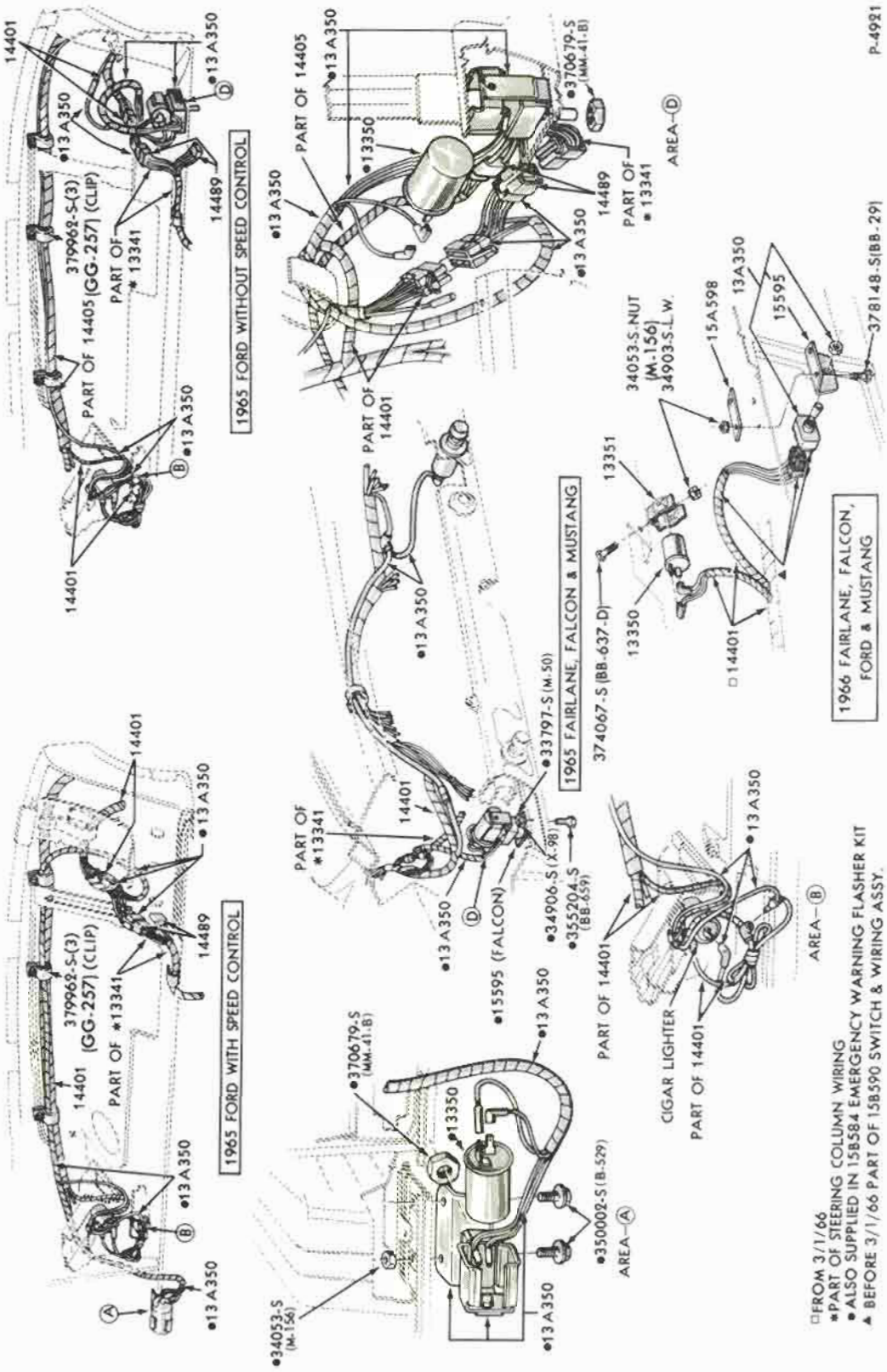

EMERGENCY WARNING FLASHER and WIRING SYSTEM
1965/66 FORD, FAIRLANE, MUSTANG, FALCON

COPYRIGHT © 1975 — FORD MOTOR COMPANY — DEARBORN, MICHIGAN

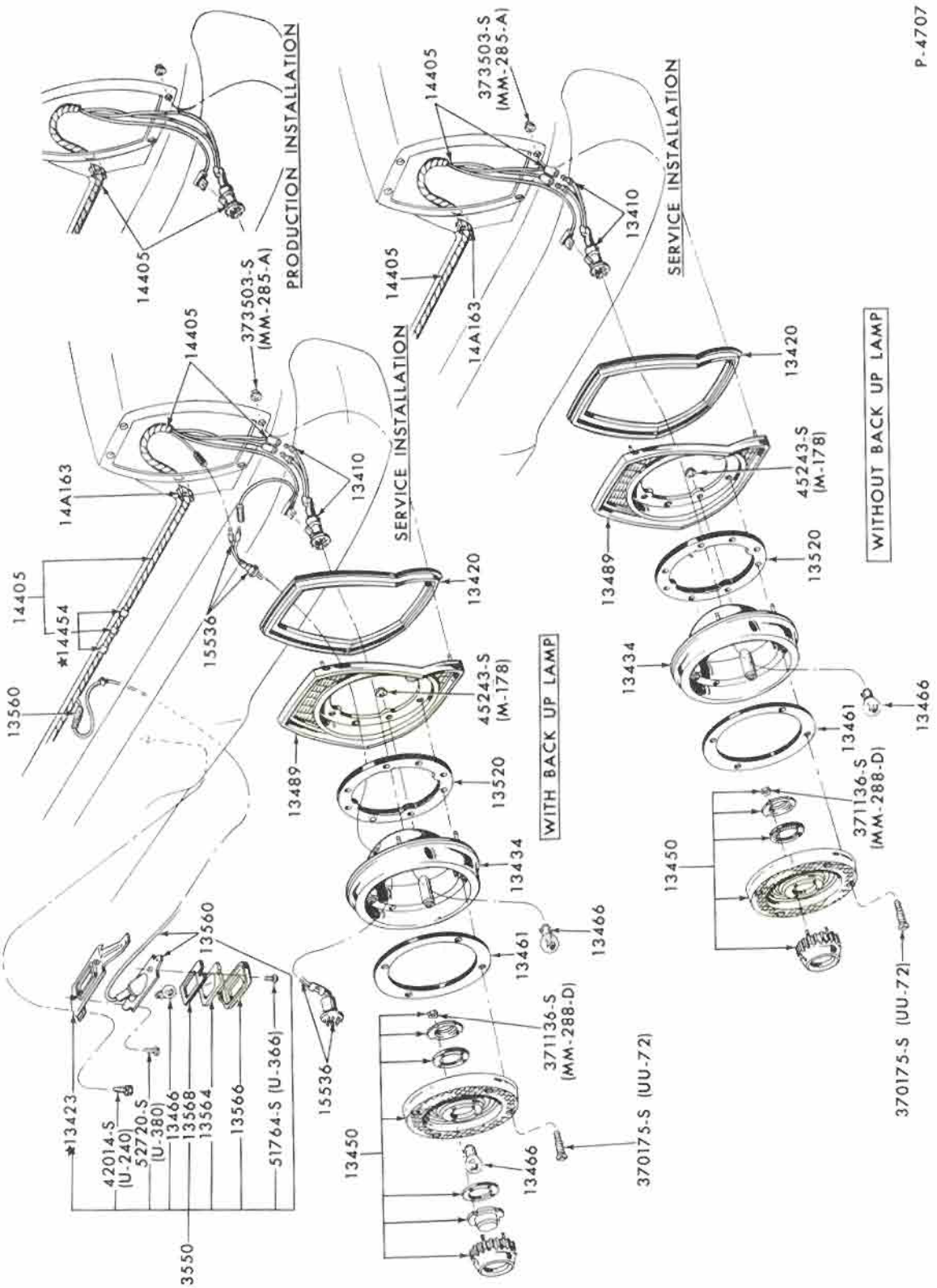

REAR LAMP, BACK UP LAMP and LICENSE PLATE LAMP
1965 FORD CUSTOM - except STATION WAGON

COPYRIGHT © 1975 — FORD MOTOR COMPANY — DEARBORN, MICHIGAN

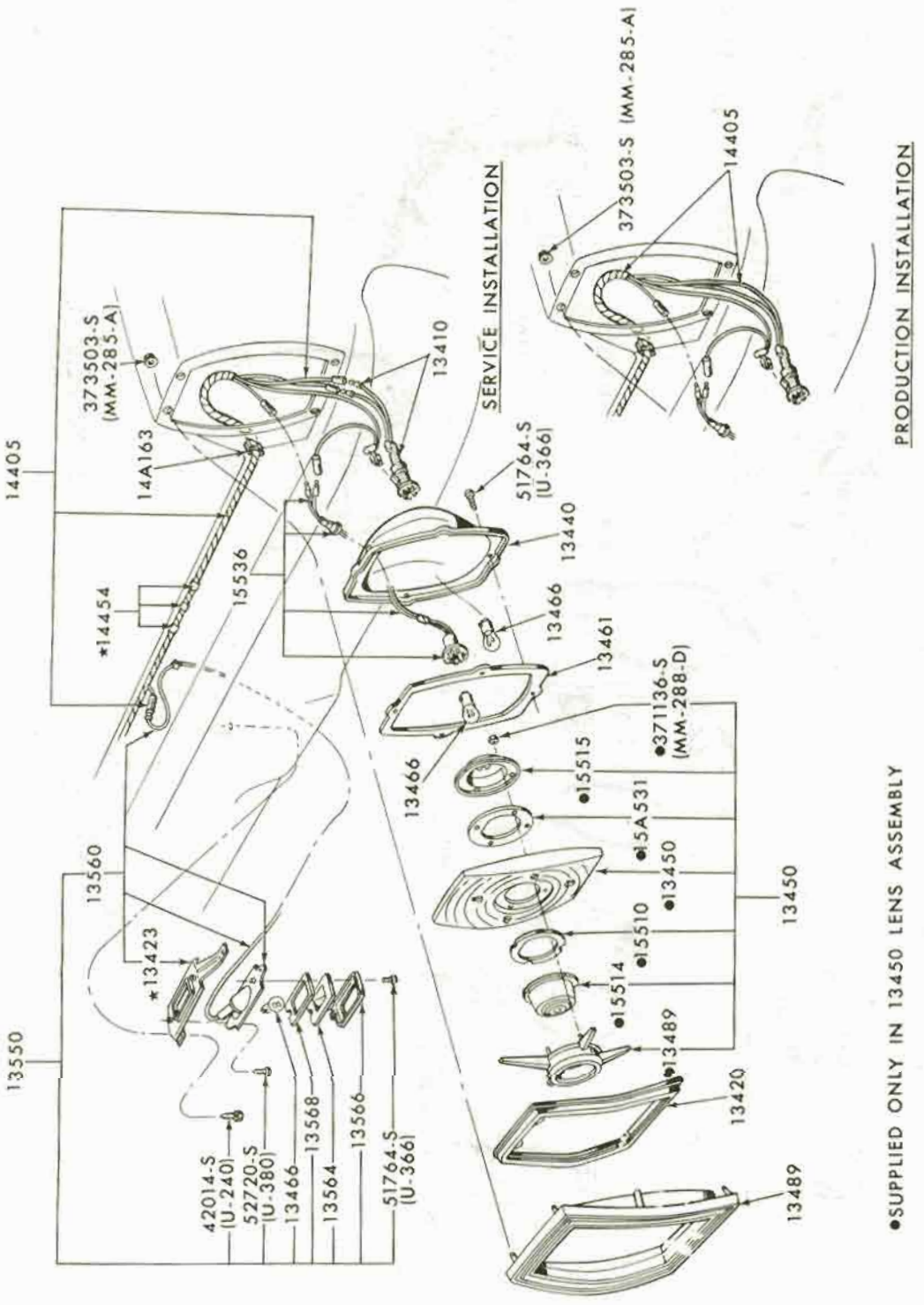

REAR LAMP, BACK UP LAMP and LICENSE PLATE LAMP
1965 FORD - GALAXIE - (except STATION WAGON)

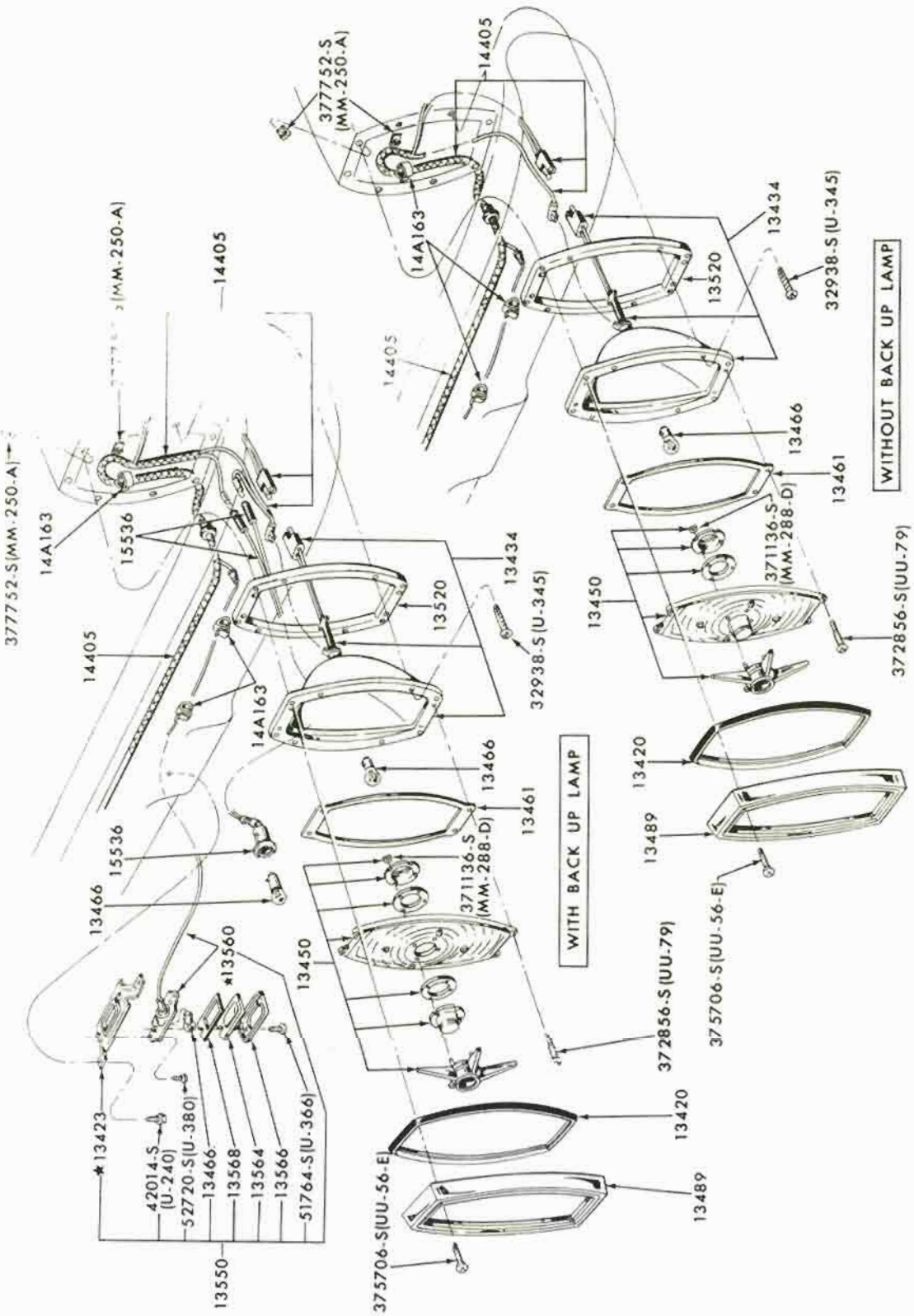

REAR LAMP, BACK UP LAMP and LICENSE PLATE LAMP
1965 FORD - STATION WAGON

COPYRIGHT © 1975 — FORD MOTOR COMPANY — DEARBORN, MICHIGAN

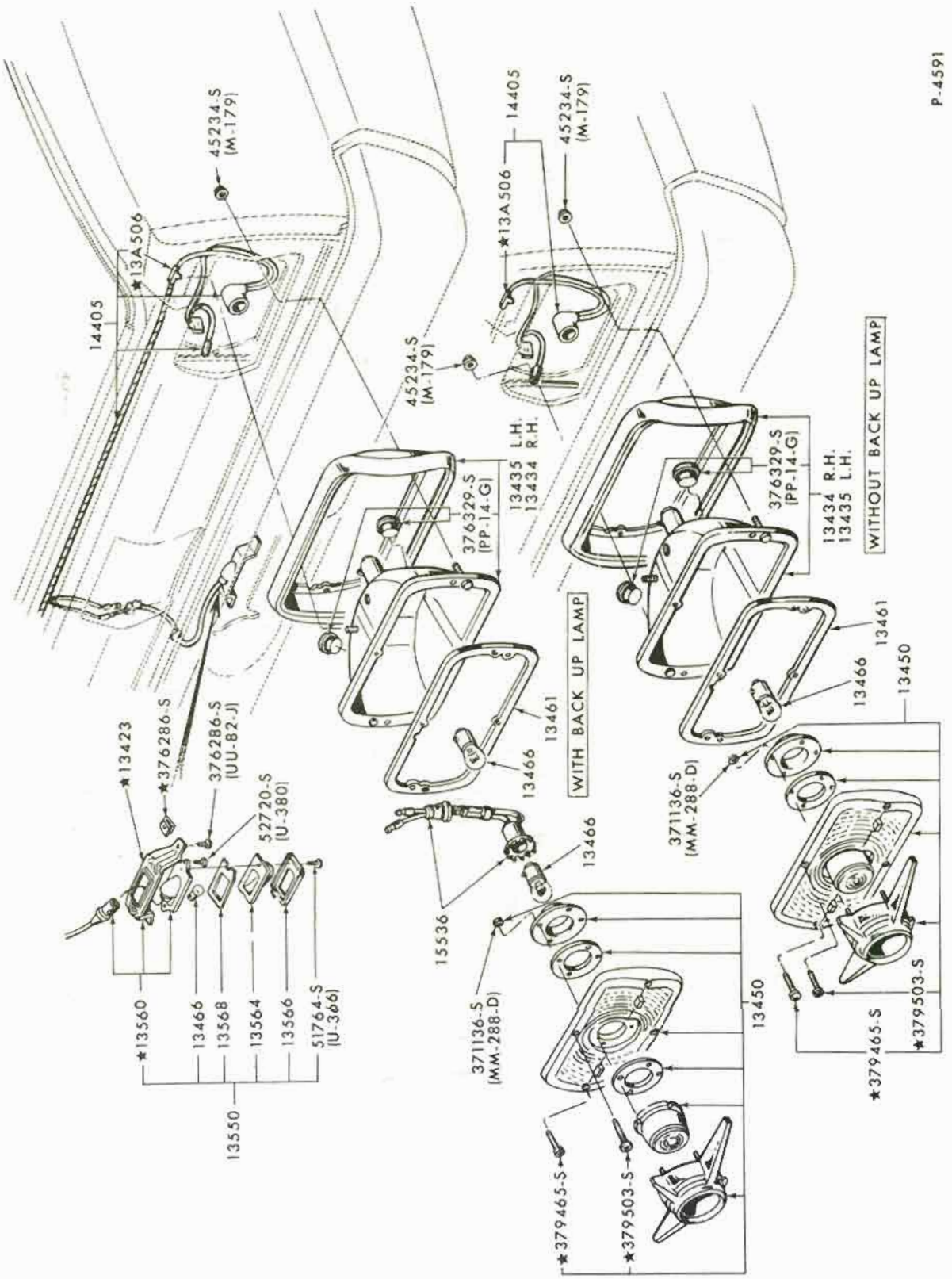

REAR LAMP, BACK UP LAMP and LICENSE PLATE LAMP
1965 FAIRLANE - except STATION WAGON

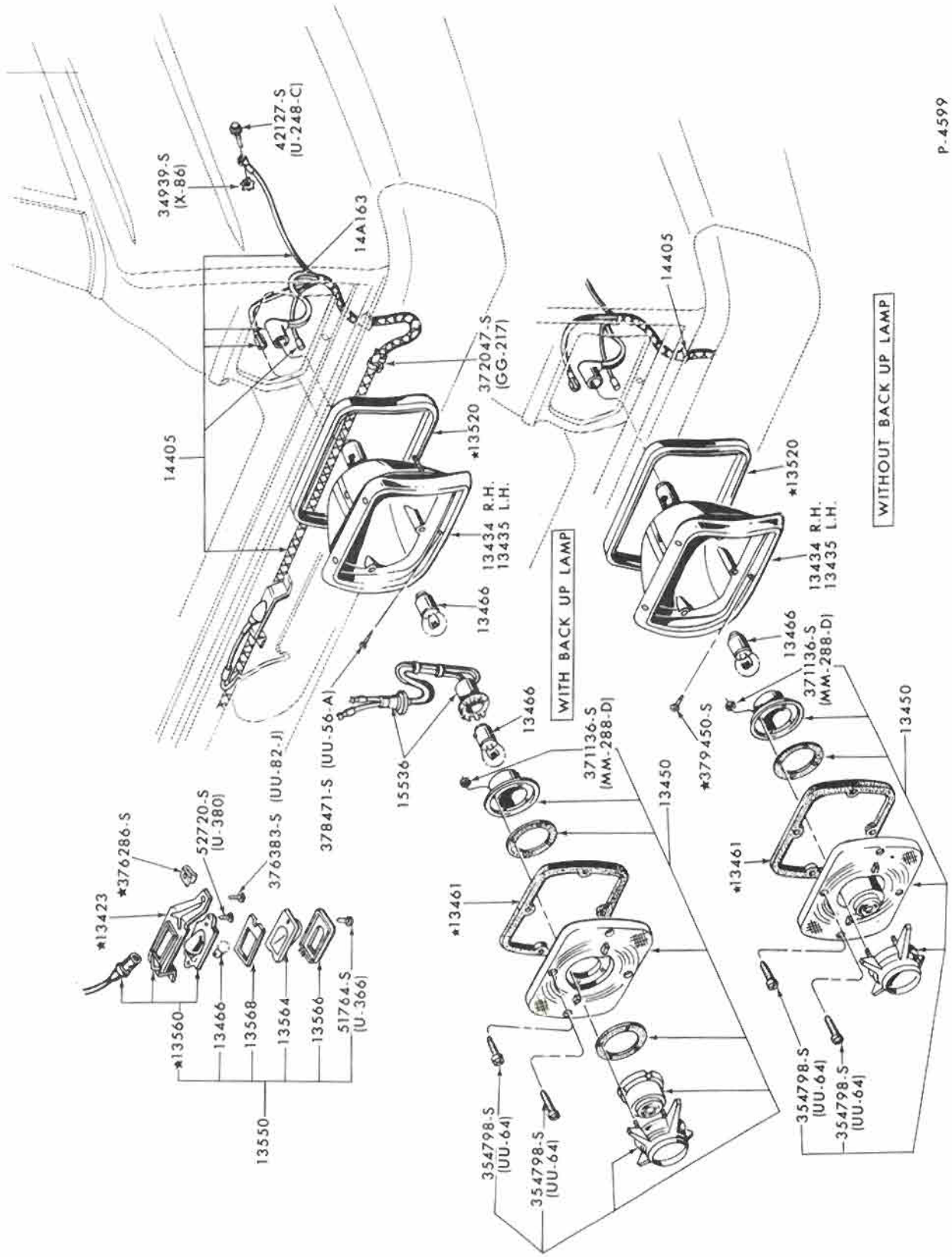

REAR LAMP, BACK UP LAMP and LICENSE PLATE LAMP
1965 FAIRLANE - BODY TYPE 71

COPYRIGHT © 1975 — FORD MOTOR COMPANY — DEARBORN, MICHIGAN

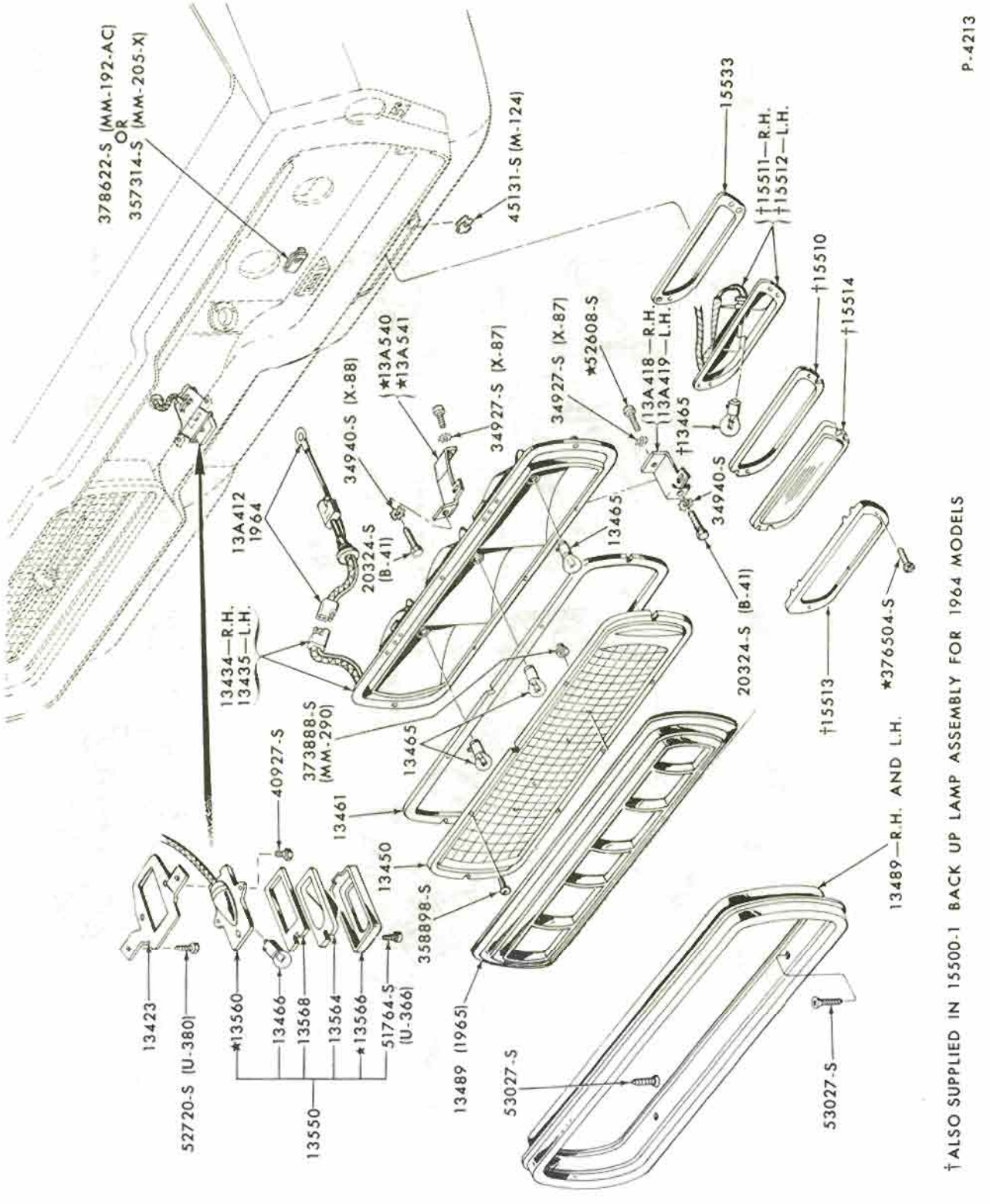

P-4213

†ALSO SUPPLIED IN 15500-1 BACK UP LAMP ASSEMBLY FOR 1964 MODELS

REAR LAMP, BACK UP LAMP, and LICENSE PLATE LAMP
1965 THUNDERBIRD

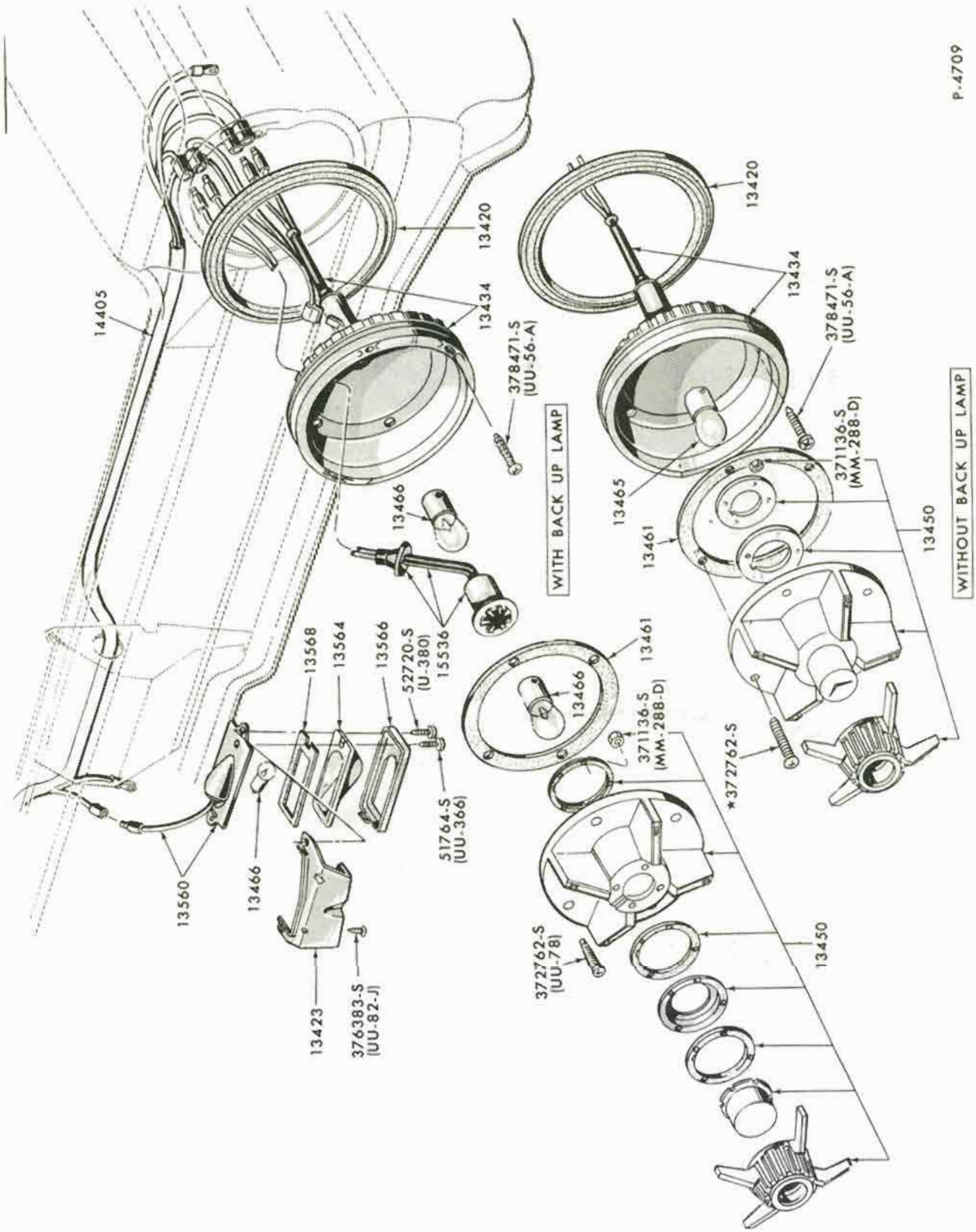

REAR LAMP, BACK UP LAMP and LICENSE PLATE LAMP
1965 FALCON

COPYRIGHT © 1975 — FORD MOTOR COMPANY — DEARBORN, MICHIGAN

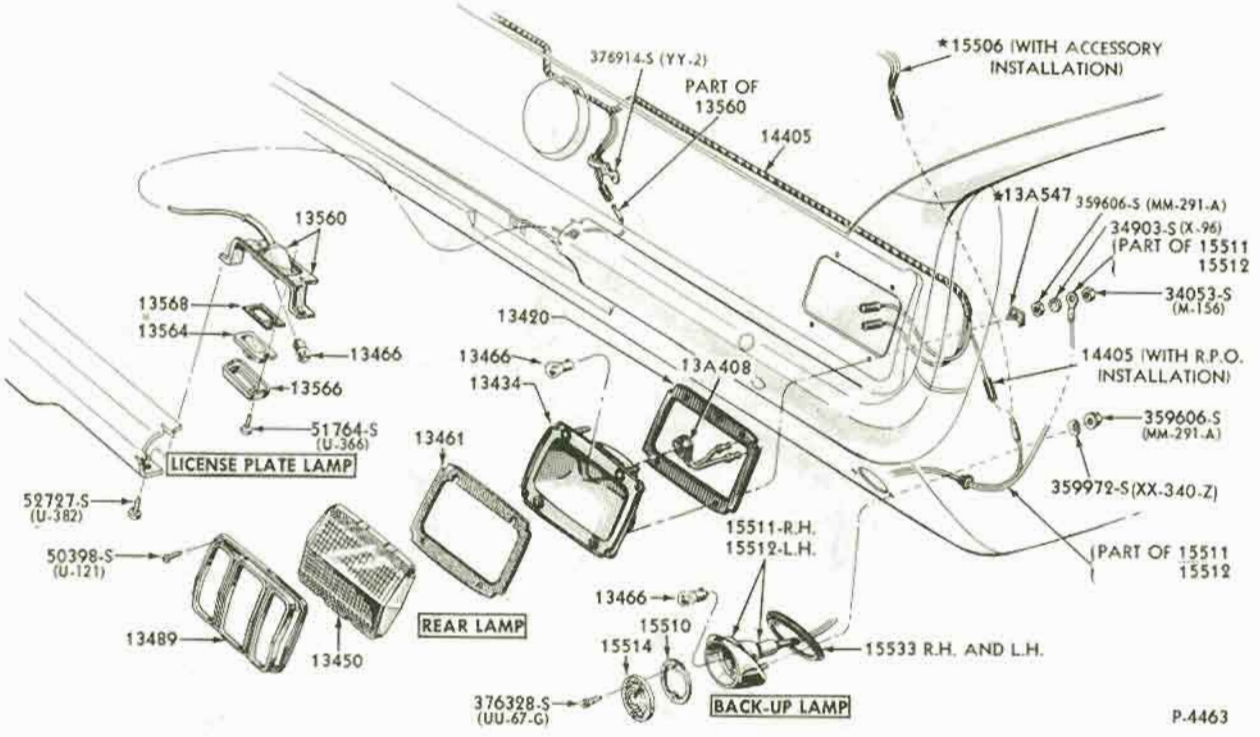

REAR LAMP, BACK UP LAMP and LICENSE PLATE LAMP
1965/66 MUSTANG

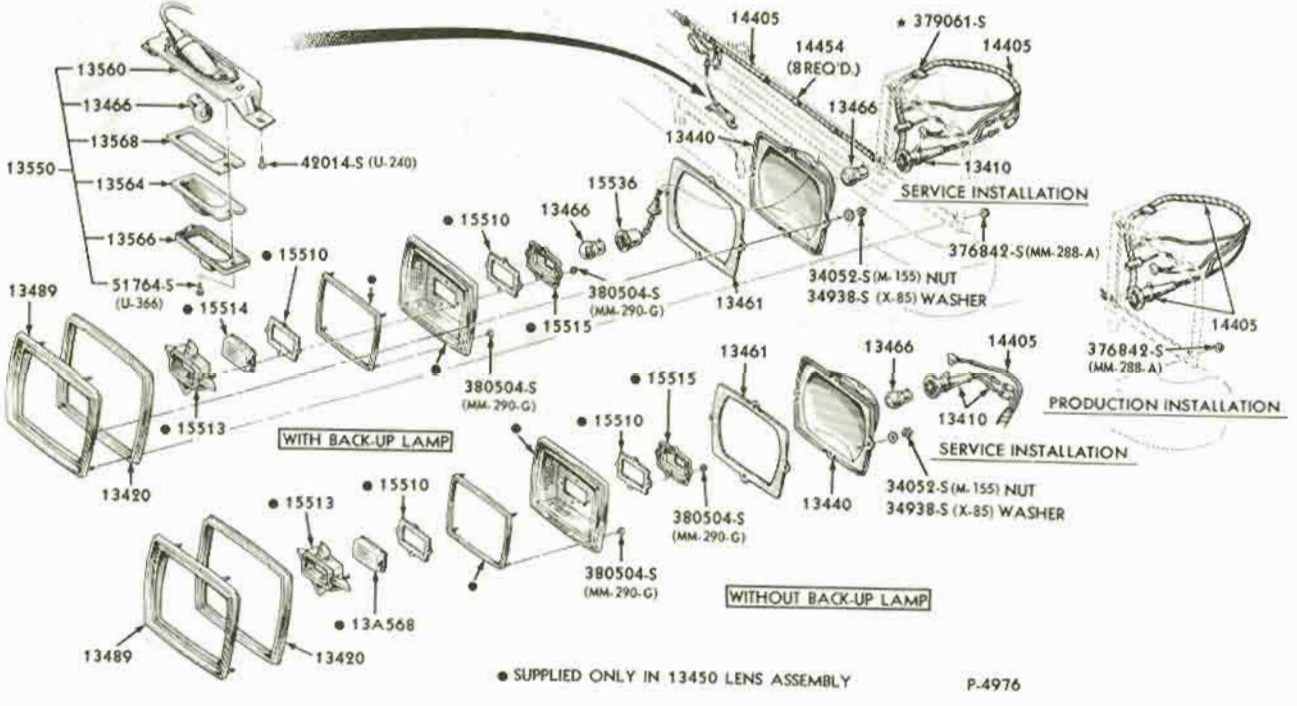

REAR LAMP, BACK UP LAMP and LICENSE PLATE LAMP
1966 FORD - except STATION WAGON

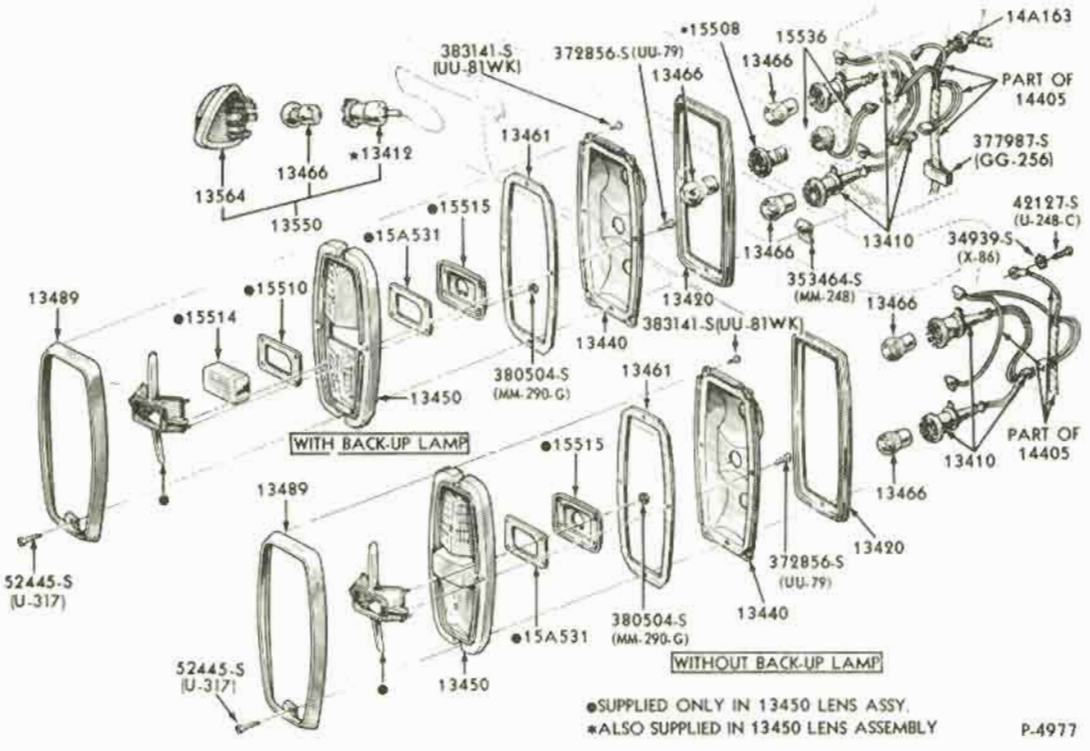

REAR LAMP, BACK UP LAMP and LICENSE PLATE LAMP
1966 FORD - STATION WAGON

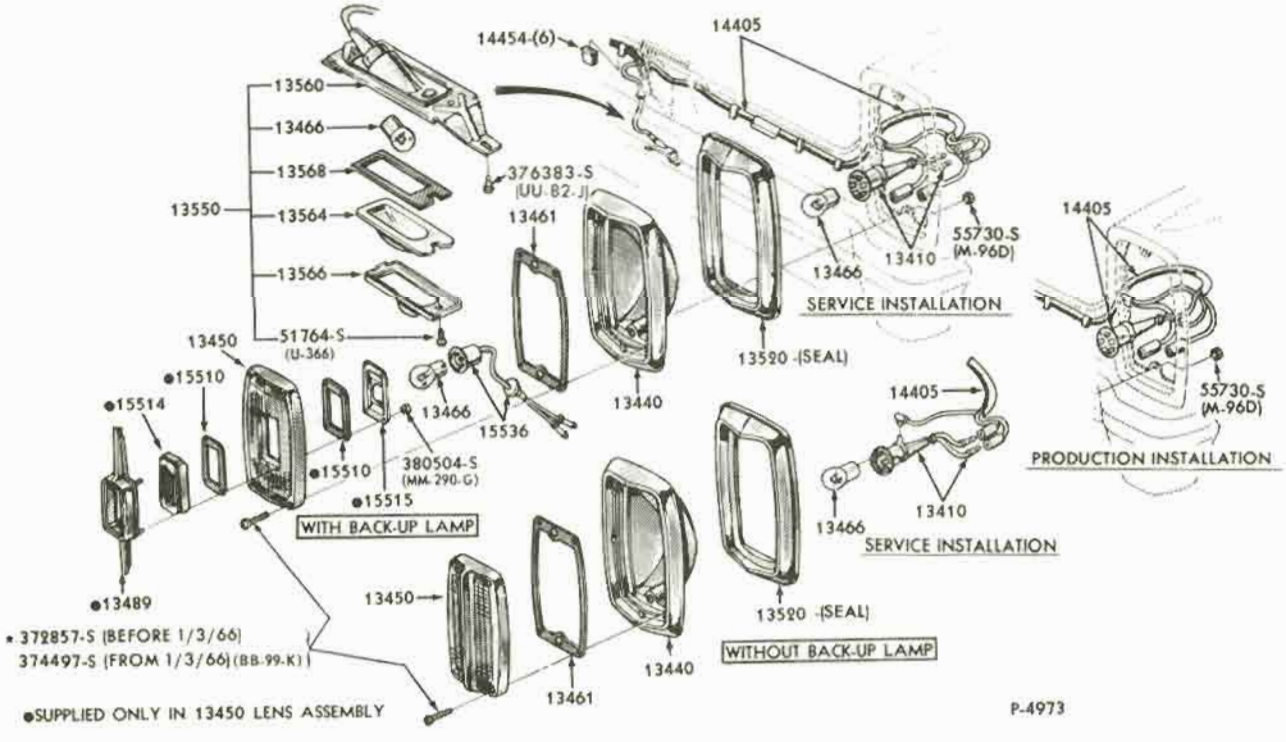

REAR LAMP, BACK UP LAMP and LICENSE PLATE LAMP
1966 FAIRLANE - except STATION WAGON

COPYRIGHT © 1975 — FORD MOTOR COMPANY — DEARBORN, MICHIGAN

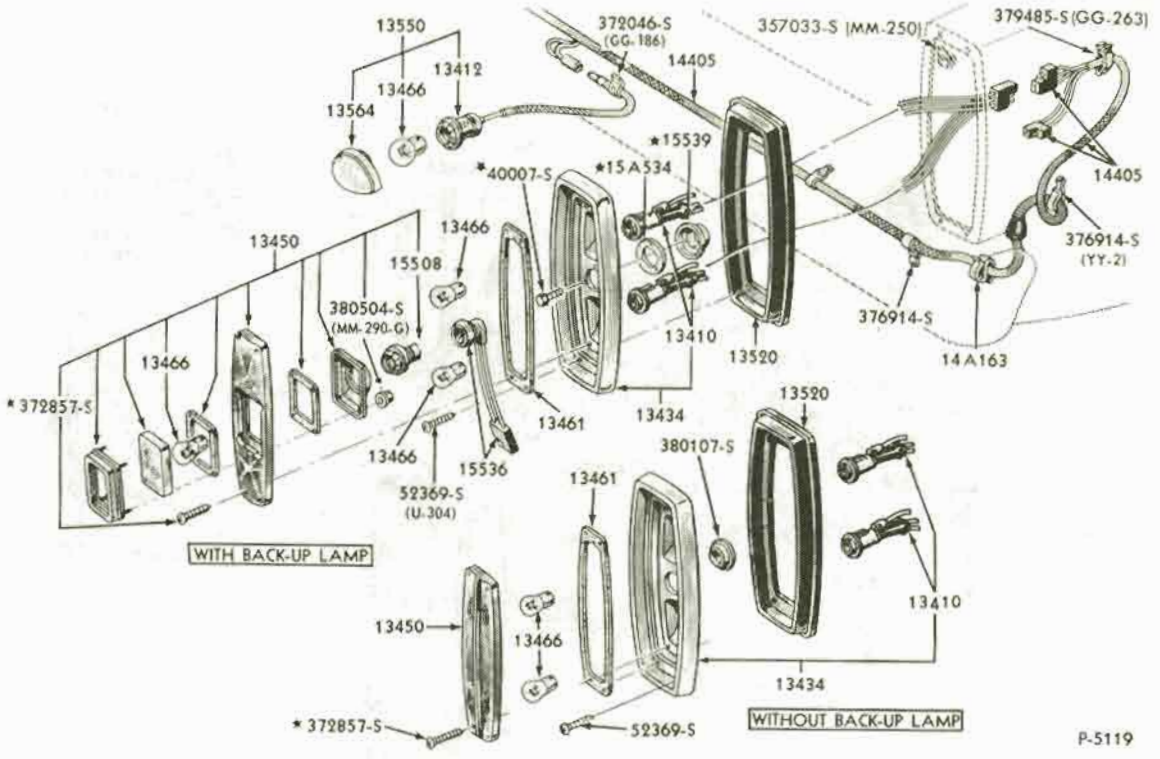

REAR LAMP, BACK UP LAMP and LICENSE PLATE LAMP
1966 FAIRLANE - STATION WAGON

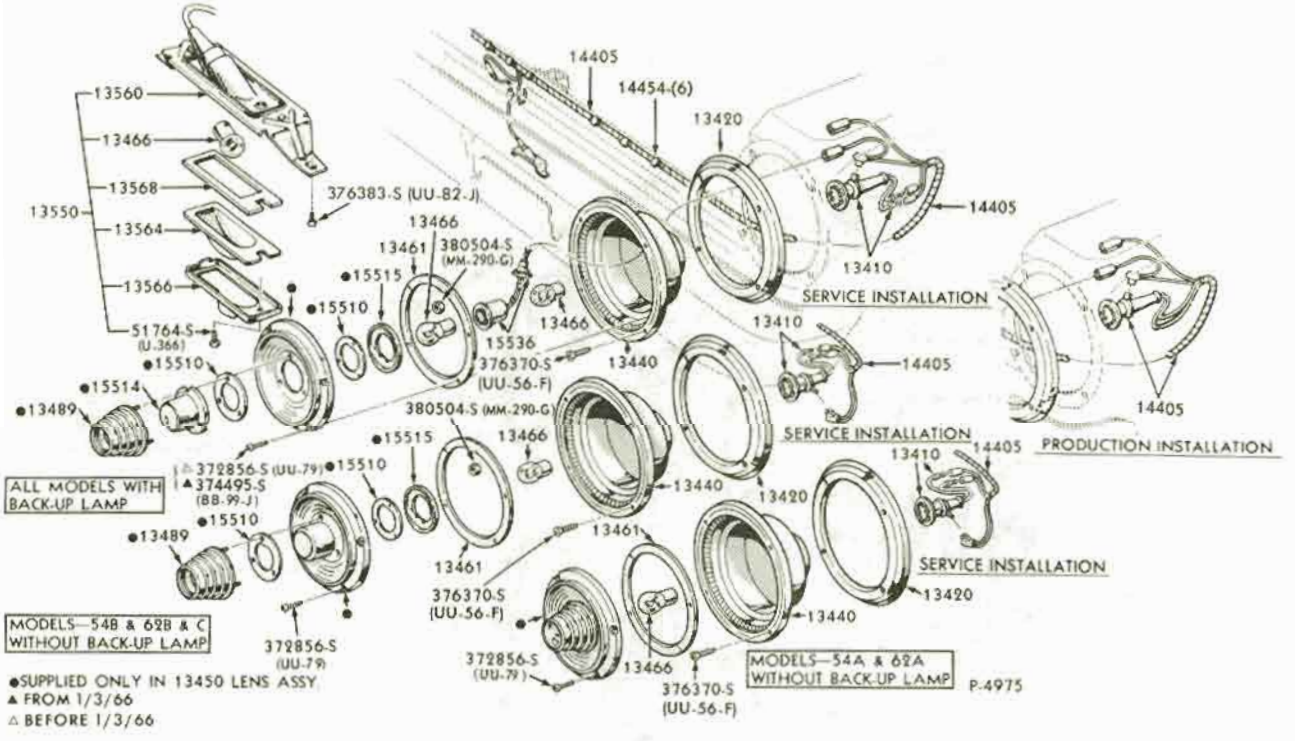

●SUPPLIED ONLY IN 13450 LENS ASSY
▲ FROM 1/3/66
△ BEFORE 1/3/66

REAR LAMP, BACK UP LAMP and LICENSE PLATE LAMP
1966 FALCON - except STATION WAGON and RANCHERO

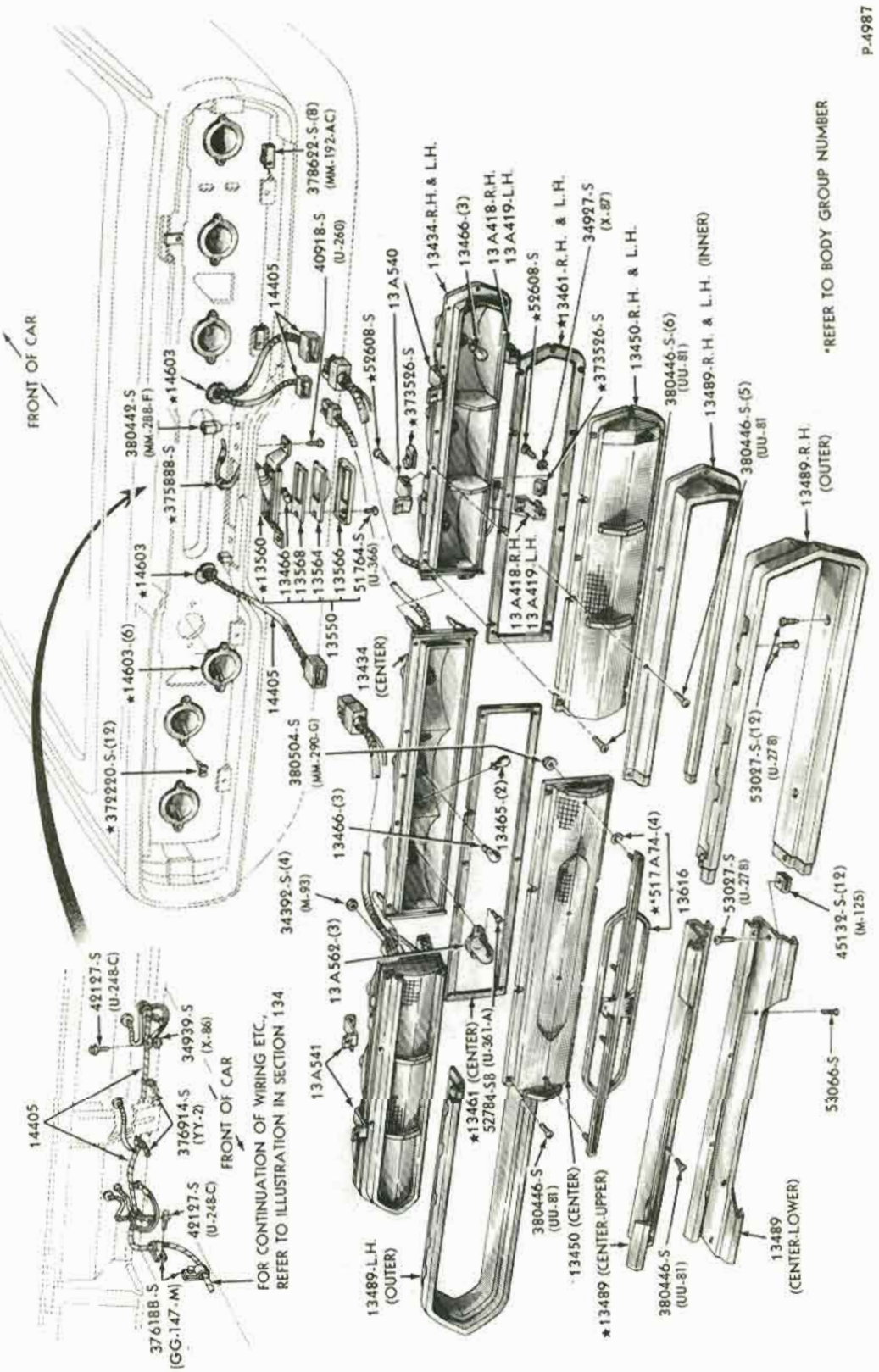

REAR LAMP, BACK UP LAMP and LICENSE PLATE LAMP
1966 THUNDERBIRD

COPYRIGHT © 1975 — FORD MOTOR COMPANY — DEARBORN, MICHIGAN

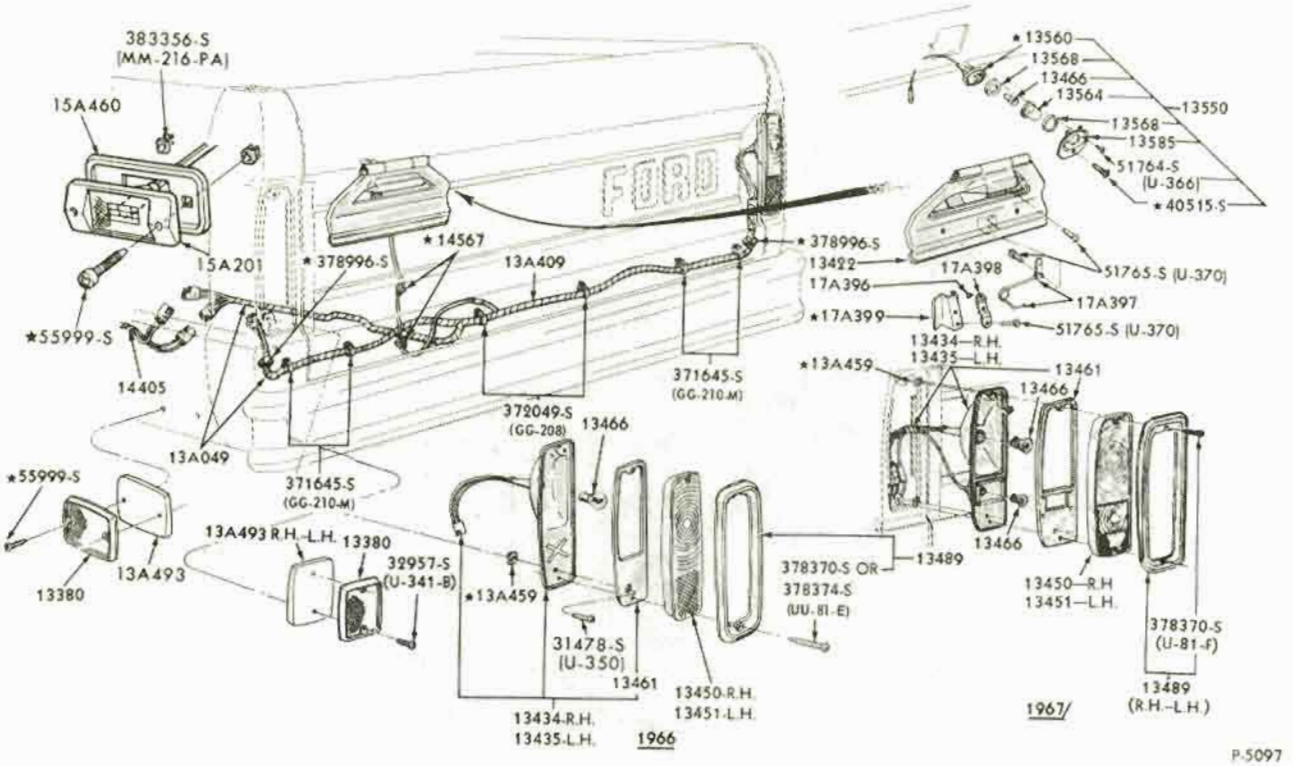

P-5097

REAR LAMP, LICENSE PLATE LAMP and RELATED PARTS
1966/72 BRONCO

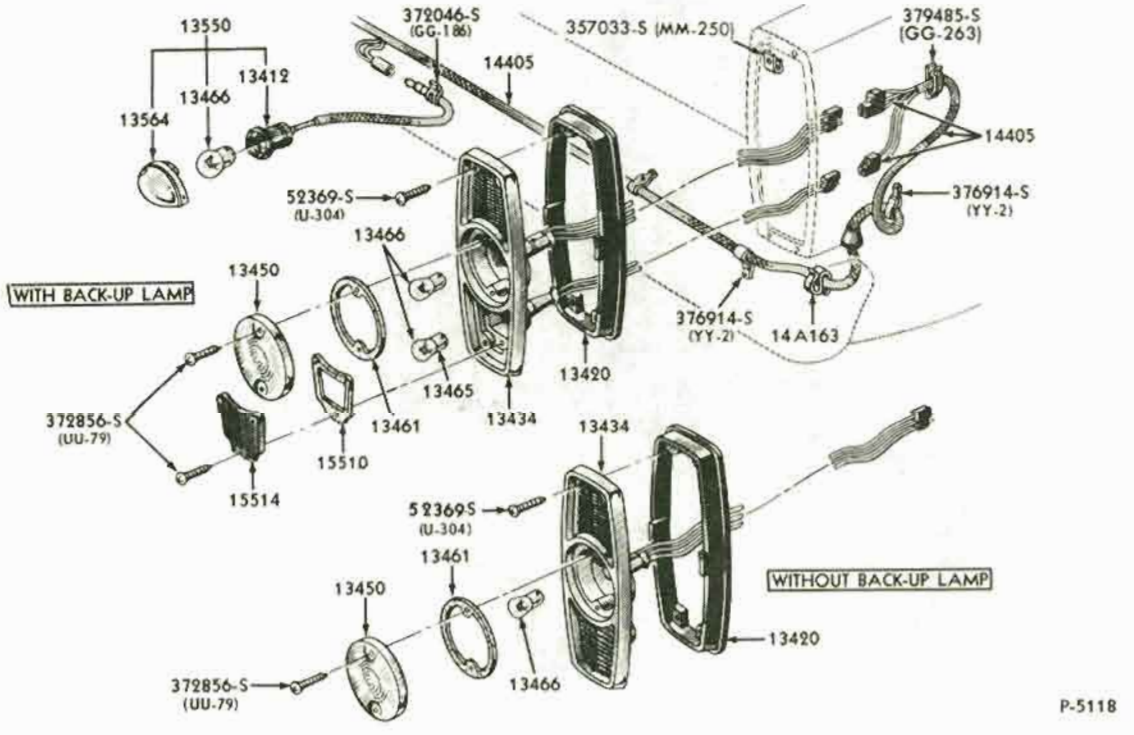

P-5118

REAR LAMP, BACK UP LAMP and LICENSE PLATE LAMP
1966 FALCON - STATION WAGON and RANCHERO

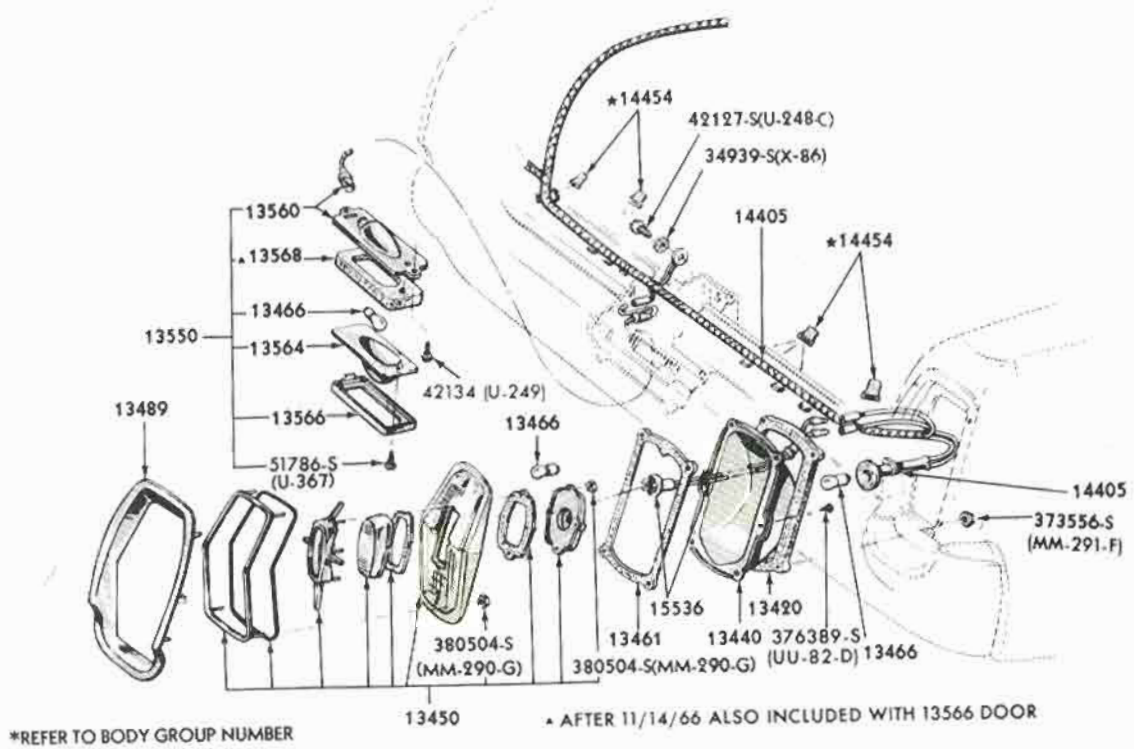

REAR LAMP, BACK UP LAMP and LICENSE PLATE LAMP
1967 FORD - EXCEPT STATION WAGON

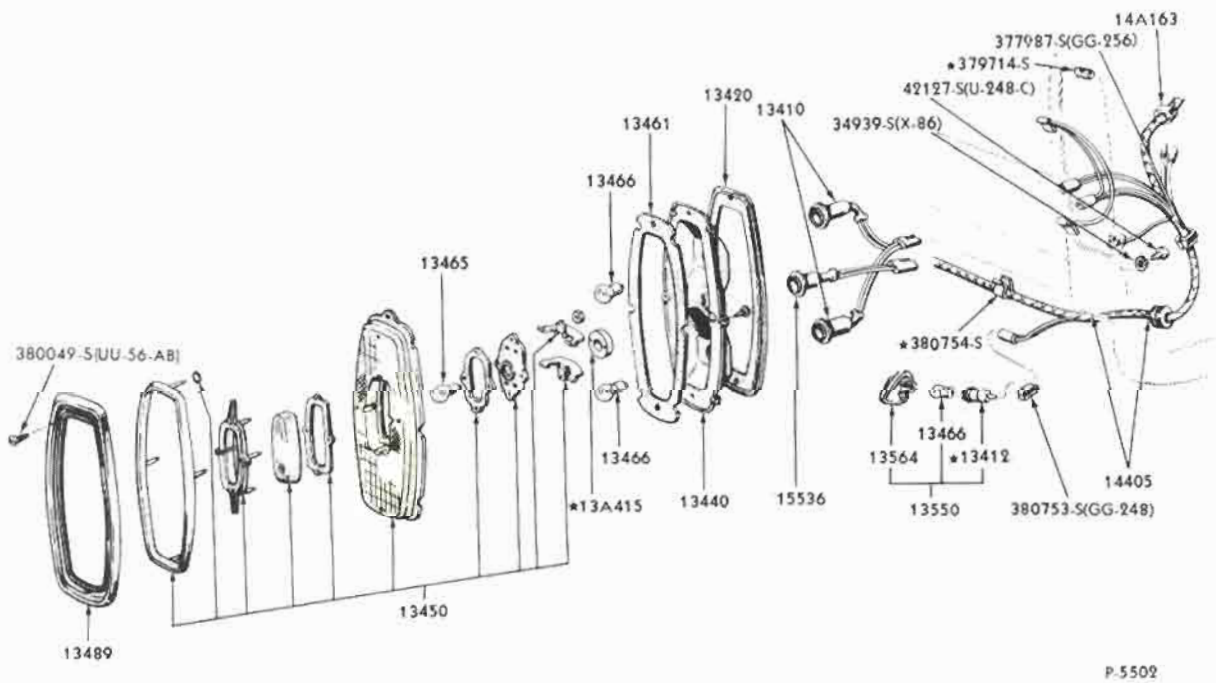

REAR LAMP, BACK UP LAMP and LICENSE PLATE LAMP
1967 FORD - STATION WAGON

COPYRIGHT © 1975 — FORD MOTOR COMPANY — DEARBORN, MICHIGAN

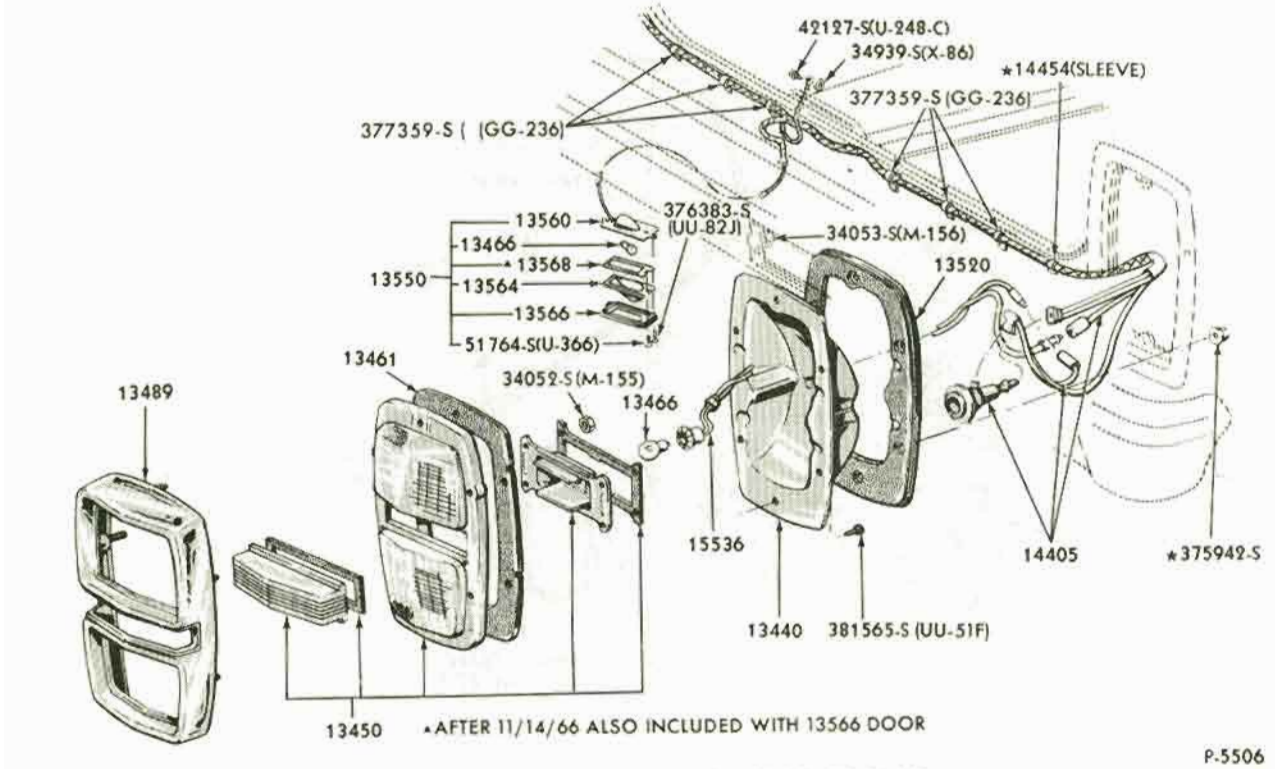

REAR LAMP, BACK UP LAMP and LICENSE PLATE LAMP
1967 FAIRLANE - except STATION WAGON and RANCHERO

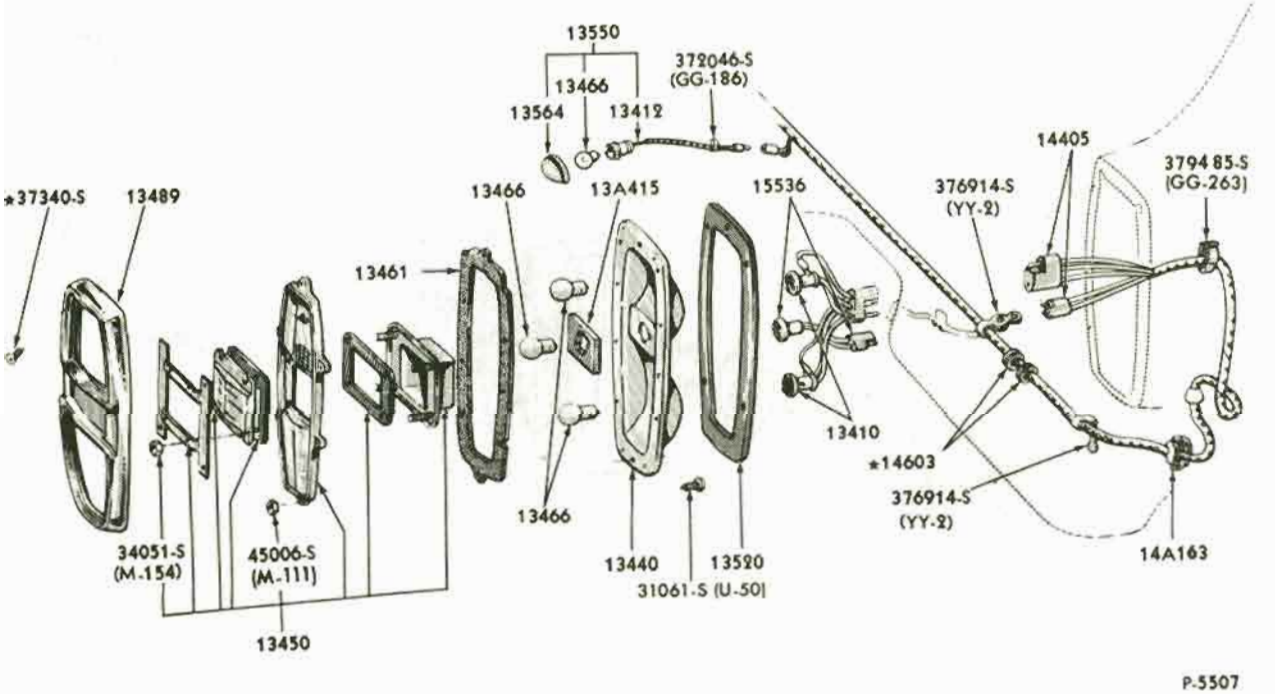

REAR LAMP, BACK UP LAMP and LICENSE PLATE LAMP
1967 FAIRLANE - STATION WAGON 1967 FAIRLANE - RANCHERO - except with REFLECTORS

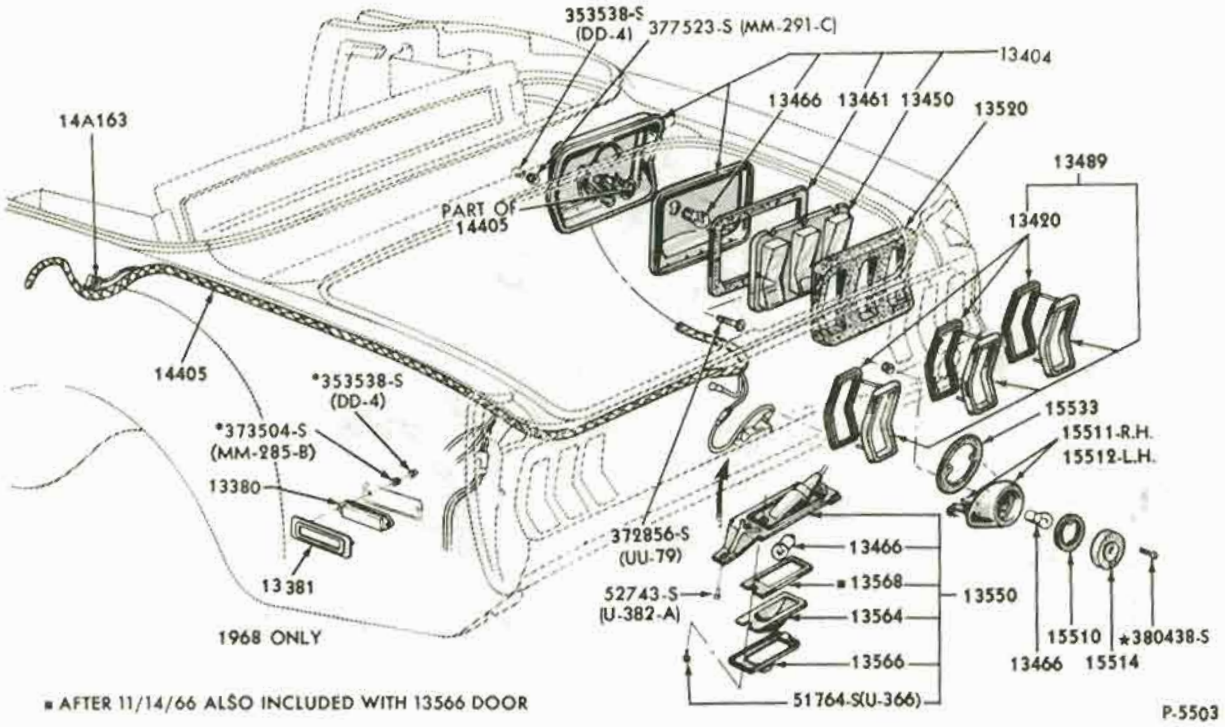

REAR LAMP, BACK UP LAMP and LICENSE PLATE LAMP
1967/68 MUSTANG - except GT 350/500

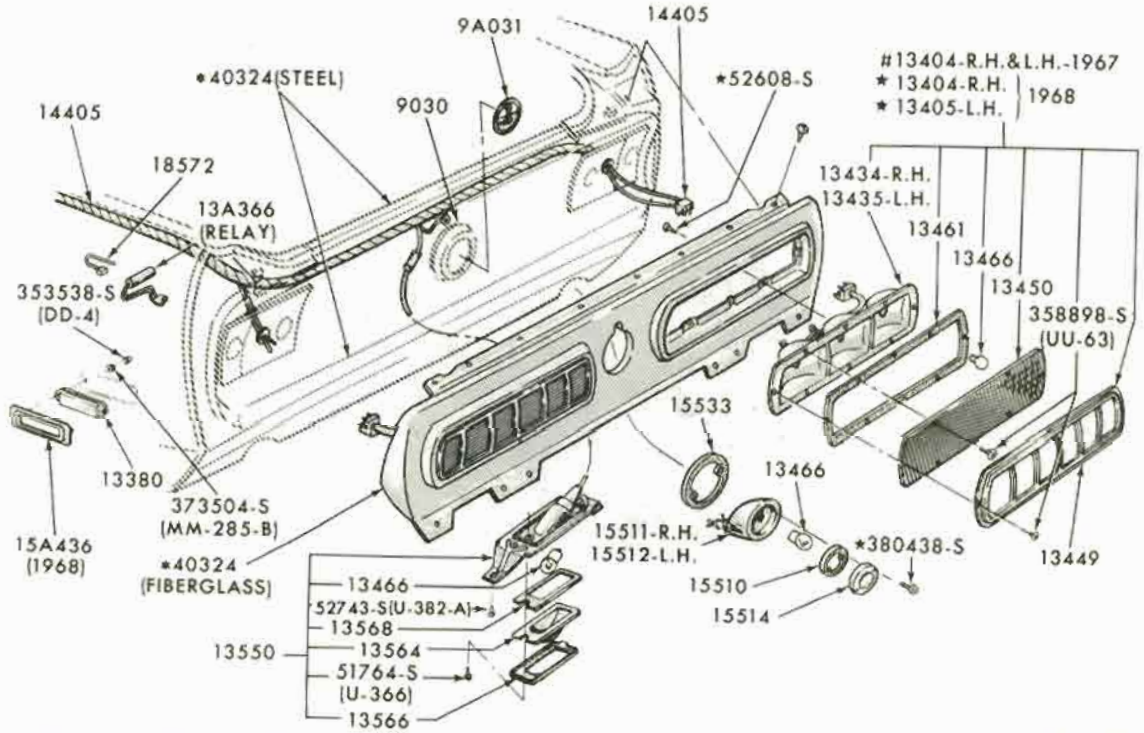

REAR LAMP, BACK UP LAMP and LICENSE PLATE LAMP
1967/68 MUSTANG - GT 350/500

COPYRIGHT © 1975 — FORD MOTOR COMPANY — DEARBORN, MICHIGAN

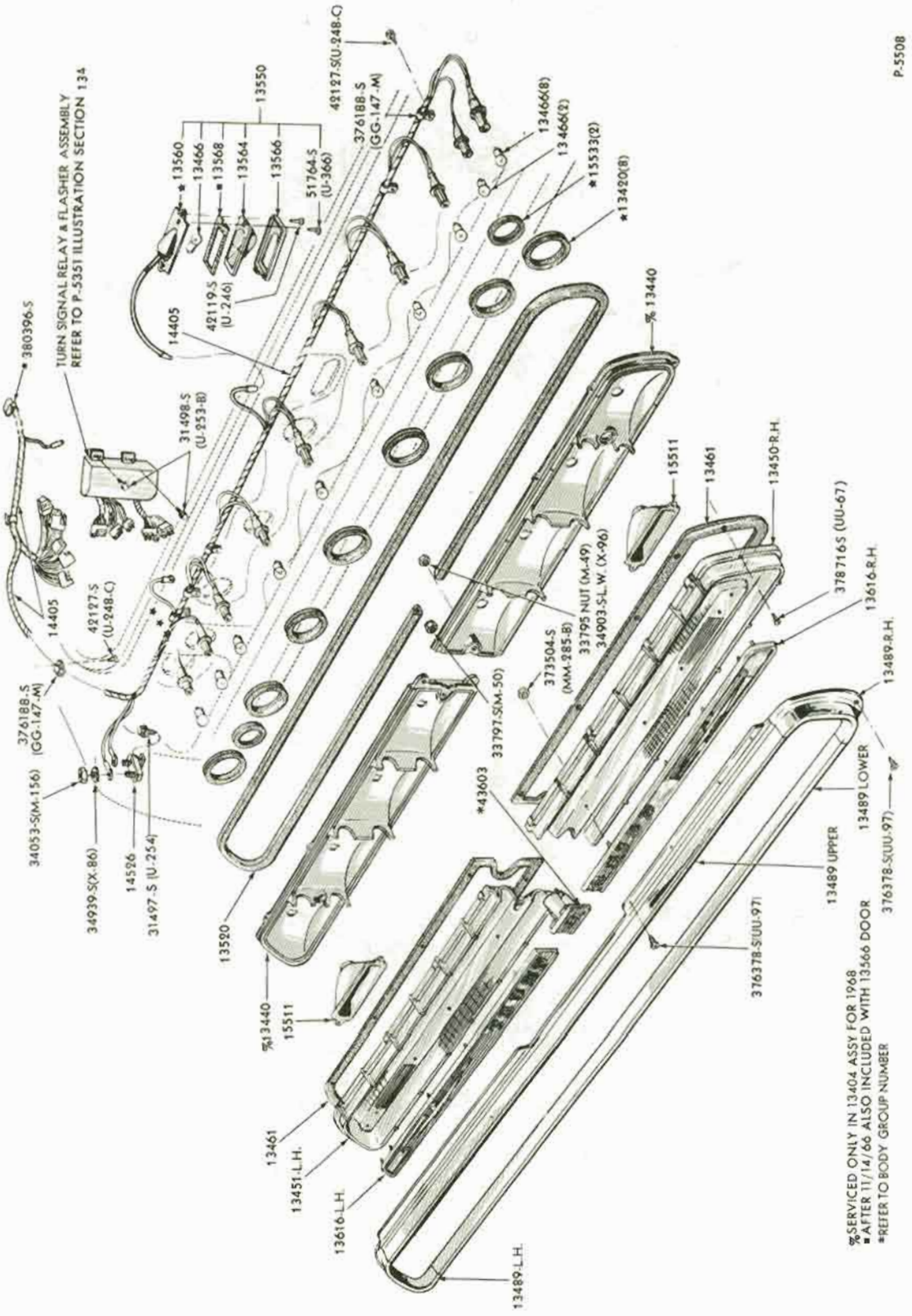

REAR LAMP, BACK UP LAMP, LICENSE PLATE LAMP and RELATED PARTS
1967/68 THUNDERBIRD

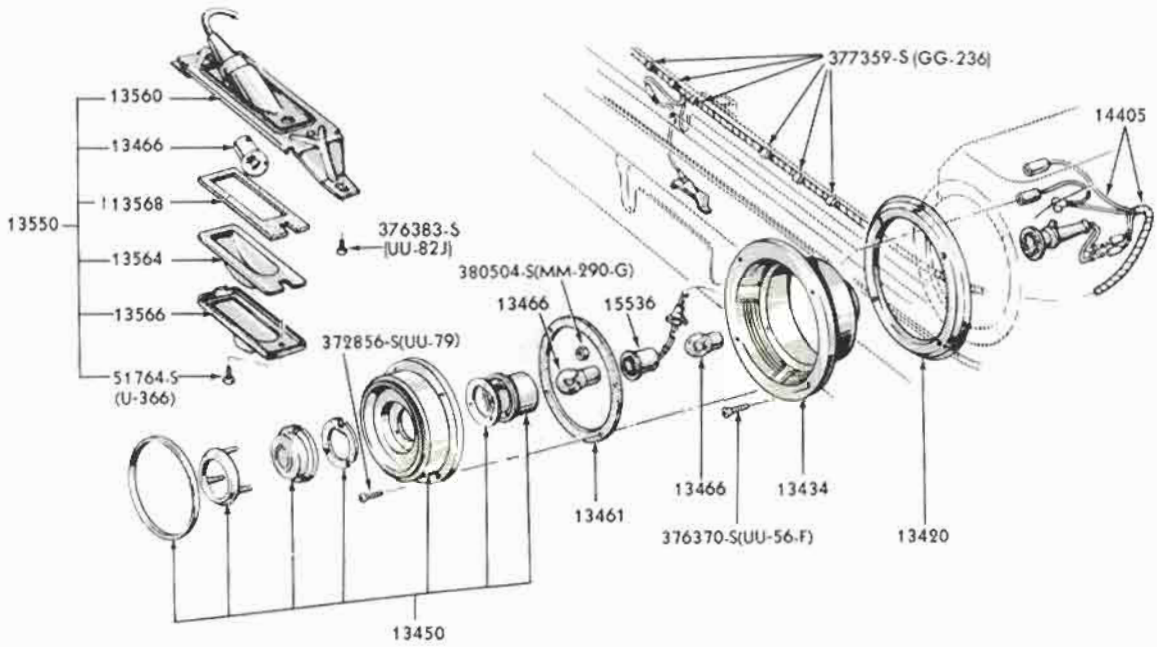

FROM 11/14/66 ALSO INCLUDED WITH 13566 DOOR

REAR LAMP, BACK UP LAMP and LICENSE PLATE LAMP
1967 FALCON - except STATION WAGON

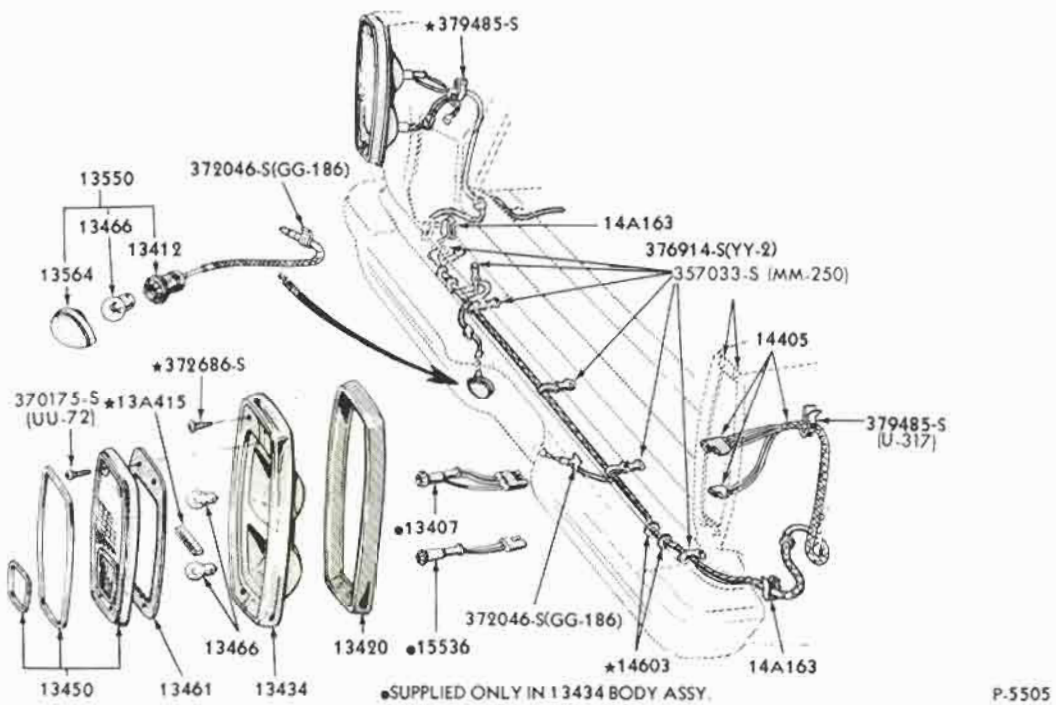

REAR LAMP, BACK UP LAMP and LICENSE PLATE LAMP
1967 FALCON - STATION WAGON

COPYRIGHT © 1975 — FORD MOTOR COMPANY — DEARBORN, MICHIGAN

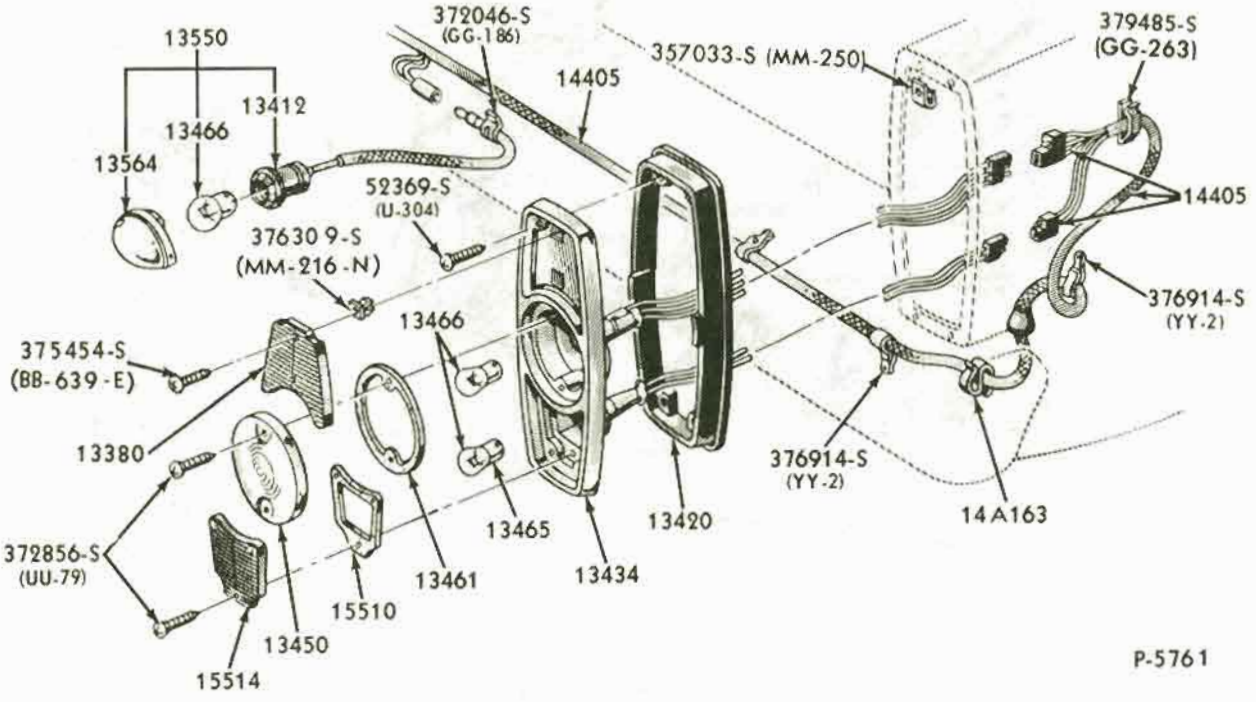

REAR LAMP, BACK UP LAMP and LICENSE PLATE LAMP
1967 FAIRLANE - RANCHERO - with REFLECTORS

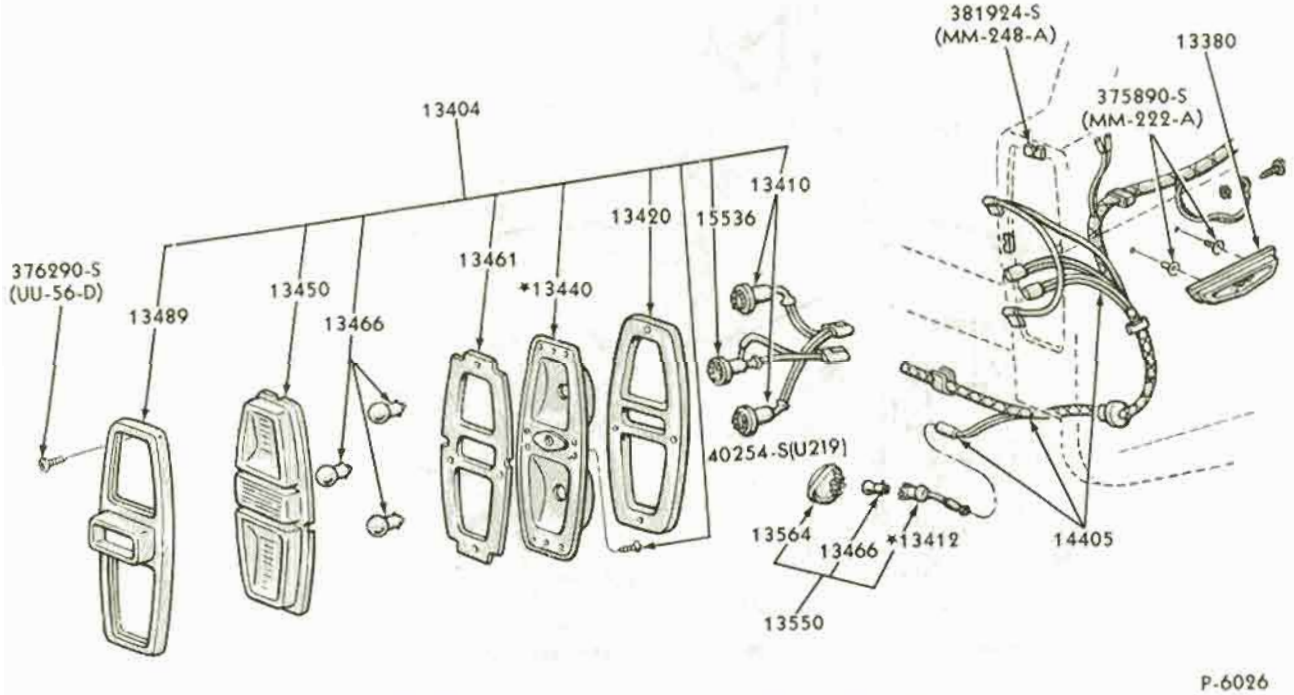

REAR LAMP, BACK UP LAMP, LICENSE PLATE LAMP
1968 FORD - STATION WAGON

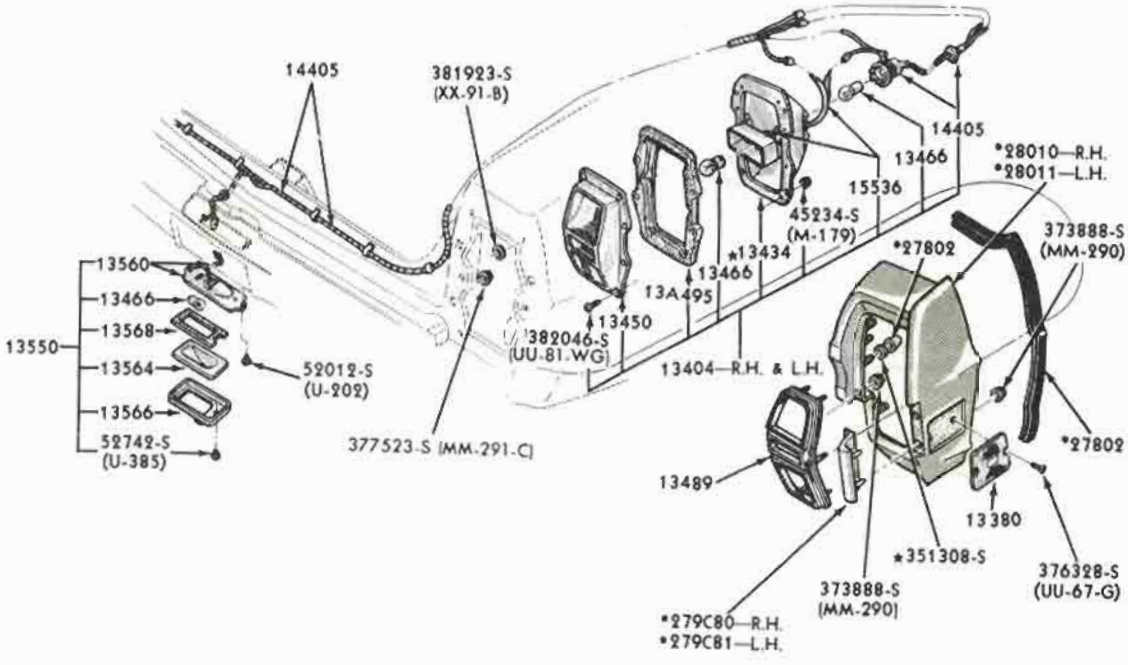

*REFER TO BODY GROUP NUMBER

P-6043

REAR LAMP, BACK UP LAMP and LICENSE PLATE LAMP
1968 FORD - except STATION WAGON

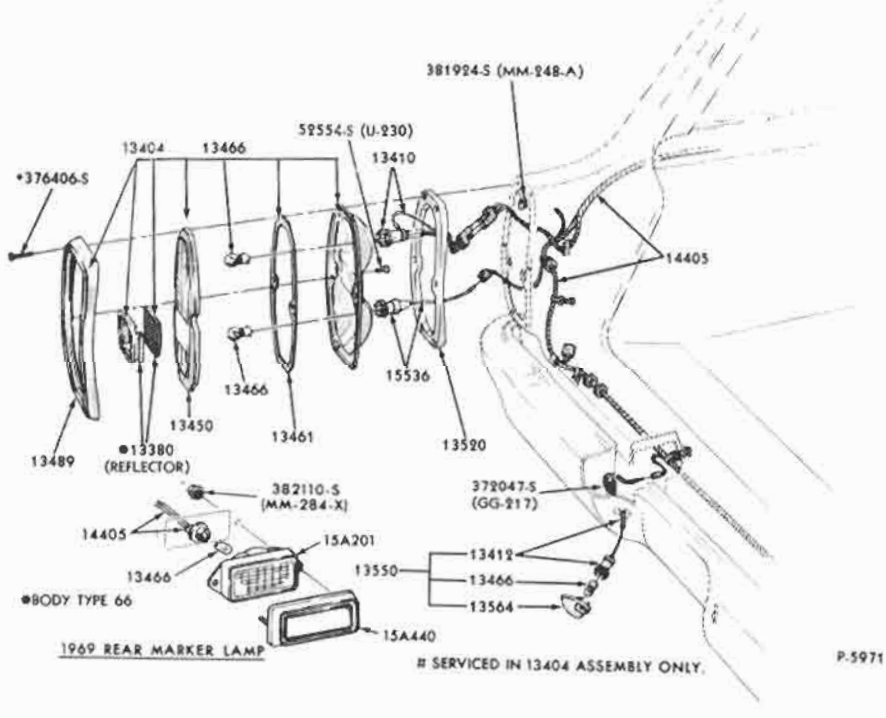

P-5971

REAR LAMP, BACK UP LAMP, LICENSE PLATE LAMP and BODY SIDE -- MARKER LAMP
1968/69 FAIRLANE - RANCHERO

COPYRIGHT © 1975 — FORD MOTOR COMPANY — DEARBORN, MICHIGAN

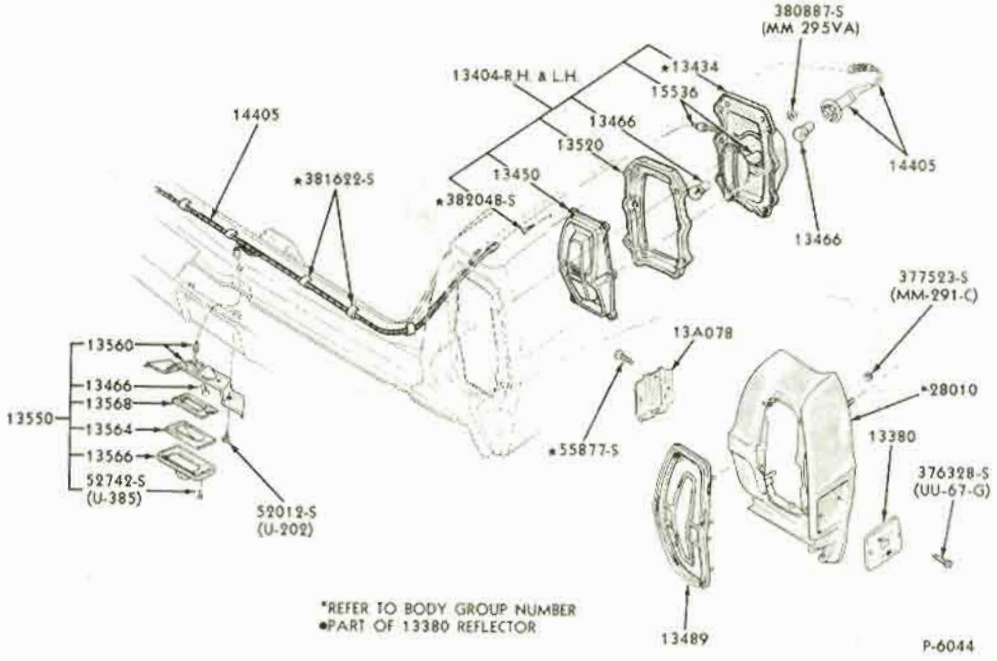

REAR LAMP, BACK UP LAMP & LICENSE PLATE LAMP
1968 FAIRLANE/TORINO - BODY TYPES 54, 65, 76

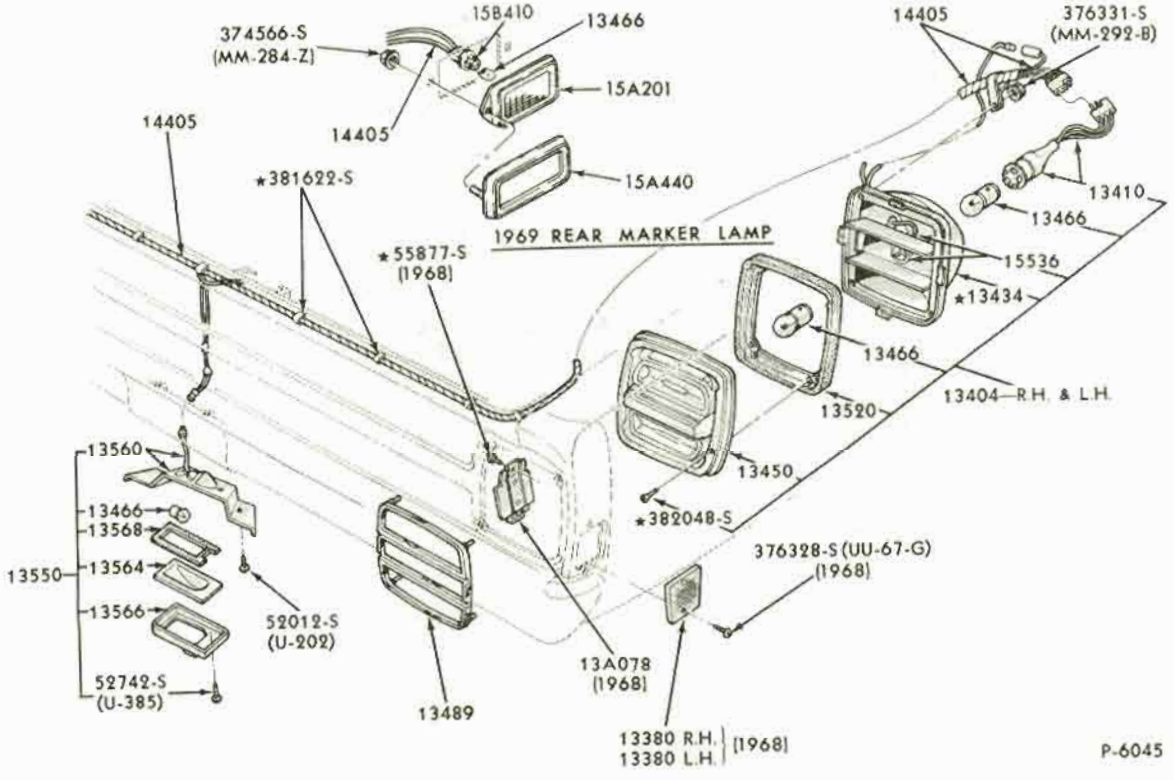

REAR LAMP, BACK UP LAMP, LICENSE PLATE LAMP and BODY SIDE MARKER LAMP
1968/69 FAIRLANE/TORINO - BODY TYPE 63

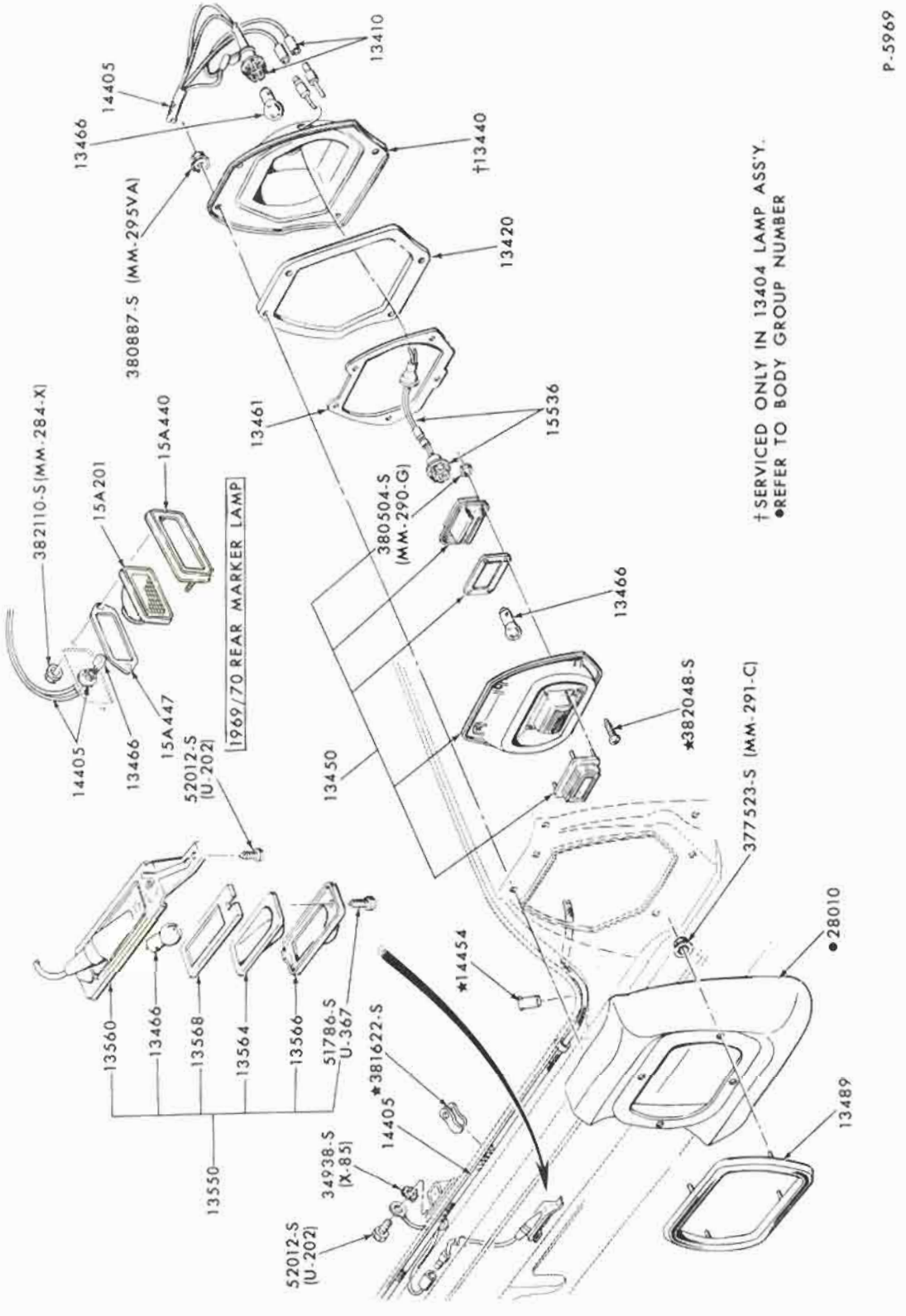

REAR LAMP, BACK UP LAMP, LICENSE PLATE LAMP and BODY SIDE MARKER LAMP
1968/70 FALCON - except STATION WAGON

COPYRIGHT © 1975 — FORD MOTOR COMPANY — DEARBORN, MICHIGAN

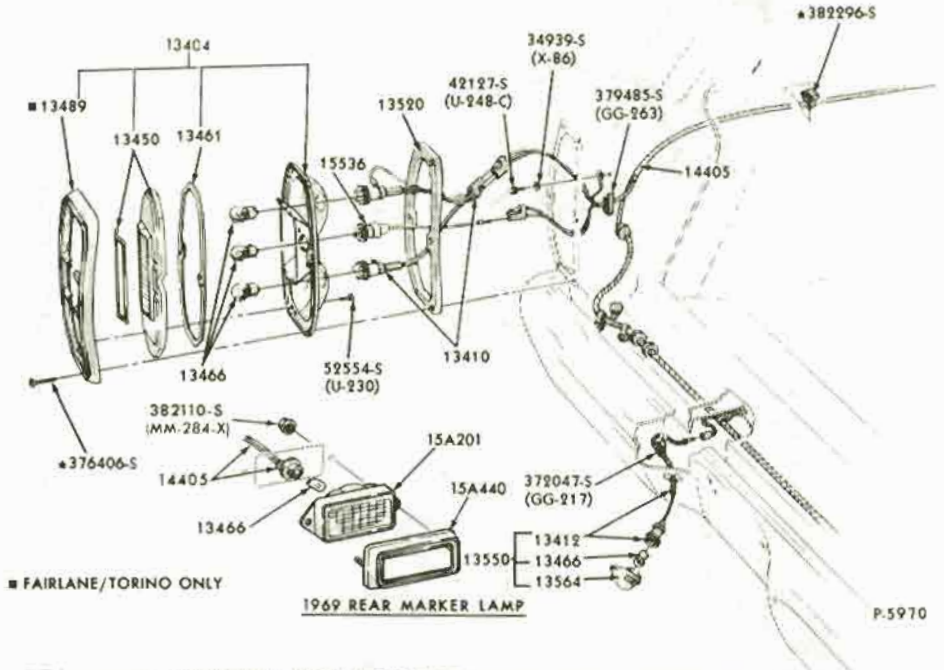

REAR LAMP, BACK UP LAMP, LICENSE PLATE LAMP and BODY SIDE MARKER LAMP
1968/69 FAIRLANE/TORINO - STATION WAGON 1968/70 FALCON - STATION WAGON

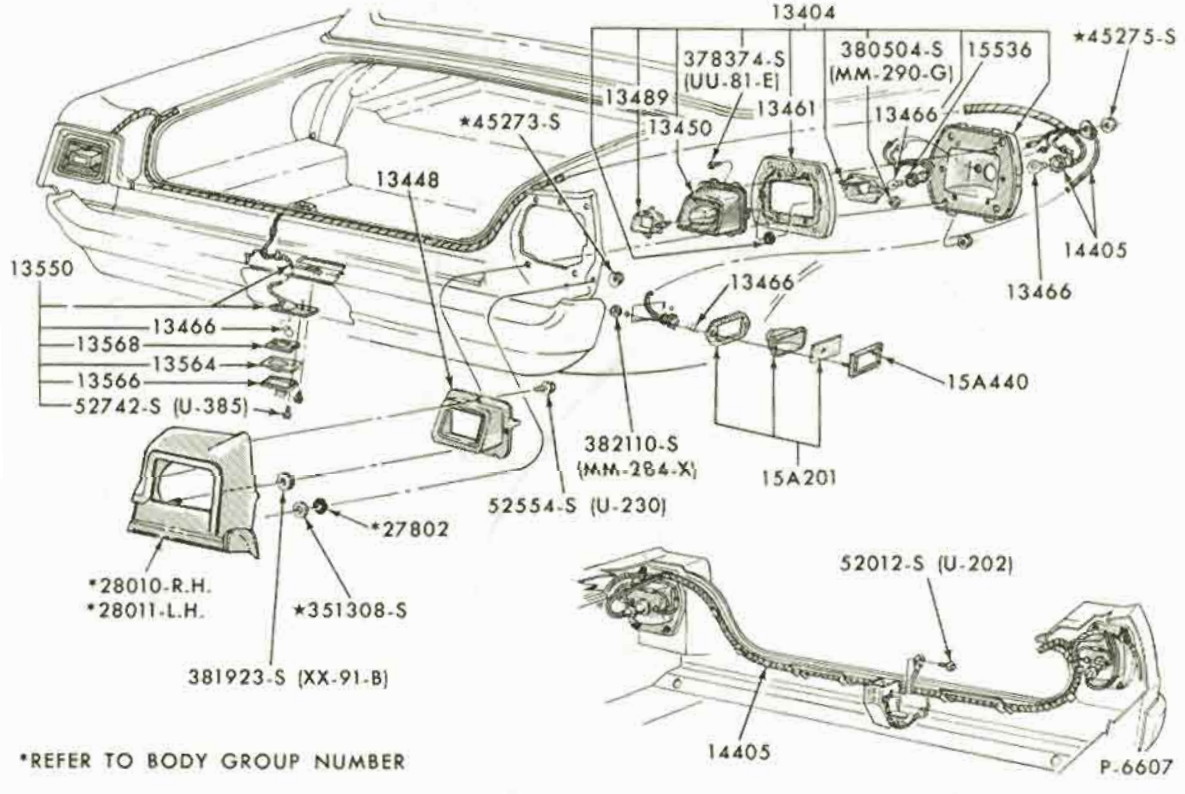

REAR LAMP, BACK UP LAMP, LICENSE PLATE LAMP and BODY SIDE MARKER LAMP
1969 FORD - except STATION WAGON

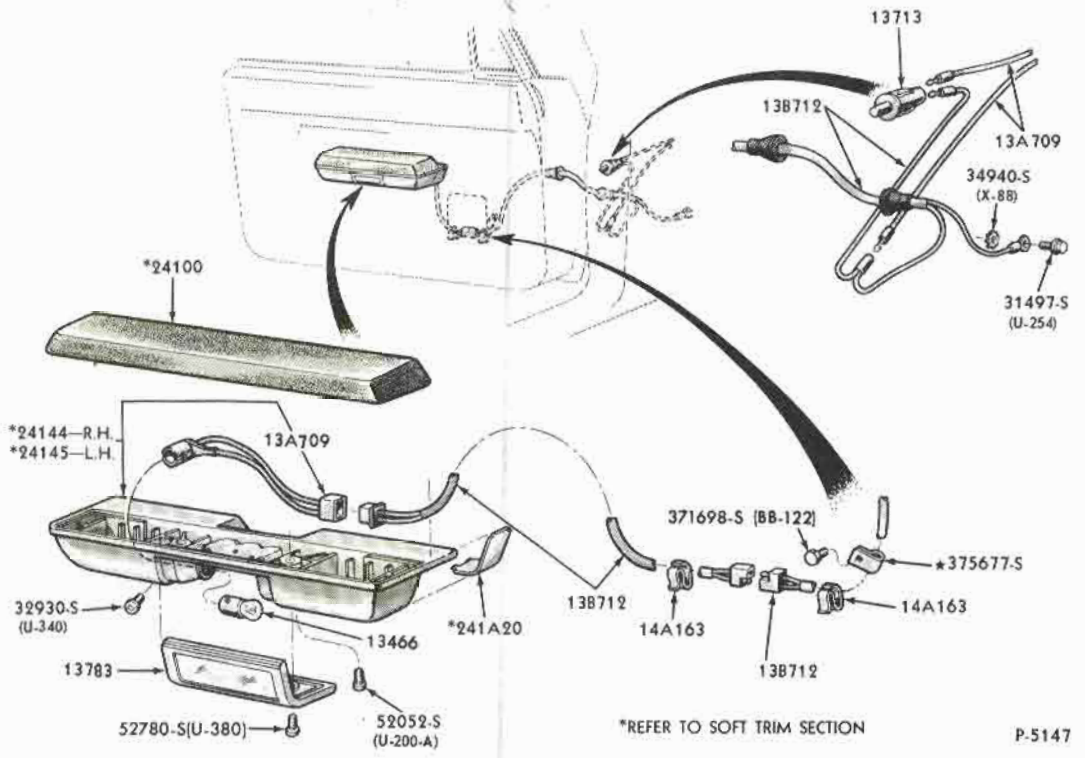

COURTESTY LAMP and WIRING - INTERIOR DOOR ARM REST
1966 FAIRLANE

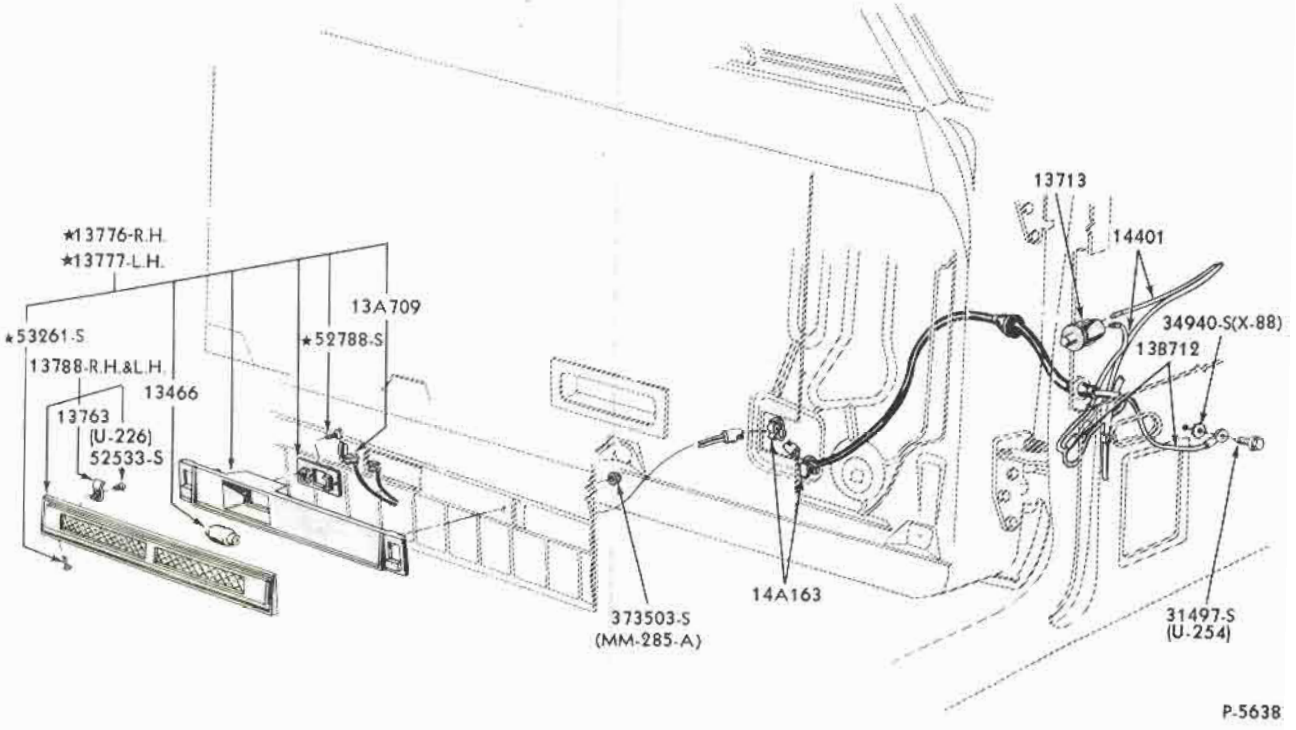

COURTESY LAMP and WIRING - INTERIOR DOOR
1967 FAIRLANE

COPYRIGHT © 1975 — FORD MOTOR COMPANY — DEARBORN, MICHIGAN

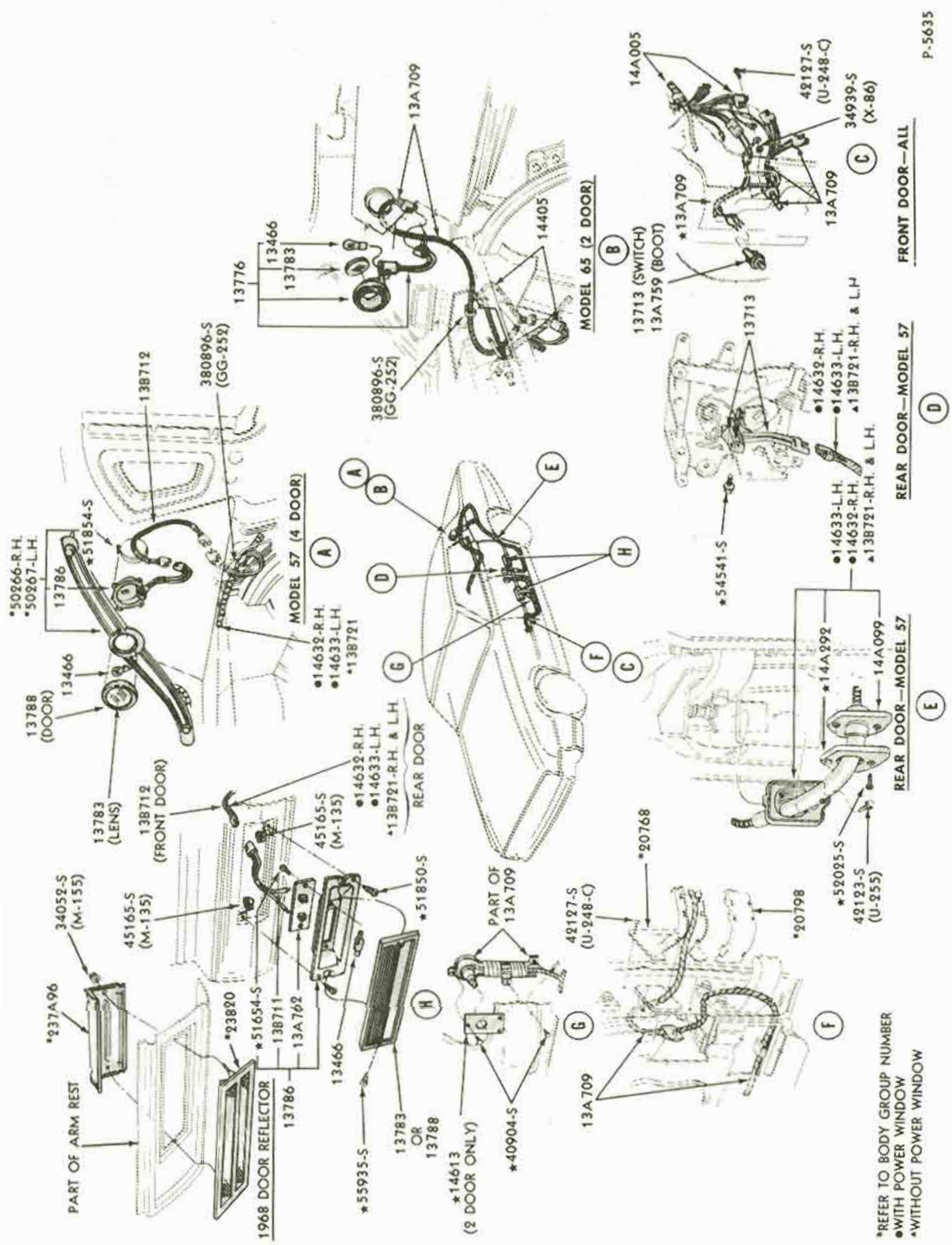

PILLAR LAMP, COURTESY LAMP and WIRING - INTERIOR DOOR
1967/71 THUNDERBIRD

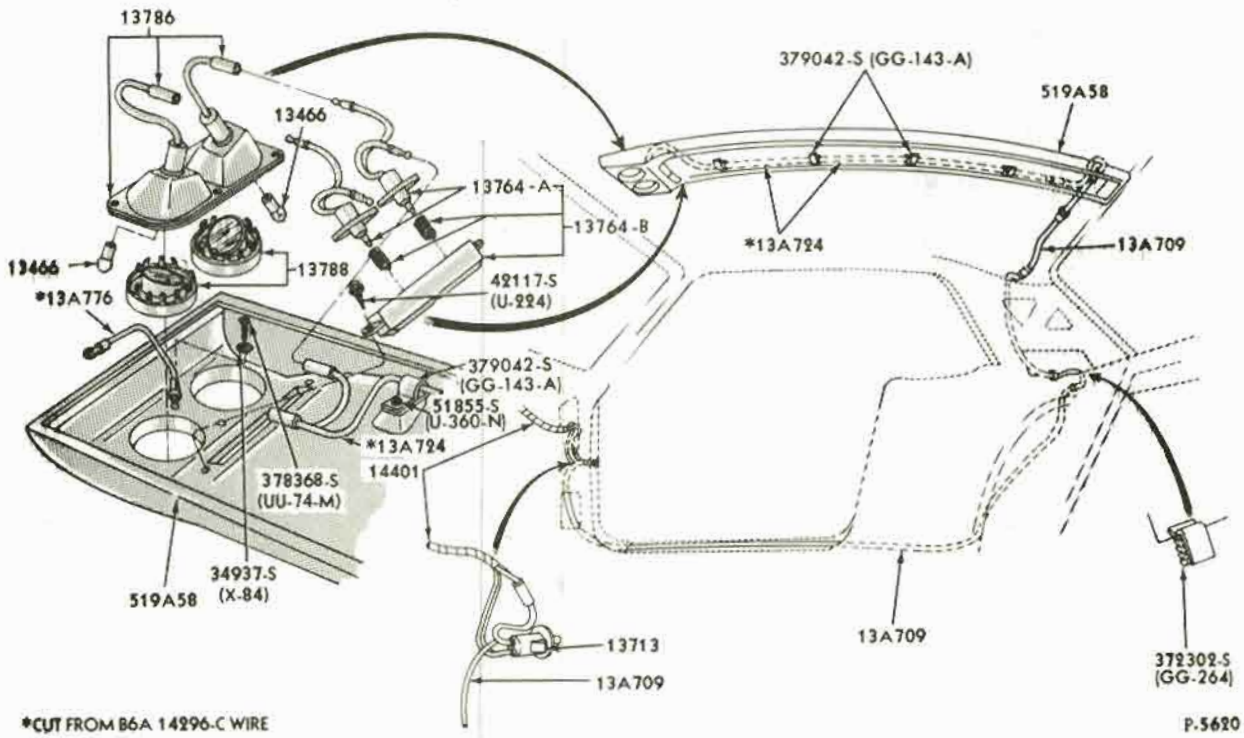

MAP LAMPS and WIRING - ROOF CONSOLE
1967/68 MUSTANG

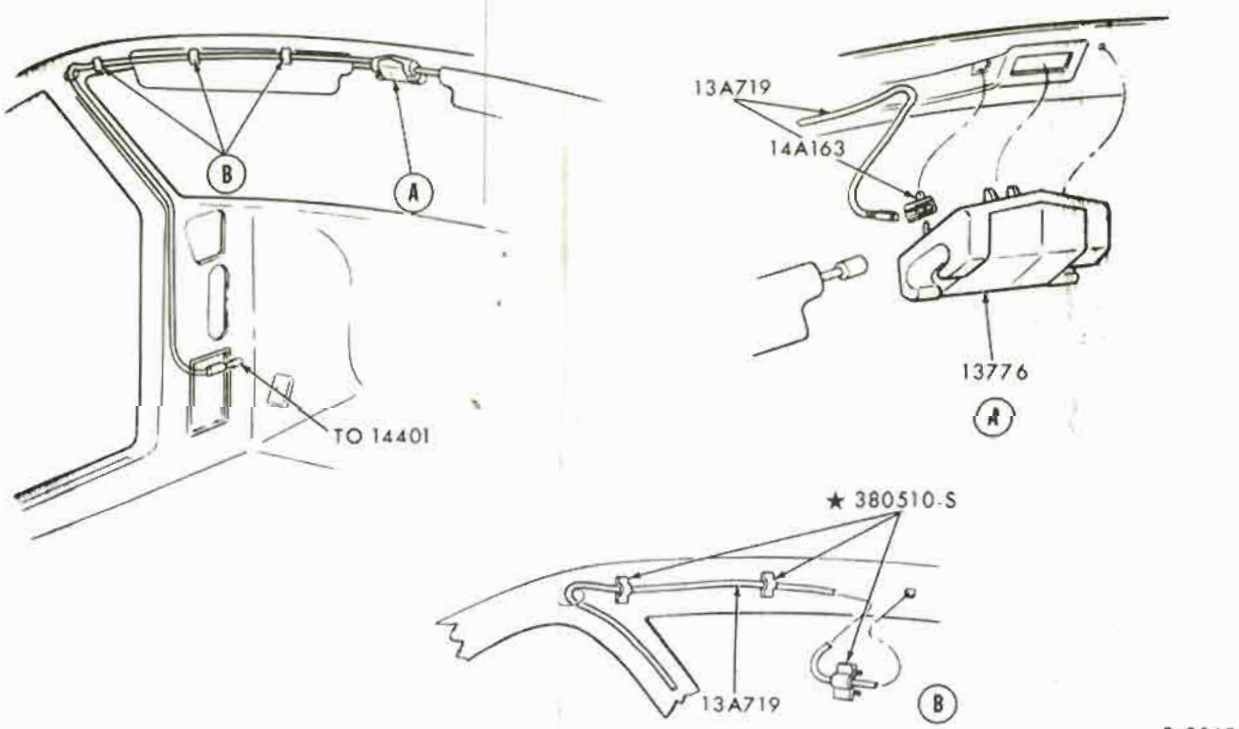

DOME LAMP
1971/72 PINTO

COPYRIGHT © 1975 — FORD MOTOR COMPANY — DEARBORN, MICHIGAN

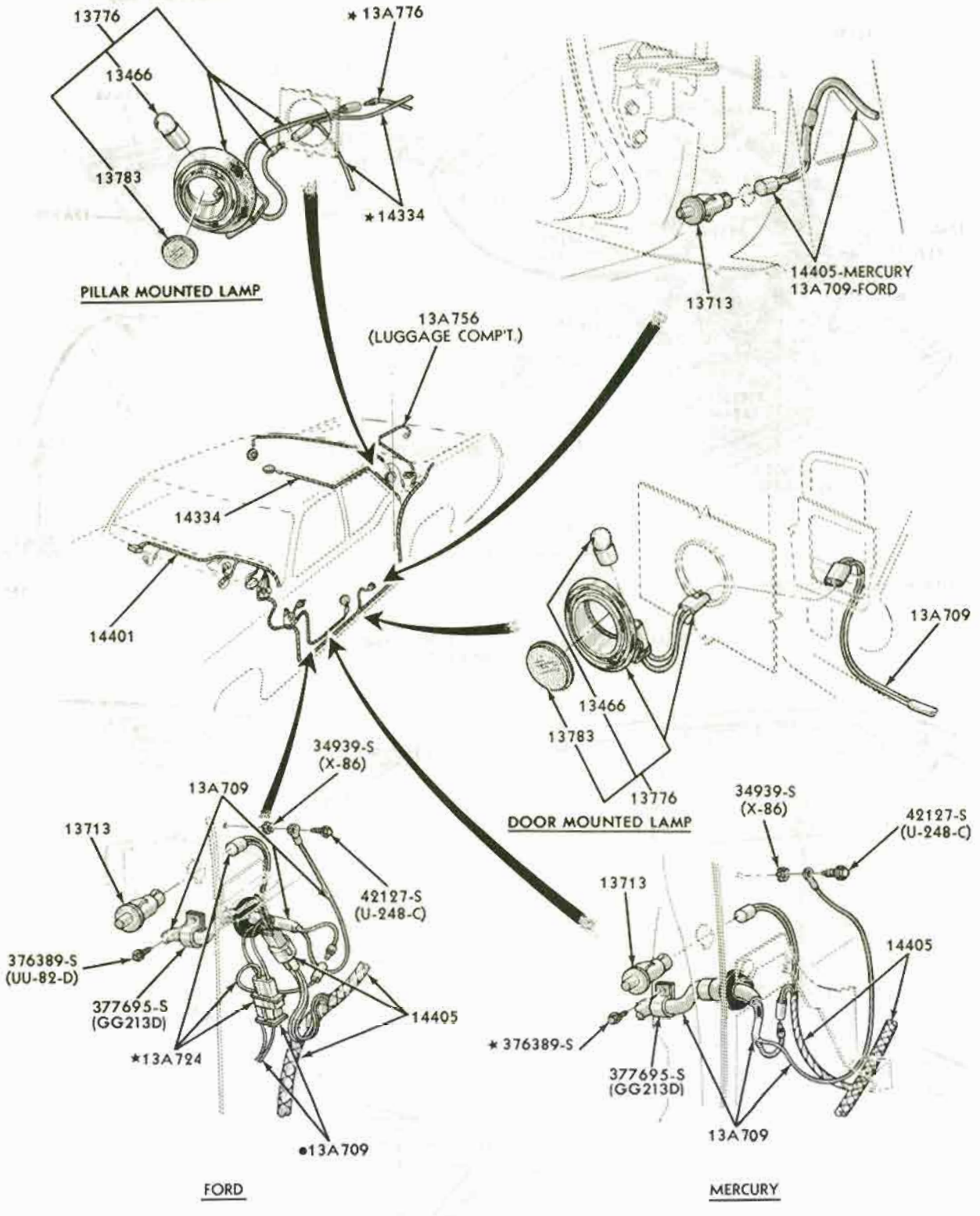

•REAR DOOR WIRING FOR 4-DOOR MODELS ONLY

P-6263

PILLAR LAMPS and COURTESY LAMPS and WIRING - INTERIOR DOOR
1968 FORD

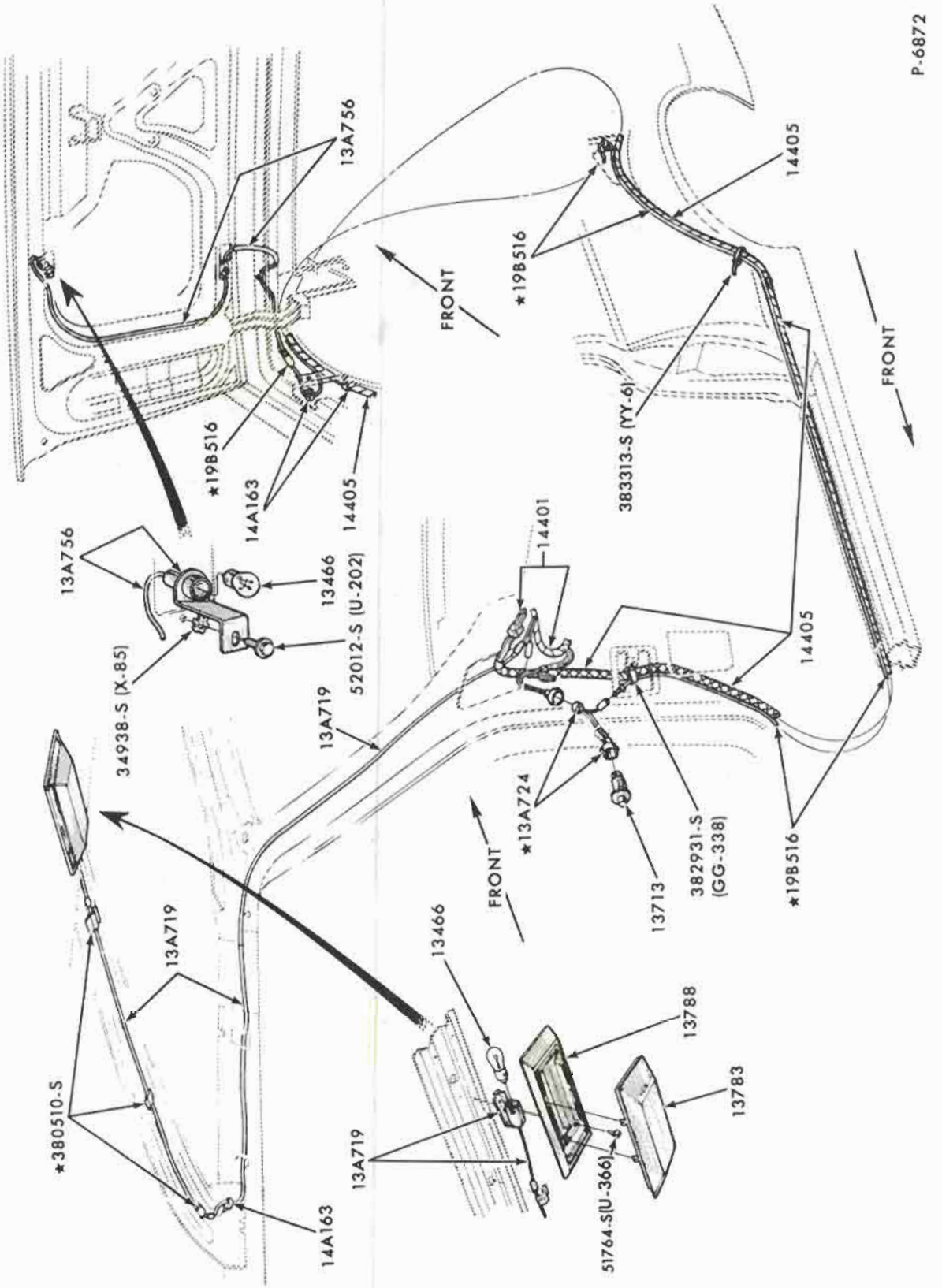

DOME LAMP, LUGGAGE COMPARTMENT LAMP and RELATED PARTS
1970/72 MAVERICK

COPYRIGHT © 1975 — FORD MOTOR COMPANY — DEARBORN, MICHIGAN

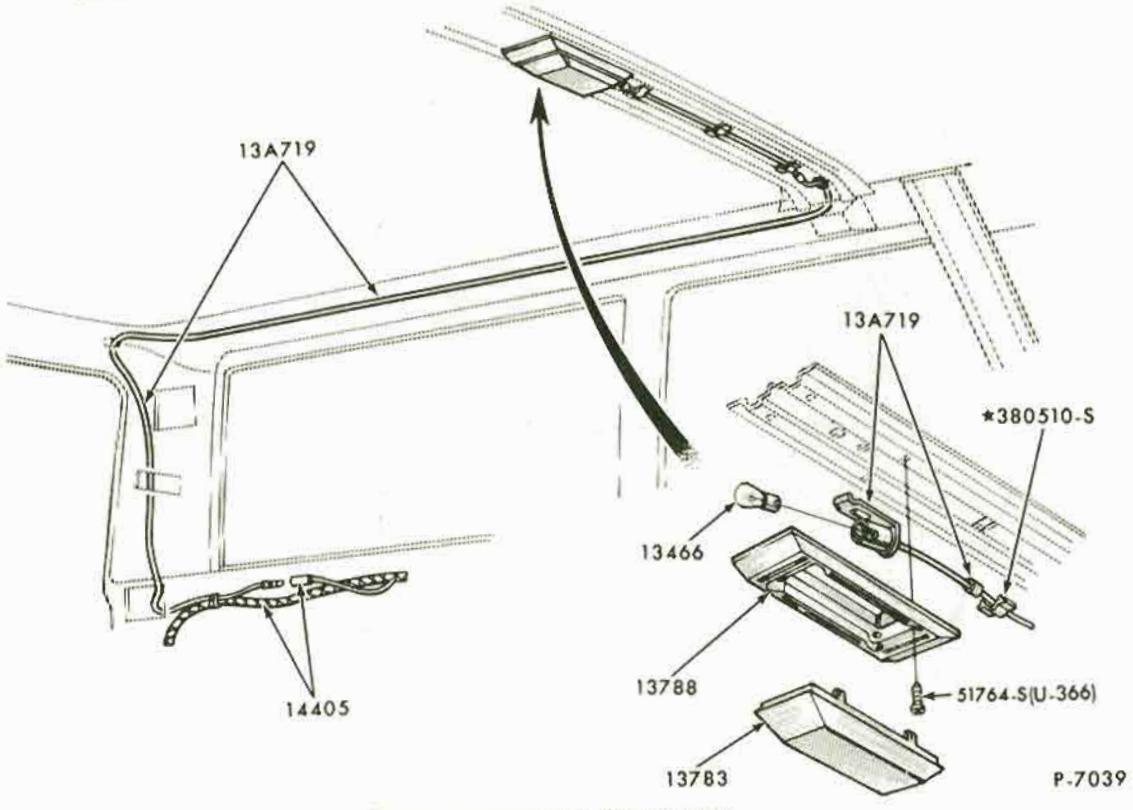

DOME LAMP and RELATED PARTS
1966/72 FORD and 1971/72 TORINO

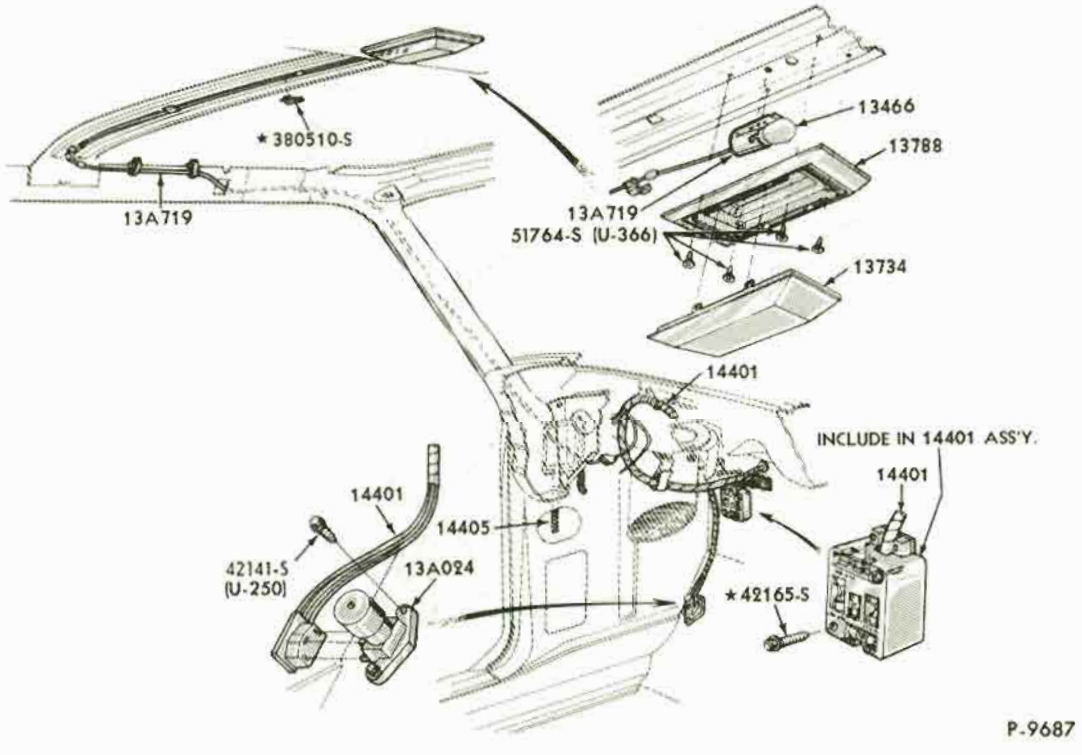

DOME LAMP
1969/70 FAIRLANE/TORINO 1966/70 FALCON

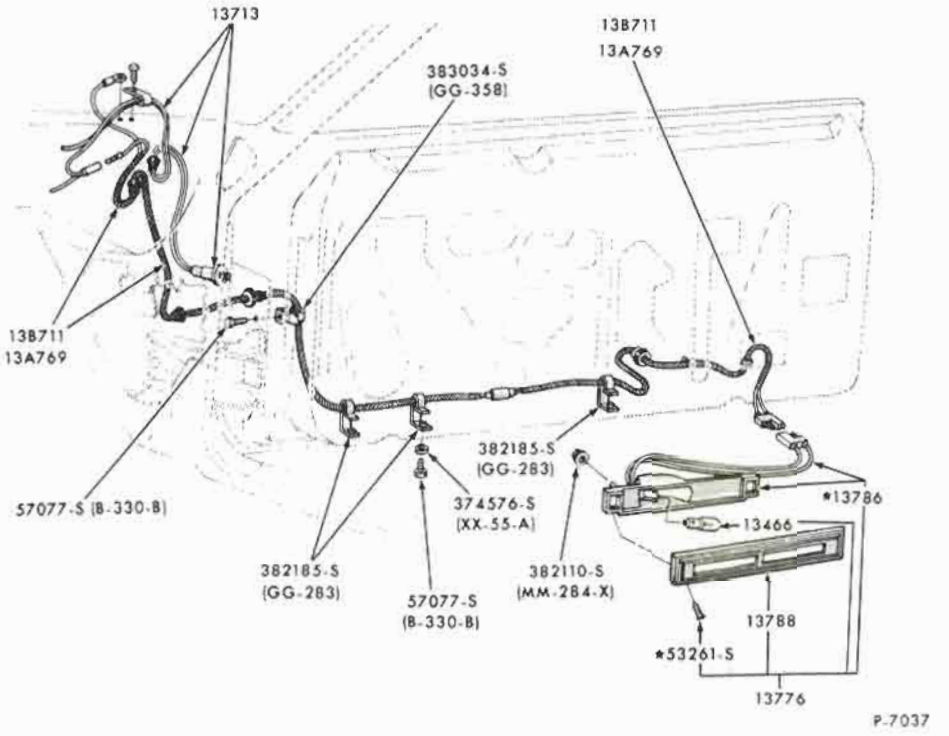

COURTESY LAMP and WIRING - INTERIOR DOOR
1969/70 FORD

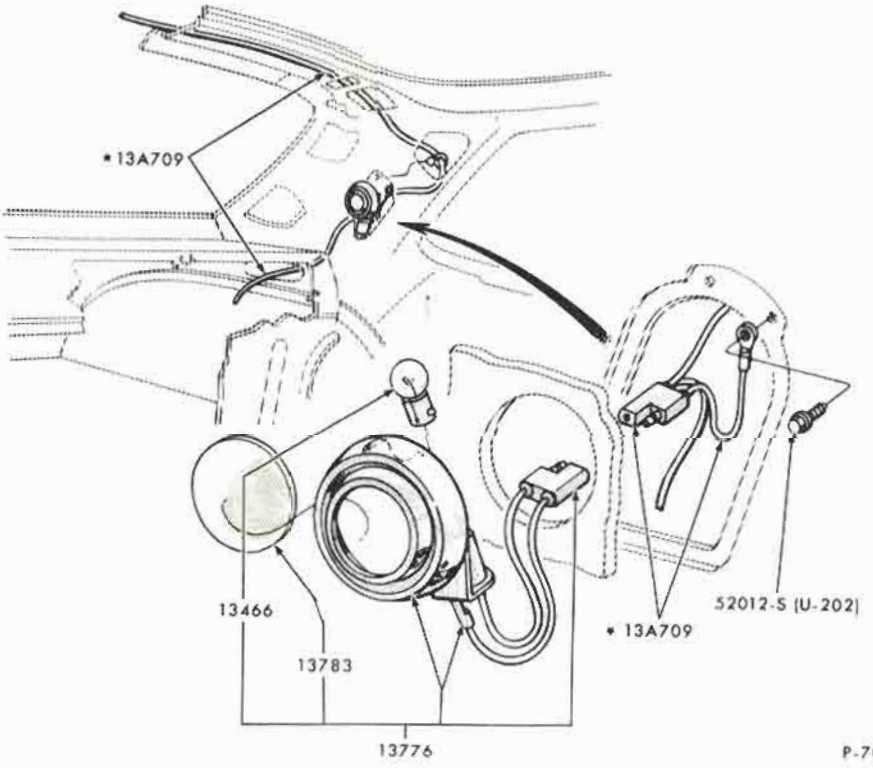

COURTESY LAMP and RELATED PARTS - PILLAR MOUNTED
1969/72 FORD

COPYRIGHT © 1975 — FORD MOTOR COMPANY — DEARBORN, MICHIGAN

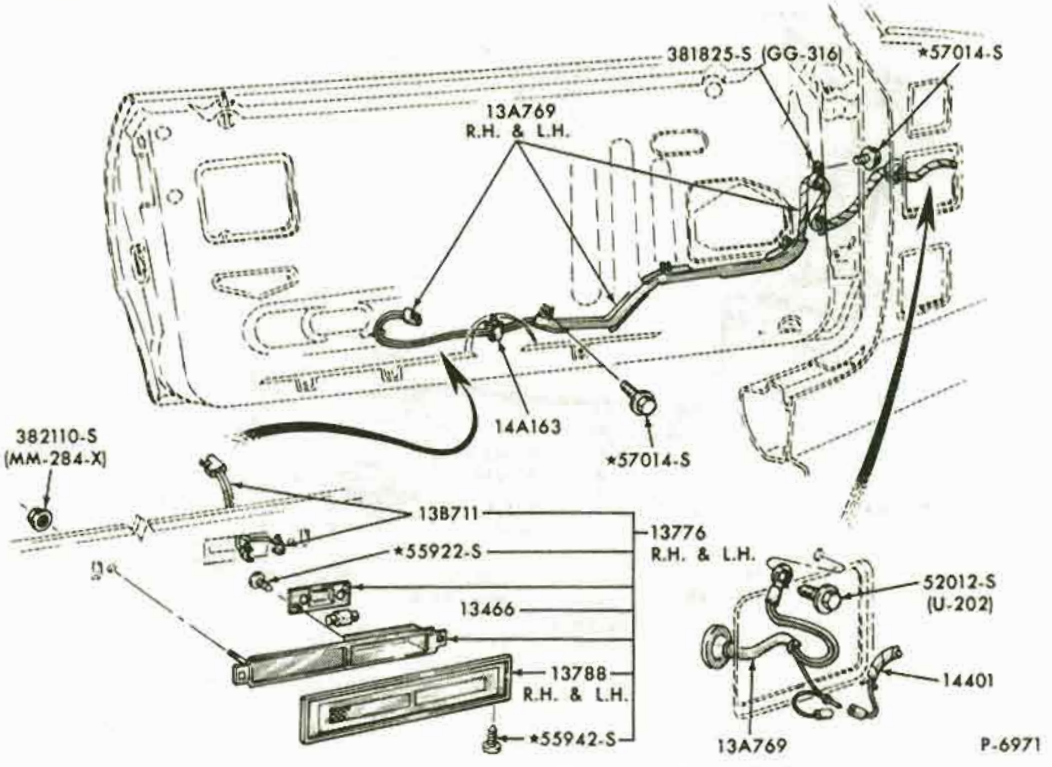

COURTESY LAMP, WIRING and RELATED PARTS - INTERIOR DOOR
1969/70 MUSTANG

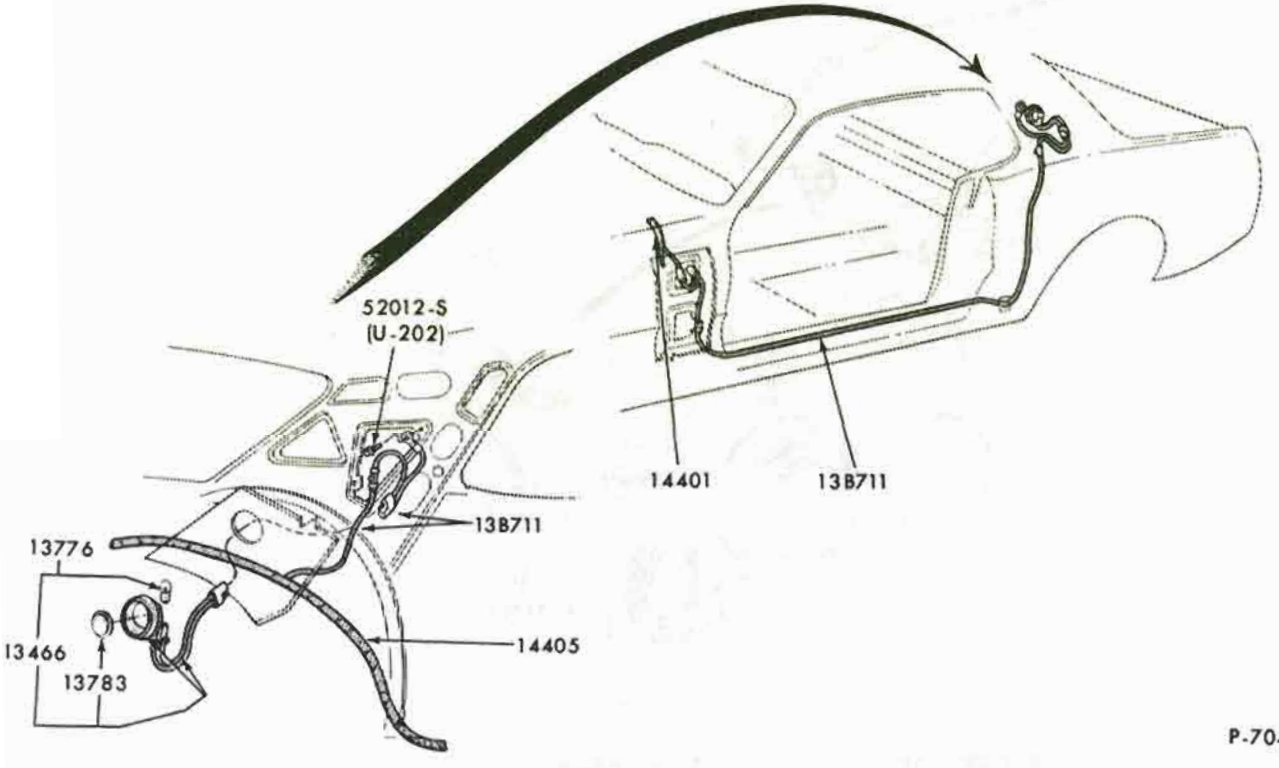

COURTESY LAMP and RELATED PARTS - PILLAR MOUNTED
1969/72 MUSTANG

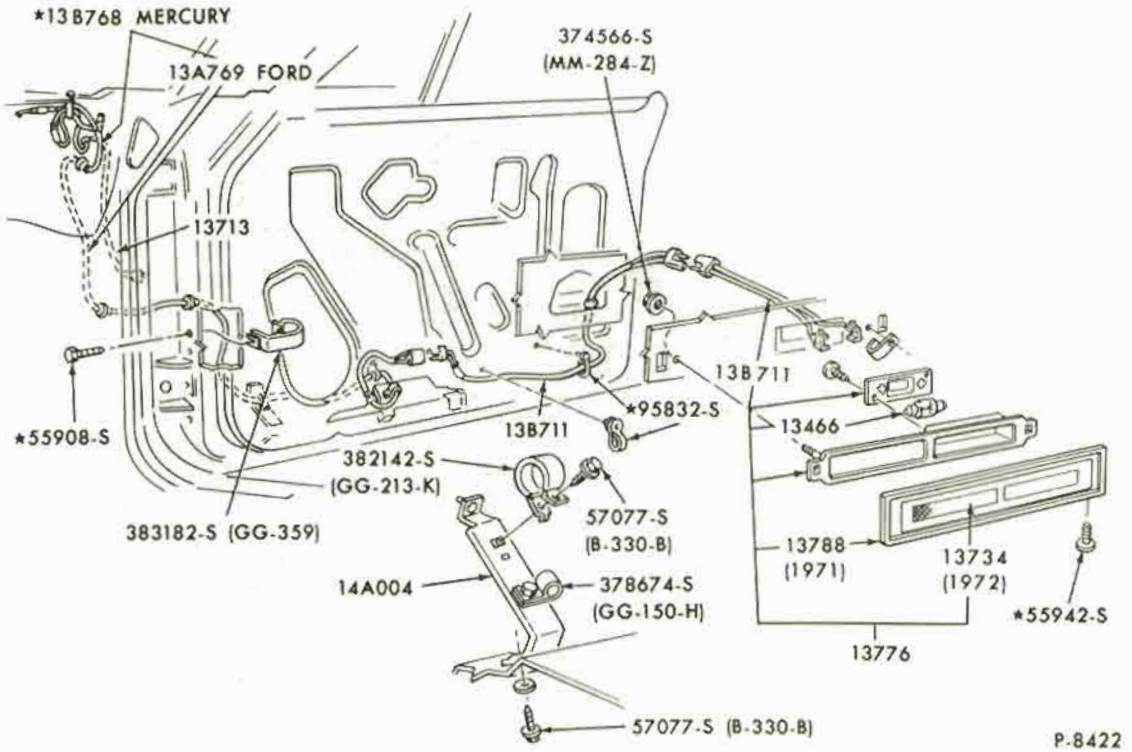

COURTESY LAMP and RELATED PARTS - INTERIOR DOOR
1971 FORD

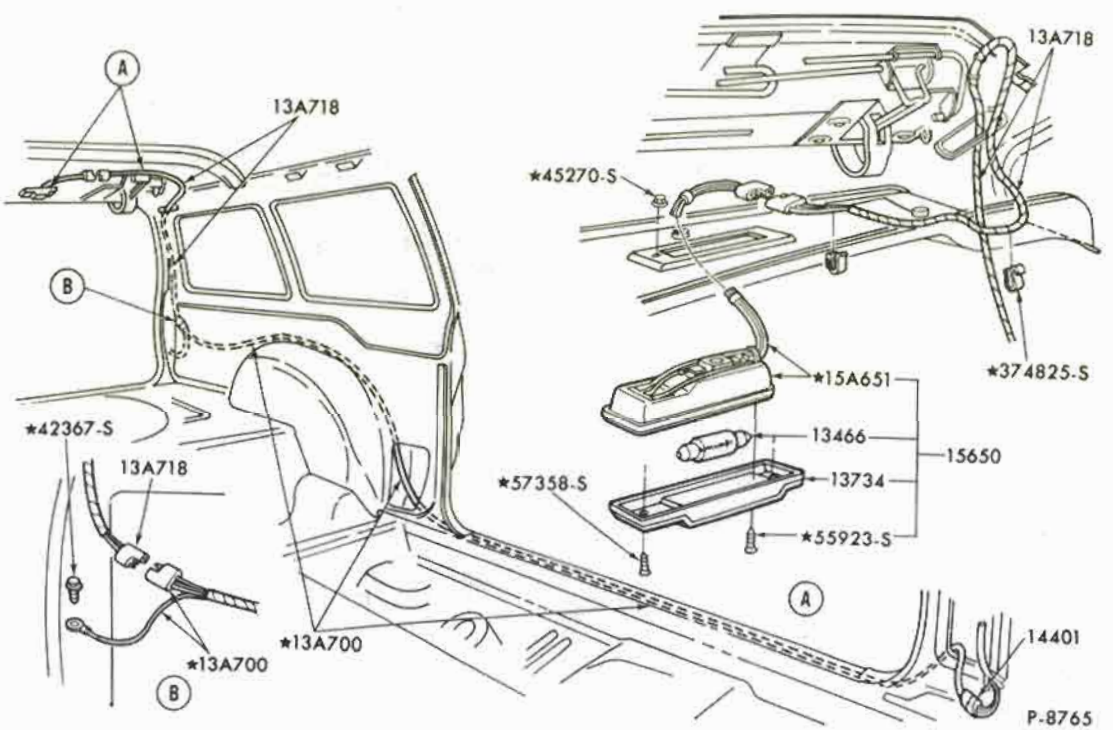

CARGO AREA LAMP
1972 PINTO - BODY TYPE 73

COPYRIGHT © 1975 — FORD MOTOR COMPANY — DEARBORN, MICHIGAN

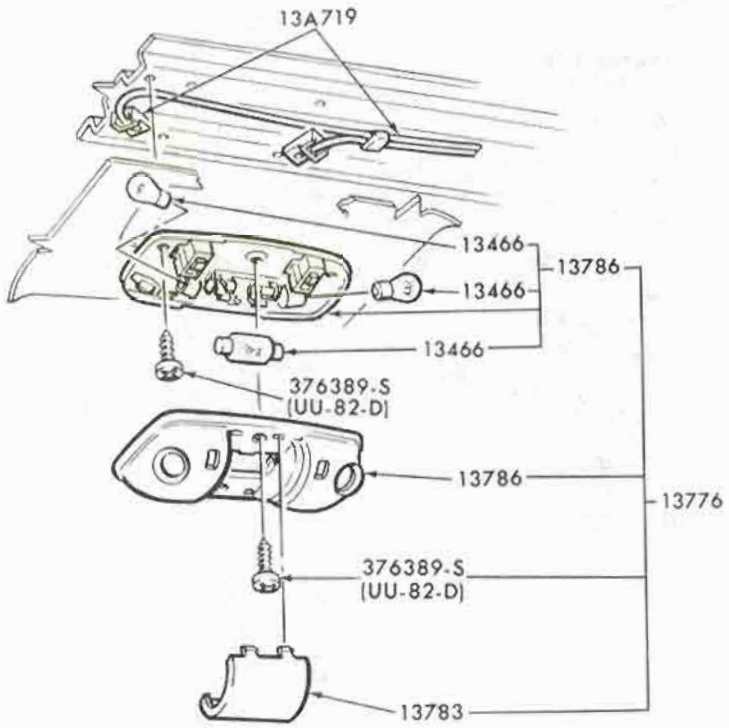

P-9197

DOME LAMP
1972 THUNDERBIRD and TORINO

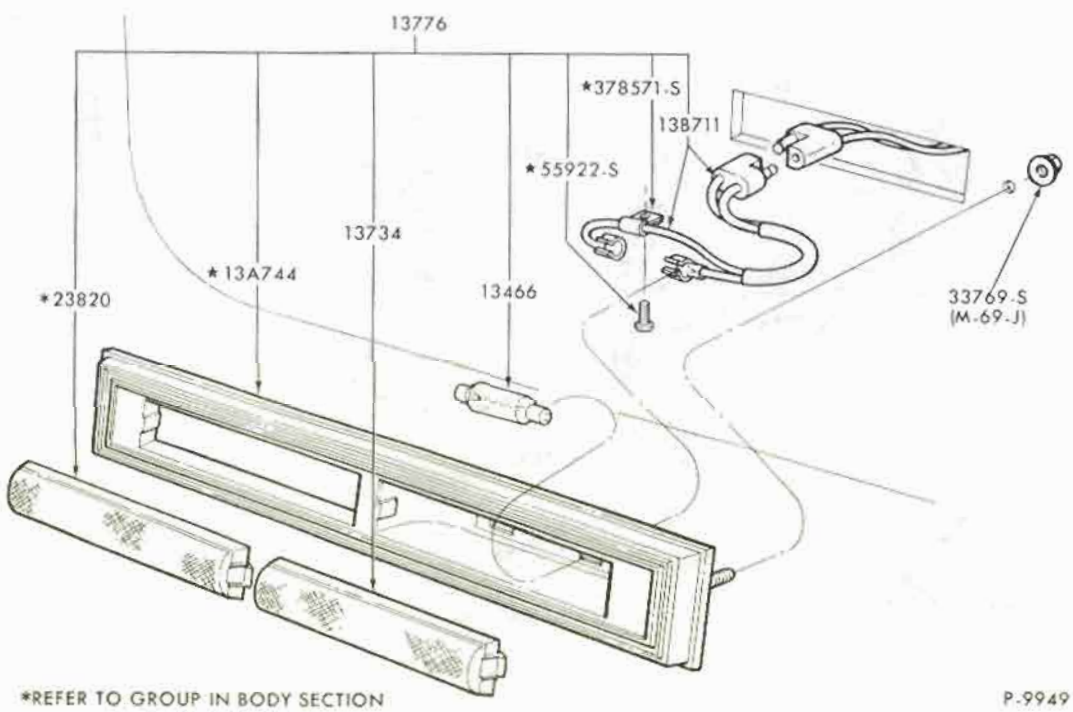

*REFER TO GROUP IN BODY SECTION

P-9949

COURTESY LAMP and RELATED PARTS - INTERIOR DOOR
1972 FORD, THUNDERBIRD

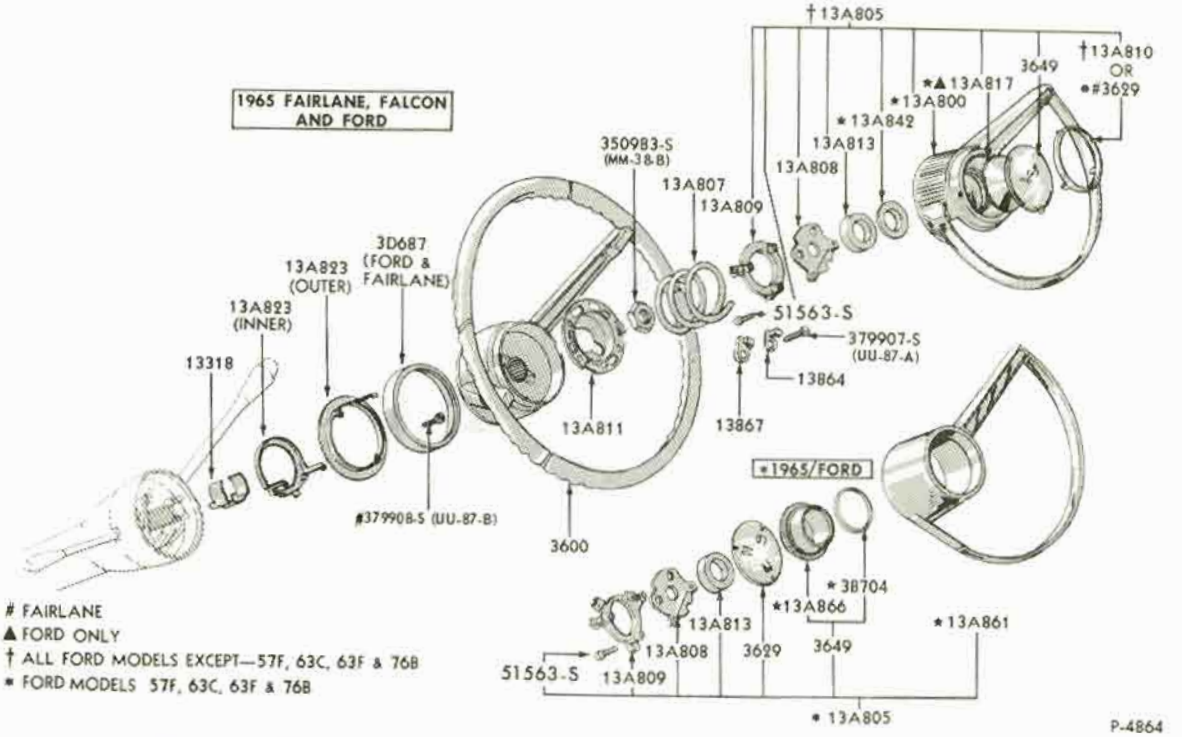

HORN RING, STEERING WHEEL and RELATED PARTS -- NON - WOODGRAIN WHEEL
1965/66 FORD 1965 FAIRLANE and FALCON

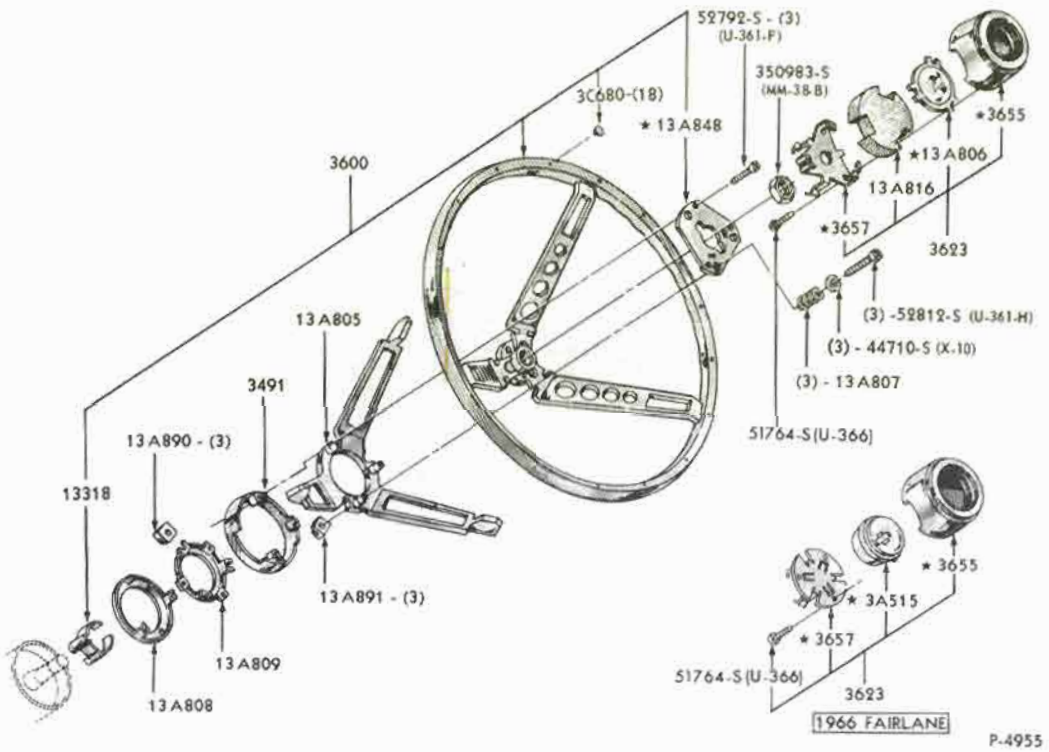

HORN RING, STEERING WHEEL and RELATED PARTS --WOODGRAIN WHEEL
1965/66 MUSTANG 1966 FORD - 7 LITRE 1966 FAIRLANE

COPYRIGHT © 1975 — FORD MOTOR COMPANY — DEARBORN, MICHIGAN

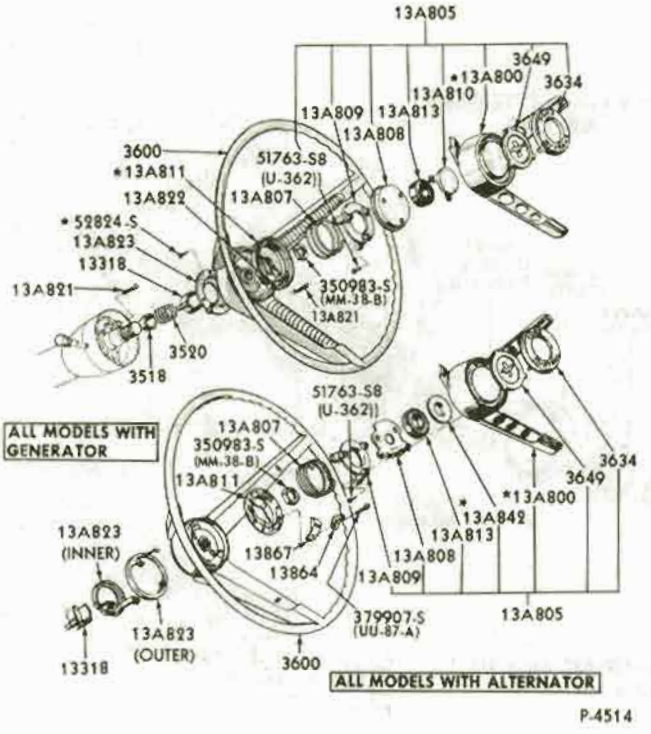

HORN RING, STEERING WHEEL and RELATED PARTS -- NON - WOODGRAIN WHEEL
1965/66 MUSTANG

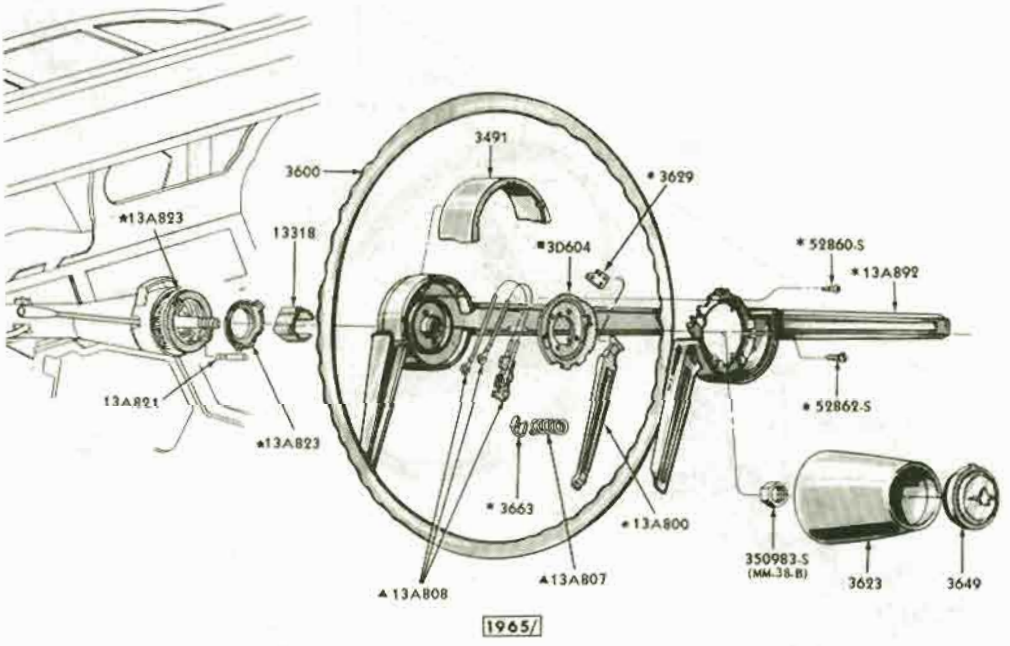

* SUPPLIED ONLY IN 13A805 HORN BUTTON ASSEMBLY
▲ ALSO SUPPLIED IN 13A805 HORN BUTTON ASSEMBLY
■ SUPPLIED ONLY IN 3600 WHEEL ASSEMBLY

P-4544

HORN RING, STEERING WHEEL and RELATED PARTS
1965/66 THUNDERBIRD - EXCEPT WITH SPEED CONTROL

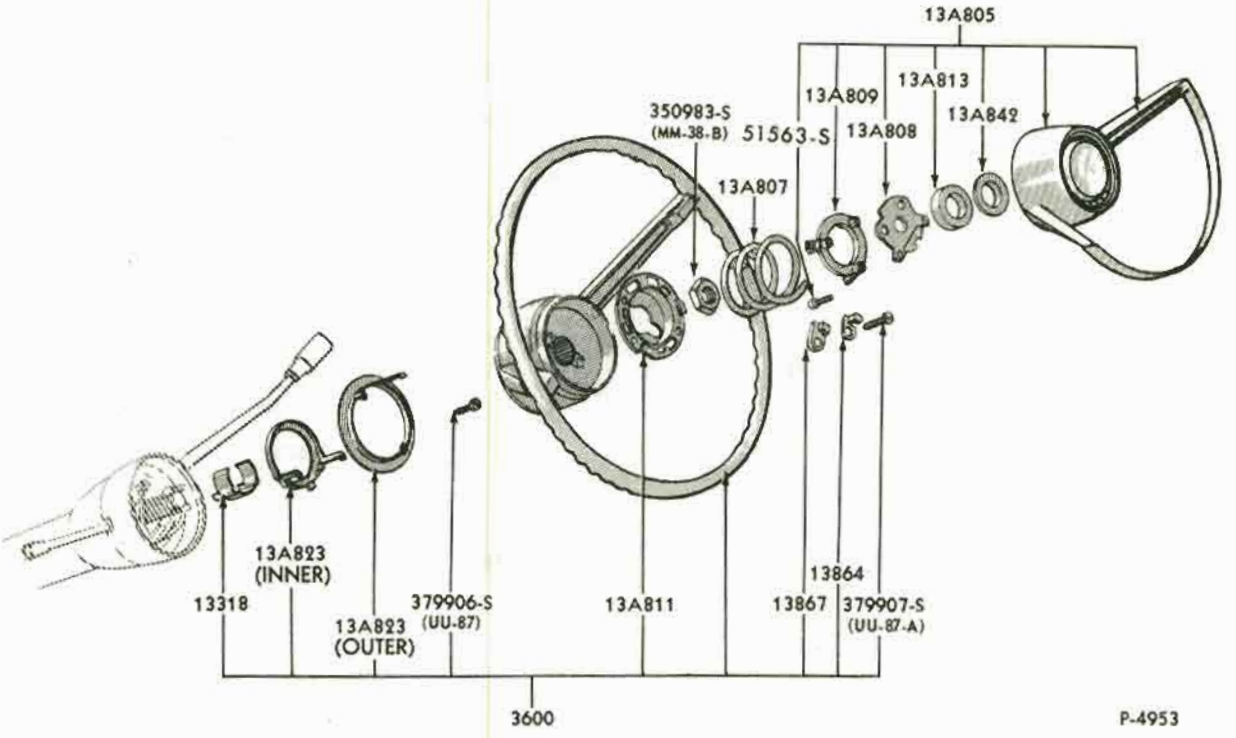

HORN RING, STEERING WHEEL and RELATED PARTS
1966/72 BRONCO

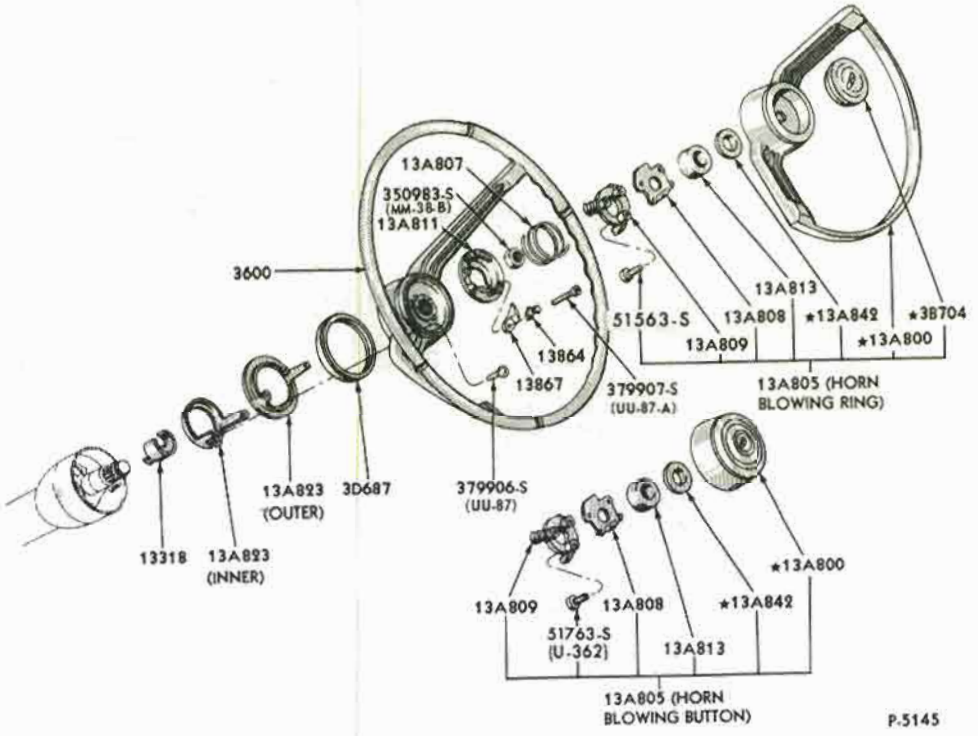

HORN RING, STEERING WHEEL and RELATED PARTS -- NON-WOODGRAIN WHEEL
1966 FAIRLANE and FALCON

COPYRIGHT © 1975 — FORD MOTOR COMPANY — DEARBORN, MICHIGAN

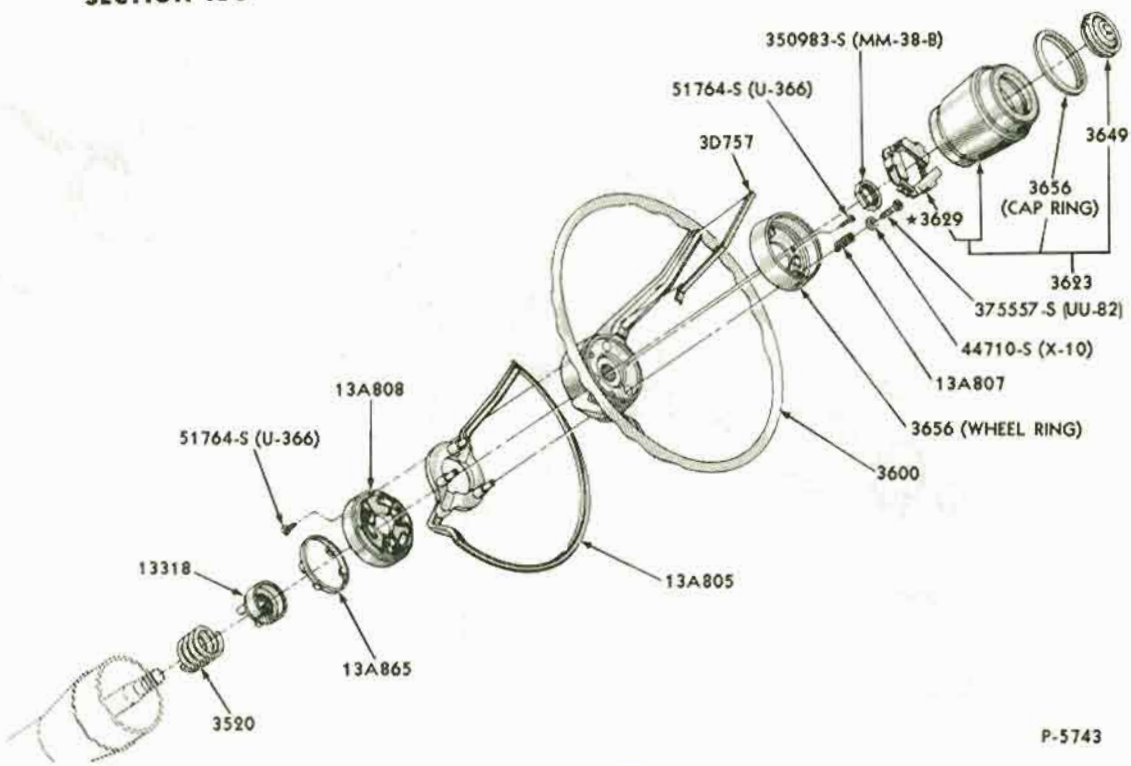

HORN RING, STEERING WHEEL and RELATED PARTS
1967 THUNDERBIRD - EXCEPT WITH SPEED CONTROL

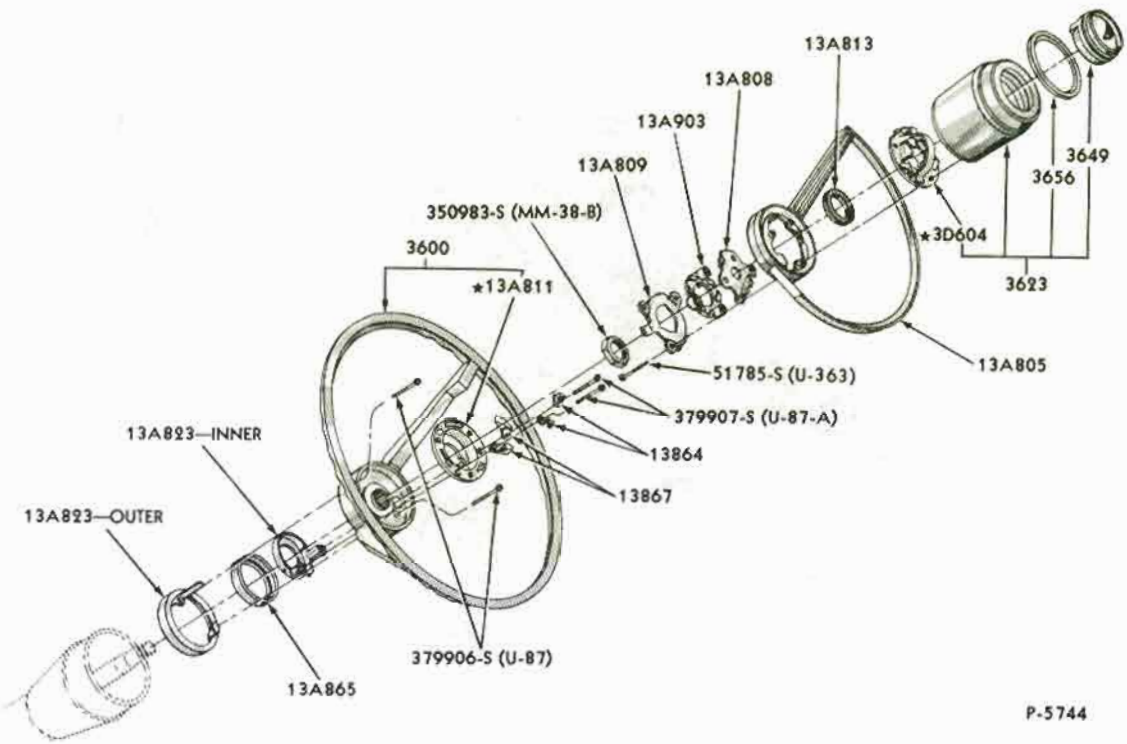

HORN RING, STEERING WHEEL and RELATED PARTS -- NON - WOODGRAIN WHEEL
1967 FORD

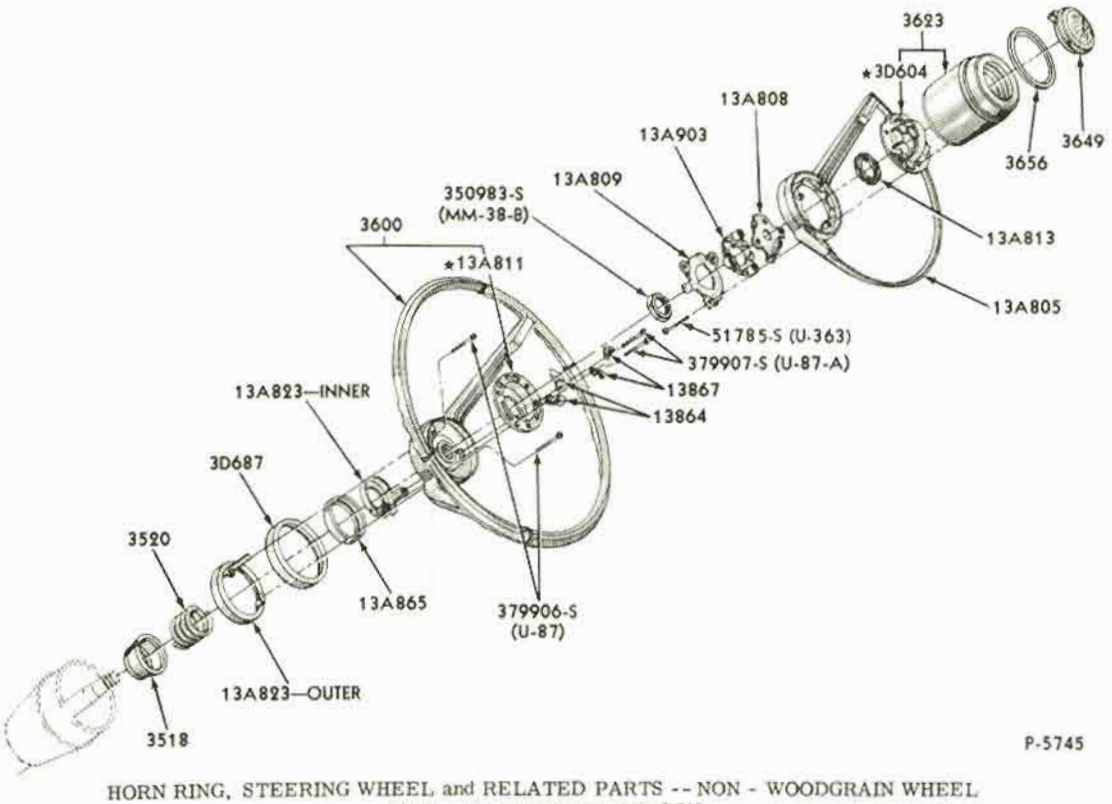

HORN RING, STEERING WHEEL and RELATED PARTS -- NON - WOODGRAIN WHEEL
1967 FAIRLANE and FALCON

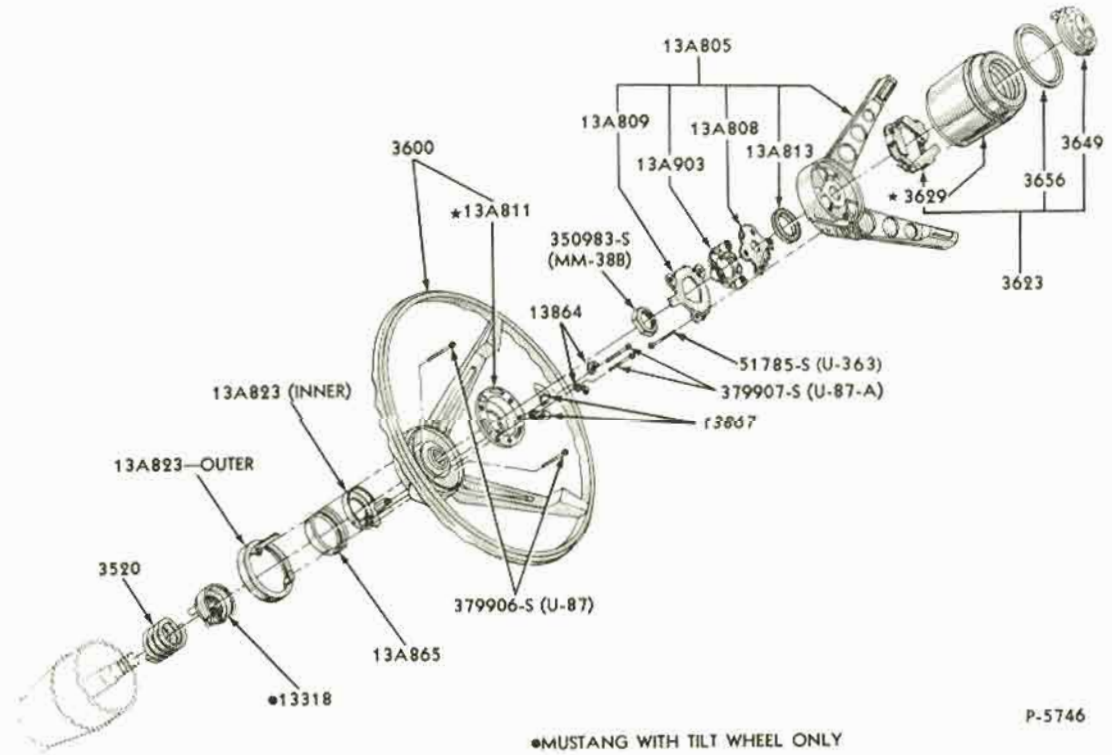

•MUSTANG WITH TILT WHEEL ONLY

HORN RING, STEERING WHEEL and RELATED PARTS -- NON - WOODGRAIN WHEEL
1967 MUSTANG

COPYRIGHT © 1975 — FORD MOTOR COMPANY — DEARBORN, MICHIGAN

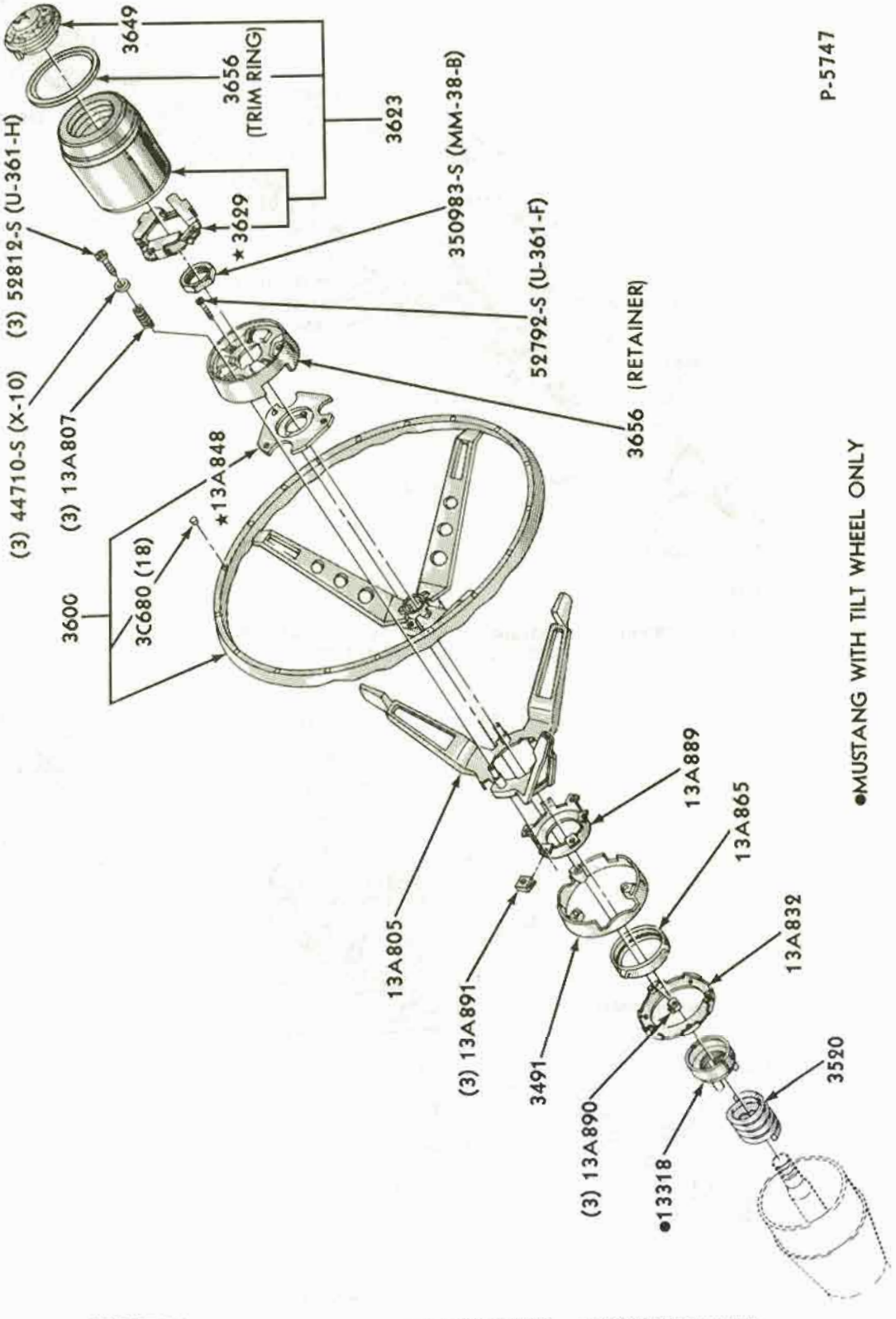

HORN RING, STEERING WHEEL and RELATED PARTS -- WOODGRAIN WHEEL
1967 FORD, FAIRLANE, MUSTANG and FALCON

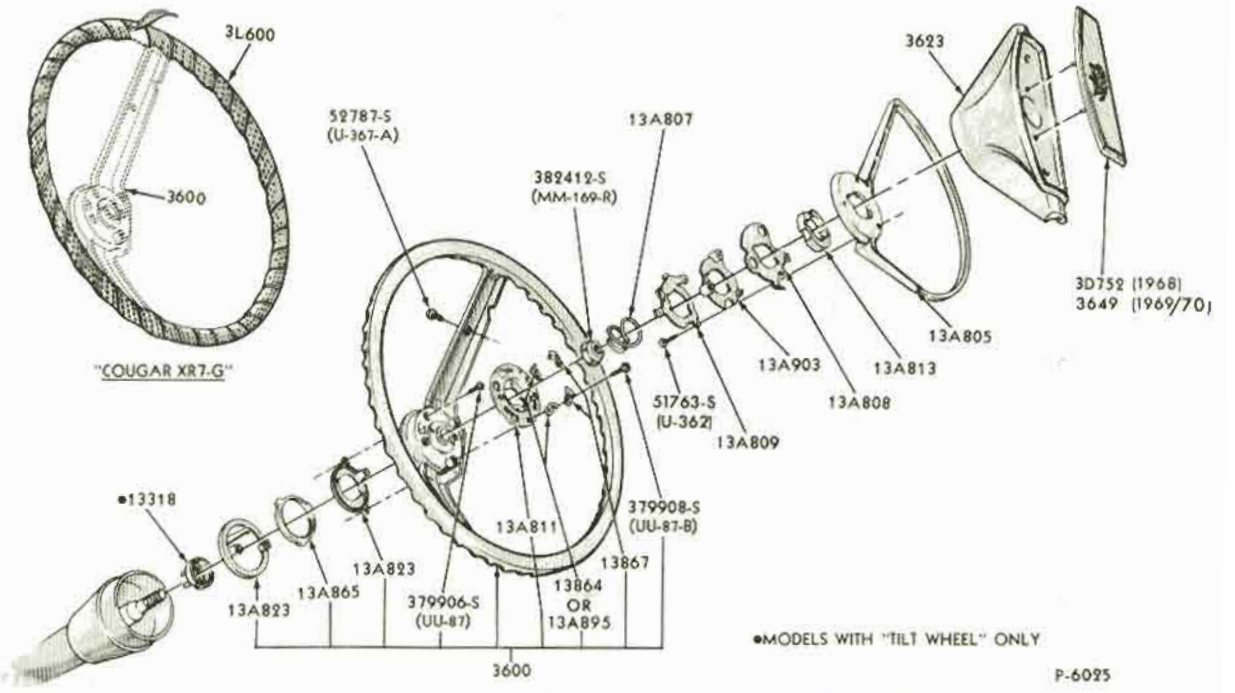

HORN RING, 2 - SPOKE STEERING WHEEL and RELATED PARTS
1968 FORD, 1968/69 FAIRLANE, MUSTANG, FALCON
1968/69 THUNDERBIRD - EXCEPT WITH SPEED CONTROL
1969 FORD - EXCEPT WITH SPEED CONTROL, 1970 MAVERICK - WITHOUT LOCKING STEERING COLUMN

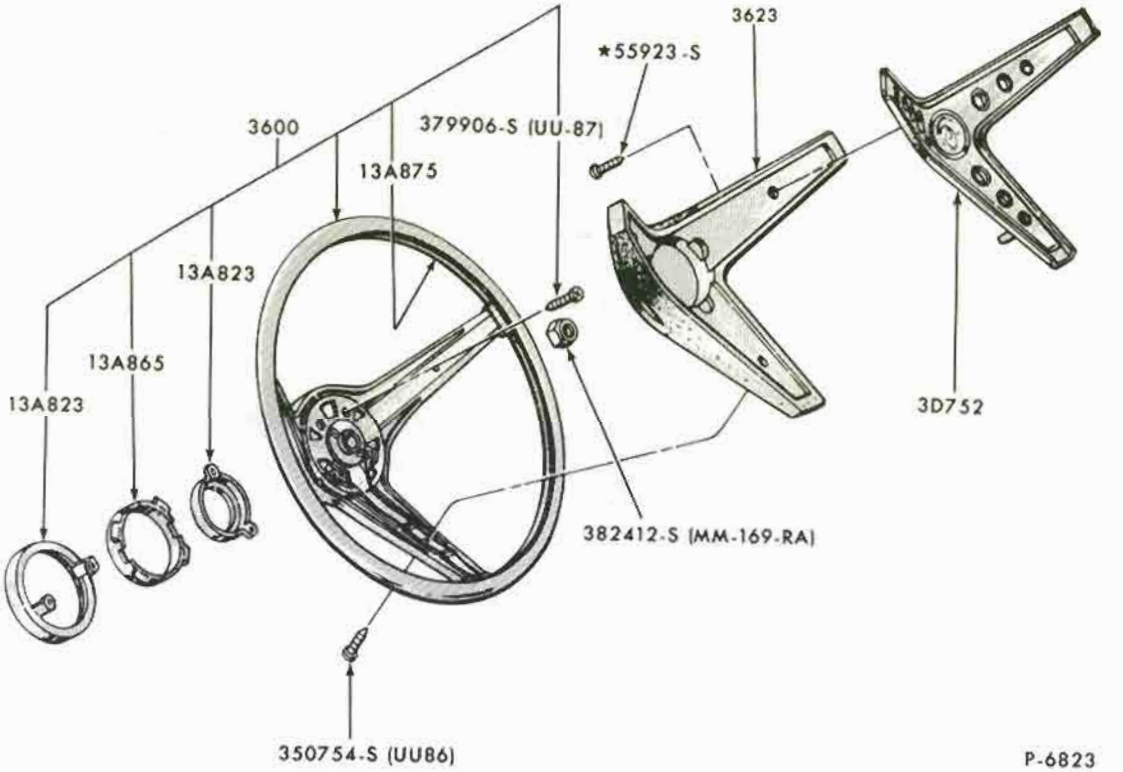

3 - SPOKE STEERING WHEEL WITH RIM BLOW HORN and RELATED PARTS
1969 FORD, FAIRLANE, MUSTANG, FALCON 1970 MAVERICK - WITHOUT LOCKING STEERING COLUMN

COPYRIGHT © 1975 — FORD MOTOR COMPANY — DEARBORN, MICHIGAN

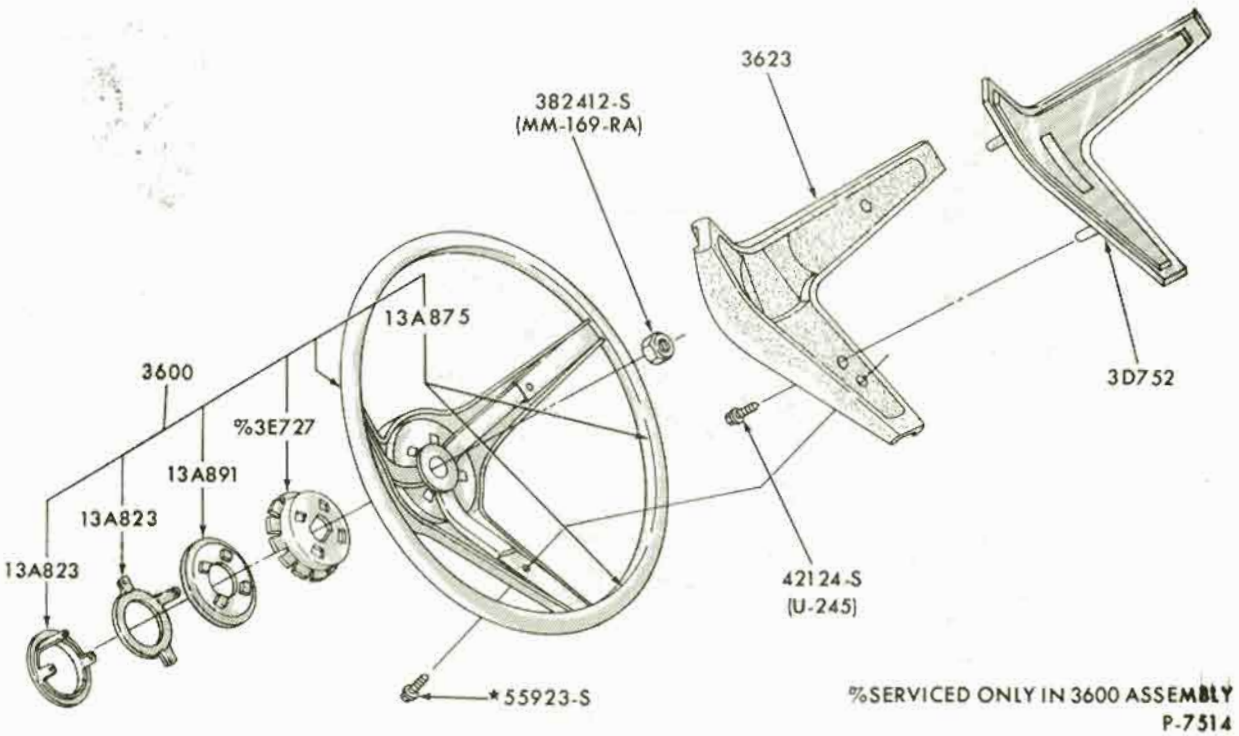

3 - SPOKE STEERING WHEEL WITH RIM BLOW HORN and RELATED PARTS
1970/72 FORD, 1970 FAIRLANE/TORINO "BEFORE 1/5/70", 1970 MUSTANG-GT350/500, 1970/72 THUNDERBIRD
1970/71 MAVERICK-with LOCKING STEERING COLUMN

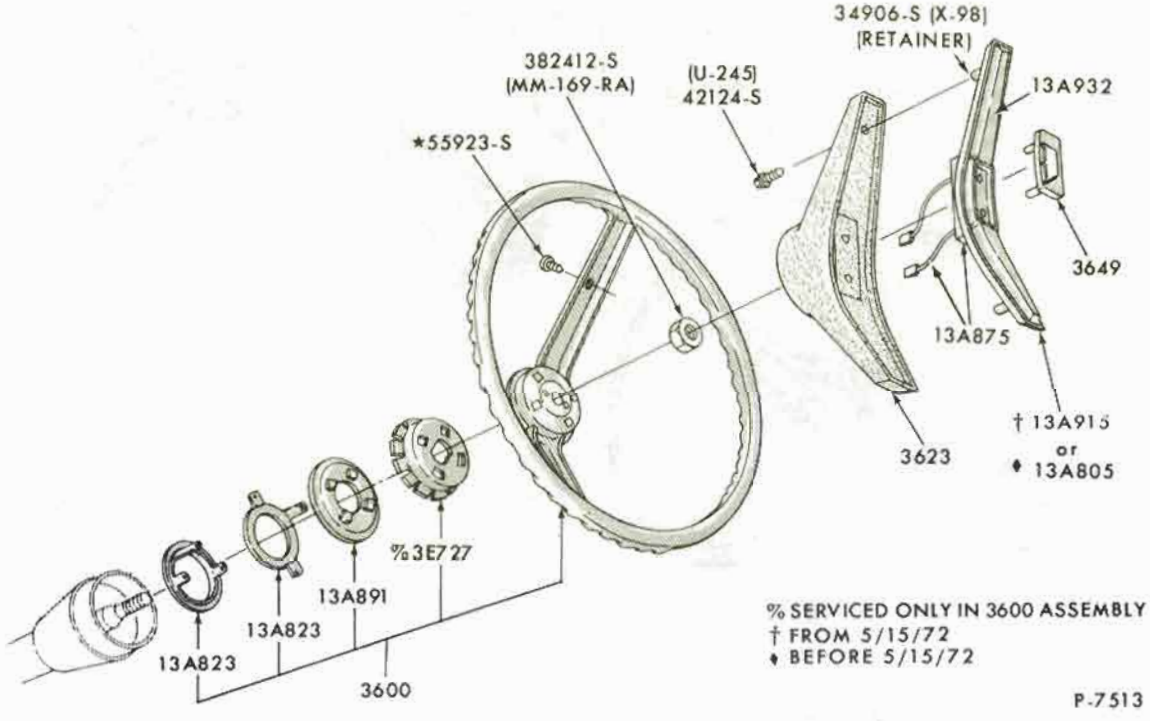

2 - SPOKE STEERING WHEEL and RELATED PARTS
1970/72 FAIRLANE/TORINO, MUSTANG, FALCON 1970/72 FORD, THUNDERBIRD-EXCEPT WITH SPEED CONTROL
1970/72 MAVERICK-with LOCKING STEERING COLUMN 1971/72 PINTO

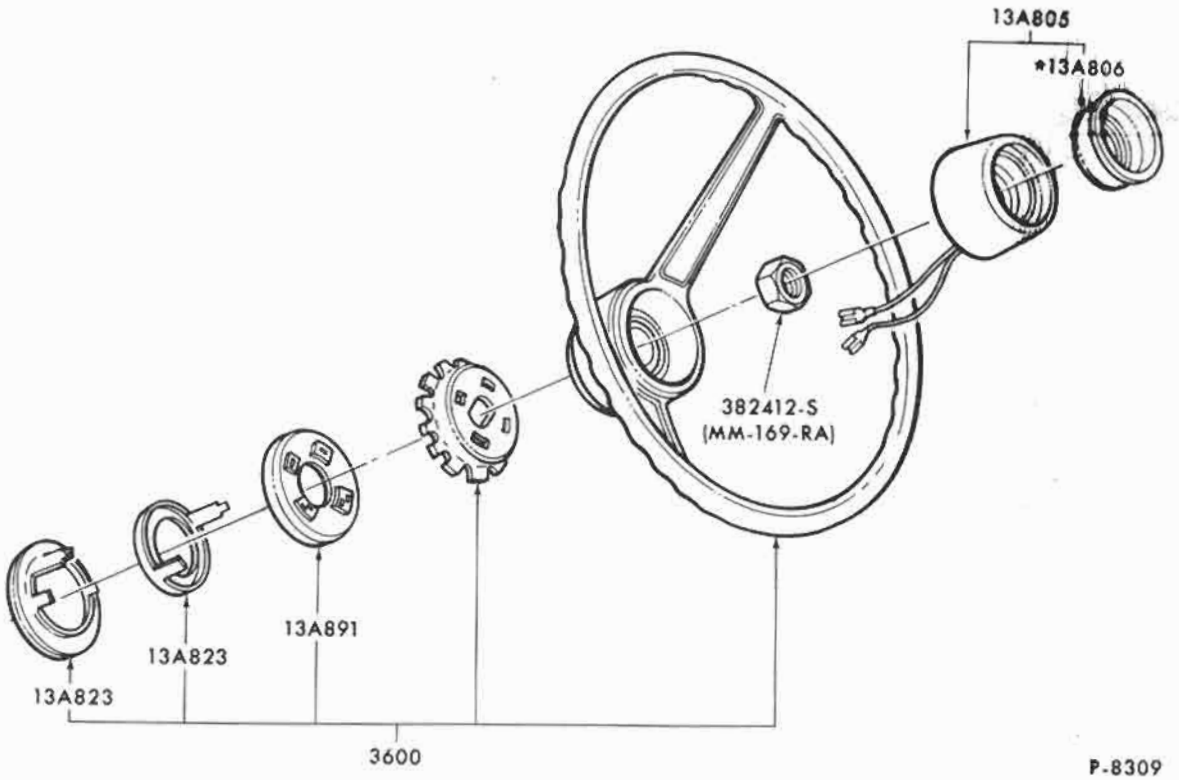

2 - SPOKE STEERING WHEEL WITH BUTTON BLOW HORN and RELATED PARTS
1971/72 MAVERICK, MUSTANG, PINTO

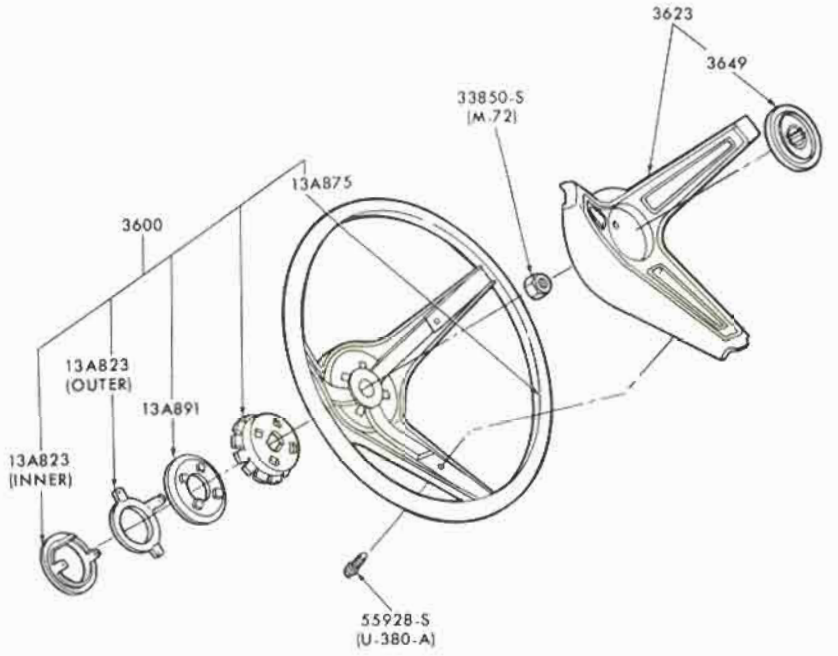

3 SPOKE STEERING WHEEL WITH RIM BLOW HORN and RELATED PARTS
1970/72 FAIRLANE/TORINO-"FROM 1/5/70", 1970/72 MUSTANG-EXCEPT GT350/500

COPYRIGHT © 1975 — FORD MOTOR COMPANY — DEARBORN, MICHIGAN

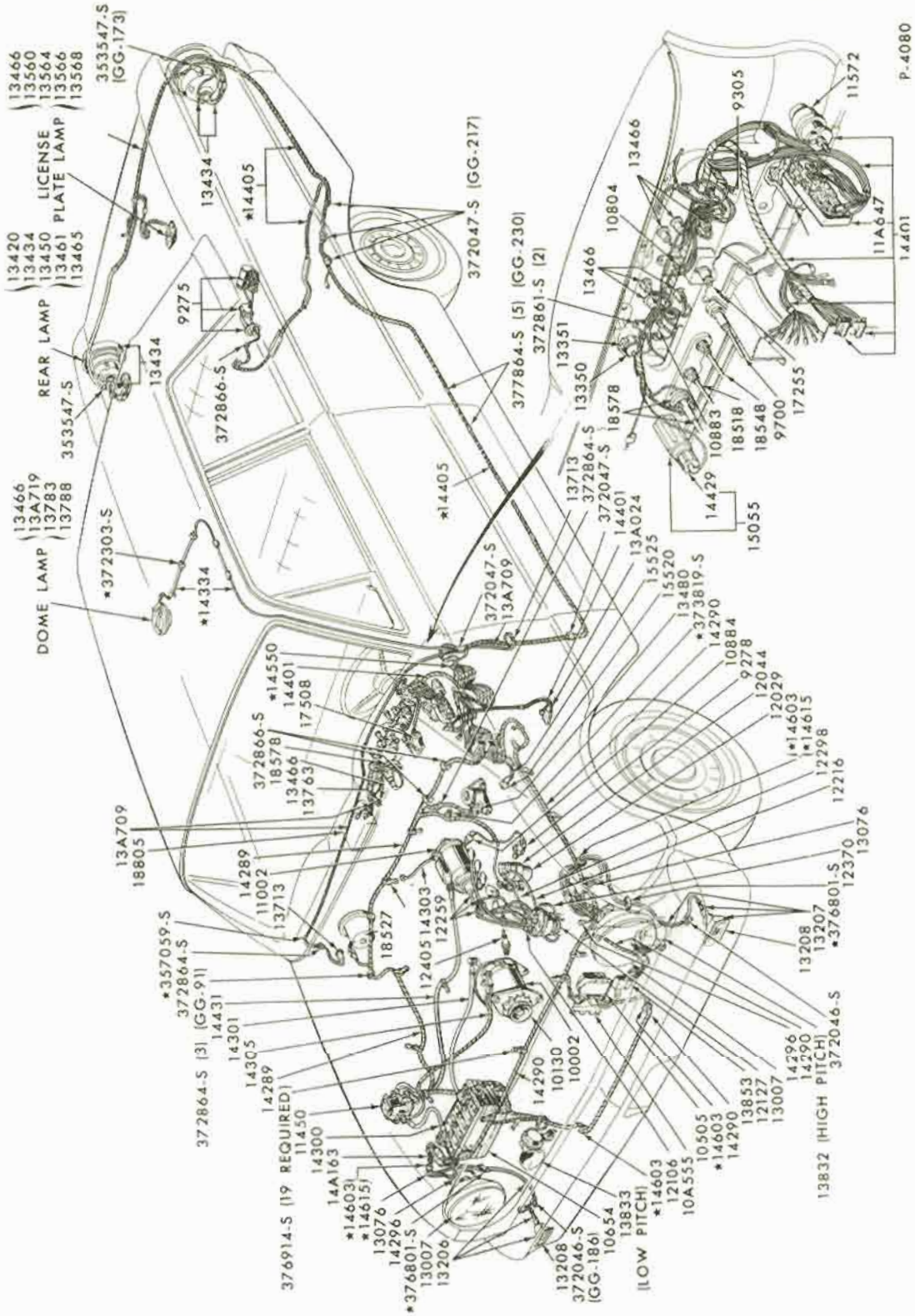

WIRING SYSTEM - "TYPICAL"
1965 FALCON

COPYRIGHT © 1975 — FORD MOTOR COMPANY — DEARBORN, MICHIGAN

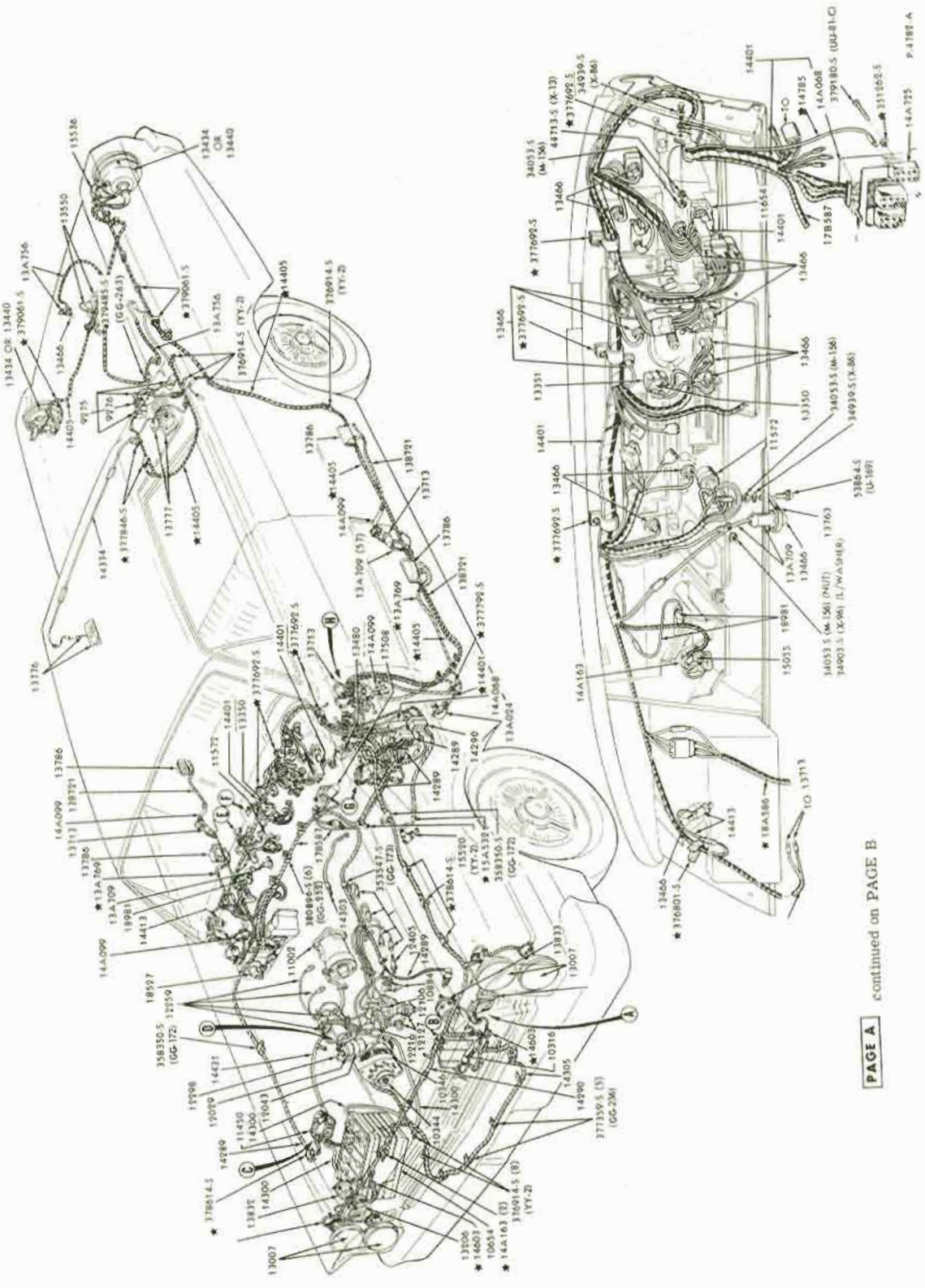

WIRING SYSTEM - "TYPICAL". . . PAGE A
1965/66 FORD

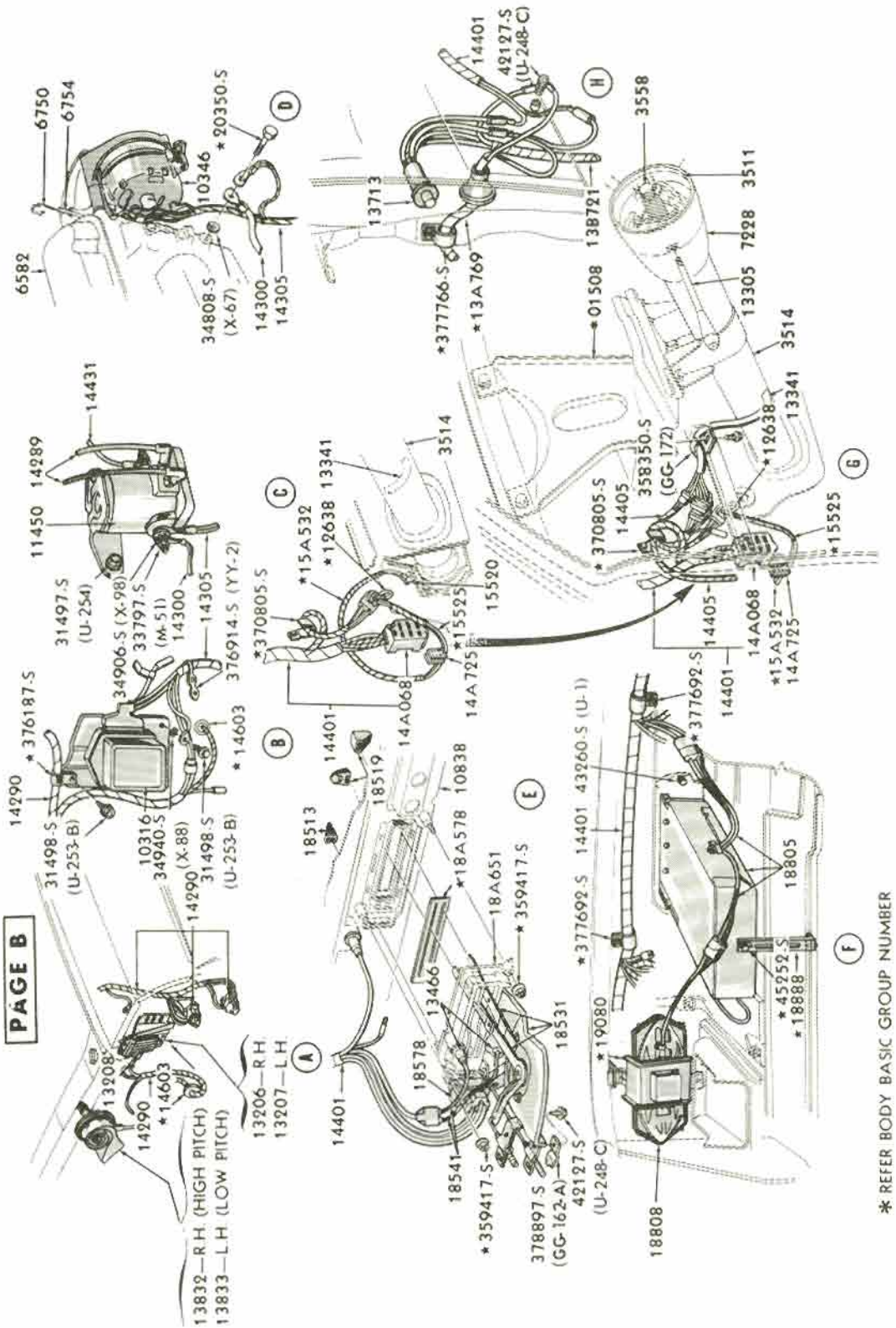

WIRING SYSTEM - "TYPICAL" ... PAGE B
1965/66 FORD

COPYRIGHT © 1975 — FORD MOTOR COMPANY — DEARBORN, MICHIGAN

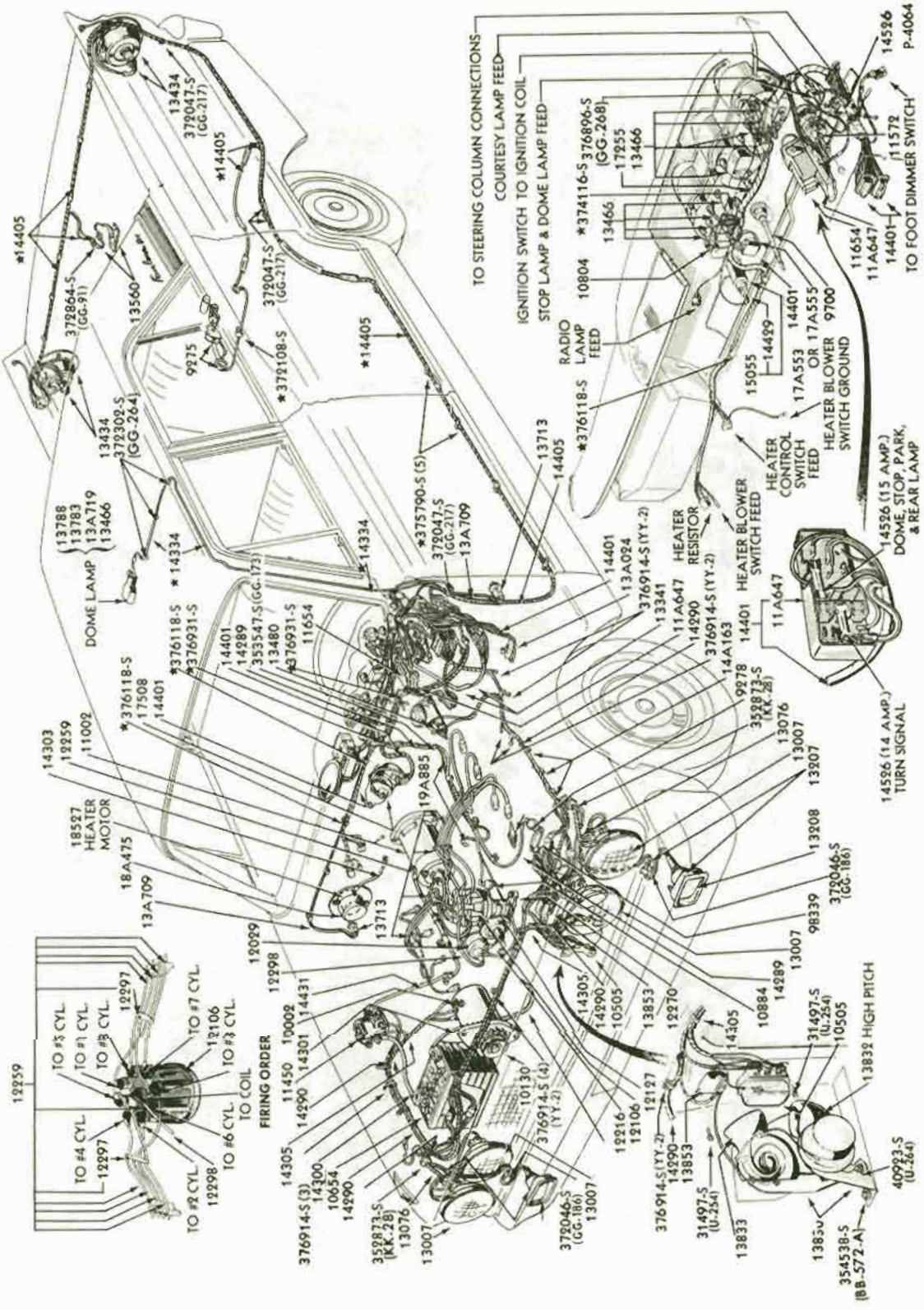

WIRING SYSTEM - "TYPICAL"
1965 FAIRLANE

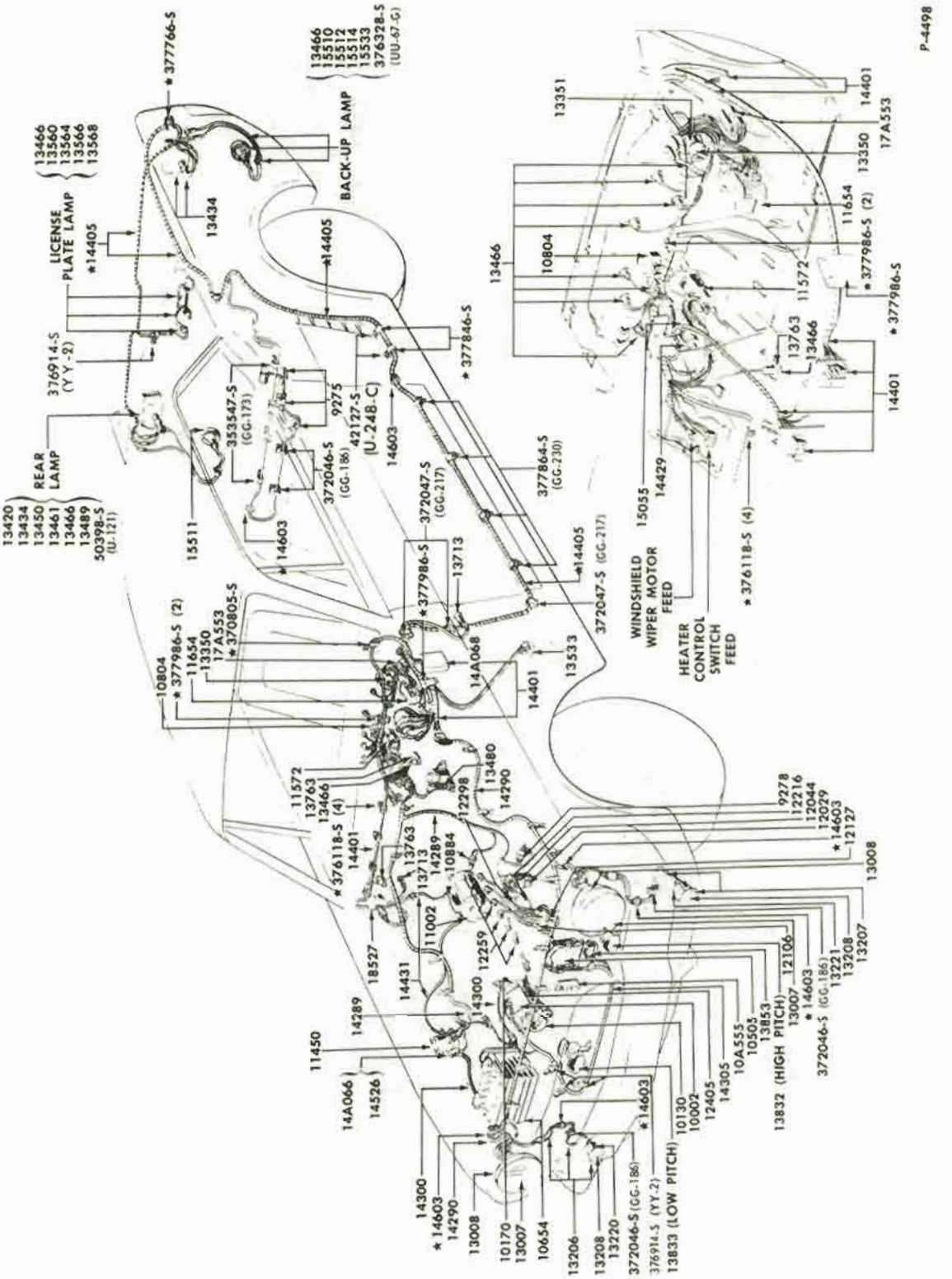

WIRING SYSTEM - "TYPICAL"
1965/66 MUSTANG

COPYRIGHT © 1975 — FORD MOTOR COMPANY — DEARBORN, MICHIGAN

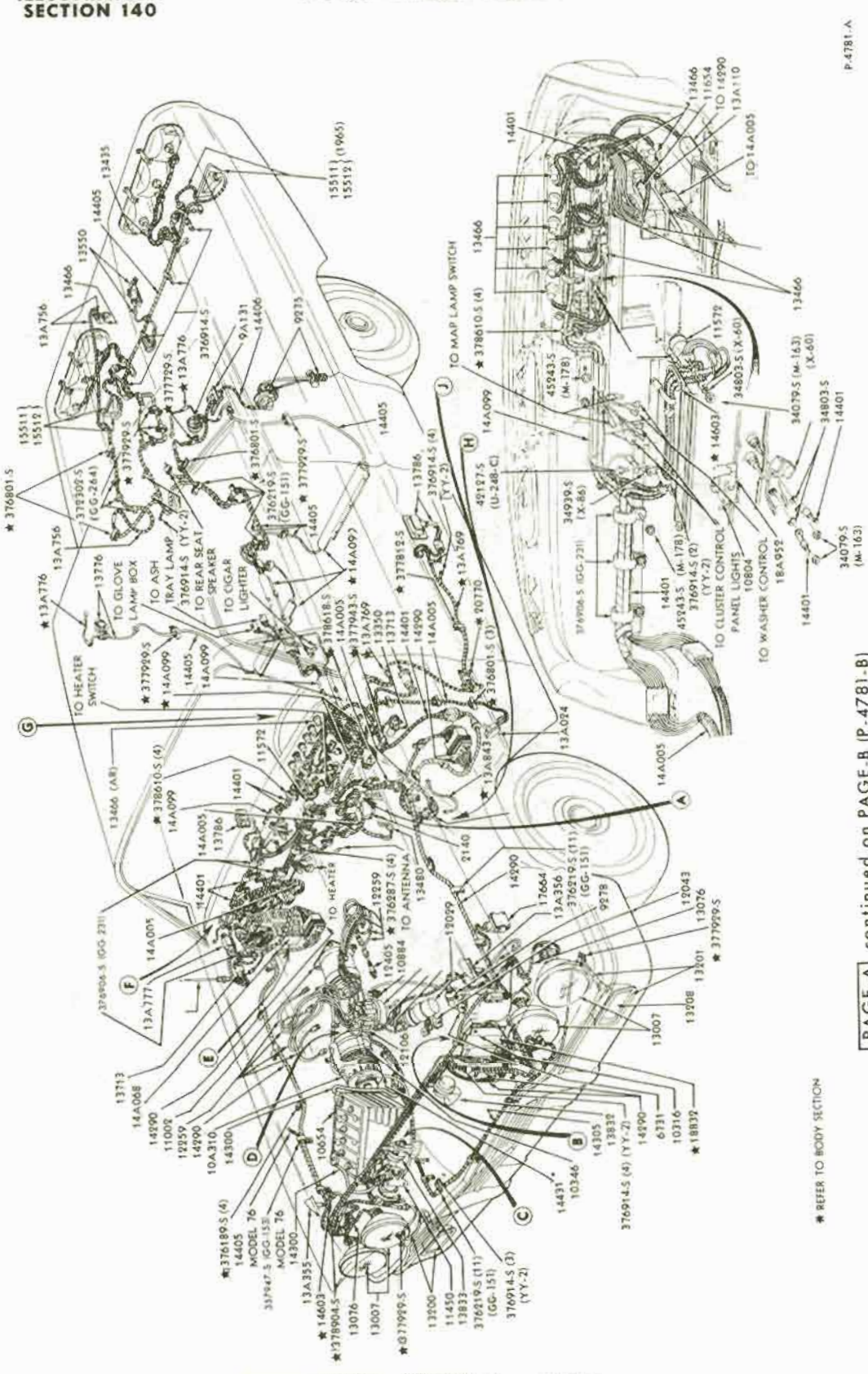

WIRING SYSTEM - "TYPICAL"... PAGE A
1965/66 THUNDERBIRD

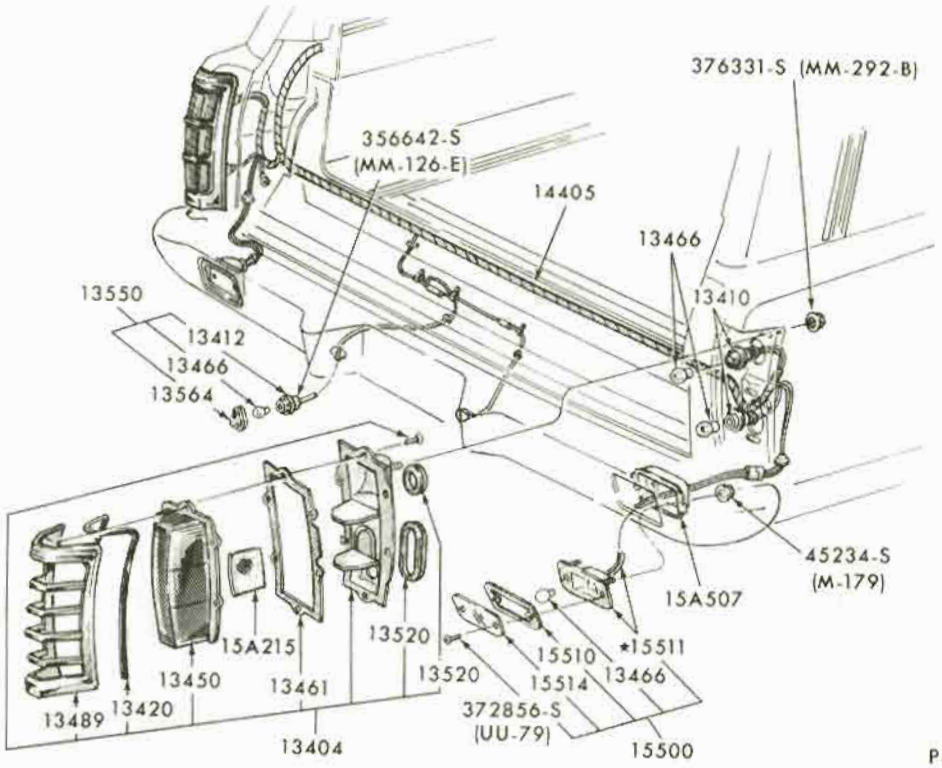

REAR LAMP, BACK UP LAMP & LICENSE PLATE LAMP
1969/70 FORD - STATION WAGON

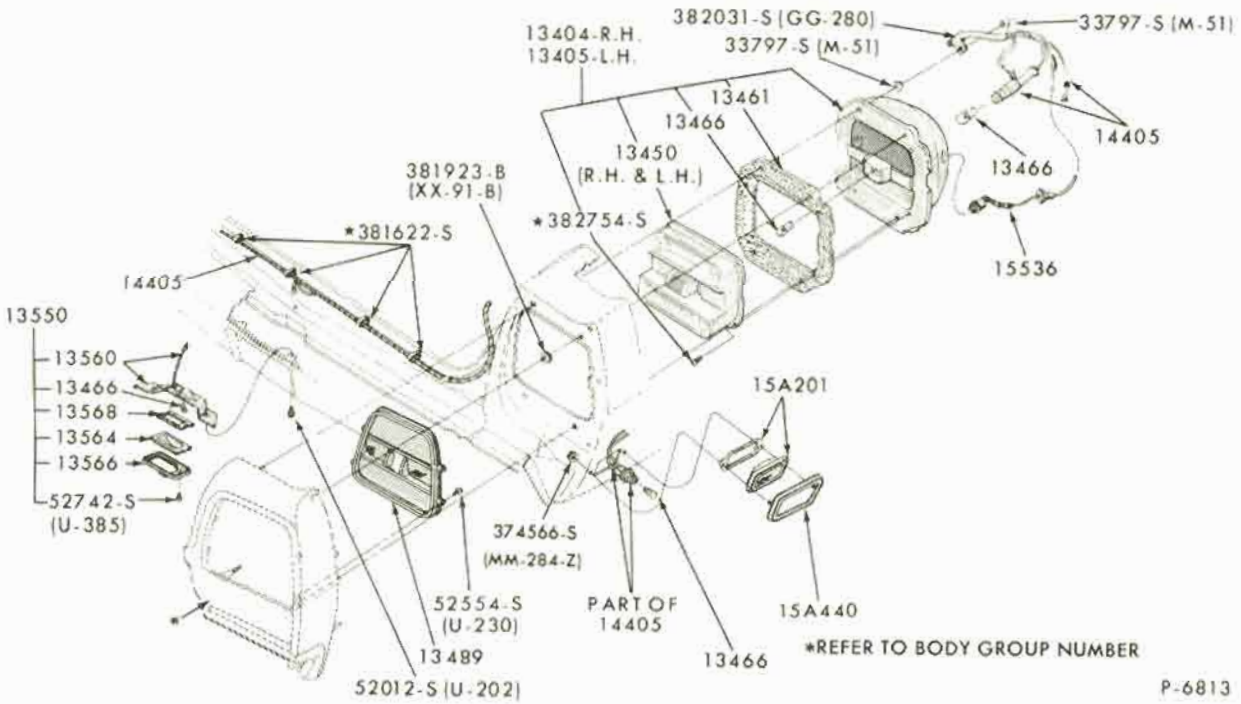

REAR LAMP, BACK UP LAMP, LICENSE PLATE LAMP and BODY SIDE MARKER LAMP
1969 FAIRLANE/TORINO - BODY TYPE 54, 65, 76

COPYRIGHT © 1975 — FORD MOTOR COMPANY — DEARBORN, MICHIGAN

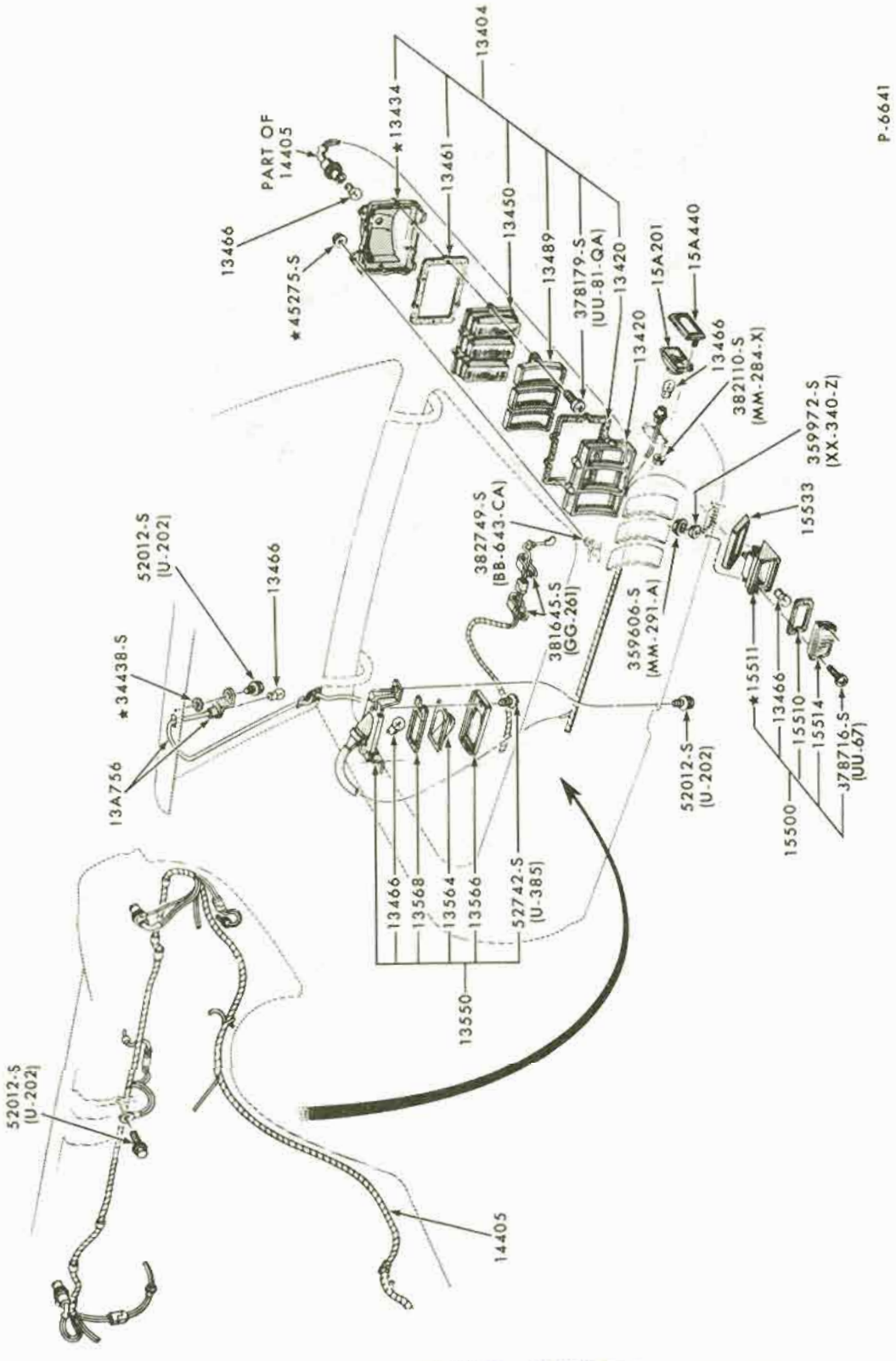

REAR LAMP, BACK UP LAMP, LICENSE PLATE LAMP and BODY SIDE MARKER LAMP
1969 MUSTANG - except GT 350/500

COPYRIGHT © 1975 — FORD MOTOR COMPANY — DEARBORN, MICHIGAN

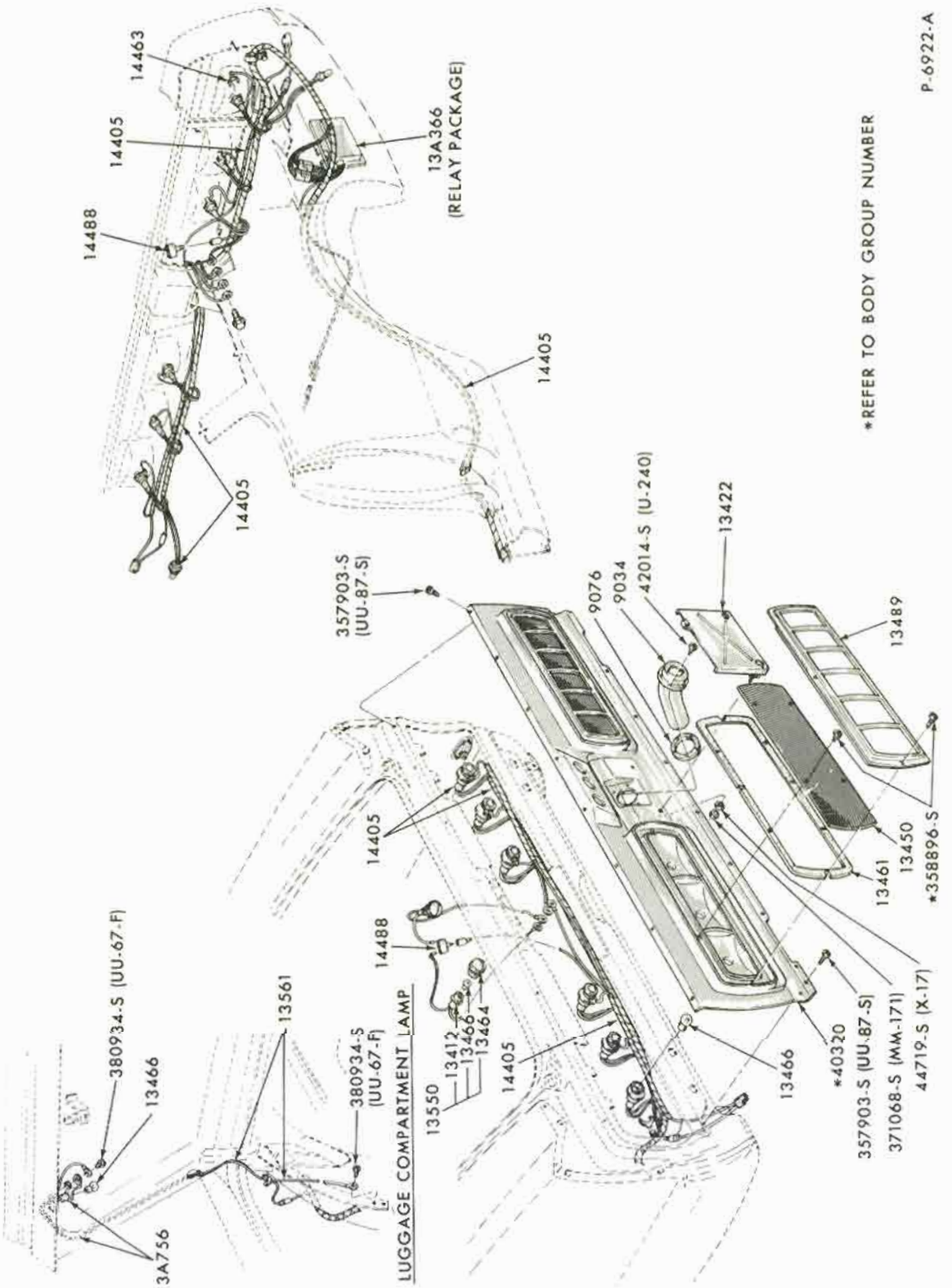

REAR LAMP, BACK UP LAMP, LICENSE PLATE LAMP and BODY SIDE MARKER LAMP
1969/70 MUSTANG - GT 350/500

COPYRIGHT © 1975 — FORD MOTOR COMPANY — DEARBORN, MICHIGAN

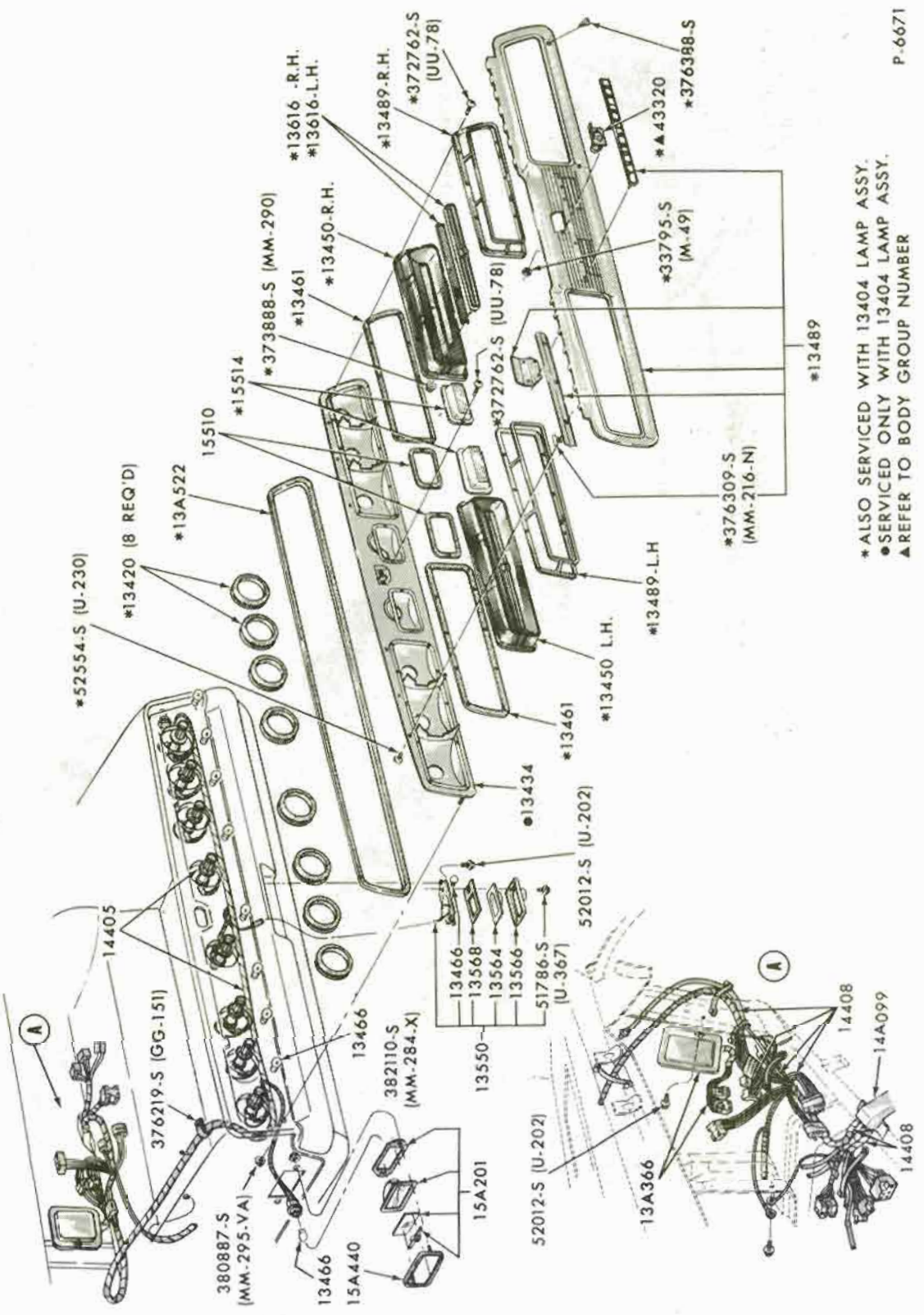

REAR LAMP, BACK UP LAMP, LICENSE PLATE LAMP and BODY SIDE MARKER LAMP
1969 THUNDERBIRD

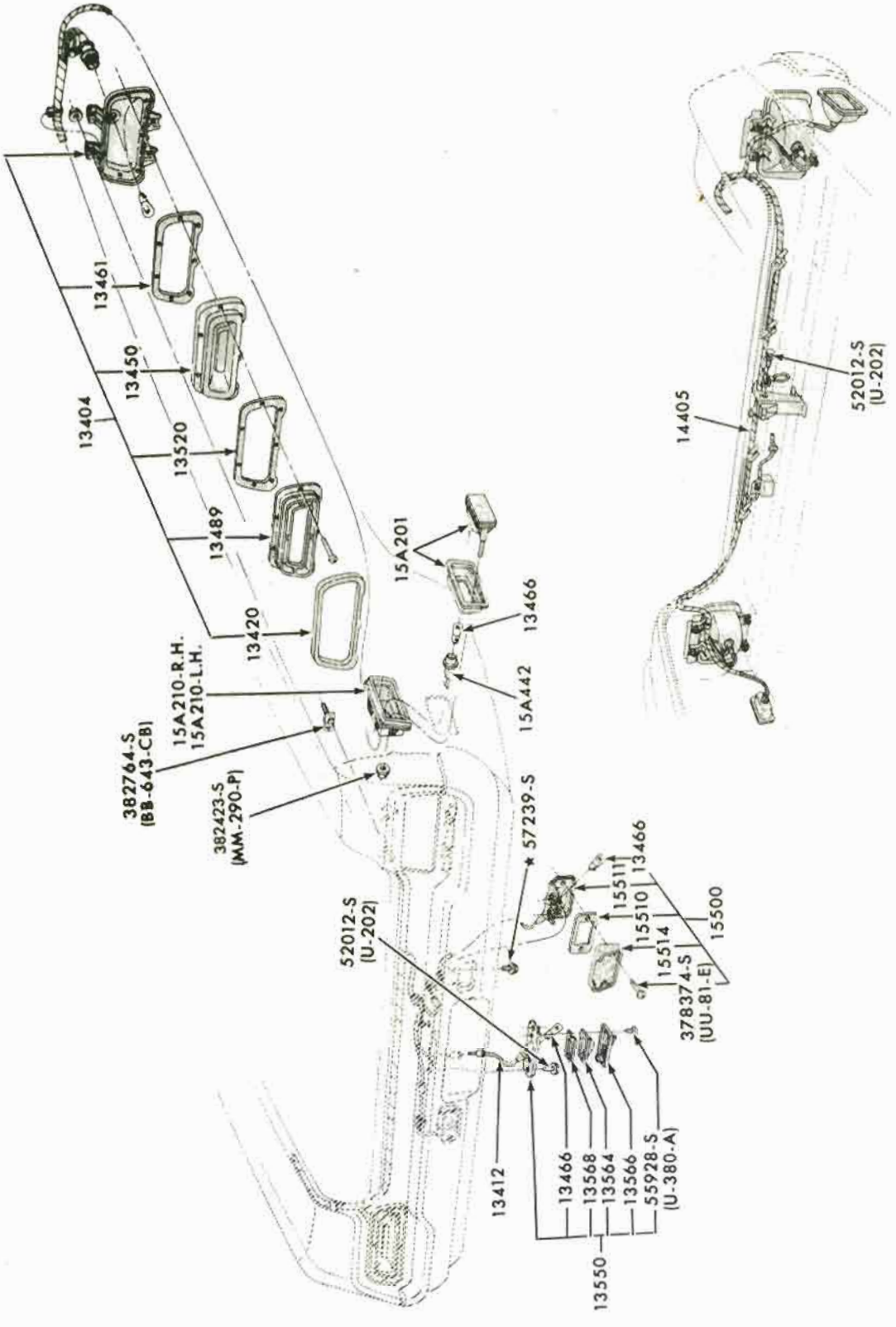

REAR LAMP, BACK UP LAMP, LICENSE PLATE LAMP and BODY SIDE MARKER LAMP

1970 FORD - EXCEPT STATION WAGON

COPYRIGHT © 1975 — FORD MOTOR COMPANY — DEARBORN, MICHIGAN

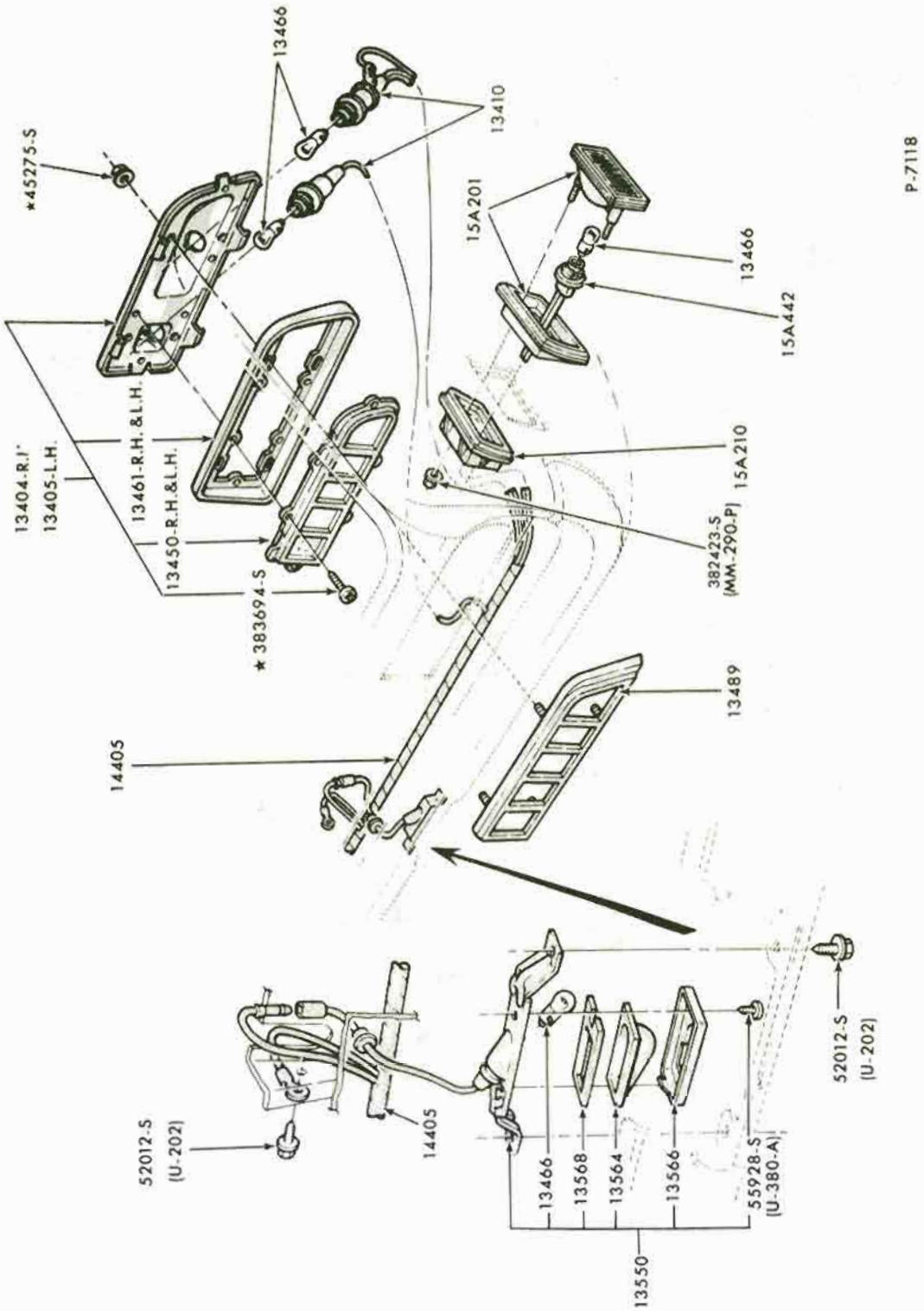

REAR LAMP, BACK UP LAMP, LICENSE PLATE LAMP and BODY SIDE MARKER LAMP
1970/71 FAIRLANE/TORINO - BODY TYPES 54, 57, 62, 63C, H, 65

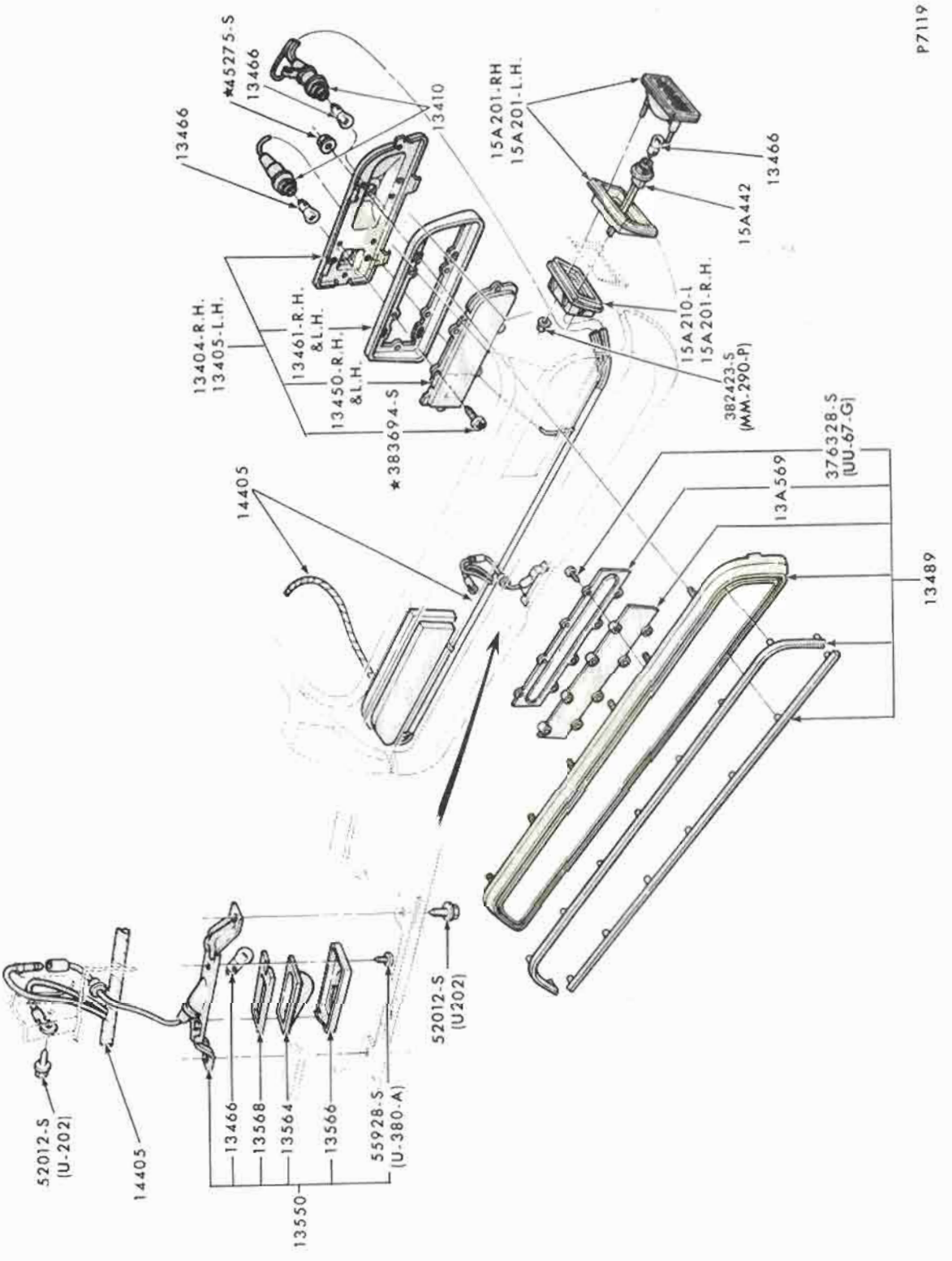

REAR LAMP, BACK UP LAMP, LICENSE PLATE LAMP and BODY SIDE MARKER LAMP
1970/71 FAIRLANE/TORINO - BODY TYPES 63F, 76F

COPYRIGHT © 1975 — FORD MOTOR COMPANY — DEARBORN, MICHIGAN

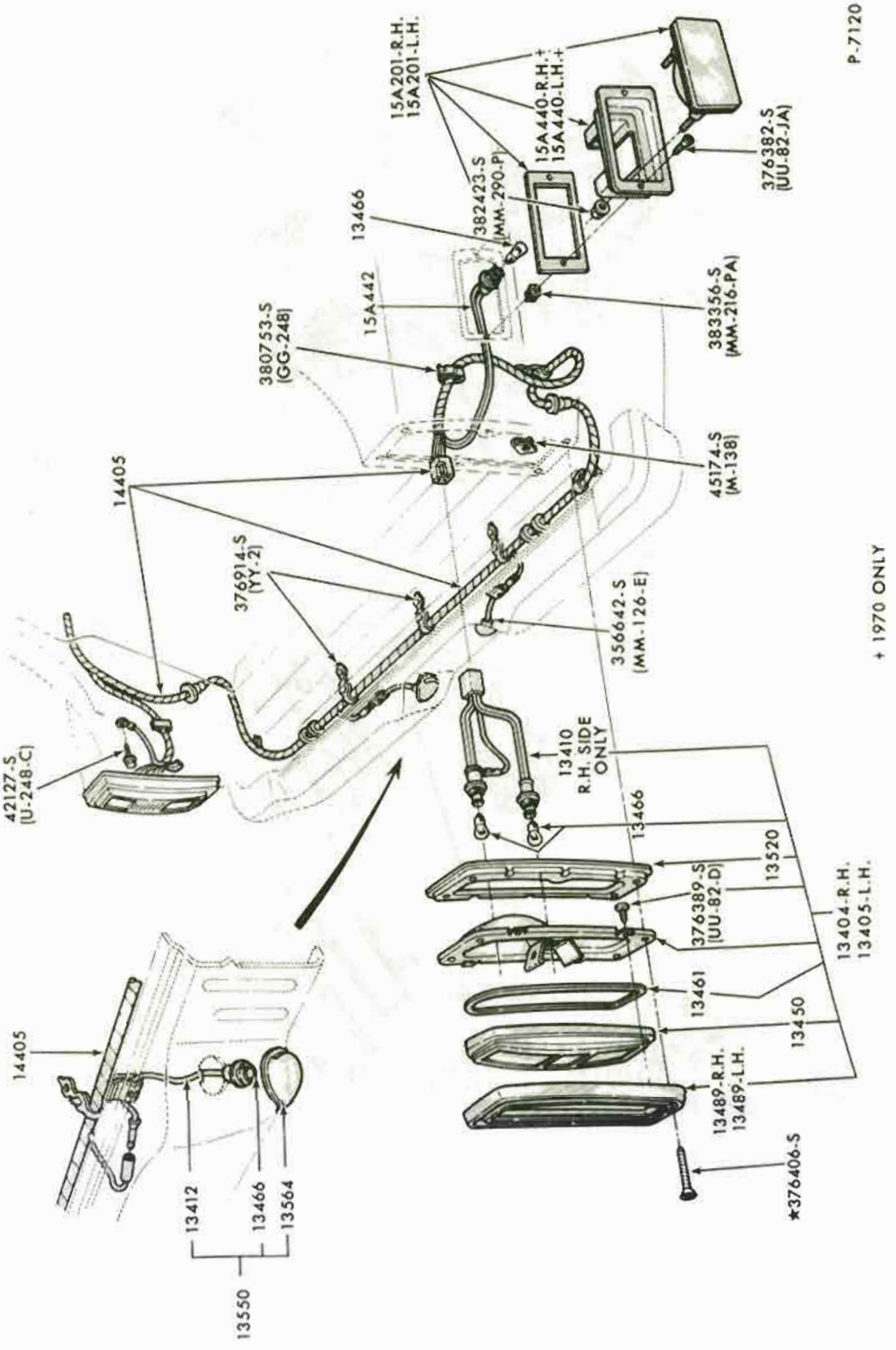

REAR LAMP, BACK UP LAMP, LICENSE PLATE LAMP and BODY SIDE MARKER LAMP
1970/71 FAIRLANE/TORINO - BODY TYPES 66, 71

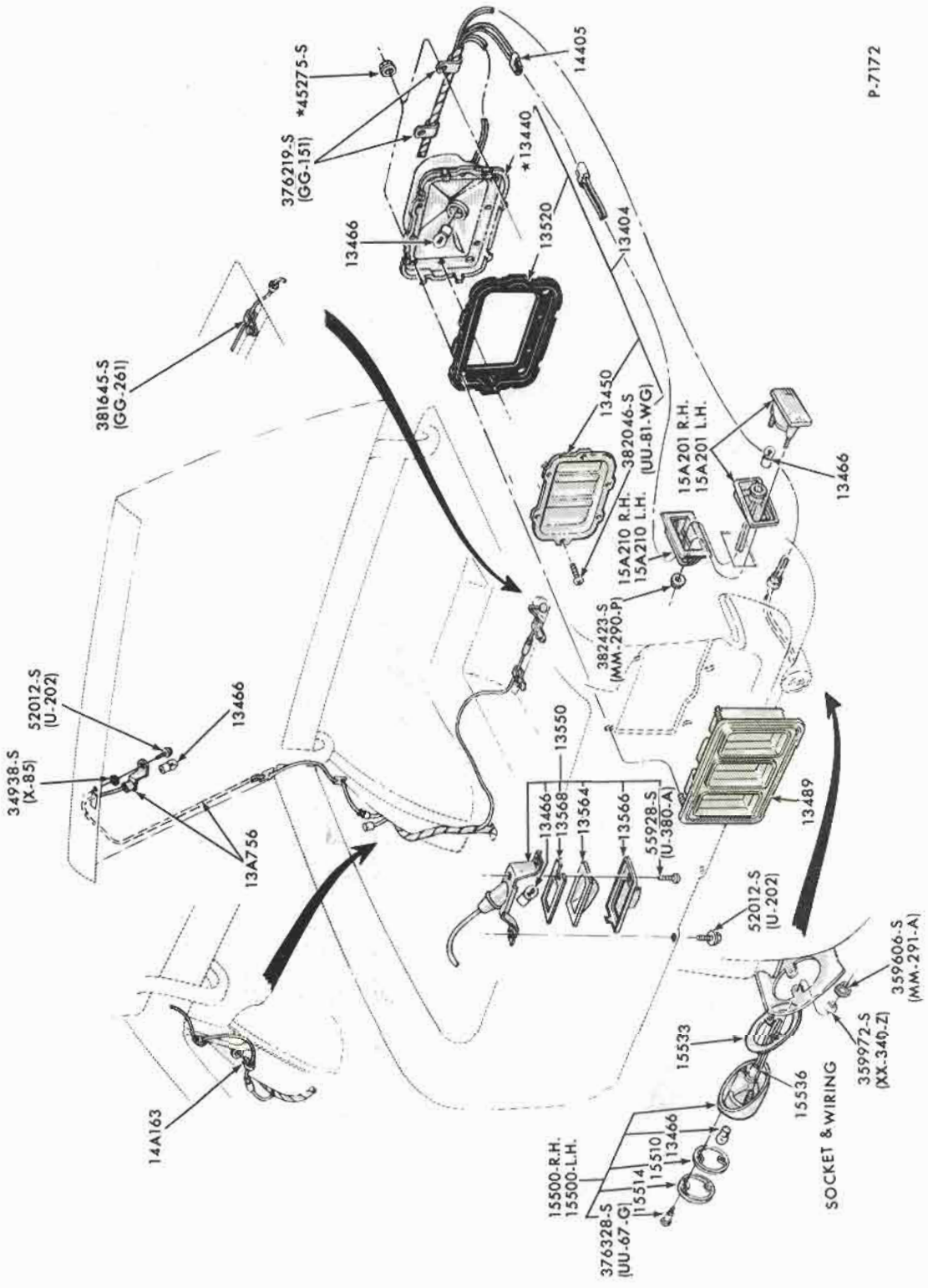

REAR LAMP, BACK UP LAMP, LICENSE PLATE LAMP and BODY SIDE MARKER LAMP
1970 MUSTANG-except GT350/500

COPYRIGHT © 1975 — FORD MOTOR COMPANY — DEARBORN, MICHIGAN

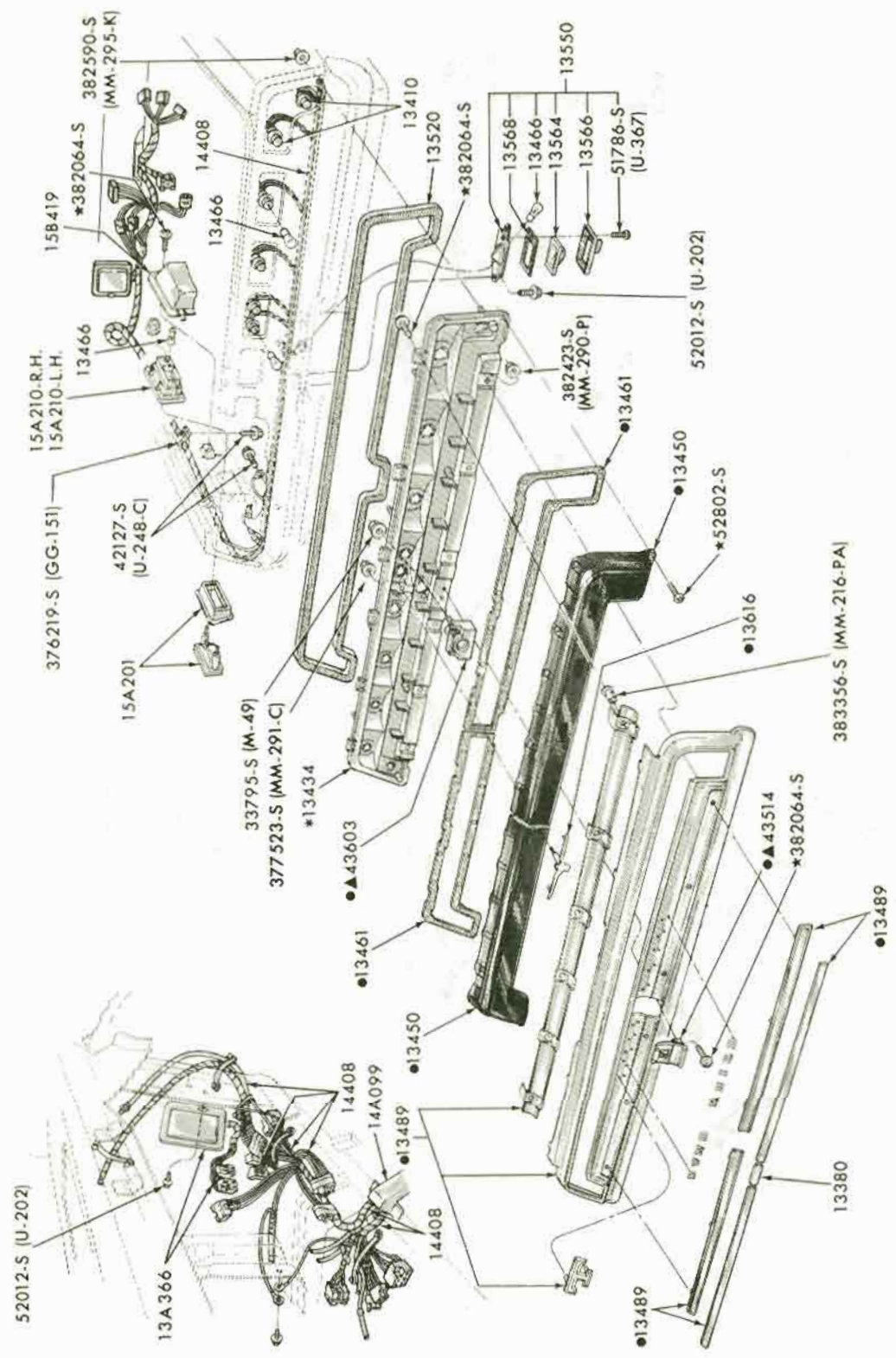

*SUPPLIED ONLY IN 13404 REAR LAMP ASSY.
•ALSO SUPPLIED IN 13404 REAR LAMP ASSY.
▲REFER TO BODY GROUP NUMBER

P-7158

REAR LAMP, BACK UP LAMP, LICENSE PLATE LAMP and BODY SIDE MARKER LAMP
1970/71 THUNDERBIRD

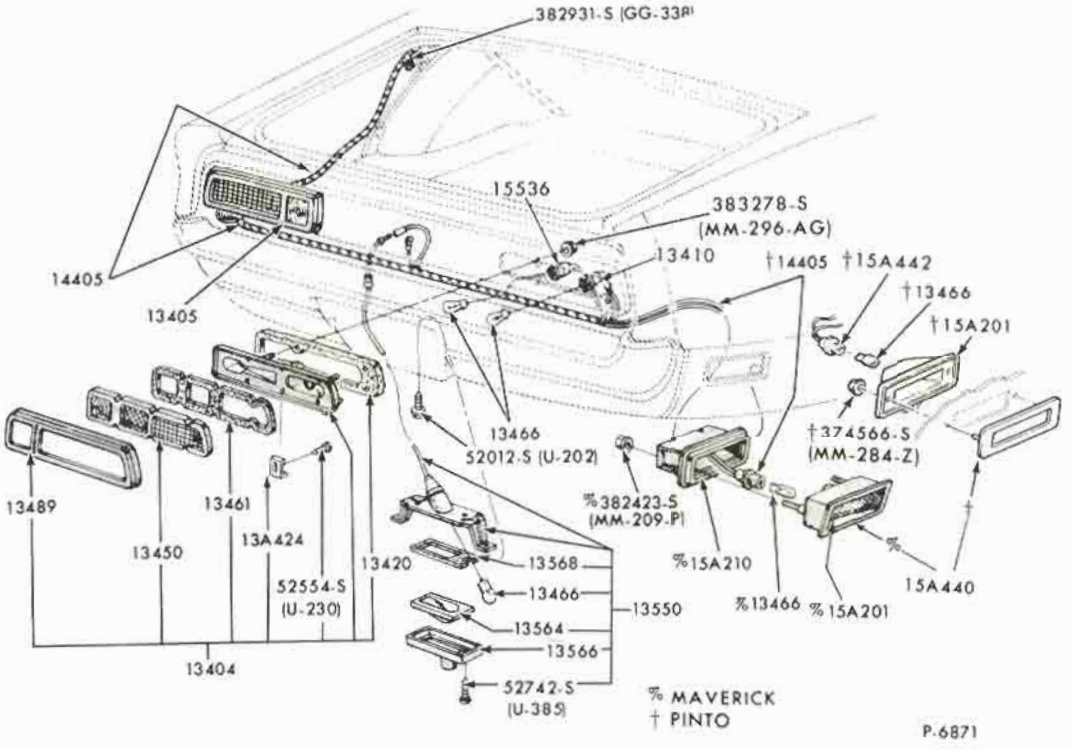

REAR LAMP, BACK UP LAMP, LICENSE PLATE LAMP and BODY SIDE MARKER LAMP
1970/72 MAVERICK 1971/72 PINTO - BODY TYPES 62, 64

COPYRIGHT © 1975— FORD MOTOR COMPANY —DEARBORN, MICHIGAN

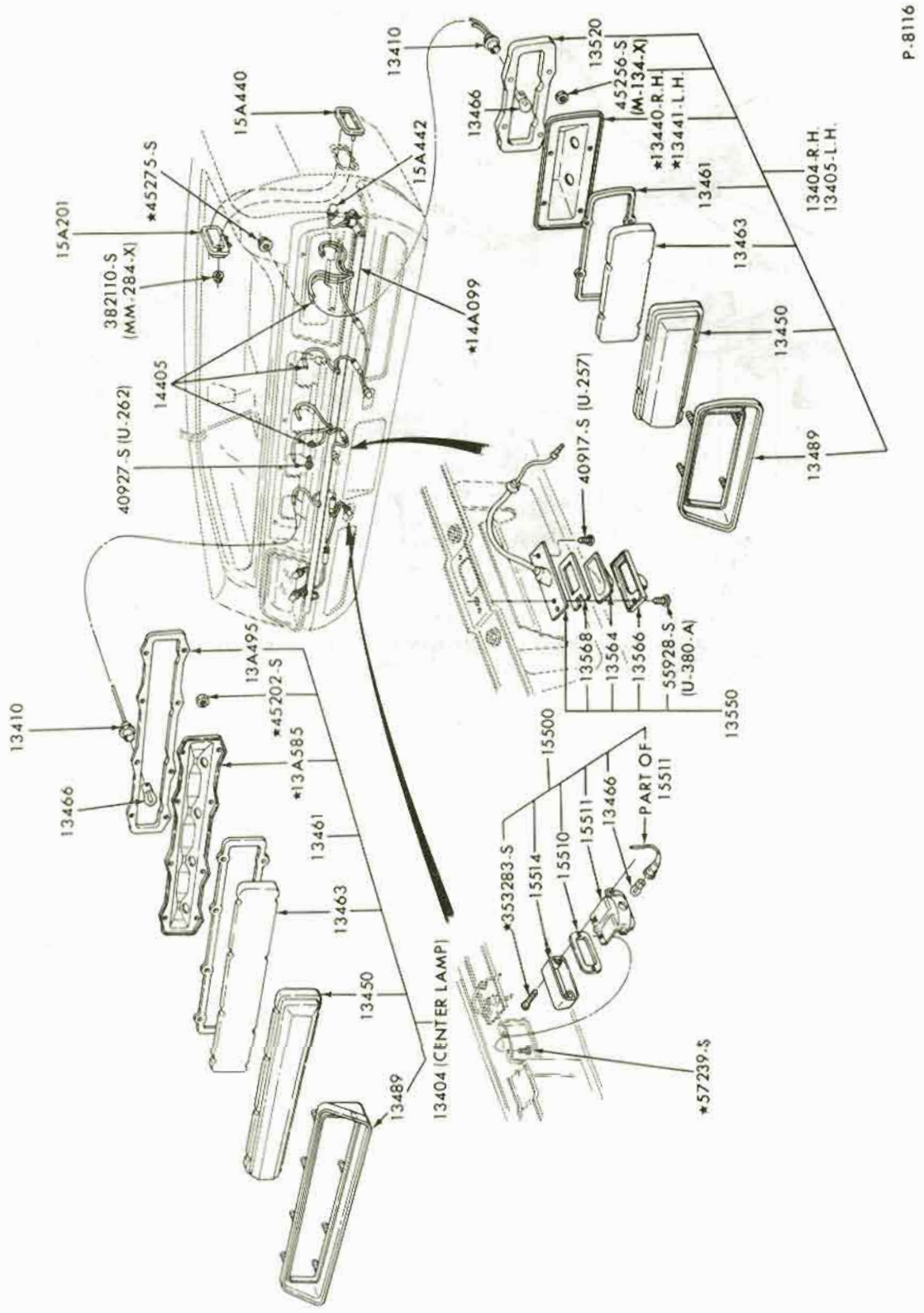

REAR LAMP, BACK UP LAMP, LICENSE PLATE LAMP and BODY SIDE MARKER LAMP
1971 FORD - EXCEPT STATION WAGON

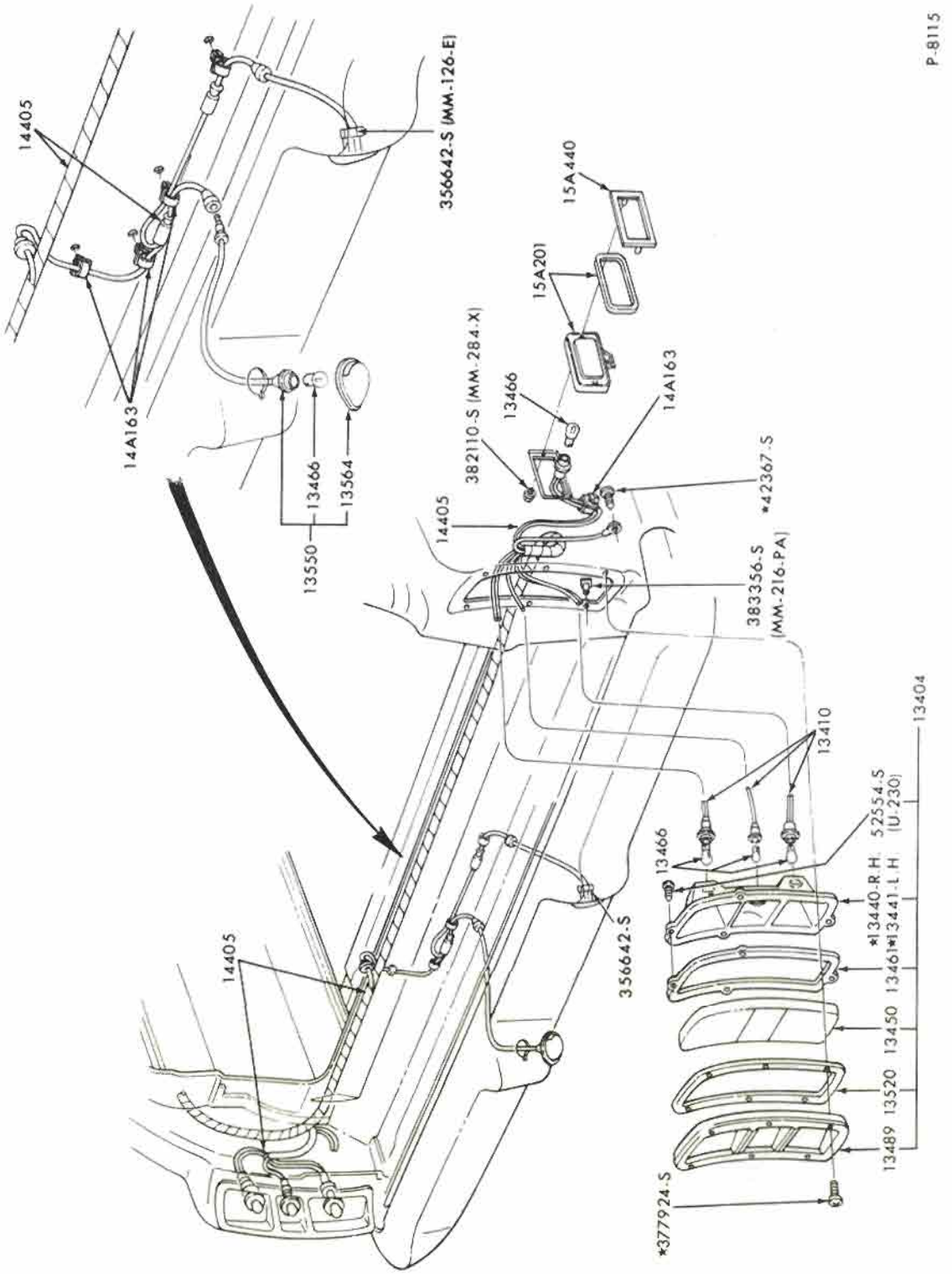

REAR LAMP, BACK UP LAMP, LICENSE PLATE LAMP and BODY SIDE MARKER LAMP
1971/72 FORD - STATION WAGON

COPYRIGHT © 1975 — FORD MOTOR COMPANY — DEARBORN, MICHIGAN

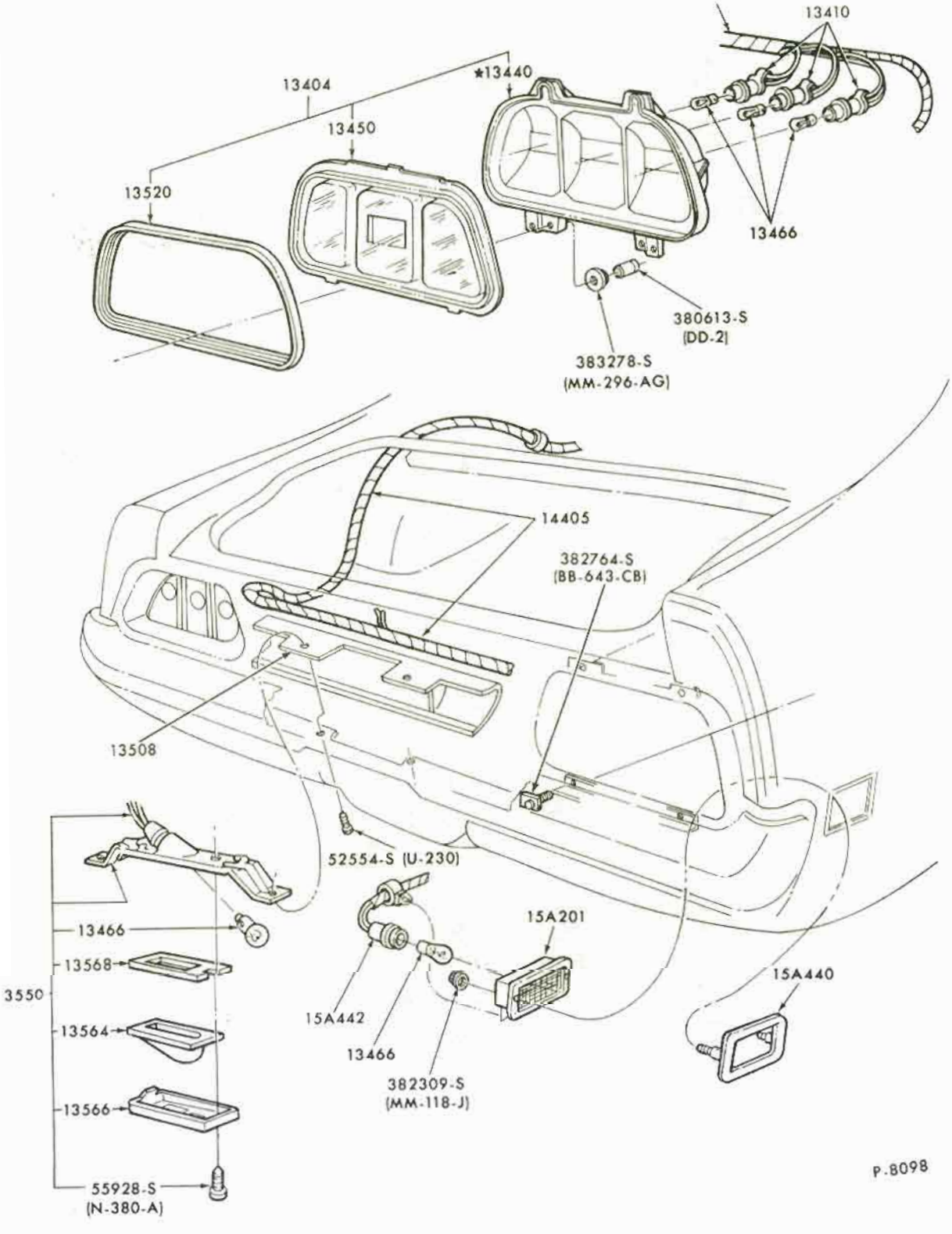

REAR LAMP, BACK UP LAMP, LICENSE PLATE LAMP and BODY SIDE MARKER LAMP
1971/72 MUSTANG

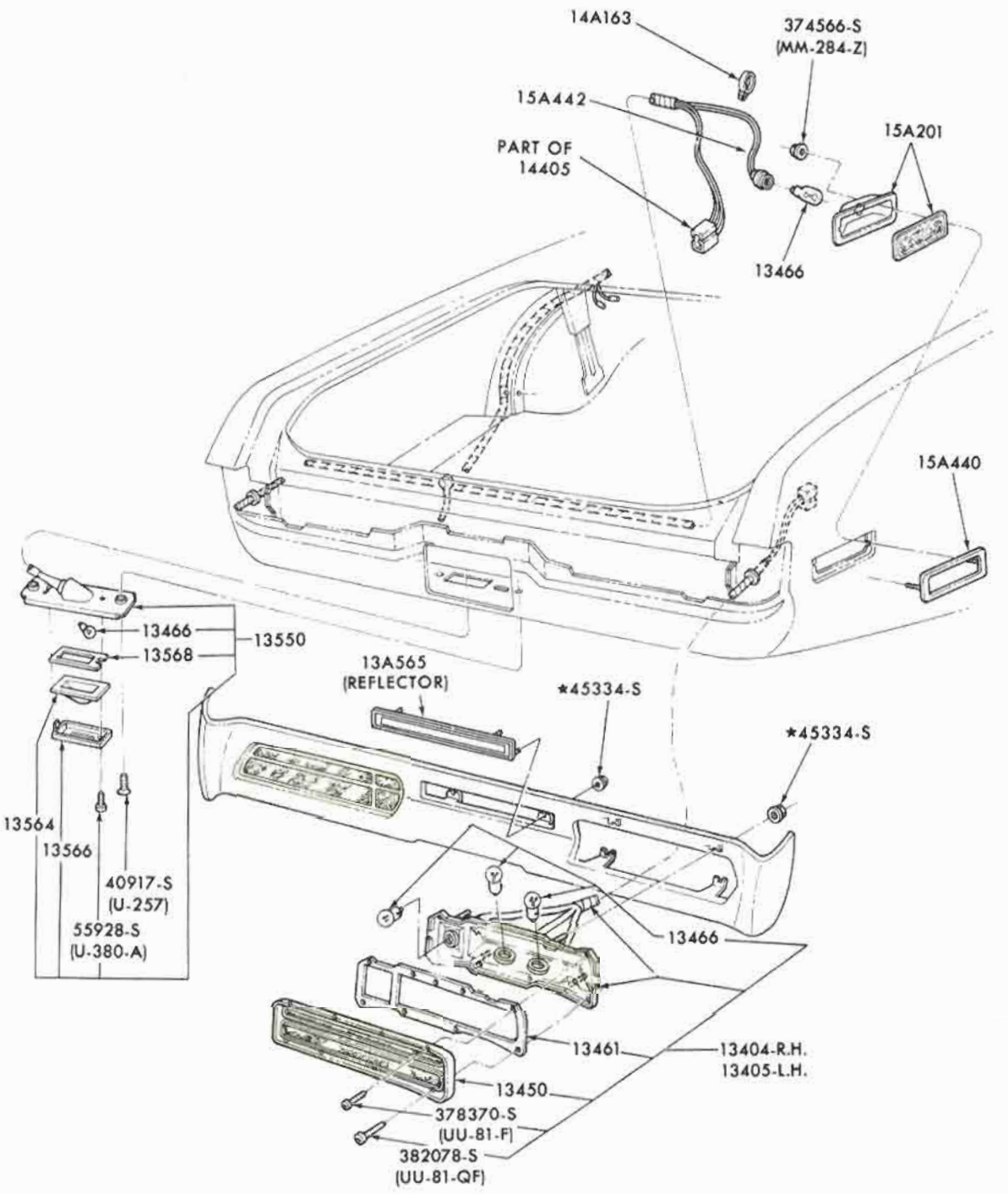

P-8757

REAR LAMP, BACK-UP LAMP, LICENSE PLATE LAMP and BODY SIDE MARKER LAMP
1972 FORD - EXCEPT STATION WAGON

COPYRIGHT © 1975 — FORD MOTOR COMPANY — DEARBORN, MICHIGAN

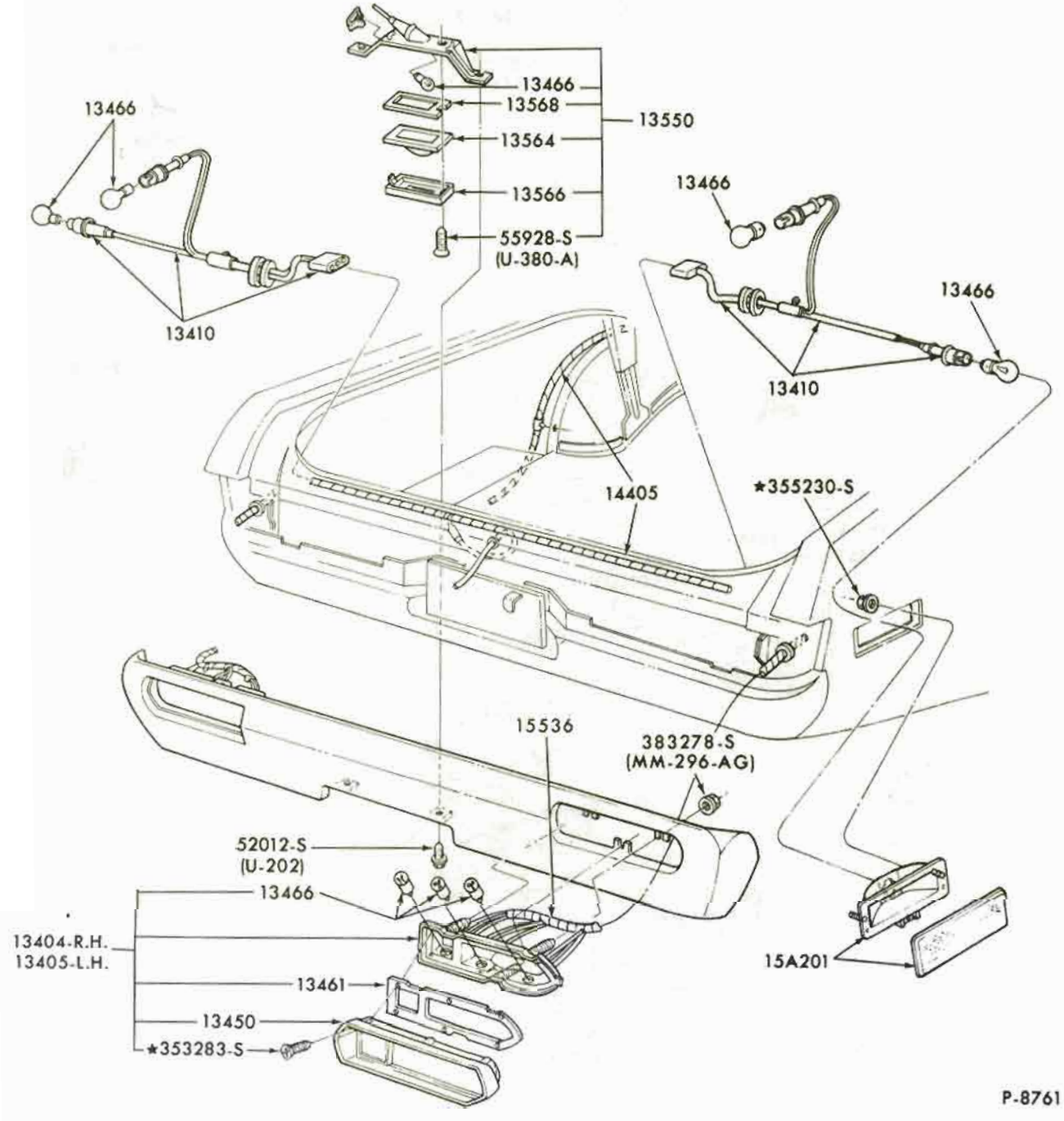

REAR LAMP, BACK-UP LAMP, LICENSE PLATE LAMP and BODY SIDE MARKER LAMP
1972 TORINO - EXCEPT STATION WAGON, RANCHERO

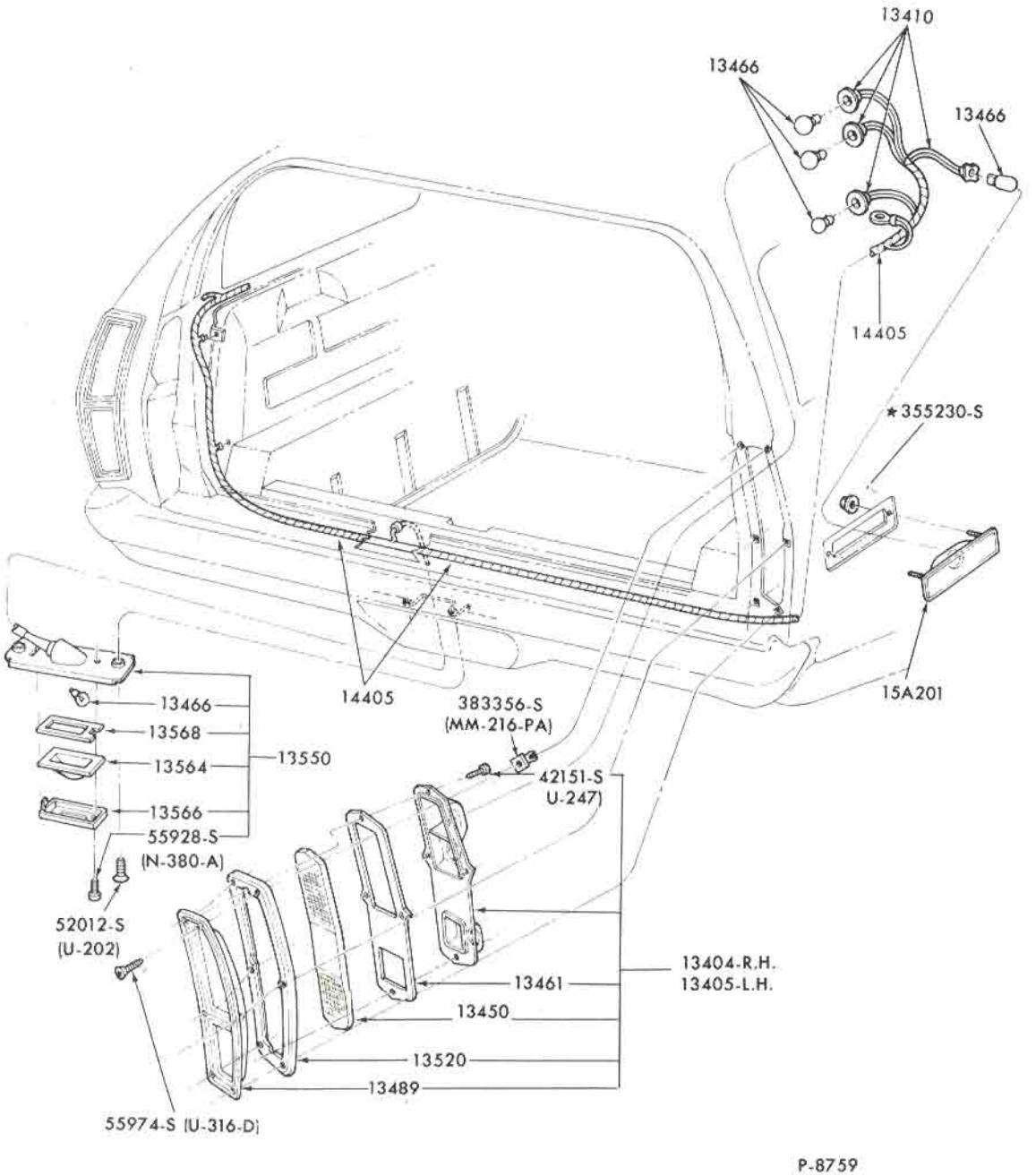

REAR LAMP, BACK-UP LAMP, LICENSE PLATE LAMP and BODY SIDE MARKER LAMP
1972 TORINO - STATION WAGON

COPYRIGHT © 1975 — FORD MOTOR COMPANY — DEARBORN, MICHIGAN

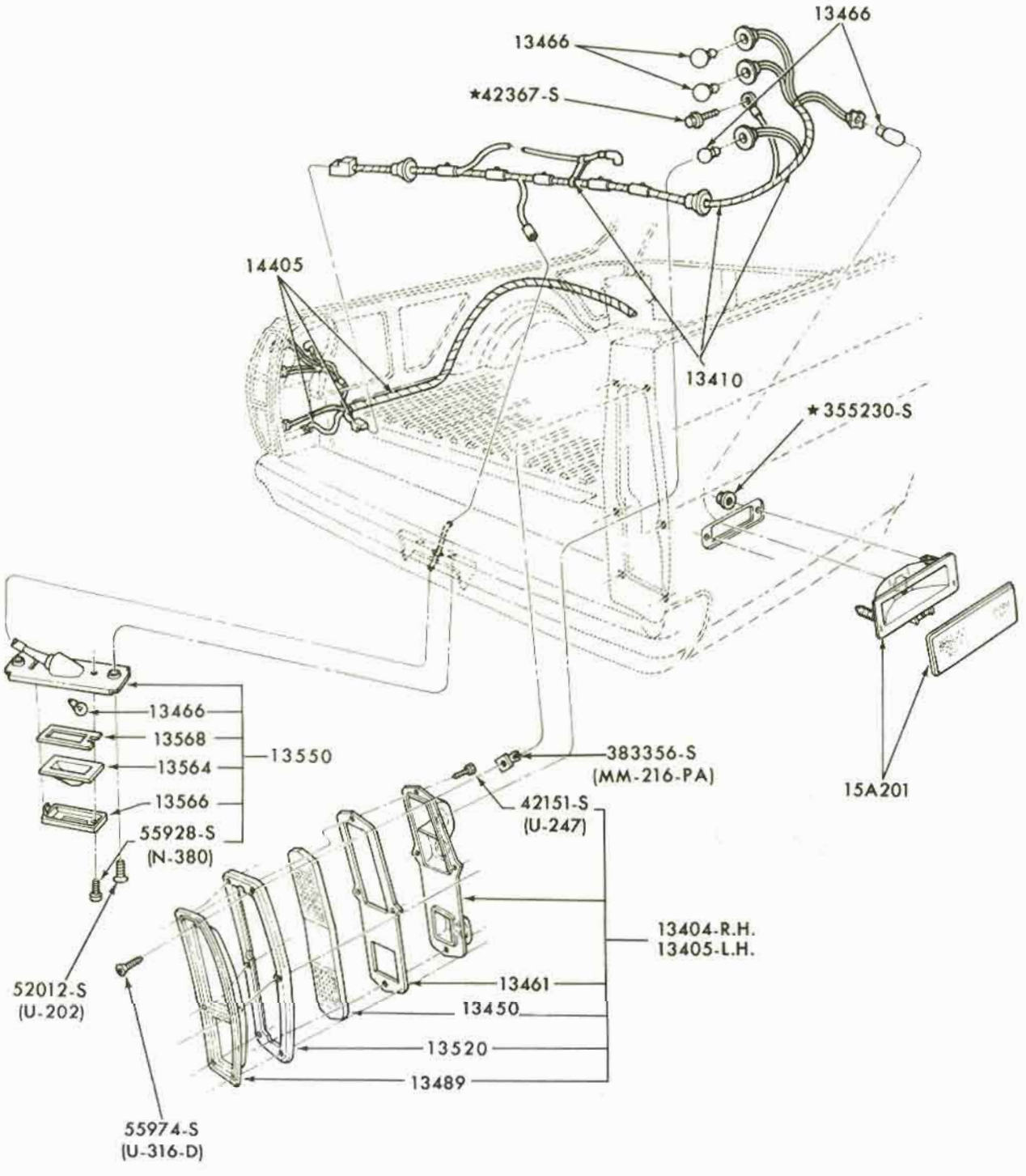

REAR LAMP, BACK-UP LAMP, LICENSE PLATE LAMP and BODY SIDE MARKER LAMP
1972 TORINO - RANCHERO

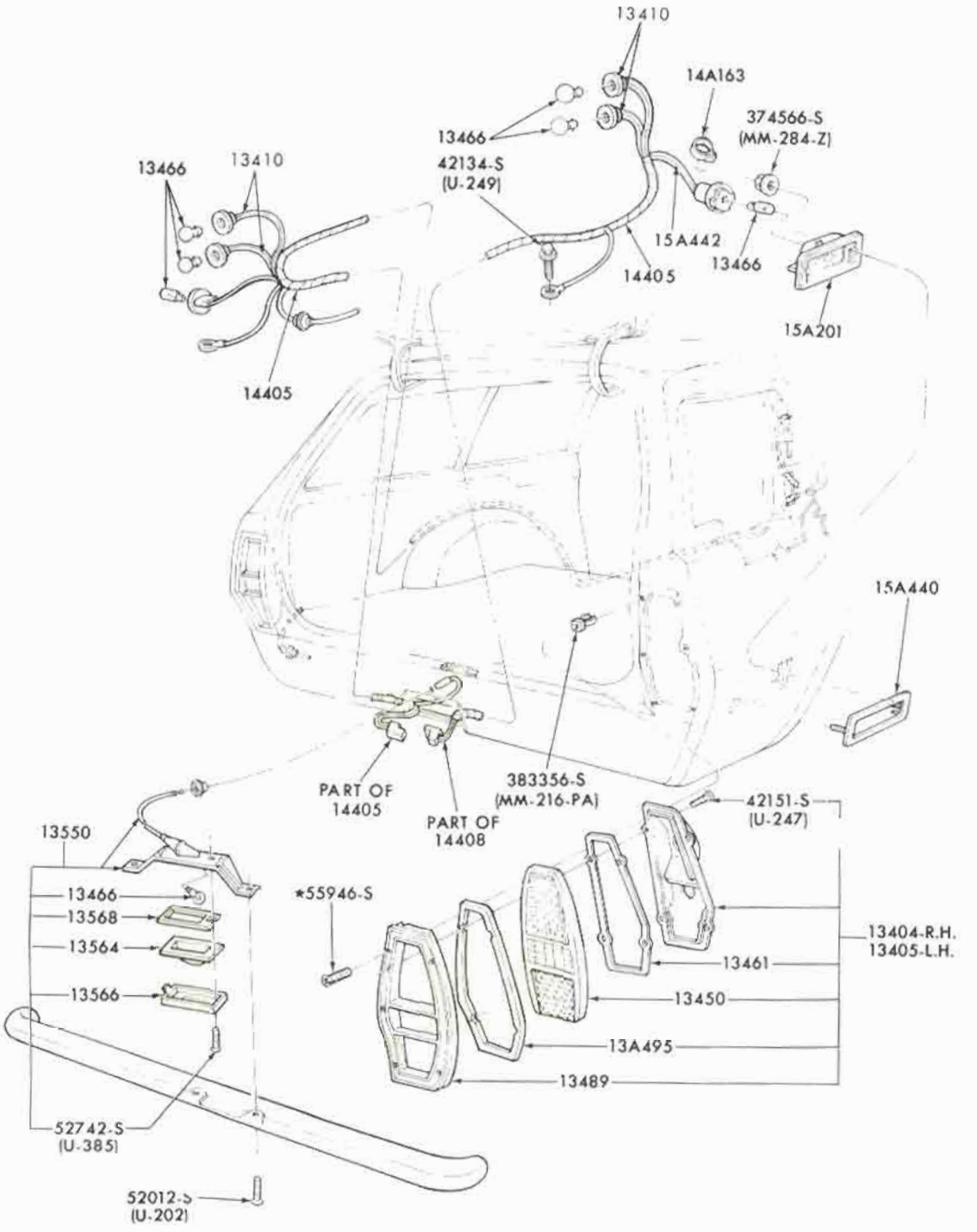

REAR LAMP, BACK-UP LAMP, LICENSE PLATE LAMP and BODY SIDE MARKER LAMP
1972 PINTO - BODY TYPE 73

COPYRIGHT © 1975— FORD MOTOR COMPANY —DEARBORN, MICHIGAN

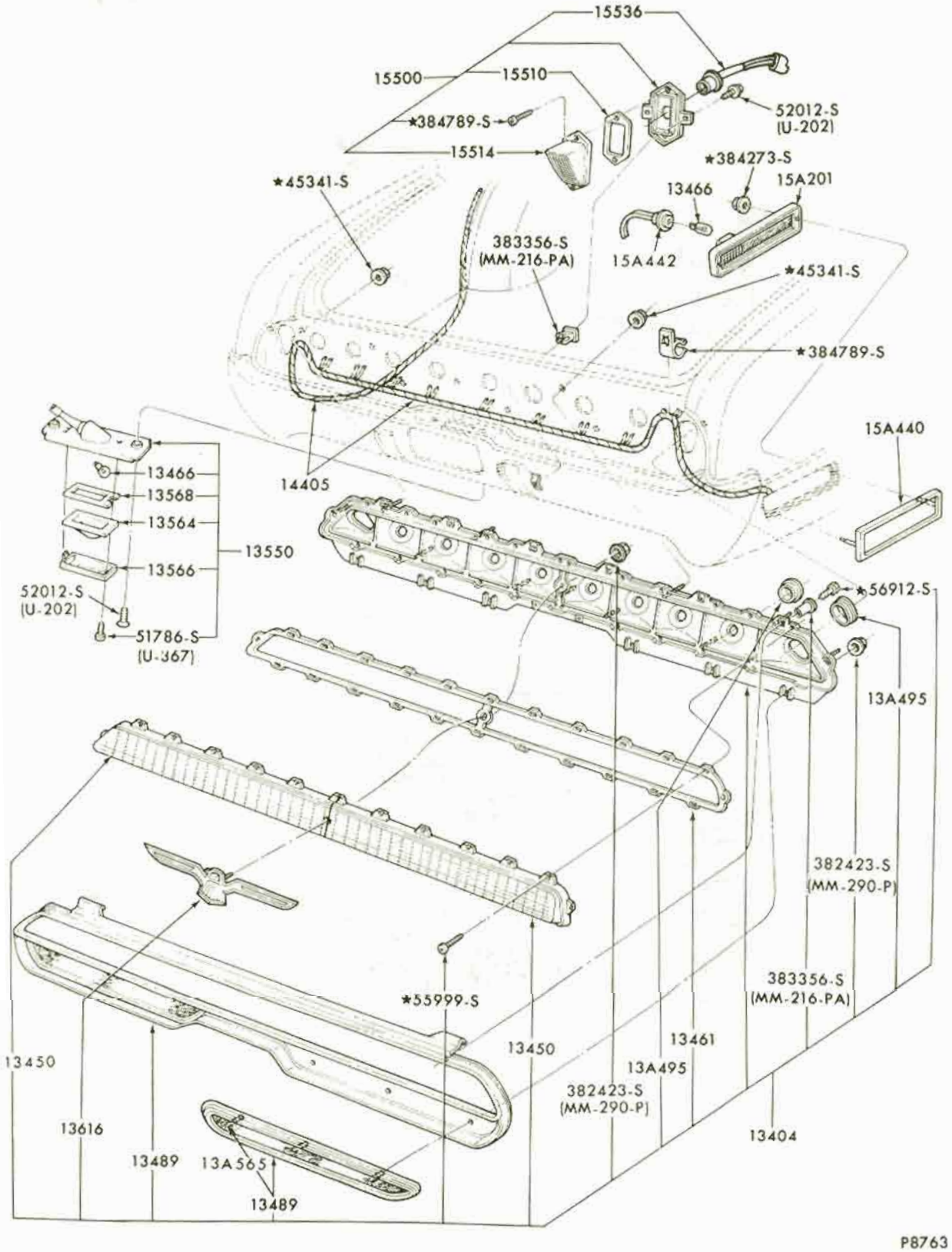

REAR LAMP, BACK-UP LAMP, LICENSE PLATE LAMP and BODY SIDE MARKER LAMP
1972 THUNDERBIRD

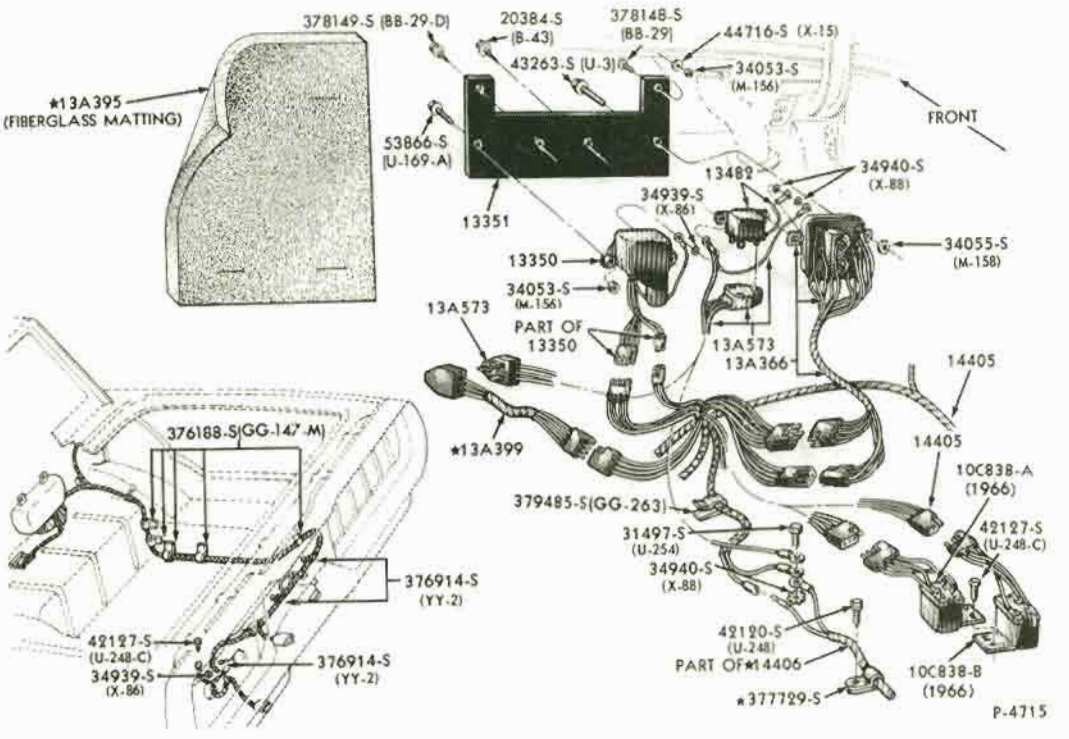

REAR LAMP TURN INDICATOR - SEQUENTIAL WIRING SYSTEM
1965/66 THUNDERBIRD - "BEFORE 11/17/65"

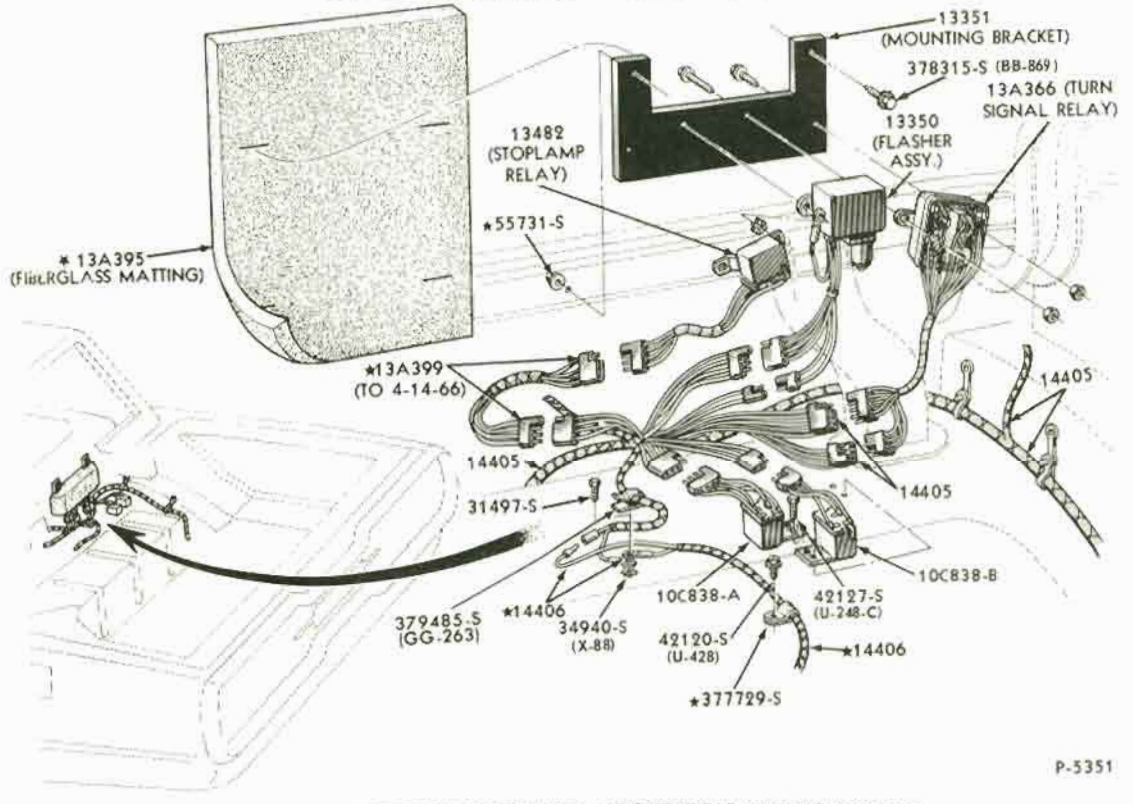

REAR LAMP TURN INDICATOR - SEQUENTIAL WIRING SYSTEM
1966/67 THUNDERBIRD - "FROM 11/17/65"

COPYRIGHT © 1975 — FORD MOTOR COMPANY — DEARBORN, MICHIGAN

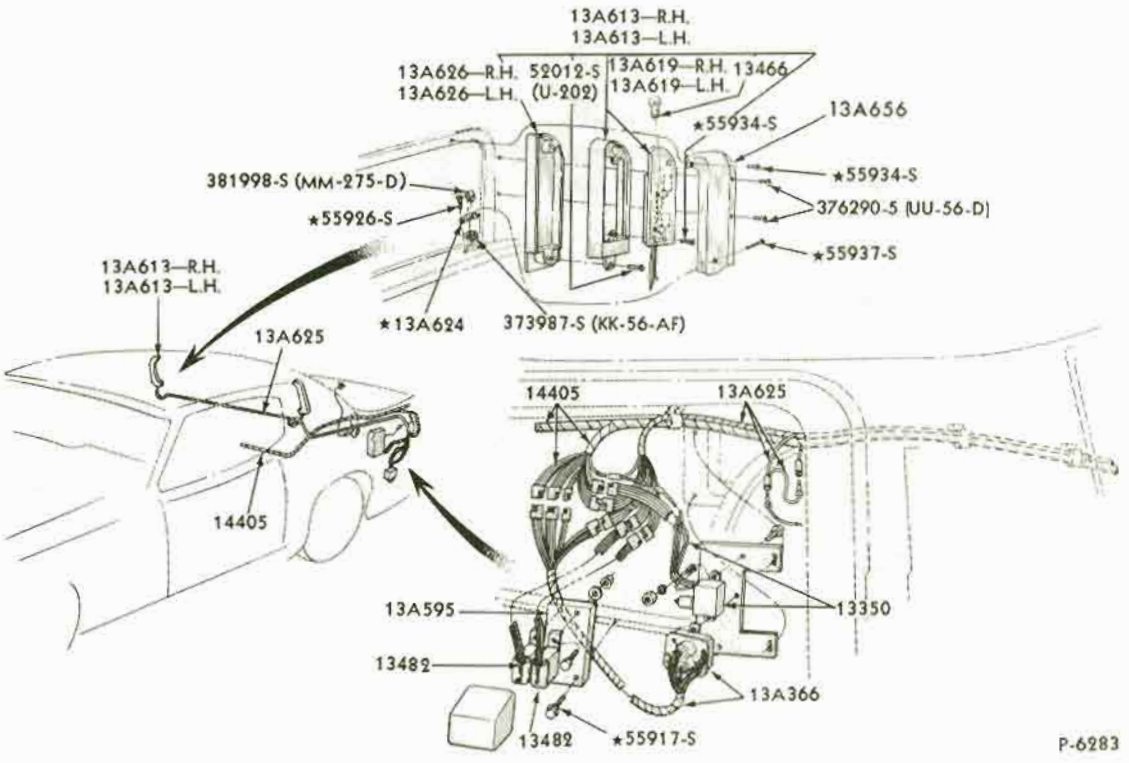

AUXILIARY STOP LAMPS - PACKAGE TRAY MOUNTED
1969/70 THUNDERBIRD

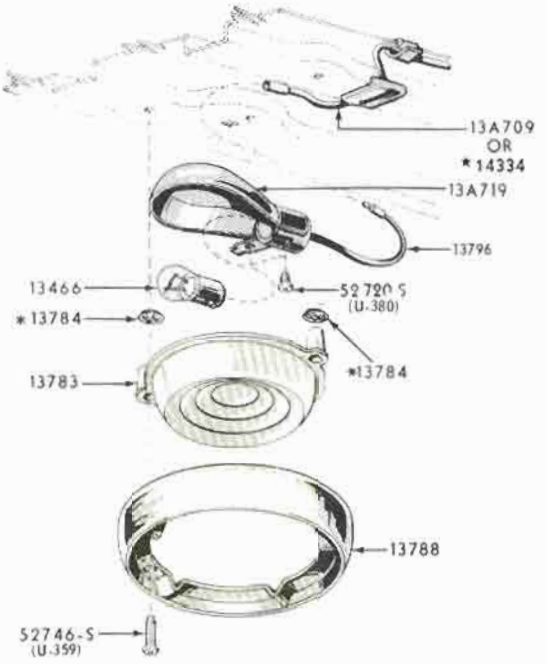

*USED ON STATION WAGON MODELS ONLY P-2996

"TYPICAL" DOME LAMP
1965 FALCON 1965 FAIRLANE
1965/68 FORD 1967/69 MUSTANG

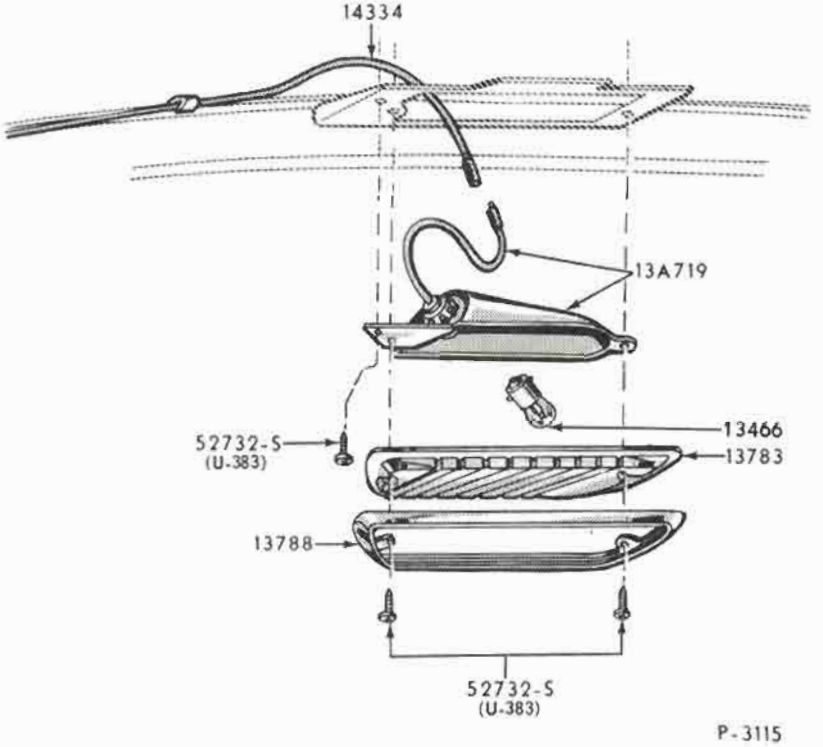

P-3115

DOME LAMP
1966/67 RANCHERO

COPYRIGHT © 1975 — FORD MOTOR COMPANY — DEARBORN, MICHIGAN

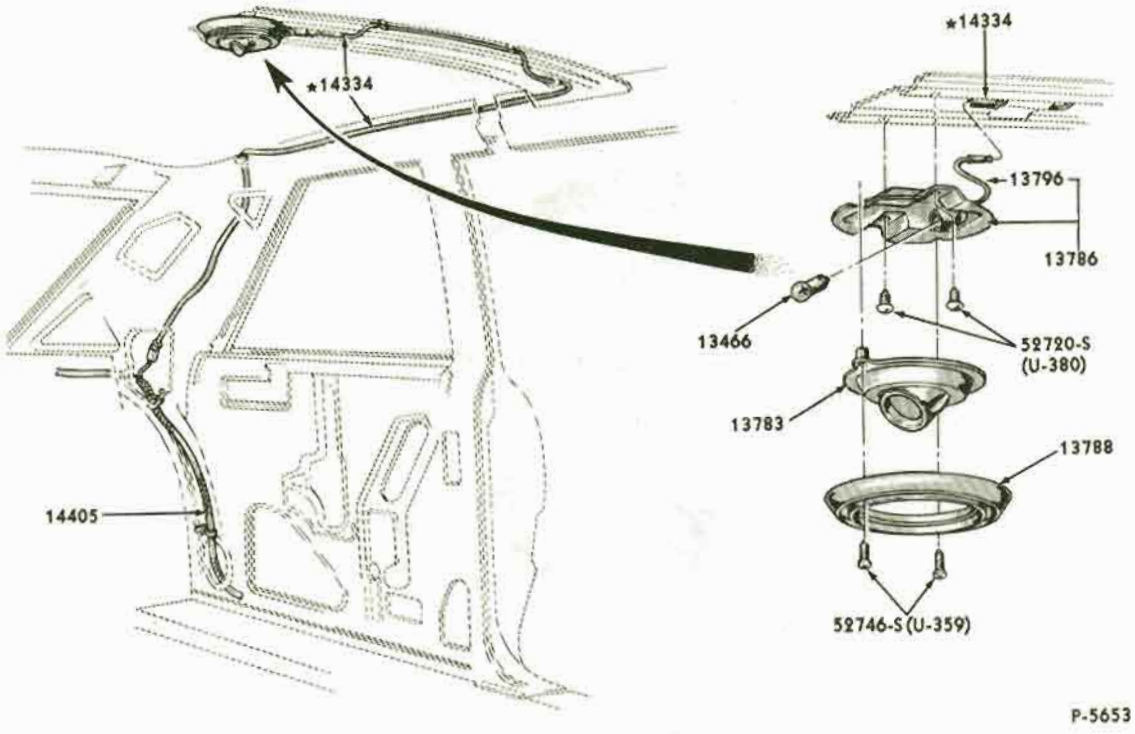

"SWIVEL" DOME LAMP
1967 FORD

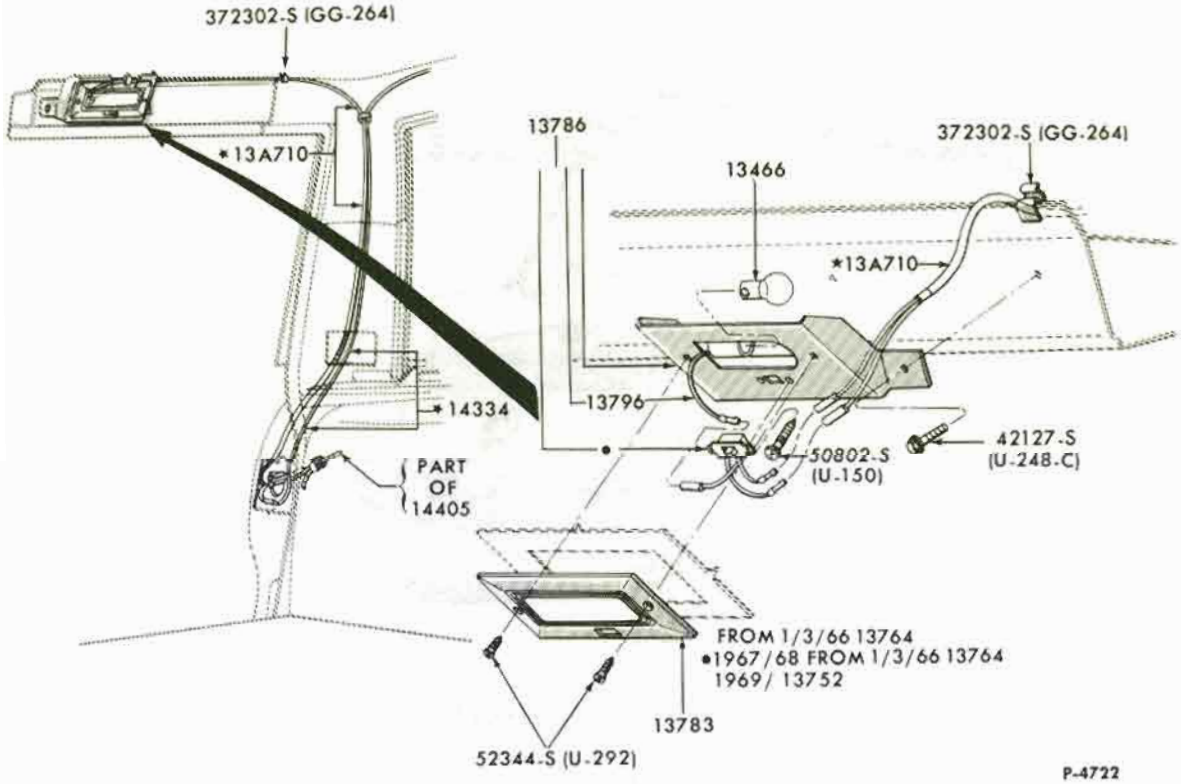

CARGO AREA LAMP
1965/72 FORD - BODY TYPE 71

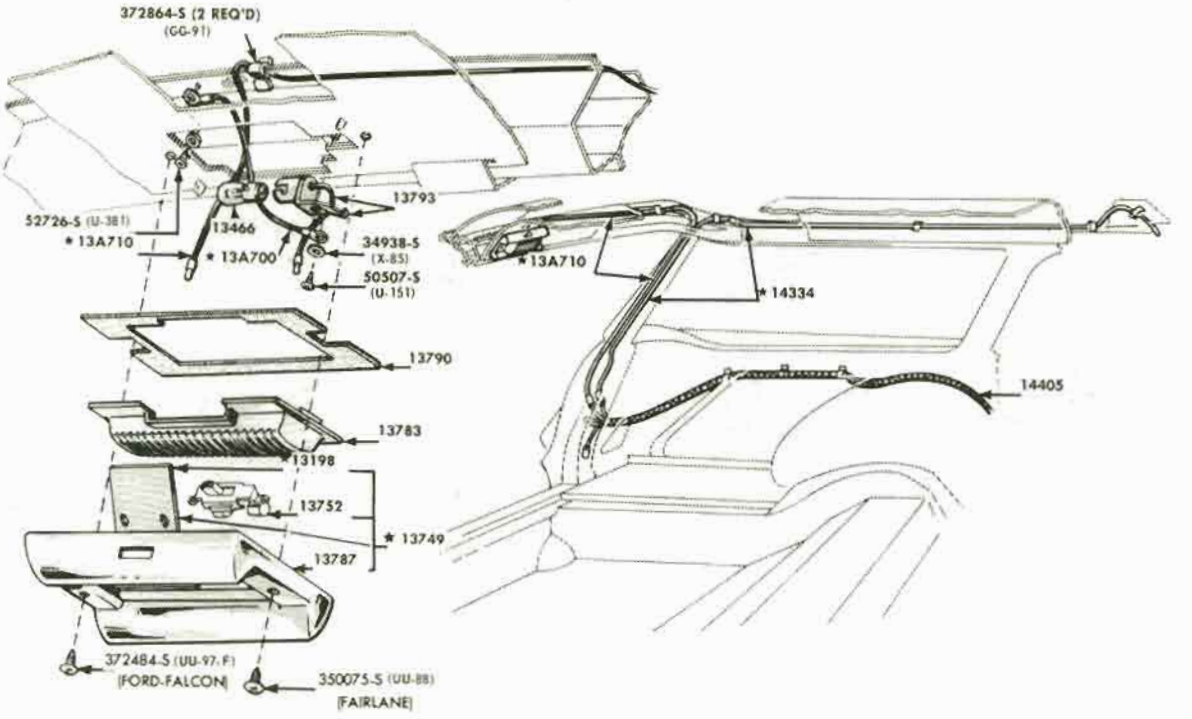

P4509

CARGO AREA LAMP (STATION WAGON)
1965 FAIRLANE 1965 FALCON

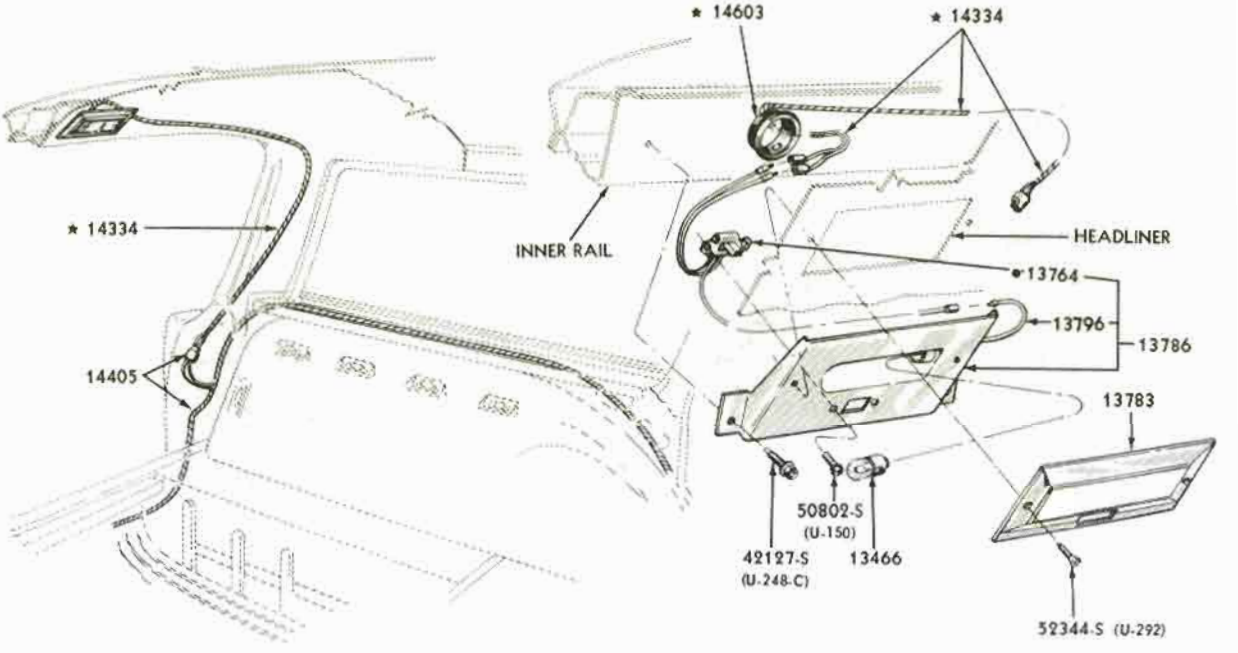

• FROM 1/3/66 SERVICED ONLY IN 13786 BODY & SOCKET ASSY.

P-4984

CARGO AREA LAMP - STATION WAGON
1966/72 FAIRLANE/TORINO 1966/70 FALCON

COPYRIGHT © 1975 — FORD MOTOR COMPANY — DEARBORN, MICHIGAN

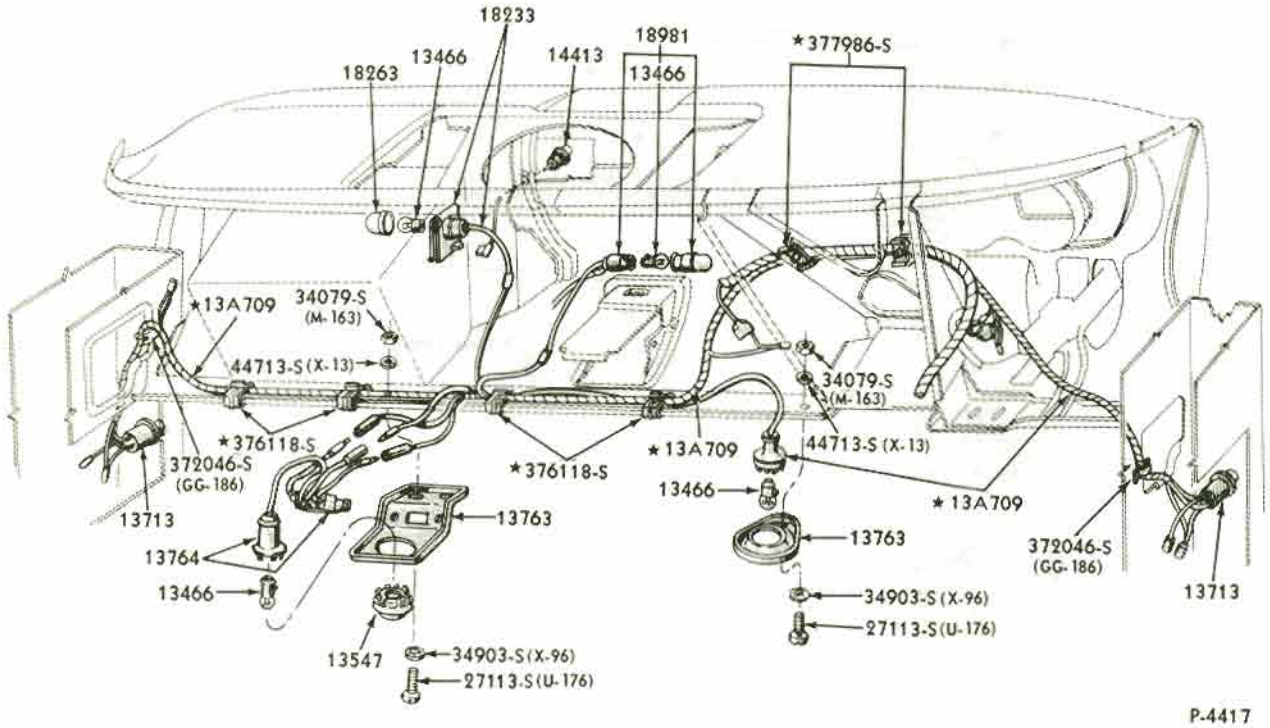

COURTESY LAMPS and WIRING - INSTRUMENT PANEL MOUNTED
1965 FALCON

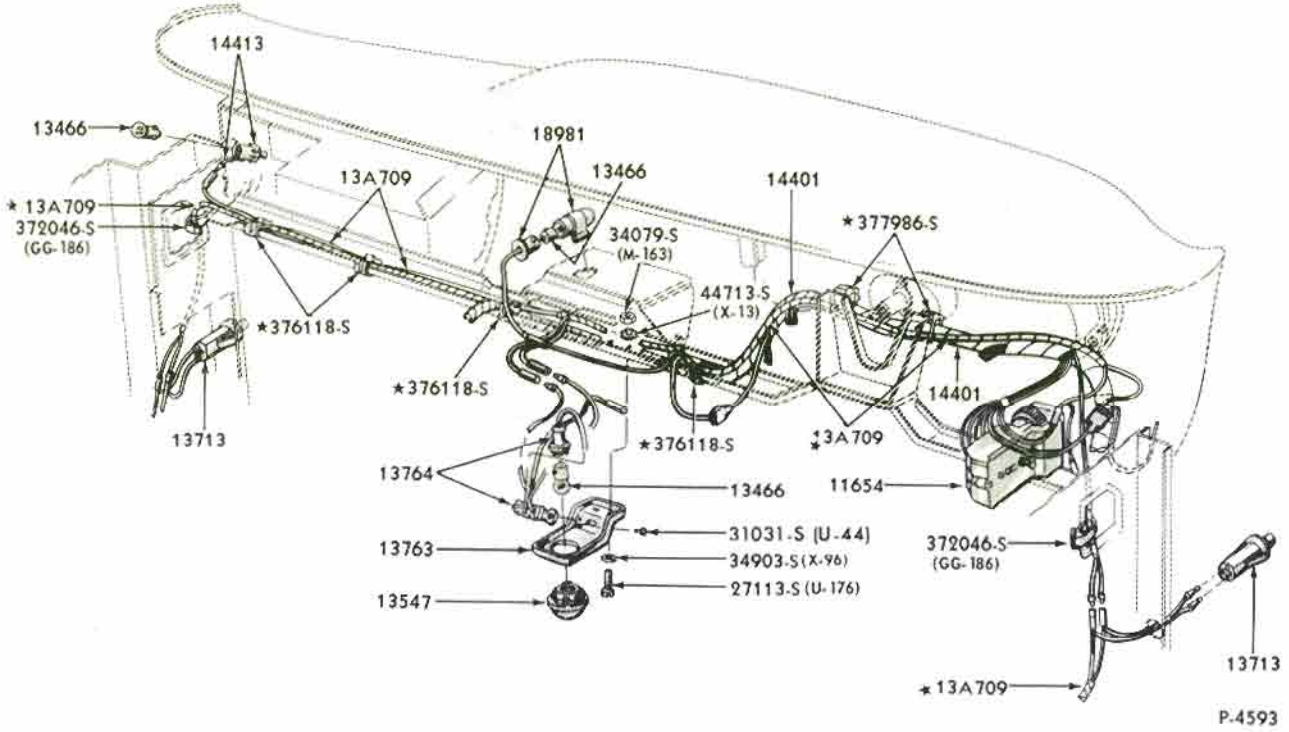

COURTESY LAMPS and WIRING - INSTRUMENT PANEL MOUNTED
1965 FAIRLANE

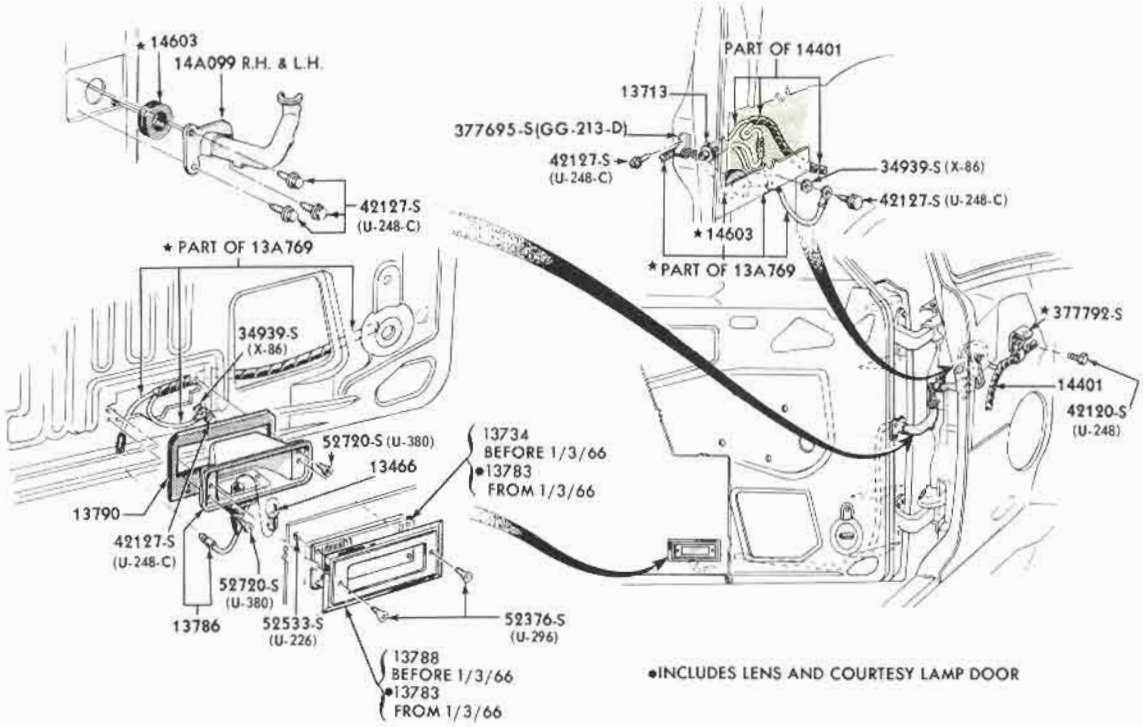

COURTESY LAMP and WIRING - FRONT INTERIOR DOOR
1965/67 FORD

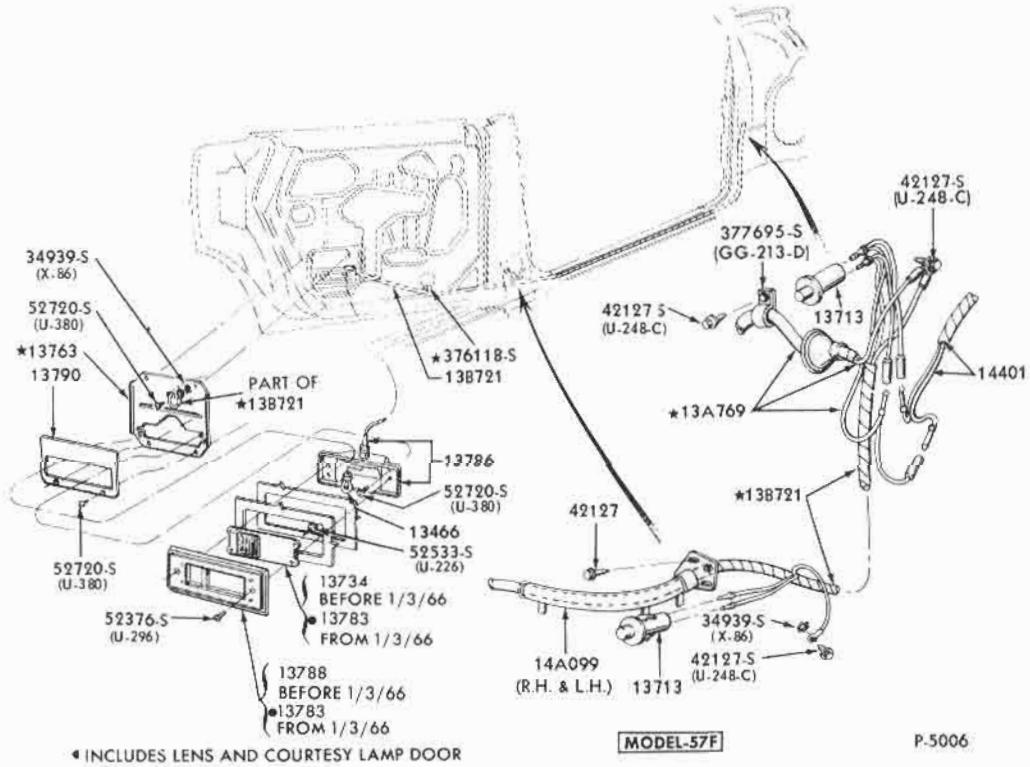

COURTESY LAMP and WIRING - REAR INTERIOR DOOR
1965/67 FORD

COPYRIGHT © 1975 — FORD MOTOR COMPANY — DEARBORN, MICHIGAN

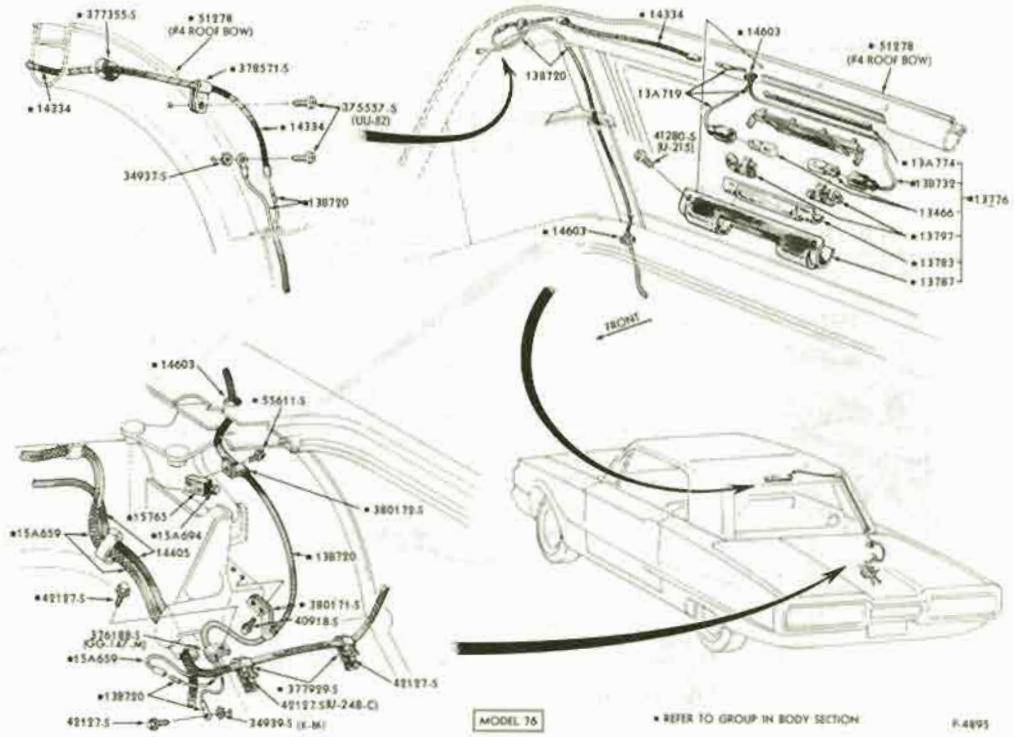

INTERIOR LAMP - NO. 4 ROOF BOW MOUNTED
1965/66 THUNDERBIRD - BODY TYPE 76

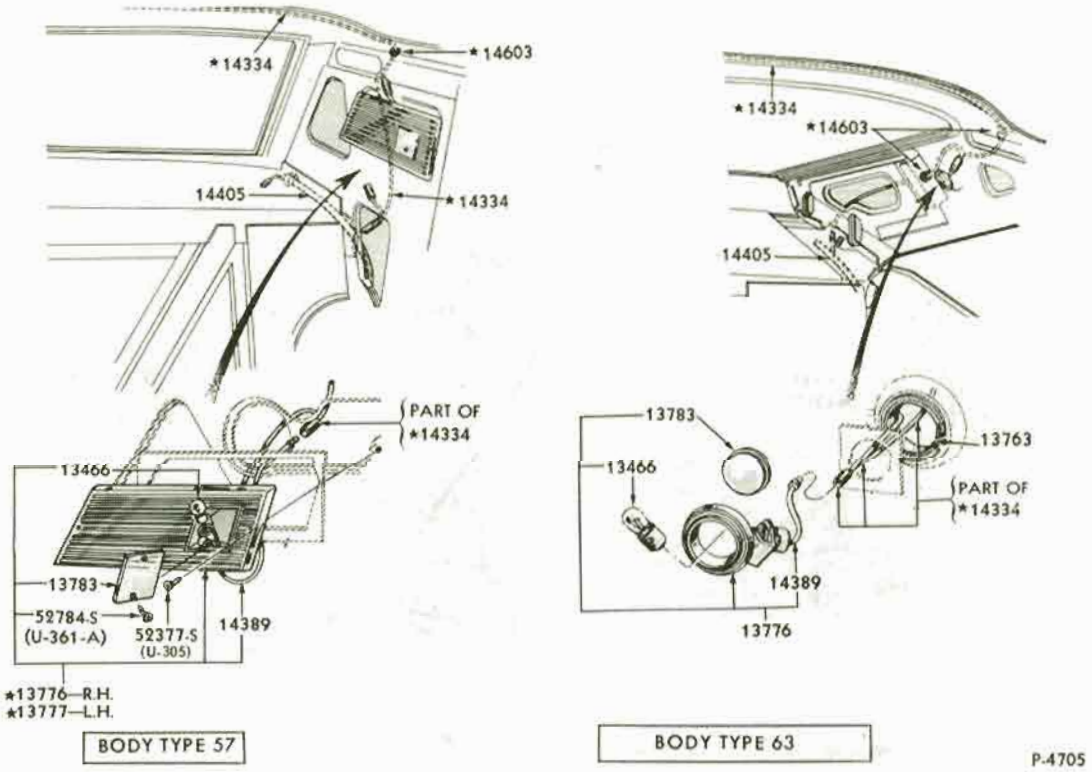

PILLAR LAMP
1965/67 FORD

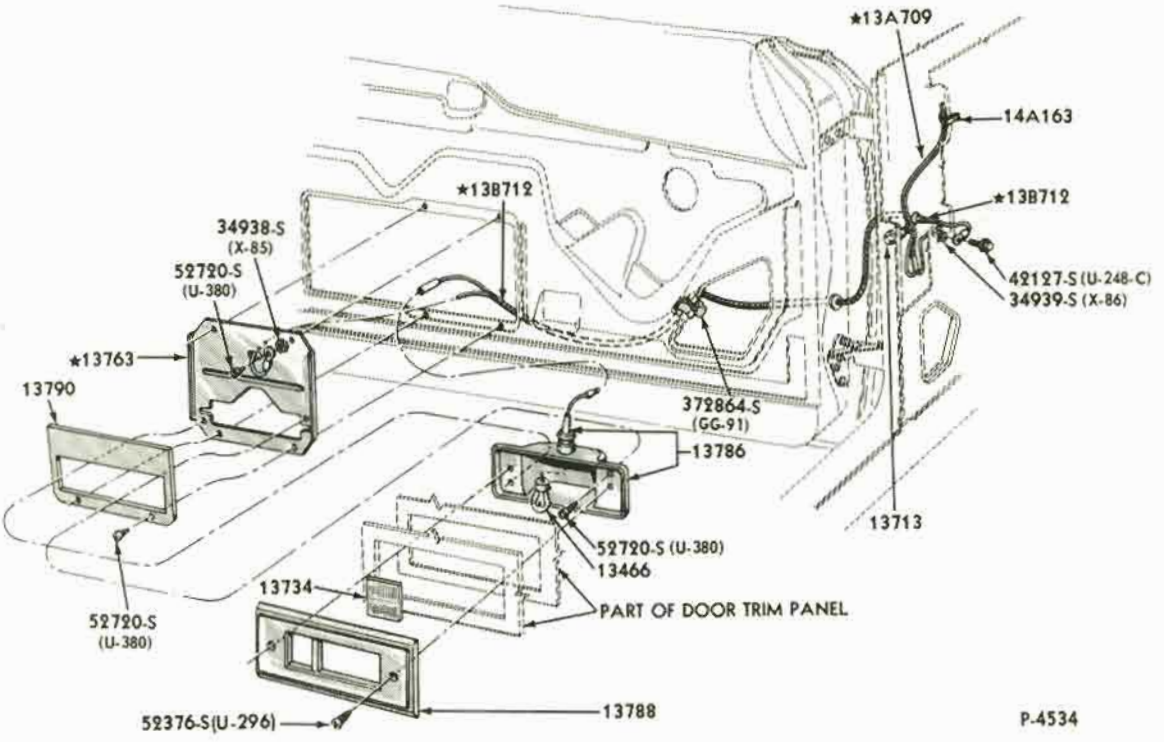

COURTESY LAMPS and WIRING - INTERIOR DOOR
1965 FAIRLANE

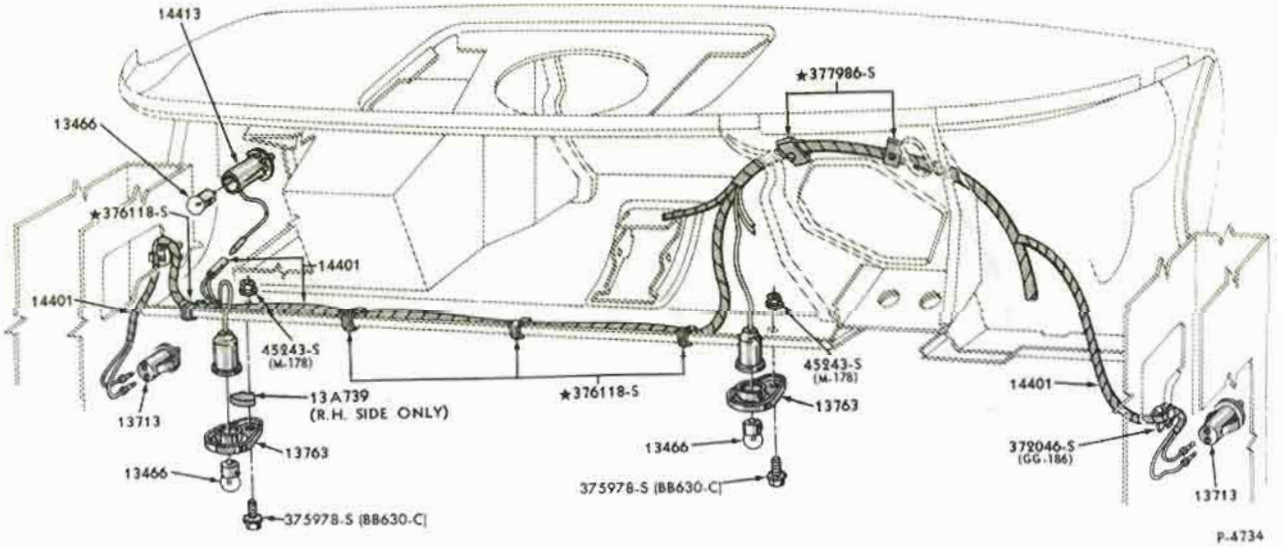

COURTESY LAMP and WIRING - INSTRUMENT PANEL MOUNTED
1965/68 MUSTANG

COPYRIGHT © 1975 — FORD MOTOR COMPANY — DEARBORN, MICHIGAN

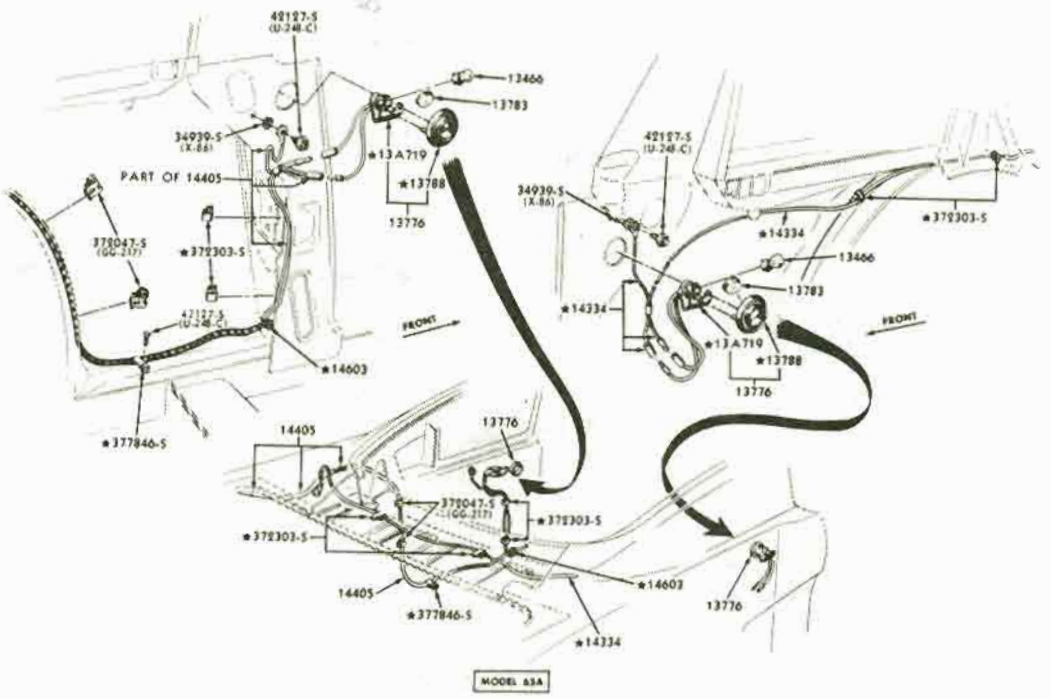

P4735

COURTESY LAMP and WIRING - INTERIOR QUARTER PANEL
1965/70 MUSTANG - "FASTBACK"

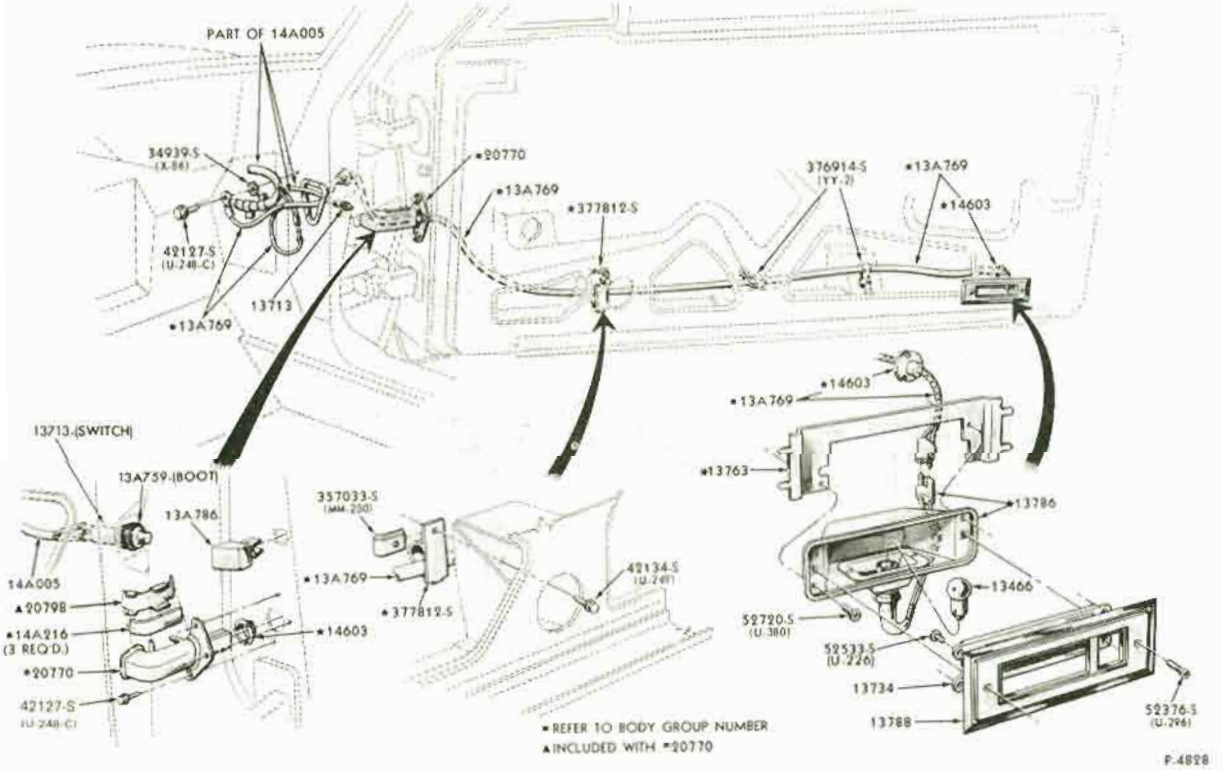

P-4828

COURTESY LAMP and WIRING - INTERIOR DOOR
1965/66 THUNDERBIRD

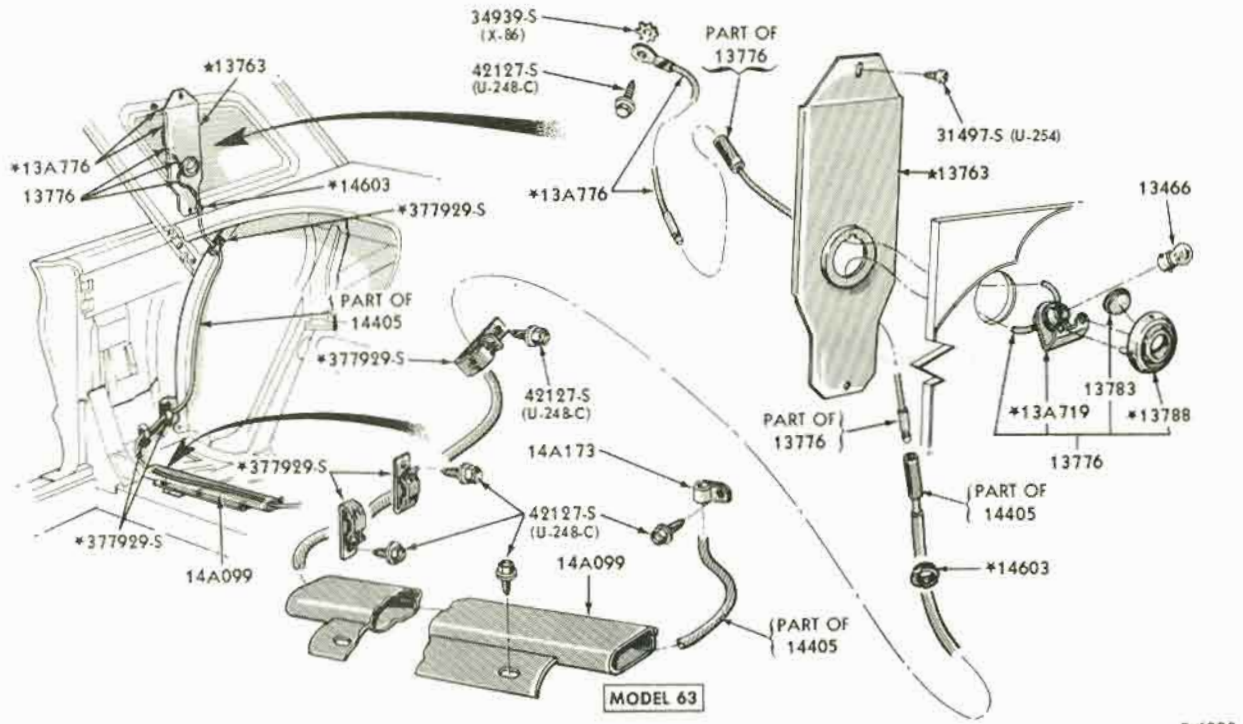

PILLAR LAMP and RELATED PARTS
1965/66 THUNDERBIRD - BODY TYPE 63A

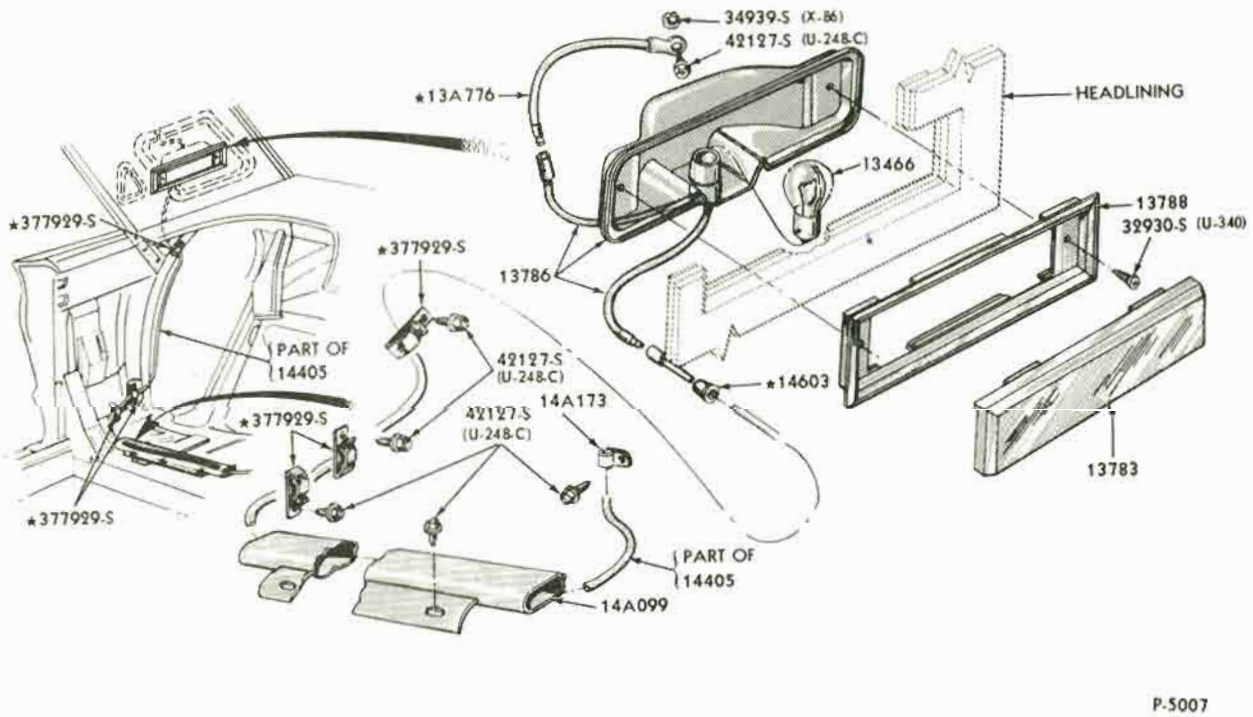

PILLAR LAMP and RELATED PARTS
1966 THUNDERBIRD - BODY TYPES 63C,D

COPYRIGHT © 1975— FORD MOTOR COMPANY — DEARBORN, MICHIGAN

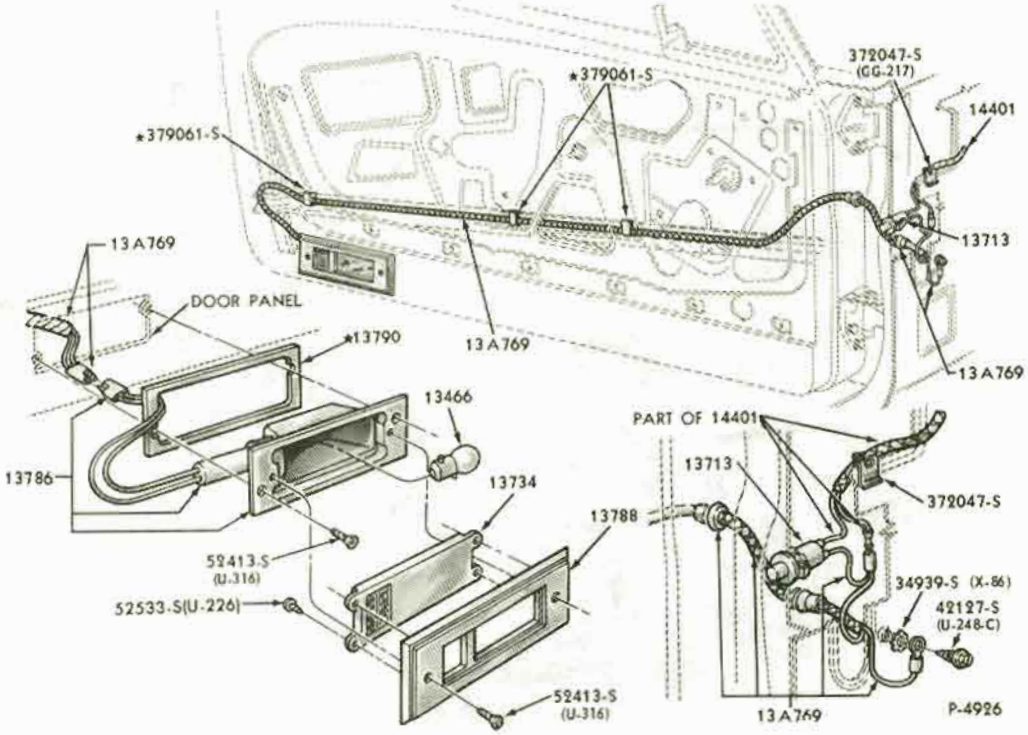

COURTESY LAMP and WIRING - INTERIOR DOOR
1965/66 MUSTANG

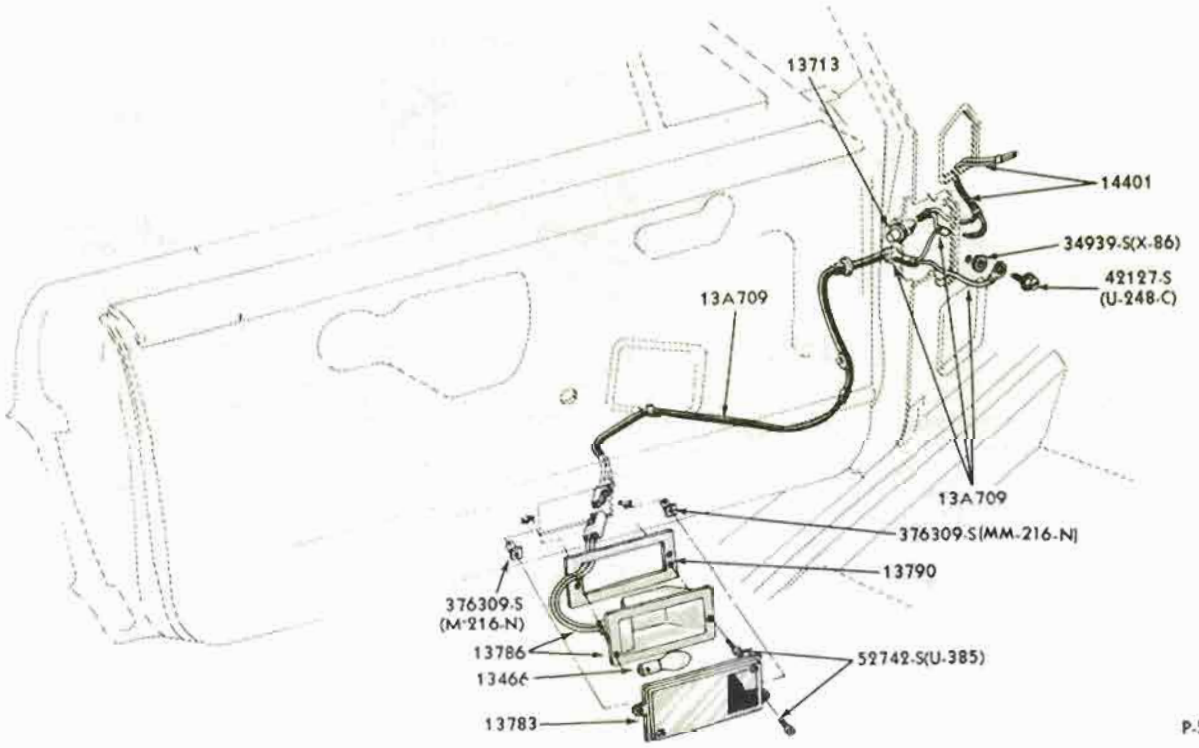

COURTESY LAMP and WIRING - INTERIOR DOOR
1967/68 MUSTANG

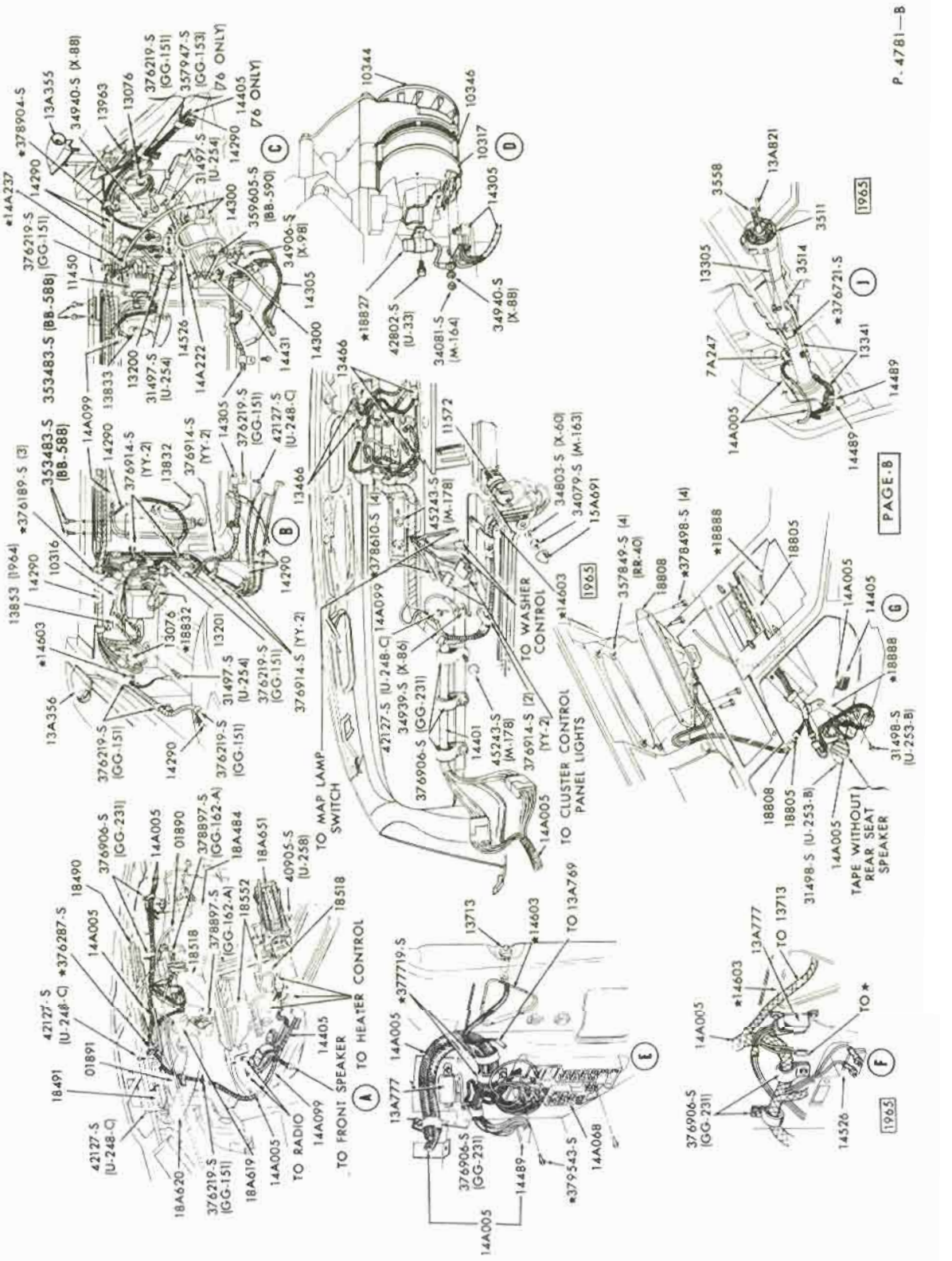

WIRING SYSTEM - "TYPICAL"... PAGE B
1965/66 THUNDERBIRD

COPYRIGHT © 1975 — FORD MOTOR COMPANY — DEARBORN, MICHIGAN

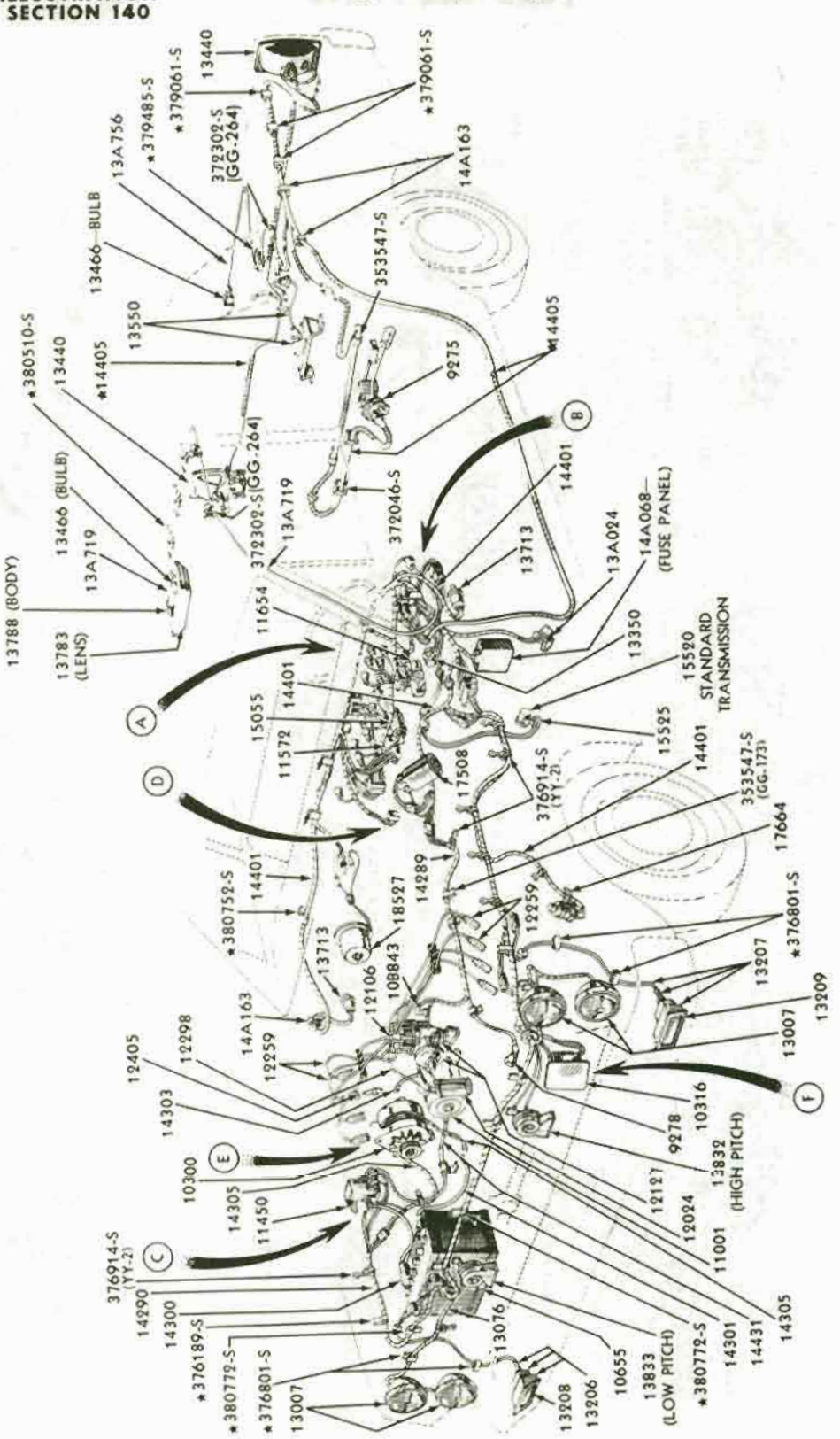

PAGE—A continued on PAGE B

P-5303-A

WIRING SYSTEM - "TYPICAL" ... PAGE A
1966/67 FAIRLANE/TORINO

WIRING SYSTEM - "TYPICAL" ... PAGE B
1966/67 FAIRLANE/TORINO

COPYRIGHT © 1975 — FORD MOTOR COMPANY — DEARBORN, MICHIGAN

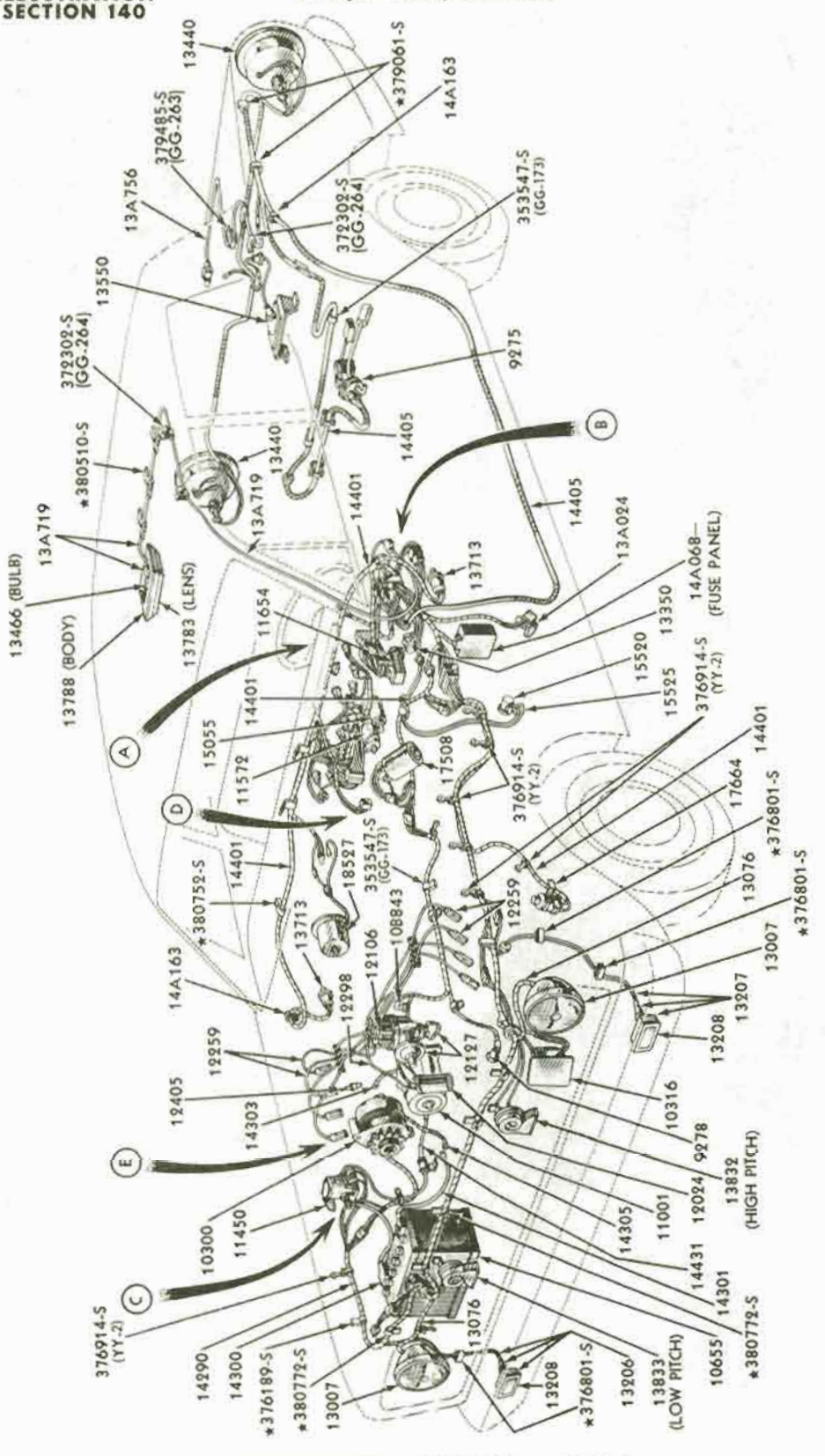

PAGE—A continued on PAGE B

P-5304-A

WIRING SYSTEM - "TYPICAL" ... PAGE A
1966/67 FALCON

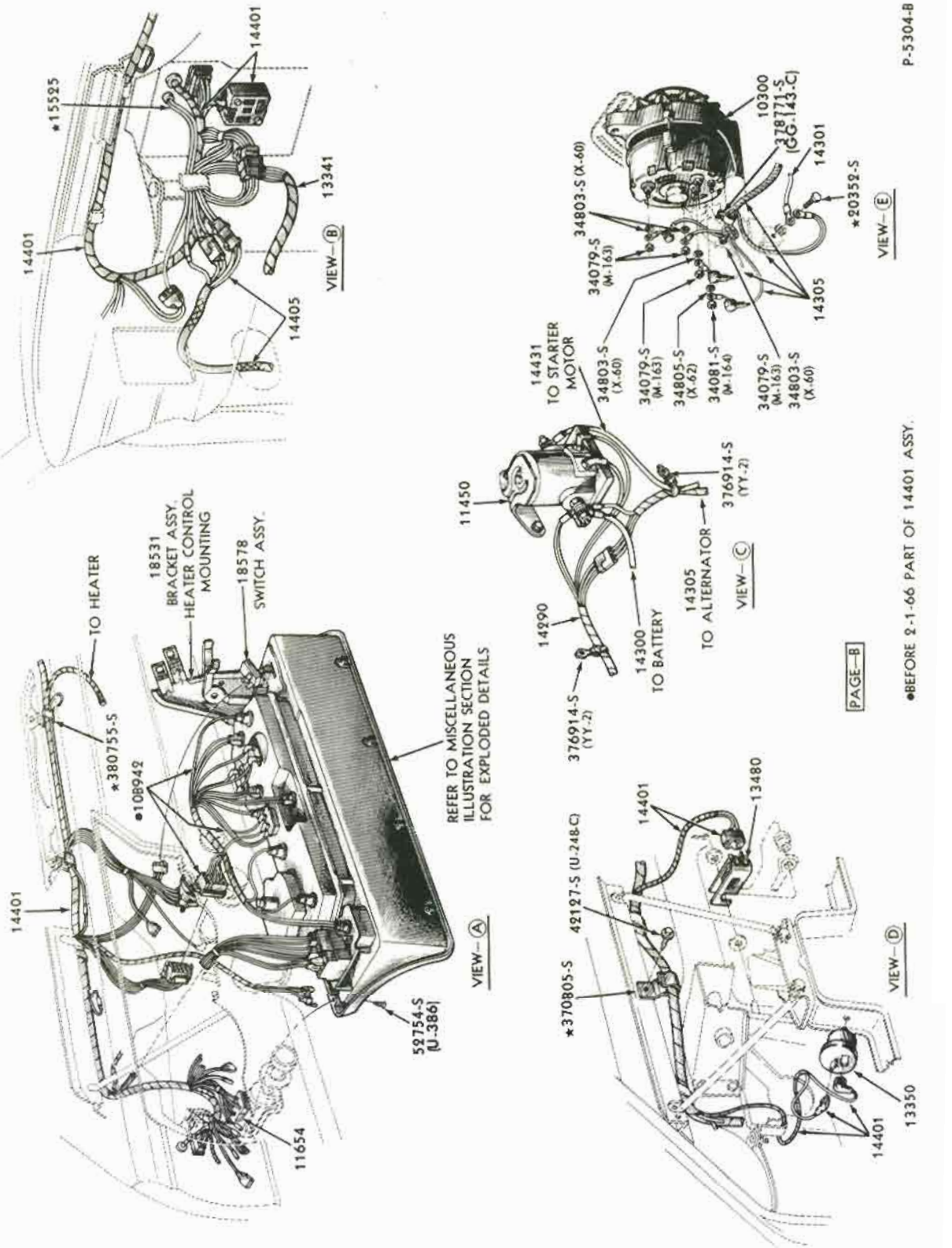

WIRING SYSTEM - "TYPICAL" ... PAGE B
1966/67 FALCON

COPYRIGHT © 1975 — FORD MOTOR COMPANY — DEARBORN, MICHIGAN

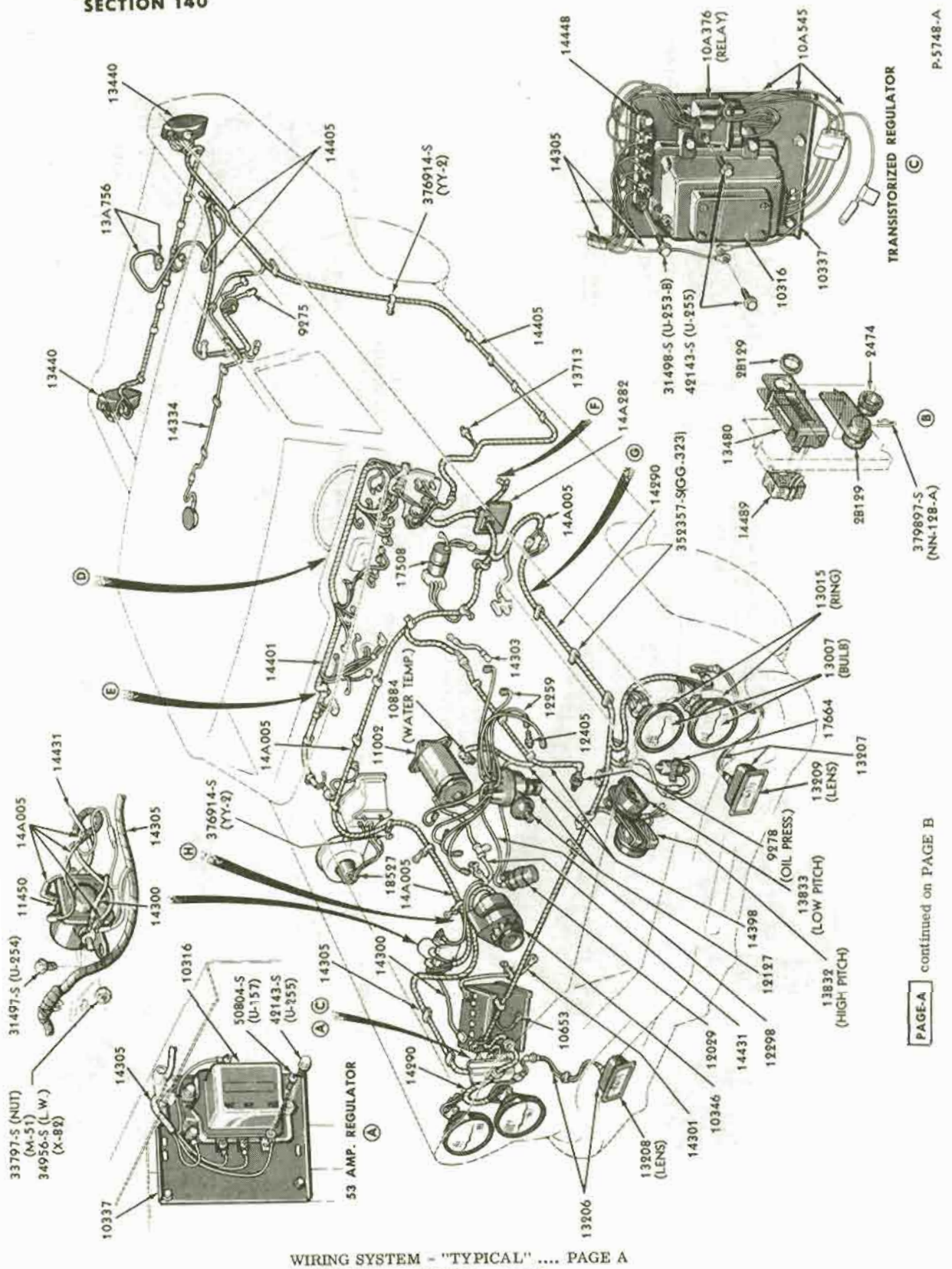

WIRING SYSTEM - "TYPICAL" .... PAGE A
1967/68 FORD

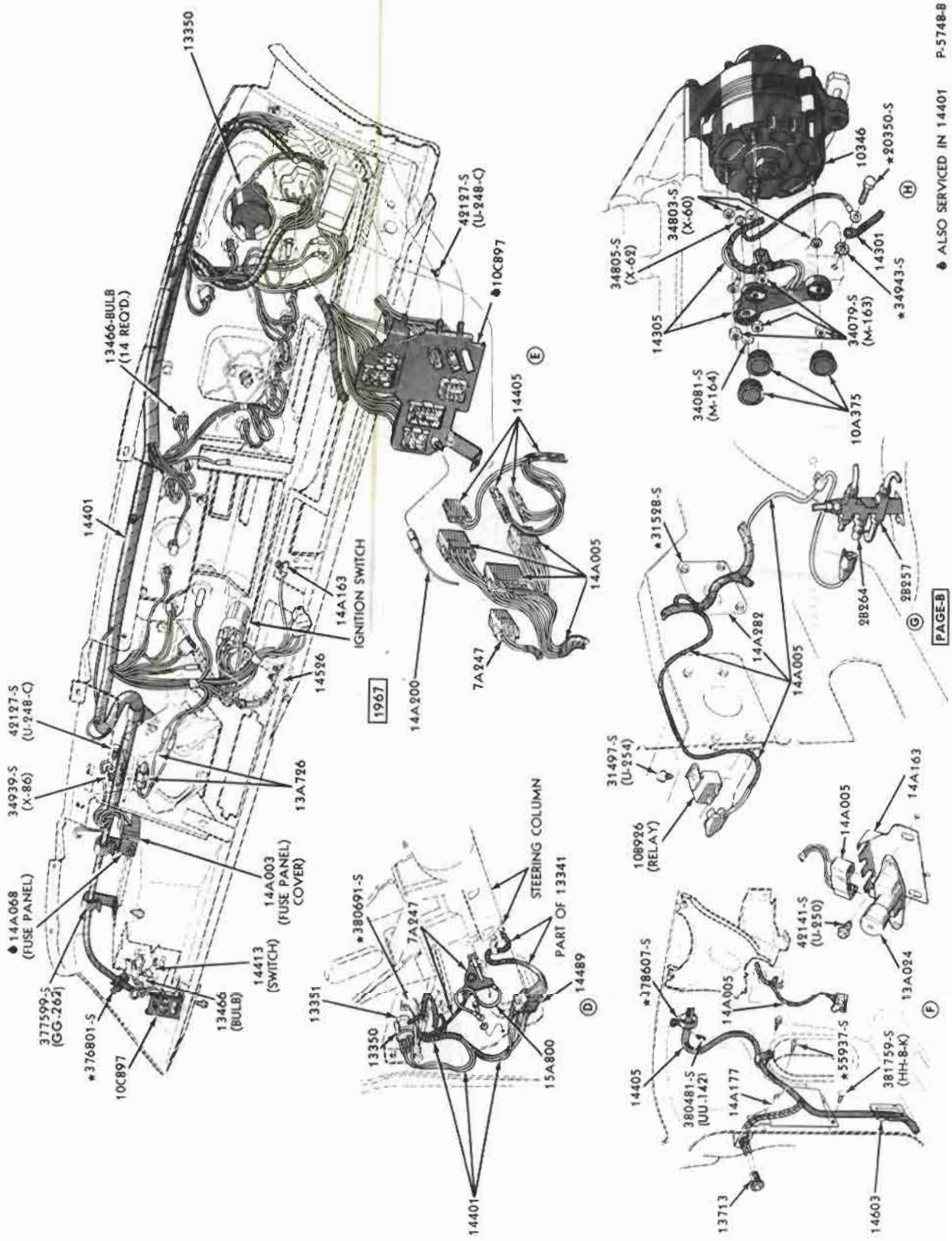

WIRING SYSTEM - "TYPICAL" ... PAGE B
1967/68 FORD

COPYRIGHT © 1975 — FORD MOTOR COMPANY — DEARBORN, MICHIGAN

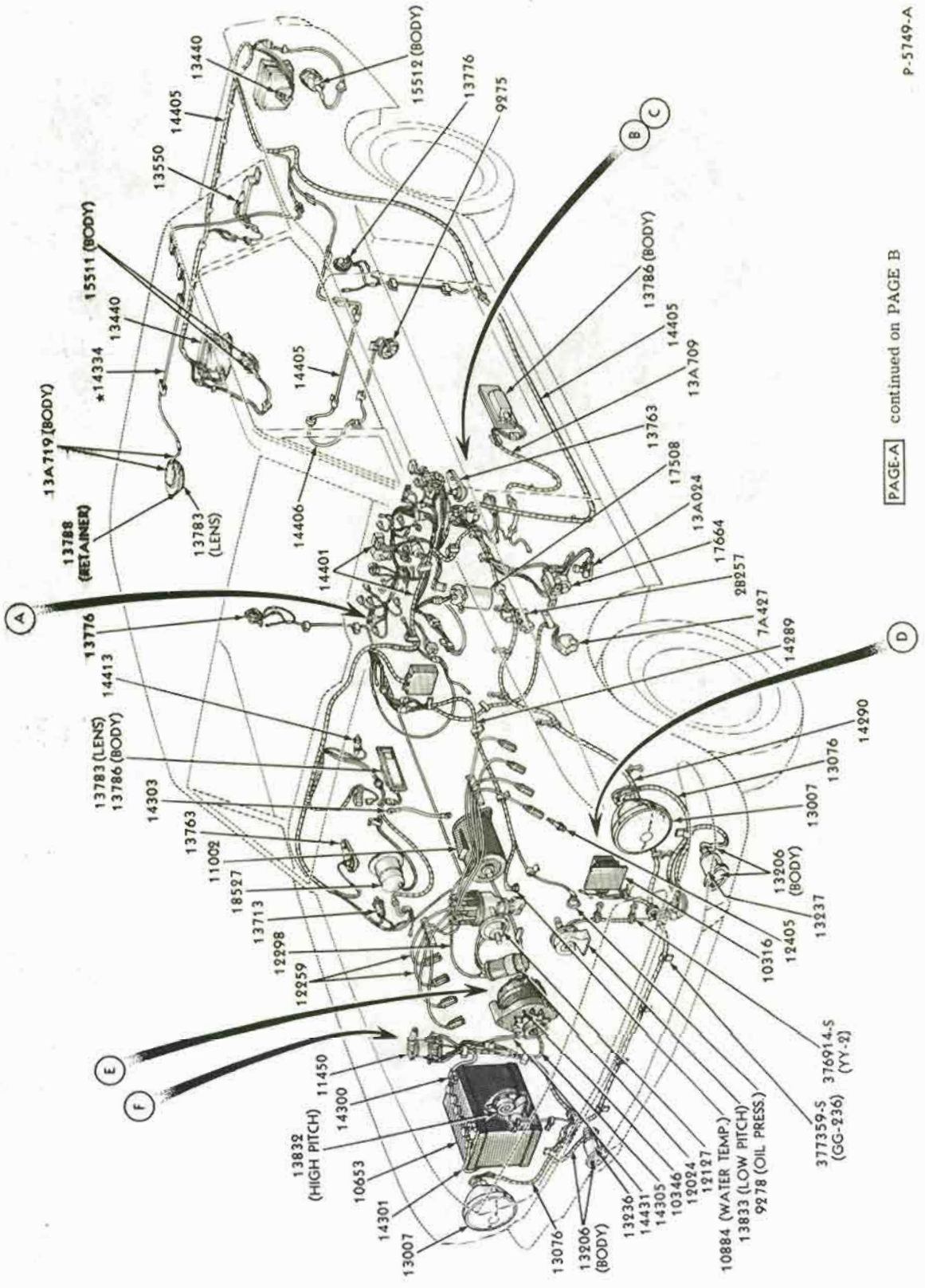

PAGE-A continued on PAGE B

P-5749-A

WIRING SYSTEM - "TYPICAL" ... PAGE A
1967/68 MUSTANG

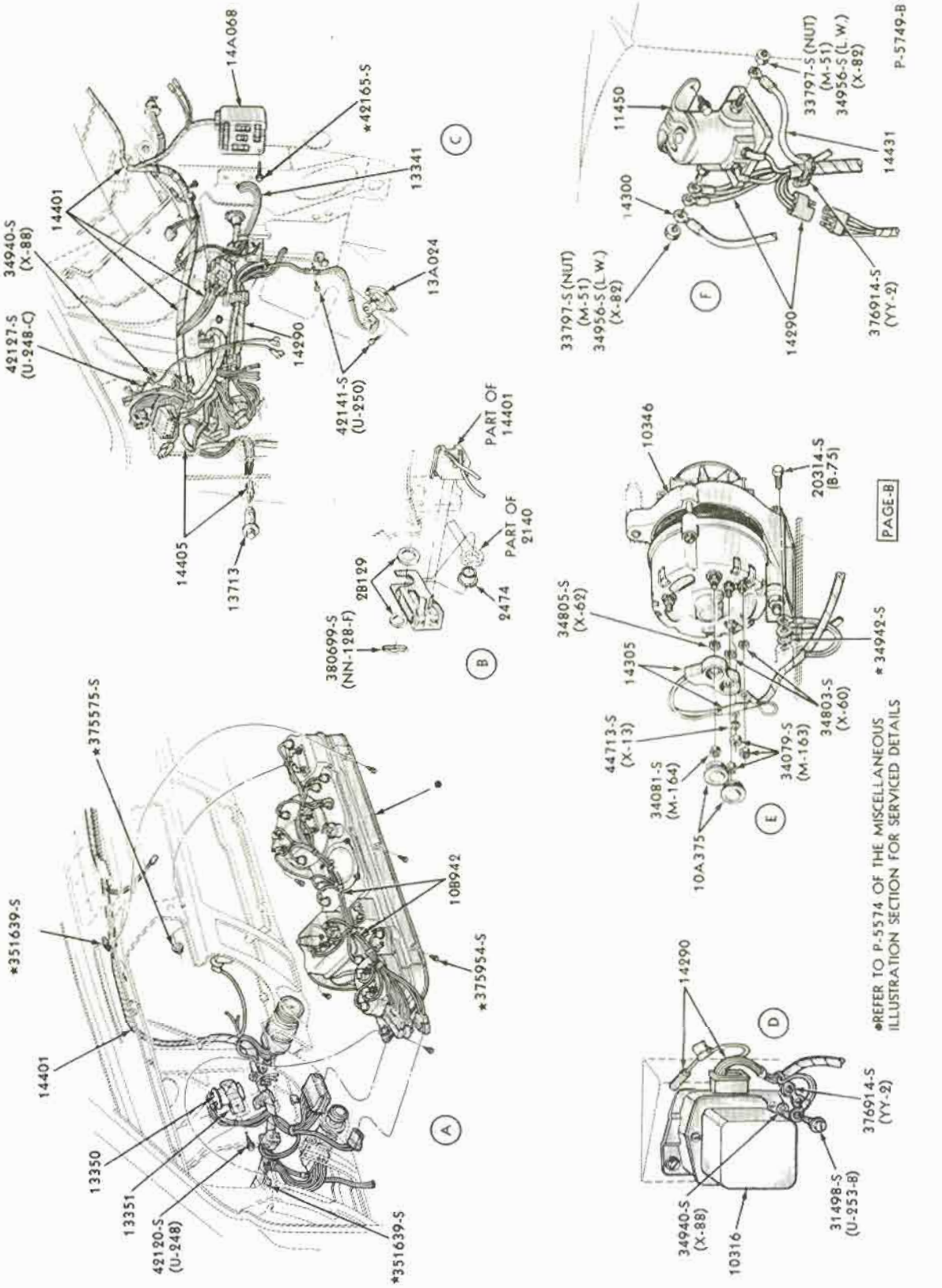

WIRING SYSTEM - "TYPICAL". . . PAGE B
1967/68 MUSTANG

COPYRIGHT © 1975 — FORD MOTOR COMPANY — DEARBORN, MICHIGAN

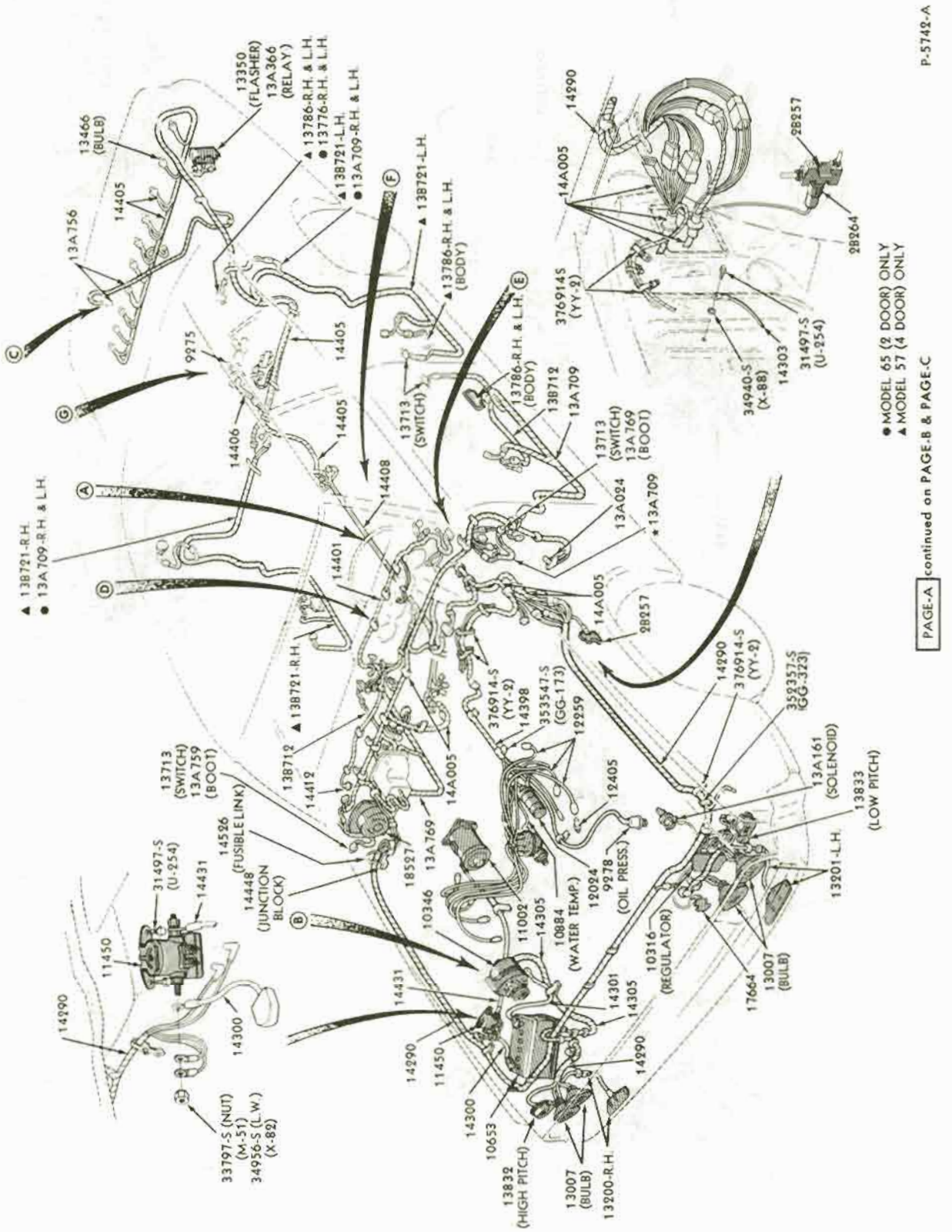

WIRING SYSTEM - "TYPICAL". . . PAGE A
1967/69 THUNDERBIRD

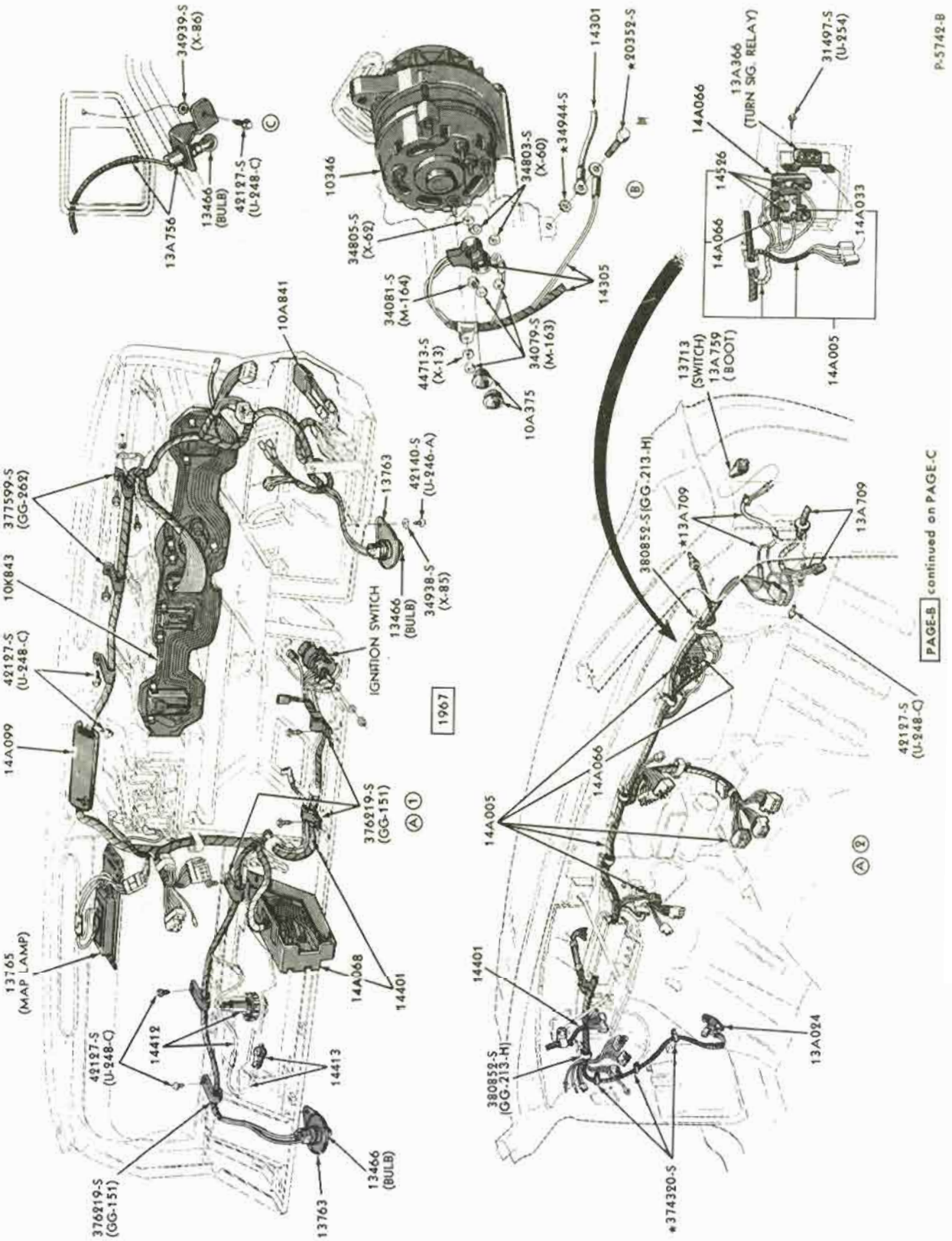

WIRING SYSTEM - "TYPICAL". . . PAGE B
1967/69 THUNDERBIRD

COPYRIGHT © 1975 — FORD MOTOR COMPANY — DEARBORN, MICHIGAN

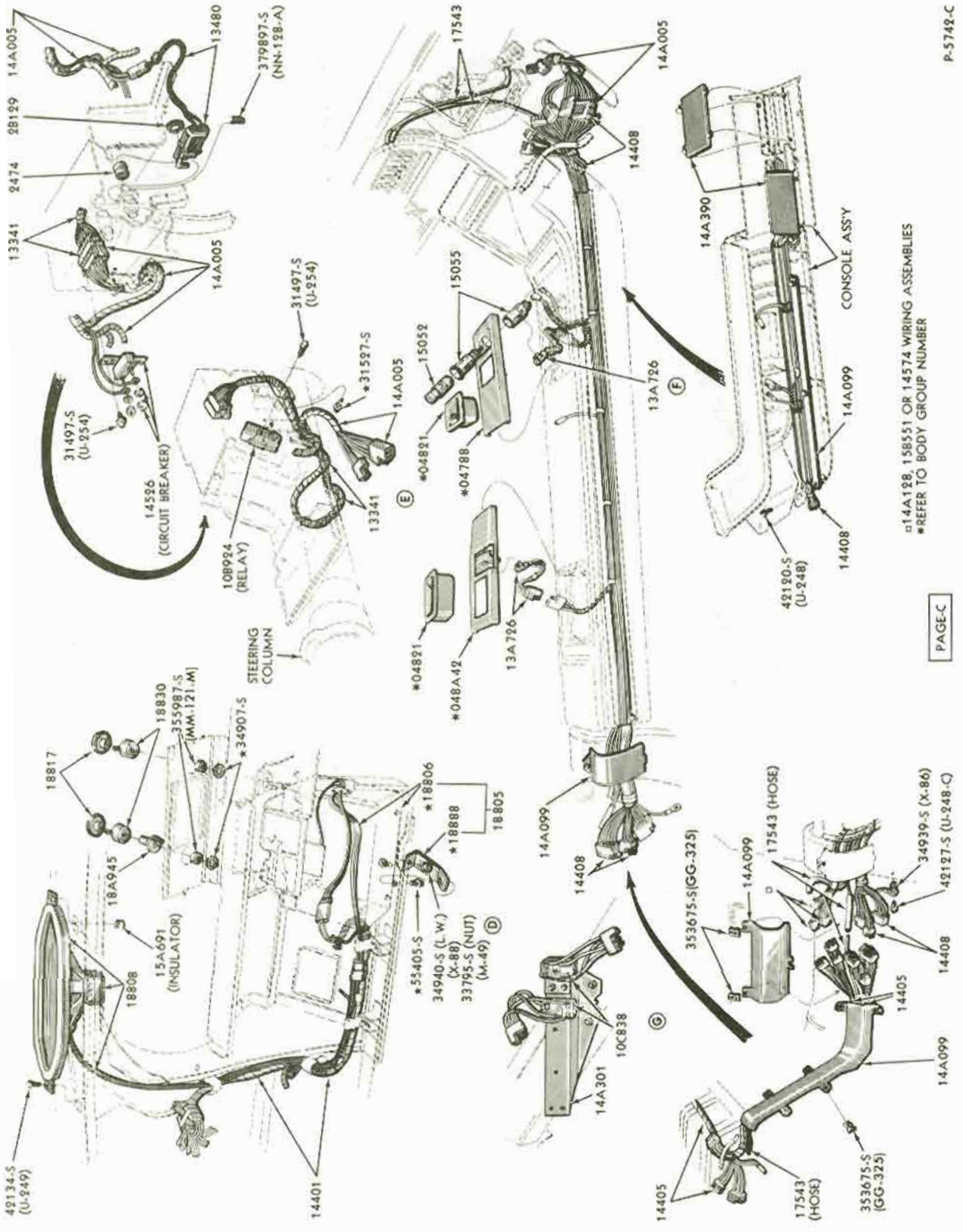

WIRING SYSTEM - "TYPICAL". . . PAGE C
1967/69 THUNDERBIRD

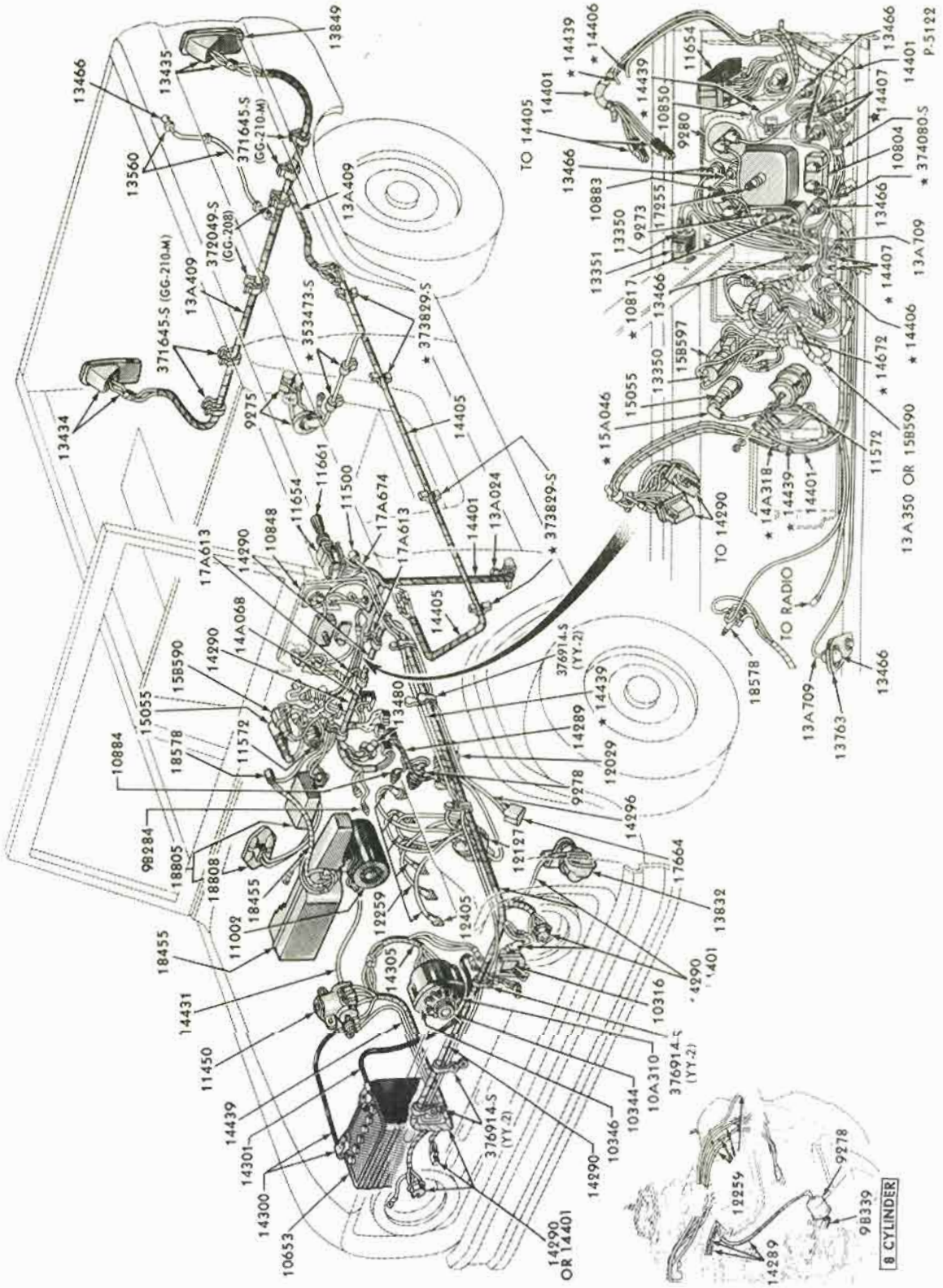

WIRING SYSTEM - "TYPICAL"
1966/72 BRONCO

COPYRIGHT © 1975 — FORD MOTOR COMPANY — DEARBORN, MICHIGAN

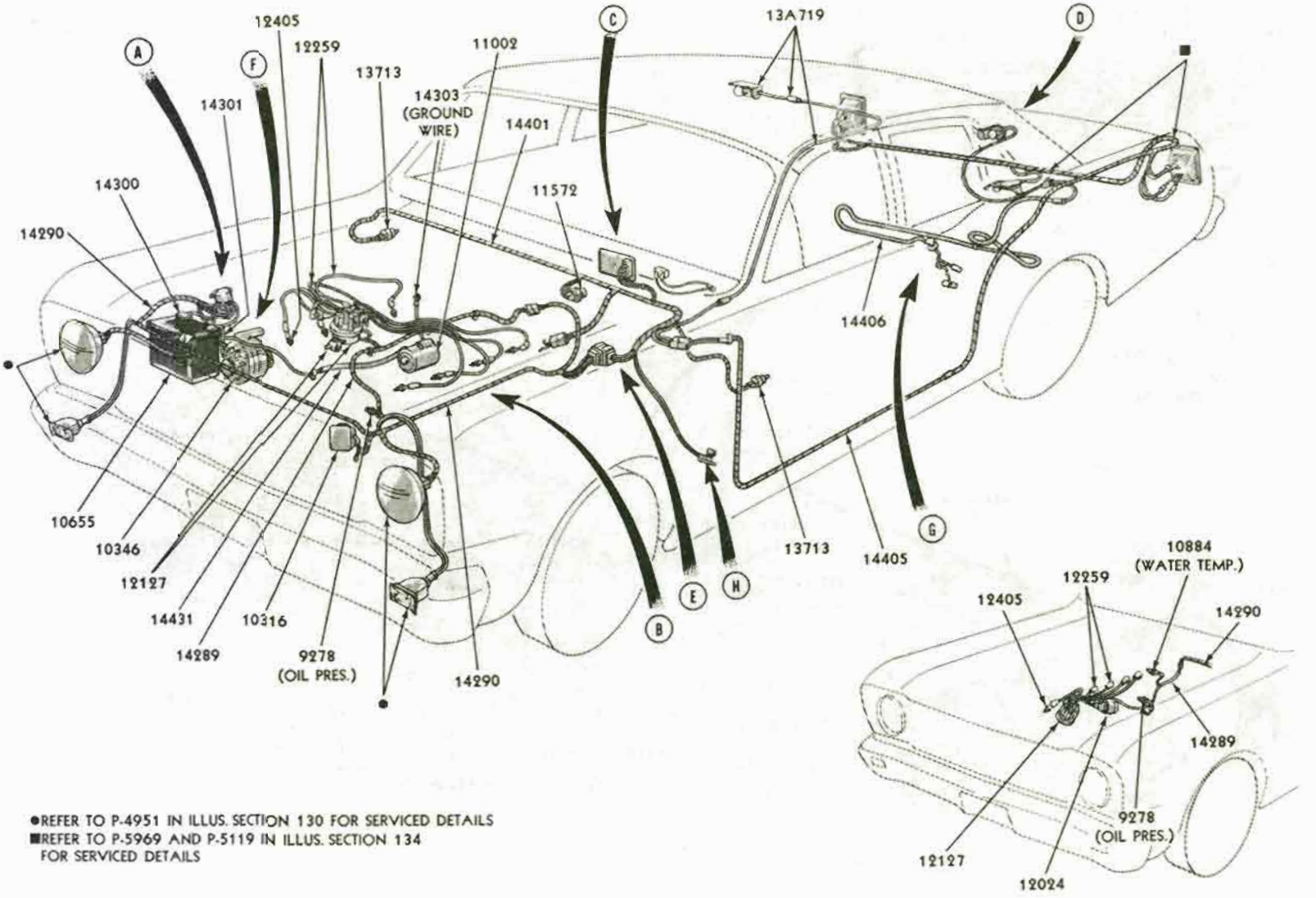

●REFER TO P-4951 IN ILLUS. SECTION 130 FOR SERVICED DETAILS
■REFER TO P-5969 AND P-5119 IN ILLUS. SECTION 134 FOR SERVICED DETAILS

PAGE A CONTINUED ON PAGE B

6 CYLINDER ENGINE

P-6508

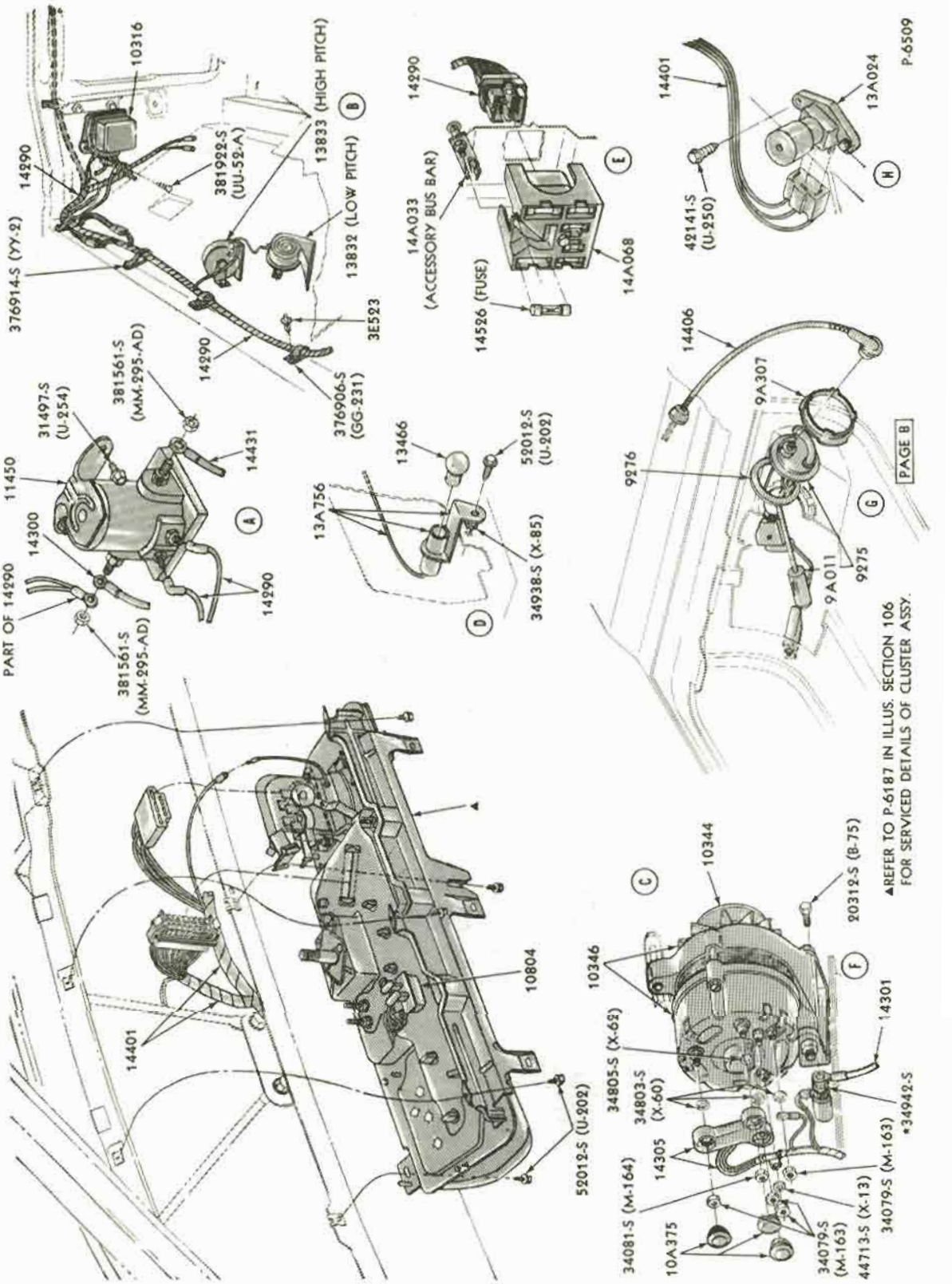

WIRING SYSTEM - "TYPICAL". . . PAGE B
1968/70 FALCON

COPYRIGHT © 1975 — FORD MOTOR COMPANY — DEARBORN, MICHIGAN

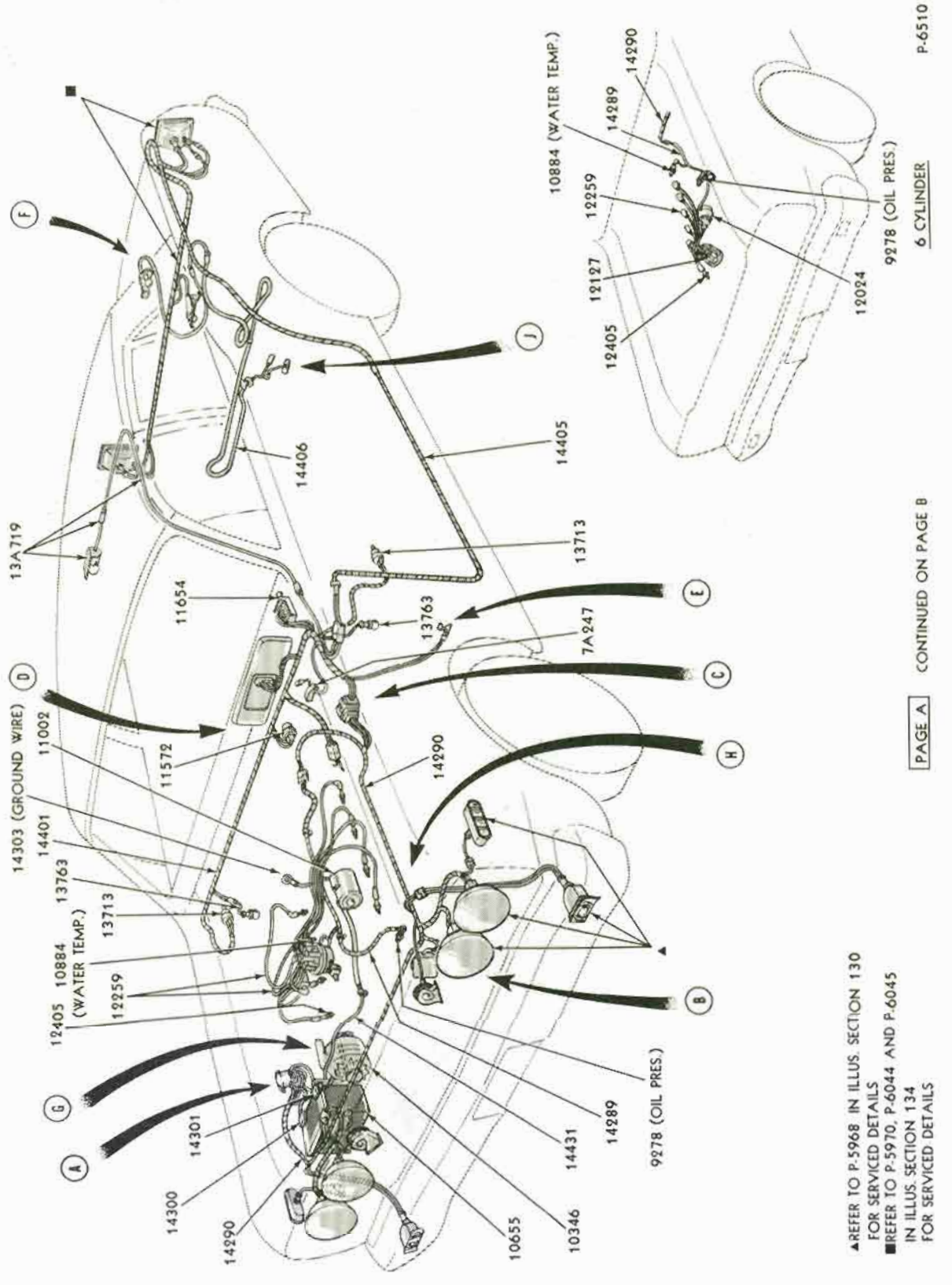

WIRING SYSTEM - "TYPICAL". . . PAGE A
1968/69 FAIRLANE/TORINO

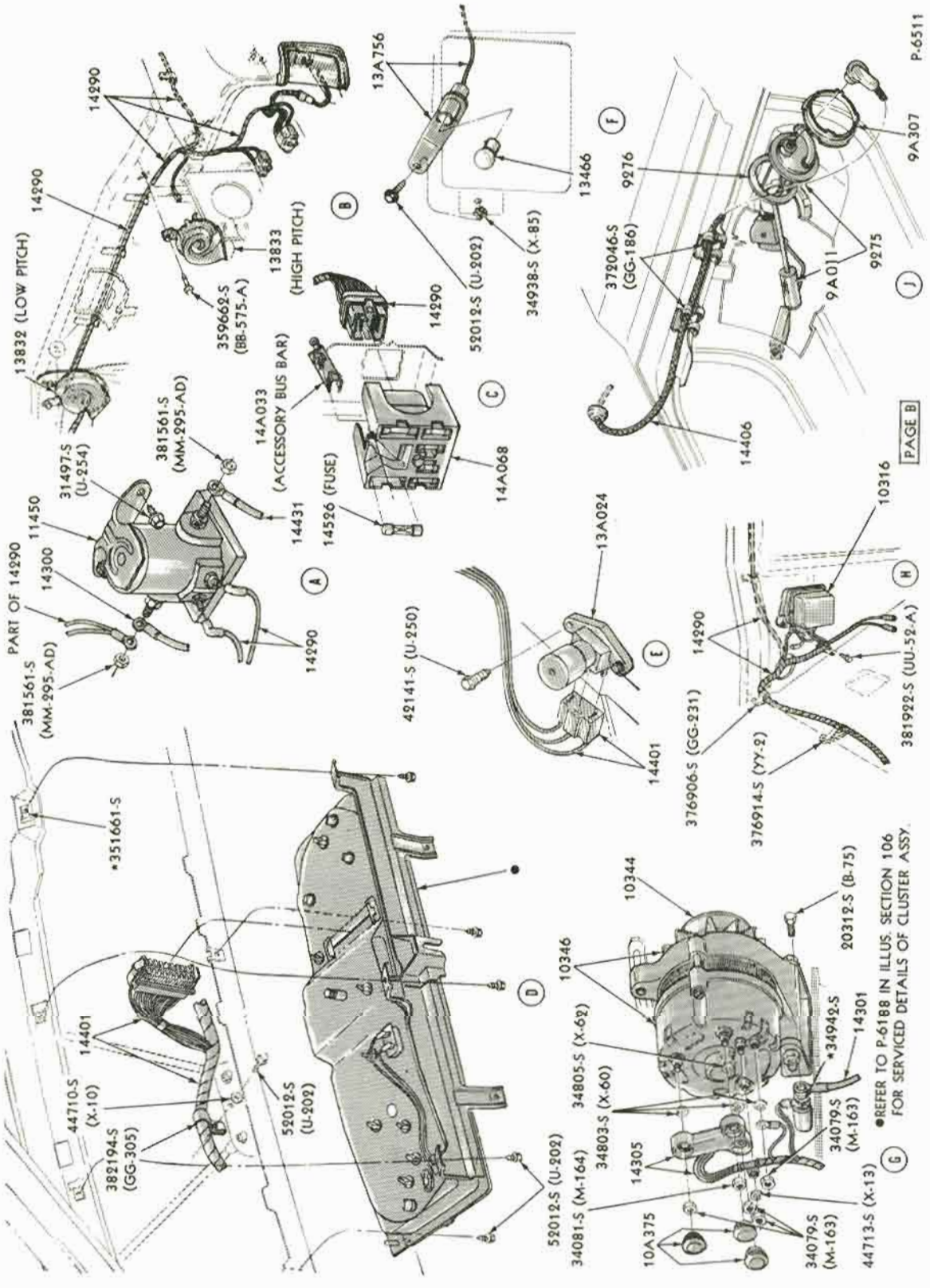

WIRING SYSTEM - "TYPICAL". . . PAGE B
1968/69 FAIRLANE/TORINO

COPYRIGHT © 1975 — FORD MOTOR COMPANY — DEARBORN, MICHIGAN

#REFER TO P-6607 IN SECTION 134 FOR SERVICED DETAILS
▲REFER TO P-6605 & P-6606 IN SECTION 130 FOR SERVICED DETAILS
*REFER TO P-6651 IN SECTION 140 FOR SERVICED DETAILS

PAGE-A continued on PAGE-B

7029

WIRING SYSTEM - "TYPICAL". . .PAGE A
1969/70 FORD

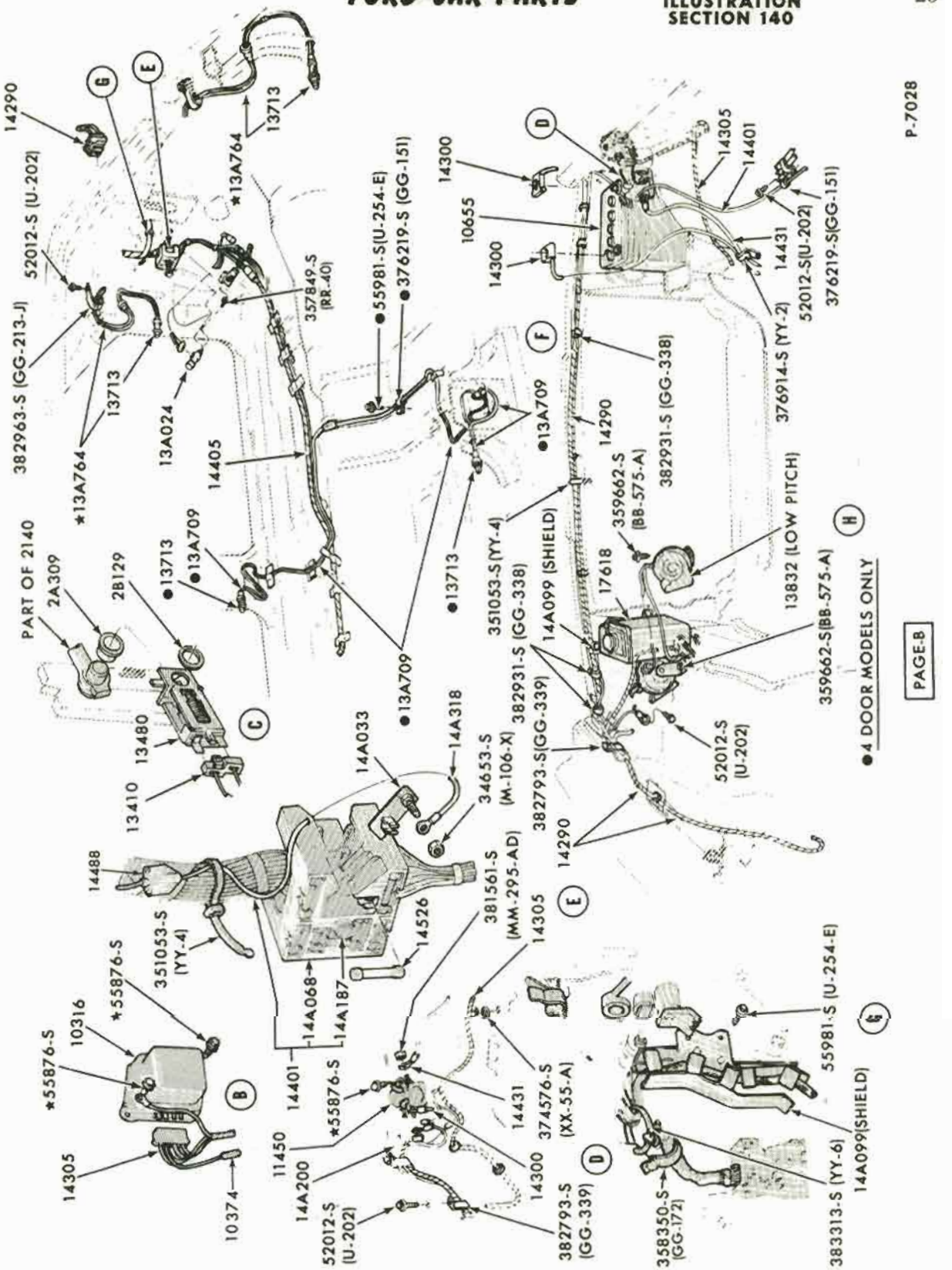

P-7028

WIRING SYSTEM - "TYPICAL" ... PAGE B
1969/70 FORD

COPYRIGHT © 1975 — FORD MOTOR COMPANY — DEARBORN, MICHIGAN

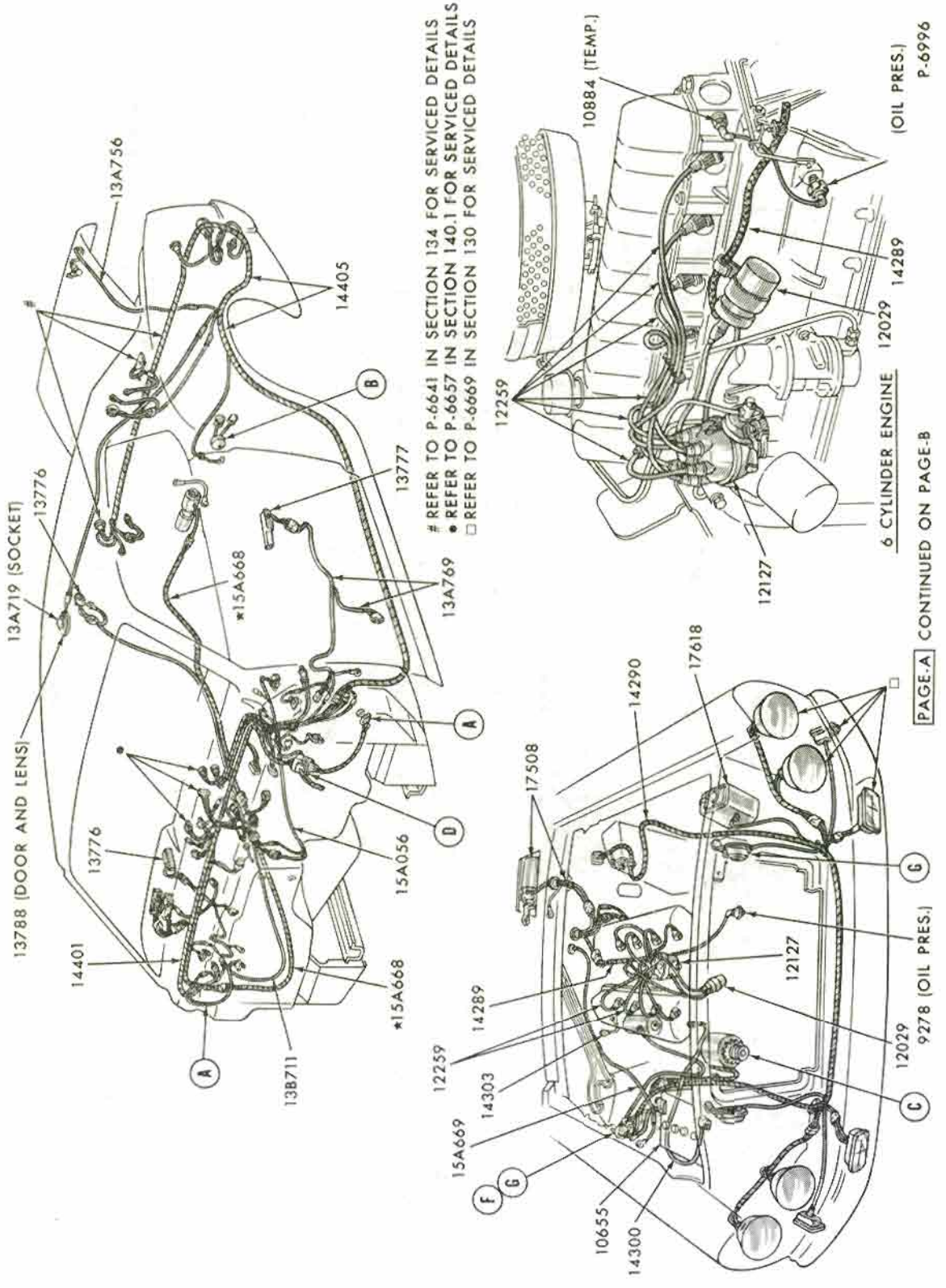

WIRING SYSTEM - "TYPICAL" ... PAGE A
1969/70 MUSTANG

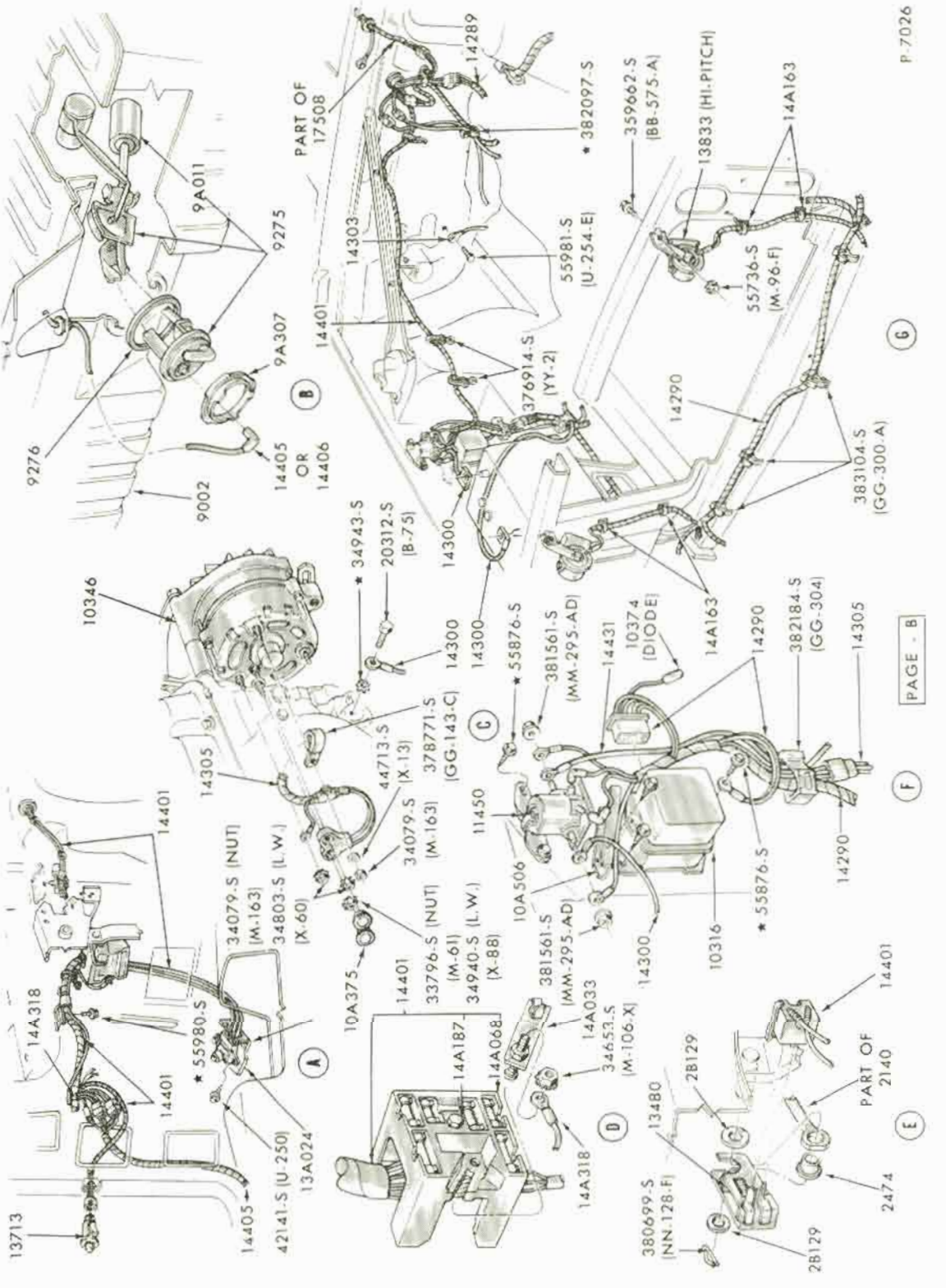

WIRING SYSTEM - "TYPICAL" ... PAGE B
1969/70 MUSTANG

COPYRIGHT © 1975 — FORD MOTOR COMPANY — DEARBORN, MICHIGAN

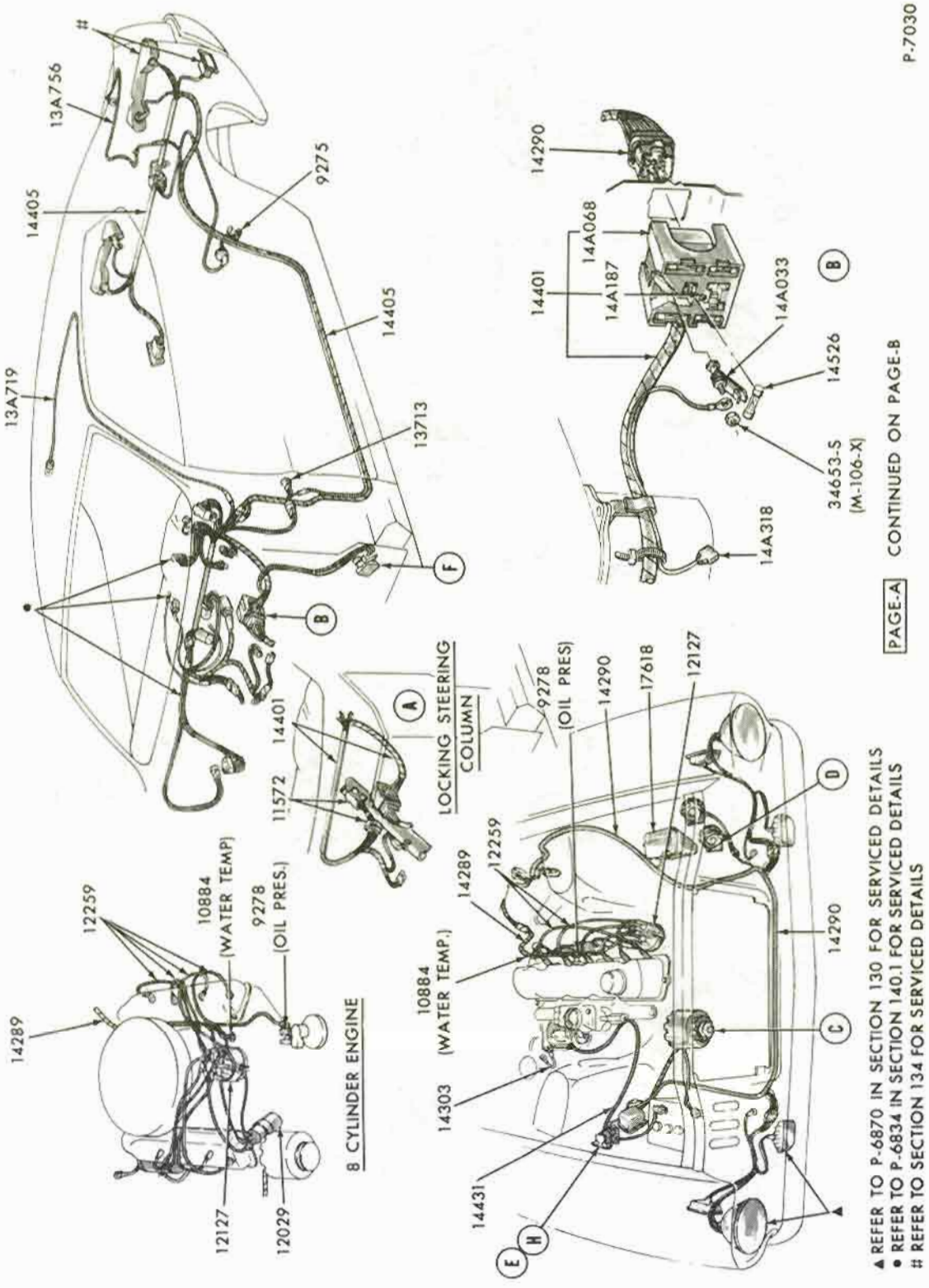
#
13A756
14405
9275
14405
13A719
13713
B
F
14401
11572
A
LOCKING STEERING COLUMN
9278 (OIL PRES)
14290
17618
12127
D
14289
12259
10884 (WATER TEMP.)
14303
14290
C
14431
E
H
8 CYLINDER ENGINE
14289
12259
10884 (WATER TEMP)
9278 (OIL PRES.)
12127
12029
14290
14A068
14401
14A187
14A033
B
14526
34653-S (M-106-X)
14A318
PAGE-A CONTINUED ON PAGE-B
P-7030
▲ REFER TO P-6870 IN SECTION 130 FOR SERVICED DETAILS
● REFER TO P-6834 IN SECTION 140.1 FOR SERVICED DETAILS
REFER TO SECTION 134 FOR SERVICED DETAILS

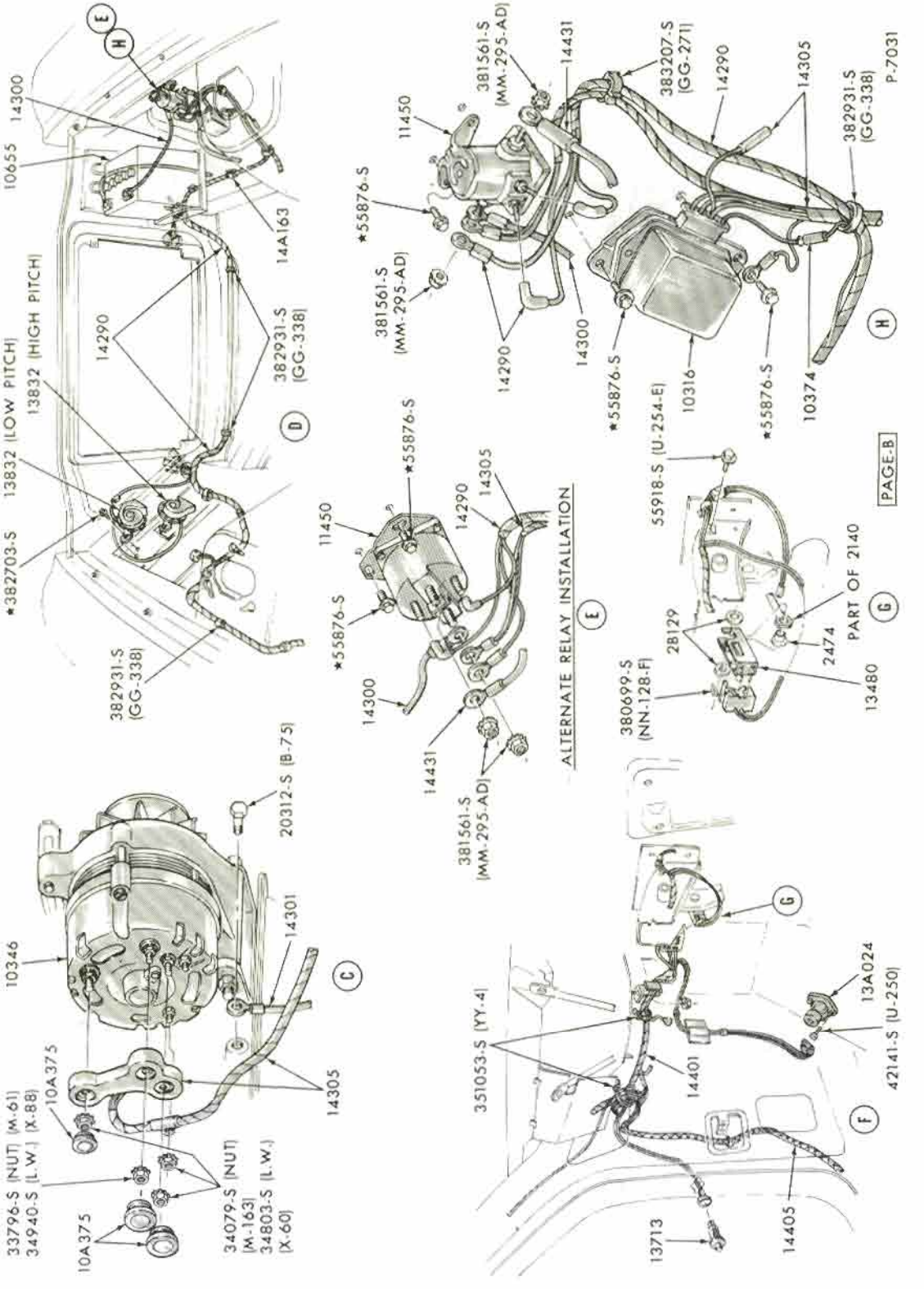

WIRING SYSTEM - "TYPICAL". . .PAGE B
1970/72 MAVERICK

COPYRIGHT © 1975 — FORD MOTOR COMPANY — DEARBORN, MICHIGAN

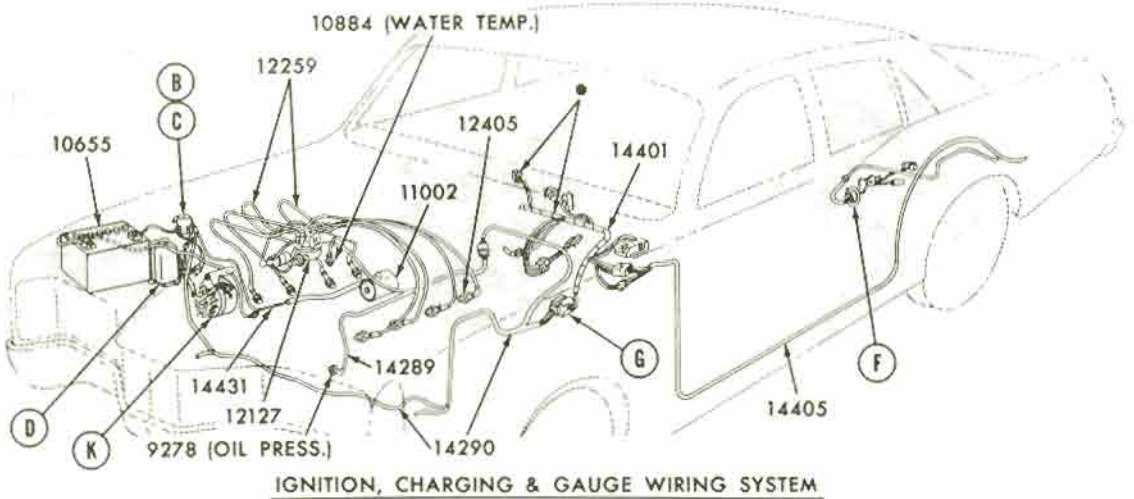

IGNITION, CHARGING & GAUGE WIRING SYSTEM

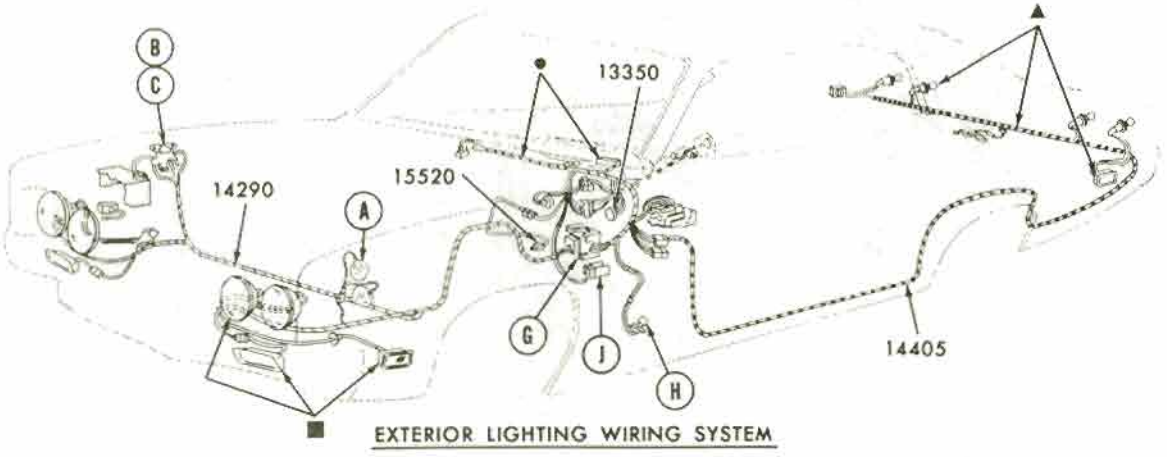

EXTERIOR LIGHTING WIRING SYSTEM

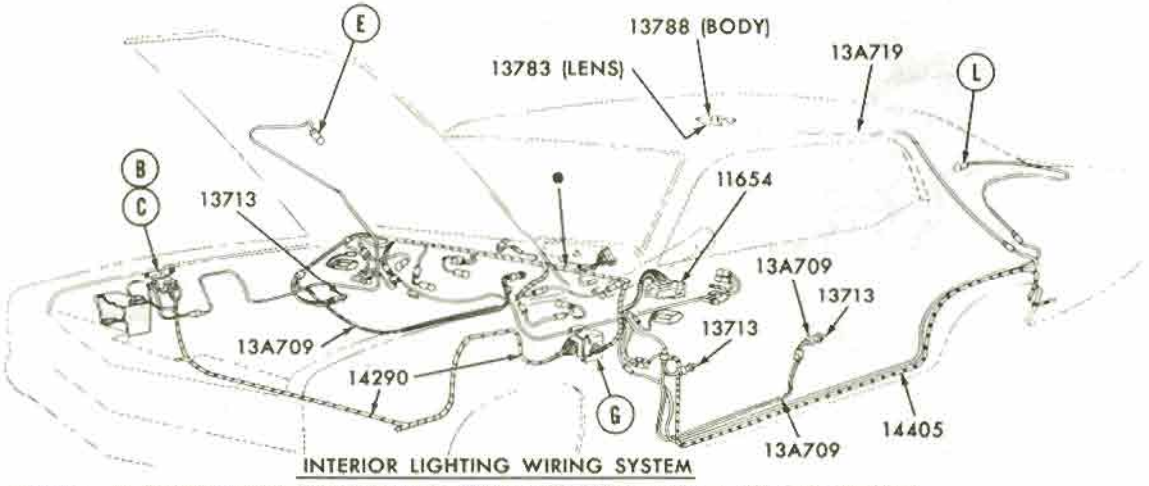

INTERIOR LIGHTING WIRING SYSTEM

● REFER TO ILLUSTRATION SECTION 140.1 FOR INSTRUMENT PANEL WIRING DETAILS
■ REFER TO ILLUSTRATION SECTION 130 FOR HEADLAMP DETAILS
▲ REFER TO ILLUSTRATION SECTION 134 FOR REAR LAMP DETAILS

PAGE—A CONTINUED ON PAGE—B

P-7666

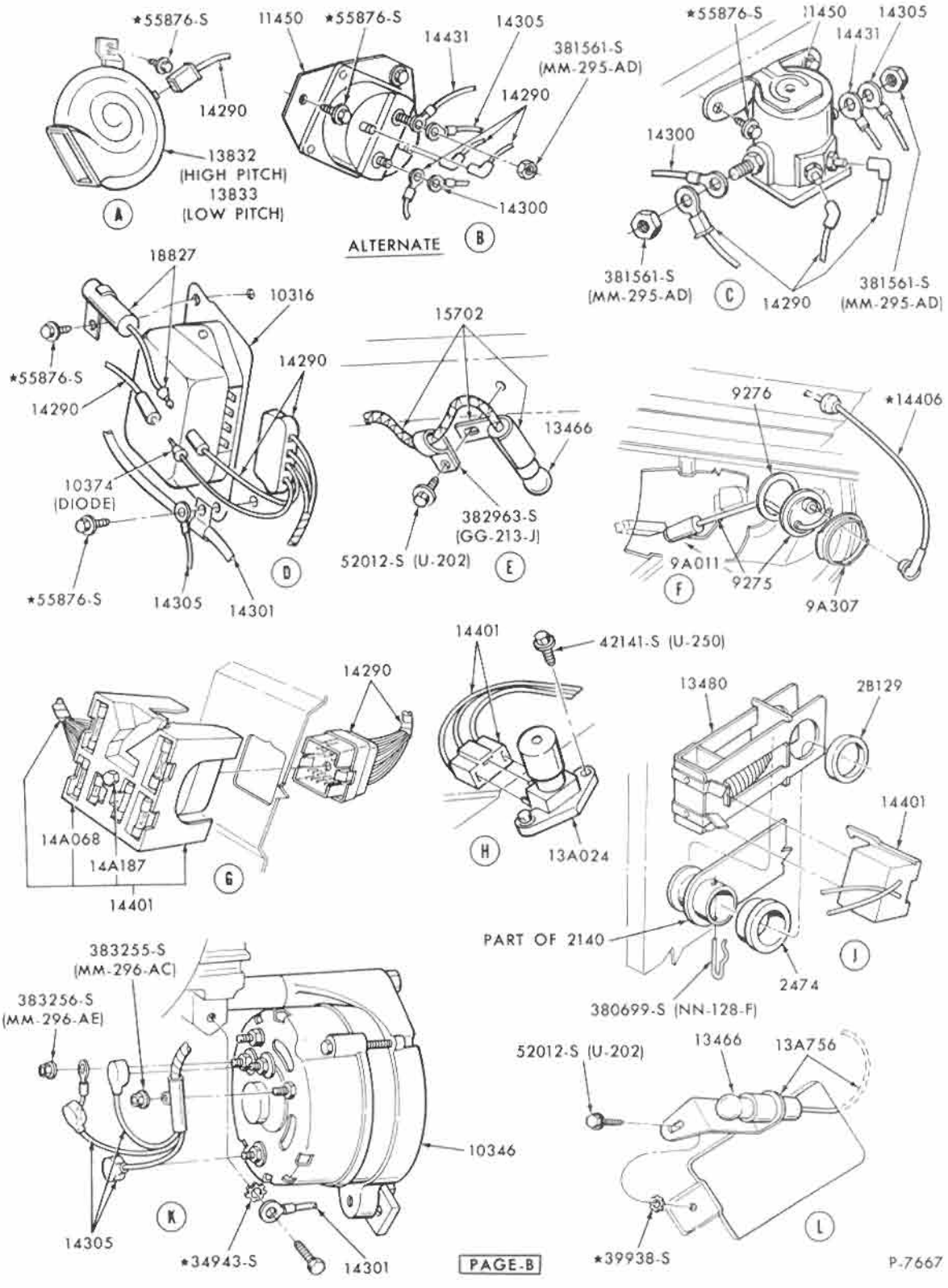

WIRING SYSTEM - "TYPICAL". . . PAGE B
1970/71 FAIRLANE/TORINO

COPYRIGHT © 1975 — FORD MOTOR COMPANY — DEARBORN, MICHIGAN

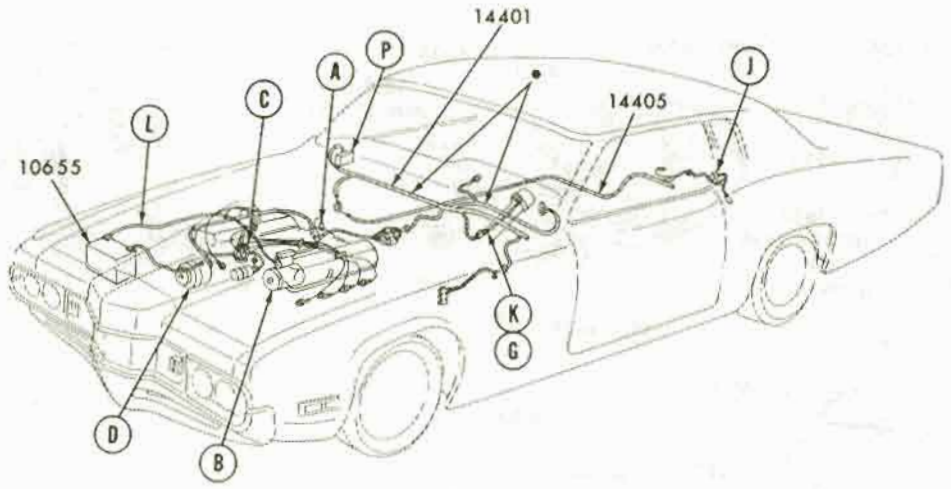

IGNITION, STARTING, CHARGING GAUGES WIRING SYSTEMS

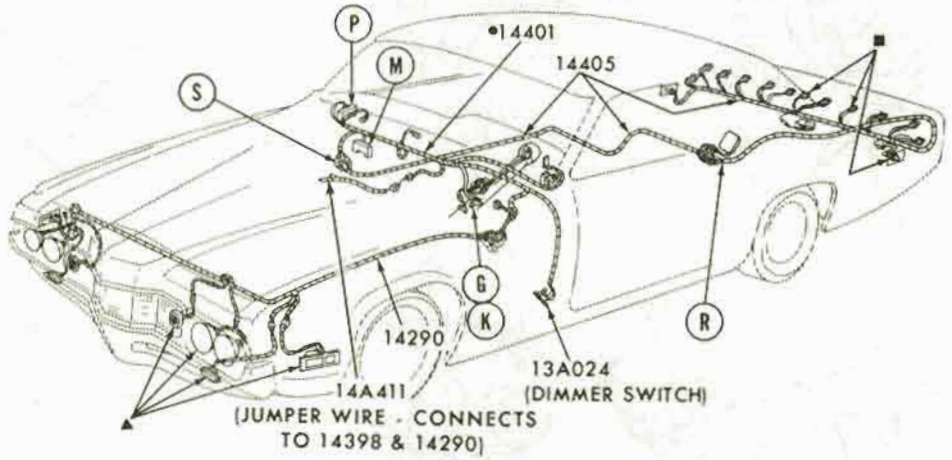

EXTERIOR LAMP WIRING SYSTEM

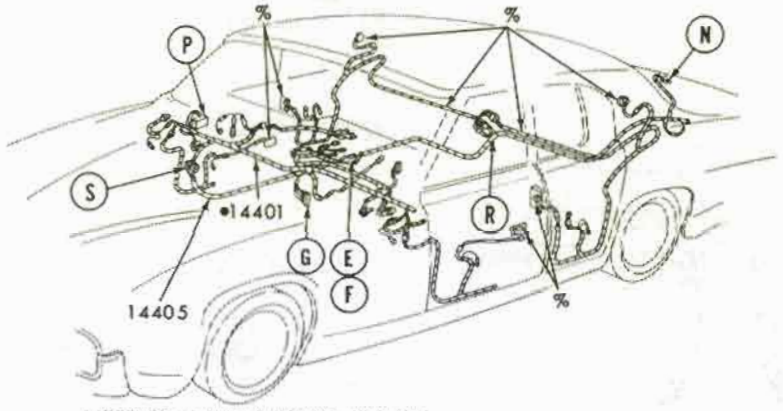

INTERIOR LAMP WIRING SYSTEM

%REFER TO ILLUSTRATION SECTION 137 FOR COURTESY LAMP ETC. DETAILS
•REFER TO ILLUSTRATION SECTION 140.1 FOR INSTRUMENT PANEL WIRING
▲REFER TO ILLUSTRATION SECTION 130 FOR HEADLAMP ETC. DETAILS
■REFER TO ILLUSTRATION SECTION 134 FOR REAR LAMP ETC. DETAILS

P-7682

PAGE A CONTINUED ON PAGE B (P-7683) & PAGE C (P-7684)

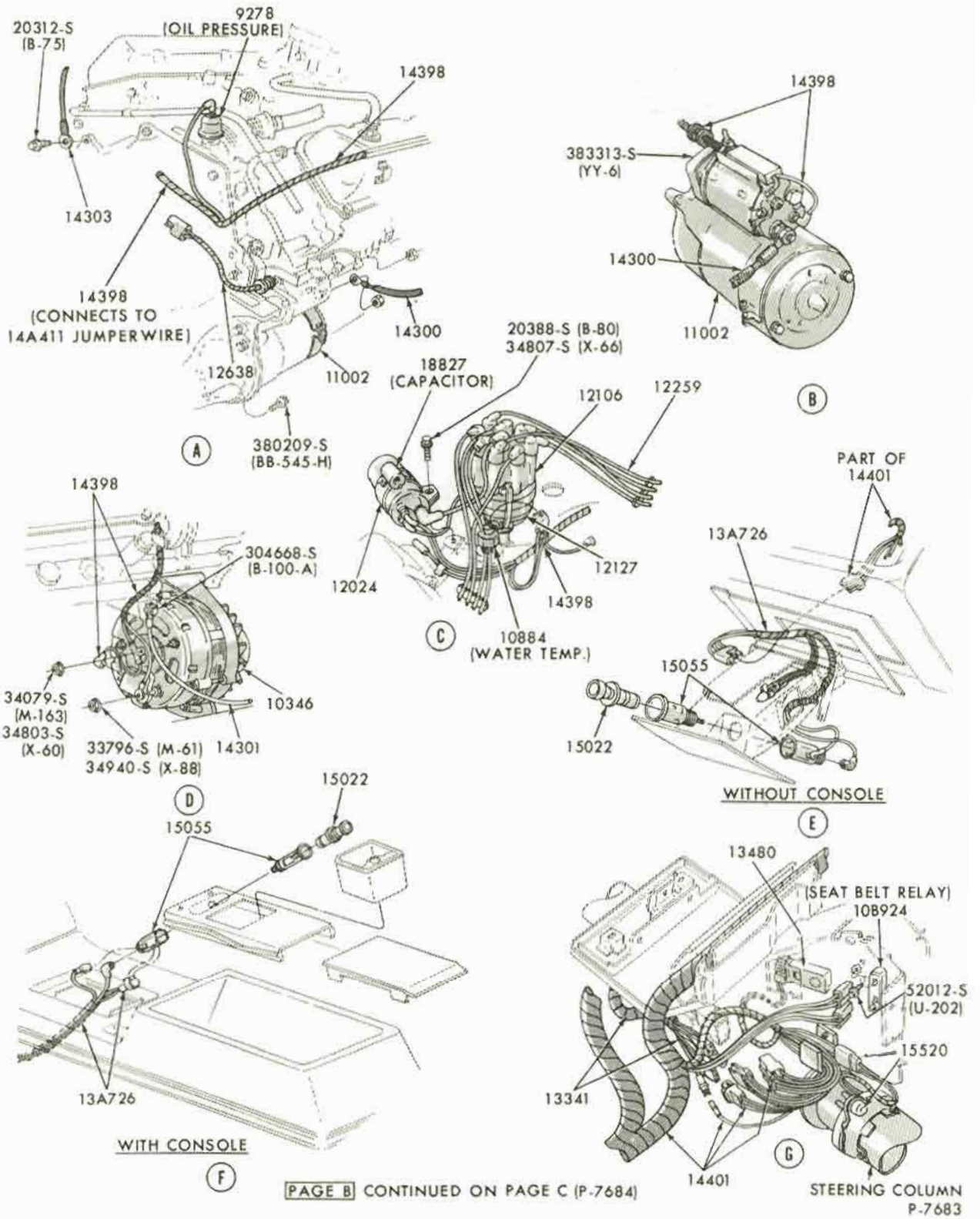

PAGE B CONTINUED ON PAGE C (P-7684)

WIRING SYSTEM - "TYPICAL". . . PAGE B
1970/71 THUNDERBIRD

COPYRIGHT © 1975 — FORD MOTOR COMPANY — DEARBORN, MICHIGAN

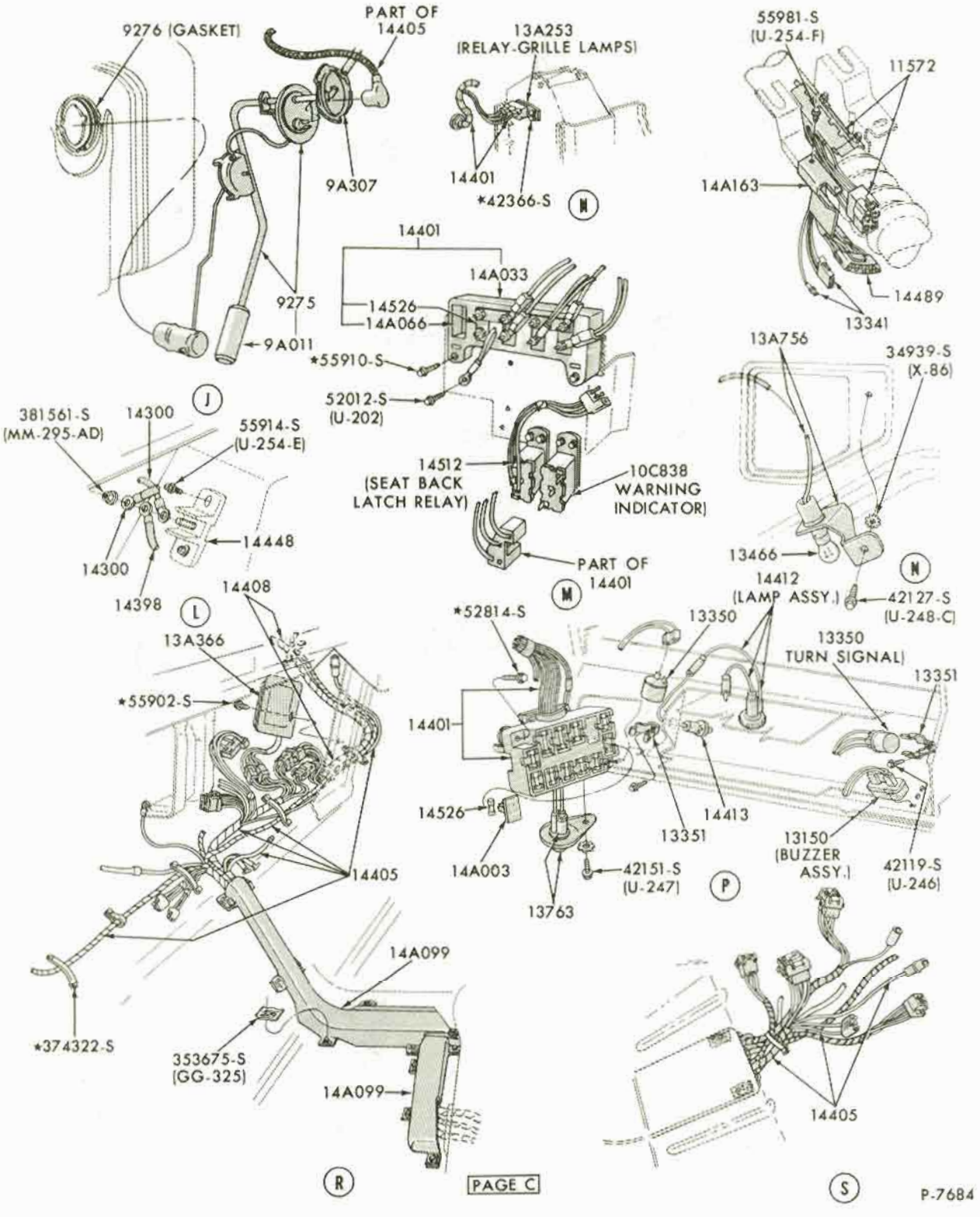
9276 (GASKET)
PART OF 14405
9A307
9275
9A011
J
13A253 (RELAY-GRILLE LAMPS)
14401
*42366-S
N
55981-S (U-254-F)
11572
14A163
14489
13341
14401
14A033
14526
14A066
*55910-S
52012-S (U-202)
14512 (SEAT BACK LATCH RELAY)
10C838 WARNING INDICATOR)
PART OF 14401
M
13A756
34939-S (X-86)
13466
N
14412 (LAMP ASSY.)
42127-S (U-248-C)
381561-S (MM-295-AD)
14300
55914-S (U-254-E)
14448
14300
14398
L
14408
13A366
*55902-S
14405
*52814-S
13350
13350 TURN SIGNAL)
13351
14401
14526
14A003
13763
42151-S (U-247)
P
14413
13351
13150 (BUZZER ASSY.)
42119-S (U-246)
14A099
*374322-S
353675-S (GG-325)
14A099
14405
R
S
PAGE C
P-7684

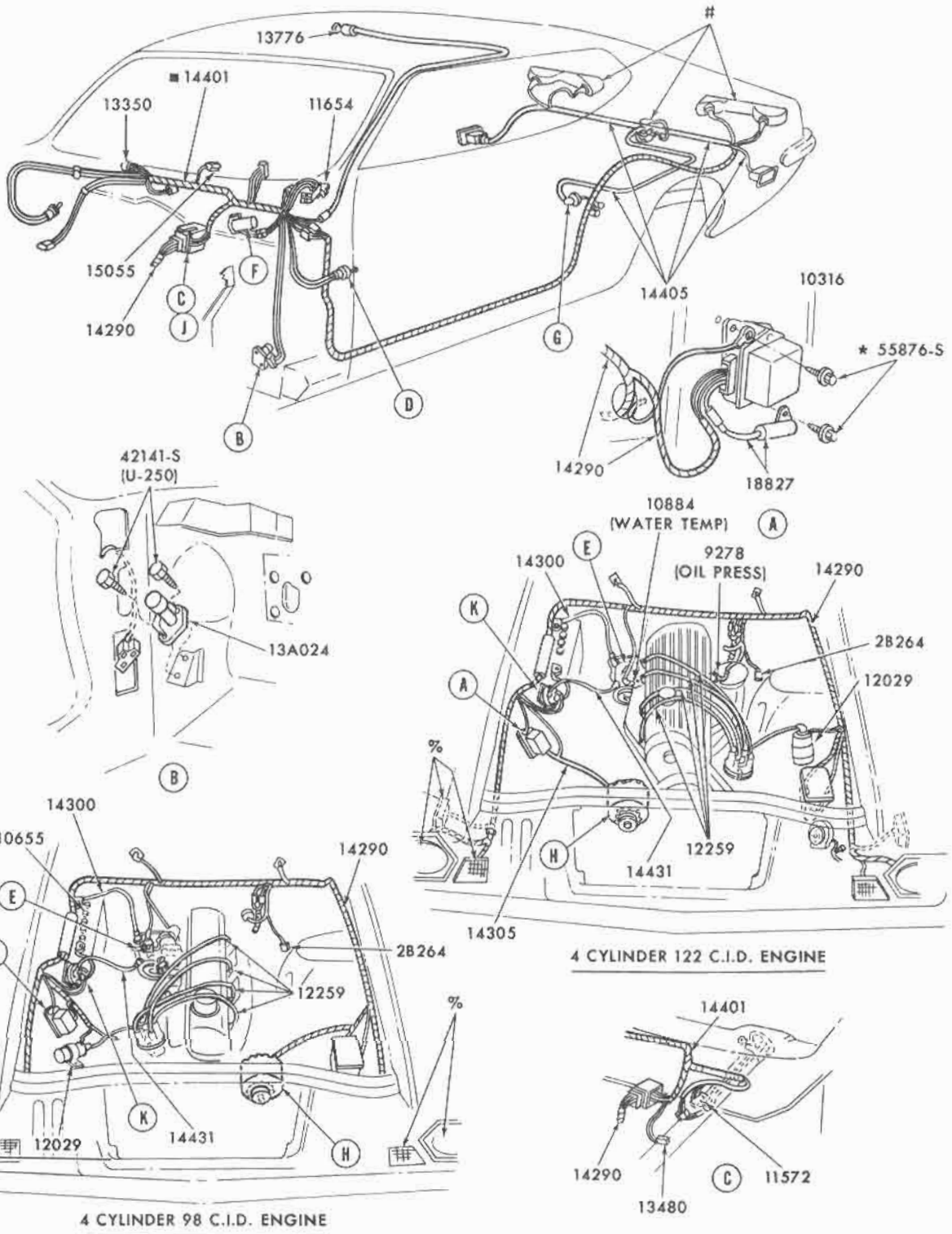

PAGE A CONTINUED ON PAGE B (P-8062)

REFER TO ILLUSTRATION SECTION 134 FOR REAR LAMP DETAILS
■ REFER TO ILLUSTRATION SECTION 140.1 FOR INSTRUMENT PANEL WIRING
% REFER TO ILLUSTRATION SECTION 130 FOR HEADLAMP ETC. DETAILS

P-8061

WIRING SYSTEM - "TYPICAL" ... PAGE A
1971/72 PINTO

COPYRIGHT © 1975 — FORD MOTOR COMPANY — DEARBORN, MICHIGAN

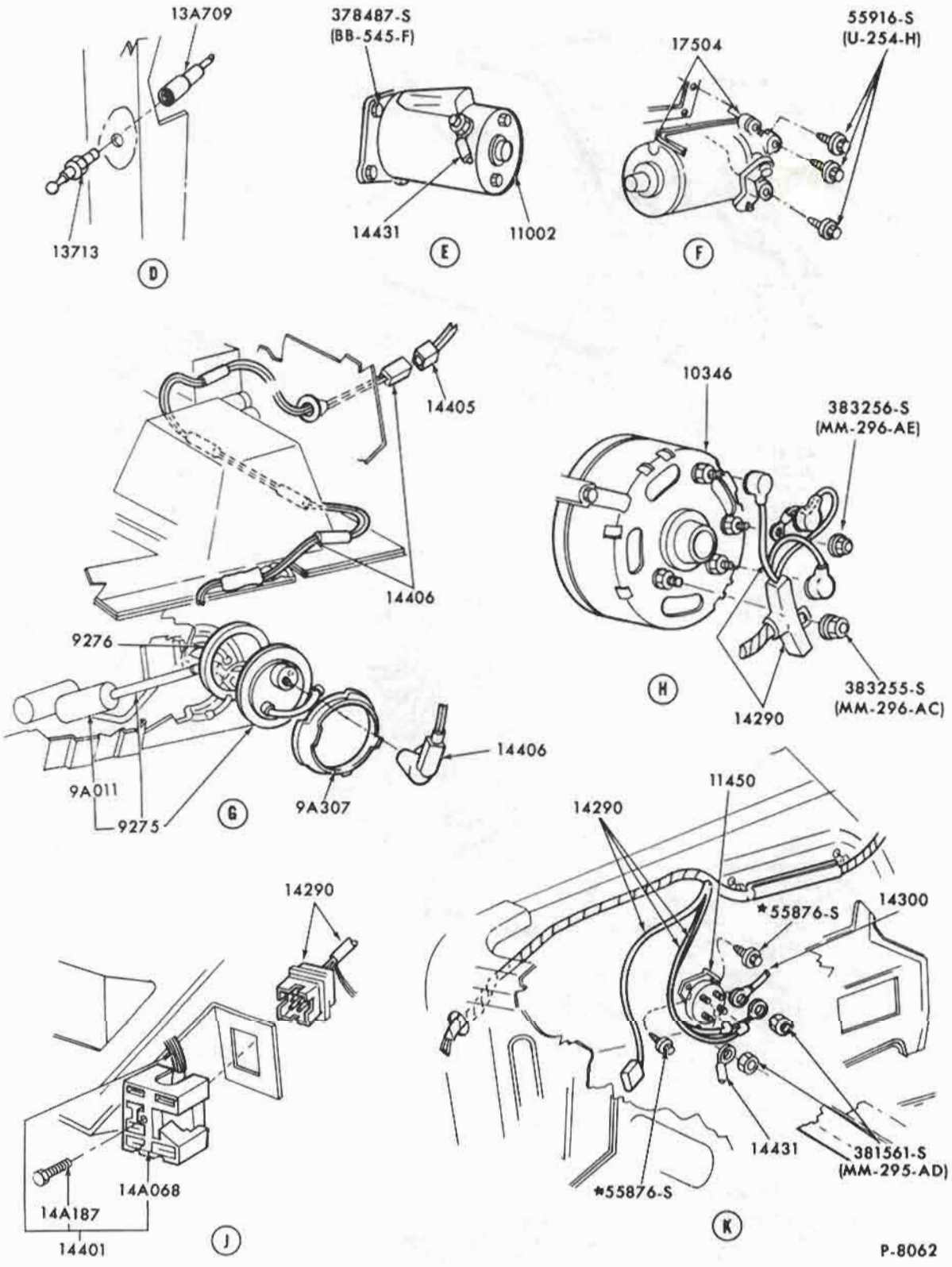
13A709
13713
D
378487-S
(BB-545-F)
14431
11002
E
17504
55916-S
(U-254-H)
F
14405
14406
9276
9A011
9275
9A307
G
14406
10346
383256-S
(MM-296-AE)
H
383255-S
(MM-296-AC)
14290
14290
14A068
14A187
14401
J
11450
14290
*55876-S
14300
14431
381561-S
(MM-295-AD)
*55876-S
K
P-8062

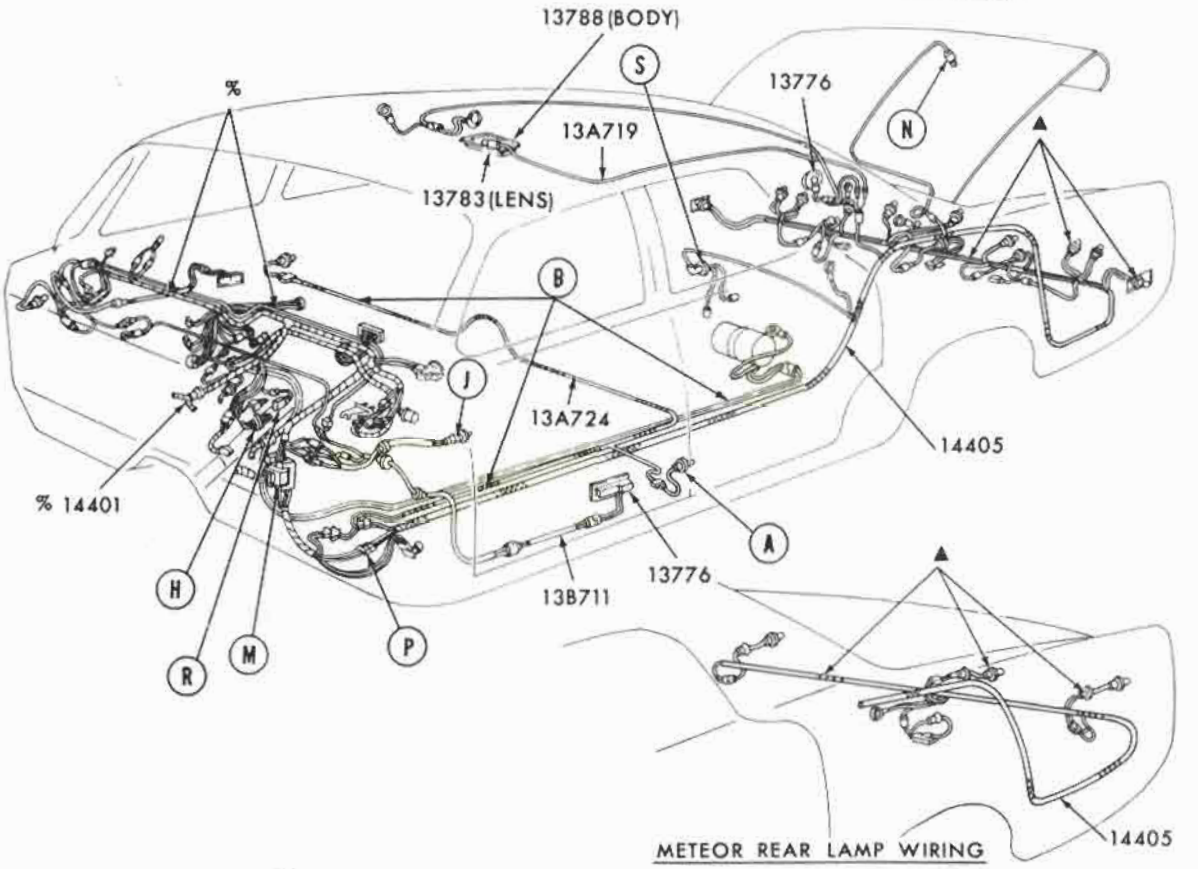

METEOR REAR LAMP WIRING

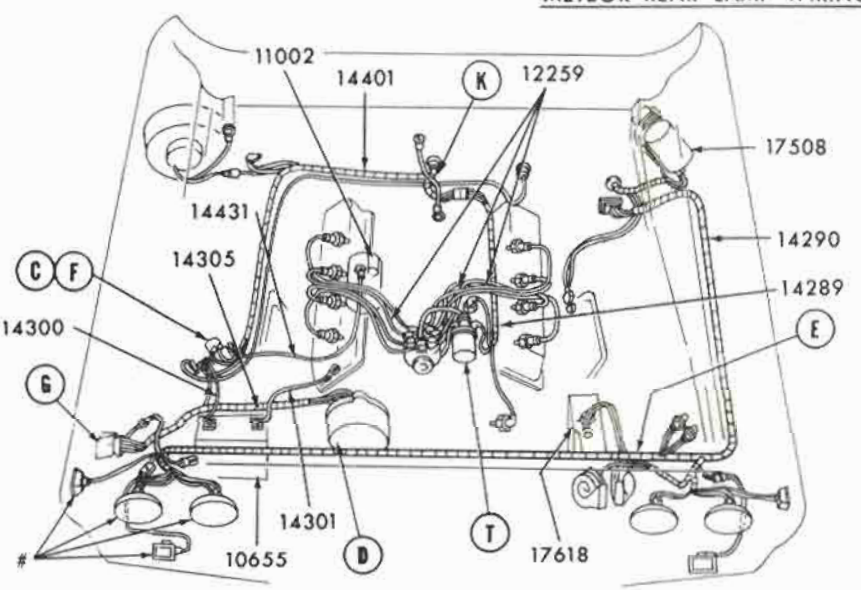

REFER TO ILLUSTRATION SECTION 130 FOR HEADLAMP DETAILS
▲ REFER TO ILLUSTRATION SECTION SECTION 134 FOR REAR LAMP DETAILS
% REFER TO ILLUSTRATION SECTION 140.1 FOR INSTRUMENT PANEL WIRING DETAILS

PAGE-A CONTINUED ON PAGE-B AND PAGE-C

P-8417

COPYRIGHT © 1975 — FORD MOTOR COMPANY — DEARBORN, MICHIGAN

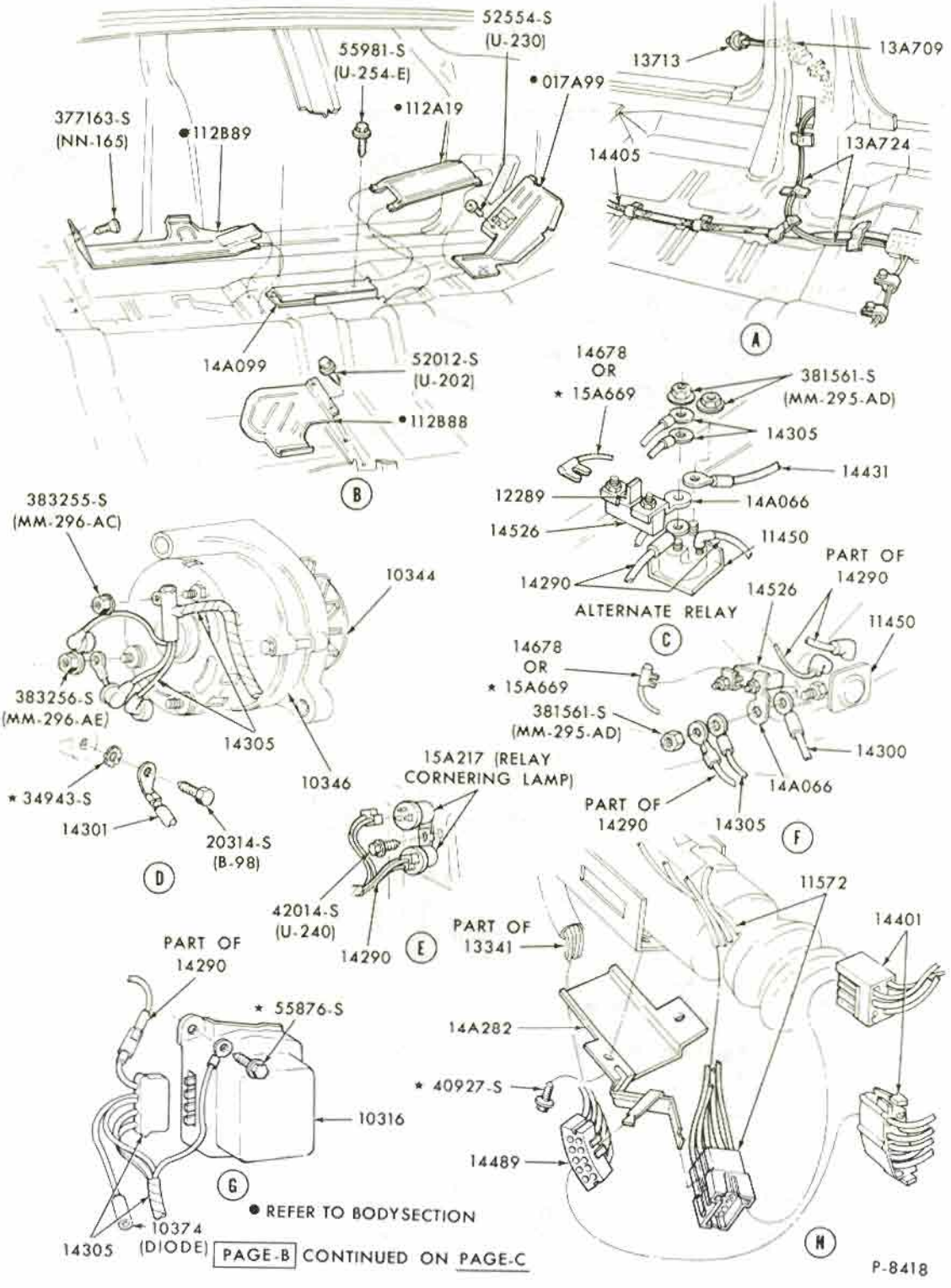
52554-S
(U-230)
55981-S
(U-254-E)
•017A99
•112A19
377163-S
(NN-165)
•112B89
14A099
52012-S
(U-202)
•112B88
B
13713
13A709
14405
13A724
A
14678
OR
* 15A669
381561-S
(MM-295-AD)
14305
14431
12289
14A066
14526
11450
14290
ALTERNATE RELAY
C
PART OF
14290
14526
11450
14678
OR
* 15A669
381561-S
(MM-295-AD)
14300
14A066
PART OF
14290
14305
F
383255-S
(MM-296-AC)
10344
383256-S
(MM-296-AE)
14305
10346
* 34943-S
14301
20314-S
(B-98)
D
15A217 (RELAY
CORNERING LAMP)
42014-S
(U-240)
14290
E
11572
14401
PART OF
13341
14A282
* 40927-S
14489
PART OF
14290
* 55876-S
10316
G
H
• REFER TO BODYSECTION
14305
10374
(DIODE)
PAGE-B CONTINUED ON PAGE-C
P-8418

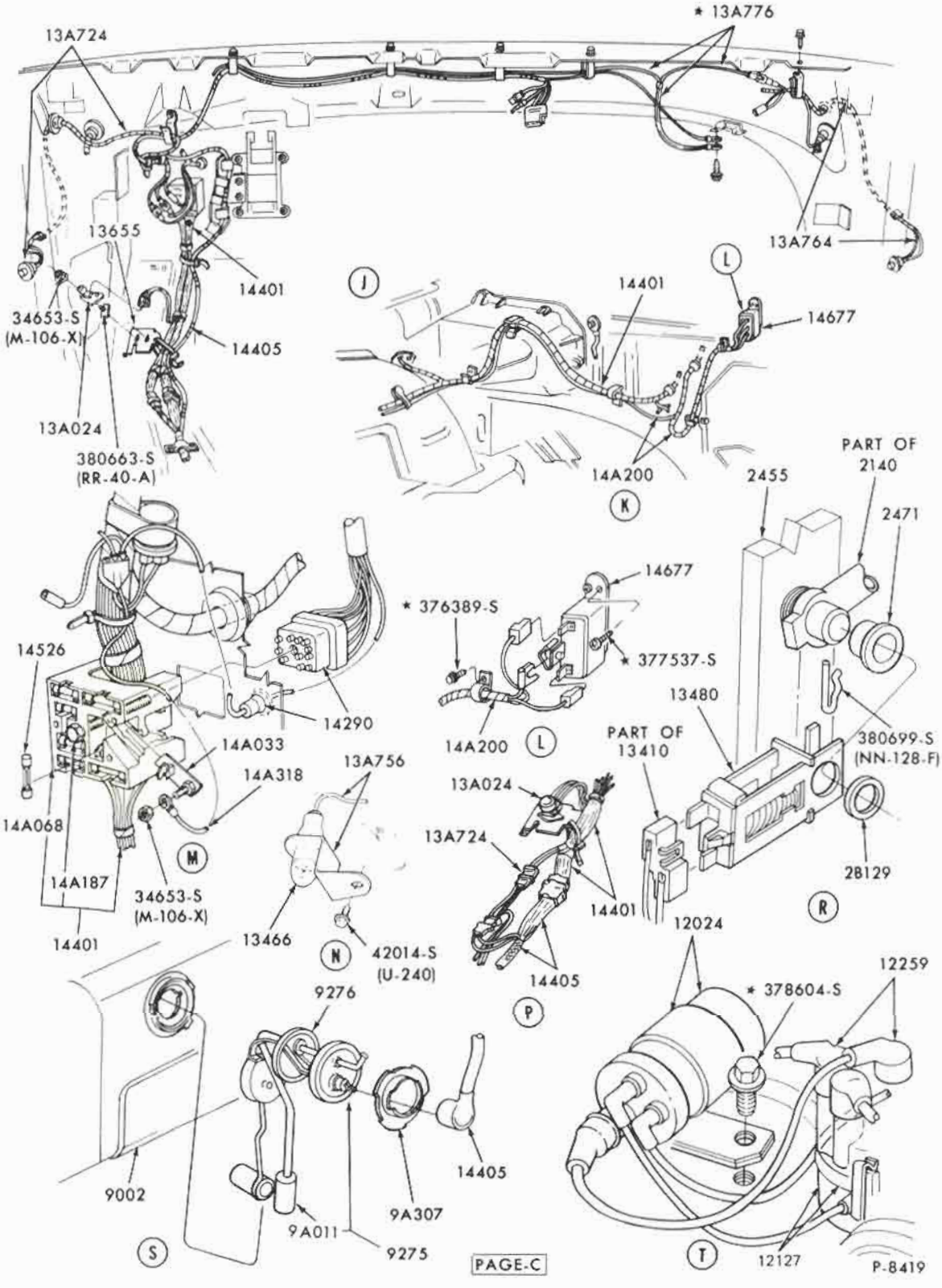

WIRING SYSTEM - "TYPICAL".....PAGE C

COPYRIGHT © 1975 — FORD MOTOR COMPANY — DEARBORN, MICHIGAN

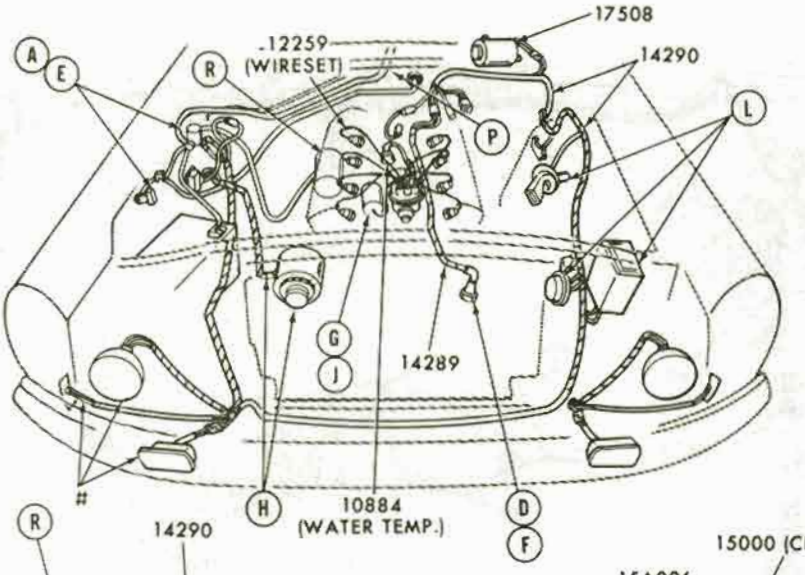

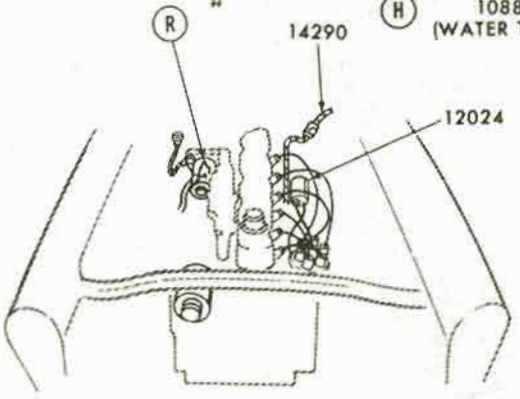

6 CYLINDER ENGINE

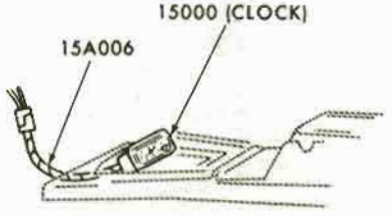

CONSOLE MOUNTED CLOCK

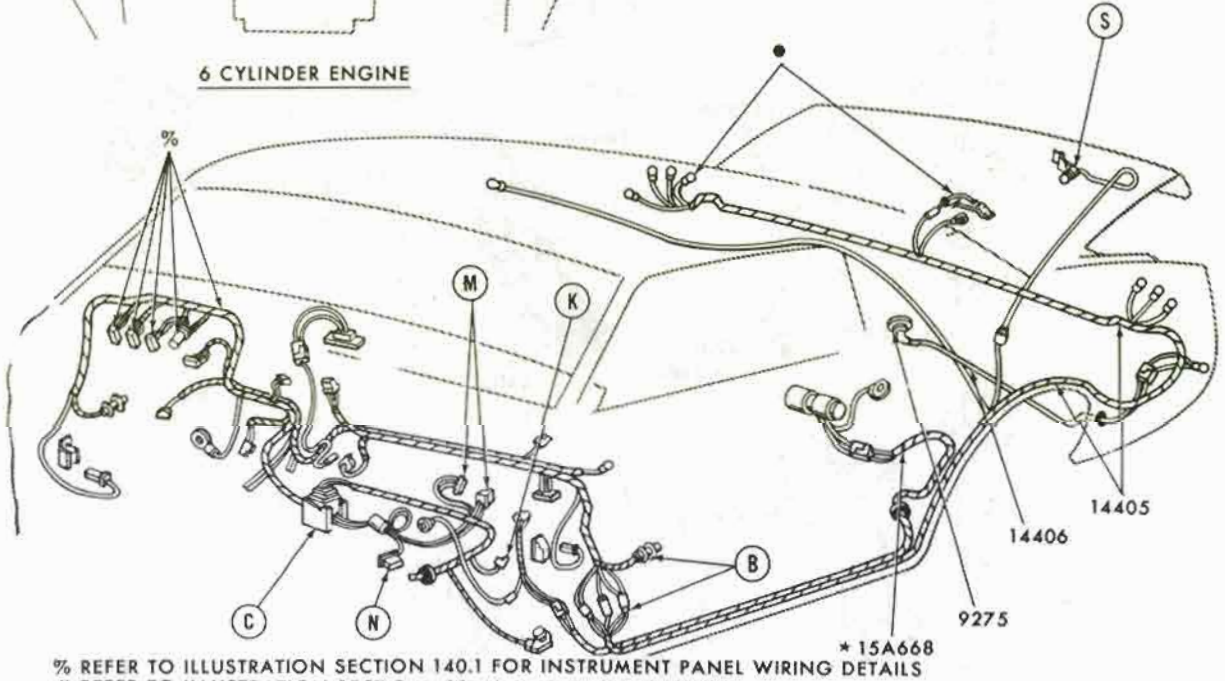

% REFER TO ILLUSTRATION SECTION 140.1 FOR INSTRUMENT PANEL WIRING DETAILS
# REFER TO ILLUSTRATION SECTION 130 FOR HEADLAMP DETAILS
• REFER TO ILLUSTRATION SECTION 134 FOR HEADLAMP DETAILS

PAGE-A CONTINUED ON PAGE-B AND PAGE-C

P-8406

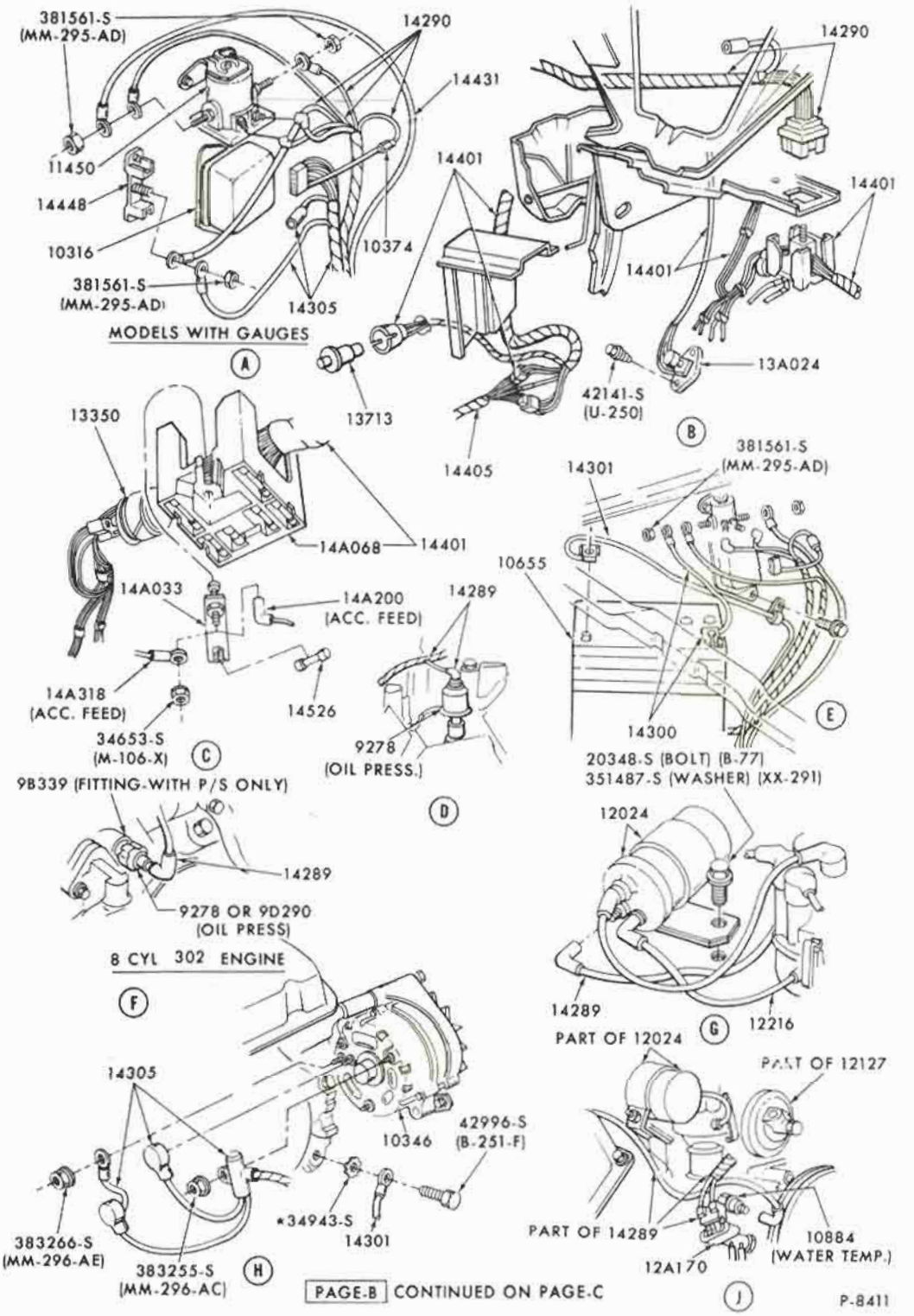

May, 1975 COPYRIGHT © 1975 — FORD MOTOR COMPANY — DEARBORN, MICHIGAN

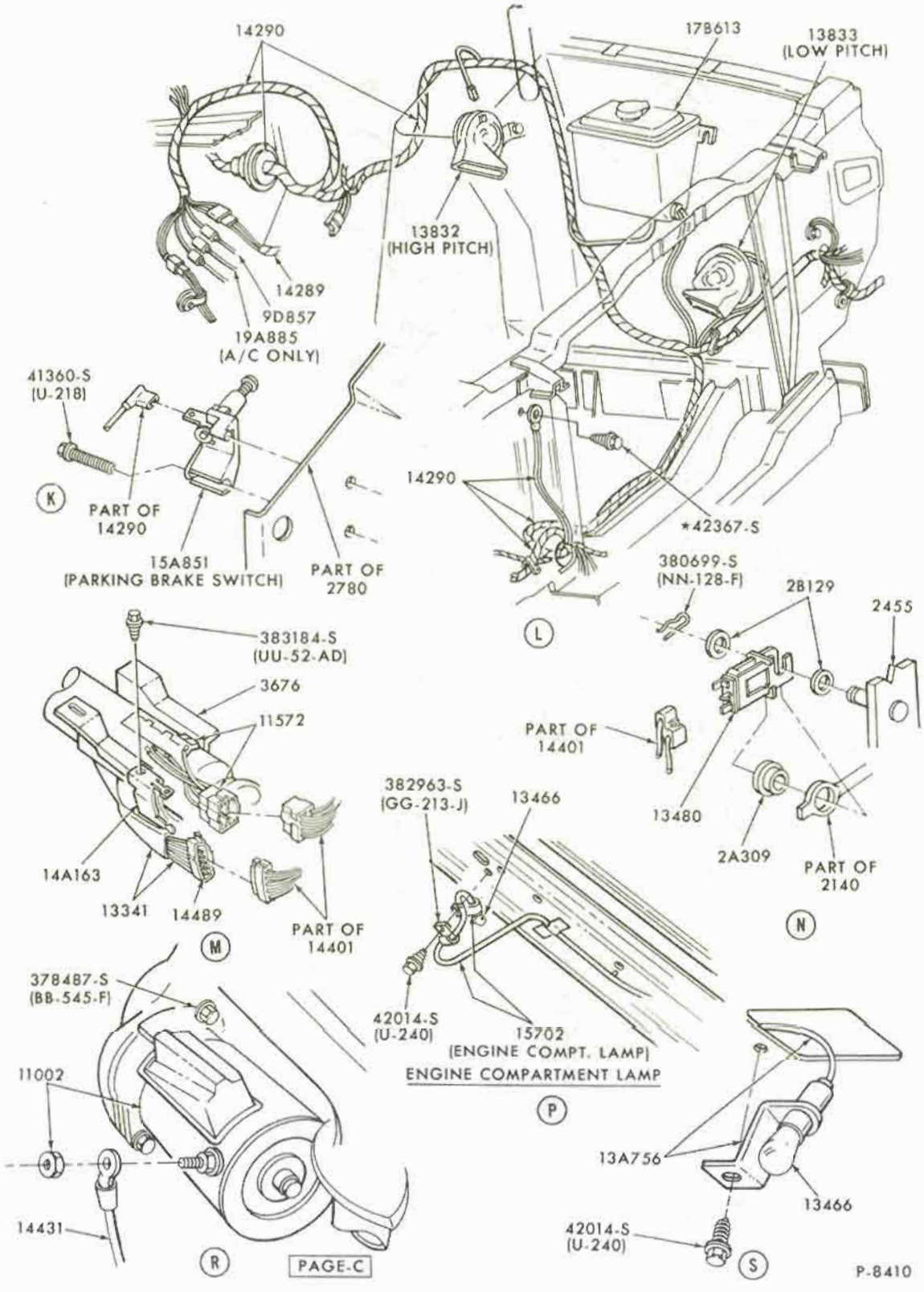

WIRING SYSTEM - "TYPICAL".....PAGE C
1971/72 MUSTANG

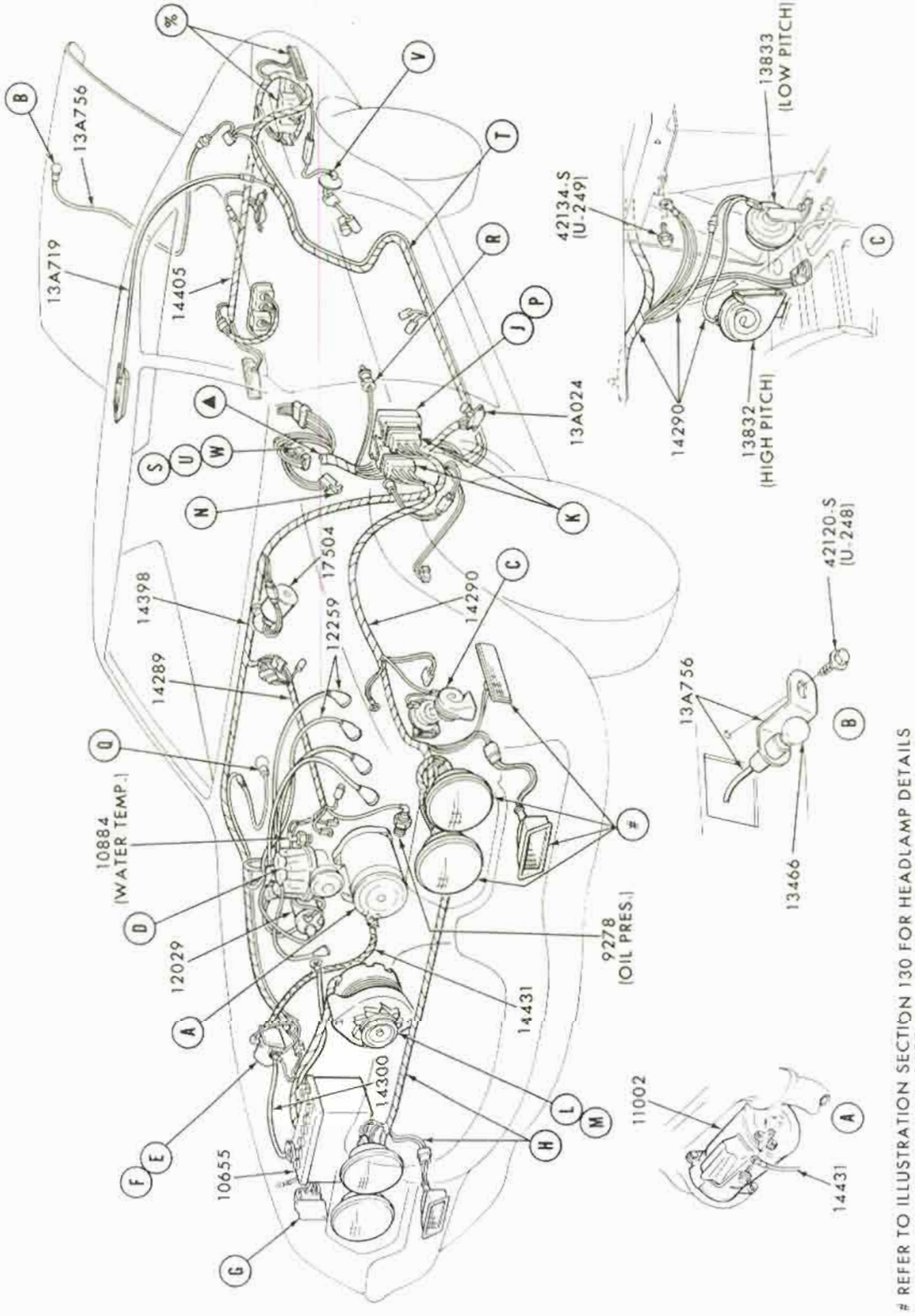

REFER TO ILLUSTRATION SECTION 130 FOR HEADLAMP DETAILS
% REFER TO ILLUSTRATION SECTION 134 FOR REAR LAMP DETAILS
▲ REFER TO ILLUSTRATION SECTION 140.1 FOR INSTRUMENT PANEL WIRING

PAGE-A CONTINUED ON PAGE-B AND PAGE-C

P-9956

WIRING SYSTEM - "TYPICAL" . . . . PAGE A
1972 TORINO

COPYRIGHT © 1975 — FORD MOTOR COMPANY — DEARBORN, MICHIGAN

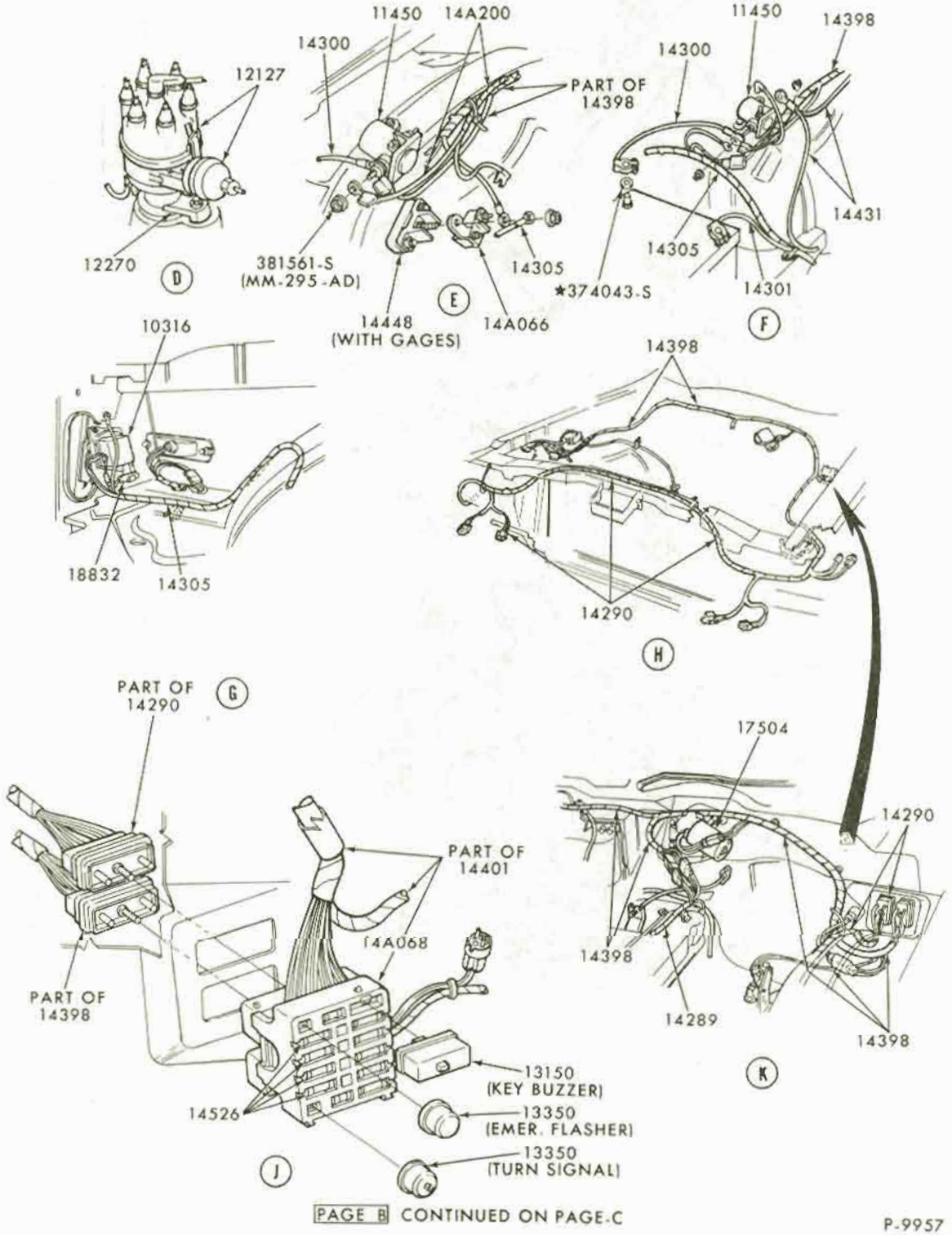

PAGE B CONTINUED ON PAGE C

P-9957

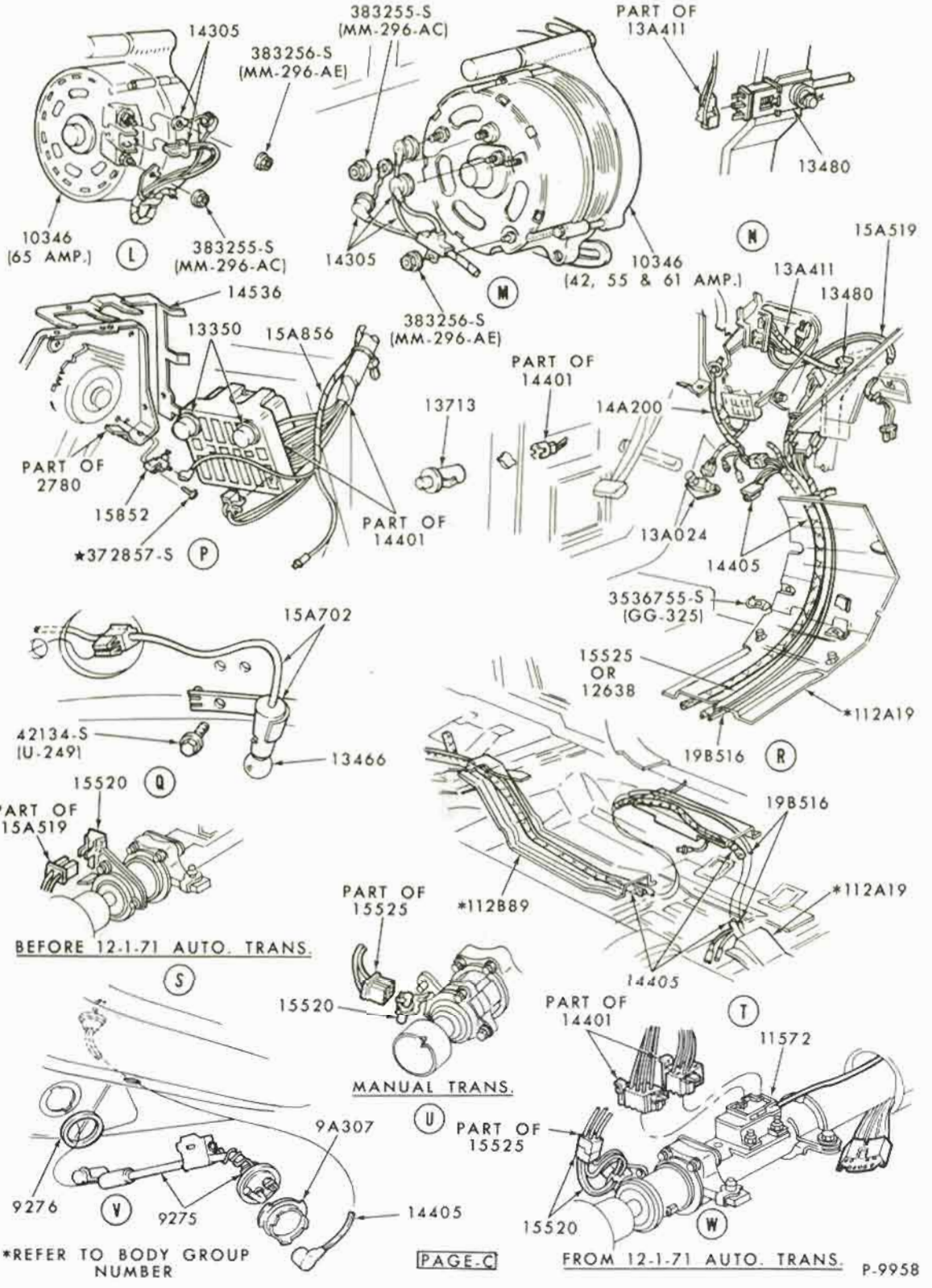

May, 1975 COPYRIGHT © 1975 — FORD MOTOR COMPANY — DEARBORN, MICHIGAN FINAL ISSUE

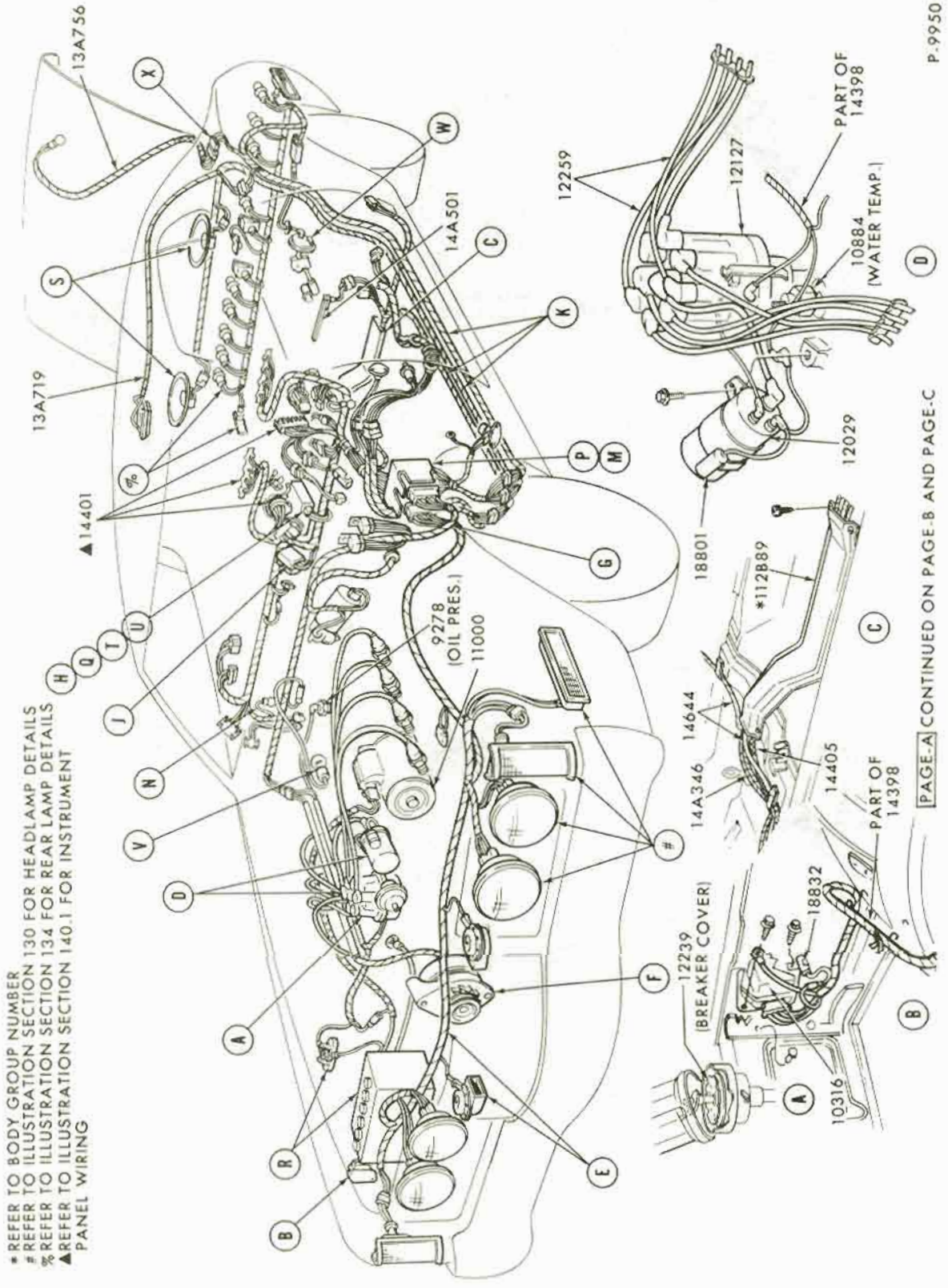
* REFER TO BODY GROUP NUMBER
# REFER TO ILLUSTRATION SECTION 130 FOR HEADLAMP DETAILS
% REFER TO ILLUSTRATION SECTION 134 FOR REAR LAMP DETAILS
▲ REFER TO ILLUSTRATION SECTION 140.1 FOR INSTRUMENT PANEL WIRING
13A756
13A719
▲14401
14A501
9278 (OIL PRES.)
11000
12259
12127
PART OF 14398
10884 (WATER TEMP.)
12029
18801
*112B89
14644
14A346
14405
PART OF 14398
18832
12239 (BREAKER COVER)
10316
PAGE-A CONTINUED ON PAGE-B AND PAGE-C
P.9950

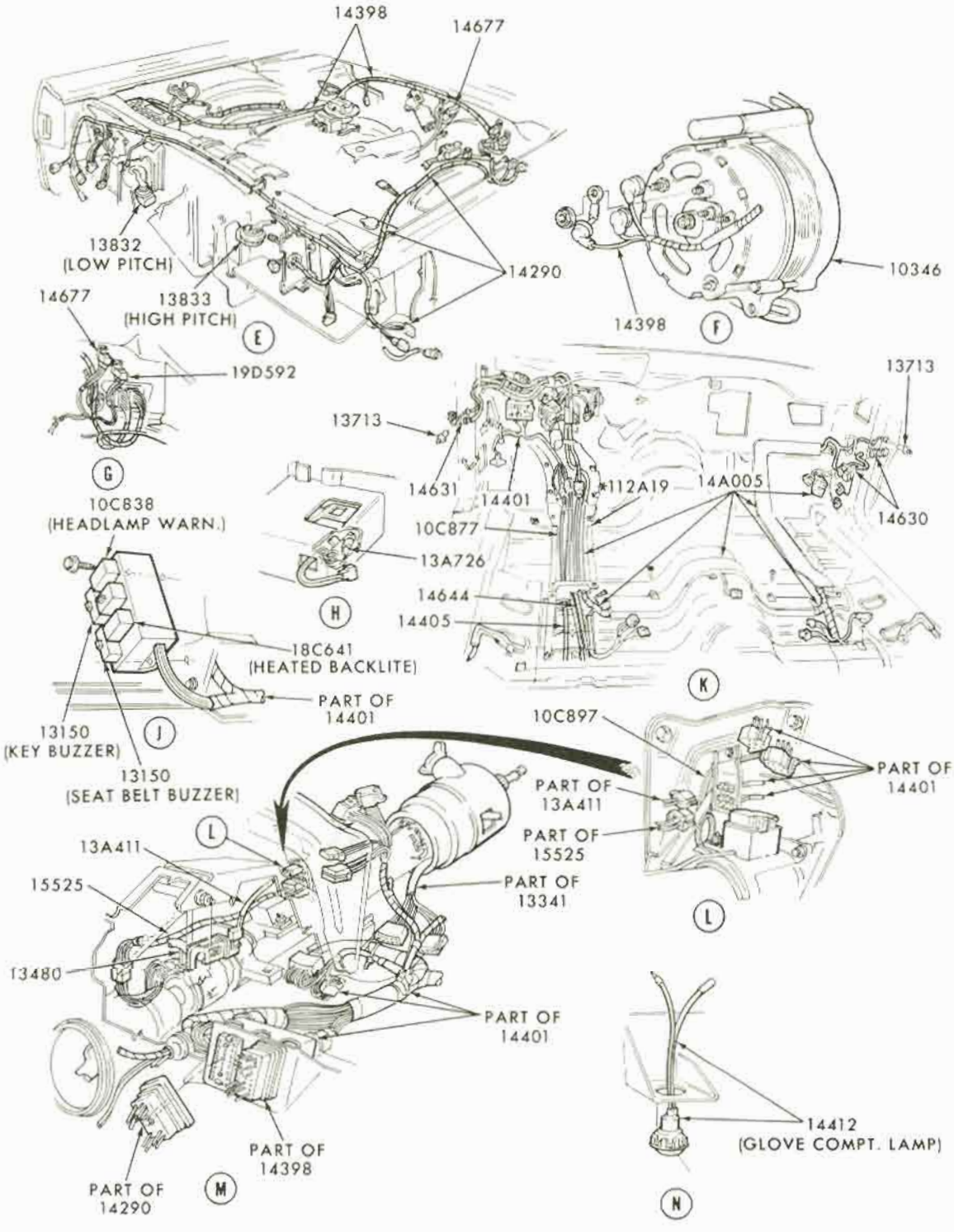

*REFER TO BODY GROUP NUMBER

PAGE-B CONTINUED ON PAGE-C

P.9951

May, 1975 COPYRIGHT © 1975 — FORD MOTOR COMPANY — DEARBORN, MICHIGAN FINAL ISSUE

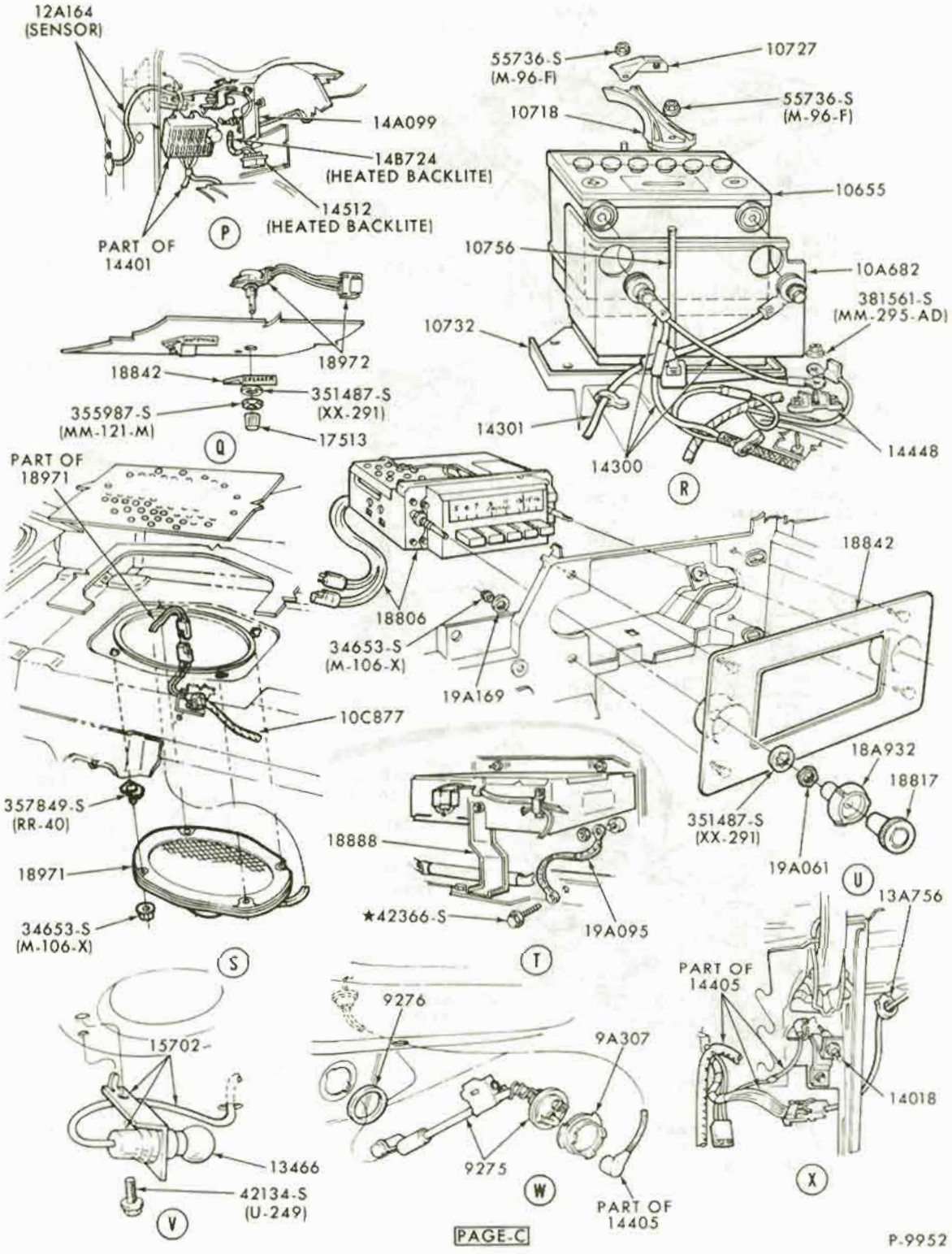
12A164
(SENSOR)
14A099
14B724
(HEATED BACKLITE)
14512
(HEATED BACKLITE)
PART OF
14401
P
55736-S
(M-96-F)
10727
55736-S
(M-96-F)
10718
10655
10756
10A682
381561-S
(MM-295-AD)
10732
14301
14300
14448
R
18842
18972
351487-S
(XX-291)
355987-S
(MM-121-M)
17513
Q
PART OF
18971
18806
34653-S
(M-106-X)
19A169
18842
10C877
18A932
18817
351487-S
(XX-291)
19A061
U
13A756
357849-S
(RR-40)
18971
34653-S
(M-106-X)
18888
★42366-S
19A095
T
S
PART OF
14405
14018
15702
9276
9A307
13466
42134-S
(U-249)
9275
W
PART OF
14405
V
X
PAGE-C
P-9952

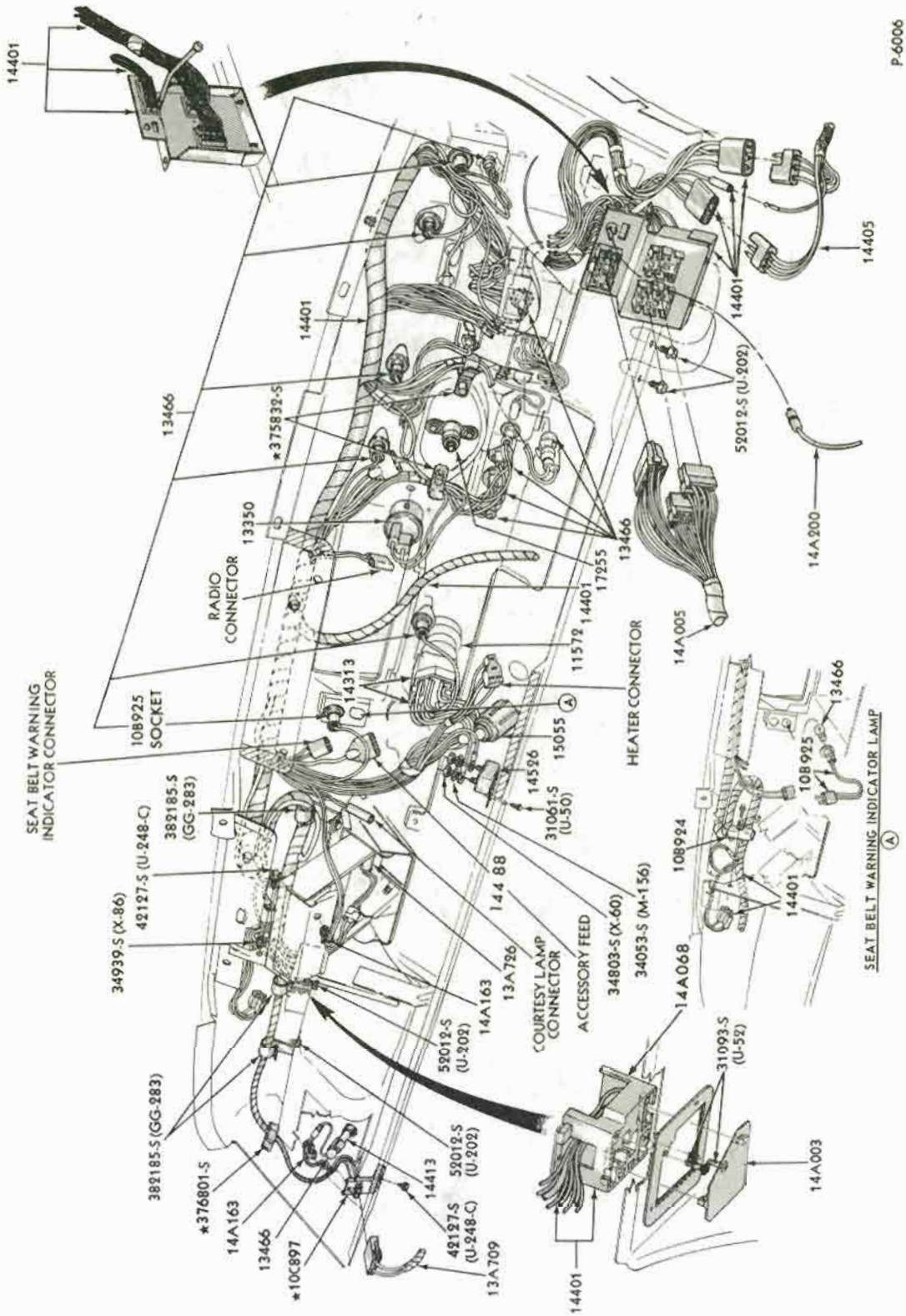

WIRING INSTRUMENT PANEL
1968 FORD

COPYRIGHT © 1975 — FORD MOTOR COMPANY — DEARBORN, MICHIGAN

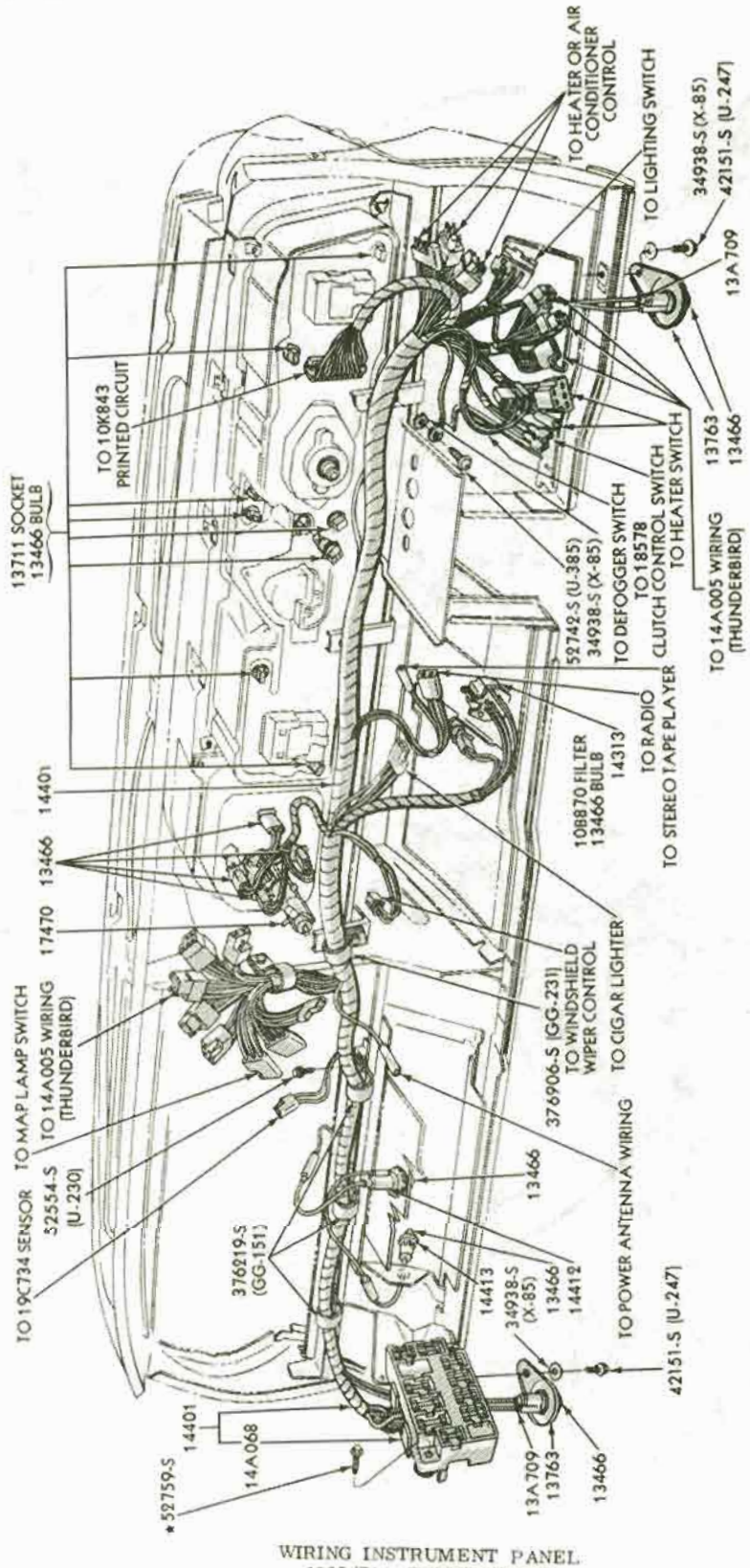

P-6037

WIRING INSTRUMENT PANEL
1968/71 THUNDERBIRD

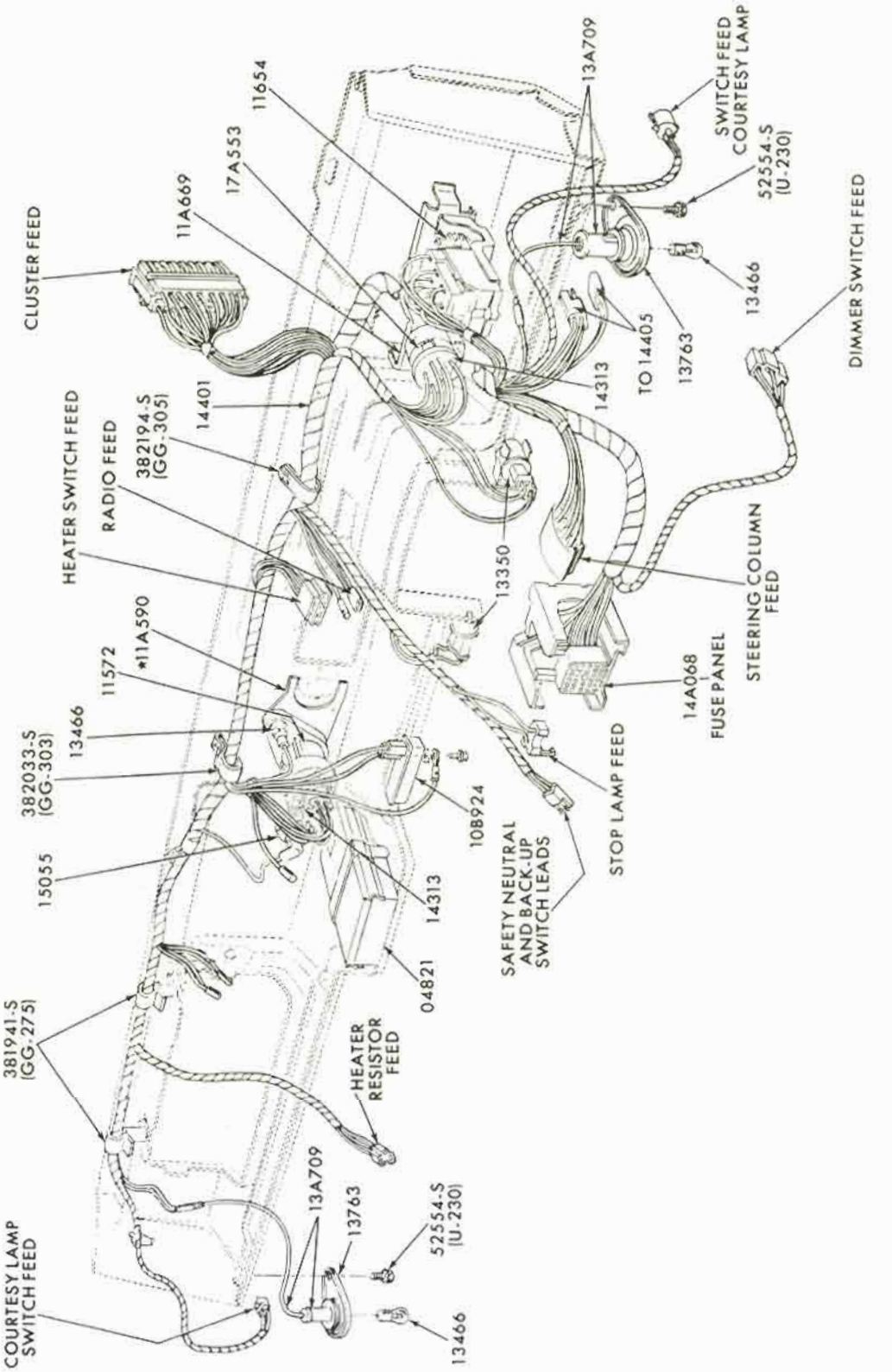

WIRING INSTRUMENT PANEL
1968/69 FAIRLANE/TORINO 1968/70 FALCON

COPYRIGHT © 1975 — FORD MOTOR COMPANY — DEARBORN, MICHIGAN

ILLUSTRATION SECTION 140.1

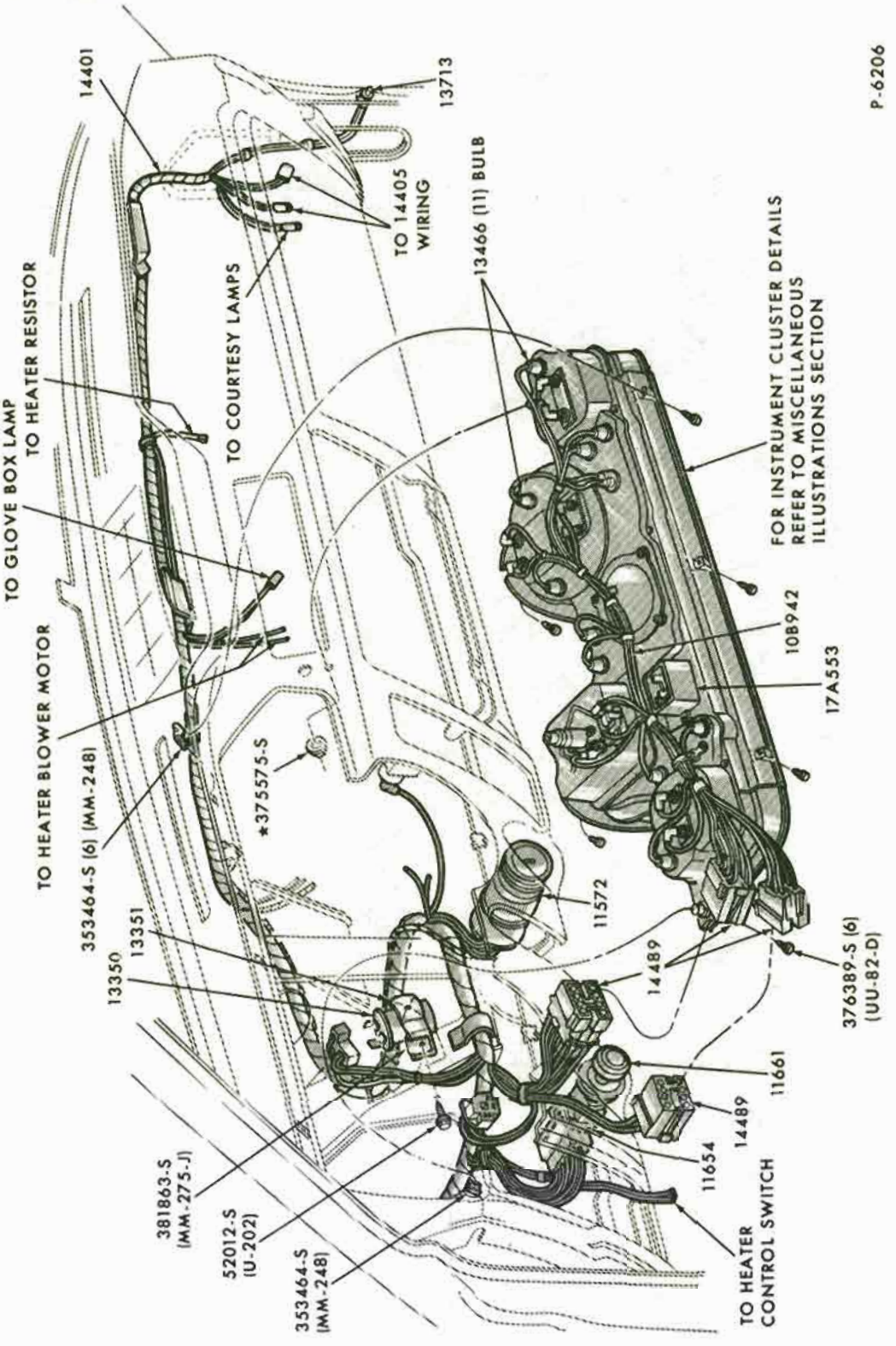

WIRING INSTRUMENT PANEL
1967/68 MUSTANG

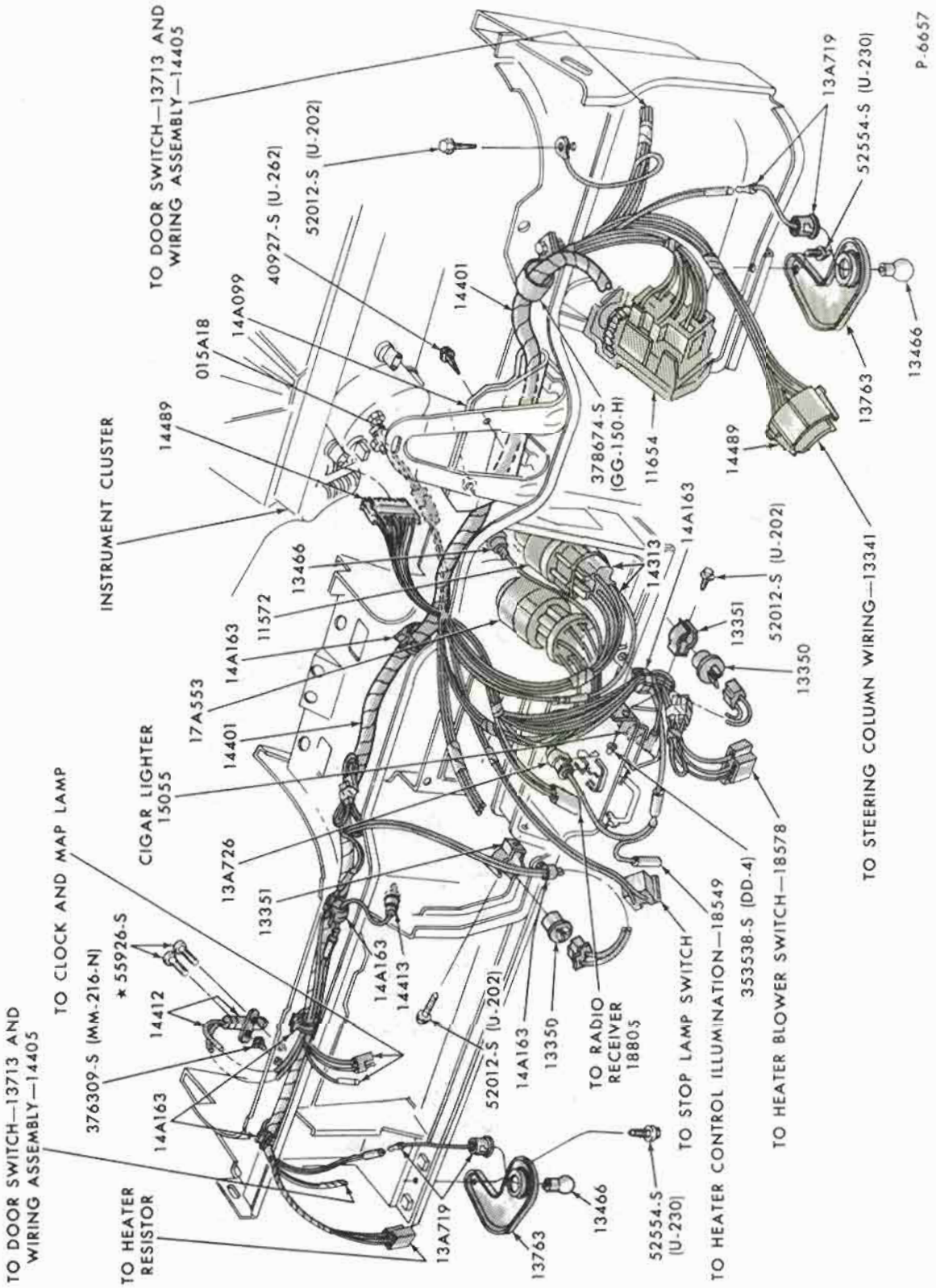

WIRING INSTRUMENT PANEL
1969/70 MUSTANG - except GT 350/500

COPYRIGHT © 1975 — FORD MOTOR COMPANY — DEARBORN, MICHIGAN

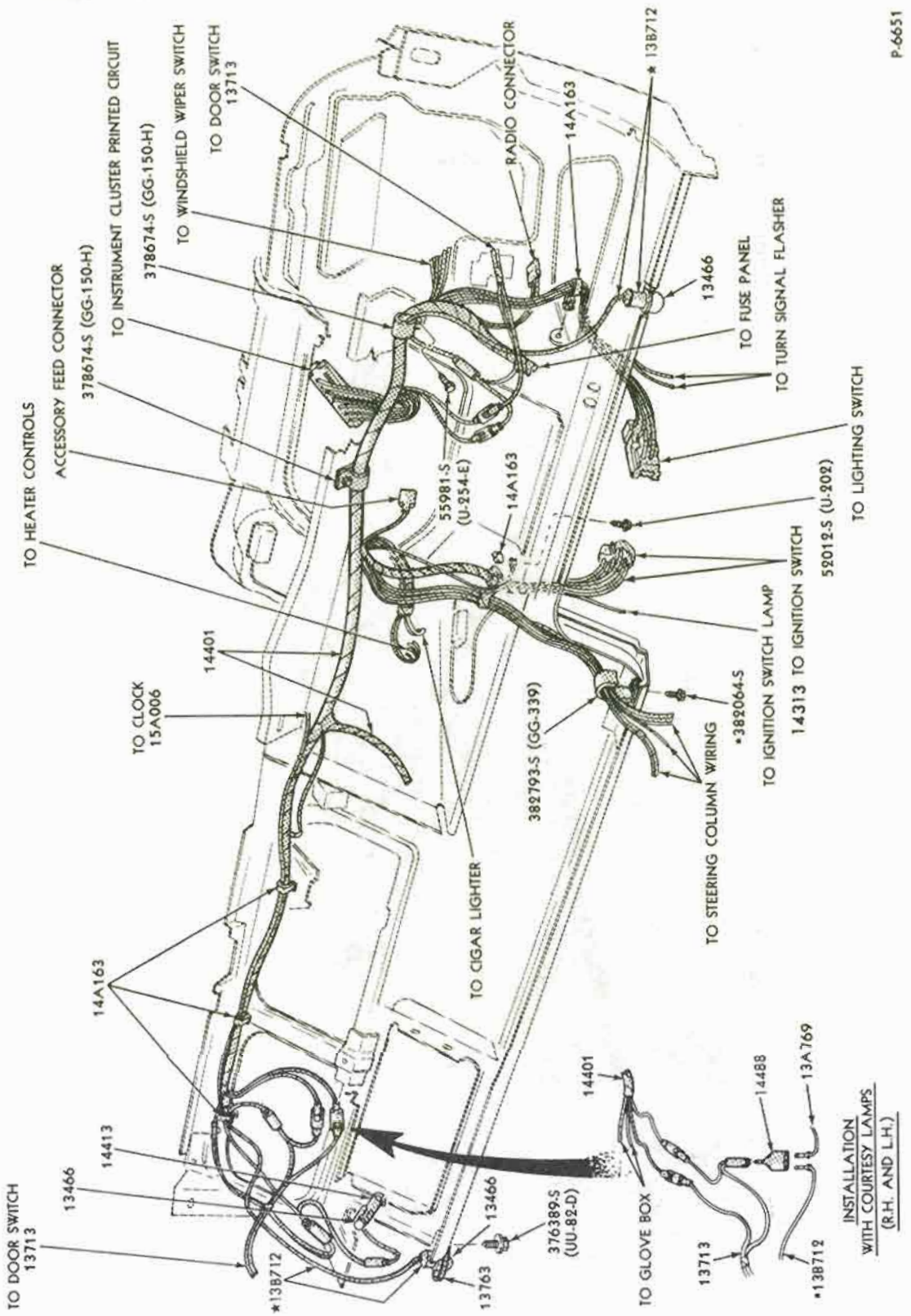

WIRING INSTRUMENT PANEL
1969/70 FORD

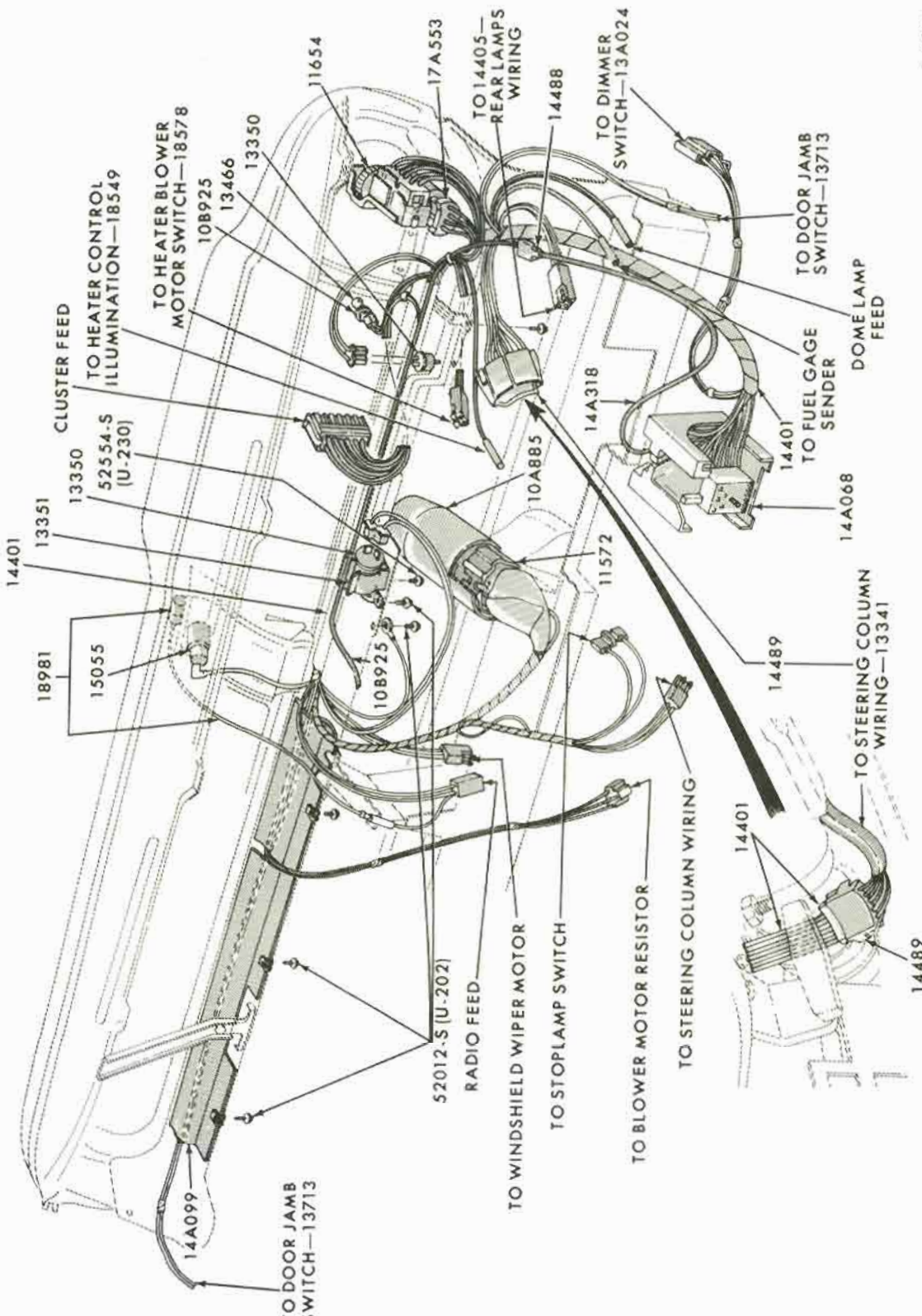

WIRING INSTRUMENT PANEL
1970/72 MAVERICK

COPYRIGHT © 1975 — FORD MOTOR COMPANY — DEARBORN, MICHIGAN

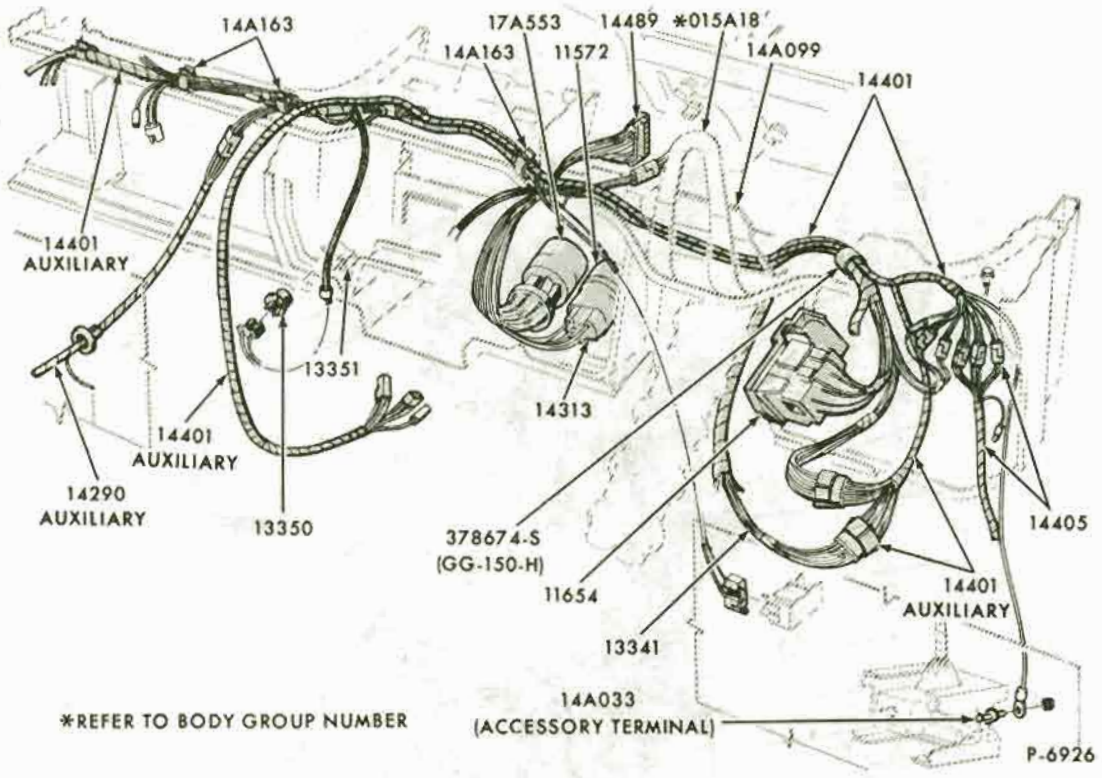

WIRING INSTRUMENT PANEL
1969/70 MUSTANG - GT 350/500

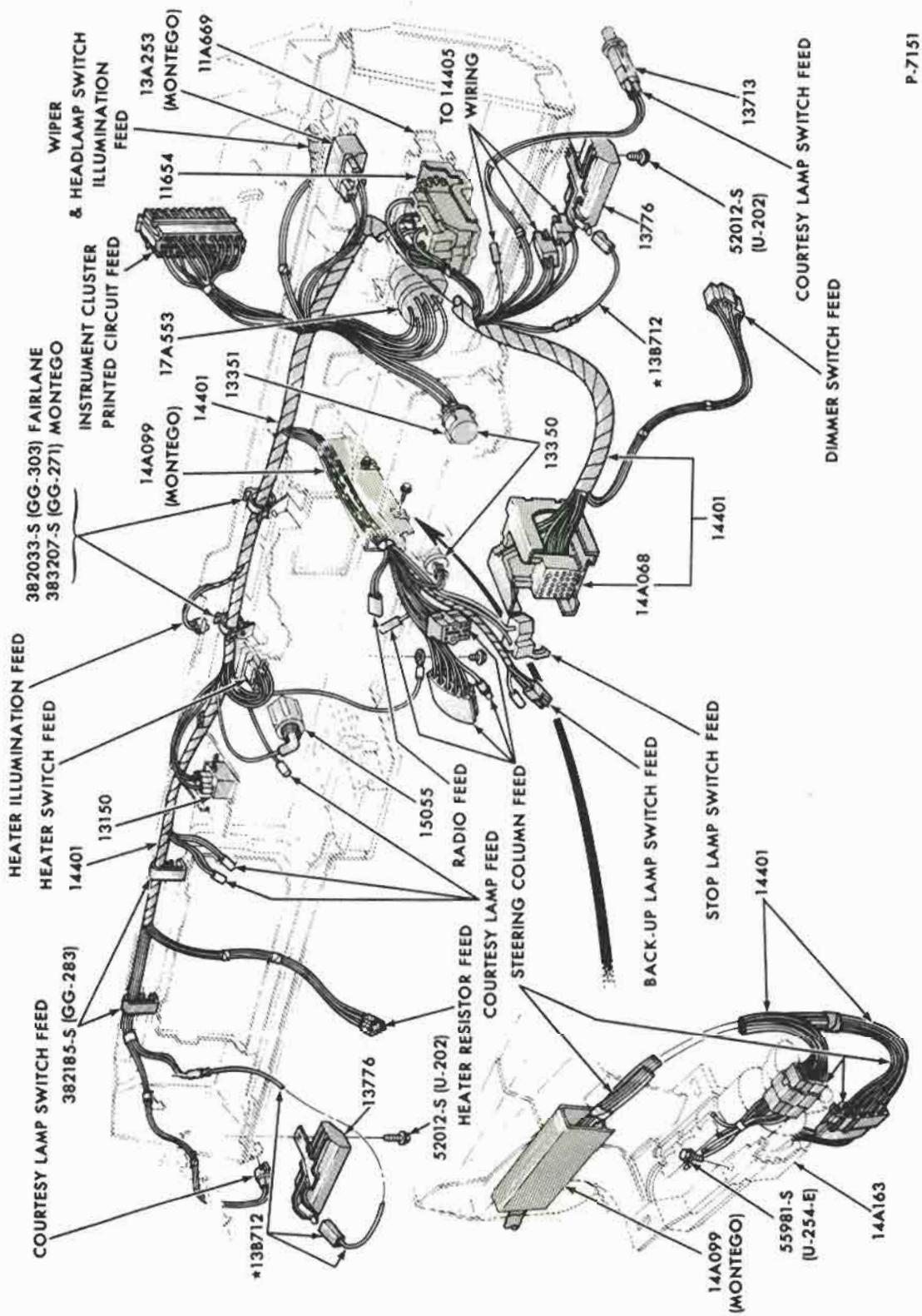

WIRING INSTRUMENT PANEL
1970/71 FAIRLANE/TORINO

COPYRIGHT © 1975 — FORD MOTOR COMPANY — DEARBORN, MICHIGAN

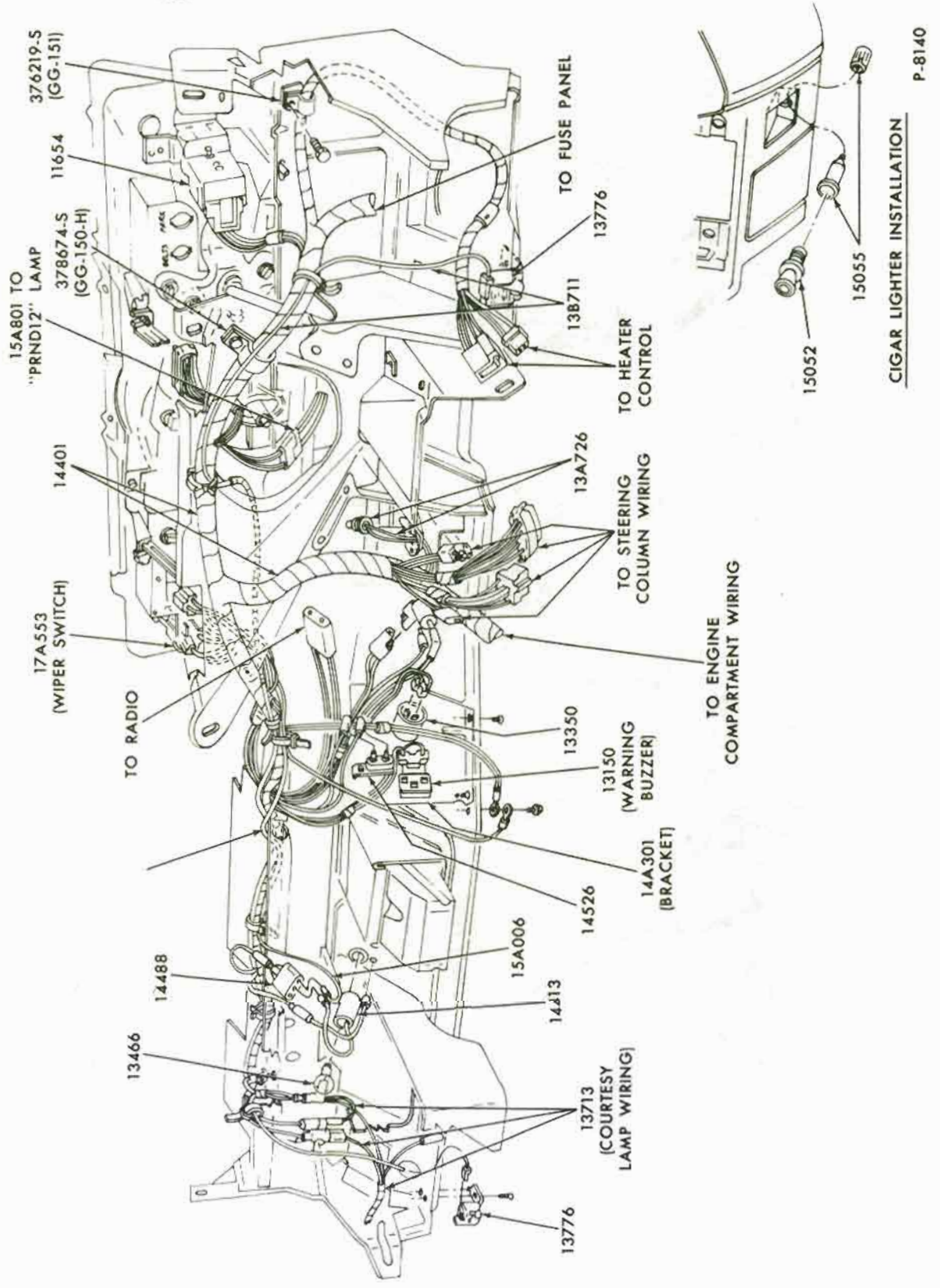

WIRING INSTRUMENT PANEL
1971/72 FORD

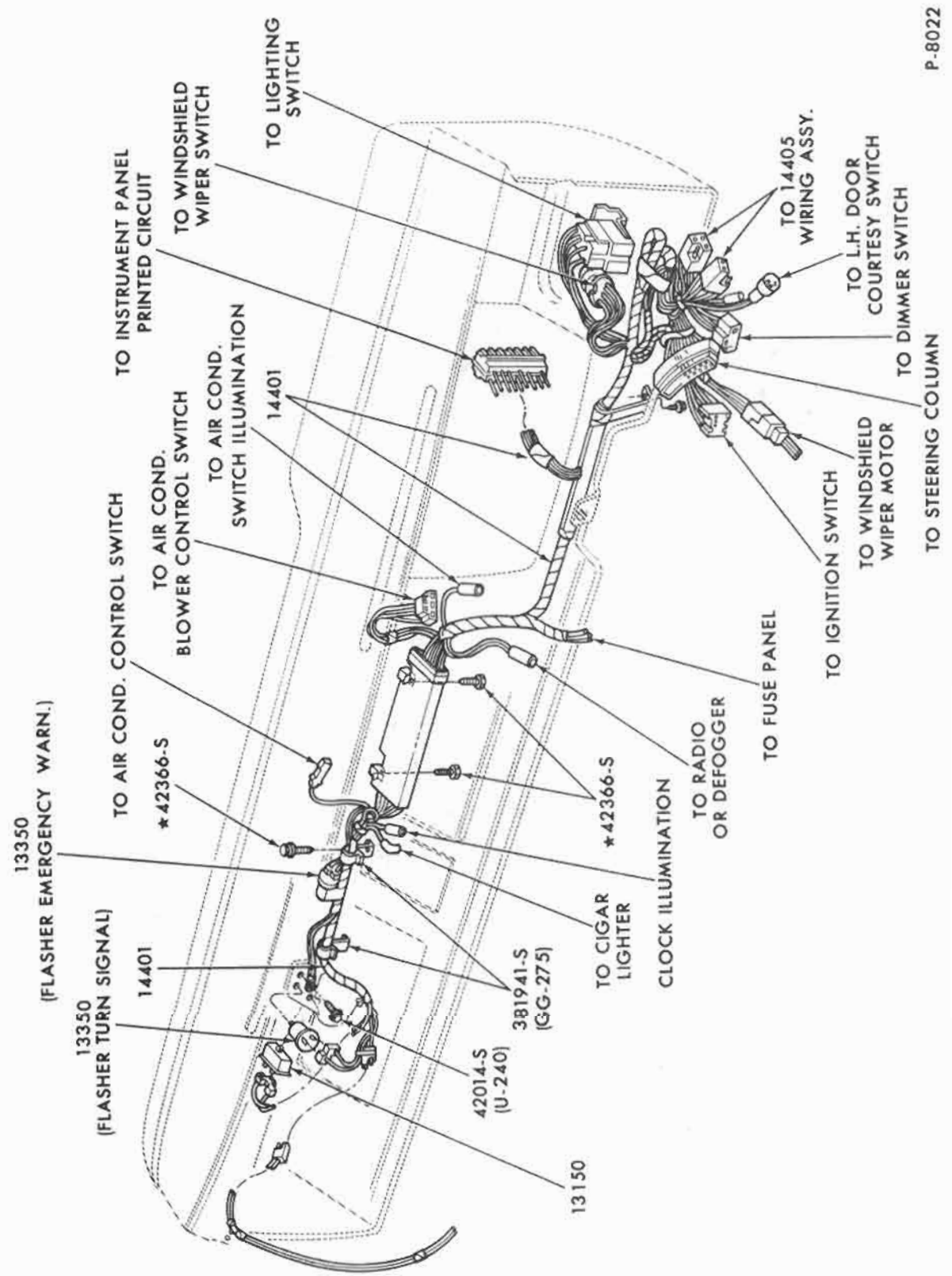

WIRING INSTRUMENT PANEL
1971/72 PINTO

COPYRIGHT © 1975 — FORD MOTOR COMPANY — DEARBORN, MICHIGAN

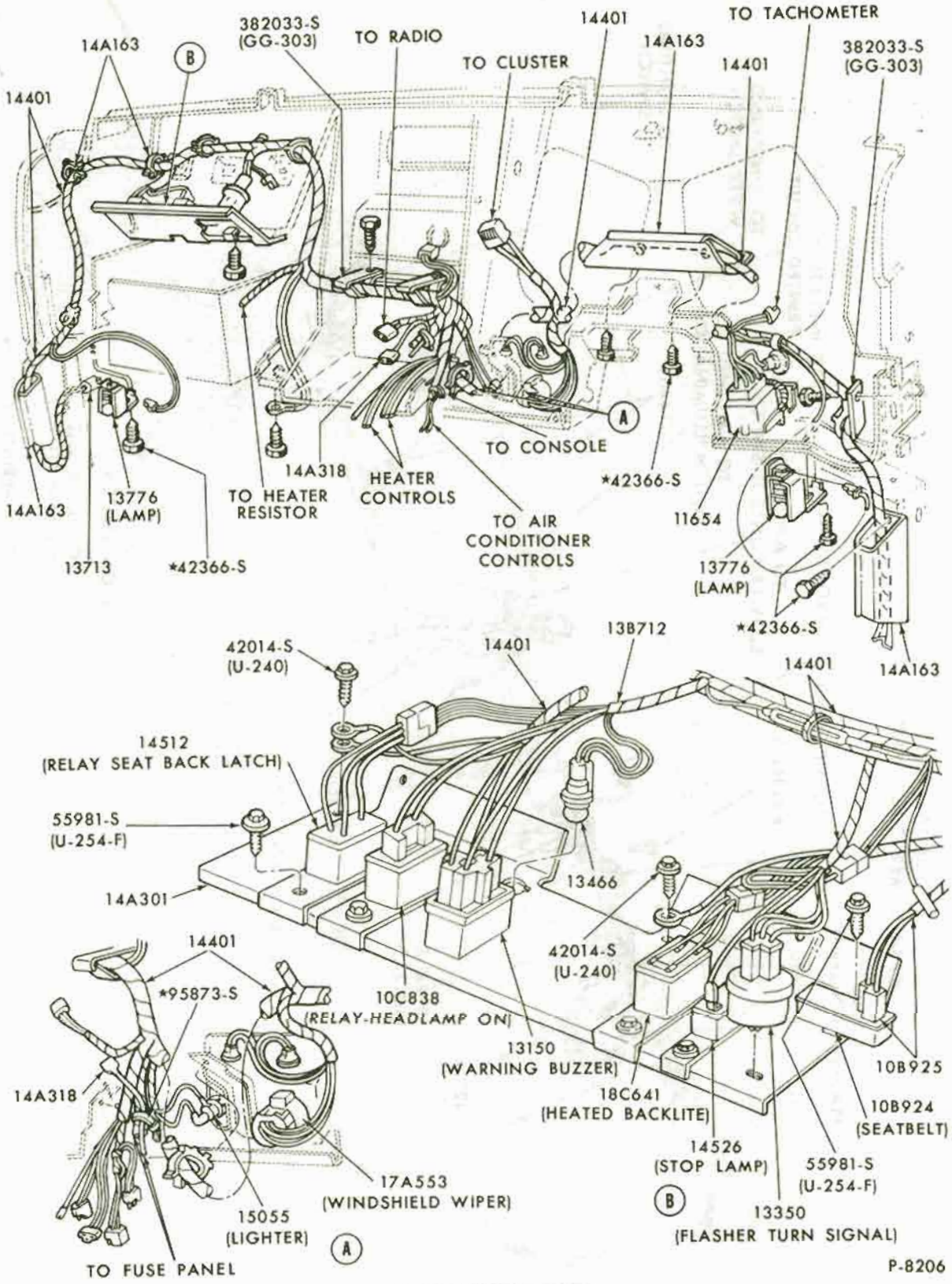

WIRING INSTRUMENT PANEL
1971/72 MUSTANG

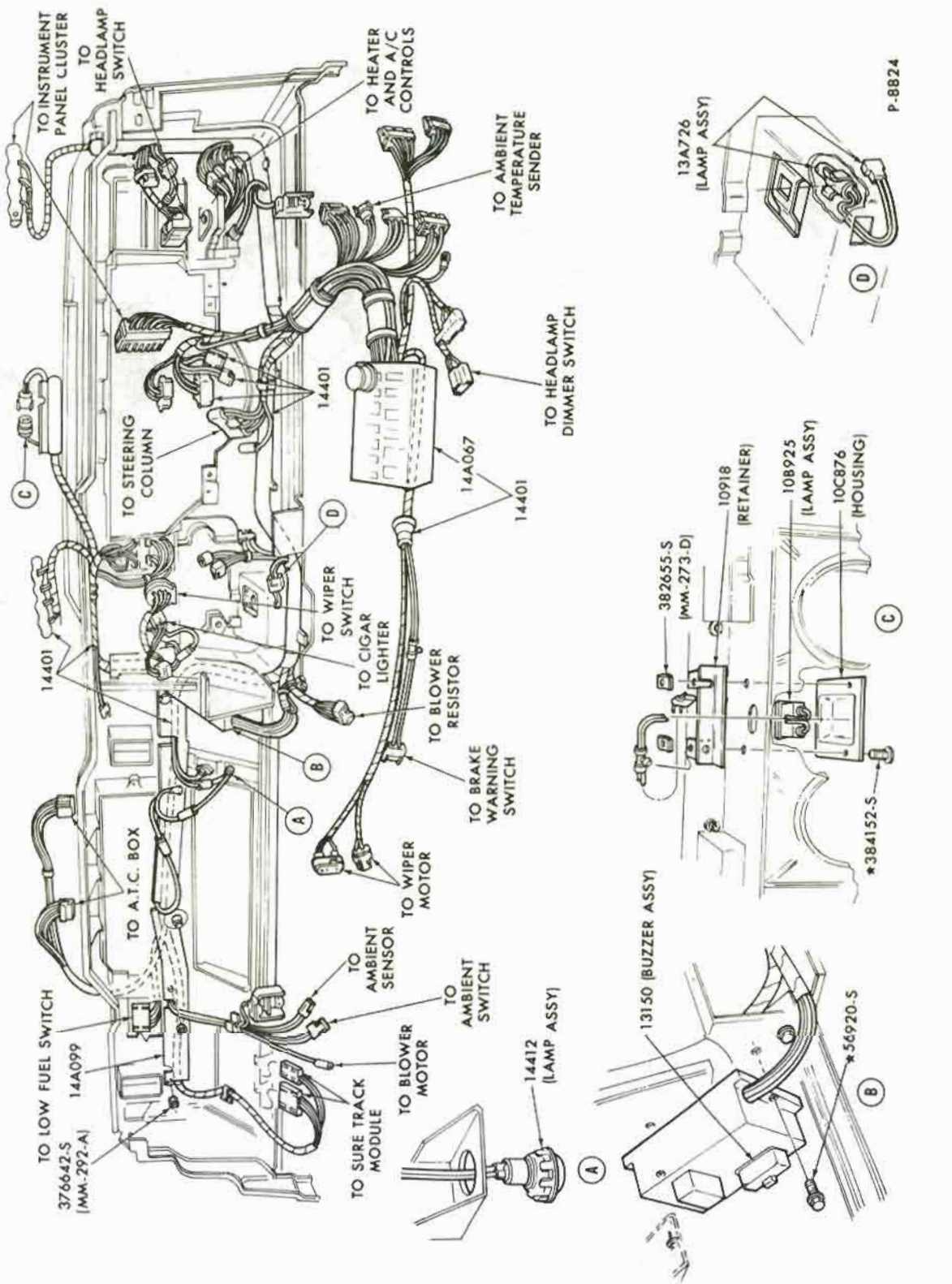

WIRING INSTRUMENT PANEL
1972 THUNDERBIRD

COPYRIGHT © 1975 — FORD MOTOR COMPANY — DEARBORN, MICHIGAN

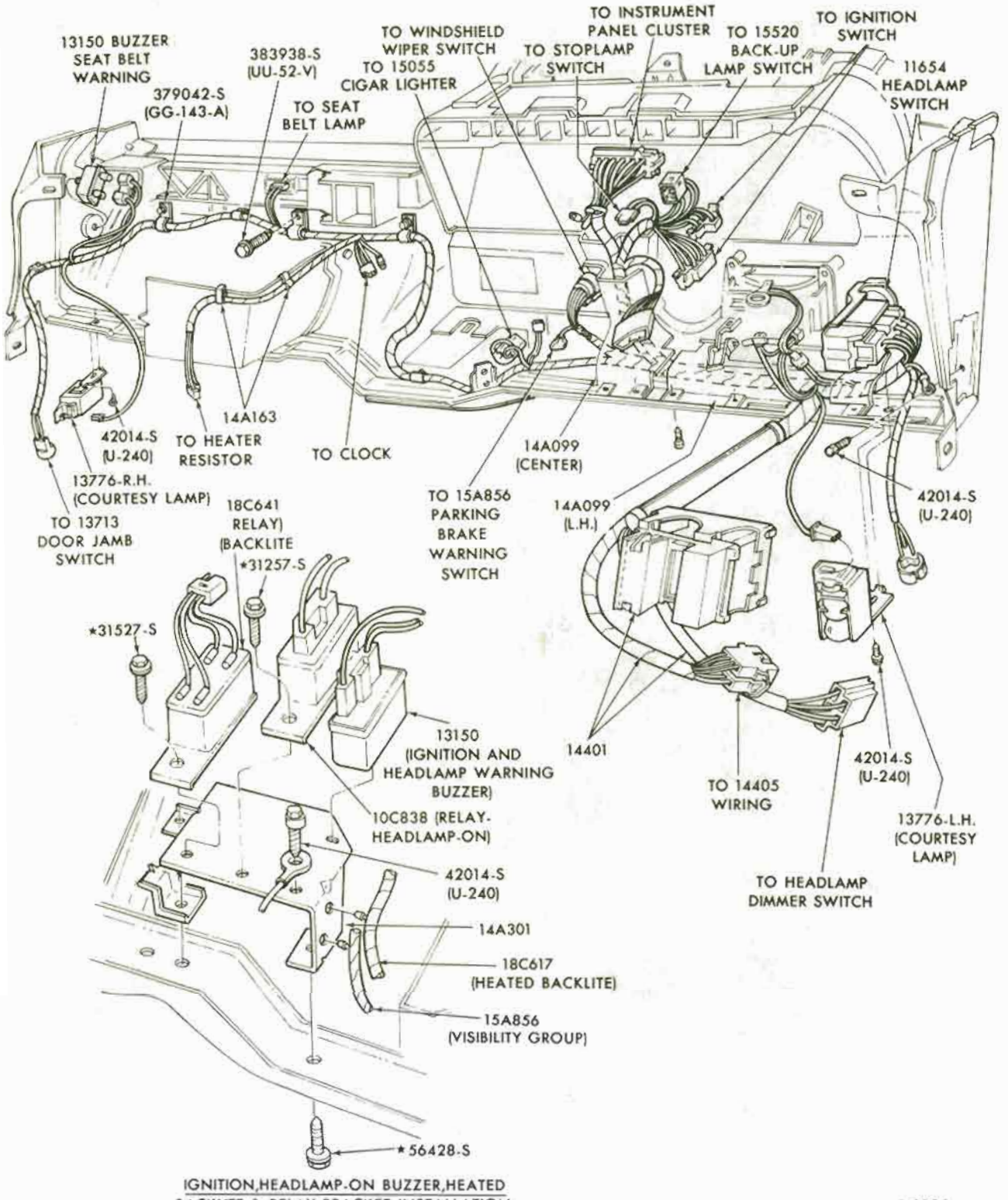

IGNITION, HEADLAMP-ON BUZZER, HEATED BACKLITE & RELAY BRACKET INSTALLATION

P-8825

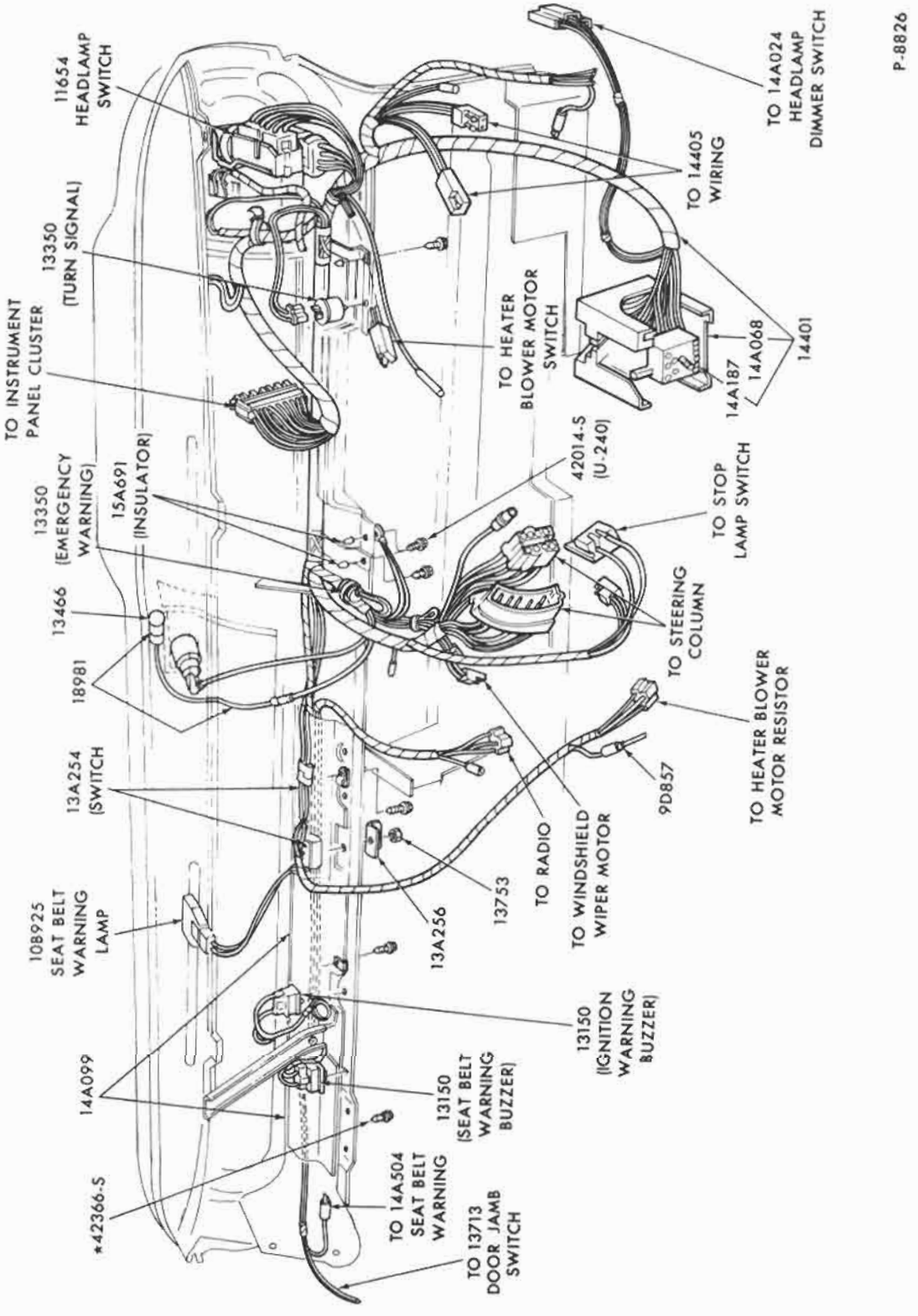

WIRING INSTRUMENT PANEL
1972 MAVERICK

COPYRIGHT © 1975 — FORD MOTOR COMPANY — DEARBORN, MICHIGAN

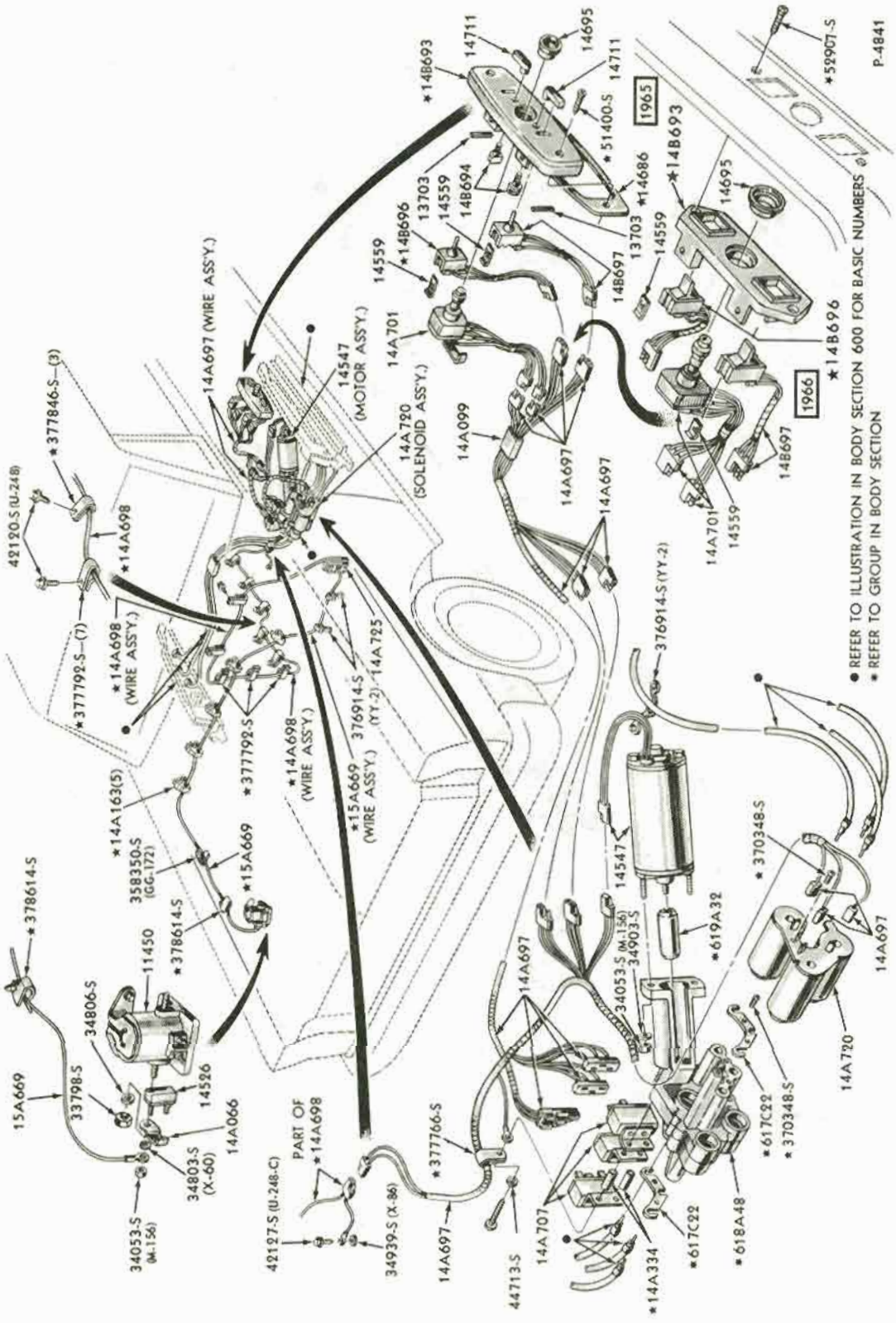

ELECTRIC 6-WAY BENCH SEAT REGULATOR, CONTROLS, WIRING SYSTEM and RELATED PARTS
1965/66 FORD

COPYRIGHT © 1975 — FORD MOTOR COMPANY — DEARBORN, MICHIGAN

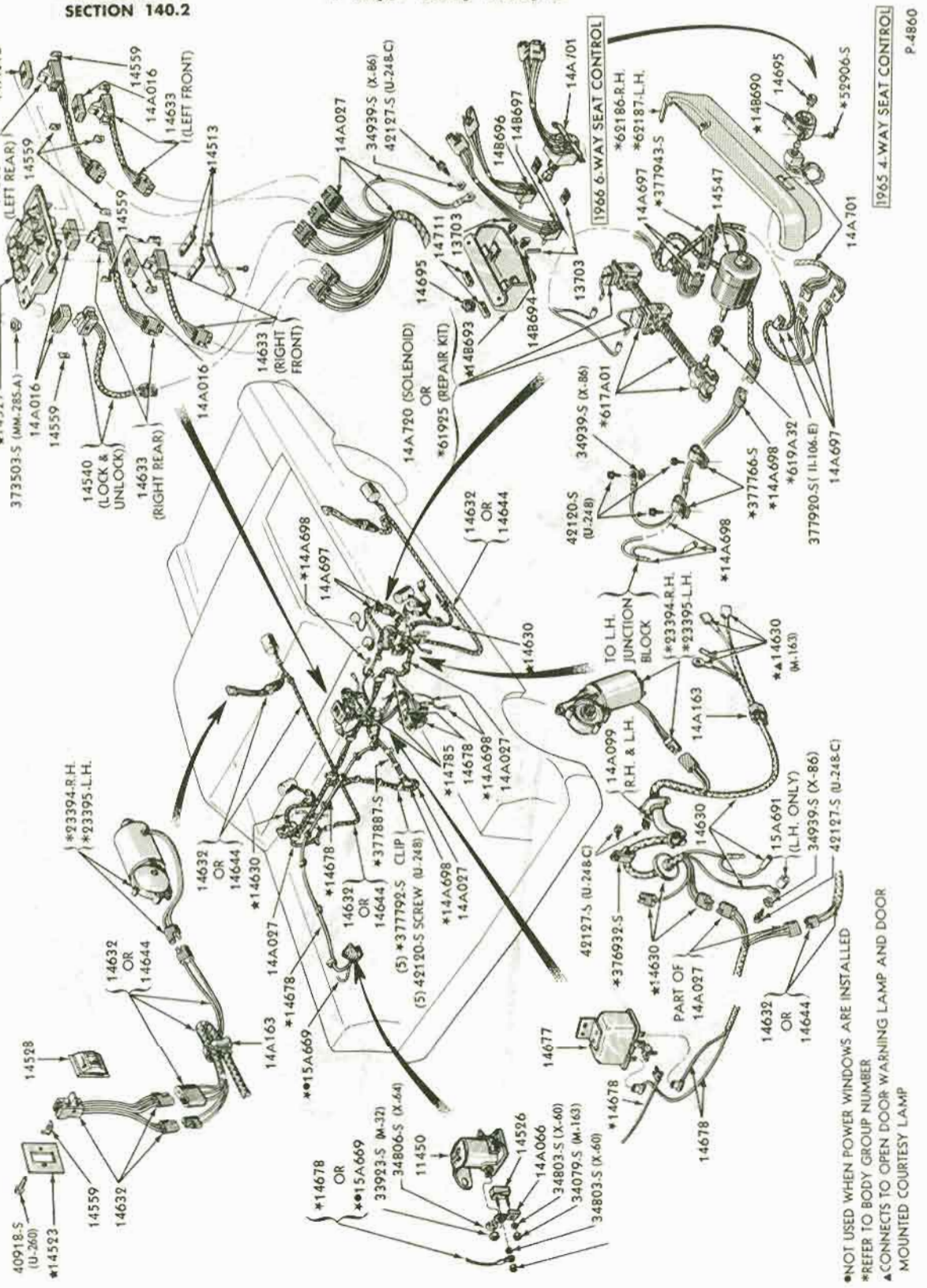

•NOT USED WHEN POWER WINDOWS ARE INSTALLED
*REFER TO BODY GROUP NUMBER
▲CONNECTS TO OPEN DOOR WARNING LAMP AND DOOR MOUNTED COURTESY LAMP

P-4860

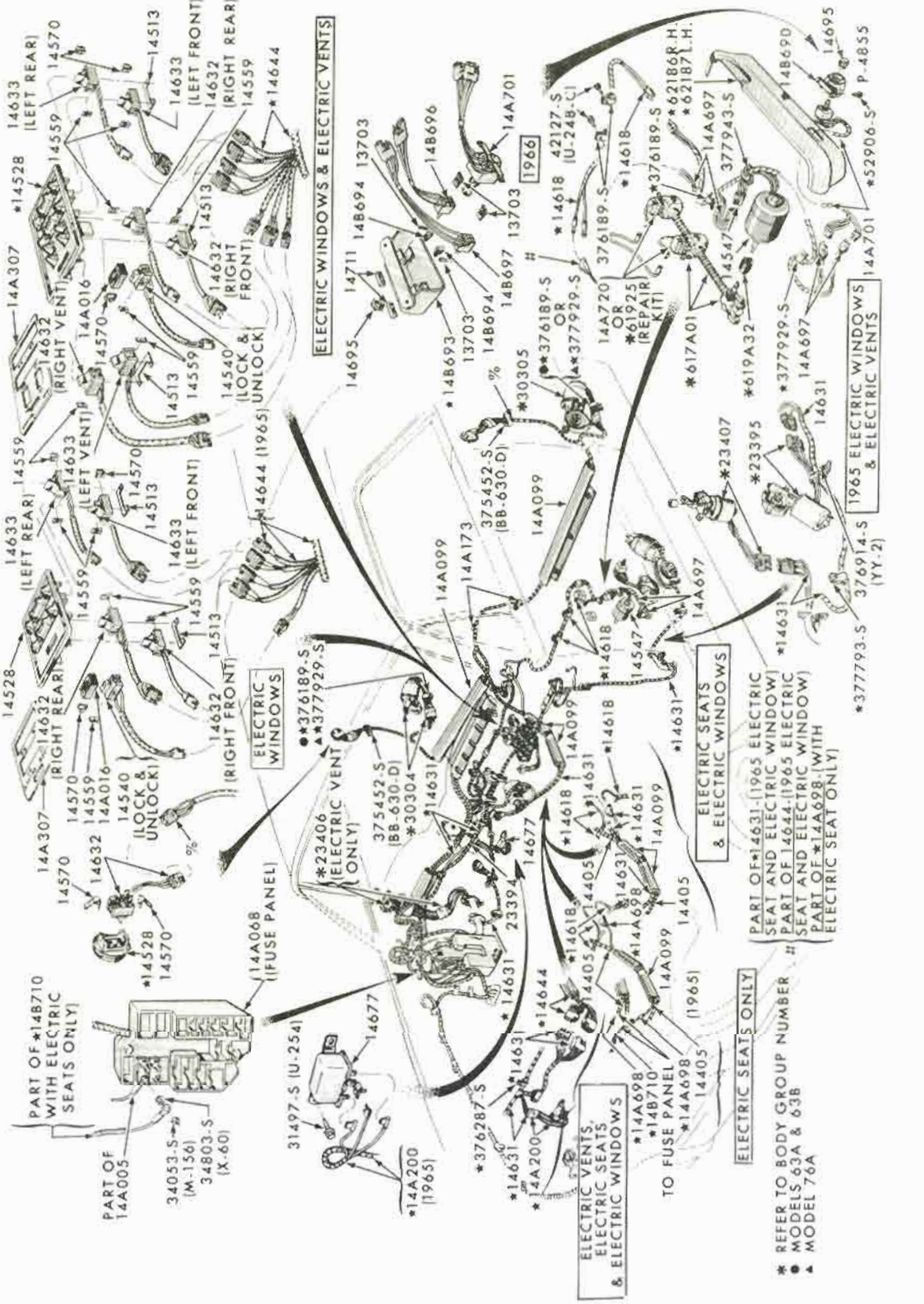

ELECTRIC 4-WAY and 6-WAY SEAT REGULATORS, CONTROLS, WIRING SYSTEM and RELATED PARTS

1965/66 THUNDERBIRD

COPYRIGHT © 1975 — FORD MOTOR COMPANY — DEARBORN, MICHIGAN

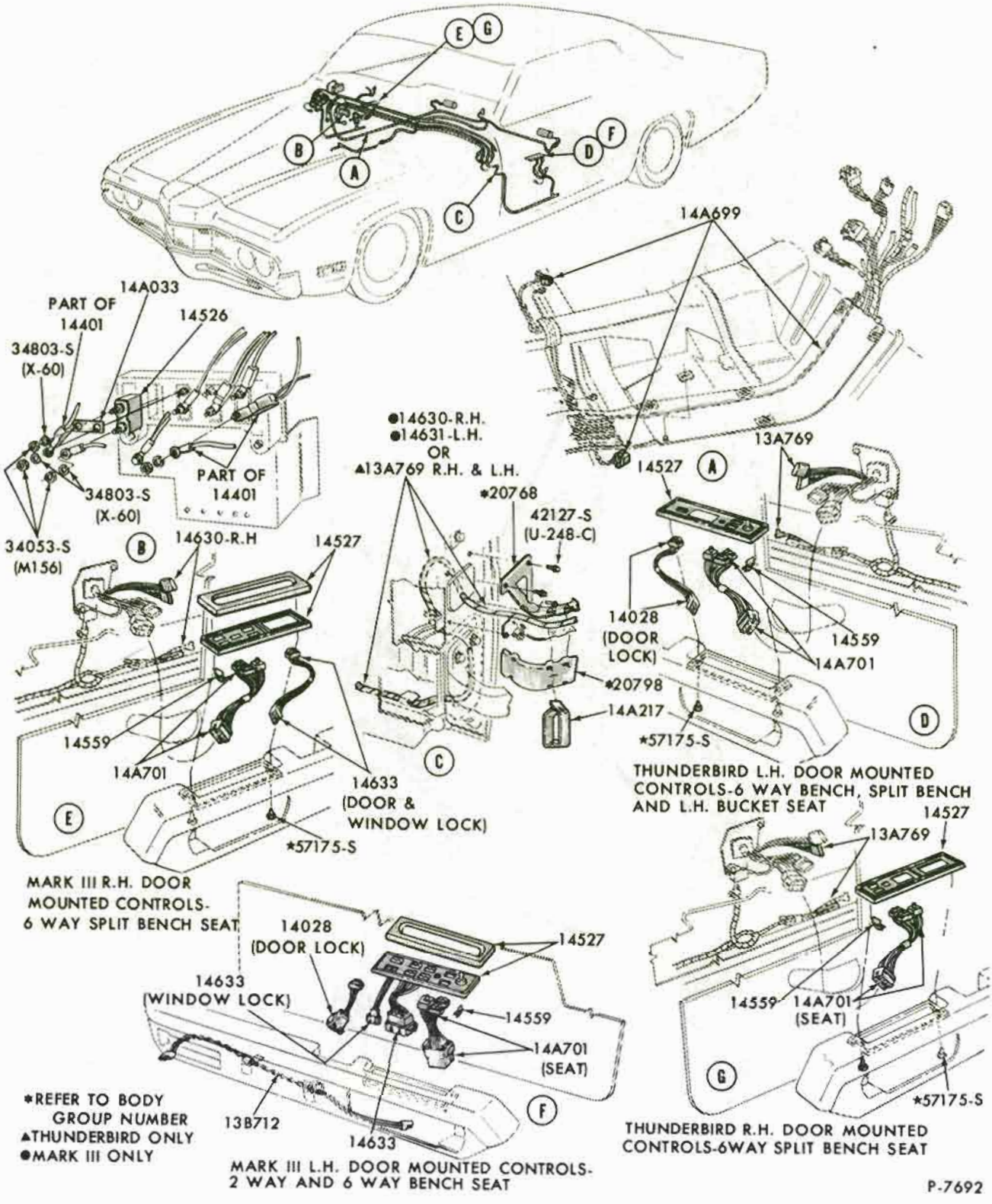

ELECTRIC POWER SEAT, CONTROLS, WIRING SYSTEM and RELATED PARTS
1970/71 THUNDERBIRD

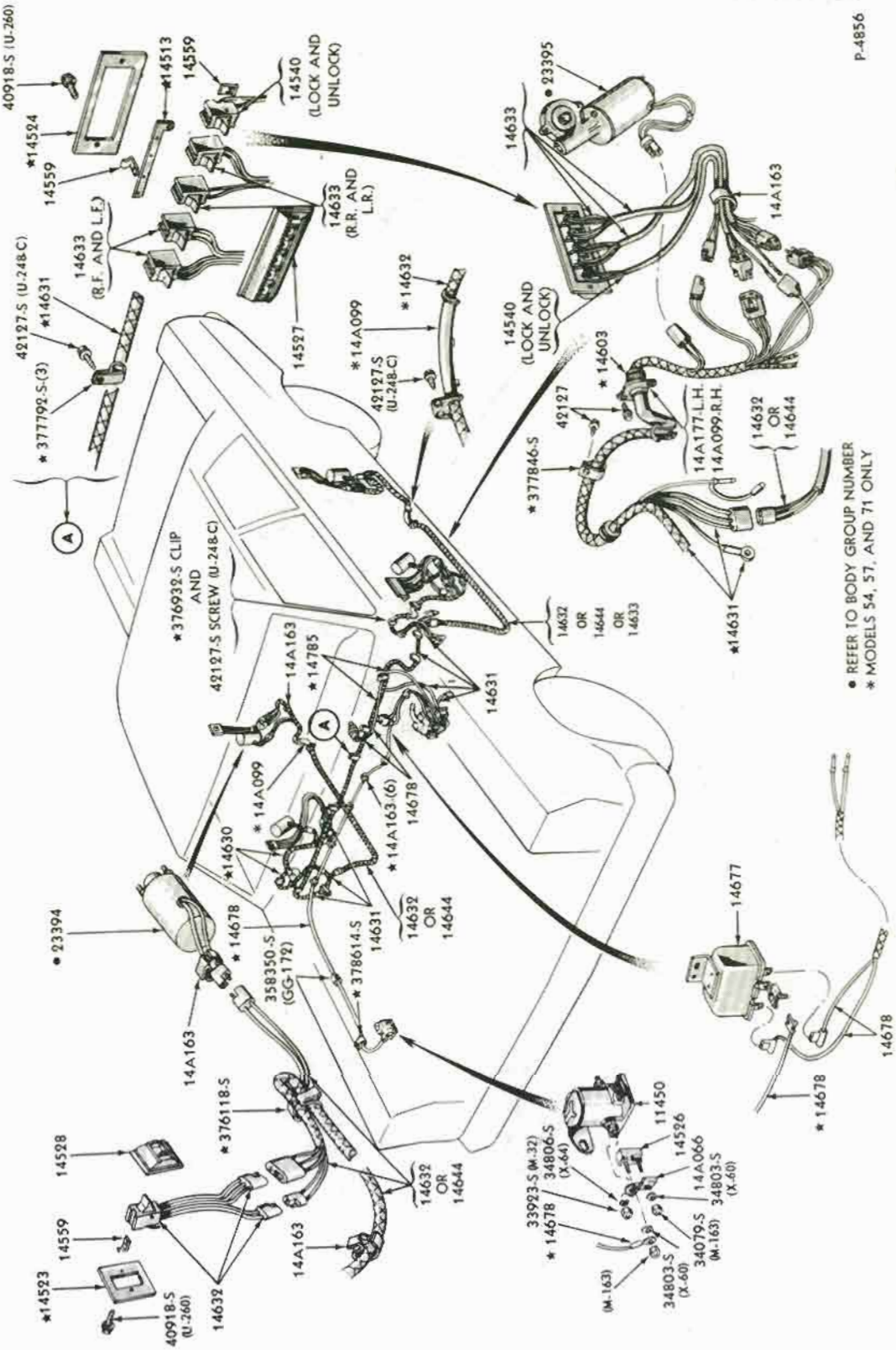

ELECTRIC WINDOW REGULATOR, CONTROLS, WIRING SYSTEM and RELATED PARTS
1965/66 FORD - CUSTOM and GALAXIE - except "XL 500"

COPYRIGHT © 1975 — FORD MOTOR COMPANY — DEARBORN, MICHIGAN

FORD CAR PARTS

ILLUSTRATION SECTION 140.3

•NOT USED WHEN POWER WINDOWS ARE INSTALLED
*REFER TO BODY GROUP NUMBER
▲CONNECTS TO OPEN DOOR WARNING LAMP AND DOOR MOUNTED COURTESY LAMP

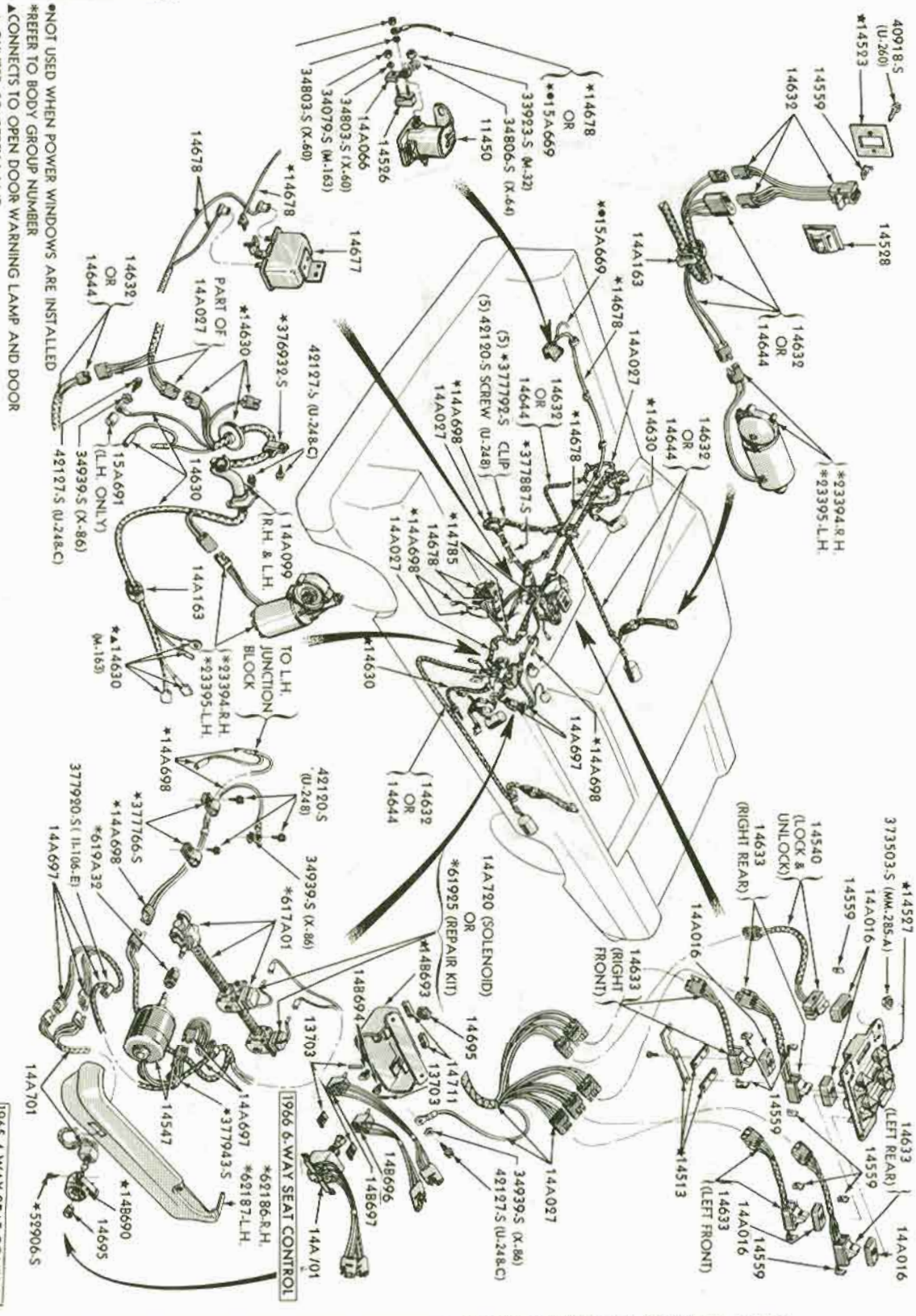

ELECTRIC WINDOW REGULATOR, CONTROLS, WIRING SYSTEM and RELATED PARTS
1965/66 FORD - GALAXIE "XL 500"

P-4860

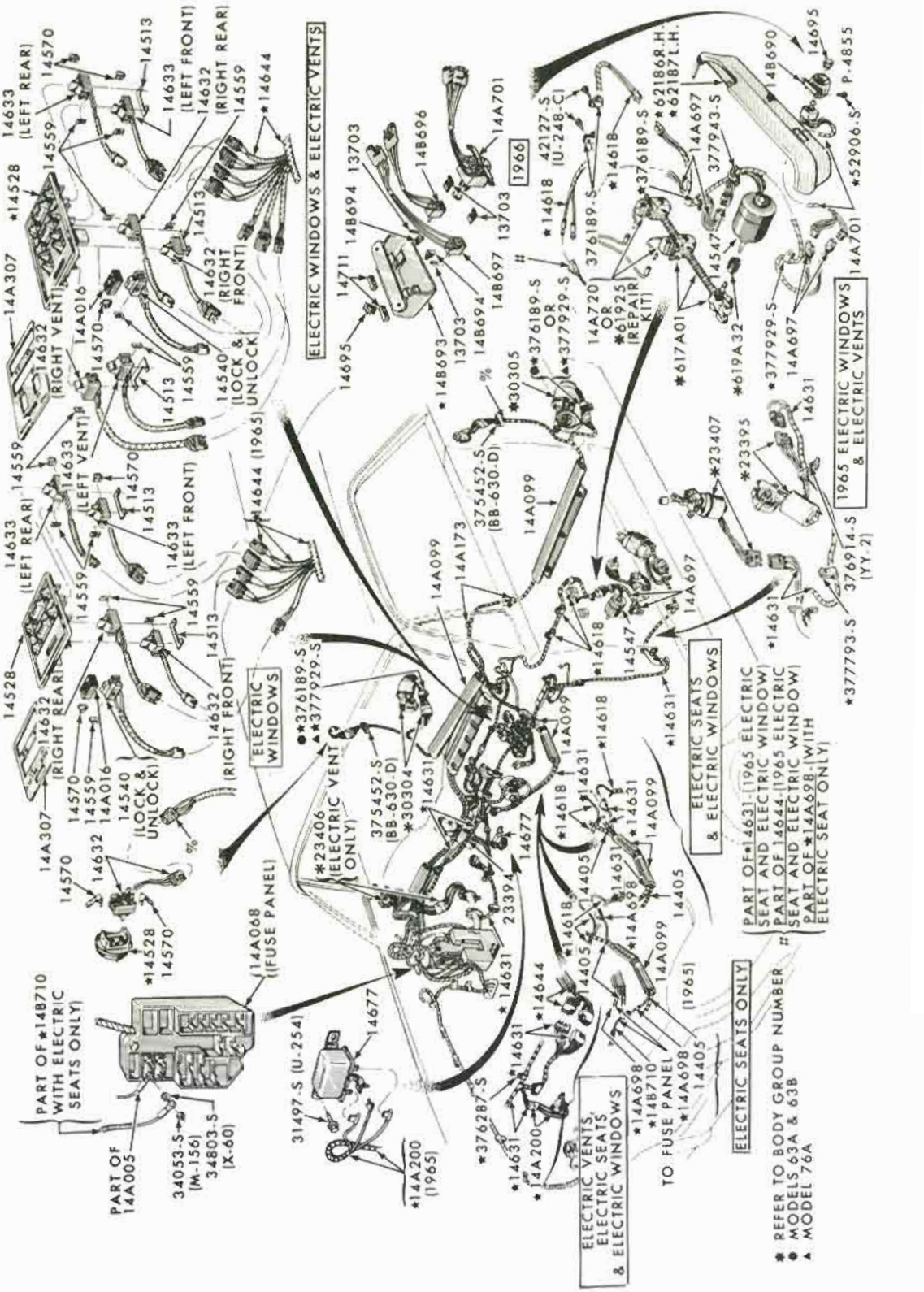

ELECTRIC WINDOW REGULATOR, POWER VENT, CONTROLS, WIRING SYSTEM and RELATED PARTS
1965/66 THUNDERBIRD

COPYRIGHT © 1975 — FORD MOTOR COMPANY — DEARBORN, MICHIGAN

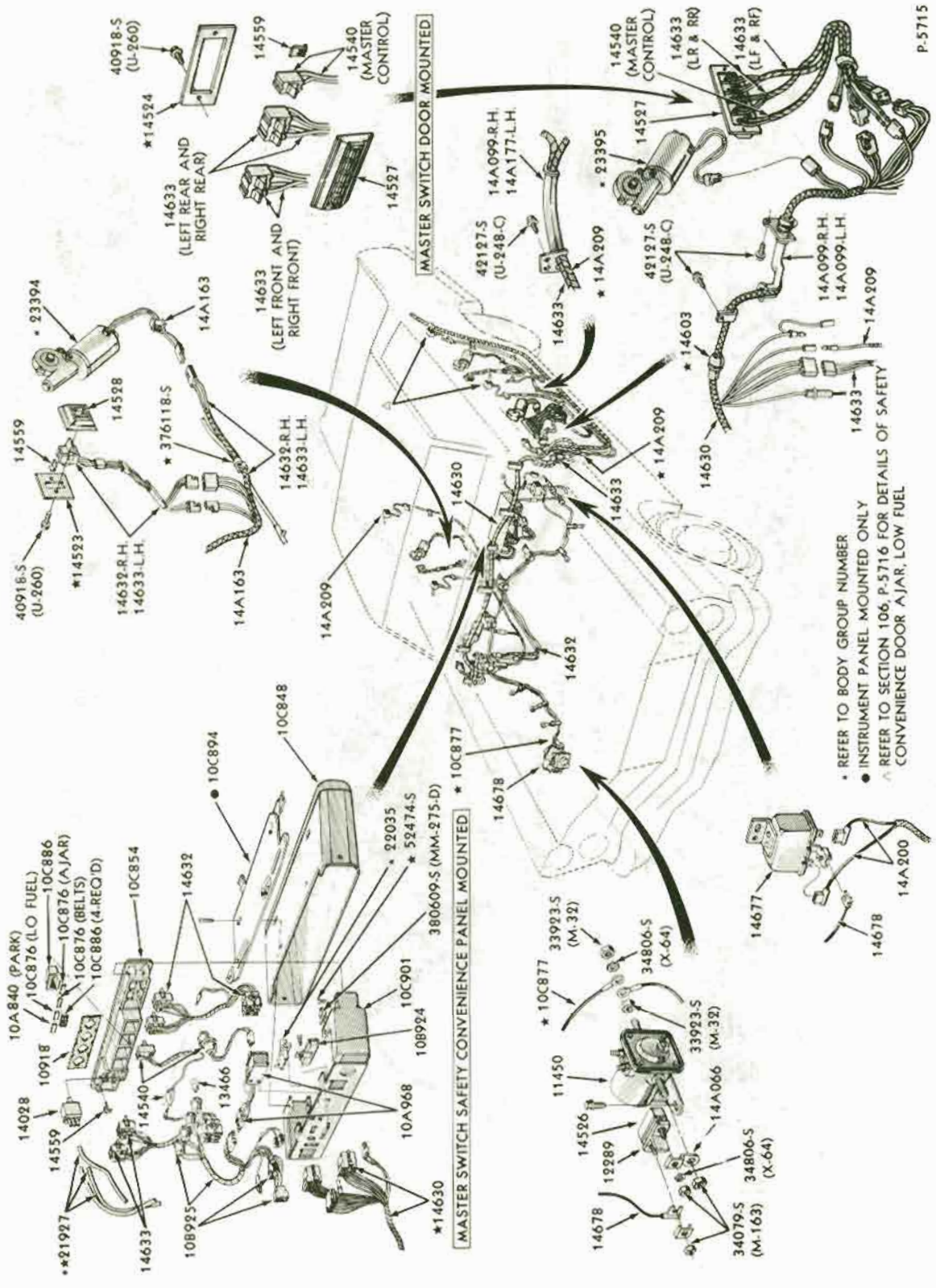

ELECTRIC WINDOW REGULATOR, CONTROLS, WIRING SYSTEM and RELATED PARTS
1967 FORD - CUSTOM and GALAXIE

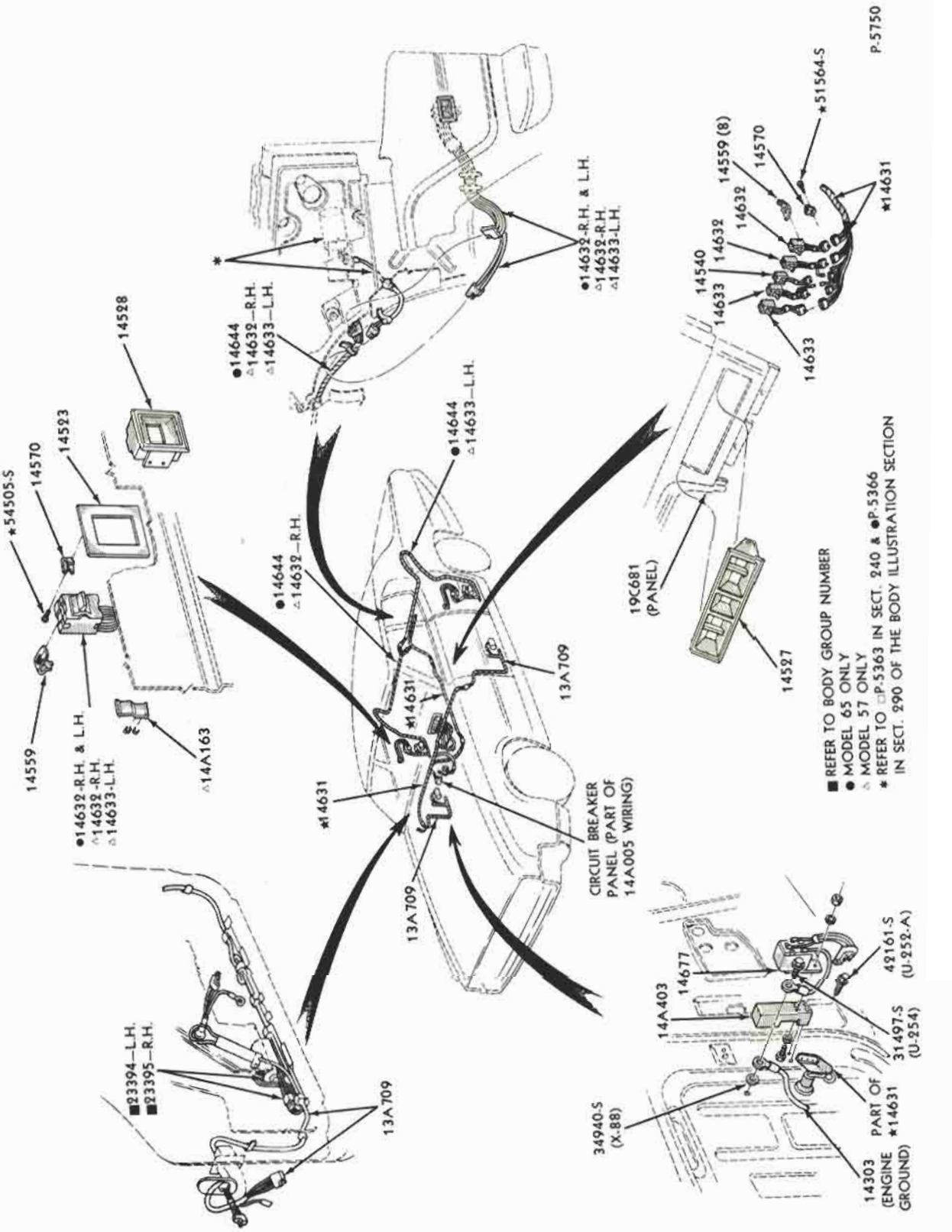

ELECTRIC WINDOW REGULATOR, CONTROLS, WIRING SYSTEM and RELATED PARTS
1967 THUNDERBIRD

COPYRIGHT © 1975 — FORD MOTOR COMPANY — DEARBORN, MICHIGAN

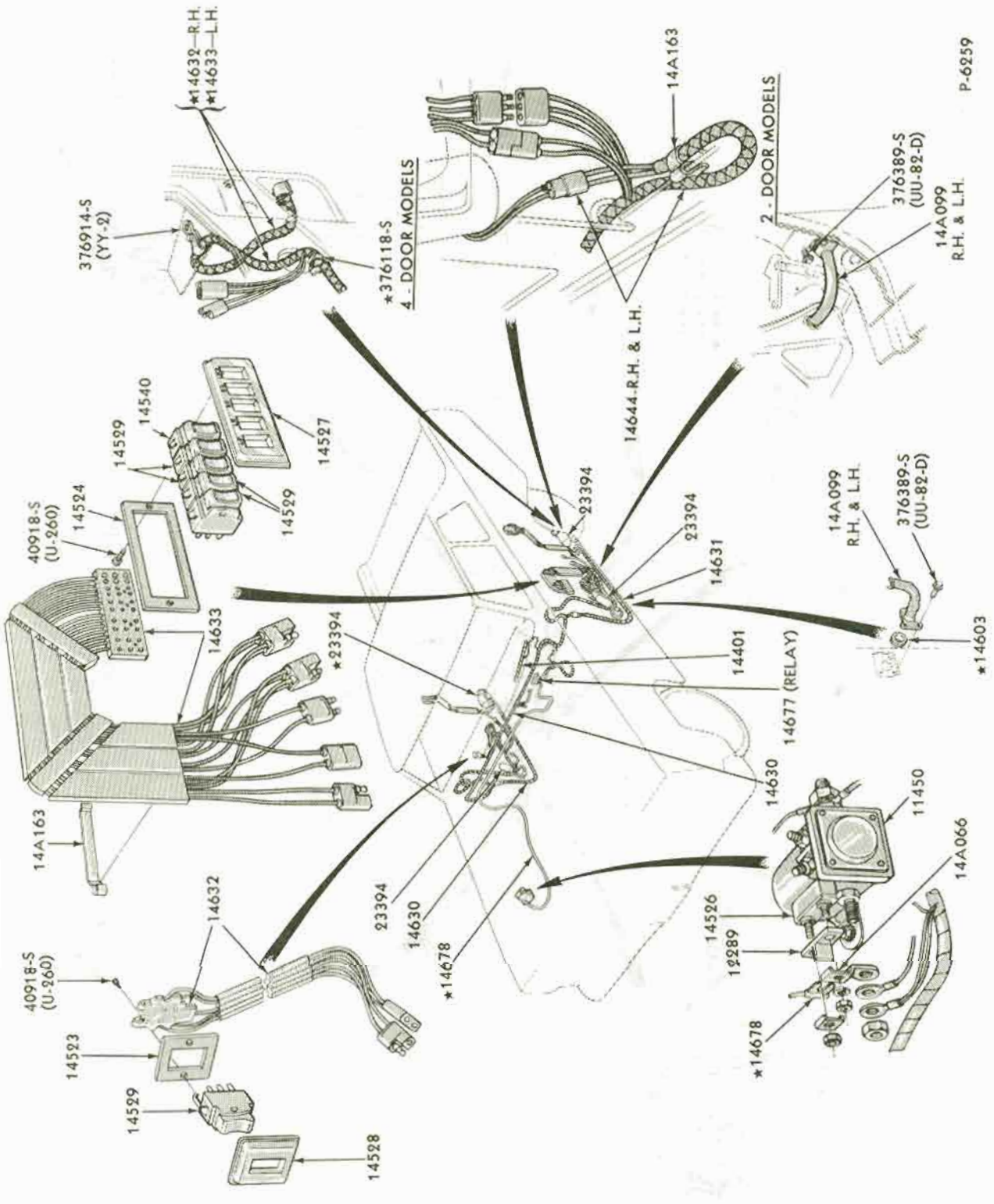

ELECTRIC WINDOW REGULATORS, CONTROLS, WIRING SYSTEM and RELATED PARTS
1968 FORD

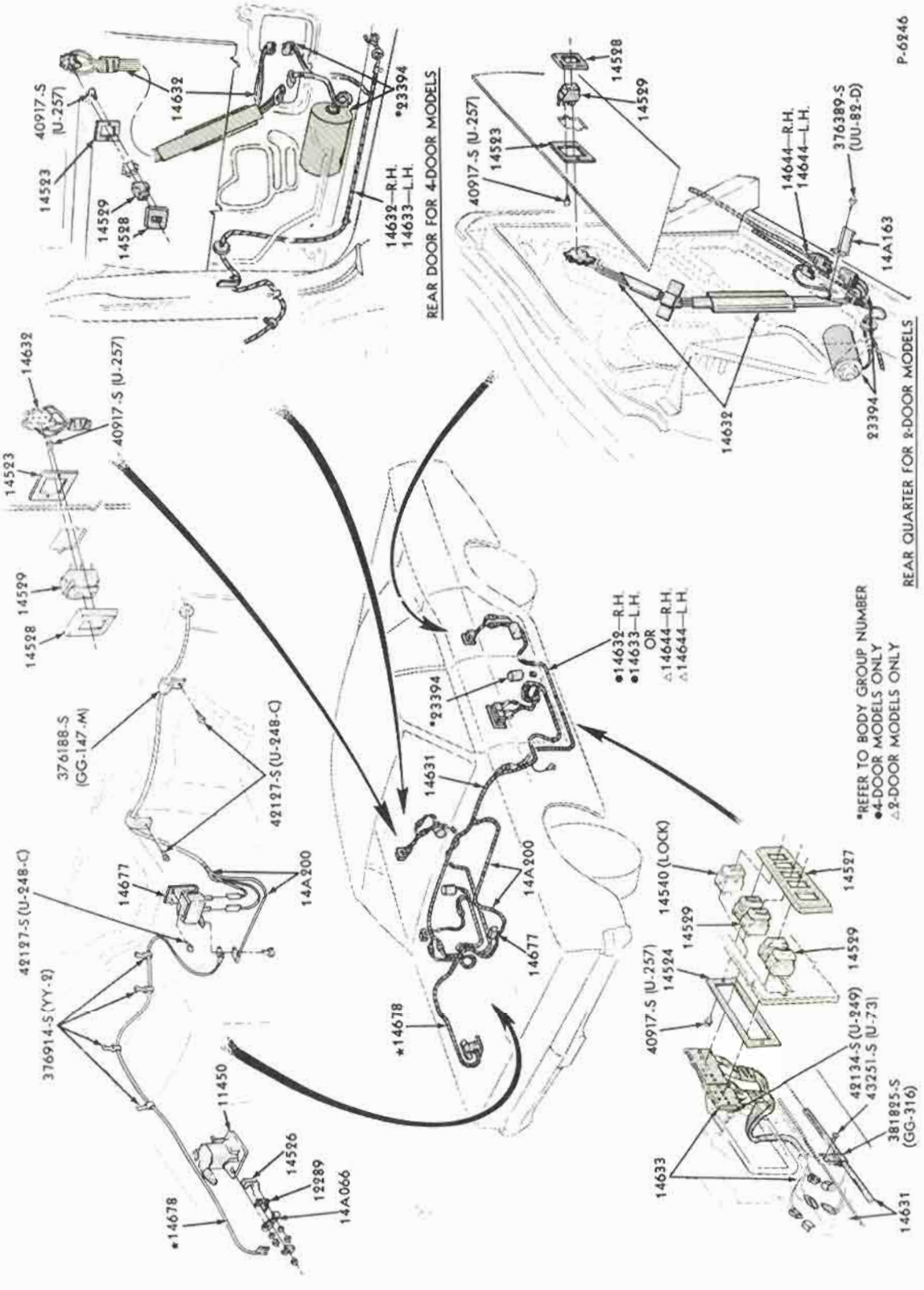

ELECTRIC WINDOW REGULATOR, CONTROL, WIRING SYSTEM and RELATED PARTS
1968/71 FAIRLANE/TORINO

COPYRIGHT © 1975 — FORD MOTOR COMPANY — DEARBORN, MICHIGAN

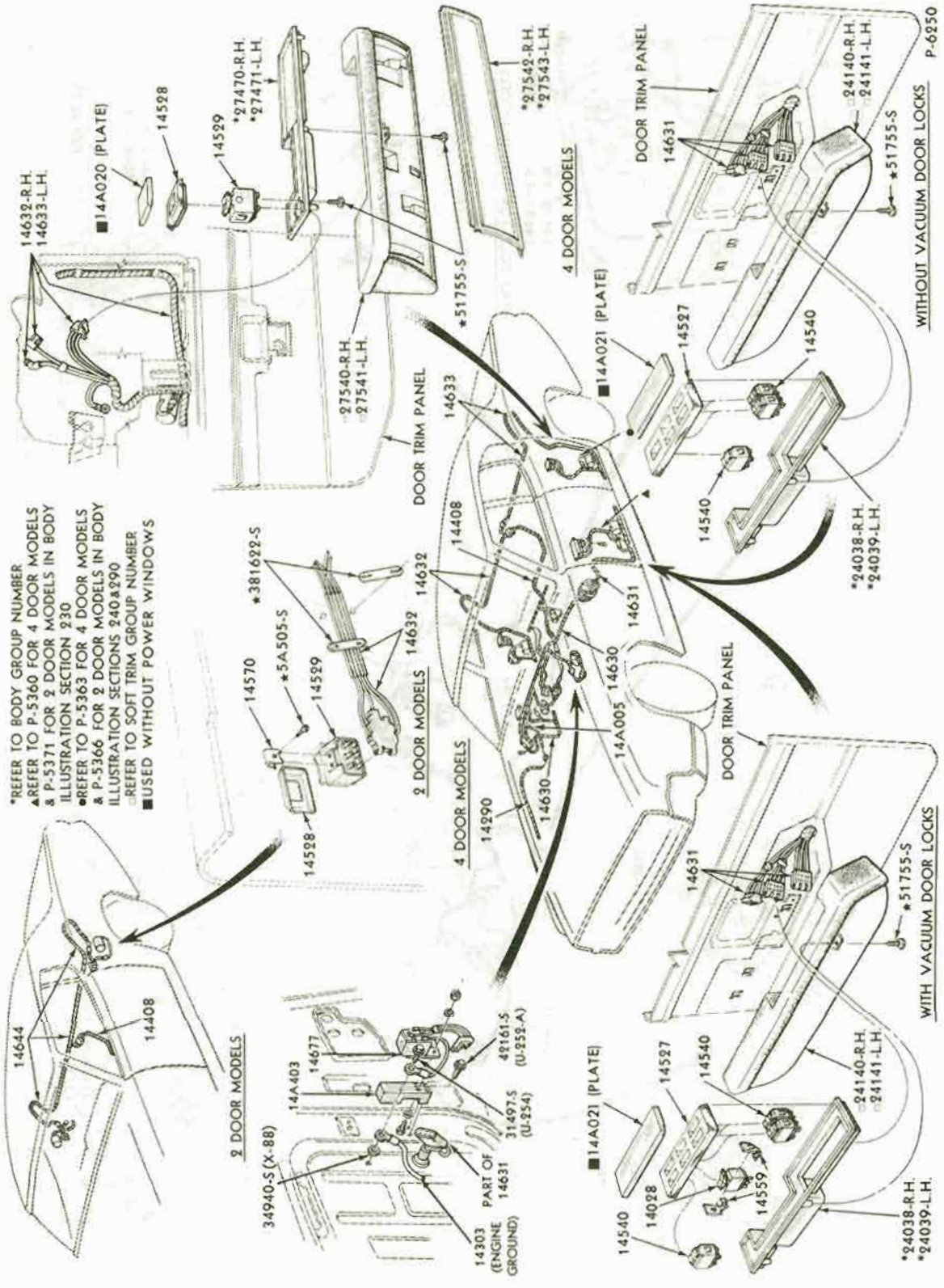

ELECTRIC WINDOW REGULATOR, CONTROLS, WIRING SYSTEM and RELATED PARTS
1968/69 THUNDERBIRD

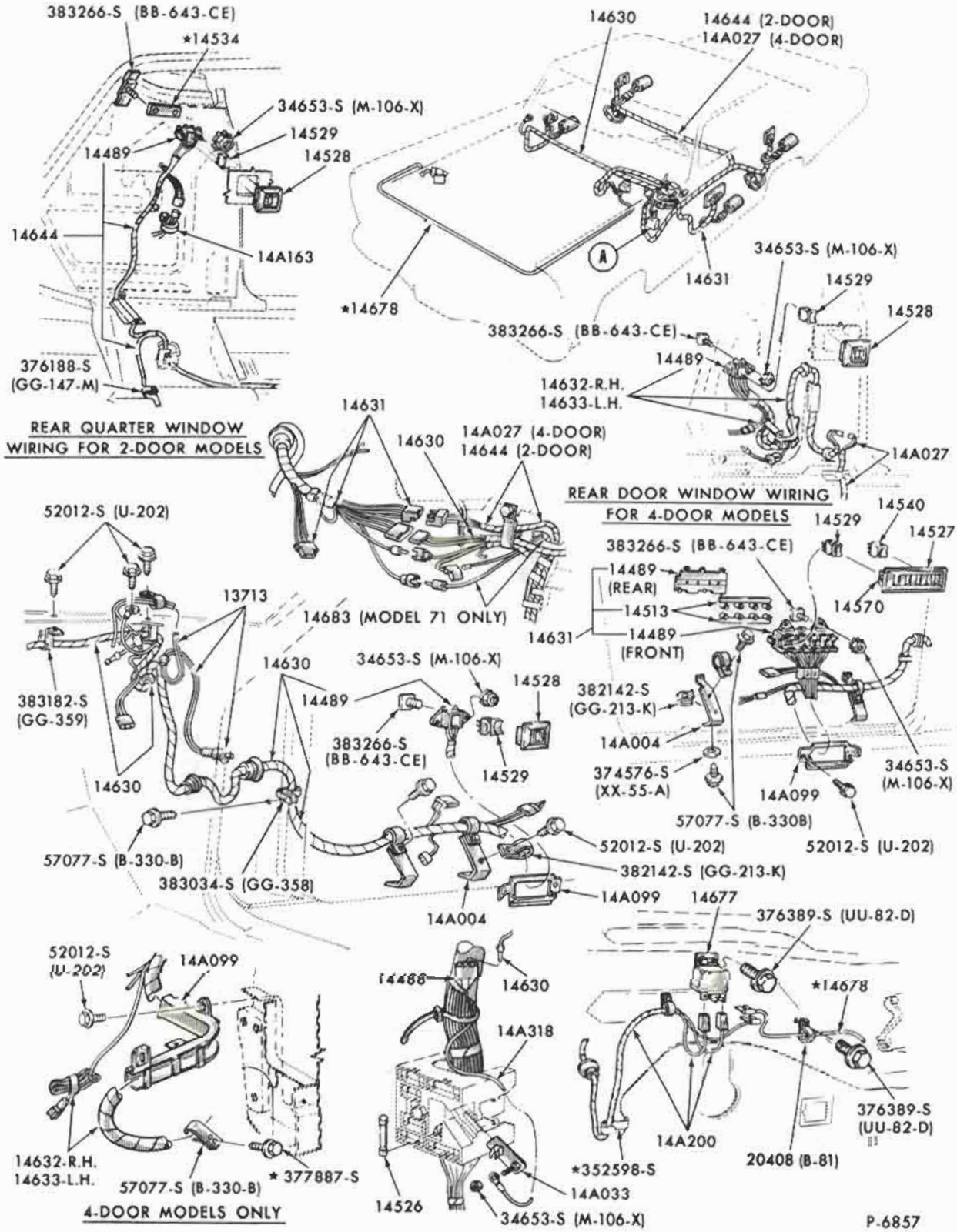

ELECTRIC WINDOW REGULATOR, CONTROLS, WIRING SYSTEM and RELATED PARTS
1969/70 FORD

COPYRIGHT © 1975 — FORD MOTOR COMPANY — DEARBORN, MICHIGAN

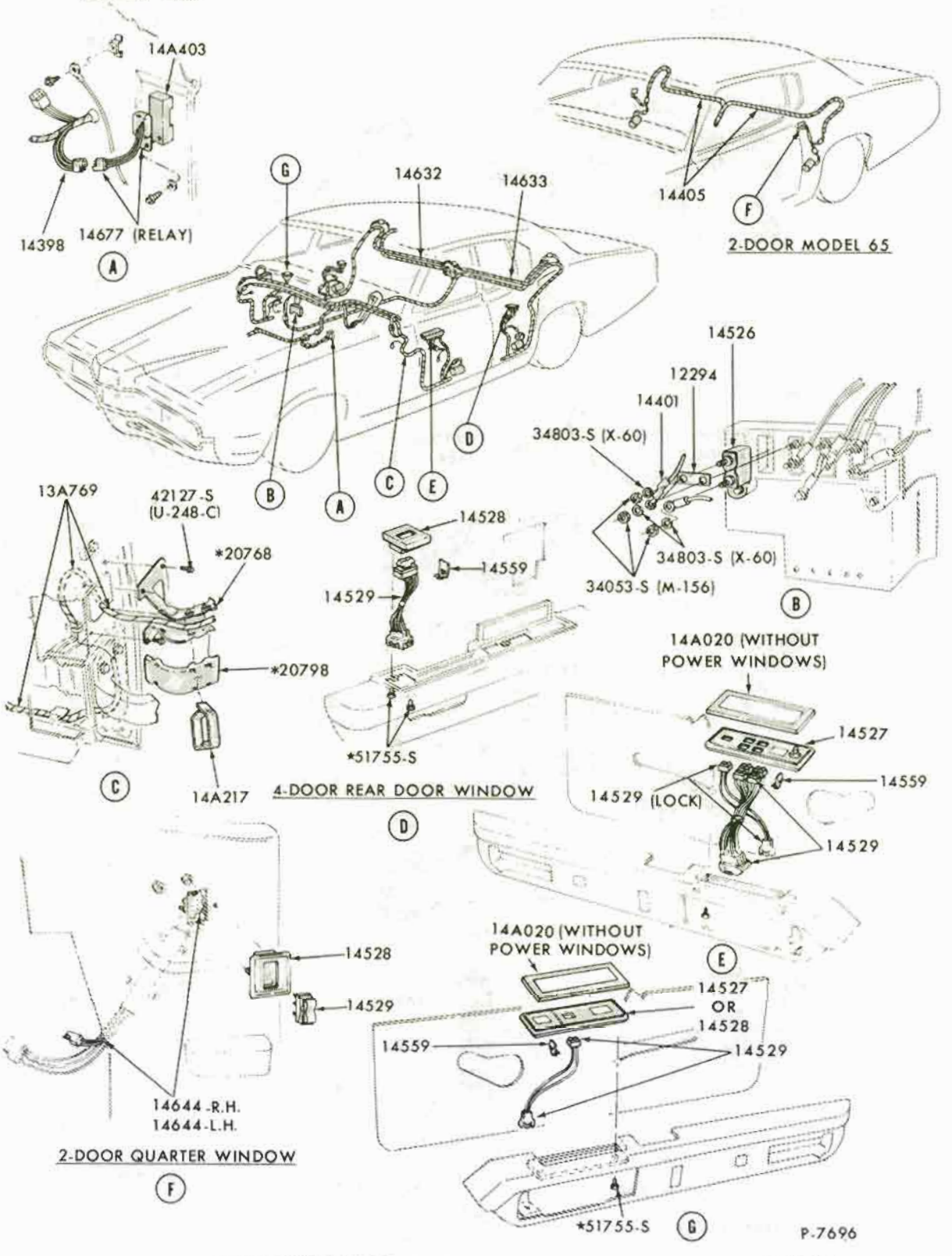

ELECTRIC WINDOW REGULATORS, CONTROLS, WIRING SYSTEM and RELATED PARTS
1970/71 THUNDERBIRD

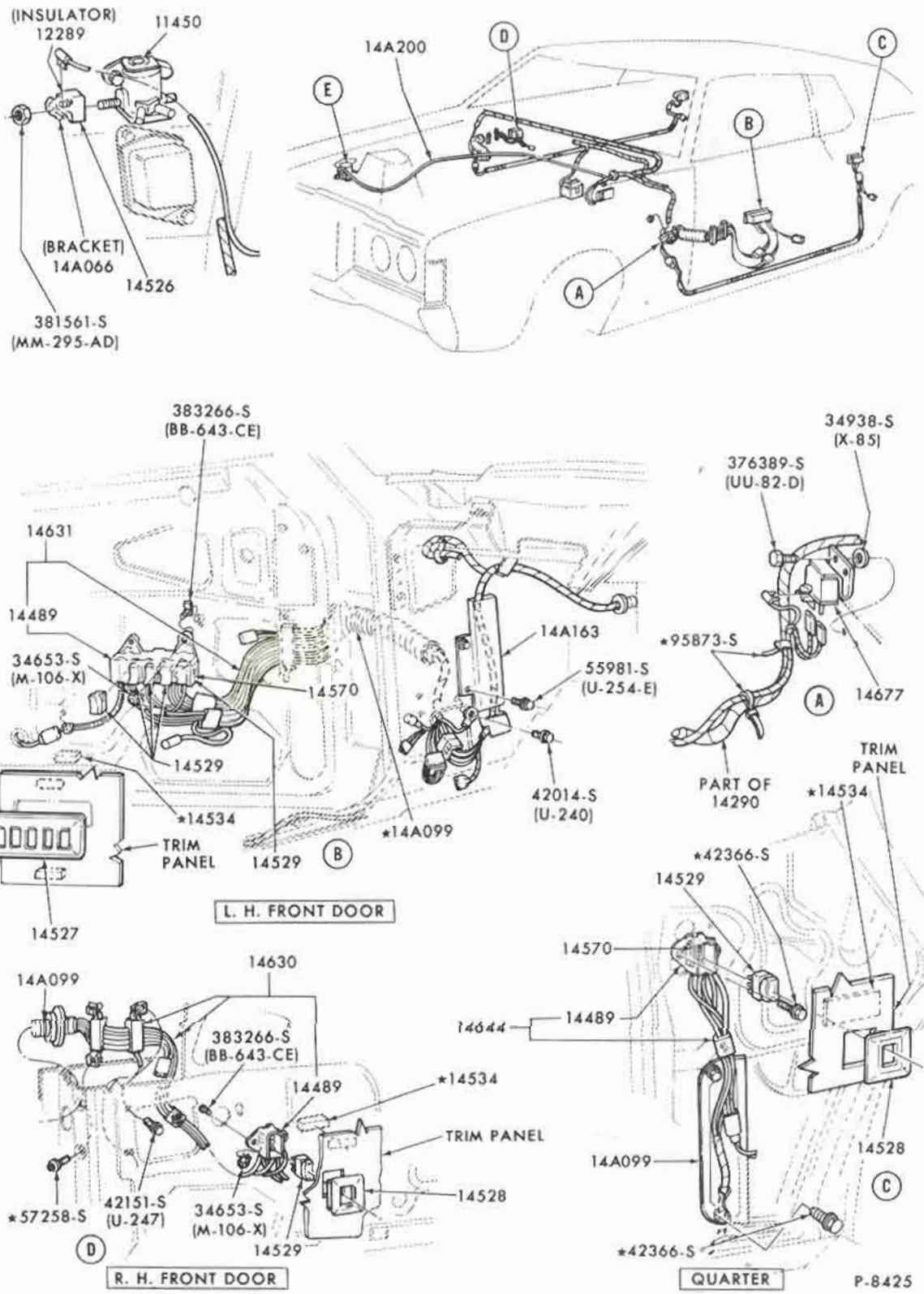

ELECTRIC WINDOW REGULATORS, CONTROLS, WIRING SYSTEM
1971/72 MUSTANG

COPYRIGHT © 1975 — FORD MOTOR COMPANY — DEARBORN, MICHIGAN

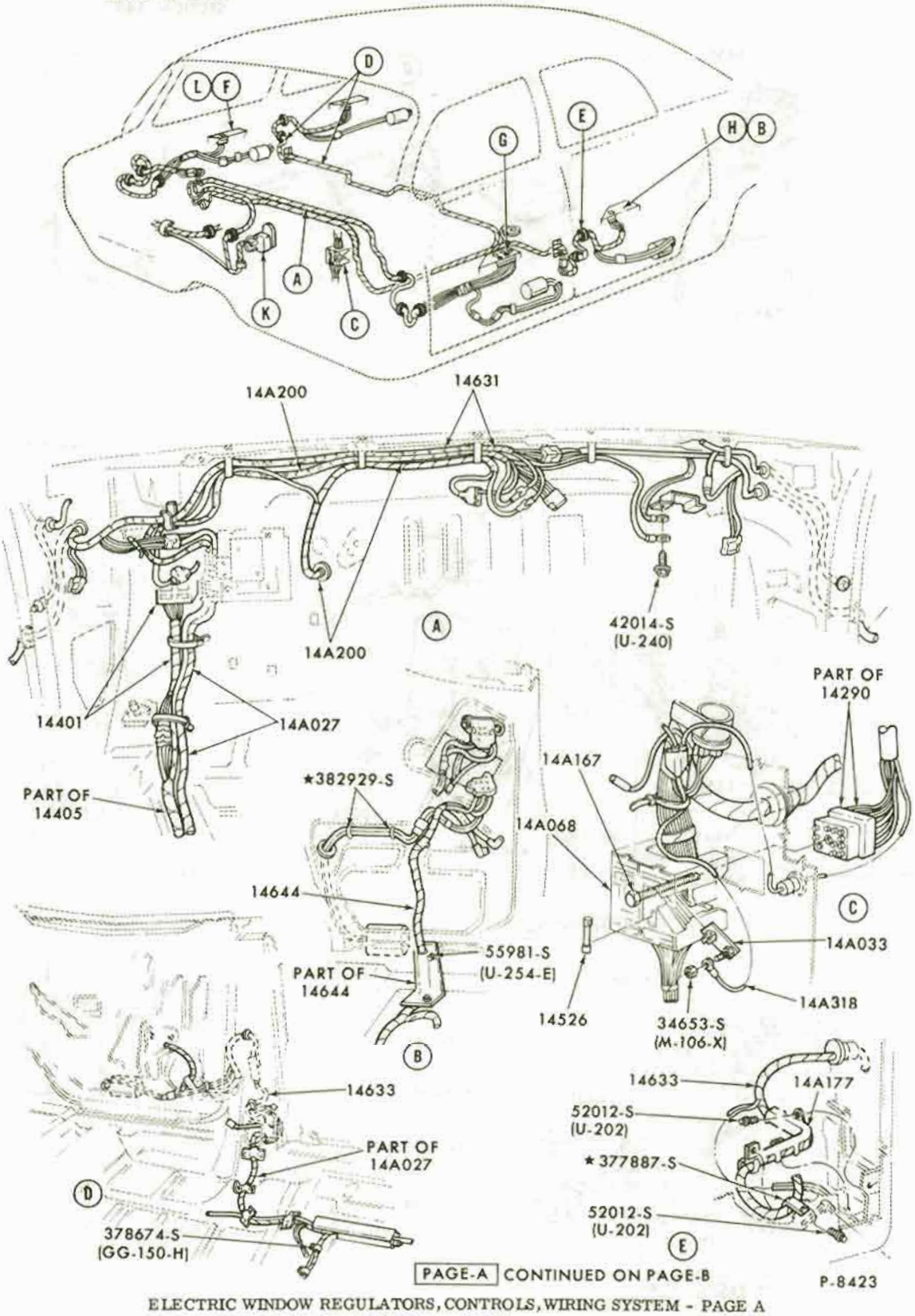

PAGE-A CONTINUED ON PAGE-B

P-8423

ELECTRIC WINDOW REGULATORS, CONTROLS, WIRING SYSTEM - PAGE A

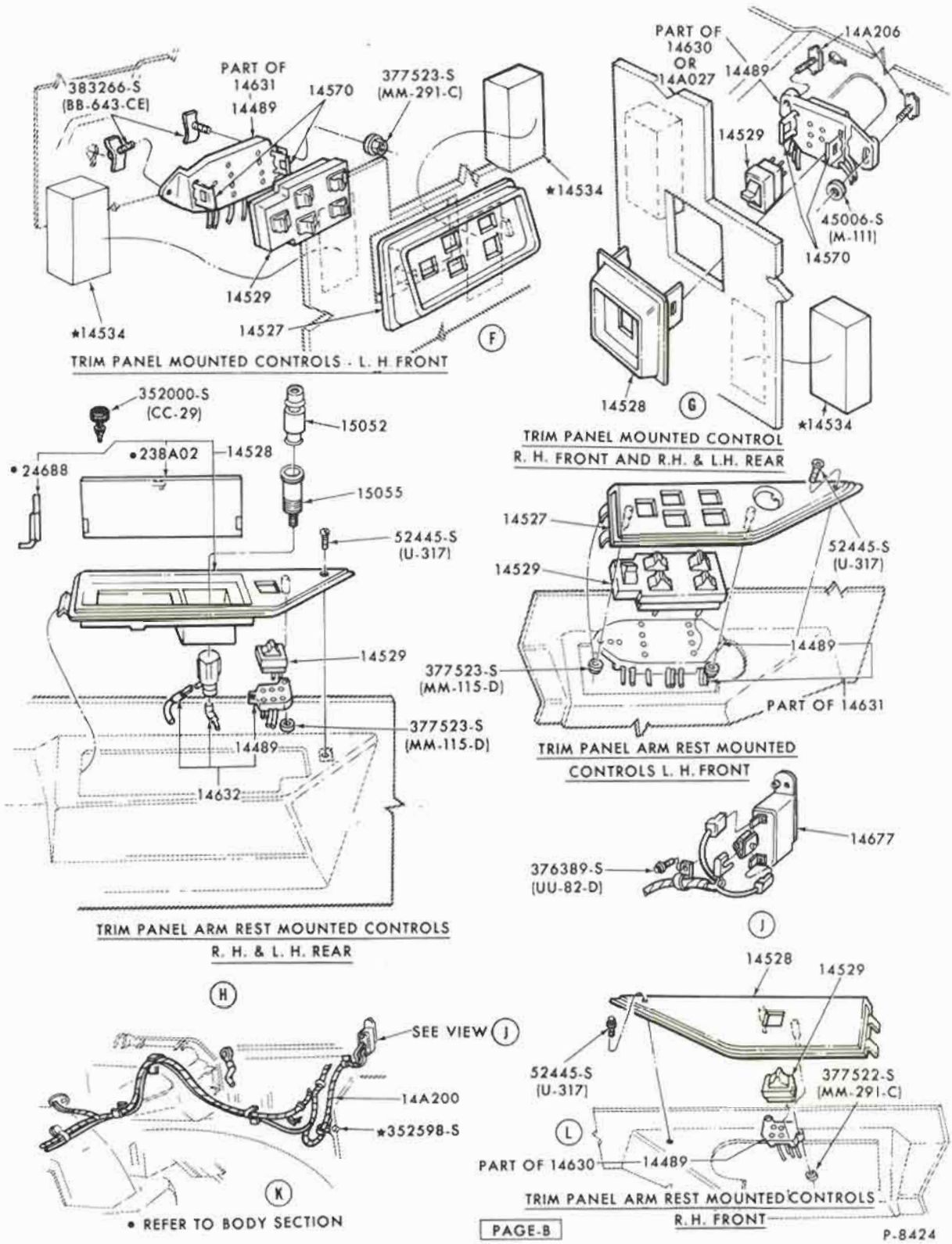

ELECTRIC WINDOW REGULATORS, CONTROLS, WIRING SYSTEM - PAGE B
1971/72 FORD

COPYRIGHT © 1975 — FORD MOTOR COMPANY — DEARBORN, MICHIGAN

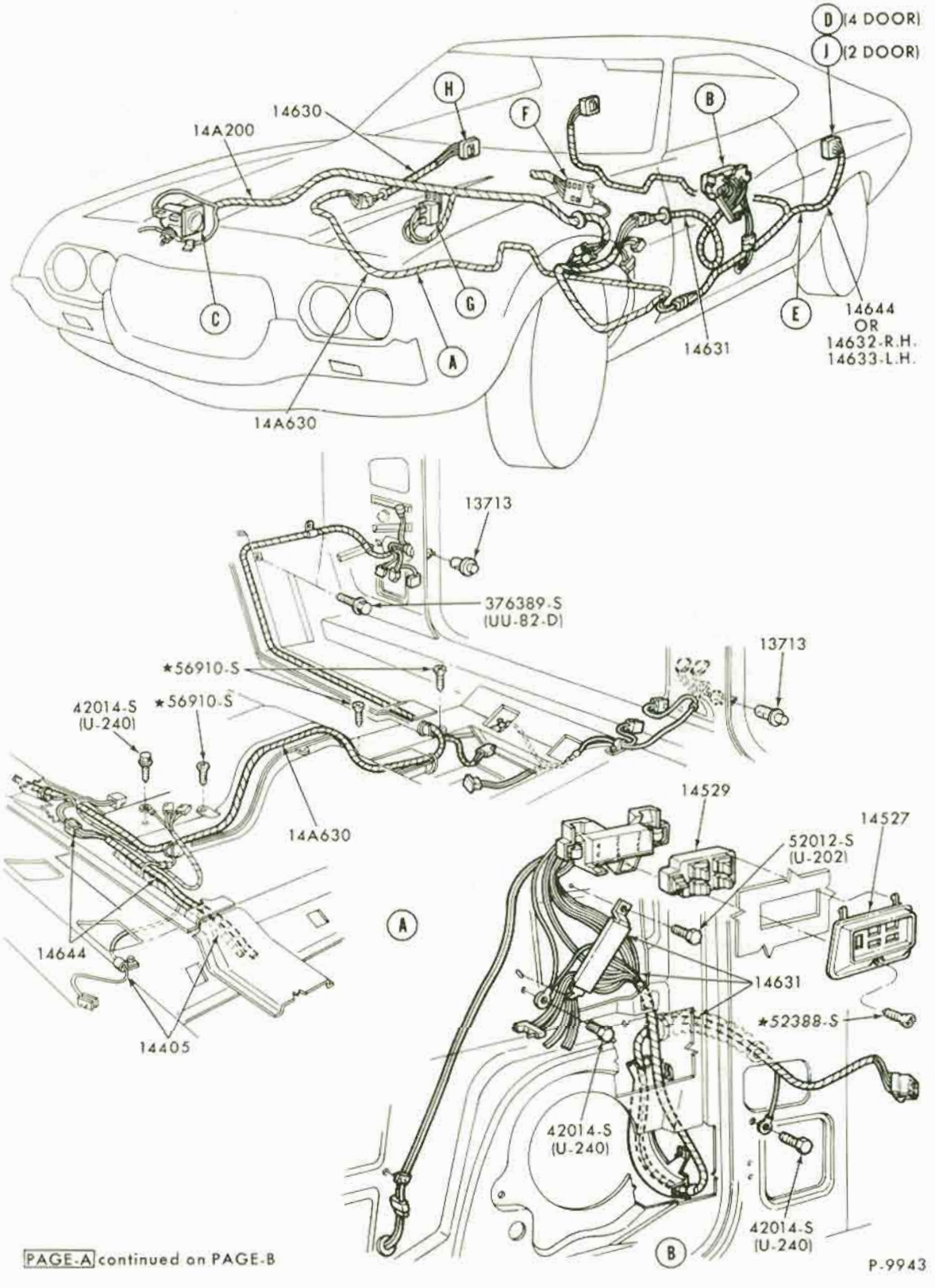

PAGE-A continued on PAGE-B

P-9943

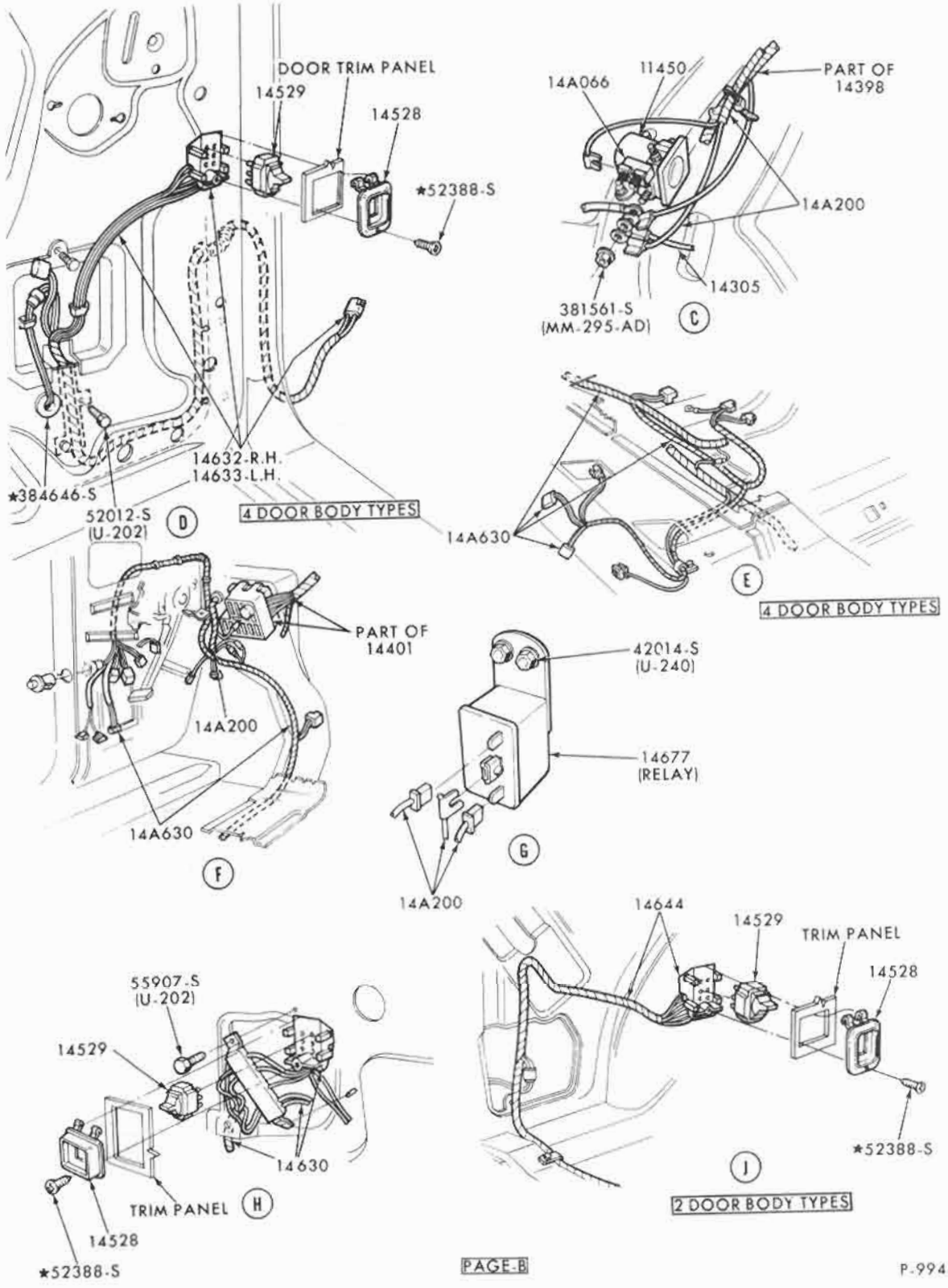

PAGE-B

P-9944

ELECTRIC WINDOW REGULATOR WIRING SYSTEM, CONTROLS and RELATED PARTS . . . . PAGE B
1972 TORINO

COPYRIGHT © 1975 — FORD MOTOR COMPANY — DEARBORN, MICHIGAN

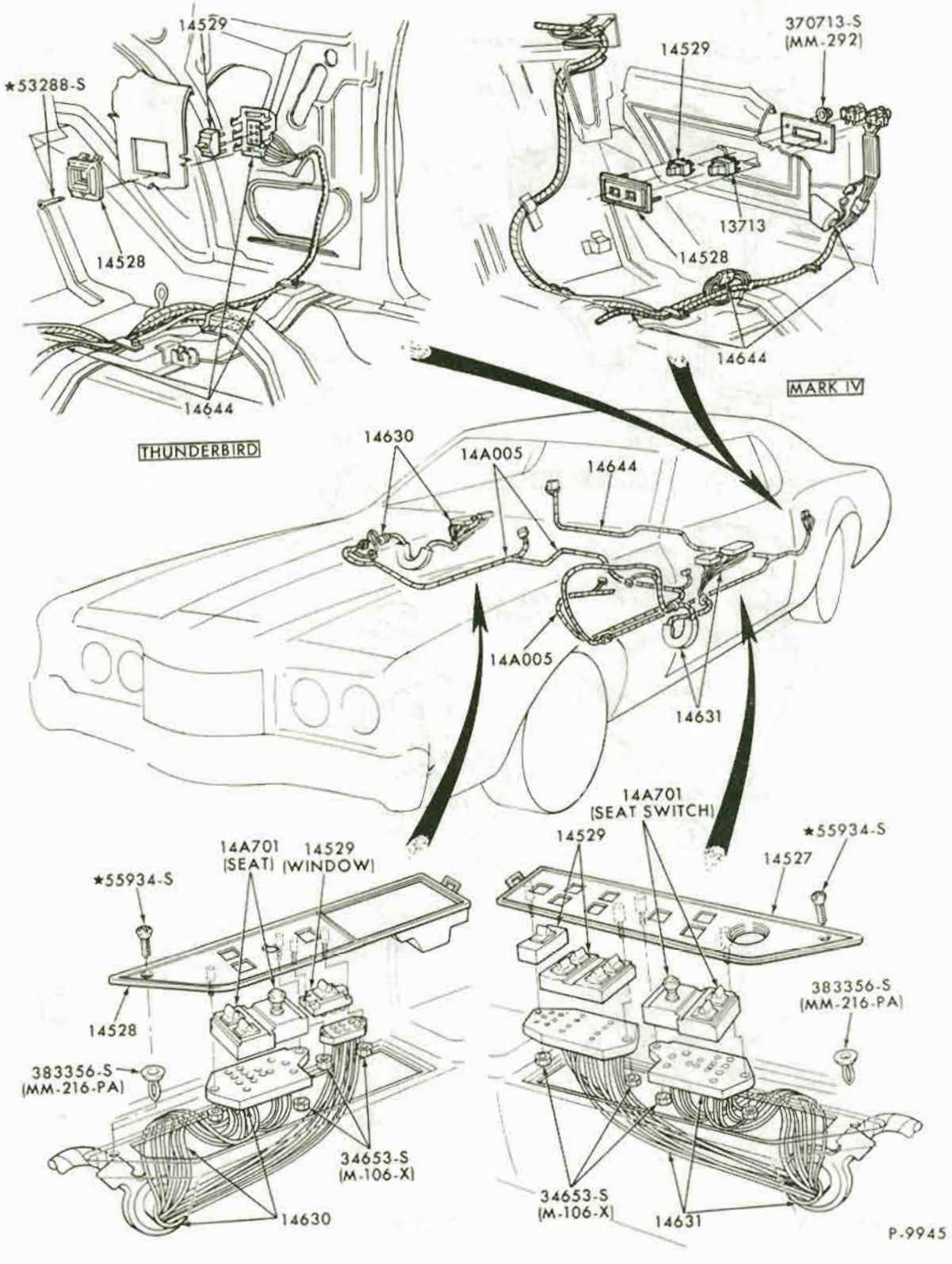

ELECTRIC WINDOW REGULATOR, ELECTRIC POWER SEAT WIRING SYSTEM, CONTROLS and RELATED PARTS
1972 THUNDERBIRD

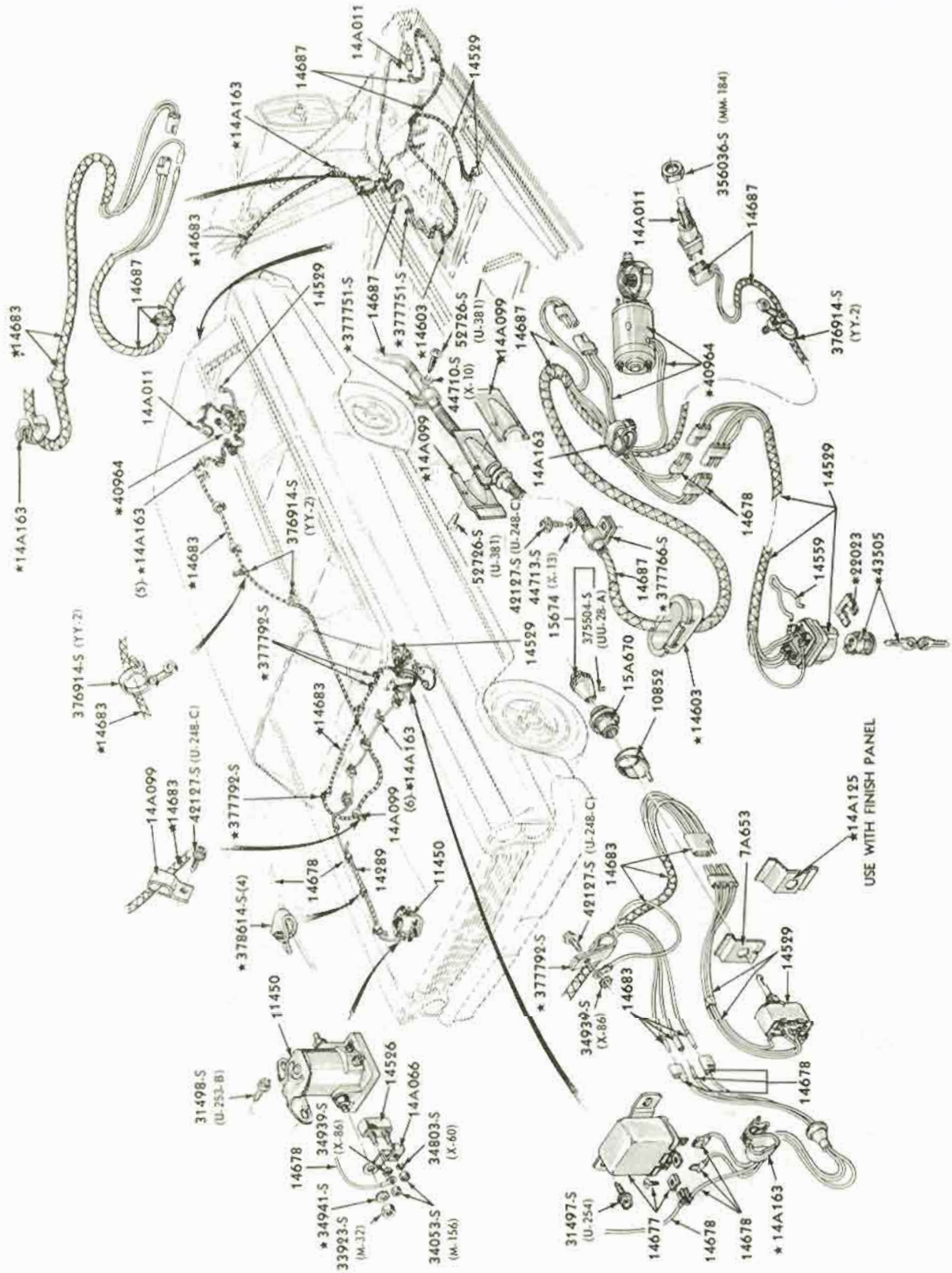

ELECTRIC TAILGATE WINDOW REGULATOR, WIRING SYSTEM and RELATED PARTS

1965 FORD - STATION WAGON

COPYRIGHT © 1975 — FORD MOTOR COMPANY — DEARBORN, MICHIGAN

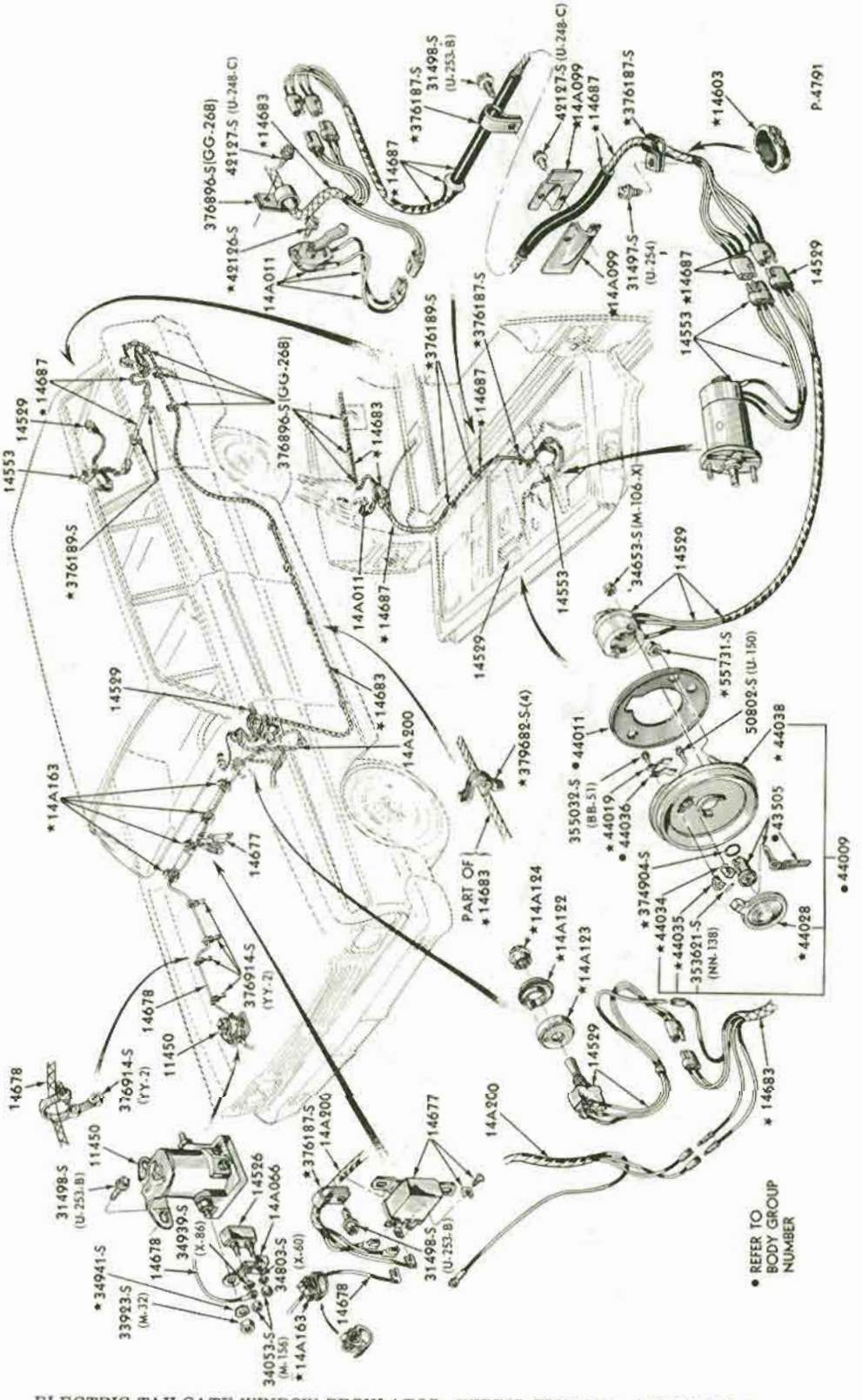

ELECTRIC TAILGATE WINDOW REGULATOR, WIRING SYSTEM and RELATED PARTS
1965 FAIRLANE - STATION WAGON

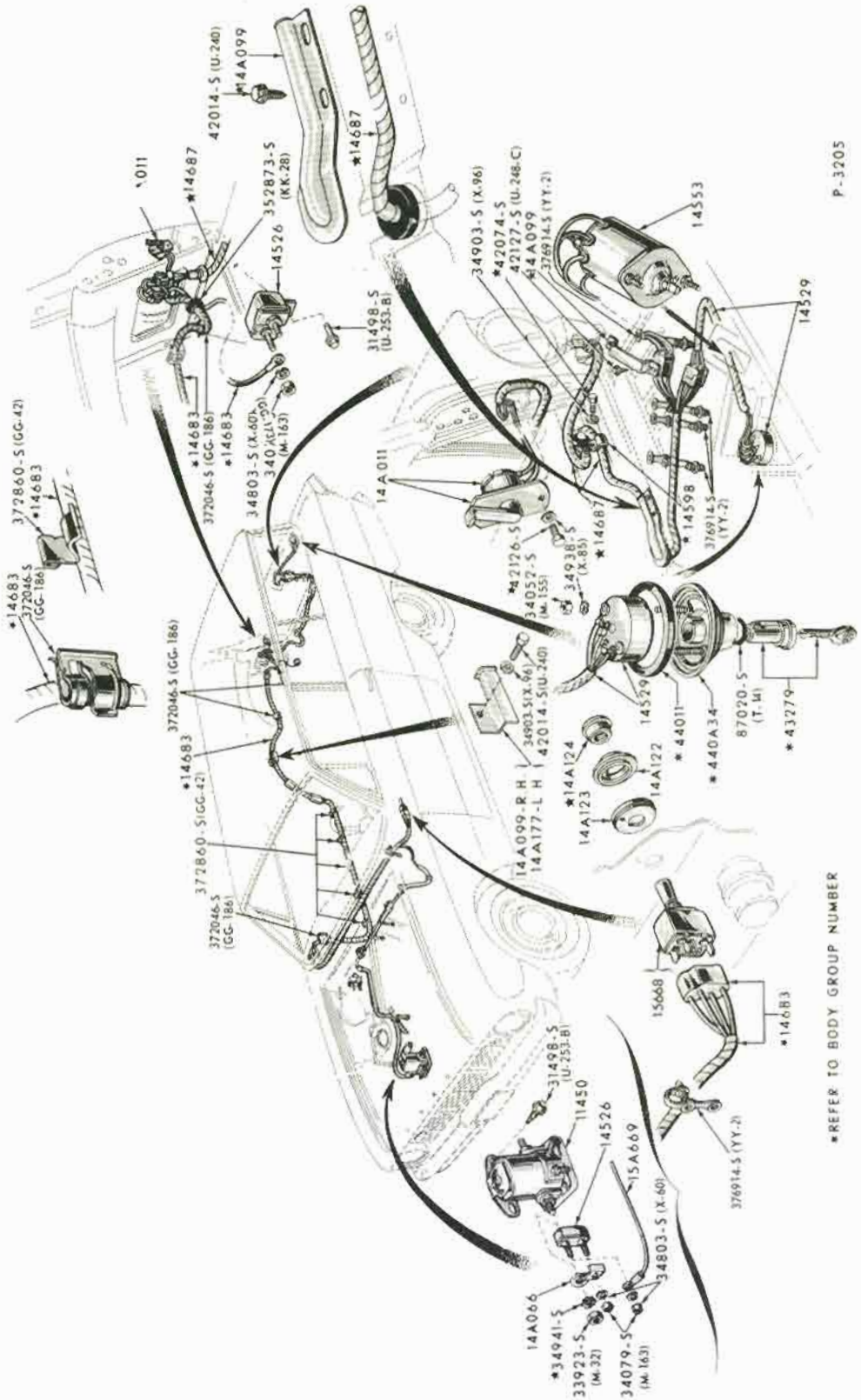

ELECTRIC TAILGATE WINDOW REGULATOR, WIRING SYSTEM and RELATED PARTS - TYPICAL
1965 FALCON - STATION WAGON

COPYRIGHT © 1975 — FORD MOTOR COMPANY — DEARBORN, MICHIGAN

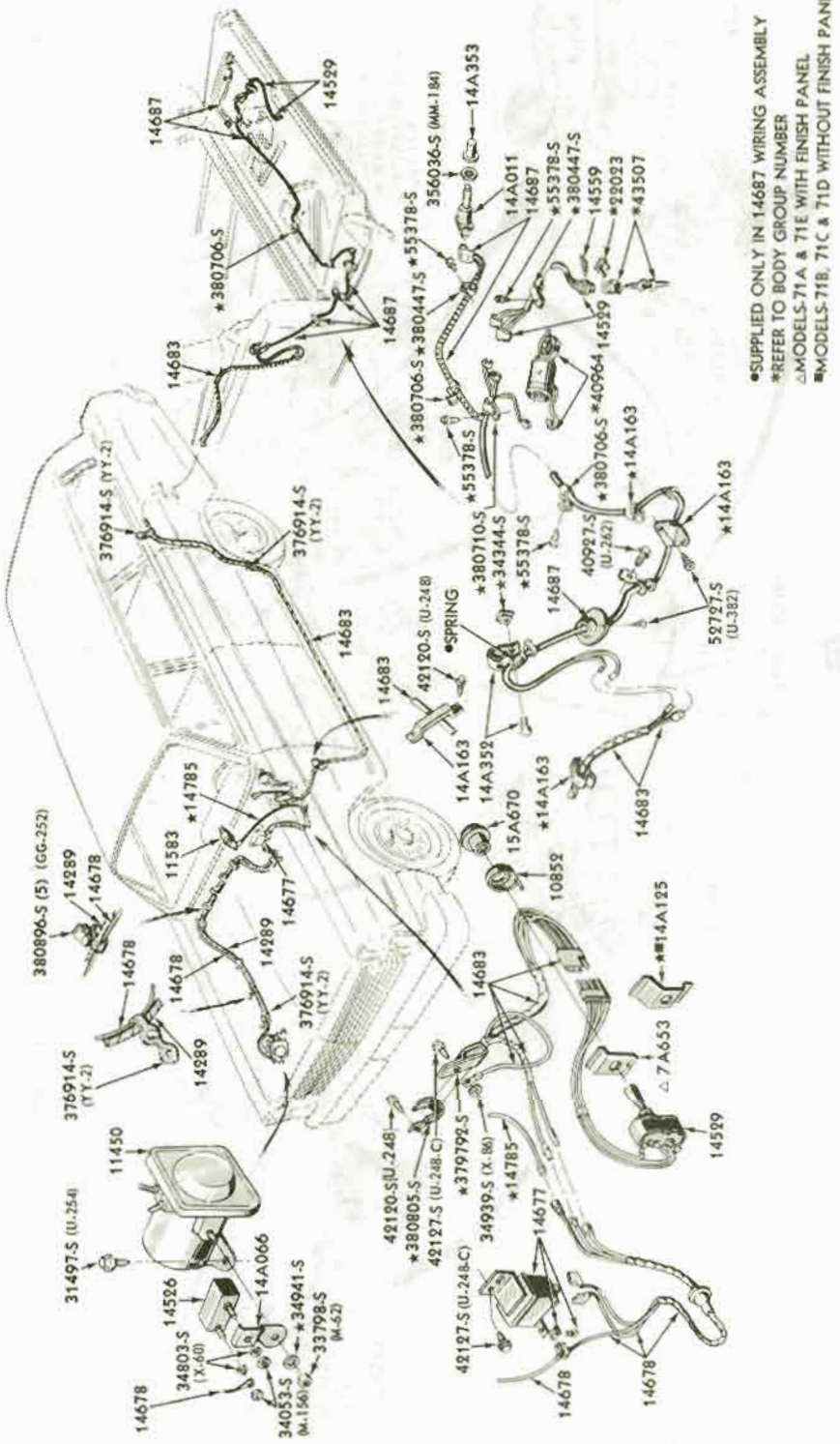

ELECTRIC TAILGATE WINDOW, WIRING SYSTEM and RELATED PARTS
1966/67 FORD - STATION WAGON

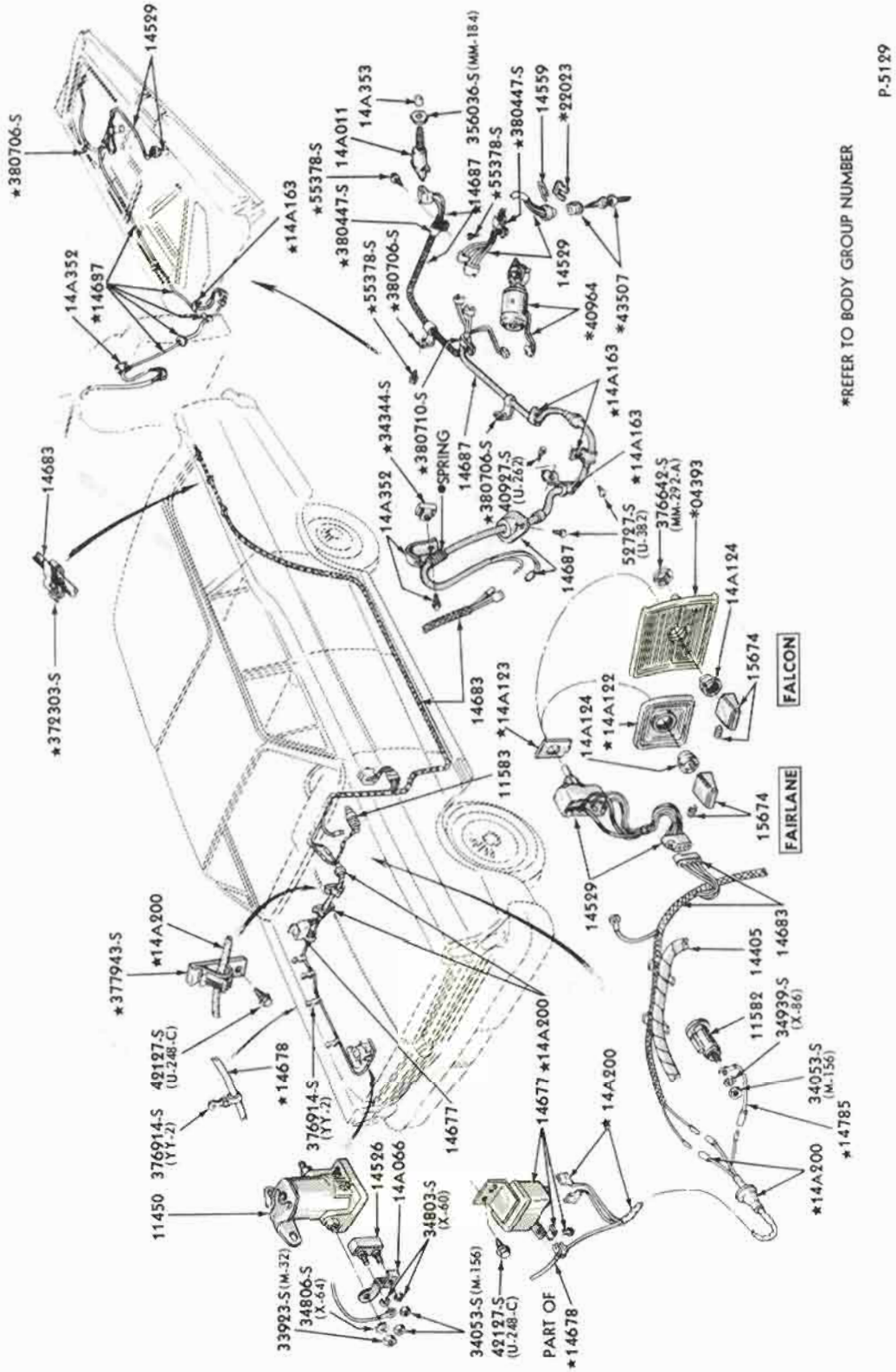

ELECTRIC TAILGATE WINDOW REGULATOR, WIRING SYSTEM and RELATED PARTS
1966/67 FAIRLANE and FALCON - STATION WAGON

COPYRIGHT © 1975 — FORD MOTOR COMPANY — DEARBORN, MICHIGAN

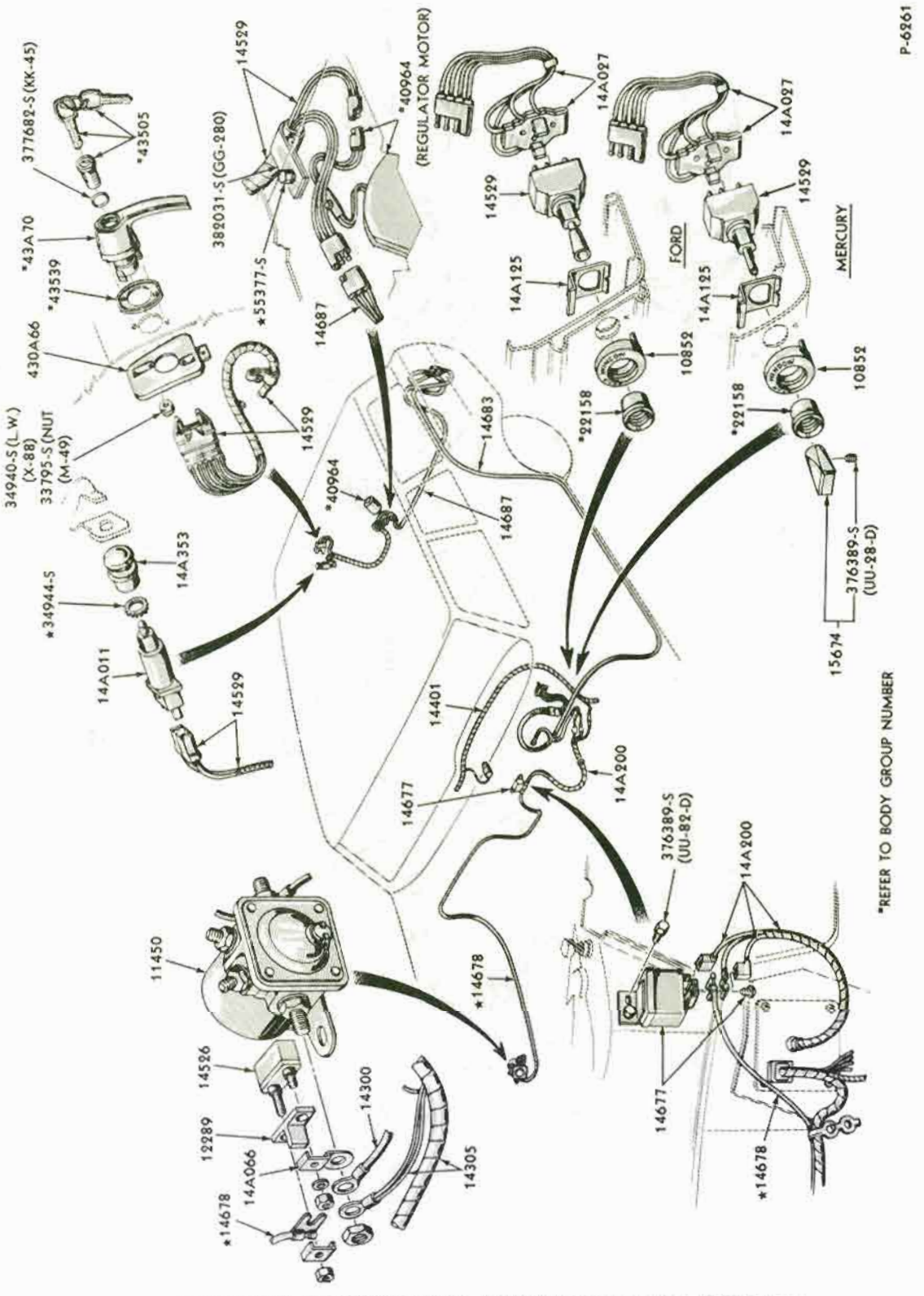

ELECTRIC TAILGATE WINDOW REGULATOR, WIRING SYSTEM and RELATED PARTS
1968 FORD - STATION WAGON

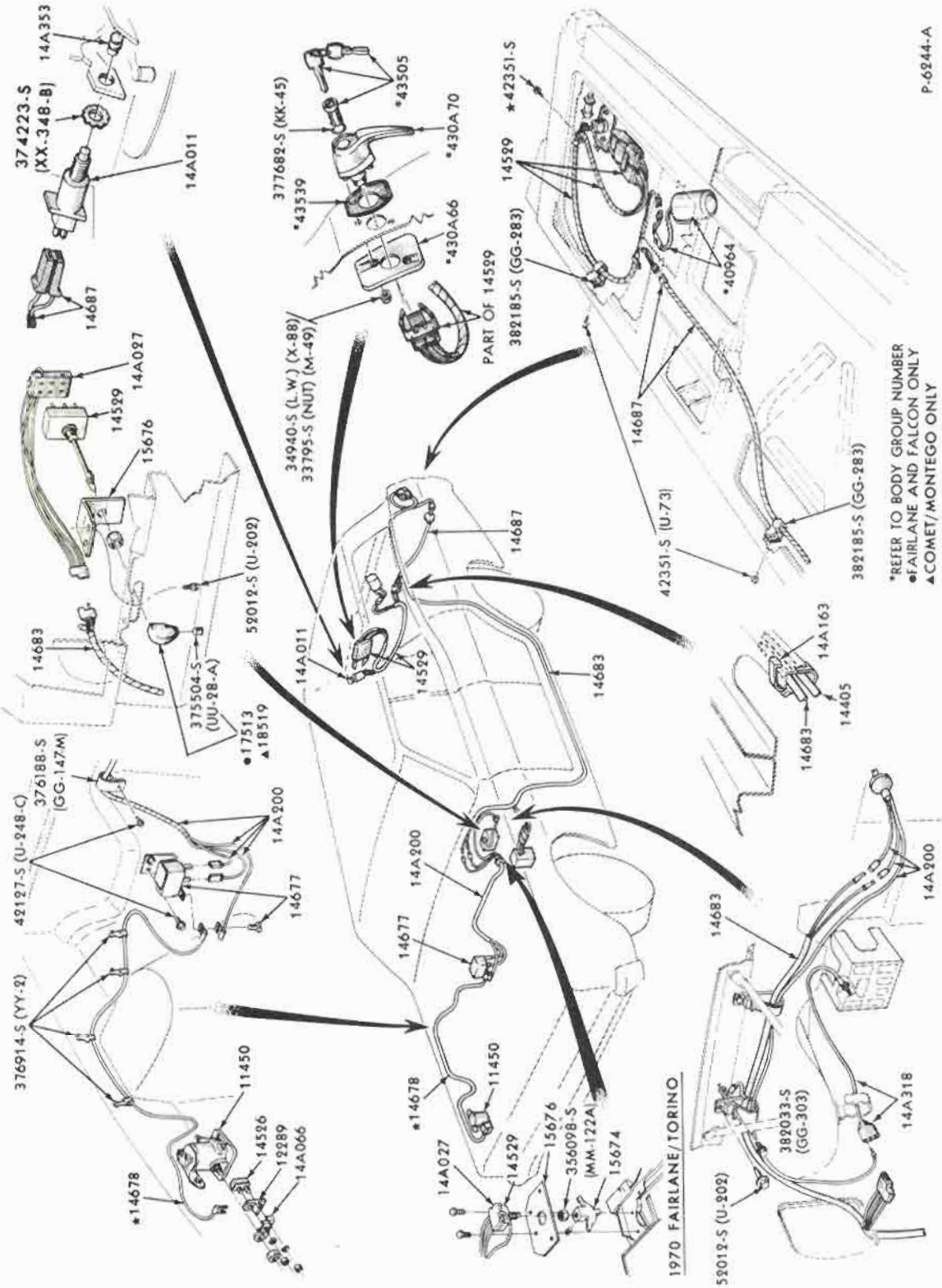

ELECTRIC TAILGATE WINDOW REGULATOR, WIRING SYSTEM and RELATED PARTS - DUAL ACTION
1968/71 FAIRLANE/TORINO and FALCON - STATION WAGON

COPYRIGHT © 1975 — FORD MOTOR COMPANY — DEARBORN, MICHIGAN

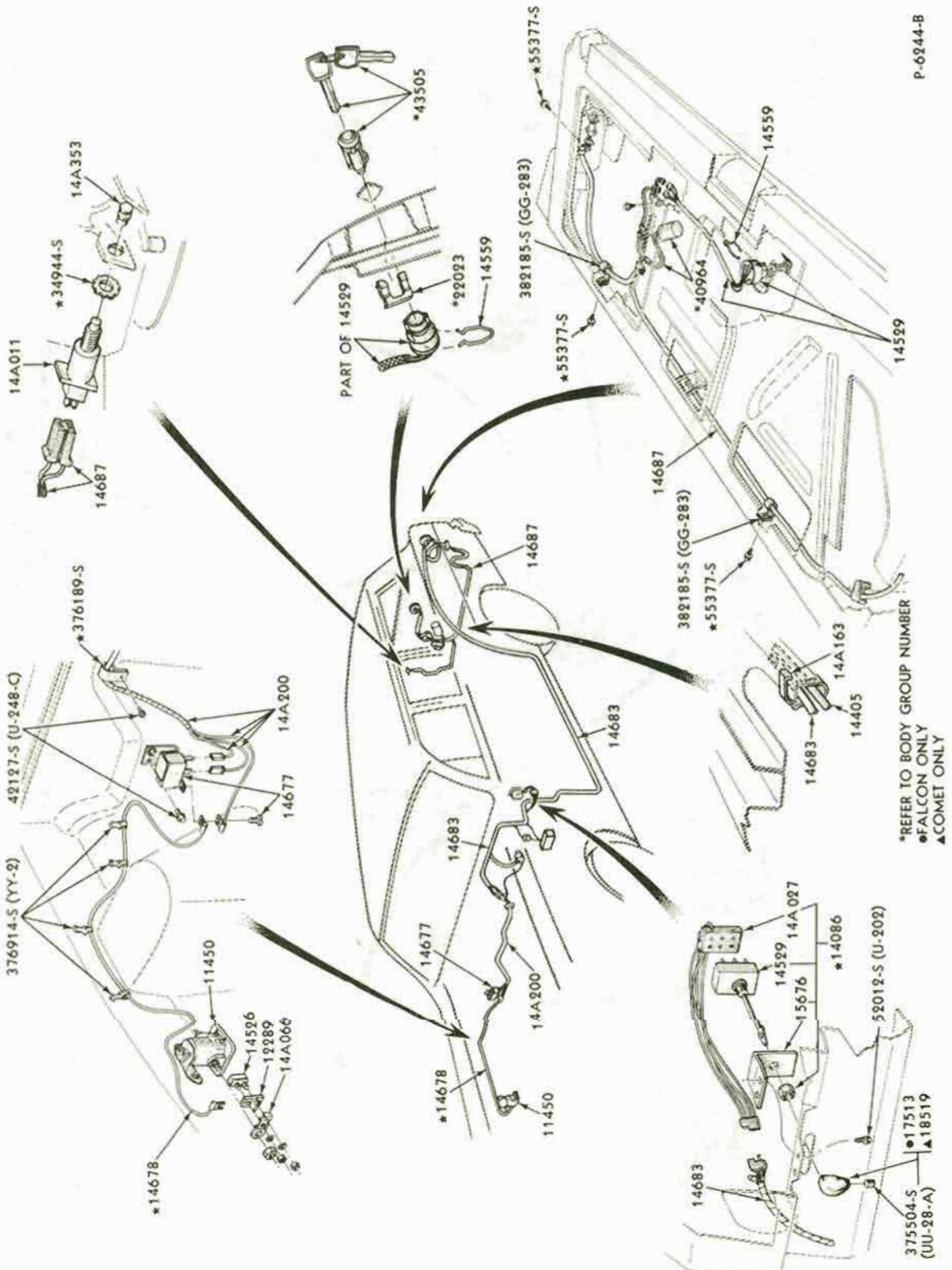

ELECTRIC TAILGATE WINDOW REGULATOR, WIRING SYSTEM and RELATED PARTS - SINGLE ACTION
1969/70 FALCON - STATION WAGON

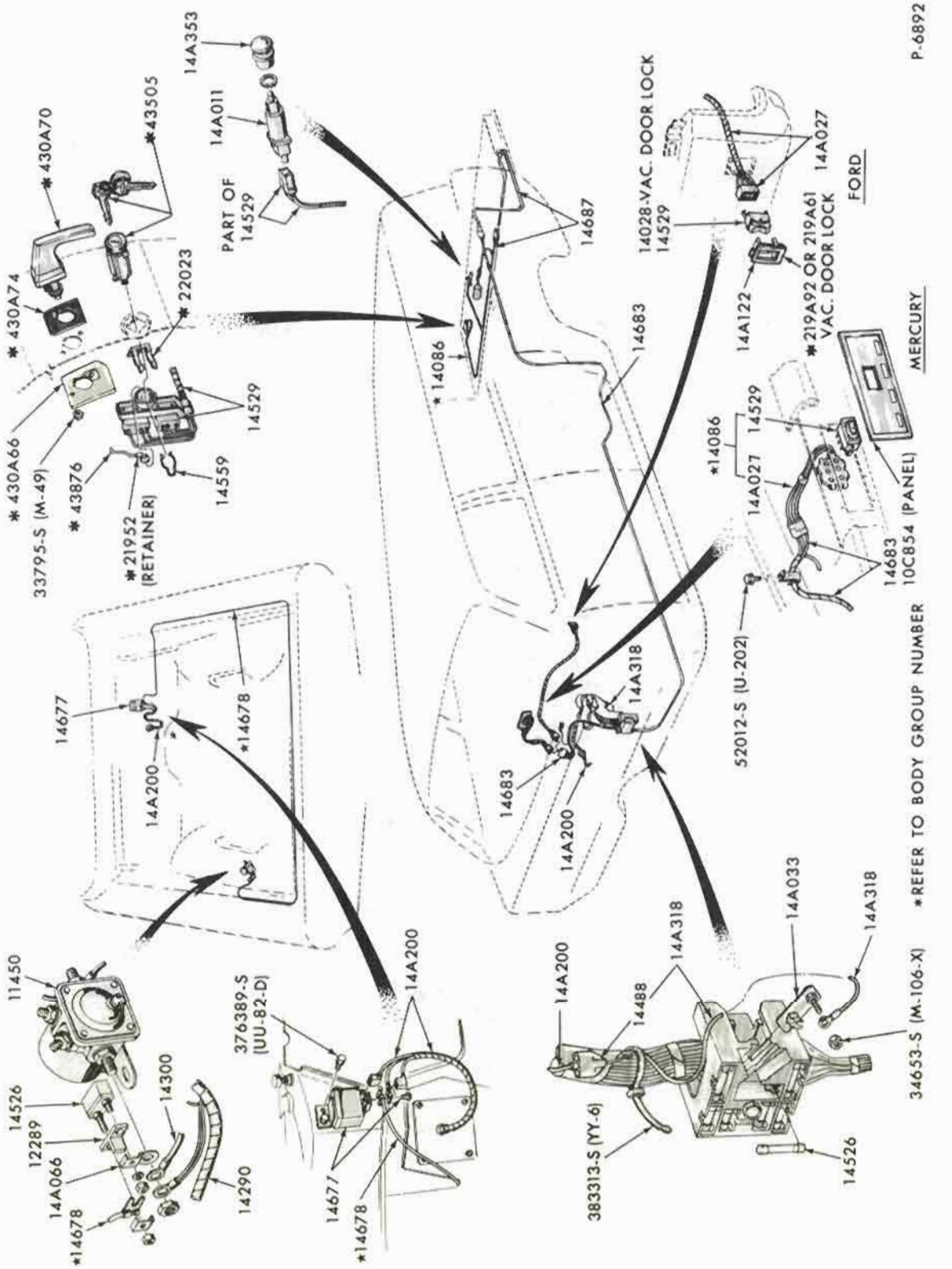

ELECTRIC TAILGATE WINDOW REGULATOR, WIRING SYSTEM and RELATED PARTS
1969/70 FORD - STATION WAGON

COPYRIGHT © 1975 — FORD MOTOR COMPANY — DEARBORN, MICHIGAN

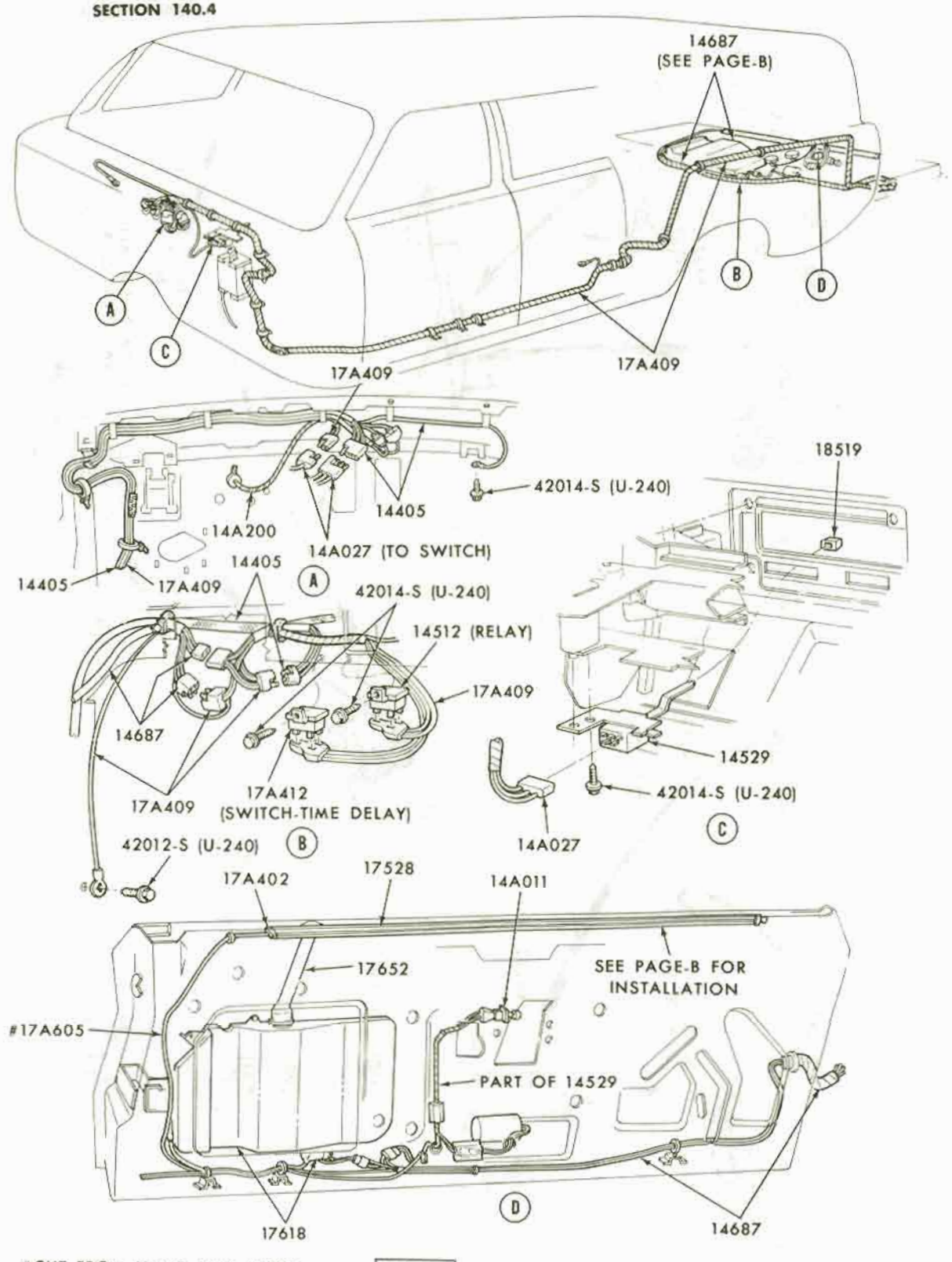

#CUT FROM 17543 BULK HOSE

PAGE-A CONTINUED ON PAGE-B

P-8320

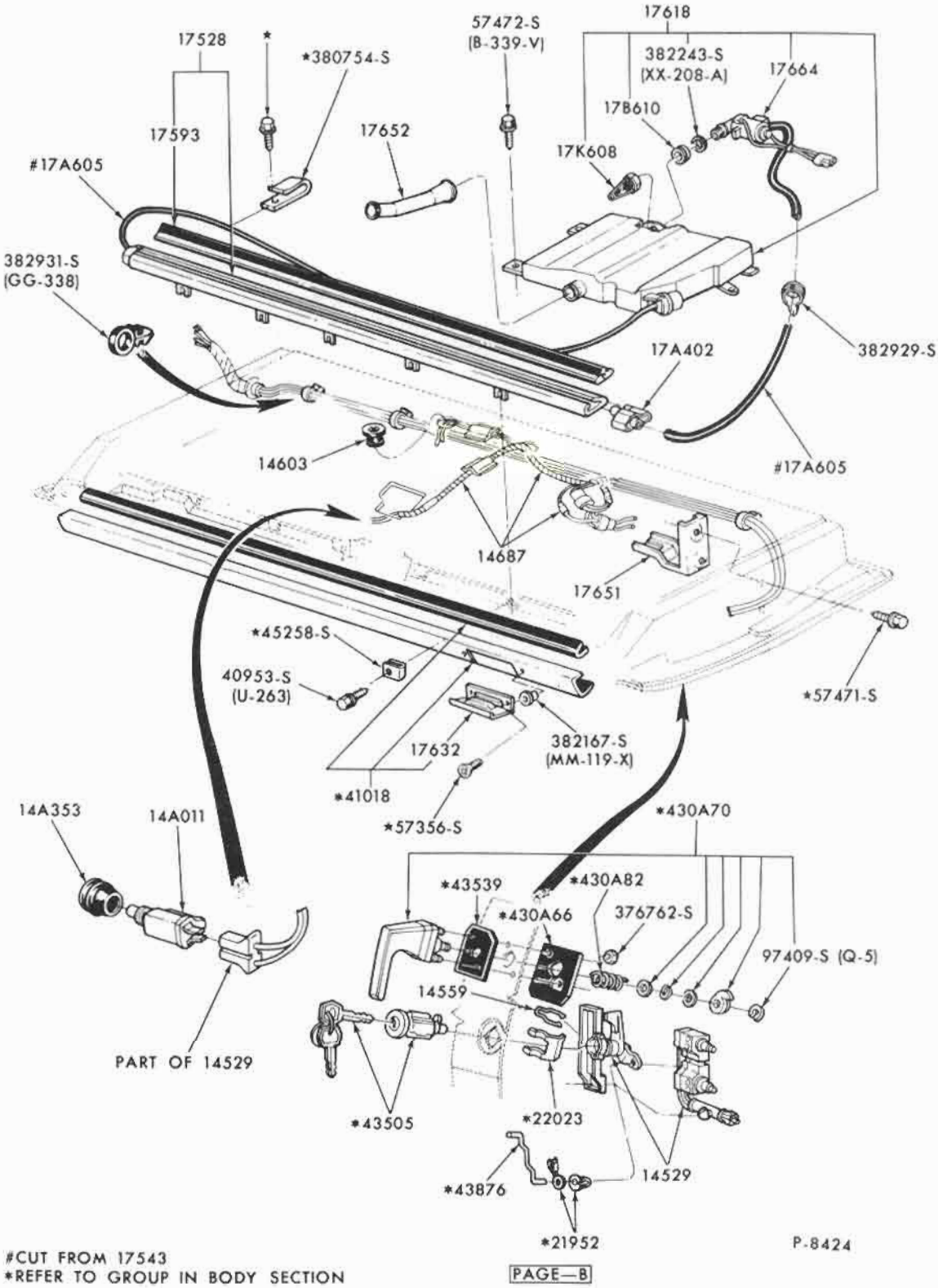

#CUT FROM 17543
*REFER TO GROUP IN BODY SECTION

PAGE—B

ELECTRIC TAILGATE WINDOW REGULATOR, WIRING SYSTEM, WASHER and RELATED PARTS...Page B
1971/72 FORD - STATION WAGON

COPYRIGHT © 1975 — FORD MOTOR COMPANY — DEARBORN, MICHIGAN

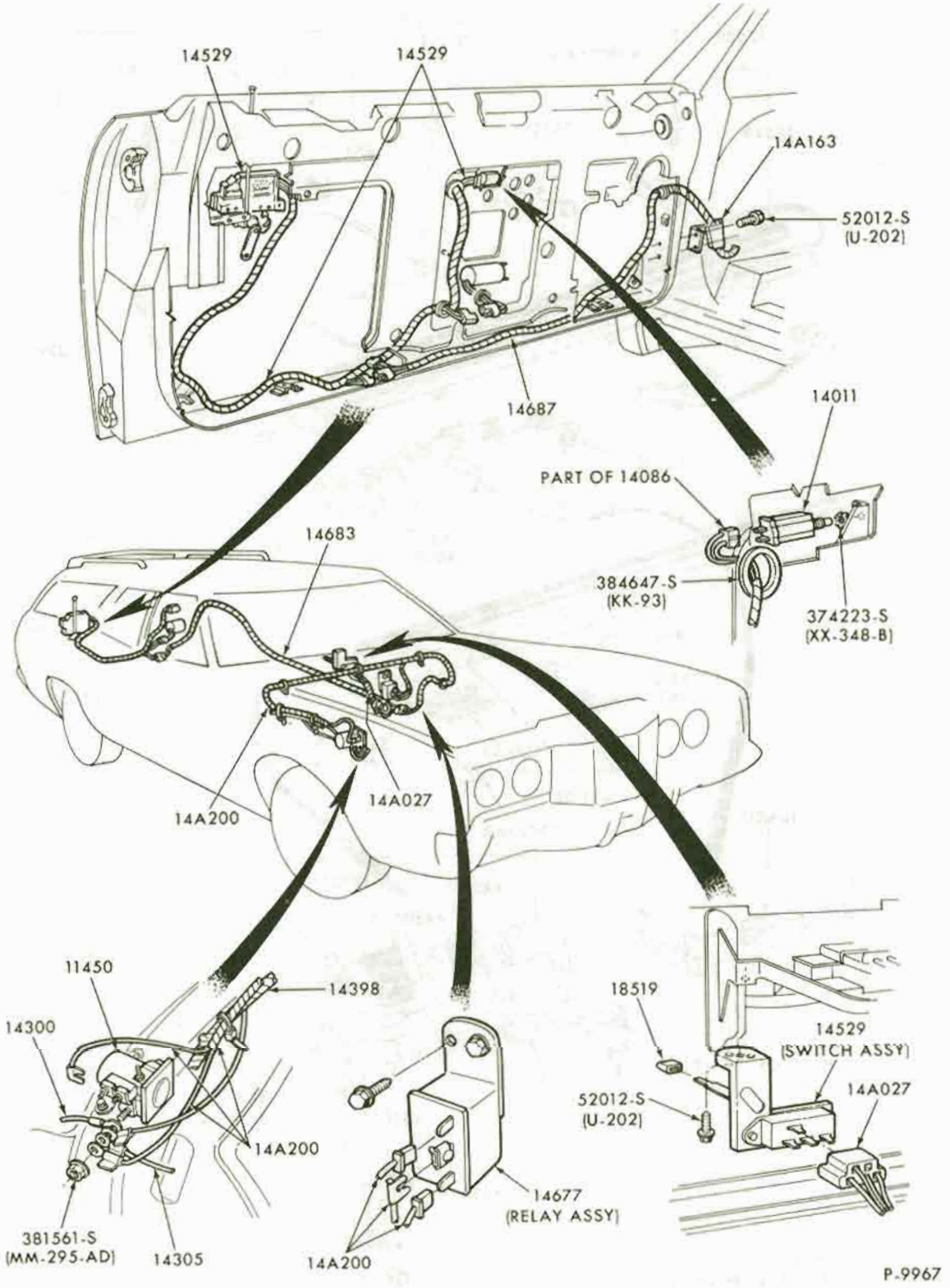

ELECTRIC TAILGATE WINDOW REGULATOR and WIRING SYSTEM
1972 TORINO

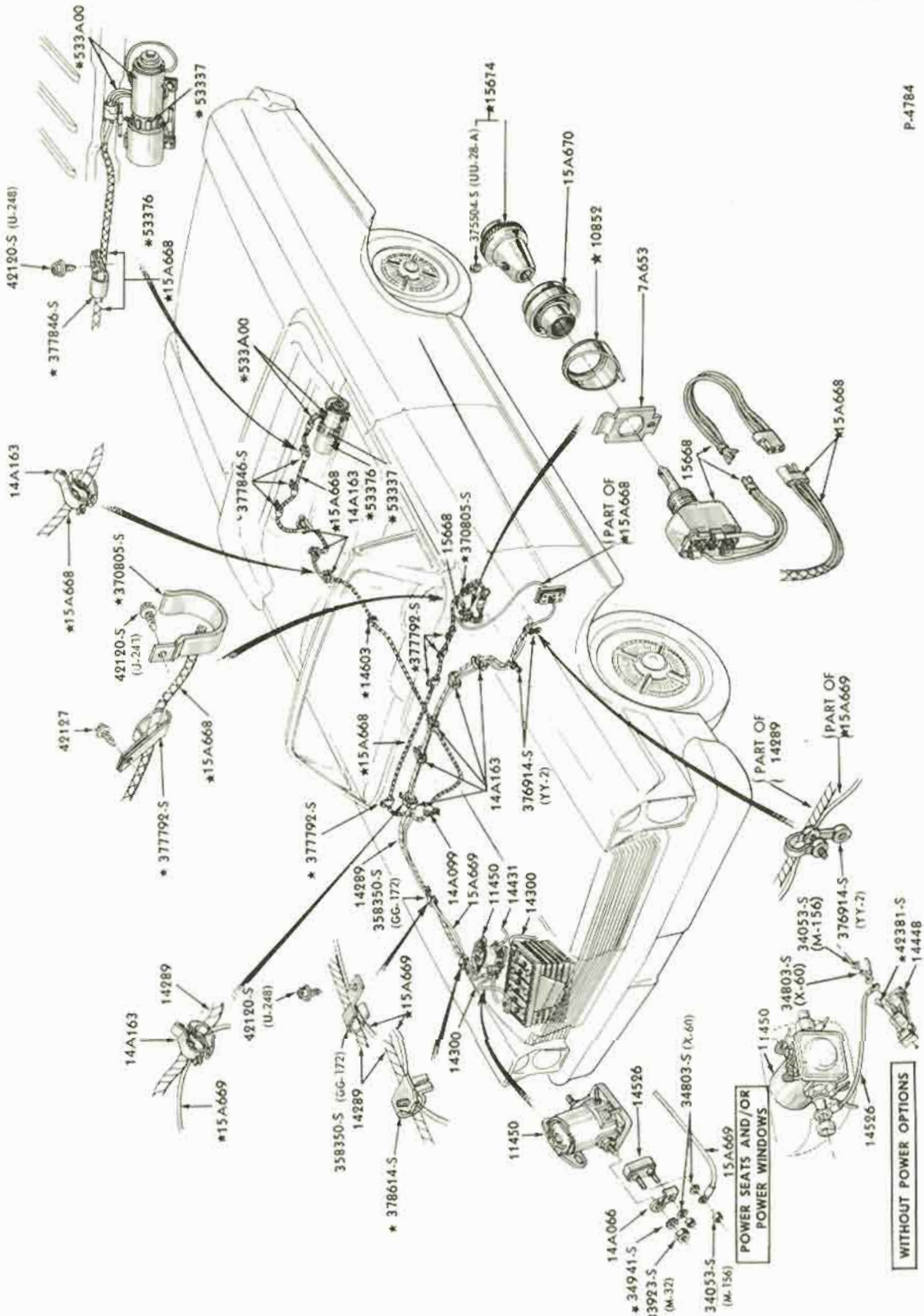

CONVERTIBLE TOP ELECTRICAL SYSTEM
1965/67 FORD

COPYRIGHT © 1975 — FORD MOTOR COMPANY — DEARBORN, MICHIGAN

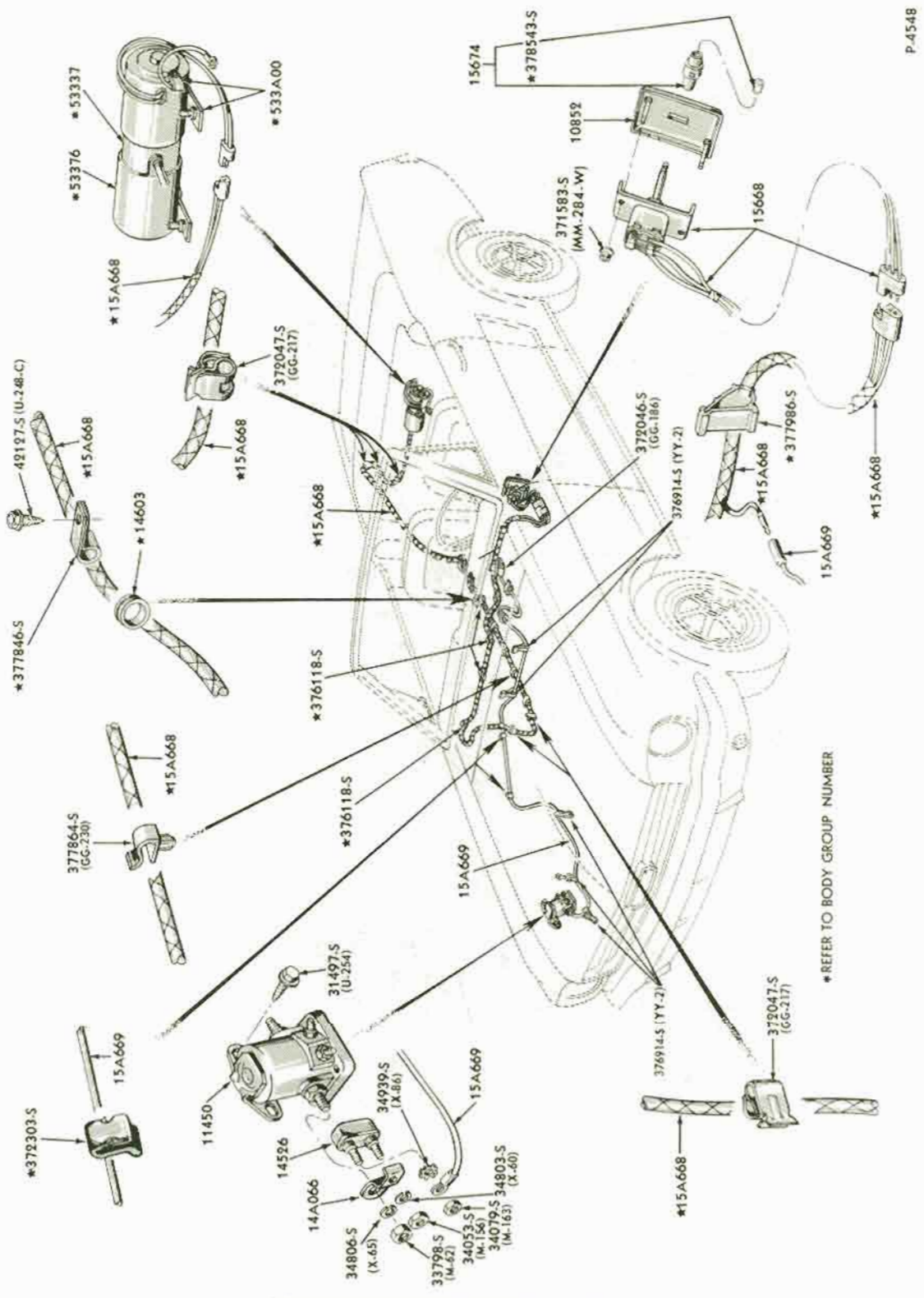

CONVERTIBLE TOP ELECTRICAL SYSTEM
1965/66 MUSTANG

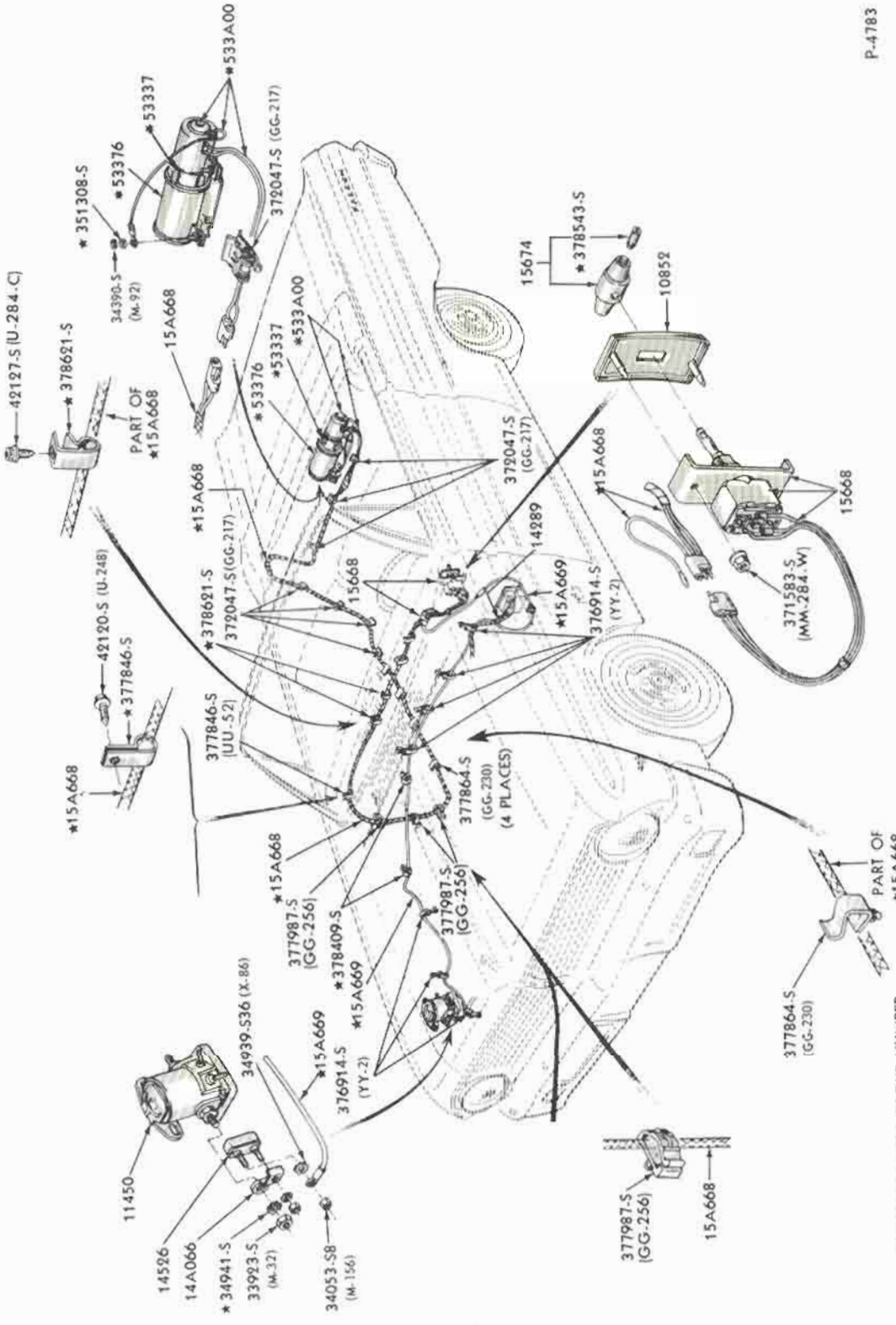

CONVERTIBLE CONVERTIBLE TOP ELECTRICAL SYSTEM
1965 FALCON

COPYRIGHT © 1975 — FORD MOTOR COMPANY — DEARBORN, MICHIGAN

ILLUSTRATION
SECTION 140.5

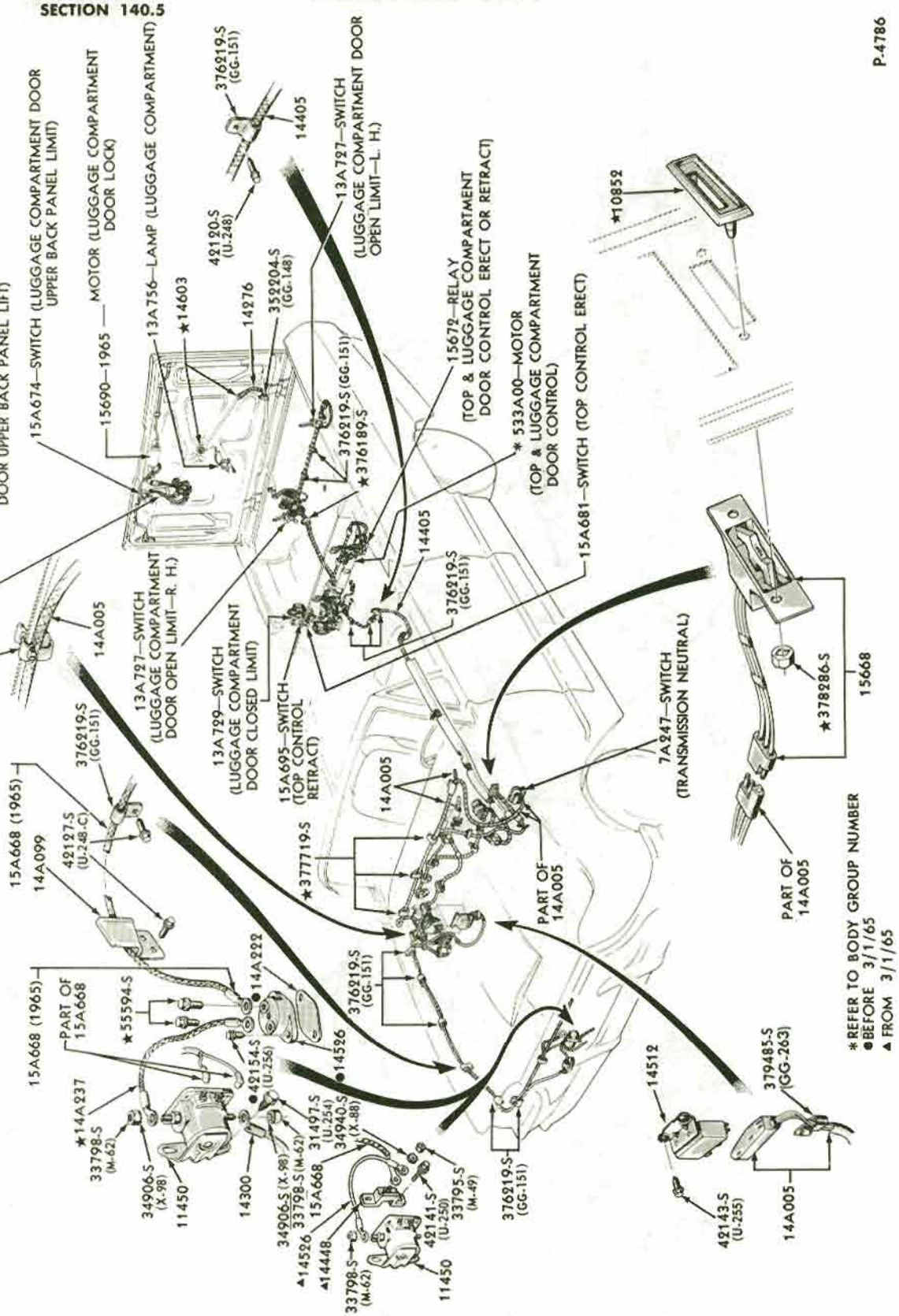

CONVERTIBLE TOP ELECTRICAL SYSTEM - COMPOSITE
1965/66 THUNDERBIRD

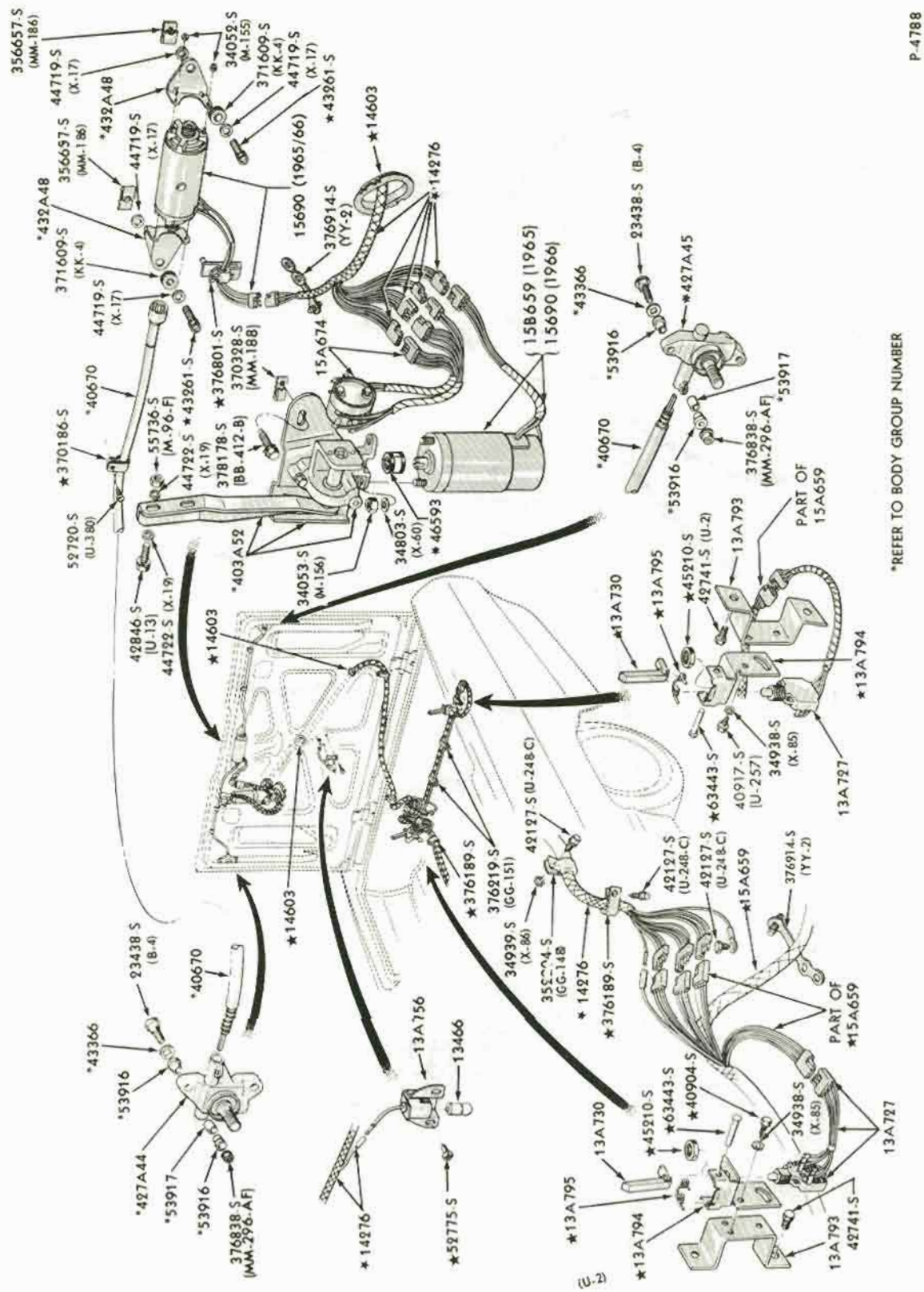

CONVERTIBLE TOP ELECTRICAL SYSTEM - LUGGAGE COMPARTMENT DOOR and REAR SECTION
1965/66 THUNDERBIRD

COPYRIGHT © 1975 — FORD MOTOR COMPANY — DEARBORN, MICHIGAN

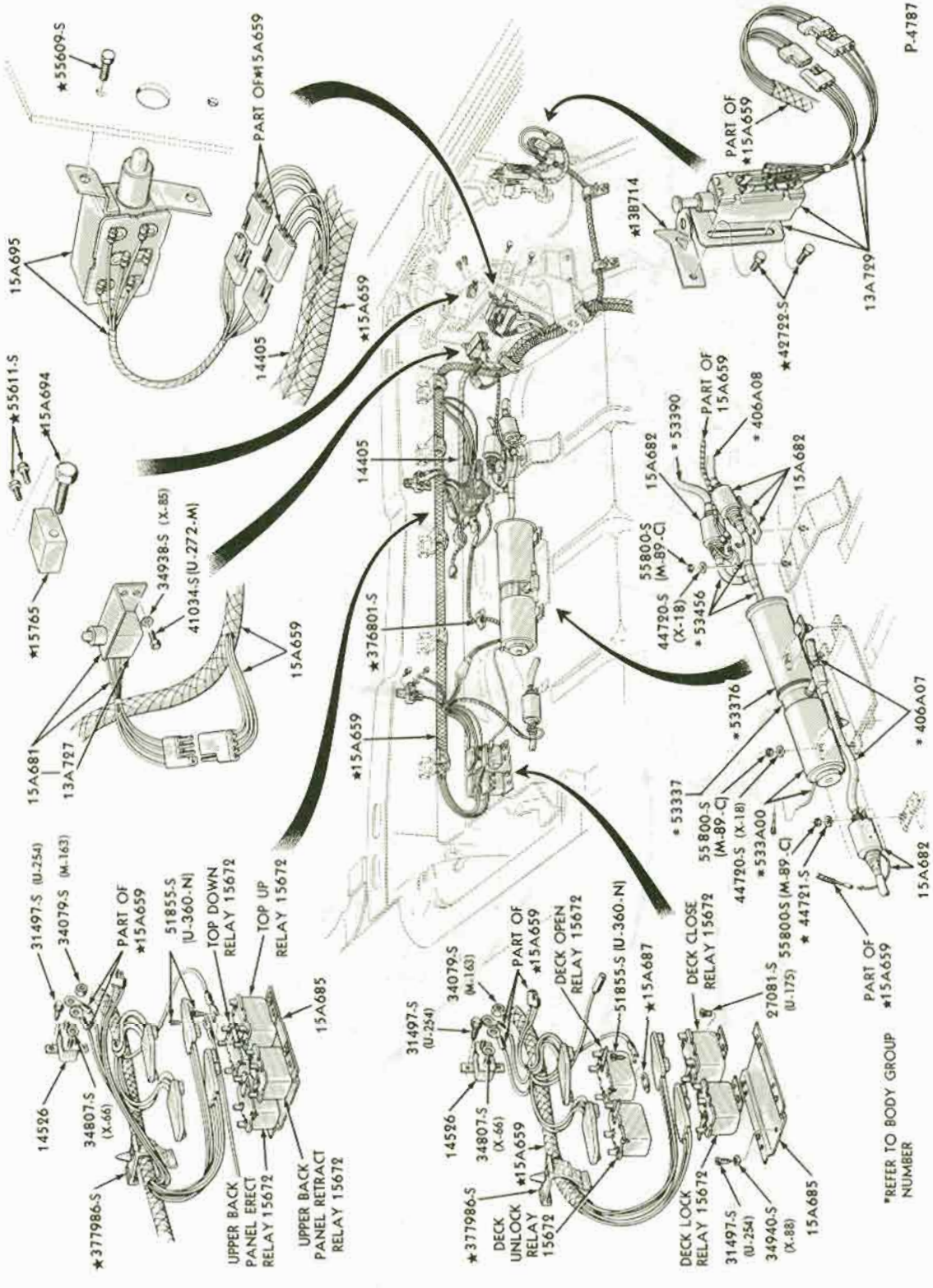

CONVERTIBLE TOP ELECTRICAL SYSTEM - LUGGAGE COMPARTMENT - FORWARD SECTION
1965/66 THUNDERBIRD

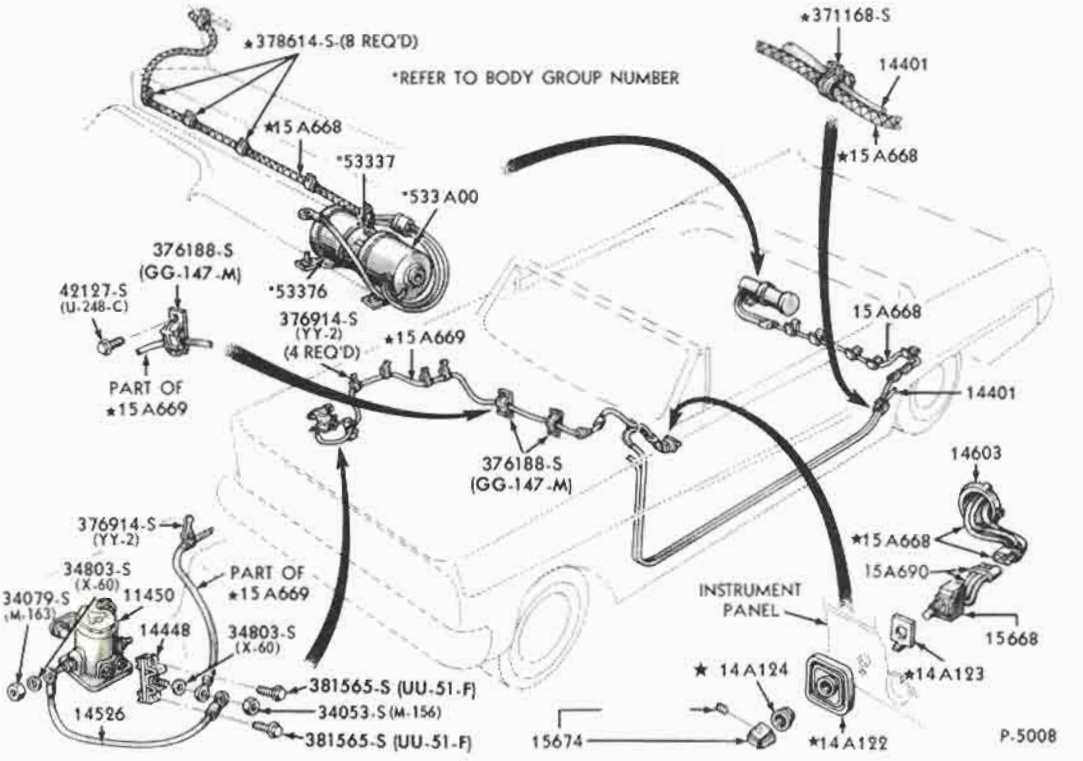

CONVERTIBLE TOP ELECTRICAL SYSTEM
1966/67 FAIRLANE

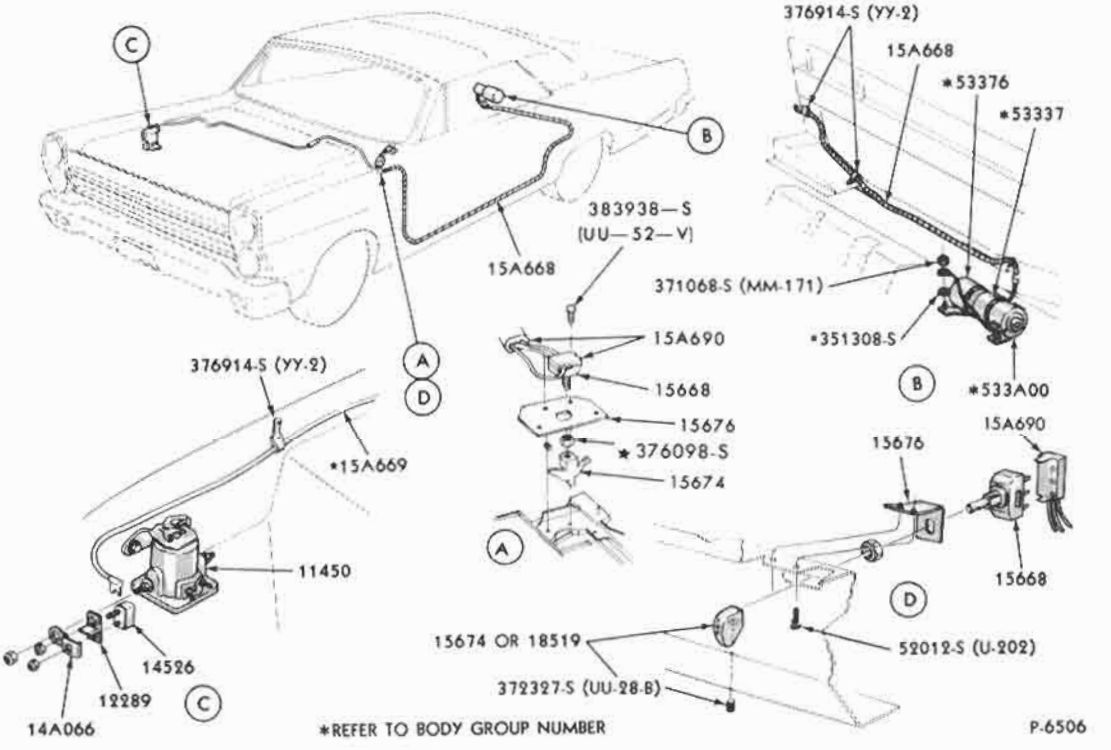

CONVERTIBLE TOP ELECTRICAL SYSTEM
1968/71 FAIRLANE/TORINO

COPYRIGHT © 1975 — FORD MOTOR COMPANY — DEARBORN, MICHIGAN

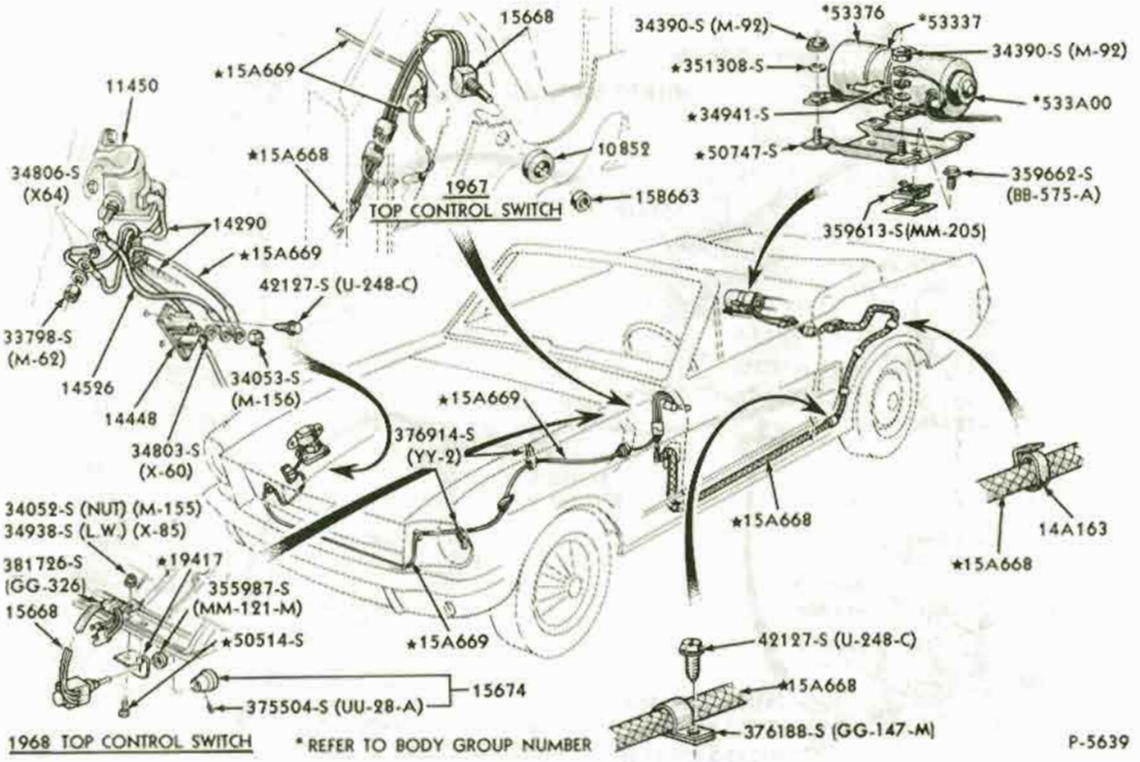

CONVERTIBLE TOP ELECTRICAL SYSTEM
1967/68 MUSTANG

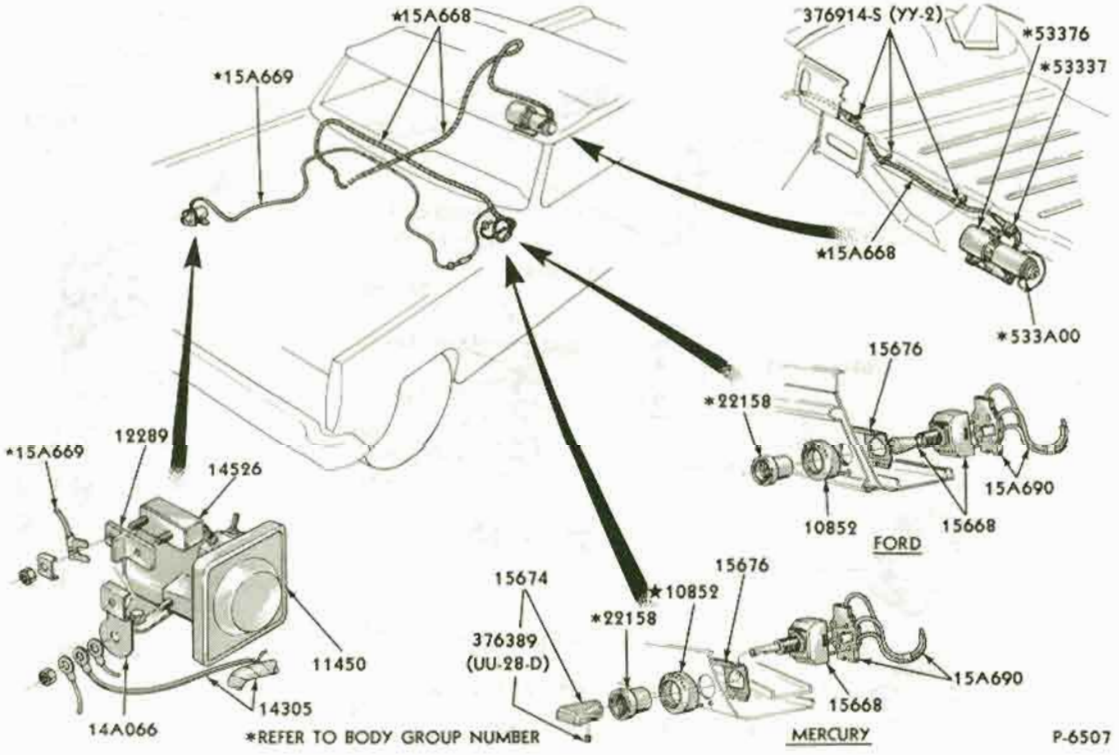

CONVERTIBLE TOP ELECTRICAL SYSTEM
1968 FORD

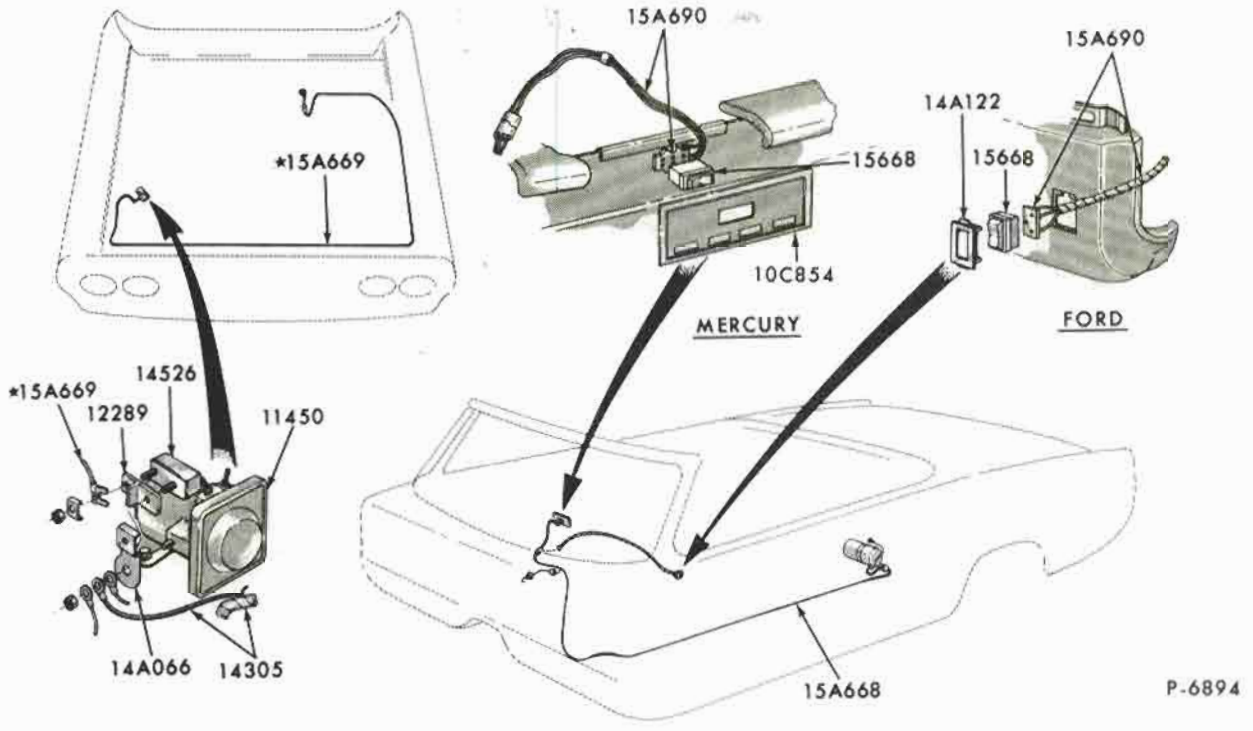

CONVERTIBLE TOP ELECTRICAL SYSTEM
1969/70 FORD

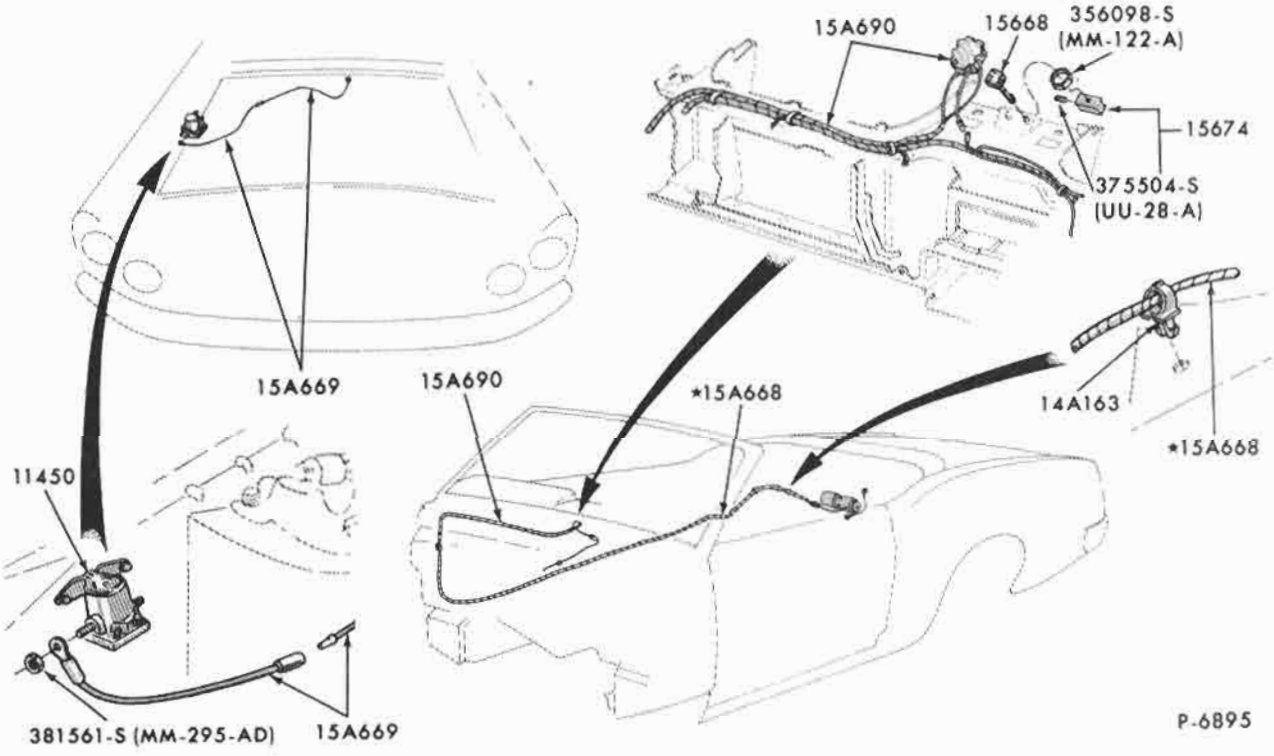

CONVERTIBLE TOP ELECTRICAL SYSTEM
1969/70 MUSTANG

COPYRIGHT © 1975 — FORD MOTOR COMPANY — DEARBORN, MICHIGAN

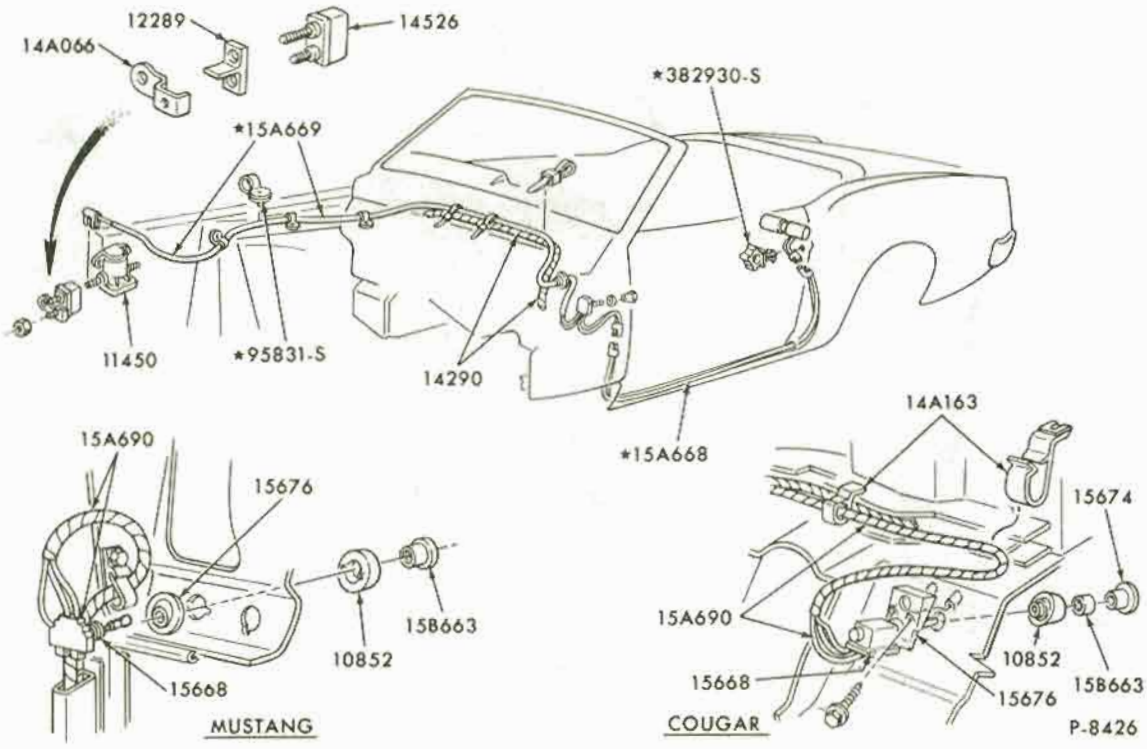

CONVERTIBLE TOP ELECTRICAL SYSTEM
1971/72 MUSTANG

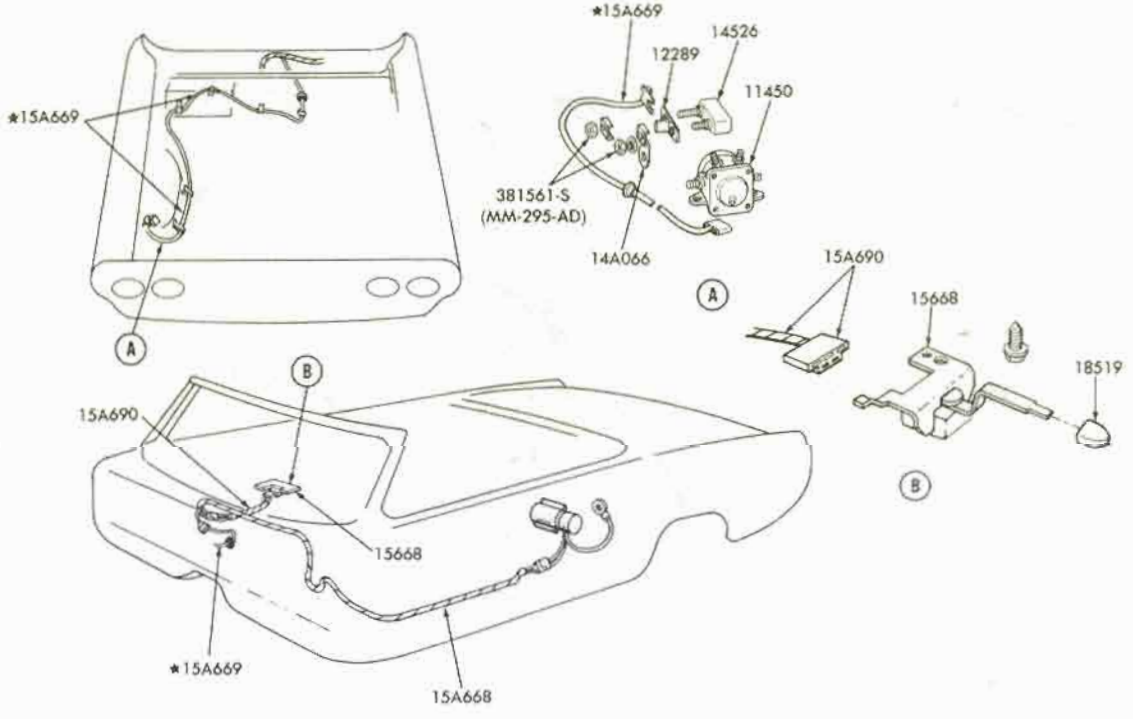

CONVERTIBLE TOP ELECTRICAL SYSTEM
1971/72 FORD

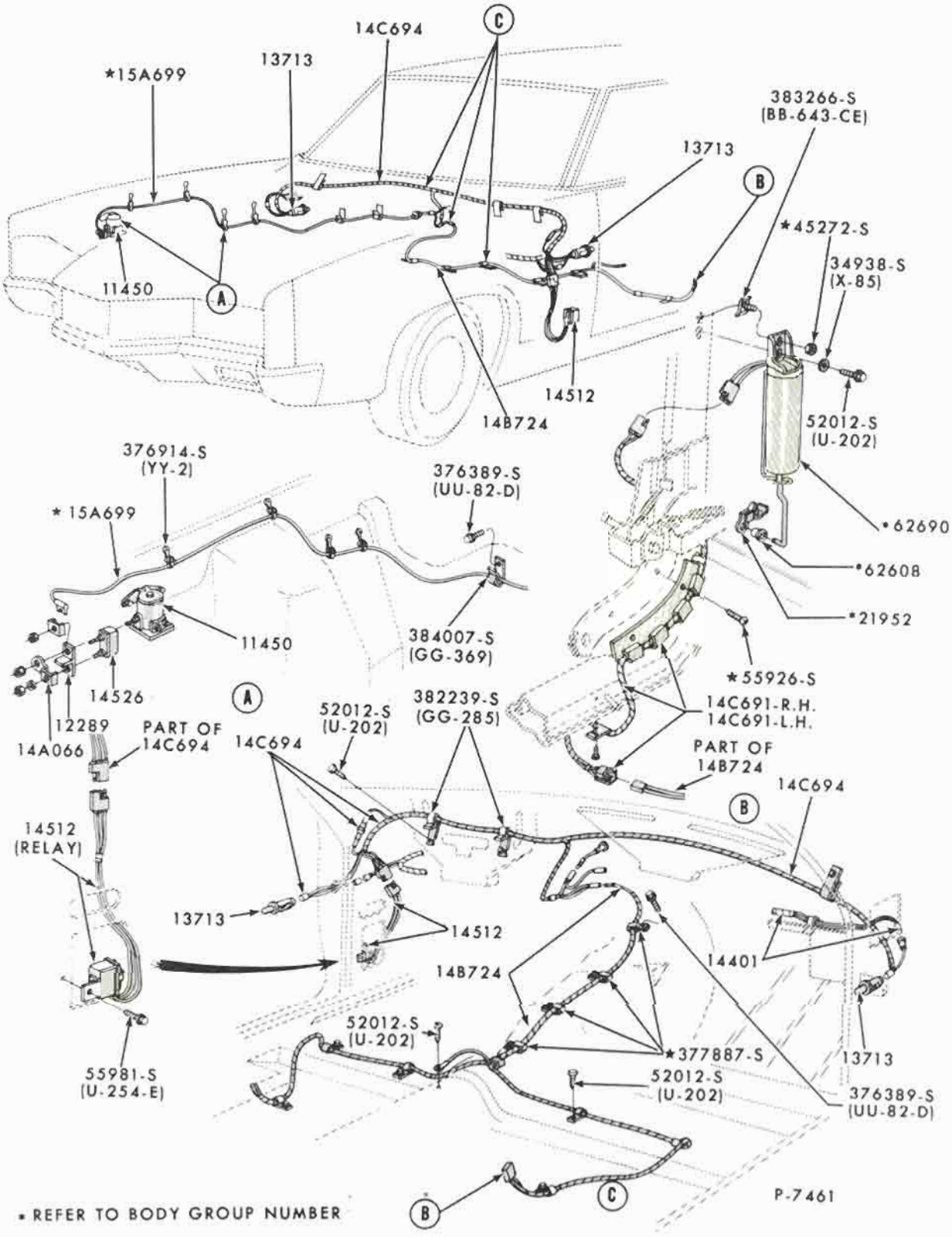

* REFER TO BODY GROUP NUMBER

AUTOMATIC SEAT BACK LATCH WIRING
1970/71 FAIRLANE/TORINO

COPYRIGHT © 1975— FORD MOTOR COMPANY —DEARBORN, MICHIGAN

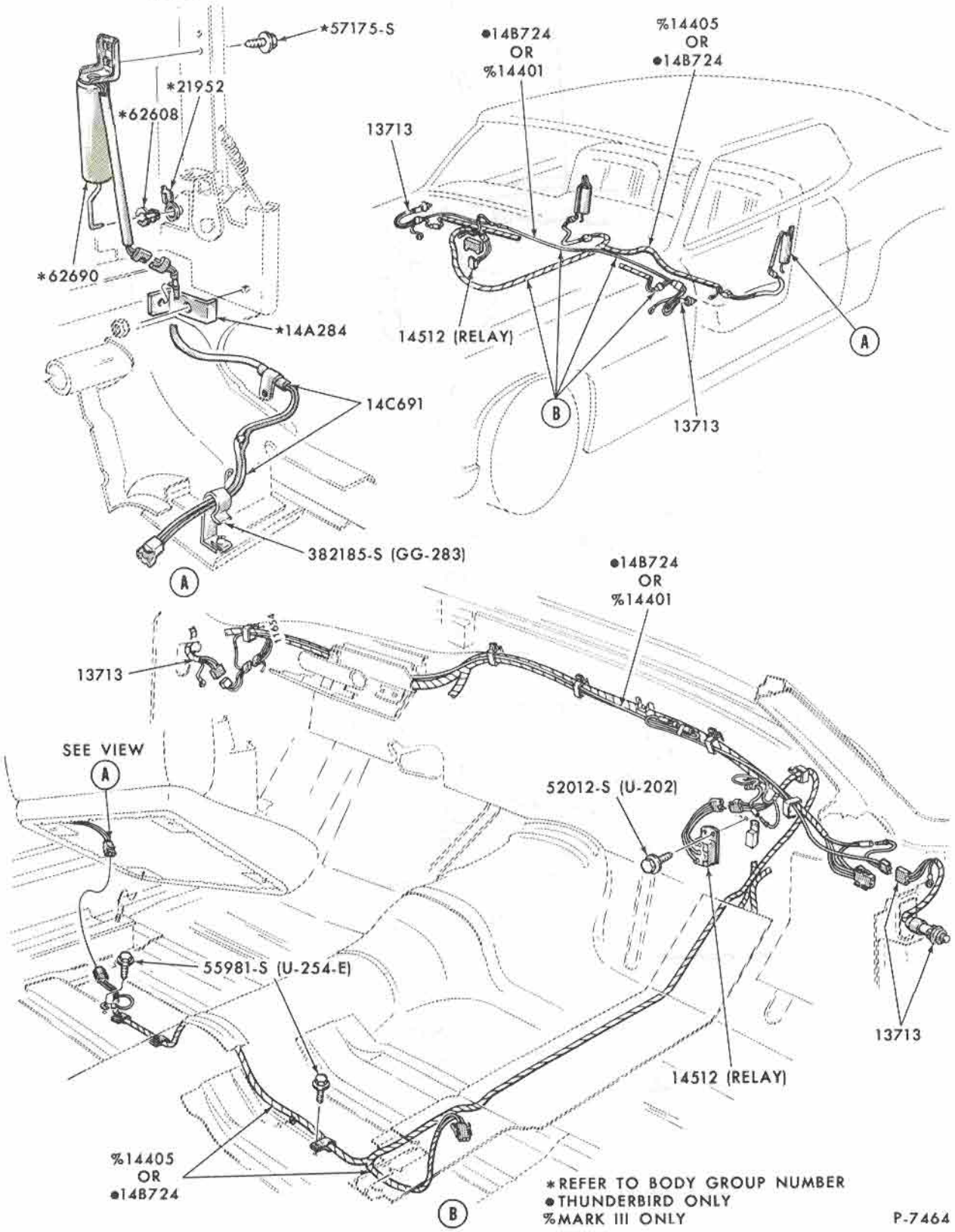

AUTOMATIC SEAT BACK LATCH WIRING
1970/71 THUNDERBIRD

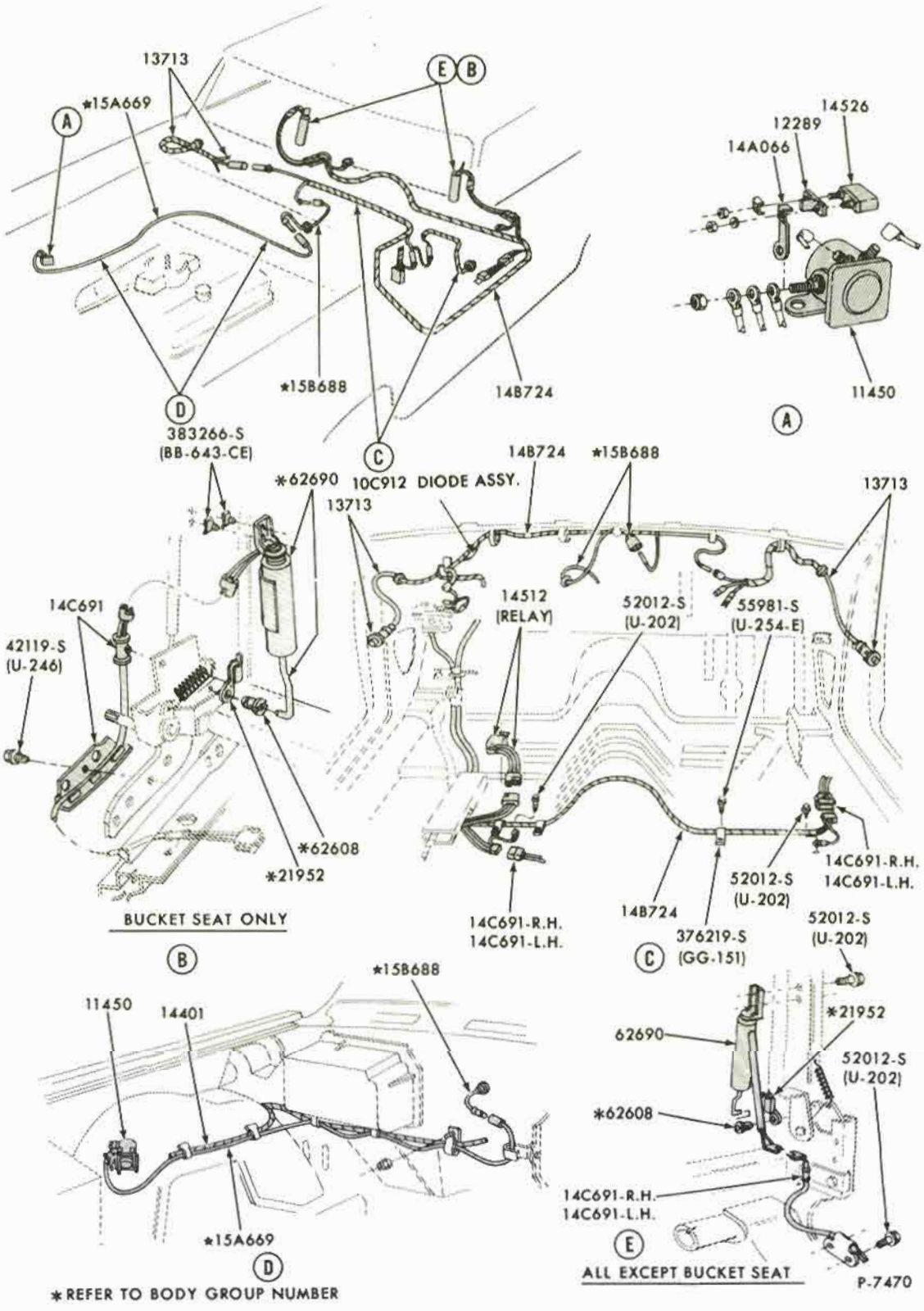

*REFER TO BODY GROUP NUMBER

AUTOMATIC SEAT BACK LATCH WIRING
1970/72 FORD

COPYRIGHT © 1975 — FORD MOTOR COMPANY — DEARBORN, MICHIGAN

INDEX

THIS INDEX SECTION INCLUDES THE FOLLOWING MAJOR GROUPS:

FENDERS and RELATED PARTS
FENDER MOULDINGS and NAME PLATES
FRONT END PARTS
HOODS

TITLE	SECTION	PAGE	ILLUS. NO.
1965			
A (FORD)			
Fender and apron sheet metal	160	1	P-7751
Fender ornamentation - Refer to Exterior Moulding Illustration Section A			
Hood	166	1	P-4613
B (FAIRLANE)			
Fender and apron sheet metal	160	2	P-9208
Fender ornamentation - Refer to Exterior Moulding Illustration Section B			
Hood	166	1	P-4717
F (MUSTANG)			
Fender and apron sheet metal	160	3	P-9205
Fender ornamentation - Refer to Exterior Moulding Illustration Section F			
Hood	166	2	P-4462
S (THUNDERBIRD)			
Fender and apron sheet metal	160	4	P-4246
Fender ornamentation - Refer to Exterior Moulding Illustration Section S			
Front end sheet metal	160	5	P-4247
Hood	166	2	P-4222
X (FALCON)			
Fender and apron sheet metal	160	6	P-9201
Fender ornamentation - Refer to Exterior Moulding Illustration Section X			
Hood	166	3	P-4255
1966			
A (FORD)			
Fender and apron sheet metal	160	1	P-7751
Fender Ornamentation - refer to Exterior Moulding Illustration Section A			
Hood	166	1	P-4613
B (FAIRLANE)			
Fender and apron sheet metal	160	7	P-4946
Hood	166	5	P-4949
F (MUSTANG)			
Fender and apron sheet metal	160	3	P-9205
Fender ornamentation - Refer to Exterior Moulding Illustration Section F			
Hood	166	2	P-4462
S (THUNDERBIRD)			
Fender and apron sheet metal	160	4	P-4246
Fender ornamentation - Refer to Exterior Moulding Illustration Section S			
Front end sheet metal	160	5	P-4247
Hood	166	4	P-5146
U (BRONCO)			
Fender and apron sheet metal	160	9	P-9203
Hood	166	18	P-10054
X (FALCON)			
Fender and apron sheet metal	160	8	P-9202
Fender ornamentation - Refer to Exterior Moulding Illustration Section X			
Hood	166	3	P-4948
1967			
A (FORD)			
Fender and apron sheet metal	160	10	P-9213
Fender Ornamentation - refer to Exterior Moulding Illustration Section A			
Hood	166	4	P-5606
B (FAIRLANE)			
Fender and apron sheet metal	160	7	P-4946
Fender Ornamentation - refer to Exterior Moulding Illustration Section B			
Hood	166	5	P-4949
S (THUNDERBIRD)			
Fender and apron sheet metal	160	13	P-5521
Fender Ornamentation - refer to Exterior Moulding Illustration Section S			
Hood	166	6	P-5522
U (BRONCO)			
Fender and apron sheet metal	160	9	P-9203
Fender ornamentation - Refer to Exterior Moulding Illustration Section U			
Hood	166	18	P-10054

continued on next page

COPYRIGHT © 1975 — FORD MOTOR COMPANY — DEARBORN, MICHIGAN

INDEX

TITLE	SECTION	PAGE	ILLUS. NO.

1967

F (MUSTANG)

Fender and apron sheet metal			
-except Shelby GT350/500	160	11	P-9206
-Shelby GT350/500	160	12	P-9207
Fender ornamentation - Refer to Exterior Moulding Illustration Section F			
Hood	166	6	P-5610

X (FALCON)

Fender and apron sheet metal	160	8	P-9202
Fender ornamentation - refer to Exterior Moulding Illustration Section X			
Hood	166	3	P-4948

1968

A (FORD)

Fender and apron sheet metal	160	14	P-5980
Fender ornamentation - refer to Exterior Moulding Illustration Section A			
Hood	166	7	P-5981

F (MUSTANG)

Fender and apron sheet metal			
-except Shelby GT350/500	160	11	P-9206
-Shelby GT350/500	160	12	P-9207
Fender ornamentation - Refer to Exterior Moulding Illustration Section F			
Hood	166	6	P-5610

S (THUNDERBIRD)

Fender and apron sheet metal	160	13	P-5521
Fender ornamentation - Refer to Exterior Moulding Illustration Section S			
Hood	166	6	P-5522

B (FAIRLANE/TORINO)

Fender and apron sheet metal	160	15	P-6039
Fender Ornamentation - refer to Exterior Moulding Illustration Section B			
Hood	166	7	P-6265

U (BRONCO)

Fender and apron sheet metal	160	9	P-9203
Hood	166	18	P-10054

X (FALCON)

Fender and apron sheet metal	160	8	P-9202
Fender ornamentation - Refer to Exterior Moulding Illustration Section X			
Hood	166	8	P-6034

1969

A (FORD)

Fender and apron sheet metal	160	16	P-6620
Fender ornamentation - Refer to Exterior Moulding Illustration Section A			
Hood	166	8	P-6728

B (FAIRLANE/TORINO)

Fender and apron sheet metal	160	15	P-6039
Fender ornamentation - Refer to Exterior Moulding Illustration Section B			
Hood	166	9	P-6675

F (MUSTANG)

Fender and apron sheet metal			
-except Shelby GT350/500	160	17	P-6666
-Shelby GT350/500	160	18	P-6920
Fender ornamentation - Refer to Exterior Moulding Illustration Section F			
Hood - except Shelby GT350/500	166	9	P-6650
- Shelby GT350/500	166	10	P-6918

S (THUNDERBIRD)

Fender and apron sheet metal	160	13	P-5521
Fender ornamentation - Refer to Exterior Moulding Illustration Section S			
Hood	166	6	P-5522

U (BRONCO)

Fender and apron sheet metal	160	9	P-9203
Fender ornamentation - Refer to Exterior Moulding Illustration Section U			
Hood	166	18	P-10054

X (FALCON)

Fender and apron sheet metal	160	8	P-9202
Fender ornamentation - Refer to Exterior Moulding Illustration Section X			
Hood	166	8	P-6034

INDEX

1970

TITLE	SECTION	PAGE	ILLUS. NO.
A (FORD)			
Fender and apron sheet metal	160	16	P-6620
Hood	166	8	P-6728
Fender ornamentation - refer to Exterior Moulding Illustration Section A			
B (FAIRLANE/TORINO)			
B (FALCON) - FROM 1/2/70			
Fender and apron sheet metal	160	21	P-7145
Hood	166	11	P-7143
Fender ornamentation - refer to Exterior Moulding Illustration Section B			
F (MUSTANG)			
Fender and apron sheet metal-except Shelby GT350/500	160	22	P-7159
-Shelby GT350/500	160	18	P-6920
Hood-except Shelby GT350/500	166	9	P-6650
-Shelby GT350/500	166	10	P-6918
Fender ornamentation - refer to Exterior Moulding Illustration Section F			
P (MAVERICK)			
Fender and apron sheet metal	160	19	P-9204
Front end sheet metal	160	20	P-6879-B
Fender ornamentation - Refer to Exterior Moulding Illustration Section P			
Hood	166	10	P-6979
S (THUNDERBIRD)			
Fender and apron sheet metal	160	23	P-7149
Hood	166	12	P-7156
Fender ornamentation - refer to Exterior Moulding Illustration Section S			
U (BRONCO)			
Fender and apron sheet metal	160	11	P-9203
Hood	166	18	P-10054
X (FALCON)			
FOR UNITS BUILT FROM 1/2/70 REFER TO B (FALCON)			
Fender and apron sheet metal	160	8	P-9202
Fender Ornamentation - refer to Exterior Moulding Illustration Section X			
Hood	166	8	P-6034

1971

TITLE	SECTION	PAGE	ILLUS. NO.
A (FORD)			
Fender and apron sheet metal	160	24	P-8074
Hood	166	12	P-8072
Fender ornamentation - refer to Exterior Moulding Illustration Section A			
B (TORINO)			
Fender and apron sheet metal	160	21	P-7145
Hood	166	11	P-7143
Fender ornamentation - refer to Exterior Moulding Illustration Section B			
F (MUSTANG)			
Fender and apron sheet metal	160	25	P-8093
Hood	166	13	P-8086
Fender ornamentation - Refer to Exterior Moulding Illustration Section F			
L (PINTO)			
Fender and apron sheet metal	160	26	P-8012
Hood	166	14	P-8015
Fender ornamentation - refer to Exterior Moulding Illustration Section L			
P (MAVERICK)			
Fender and apron sheet metal	160	19	P-9204
Front end sheet metal	160	20	P-6879-B
Hood	166	15	P-8325
Fender ornamentation - refer to Exterior Moulding Illustration Section P			
S (THUNDERBIRD)			
Fender and apron sheet metal	160	23	P-7149
Hood	166	16	P-8554
Fender ornamentation - refer to Exterior Moulding Illustration Section S			
U (BRONCO)			
Fender and apron sheet metal	160	9	P-9203
Hood	166	18	P-10054

COPYRIGHT © 1975 — FORD MOTOR COMPANY — DEARBORN, MICHIGAN

FINAL ISSUE

INDEX

1972

TITLE	SECTION	PAGE	ILLUS. NO.
A (FORD)			
Fender and apron sheet metal	160	24	P-8074
Fender ornamentation - refer to Exterior Moulding Illustration Section A			
Hood	166	18	P-9315
B (TORINO)			
Fender and apron sheet metal	160	27	P-8620
Fender ornamentation - refer to Exterior Moulding Illustration Section B			
Hood	166	17	P-8783
F (MUSTANG)			
Fender and apron sheet metal	160	25	P-8093
Fender ornamentation - refer to Exterior Moulding Illustration Section F			
Hood	166	13	P-8086
L (PINTO)			
Fender and apron sheet metal	160	26	P-8012
Fender ornamentation - refer to Exterior Moulding Illustration Section L			
Hood	166	14	P-8015
P (MAVERICK)			
Fender and apron sheet metal	160	19	P-9204
Front end sheet metal	160	20	P-6879-B
Fender ornamentation - refer to Exterior Moulding Illustration Section P			
Hood	166	15	P-8325
S (THUNDERBIRD)			
Fender and apron sheet metal	160	28	P-8602
Fender ornamentation - refer to Exterior Moulding Illustration Section S			
Hood	166	16	P-8601
U (BRONCO)			
Fender and apron sheet metal	160	9	P-9203
Fender ornamentation - Refer to Exterior Moulding Illustration Section U			
Hood	166	18	P-10054

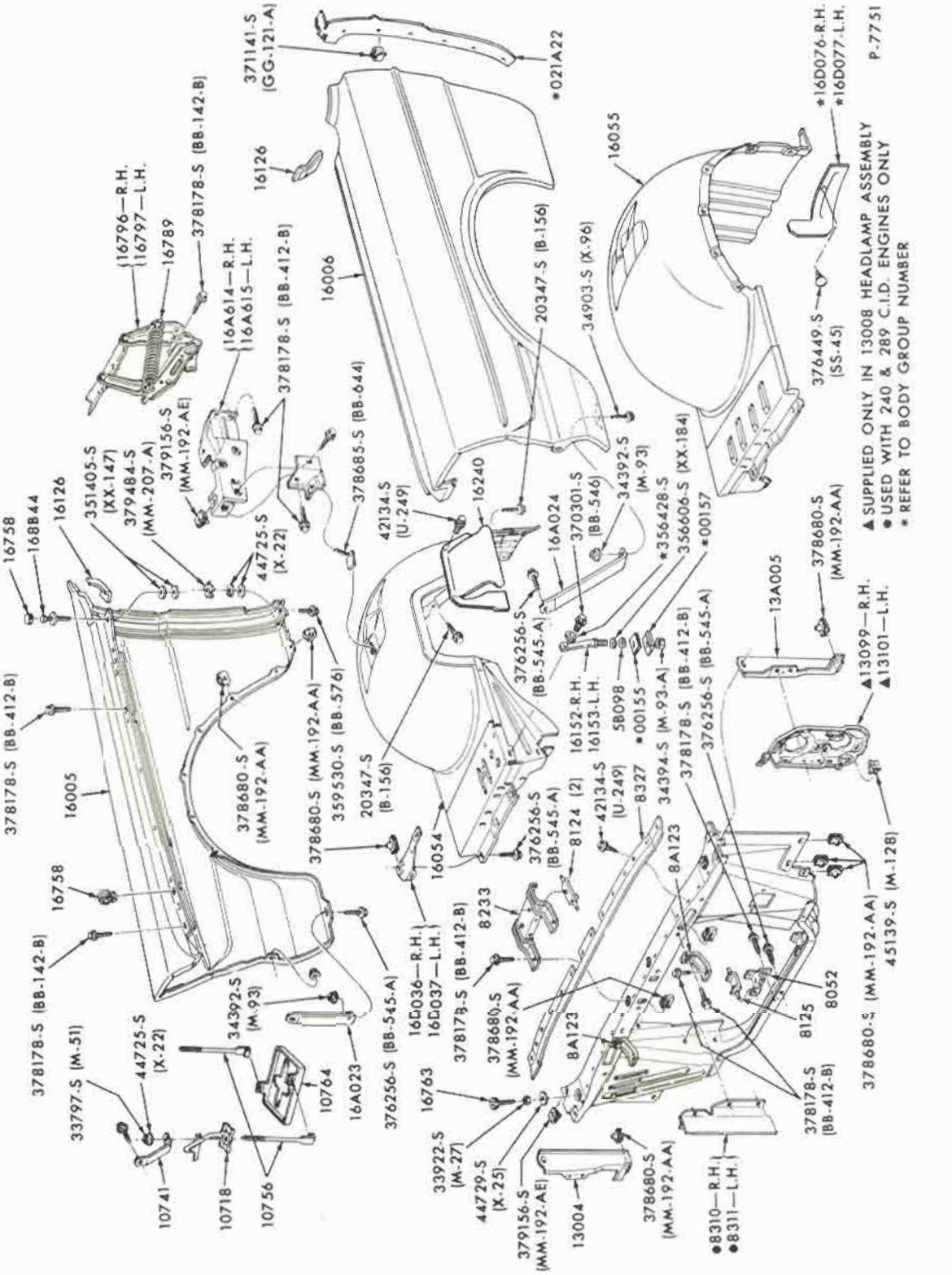

FENDERS, APRONS and RELATED PARTS
1965/66 FORD

COPYRIGHT © 1975 — FORD MOTOR COMPANY — DEARBORN, MICHIGAN

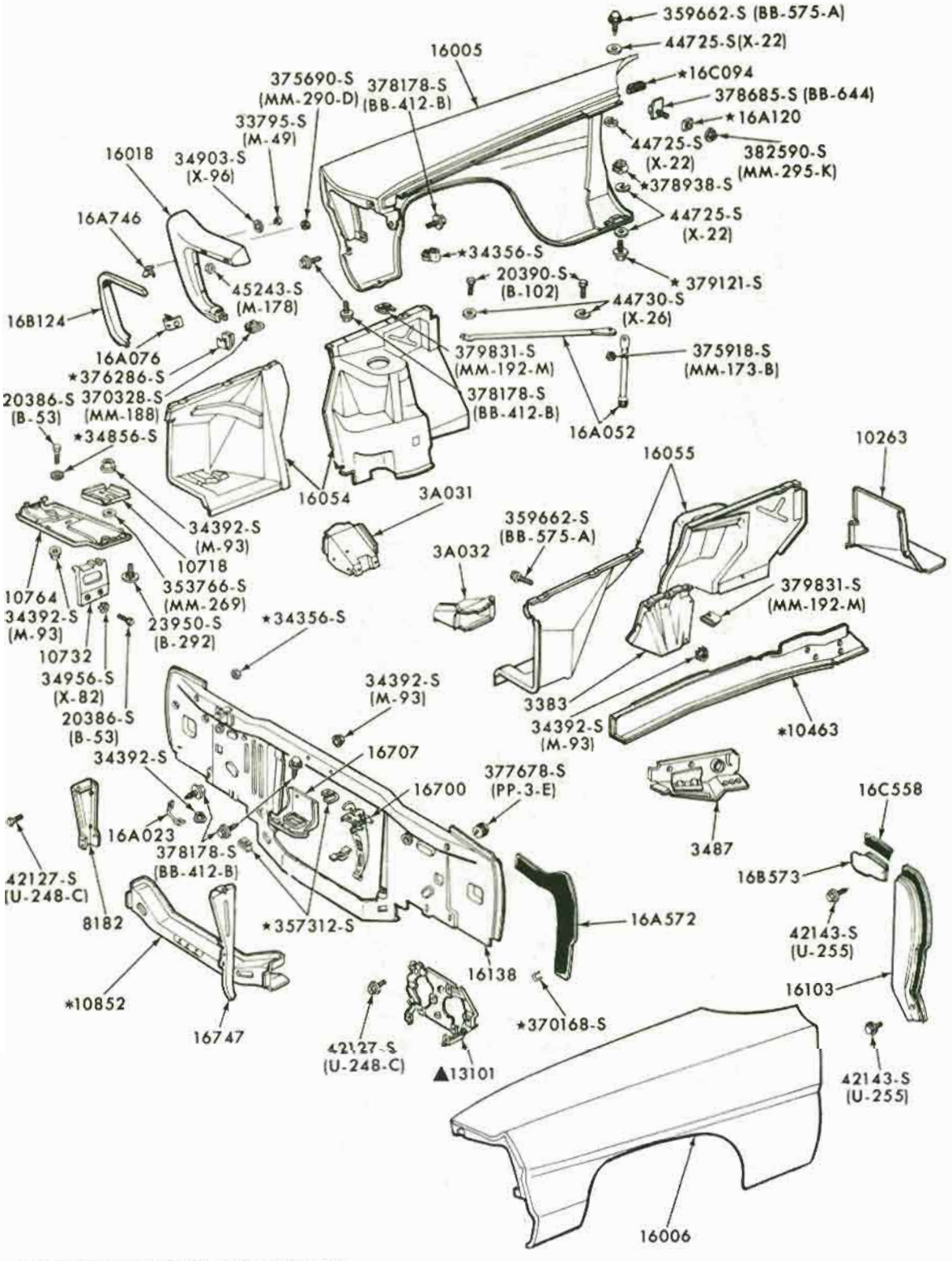

*REFER TO GROUP IN BODY SECTION
▲SUPPLIED ONLY IN 13008 HEADLAMP ASSEMBLY

P-9208

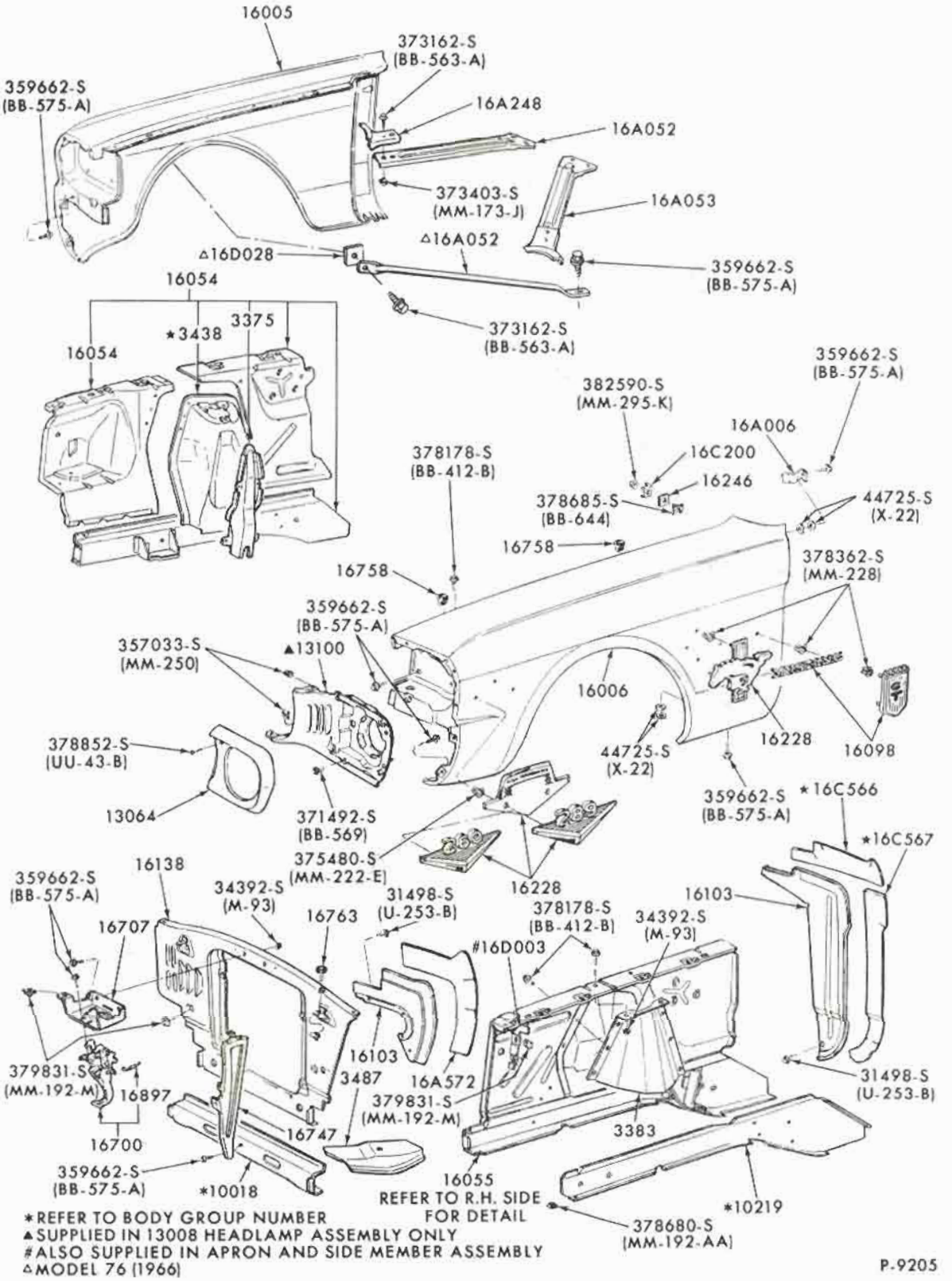

★REFER TO BODY GROUP NUMBER
▲SUPPLIED IN 13008 HEADLAMP ASSEMBLY ONLY
#ALSO SUPPLIED IN APRON AND SIDE MEMBER ASSEMBLY
△MODEL 76 (1966)

P-9205

FENDERS, APRONS and RELATED PARTS
1965/66 MUSTANG

COPYRIGHT © 1975 — FORD MOTOR COMPANY — DEARBORN, MICHIGAN

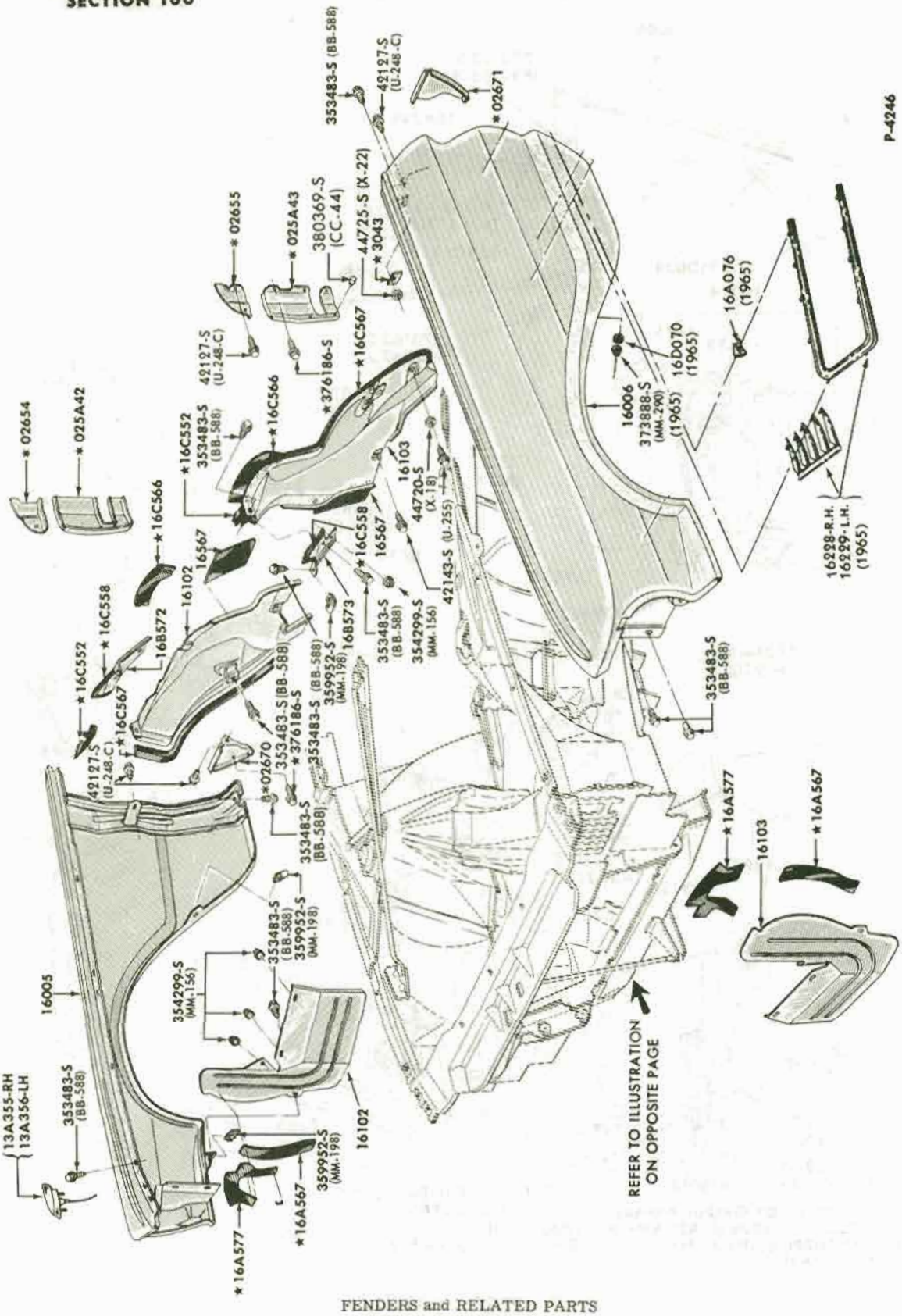

FENDERS and RELATED PARTS
1965/66 THUNDERBIRD

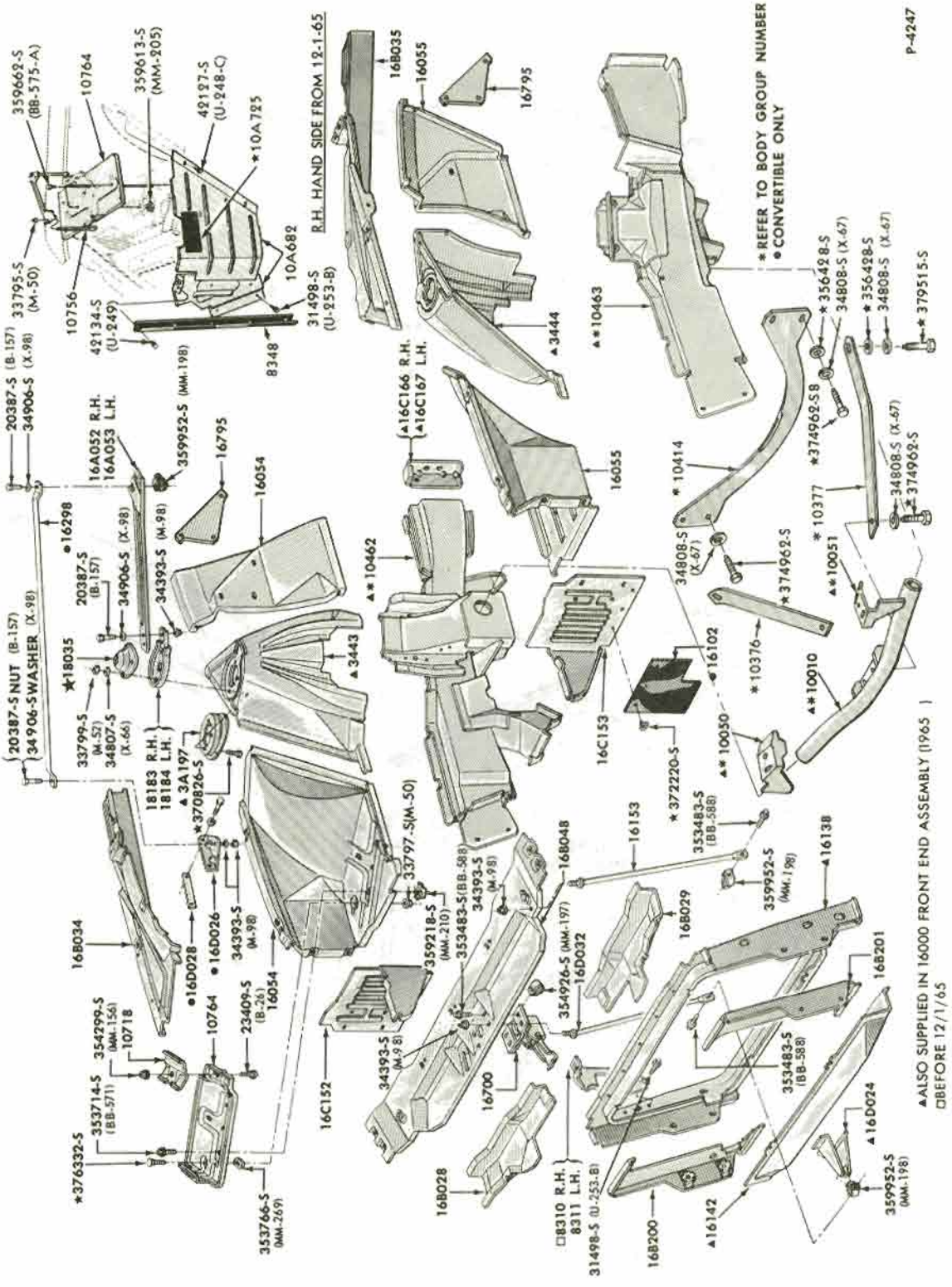

FRONT END SHEET METAL and RELATED PARTS
1965/66 THUNDERBIRD

COPYRIGHT © 1975 — FORD MOTOR COMPANY — DEARBORN, MICHIGAN

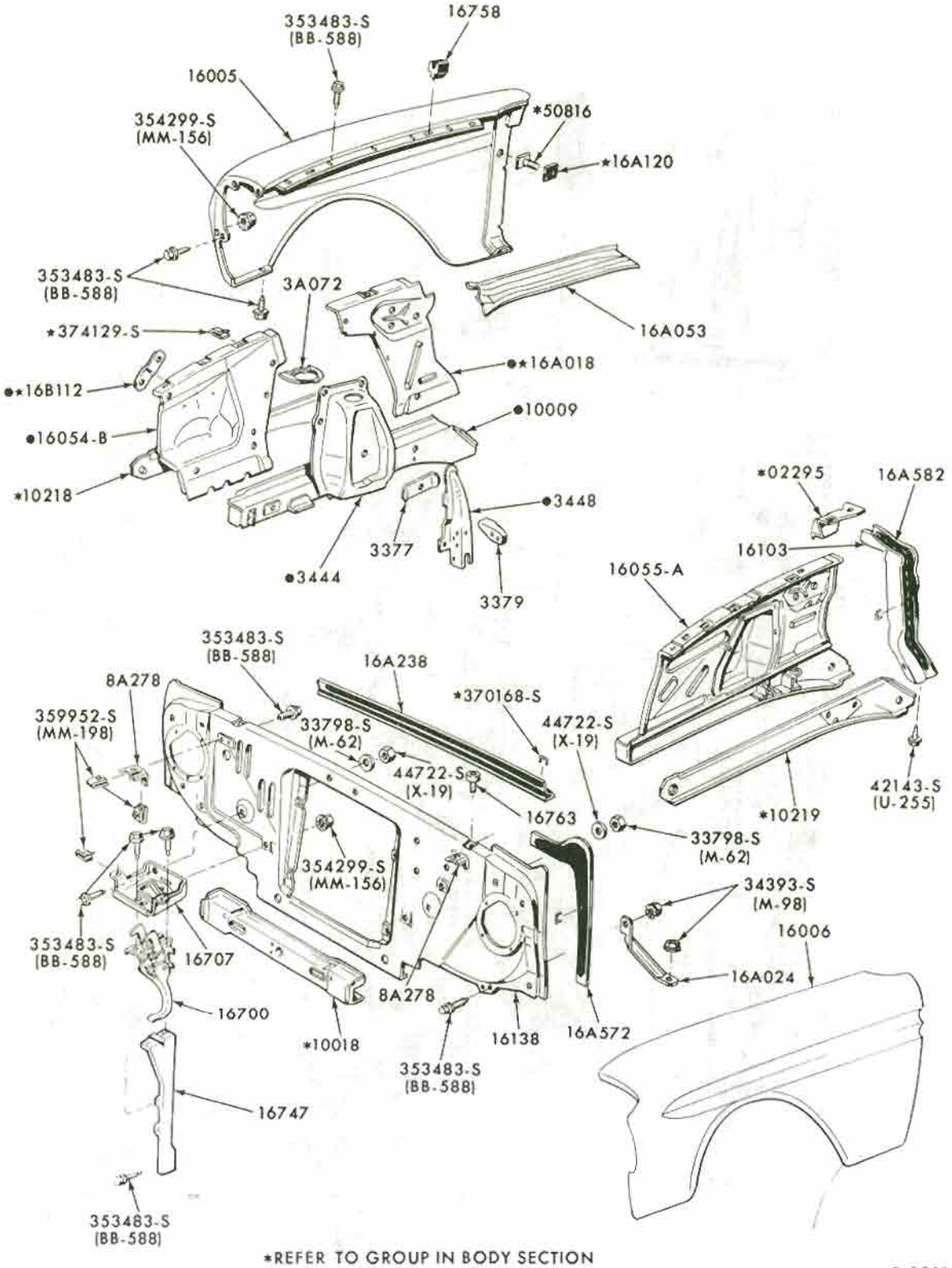

*REFER TO GROUP IN BODY SECTION
●ALSO SUPPLIED IN 16054-5 APRON AND SIDE MEMBER ASSY. P-9201

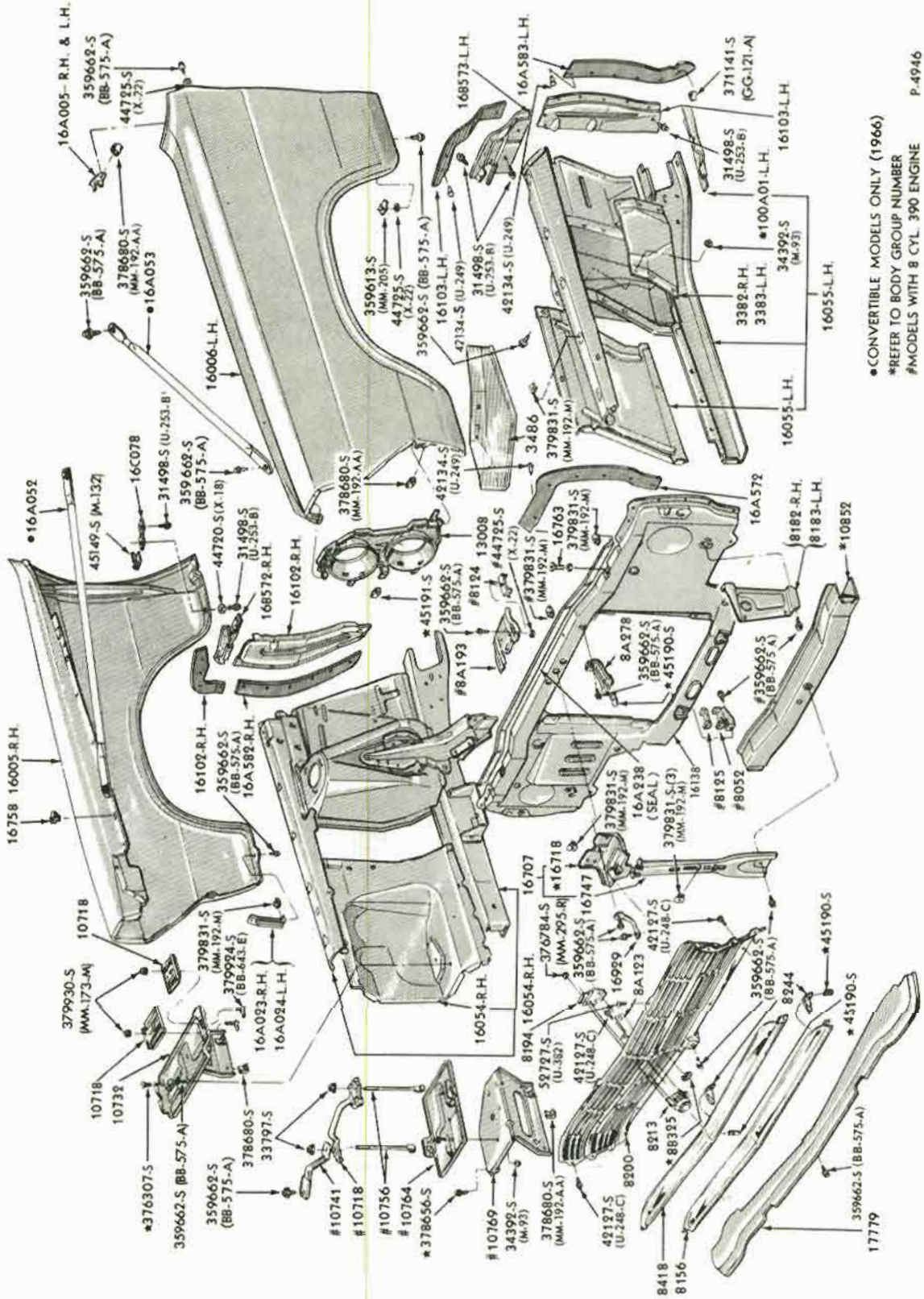

FENDERS, APRONS and RELATED PARTS
1966/67 FAIRLANE

COPYRIGHT © 1975 — FORD MOTOR COMPANY — DEARBORN, MICHIGAN

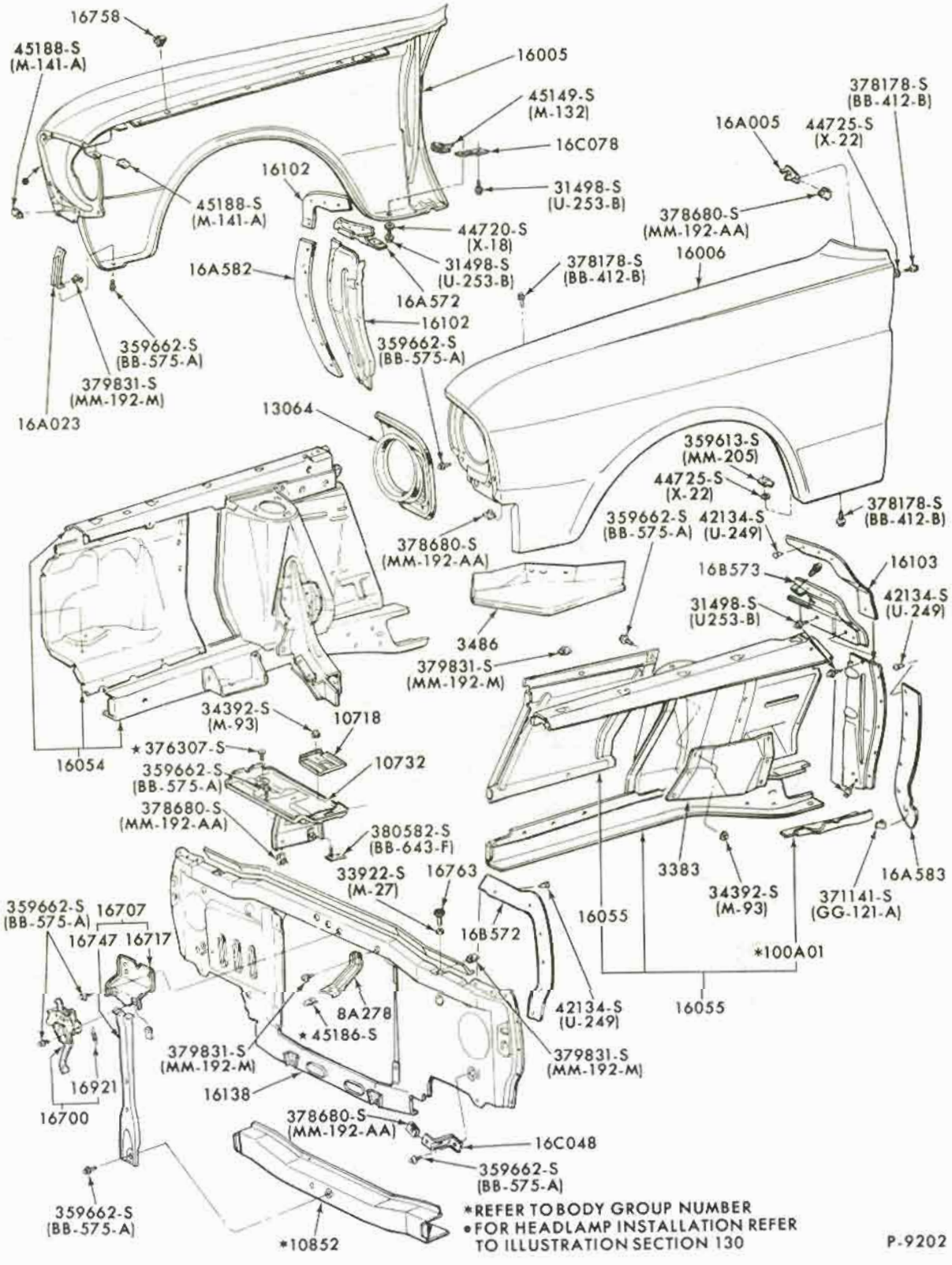

*REFER TO BODY GROUP NUMBER
•FOR HEADLAMP INSTALLATION REFER TO ILLUSTRATION SECTION 130

P-9202

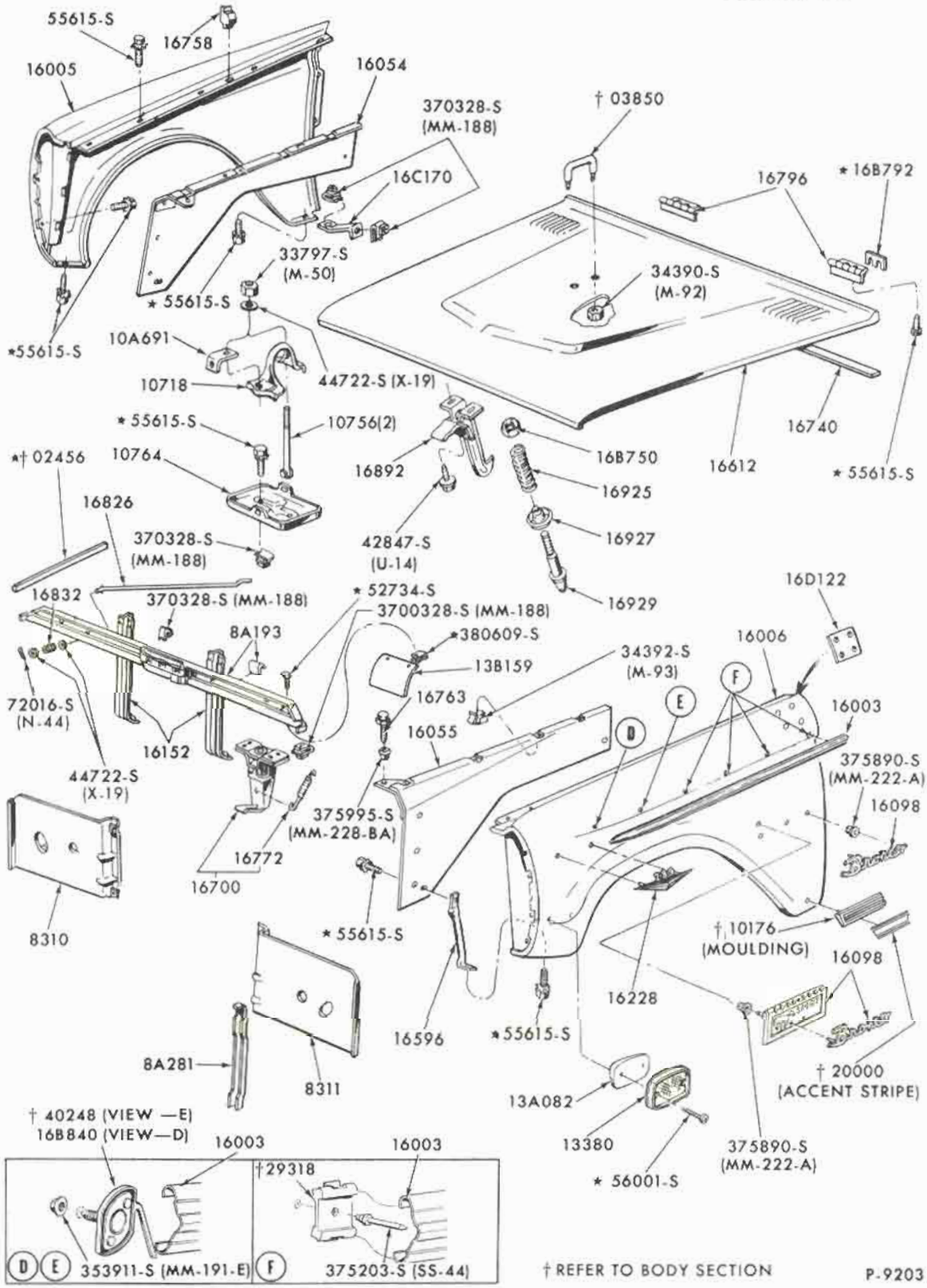

FENDERS, APRONS and RELATED PARTS
1966/72 BRONCO

COPYRIGHT © 1975 — FORD MOTOR COMPANY — DEARBORN, MICHIGAN

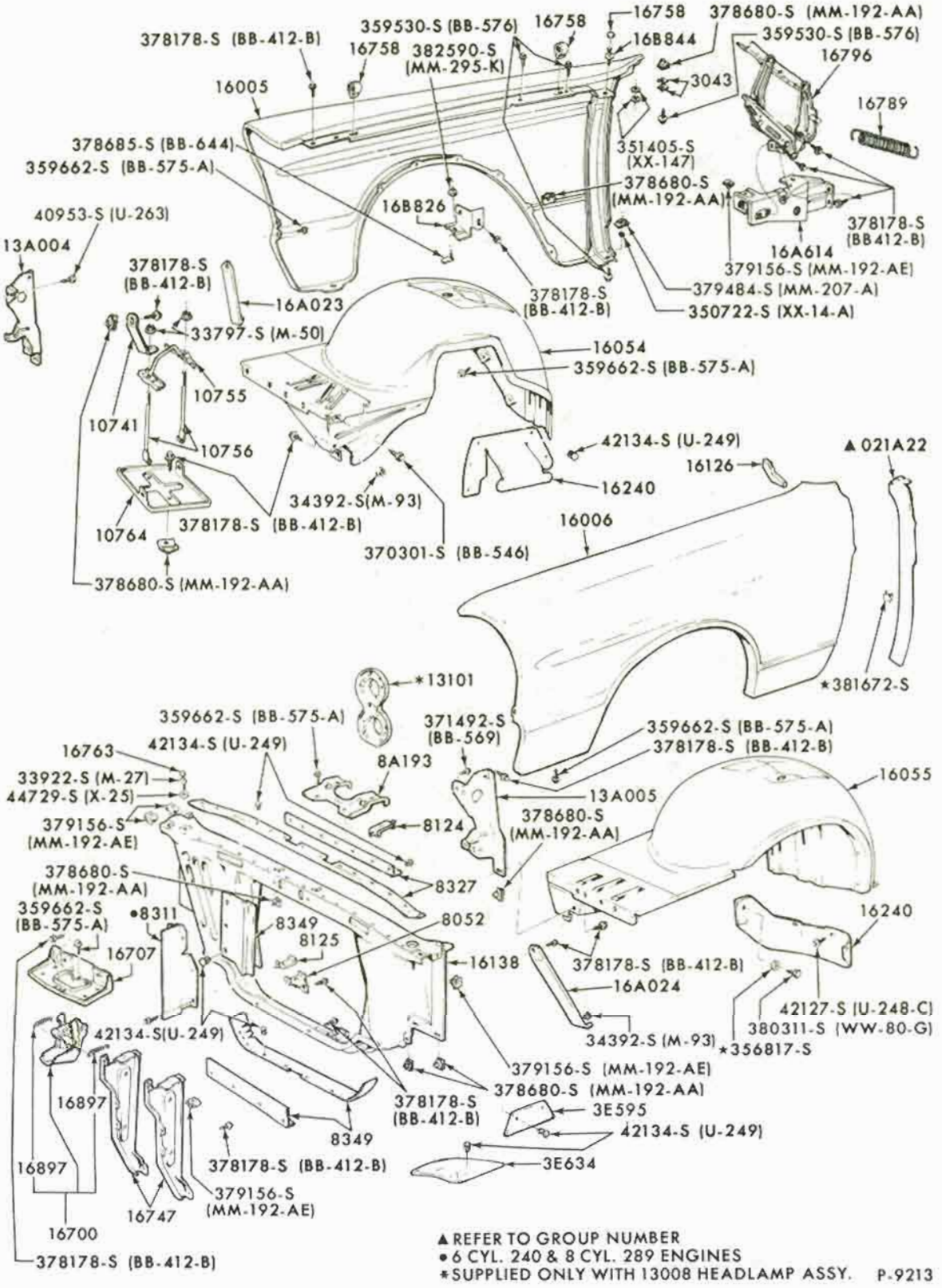

▲ REFER TO GROUP NUMBER
• 6 CYL. 240 & 8 CYL. 289 ENGINES
*SUPPLIED ONLY WITH 13008 HEADLAMP ASSY. P-9213

FENDERS, APRONS and RELATED PARTS
1967 FORD

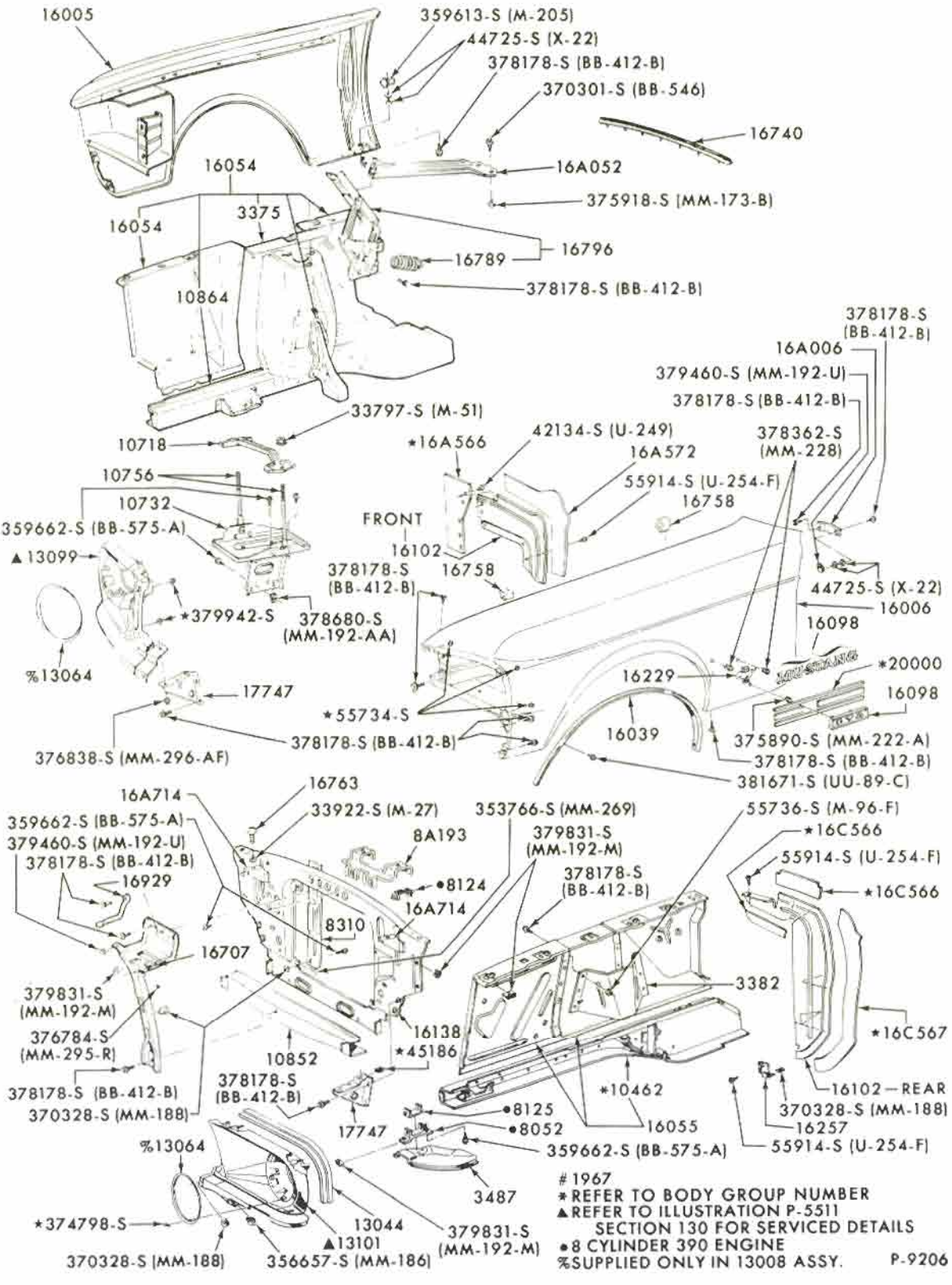

1967
* REFER TO BODY GROUP NUMBER
▲ REFER TO ILLUSTRATION P-5511 SECTION 130 FOR SERVICED DETAILS
• 8 CYLINDER 390 ENGINE
% SUPPLIED ONLY IN 13008 ASSY. P-9206

FENDERS, APRONS and RELATED PARTS
1967/68 MUSTANG - except SHELBY GT350/500

COPYRIGHT © 1975 — FORD MOTOR COMPANY — DEARBORN, MICHIGAN

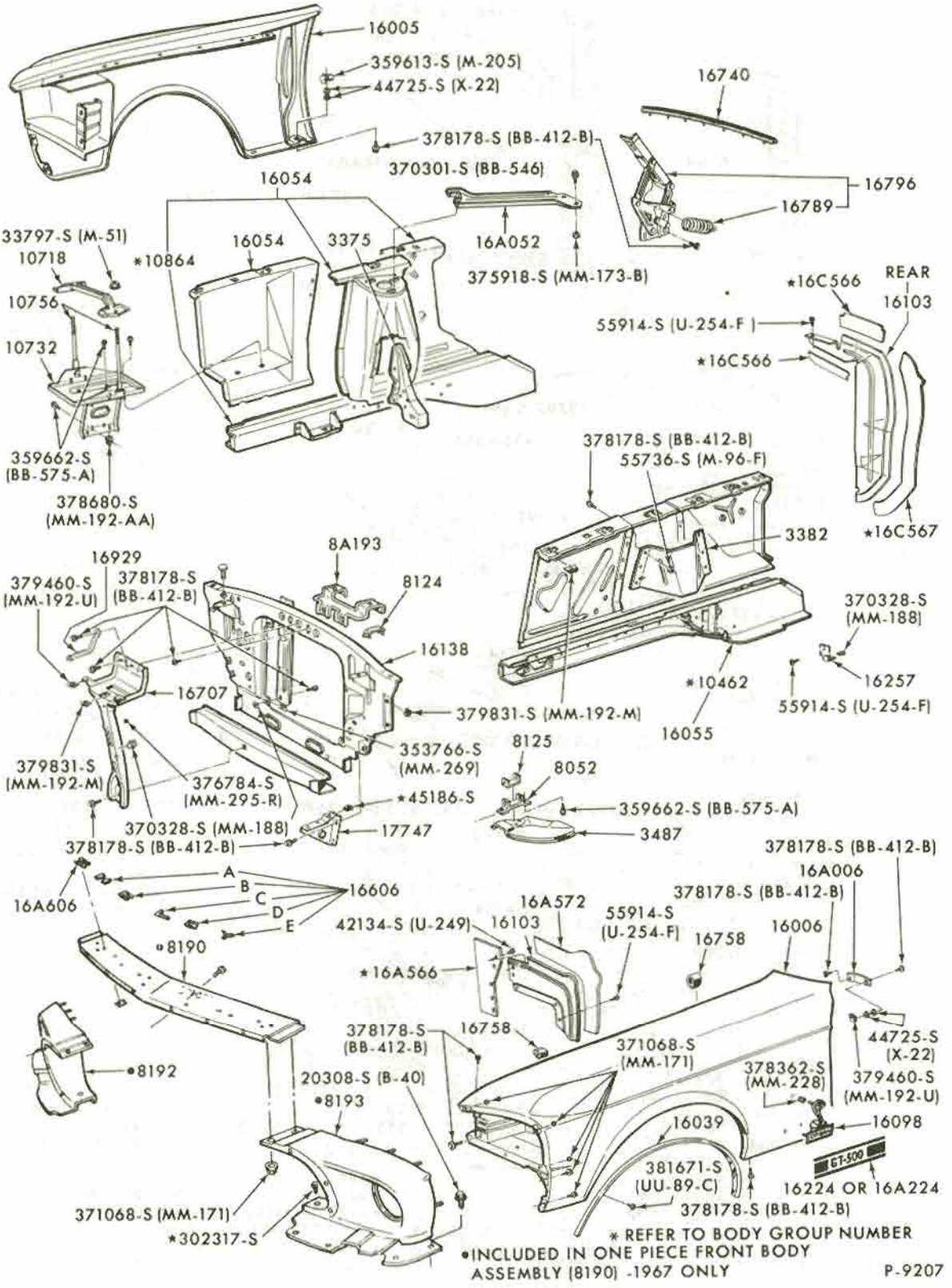

* REFER TO BODY GROUP NUMBER
•INCLUDED IN ONE PIECE FRONT BODY ASSEMBLY (8190) -1967 ONLY

P-9207

FENDERS, APRONS and RELATED PARTS
1967/68 MUSTANG - SHELBY GT350/500

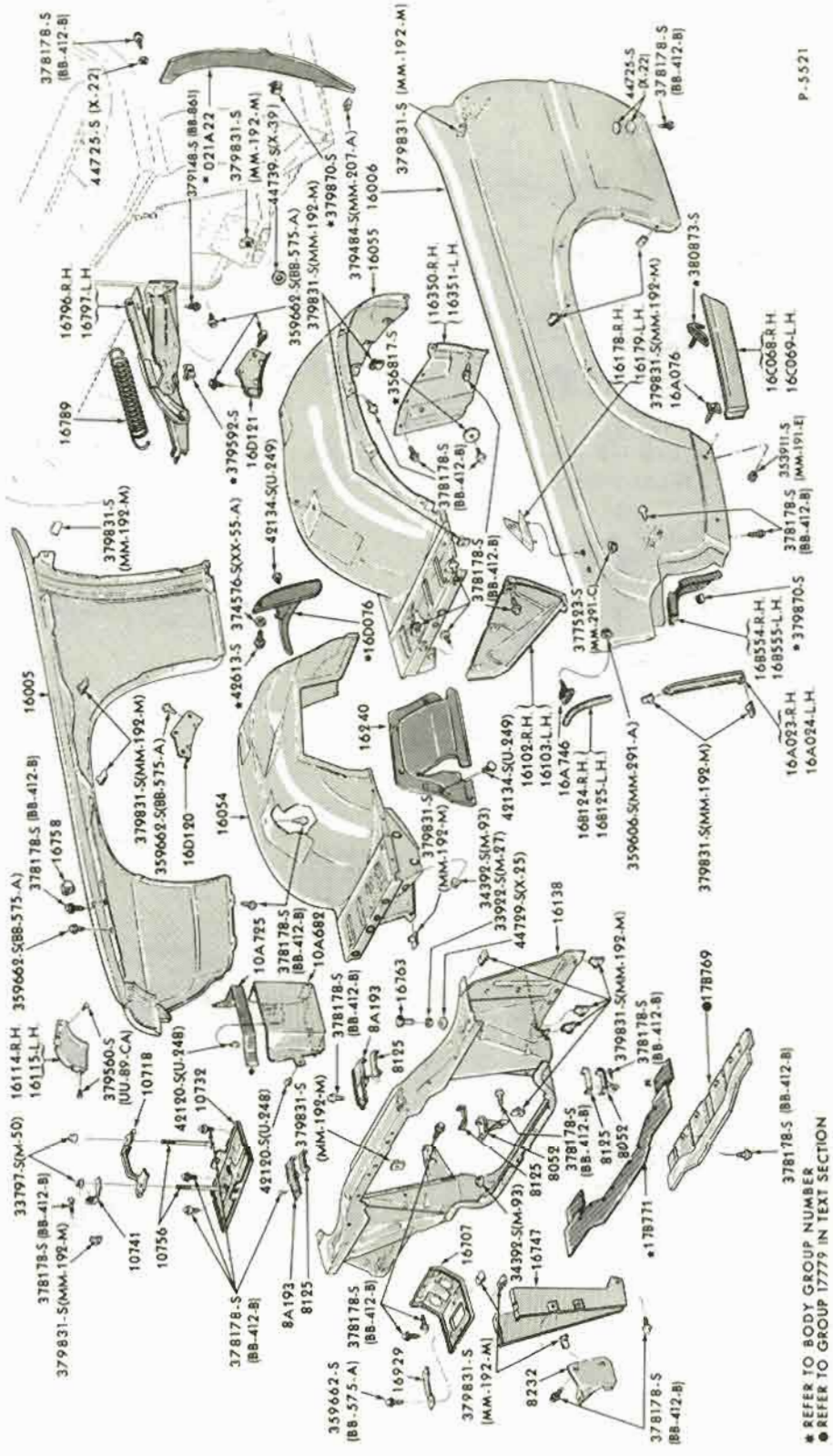

FENDERS, APRONS and RELATED PARTS
1967/69 THUNDERBIRD

COPYRIGHT © 1975 — FORD MOTOR COMPANY — DEARBORN, MICHIGAN

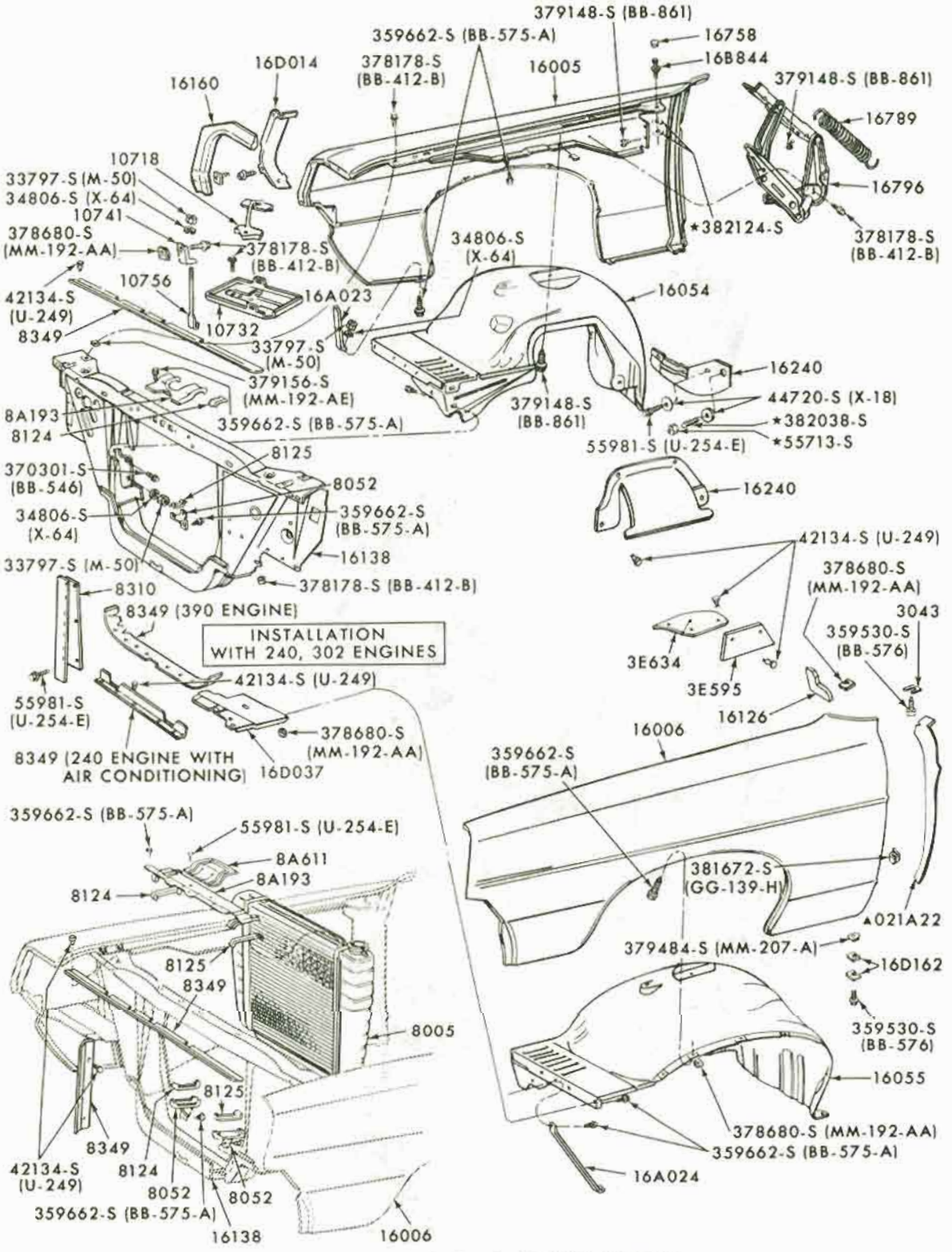

▲REFER TO GROUP NO. IN BODY SECTION P-5980

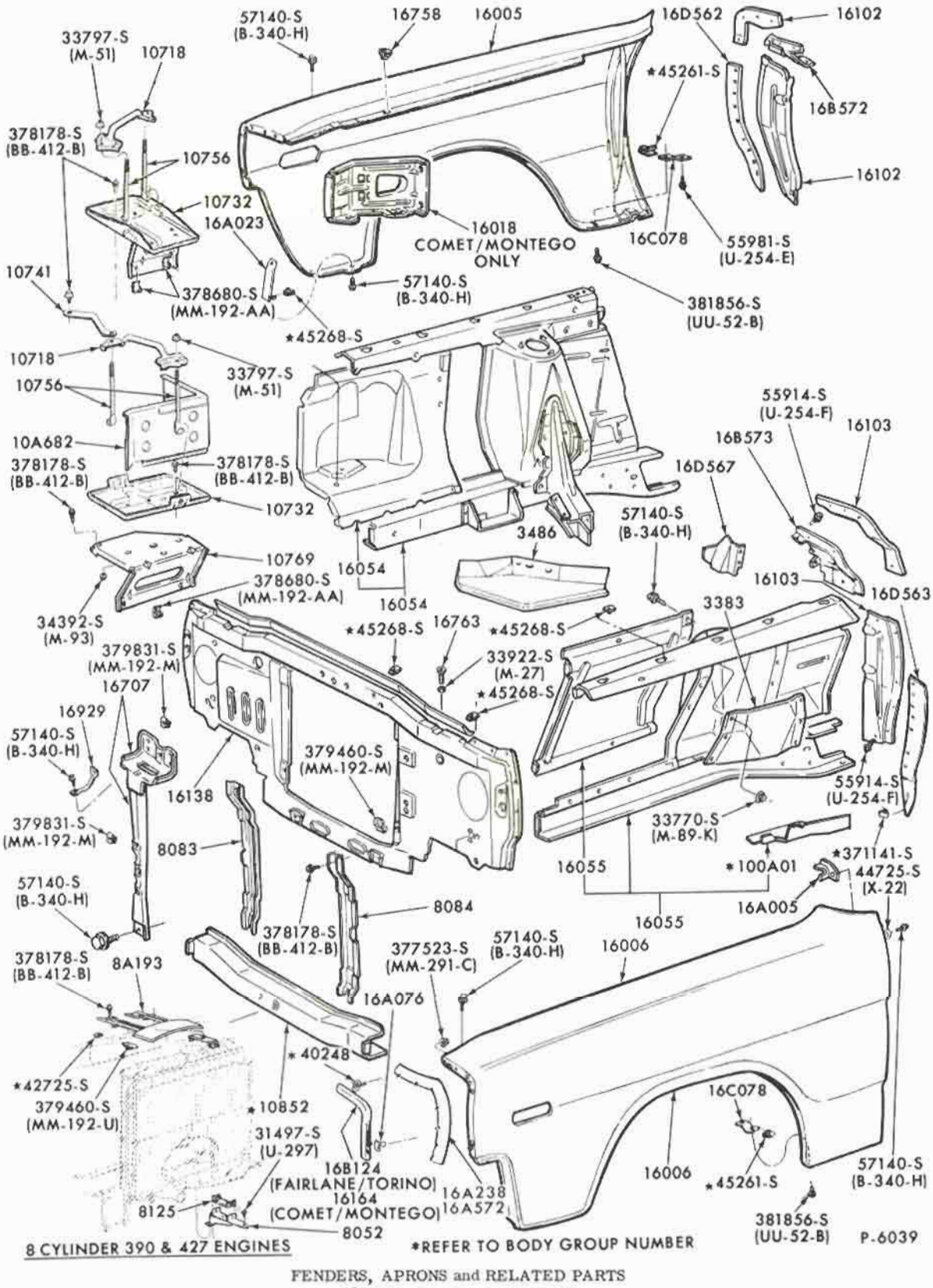

8 CYLINDER 390 & 427 ENGINES

*REFER TO BODY GROUP NUMBER

FENDERS, APRONS and RELATED PARTS
1968/69 FAIRLANE/TORINO

COPYRIGHT © 1975 — FORD MOTOR COMPANY — DEARBORN, MICHIGAN

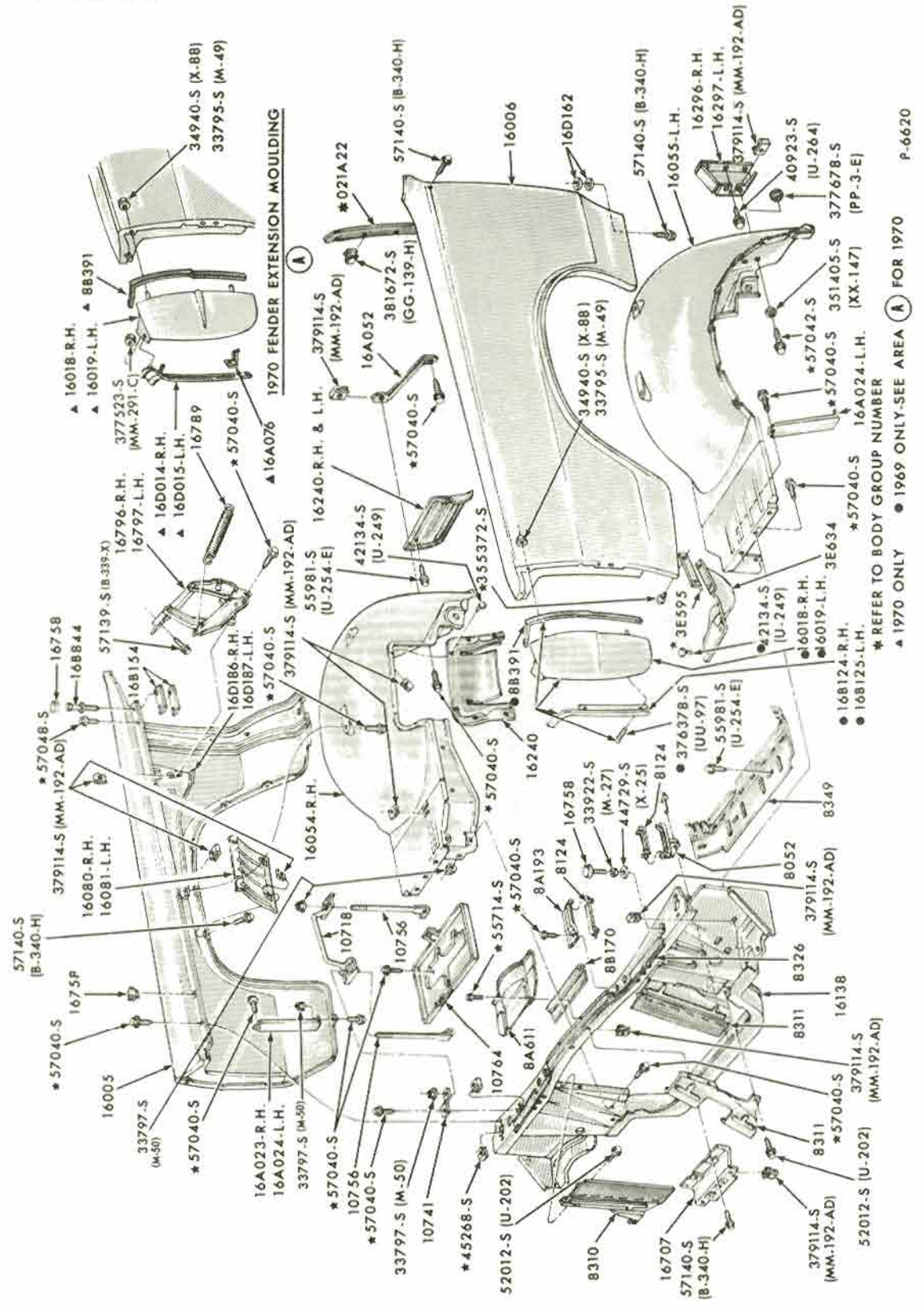

FENDERS, APRONS and RELATED PARTS
1969/70 FORD

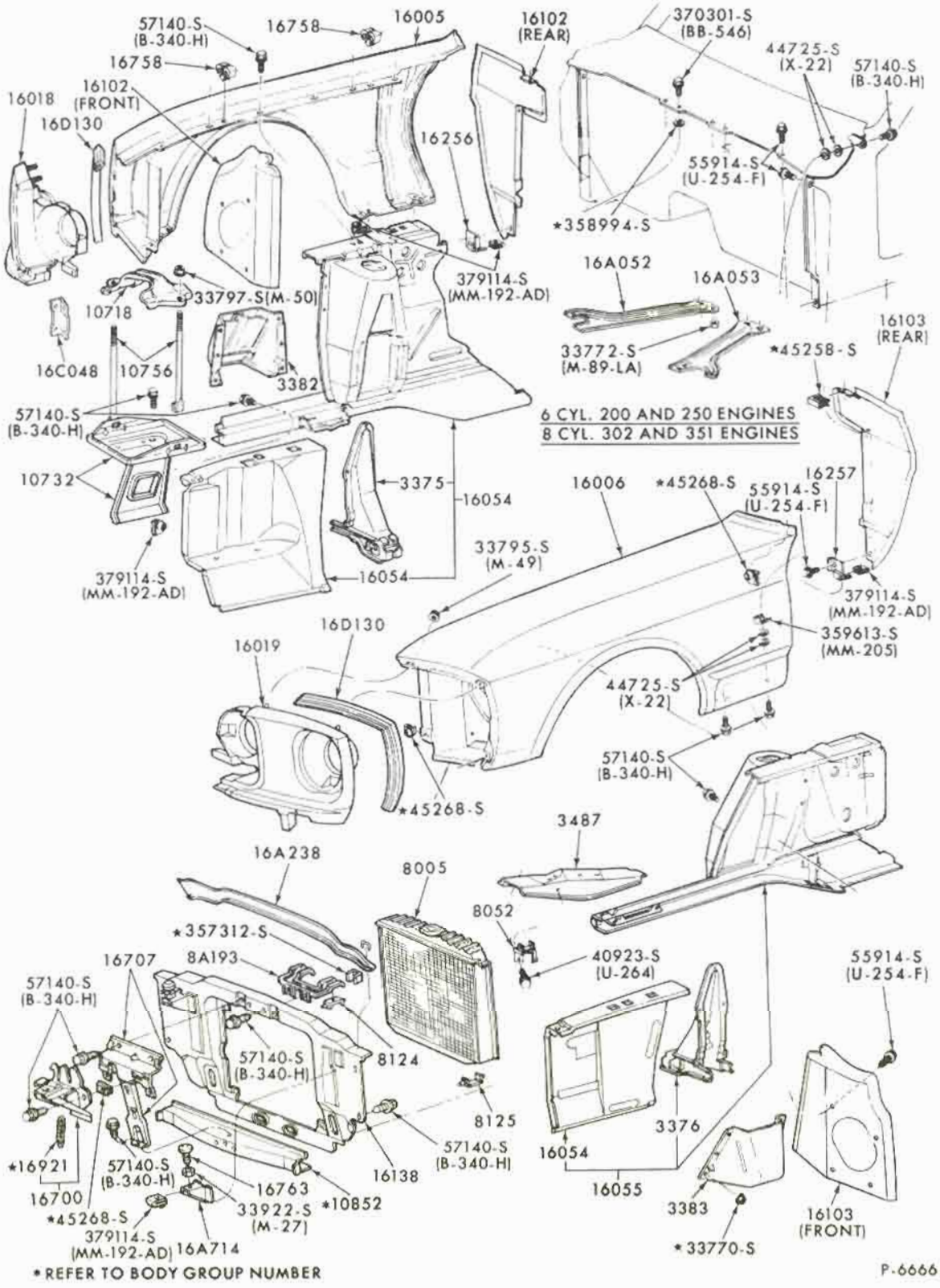

* REFER TO BODY GROUP NUMBER

P-6666

FENDERS, APRONS and RELATED PARTS
1969 MUSTANG - except SHELBY GT350/500

COPYRIGHT © 1975 — FORD MOTOR COMPANY — DEARBORN, MICHIGAN

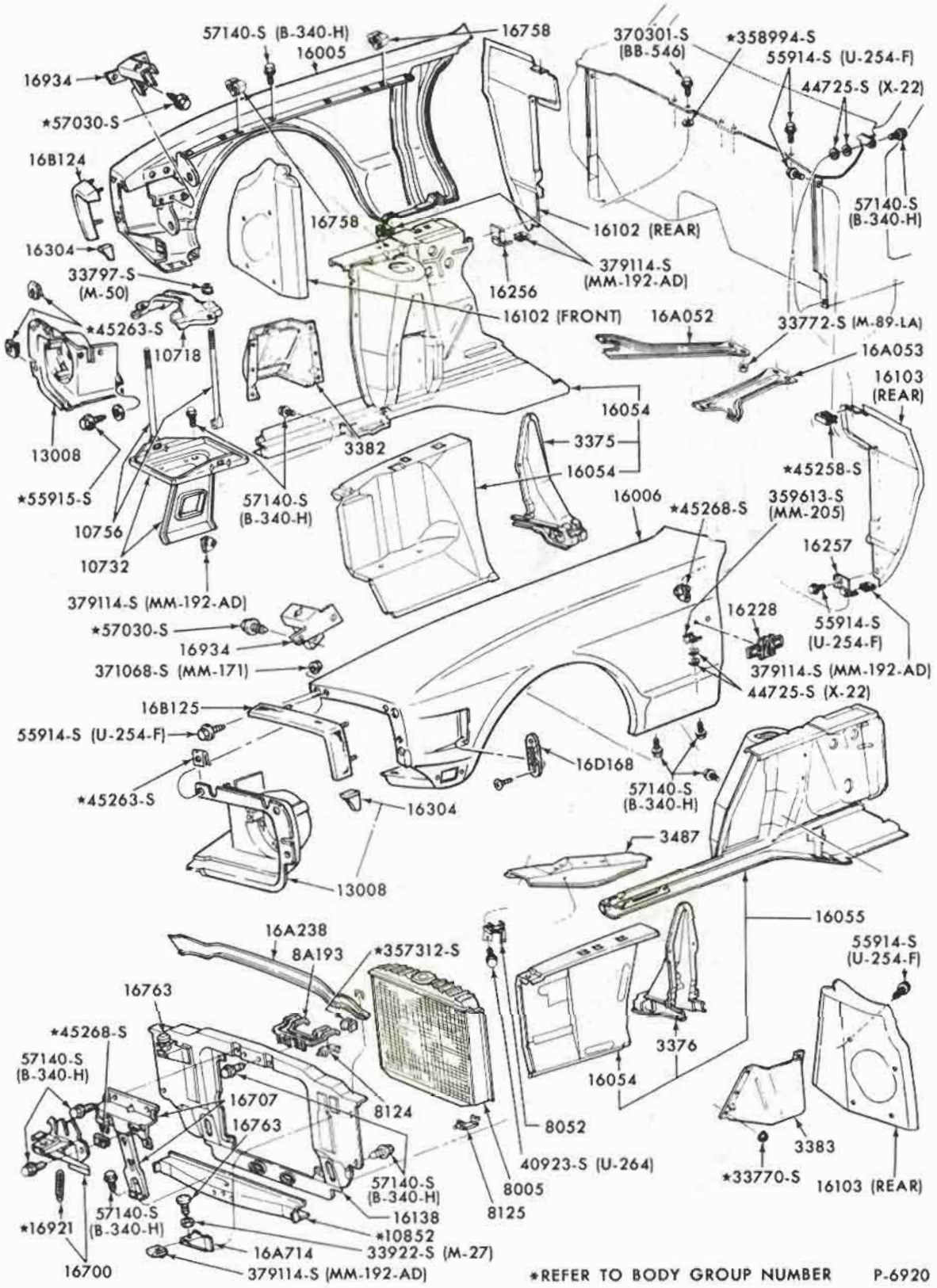

*REFER TO BODY GROUP NUMBER P-6920

FENDERS, APRONS and RELATED PARTS
1969/70 MUSTANG - SHELBY GT350/500

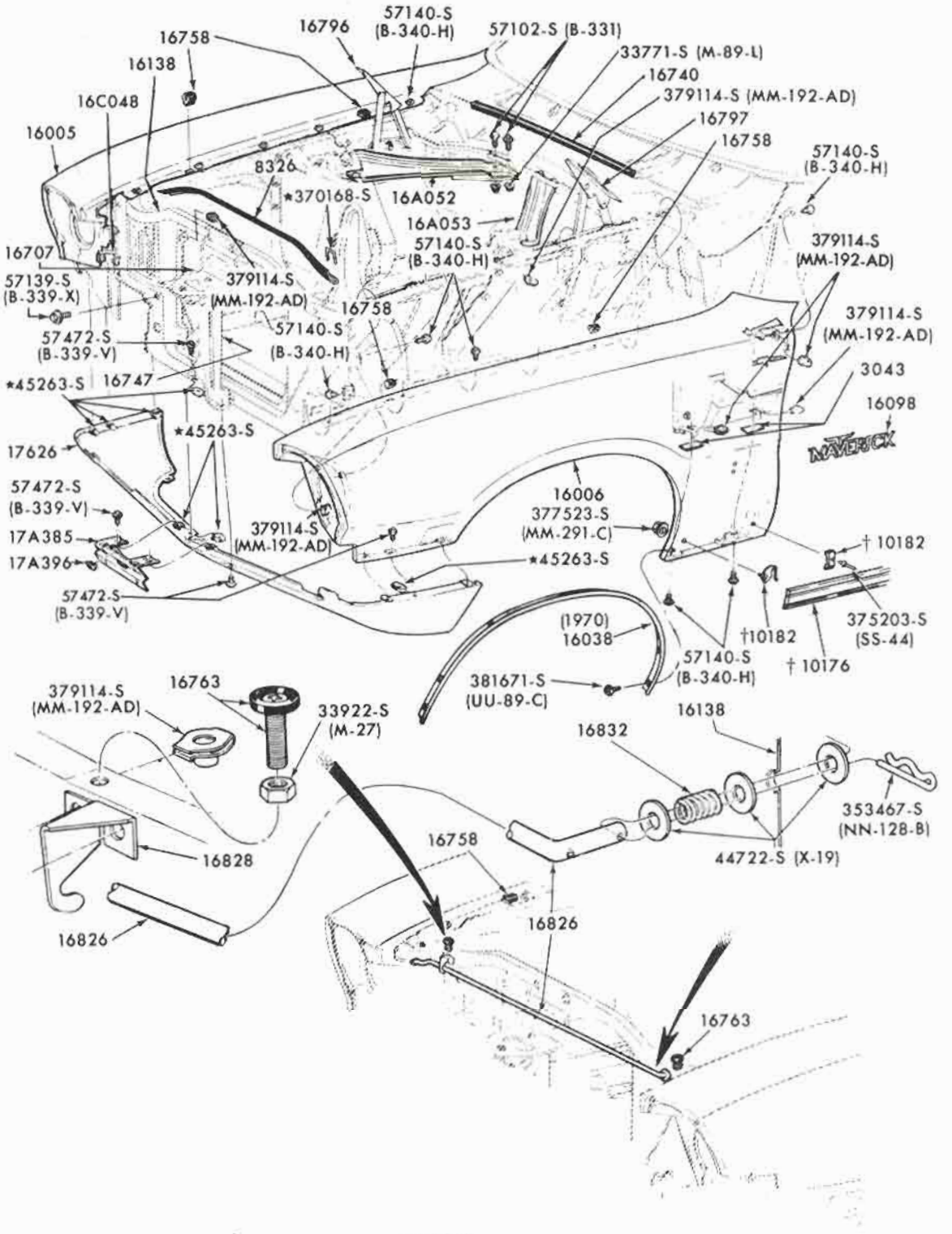

† REFER TO BODY SECTION

P-9204

May, 1975 COPYRIGHT © 1975 — FORD MOTOR COMPANY — DEARBORN, MICHIGAN FINAL ISSUE

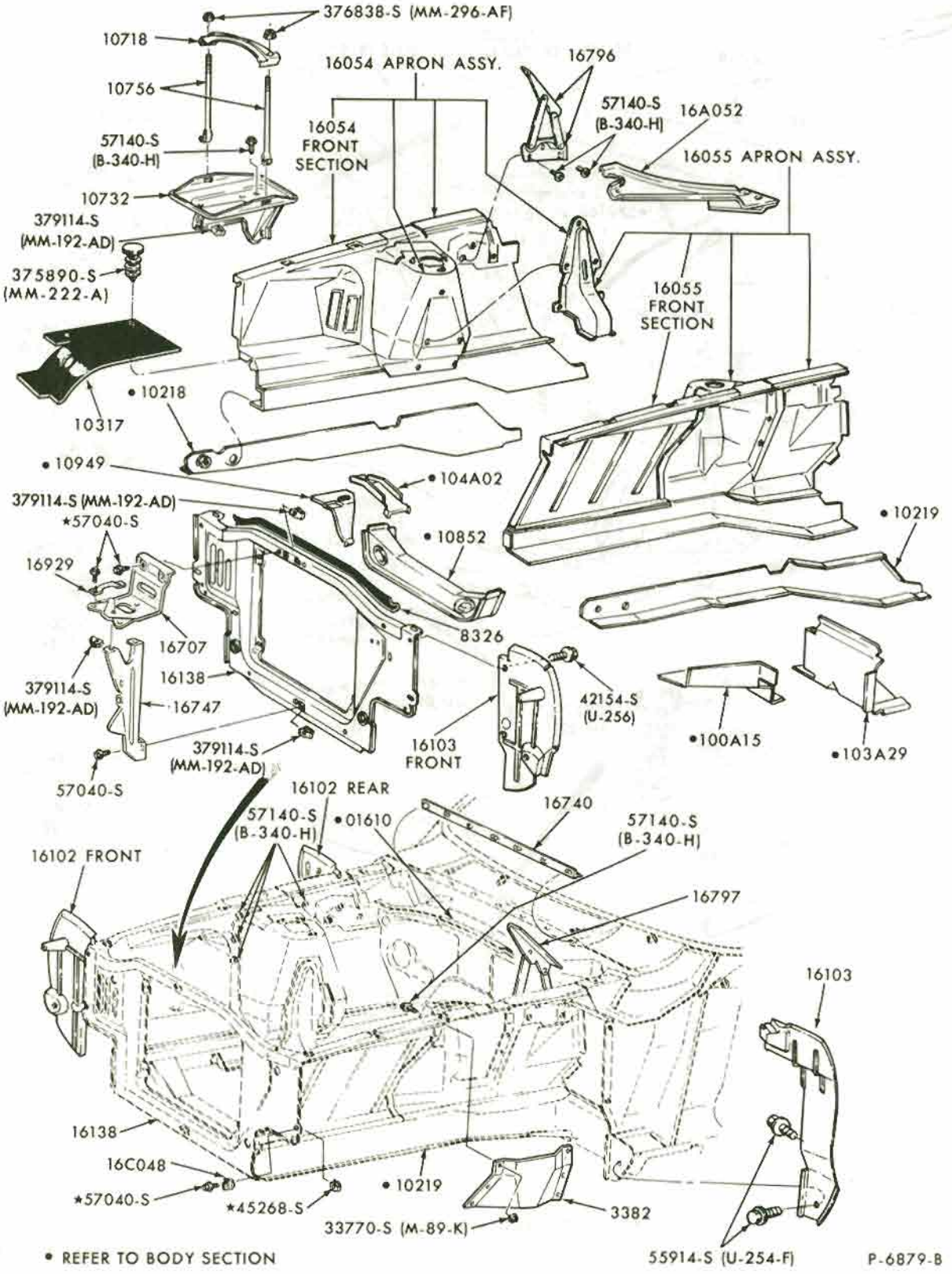

FRONT END SHEET METAL and RELATED PARTS
1970/72 MAVERICK

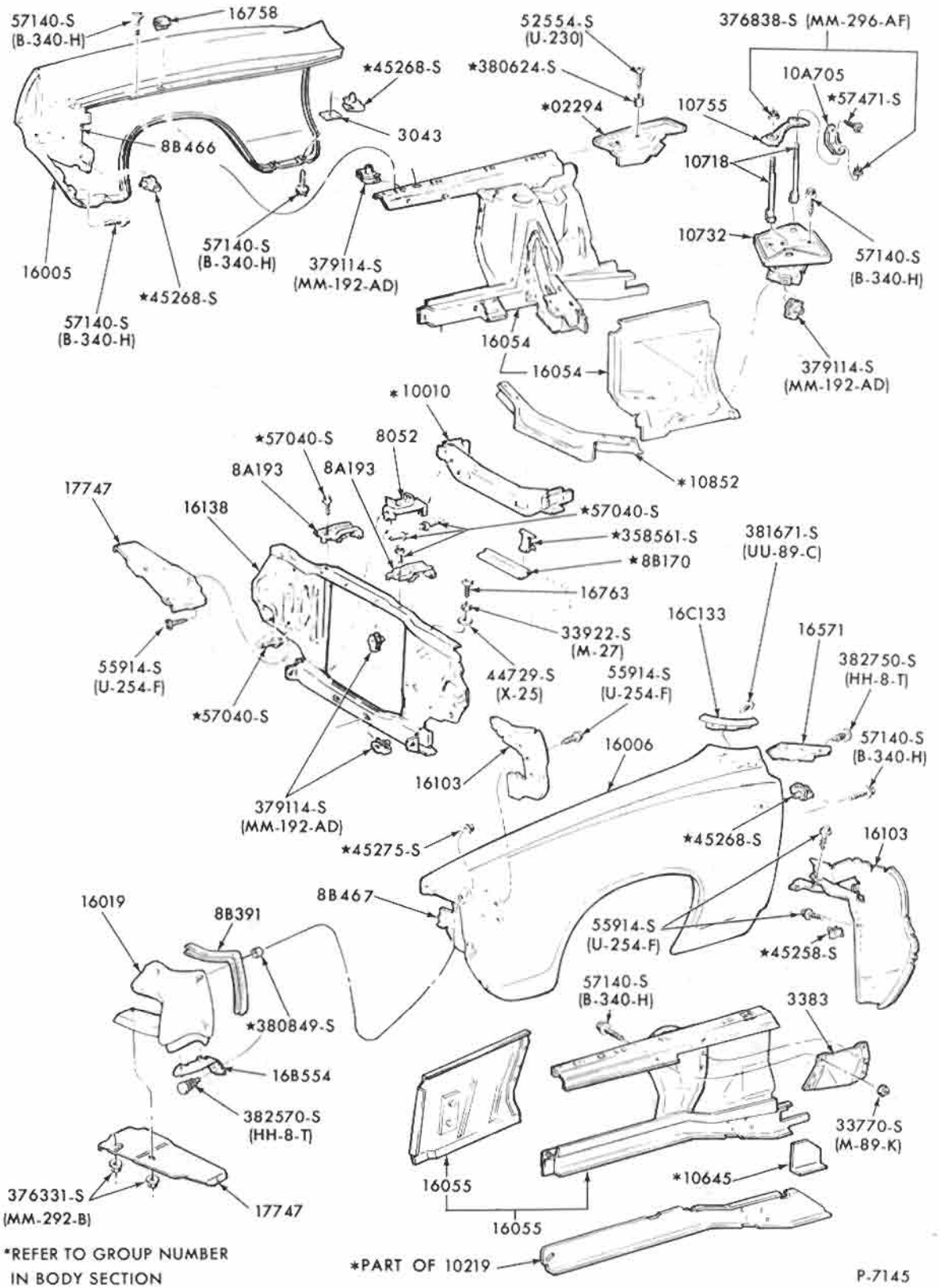

*REFER TO GROUP NUMBER IN BODY SECTION

P-7145

FENDERS, APRONS and RELATED PARTS
1970/71 FAIRLANE/TORINO

COPYRIGHT © 1975 — FORD MOTOR COMPANY — DEARBORN, MICHIGAN

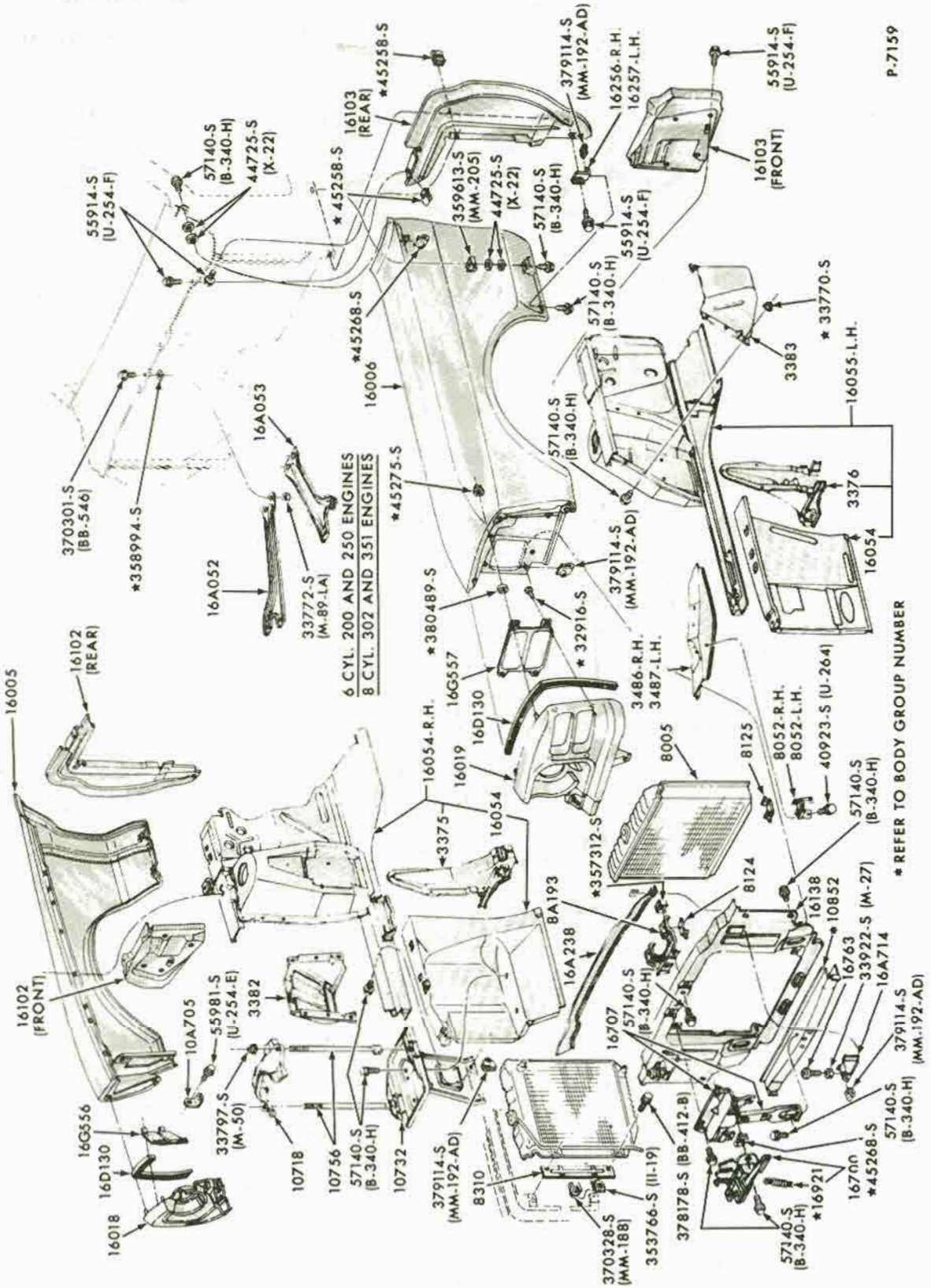

FENDERS, APRONS and RELATED PARTS
1970 MUSTANG

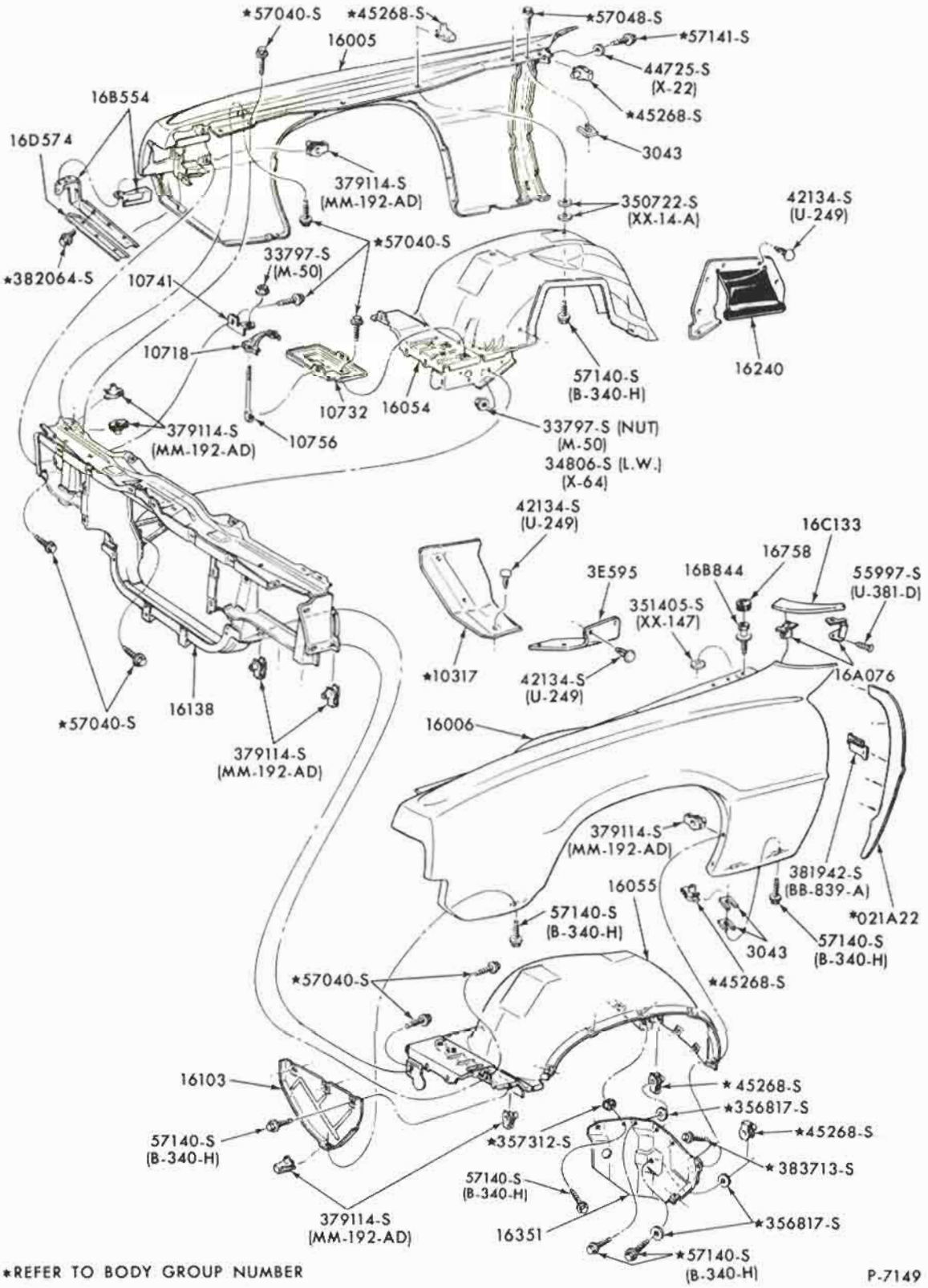

*REFER TO BODY GROUP NUMBER

P-7149

FENDERS, APRONS and RELATED PARTS
1970/71 THUNDERBIRD

COPYRIGHT © 1975 — FORD MOTOR COMPANY — DEARBORN, MICHIGAN

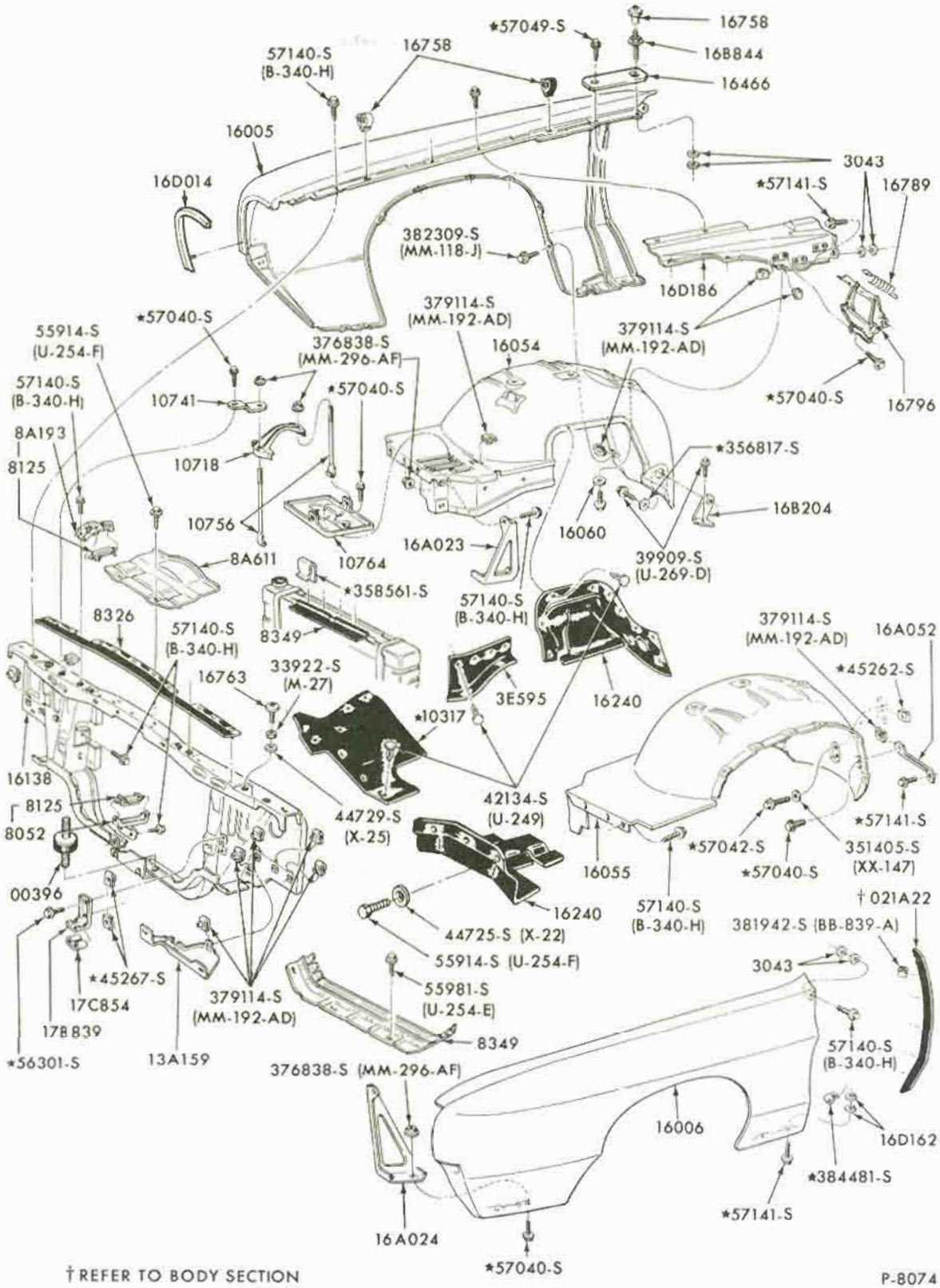

† REFER TO BODY SECTION

P-8074

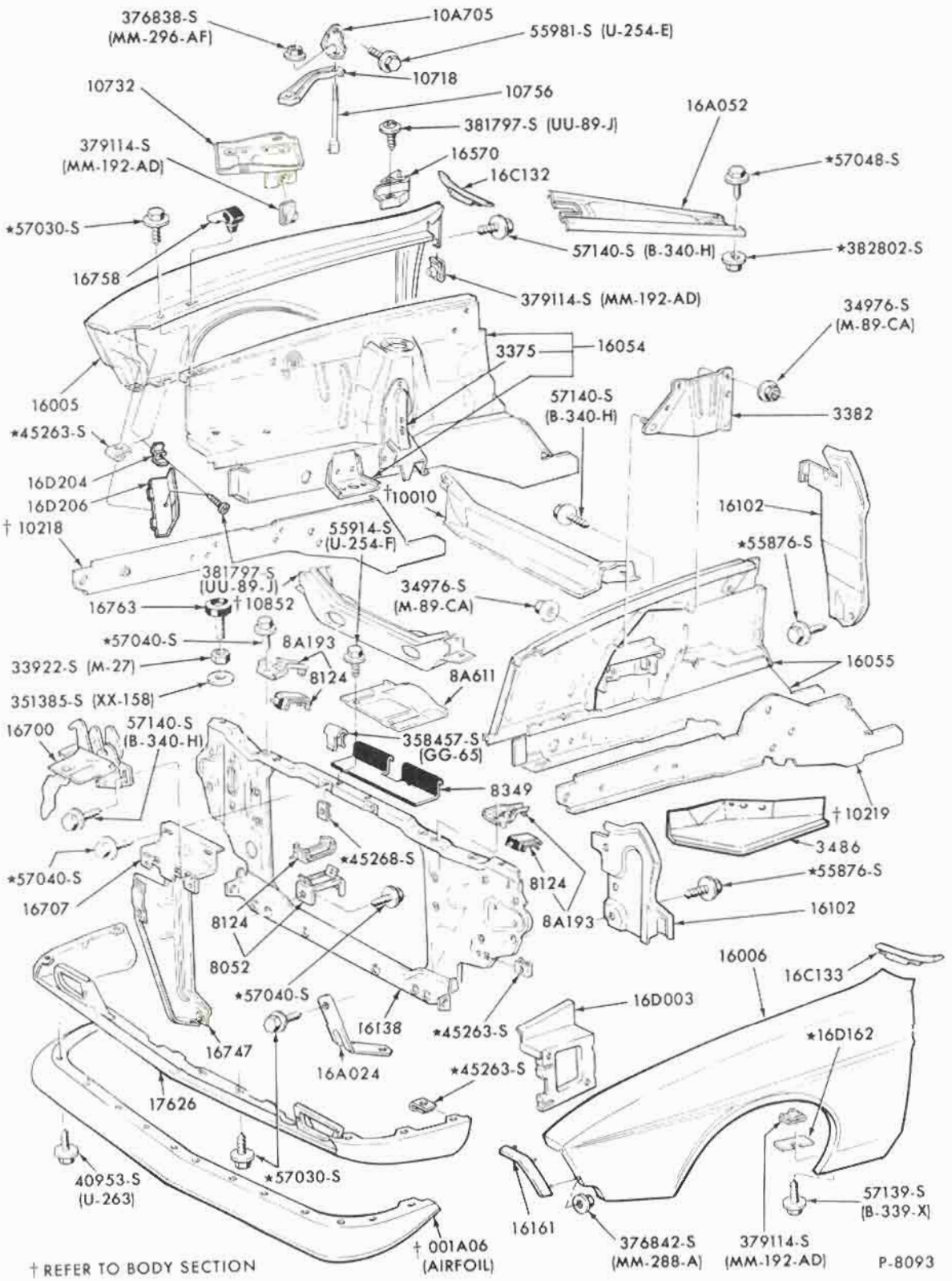

FENDERS, APRONS and RELATED PARTS

1971/72 MUSTANG

COPYRIGHT © 1975 — FORD MOTOR COMPANY — DEARBORN, MICHIGAN

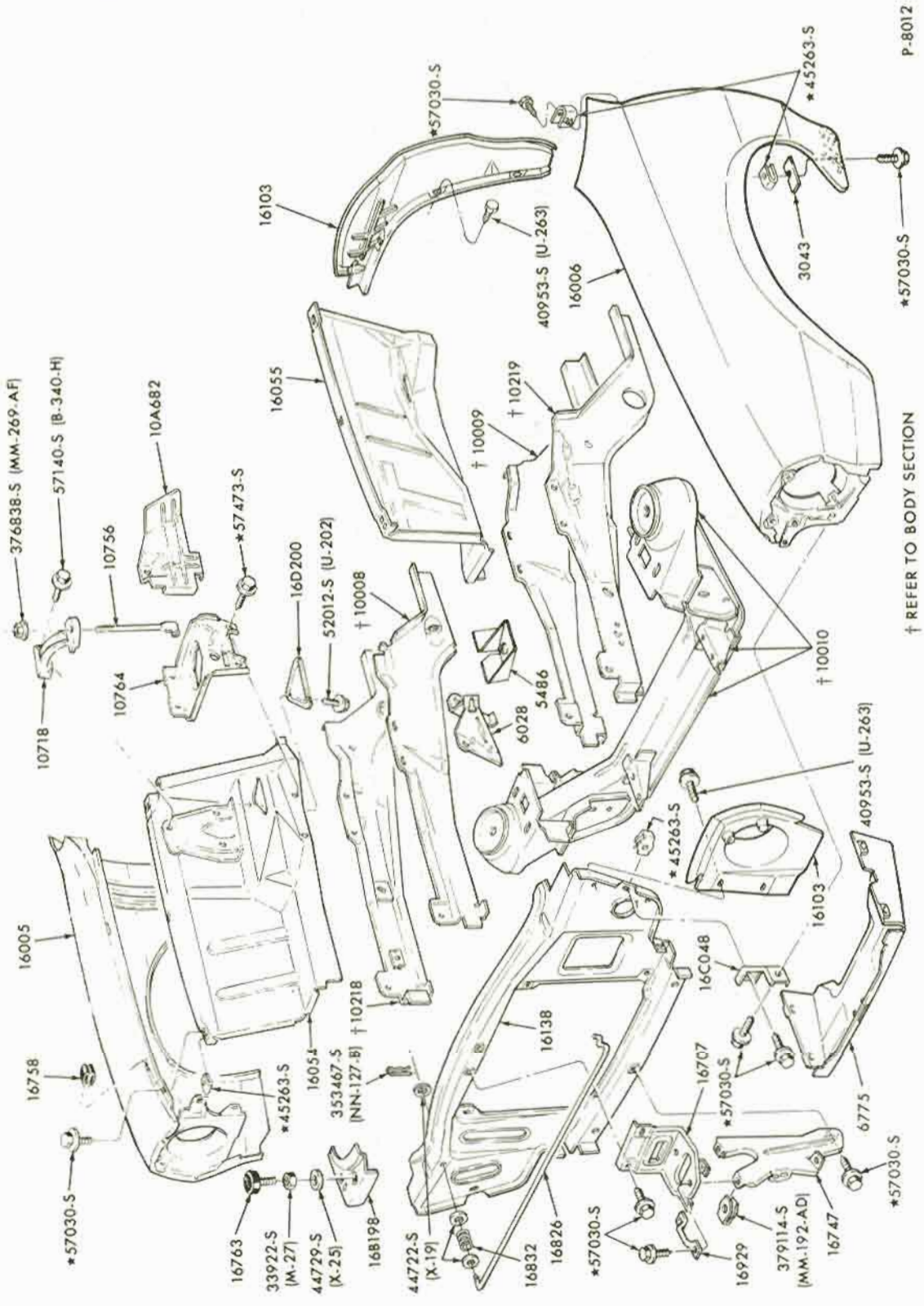

FENDERS, APRONS and RELATED PARTS

1971/72 PINTO

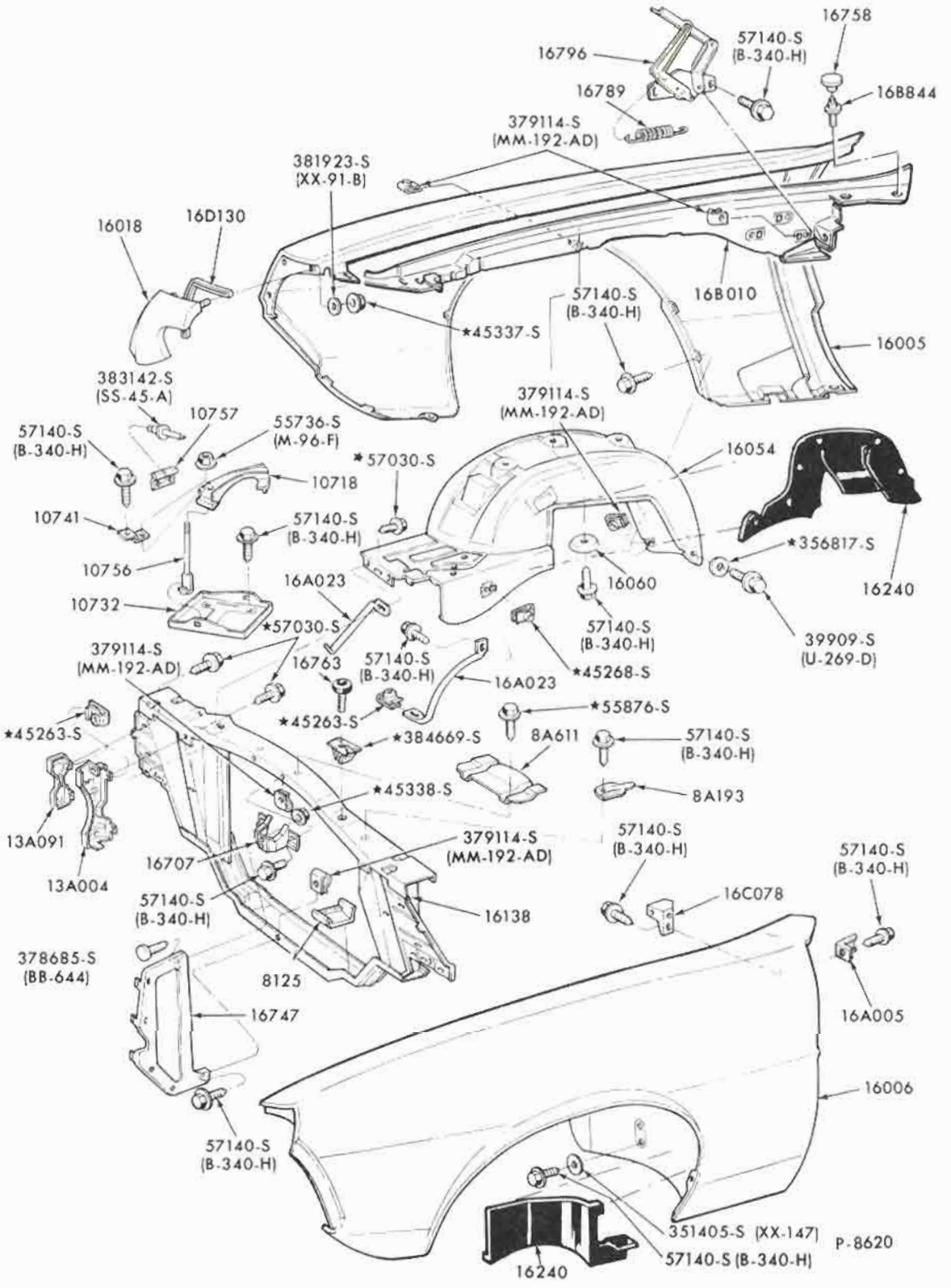

FENDERS, APRONS and RELATED PARTS
1972 TORINO

COPYRIGHT © 1975 — FORD MOTOR COMPANY — DEARBORN, MICHIGAN

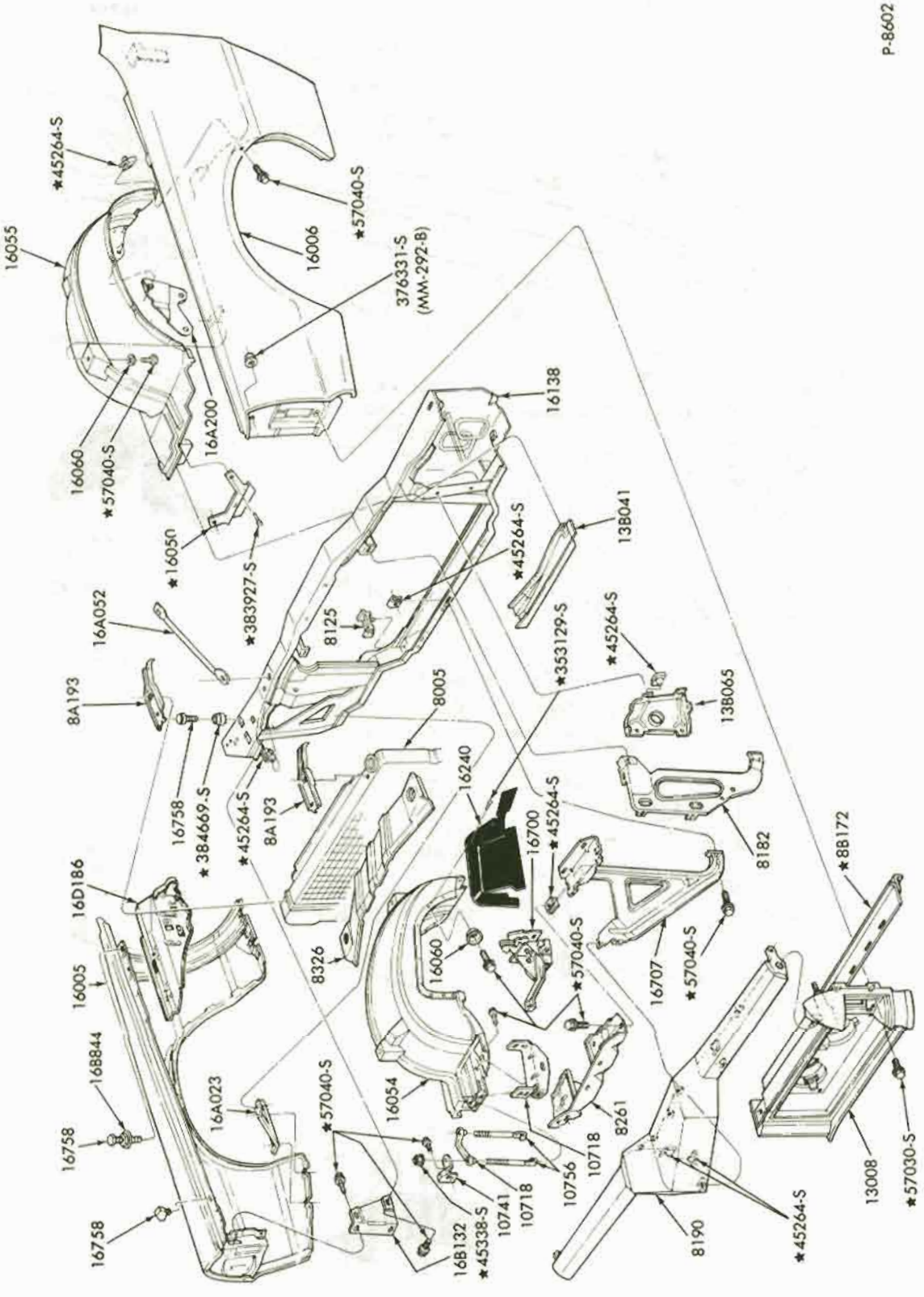

FENDERS, APRONS and RELATED PARTS
1972 THUNDERBIRD

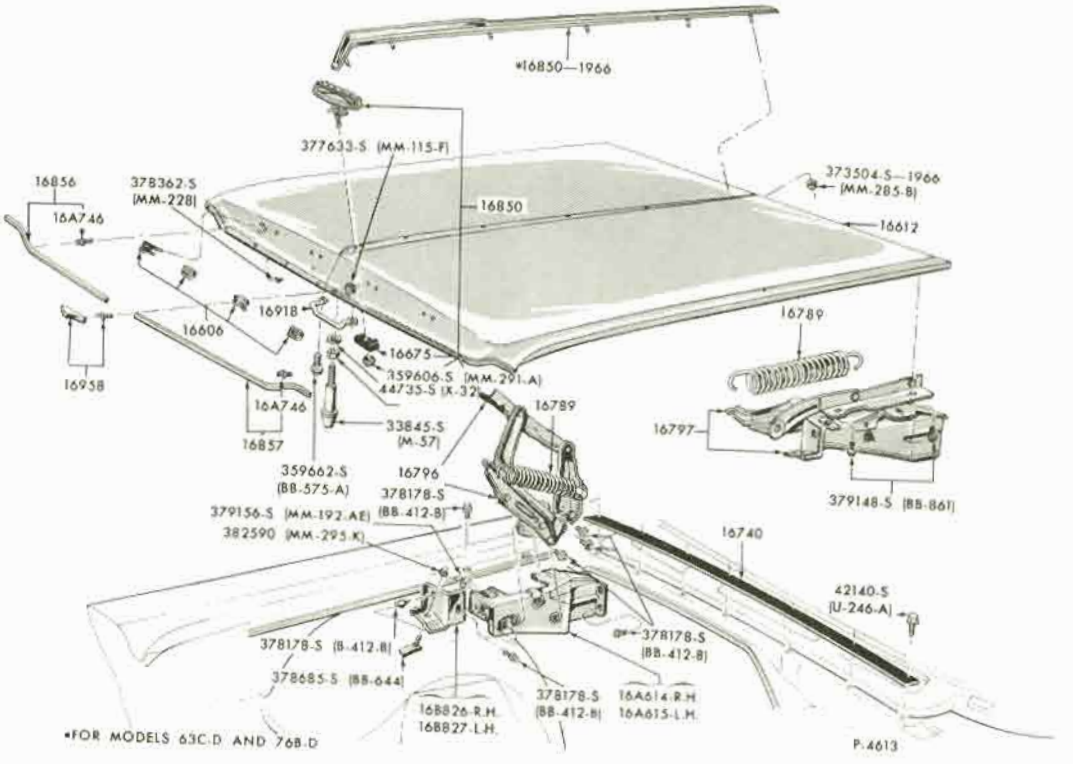

HOOD and RELATED PARTS
1965/66 FORD

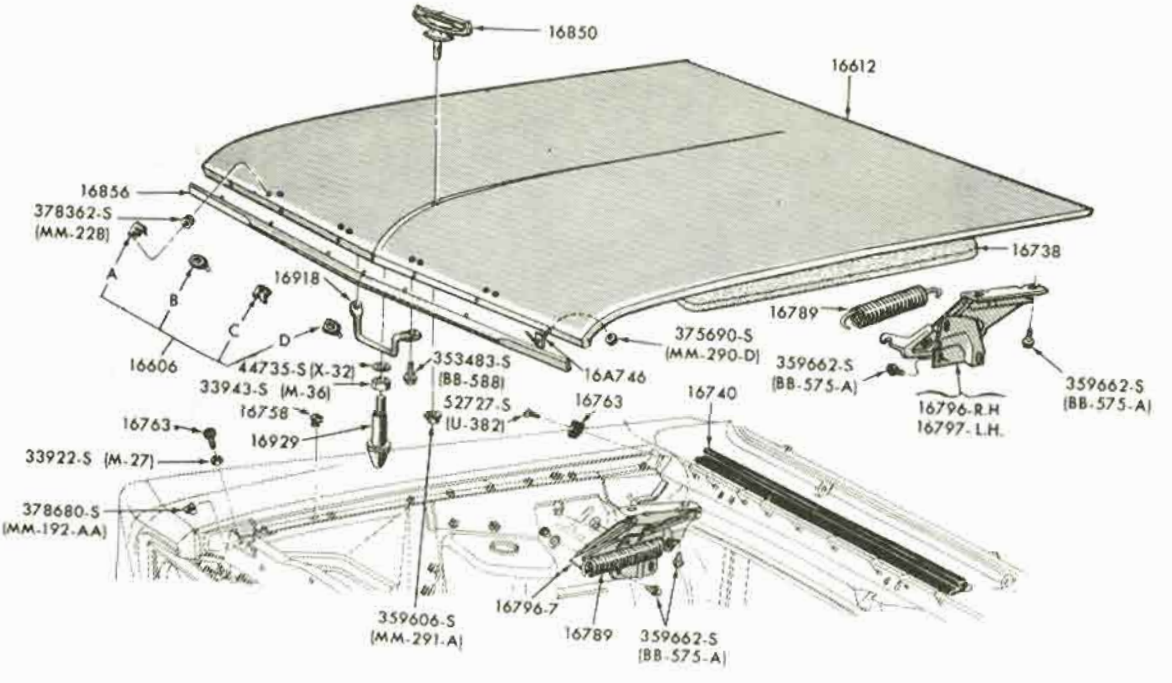

HOOD and RELATED PARTS
1965 FAIRLANE

COPYRIGHT © 1975 — FORD MOTOR COMPANY — DEARBORN, MICHIGAN

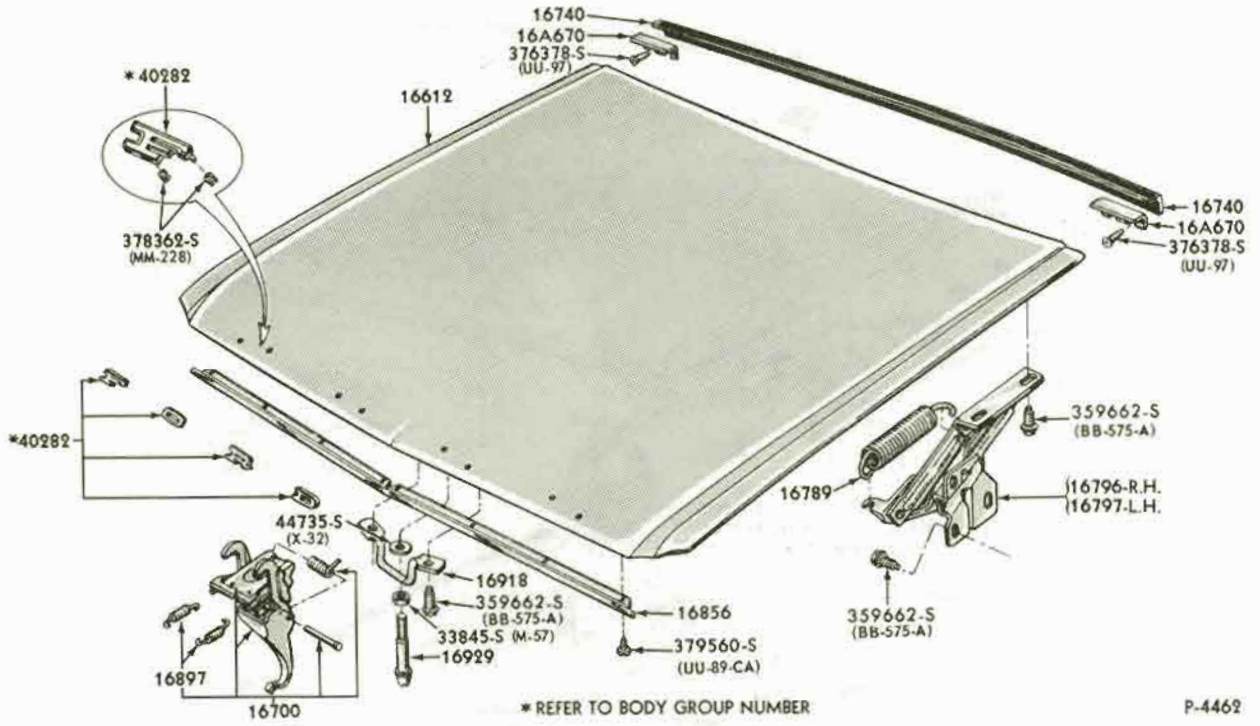

HOOD and RELATED PARTS
1965/66 MUSTANG

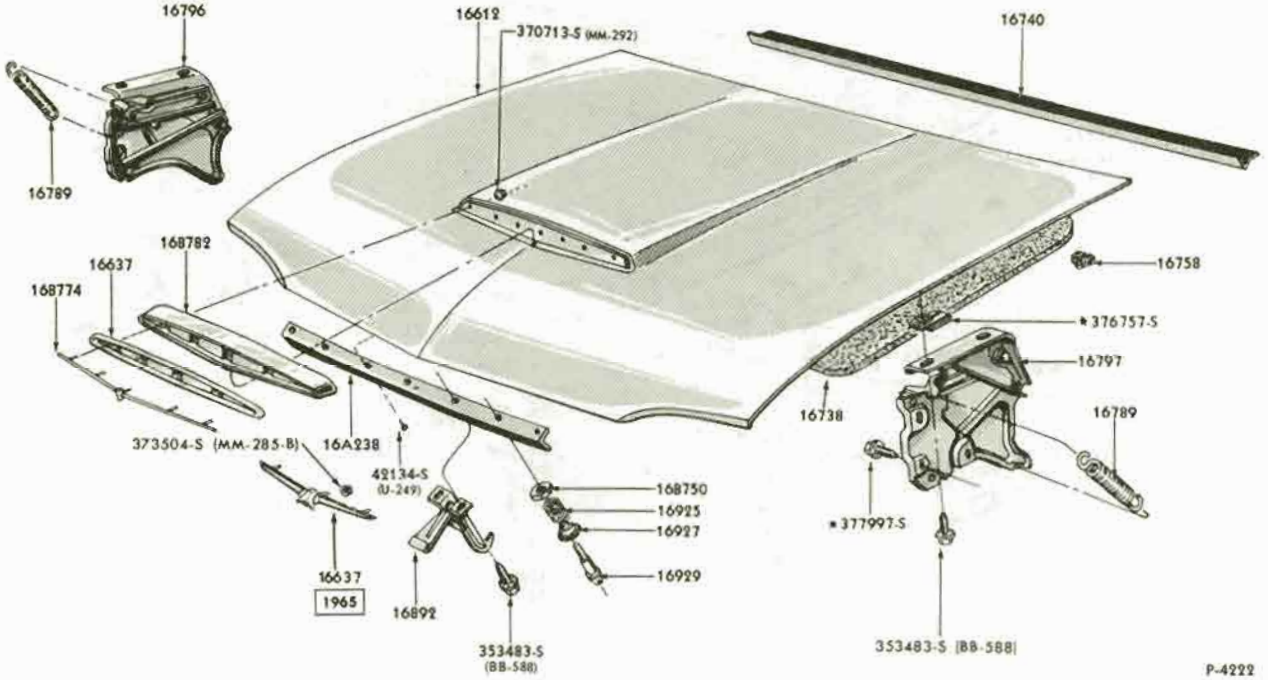

HOOD and RELATED PARTS
1965 THUNDERBIRD

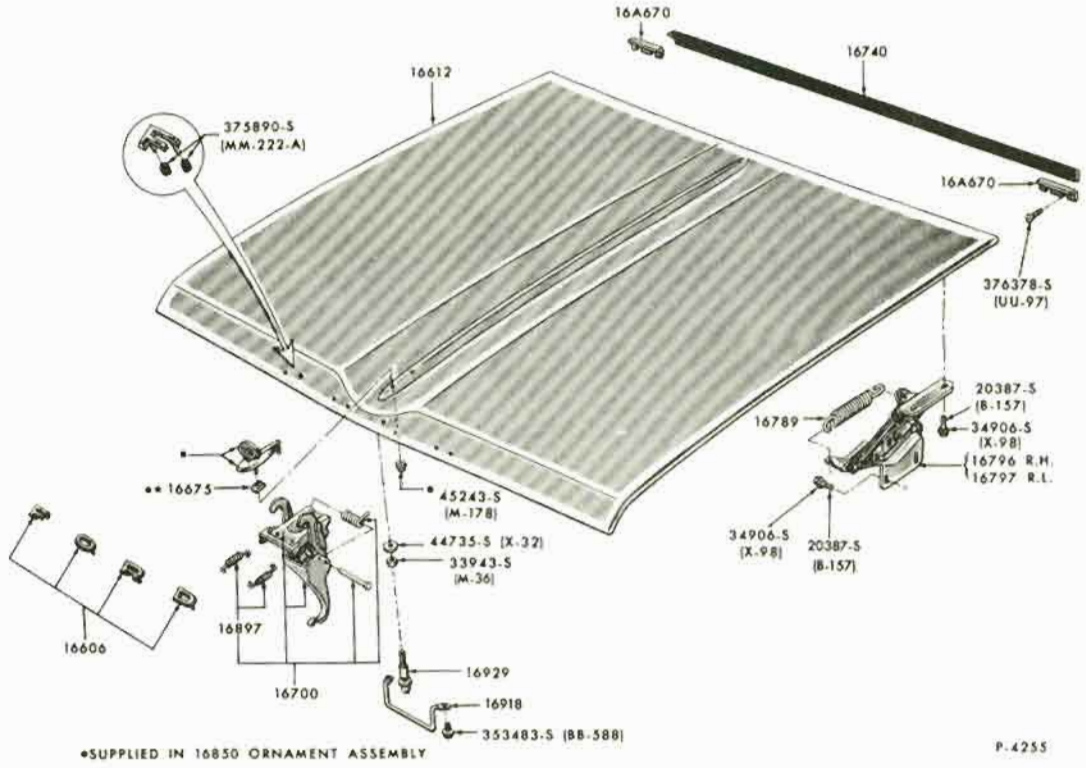

HOOD and RELATED PARTS
1965 FALCON

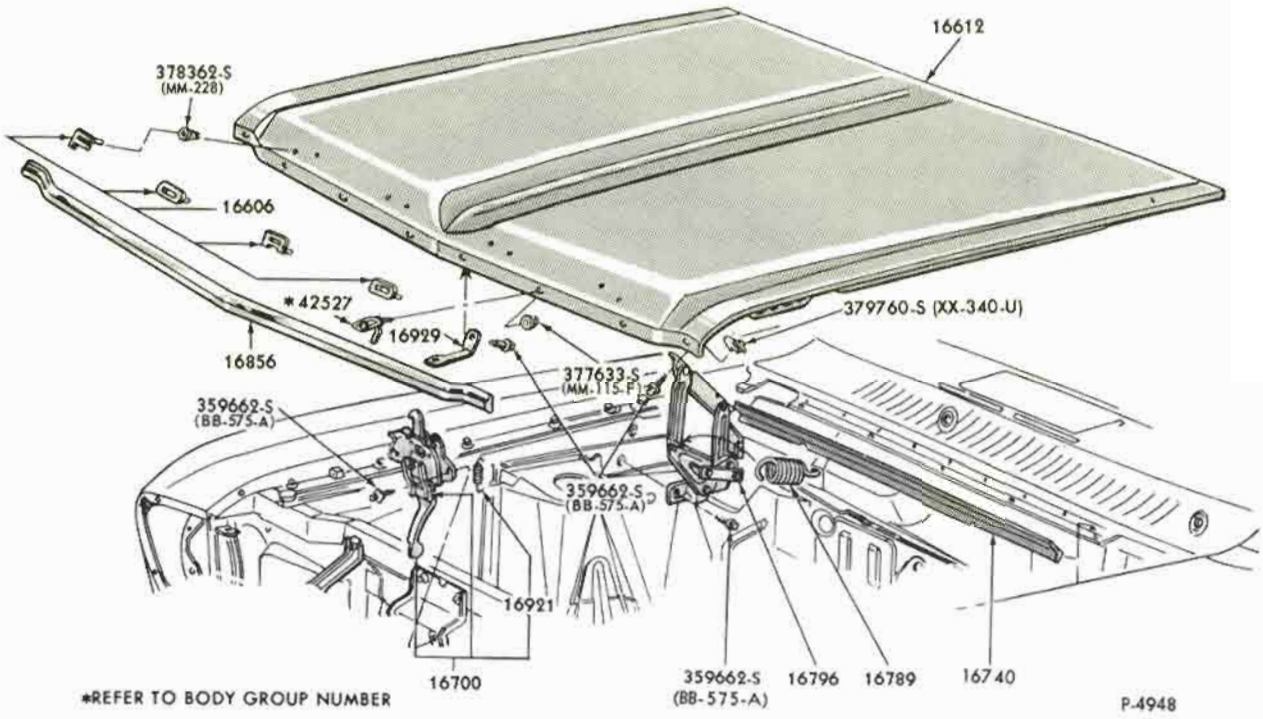

HOOD and RELATED PARTS
1966/67 FALCON

COPYRIGHT © 1975 — FORD MOTOR COMPANY — DEARBORN, MICHIGAN

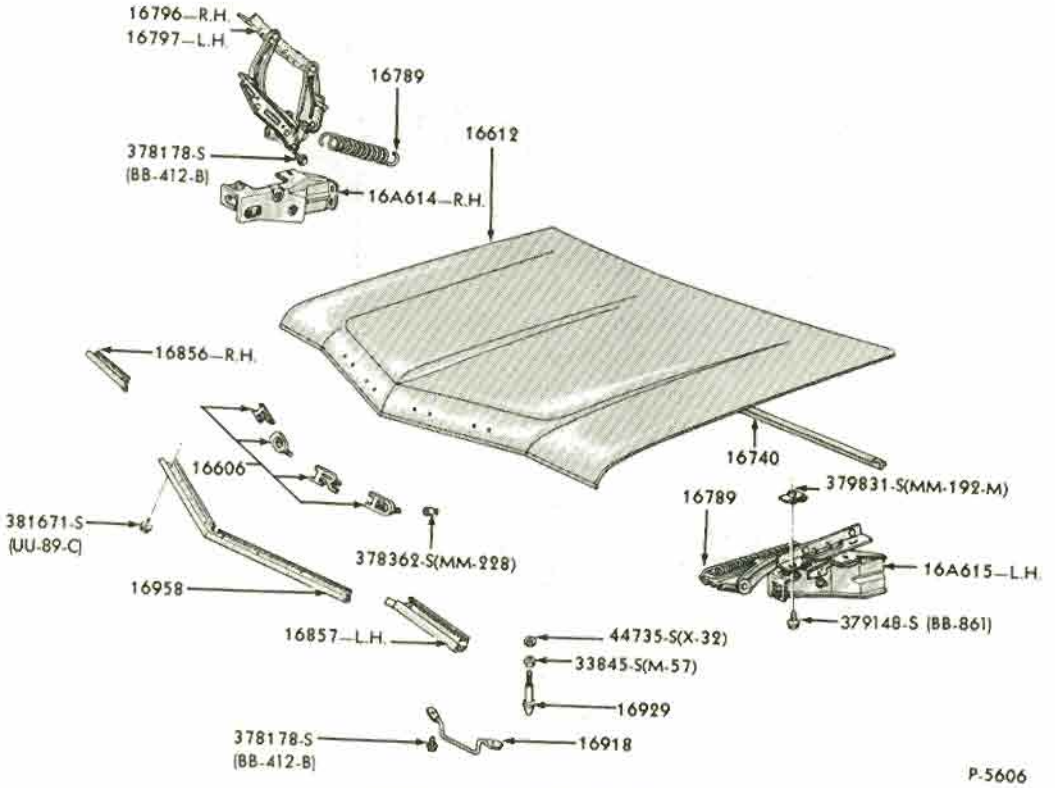

HOOD and RELATED PARTS
1967 FORD

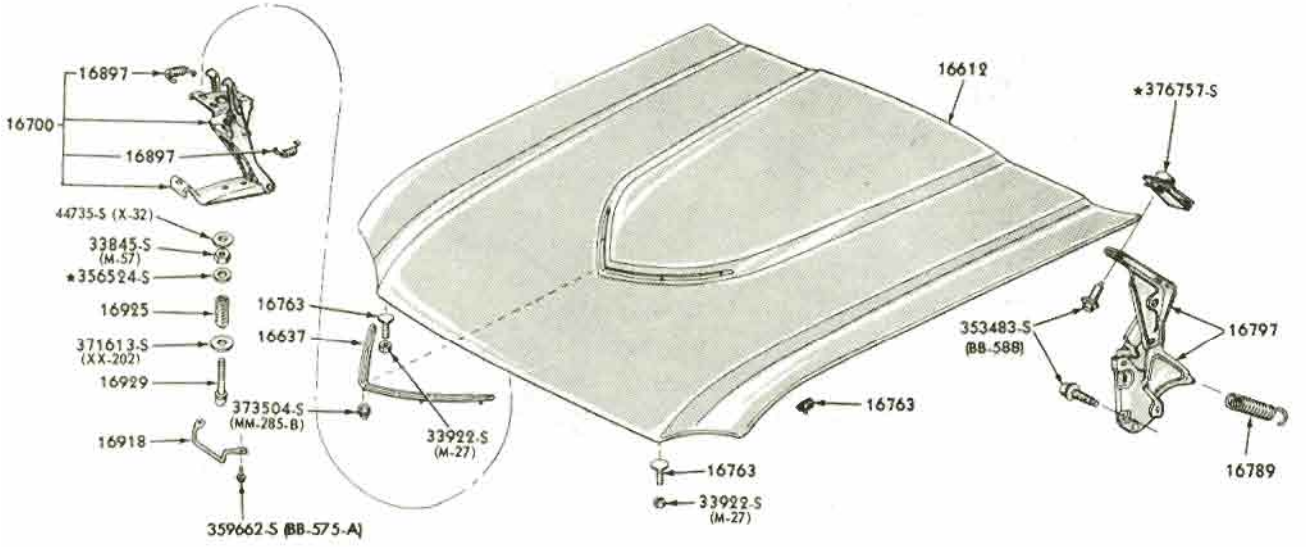

HOOD and RELATED PARTS
1966 THUNDERBIRD

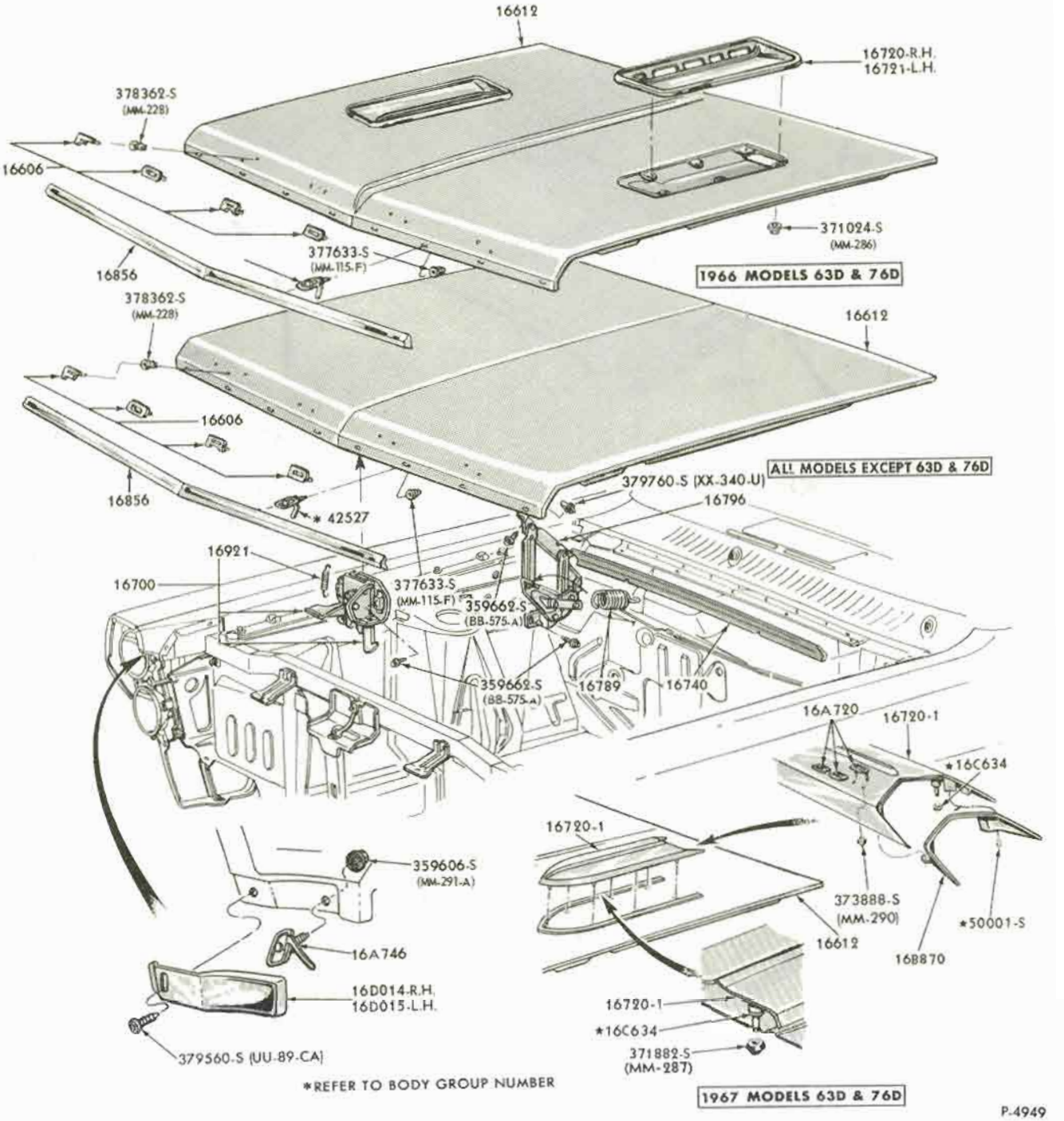

May, 1975 COPYRIGHT © 1975 — FORD MOTOR COMPANY — DEARBORN, MICHIGAN FINAL ISSUE

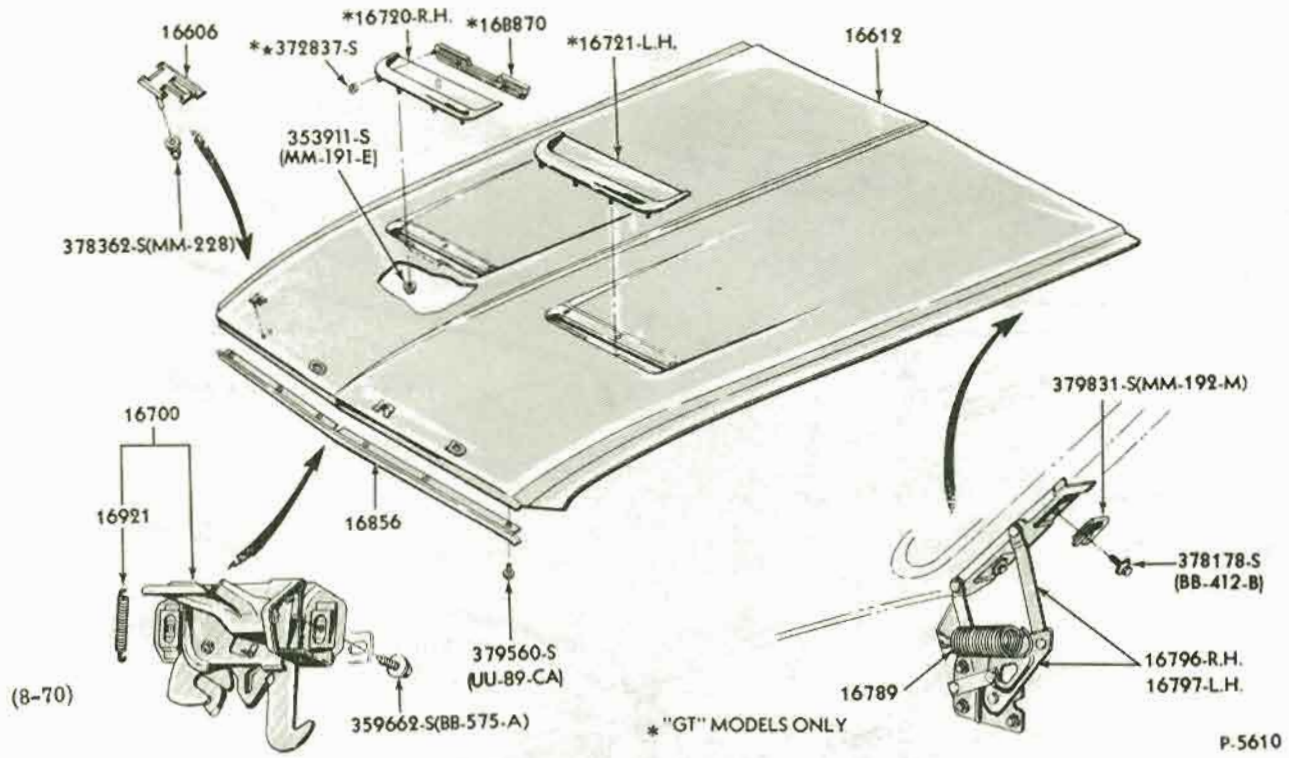

HOOD and RELATED PARTS
1967/68 MUSTANG

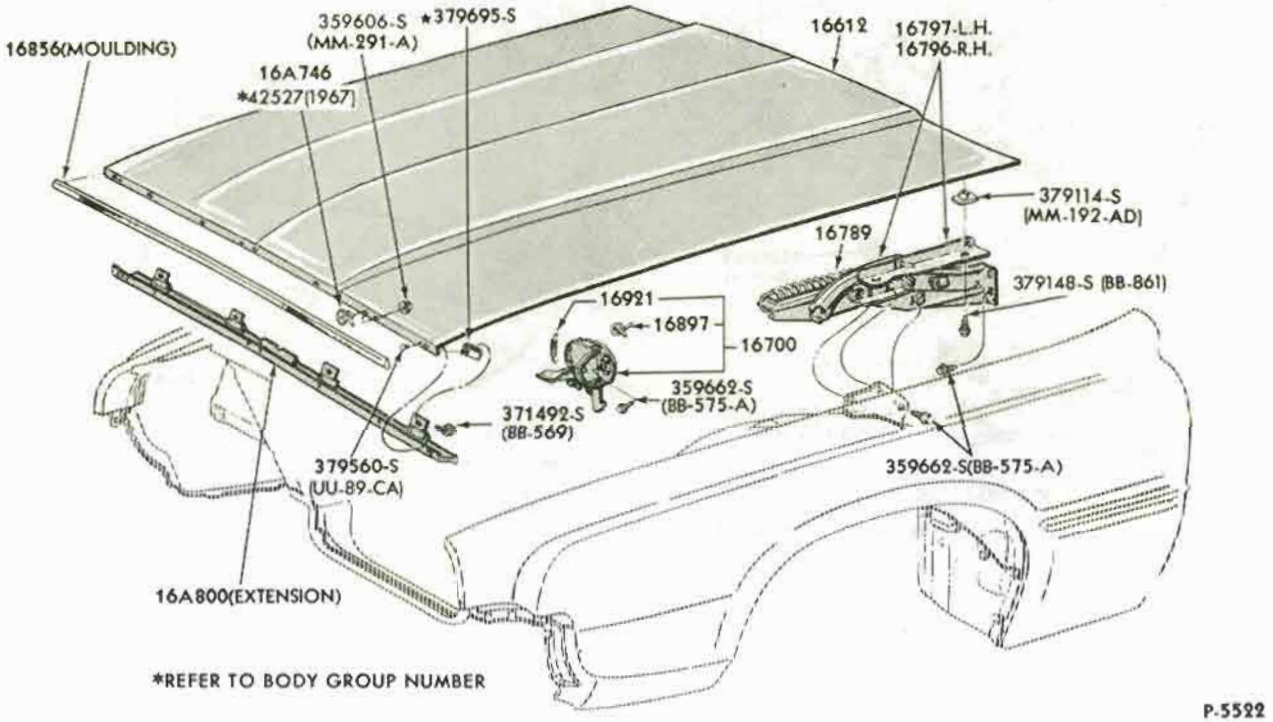

HOOD and RELATED PARTS
1967/69 THUNDERBIRD

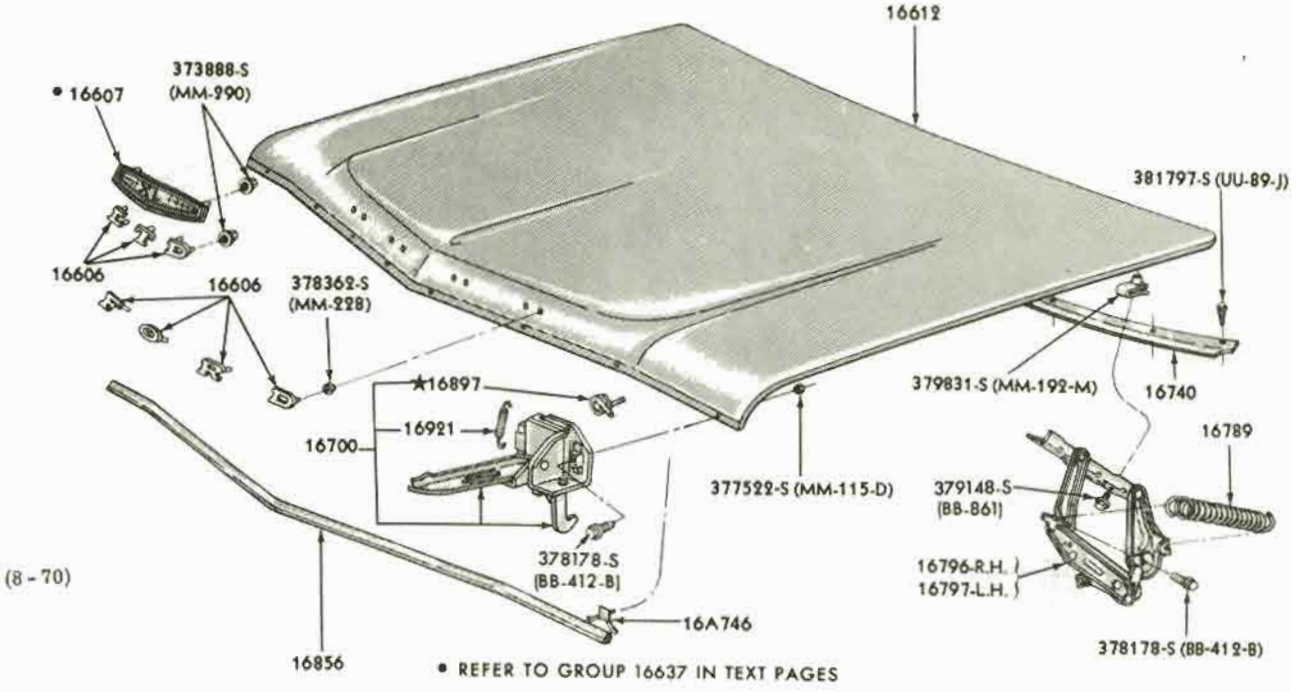

HOOD and RELATED PARTS
1968 FORD

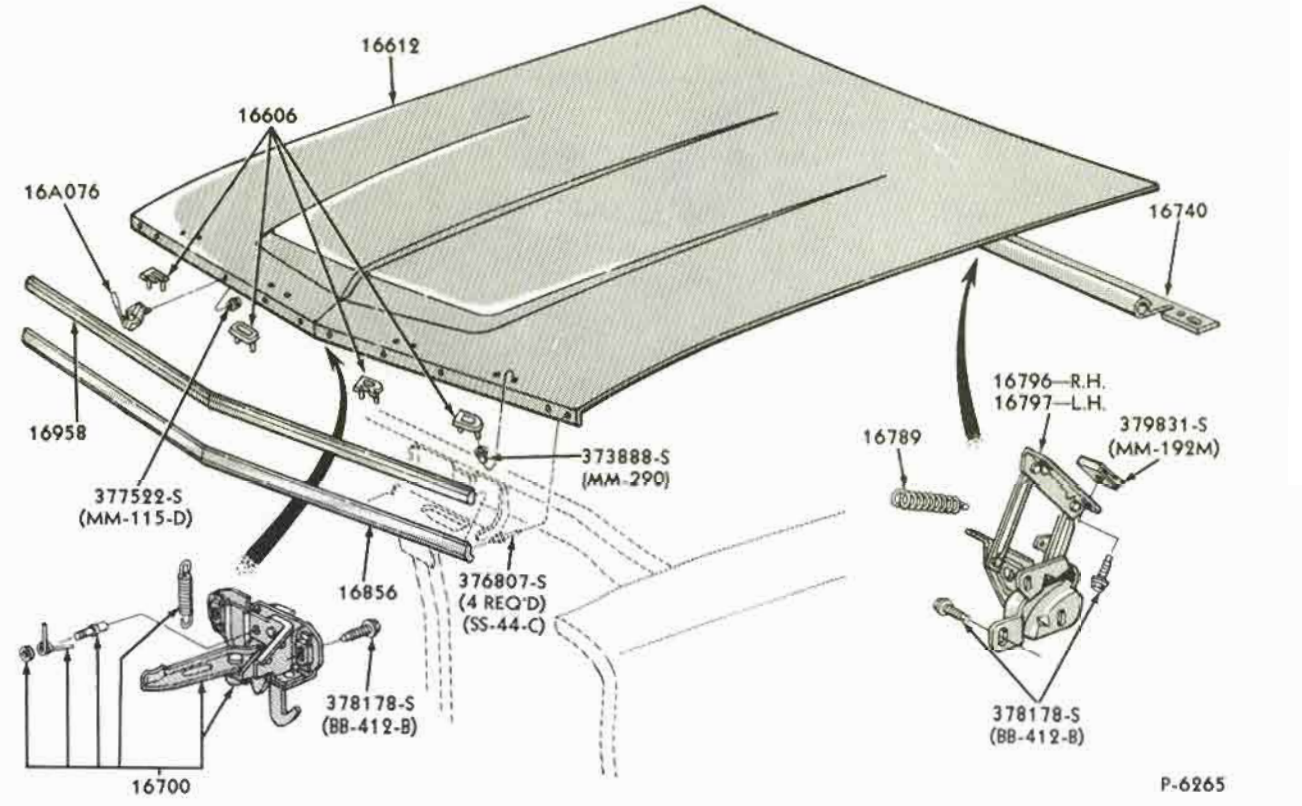

HOOD and RELATED PARTS
1968 FAIRLANE/TORINO

COPYRIGHT © 1975 — FORD MOTOR COMPANY — DEARBORN, MICHIGAN

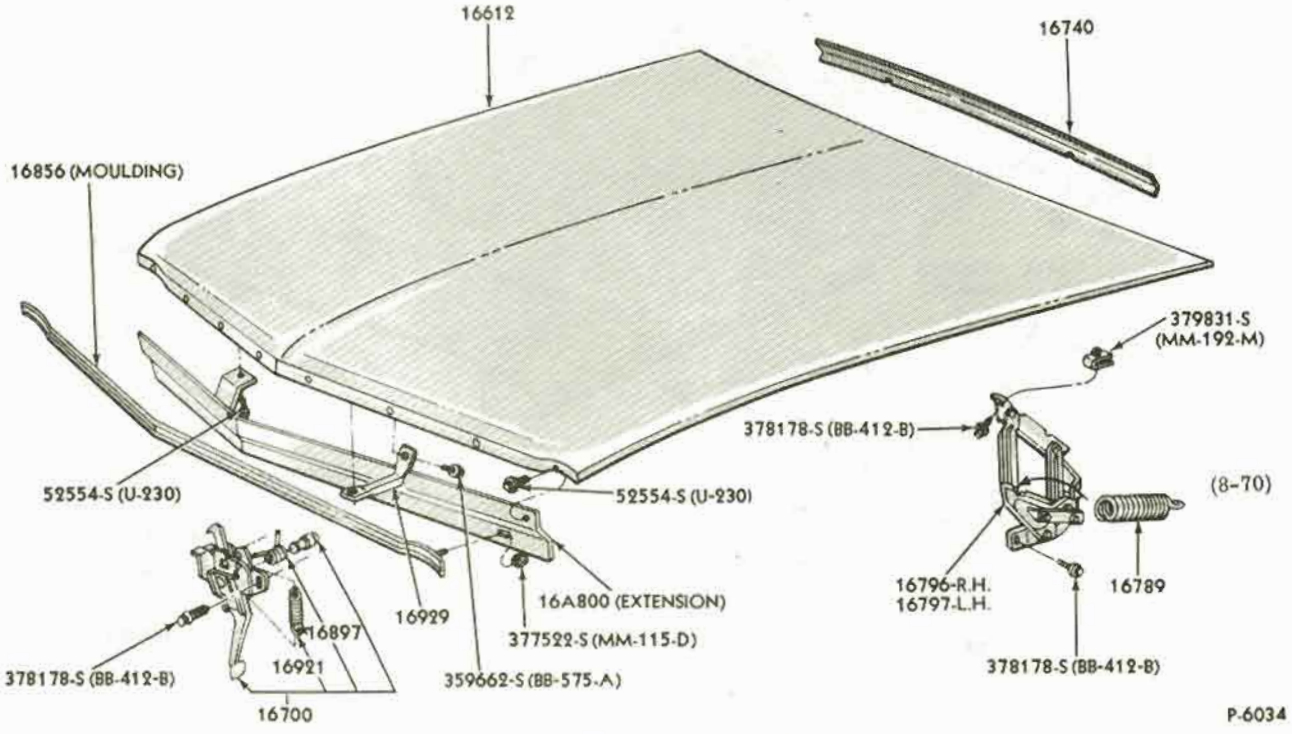

HOOD and RELATED PARTS
1968/70 FALCON

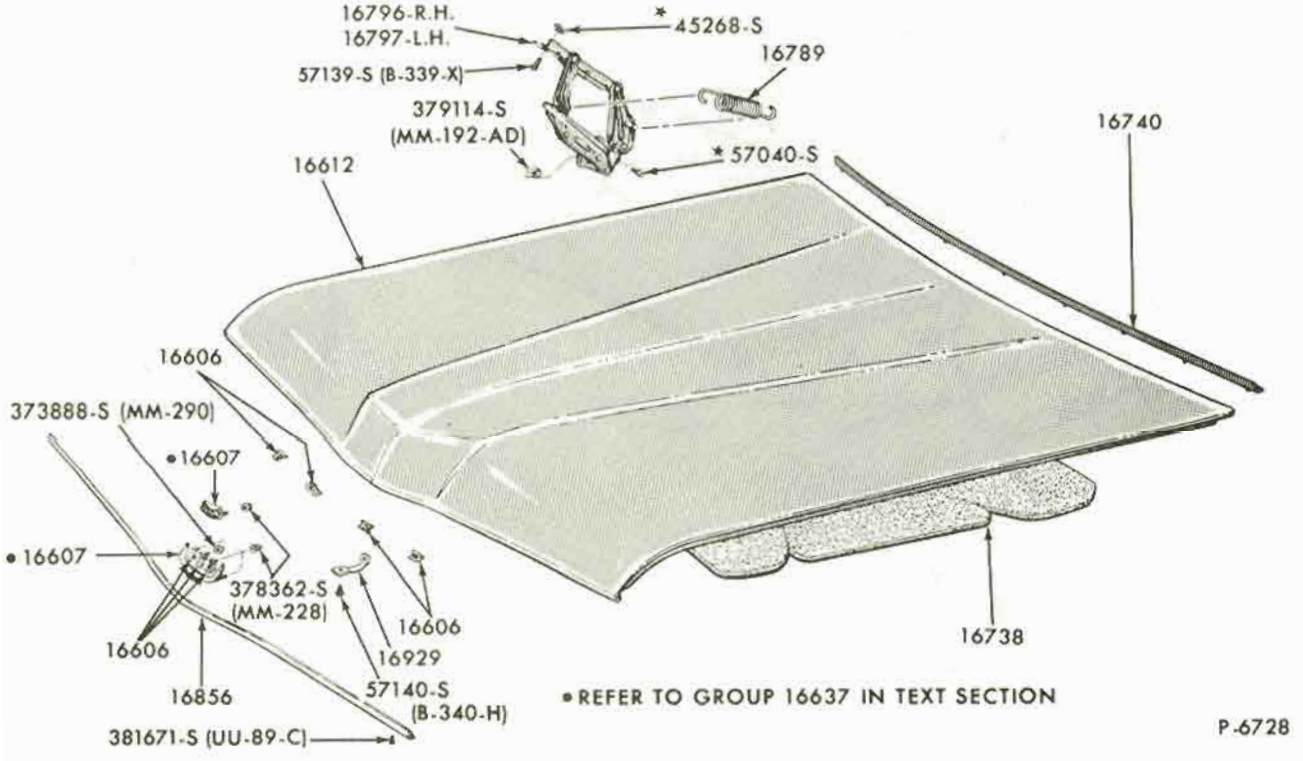

HOOD and RELATED PARTS
1969/70 FORD

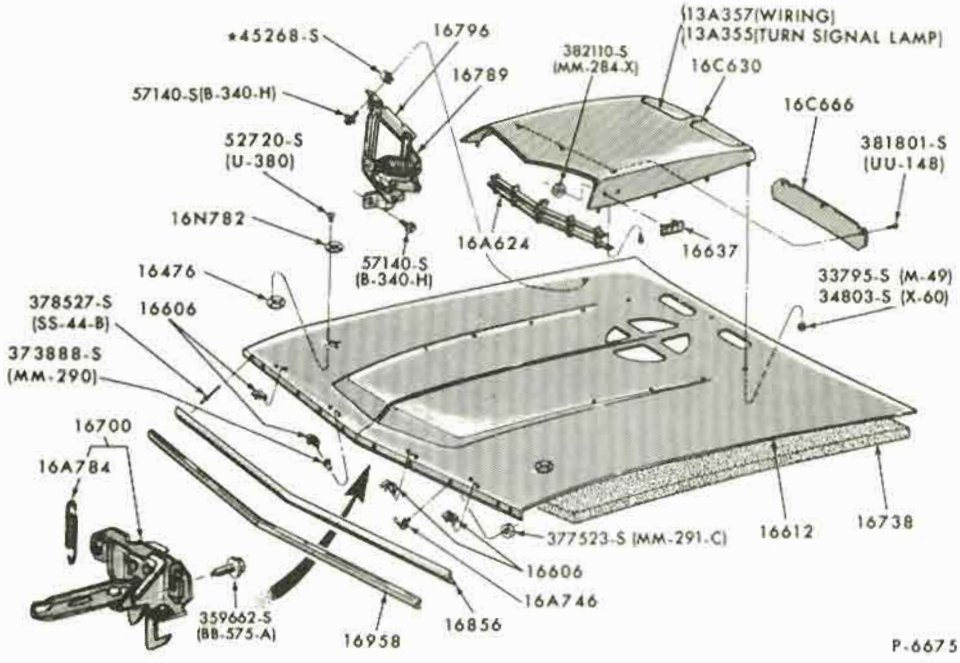

HOOD and RELATED PARTS
1969 FAIRLANE/TORINO

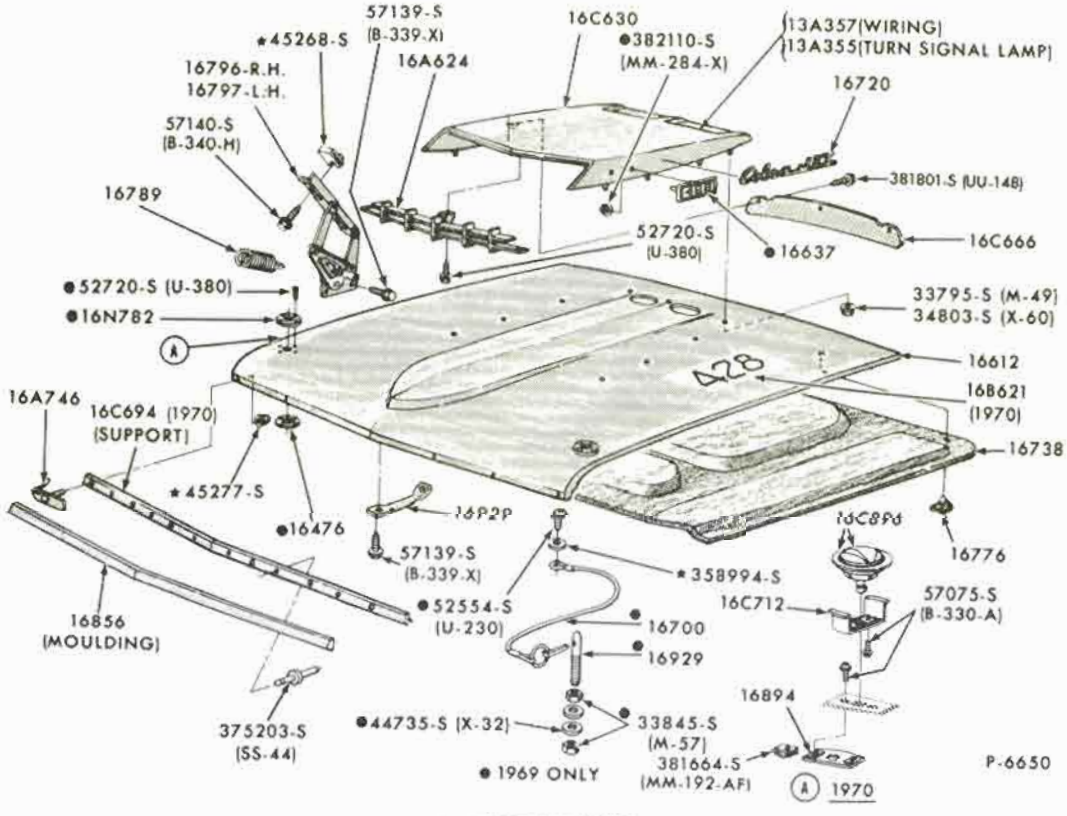

HOOD and RELATED PARTS
1969/70 MUSTANG - except SHELBY GT350/500

COPYRIGHT © 1975 — FORD MOTOR COMPANY — DEARBORN, MICHIGAN

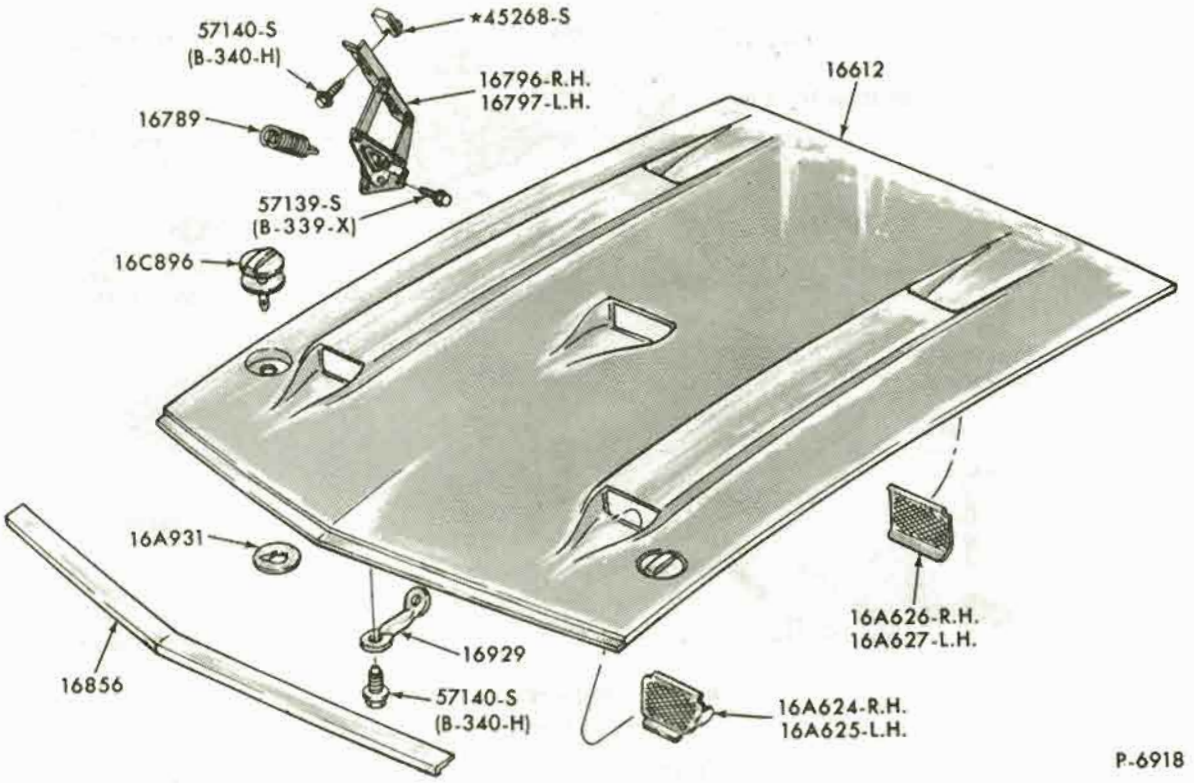

HOOD and RELATED PARTS
1969/70 MUSTANG - SHELBY GT350/500

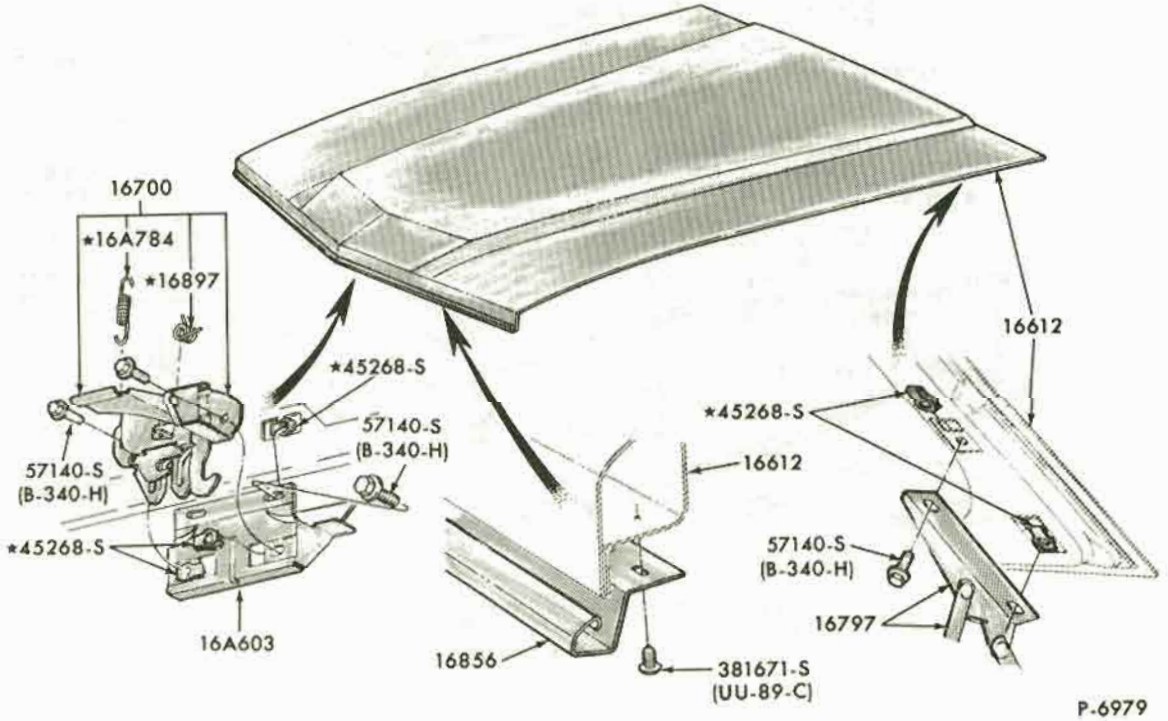

HOOD and RELATED PARTS
1970 MAVERICK

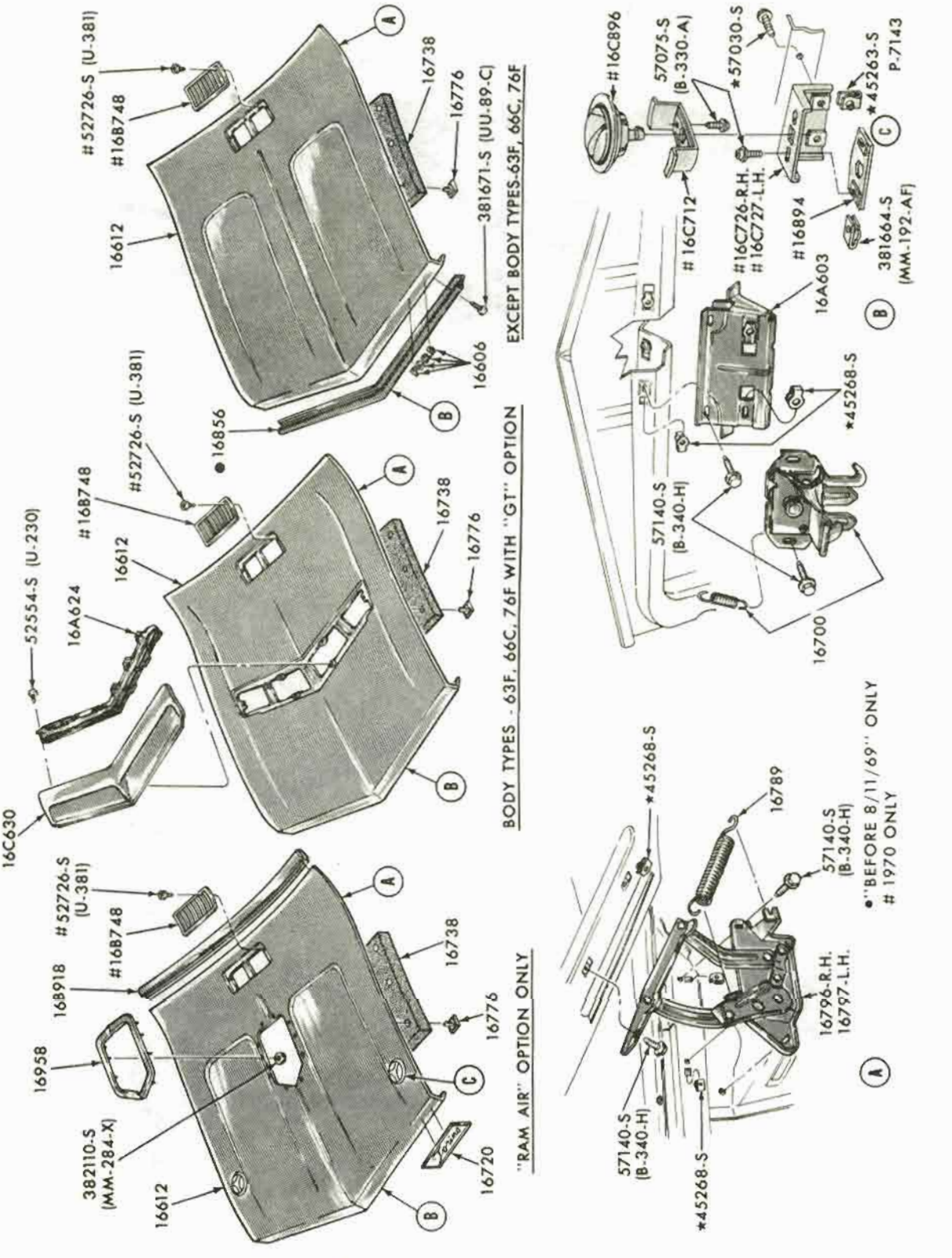

HOOD and RELATED PARTS

1970/71 FAIRLANE/TORINO

COPYRIGHT © 1975 — FORD MOTOR COMPANY — DEARBORN, MICHIGAN

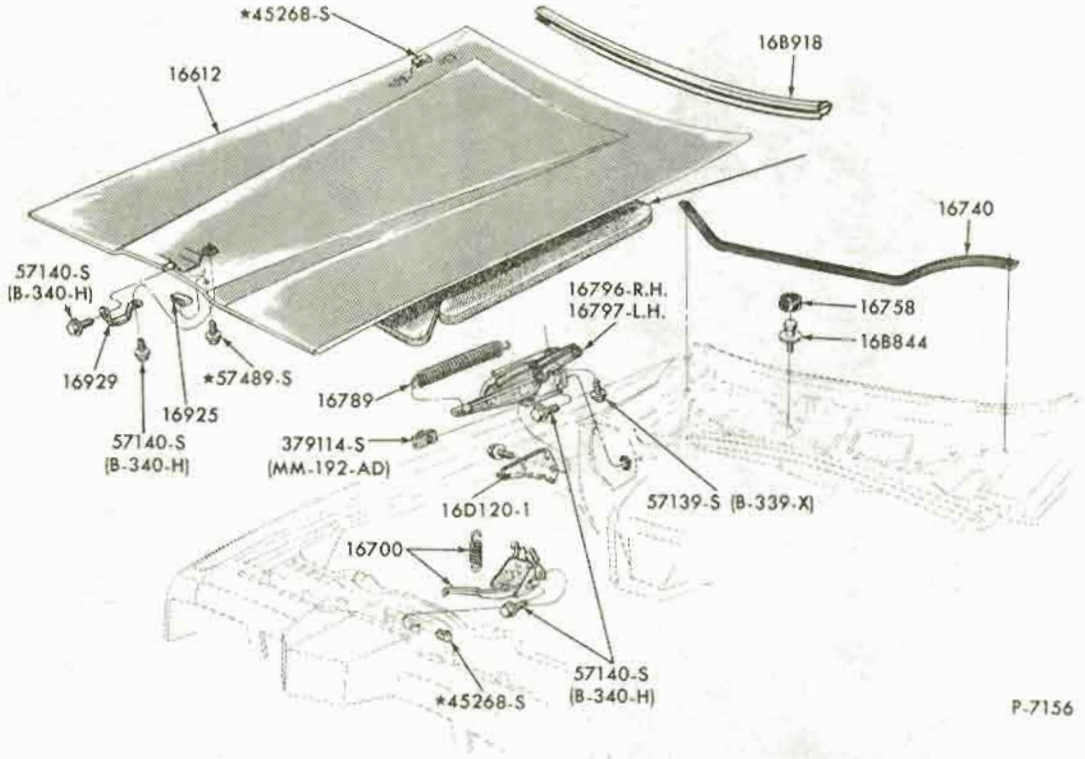

HOOD and RELATED PARTS
1970 THUNDERBIRD

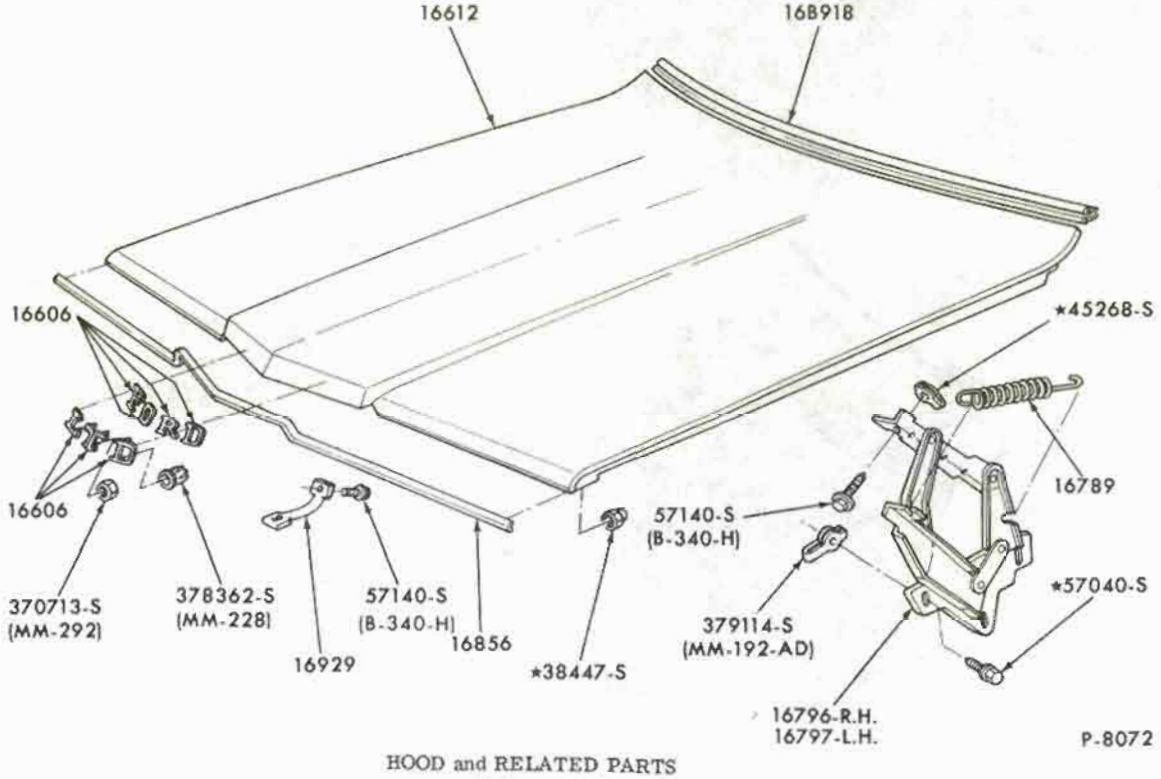

HOOD and RELATED PARTS
1971 FORD

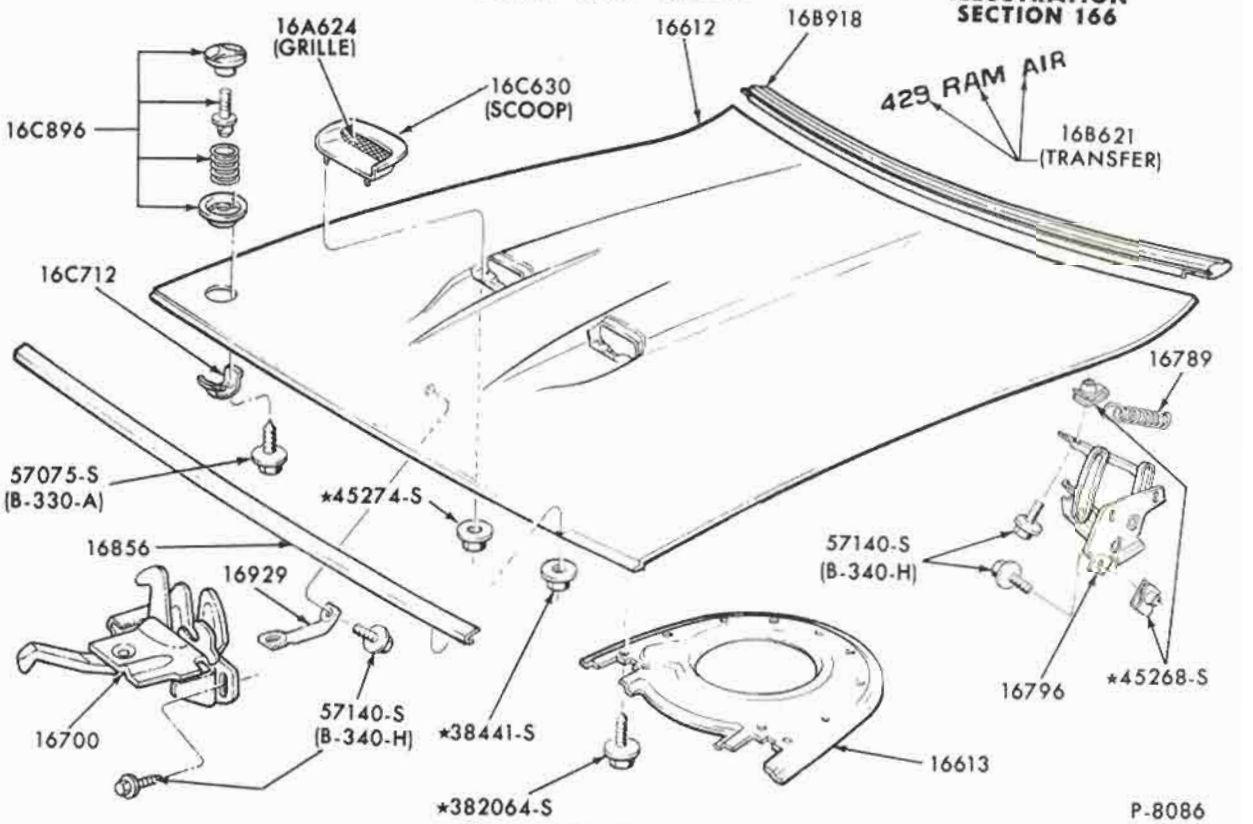

HOOD and RELATED PARTS
1971/72 MUSTANG

COPYRIGHT © 1975 — FORD MOTOR COMPANY — DEARBORN, MICHIGAN

ILLUSTRATION
SECTION 166

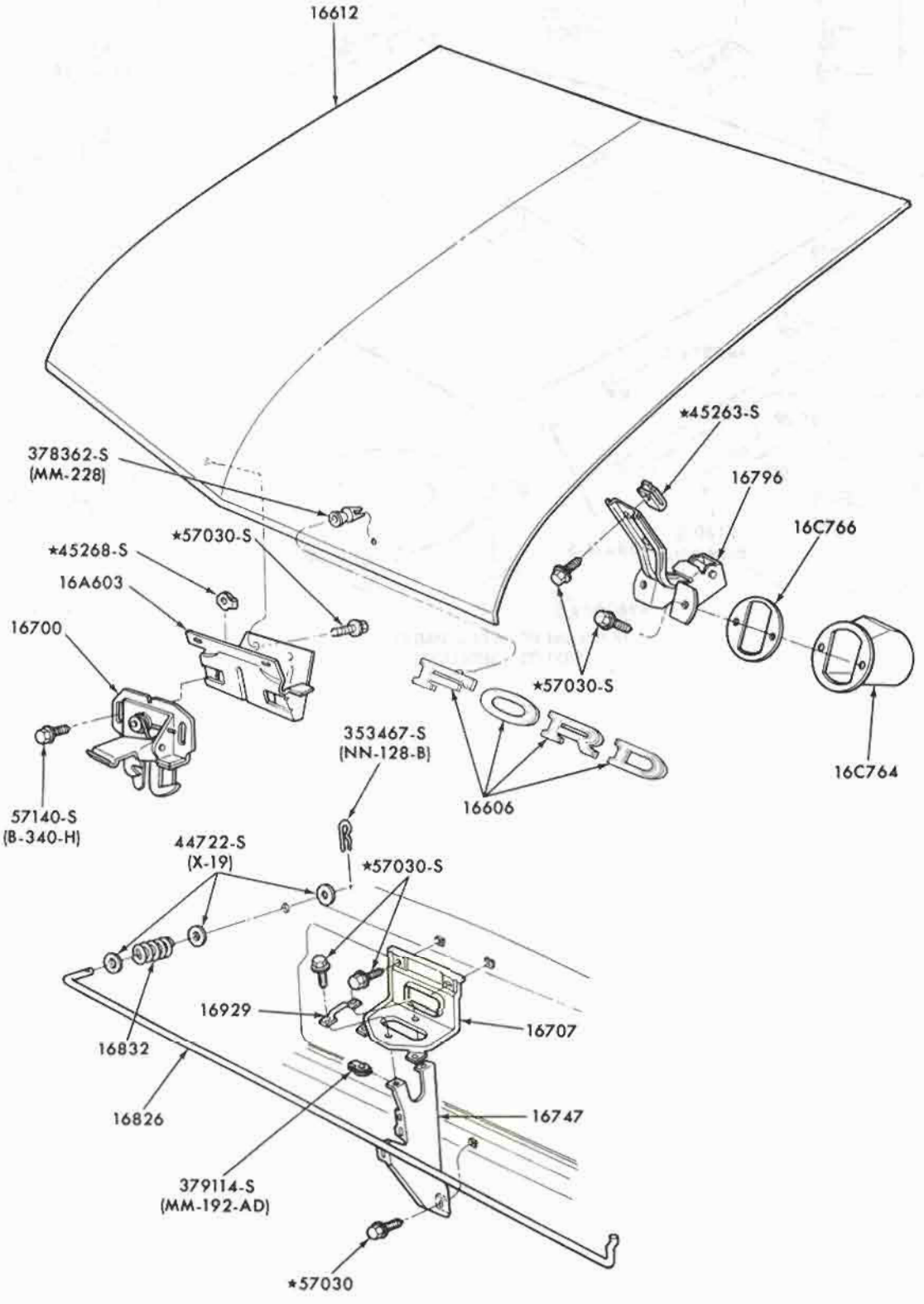

P-8015

HOOD and RELATED PARTS
1971/72 PINTO

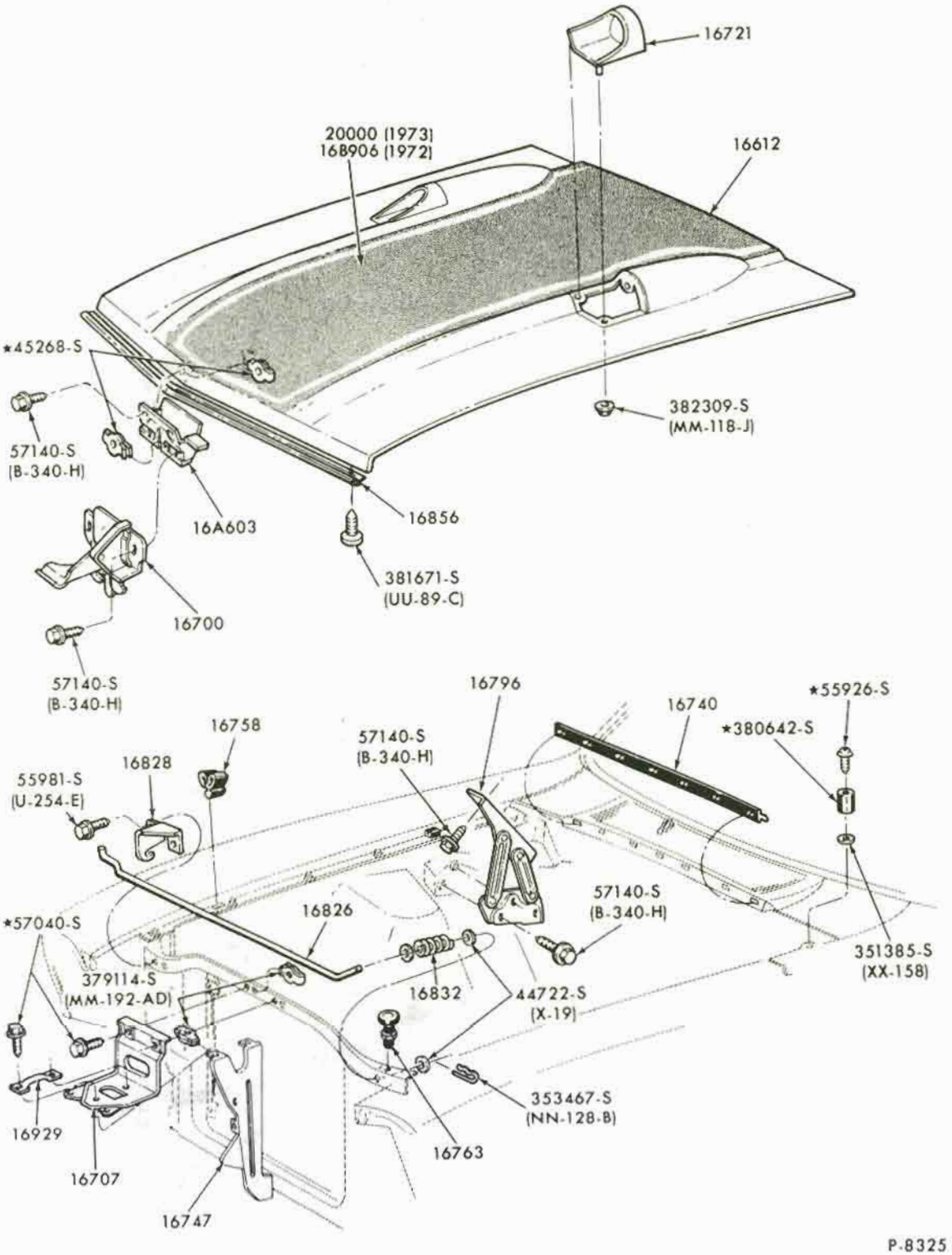

HOOD and RELATED PARTS
1971/72 MAVERICK

COPYRIGHT © 1975 — FORD MOTOR COMPANY — DEARBORN, MICHIGAN

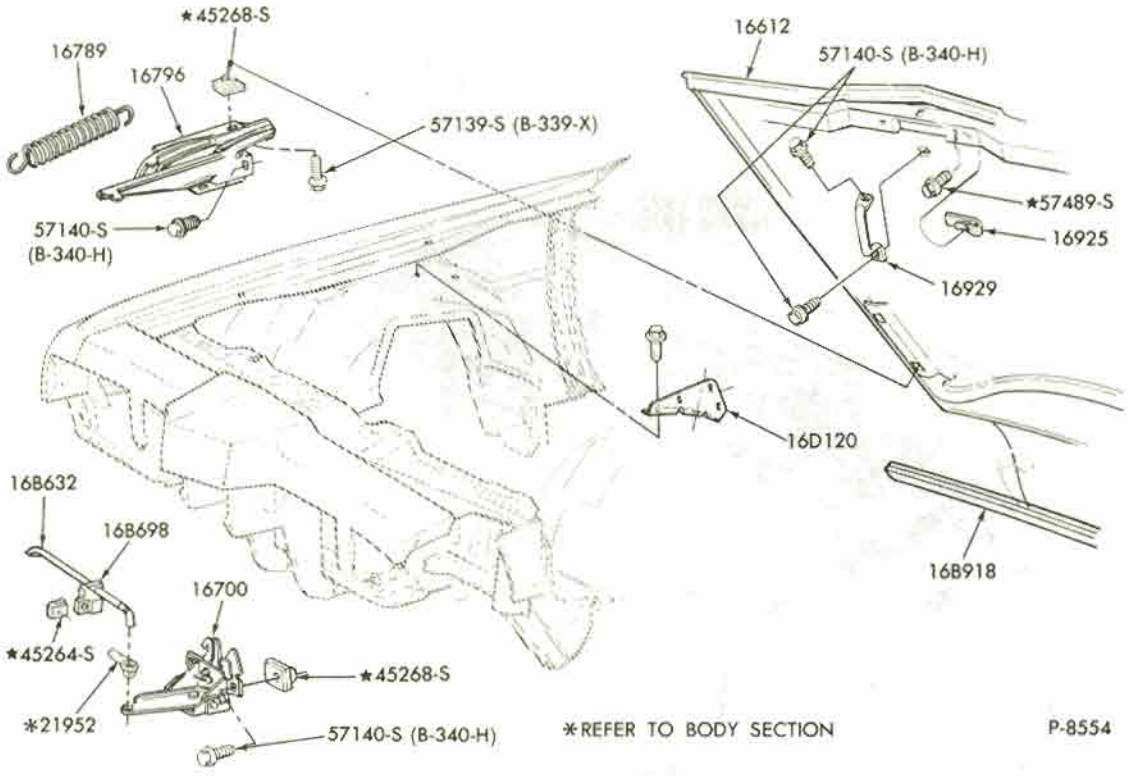

HOOD and RELATED PARTS
1971 THUNDERBIRD

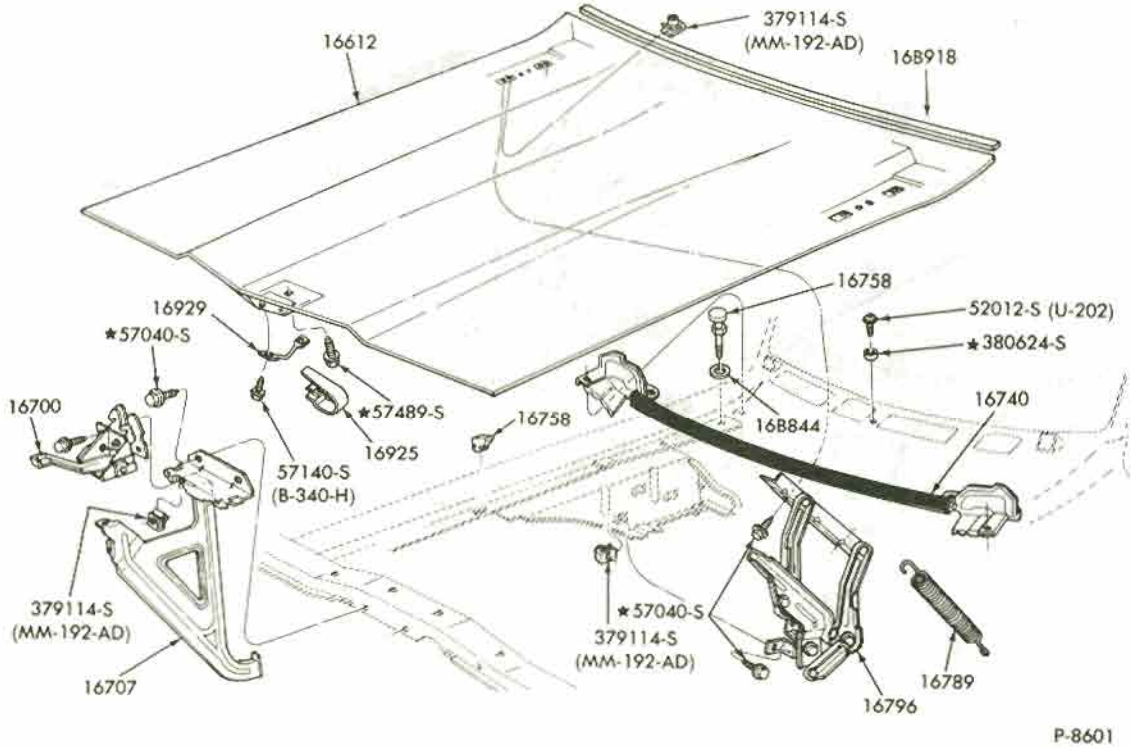

HOOD and RELATED PARTS
1972 THUNDERBIRD

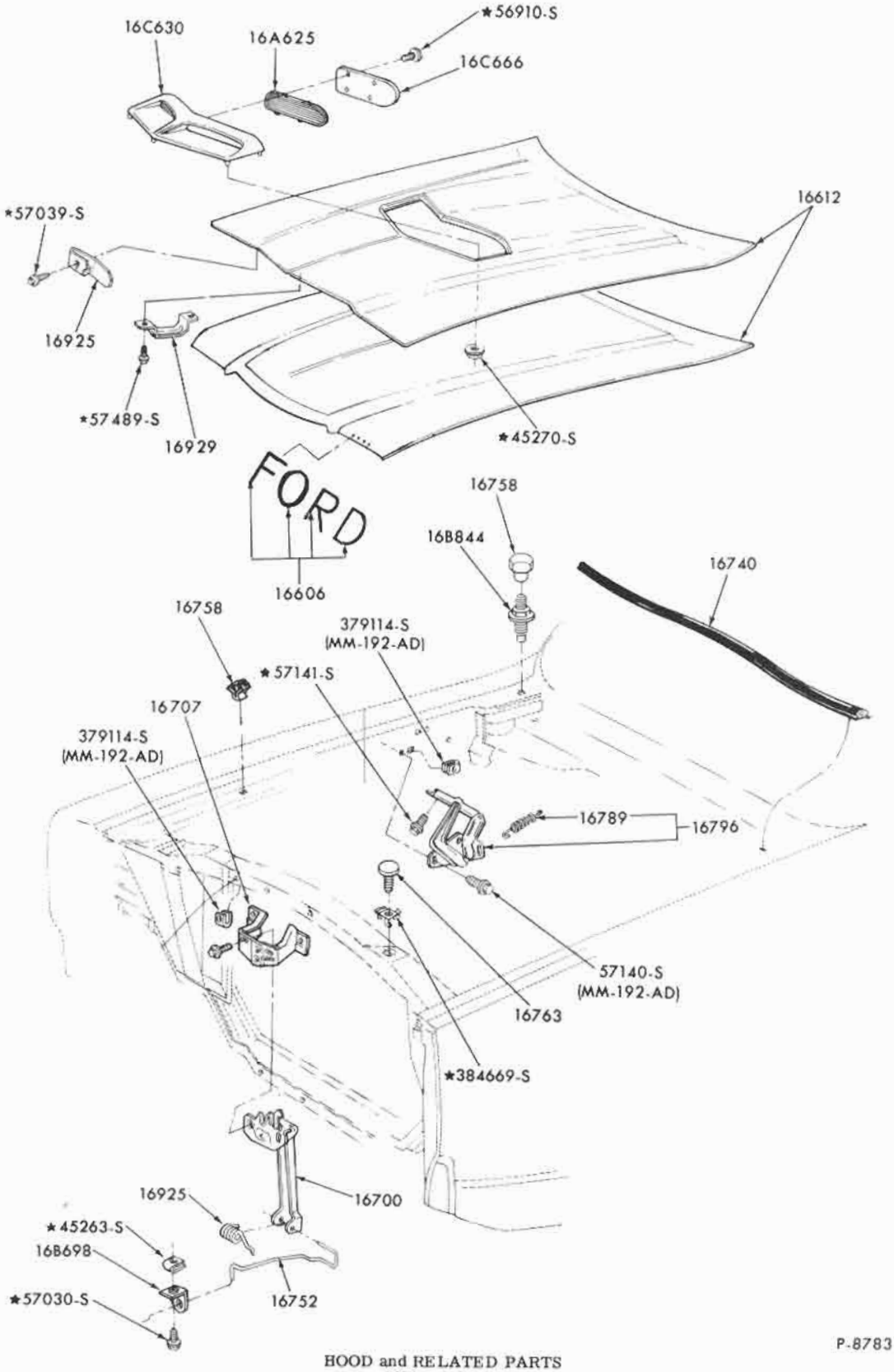

P-8783

HOOD and RELATED PARTS
1972 TORINO

COPYRIGHT © 1975 — FORD MOTOR COMPANY — DEARBORN, MICHIGAN

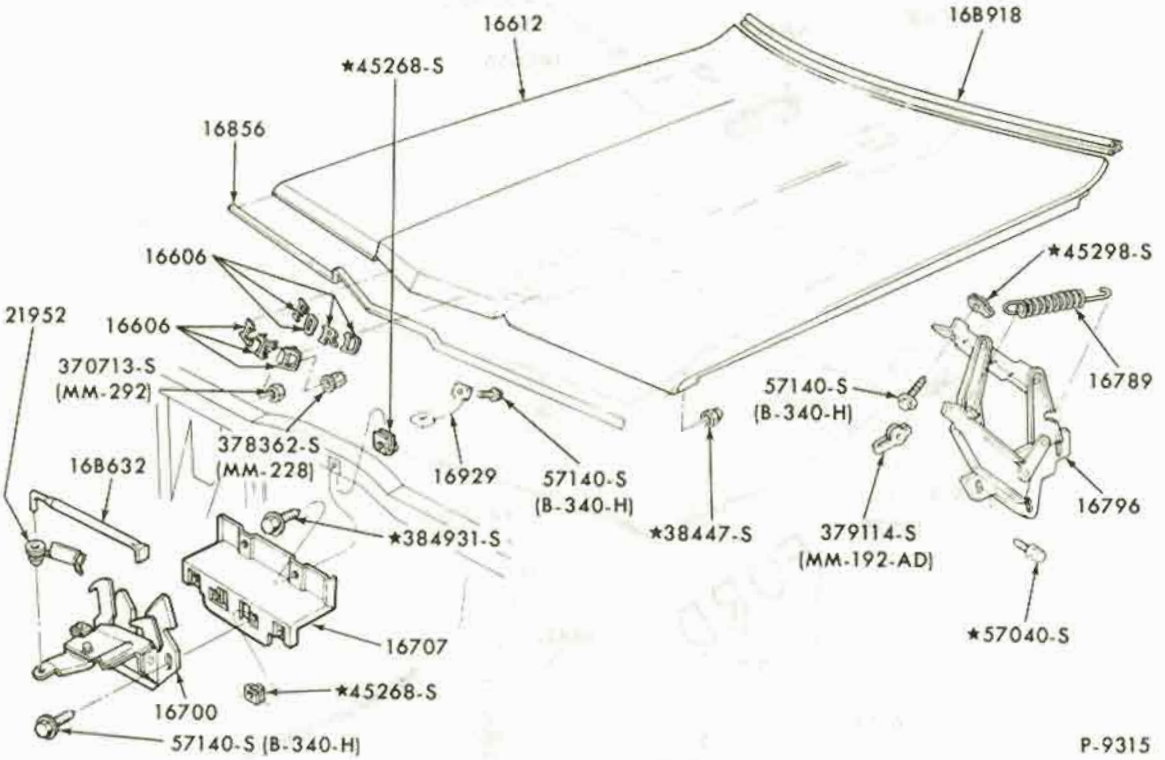

P-9315

HOOD and RELATED PARTS
1972 FORD

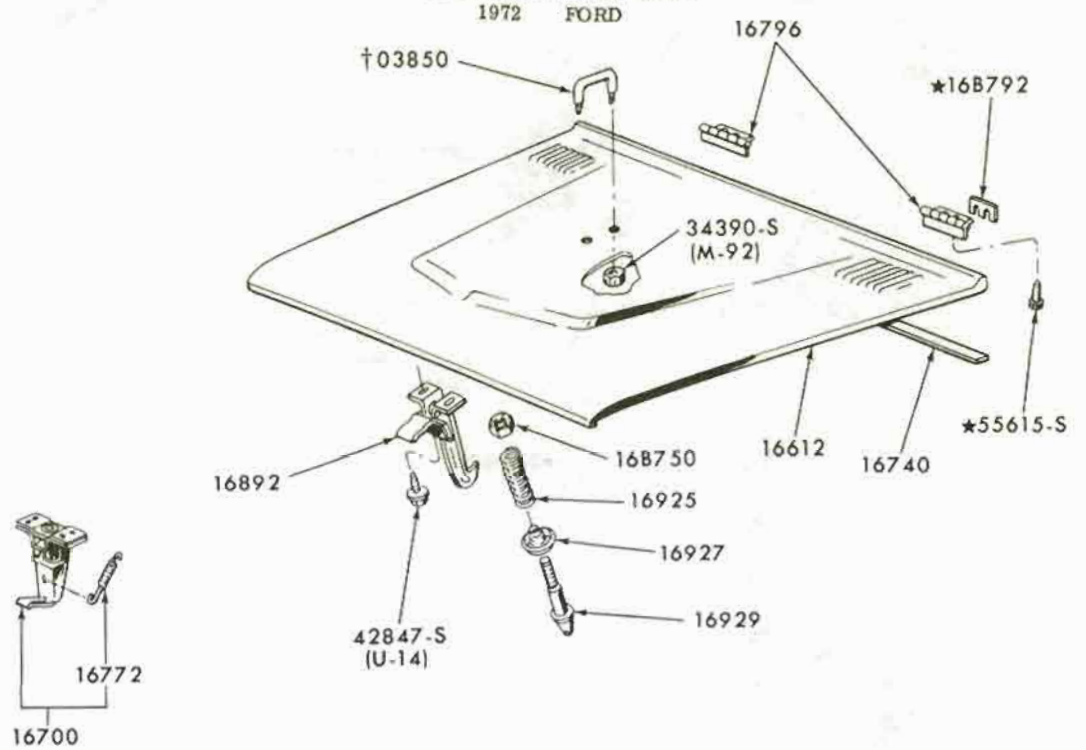

†REFER TO BODY SECTION

P-10054

HOOD and RELATED PARTS
1966/72 BRONCO

INDEX

THIS INDEX SECTION INCLUDES THE FOLLOWING MAJOR GROUPS:

AIR CONDITIONING PARTS
AND

BUMPERS
DEFOGGER - REAR WINDOW
HEATED BACK WINDOW(DEFROSTER)
HEATER
JACK
MIRROR - REAR VIEW
RADIO and STEREO
SHOCK ABSORBERS
SNOW PLOW
WINDSHIELD WASHER
WINDSHIELD WIPER
WINDSHIELD MOTOR

1965

A (FORD)

TITLE	SECTION	PAGE	ILLUS. NO.
Air Conditioner			
- compressor - Tecumseh design	197	1	P-4381
- compressor - York design	197	2	P-4382
- compressor clutches - integral	197	3	P-3216
- controls - integral	195.1	1	P-4809
- engine compartment - hang-on - 8 cyl. 289	197.2	2	P-4806
- engine compartment - 6 cyl.	197.1	2	P-4805
- engine compartment - 8 cyl. 352, 390	197.2	3	P-4807
- passenger compartment - hang-on	195	1	P-4804
- passenger compartment - integral	195.1	2	P-4810
- vacuum hoses - integral - 6 cyl.	197.1	1	P-4808
- vacuum hoses - integral - 8 cyl.	197.2	1	P-4808
Bumper - front	176	1	P-4619
- rear	176.1	1	P-4620
- guards - front and rear	176	10	P-5386
Heater	184	1	P-4813
- rear seat - body type 71	184	2	P-4799
Jack and spare wheel parts	175.2	1	P-4823
Mirror - remote control	176.2	1	P-4542
Shock absorber - front	30	1	P-4545
- rear	54	1	P-4546
Windshield wiper	175	1	P-4920
-wiper motor (single speed Ford electric)	175	5	P-5376
-wiper motor (2 speed Ford electric	175	6	P-4200
-washer	175.1	1	P-4727

B (FAIRLANE)

TITLE	SECTION	PAGE	ILLUS. NO.
Air Conditioner			
- compressor - Tecumseh design	197	1	P-4381
- compressor - York design	197	2	P-4382
- compressor clutch - integral	197	3	P-3216
- engine compartment - 6 cyl.	197.1	3	P-4404
- engine compartment - 8 cyl.	197.2	4	P-4812
- passenger compartment - integral	195.1	3	P-4157
Bumper - front	176	1	P-4624
- rear	176.1	13	P-4625
- guards - front and rear	176	10	P-5386
Heater	184	3	P-3766
Jack and spare wheel parts			
- body types 54, 62, 65	175.2	2	P-3706
- body type 71	175.2	2	P-4824
Mirror - remote control	176.2	1	P-4543
Shock absorber - front	30	2	P-3675
- rear	54	3	P-3662
Windshield wiper	175	2	P-4173
-wiper motor (single speed Ford electric)	175	5	P-5376
-wiper motor (2 speed Ford electric)	175	6	P-4200
-washer	175.1	2	P-3661

F (MUSTANG)

TITLE	SECTION	PAGE	ILLUS. NO.
Air Conditioner			
- compressor - Tecumseh design	197	1	P-4381
- compressor - York design	197	2	P-4382
- compressor clutch - integral	197	3	P-3216
- engine compartment - hang-on 6 cyl.	197.1	4	P-4573
- engine compartment - 8 cyl. - w/alternator	197.2	4	P-4812
- passenger compartment - hang-on	195	2	P-4549
Bumper - front	176	2	P-4464
- rear	176.1	2	P-4465
Heater	184	4	P-4540
Jack and spare wheel parts	175.2	3	P-4596
Mirror - remote control	176.2	1	P-4543
Shock absorber - front	180	1	P-3129
- rear	180	1	P-3137
Windshield wiper	175	3	P-4524
-wiper motor (single speed Ford electric)	175	5	P-5376
-wiper motor (2 speed Ford electric)	175	6	P-4200
-washer	175.1	3	P-4525

COPYRIGHT © 1975 — FORD MOTOR COMPANY — DEARBORN, MICHIGAN

FINAL ISSUE

INDEX

1965

S (THUNDERBIRD)

TITLE	SECTION	PAGE	ILLUS. NO.
Air Conditioner			
- compressor - Tecumseh design	197	1	P-4381
- compressor - York design	197	2	P-4382
- compressor clutches - integral	197	3	P-3216
- engine compartment - integral	197.2	5	P-4811
- passenger compartment - integral	195.1	4	P-4415
Bumper - front	176	2	P-9210
- rear	176.1	2	P-4226
Heater	184	5	P-4416
Jack and spare wheel parts	175.2	3	P-4597
Mirror - remote control	176.2	2	P-4541
Radio and stereo			
Antenna and related parts - electric	188	1	P-5382
Shock absorber - front	180	2	P-4119
- rear	180	2	P-4352
Windshield wiper	175	5	P-4053
washer	175.1	3	P-4733

X (FALCON)

TITLE	SECTION	PAGE	ILLUS. NO.
Air Conditioner			
- compressor - Tecumseh design	197	1	P-4381
- compressor - York design	197	2	P-4382
- compressor clutch - integral	197	3	P-3216
- compressor - integral	197	4	P-2724
- engine compartment - hang-on - 6 cyl.	197.1	5	P-4402
- engine compartment - 8 cyl.	197.2	4	P-4812
- passenger compartment - hang-on	195	2	P-4549
Bumper - front	176	3	P-4257
- rear	176.1	3	P-4259
- guards - front and rear	176	10	P-5386
Heater	184	6	P-3145
Jack and spare wheel parts	175.2	4	P-3916
Mirror - remote control	176.2	1	P-4543
Shock absorber - front	180	1	P-3129
- rear	180	1	P-3137
Windshield wiper	175	4	P-4130
-wiper motor (single speed Ford electric)	175	5	P-5376
-wiper motor (2 speed Ford electric)	175	6	P-4200
-washer	175.1	4	P-4726

1966

A (FORD)

TITLE	SECTION	PAGE	ILLUS. NO.
Air Conditioner			
- compressor - Tecumseh design	197	1	P-4381
- compressor - York design	197	2	P-4382
- compressor clutches - integral	197	3	P-3216
- controls - integral	195.1	1	P-4809
- engine compartment - hang-on - 8 cyl. 289	197.2	2	P-4806
- engine compartment - 6 cyl.	197.1	2	P-4805
- engine compartment - 8 cyl. 352, 390	197.2	3	P-4807
- passenger compartment - hang-on	195	1	P-4804
- passenger compartment - integral	195.1	2	P-4810
- vacuum hoses - integral - 6 cyl.	197.1	1	P-4808
- vacuum hoses - integral - 8 cyl.	197.2	1	P-4808
Bumper - front	176	1	P-4619
- rear	176.1	1	P-4620
- guards	176	10	P-5386
Heater	184	1	P-4813
Jack and spare wheel parts	175.2	1	P-4623
Mirror - remote control	176.2	1	P-4542
Radio and Stereo			
Rear seat speakers - w/stereo tape players	190	1	P-5286
Stereo tape player & speakers - hang-on and console mounted	190	2	P-5285
Shock absorber - front	30	1	P-4545
- rear	54	1	P-4546
Windshield wiper	175	1	P-4920
wiper motor (single speed Ford electric)	175	5	P-5376
wiper motor (2 speed Ford electric)	175	6	P-4200
washer	175.1	1	P-4727

B (FAIRLANE)

TITLE	SECTION	PAGE	ILLUS. NO.
Air Conditioner			
- compressor - Tecumseh design	197	1	P-4381
- compressor - York design	197	2	P-4382
- compressor clutch - integral	197	3	P-3216
- engine compartment - hang-on - 6 cyl.	197.1	7	P-5208
- engine compartment - 8 cyl. 289	197.2	7	P-5210
- engine compartment - 8 cyl. 390	197.2	8	P-5207
- passenger compartment - integral	195.1	5	P-5115
- vacuum hoses - integral - 6 cyl.	197.1	6	P-5209
- vacuum hoses - integral - 8 cyl.	197.2	6	P-5209
Bumper - front	176	4	P-5110
- rear - body types 54, 62, 63, 76	176.1	3	P-5112
- rear - body type 71	176.1	4	P-5113
- guards	176	10	P-5386
Heater	184	7	P-5108
Jack and spare wheel parts-except body type 71	175.2	5	P-5211
Mirror - remote control	176.2	1	P-4543
Radio and stereo			
Stereo tape player & speakers - hang-on	190	3	P-5284
Shock absorber - front	30	3	P-4945
- rear	54	4	P-5150
Windshield wiper	175	7	P-5121
-wiper motor (single speed Ford electric)	175	5	P-5376
-wiper motor (2 speed Ford electric)	175	23	P-11434
-washer	175.1	5	P-5121

INDEX

1966

TITLE	SECTION	PAGE	ILLUS. NO.
F (MUSTANG)			
Air Conditioner			
- compressor - Tecumseh design	197	1	P-4381
- compressor - York design	197	2	P-4382
- compressor clutch - integral	197	3	P-3216
- engine compartment - hang-on - 6 cyl.	197.1	4	P-4573
- engine compartment - 8 cyl. - w/alternator	197.2	4	P-4812
- passenger compartment - hang-on	195	2	P-4549
Bumper - front	176	2	P-4464
- rear	176.1	2	P-4465
Heater	184	4	P-4540
Jack and spare wheel parts	175.2	3	P-4596
Mirror - remote control	176.2	1	P-4543
Radio and stereo Radio (AM) with stereo tape player - integral and hang-on	190	4	P-5283
Shock absorber - front	180	1	P-3129
- rear	180	1	P-3137
Windshield wiper	175	3	P-4524
-wiper motor (2 speed Ford electric)	175	6	P-4200
-wiper motor (single speed Ford electric)	175	5	P-5376
-washer	175.1	3	P-4525
S (THUNDERBIRD)			
Air Conditioner			
- compressor - Tecumseh design	197	1	P-4381
- compressor - York design	197	2	P-4382
- compressor clutches - integral	197	3	P-3216
- engine compartment - integral	197.2	5	P-4811
- passenger compartment - integral	195.1	4	P-4415
Bumper - front	176	5	P-9211
- rear	176.1	2	P-4226
Heater	184	5	P-4416
Jack and spare wheel parts	175.2	3	P-4597
Mirror - remote control	176.2	2	P-4541
Radio and stereo Antenna and related parts - electric	188	1	P-5382
AM/Stereo tape player & speakers - integral	190	5	P-5282
Shock absorber - front	180	2	P-4119
- rear	180	2	P-4352
Windshield wiper	175	5	P-4053
washer	175.1	3	P-4733
U (BRONCO)			
Bumpers - front and rear	176	11	P-4937
Heater	184	8	P-5120
Jack and spare wheel parts - before serial 830,001	175.2	8	P-4982
- from serial 830,001	175.2	9	P-6599
Mirror - outside rectangular	176.2	2	P-6601
- outside round	176.2	3	P-5226
Shock absorber - front	30	6	P-4938
- rear	54	7	P-4939
Snow plow	190.1	1	P-8366
Windshield wiper	175	6	P-5098
-washer	175.1	6	P-5099
X (FALCON)			
Air Conditioner			
- compressor - Tecumseh design	197	1	P-4381
- compressor - York design	197	2	P-4382
- compressor clutch - integral	197	3	P-3216
- compressor - integral	197	4	P-2724
- engine compartment - hang-on - 6 cyl.	197.1	7	P-5208
- engine compartment - 8 cyl. 289	197.2	7	P-5210
- passenger compartment - hang-on	195	2	P-4549
- passenger compartment - integral	195.1	5	P-5115
- vacuum hoses - integral - 6 cyl.	197.1	6	P-5209
- vacuum hoses - integral 8 cyl.	197.2	6	P-5209
Bumper - front	176	6	P-5109
- rear - body types 54, 62	176.1	4	P-5111
- rear - body types 66, 71	176.1	4	P-5113
- guards - front and rear	176	10	P-5386
Heater	184	7	P-5108
Jack and spare wheel parts - except body type 71	175.2	5	P-5211
Mirror - remote control	176.2	1	P-4543
Radio and stereo Stereo tape player & speakers - hang-on	190	3	P-5284
Shock absorber - front	30	3	P-4945
- rear	180	1	P-3137
Windshield wiper	175	7	P-5121
-wiper motor (single speed Ford electric)	175	5	P-5376
-wiper motor (2 speed Ford electric)	175	23	P-11434
-washer	175.1	5	P-5121

COPYRIGHT © 1975 — FORD MOTOR COMPANY — DEARBORN, MICHIGAN

FINAL ISSUE

INDEX

1967

A (FORD)

TITLE	SECTION	PAGE	ILLUS. NO.
Air Conditioner			
- compressor clutches - integral	197	3	P-3216
- compressor - Tecumseh design	197	1	P-4381
- compressor - York design	197	2	P-4382
- controls - integral	195.1	6	P-5670
- engine compartment - hang-on - 6 cyl.	197.1	8	P-5689
- engine compartment - hang-on - 8 cyl. 289	197.2	9	P-5691
- engine compartment - hang-on - 8 cyl. 390, 428	197.2	11	P-5692
- engine compartment - integral - 6 cyl.	197.1	9	P-5798
- engine compartment - integral - 8 cyl. 289	197.2	10	P-5686
- engine compartment - integral - 8 cyl. 390, 428	197.2	12	P-5799
- passenger compartment - deluxe hang-on	195	3	P-5711
- passenger compartment - economy hang-on	195	4	P-5712
- passenger compartment - integral	195.1	2	P-4810
- vacuum hoses - integral - 6 cyl.	197.1	1	P-4808
- vacuum hoses - integral - 8 cyl.	197.2	1	P-4808
Bumper - front	176	3	P-5603
- rear	176.1	1	P-4620
- guards - front and rear	176	10	P-5386
Heater - w/forced ventilation	184	11	P-5668
- w/o forced ventilation	184	9	P-5669
Jack and spare wheel parts	175.2	7	P-5779
Mirror - remote control	176.2	3	P-5773
Radio and stereo			
Multiplex adapter for AM/FM radio	190	7	P-5758
Rear seat speakers - w/stereo tape player	190	8	P-5754
Radio(AM) with stereo tape player & speakers - integral and hang-on	190	6	P-5755
Shock absorber - front	30	1	P-4545
- rear	54	1	P-4546
Vacuum hoses and related parts - w/heater and forced ventilation	184	10	P-5671
Windshield wiper	175	1	P-4920
-washer	175.1	8	P-5772
-wiper motor (2 speed Ford electric)	175	6	P-4200

B (FAIRLANE)

TITLE	SECTION	PAGE	ILLUS. NO.
Air Conditioner			
- compressor - Tecumseh design	197	1	P-4381
- compressor - York design	197	2	P-4382
- compressor clutch - integral	197	3	P-3216
- engine compartment - hang-on - 6 cyl.	197.1	10	P-5690
- engine compartment - hang-on - 8 cyl. 289	197.2	9	P-5691
- engine compartment - hang-on - 8 cyl. 390, 428	197.2	11	P-5692
- engine compartment - integral - 6 cyl.	197.1	11	P-5684
- engine compartment - integral - 8 cyl. 289	197.2	13	P-5685
- engine compartment - integral - 8 cyl. 390	197.2	14	P-5800
- passenger compartment - economy hang-on	195	4	P-5712
- passenger compartment controls - integral	195.1	5	P-5115
- vacuum hoses - integral - 6 cyl.	197.1	6	P-5209
- vacuum hoses - integral - 8 cyl.	197.2	6	P-5209
Bumper - front	176	4	P-5110
- rear-body types 54,62,63,76	176.1	3	P-5112
- rear - body types 66, 71	176.1	4	P-5113
- guards	176	10	P-5386
Heater	184	7	P-5108
Jack and spare wheel parts - except body type 71	175.2	5	P-5211
Mirror - remote control	176.2	3	P-5773
Radio and stereo			
Stereo tape player & speakers - hang-on	190	9	P-5753
Shock absorber - front	30	3	P-4945
- rear	54	4	P-5150
Windshield wiper	175	7	P-5121
-wiper motor (2 speed Ford electric)	175	23	P-11434
-washer	175.1	5	P-5121

INDEX

1967

TITLE	SECTION	PAGE	ILLUS. NO.
F (MUSTANG)			
Air Conditioner			
- compressor - Tecumseh design	197	1	P-4381
- compressor - York design	197	2	P-4382
- compressor clutch - integral	197	3	P-3216
- engine compartment - hang-on - 6 cyl.	197.1	6	P-5209
- engine compartment - hang-on - 8 cyl. 289	197.2	9	P-5691
- engine compartment - hang-on - 8 cyl. 390, 428	197.2	11	P-5692
- engine compartment - integral - 6 cyl.	197.1	13	P-5688
- engine compartment - integral - 8 cyl. 289	197.2	16	P-5687
- engine compartment - integral - 8 cyl. 390, 428	197.2	17	P-5801
- passenger compartment - economy hang-on	195	4	P-5712
- passenger compartment - integral	195.1	7	P-5676
- vacuum hoses - integral - 6 cyl.	197.1	12	P-5680
- vacuum hoses - integral - 8 cyl.	197.2	15	P-5680
Bumper - front	176	4	P-5608
- rear	176.1	5	P-5607
Heater	184	12	P-5694
Jack and spare wheel parts	175.2	3	P-4596
Mirror - remote control	176.2	3	P-5773
Radio and stereo			
Multiplex adapter for AM/FM radio	190	7	P-5758
Radio (AM) with stereo tape player & speakers - integral and hang-on	190	10	P-5752
Shock absorber - front	180	1	P-3129
- rear	180	1	P-3137
Windshield wiper	175	3	P-4524
-wiper motor (2 speed Ford electric)	175	23	P-11434
-washer	175.1	7	P-5624
S (THUNDERBIRD)			
Air Conditioner			
- compressor clutches - integral	197	3	P-3216
- compressor - Tecumseh design	197	1	P-4381
- compressor - York design	197	2	P-4382
- controls - integral	195.1	9	P-5657
- engine compartment - integral	197.2	18	P-5661
- passenger compartment - integral	195.1	8	P-5660
Bumper - front	176	7	P-9212
- rear	176.1	9	P-5619
Heater	184	13	P-5654
Jack and spare wheel parts	175.2	8	P-5780
Mirror - remote control	176.2	3	P-5773
Radio and stereo			
Multiplex adapter & speakers for AM/FM radio	190	11	P-5757
AM/stereo tape player & speakers - integral	190	12	P-5756
Shock absorber - front	30	1	P-4545
- rear	180	2	P-4352
Windshield wiper (hydraulic)	175	8	P-5641
washer	175.1	8	P-5640
U (BRONCO)			
Bumper - front and rear	176	11	P-4937
Heater	184	8	P-5120
Jack and spare wheel parts	175.2	9	P-6599
Mirror - outside rectangular	176.2	2	P-6601
- outside round	176.2	3	P-5226
Shock absorber - front	30	6	P-4938
- rear	54	7	P-4939
Snow plow	190.1	1	P-8366
Windshield wiper	175	6	P-5098
washer	175.1	6	P-5099
X (FALCON)			
Air Conditioner			
- compressor - integral	197	4	P-2724
- compressor - Tecumseh design	197	1	P-4381
- compressor - York design	197	2	P-4382
- compressor clutch - integral	197	3	P-3216
- engine compartment - hang-on - 6 cyl.	197.1	10	P-5690
- engine compartment - hang-on - 8 cyl. 289	197.2	9	P-5691
- engine compartment - integral - 6 cyl.	197.1	11	P-5684
- engine compartment - integral - 8 cyl. 289	197.2	13	P-5685
- passenger compartment - economy hang-on	195	4	P-5712
- passenger compartment - integral	195.1	5	P-5115
- vacuum hoses - integral - 6 cyl.	197.1	6	P-5209
- vacuum hoses - integral - 8 cyl.	197.2	6	P-5209
Bumper - front	176	6	P-5109
- rear - body types 54, 62	176.1	4	P-5111
- rear - body type 71	176.1	4	P-5113
- guards - front and rear	176	10	P-5386
Heater	184	7	P-5108
Jack and spare wheel parts - except body type 71	175.2	5	P-5211
Mirror - remote control	176.2	3	P-5773
Radio and stereo			
Stereo tape player & speakers-hang-on	190	9	P-5753
Shock absorber - front	30	3	P-4945
- rear	180	1	P-3137
Windshield wiper	175	7	P-5121
-wiper motor (2 speed Ford electric)	175	23	P-11434
-washer	175.1	5	P-5121

COPYRIGHT © 1975 — FORD MOTOR COMPANY — DEARBORN, MICHIGAN

INDEX

1968

TITLE	SECTION	PAGE	ILLUS. NO.
A (FORD)			
Air Conditioner			
- compressor - Tecumseh design	197	1	P-4381
- compressor - York design	197	2	P-4382
- compressor clutch - integral	197	3	P-3216
- controls - integral	195.1	6	P-5670
- engine compartment - hang-on-6 cyl.	197.1	8	P-5689
- engine compartment - hang-on-8 cyl. 302	197.2	20	P-6485
- engine compartment - hang-on-8 cyl. 390, 428	197.2	19	P-6488
- engine compartment - integral-6 cyl.	197.1	9	P-5798
- engine compartment - integral-8 cyl. 390, 428	197.2	12	P-5799
- engine compartment - integral-8 cyl. 302	197.2	30	P-6477
- passenger compartment - deluxe hang-on	195	5	P-6569
- passenger compartment - economy hang-on	195	4	P-5712
- passenger compartment - integral	195.1	2	P-4810
- vacuum hoses - integral - 6 cyl.	197.1	1	P-4808
- vacuum hoses - integral - 8 cyl.	197.2	1	P-4808
Bumper - front	176	6	P-5976
- rear	176.1	6	P-6213
- guards - front and rear	176	10	P-5386
Heater - w/forced ventilation	184	11	P-5668
Jack and spare wheel parts	175.2	7	P-5779
Mirror - remote control	176.2	3	P-5773
Radio and stereo			
Rear seat speakers - w/stereo tape player	190	8	P-5754
AM/stereo tape player, AM/FM multiplex radio & speakers - integral	190	13	P-6537
Stereo tape player - hang-on	190	14	P-6540
Rear window defogger	185	1	P-6262
Shock absorber - front	30	1	P-4545
- rear	54	1	P-4546
Windshield wiper	175	1	P-4920
washer	175.1	6	P-5772
wiper motor (2 speed Ford electric)	175	6	P-4200
B (FAIRLANE/TORINO)			
Air Conditioner			
- compressor - Tecumseh design	197	1	P-4381
- compressor - York design	197	2	P-4382
- compressor clutches - integral	197	3	P-3216
- controls - integral	195.1	11	P-6479
- engine compartment - hang-on-8 cyl. 289, 302	197.2	20	P-6485
- engine compartment - hang-on-8 cyl. 390, 428	197.2	19	P-6488
- engine compartment - integral - 6 cyl. 200, 250	197.1	15	P-6481
- engine compartment - integral - 8 cyl. 289, 302, 351	197.2	22	P-6482
- engine compartment - integral - 8 cyl. 390, 428	197.2	23	P-6483
- passenger compartment - deluxe hang-on	195	6	P-6570
- passenger compartment - economy hang-on	195	4	P-5712

TITLE	SECTION	PAGE	ILLUS. NO.
B (FAIRLANE/TORINO) - continued			
Air Conditioner - continued			
- passenger compartment - integral	195.1	10	P-6478
- vacuum hoses - integral - 6 cyl.	197.1	14	P-6484
- vacuum hoses - integral - 8 cyl.	197.2	21	P-6484
Bumper - front	176	8	P-6028
- rear-exc. body types 66, 71	176.1	5	P-6215
- rear - body types 66, 71	176.1	4	P-5113
- guards - front and rear	176	10	P-5386
Heater and forced ventilation system	184	14	P-6480
Jack and spare wheel parts - except body types 66, 71	175.2	5	P-5211
Mirror - remote control	176.2	3	P-5773
Radio and stereo			
AM/FM multiplex radio & speakers - integral	190	15	P-6538
Stereo tape player - hang-on	190	14	P-6540
Rear window defogger	185	1	P-6248
Shock absorber - front	30	8	P-6927
- rear	54	4	P-5150
Windshield wiper	175	9	P-6305
-wiper motor (2 speed electric)	175	23	P-11434
-washer	175.1	9	P-6305
F (MUSTANG)			
Air Conditioner			
- compressor - Tecumseh design	197	1	P-4381
- compressor - York design	197	2	P-4382
- compressor clutch - integral	197	3	P-3216
- engine compartment - hang-on-8 cyl. 289, 302	197.2	20	P-6485
- engine compartment - hang-on-8 cyl. 390, 428	197.2	19	P-6488
- engine compartment - integral-6 cyl. 200, 250	197.1	17	P-6475
- engine compartment - integral-8 cyl. 302, 351	197.2	24	P-6476
- engine compartment - integral-8 cyl. 390, 428	197.2	17	P-5801
- passenger compartment - deluxe hang-on	195	7	P-6571
- passenger compartment - economy hang-on	195	4	P-5712
- passenger compartment - integral	195.1	7	P-5676
Bumper - front	176	4	P-5608
- rear	176.1	5	P-5607
Heater	184	12	P-5694
Jack and spare wheel parts	175.2	3	P-4596
Mirror - remote control	176.2	3	P-5773
Radio and stereo			
AM/stereo tape player, AM/FM multiplex radio & speakers - integral	190	16	P-6539
Stereo tape player - hang-on	190	14	P-6540
Rear window defogger	185	3	P-6256
Shock absorber - front	180	1	P-3129
- rear	180	1	P-3137
Windshield wiper	175	3	P-4524
-wiper motor (2 speed electric)	175	23	P-11434
-washer	175.1	7	P-5624

INDEX

1968

S (THUNDERBIRD)

TITLE	SECTION	PAGE	ILLUS. NO.
Air Conditioner			
- compressor clutches - integral	197	3	P-3216
- compressor - Tecumseh design	197	1	P-4381
- compressor - York design	197	2	P-4382
- controls - with manual A/C	195.1	13	P-6315
- controls - with A.T.C.	195.1	14	P-6174
- engine compartment - integral	197.2	25	P-6317
- passenger compartment - with manual A/C	195.1	15	P-6316
- passenger compartment - with A.T.C.	195.1	12	P-6173
Bumper - front	176	12	P-6202
- rear	176.1	9	P-5619
Heater	184	15	P-6314
- controls, ducts etc.	184	21	P-6315
Jack and spare wheel parts	175.2	8	P-5780
Mirror - remote control	176.2	3	P-5773
Radio and stereo			
antenna and related parts - electric	188	2	P-6534
AM/stereo tape player, AM/FM multiplex radio & speakers - integral	190	17	P-6535
Rear window defogger	185	2	P-6249
Shock absorber - front	30	1	P-4545
- rear	180	2	P-4352
Windshield wiper	175	8	P-6307
-washer	175.1	10	P-6306

U (BRONCO)

TITLE	SECTION	PAGE	ILLUS. NO.
Bumper - front and rear	176	11	P-4937
Heater	184	8	P-5120
Jack and spare wheel parts	175.2	9	P-6599
Mirror - outside rectangular	176.2	2	P-6601
- outside round	176.2	3	P-5226
Shock absorber - front	30	6	P-4938
- rear	54	7	P-4939
Snow plow	190.1	1	P-8366
Windshield wiper	175	6	P-5098
-washer	175.1	6	P-5099

X (FALCON)

TITLE	SECTION	PAGE	ILLUS. NO.
Air Conditioner			
- compressor - integral	197	4	P-2724
- compressor - Tecumseh design	197	1	P-4381
- compressor - York design	197	2	P-4362
- compressor clutch - integral	197	3	P-3216
- controls - integral	195.1	11	P-6479
- engine compartment - hang-on-8 cyl, 289, 302	197.2	20	P-6485
- engine compartment - integral-6 cyl, 200	197.1	15	P-6481
- engine compartment - integral-8 cyl. 289, 302	197.2	22	P-6482
- passenger compartment - deluxe hang-on	195	6	P-6570
- passenger compartment - economy hang-on	195	4	P-5712
- passenger compartment - integral	195.1	10	P-6478
- vacuum hoses - integral - 6 cyl.	197.1	14	P-6484
- vacuum hoses - integral - 8 cyl.	197.2	21	P-6484
Bumper - front	176	8	P-6033
- rear - body types 54, 62	176.1	4	P-5111
- rear - body type 71	176.1	4	P-5113
- guards - front and rear	176	10	P-5386
Heater	184	14	P-6480
Jack and spare wheel parts - except body type 71	175.2	5	P-5211
Mirror - remote control	176.2	3	P-5773
Radio and stereo			
AM/FM multiplex radio & speakers - integral	190	15	P-6538
Stereo tape player - hang-on	190	14	P-6540
Rear window defogger	185	1	P-6248
Shock absorber - front	30	8	P-6927
- rear	180	1	P-3137
Windshield wiper	175	9	P-6305
-wiper motor (2 speed Ford design)	175	23	P-11434
-washer	175.1	9	P-6305

1969

A (FORD)

TITLE	SECTION	PAGE	ILLUS. NO.
Air Conditioner			
- compressor clutches - integral	197	3	P-3216
- compressor - Tecumseh design	197	1	P-4381
- compressor - York design	197	2	P-4382
- controls - integral	195.1	17	P-6638
- engine compartment - integral 8 cyl, 302, 351	197.2	31	P-6989
- engine compartment - integral-8 cyl, 390, 428	197.2	28	P-6990
- engine compartment - integral-8 cyl, 429	197.2	29	P-6991
- passenger compartment - hang-on console design	195	8	P-7064
- passenger compartment deluxe slim-line hang-on	195	11	P-8548
- passenger compartment - integral	195.1	16	P-6636
- vacuum hoses - integral - 6 cyl.	197.1	18	P-6639
- vacuum hoses - integral - 8 cyl.	197.2	26	P-6639
Back window defogger	185	4	P-6861
Bumper - front	176	9	P-6611
- rear - exc. body type 71	176.1	7	P-6616
- rear - body type 71	176.1	7	P-6618
- guards - front and rear	176	10	P-5386

A (FORD) - continued

TITLE	SECTION	PAGE	ILLUS. NO.
Heater -	184	16	P-6634
- controls	184	17	P-6635
Jack and spare wheel parts			
- except body type 71	175.2	12	P-7055
- body type 71	175.2	13	P-7056
Mirror - remote control	176.2	3	P-5773
Radio and stereo			
Radio speakers - front door and rear seat	190	18	P-7065
Radio (AM) with stereo tape player - hang-on	190	14	P-6540
- tunnel mtd.	190	20	P-7077
AM/FM mulitplex radio - integral	190	19	P-7076
Shock absorber - front	30	1	P-4545
- rear	54	1	P-4546
Windshield wiper	175	11	P-6833
-wiper motor (2 speed)	175	10	P-6854
-washer	175.1	10	P-6832

COPYRIGHT © 1975 — FORD MOTOR COMPANY — DEARBORN, MICHIGAN

FINAL ISSUE

INDEX

1969

TITLE	SECTION	PAGE	ILLUS. NO.
B (FAIRLANE/TORINO)			
Air Conditioner			
- compressor - Tecumseh design	197	1	P-4381
- compressor - York design	197	2	P-4382
- compressor clutch - integral	197	3	P-3216
- controls - integral	195.1	11	P-6479
- engine compartment - integral- 6 cyl. 200, 250	197.1	15	P-6481
- engine compartment - integral- 8 cyl. 289, 302, 351	197.2	22	P-6482
- engine compartment - integral 8 cyl. 390, 428	197.2	23	P-6483
- passenger compartment - deluxe hang-on	195	6	P-6570
- passenger compartment - economy hang-on	195	4	P-5712
- passenger compartment - integral	195.1	10	P-6478
- vacuum hoses - integral - 6 cyl.	197.1	14	P-6484
- vacuum hoses - integral - 8 cyl.	197.2	21	P-6484
Back window defogger	185	1	P-6248
Bumper - front	176	8	P-6028
- rear-exc. body types 66,71	176.1	5	P-6215
- rear - body types 66, 71	176.1	4	P-5113
- guards - front and rear	176	10	P-5386
Heater, forced ventilation & controls	184	14	P-6480
Jack and spare wheel parts - except body types 66, 71	175.2	5	P-5211
Mirror - remote control	176.2	3	P-5773
Radio and stereo			
AM/FM multiplex radio & speakers - integral	190	15	P-6538
Stereo tape player - hang-on	190	14	P-6540
Shock absorber - front	30	8	P-6927
- rear	54	4	P-5150
Windshield wiper	175	9	P-6305
-wiper motor (2 speed Ford design)	175	23	P-11434
-washer	175.1	9	P-6305
F (MUSTANG)			
Air Conditioner			
- compressor - Tecumseh design	197	1	P-4381
- compressor - York design	197	2	P-4382
- compressor clutch - integral	197	3	P-3216
- controls - integral	195.1	18	P-6643
- engine compartment - integral- 6 cyl. 200, 250	197.1	17	P-6475
- engine compartment - integral- 8 cyl. 302, 351	197.2	24	P-6476
- engine compartment - integral - 8 cyl. 390, 428	197.2	17	P-5801
- passenger compartment - integral	195.1	19	P-6644
- passenger compartment deluxe hang-on	195	10	P-8503
- vacuum hoses - integral - 6 cyl.	197.1	16	P-6645
- vacuum hoses - integral - 8 cyl.	197.2	27	P-6645
Back window defogger	185	6	P-7032
Bumper - front - except Shelby GT350/500	176	9	P-6664
- front - Shelby GT350/500	176	10	P-6921-A
- rear	176.1	8	P-6731
Heater	184	18	P-6642
Jack and spare wheel parts	175.2	13	P-7063
Mirror - remote control	176.2	3	P-5773
Radio and stereo			
Stereo tape player - hang-on	190	14	P-6540
AM/ stereo tape player, AM/FM multiplex radio & speakers - integral	190	21	P-7078
Shock absorber - front	180	1	P-3129
Windshield wiper	175	12	P-6867
-wiper motor (2 speed Ford design)	175	23	P-11434
-washer	175.1	11	P-6867
S (THUNDERBIRD)			
Air Conditioner			
- compressor clutches - integral	197	3	P-3216
- compressor - Tecumseh design	197	1	P-4381
- compressor - York design	197	2	P-4382
- controls - with manual A/C	195.1	13	P-6315
- controls - with A.T.C.	195.1	14	P-6174
- engine compartment - integral	197.2	25	P-6317
- passenger compartment - with manual A/C	195.1	15	P-6316
- passenger compartment - with A.T.C.	195.1	12	P-6173
Back window defogger	185	2	P-6249
Bumper - front	176	12	P-6202
- rear	176.1	9	P-5619
Heated back window (defroster)	186	1	P-7509
Heater	184	15	P-6314
- controls	184	21	P-6315
Jack and spare wheel parts	175.2	8	P-5780
Mirror - remote control	176.2	3	P-5773
Radio and stereo			
Antenna and related parts - electric	188	2	P-6534
AM/ stereo tape player, AM/FM multiplex radio & speakers - integral	190	17	P-6535
Shock absorber - front	30	1	P-4545
- rear	54	1	P-4546
Windshield wiper	175	8	P-6307
washer	175.1	10	P-6306
U (BRONCO)			
Bumper - front and rear	176	11	P-4937
Heater	184	8	P-5120
Jack parts	175.2	10	P-6600
Mirror - outside rectangular	176.2	2	P-6601
- outside round	176.2	3	P-5226
- outside romote control	176.2	4	P-8641
Shock absorber - front	30	6	P-4938
- rear	54	7	P-4938
Snow plow	190.1	1	P-8366
Spare wheel parts	10	2	P-6232
Windshield wiper (hydraulic)	175	6	P-5098
-washer	175.1	6	P-5099
-wiper motor (2 speed Ford design) (electric)	175	23	P-11434
	175	13	P-6956

INDEX

1969

X (FALCON)

TITLE	SECTION	PAGE	ILLUS. NO.
Air Conditioner			
- compressor - integral	197	4	P-2724
- compressor - Tecumseh design	197	1	P-4381
- compressor - York design	197	2	P-4382
- compressor clutch - integral	197	3	P-3216
- controls - integral	195.1	11	P-6479
- engine compartment - integral - 6 cyl. 200	197.1	15	P-6481
- engine compartment - integral - 8 cyl. 302	197.2	22	P-6482
- passenger compartment - deluxe hang-on	195	6	P-6570
- passenger compartment - economy hang-on	195	4	P-5712
- passenger compartment - integral	195.1	10	P-6478
- vacuum hoses - integral - 6 cyl.	197.1	14	P-6484
- vacuum hoses - integral - 8 cyl.	197.2	21	P-6484
Back window defogger	185	1	P-6248

X (FALCON) - continued

TITLE	SECTION	PAGE	ILLUS. NO.
Bumper - front	176	8	P-6033
- rear - body types 54, 62	176.1	4	P-5111
- rear - body type 71	176.1	4	P-5113
- guards - front and rear	176	10	P-5386
Heater and controls	184	14	P-6480
Jack and spare wheel parts - body types 54, 62	175.2	5	P-5211
Mirror - remote control	176.2	3	P-5773
Radio and stereo			
AM/FM multiplex radio & speakers - integral	190	15	P-6538
Stereo tape player - hang-on	190	14	P-6540
Shock absorber - front	30	8	P-6927
- rear	54	4	P-5150
Windshield wiper	175	9	P-6305
-wiper motor (2 speed Ford electric)	175	23	P-11434
-washer	175.1	9	P-6305

1970

A (FORD)

TITLE	SECTION	PAGE	ILLUS. NO.
Air Conditioner			
- compressor clutches - integral	197	3	P-3216
- compressor - Tecumseh design	197	1	P-4381
- compressor - York design	197	2	P-4382
- control - integral	195.1	17	P-6638
- engine compartment - integral - 8 cyl. 302, 351	197.2	31	P-6989
- engine compartment - integral - 8 cyl. 390, 428	197.2	28	P-6990
- engine compartment - integral - 8 cyl. 429	197.2	32	P-7746
- passenger compartment - hang-on - console design	195	8	P-7064
- passenger compartment deluxe slimline hang-on	195	11	P-8548
- passenger compartment - integral	195.1	16	P-6636
- vacuum hoses - integral - 6 cyl.	197.1	18	P-6639
- vacuum hoses - integral - 8 cyl.	197.2	26	P-6639
Bumper - front	176	9	P-6611
- rear-exc. body type 71	176.1	7	P-6616
- rear-body type 71	176.1	7	P-6618
Heated back window (defroster)	186	2	P-7508
Heater -	184	16	P-6634
- controls	184	17	P-6635
Jack and spare wheel parts			
- except body type 71	175.2	12	P-7055
- body type 71	175.2	13	P-7056
Mirror - remote control	176.2	3	P-5773
Radio and stereo			
Radio speakers - front door and rear seat	190	18	P-7065
AM/FM mulitplex radio - integral	190	19	P-7076
Radio(AM) with stereo tape player - hang-on	190	14	P-6540
- tunnel mtd.	190	20	P-7077
Rear window defogger	185	4	P-6861
Shock absorber - front	30	1	P-4545
- rear	54	1	P-4546
Windshield wiper	175	11	P-6833
wiper motor (2 speed)	175	10	P-6854
washer	175.1	10	P-6832

B (FAIRLANE/TORINO) B (FALCON) - FROM 1/2/70

TITLE	SECTION	PAGE	ILLUS. NO.
Air Conditioner			
- compressor - Tecumseh design	197	1	P-4381
- compressor - York design	197	2	P-4382
- compressor clutch - integral	197	3	P-3216
- controls - integral	195.1	22	P-7734
- engine compartment - integral - 6 cyl. 250	197.1	22	P-7741
- engine compartment - integral - 8 cyl. 302, 351	197.2	33	P-7742
- engine compartment - integral - 8 cyl. 429	197.2	34	P-7743
- passenger compartment - economy hang-on	195	4	P-5712
- passenger compartment-integral	195.1	10	P-6478
- passenger compact - deluxe hang-on	195	6	P-6570
- vacuum hoses - integral - 6 cyl.	197.1	21	P-7744
- vacuum hoses - integral - 8 cyl.	197.2	35	P-7744
Bumper - front	176	12	P-7111
- rear - body types 66, 71	176.1	10	P-7115
- rear - except body types 66, 71	176.1	10	P-7113
Heater and controls	184	20	P-7733
Jack and spare wheel parts			
- except body types 66, 71	175.2	5	P-5211
- body types 66, 71	175.2	6	P-5212
Mirror - remote control	176.2	3	P-5773
Radio and stereo			
Stereo tape player - hang-on	190	14	P-6540
AM/FM multiplex radio & speakers - integral	190	15	P-6538
Rear window defogger	185	1	P-6248
Shock absorber - front	30	8	P-6927
- rear	54	4	P-5150
Windshield wiper	175	14	P-7345
-wiper motor (2 speed Ford electric)	175	23	P-11434
-washer	175.1	12	P-7345

COPYRIGHT © 1975 — FORD MOTOR COMPANY — DEARBORN, MICHIGAN

INDEX

1970

TITLE	SECTION	PAGE	ILLUS. NO.
F (MUSTANG)			
Air Conditioner			
- compressor - Tecumseh design	197	1	P-4381
- compressor - York design	197	2	P-4382
- compressor clutch - integral	197	3	P-3216
- control - integral	195.1	18	P-6643
- engine compartment - integral - 6 cyl. 200, 250	197.1	17	P-6475
- engine compartment - integral - 8 cyl. 302, 351	197.2	24	P-6476
- engine compartment integral - 8 cyl. 390, 428	197.2	17	P-5801
- passenger compartment - integral	195.1	19	P-6644
- passenger compartment - deluxe hang-on	195	10	P-8503
- vacuum hoses - integral - 6 cyl.	197.1	16	P-6645
- vacuum hoses - integral - 8 cyl.	197.2	27	P-6645
Back window defogger	185	6	P-7032
Bumper			
- front - except Shelby GT350/500	176	9	P-6664
- front - Shelby GT350/500	176	10	P-6921-A
- rear	176.1	8	P-6731
Heater	184	18	P-6642
Jack and spare wheel parts	175.2	13	P-7063
Mirror - remote control	176.2	3	P-5773
Radio and stereo			
Stereo tape player - hang-on	190	14	P-6540
AM/ stereo tape player, AM/FM multiplex radio & speakers - integral	190	21	P-7078
Shock absorber - front	30	8	P-6927
- rear			
Windshield wiper	175	12	P-6867
-wiper motor (2 speed Ford electric)	175	23	P-11434
-washer	175.1	11	P-6867
P (MAVERICK)			
Air Conditioner			
- compressor - Tecumseh design	197	1	P-4381
- compressor - York design	197	2	P-4382
- compressor clutch - integral	197	3	P-3216
- controls - integral	195.1	21	P-6899
- engine compartment - integral	197.1	20	P-6904
- passenger compartment - integral	195.1	20	P-6898
- passenger compartment - economy hang-on	195	9	P-8547
- passenger compartment - deluxe hang-on	195	10	P-8503
- vacuum hoses - integral	197.1	19	P-6928
Bumper - front	176	11	P-6876
- rear	176.1	8	P-6877
Heater & controls	184	19	P-6890
Jack and spare wheel parts	175.2	11	P-6925
Mirror - remote control	176.2	4	P-6880
Stereo tape player - hang-on	190	14	P-6540
Rear window defogger	185	5	P-6893
Shock absorber - front	30	8	P-6927
- rear	54	11	P-6887
Windshield wiper	175	15	P-6875
-wiper motor (2 speed Ford electric)	175	23	P-11434
-washer	175.1	13	P-6875

TITLE	SECTION	PAGE	ILLUS. NO.
S (THUNDERBIRD)			
Air Conditioner			
- compressor clutches - integral	197	3	P-3216
- compressor - Tecumseh design	197	1	P-4381
- compressor - York design	197	2	P-4382
- controls - with manual A/C	195.1	23	P-7727
- controls - with A.T.C.	195.1	24	P-7728
- engine compartment - integral	197.2	36	P-7726
- passenger compartment - with manual A/C	195.1	15	P-6316
- passenger compartment - with A.T.C.	195.1	12	P-6173
Bumper - front	176	13	P-7148
- rear	176.1	9	P-5619
Heated back window (defroster)	186	3	P-7519
Heater	184	15	P-6314
- controls, ducts etc.	184	22	P-7727
Jack and spare wheel parts	175.2	8	P-5780
Mirror - remote control	176.2	3	P-5773
Radio and stereo			
Antenna and related parts - electric	188	2	P-6534
AM/ stereo tape player, AM/FM multiplex radio & speakers - integral	190	17	P-6535
Rear window defogger	185	2	P-6249
Shock absorber - front	30	1	P-4545
- rear	54	1	P-4546
Windshield wiper - hydraulic	175	17	P-7456
- electric	175	16	P-7343
-wiper motor (2 speed Ford electric)	175	6	P-4200
-washer	175.1	15	P-7342
U (BRONCO)			
Bumper - front and rear	176	11	P-4937
Heater	184	8	P-5120
Jack and spare wheel parts	175.2	9	P-6599
Mirror - outside rectangular	176.2	2	P-6601
- outside remote control	176.2	4	P-8641
Shock absorber - front	30	6	P-4938
- rear	54	7	P-4939
Snow plow	190.1	1	P-8366
Windshield washer	175.1	6	P-5099
-wiper motor (2 speed Ford electric)	175	23	P-11434
-wiper (electric)	175	13	P-6956

INDEX

1970

X (FALCON) - BEFORE 1/2/70

FOR UNITS BUILT FROM 1/2/70 REFER TO B (FALCON)

TITLE	SECTION	PAGE	ILLUS. NO.
Air Conditioner			
- compressor - integral	197	4	P-2724
- compressor - Tecumseh design	197	1	P-4381
- compressor - York design	197	2	P-4382
- compressor clutch - integral	197	3	P-3216
- controls, ducts etc. - integral	195.1	11	P-6479
- engine compartment - integral - 6 cyl. 200	197.1	15	P-6481
- engine compartment - integral - 8 cyl. 302	197.2	22	P-6482
- passenger compartment - integral	195.1	10	P-6478
- passenger compartment - economy hang-on	195	4	P-5712
- vacuum hoses - integral - 6 cyl.	197.1	14	P-6484
- vacuum hoses - integral - 8 cyl.	197.2	21	P-6484
Bumper - front	176	8	P-6033
- rear - body type 71	176.1	4	P-5113
- rear - body types 54, 62	176.1	4	P-5111
Heater	184	14	P-6480
Jack and spare wheel parts			
- except body type 71	175.2	5	P-5211
- body type 71	175.2	6	P-5212
Mirror - remote control	176.2	3	P-5773
Radio and stereo			
AM/FM multiplex radio & speakers - integral	190	15	P-6538
Stereo tape player - hang-on	190	14	P-6540
Rear window defogger	185	1	P-6248
Shock absorber - front	30	8	P-6927
- rear	54	4	P-5150
Windshield wiper	175	9	P-6305
-wiper motor (2 speed Ford electric)	175	23	P-11434
-washer	175.1	9	P-6305

1971

A (FORD)

Air conditioner			
- compressor clutches - integral	197	3	P-3216
- compressor - Tecumseh design	197	1	P-4381
- compressor - York design	197	2	P-4382
- controls - integral - A.T.C.	195.1	30	P-8307
- controls - integral - manual	195.1	29	P-8308
- engine compartment - integral - 8 cyl. 302, 351, 400	197.2	31	P-6989
- engine compartment - integral - 8 cyl. 390	197.2	28	P-6990
- engine compartment - integral - 8 cyl. 429	197.2	32	P-7746
- passenger compartment - hang-on slimline	195	11	P-8548
- passenger compartment - manual integral	195.1	31	P-8304
- control box A.T.C.	195.1	33	P-8489
- passenger compartment - A.T.C.	195.1	32	P-8303
- vacuum hoses - integral - 8 cyl.	197.2	40	P-8457
Bumper - front	176	14	P-8067
- rear - exc. body type 71	176.1	11	P-8069
- rear - body type 71	176.1	12	P-8068
Heated back window (defroster)	186	4	P-8436
Heater -	184	26	P-8306
- controls	184	25	P-8305
Jack and spare wheel parts			
- except body type 71	175.2	12	P-7055
- body type 71	175.2	13	P-7056
Mirror - remote control	176.2	3	P-5773
Radio and stereo			
Radio speakers - front door and rear seat	190	22	P-8450
AM/FM multiplex radio - integral	190	19	P-7076
Stereo tape player - hang-on	190	14	P-6540
Rear window defogger	185	6	P-8439
Shock absorber - front	30	1	P-4545
- rear	54	1	P-4546
Windshield wiper	175	18	P-8385
-wiper motor (2 speed)	175	10	P-6854
-washer	175.1	16	P-8386
Washer and wiper-rear			
-window body type 71	140.4	10	P-8320
	140.4	11	P-8321

B (TORINO)

Air conditioner			
- compressor - Tecumseh design	197	1	P-4381
- compressor - York design	197	2	P-4382
- compressor clutch - integral	197	3	P-3216
- controls - integral	195.1	22	P-7734
- engine compartment - integral - 6 cyl. 250	197.1	22	P-7741
- engine compartment - integral - 8 cyl. 302, 351	197.2	33	P-7742
- engine compartment - integral - 8 cyl. 429	197.2	34	P-7743
- passenger compact - Deluxe - hang-on	195	6	P-6570
- passenger compartment - integral	195.1	10	P-6478
- vacuum hoses - integral - 6 cyl.	197.1	21	P-7744
- vacuum hoses - integral - 8 cyl.	197.2	35	P-7744
Bumper - front	176	12	P-7111
- rear - body types 66, 71	176.1	10	P-7115
- rear except body types 66, 71	176.1	10	P-7113
Heater and controls	184	20	P-7733
Jack and spare wheel parts			
- except body types 66, 71	175.2	5	P-5211
- body types 66, 71	175.2	6	P-5212
Mirror - remote control	176.2	3	P-5773
Radio and stereo			
Stereo tape player - hang-on	190	14	P-6540
AM/FM multiplex radio & speakers - integral	190	15	P-6538
Rear window defogger	185	1	P-6248
Shock absorber - front	30	8	P-6927
- rear	54	4	P-5150
Windshield wiper	175	14	P-7345
- wiper motor (2 speed Ford electric)	175	23	P-11434
- washer	175.1	12	P-7345

COPYRIGHT © 1975 — FORD MOTOR COMPANY — DEARBORN, MICHIGAN

FINAL ISSUE

INDEX

1971

TITLE	SECTION	PAGE	ILLUS. NO.
F (MUSTANG)			
Air conditioner			
- compressor - Tecumseh design	197	1	P-4381
- compressor - York design	197	2	P-4382
- compressor clutch - integral	197	3	P-3216
- controls - integral	195.1	27	P-8300
- engine compartment - integral - 6 cyl. 200, 250	197.1	22	P-7741
- engine compartment - integral 8 cyl. 302, 351	197.2	33	P-7742
- engine compartment - integral 8 cyl. 429	197.2	34	P-7743
- passenger compartment - deluxe hang-on	195	10	P-8503
- passenger compartment - integral	195.1	28	P-8301
- vacuum hoses - integral - 6 cyl.	197.1	23	P-8293
- vacuum hoses - integral - 8 cyl.	197.2	39	P-8293
Bumper - front	176	15	P-8087
- rear	176.1	13	P-8084
Heated back window (defroster)	186	5	P-8431
Heater & controls	184	24	P-8302
Jack and spare wheel parts	175.2	13	P-7063
Mirror - remote control	176.2	3	P-5773
Radio and stereo			
Stereo tape player - hang-on	190	14	P-6540
AM/ stereo tape player, AM/FM multiplex radio & speakers - integral	190	21	P-7078
Shock absorber - front	30	8	P-6927
- rear			
Windshield wiper	175	19	P-8387
- wiper motor (2 speed Ford electric)	175	23	P-11434
- washer	175.1	17	P-8388
L (PINTO)			
Air conditioner			
- compressor - Tecumseh design	197	1	P-4381
- compressor - York design	197	2	P-4382
- compressor clutch - integral	197	3	P-3216
- controls - integral	195.1	25	P-8019
- engine compartment - integral - 4 cyl. 122	197.3	1	P-8021
- passenger compartment - economy hang-on	195	9	P-8547
- passenger compartment - integral	195.1	26	P-8018
- vacuum hoses - integral	197.3	2	P-8020
Bumper - front	176	16	P-8013
- rear	176.1	14	P-8014
Heater and controls	184	23	P-8017
Jack and spare wheel parts	175.2	11	P-8407
Rear window defogger	185	7	P-7968
Shock absorber - front	30	9	P-7936
- rear	54	13	P-7942
Windshield wiper	175	20	P-8034
- wiper motor (2 speed)	175	23	P-11434
- washer	175.1	14	P-8034

TITLE	SECTION	PAGE	ILLUS. NO.
P (MAVERICK)			
Air conditioner			
- compressor - Tecumseh design	197	1	P-4381
- compressor - York design	197	2	P-4382
- compressor clutch - integral	197	3	P-3216
- controls - integral	195.1	21	P-6899
- engine compartment - integral	197.1	20	P-6904
- engine compartment - integral- 6 cyl.170,200,250	197.1	20	P-6904
- engine compartment - integral - 8 cyl.302	197.2	37	P-6905
- passenger compartment - deluxe hang-on	195	10	P-8503
- passenger compartment - economy hang-on	195	9	P-8547
- passenger compartment - integral	195.1	20	P-6898
- vacuum hoses - integral-6 cyl.	197.1	19	P-6928
- vacuum hoses - integral-8 cyl.	197.2	38	P-6928
Bumper - front	176	11	P-6876
- rear	176.1	8	P-6877
Heater and controls	184	19	P-6890
Jack and spare wheel parts	175.2	11	P-6925
Stereo tape player - hang-on	190	14	P-6540
Rear window defogger	185	5	P-6893
Shock absorber - front	30	8	P-6927
- rear	54	11	P-6887
Windshield wiper	175	15	P-6875
- wiper motor (2 speed Ford electric)	175	23	P-11434
- washer	175.1	13	P-6875

INDEX

1971

S (THUNDERBIRD)

TITLE	SECTION	PAGE	ILLUS. NO.
Air Conditioner			
- compressor - Tecumseh design	197	1	P-4381
- compressor - York design	197	2	P-4382
- compressor clutches - integral	197	3	P-3216
- controls - with manual A/C	195.1	23	P-7727
- controls - with A. T. C.	195.1	24	P-7728
- engine compartment - integral	197.2	36	P-7726
- passenger compartment - with manual A/C	195.1	15	P-6316
- passenger compartment - with A. T. C.	195.1	12	P-6173
Bumper - front	176	13	P-7148
- rear	176.1	9	P-5619
Heated back window (defroster)	186	3	P-7510
Heater	184	15	P-6314
- controls, ducts etc.	184	22	P-7727
Jack and spare wheel parts	175.2	8	P-5780
Mirror - remote control	176.2	3	P-5773
Radio and stereo			
Antenna and related parts - electric	188	2	P-6534
AM/ stereo tape player, AM/FM multiplex radio & speakers - integral	190	17	P-6535
Rear window defogger	185	2	P-6249
Shock absorber - front	30	1	P-4545
- rear	54	1	P-4546
Windshield wiper - hydraulic	175	17	P-7456
- washer	175.1	15	P-7342

U (BRONCO)

TITLE	SECTION	PAGE	ILLUS. NO.
Bumper - front and rear	176	11	P-4937
Heater	184	8	P-5120
Jack and spare wheel parts	175.2	9	P-6599
Mirror - outside rectangular	176.2	2	P-6601
- outside remote control	176.2	4	P-8641
Shock absorber - front	30	6	P-4938
- rear	54	7	P-4939
Snow plow	190.1	1	P-8366
Windshield washer	175.1	6	P-5099
- wiper motor (2 speed Ford electric)	175	23	P-11434
- wiper (electric)	175	13	P-6956

1972

A (FORD)

Air Conditioner			
- compressor - Tecumseh design	197	1	P-4381
- compressor - York design	197	2	P-4382
- compressor clutches - integral	197	3	P-3216
- condenser, dehydrator and and deluxe-6 cyl.240 engine related parts-hang-on economy	197.1	26	P-8882
- condenser, dehydrator and related parts-hang-on economy and deluxe-all 8 cyl.engines	197.2	40	P-8882
- control box A.T.C.	195.1	33	P-8489
- controls - integral - A.T.C.	195.1	30	P-8307
- controls - integral - manual	195.1	29	P-8308
- engine compartment-hang-on economy and deluxe - 6 cyl.240 eng.	197.1	25	P-8857
- engine compartment-hang-on economy and deluxe-8 cyl.302, 351-W engines	197.2	43	P-8856
- engine compartment-hang-on economy and deluxe-8 cyl. 351-C, 400 engine	197.2	42	P-8855
- engine compartment - integral - 8 cyl. 302,351,400	197.2	31	P-6989
- engine compartment-hang-on economy and deluxe 8 cylinder 429 engine	197.2	41	P-8854
- engine compartment - integral - 8 cyl.429	197.2	32	P-7746
- passenger compartment - manual integral	195.1	31	P-8304
- passenger compartment - A.T.C.	195.1	32	P-8303

A (FORD) - continued

Air Conditioner - continued			
- passenger compartment-economy and deluxe hang-on evaporator	195	12	P-8847
- passenger compartment-deluxe hang-on bezel	195	15	P-8850
- passenger compartment-economy hang-on bezel	195	18	P-8881
- vacuum hoses - integral - 8 cyl.	197.2	40	P-8457
Bumper - front	176	14	P-8067
- rear - exc. body type 71	176.1	18	P-8906
- rear - body type 71	176.1	12	P-8068
Heated back window (defroster)	186	4	P-8436
Heater -	184	25	P-8306
- controls	184	26	P-8305
Jack and spare wheel parts			
- except body type 71	175.2	12	P-7055
- body type 71	175.2	13	P-7056
Mirror - remote control	176.2	3	P-5773
Radio and stereo			
Radio speakers - front door and rear seat	190	22	P-8450
AM/FM multiplex radio-integral	190	19	P-7076
Rear window defogger	185	6	P-8439
Shock absorber - front	30	11	P-8639
- rear	54	1	P-4546
Windshield wiper	175	18	P-8385
-wiper motor (2 speed)	175	10	P-6854
-washer	175.1	16	P-8386
Washer and wiper-rear			
-window body type 71	140.4	10	P-8320
	140.4	11	P-8321

COPYRIGHT © 1975 — FORD MOTOR COMPANY — DEARBORN, MICHIGAN

FINAL ISSUE

INDEX

1972

TITLE	SECTION	PAGE	ILLUS. NO.
B (TORINO)			
Air Conditioner			
- compressor - Tecumseh design	197	1	P-4381
- compressor - York design	197	2	P-4382
- compressor clutch - integral	197	3	P-3216
- controls - integral	195.1	35	P-8808
- condenser, dehydrator and related parts - hang-on economy and deluxe-all 6 cyl. engines	197.1	26	P-8882
- condenser, dehydrator and related parts - hang-on economy and deluxe - all 8 cyl.engines	197.2	40	P-8882
- engine compartment-hang-on economy and deluxe all 6 cyl.	197.1	24	P-8853
- engine compartment - integral - 6 cyl. 250	197.1	27	P-9960
- engine compartment-hang-on economy and deluxe 8 cyl.302, 351-W engines	197.2	43	P-8856
- engine compartment-hang-on 400 engines economy and deluxe-8 cyl.351-C,	197.2	42	P-8855
- engine compartment - integral - 8 cyl. 302,351	197.2	44	P-9961
- engine compartment - integral - 8 cyl. 400	197.2	45	P-9962
- engine compartment-hang-on economy and deluxe 8 cyl.429	197.2	41	P-8854
- engine compartment - integral - 8 cyl. 429	197.2	46	P-9963
- passenger compartment - integral	195.1	34	P-8806
- passenger compartment-economy and deluxe-hang-on evaporator	195	12	P-8847
- passenger compartment-deluxe hang-on bezel	195	16	P-8851
- passenger compartment-economy hang-on bezel	195	18	P-8881
- vacuum hoses - integral - 6 cyl.	197.1	28	P-9965
- vacuum hoses - integral - 8 cyl.	197.2	47	P-9965
Bumper - front (body types-63, 65R, 71K, 97K, 97R)	176	19	P-8663
- front (except body types 63, 65R, 71K, 97K, 97R)	176	18	P-8662
- rear (except body types 71 and 97)	176.1	15	P-8665
- rear (body types 71 and 97)	176.1	17	P-8667
Heated back window (defroster)	186	6	P-9941
Heater and controls	184	27	P-8804
Jack and spare wheel parts			
-except body type 71,97	175.2	14	P-9975
-body type 71	175.2	14	P-9974
-body type 97	175.2	15	P-9976
Mirror - remote control	176.2	3	P-5773
Radio and stereo AM/FM multiplex radio & speakers - integral	190	24	P-9971
Shock absorber - front	30	11	P-8639
- rear	54	15	P-8638

TITLE	SECTION	PAGE	ILLUS. NO.
B (TORINO) - continued			
Windshield wiper	175	21	P-9930
-washer	175.1	18	P-9929
-wiper motor-w/o concealed wipers	175	23	P-11434
-wiper motor -with concealed wipers	175	10	P-6854
F (MUSTANG)			
Air Conditioner			
- compressor - Tecumseh design	197	1	P-4381
- compressor - York design	197	2	P-4382
- compressor clutch - integral	197	3	P-3216
- controls - integral	195.1	27	P-8300
- condenser, dehydrator and related parts-hang-on economy and deluxe - all 6 cyl.engines	197.1	26	P-8882
- condenser, dehydrator and related parts - hang-on economy and deluxe - all 8 cyl.engines	197.2	40	P-8882
- engine compartment - hang-on economy and deluxe all 6 cyl.	197.1	24	P-8853
- engine compartment - integral - 6 cyl.200,250	197.1	22	P-7741
- engine compartment-hang-on economy and deluxe 8 cyl.302, 351-W engines	197.2	43	P-8856
- engine compartment-hang-on economy and deluxe-8 cyl.351-C, engine	197.2	42	P-8855
- engine compartment - integral - 8 cyl. 302,351	197.2	33	P-7742
- passenger compartment - integral	195.1	28	P-8301
- passenger compartment-economy and deluxe - hang-on evaporator	195	12	P-8847
- passenger compartment-deluxe hang-on bezel	195	17	P-8880
- passenger compartment-economy hang-on bezel	195	18	P-8881
- vacuum hoses - integral - 6 cyl.	197.1	23	P-8293
- vacuum hoses - integral - 8 cyl.	197.2	39	P-8293
Bumper - front	176	15	P-8087
- rear	176.1	13	P-8084
Heated back window (defroster)	186	5	P-8431
Heater & controls	184	24	P-8302
Jack and spare wheel parts	175.2	13	P-7063
Mirror - remote control	176.2	3	P-5773
Radio and stereo AM/ stereo tape player, AM/ FM multiplex radio & speakers - integral	190	21	P-7078
Shock absorber - front	30	8	P-6927
- rear	54	12	P-5960
Windshield wiper	175	19	P-8387
-wiper motor (2 speed Ford electric)	175	23	P-11434
-washer	175.1	17	P-8388

INDEX

1972

L (PINTO)

TITLE	SECTION	PAGE	ILLUS. NO.
Air Conditioner			
- compressor - Tecumseh design	197	1	P-4381
- compressor - York design	197	2	P-4382
- compressor clutch - integral	197	3	P-3219
- condenser, dehydrator and related parts-hang-on Economy and Deluxe-4 cyl.98 engine	197.3	3	P-8883
- condenser, dehydrator and related parts-hang-on Economy and Deluxe 4 cyl. 122 engine	197.3	5	P-8941
- controls - integral	195.1	25	P-8019
- engine compartment - integral - 4 cyl. 122	197.3	1	P-8021
- passenger compartment - integral	195.1	26	P-8018
- passenger compartment-economy and deluxe-hang-on evaporator	195	12	P-8847
- passenger compartment-deluxe hang-on bezel	195	13	P-8848
- passenger compartment-economy hang-on bezel	195	18	P-8881
- passenger compartment-built-in A/C dealer installed	195	19	P-11327
- vacuum hoses - integral	197.3	2	P-8020
Bumper - front	176	16	P-8013
- rear	176.1	14	P-8014
Engine compartment-hang-on Economy and Deluxe-4 cyl.98 engine	197.3	4	P-8859
Heated back window (defroster)	186	8	P-10166
Heater and controls	184	23	P-8017
Jack and spare wheel parts	175.2	11	P-8407
Rear window defogger	185	7	P-7968
Shock absorber - front	30	9	P-7936
- rear	54	13	P-7942
Windshield wiper	175	20	P-8034
-wiper motor (2 speed)	175	23	P-11434
-washer	175.1	14	P-8034

P (MAVERICK)

TITLE	SECTION	PAGE	ILLUS. NO.
Air Conditioner			
- compressor - Tecumseh design	197	1	P-4381
- compressor - York design	197	2	P-4382
- compressor clutch - integral	197	3	P-3216
- controls - integral	195.1	21	P-6899
- condenser, dehydrator and related parts - hang-on economy and deluxe-6 cyl.	197.1	26	P-8882
- condenser, dehydrator and related parts-hang-on economy and deluxe-8 cyl.	197.2	40	P-8882
- engine compartment-hang-on economy and deluxe-6 cyl.engines	197.1	24	P-8853
- engine compartment - integral - 6 cyl. 170, 200, 250	197.1	20	P-6904
- engine compartment-hang-on economy and deluxe-8 cyl.302 eng.	197.2	43	P-8856
- engine compartment - integral - 8 cyl. 302	197.2	37	P-6905
- passenger compartment - integral	195.1	20	P-6898
- passenger compartment-economy and deluxe hang-on evaporator	195	12	P-8847
- passenger compartment-deluxe hang-on bezel	195	14	P-8849
- passenger compartment-economy hang-on bezel	195	18	P-8881
- vacuum hoses - integral - 6 cyl.	197.1	19	P-6928
- vacuum hoses - integral - 8 cyl.	197.2	38	P-6928
Bumper - front	176	11	P-6876
- rear	176.1	8	P-6877
Heater and controls	184	19	P-6890
Jack and spare wheel parts	175.2	11	P-6925
Rear window defogger	185	5	P-6893
Shock absorber - front	30	8	P-6927
- rear	54	11	P-6887
Windshield wiper	175	15	P-6875
-wiper motor (2 speed Ford electric)	175	23	P-11434
-washer	175.1	13	P-6875

COPYRIGHT © 1975 — FORD MOTOR COMPANY — DEARBORN, MICHIGAN

INDEX

1972

TITLE	SECTION	PAGE	ILLUS. NO.
S (THUNDERBIRD)			
Air Conditioner			
- compressor - swash plate design	197	5	P-8492
- compressor clutches - integral	197	5	P-8492
- controls - with manual A/C	195.1	38	P-8809
- controls - with A. T. C.	195.1	36	P-8810
- control box A.T.C.	195.1	30	P-8307
- engine compartment - integral	197.2	48	P-9959
- passenger compartment - with manual A/C	195.1	34	P-8306
- passenger compartment - with A. T. C.	195.1	37	P-8807
- vacuum hoses - integral	197.2	49	P-9964
Bumper - front	176	17	P-8660
- rear	176.1	16	P-8661
Heated back window (defroster)	186	7	P-9942
Heater	184	29	P-8805
-controls, ducts, etc.	184	28	P-8809
Jack and spare wheel parts	175.2	15	P-9973
Mirror - remote control	176.2	3	P-5773
Radio and stereo			
Antenna and related parts - electric	188	3	P-9926
AM/ stereo tape player, AM/FM multiplex radio & speakers - integral	190	23	P-9970
Shock absorber - front	30	11	P-8639
- rear	54	15	P-8638
Windshield wiper	175	22	P-9928
-wiper motor	175	10	P-6854
-washer	175.1	19	P-9927

TITLE	SECTION	PAGE	ILLUS. NO.
U (BRONCO)			
Bumper - front and rear	176	11	P-4937
Heater	184	8	P-5120
Jack and spare wheel parts	175.2	9	P-6599
Mirror - outside rectangular	176.2	2	P-6601
- outside remote control	176.2	4	P-8641
Shock absorber - front	30	6	P-4938
- rear	54	7	P-4939
Snow plow	190.1	1	P-8366
Windshield washer	175.1	6	P-5099
-wiper motor (2 speed Ford electric)	175	23	P-11434
-wiper (electric)	175	13	P-6956

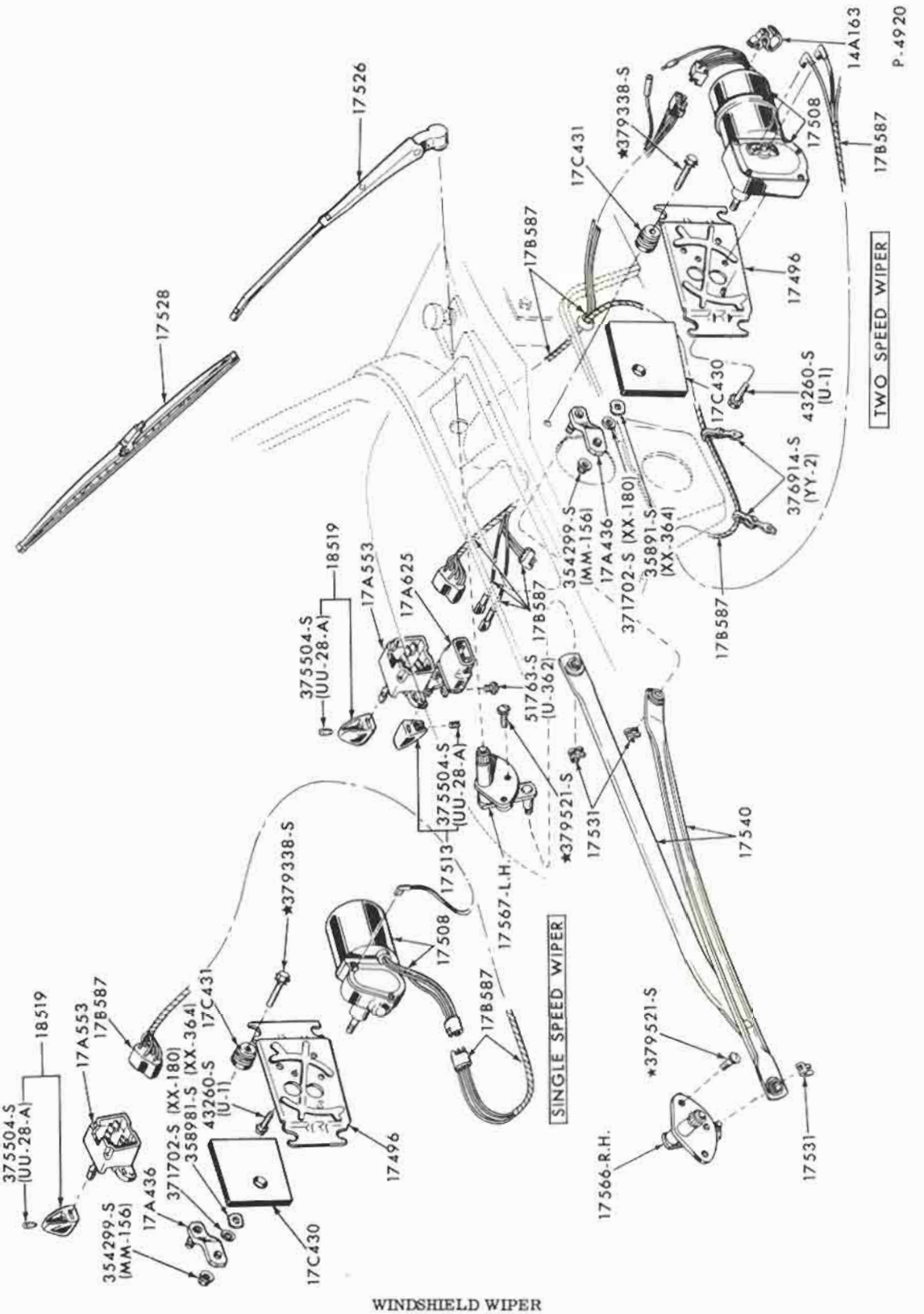

WINDSHIELD WIPER
1965/68 FORD

COPYRIGHT © 1975 — FORD MOTOR COMPANY — DEARBORN, MICHIGAN

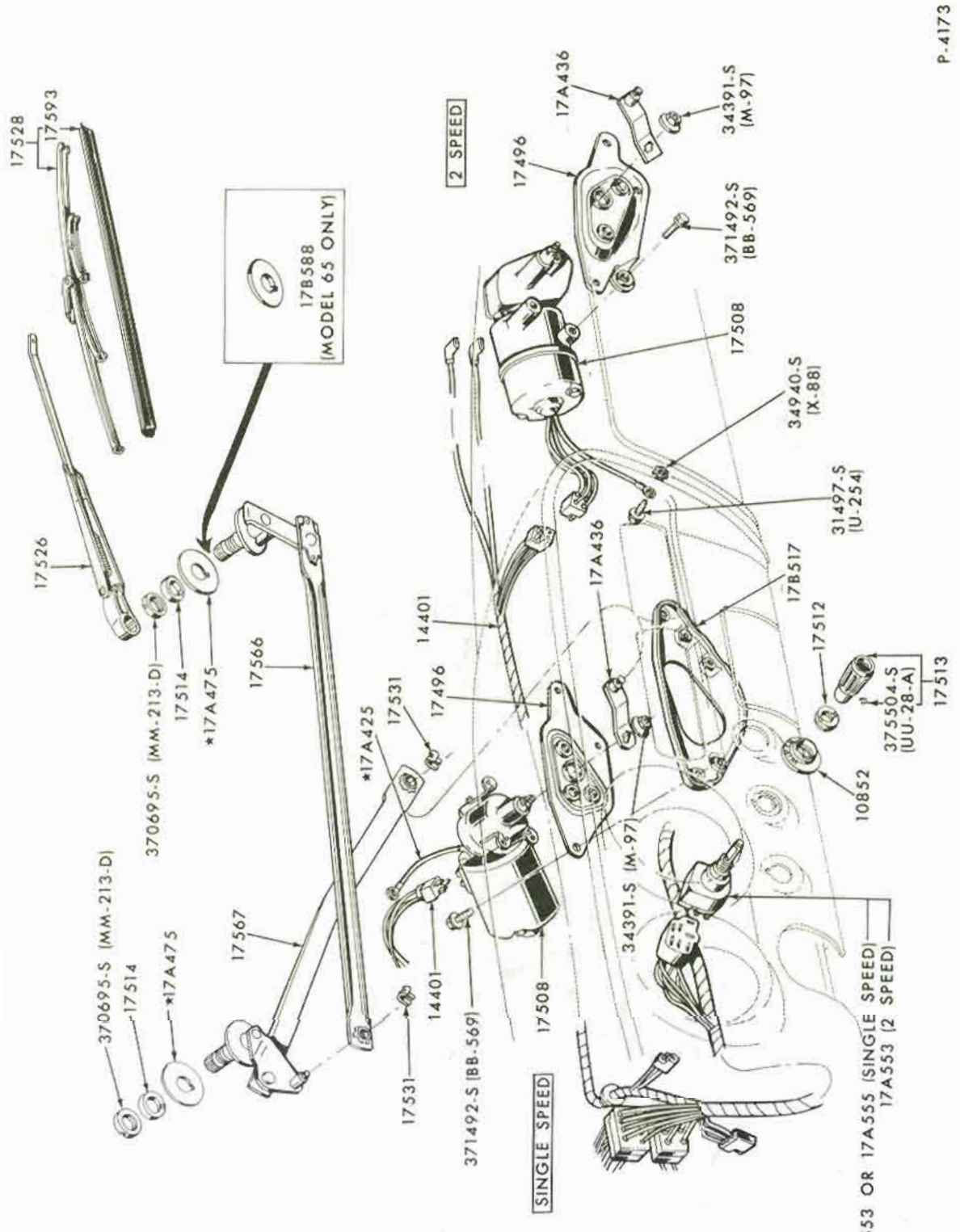

WINDSHIELD WIPER
1965 FAIRLANE

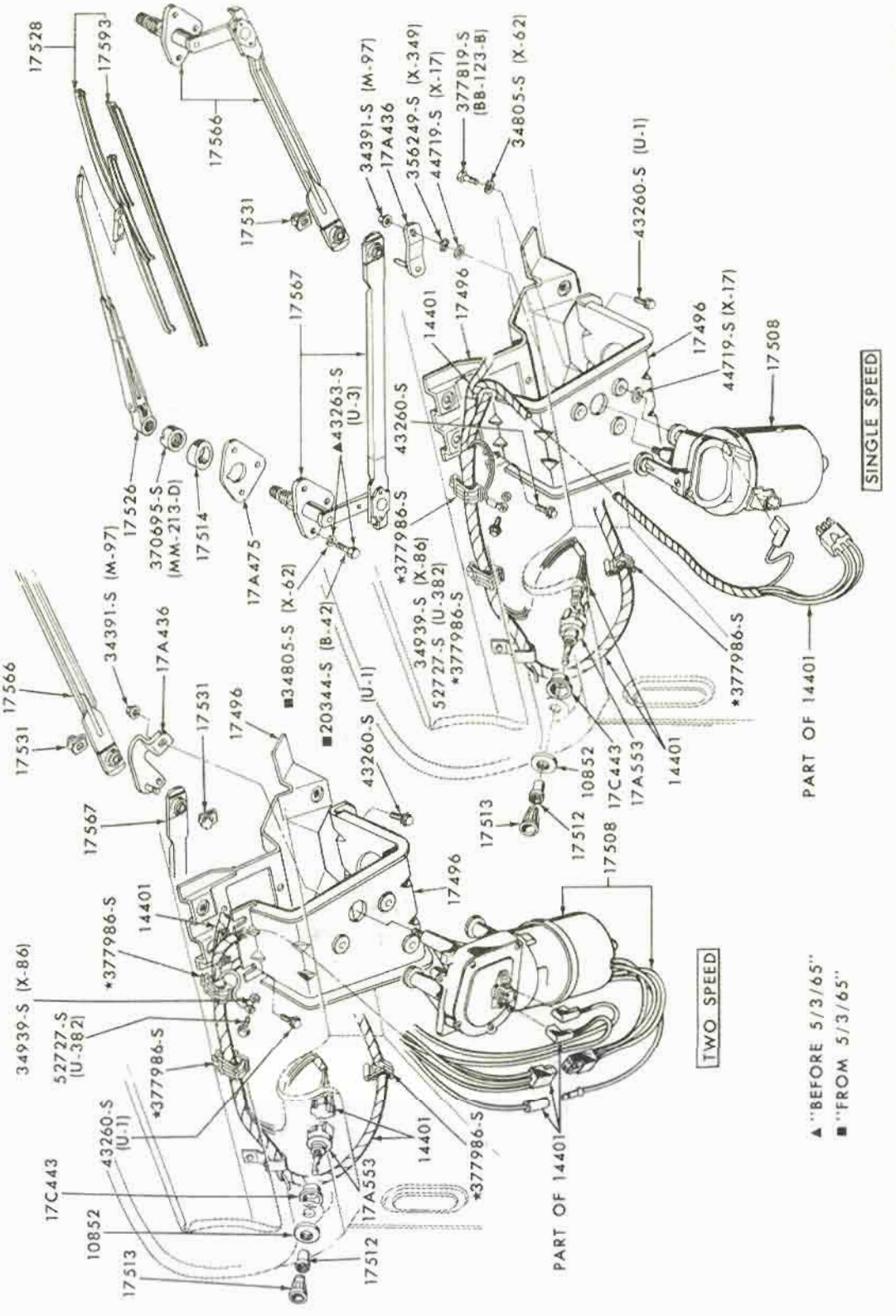

WINDSHIELD WIPER
1965/68 MUSTANG

COPYRIGHT © 1975 — FORD MOTOR COMPANY — DEARBORN, MICHIGAN

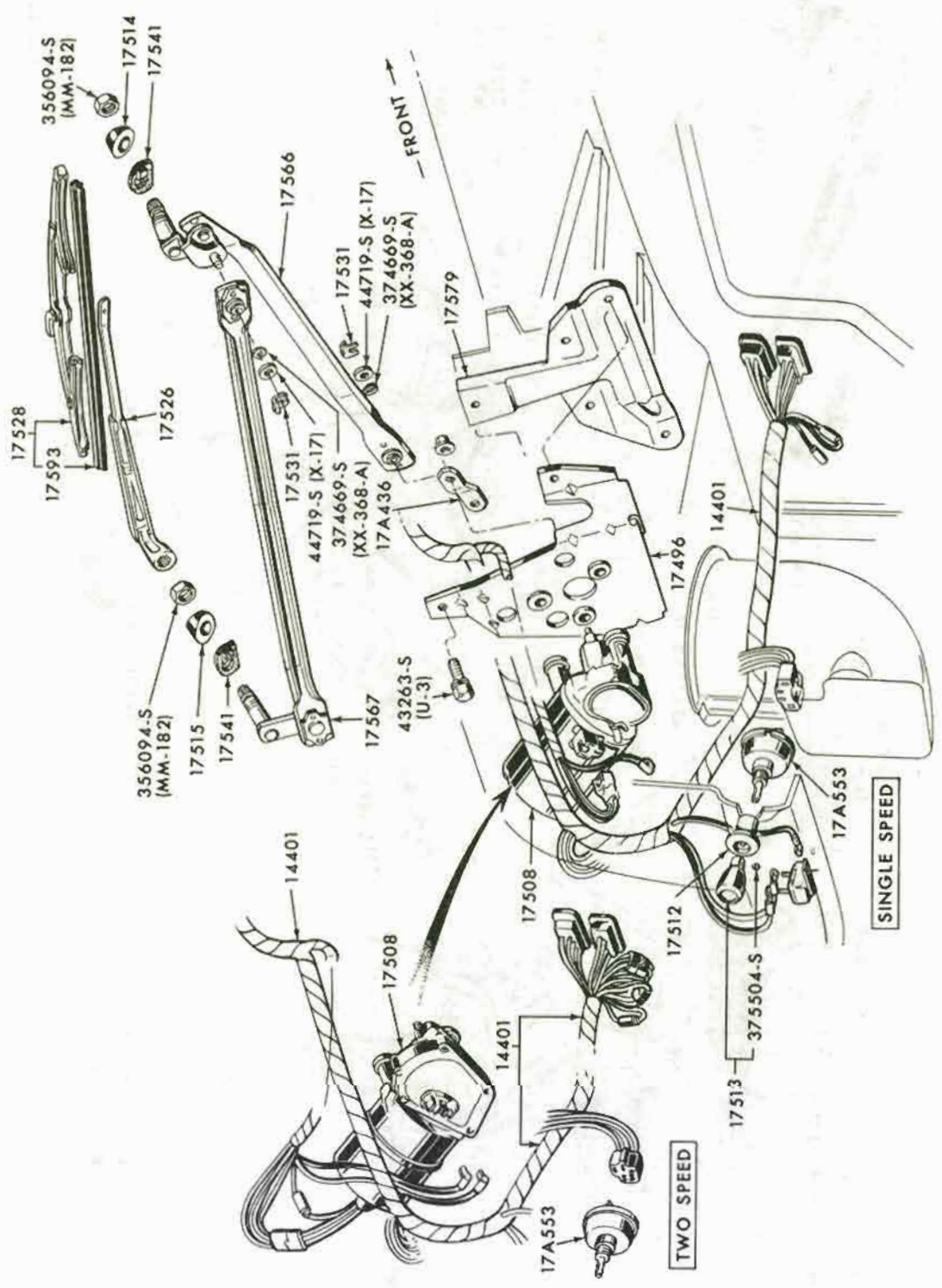
P-4130
FRONT
356094-S (MM-182)
17514
17541
17566
17528
17593
17526
17531
44719-S (X-17)
374669-S (XX-368-A)
17579
17531 (X-17)
44719-S (X-17)
374669-S (XX-368-A)
17A436
17496
14401
356094-S (MM-182)
17515
17541
17567
43263-S (U-3)
17A553
SINGLE SPEED
14401
17508
17512
375504-S
17513
17508
14401
17A553
TWO SPEED

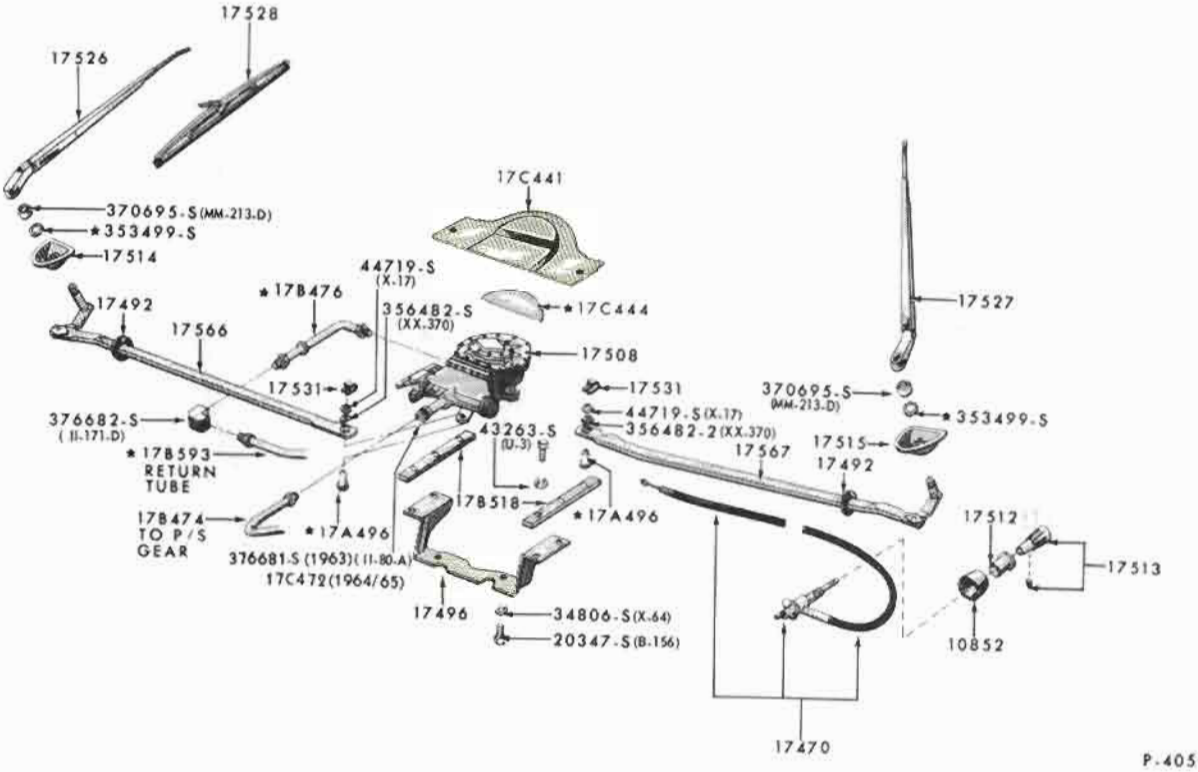

WINDSHIELD WIPER (HYDRAULIC)
1965/66 THUNDERBIRD

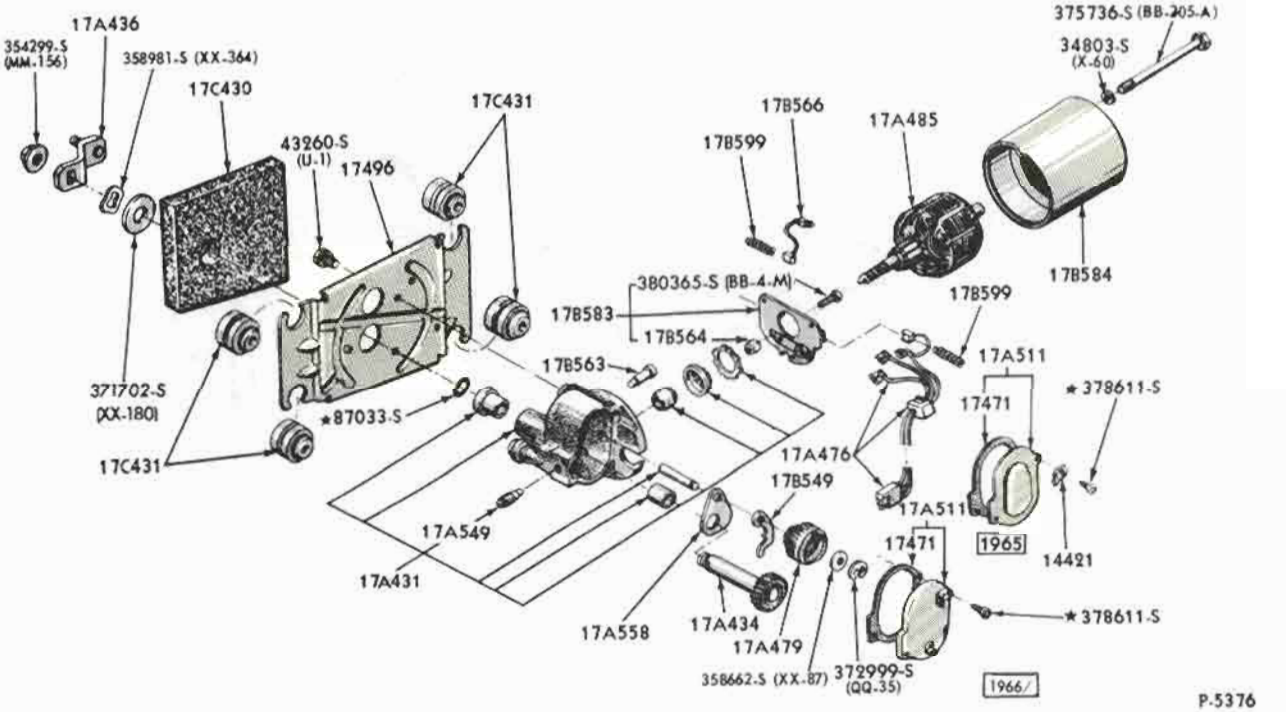

WINDSHIELD WIPER MOTOR (SINGLE SPEED FORD ELECTRIC)
1965/66 FORD, FAIRLANE, FALCON and MUSTANG

COPYRIGHT © 1975 — FORD MOTOR COMPANY — DEARBORN, MICHIGAN

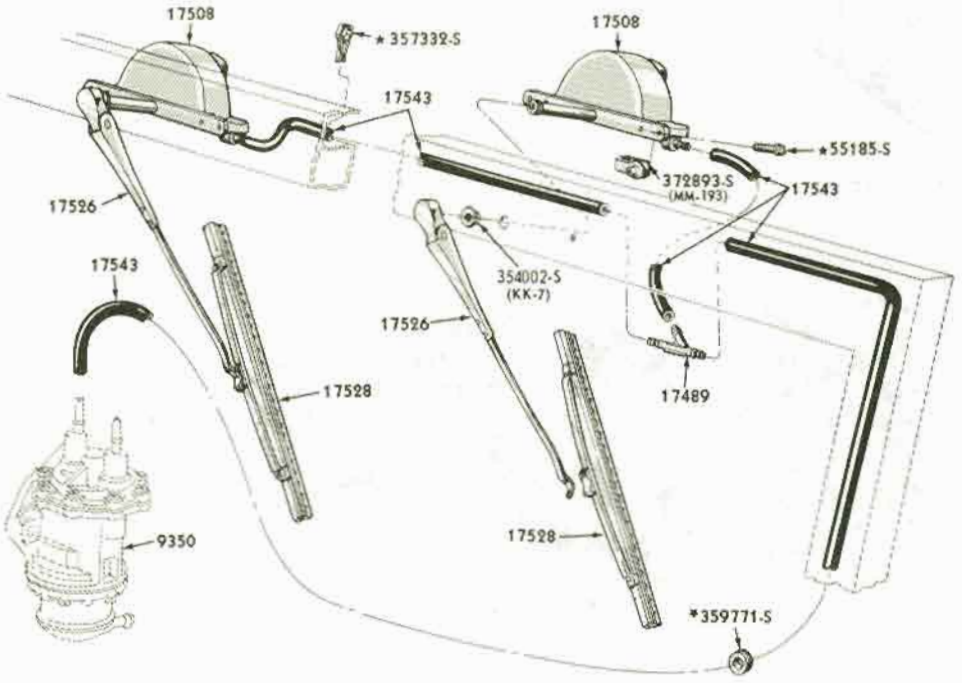

P-5098

WINDSHIELD WIPER (VACUUM)
1966/69 BRONCO

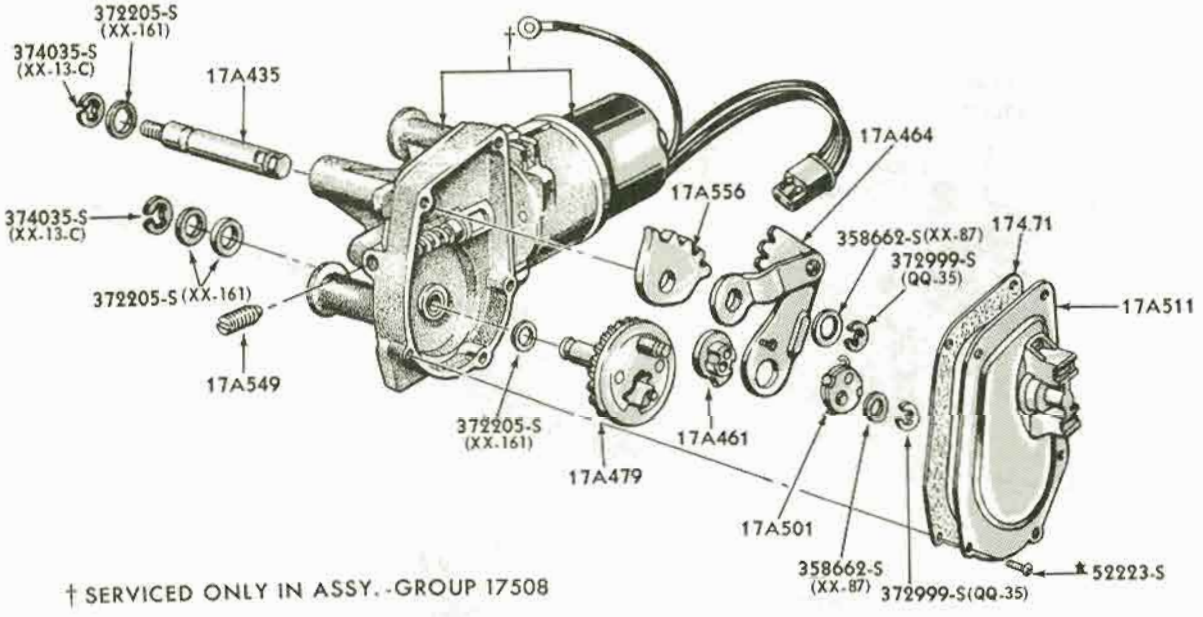

† SERVICED ONLY IN ASSY.-GROUP 17508

P-4200

WINDSHIELD WIPER MOTOR (2 SPEED FORD ELECTRIC)
1965/68 FORD, 1965/ FAIRLANE and FALCON, 1965/66 MUSTANG
1970 THUNDERBIRD

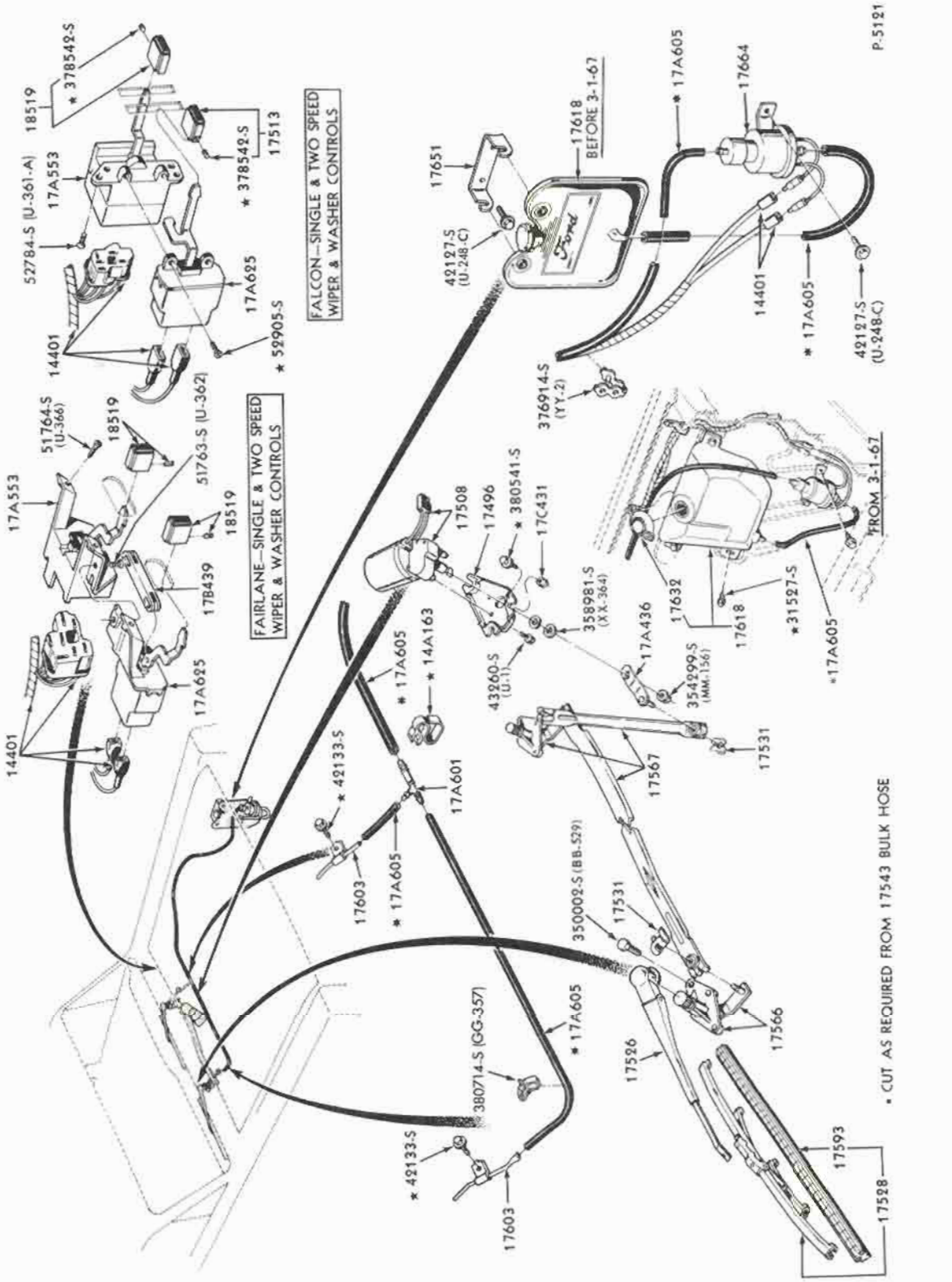

WINDSHIELD WIPER and WASHER
1966/67 FAIRLANE and FALCON

COPYRIGHT © 1975— FORD MOTOR COMPANY — DEARBORN, MICHIGAN

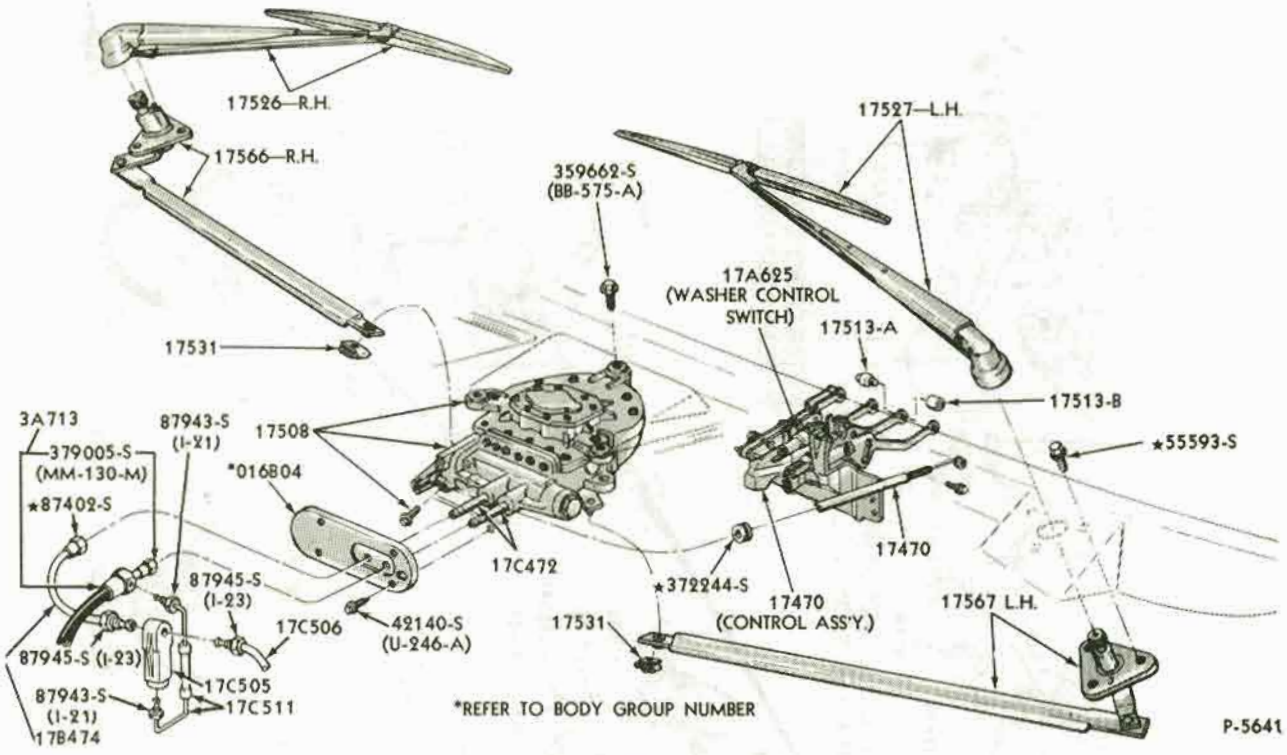

WINDSHIELD WIPER (HYDRAULIC)
1967 THUNDERBIRD

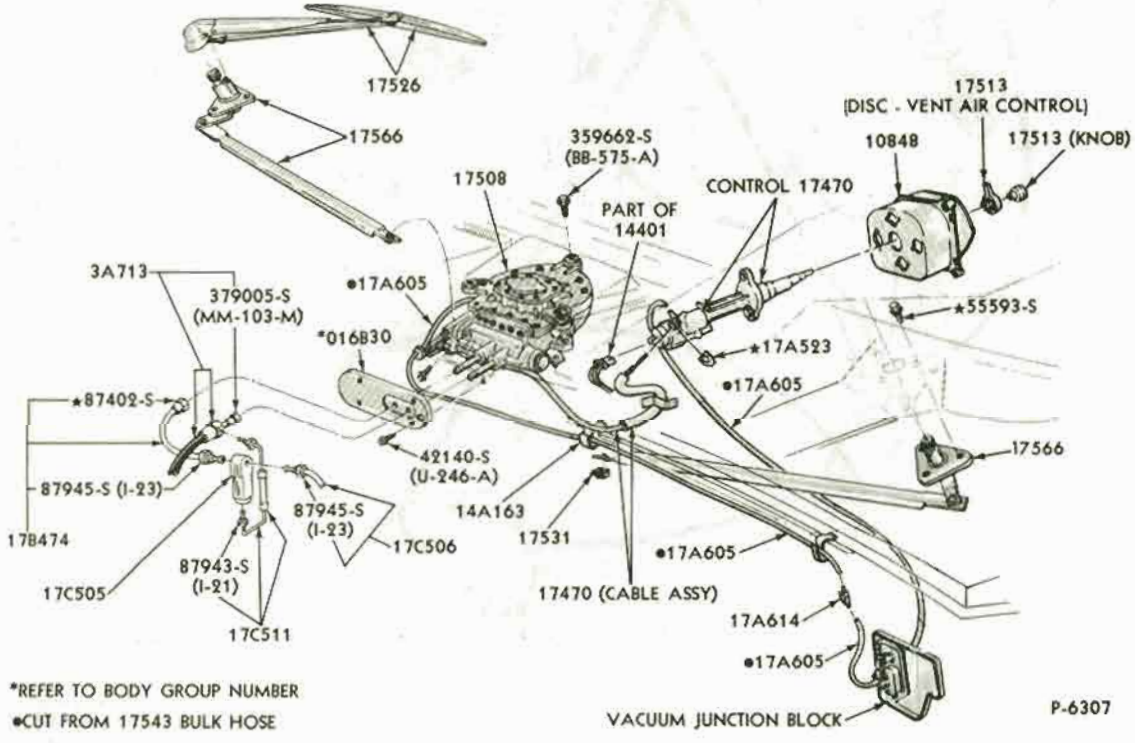

WINDSHIELD WIPER
1968/69 THUNDERBIRD

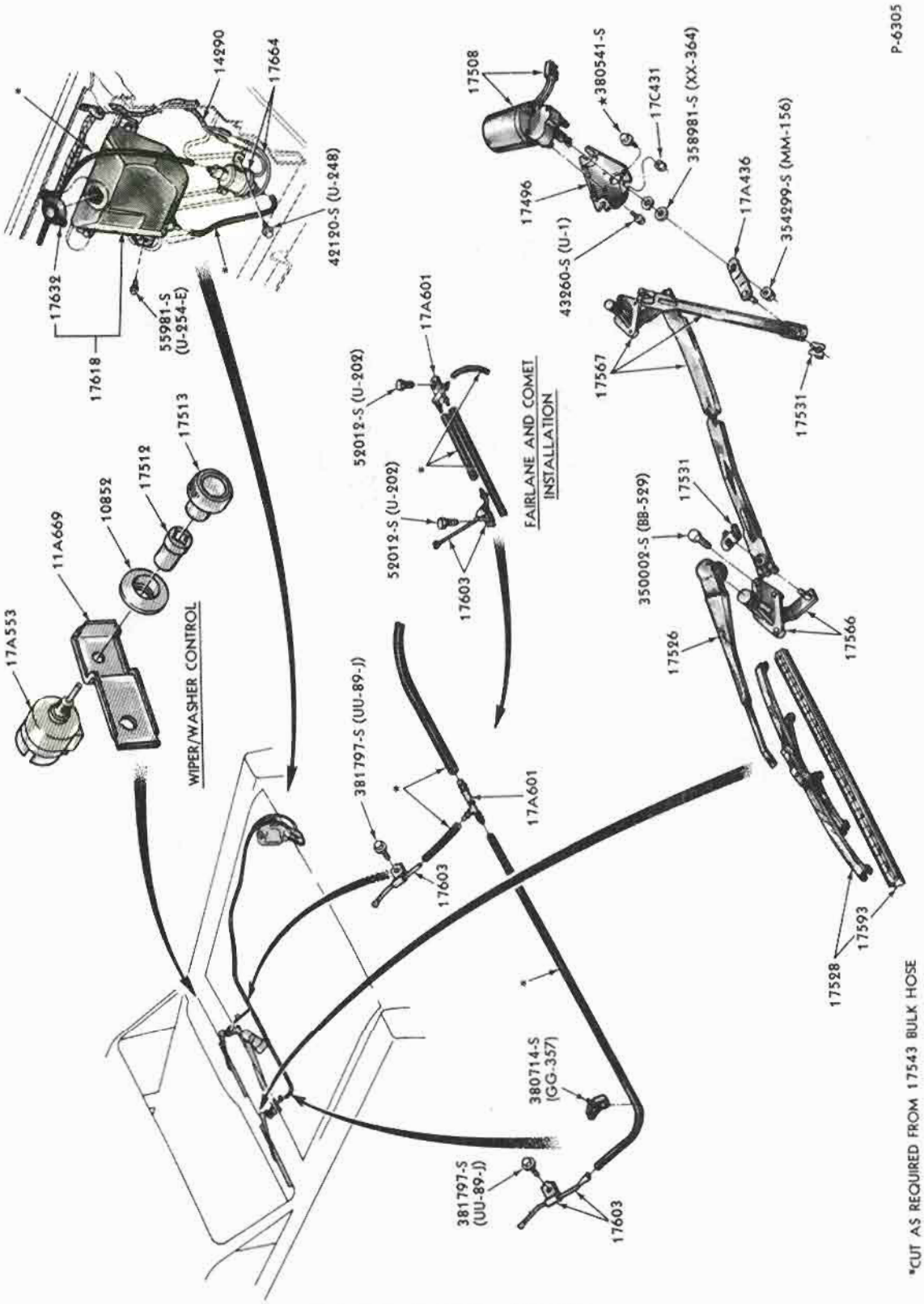

WINDSHIELD WIPER and WASHER
1968/69 FAIRLANE/TORINO and 1968/70 FALCON

COPYRIGHT © 1975 — FORD MOTOR COMPANY — DEARBORN, MICHIGAN

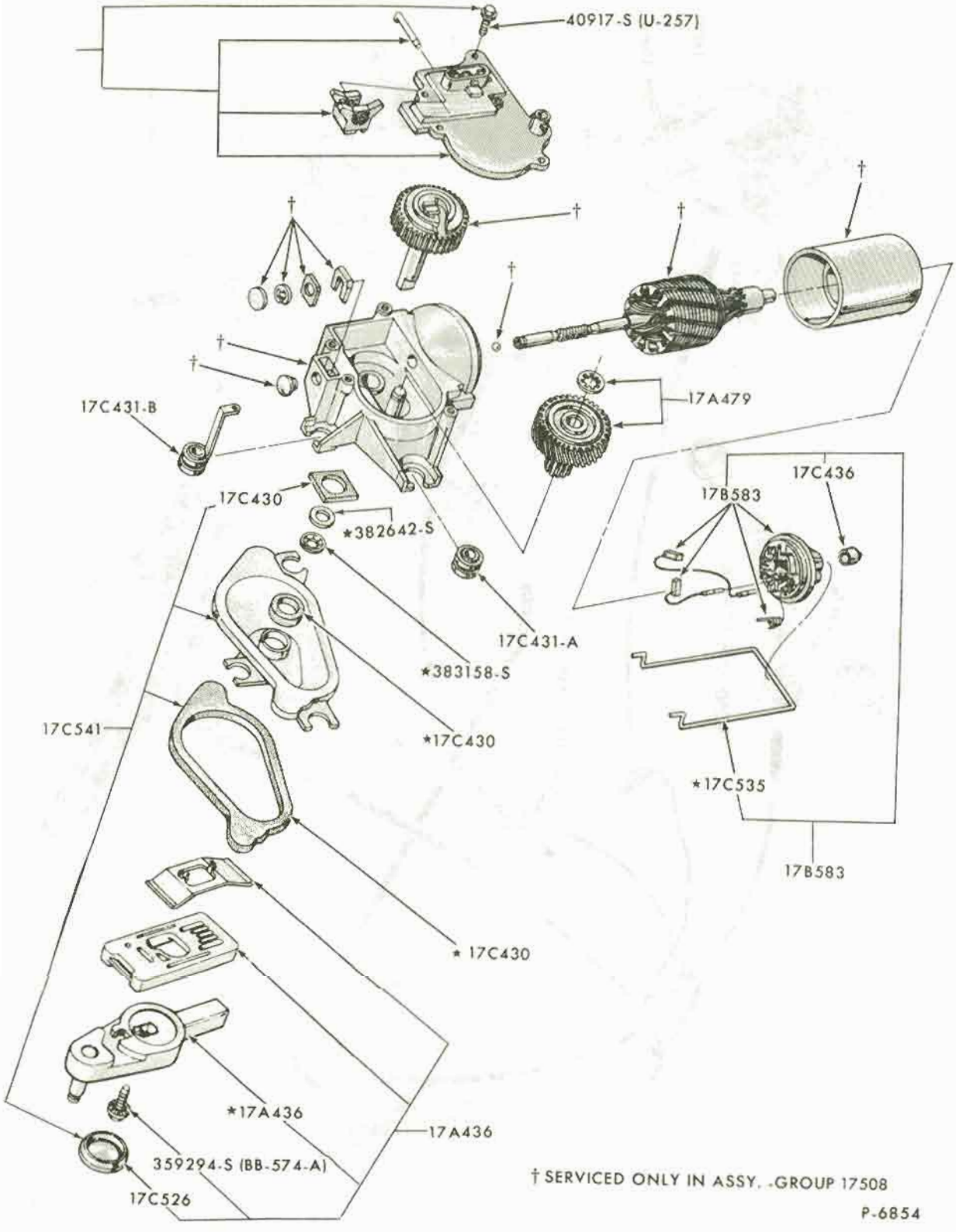

WINDSHIELD WIPER MOTOR (2 SPEED)
1969/72 FORD, 1972 TORINO with CONCEALED WIPERS, 1972 THUNDERBIRD

WINDSHIELD WIPER
1969/70 FORD

COPYRIGHT © 1975 — FORD MOTOR COMPANY — DEARBORN, MICHIGAN

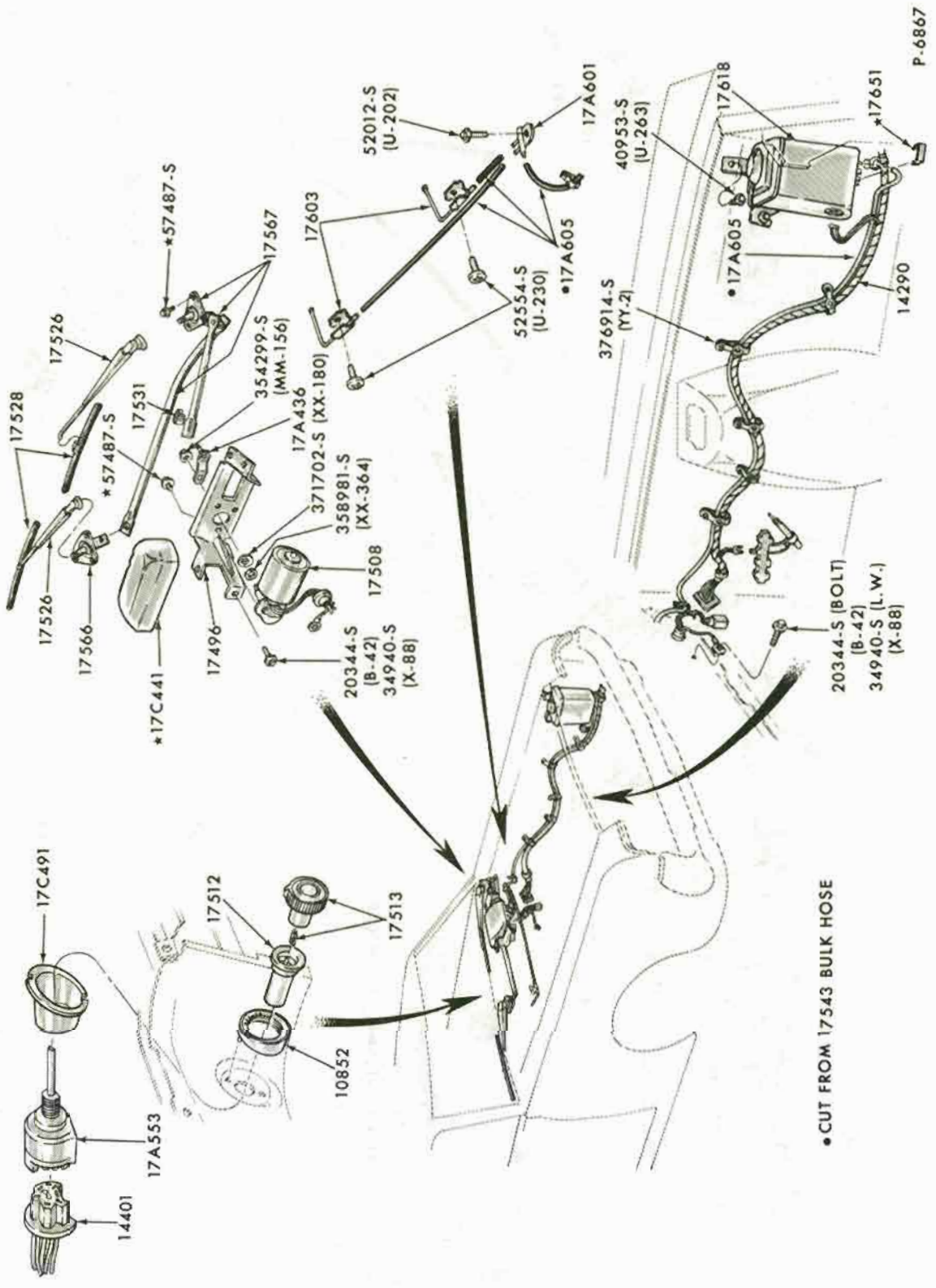

WINDSHIELD WIPER and WASHER
1969/70 MUSTANG

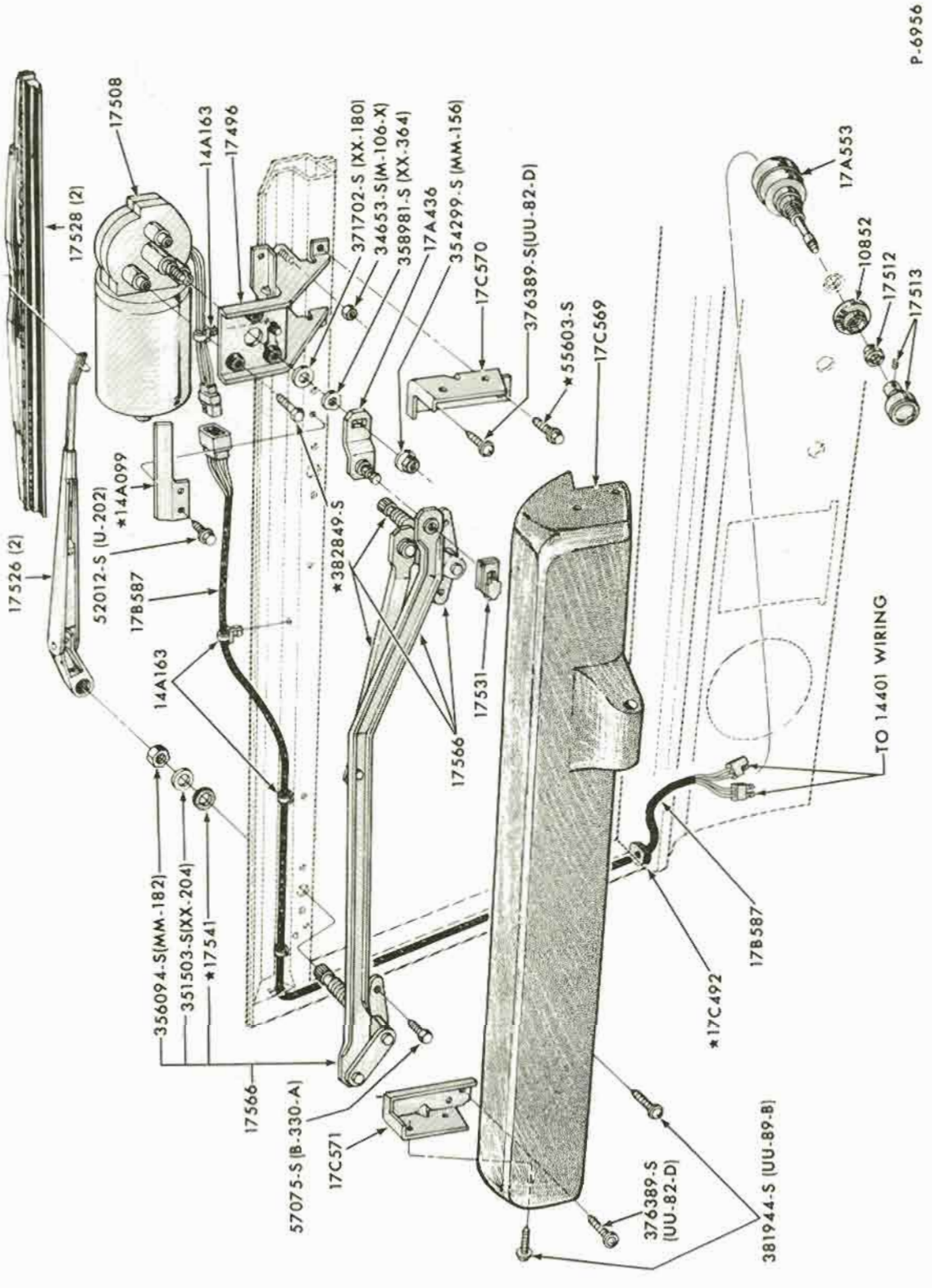

WINDSHIELD WIPER (ELECTRIC)
1969/72 BRONCO

COPYRIGHT © 1975 — FORD MOTOR COMPANY — DEARBORN, MICHIGAN

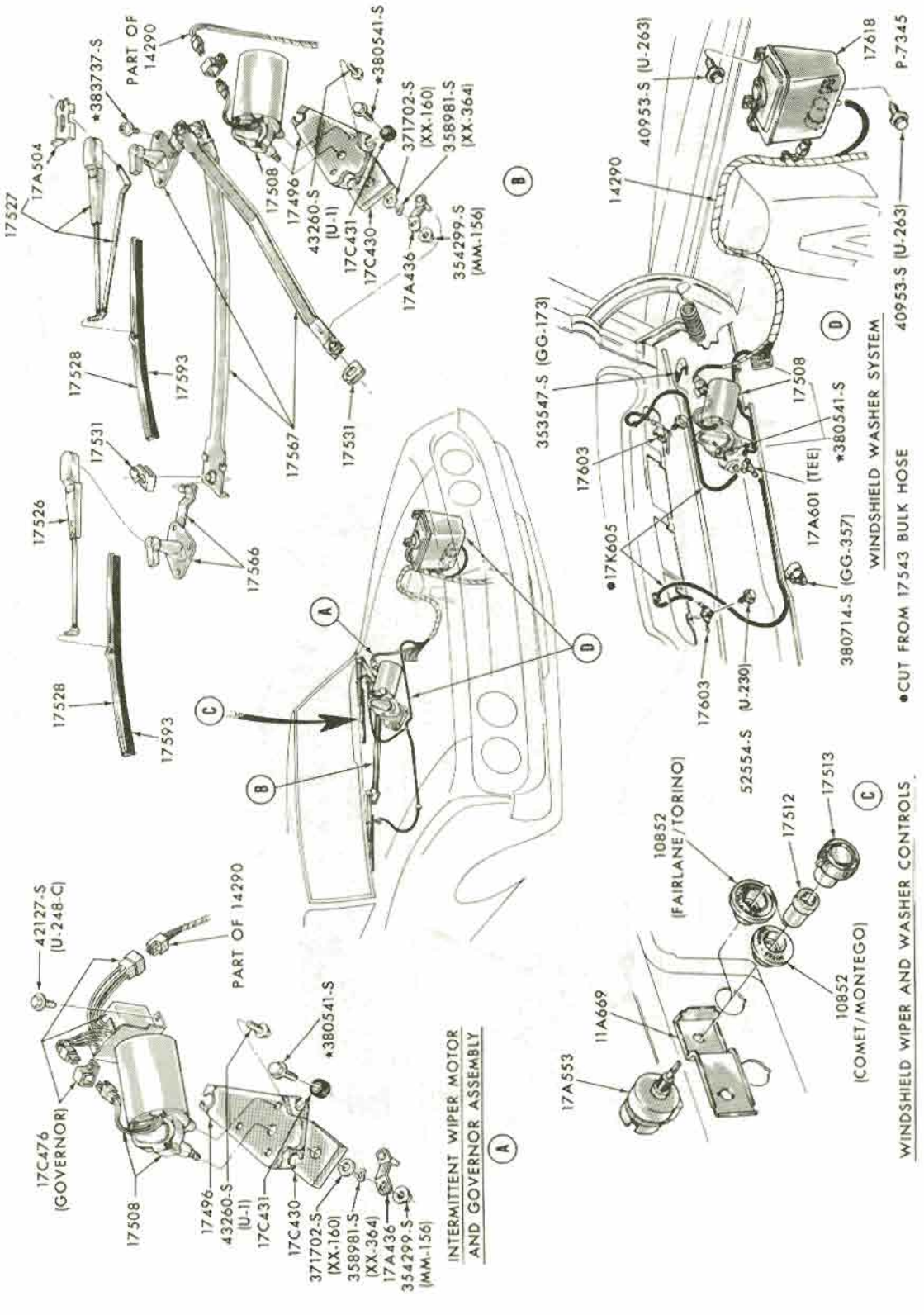

WINDSHIELD WIPER and WASHER
1970/71 FAIRLANE/TORINO

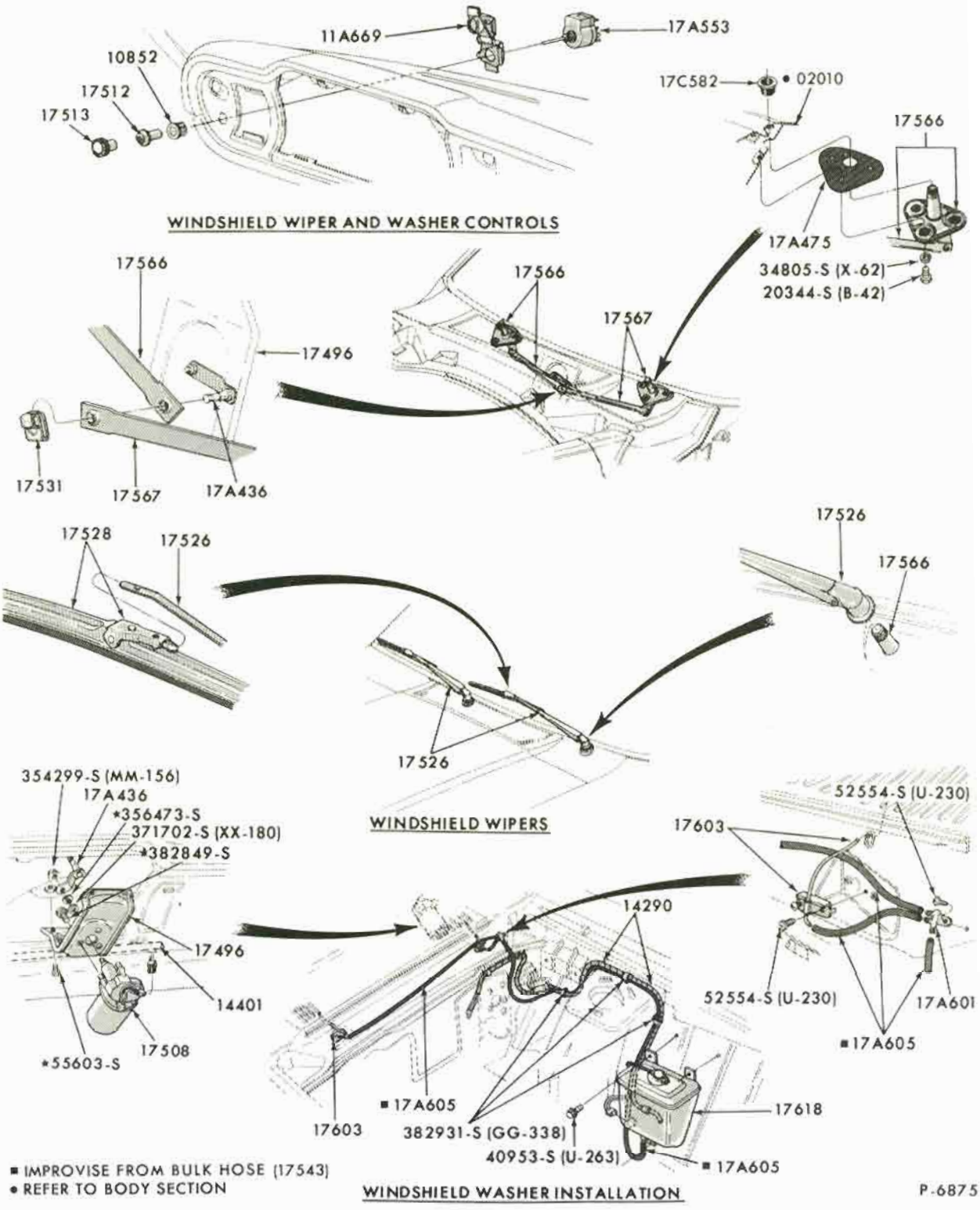

WINDSHIELD WIPER and WASHER
1970/72 MAVERICK

COPYRIGHT © 1975— FORD MOTOR COMPANY —DEARBORN, MICHIGAN

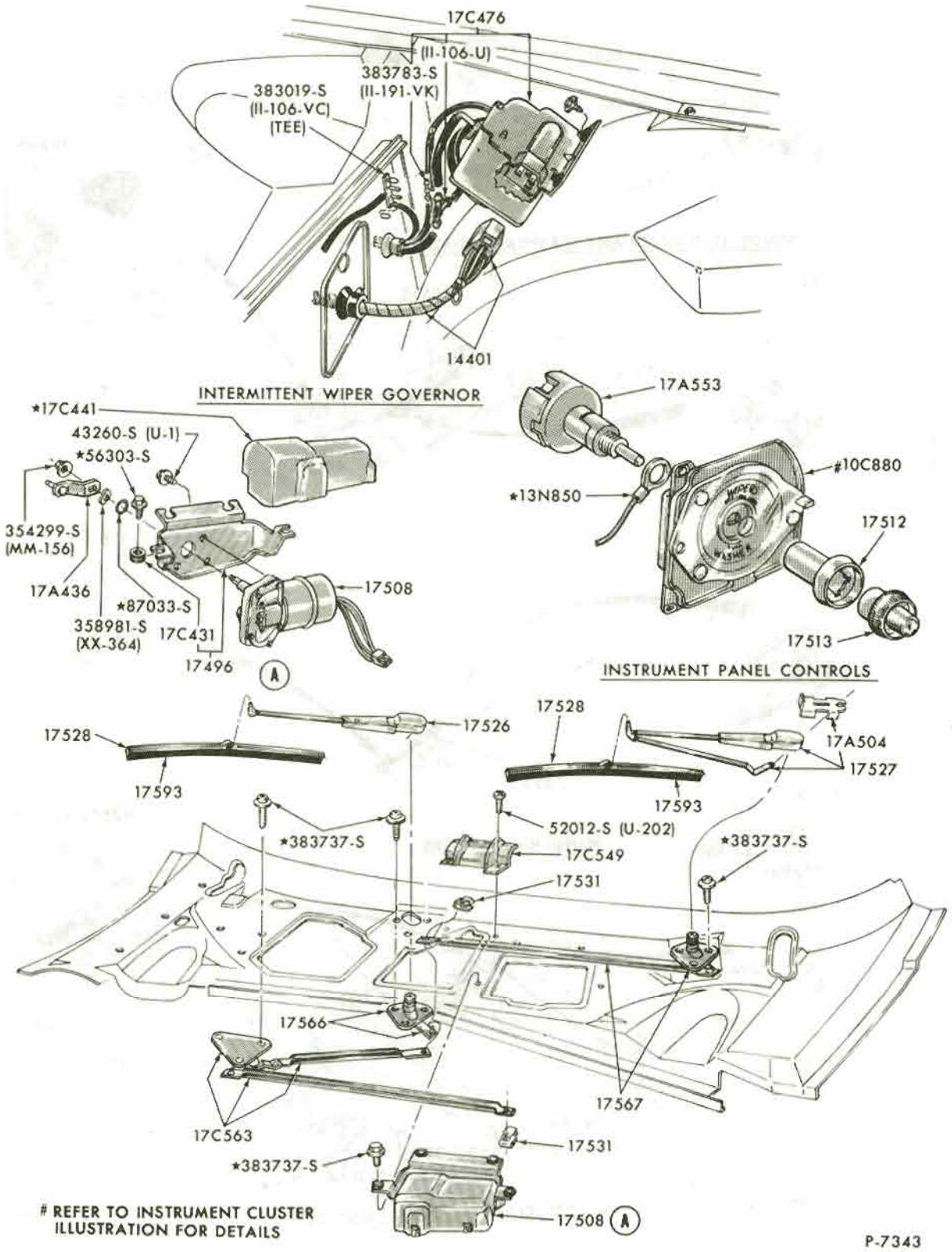

WINDSHIELD WIPER (ELECTRIC)
1970 THUNDERBIRD

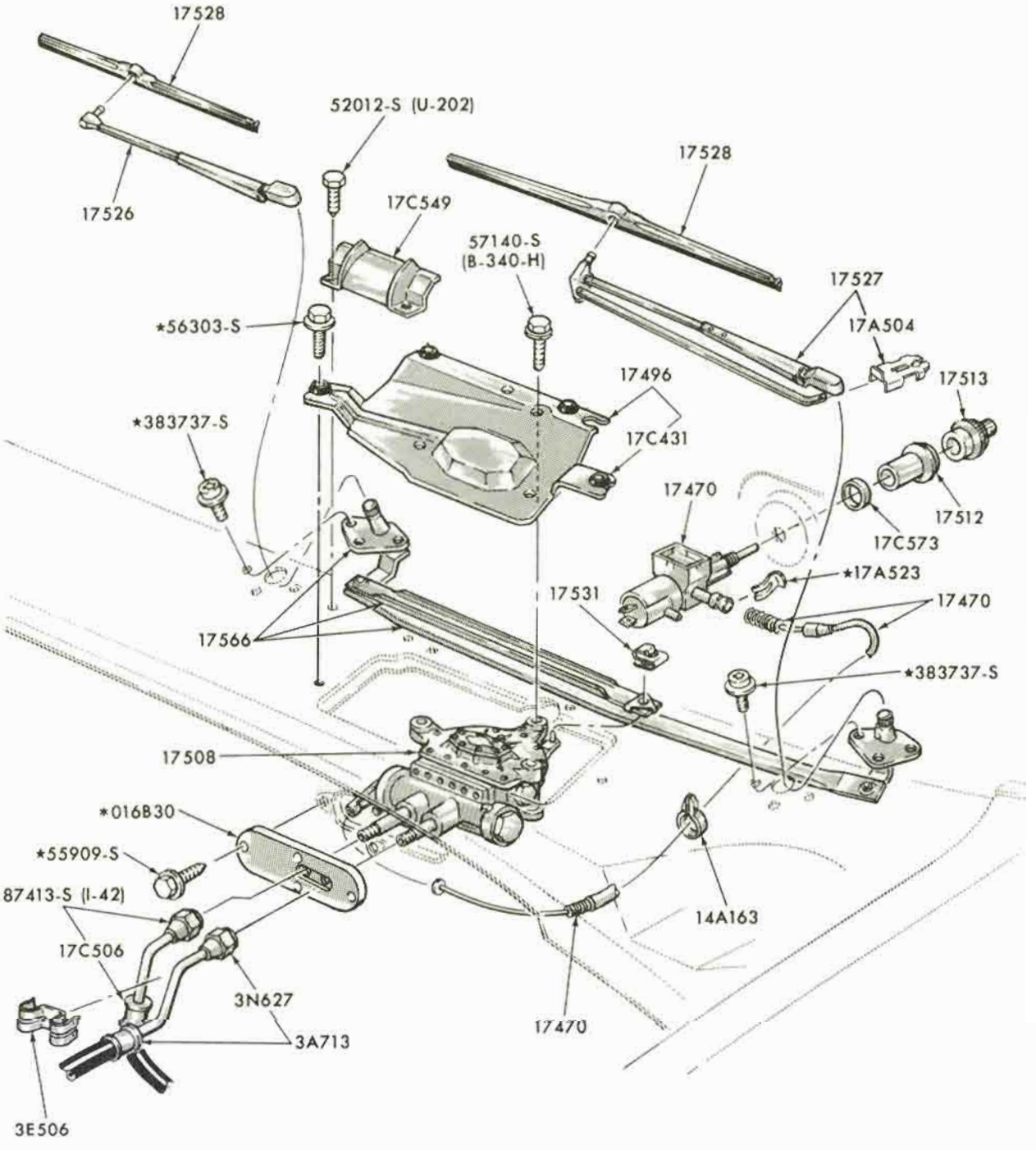

*REFER TO BODY GROUP NUMBER

P-7456

May, 1975 COPYRIGHT © 1975 — FORD MOTOR COMPANY — DEARBORN, MICHIGAN

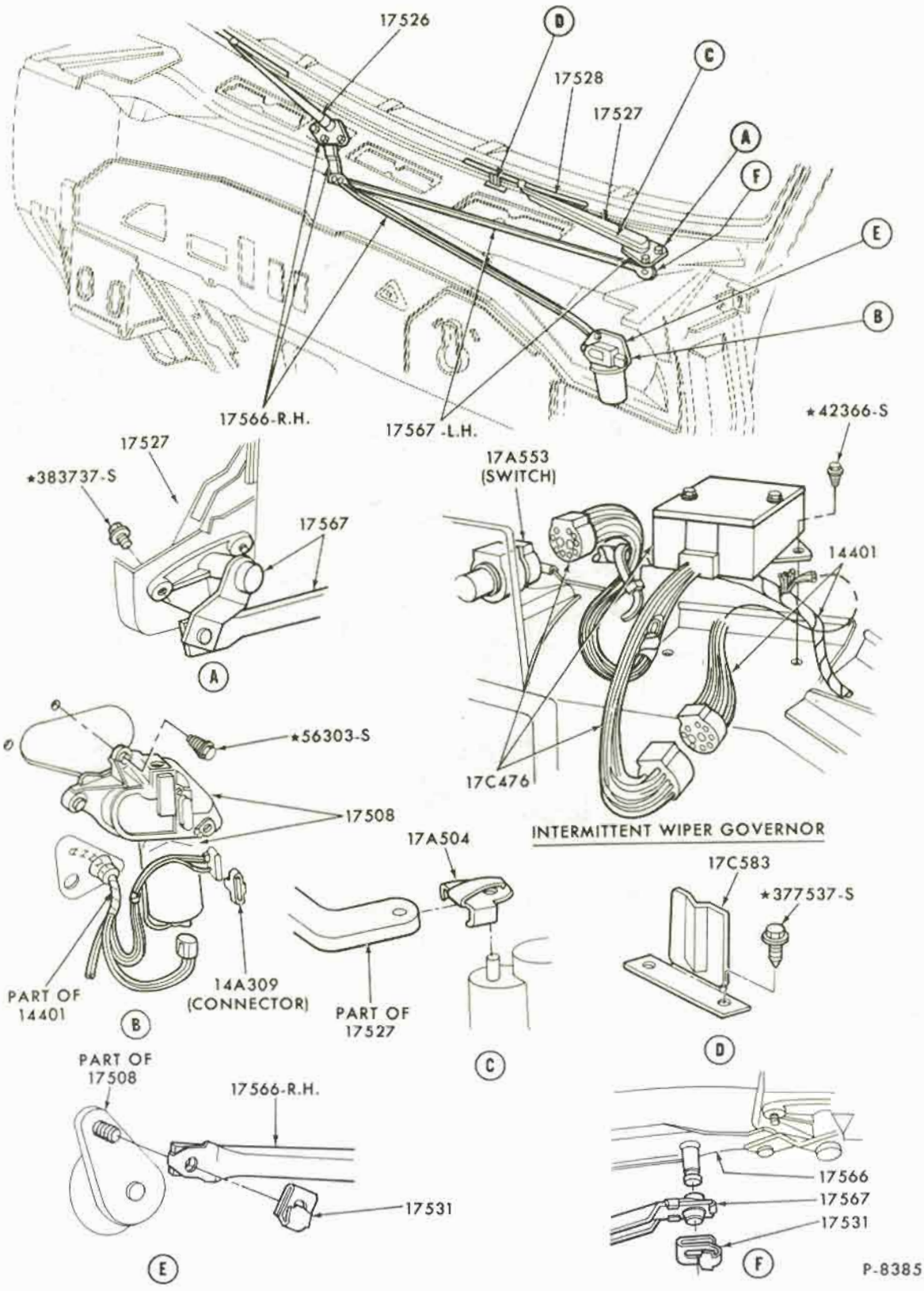
17526
D
17528
C
17527
A
F
E
B
17566-R.H.
17567 -L.H.
17527
*383737-S
17567
A
*42366-S
17A553
(SWITCH)
14401
17C476
INTERMITTENT WIPER GOVERNOR
*56303-S
17508
PART OF
14401
14A309
(CONNECTOR)
B
17A504
PART OF
17527
C
17C583
*377537-S
D
PART OF
17508
17566-R.H.
17531
E
17566
17567
17531
F
P-8385

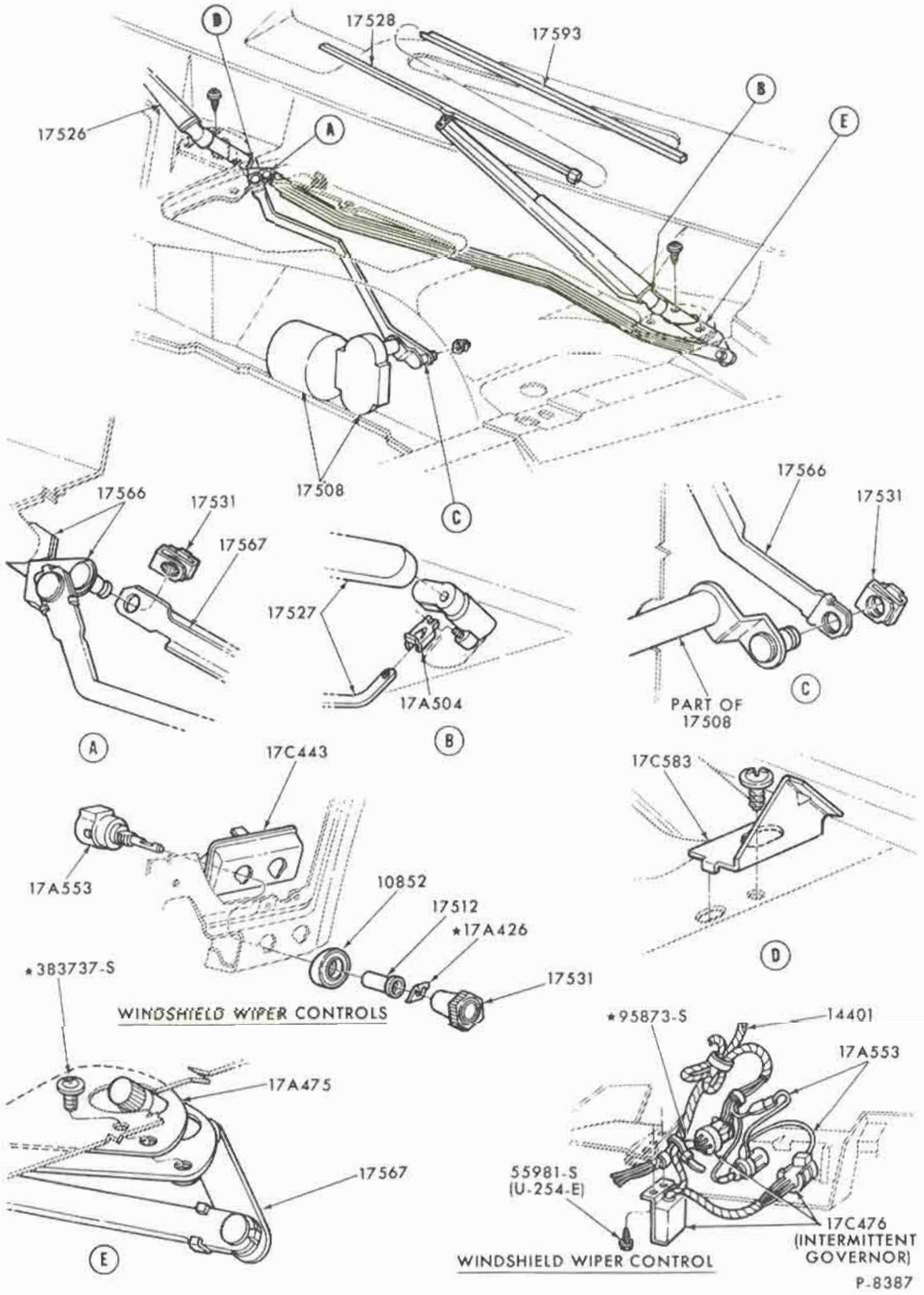

P-8387

WINDSHIELD WIPER
1971/72 MUSTANG

COPYRIGHT © 1975 — FORD MOTOR COMPANY — DEARBORN, MICHIGAN

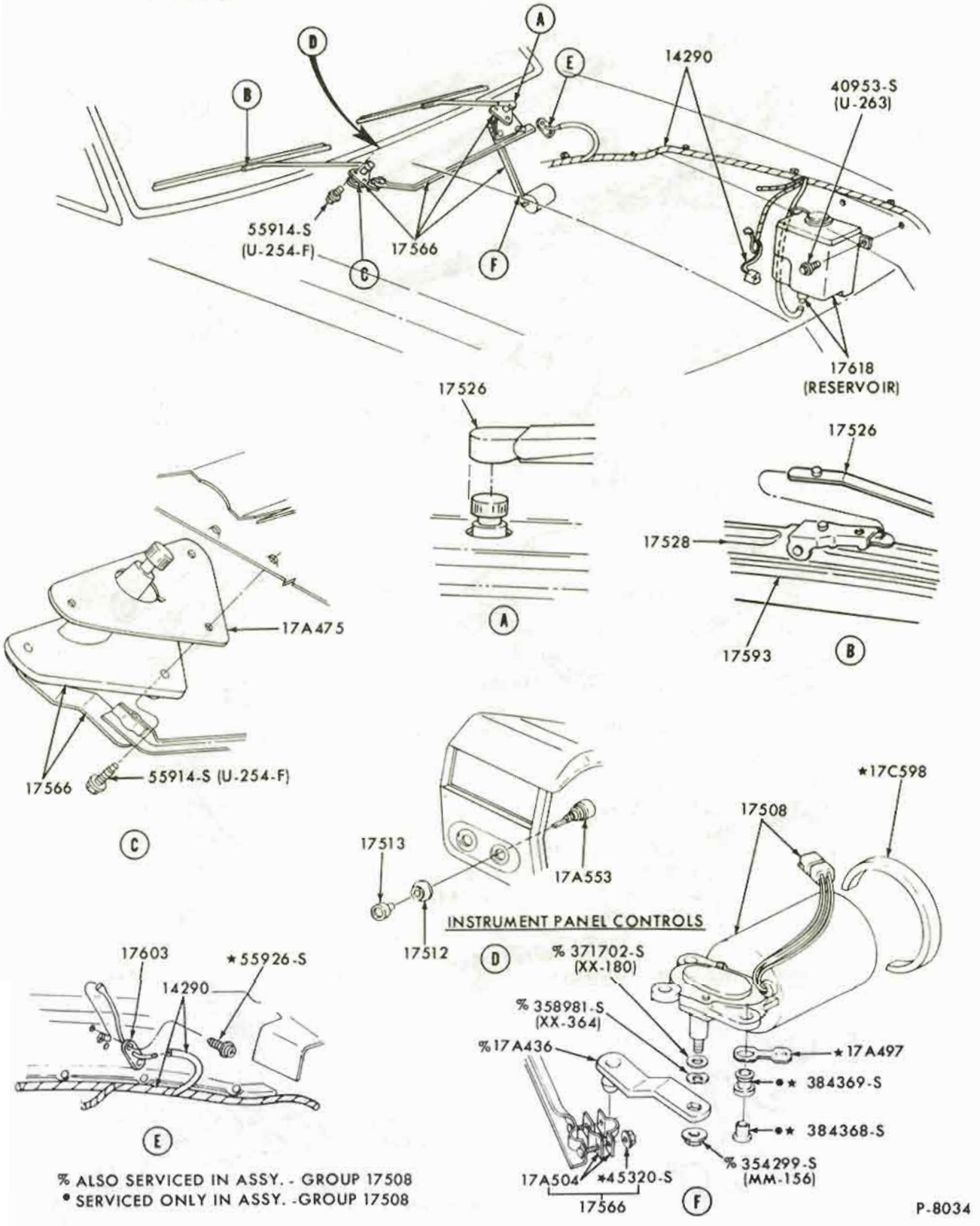

% ALSO SERVICED IN ASSY. - GROUP 17508
• SERVICED ONLY IN ASSY. -GROUP 17508

P-8034

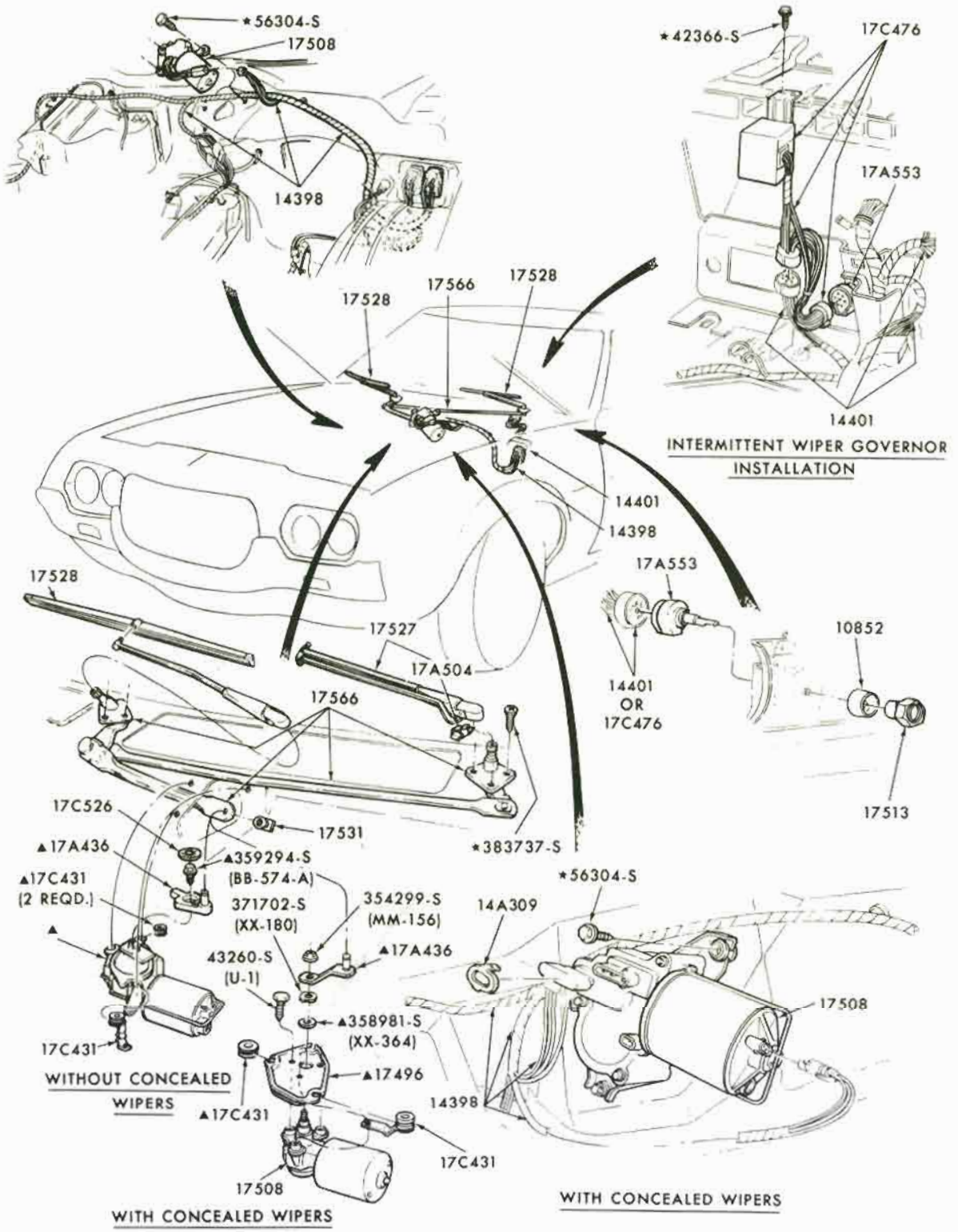

▲ALSO SERVICED AS PART OF THE 17508 WIPER MOTER

P-9930

COPYRIGHT © 1975 — FORD MOTOR COMPANY — DEARBORN, MICHIGAN

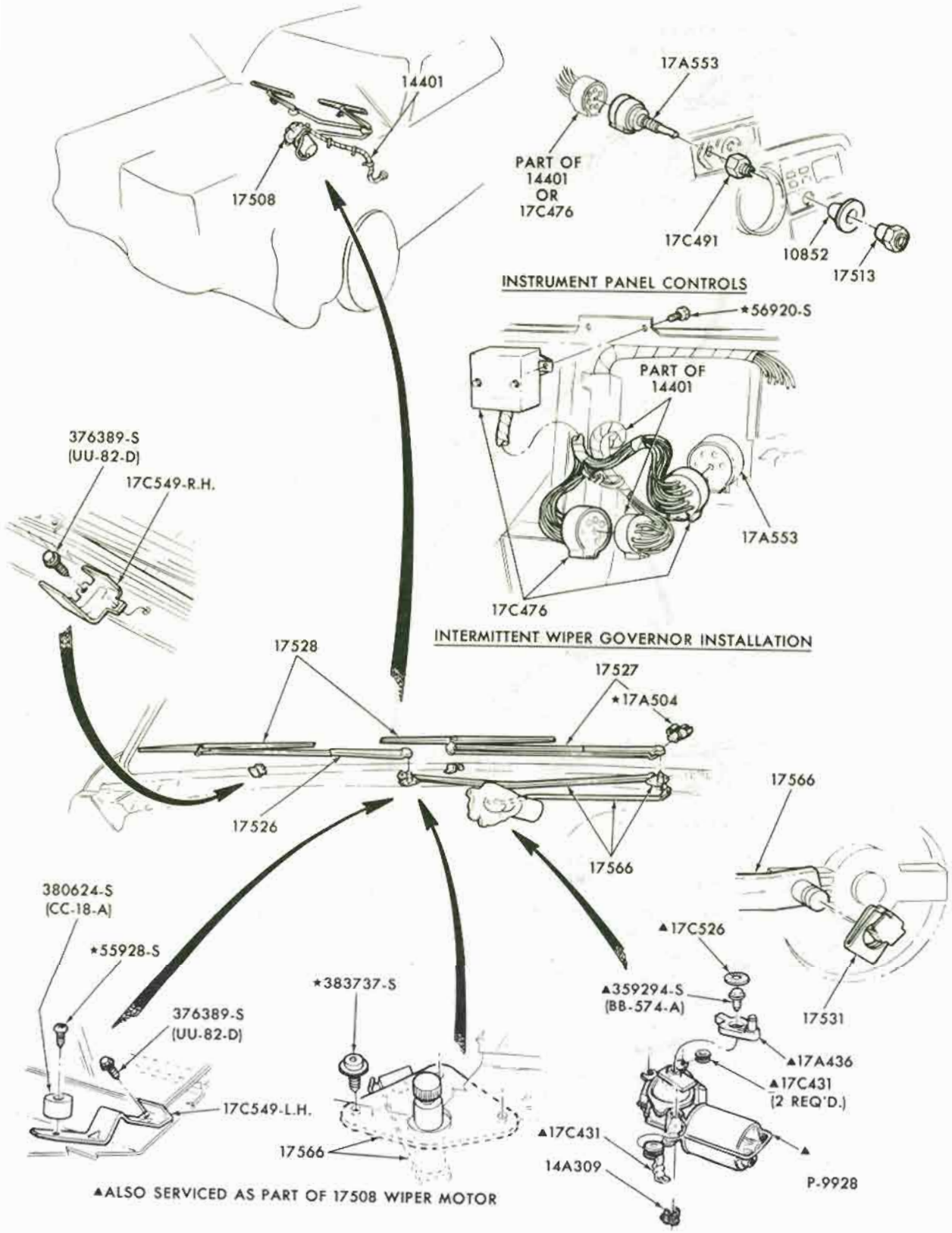

▲ALSO SERVICED AS PART OF 17508 WIPER MOTOR

WINDSHIELD WIPER
1972 THUNDERBIRD

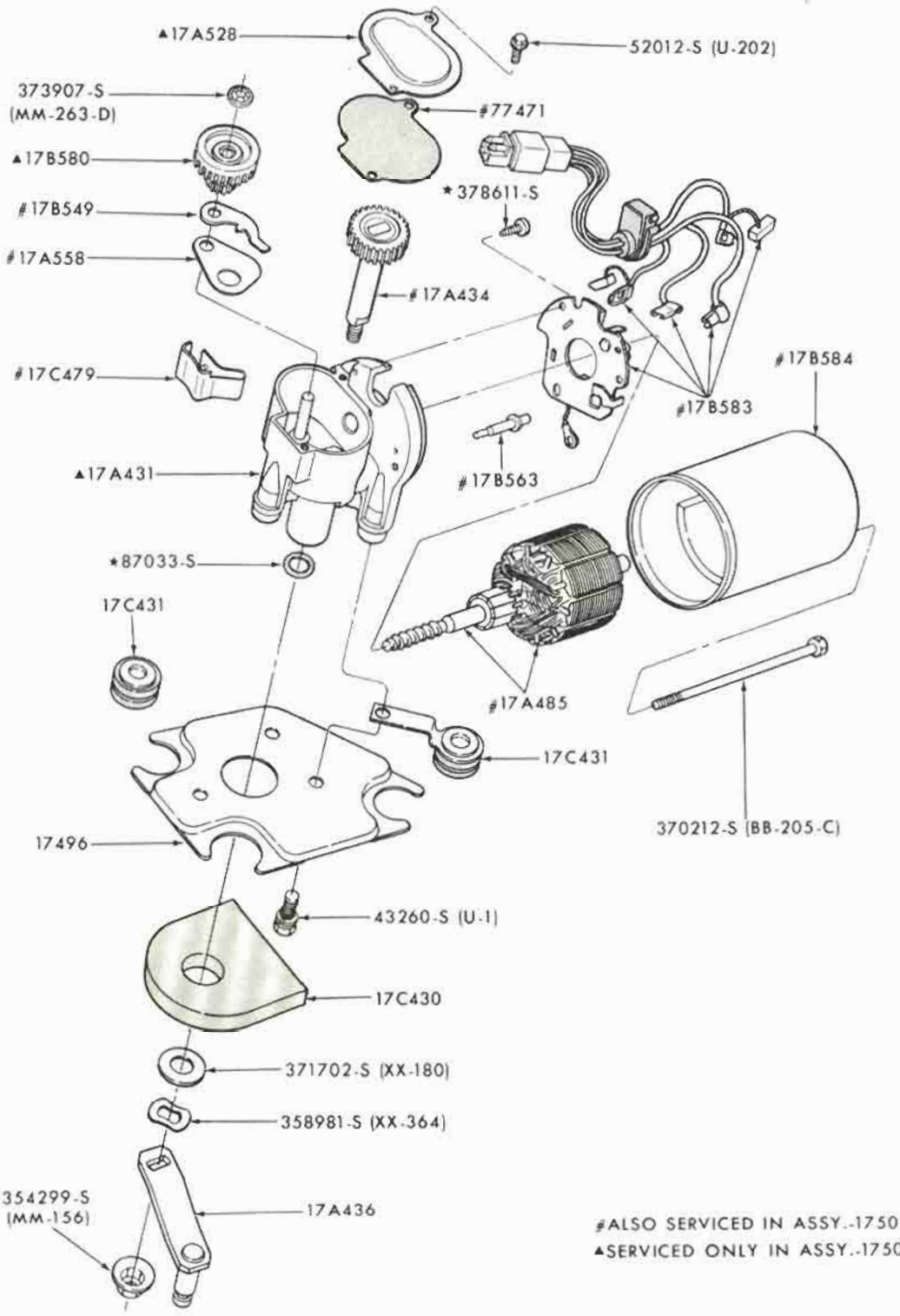

#ALSO SERVICED IN ASSY.-17508
▲SERVICED ONLY IN ASSY.-17508

P-11434

WINDSHIELD WIPER MOTOR
1966/ FAIRLANE, MAVERICK and TORINO-W/O CONCEALED WIPERS
1966/70 FALCON-2 SPEED
1969/ BRONCO, 1971/ PINTO

COPYRIGHT © 1975 — FORD MOTOR COMPANY — DEARBORN, MICHIGAN

P-4727

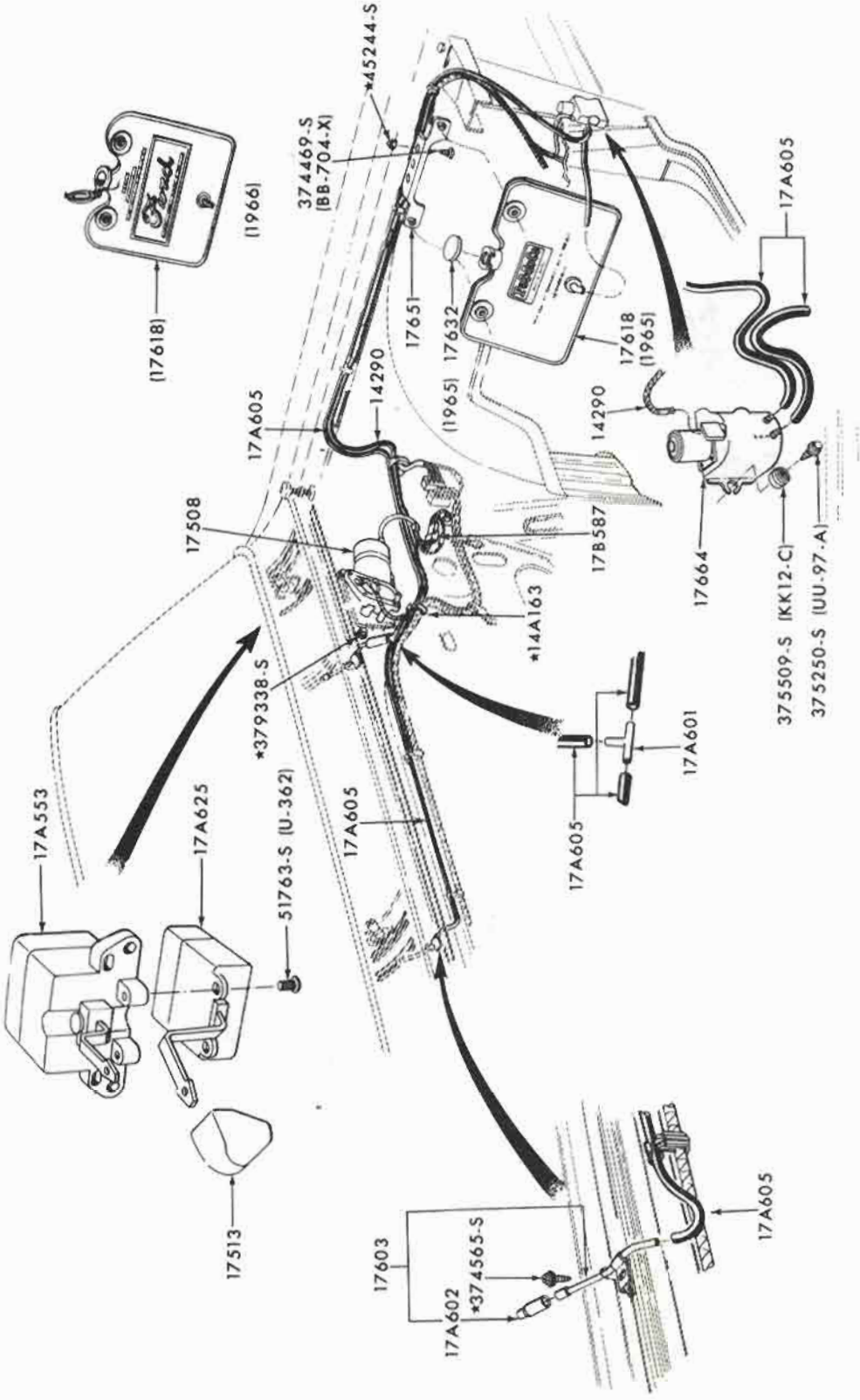

WINDSHIELD WASHER
1965/66 FORD

COPYRIGHT © 1975 — FORD MOTOR COMPANY — DEARBORN, MICHIGAN

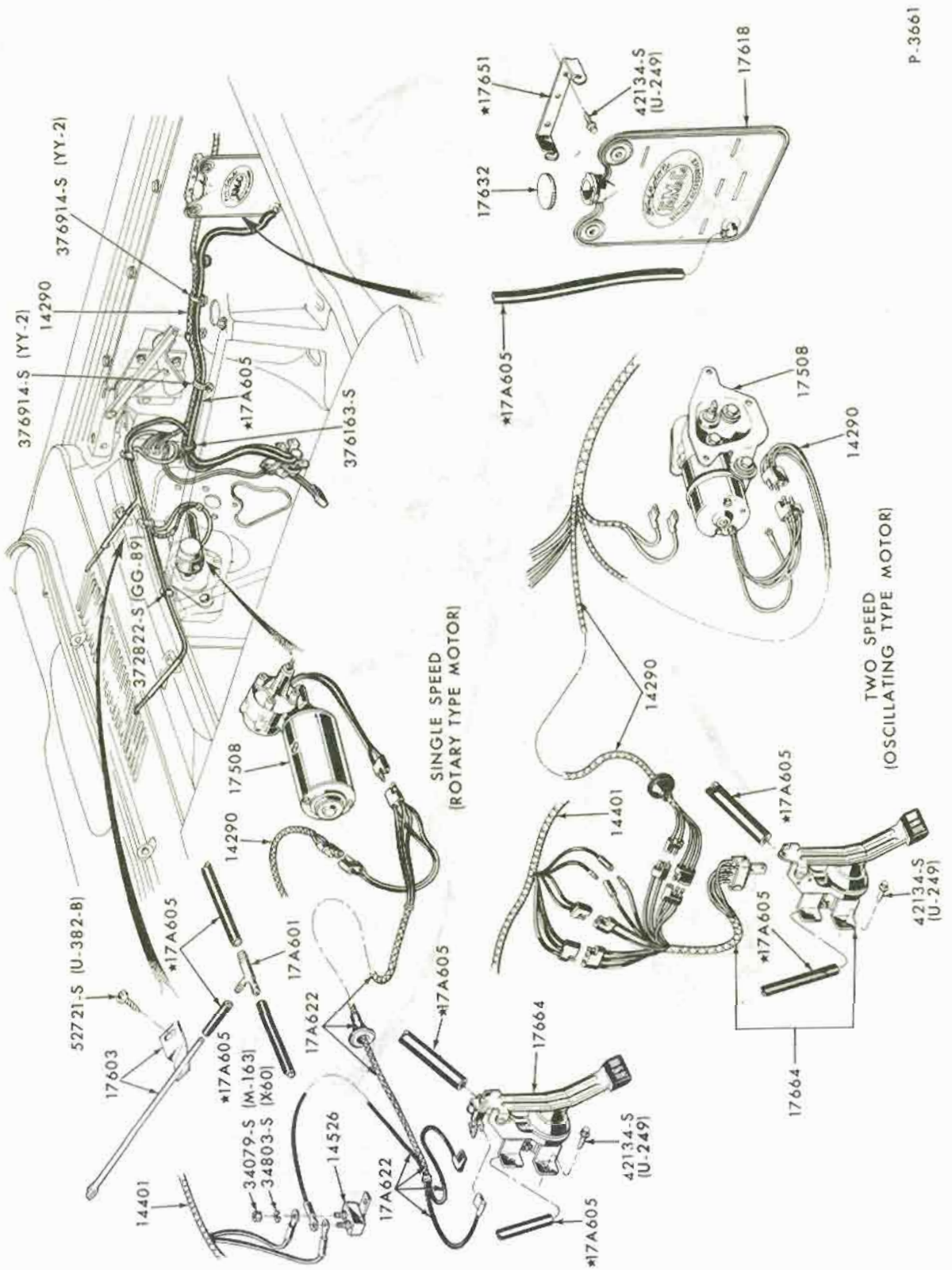

WINDSHIELD WASHER
1965 FAIRLANE

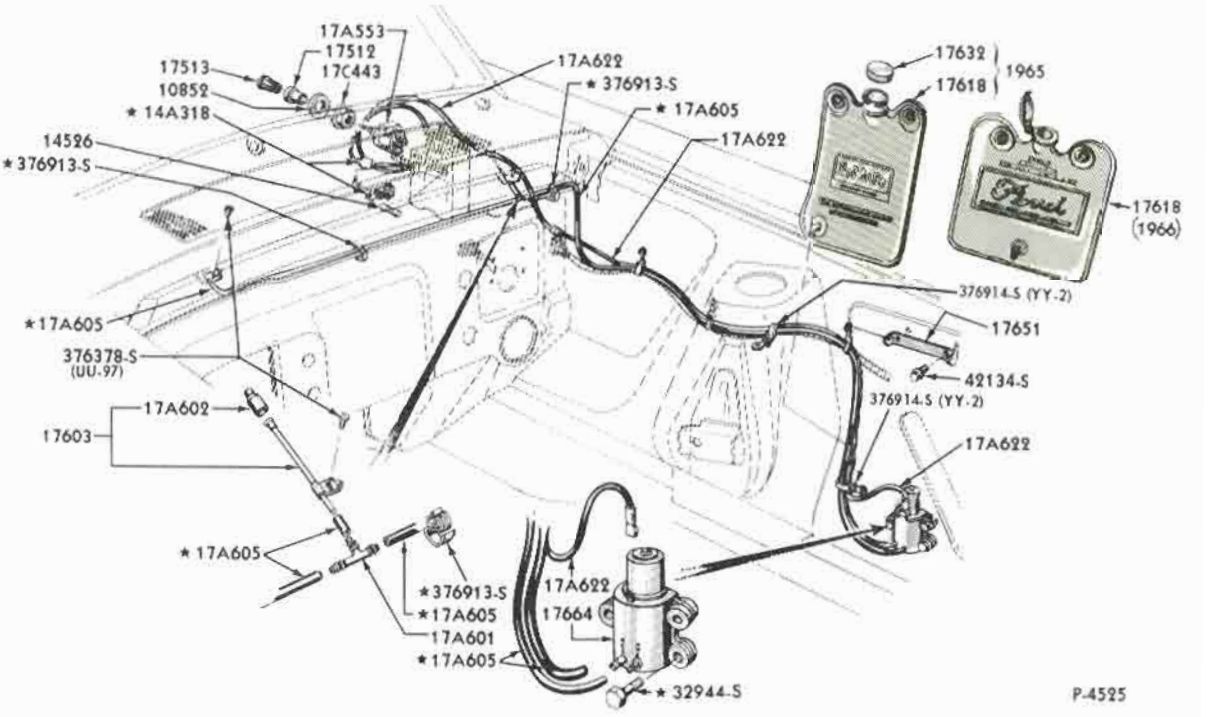

WINDSHIELD WASHER
1965/66 MUSTANG

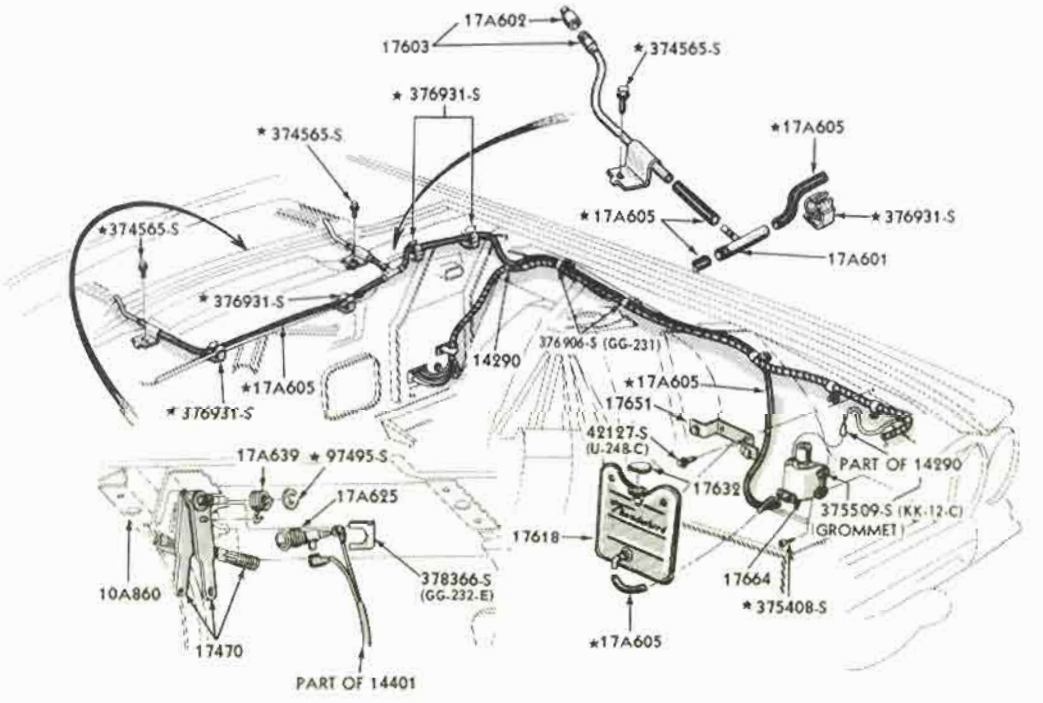

WINDSHIELD WASHER
1965/66 THUNDERBIRD

COPYRIGHT © 1975 — FORD MOTOR COMPANY — DEARBORN, MICHIGAN

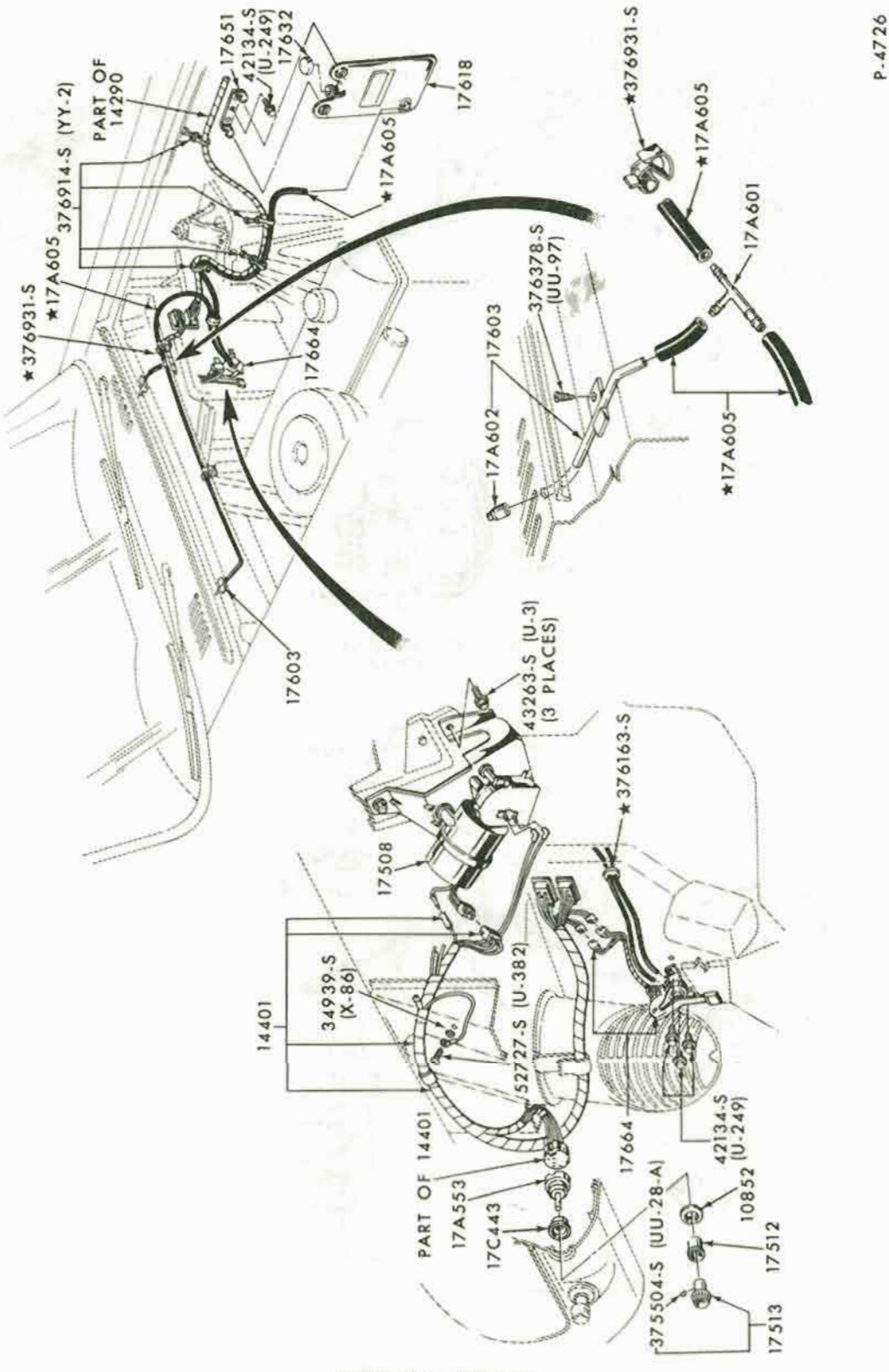

WINDSHIELD WASHER
1965 FALCON

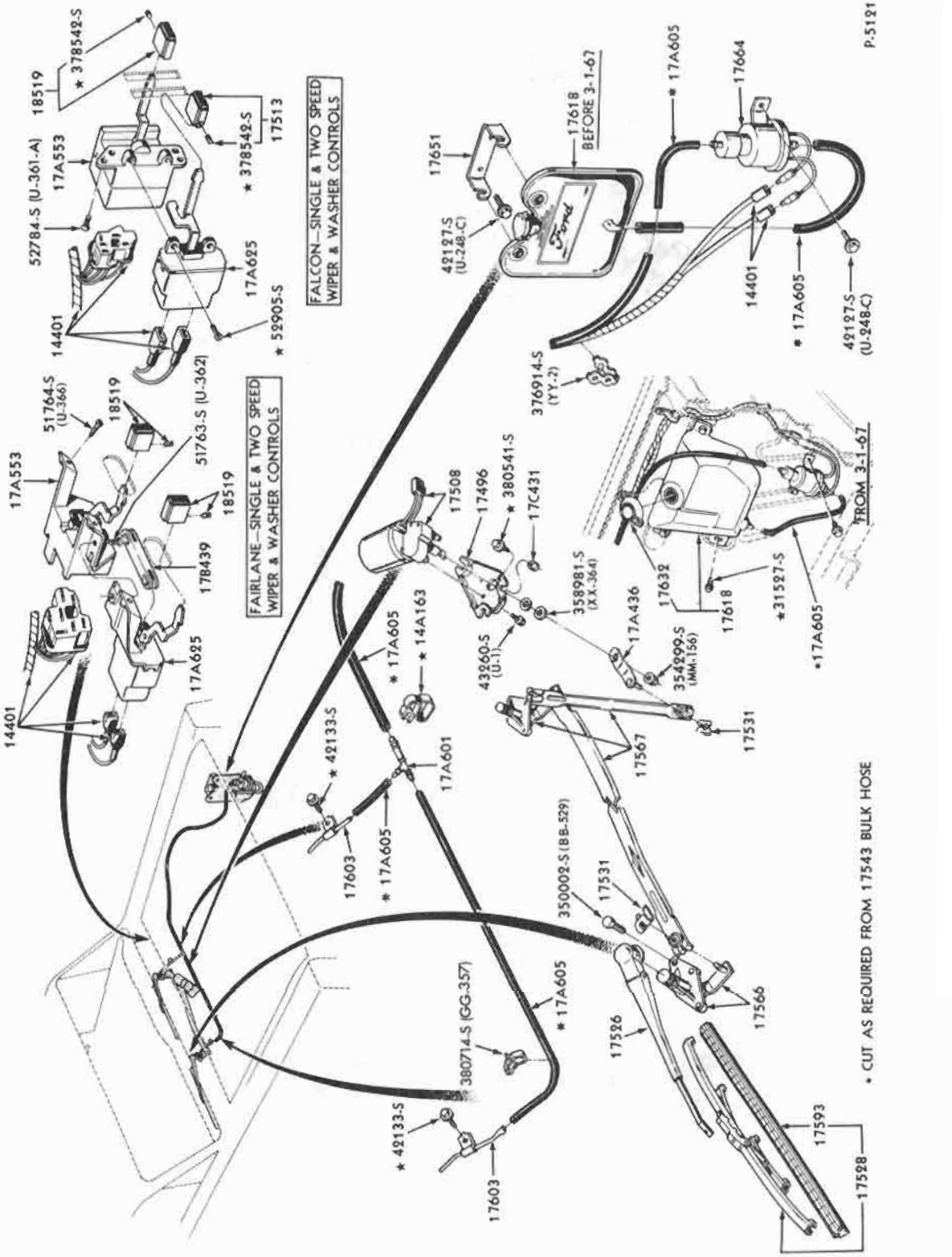

WINDSHIELD WASHER and WIPER
1966/67 FAIRLANE and FALCON

COPYRIGHT © 1975 — FORD MOTOR COMPANY — DEARBORN, MICHIGAN

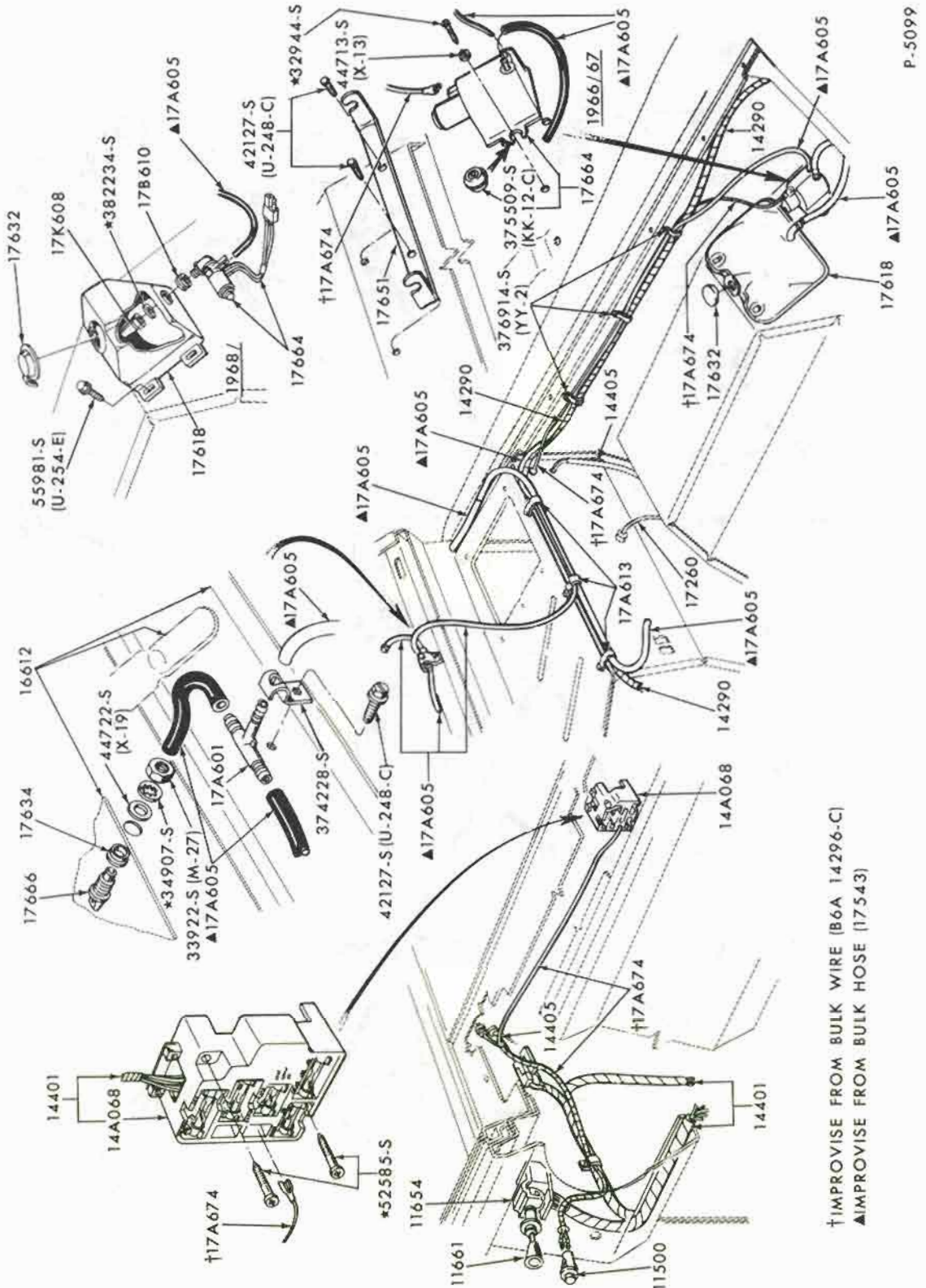

WINDSHIELD WASHER
1966/72 BRONCO

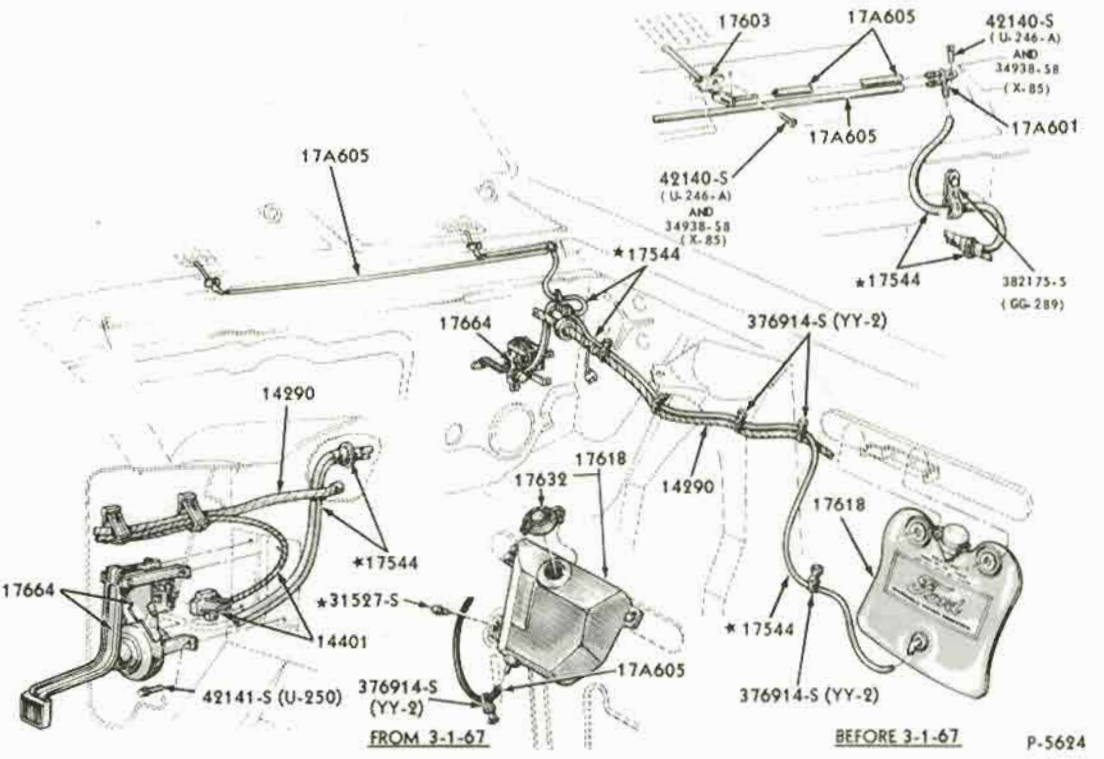

WINDSHIELD WASHER
1967/68 MUSTANG

COPYRIGHT © 1975 — FORD MOTOR COMPANY — DEARBORN, MICHIGAN

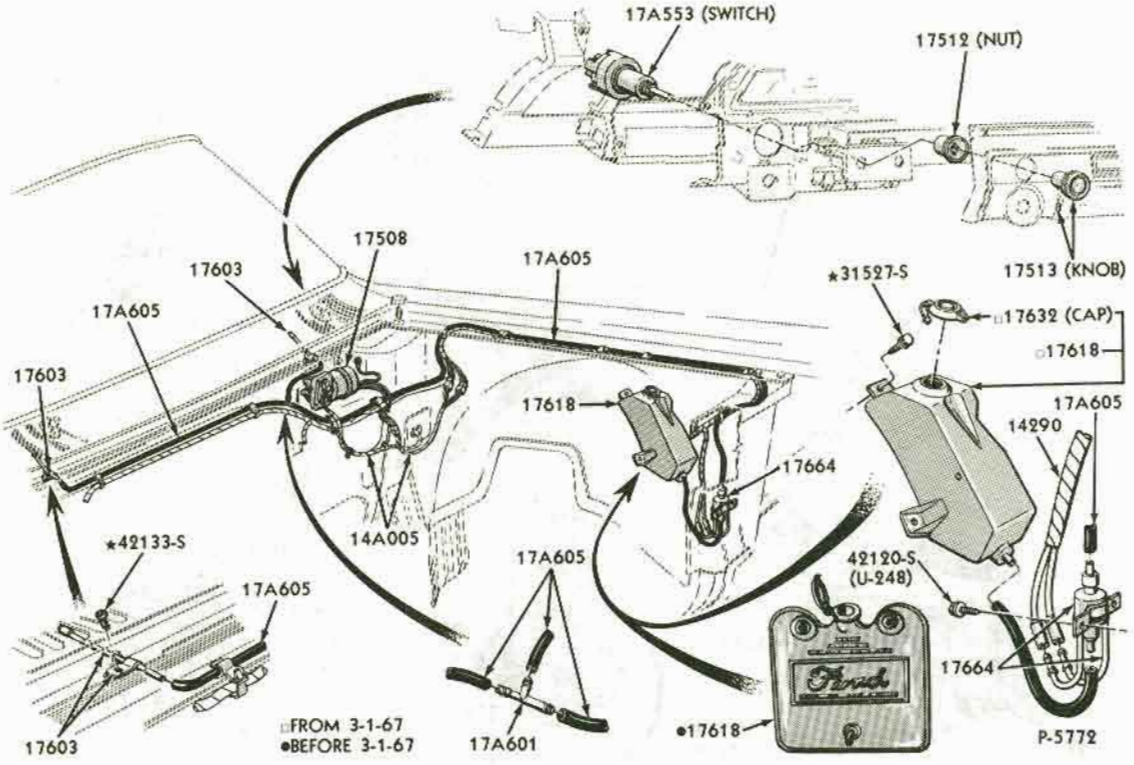

WINDSHIELD WASHER
1967/68 FORD

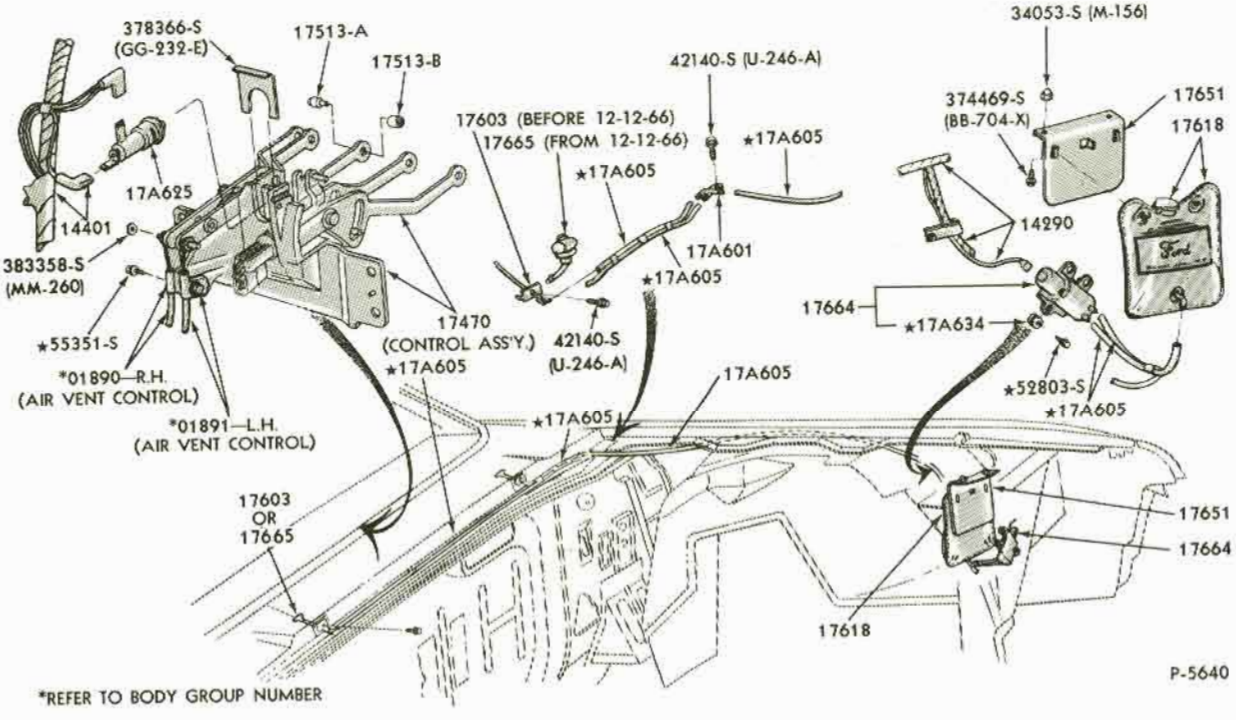

WINDSHIELD WASHER
1967 THUNDERBIRD

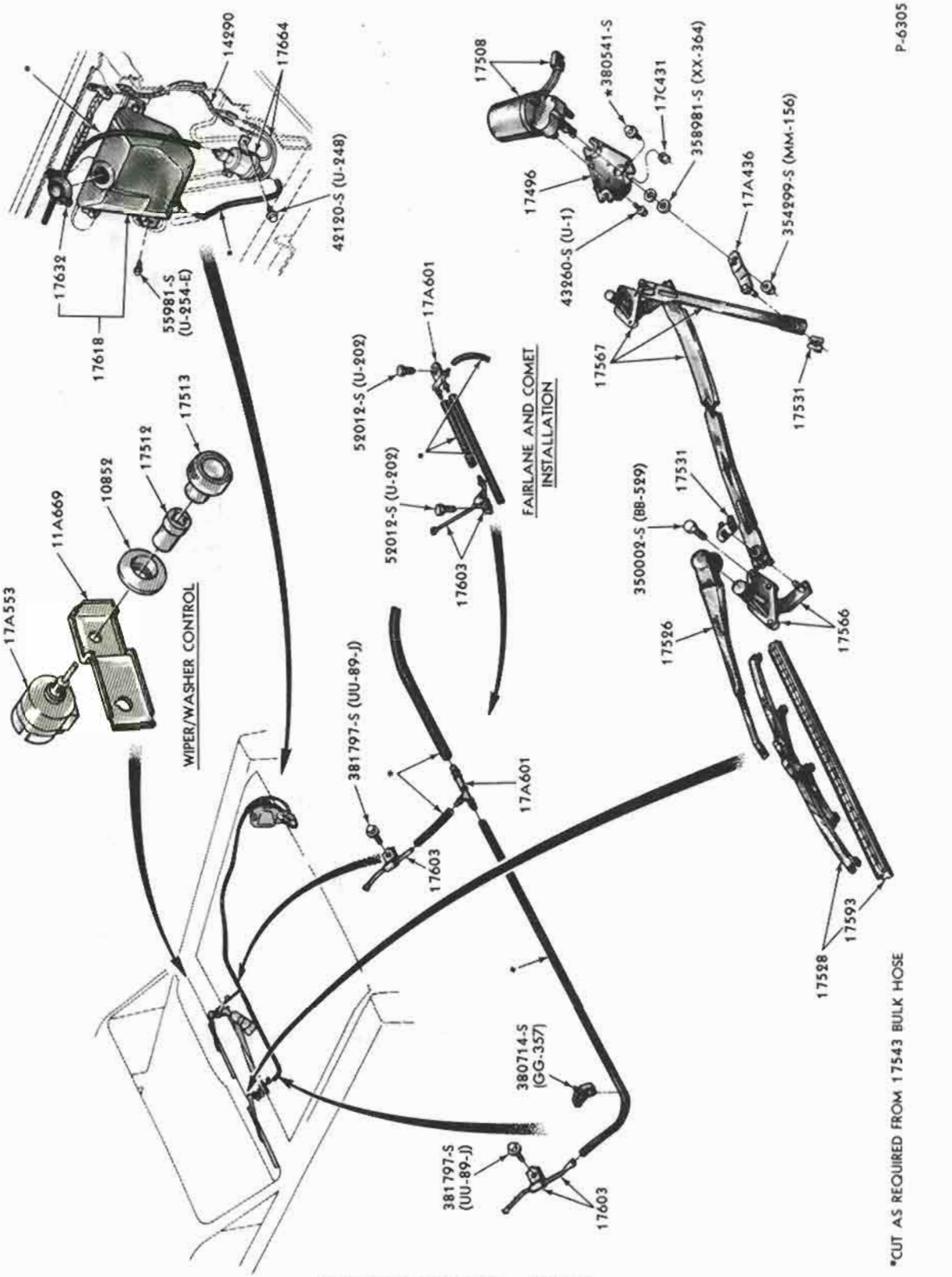

WINDSHIELD WASHER and WIPER
1968/69 FAIRLANE/TORINO and 1968/70 FALCON

COPYRIGHT © 1975 — FORD MOTOR COMPANY — DEARBORN, MICHIGAN

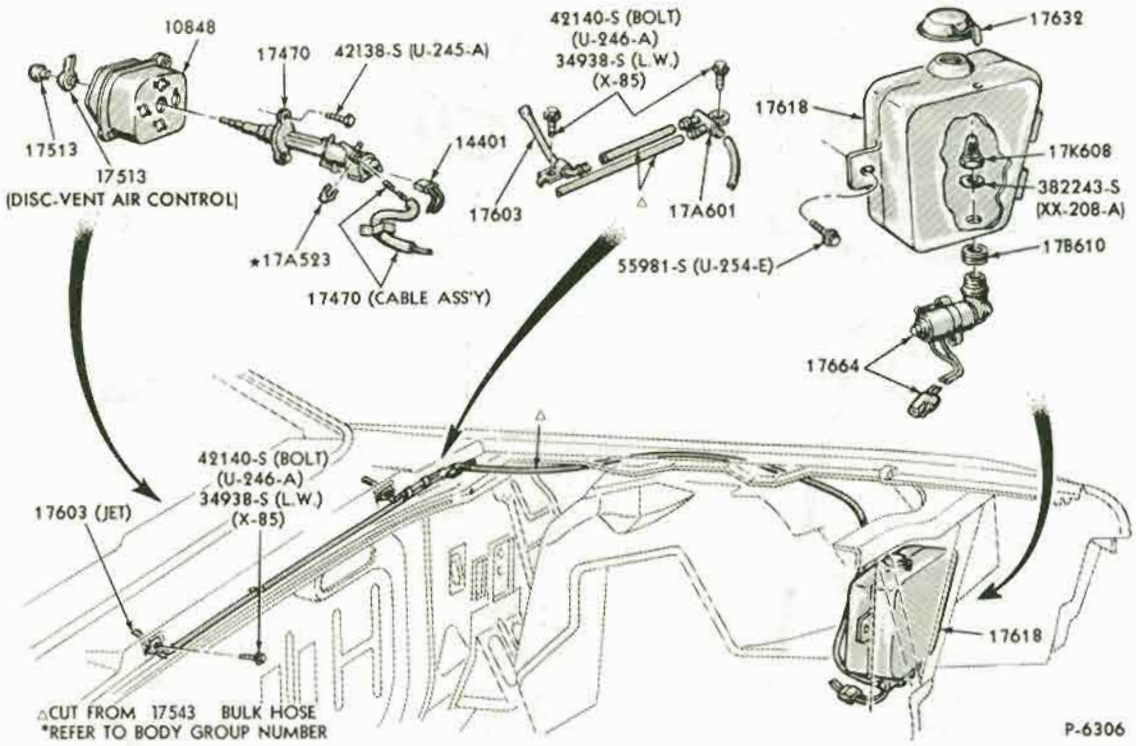

WINDSHIELD WASHER
1968/69 THUNDERBIRD

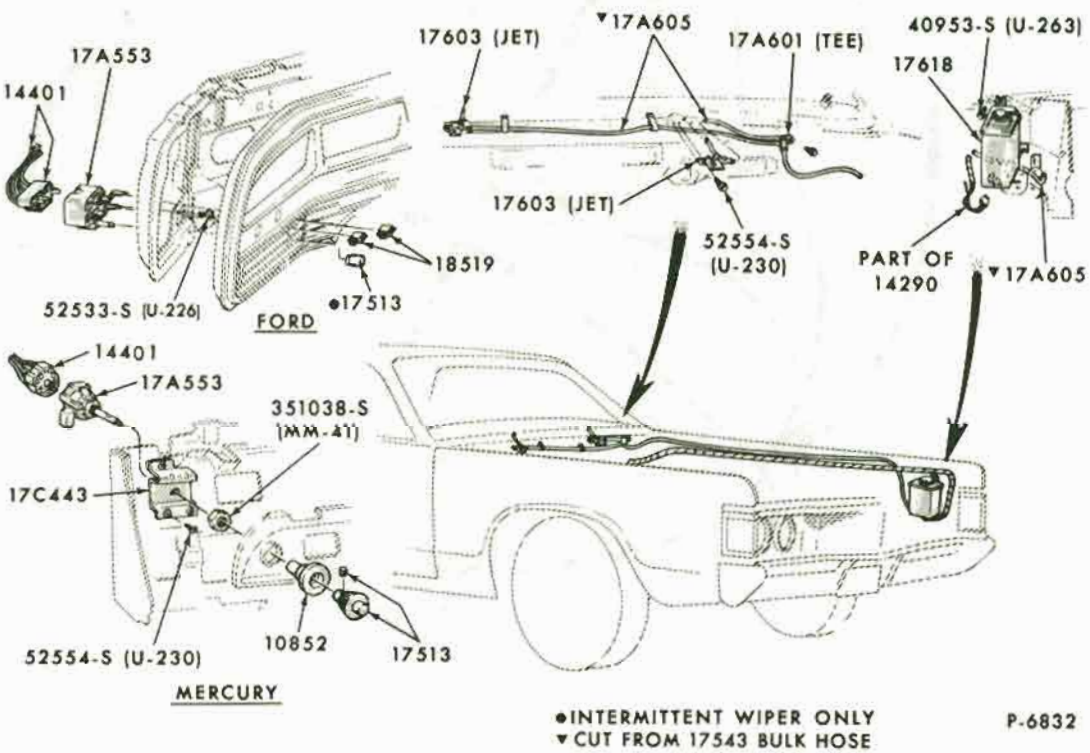

WINDSHIELD WASHER
1969/70 FORD

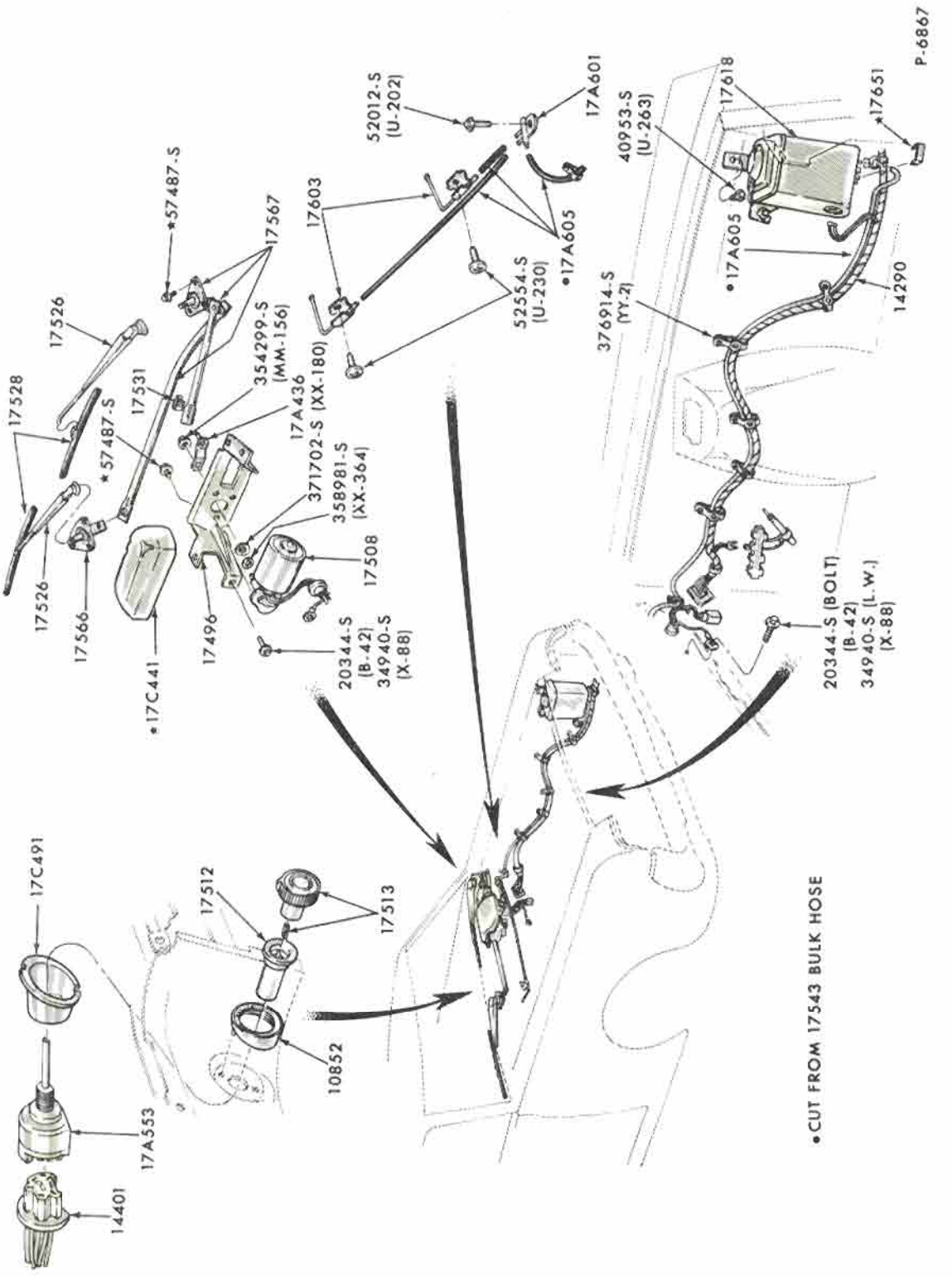

WINDSHIELD WASHER and WIPERS
1969/70 MUSTANG

COPYRIGHT © 1975 — FORD MOTOR COMPANY — DEARBORN, MICHIGAN

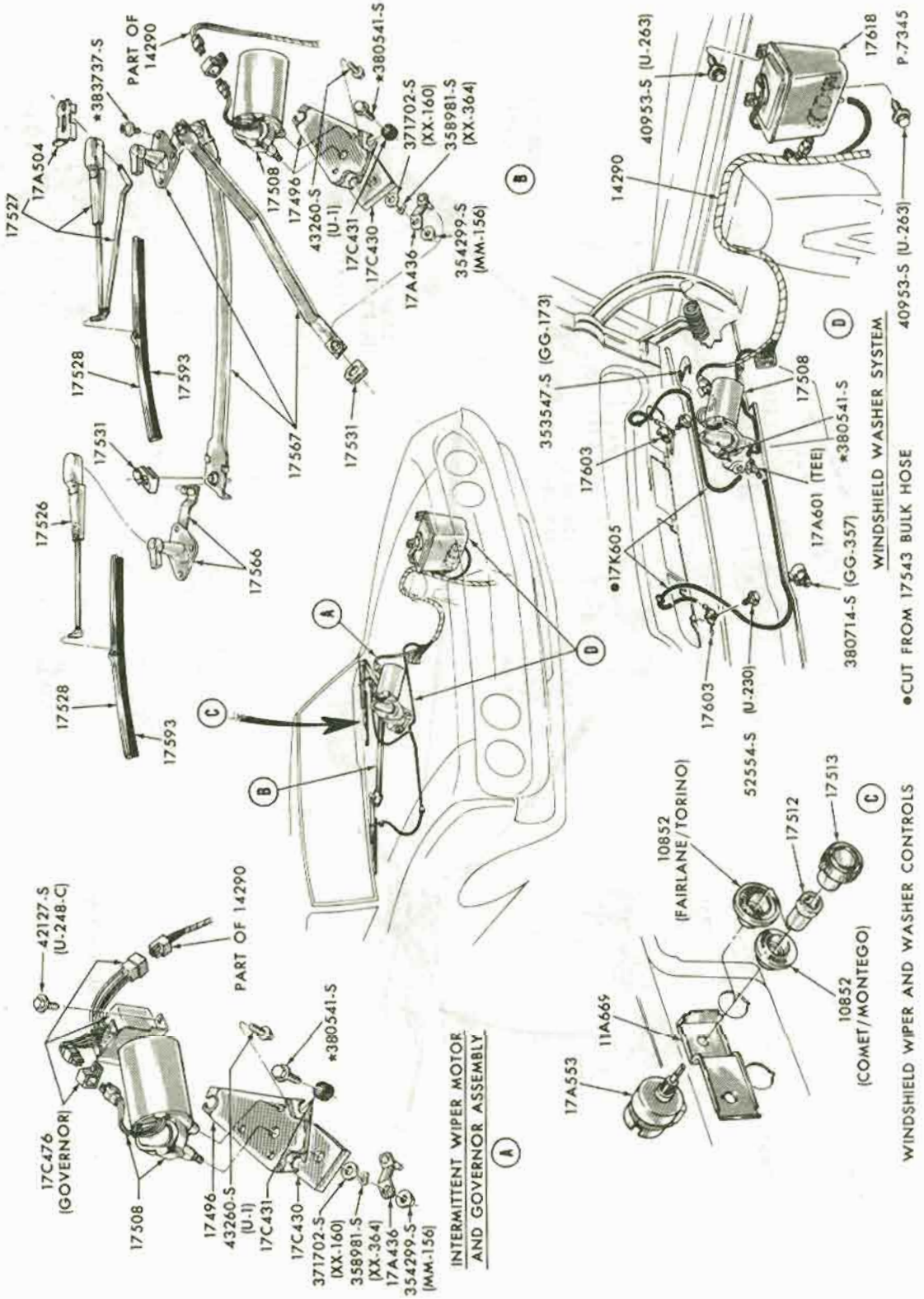
17527
17A504
*383737-S
PART OF 14290
17508
17496
43260-S (U-1)
17C431
17C430
*380541-S
371702-S (XX-160)
358981-S (XX-364)
17A436
354299-S (MM-156)
17528
17593
17531
17526
17566
17567
17C476 (GOVERNOR)
42127-S (U-248-C)
INTERMITTENT WIPER MOTOR AND GOVERNOR ASSEMBLY
A
B
C
D
14290
40953-S (U-263)
17618
P-7345
353547-S (GG-173)
17603
•17K605
17508
*380541-S
17A601 (TEE)
380714-S (GG-357)
WINDSHIELD WASHER SYSTEM
•CUT FROM 17543 BULK HOSE
40953-S (U-263)
17603
52554-S (U-230)
10852 (FAIRLANE/TORINO)
17512
17513
10852 (COMET/MONTEGO)
11A665
17A553
WINDSHIELD WIPER AND WASHER CONTROLS

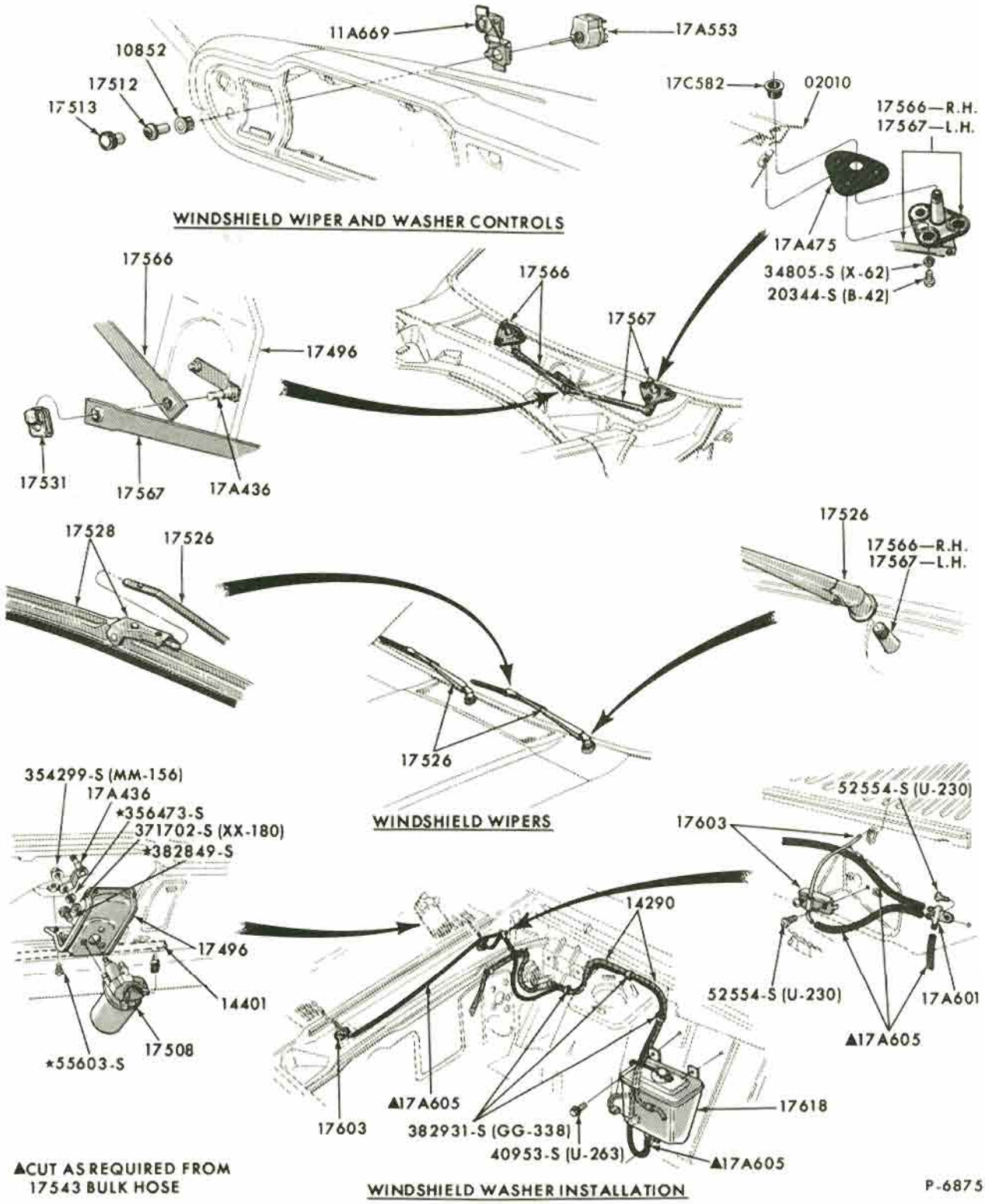

WINDSHIELD WASHER and WIPER
1970/72 MAVERICK

COPYRIGHT © 1975 — FORD MOTOR COMPANY — DEARBORN, MICHIGAN

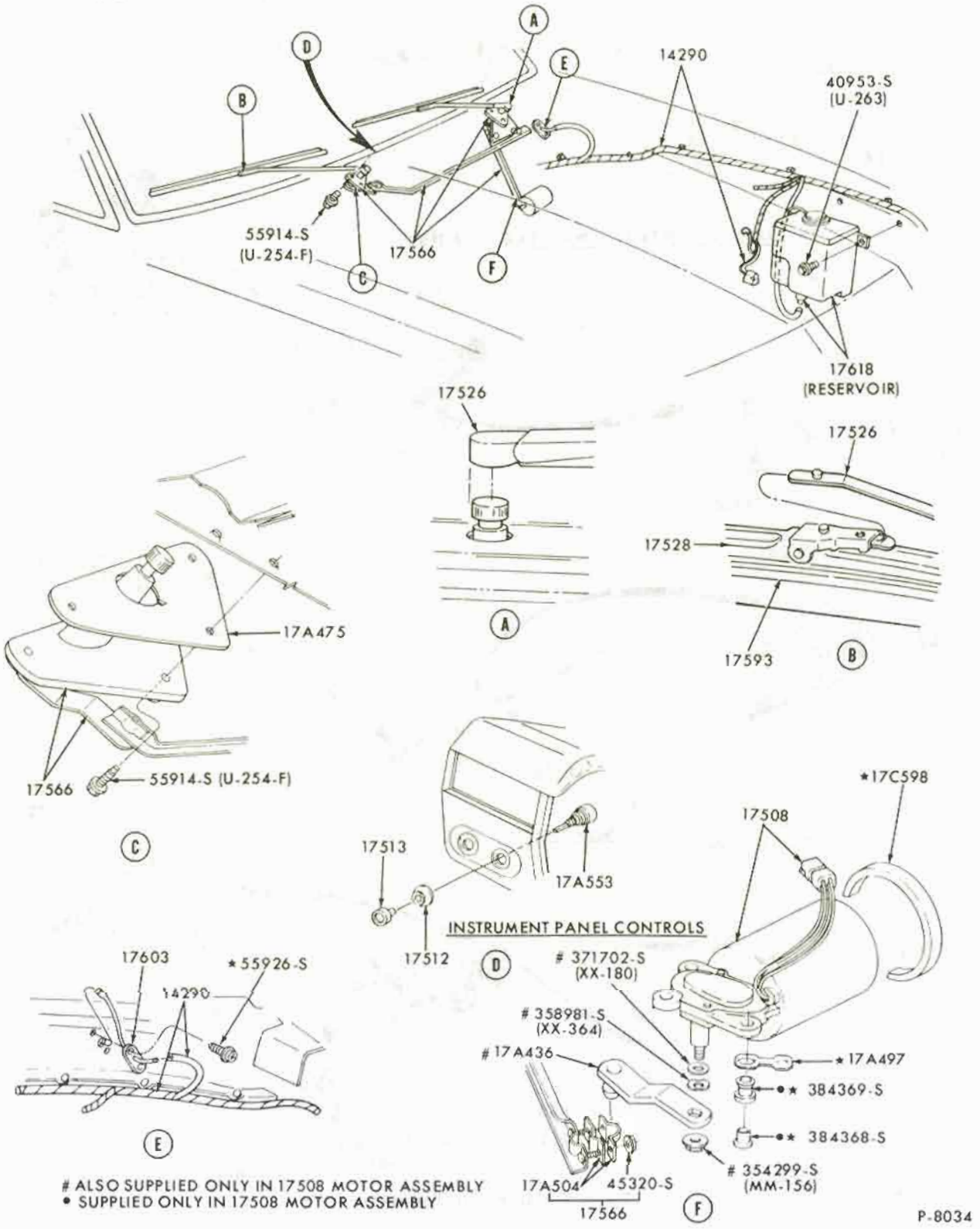
A
B
C
D
E
F
14290
40953-S
(U-263)
55914-S
(U-254-F)
17566
17618
(RESERVOIR)
17526
17528
17593
17A475
17566
55914-S (U-254-F)
17513
17A553
17512
INSTRUMENT PANEL CONTROLS
17603
★55926-S
14290
17508
★17C598
371702-S
(XX-180)
358981-S
(XX-364)
17A436
★17A497
•★ 384369-S
•★ 384368-S
354299-S
(MM-156)
17A504
45320-S
17566
ALSO SUPPLIED ONLY IN 17508 MOTOR ASSEMBLY
• SUPPLIED ONLY IN 17508 MOTOR ASSEMBLY
P-8034

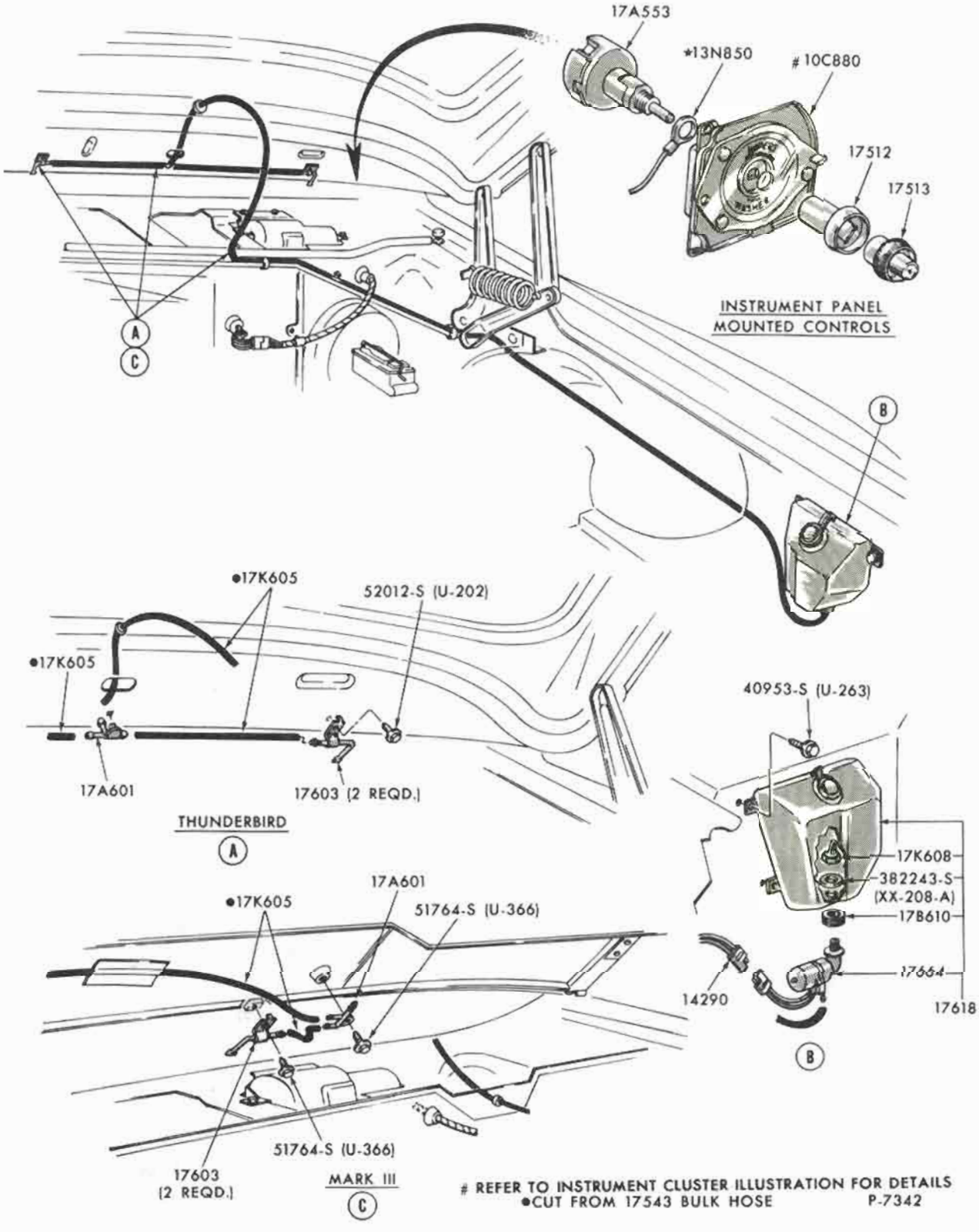

REFER TO INSTRUMENT CLUSTER ILLUSTRATION FOR DETAILS
•CUT FROM 17543 BULK HOSE

P-7342

WINDSHILD WASHERS
1970/71 THUNDERBIRD

COPYRIGHT © 1975 — FORD MOTOR COMPANY — DEARBORN, MICHIGAN

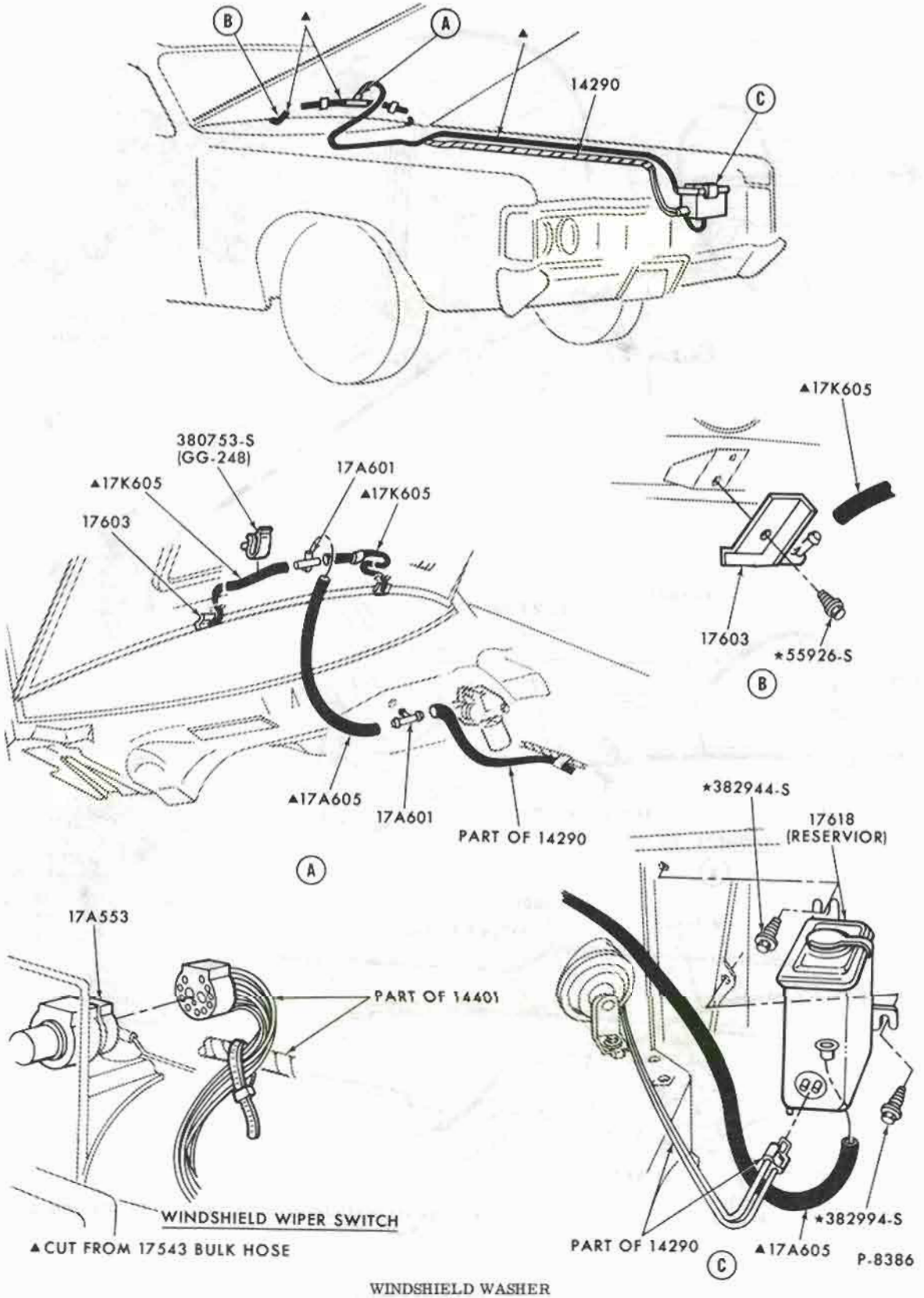
B
A
14290
C
▲17K605
380753-S
(GG-248)
17A601
▲17K605
▲17K605
17603
17603
★55926-S
B
▲17A605
17A601
PART OF 14290
A
★382944-S
17618
(RESERVIOR)
17A553
PART OF 14401
WINDSHIELD WIPER SWITCH
▲CUT FROM 17543 BULK HOSE
PART OF 14290
▲17A605
★382994-S
C
P-8386

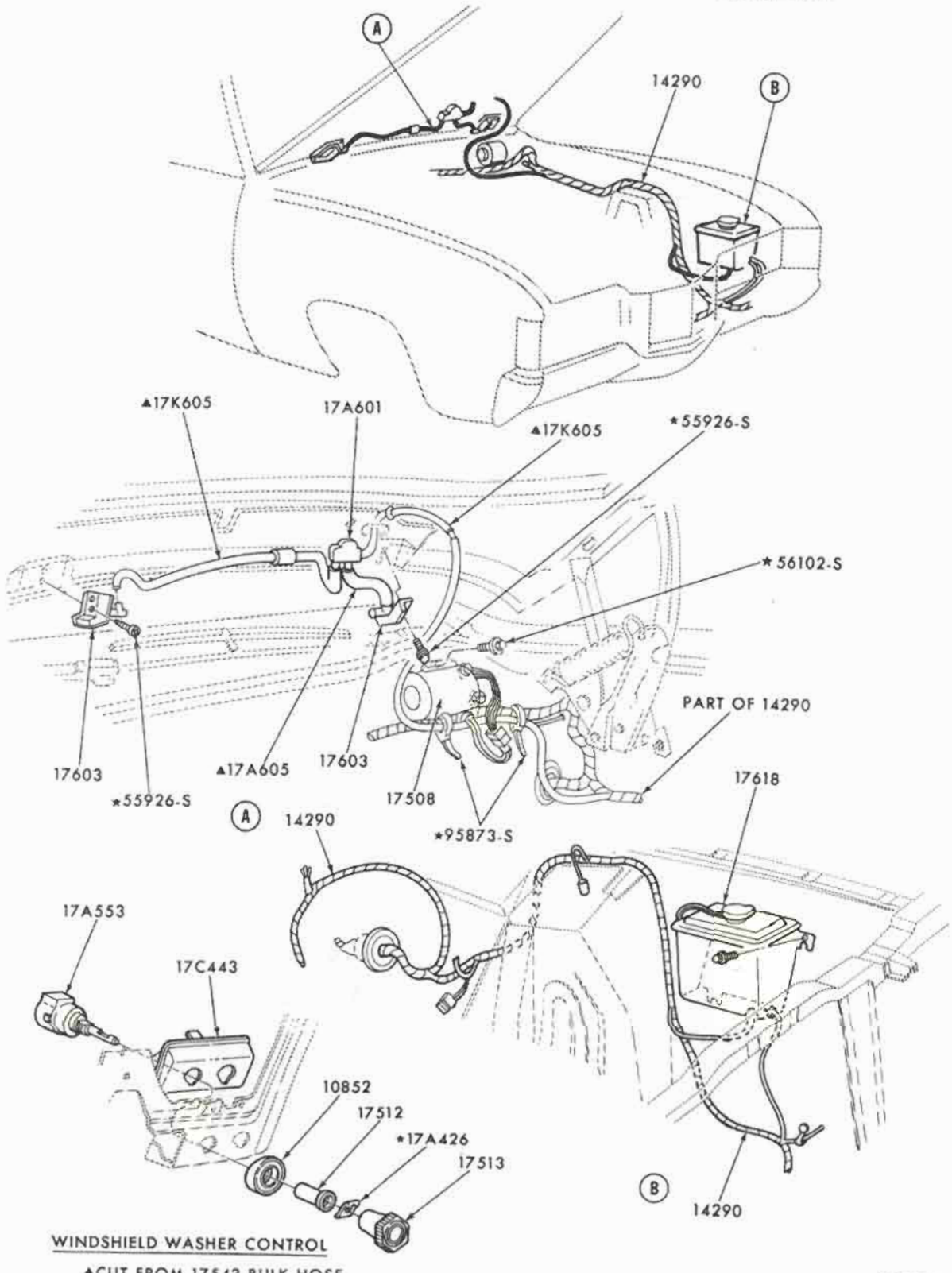

WINDSHIELD WASHER CONTROL

▲CUT FROM 17543 BULK HOSE

P-8388

WINDSHIELD WASHER
1971/72 MUSTANG

COPYRIGHT © 1975 — FORD MOTOR COMPANY — DEARBORN, MICHIGAN

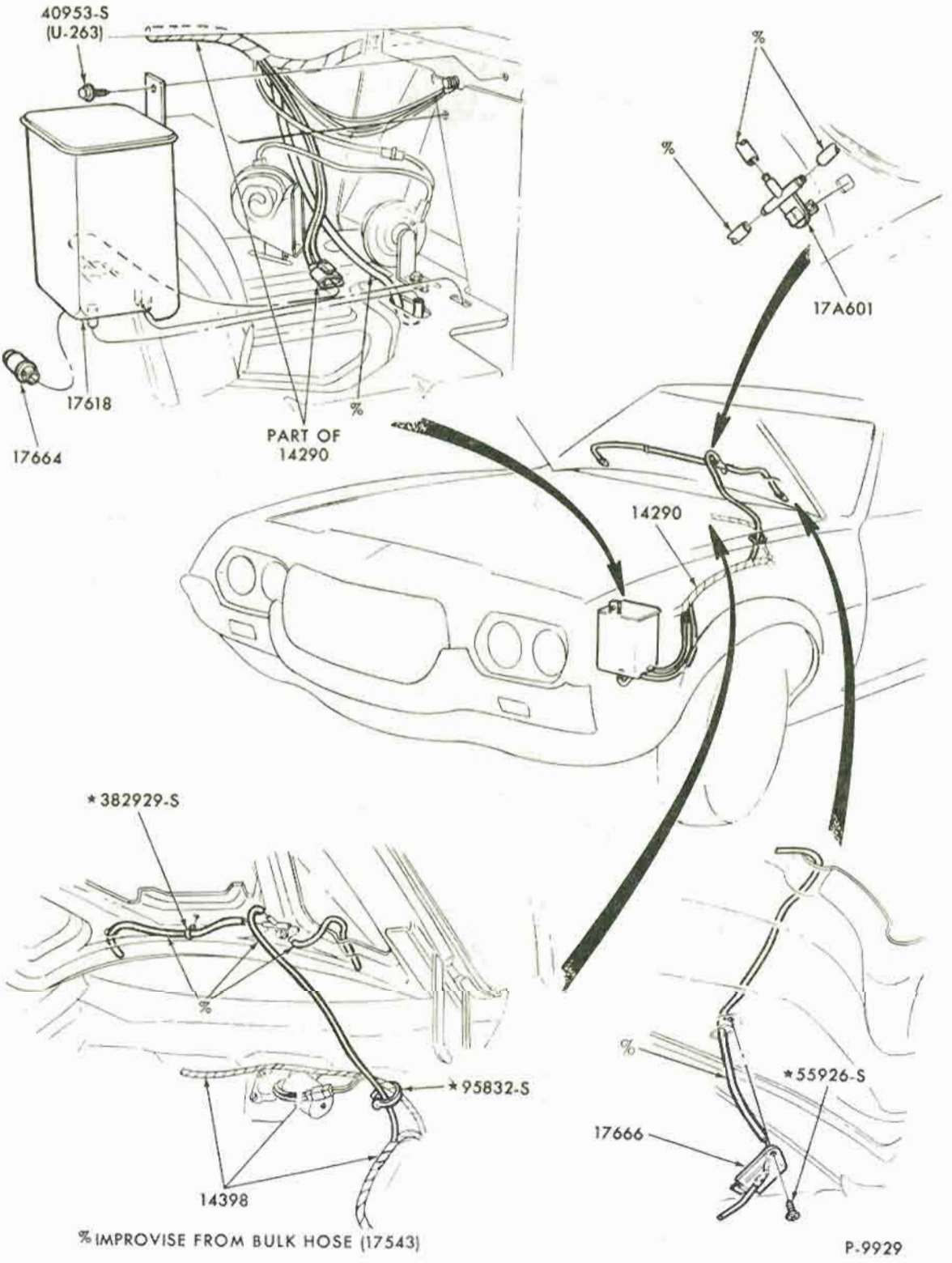

WINDSHIELD WASHER
1972 TORINO

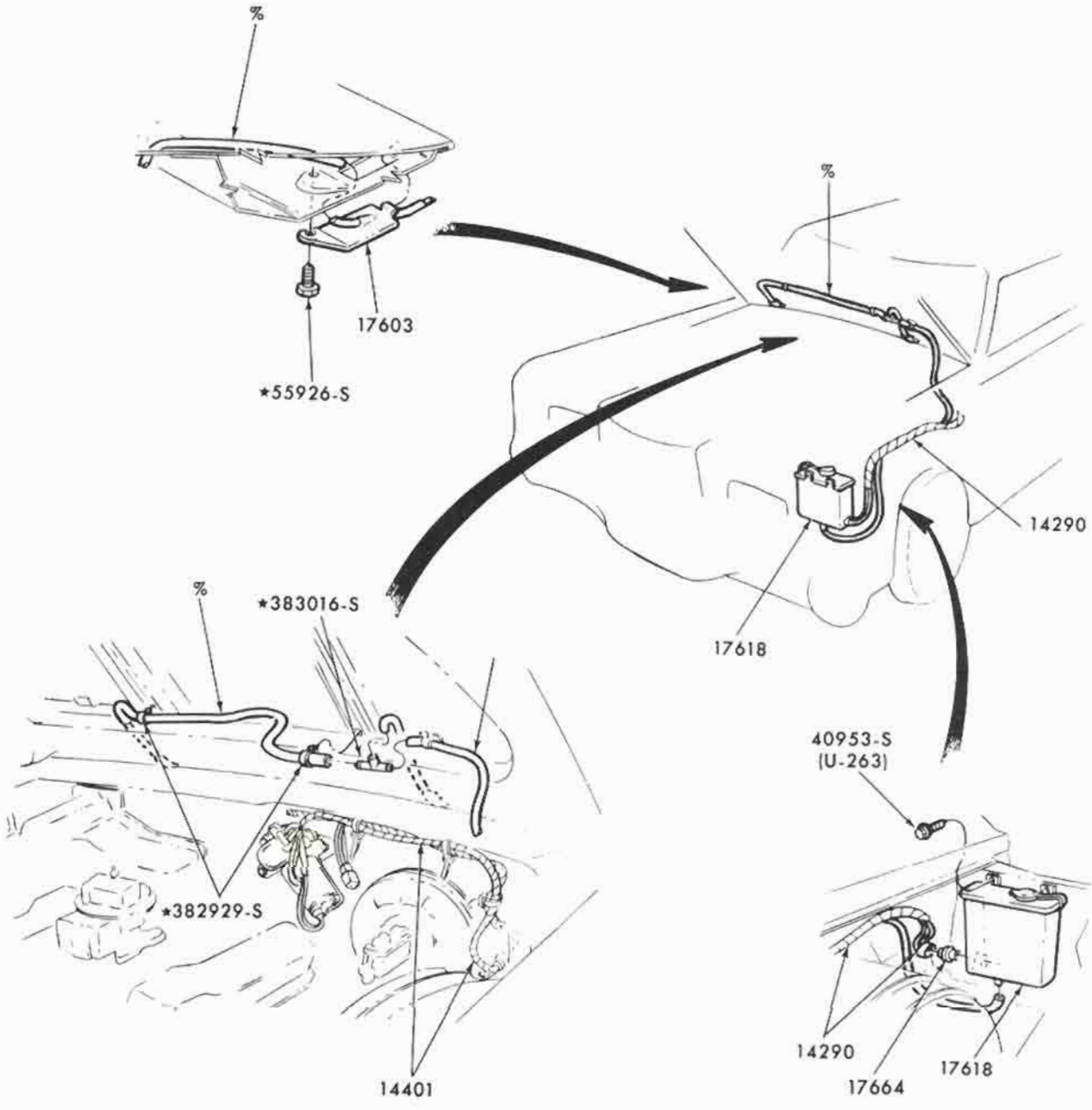

% IMPROVISE FROM BULK HOSE (17543)

P-9927

WINDSHIELD WASHER
1972 THUNDERBIRD

COPYRIGHT © 1975 — FORD MOTOR COMPANY — DEARBORN, MICHIGAN

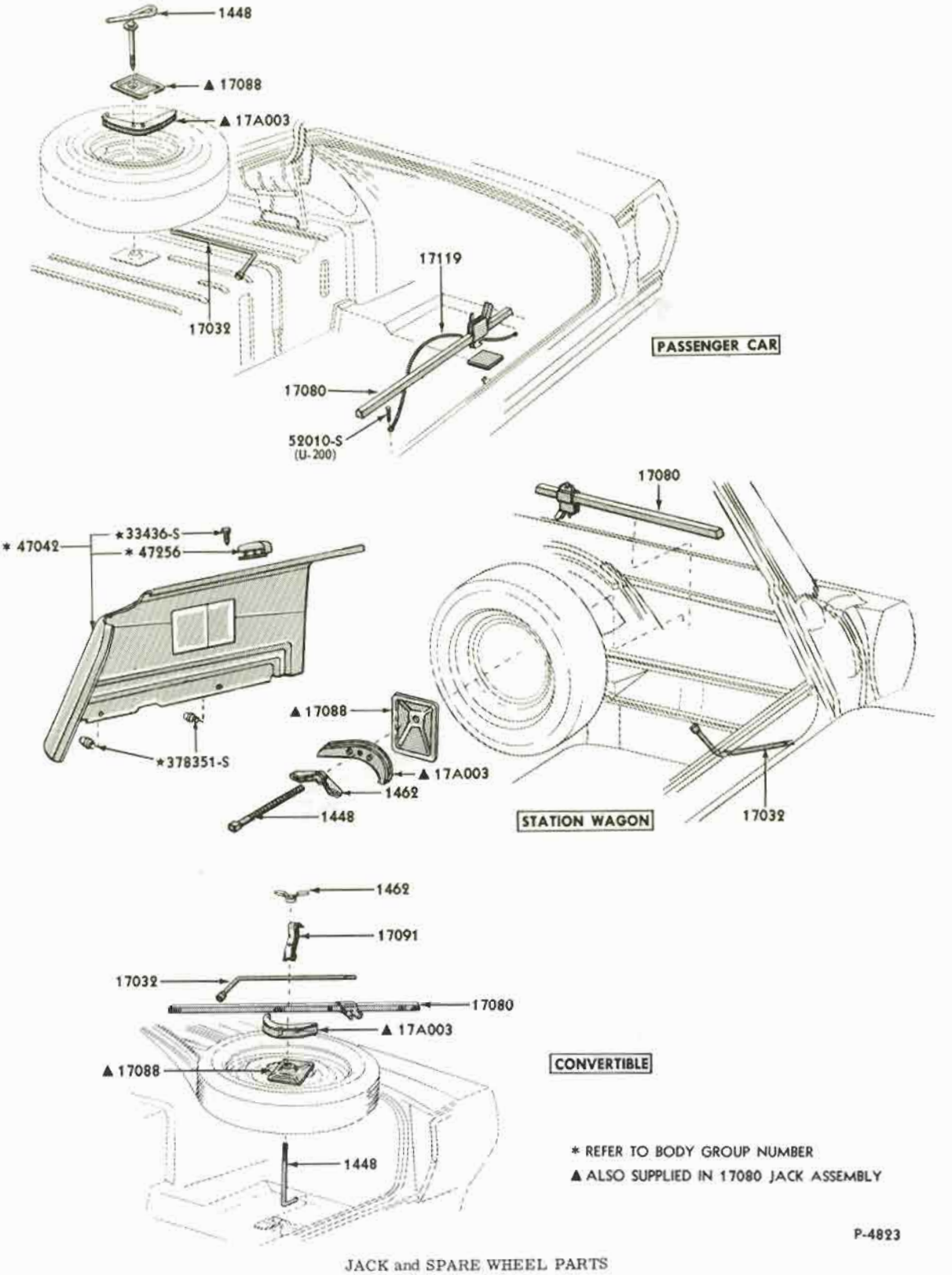

* REFER TO BODY GROUP NUMBER

▲ ALSO SUPPLIED IN 17080 JACK ASSEMBLY

P-4823

JACK and SPARE WHEEL PARTS
1965/66 FORD

COPYRIGHT © 1975 — FORD MOTOR COMPANY — DEARBORN, MICHIGAN

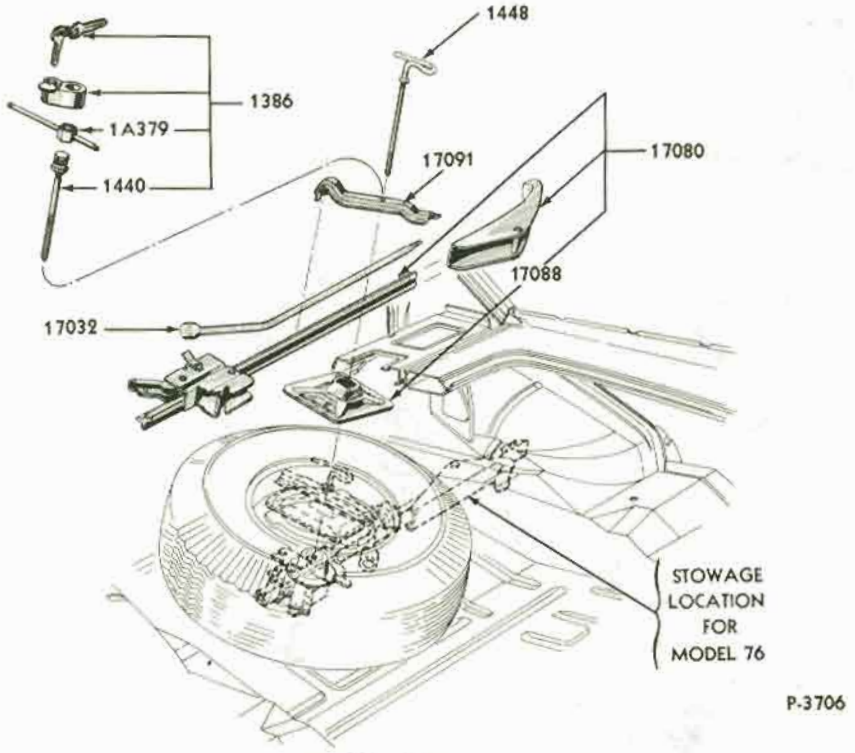

JACK and SPARE WHEEL PARTS
1965 FAIRLANE - BODY TYPE 54, 62, 65

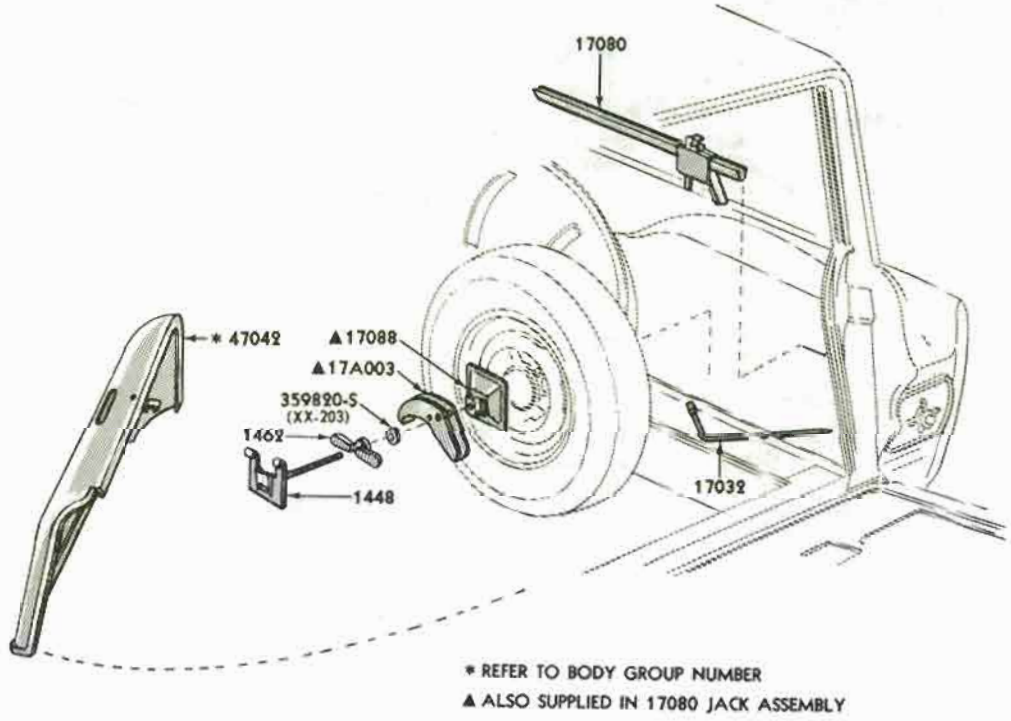

JACK and SPARE WHEEL PARTS
1965 FAIRLANE - BODY TYPE 71

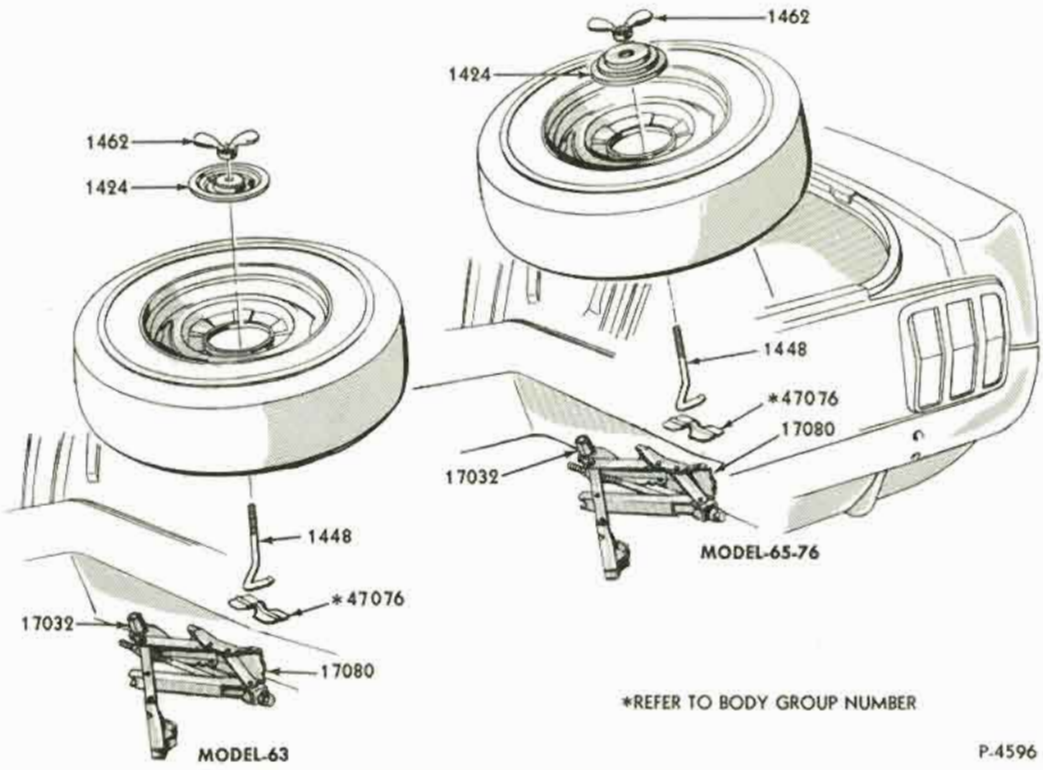

*REFER TO BODY GROUP NUMBER

P-4596

JACK and SPARE WHEEL PARTS
1965/67 MUSTANG

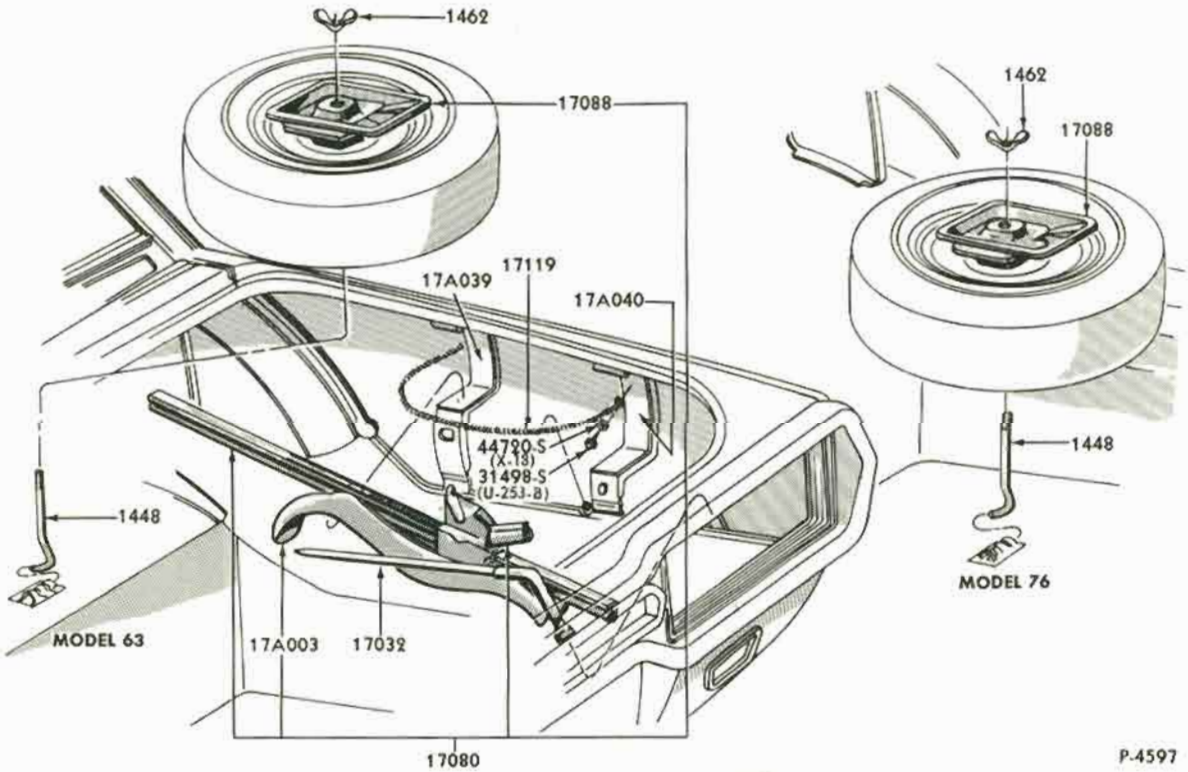

P-4597

JACK and SPARE WHEEL PARTS
1965/66 THUNDERBIRD

COPYRIGHT © 1975 — FORD MOTOR COMPANY — DEARBORN, MICHIGAN

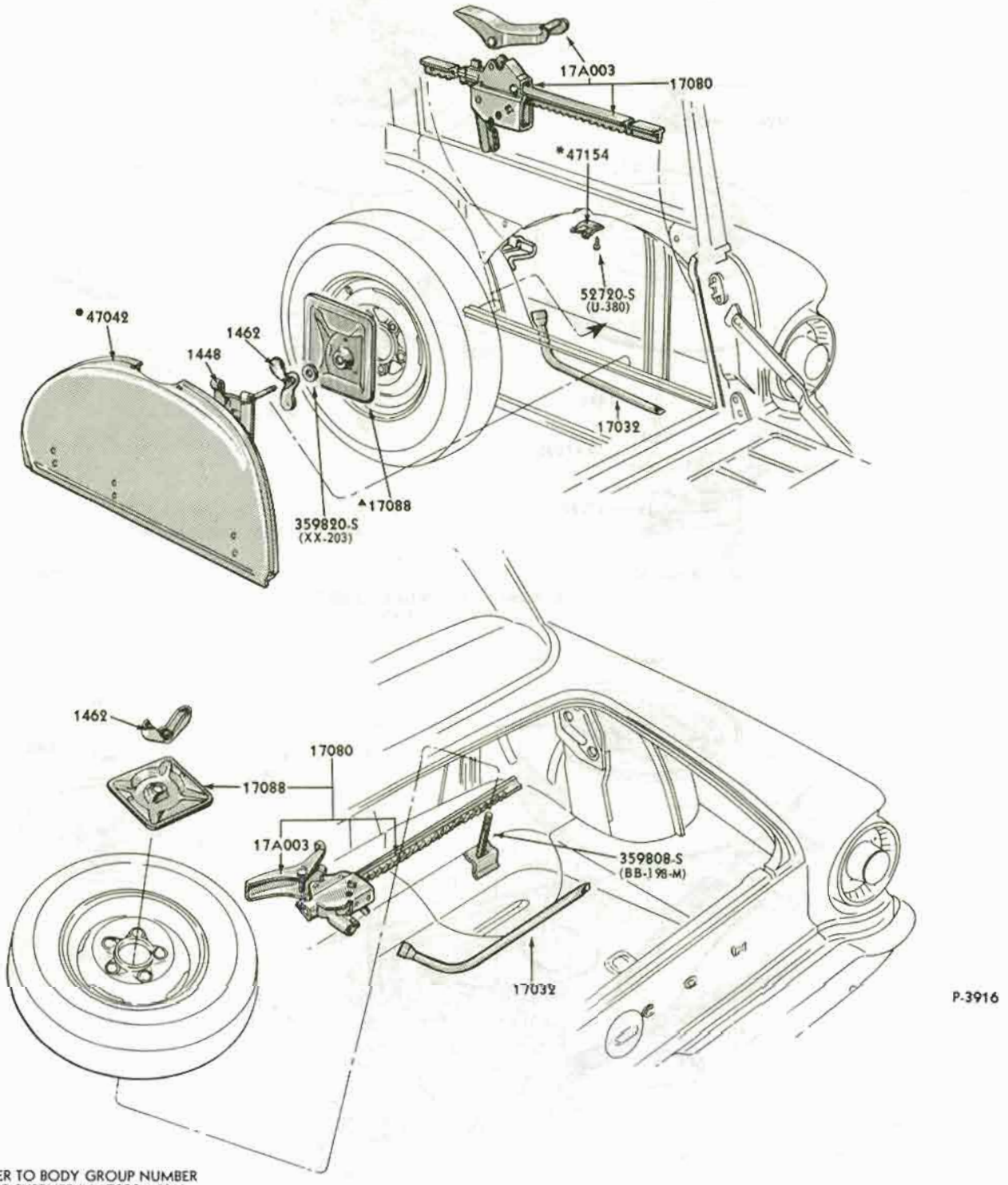

*REFER TO BODY GROUP NUMBER
▲ALSO SUPPLIED IN 17080 ASS'Y.
●REFER TO GROUP IN SOFT TRIM SECTION

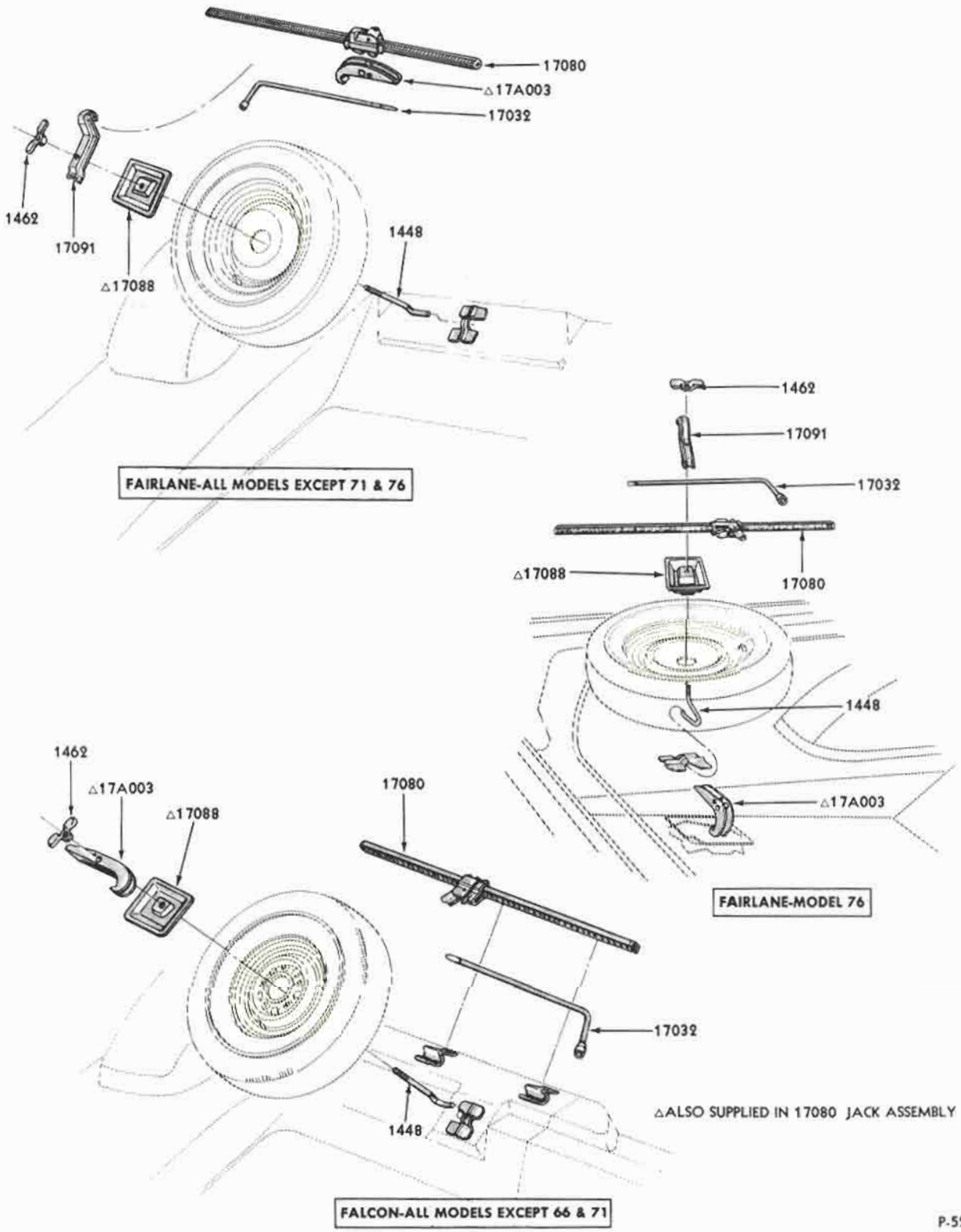

△ALSO SUPPLIED IN 17080 JACK ASSEMBLY

P-5211

JACK and SPARE WHEEL PARTS

1966/71 FAIRLANE/TORINO and 1966/70 FALCON - except BODY TYPE 66, 71

COPYRIGHT © 1975 — FORD MOTOR COMPANY — DEARBORN, MICHIGAN

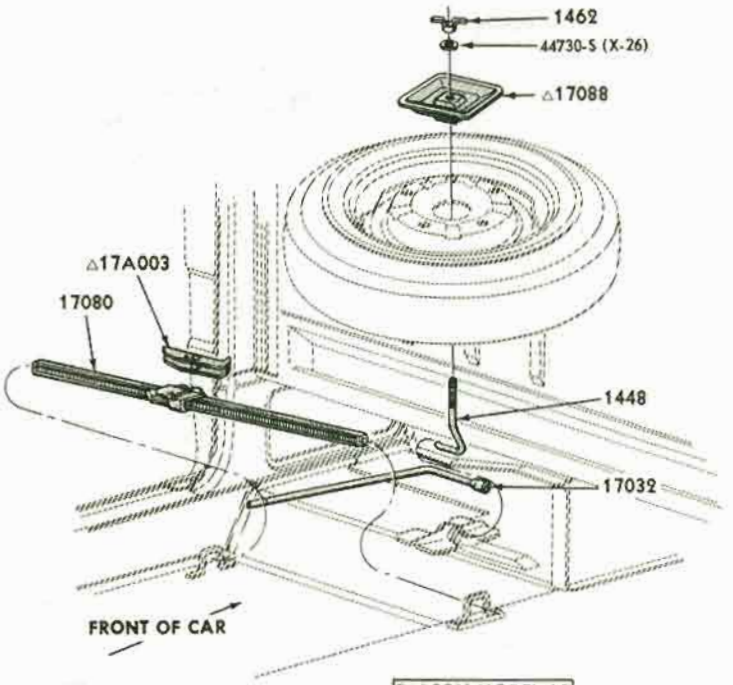

FALCON-MODEL 66

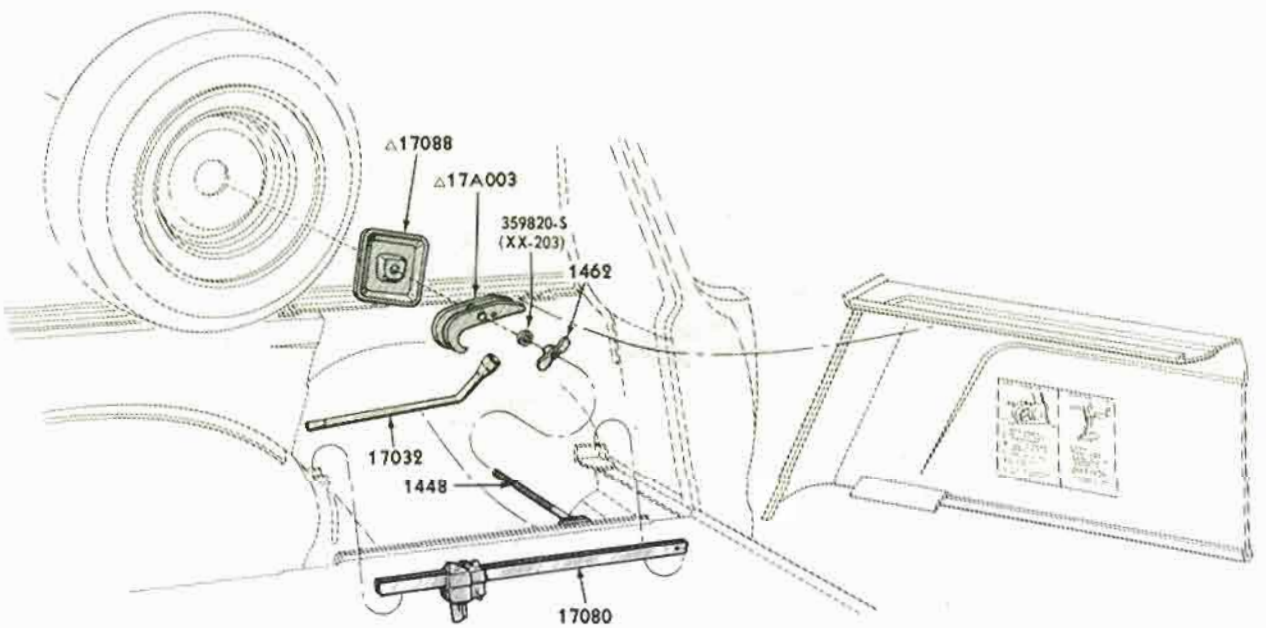

FAIRLANE & FALCON MODEL 71

△ALSO SUPPLIED IN 17080 JACK ASSEMBLY

P-5212

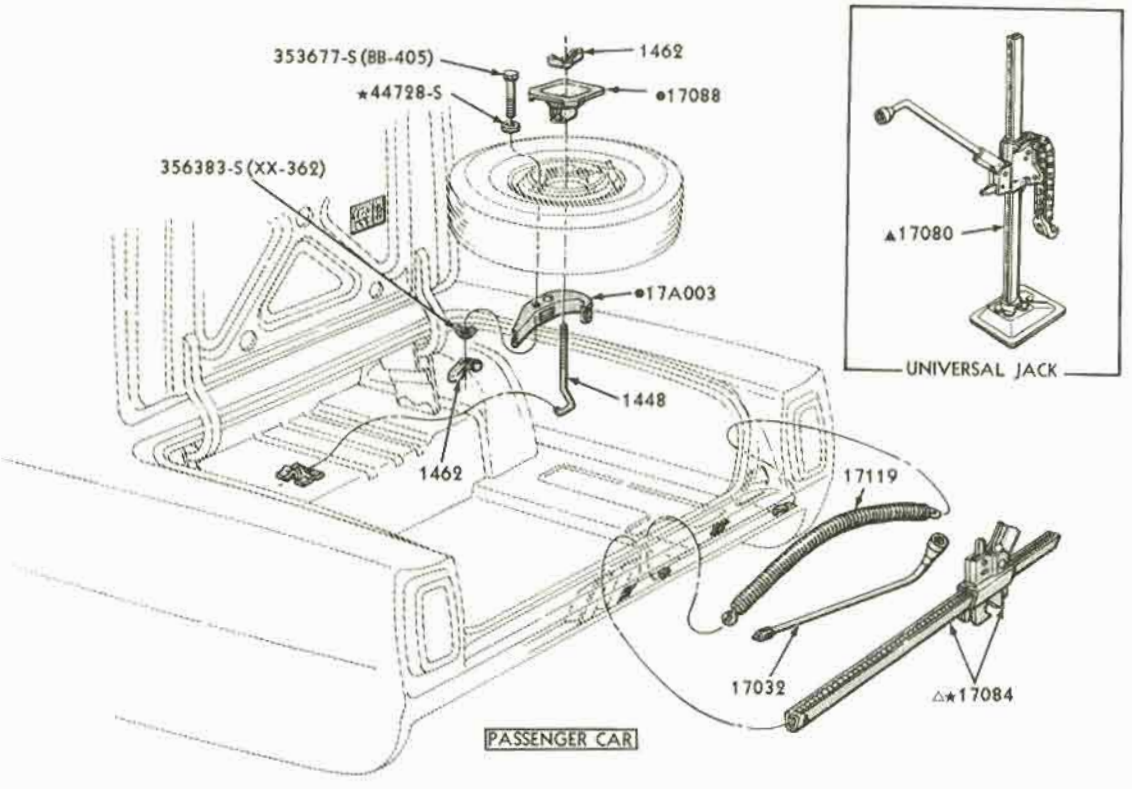

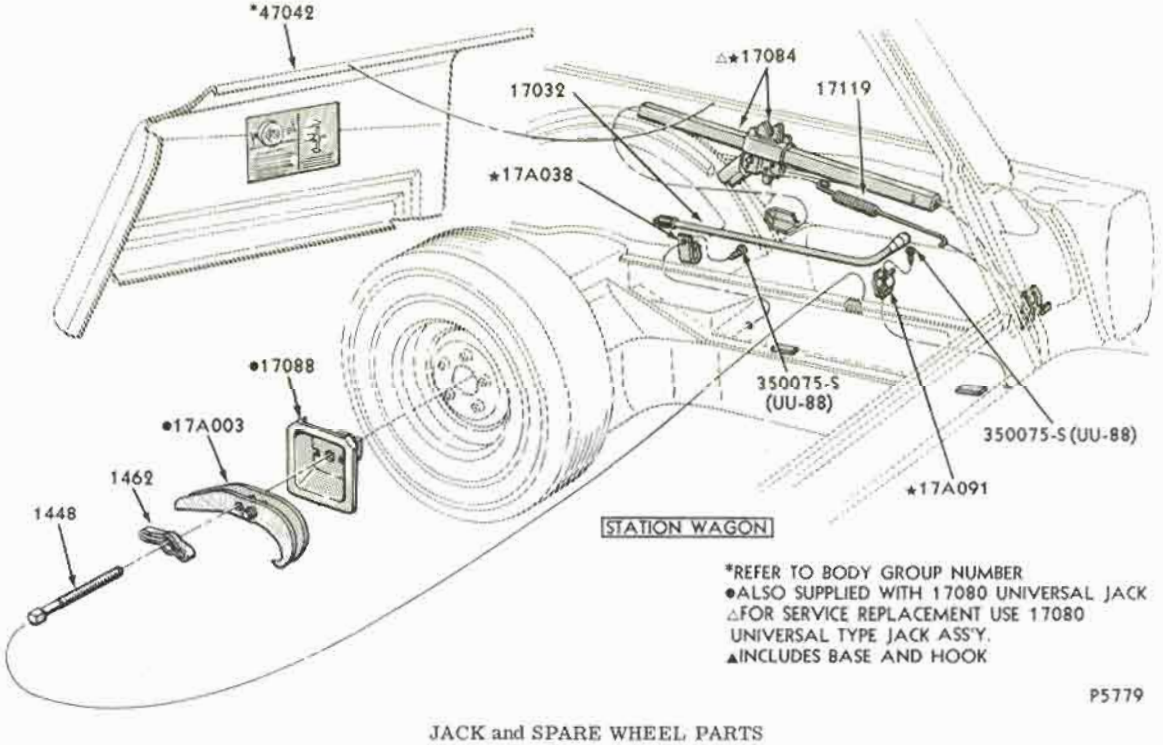

*REFER TO BODY GROUP NUMBER
●ALSO SUPPLIED WITH 17080 UNIVERSAL JACK
△FOR SERVICE REPLACEMENT USE 17080 UNIVERSAL TYPE JACK ASS'Y.
▲INCLUDES BASE AND HOOK

P5779

JACK and SPARE WHEEL PARTS
1967/69 FORD

COPYRIGHT © 1975 — FORD MOTOR COMPANY — DEARBORN, MICHIGAN

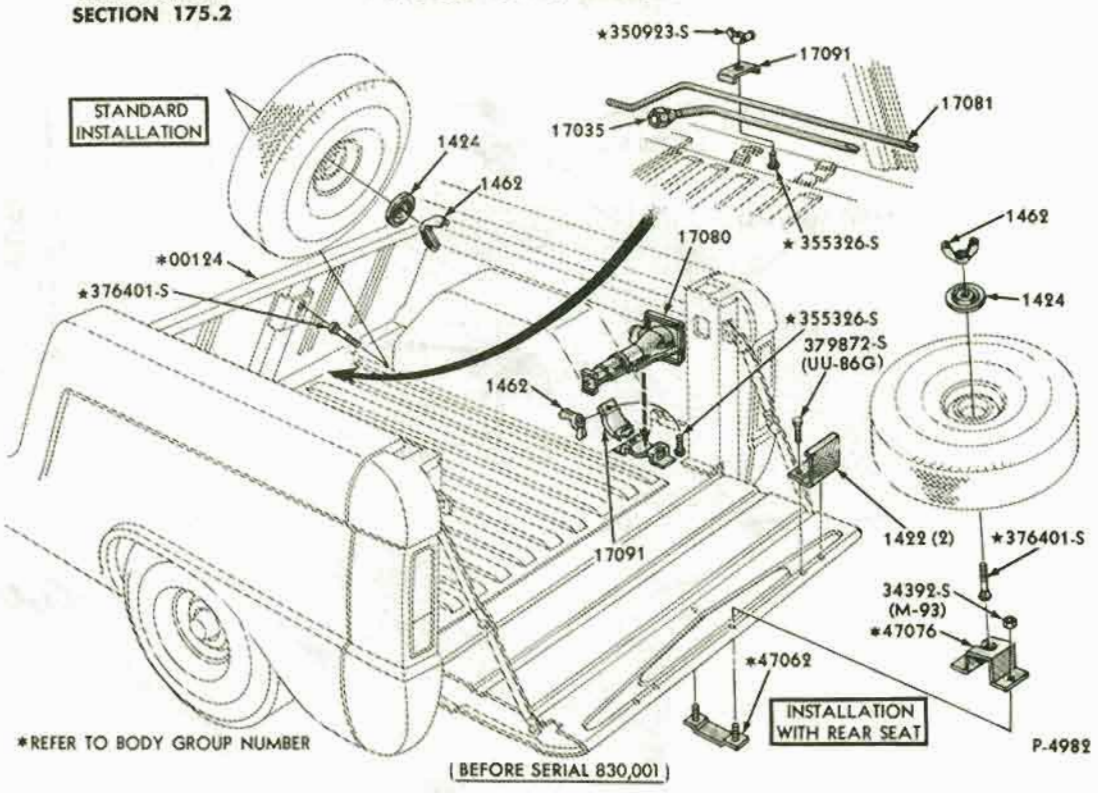

(BEFORE SERIAL 830,001)

JACK and SPARE WHEEL PARTS
1966 BRONCO - BEFORE SERIAL 830,001

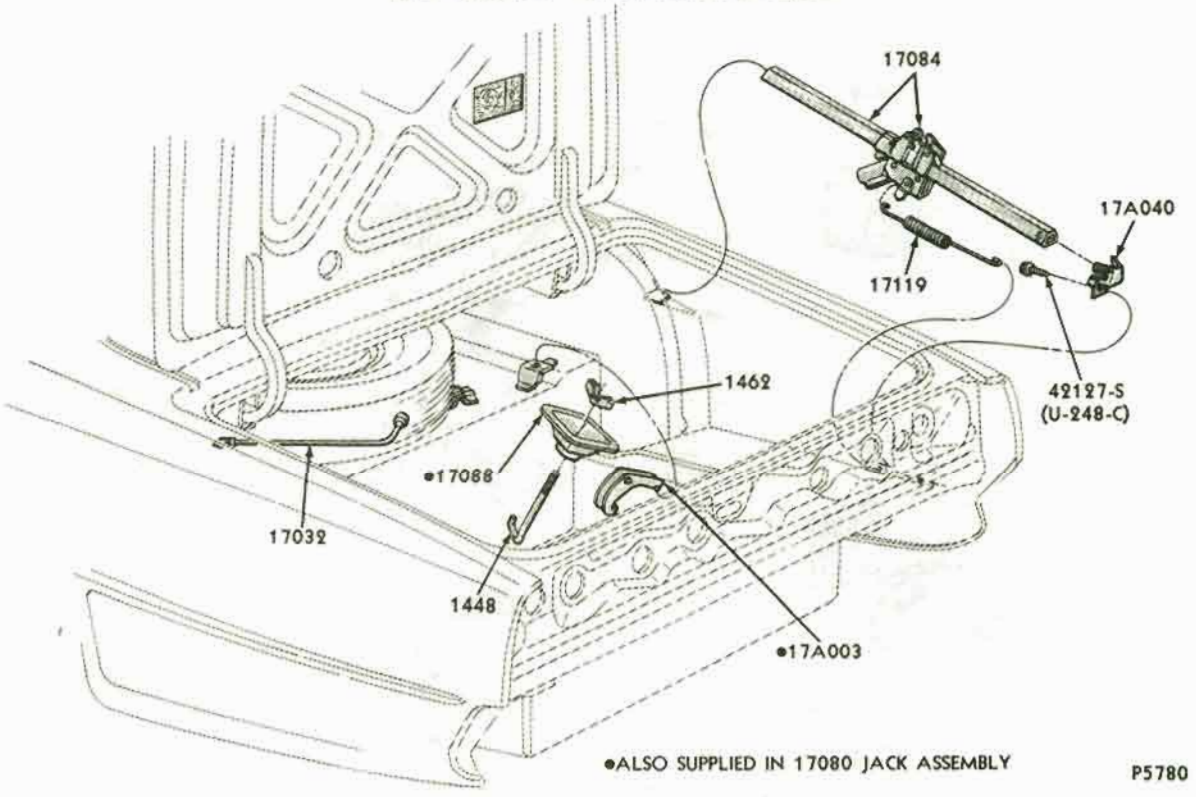

JACK and SPARE WHEEL PARTS
1967/71 THUNDERBIRD

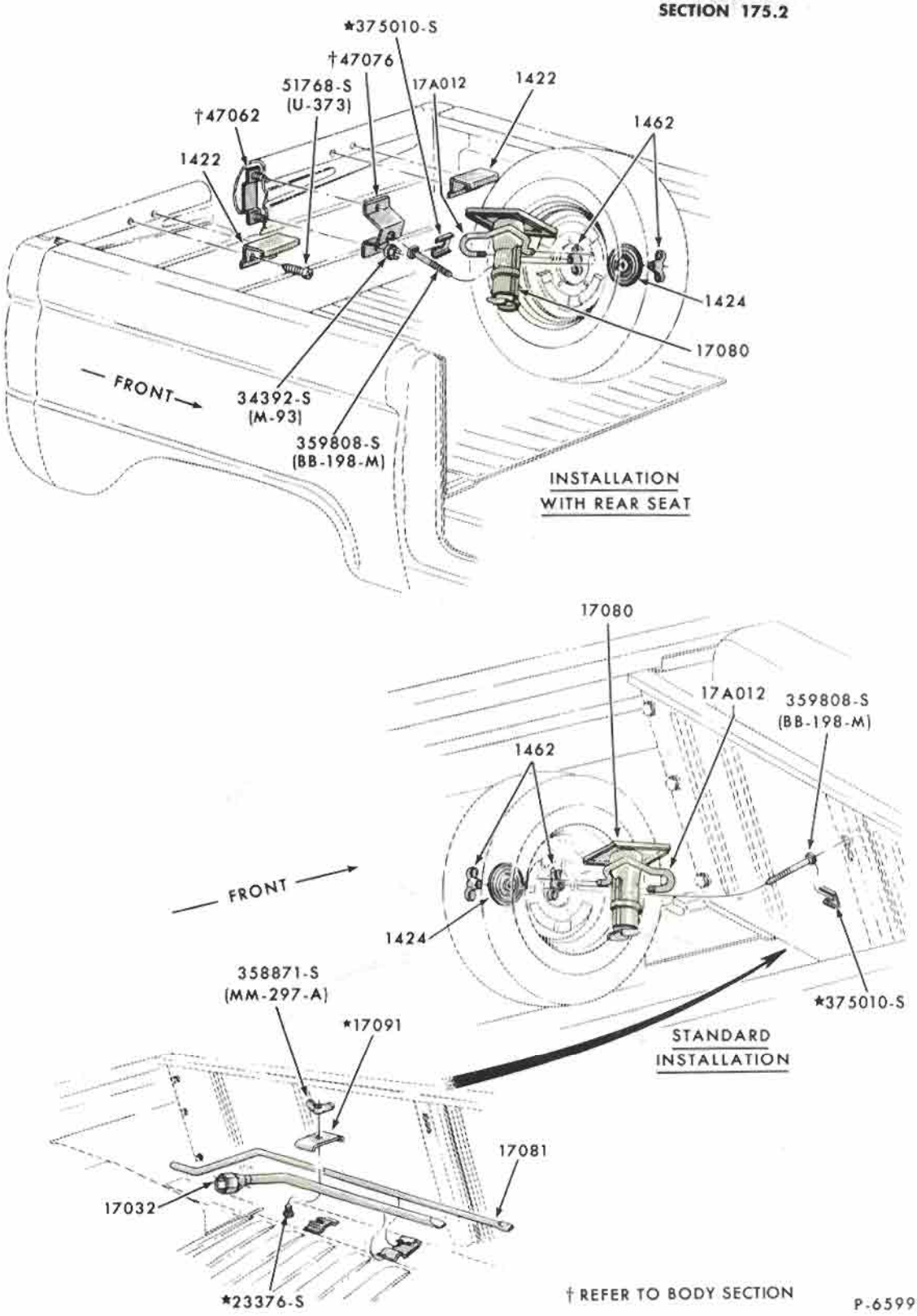

JACK and SPARE WHEEL PARTS
1966/67 BRONCO (JACK STOWAGE) - FROM SERIAL 830, 001
1966/72 BRONCO (EXCEPT SWING-A-WAY) - SPARE WHEEL PARTS

COPYRIGHT © 1975 — FORD MOTOR COMPANY — DEARBORN, MICHIGAN

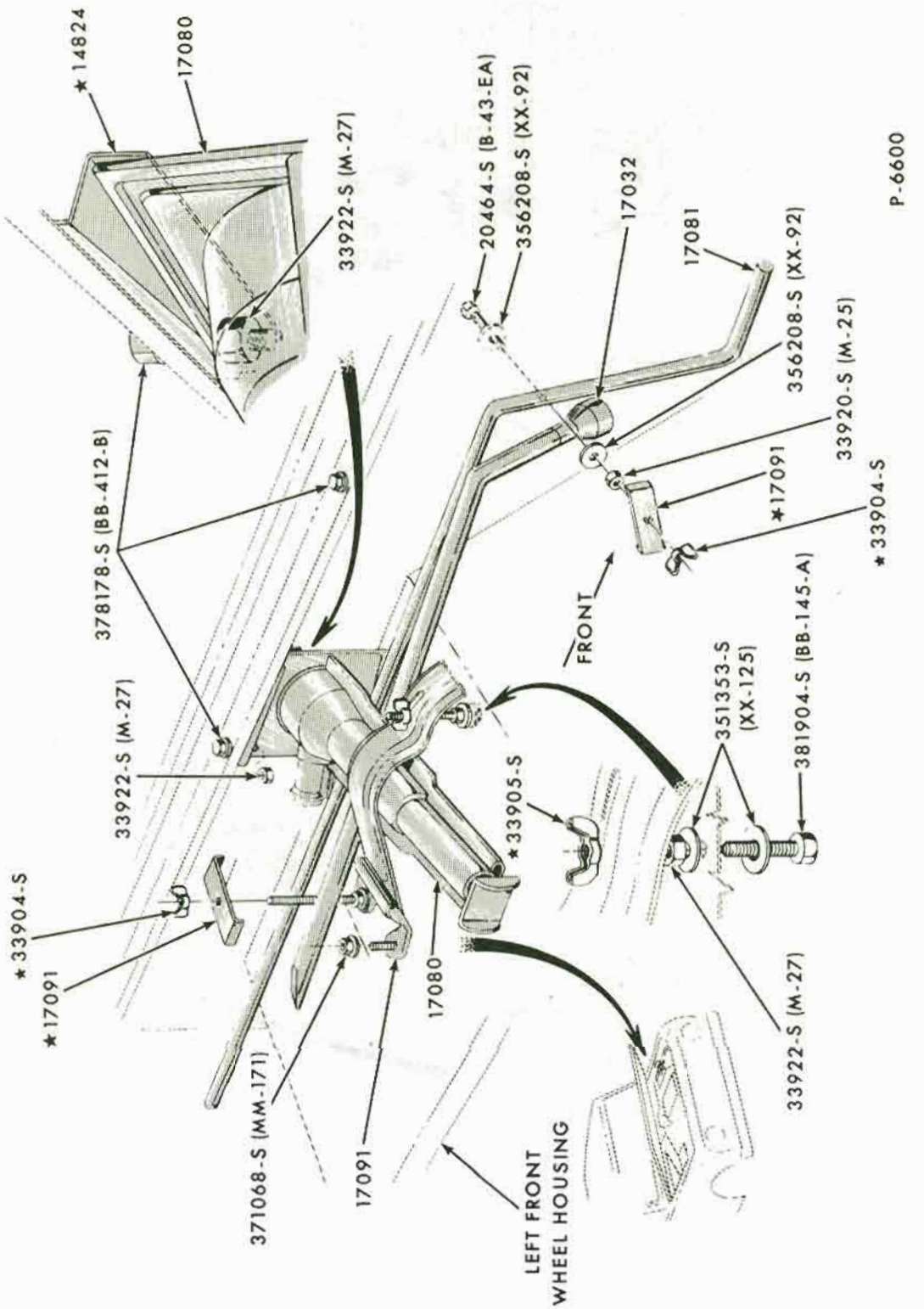

JACK PARTS
1968/72 BRONCO

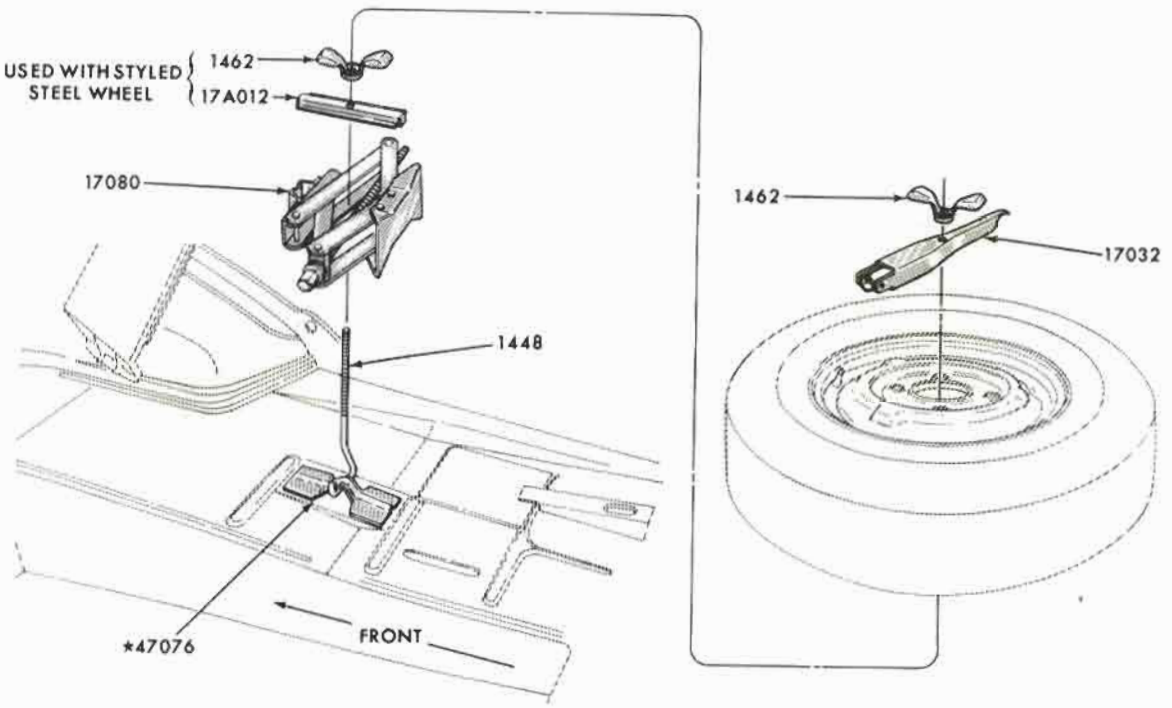

P-6925

JACK and SPARE WHEEL PARTS
1970/72 MAVERICK

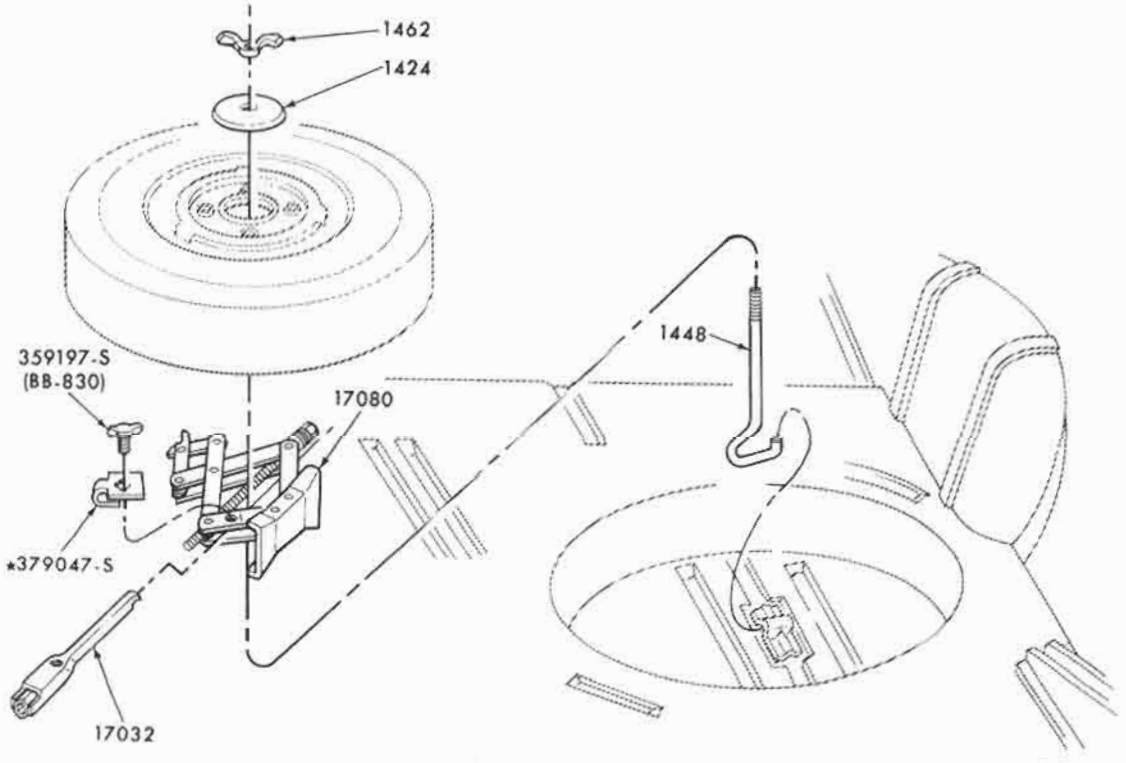

P-8407

JACK and SPARE WHEEL PARTS
1971/72 PINTO

COPYRIGHT © 1975 — FORD MOTOR COMPANY — DEARBORN, MICHIGAN

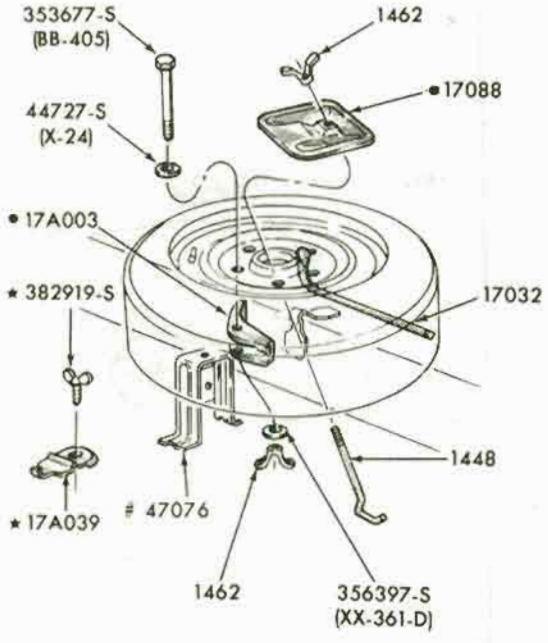

FORD CONVERTIBLE

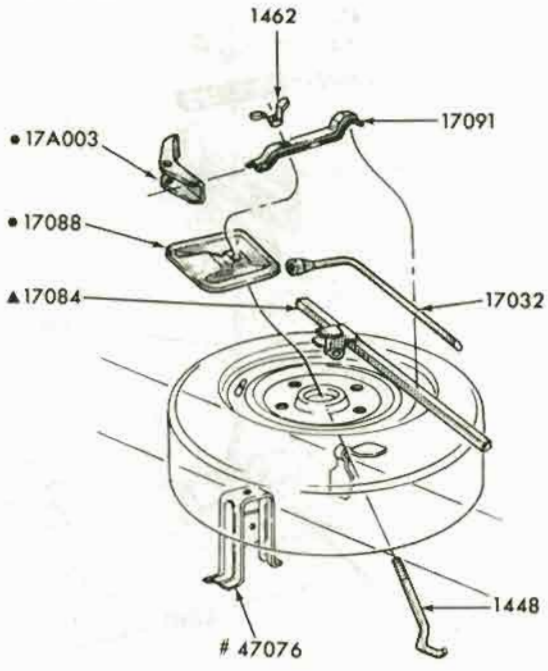

MERCURY CONVERTIBLE EXCEPT WITH STYLED STEEL WHEELS

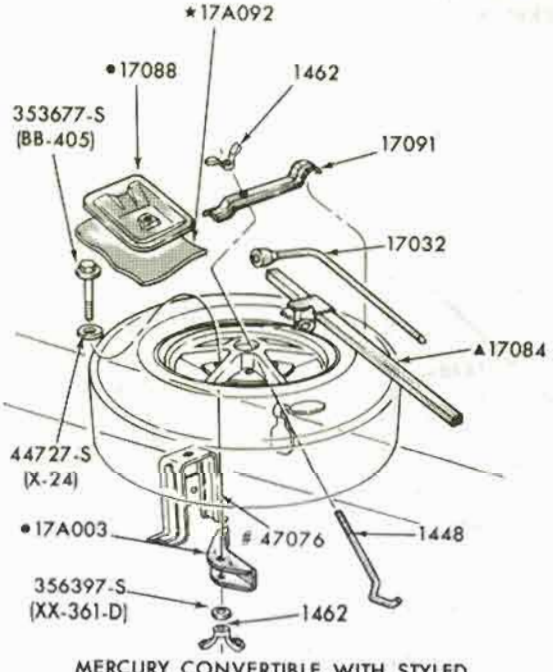

MERCURY CONVERTIBLE WITH STYLED STEEL WHEELS

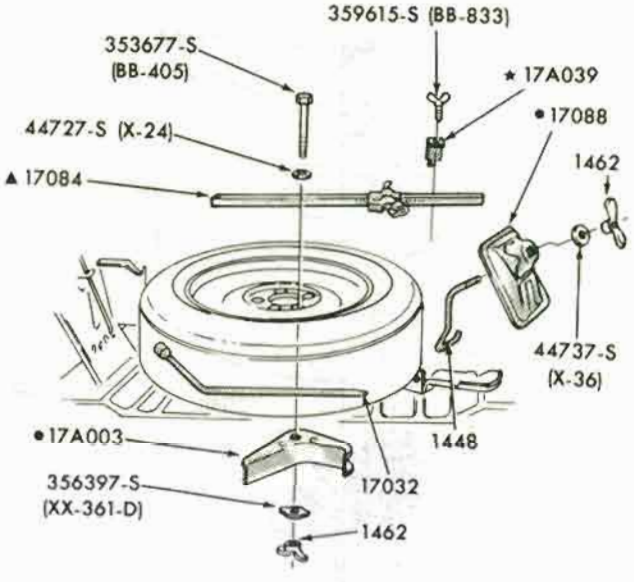

ALL FORD AND MERCURY EXCEPT CONVERTIBLE

REFER TO GROUP IN BODY SECTION
• ALSO PART OF 17080 JACK ASSEMBLY
▲ SERVICED AS 17080 JACK ASSEMBLY ONLY

P-7055

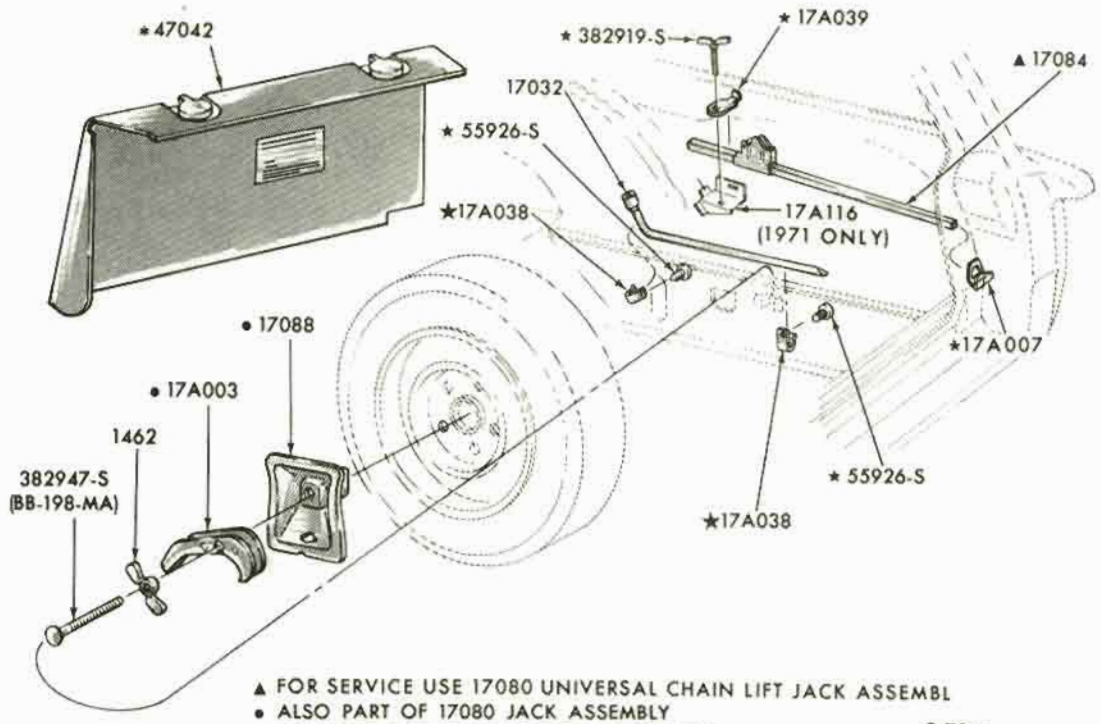

▲ FOR SERVICE USE 17080 UNIVERSAL CHAIN LIFT JACK ASSEMBL
• ALSO PART OF 17080 JACK ASSEMBLY
* REFER TO GROUP IN SOFT TRIM SECTION

P-7056

JACK and SPARE WHEEL PARTS
1969/72 FORD - BODY TYPE 71

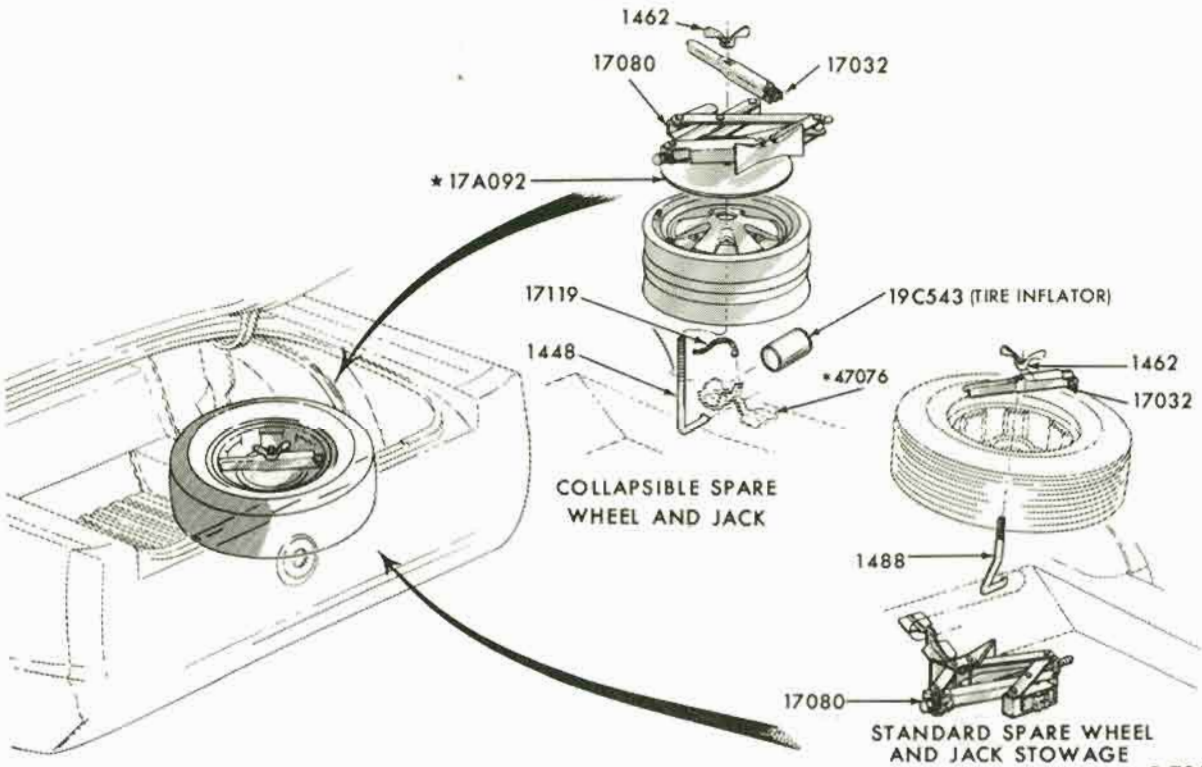

P-7063

* BODY GROUP NUMBER

JACK and SPARE WHEEL PARTS
1969/72 MUSTANG

COPYRIGHT © 1975 — FORD MOTOR COMPANY — DEARBORN, MICHIGAN

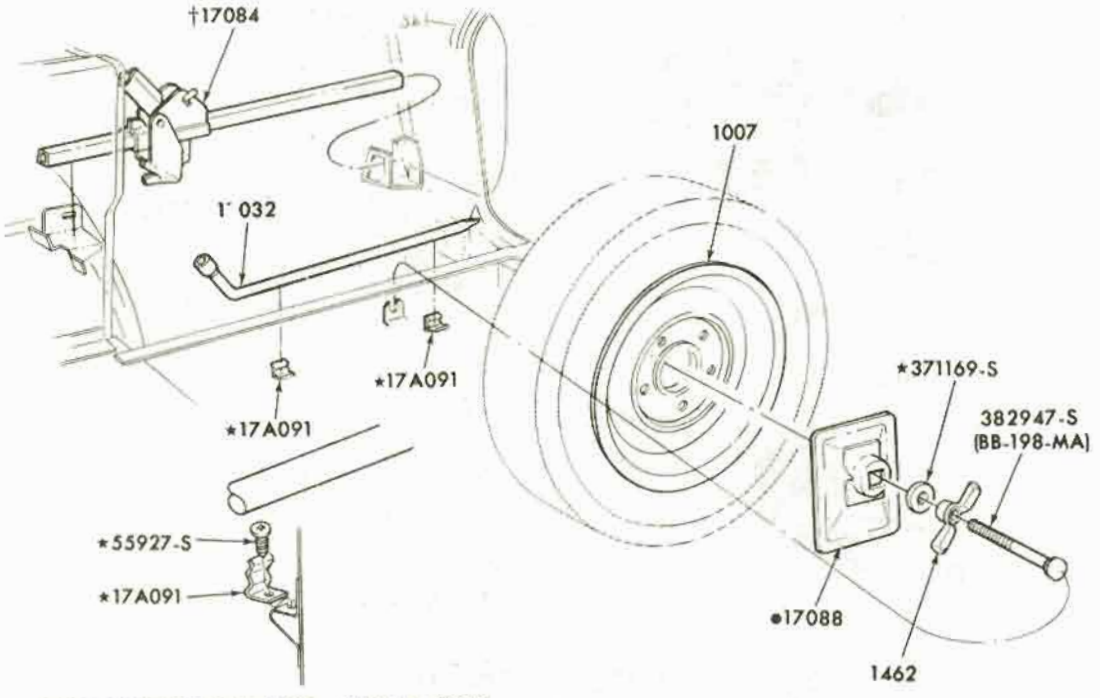

† SERVICED ONLY IN ASSY. - GROUP 17080
• ALSO SERVICED IN ASSY. - GROUP 17080

P-9974

JACK and SPARE WHEEL PARTS
1972 TORINO - BODY TYPE 71

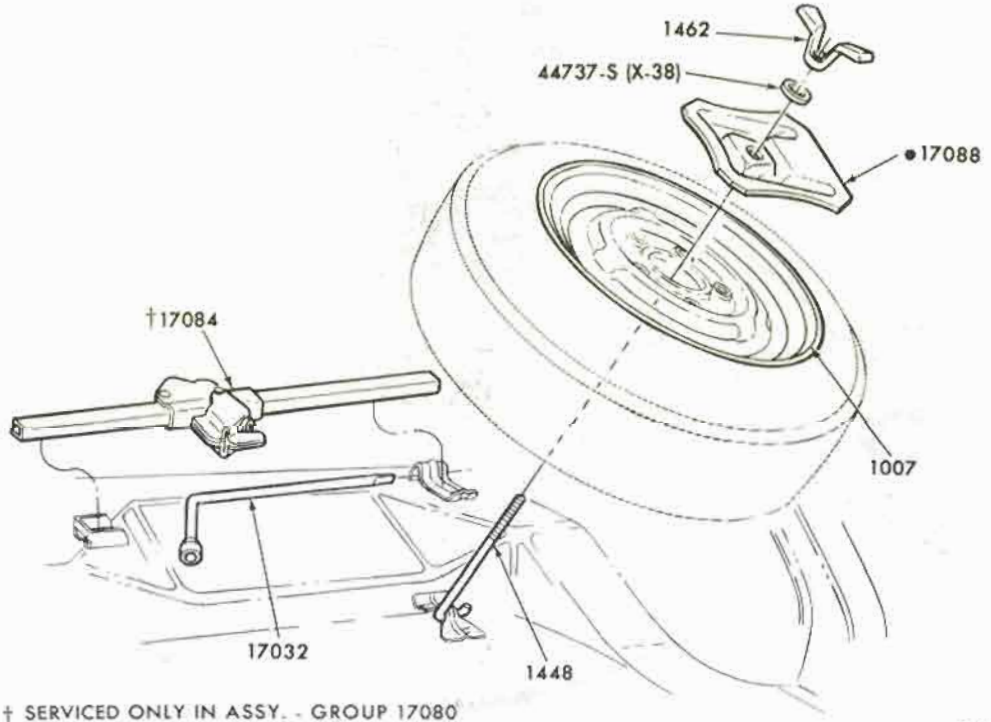

† SERVICED ONLY IN ASSY. - GROUP 17080
• ALSO SERVICED IN ASSY. - GROUP 17080

P-9975

JACK and SPARE WHEEL PARTS
1972 TORINO - EXCEPT BODY TYPES 71 and 97

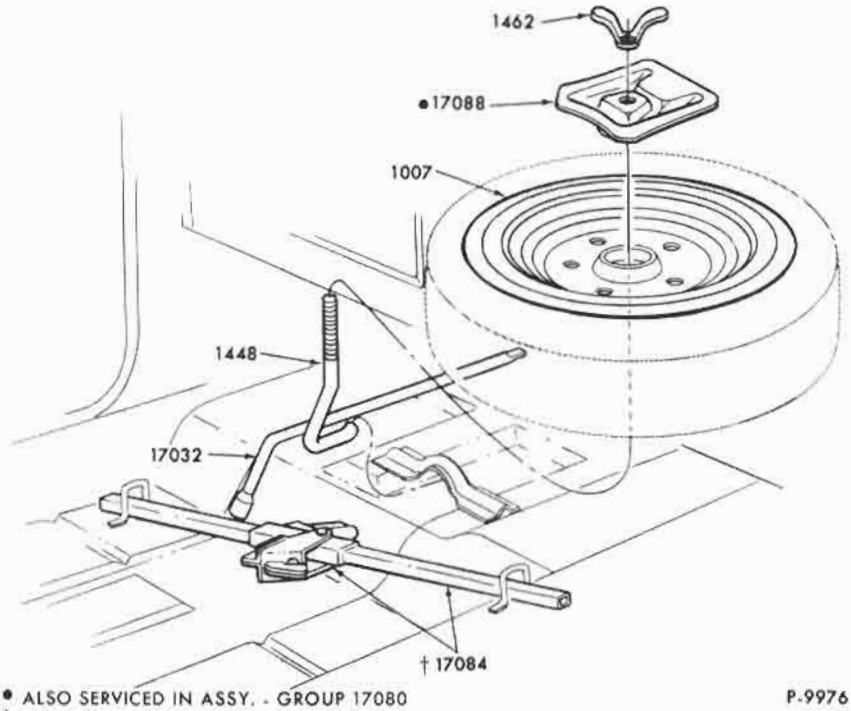

• ALSO SERVICED IN ASSY. - GROUP 17080
† SERVICED ONLY IN ASSY. - GROUP 17080

P-9976

JACK and SPARE WHEEL PARTS
1972 TORINO - BODY TYPE 97

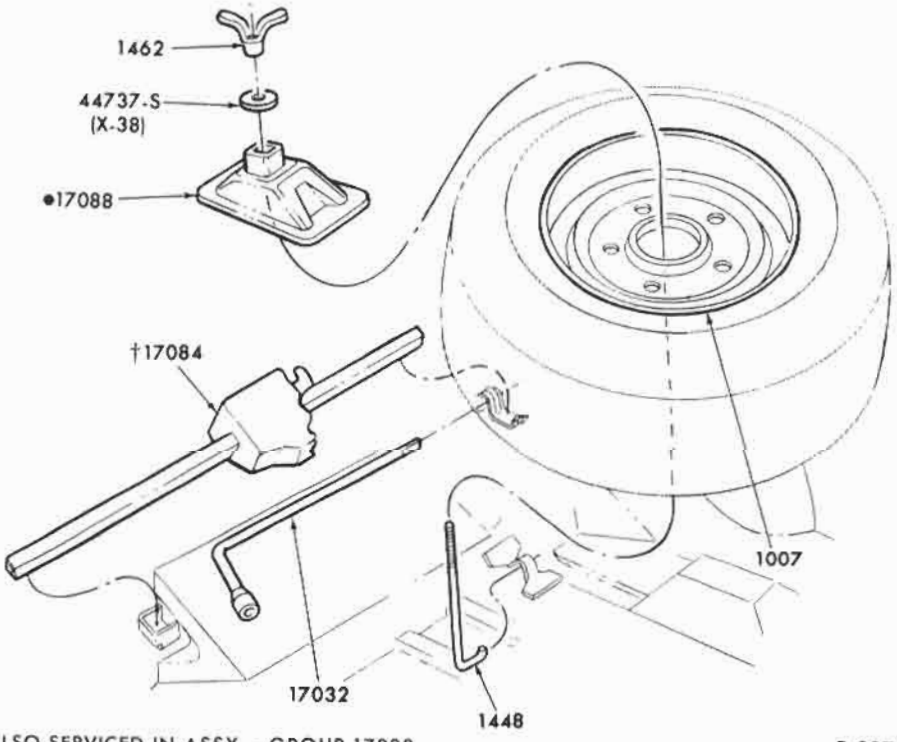

• ALSO SERVICED IN ASSY. - GROUP 17080
† SERVICED ONLY IN ASSY. - GROUP 17080

P-9973

JACK and SPARE WHEEL PARTS
1972 THUNDERBIRD

COPYRIGHT © 1975— FORD MOTOR COMPANY —DEARBORN, MICHIGAN

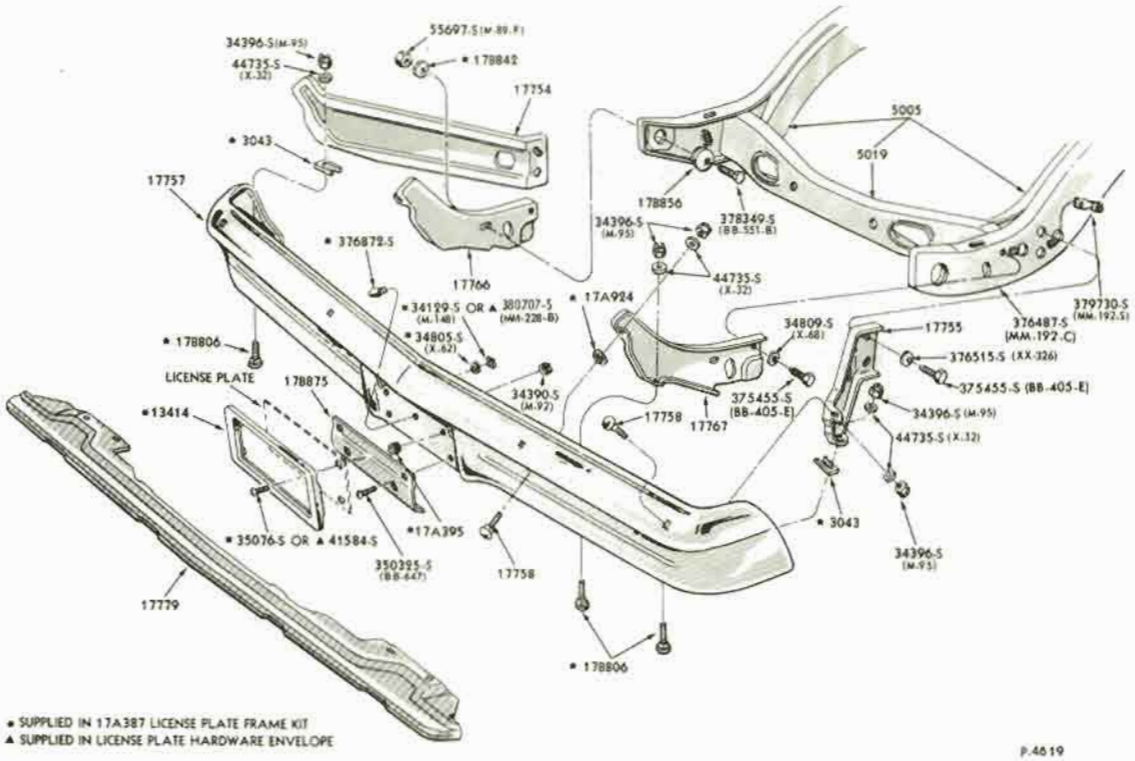

FRONT BUMPER and RELATED PARTS
1965/66 FORD

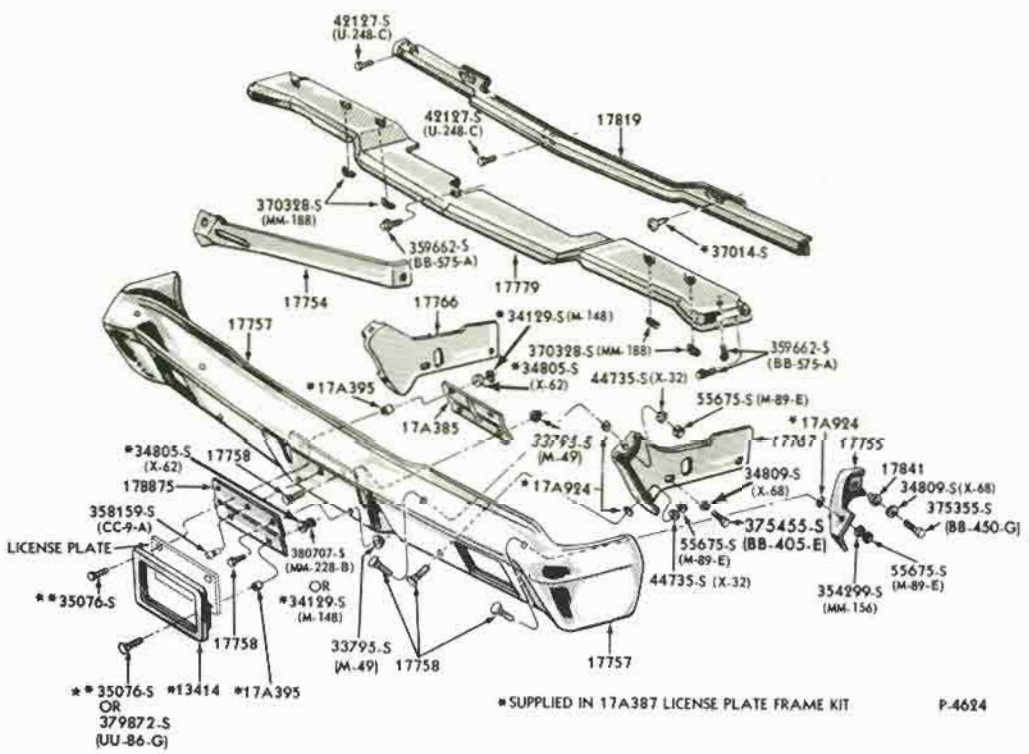

FRONT BUMPER and RELATED PARTS
1965 FAIRLANE

COPYRIGHT © 1975 — FORD MOTOR COMPANY — DEARBORN, MICHIGAN

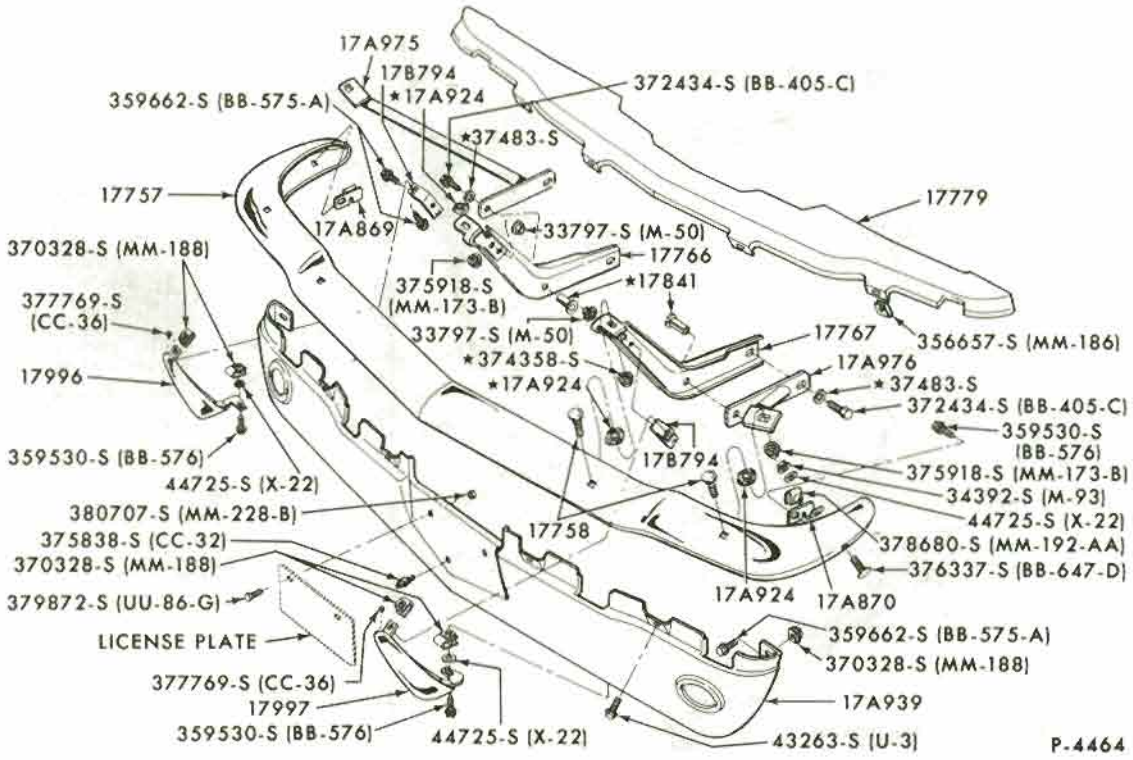

FRONT BUMPER and RELATED PARTS
1965/66 MUSTANG

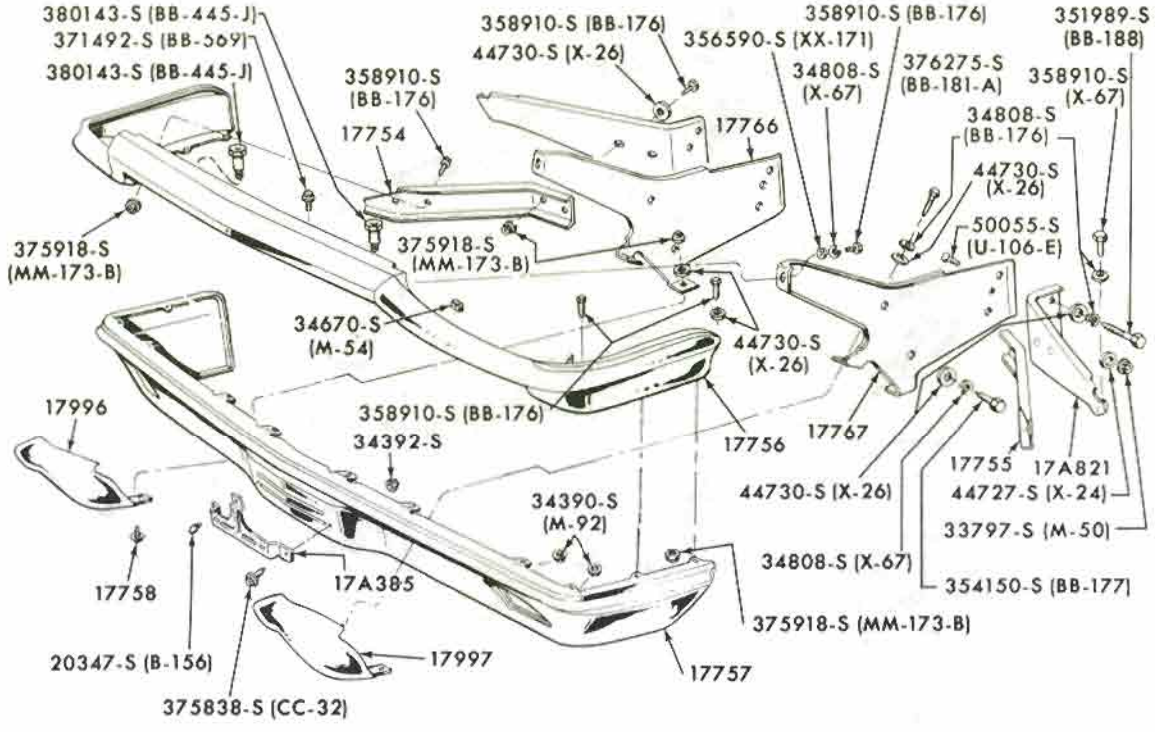

P-9210

FRONT BUMPER, GRILLE and RELATED PARTS
1965 THUNDERBIRD

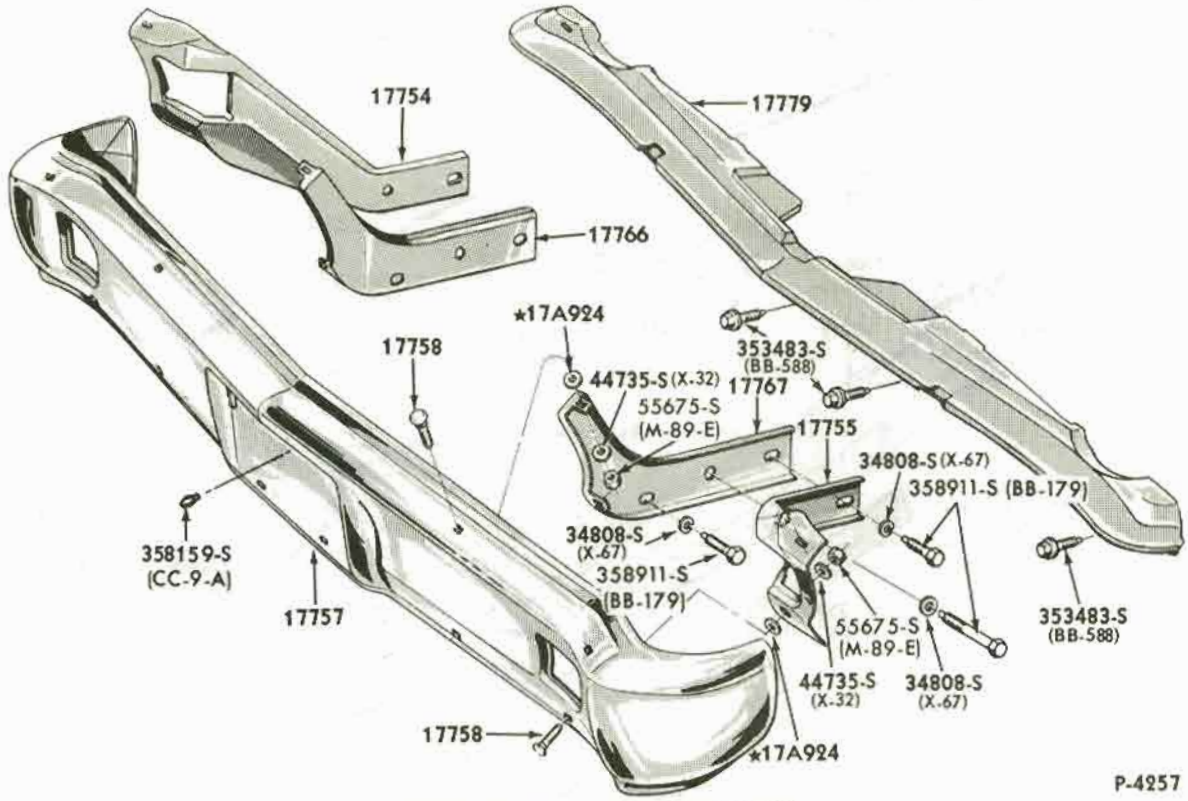

FRONT BUMPER and RELATED PARTS
1965 FALCON

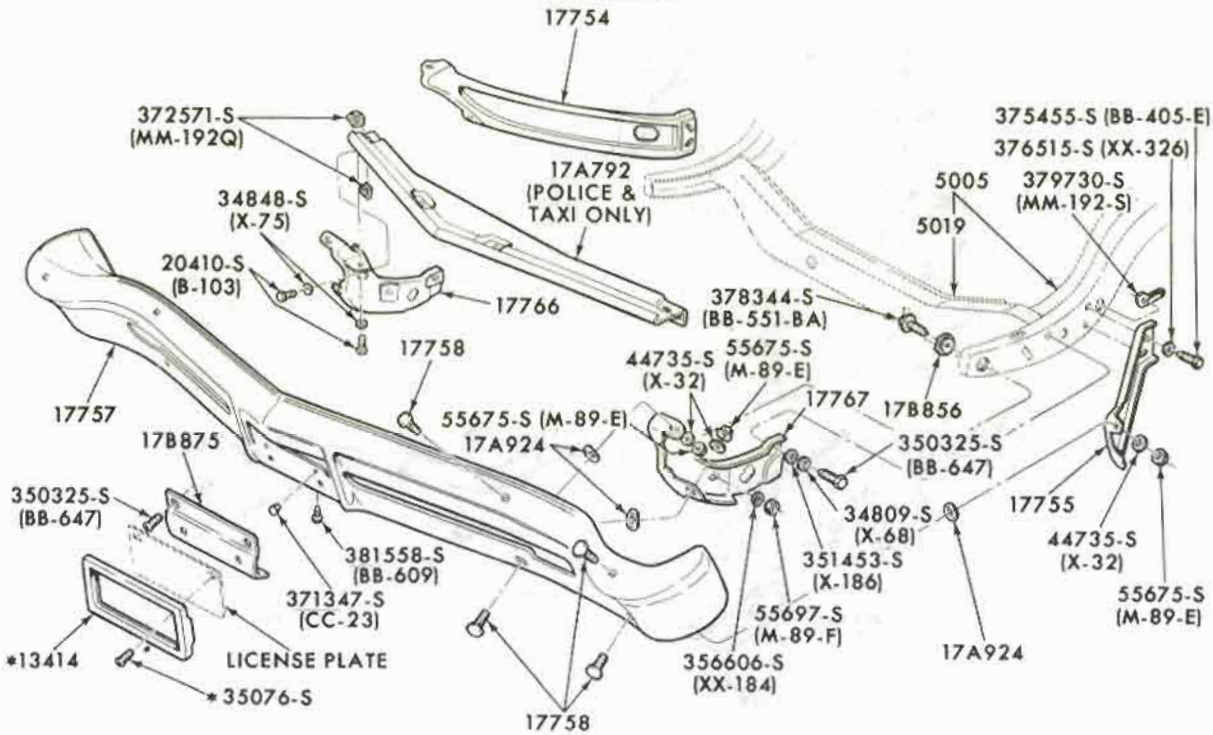

FRONT BUMPER and RELATED PARTS
1967 FORD

COPYRIGHT © 1975 — FORD MOTOR COMPANY — DEARBORN, MICHIGAN

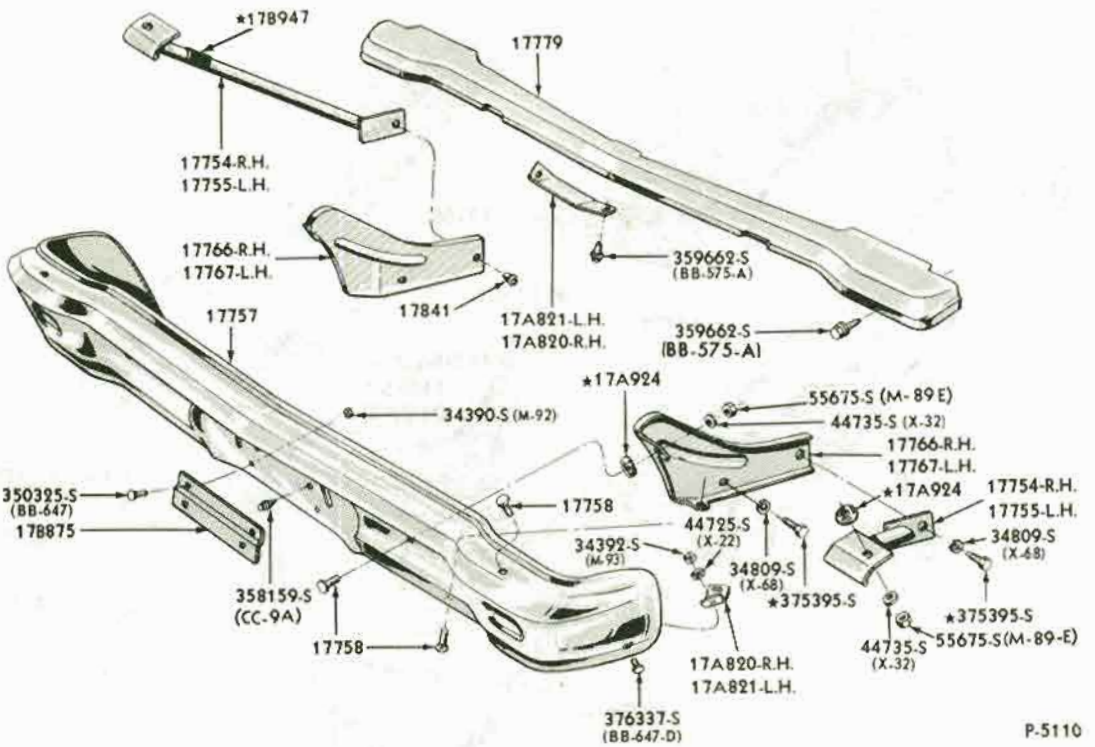

FRONT BUMPER and RELATED PARTS
1966/67 FAIRLANE

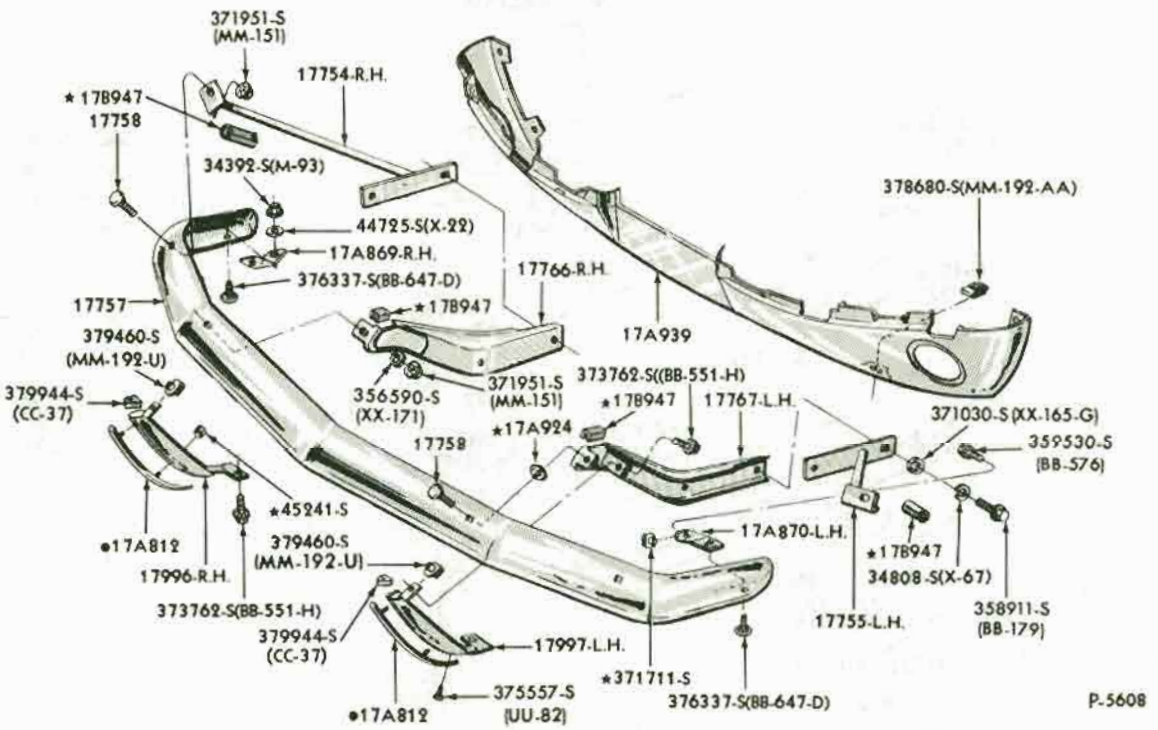

•NOT USED ON UNITS BUILT FROM 3/29/67

FRONT BUMPER and RELATED PARTS
1967/68 MUSTANG

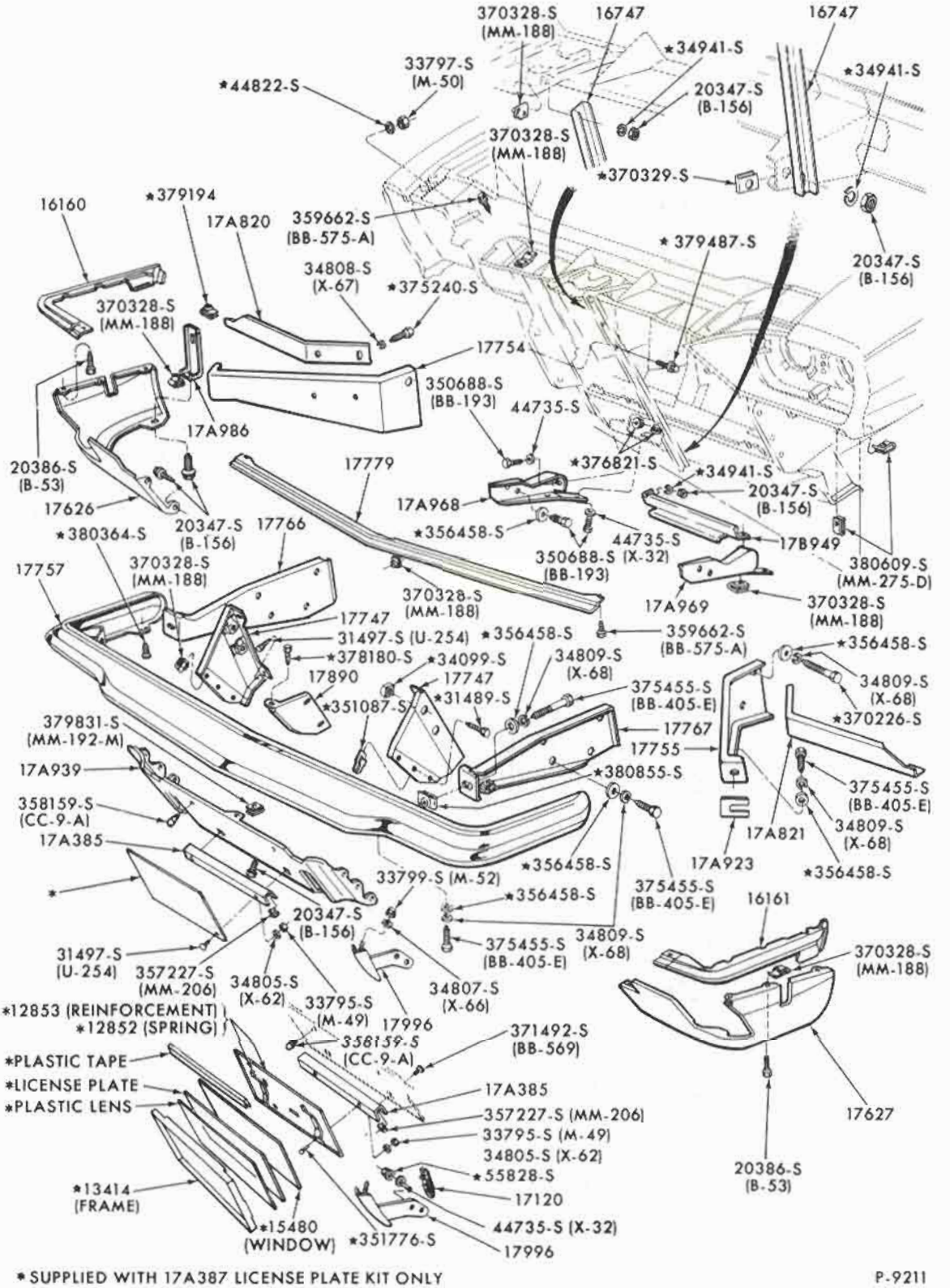

* SUPPLIED WITH 17A387 LICENSE PLATE KIT ONLY

P-9211

FRONT BUMPERS, GRILLE and RELATED PARTS
1966 THUNDERBIRD

COPYRIGHT © 1975 — FORD MOTOR COMPANY — DEARBORN, MICHIGAN

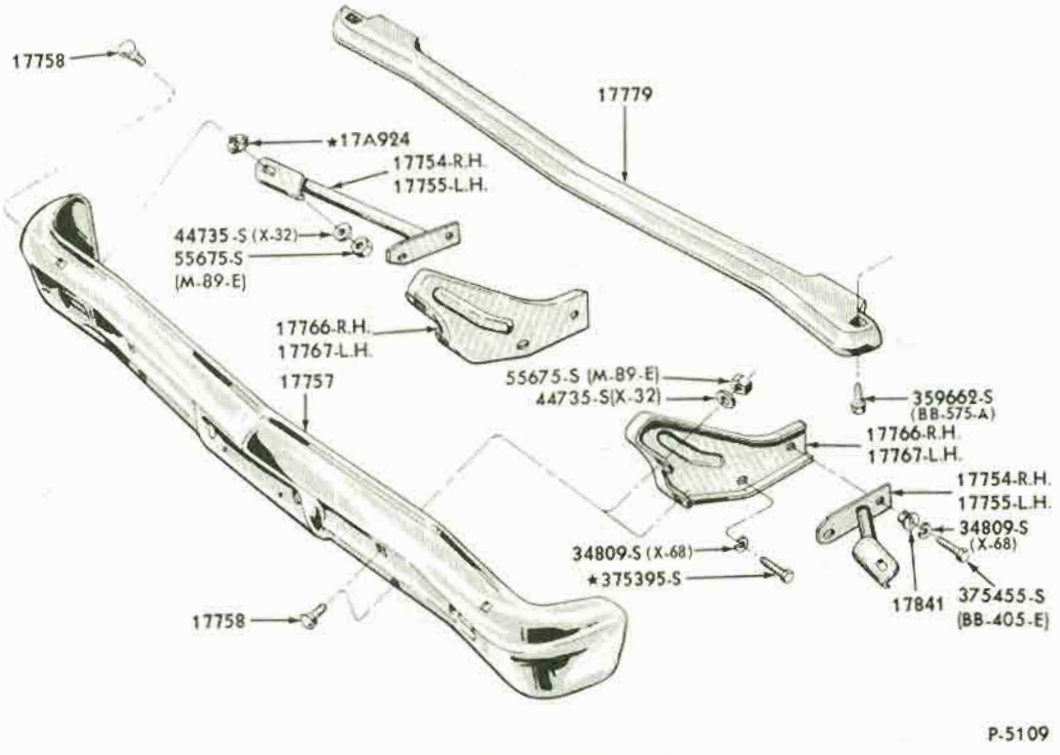

FRONT BUMPER and RELATED PARTS
1966/67 FALCON

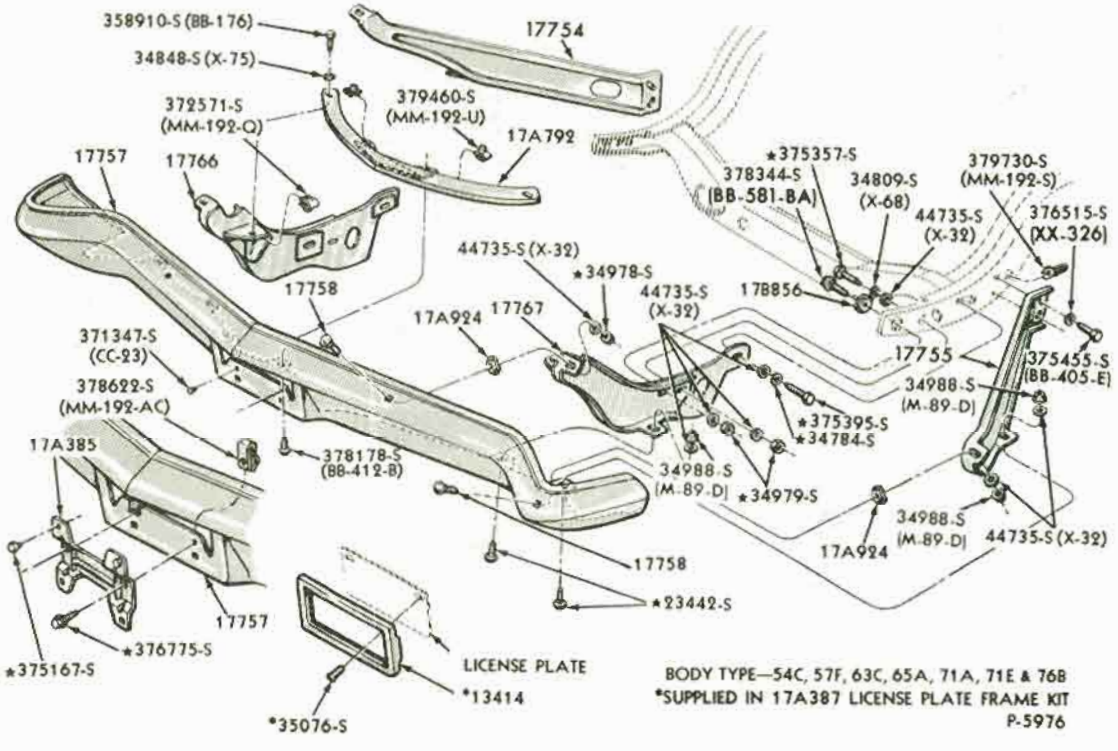

FRONT BUMPER and RELATED PARTS
1968 FORD

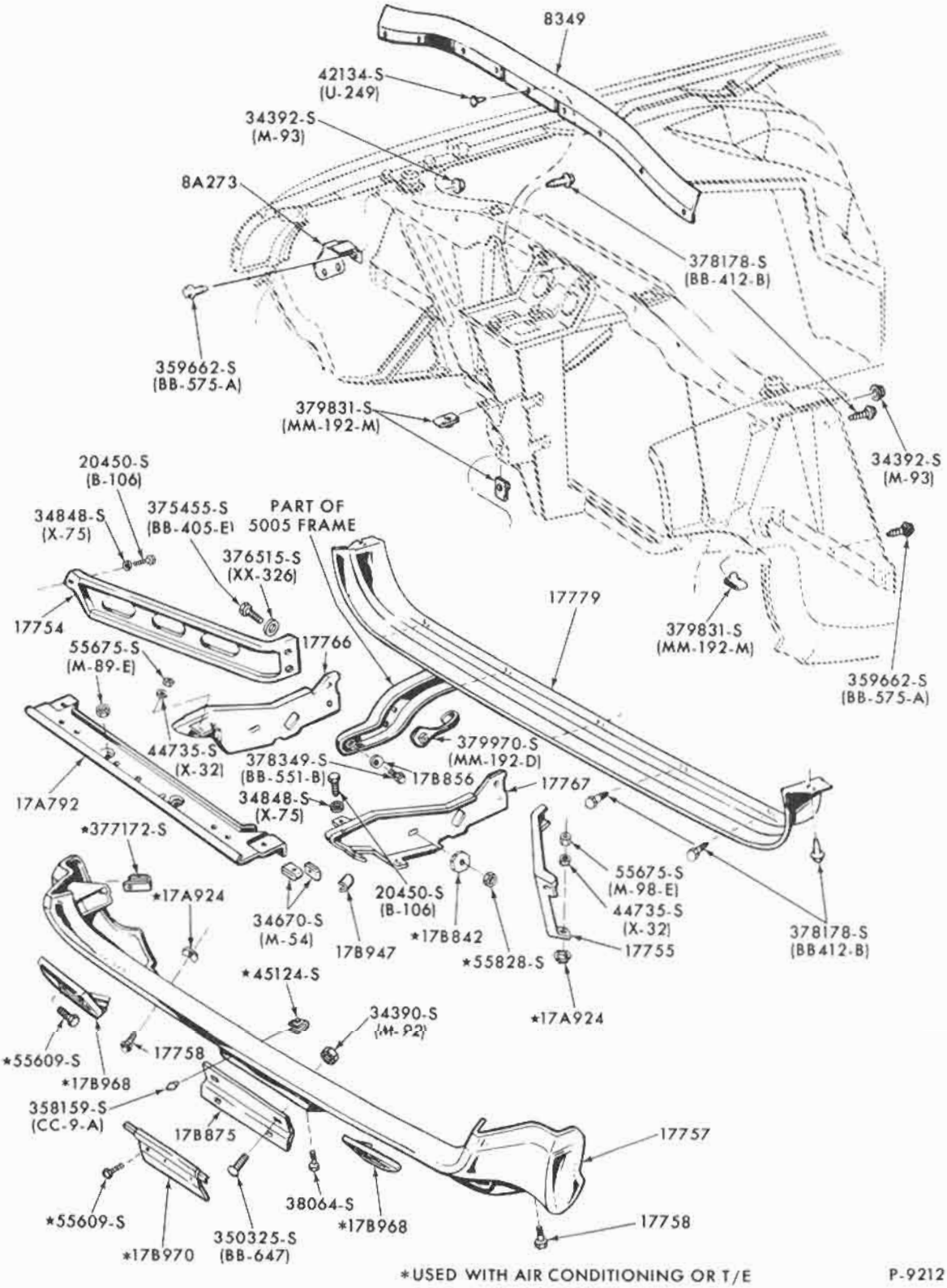

*USED WITH AIR CONDITIONING OR T/E

P-9212

FRONT BUMPER GRILLE and RELATED PARTS
1967 THUNDERBIRD

COPYRIGHT © 1975 — FORD MOTOR COMPANY — DEARBORN, MICHIGAN

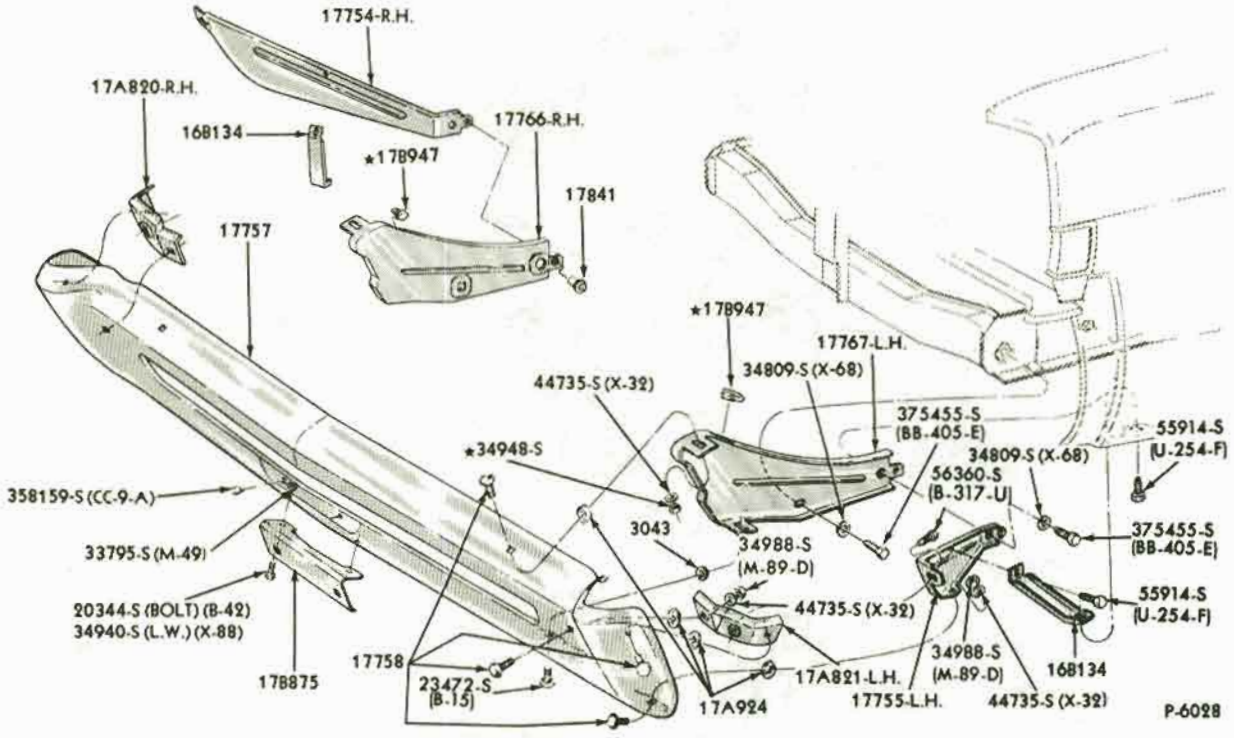

FRONT BUMPER and RELATED PARTS
1968/69 FAIRLANE/TORINO

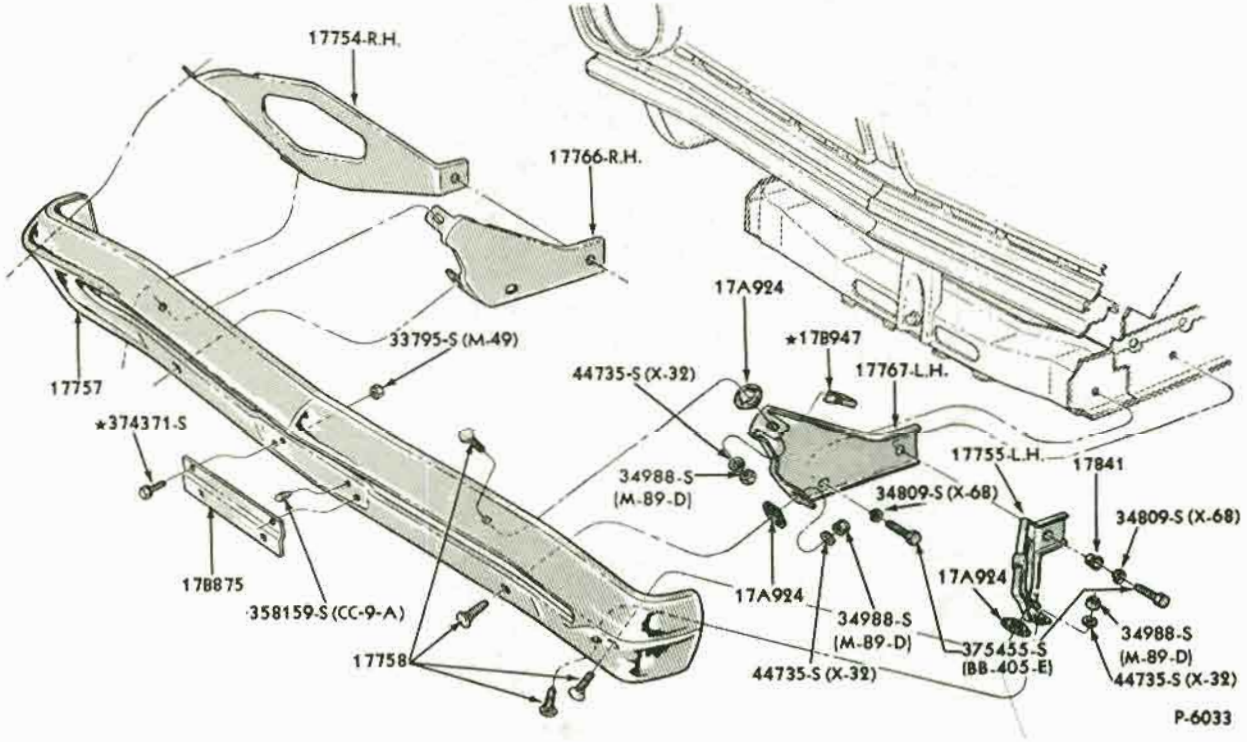

FRONT BUMPER and RELATED PARTS
1968/70 FALCON

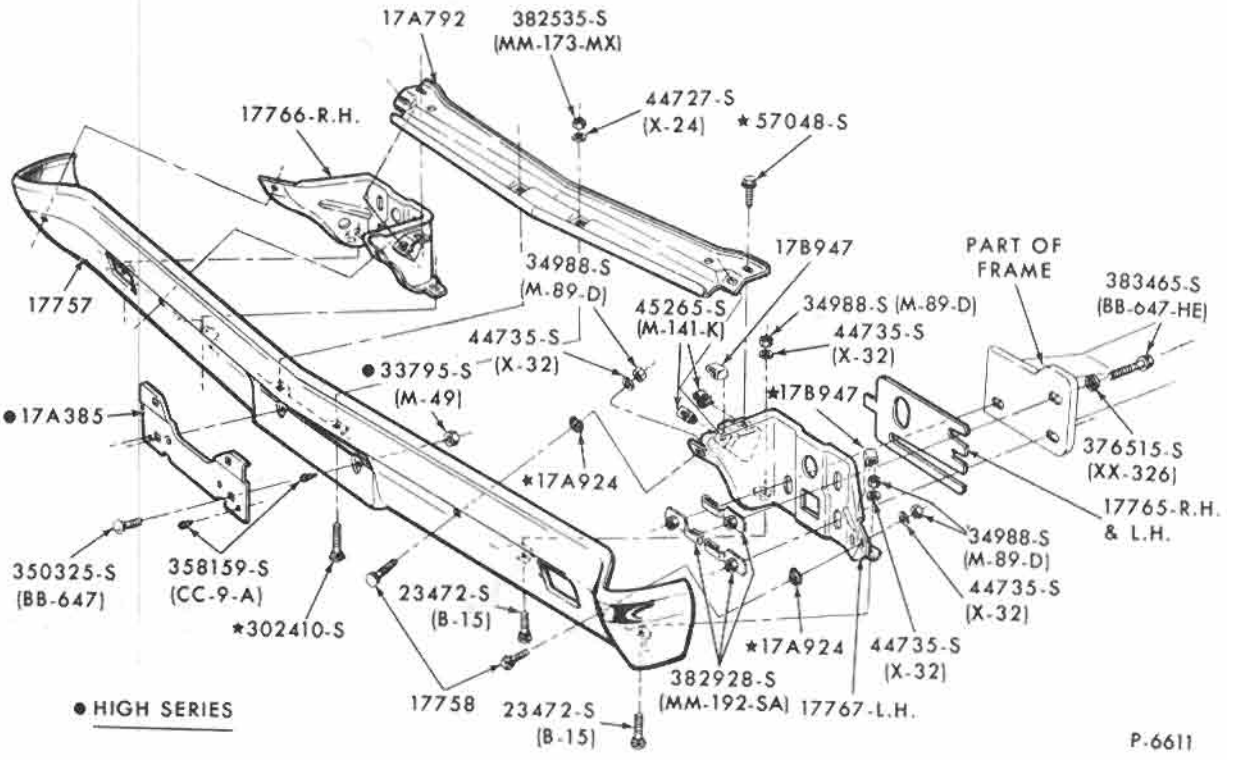

FRONT BUMPER and RELATED PARTS
1969/70 FORD

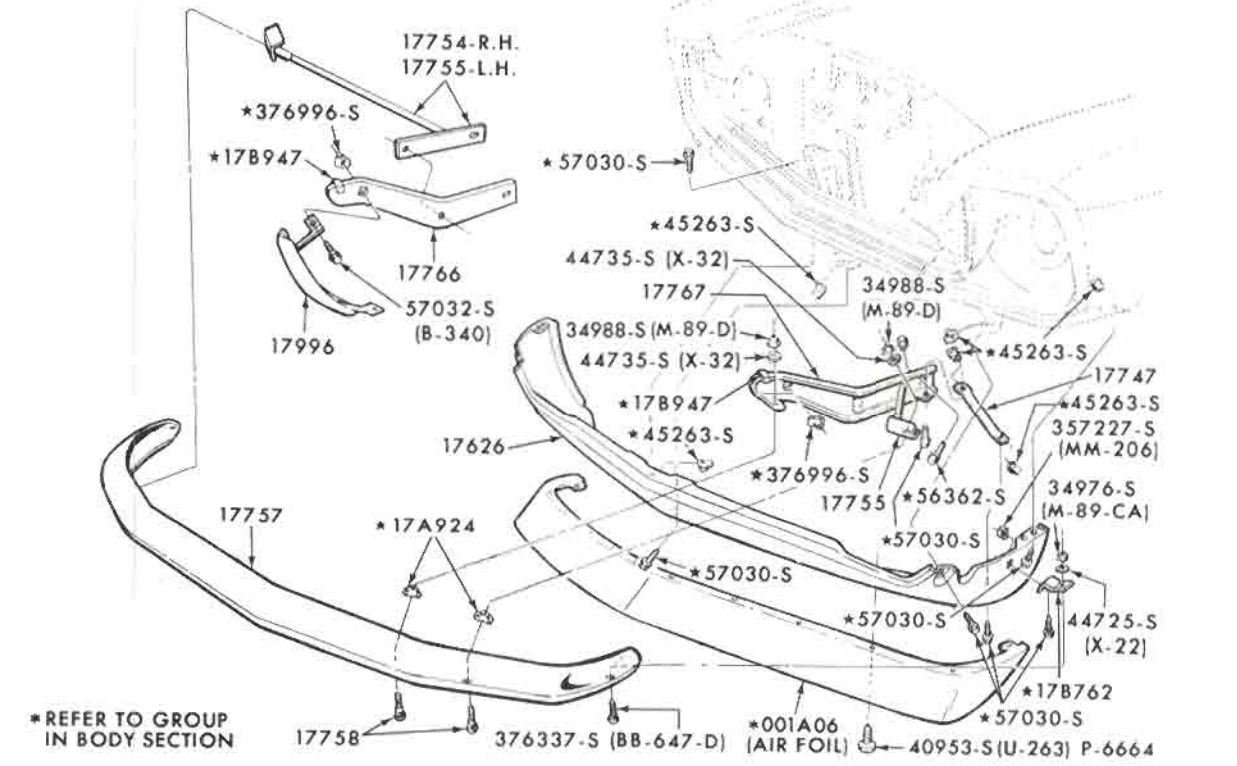

FRONT BUMPER and RELATED PARTS
1969/70 MUSTANG - except SHELBY GT 350/500

COPYRIGHT © 1975 — FORD MOTOR COMPANY — DEARBORN, MICHIGAN

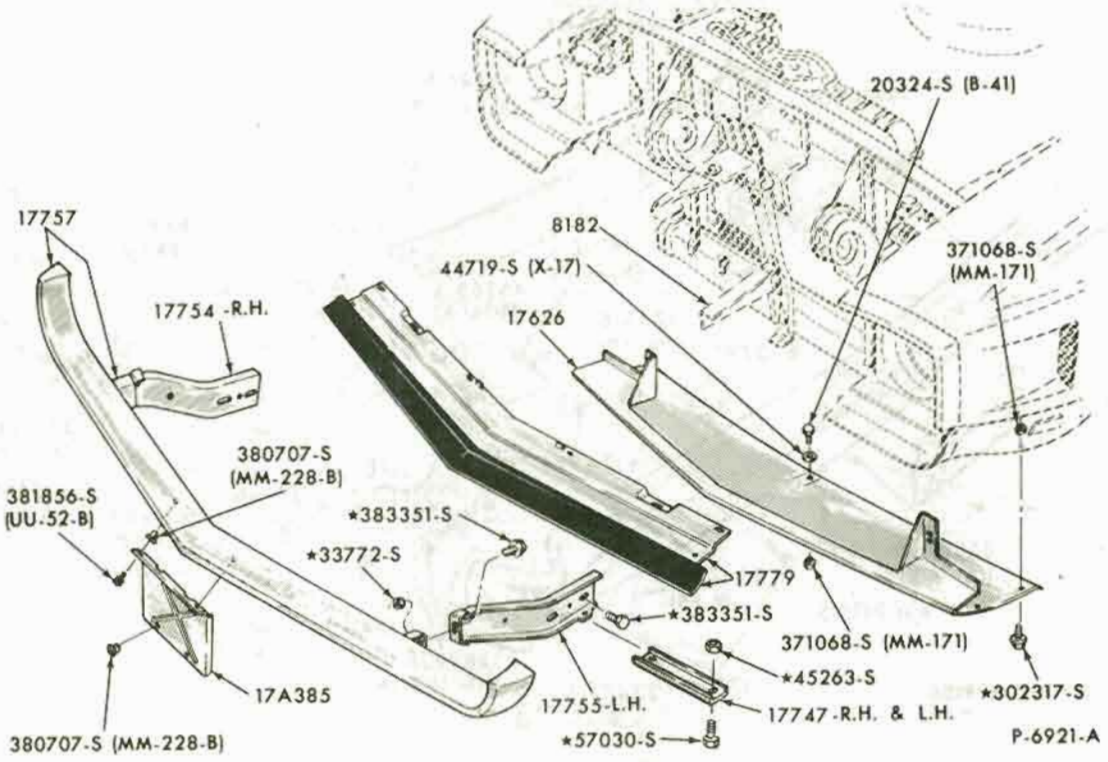

FRONT BUMPER and RELATED PARTS
1969/70 MUSTANG - SHELBY GT 350/500

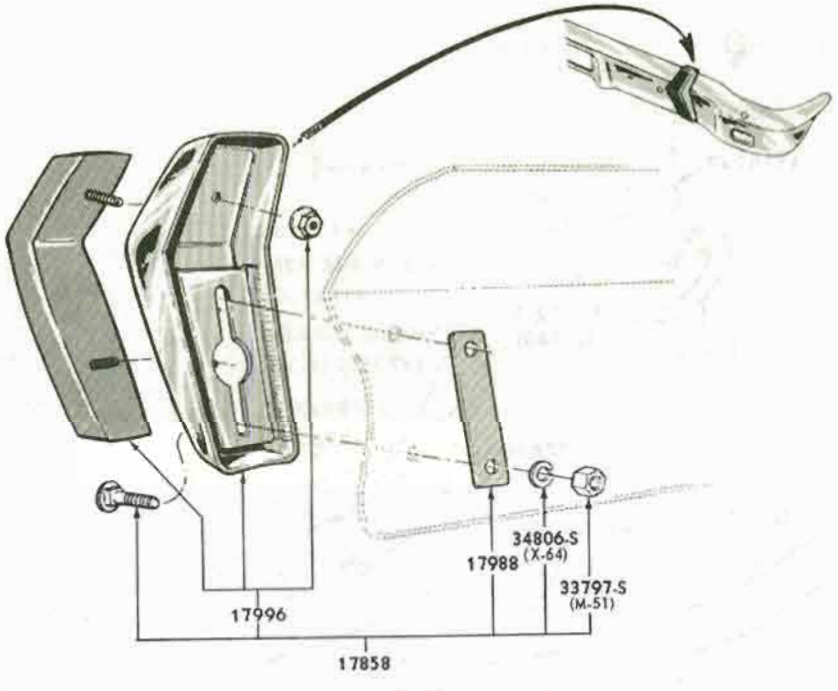

BUMPER GUARDS-FRONT and REAR (UNIVERSAL TYPE)
1965/69 FORD, FAIRLANE/TORINO and FALCON

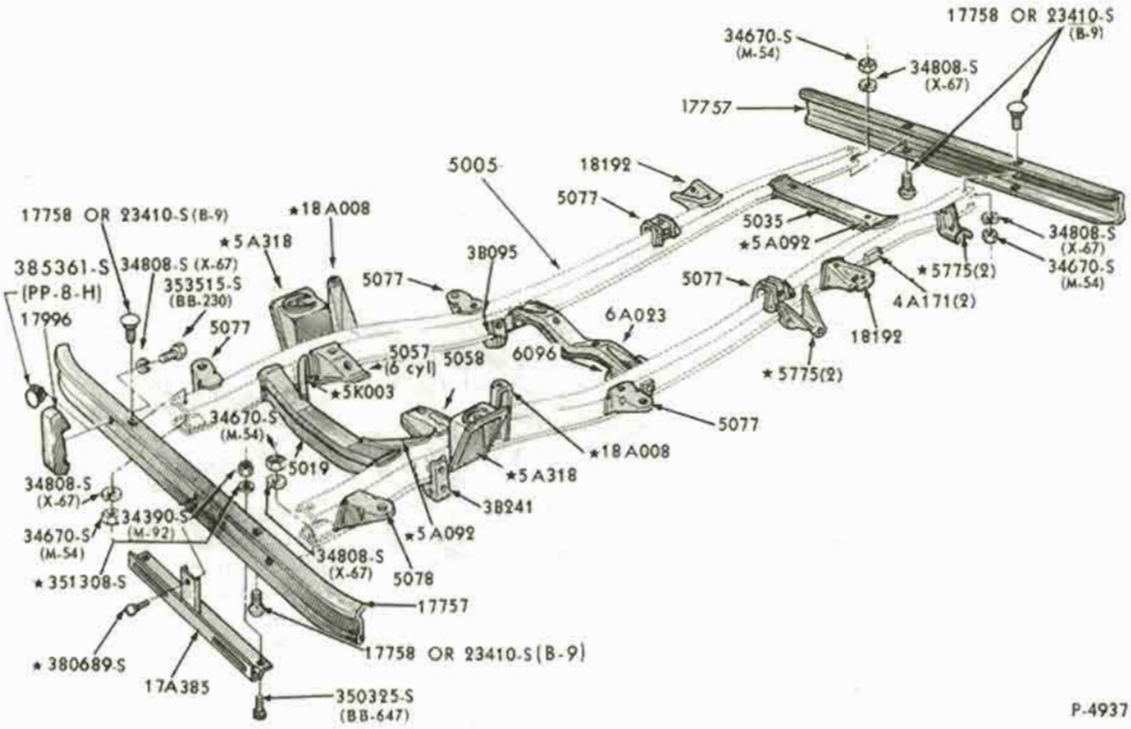

P-4937

FRONT and REAR BUMPERS and RELATED PARTS
1966/72 BRONCO

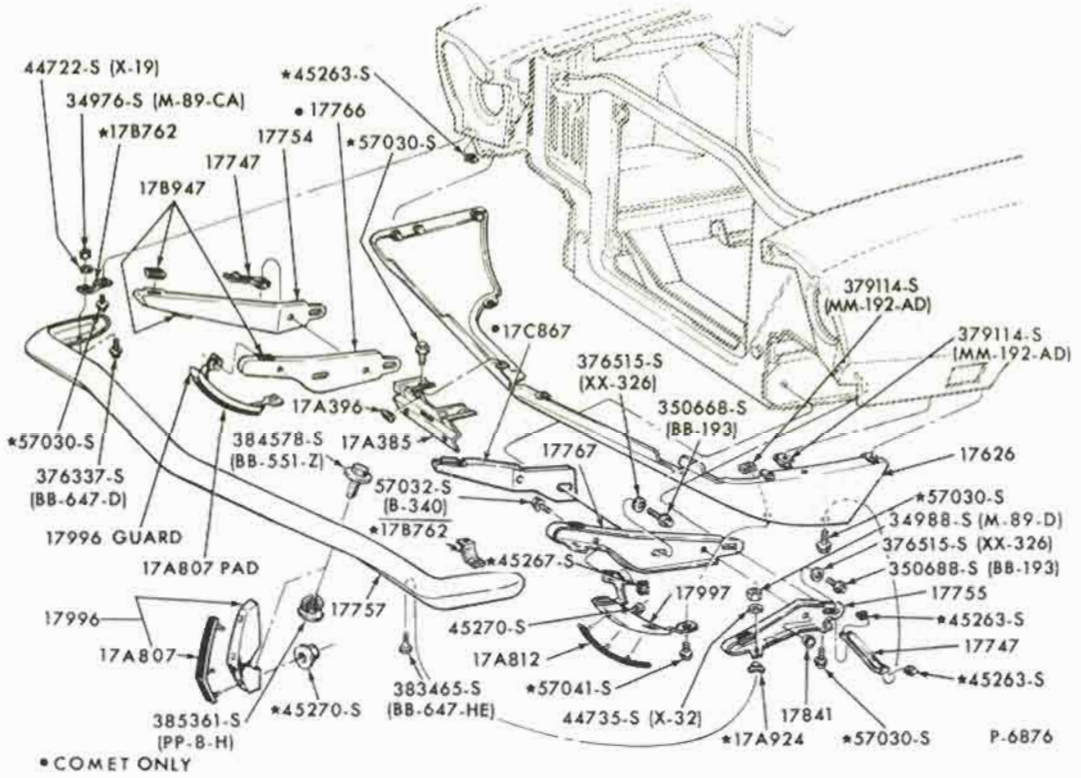

P-6876

FRONT BUMPER and RELATED PARTS
1970/72 MAVERICK

COPYRIGHT © 1975 — FORD MOTOR COMPANY — DEARBORN, MICHIGAN

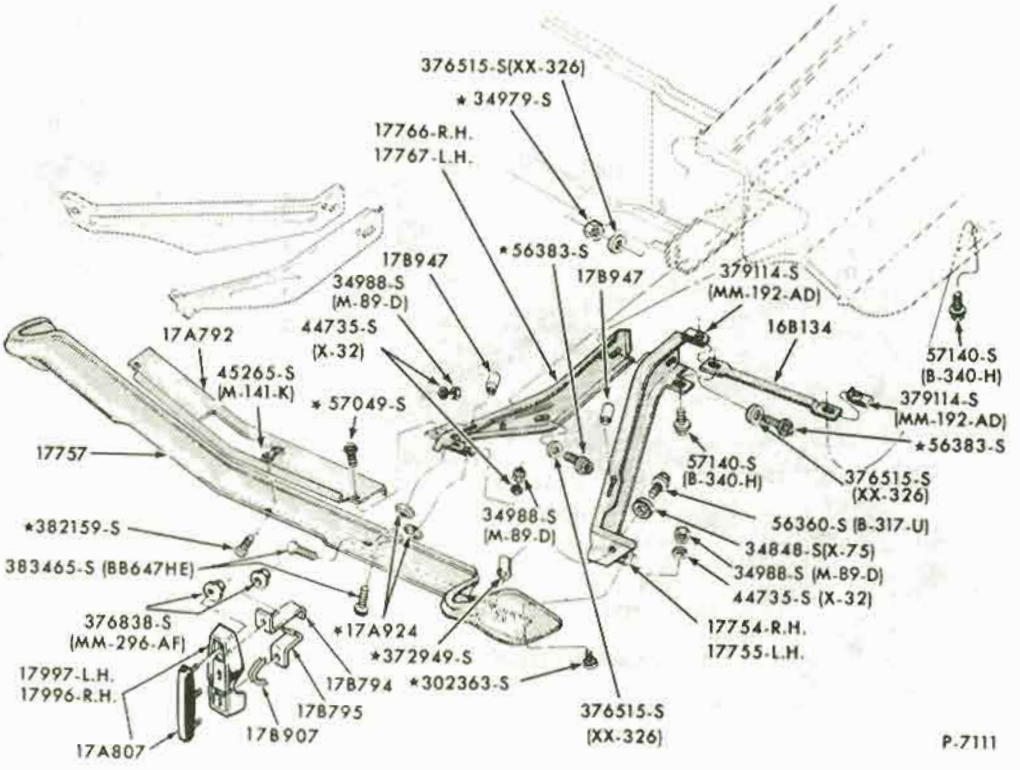

FRONT BUMPER and RELATED PARTS
1970/71 FAIRLANE/TORINO

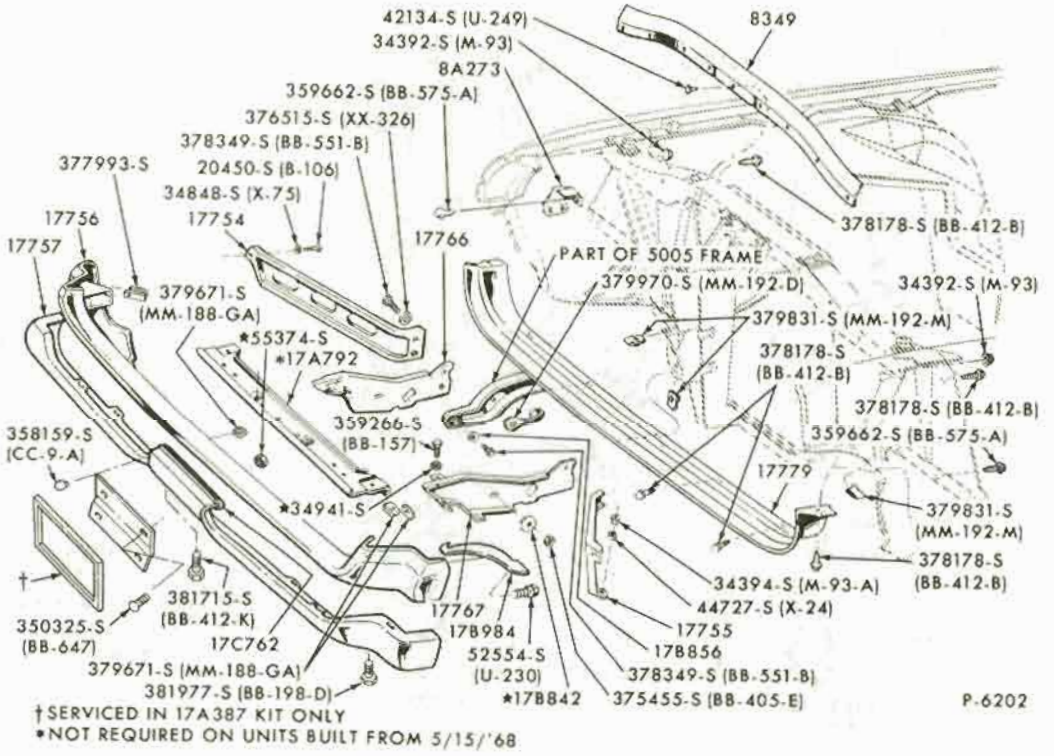

†SERVICED IN 17A387 KIT ONLY
*NOT REQUIRED ON UNITS BUILT FROM 5/15/'68

FRONT BUMPER and RELATED PARTS
1968/69 THUNDERBIRD

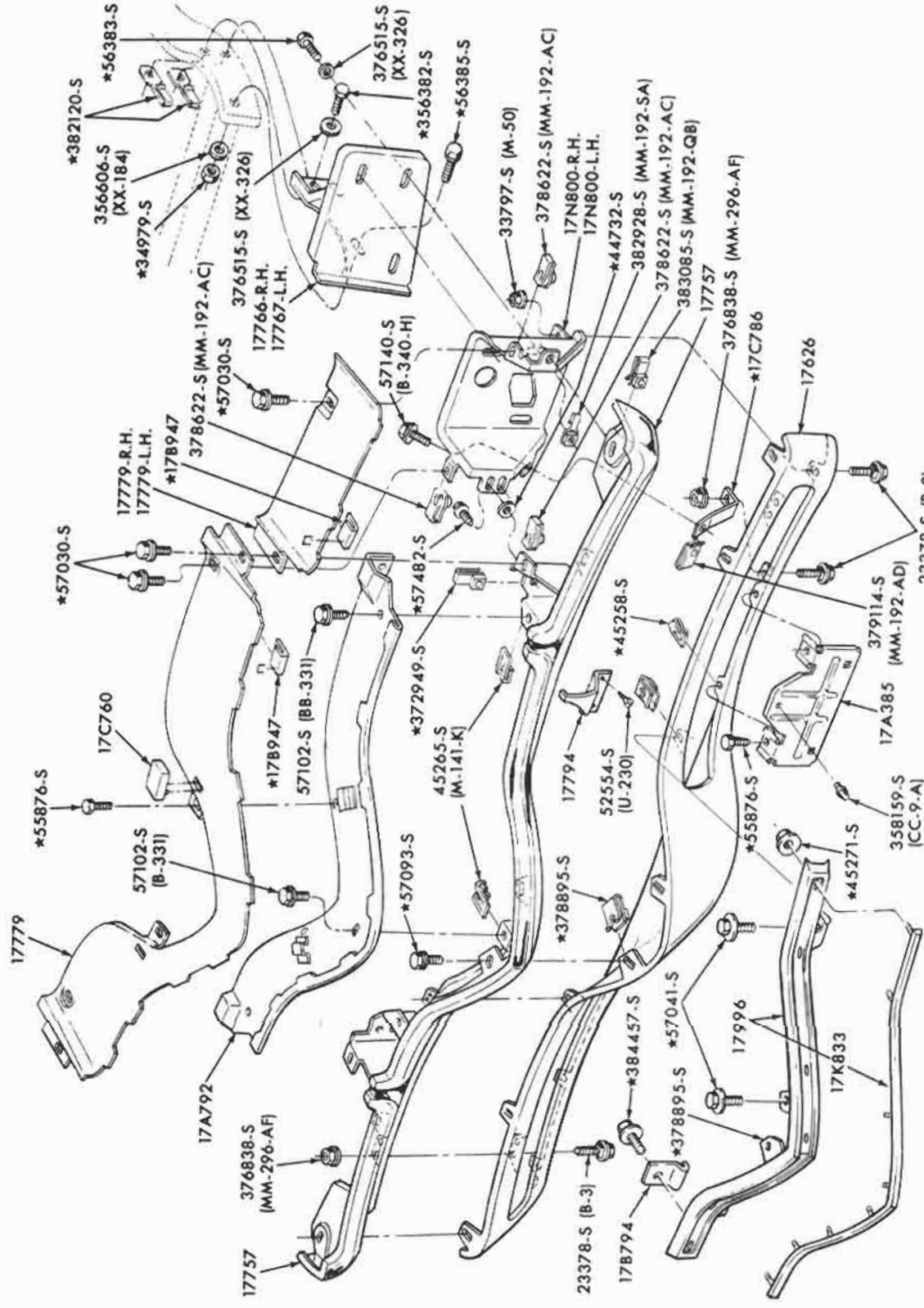

FRONT BUMPER and RELATED PARTS
1970/71 THUNDERBIRD

COPYRIGHT © 1975 — FORD MOTOR COMPANY — DEARBORN, MICHIGAN

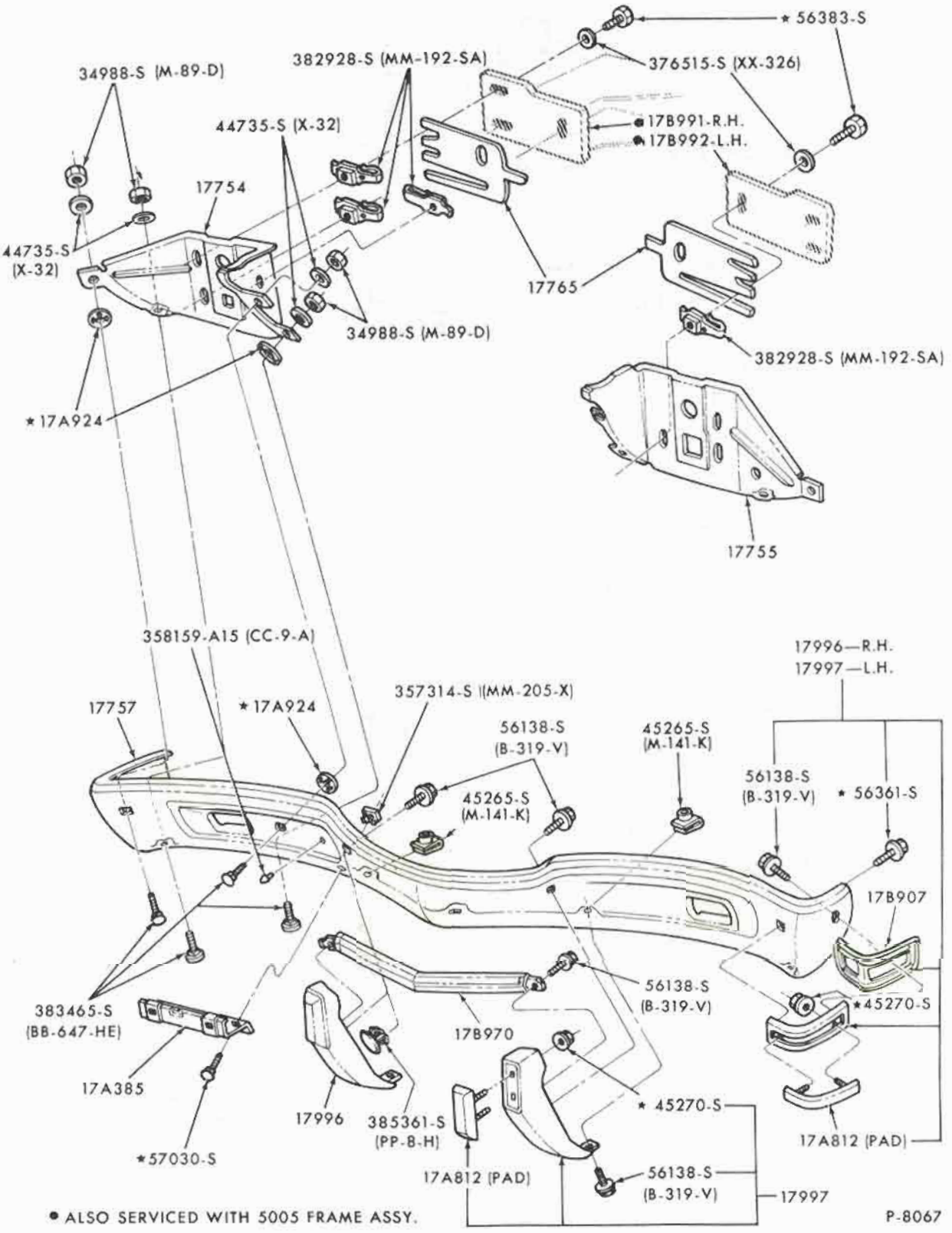

FRONT BUMPER and RELATED PARTS
1971/72 FORD

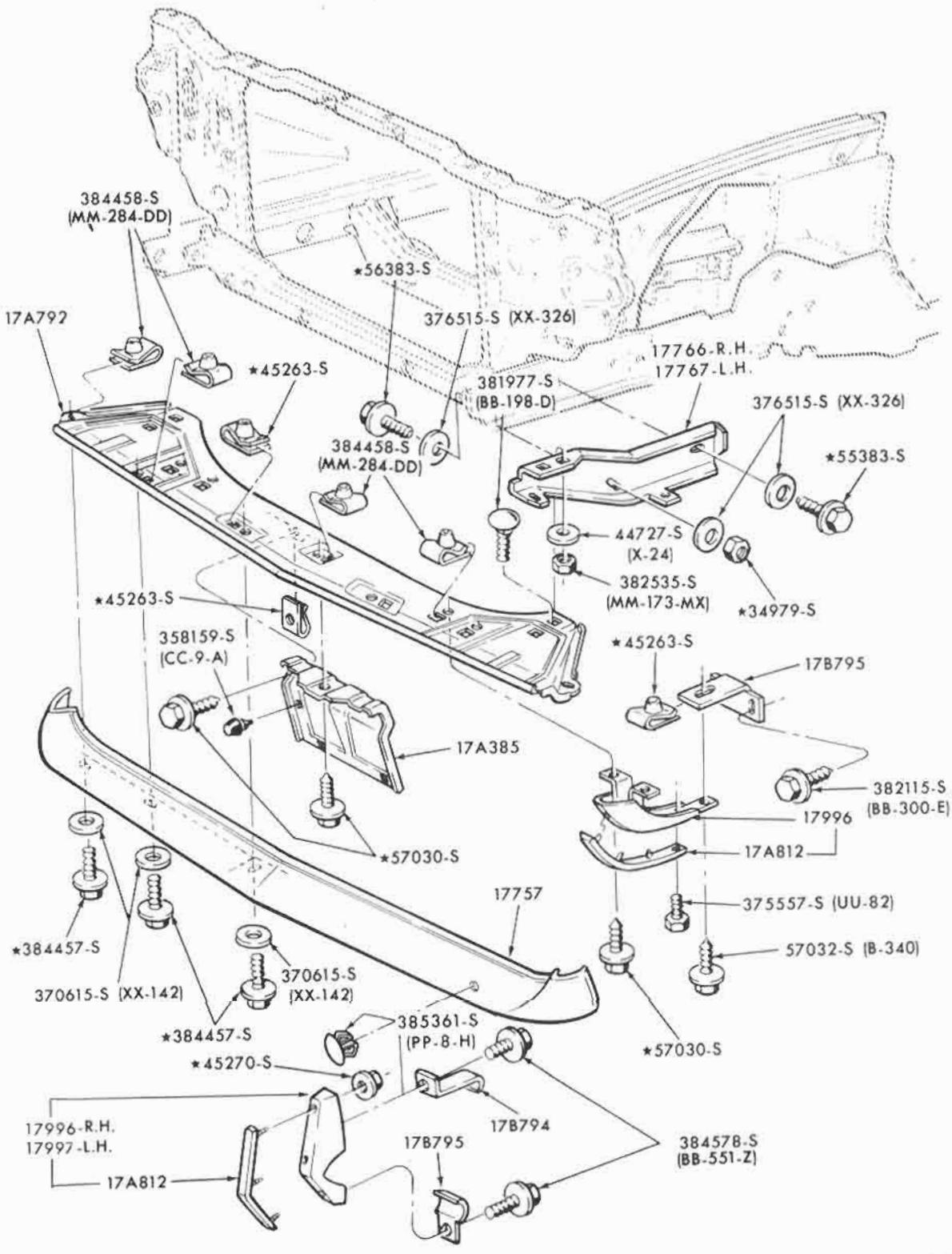

P-8087

FRONT BUMPER and RELATED PARTS
1971/72 MUSTANG

COPYRIGHT © 1975 — FORD MOTOR COMPANY — DEARBORN, MICHIGAN

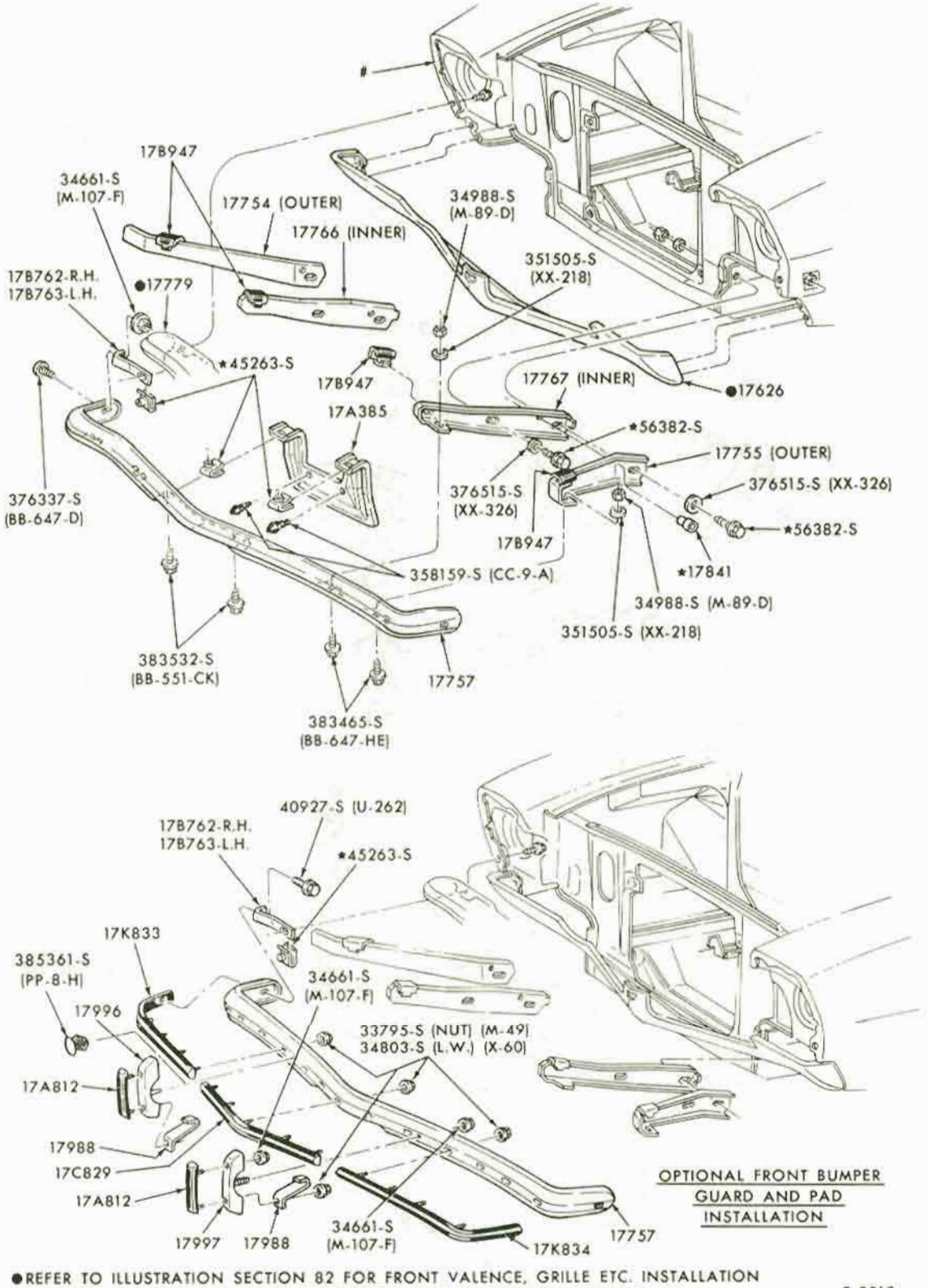

OPTIONAL FRONT BUMPER GUARD AND PAD INSTALLATION

●REFER TO ILLUSTRATION SECTION 82 FOR FRONT VALENCE, GRILLE ETC. INSTALLATION
#REFER TO ILLUSTRATION SECTION 160 FOR FRONT FENDER ETC. INSTALLATION

P-8013

FRONT BUMPER and RELATED PARTS
1971/72 PINTO

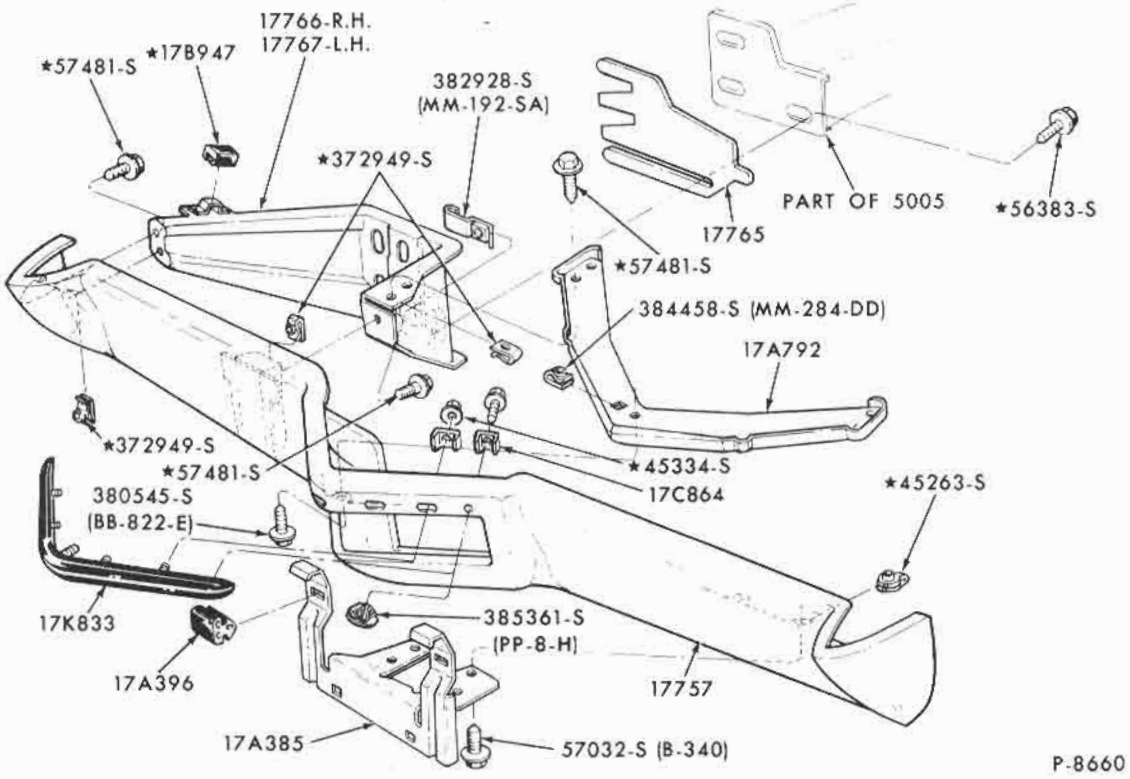

FRONT BUMPER and RELATED PARTS
1972 THUNDERBIRD

COPYRIGHT © 1975— FORD MOTOR COMPANY —DEARBORN, MICHIGAN

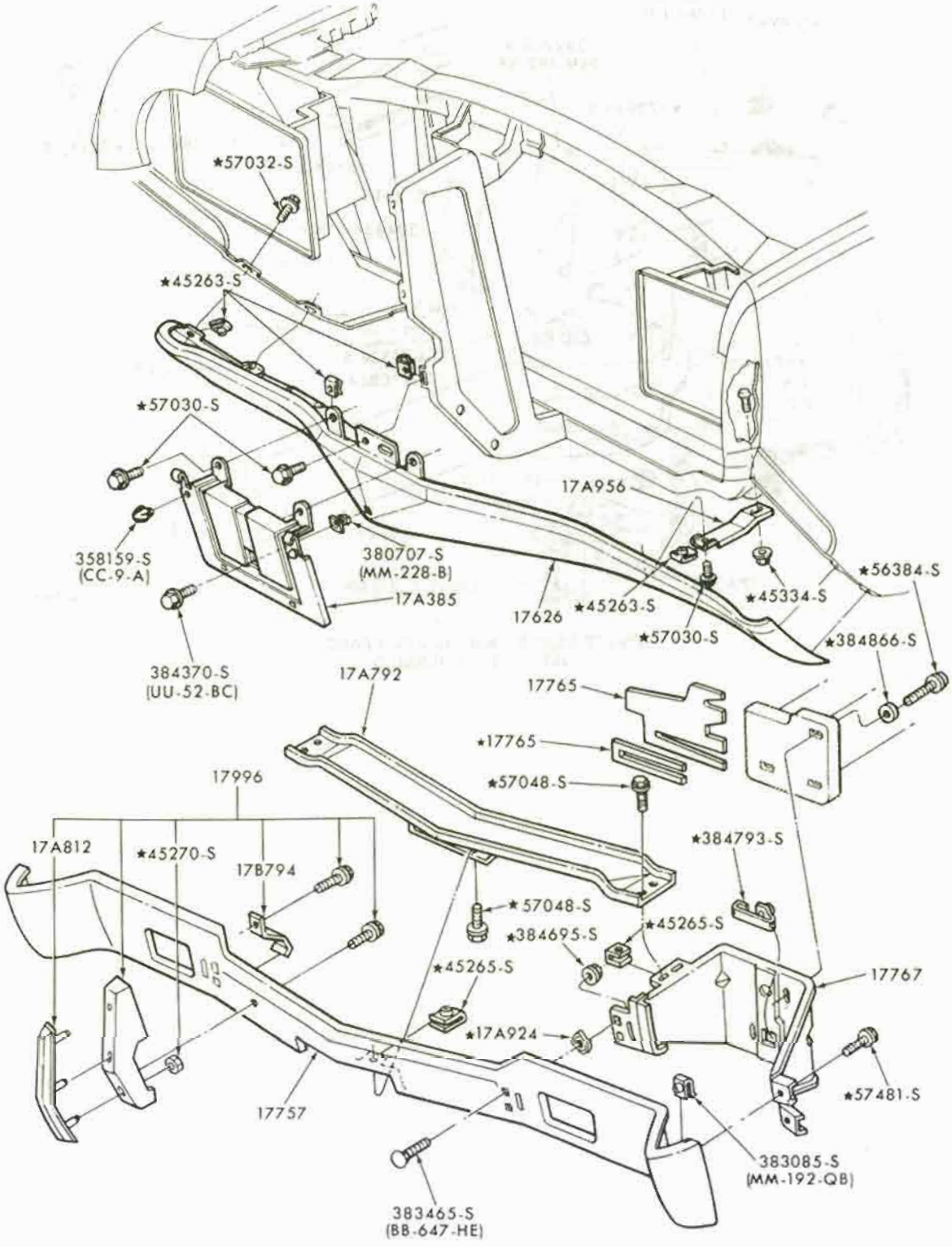

P-8662

FRONT BUMPER and RELATED PARTS
1972 TORINO - ALL EXCEPT BODY TYPES 63,65R,71K,97

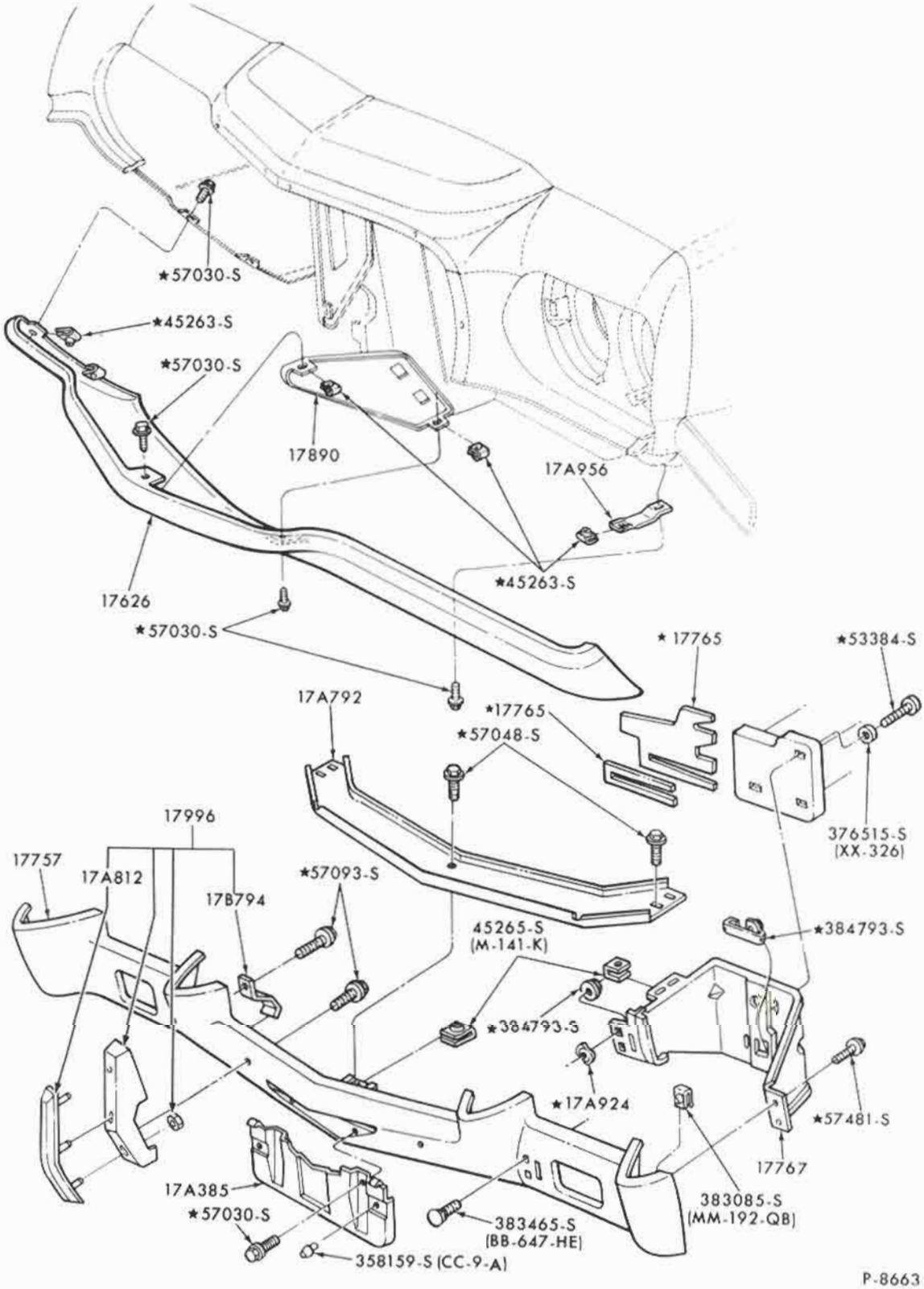

FRONT BUMPER and RELATED PARTS
1972 TORINO - BODY TYPES 63,65R,71K,97K,R

COPYRIGHT © 1975 — FORD MOTOR COMPANY — DEARBORN, MICHIGAN

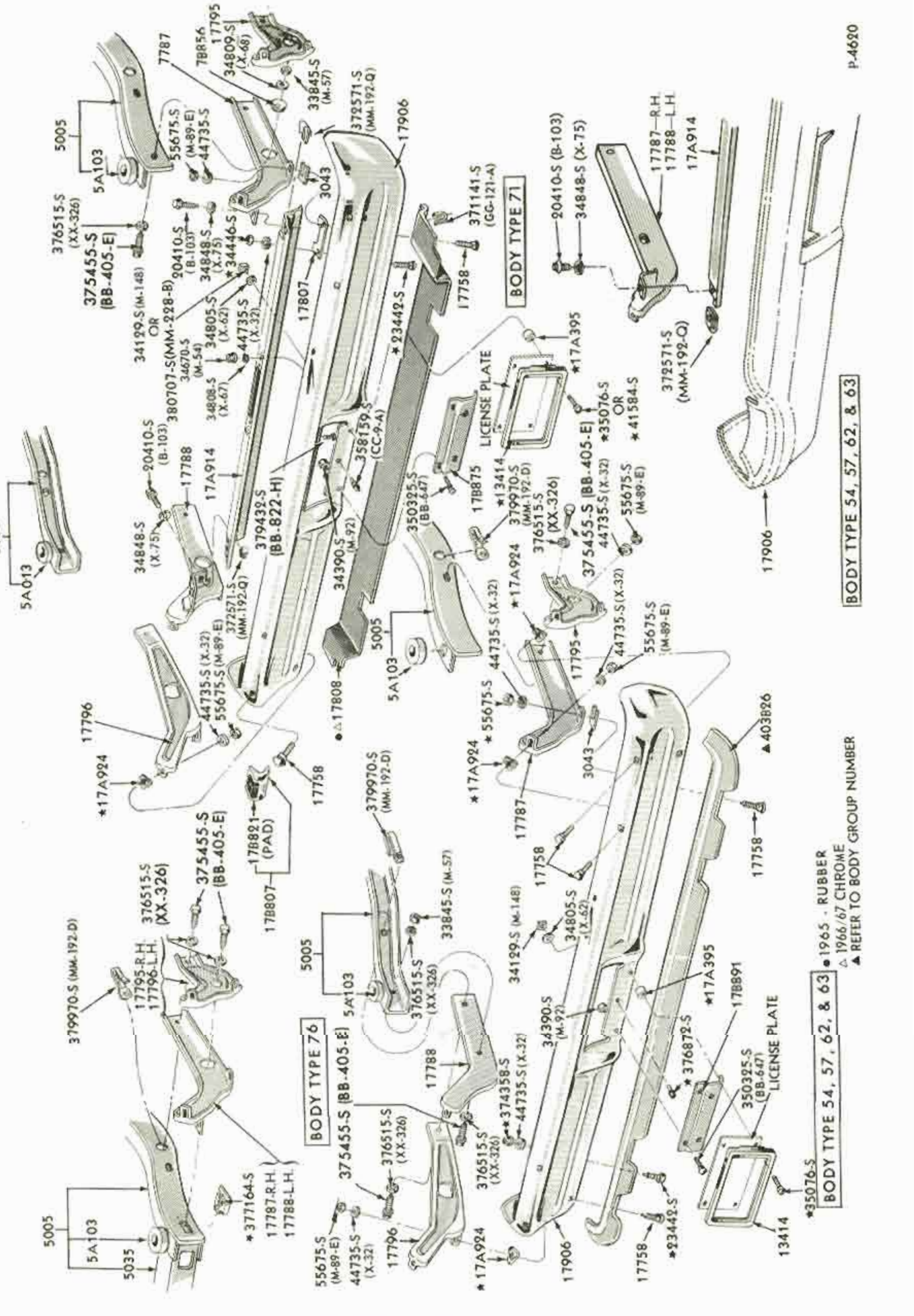

REAR BUMPER and RELATED PARTS
1965/67 FORD

COPYRIGHT © 1975 — FORD MOTOR COMPANY — DEARBORN, MICHIGAN

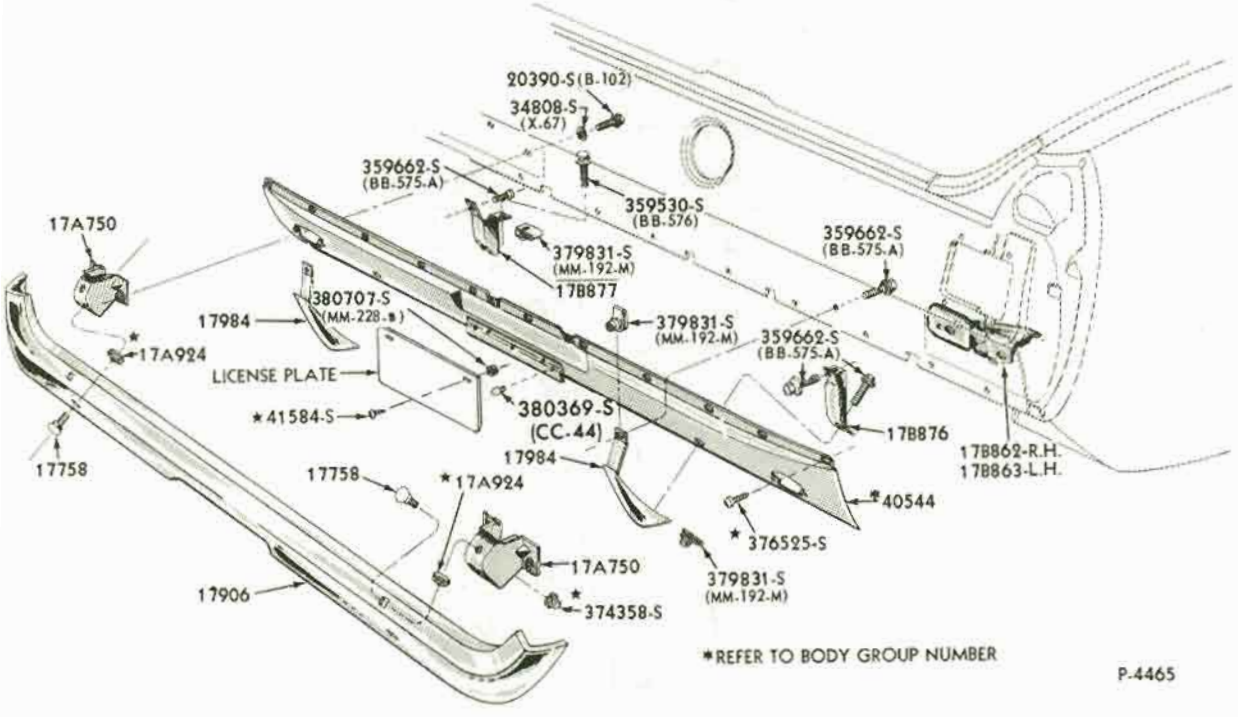

REAR BUMPER and RELATED PARTS
1965/66 MUSTANG

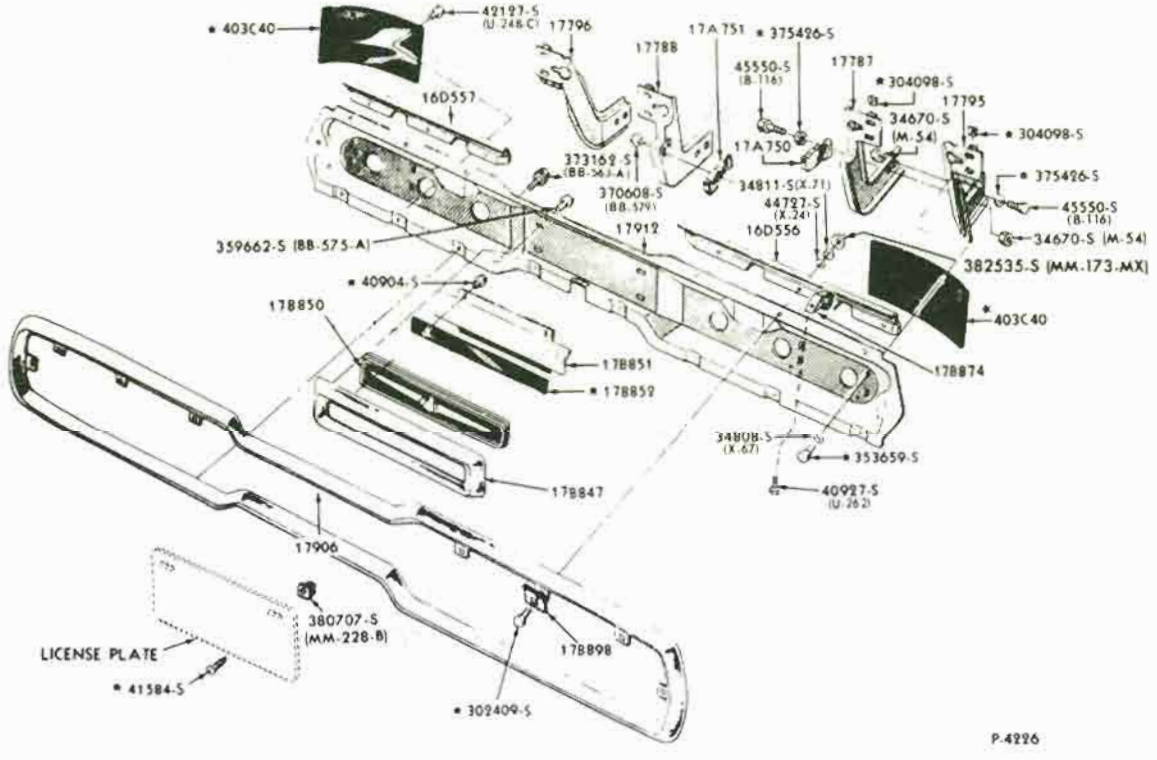

REAR BUMPER and RELATED PARTS
1965/66 THUNDERBIRD

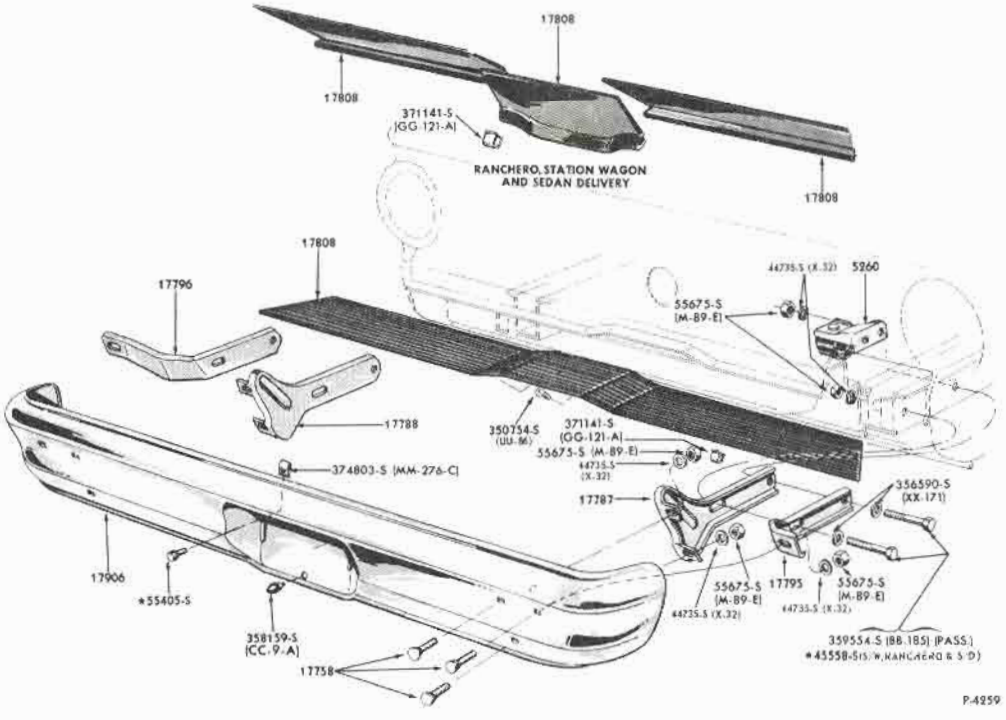

REAR BUMPER and RELATED PARTS
1965 FALCON

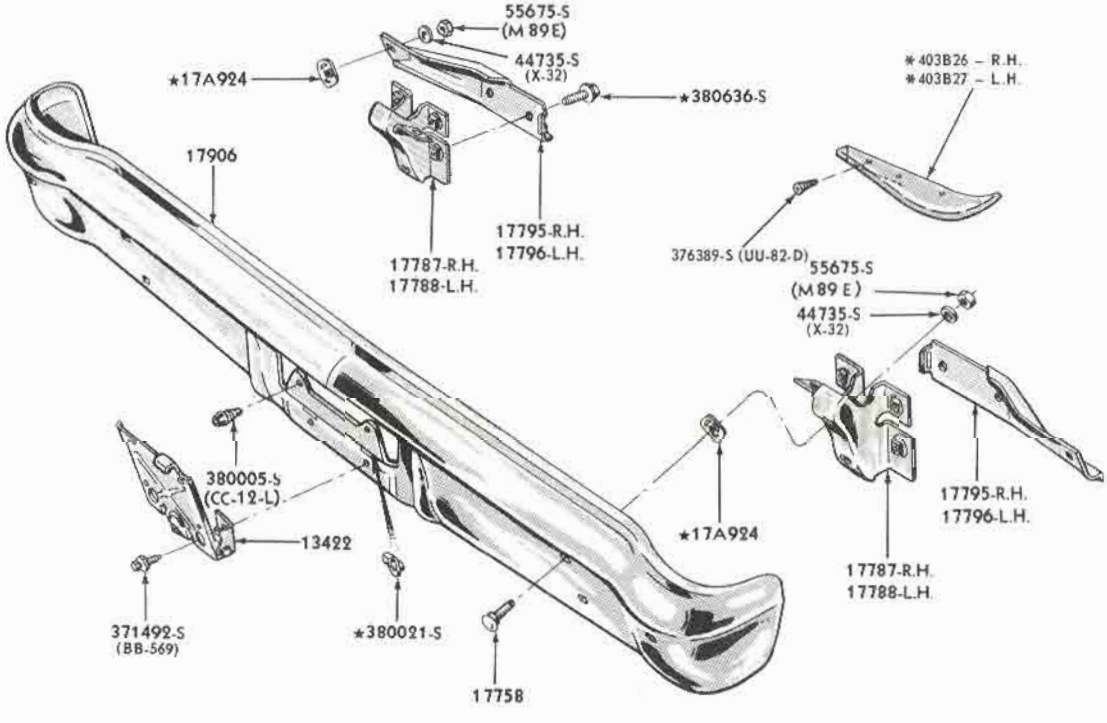

* REFER TO BODY GROUP NUMBER

P-5112

REAR BUMPER and RELATED PARTS
1966/67 FAIRLANE - BODY TYPES 54,62,63,76

COPYRIGHT © 1975— FORD MOTOR COMPANY —DEARBORN, MICHIGAN

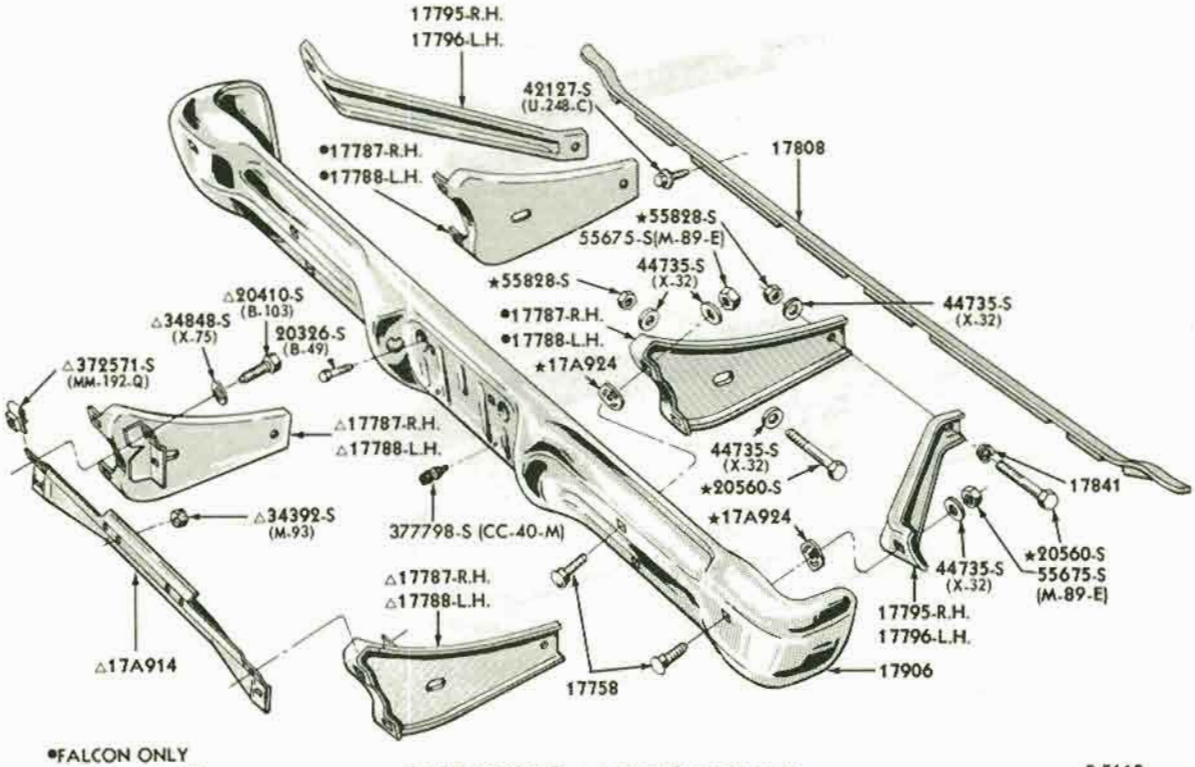

•FALCON ONLY
△FAIRLANE ONLY

REAR BUMPER and RELATED PARTS P-5113
1966/69 FAIRLANE/TORINO - BODY TYPES 66, 71
and 1966/70 FALCON - BODY TYPES 66, 71

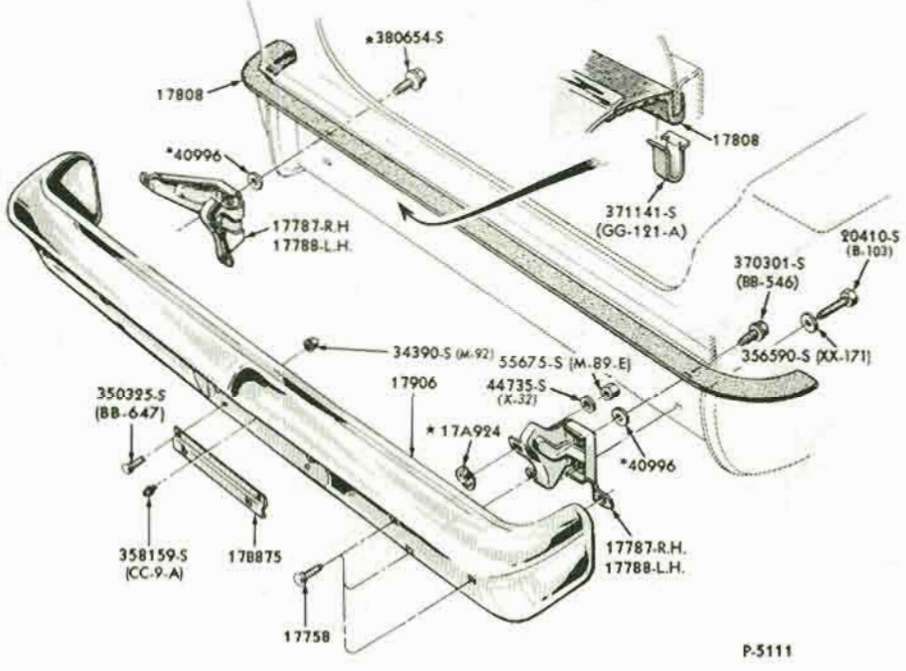

P-5111

*REFER TO BODY GROUP NUMBER

REAR BUMPER and RELATED PARTS
1966/70 FALCON - BODY TYPES 54, 62

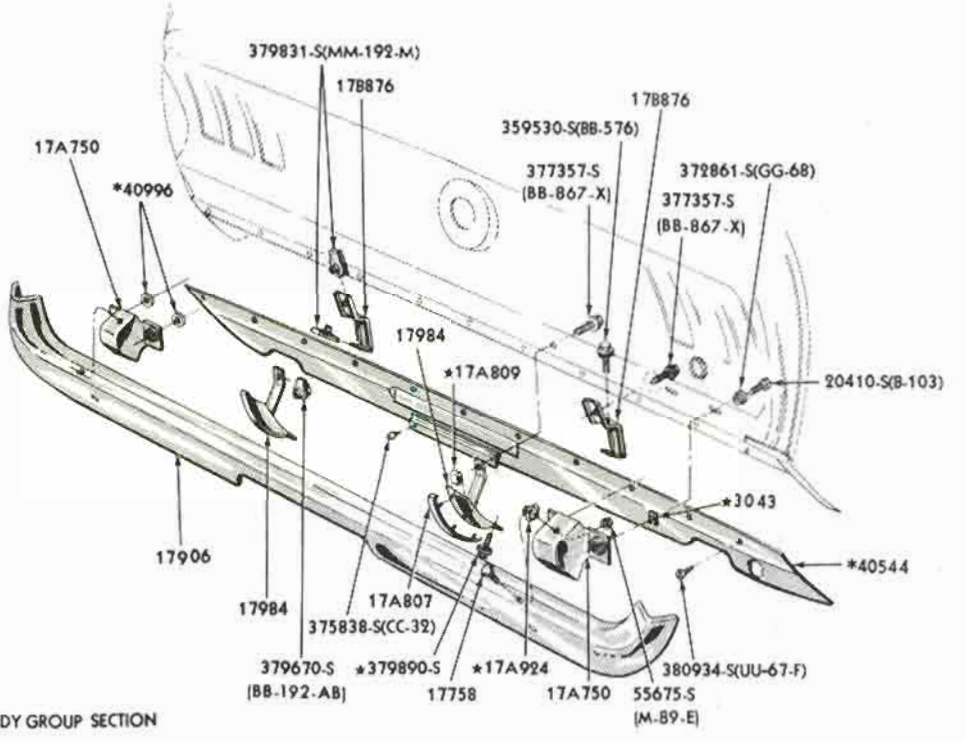

*REFER TO BODY GROUP SECTION

P-5607

REAR BUMPER and RELATED PARTS
1967/68 MUSTANG

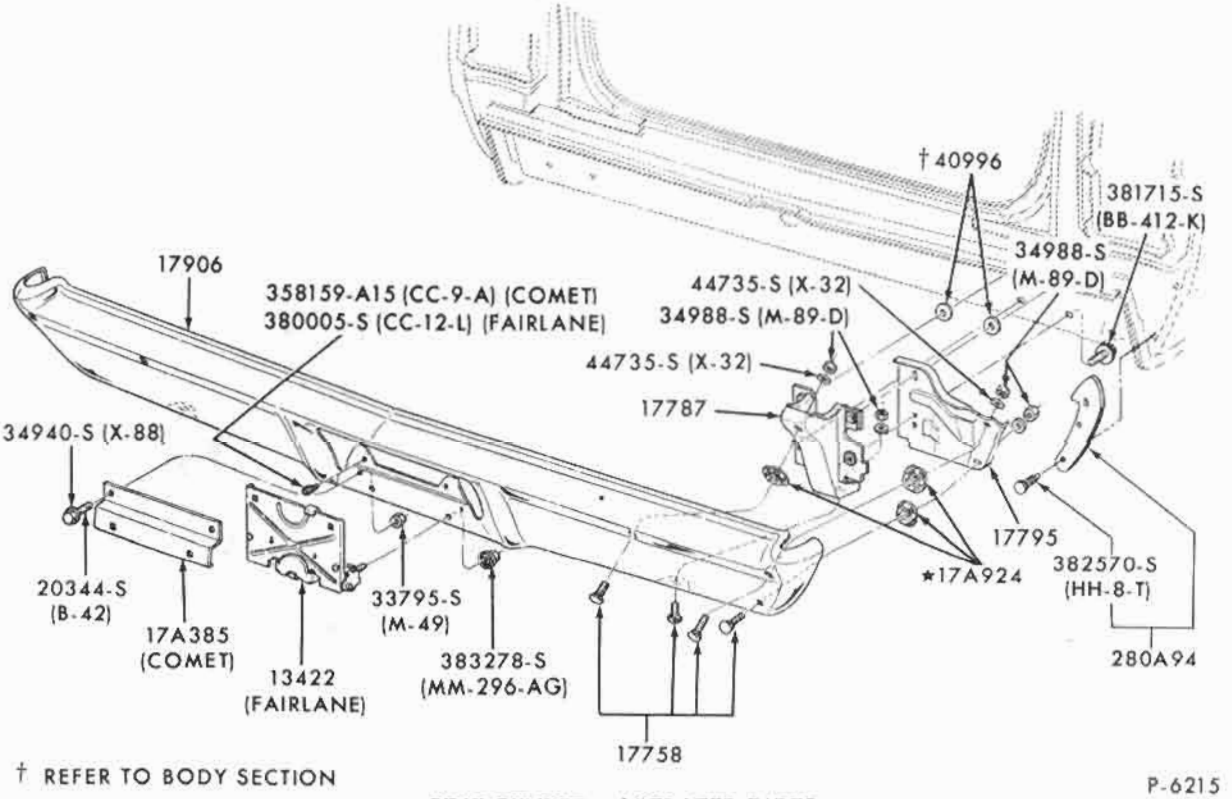

† REFER TO BODY SECTION

P-6215

REAR BUMPER and RELATED PARTS
1968/69 FAIRLANE/TORINO - except BODY TYPES 66, 71

COPYRIGHT © 1975 — FORD MOTOR COMPANY — DEARBORN, MICHIGAN

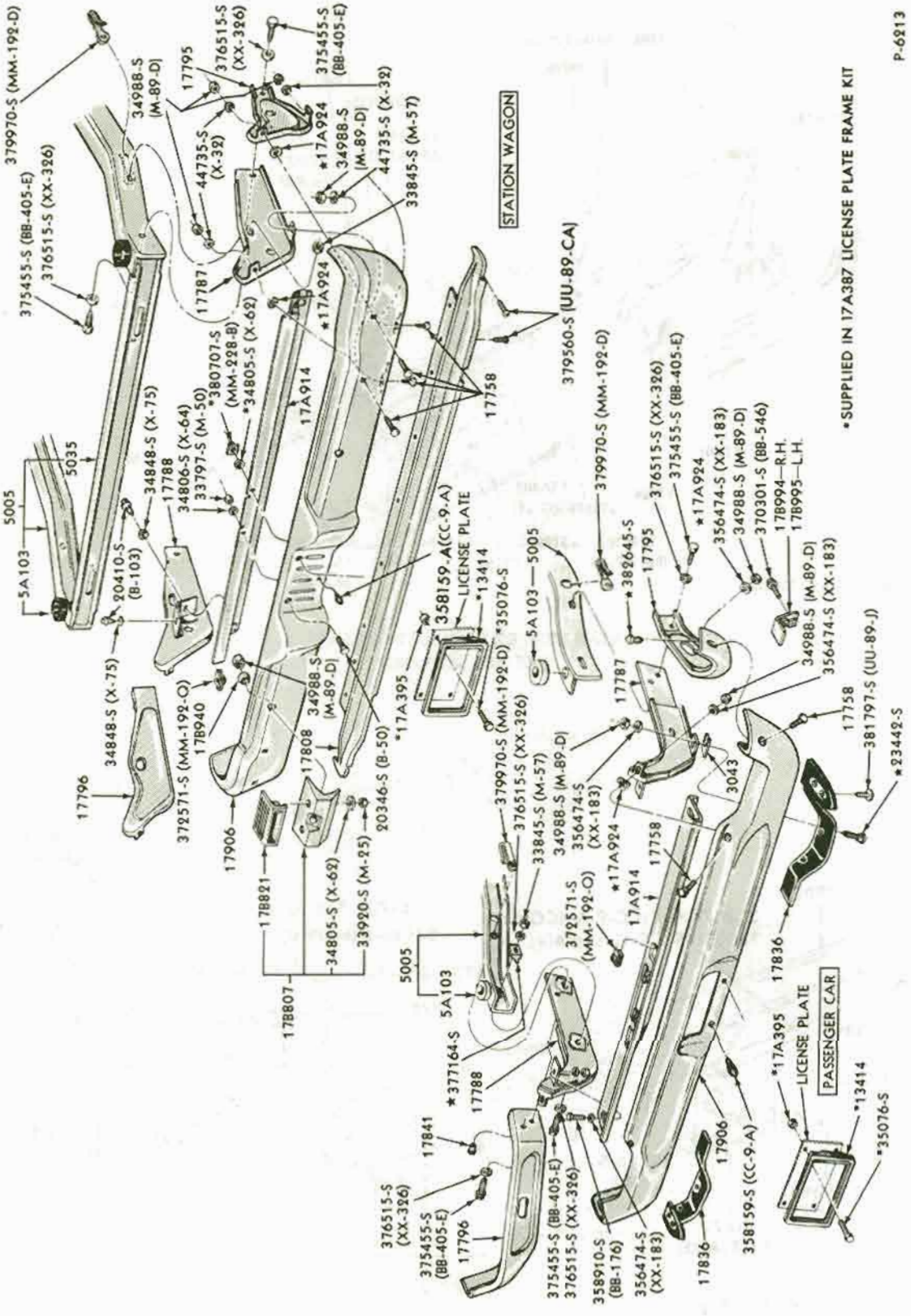

REAR BUMPER and RELATED PARTS
1968 FORD

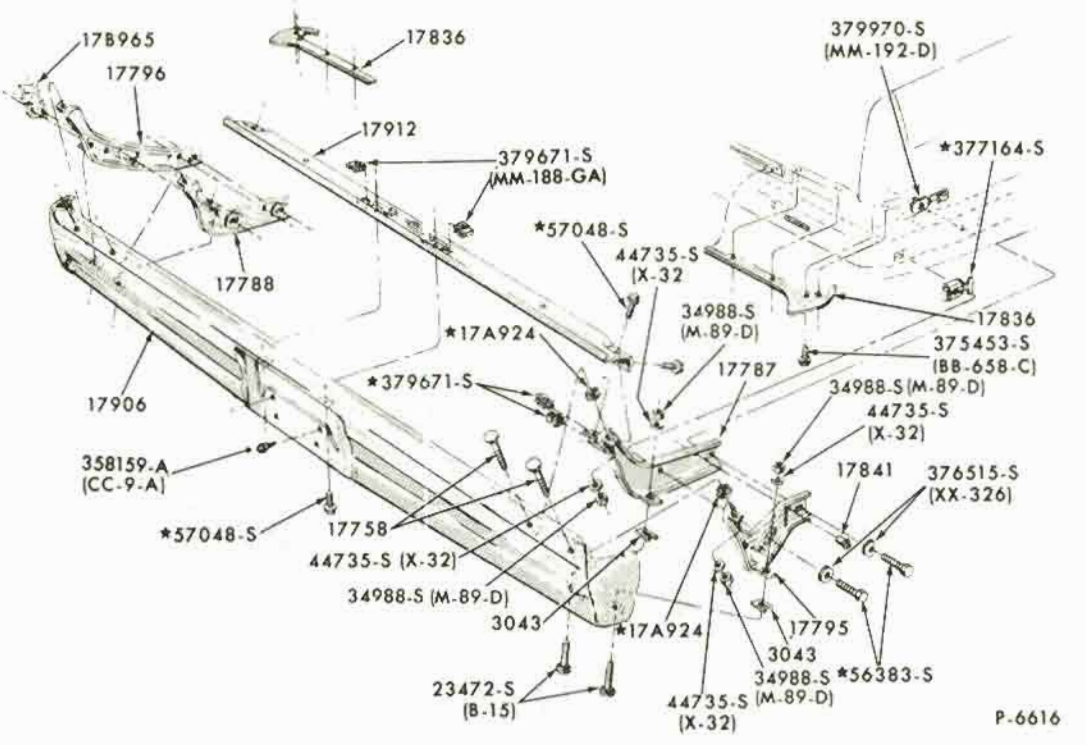

REAR BUMPER and RELATED PARTS
1969/70 FORD - except BODY TYPE 71

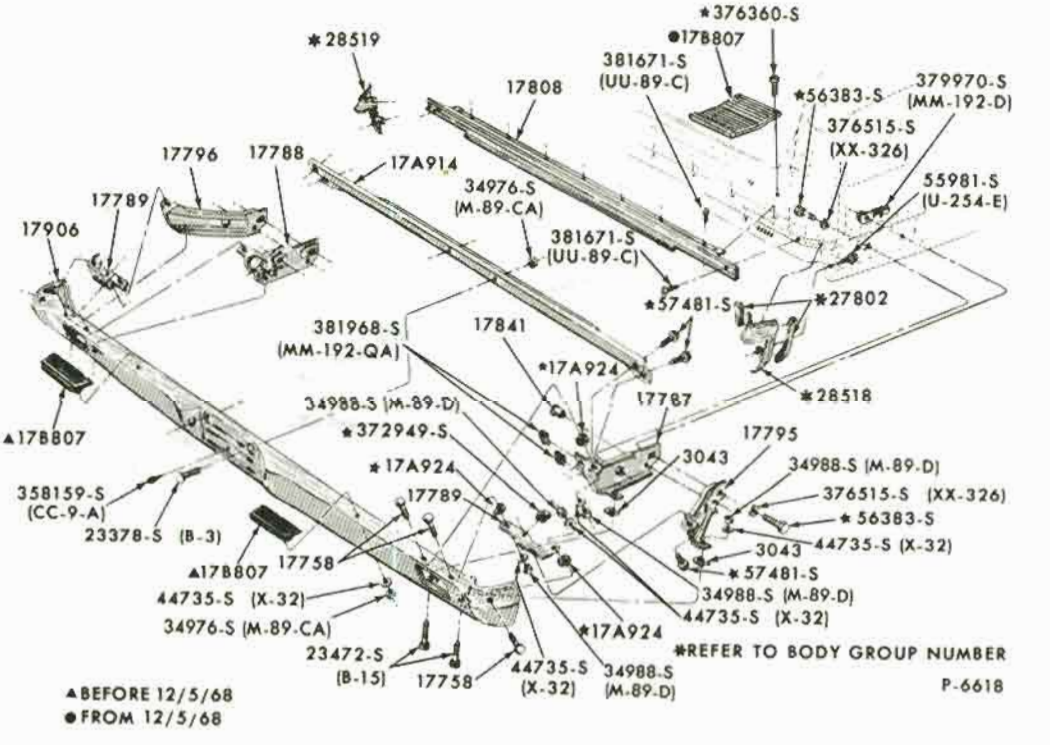

REAR BUMPER and RELATED PARTS
1969/70 FORD - BODY TYPE 71

COPYRIGHT © 1975 — FORD MOTOR COMPANY — DEARBORN, MICHIGAN

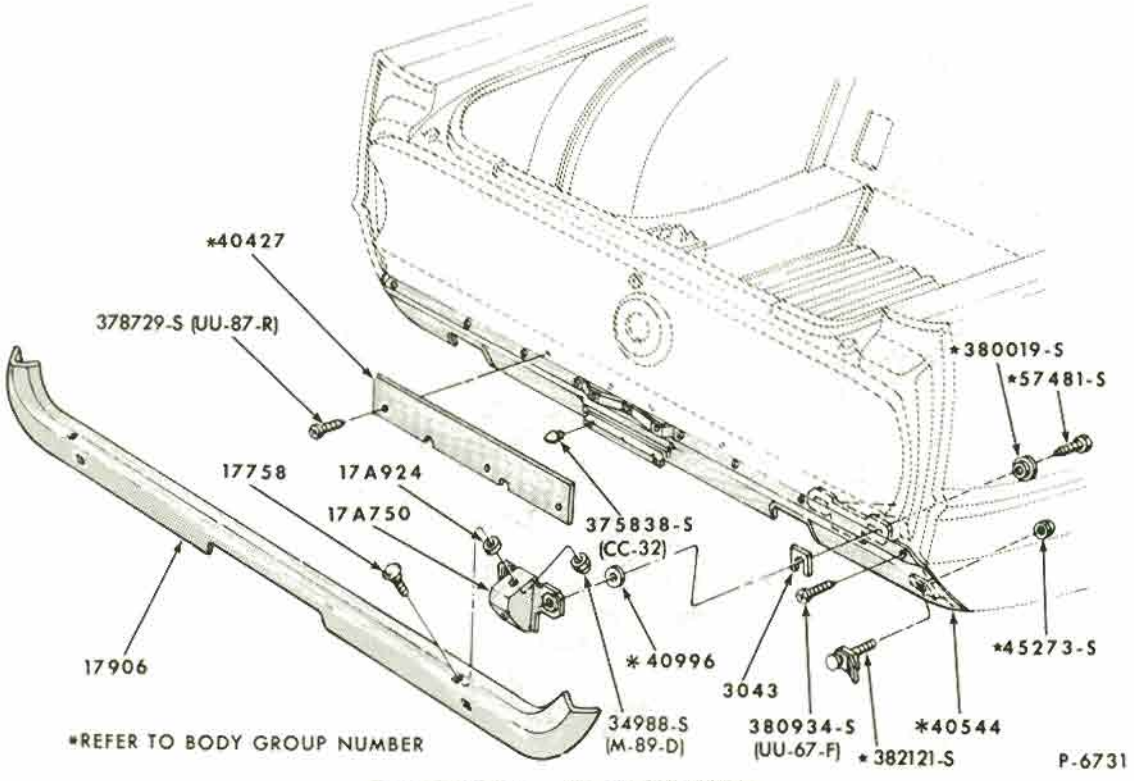

REAR BUMPER and RELATED PARTS
1969/70 MUSTANG

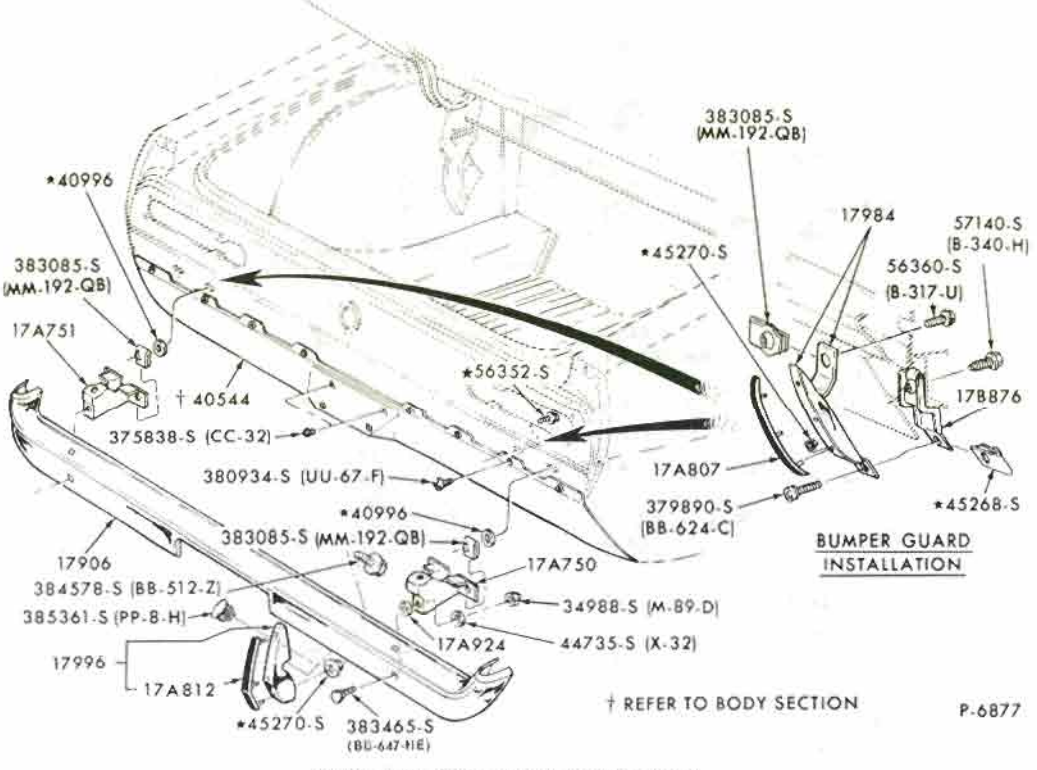

REAR BUMPER and RELATED PARTS
1970/72 MAVERICK

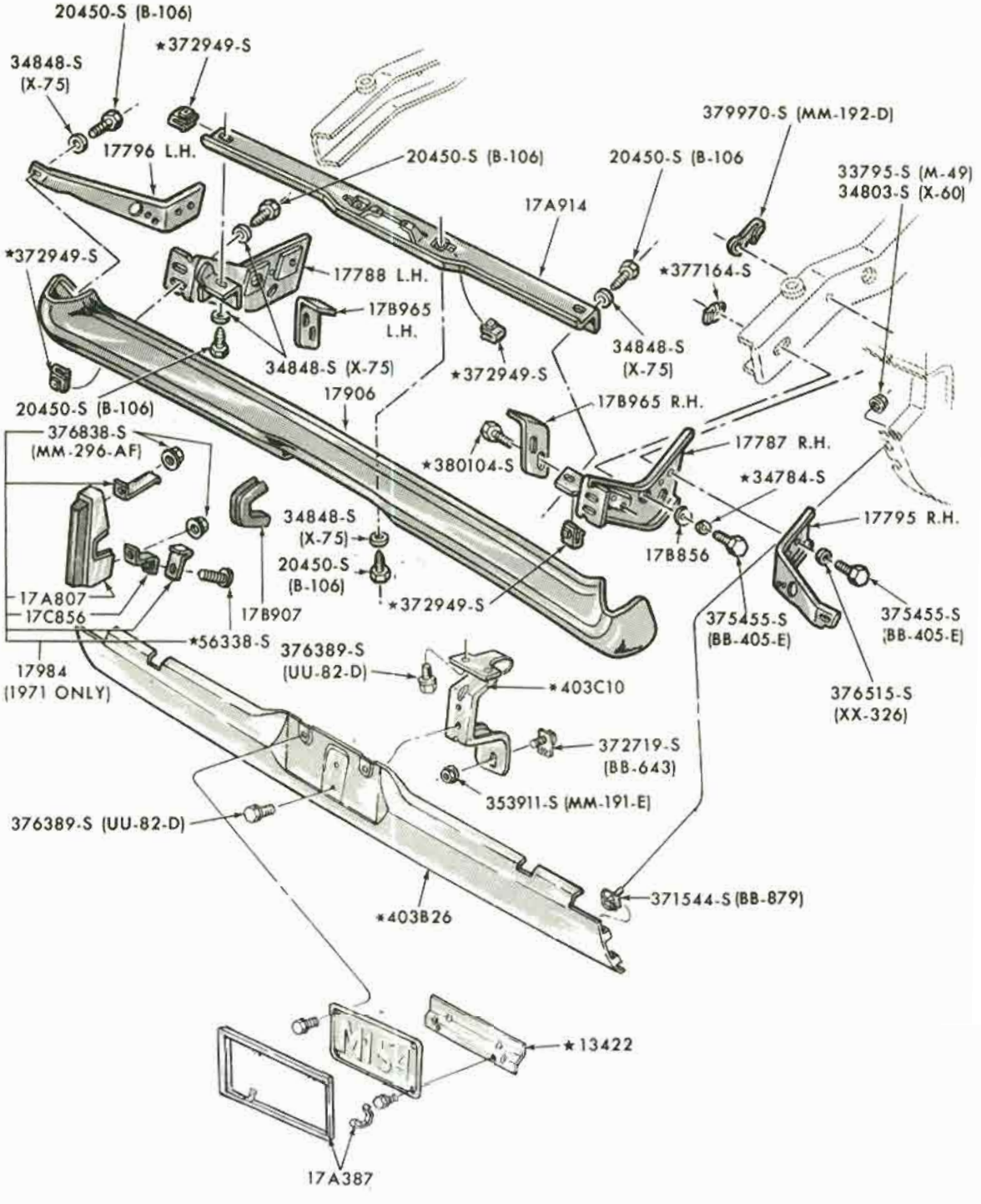

*REFER TO BODY GROUP NUMBER

P-5619

May, 1975 COPYRIGHT © 1975 — FORD MOTOR COMPANY — DEARBORN, MICHIGAN FINAL ISSUE

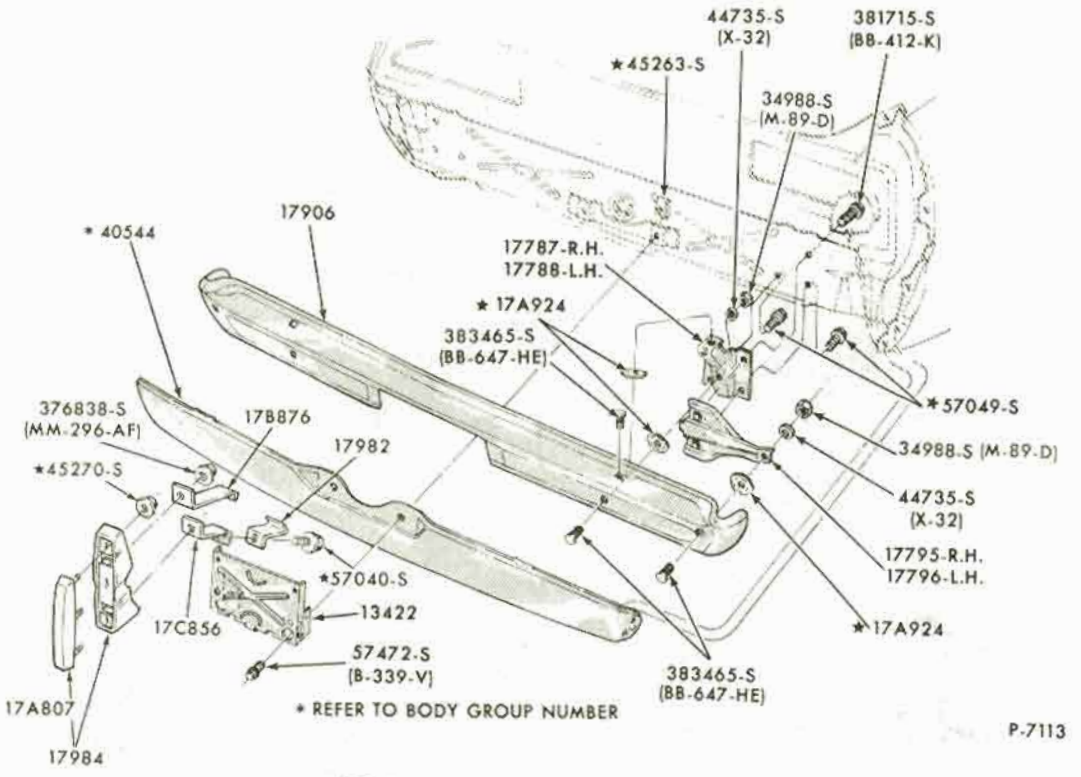

REAR BUMPER and RELATED PARTS
1970/71 FAIRLANE / TORINO - except BODY TYPES 66, 71

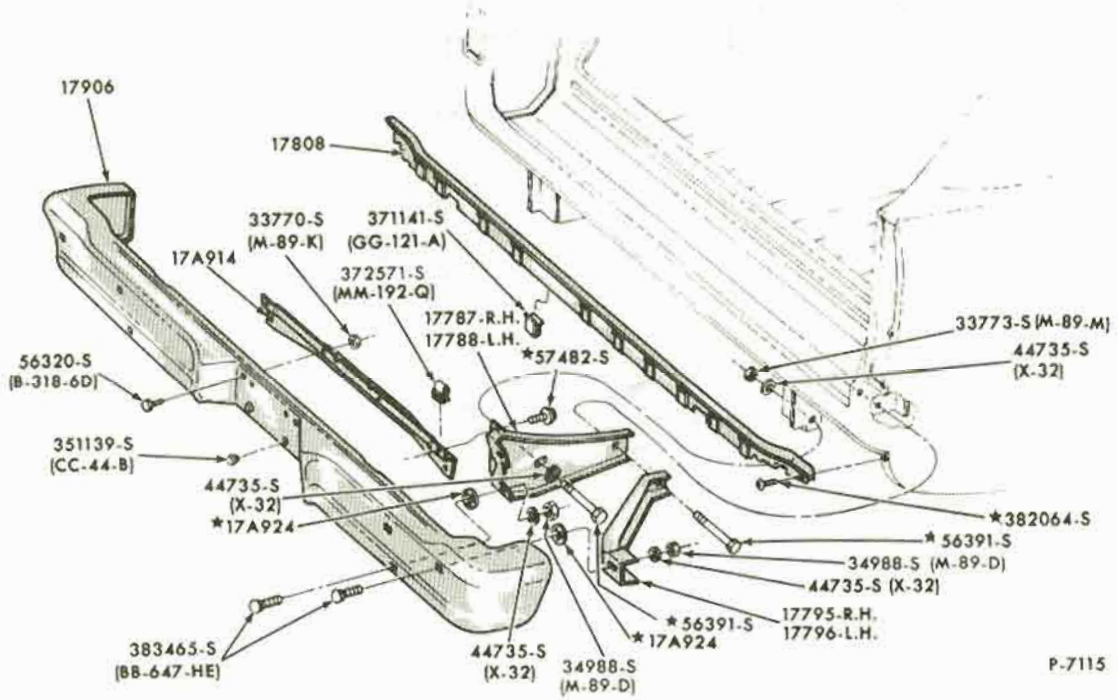

REAR BUMPER and RELATED PARTS
1970/71 FAIRLANE/TORINO - BODY TYPES 66, 71

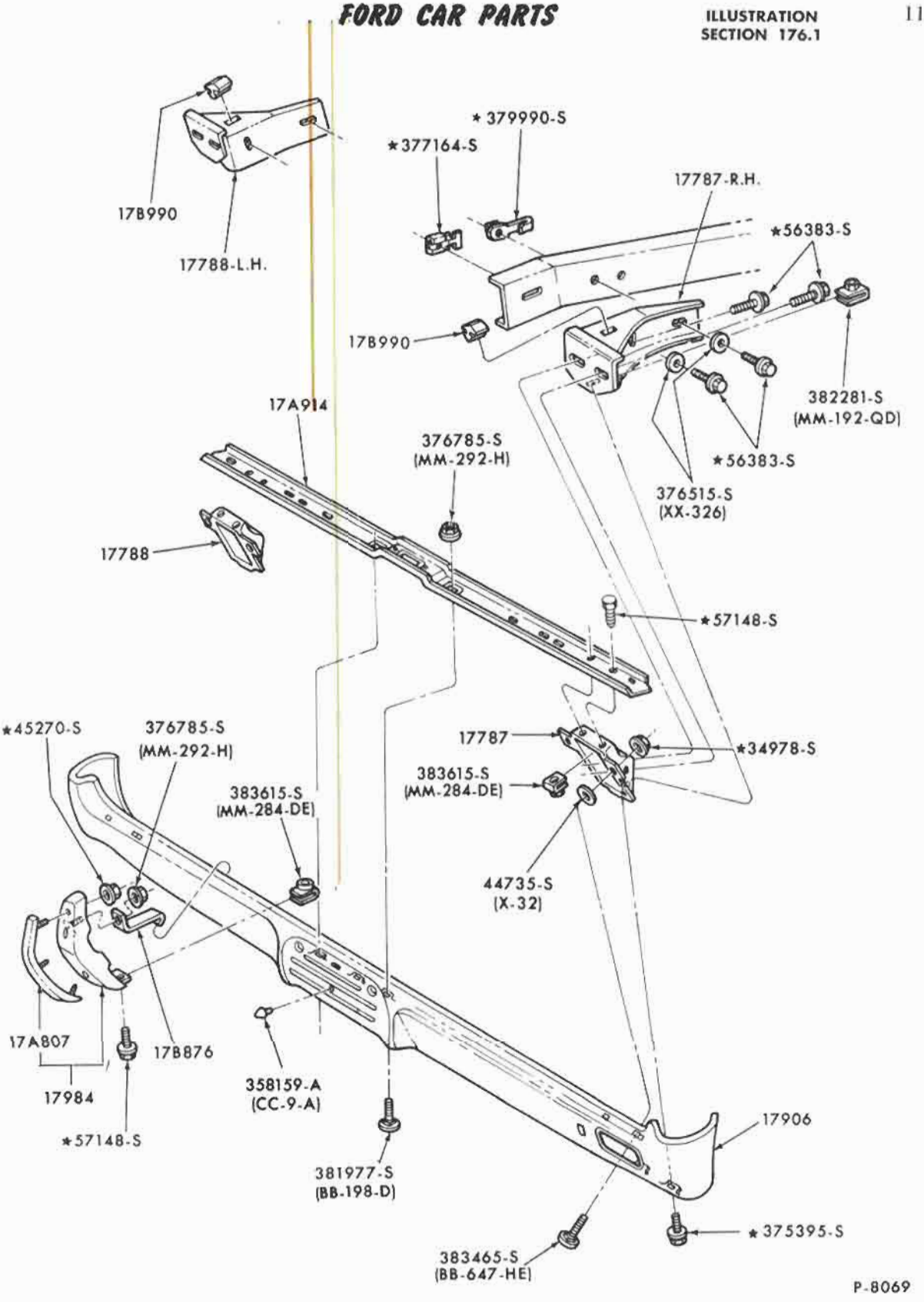

REAR BUMPER and RELATED PARTS
1971 FORD - EXCEPT BODY TYPE 71

COPYRIGHT © 1975 — FORD MOTOR COMPANY — DEARBORN, MICHIGAN

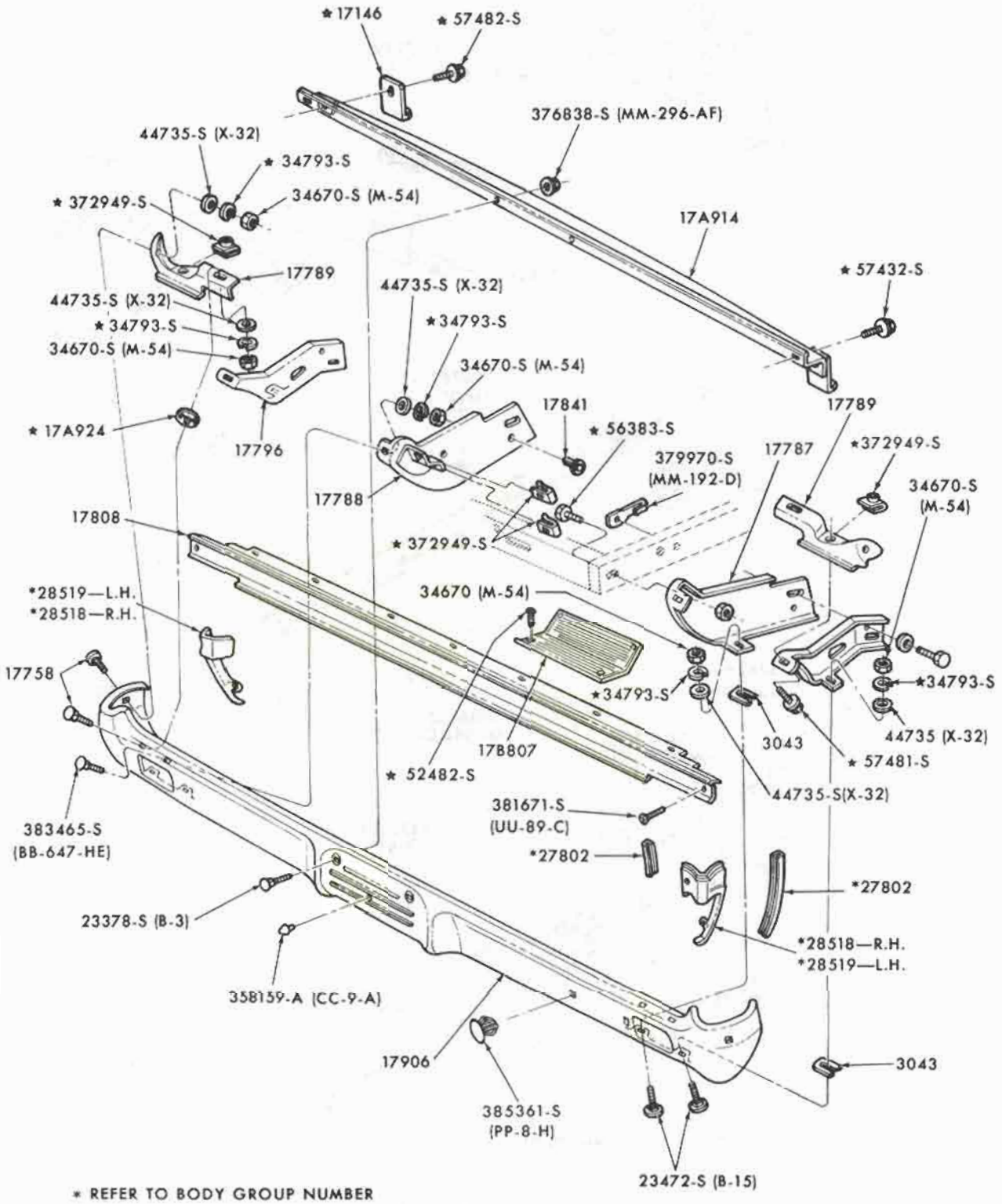

★ REFER TO BODY GROUP NUMBER

P-8068

REAR BUMPER and RELATED PARTS
1971/72 FORD - BODY TYPE 71

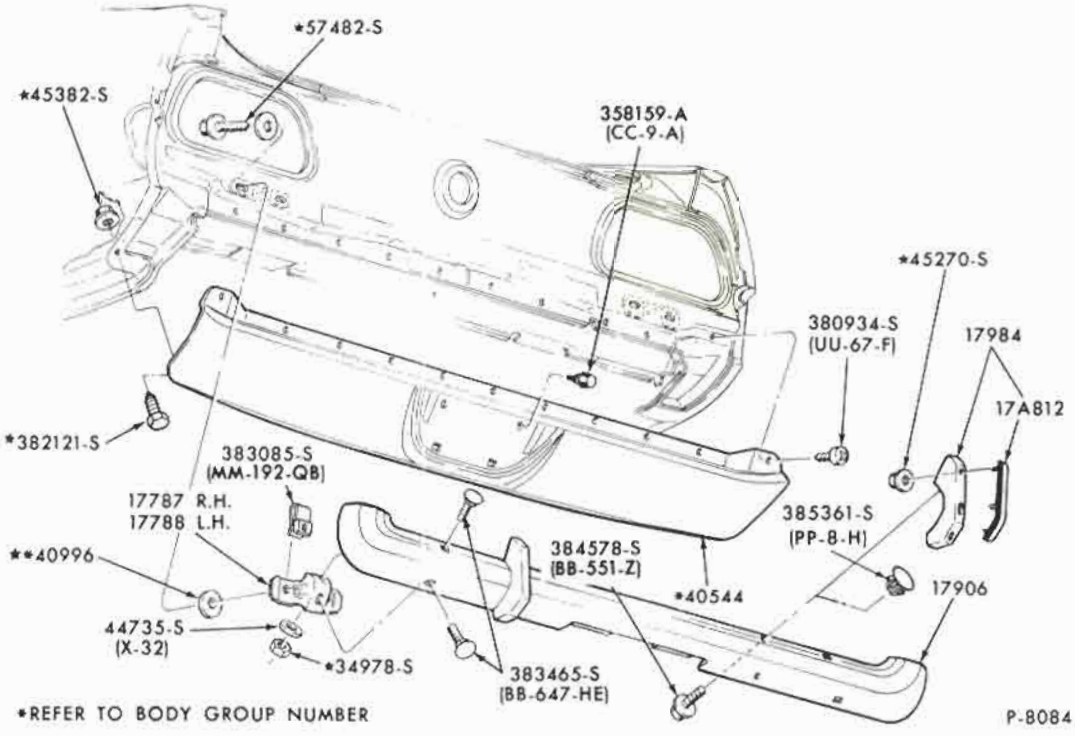

REAR BUMPER and RELATED PARTS
1971/72 MUSTANG

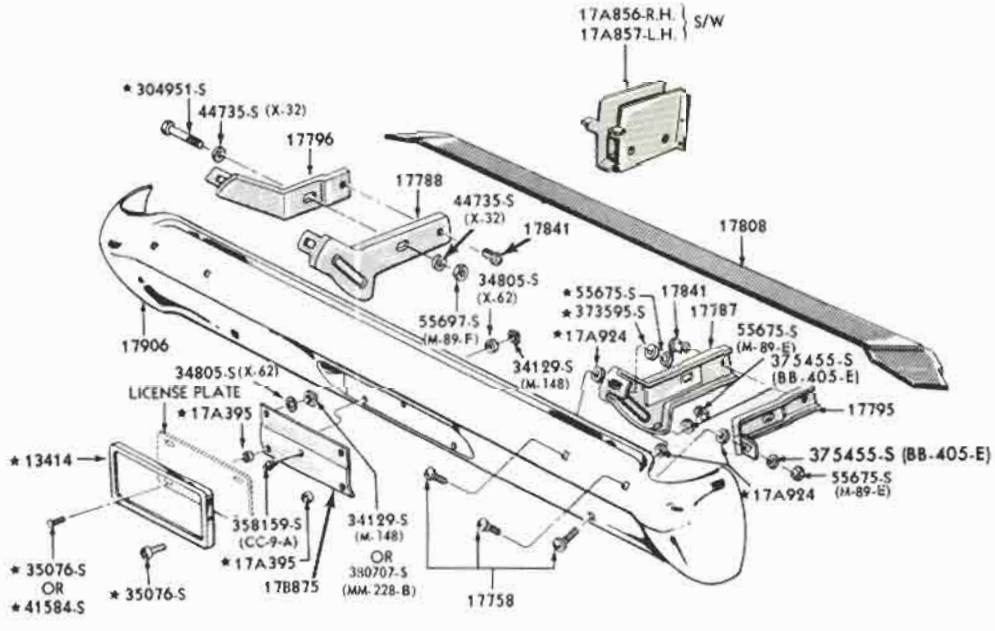

REAR BUMPER and RELATED PARTS
1965 FAIRLANE

COPYRIGHT © 1975 — FORD MOTOR COMPANY — DEARBORN, MICHIGAN

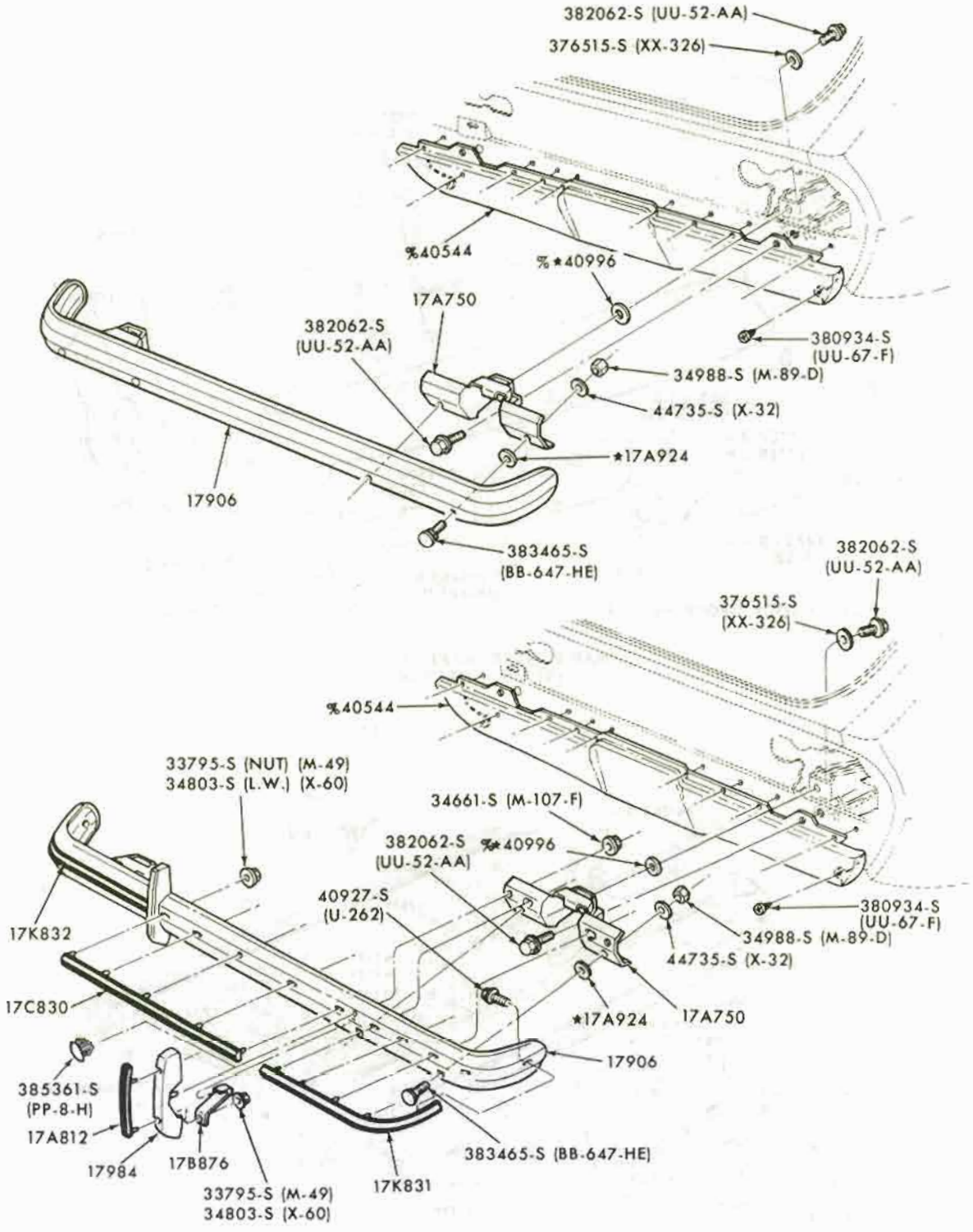

OPTIONAL REAR BUMPER GUARD AND PAD INSTALLATION

% REFER TO BODY SECTION

P-8014

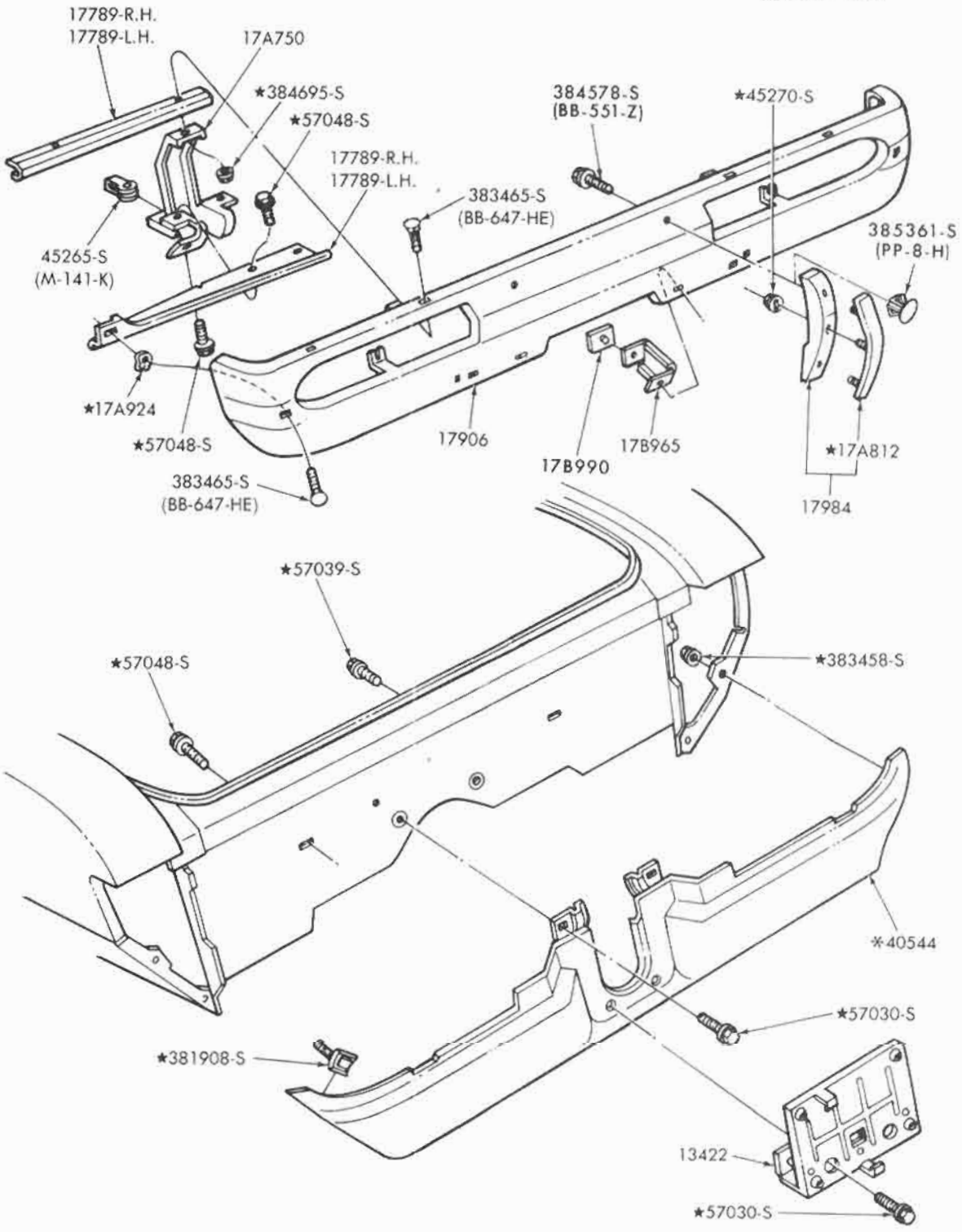

✳REFER TO BODY GROUP NUMBER

P-8665

REAR BUMPER and RELATED PARTS
1972 TORINO - EXCEPT BODY TYPES 71,97

COPYRIGHT © 1975 — FORD MOTOR COMPANY — DEARBORN, MICHIGAN

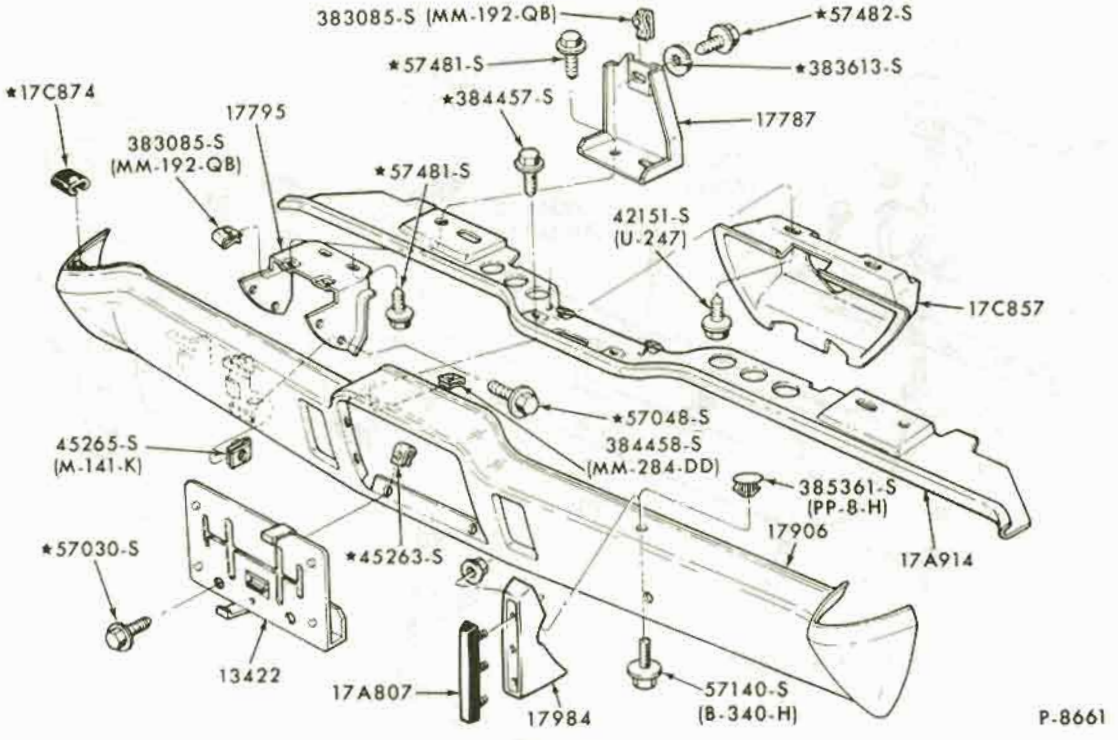

REAR BUMPER and RELATED PARTS
1972 THUNDERBIRD

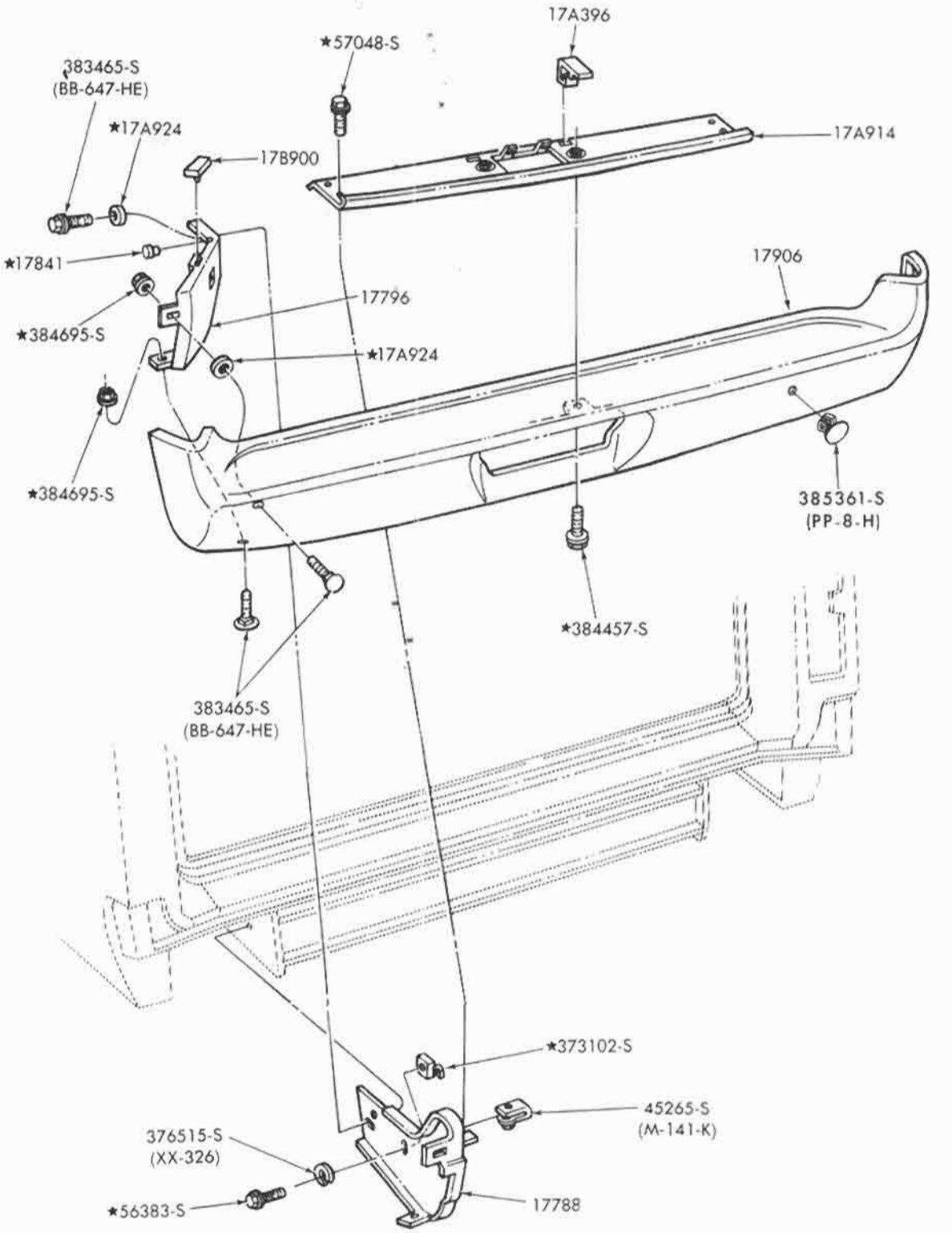

P-8667

REAR BUMPER and RELATED PARTS
1972 TORINO - BODY TYPES 71, 79

COPYRIGHT © 1975 — FORD MOTOR COMPANY — DEARBORN, MICHIGAN

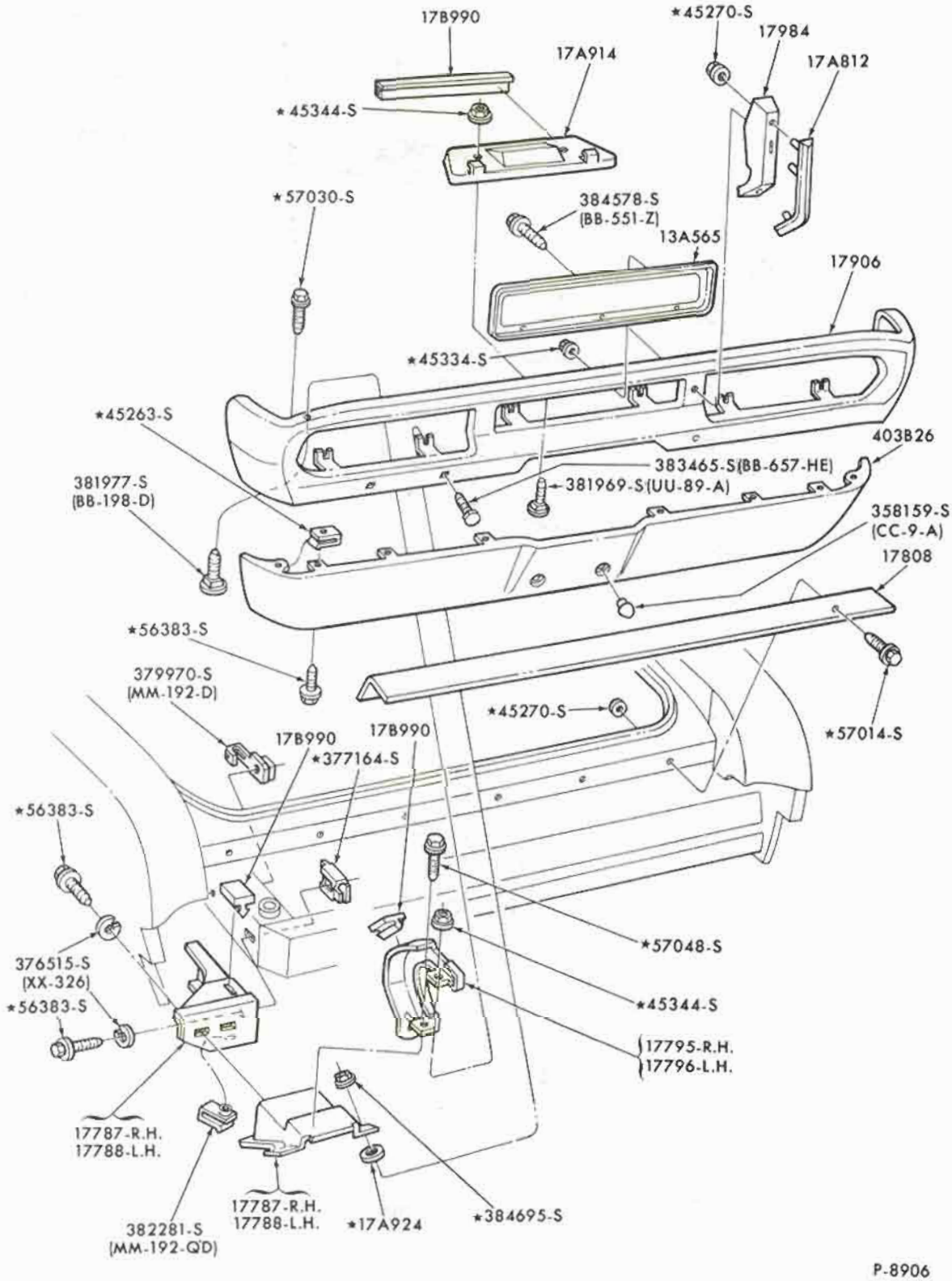

P-8906

REAR BUMPER and RELATED PARTS
1972 FORD - ALL EXCEPT BODY TYPE 71

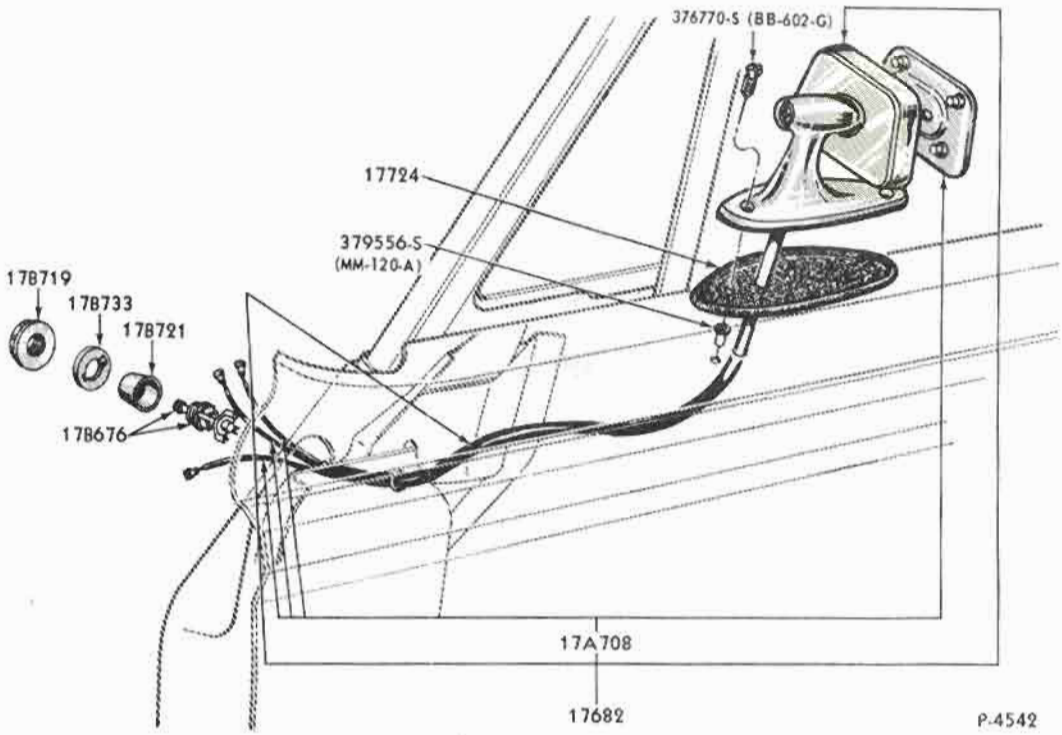

MIRROR - REMOTE CONTROL
1965/66 FORD

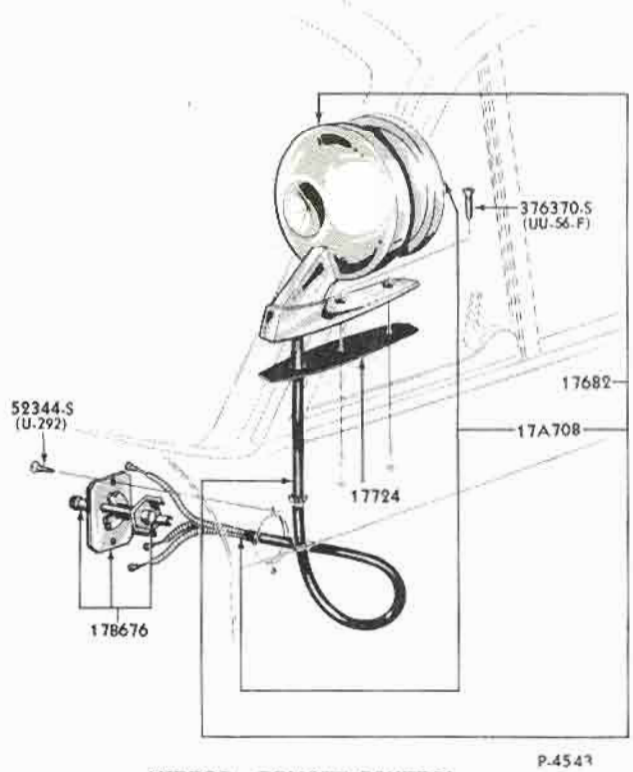

MIRROR - REMOTE CONTROL
1965/66 FAIRLANE, FALCON and MUSTANG

COPYRIGHT © 1975 — FORD MOTOR COMPANY — DEARBORN, MICHIGAN

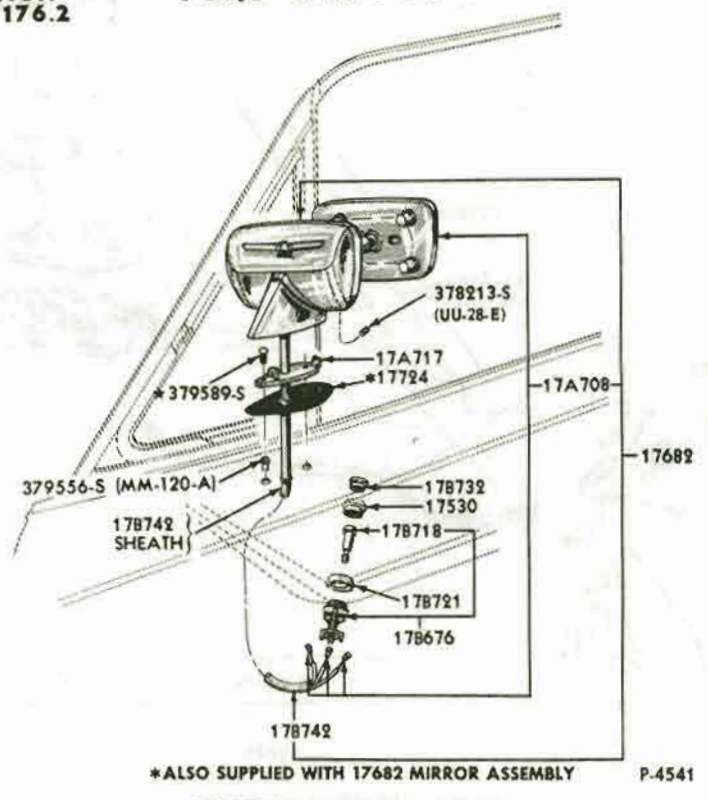

*ALSO SUPPLIED WITH 17682 MIRROR ASSEMBLY P-4541

MIRROR - REMOTE CONTROL
1965/66 THUNDERBIRD

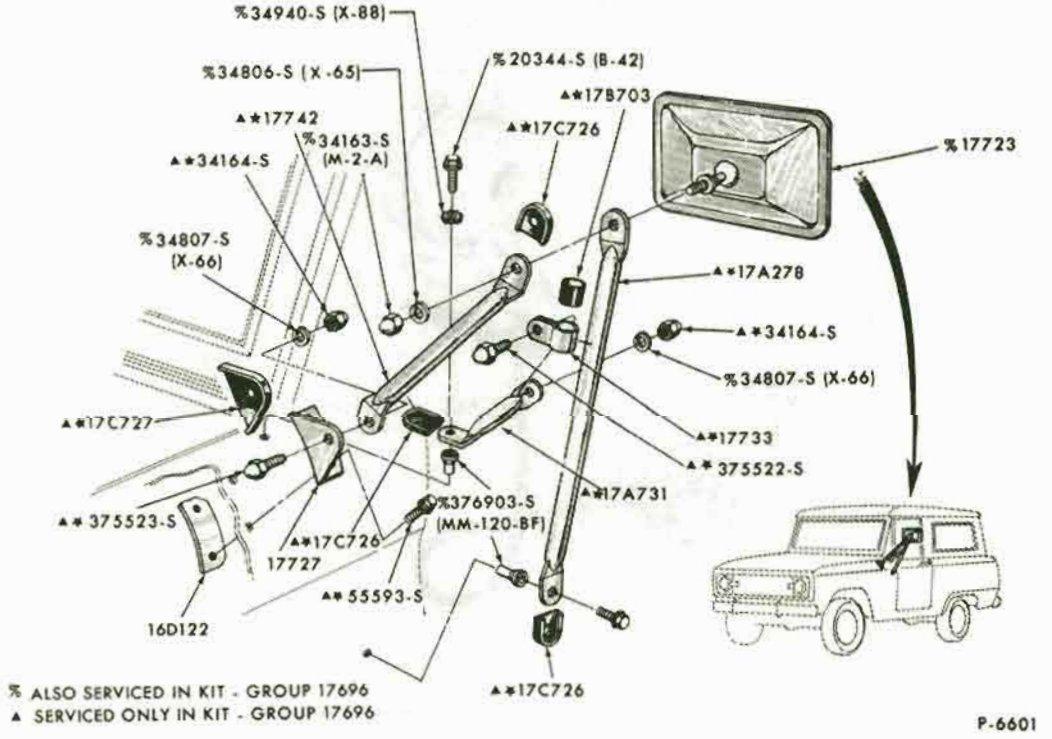

% ALSO SERVICED IN KIT - GROUP 17696
▲ SERVICED ONLY IN KIT - GROUP 17696

P-6601

MIRROR - OUTSIDE RECTANGULAR
1966/72 BRONCO

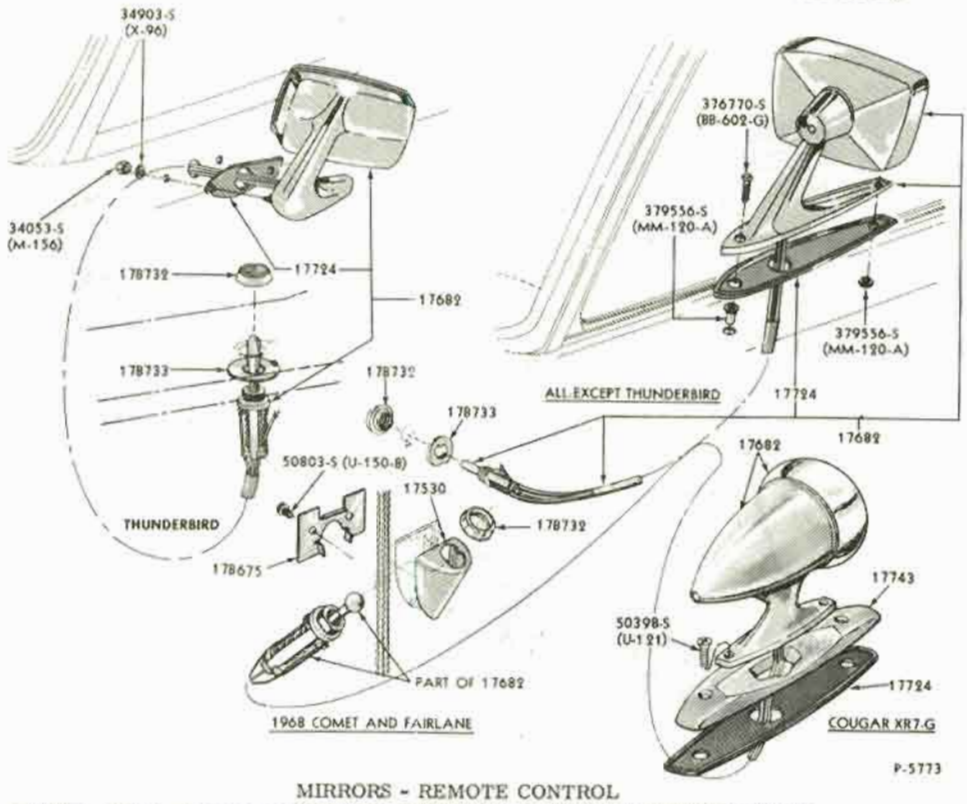

MIRRORS - REMOTE CONTROL
1967/72 FORD, FAIRLANE/TORINO, MUSTANG, FALCON and THUNDERBIRD

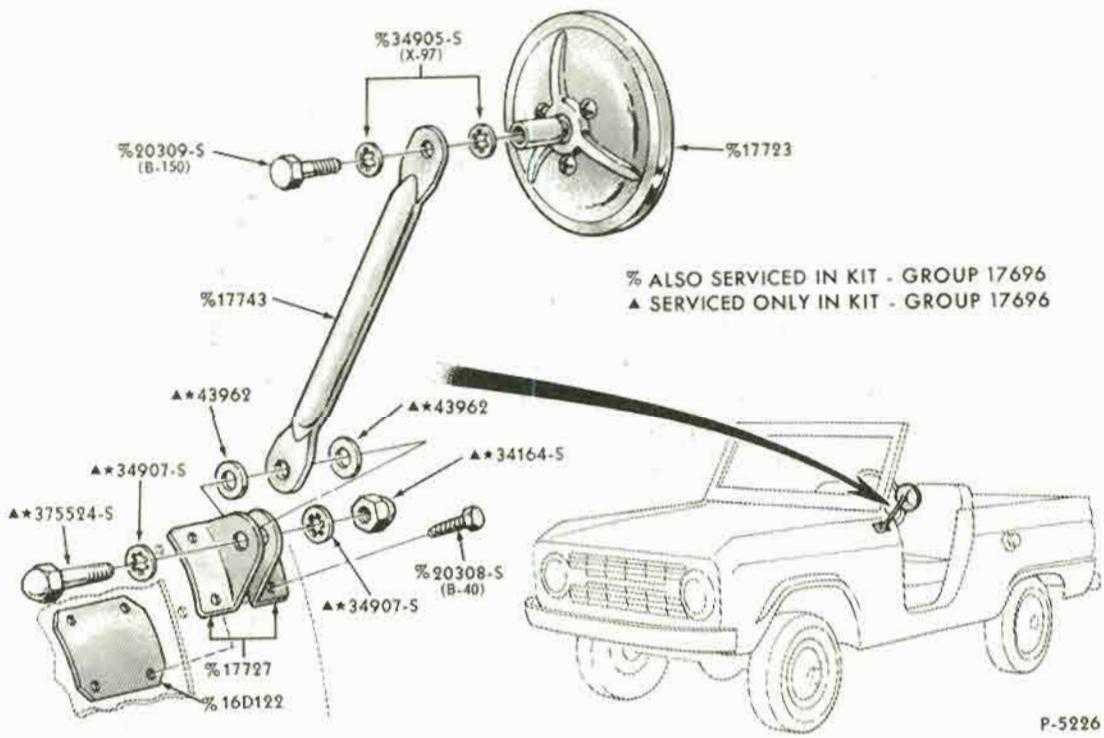

MIRROR - OUTSIDE ROUND
1966/69 BRONCO

COPYRIGHT © 1975— FORD MOTOR COMPANY —DEARBORN, MICHIGAN

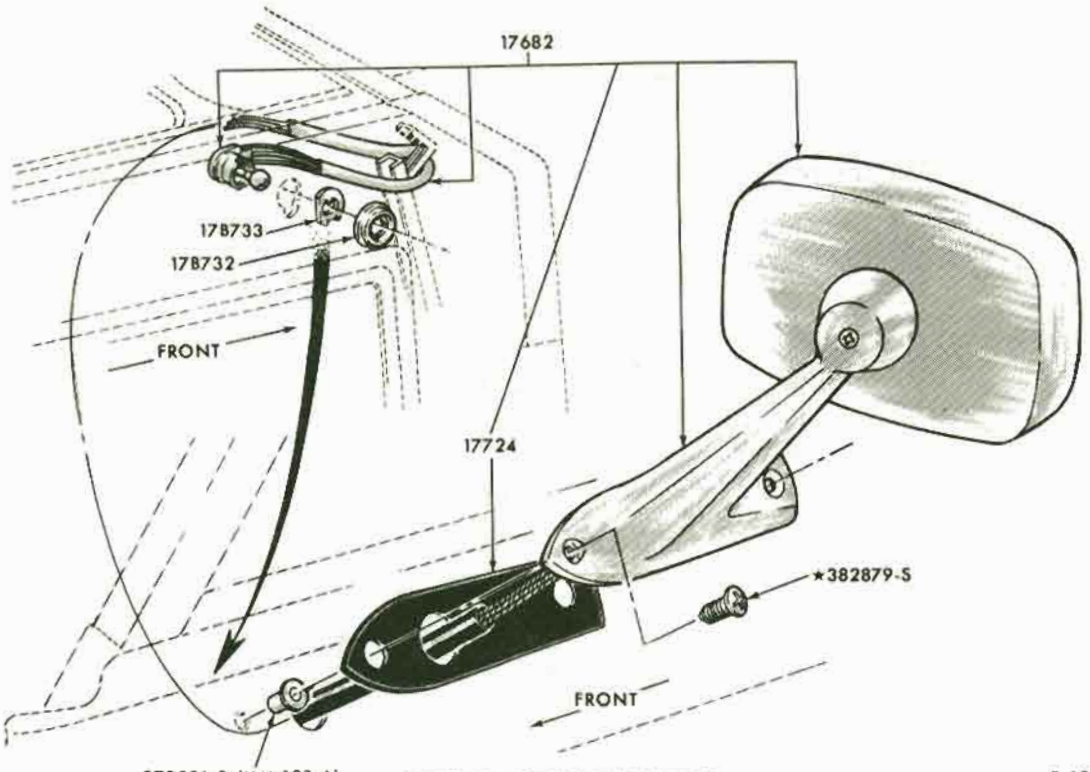

MIRROR - REMOTE CONTROL
1970 MAVERICK

P-6880

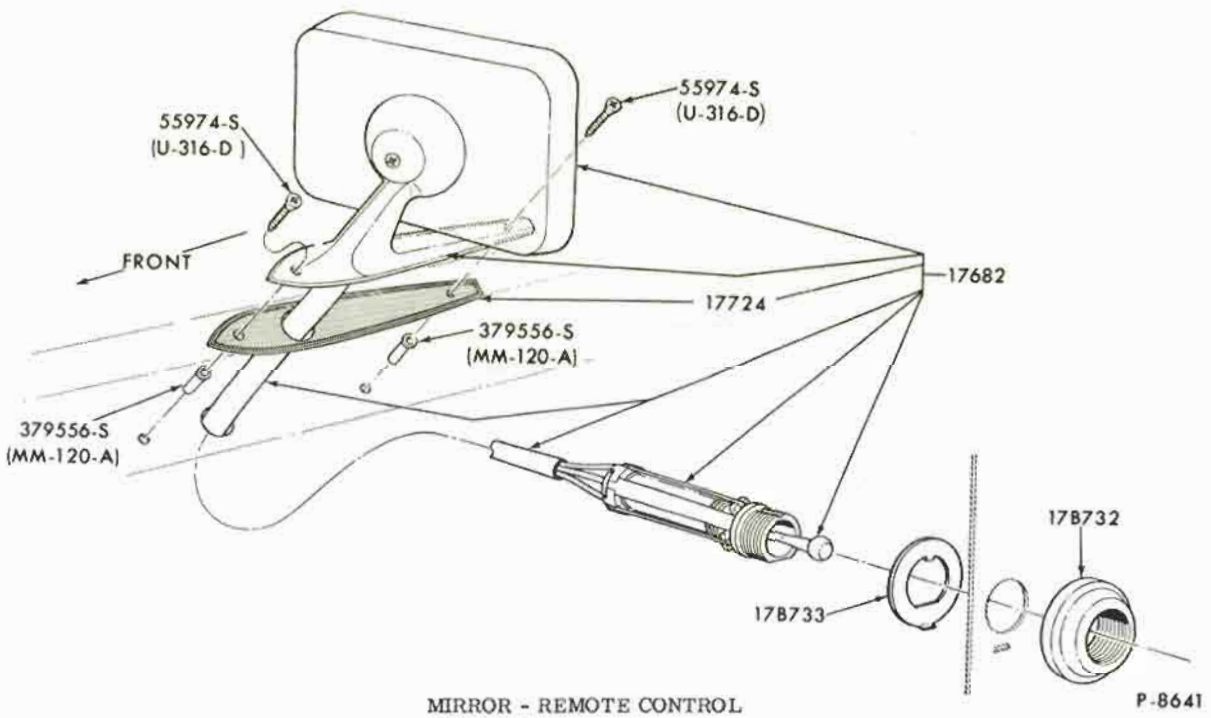

MIRROR - REMOTE CONTROL
1969/72 BRONCO

P-8641

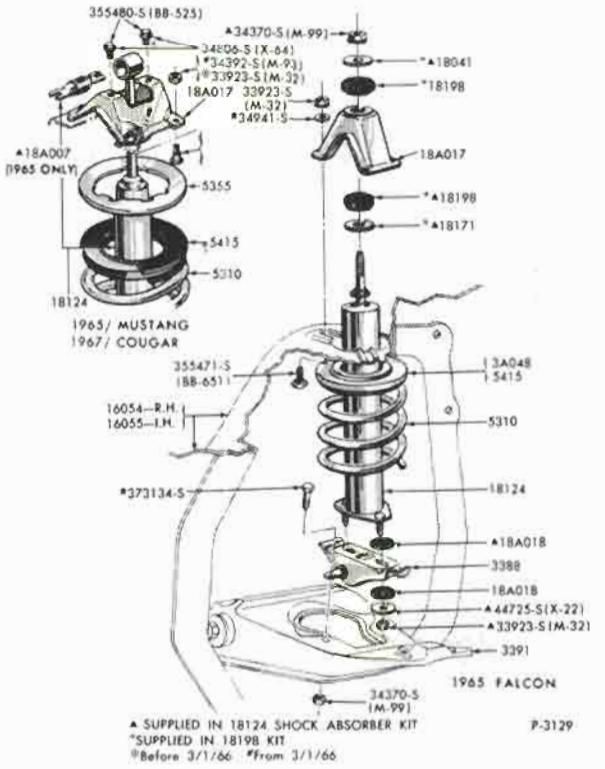

SHOCK ABSORBER - FRONT
1965 FALCON and 1965/69 MUSTANG

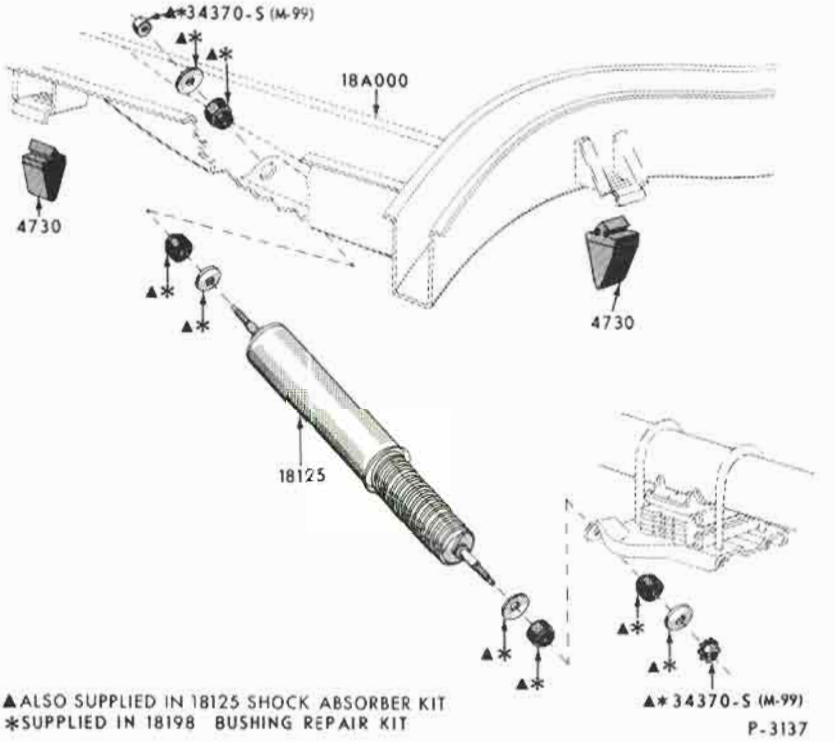

SHOCK ABSORBER - REAR
1965/68 FALCON and MUSTANG

COPYRIGHT © 1975 — FORD MOTOR COMPANY — DEARBORN, MICHIGAN

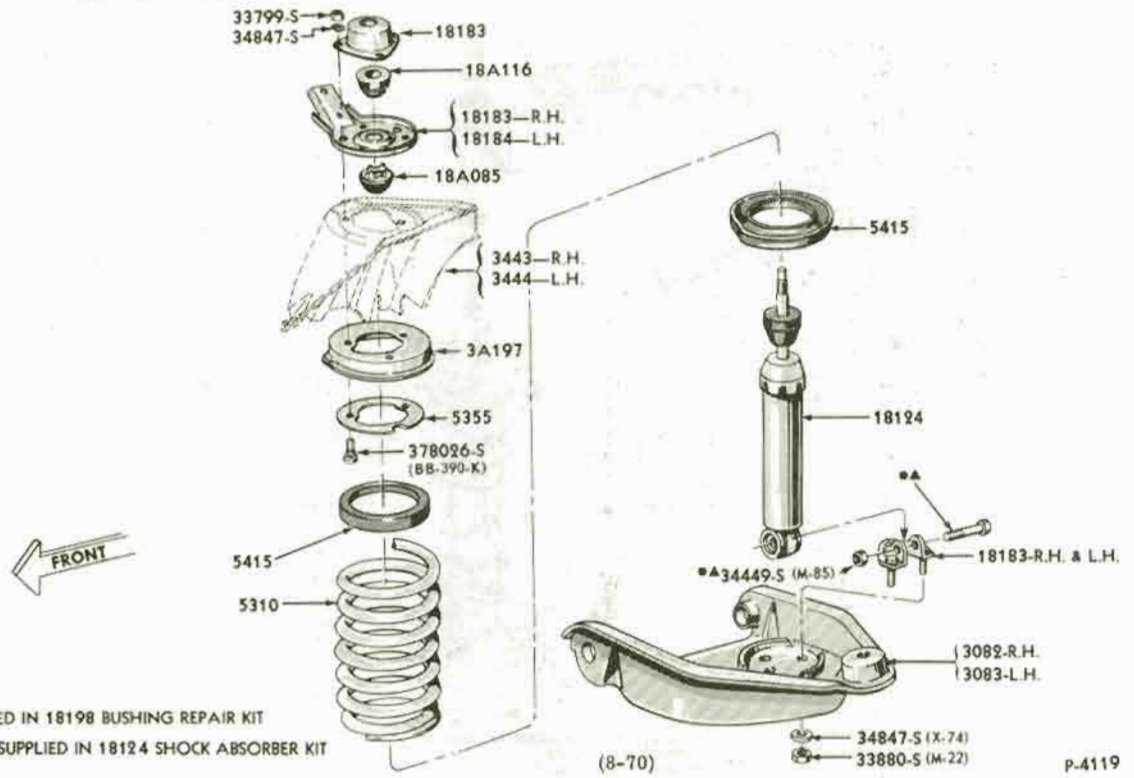

SHOCK ABSORBER - FRONT
1965/66 THUNDERBIRD

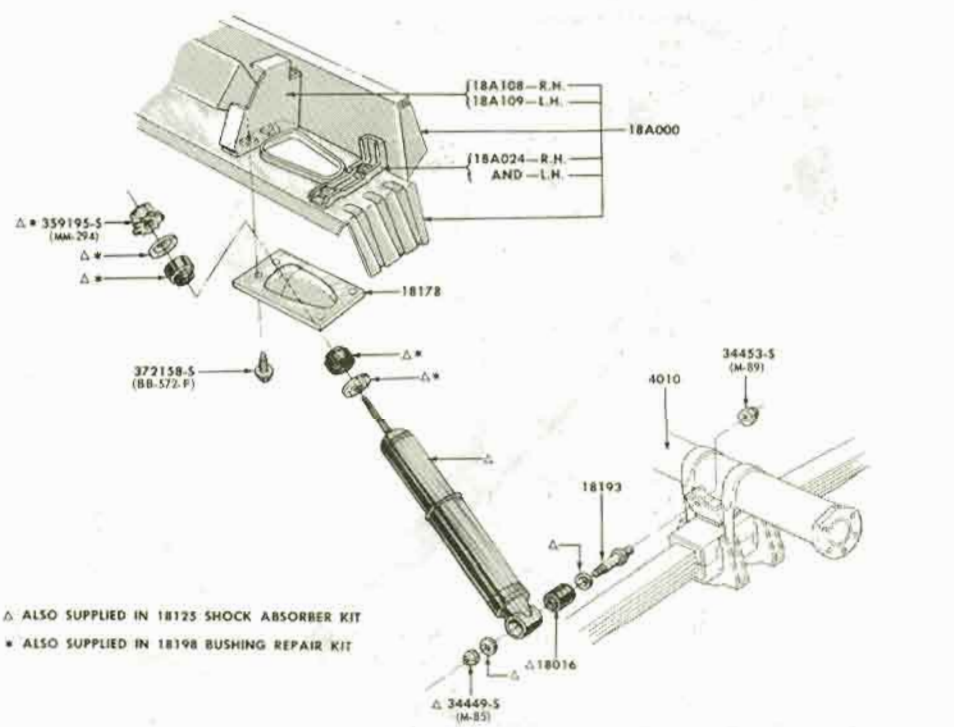

SHOCK ABSORBER - REAR
1965/68 THUNDERBIRD

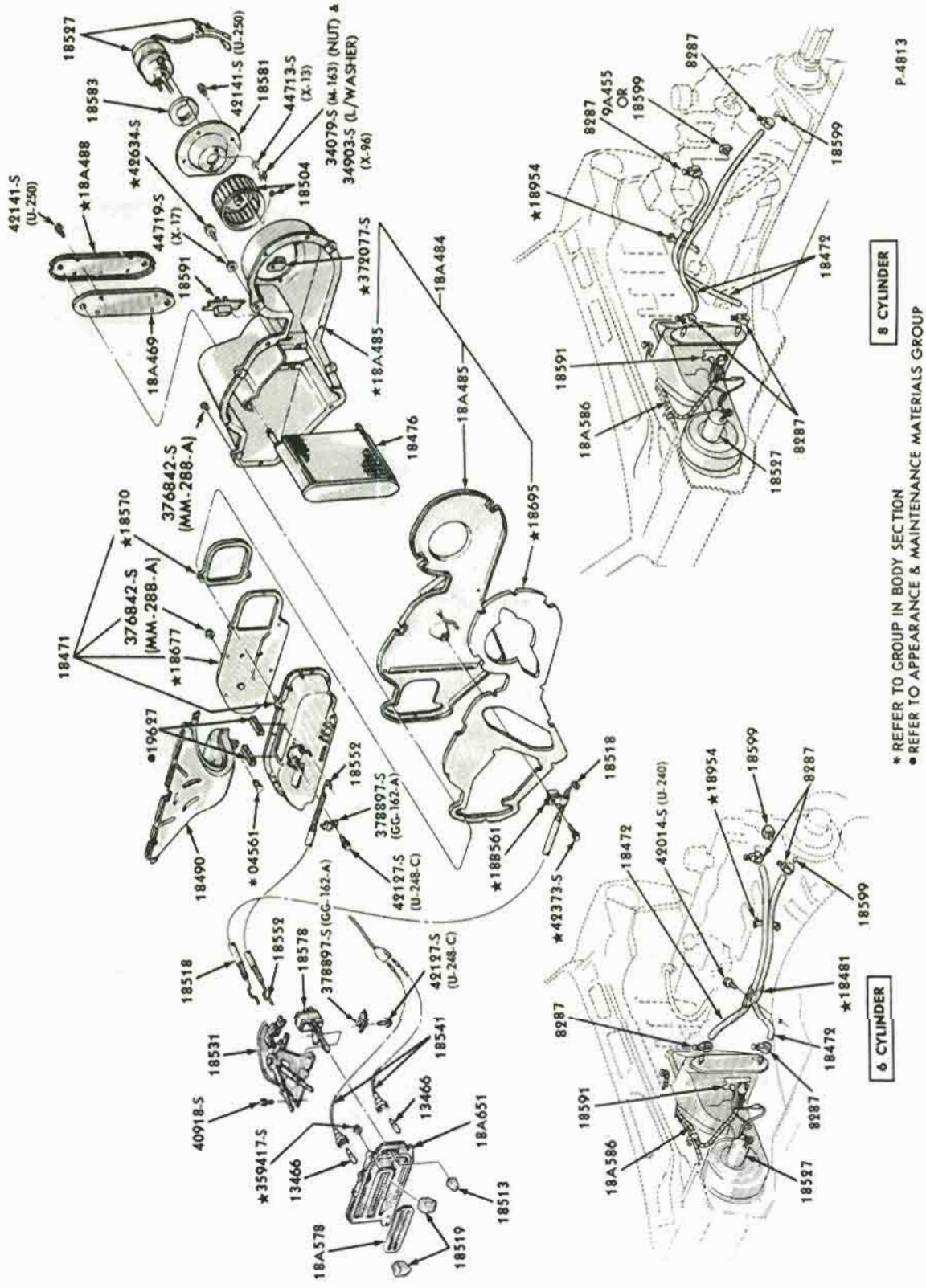

HEATER and RELATED PARTS
1965/66 FORD

COPYRIGHT © 1975 — FORD MOTOR COMPANY — DEARBORN, MICHIGAN

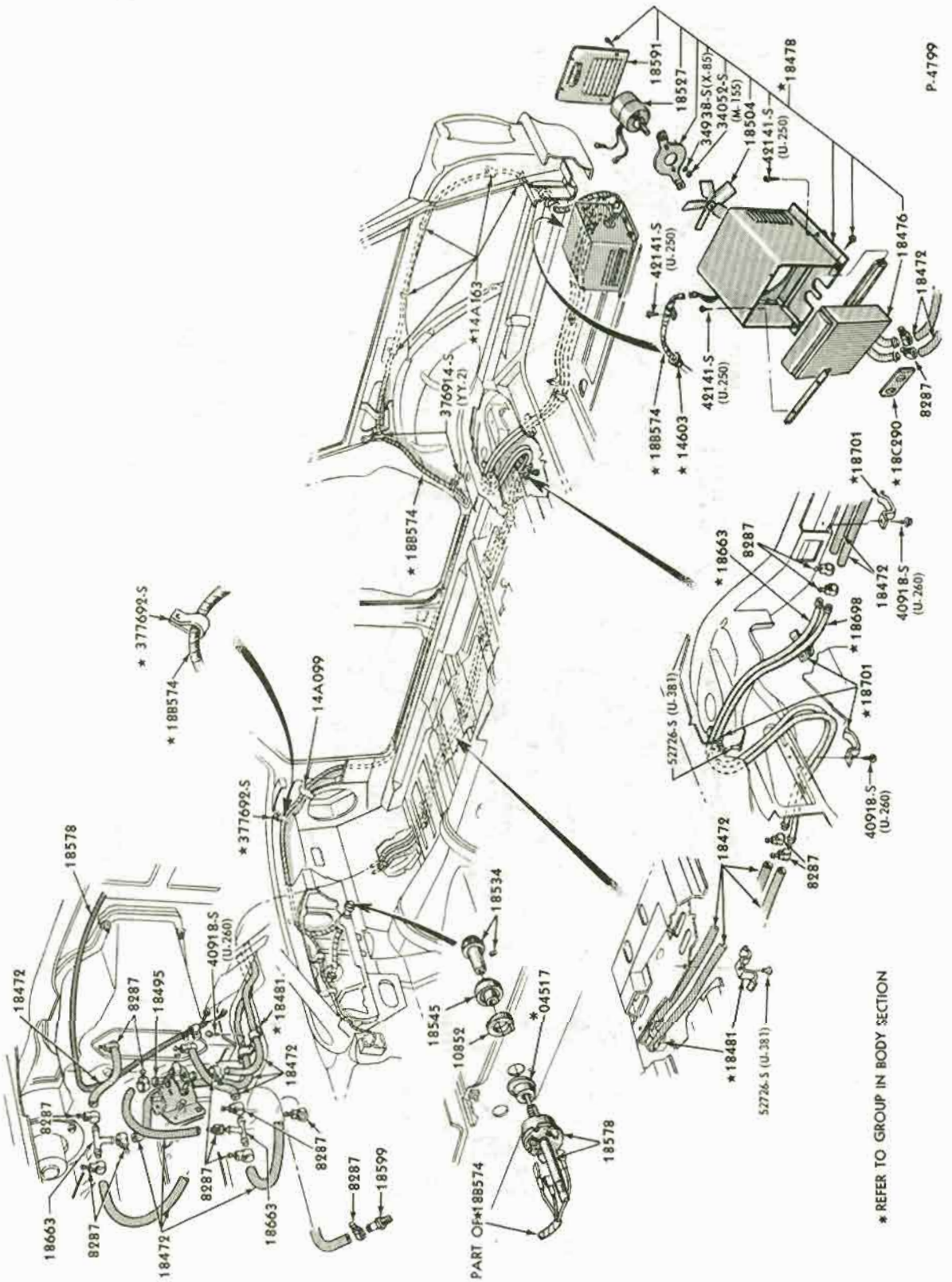

HEATER and RELATED PARTS - REAR SEAT
1965 FORD - BODY TYPE 71

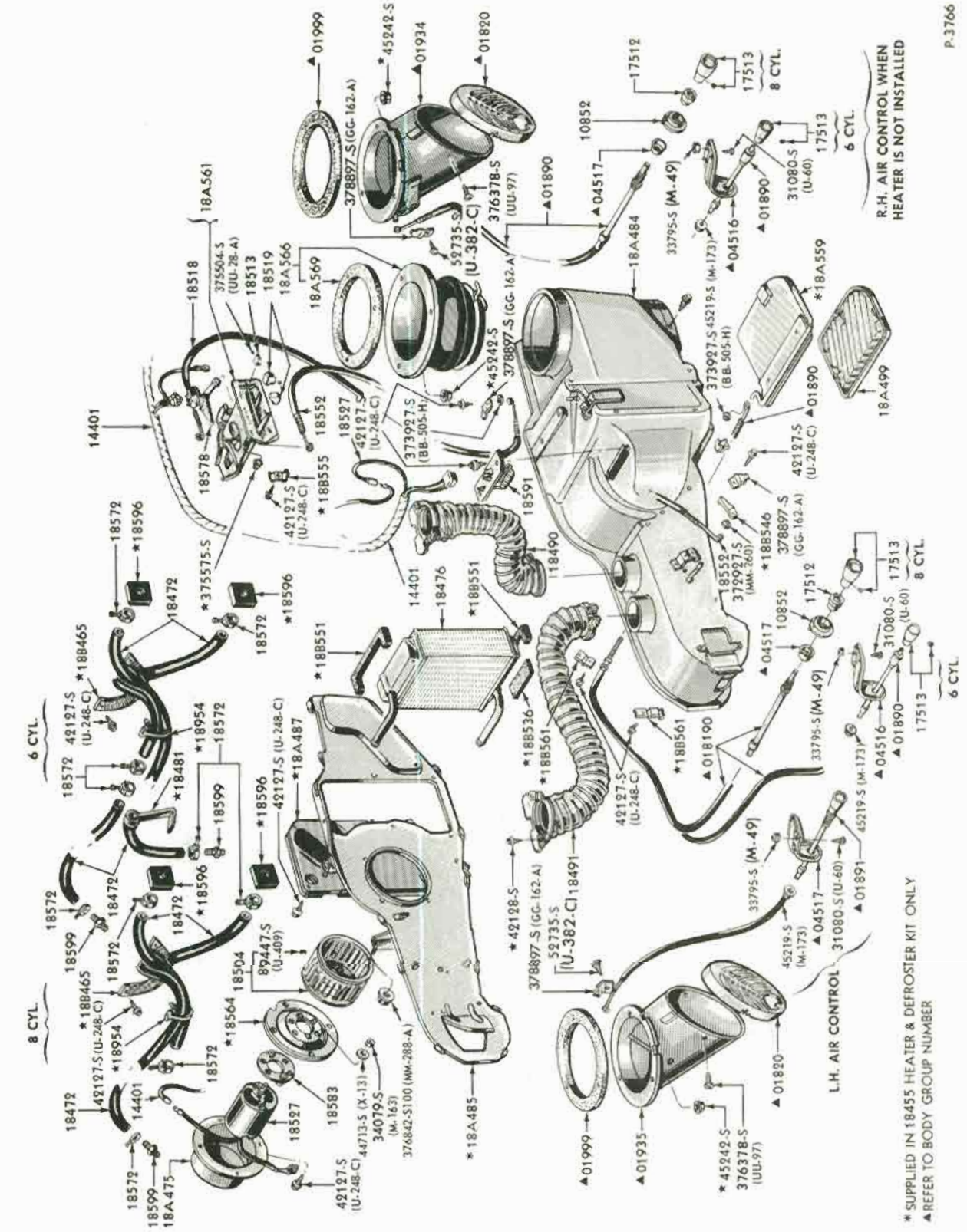

HEATER and RELATED PARTS
1965 FAIRLANE

COPYRIGHT © 1975 — FORD MOTOR COMPANY — DEARBORN, MICHIGAN

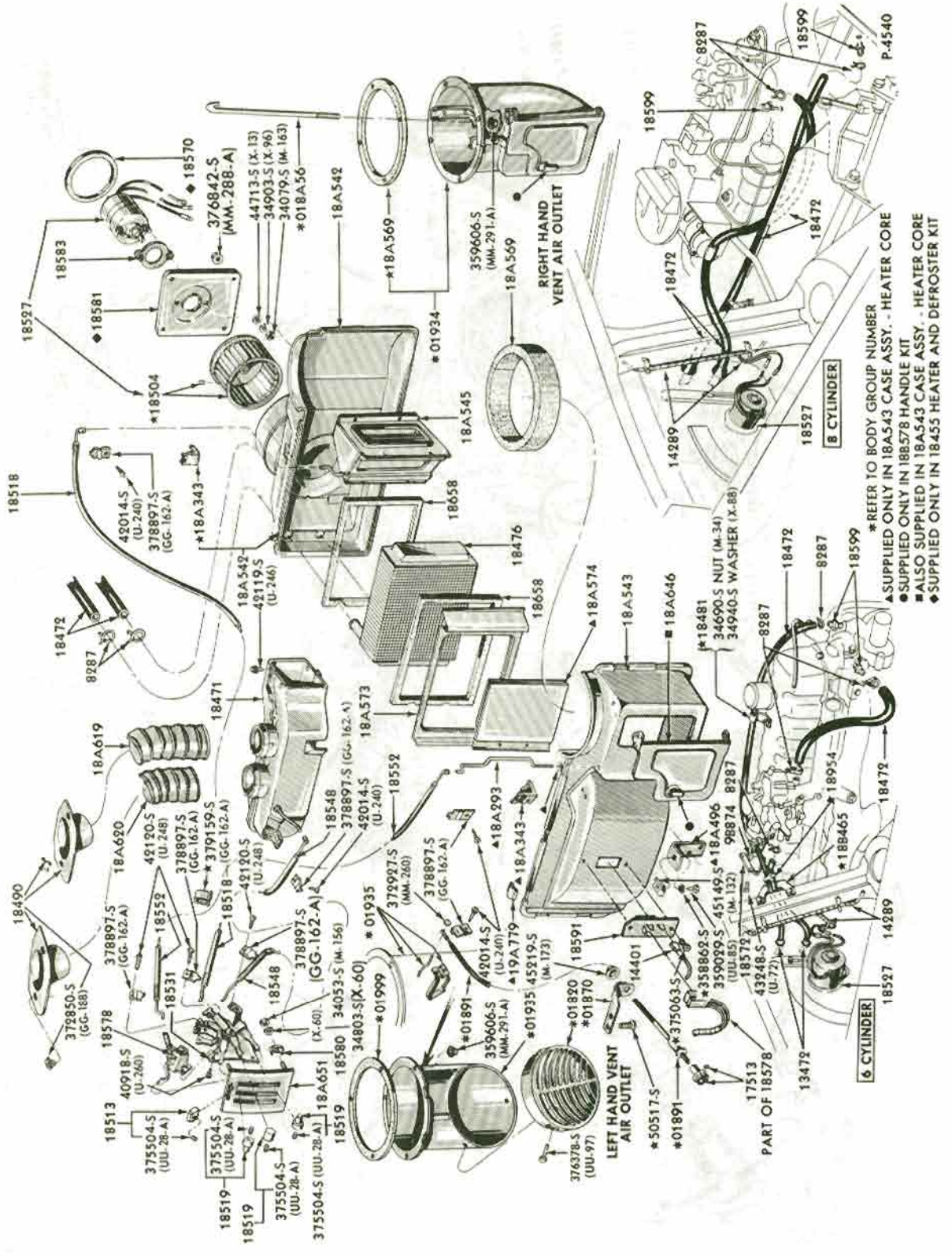

FRESH AIR HEATER and RELATED PARTS
1965/66 MUSTANG

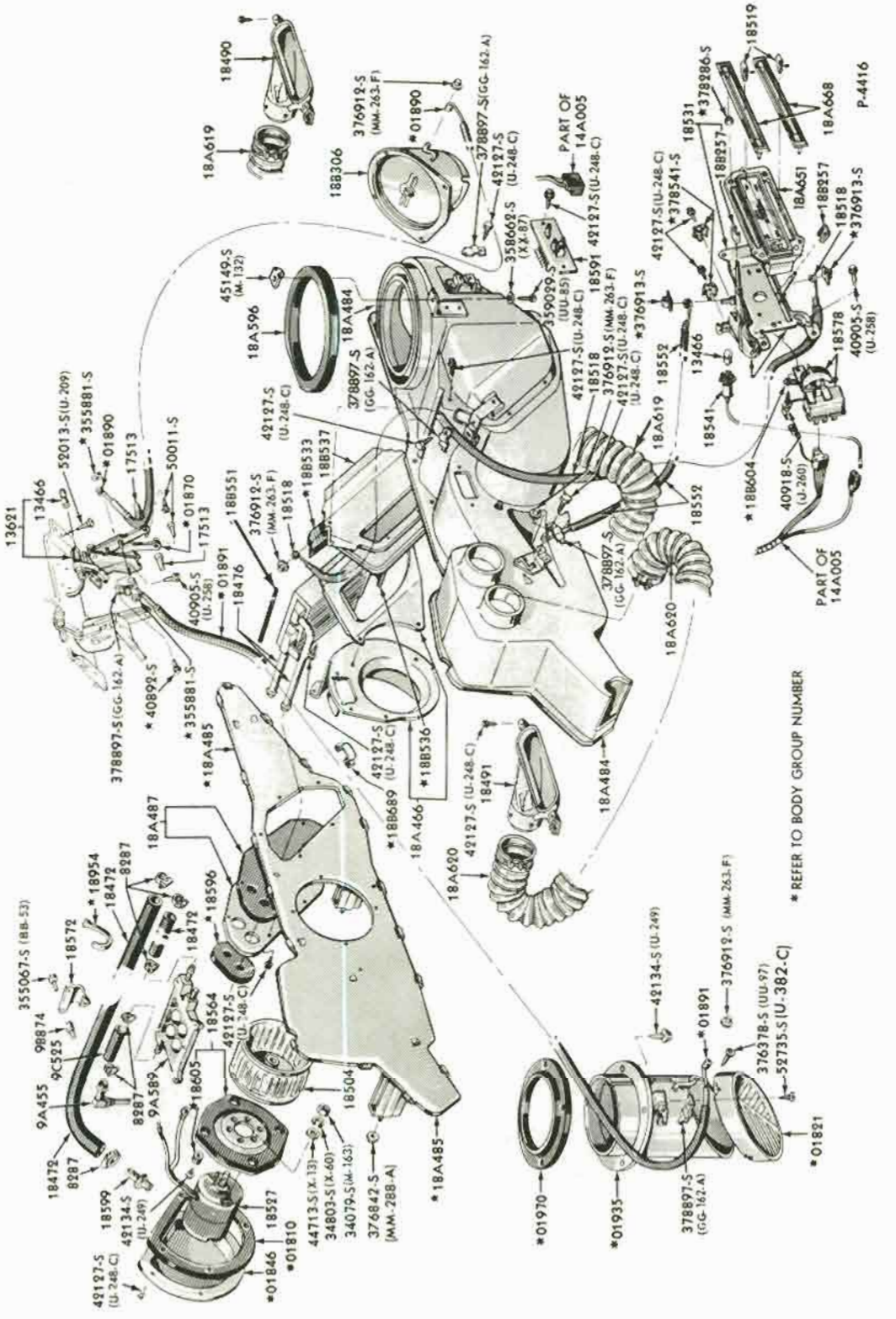

HEATER and RELATED PARTS
1965/66 THUNDERBIRD

COPYRIGHT © 1975 — FORD MOTOR COMPANY — DEARBORN, MICHIGAN

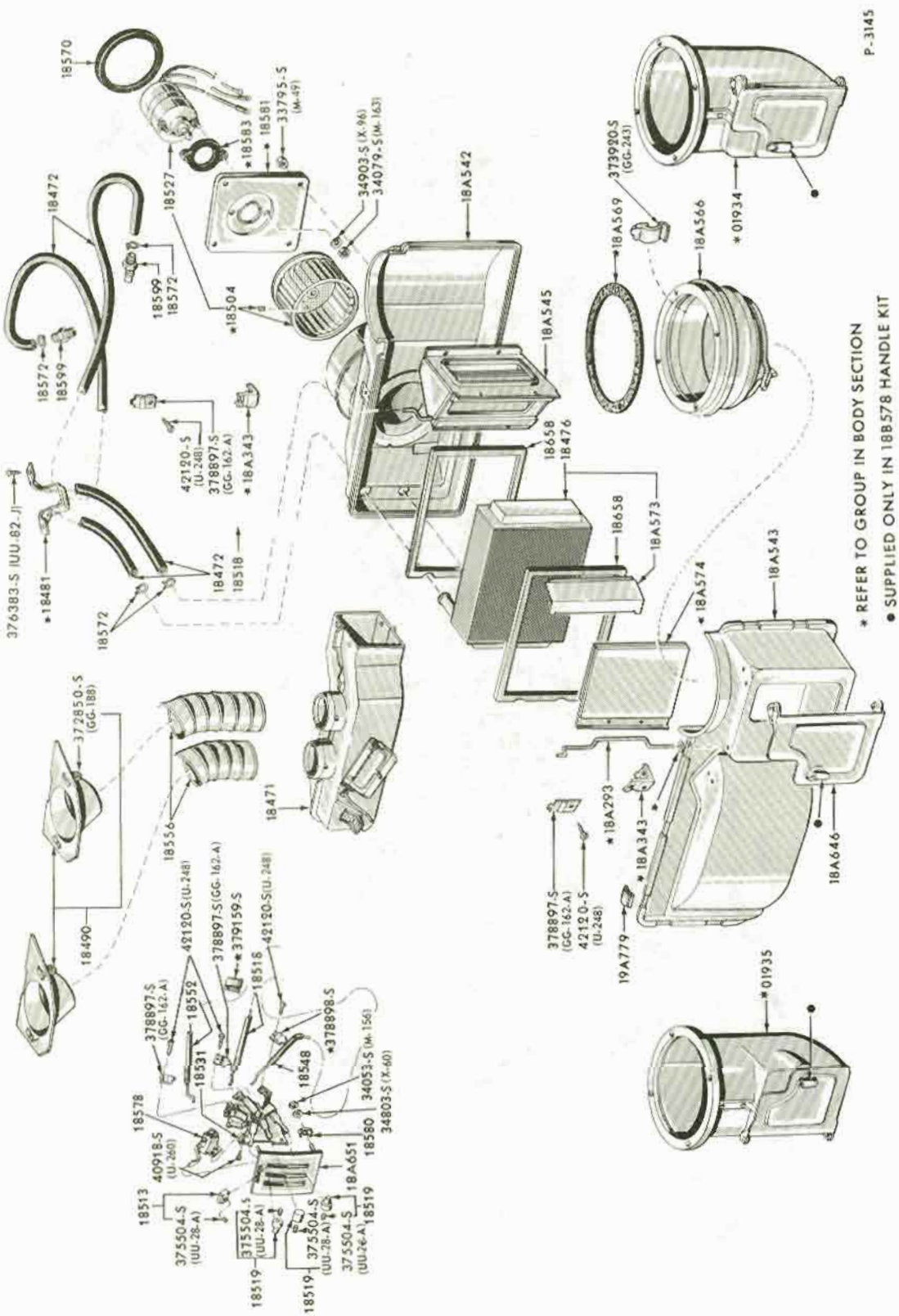

HEATER and RELATED PARTS
1965 FALCON

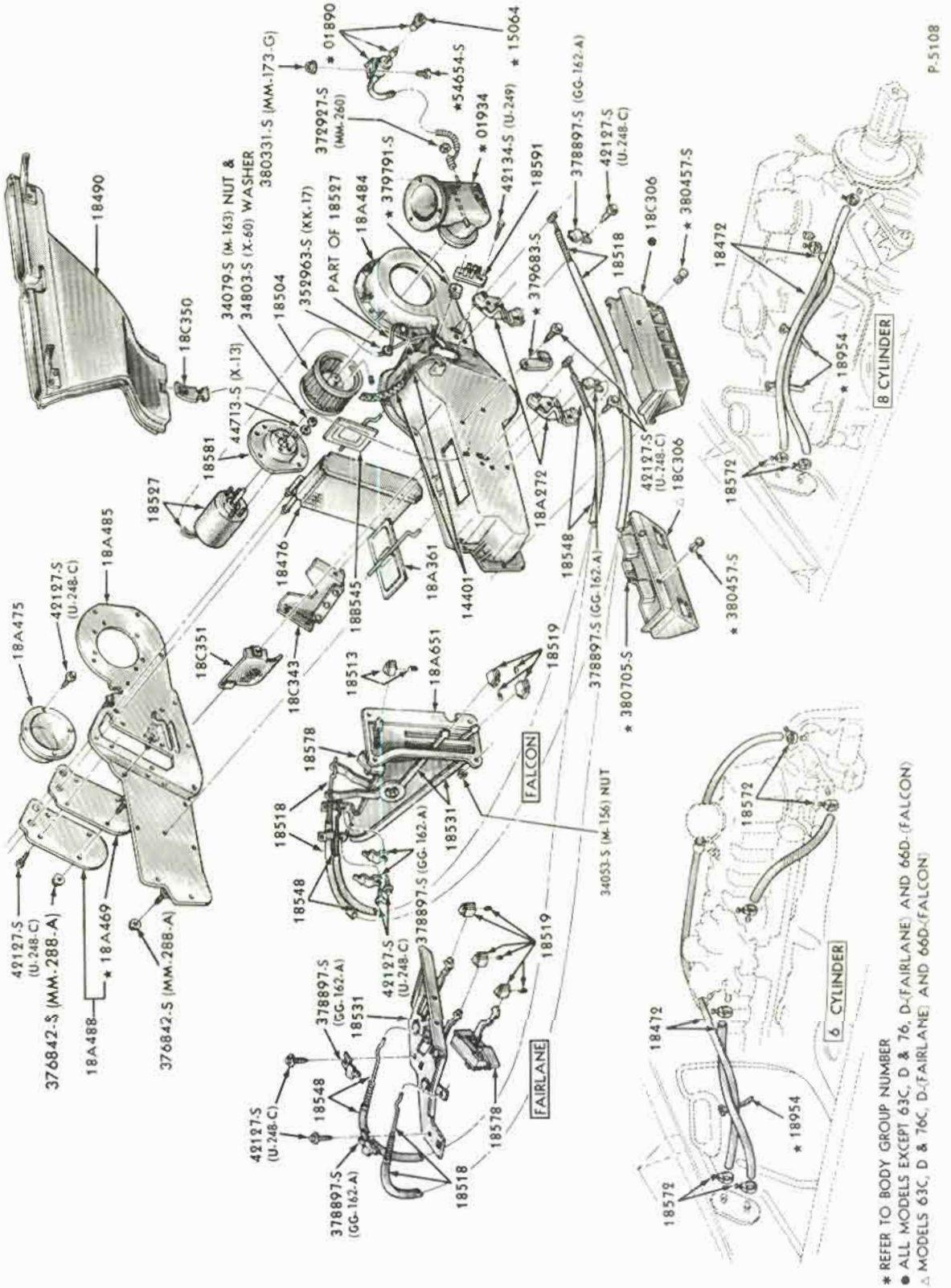

HEATER and RELATED PARTS
1966/67 FAIRLANE and FALCON

COPYRIGHT © 1975— FORD MOTOR COMPANY —DEARBORN, MICHIGAN

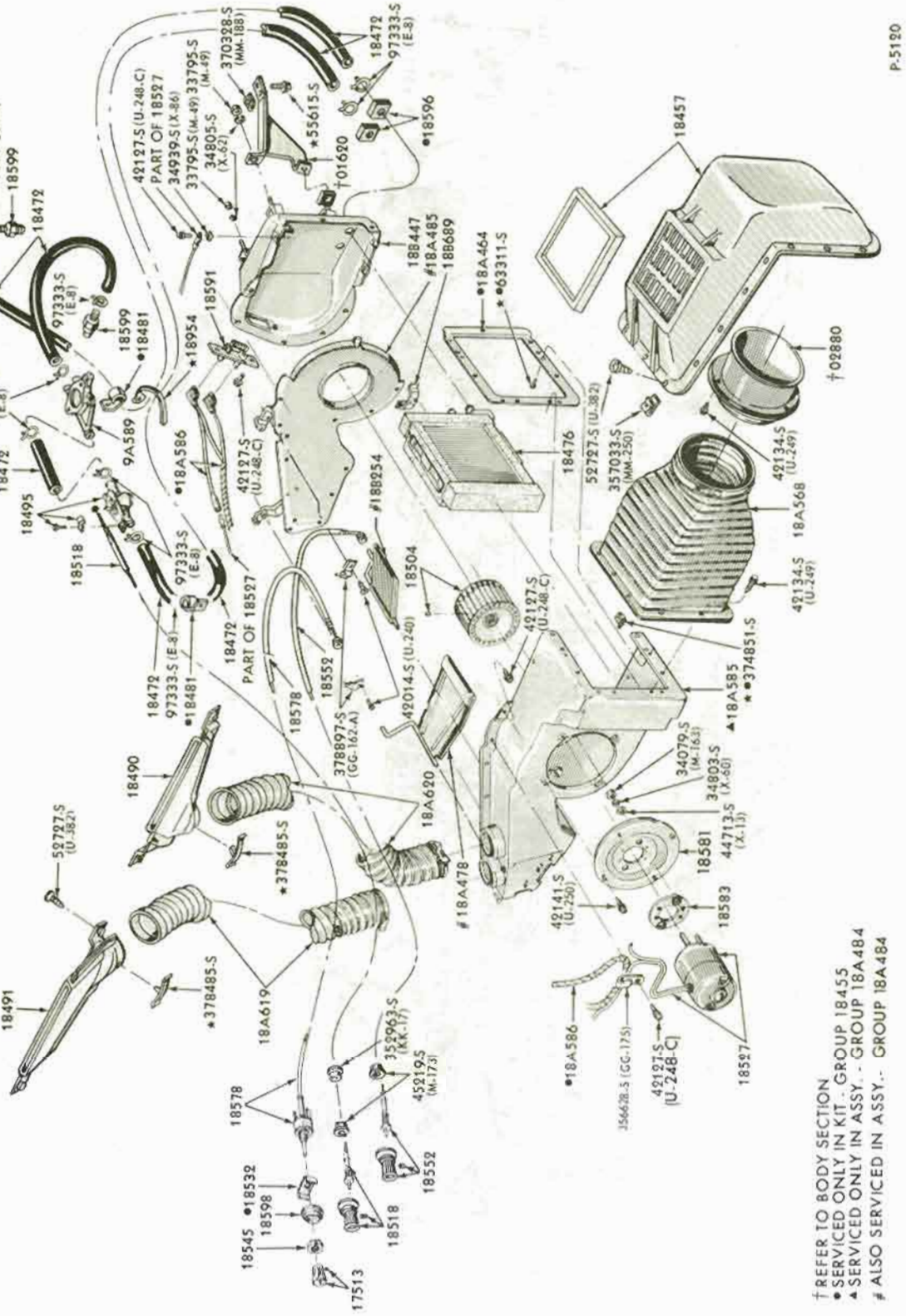

† REFER TO BODY SECTION
• SERVICED ONLY IN KIT. - GROUP 18455
▲ SERVICED ONLY IN ASSY. - GROUP 18A484
ALSO SERVICED IN ASSY.- GROUP 18A484

HEATER and RELATED PARTS
1966/72 BRONCO

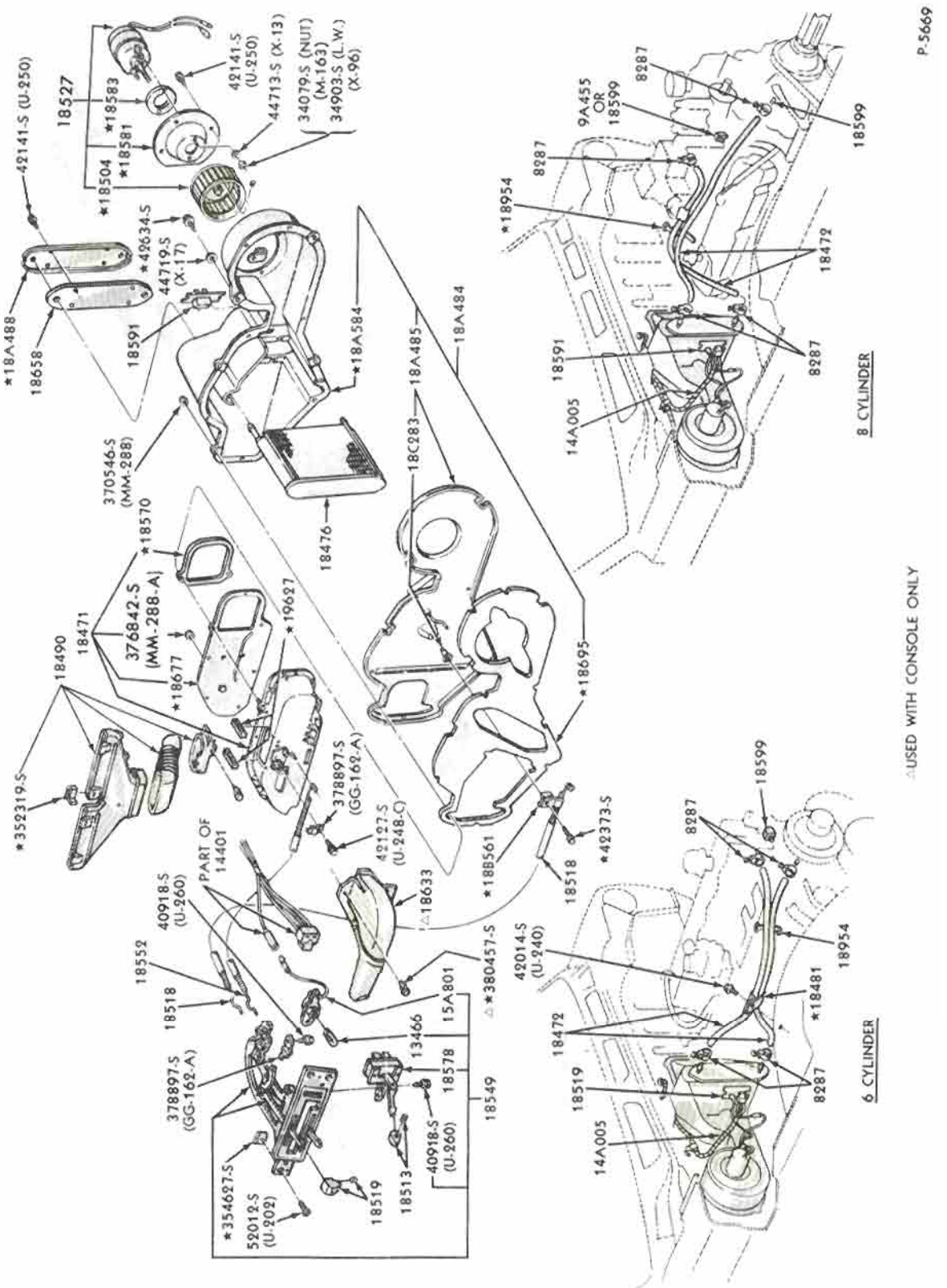

HEATER and RELATED PARTS
1967 FORD - w/o FORCED VENTILATION

COPYRIGHT © 1975 -- FORD MOTOR COMPANY -- DEARBORN, MICHIGAN

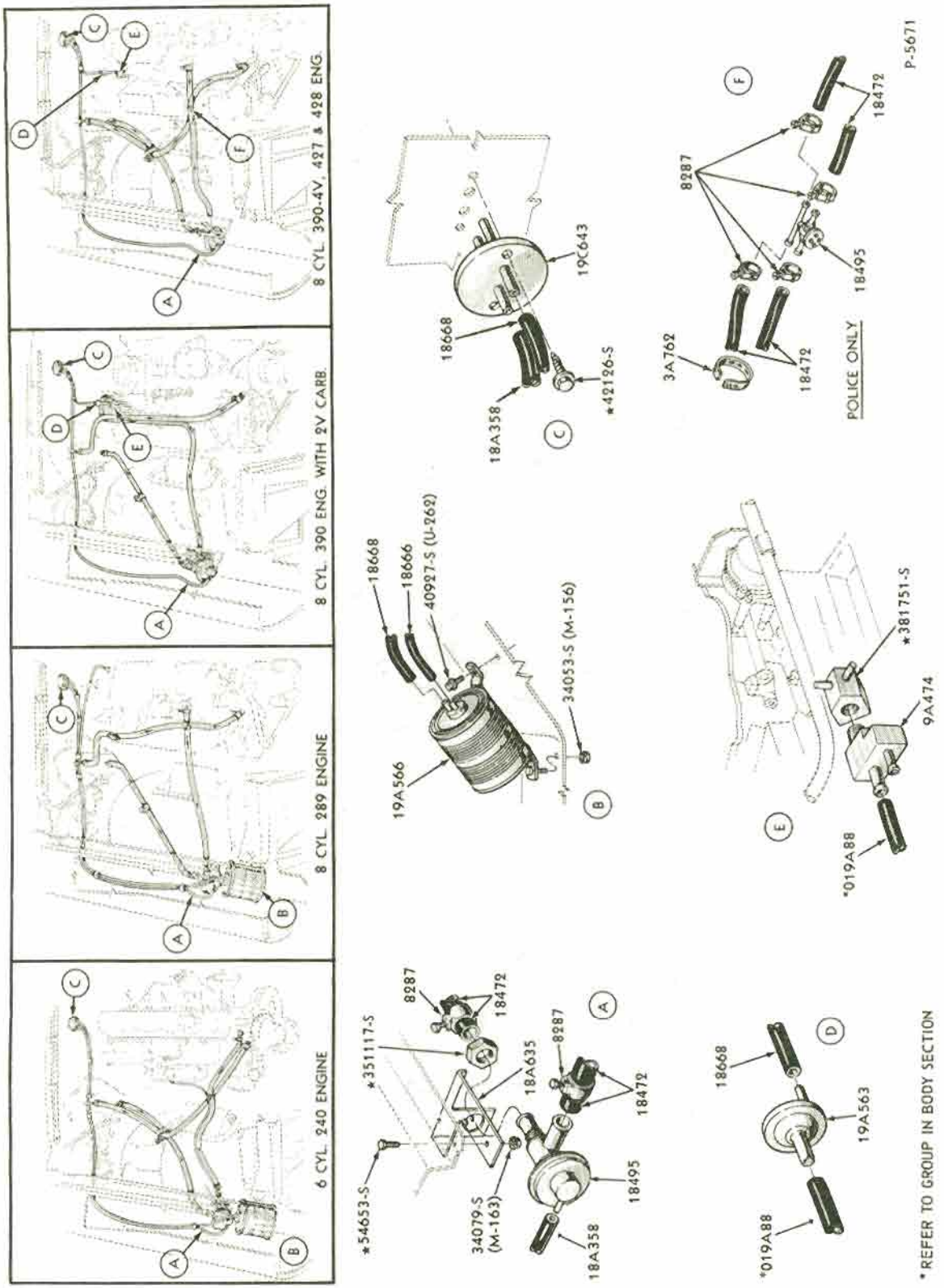

VACUUM HOSES and RELATED PARTS
1967 FORD - w/HEATER and FORCED VENTILATION

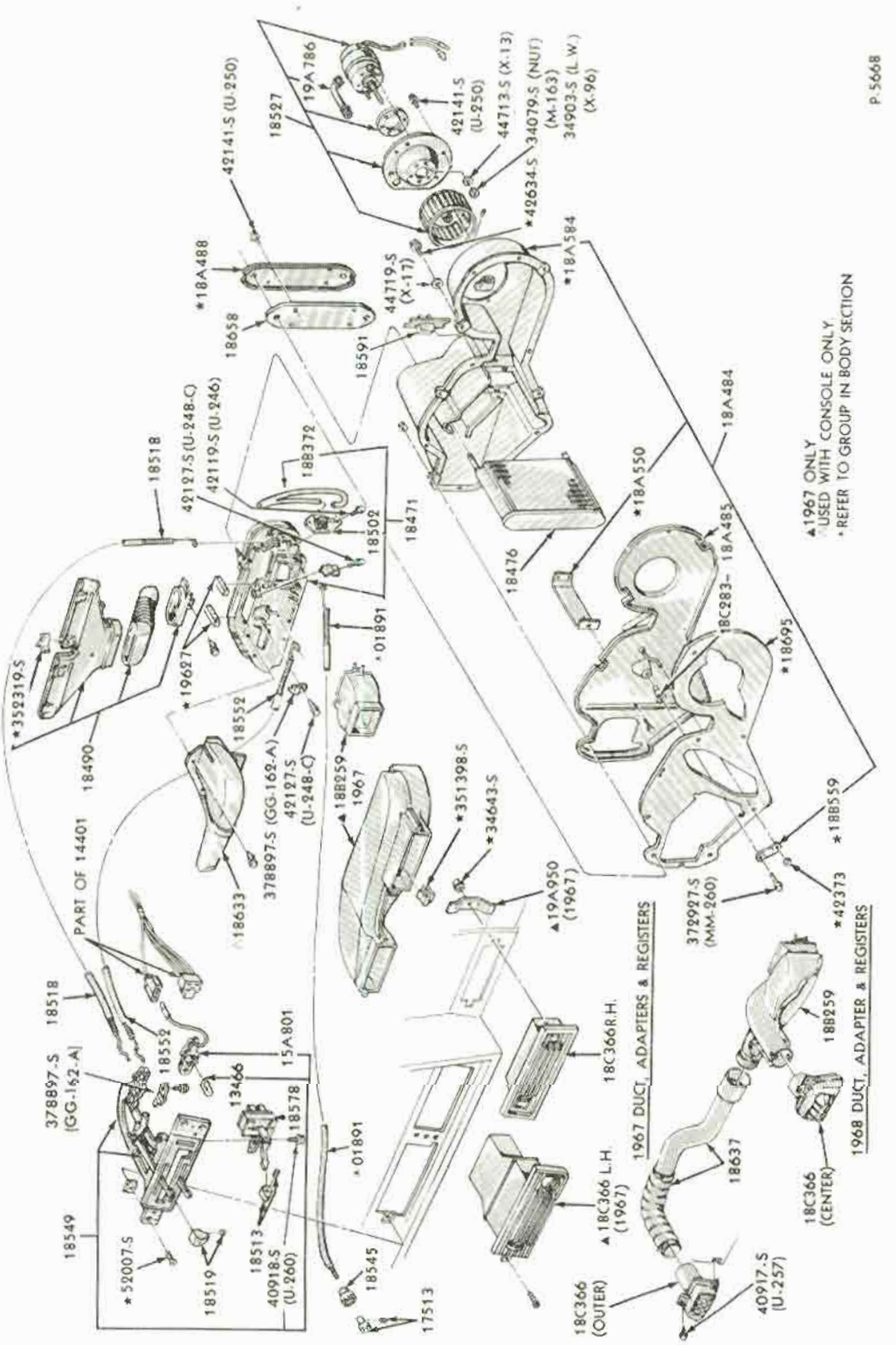

HEATER and RELATED PARTS

1967/68 FORD - w/ FORCED VENTILATION

COPYRIGHT © 1975 — FORD MOTOR COMPANY — DEARBORN, MICHIGAN

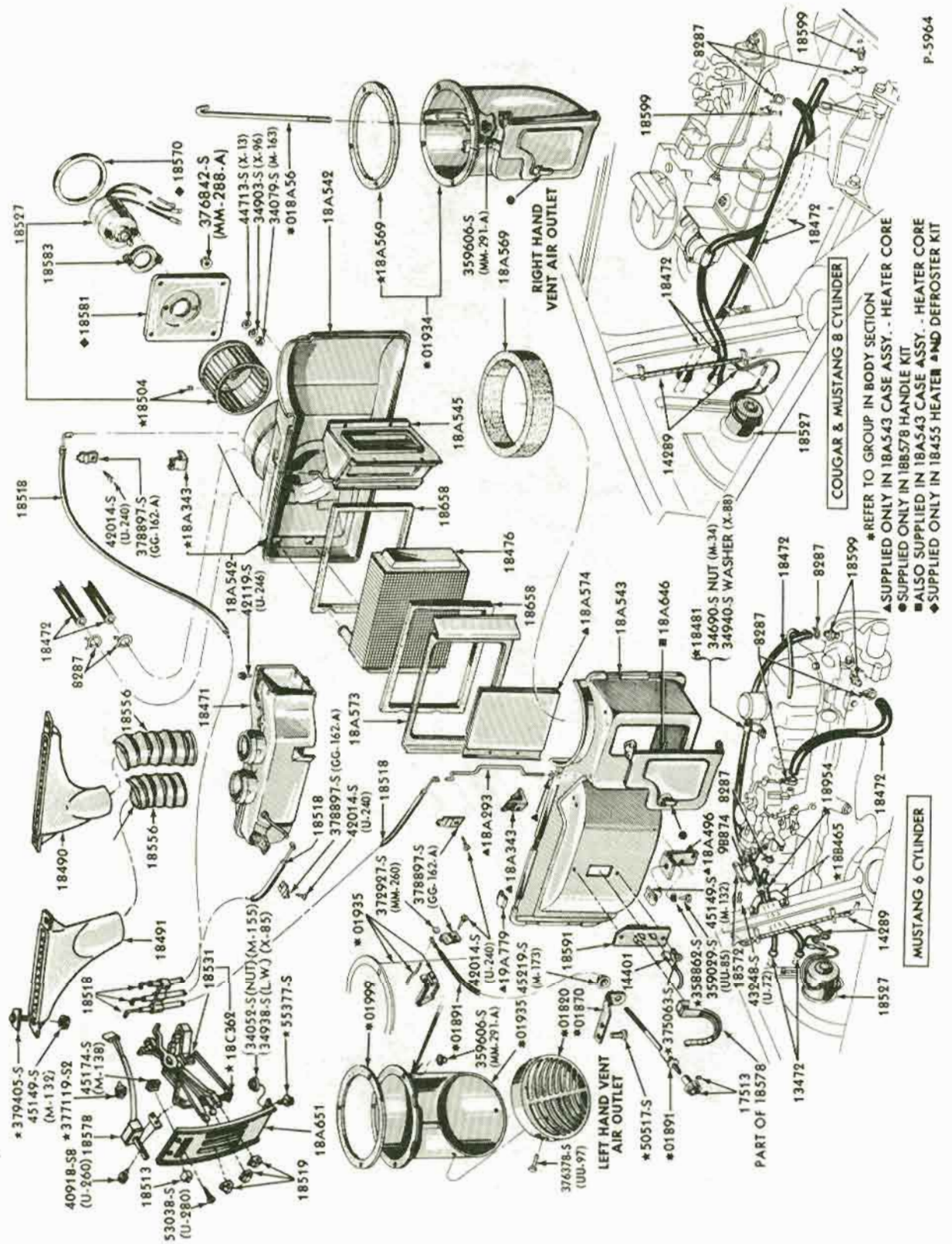
P-5964
RIGHT HAND VENT AIR OUTLET
LEFT HAND VENT AIR OUTLET
COUGAR & MUSTANG 8 CYLINDER
MUSTANG 6 CYLINDER
PART OF 18578
★REFER TO GROUP IN BODY SECTION
▲SUPPLIED ONLY IN 18A543 CASE ASSY. - HEATER CORE
●SUPPLIED ONLY IN 18B578 HANDLE KIT
■ALSO SUPPLIED IN 18A543 CASE ASSY. - HEATER CORE
◆SUPPLIED ONLY IN 18455 HEATER AND DEFROSTER KIT

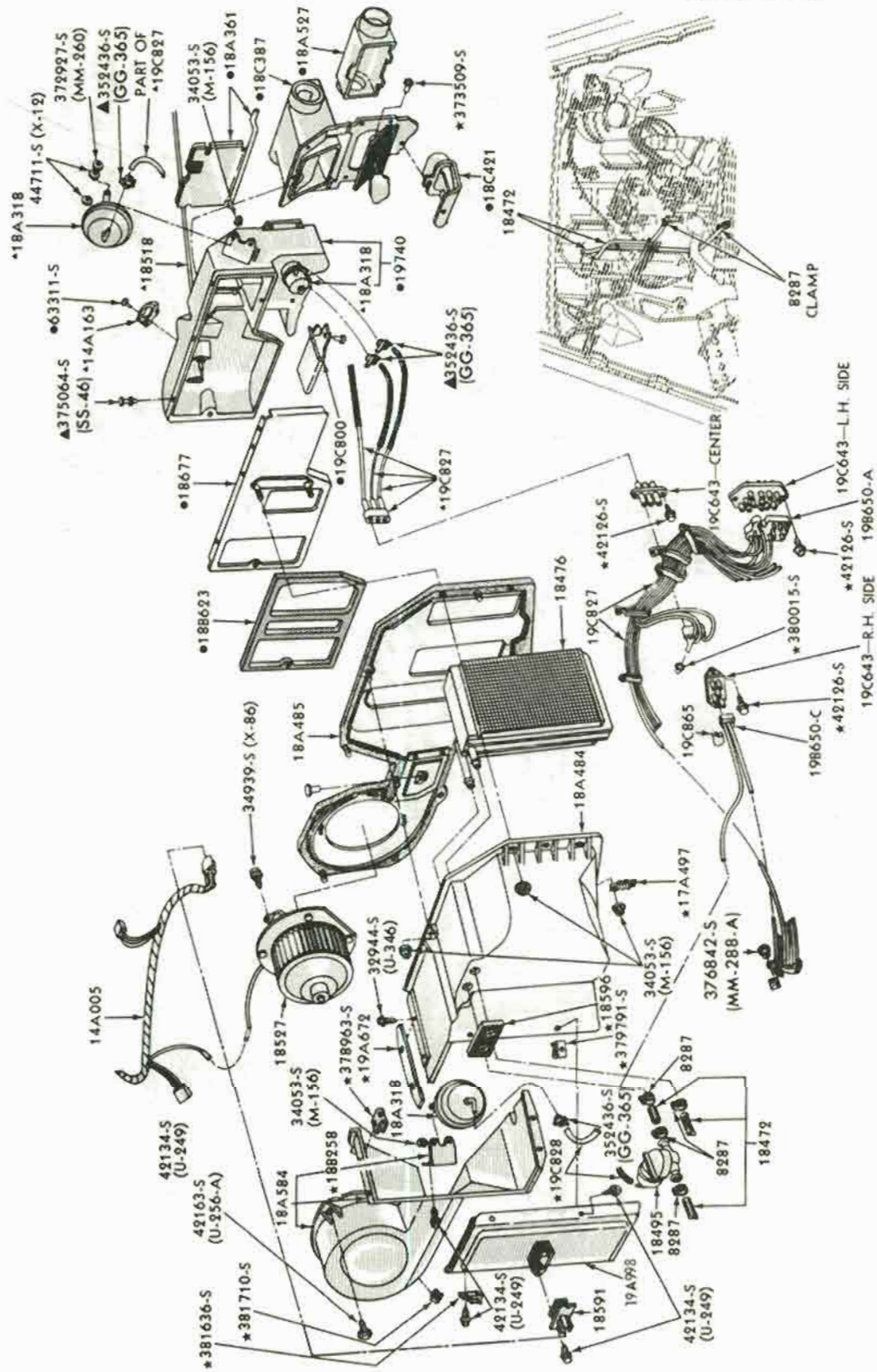

HEATER and RELATED PARTS
1967 THUNDERBIRD

COPYRIGHT © 1975 — FORD MOTOR COMPANY — DEARBORN, MICHIGAN

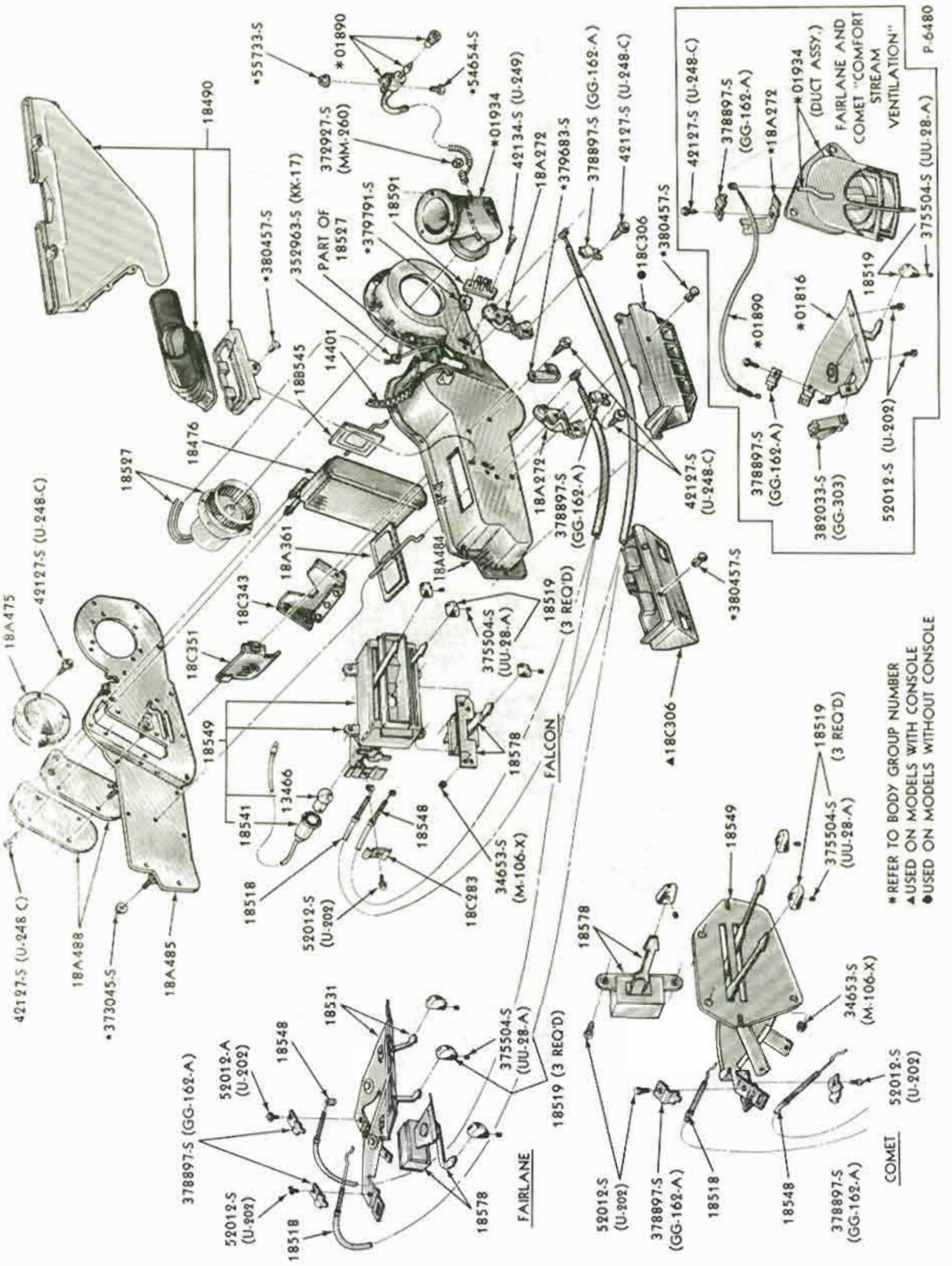

HEATER, CONTROLS and RELATED PARTS
1968/69 FAIRLANE/TORINO and 1968/70 FALCON

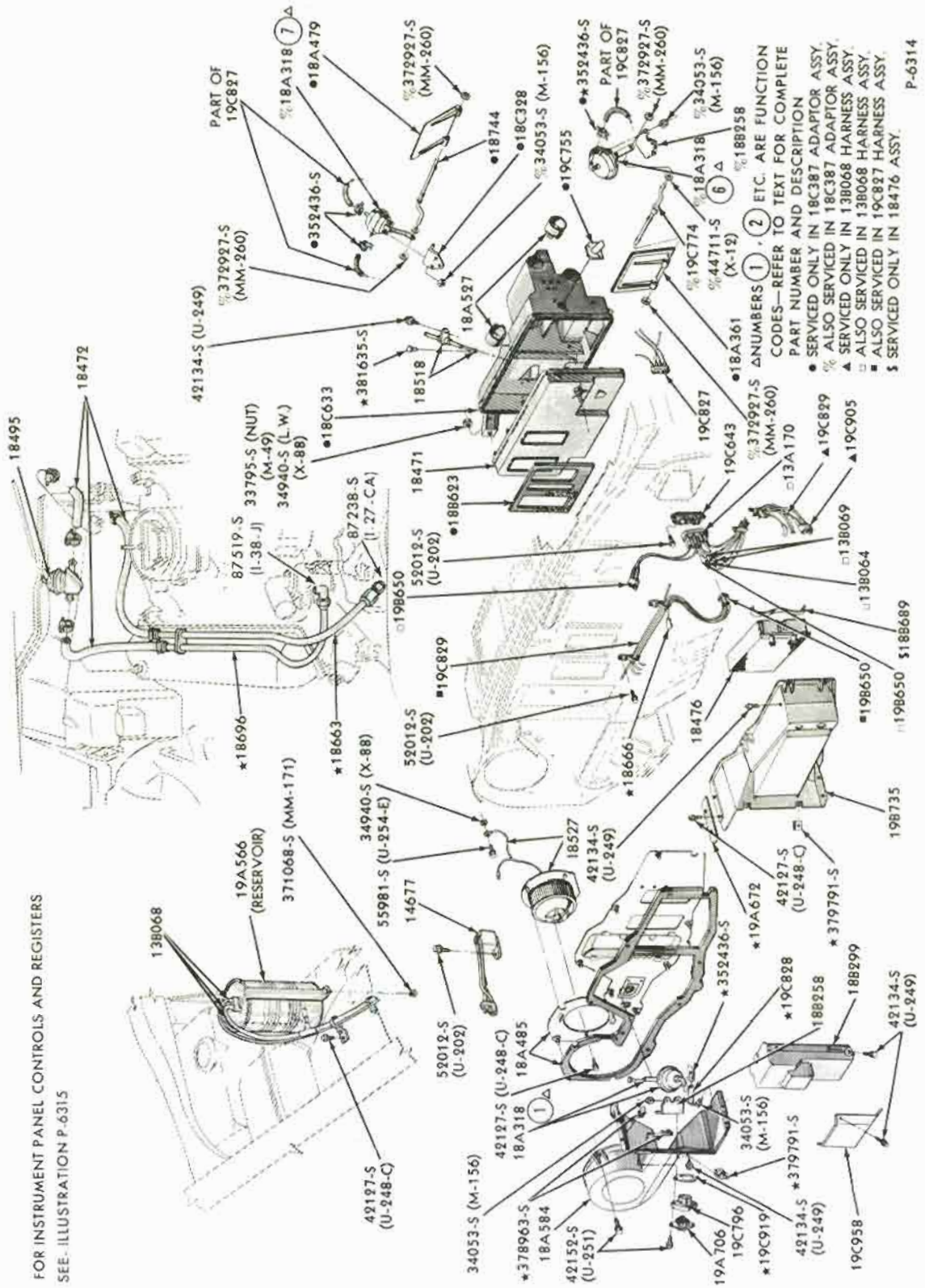

HEATER and RELATED PARTS
1968/71 THUNDERBIRD

COPYRIGHT © 1975 — FORD MOTOR COMPANY — DEARBORN, MICHIGAN

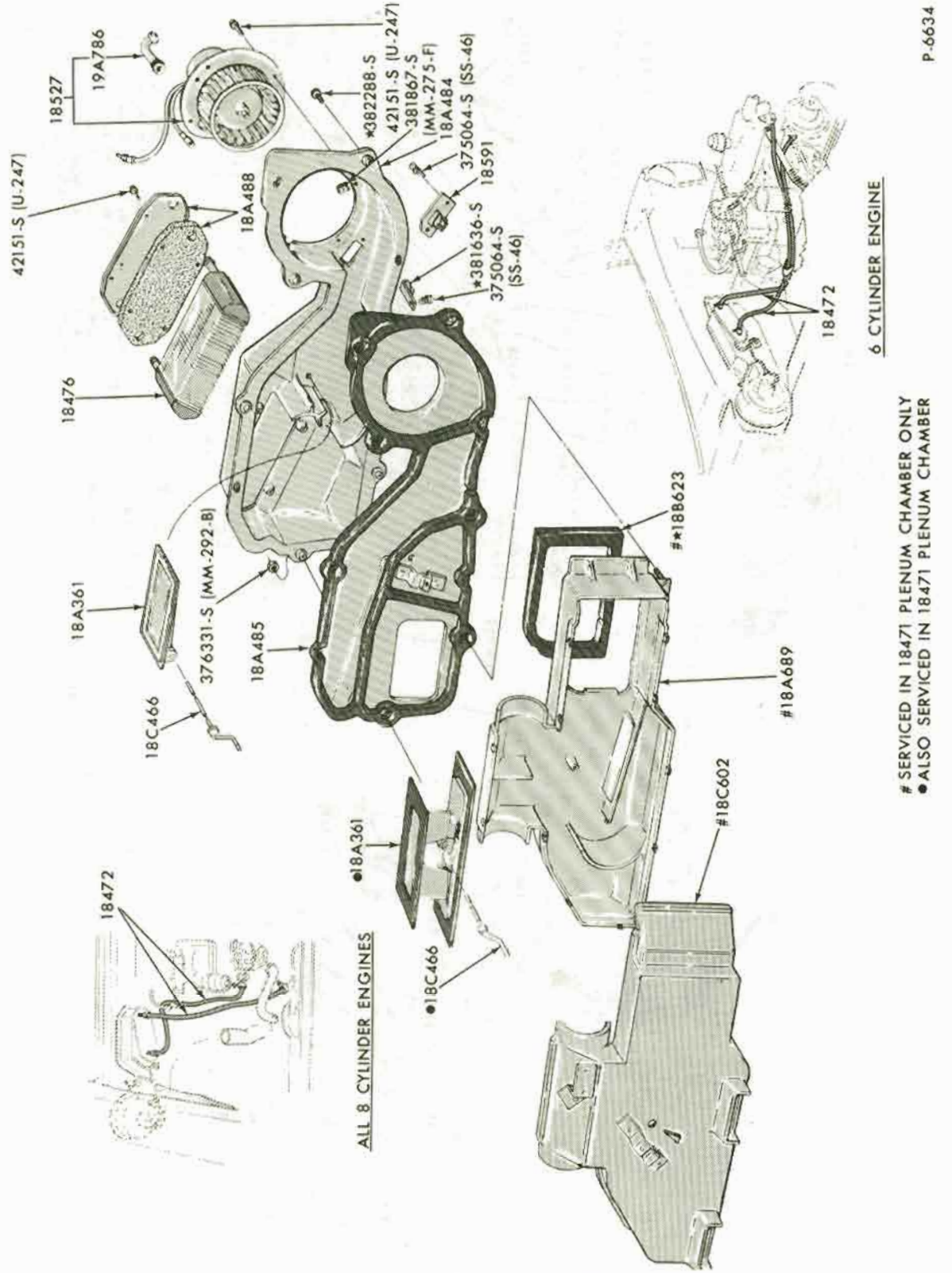

SERVICED IN 18471 PLENUM CHAMBER ONLY
• ALSO SERVICED IN 18471 PLENUM CHAMBER

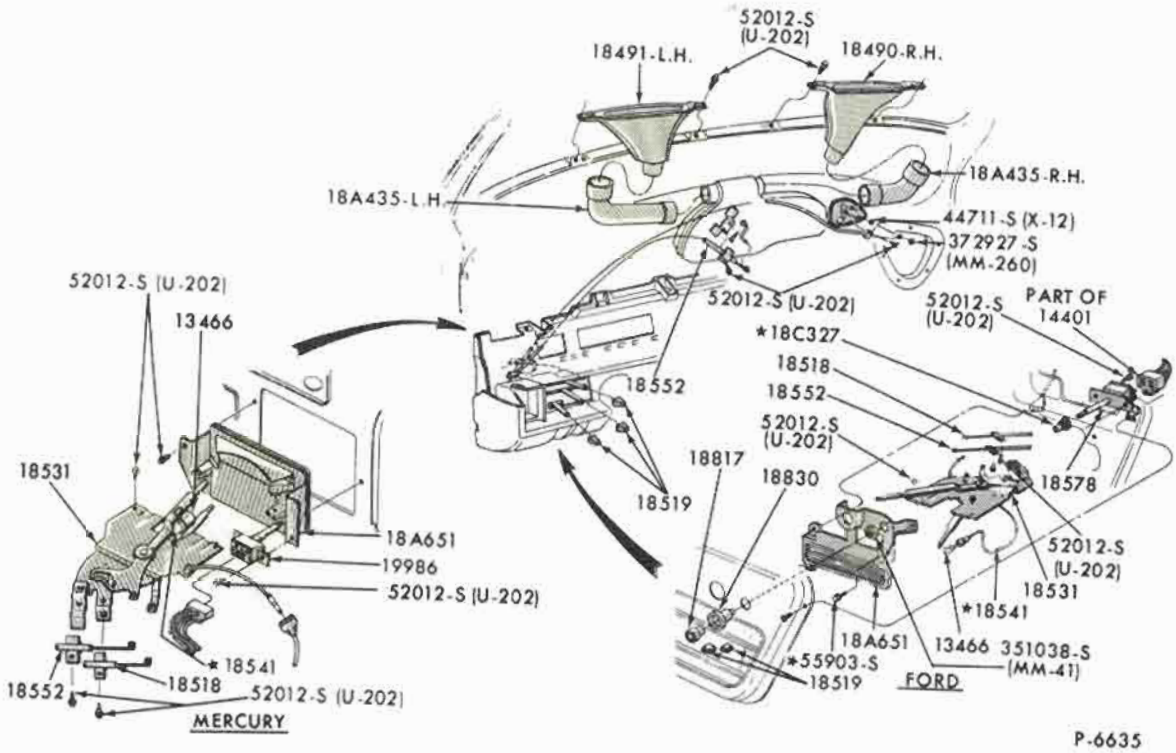

HEATER CONTROLS and RELATED PARTS
1969/70 FORD

COPYRIGHT © 1975 — FORD MOTOR COMPANY — DEARBORN, MICHIGAN

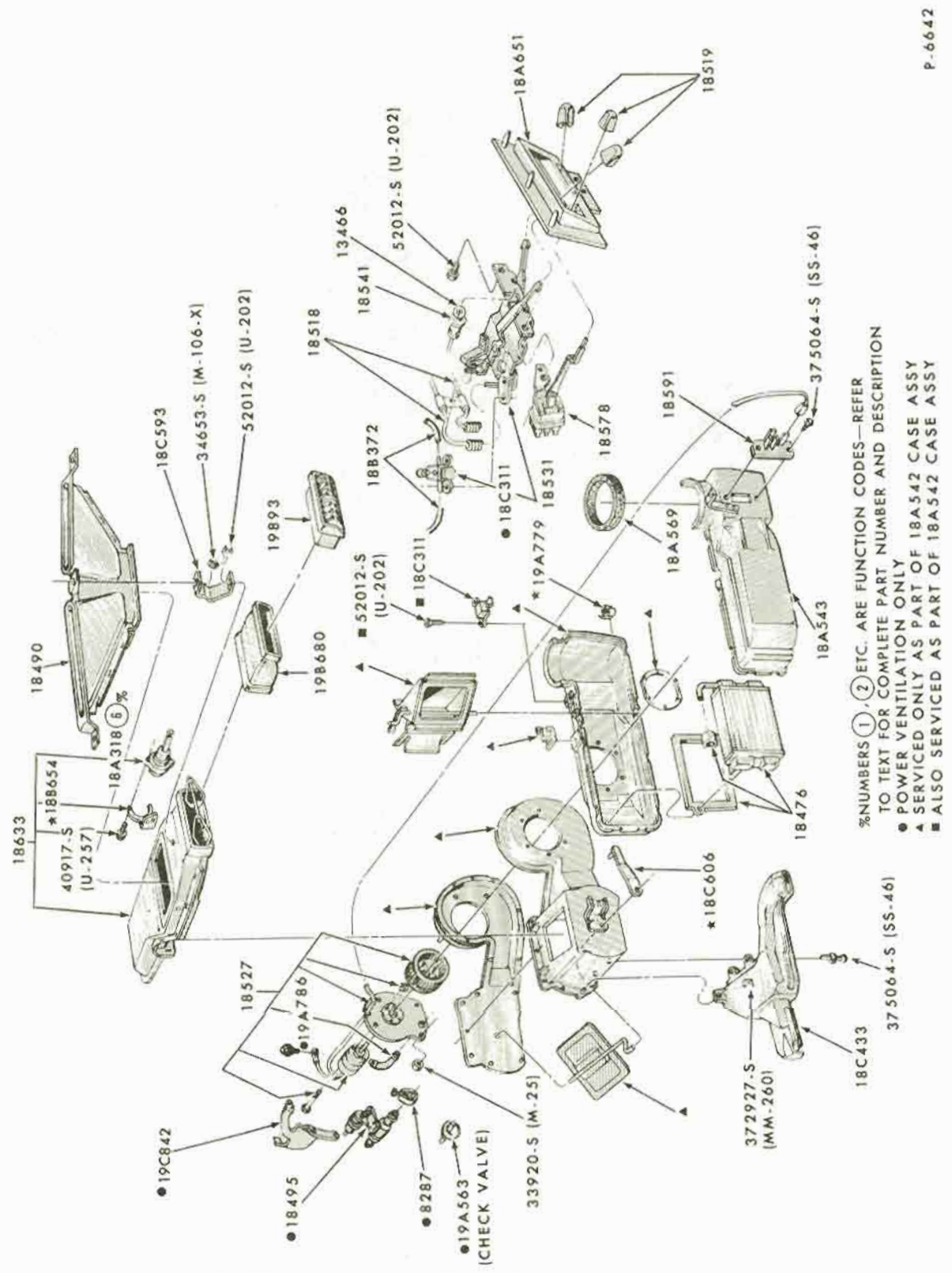

HEATER, FORCED VENTILATION SYSTEM and RELATED PARTS
1969/70 MUSTANG

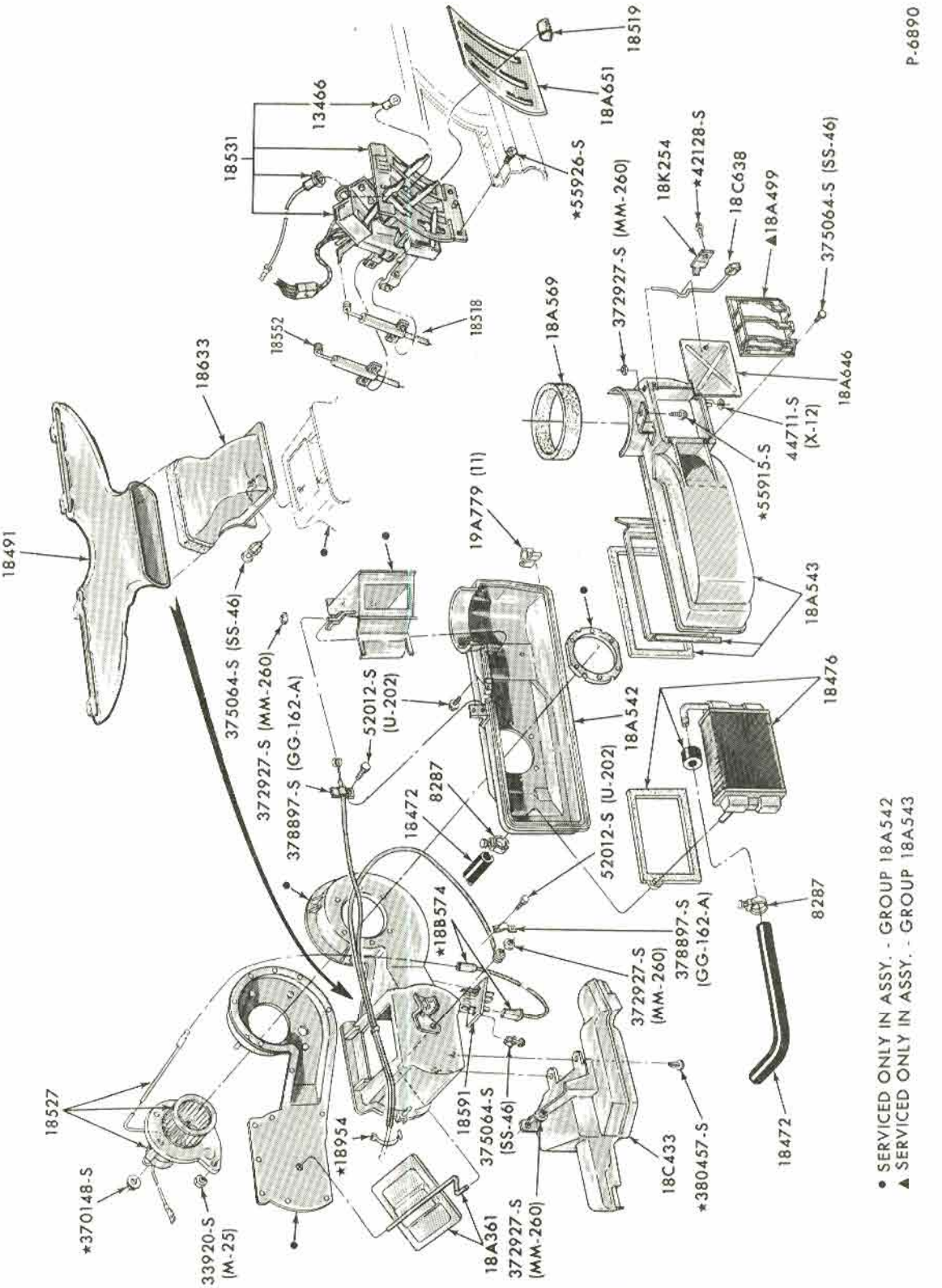

HEATER, CONTROLS and RELATED PARTS
1970/72 MAVERICK

COPYRIGHT © 1975— FORD MOTOR COMPANY — DEARBORN, MICHIGAN

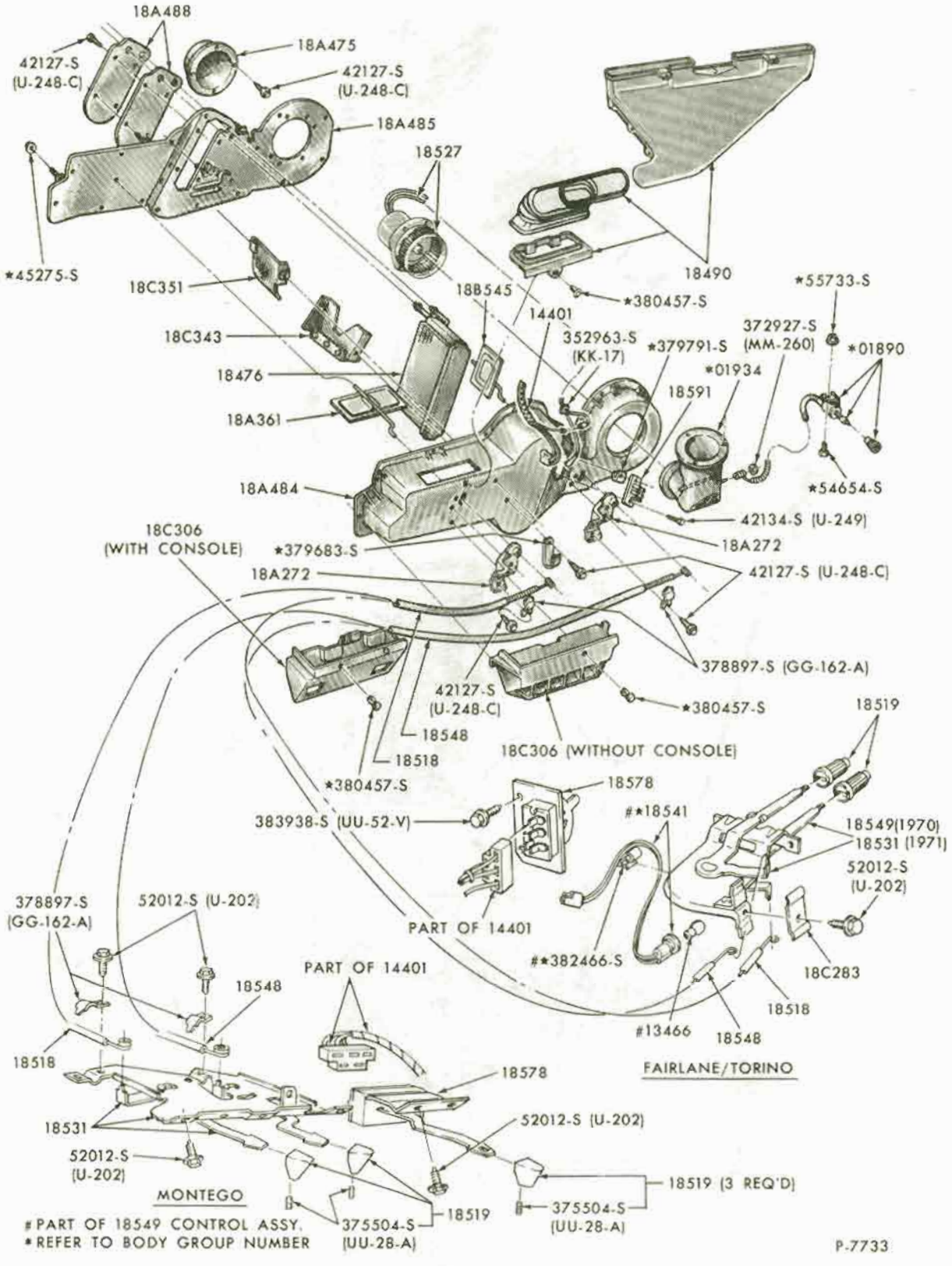

HEATER, CONTROLS and RELATED PARTS
1970/71 FAIRLANE/TORINO

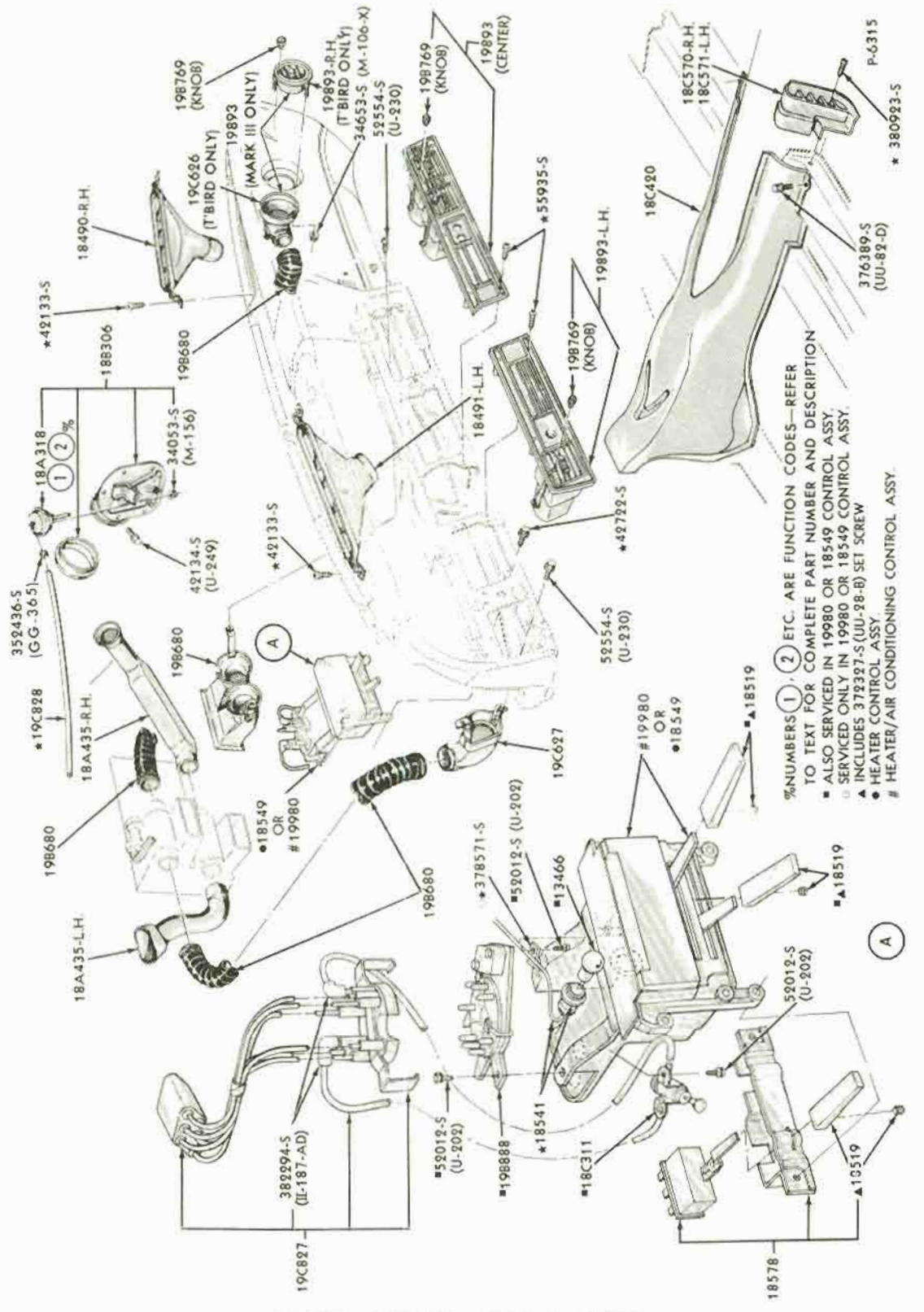

HEATER, CONTROLS and RELATED PARTS
1968/69 THUNDERBIRD

COPYRIGHT © 1975 — FORD MOTOR COMPANY — DEARBORN, MICHIGAN

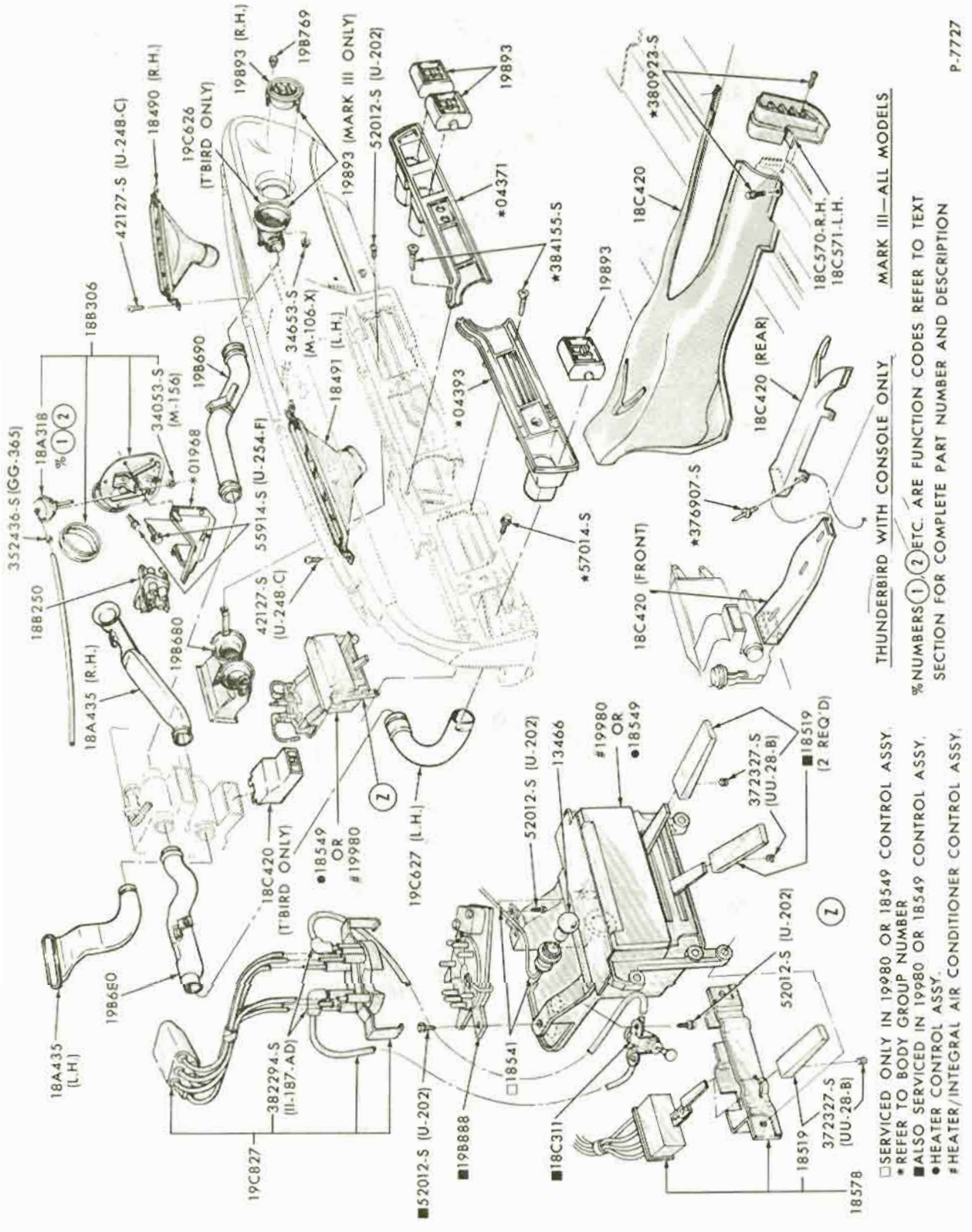

HEATER, CONTROLS and RELATED PARTS
1970/71 THUNDERBIRD

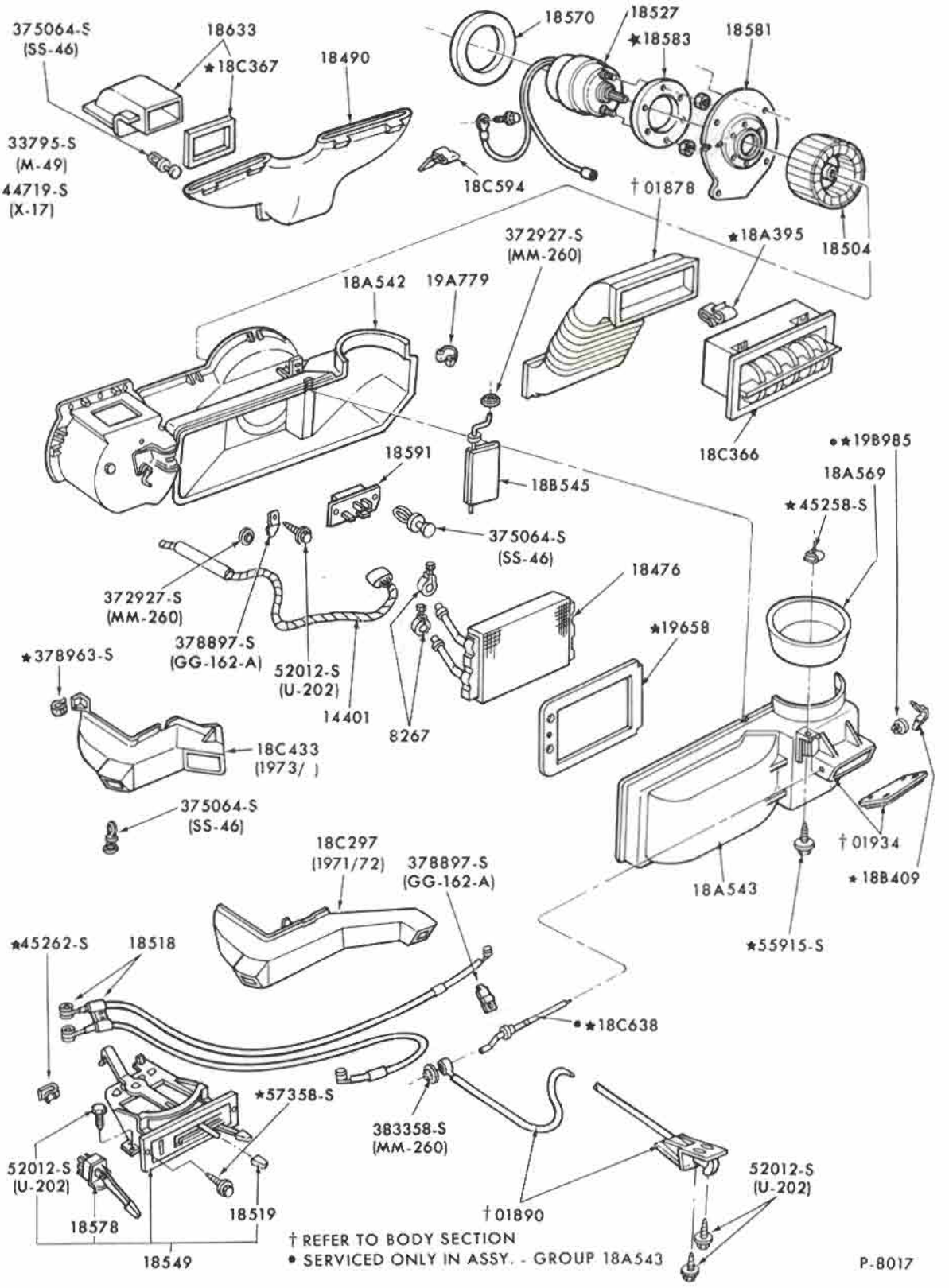

HEATER, CONTROLS and RELATED PARTS
1971/72 PINTO

COPYRIGHT © 1975 — FORD MOTOR COMPANY — DEARBORN, MICHIGAN

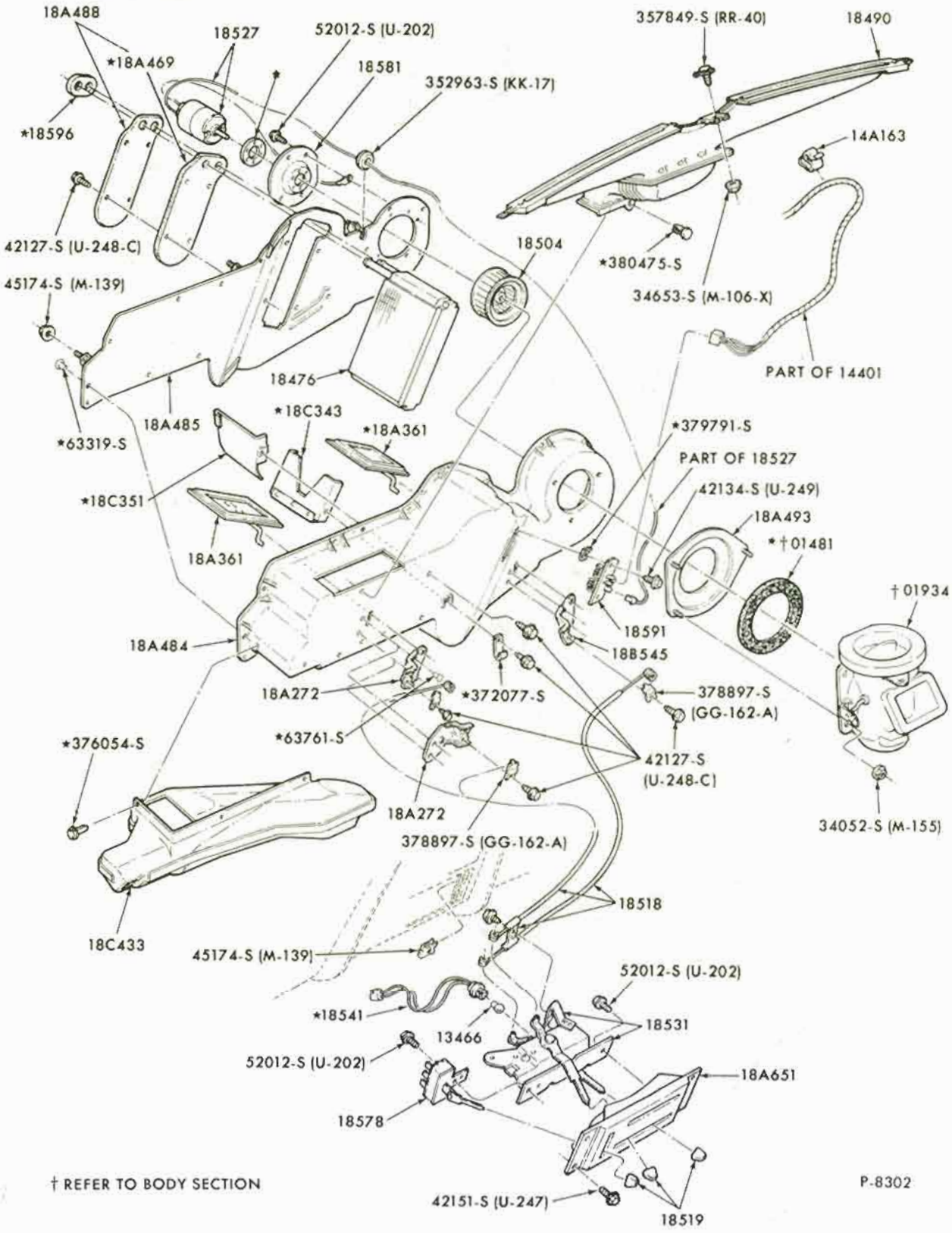

† REFER TO BODY SECTION

P-8302

HEATER, CONTROLS and RELATED PARTS
1971/72 MUSTANG

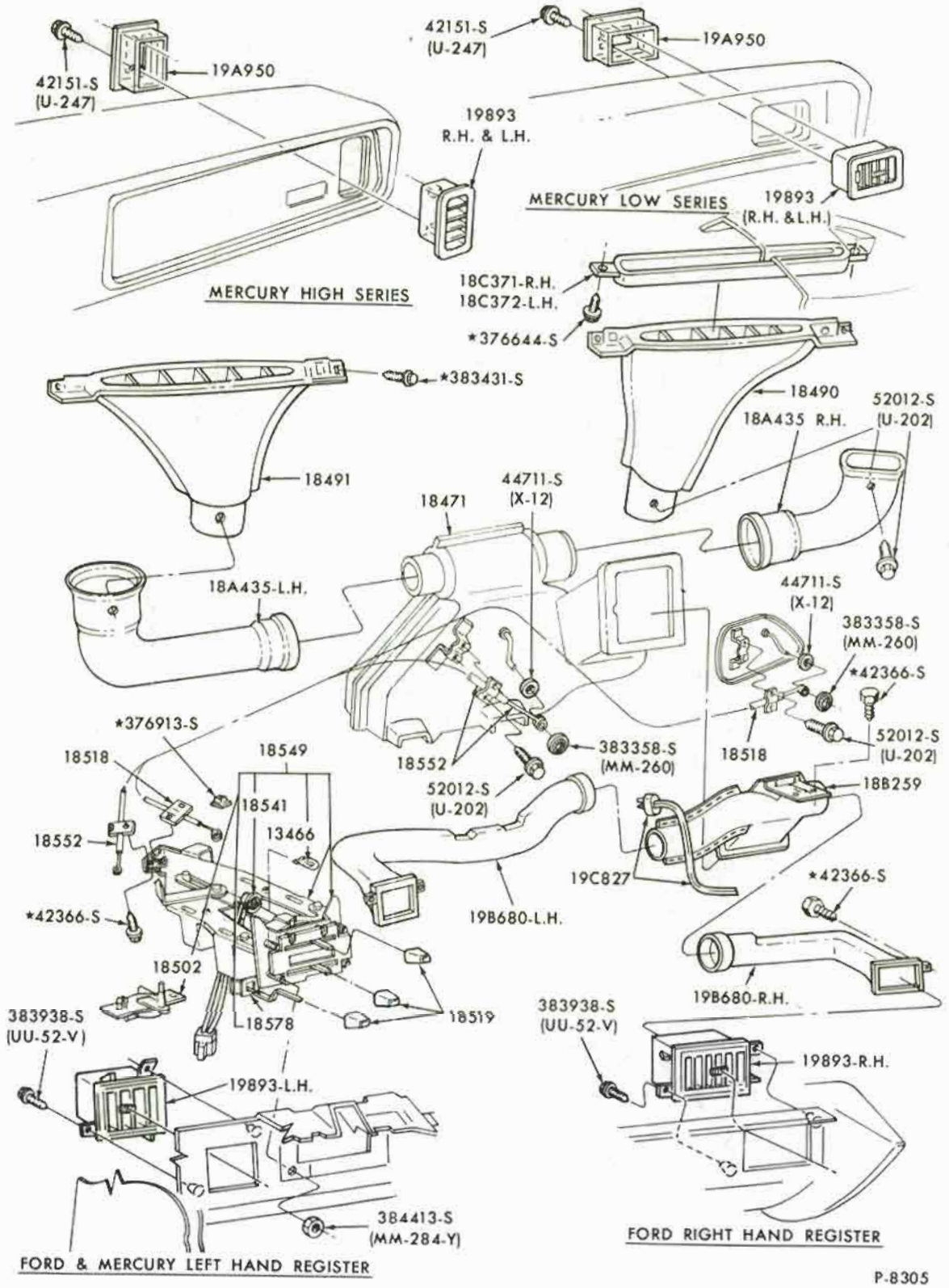

P-8305

May, 1975 COPYRIGHT © 1975 — FORD MOTOR COMPANY — DEARBORN, MICHIGAN

ILLUSTRATION
SECTION 184

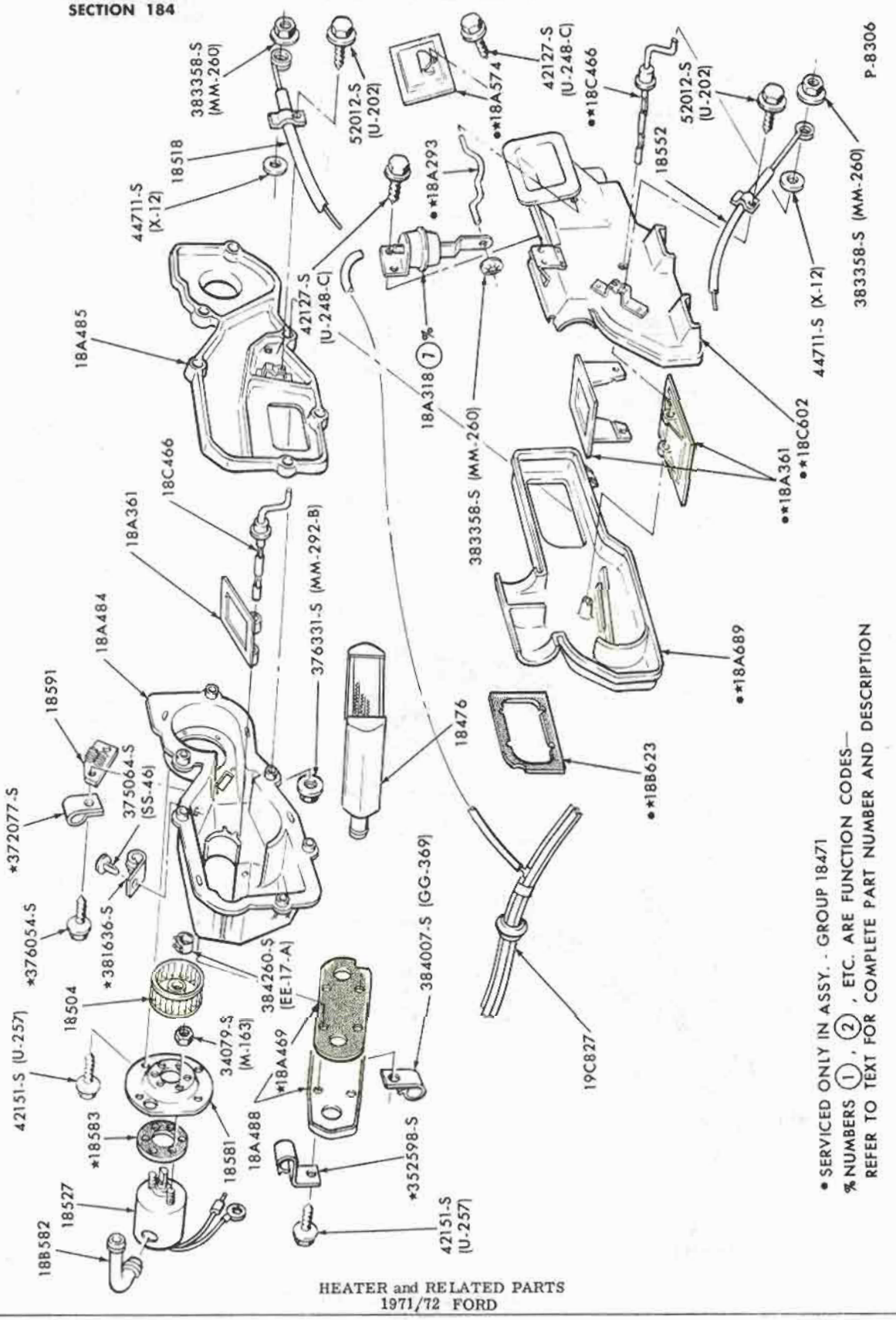

P-8306

• SERVICED ONLY IN ASSY. - GROUP 18471
% NUMBERS (1), (2), ETC. ARE FUNCTION CODES—
REFER TO TEXT FOR COMPLETE PART NUMBER AND DESCRIPTION

HEATER and RELATED PARTS
1971/72 FORD

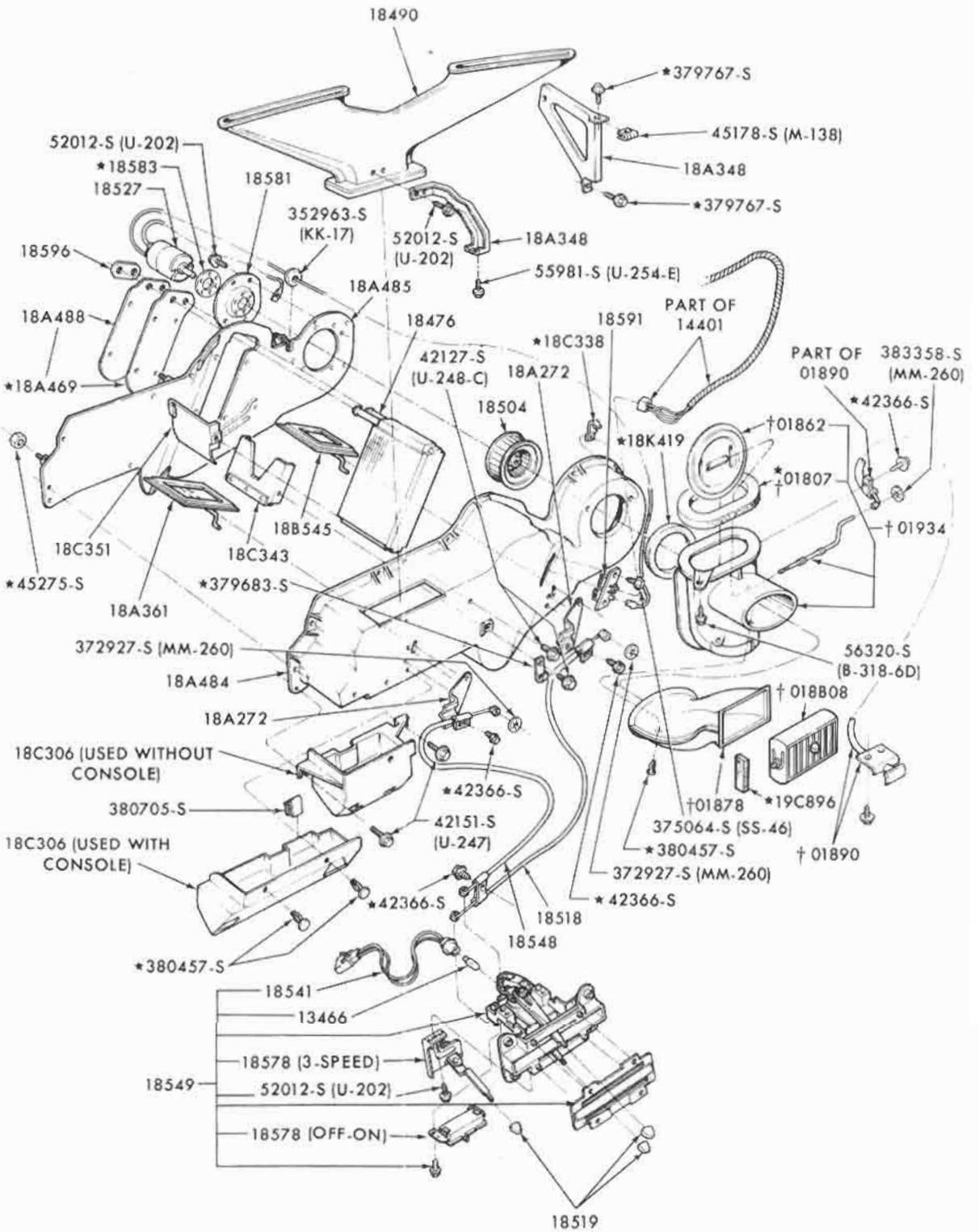

† REFER TO BODY SECTION

P-8804

HEATER CONTROLS and RELATED PARTS
1972 TORINO

COPYRIGHT © 1975 — FORD MOTOR COMPANY — DEARBORN, MICHIGAN

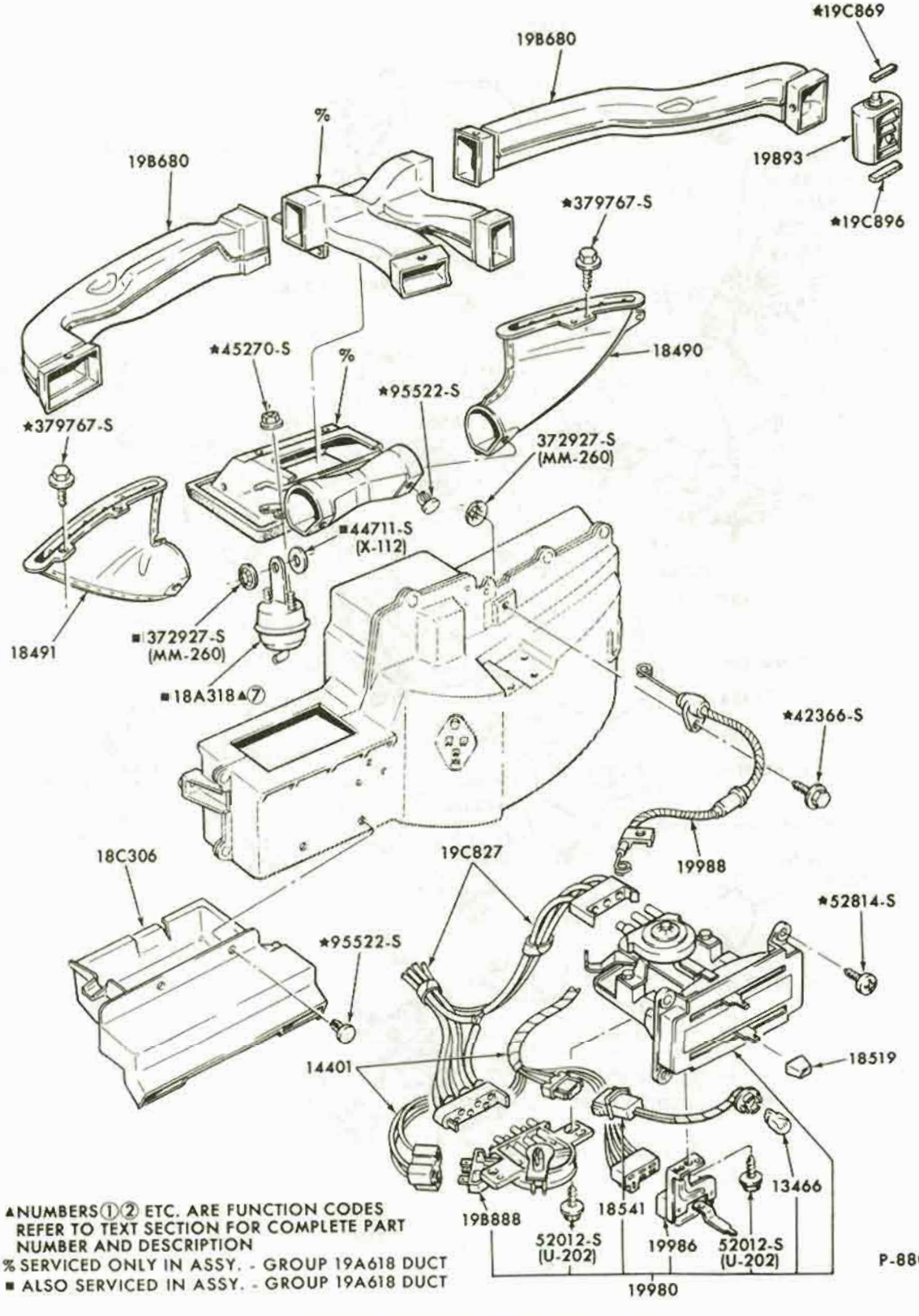

▲NUMBERS ① ② ETC. ARE FUNCTION CODES
REFER TO TEXT SECTION FOR COMPLETE PART
NUMBER AND DESCRIPTION
% SERVICED ONLY IN ASSY. - GROUP 19A618 DUCT
■ ALSO SERVICED IN ASSY. - GROUP 19A618 DUCT

HEATER CONTROLS and RELATED PARTS
1972 THUNDERBIRD

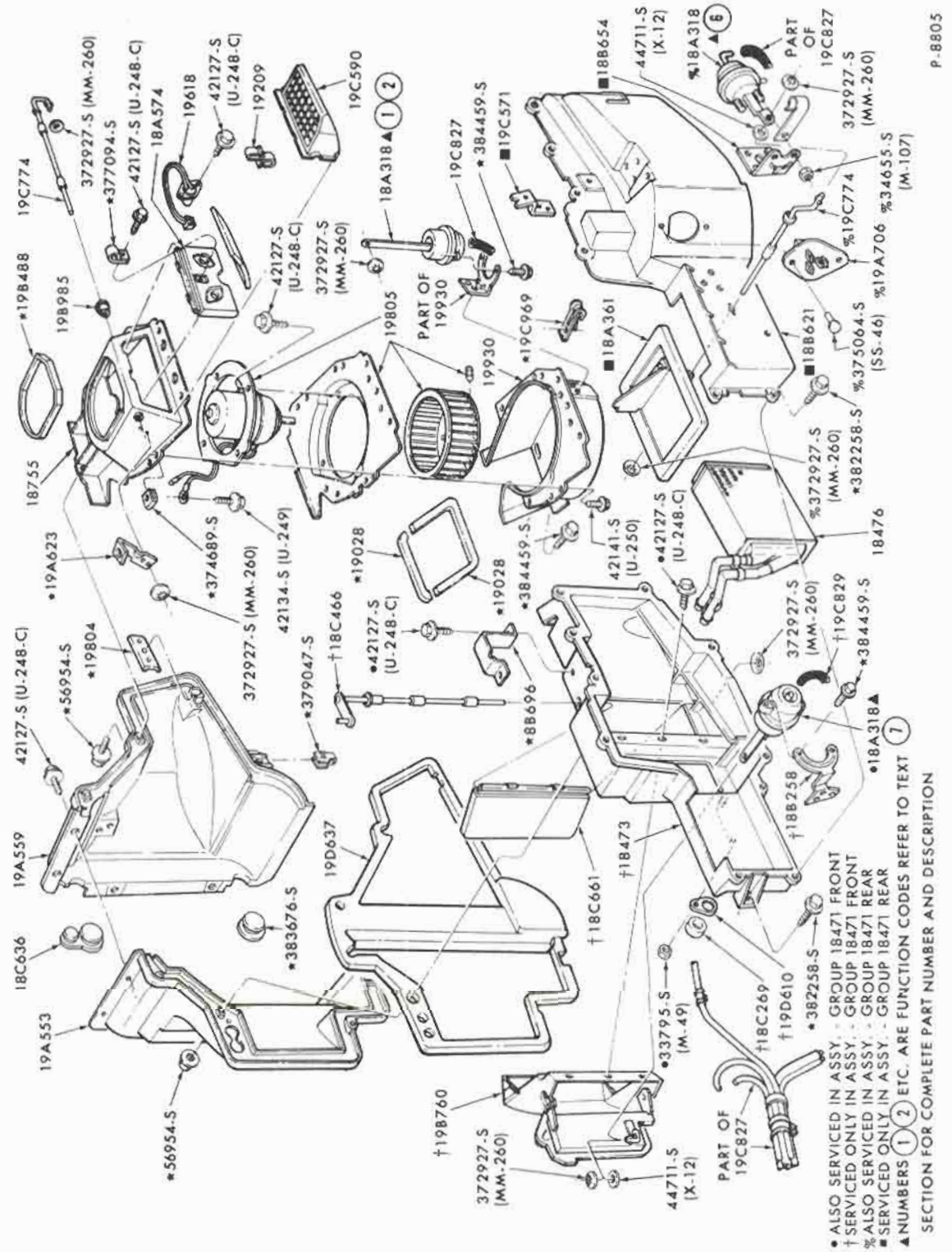

HEATER and RELATED PARTS
1972 THUNDERBIRD

COPYRIGHT © 1975 — FORD MOTOR COMPANY — DEARBORN, MICHIGAN

ILLUSTRATION
SECTION 184

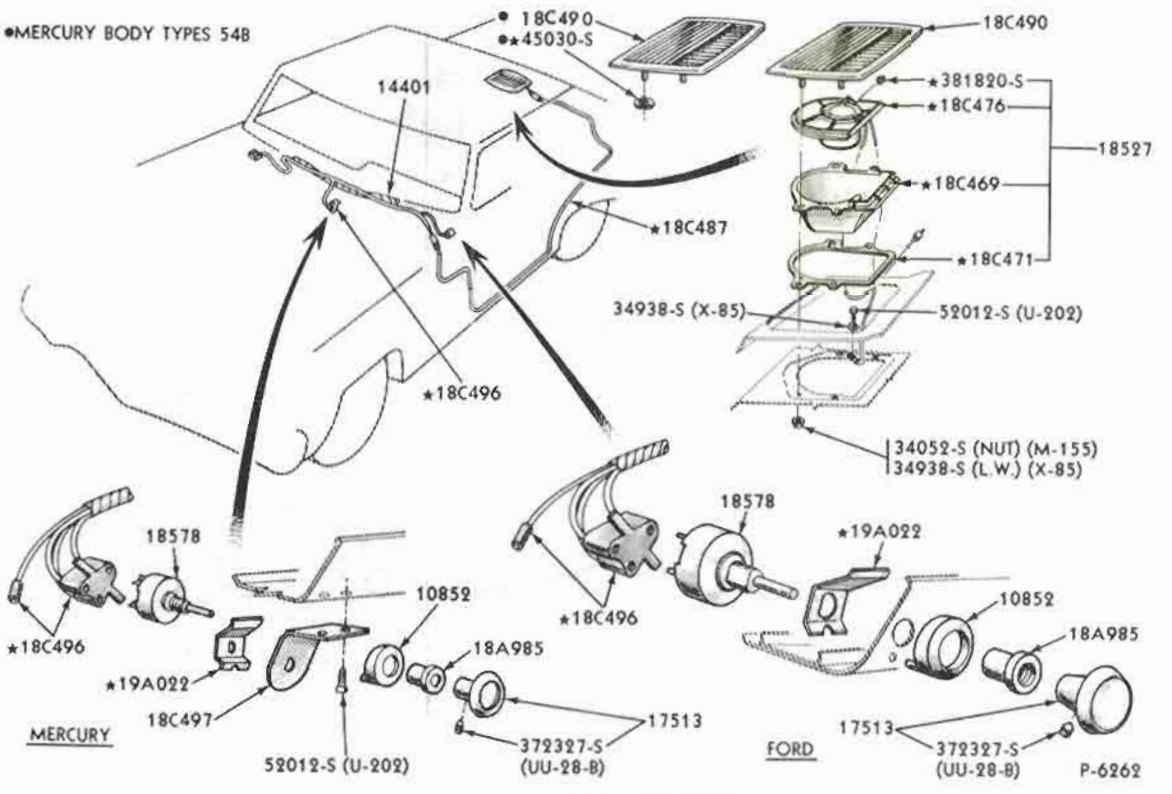

REAR WINDOW DEFOGGER and RELATED PARTS
1968 FORD

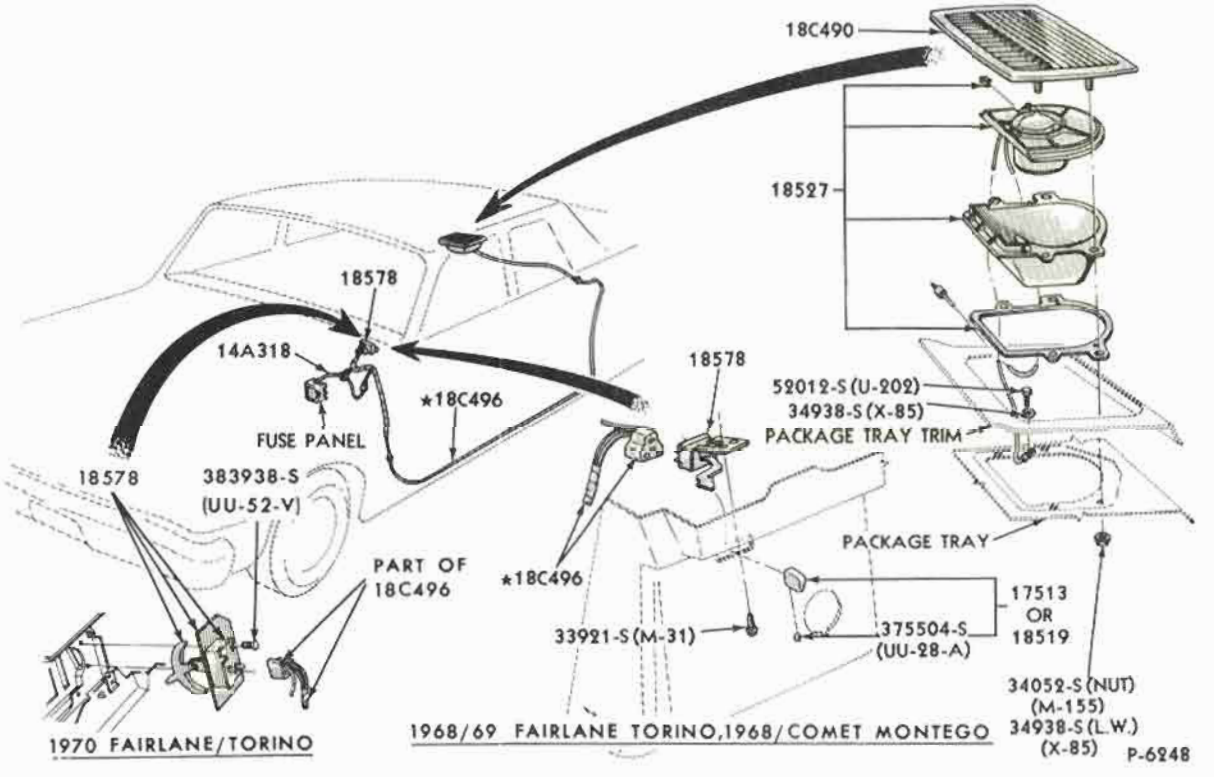

REAR WINDOW DEFOGGER and RELATED PARTS
1968/71 FAIRLANE/TORINO and 1968/70 FALCON

COPYRIGHT © 1975 — FORD MOTOR COMPANY — DEARBORN, MICHIGAN

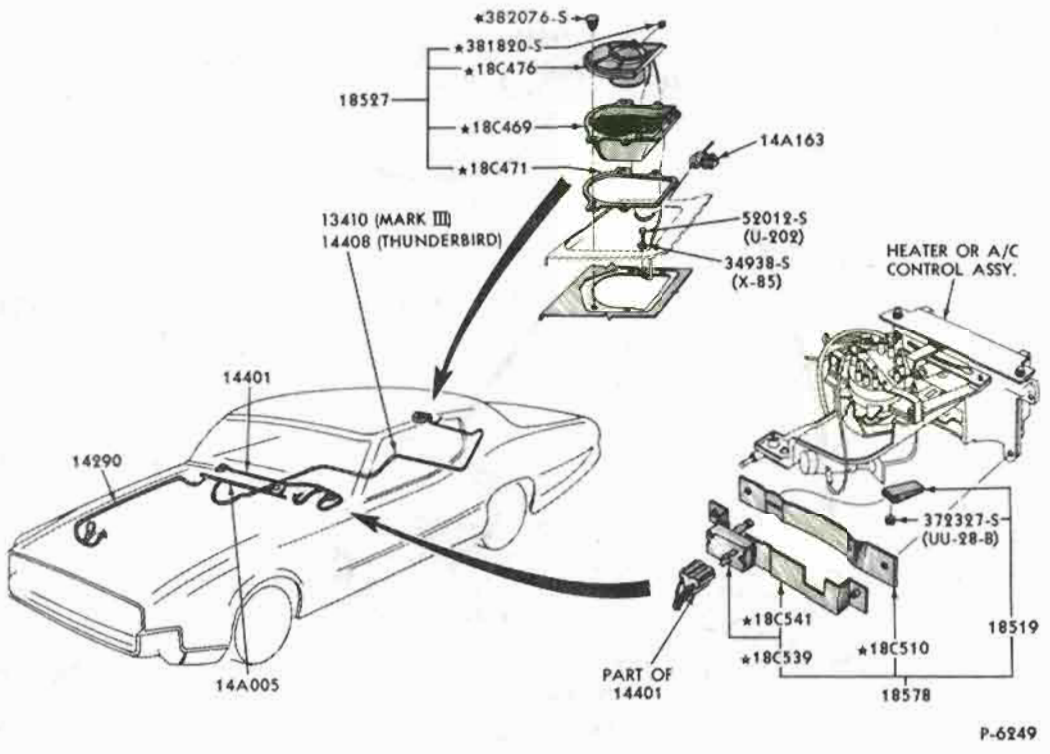

REAR WINDOW DEFOGGER and RELATED PARTS
1968/71 THUNDERBIRD

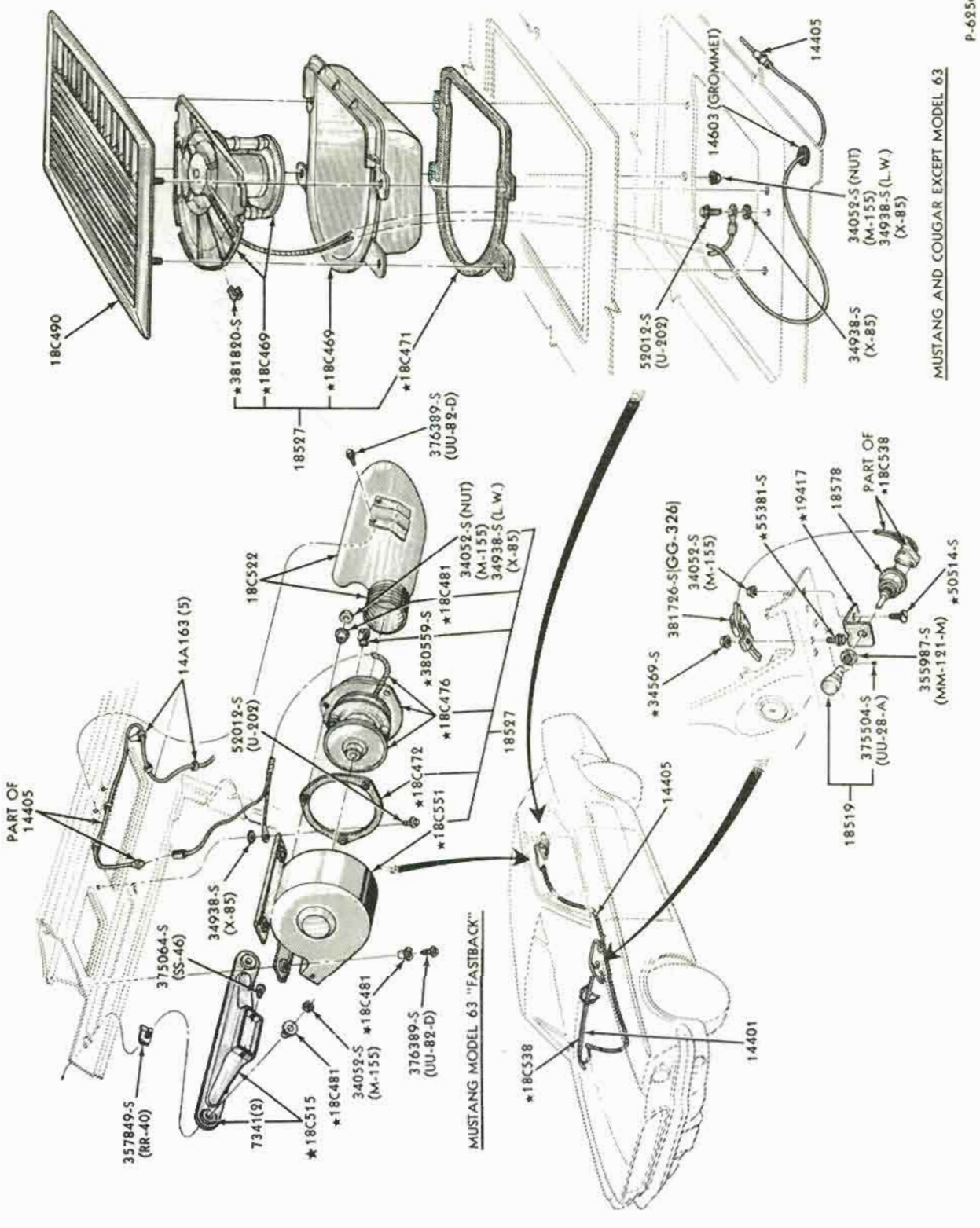

REAR WINDOW DEFOGGER and RELATED PARTS
1968 MUSTANG

COPYRIGHT © 1975 — FORD MOTOR COMPANY — DEARBORN, MICHIGAN

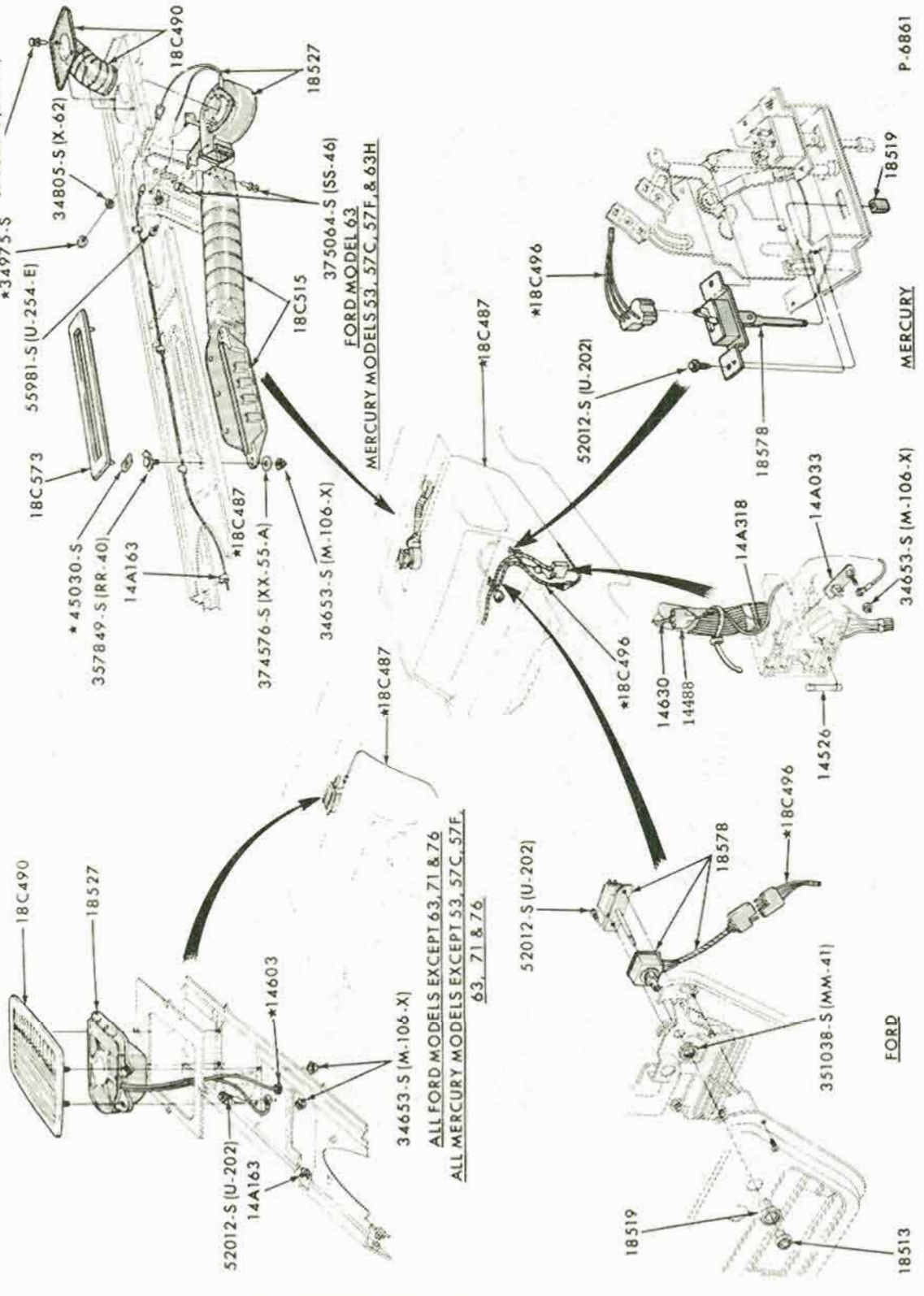

REAR WINDOW DEFOGGER and RELATED PARTS
1969/70 FORD

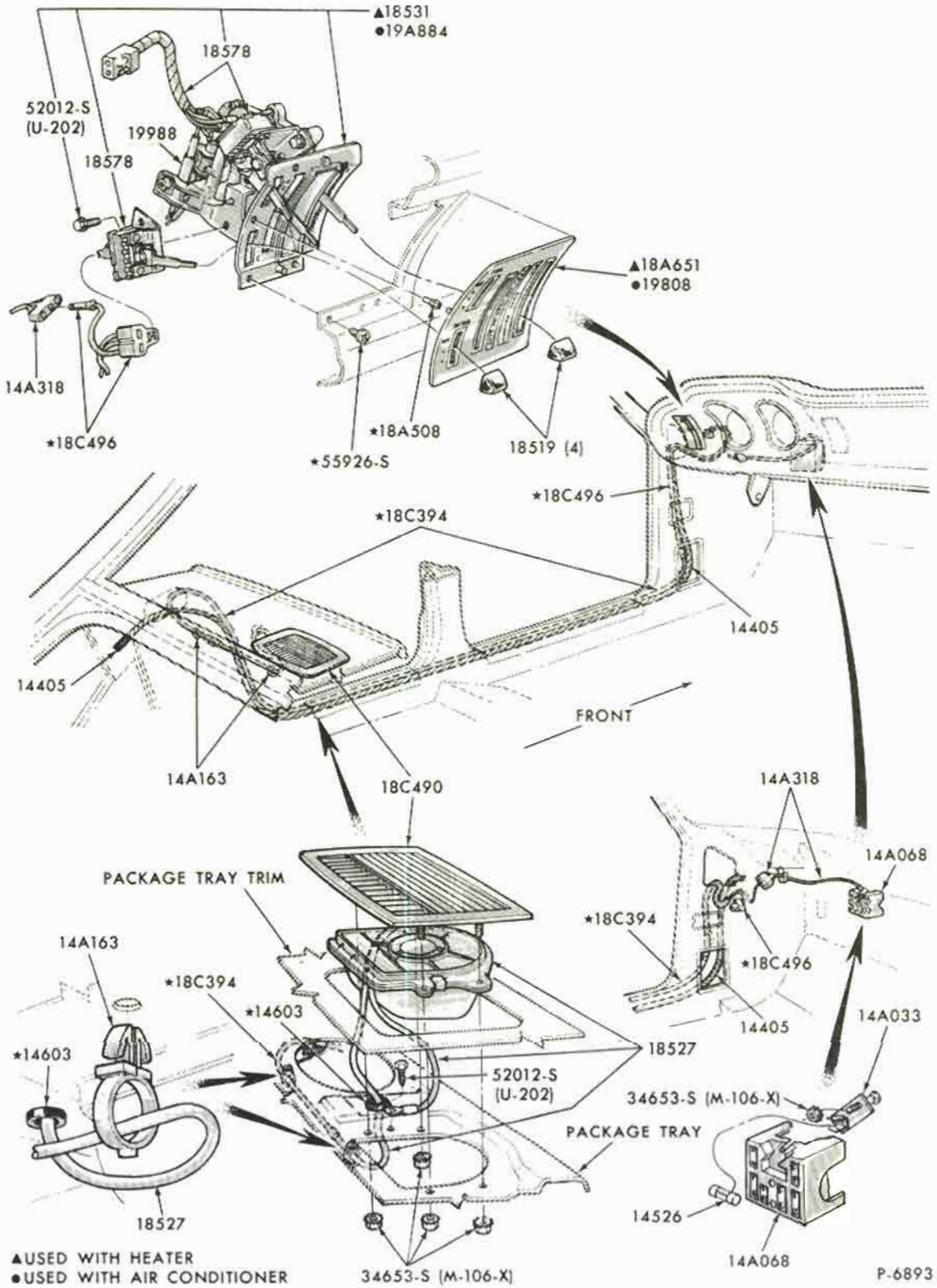

REAR WINDOW DEFOGGER and RELATED PARTS
1970/72 MAVERICK

COPYRIGHT © 1975 — FORD MOTOR COMPANY — DEARBORN, MICHIGAN

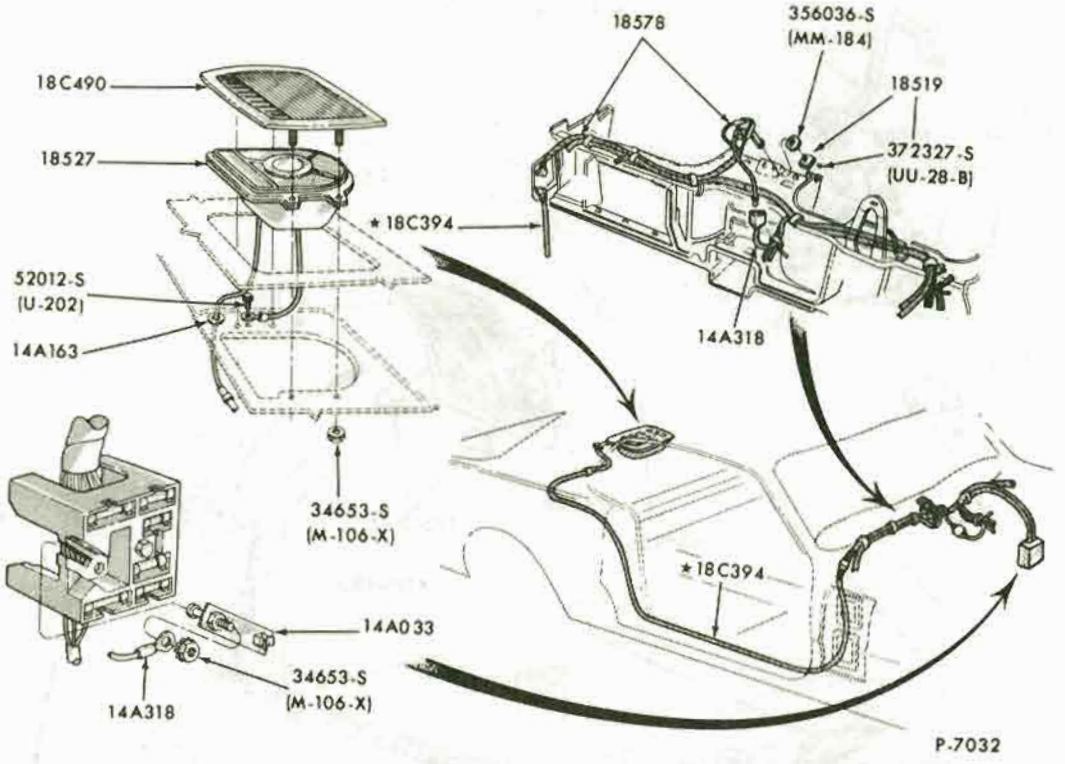

REAR WINDOW DEFOGGER and RELATED PARTS
1969/70 MUSTANG

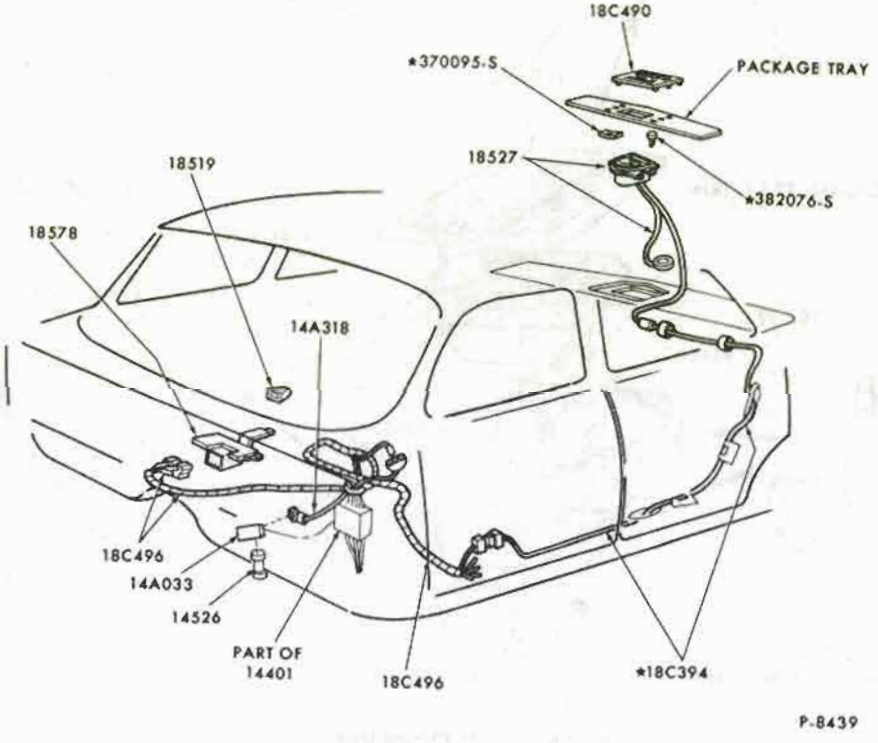

REAR WINDOW DEFOGGER and RELATED PARTS
1971/72 FORD

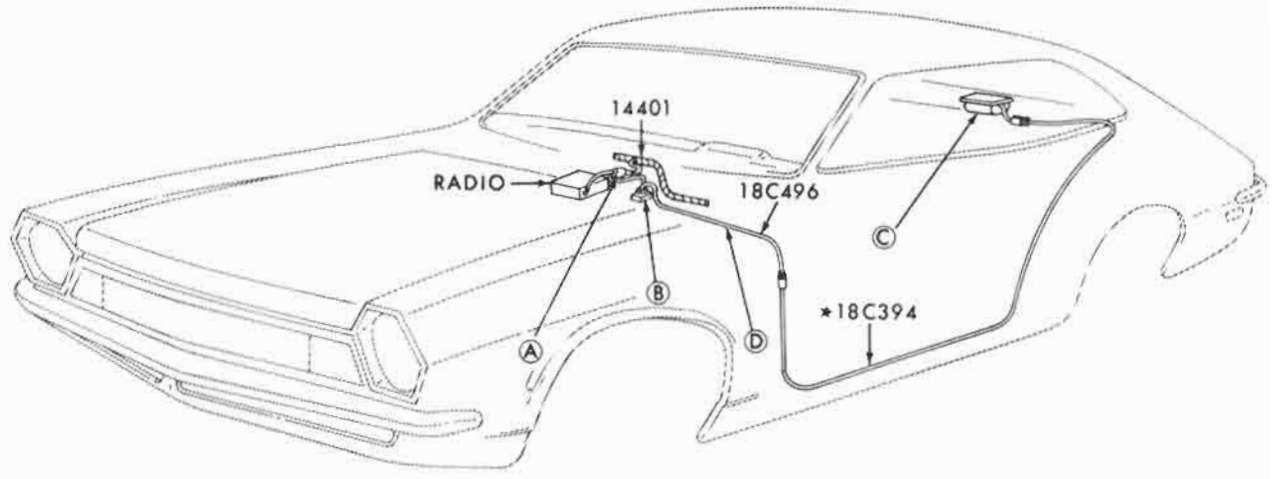

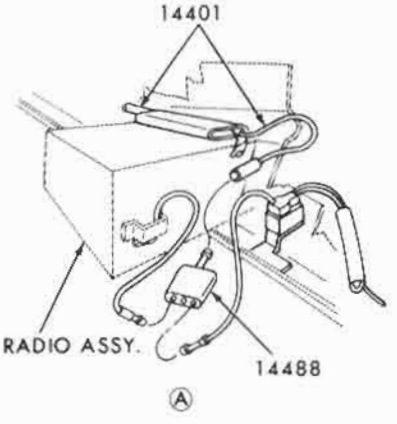

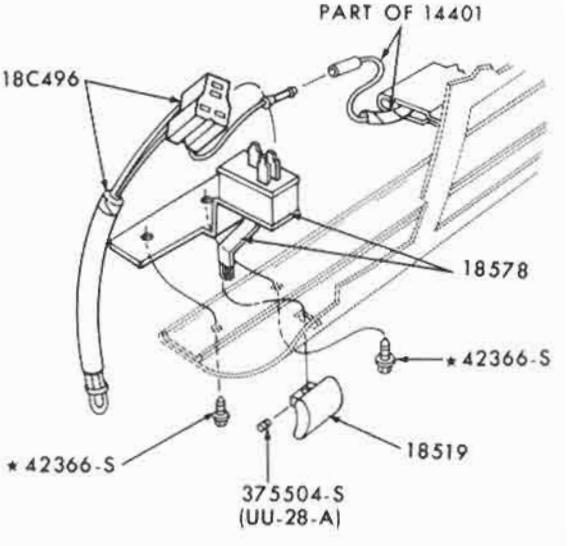

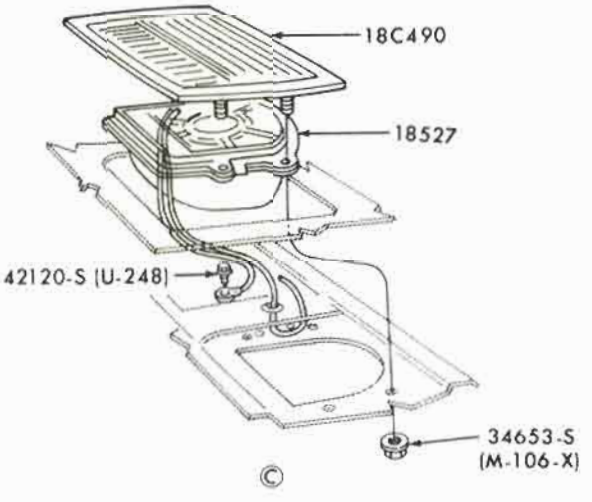

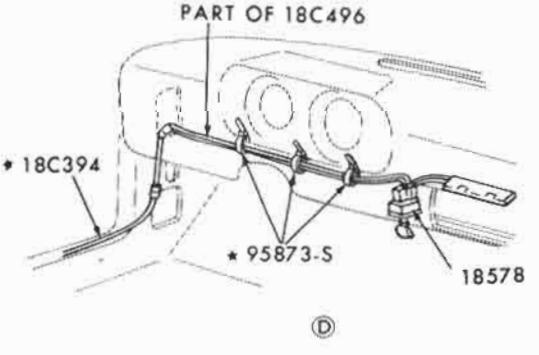

P-7968

COPYRIGHT © 1975 — FORD MOTOR COMPANY — DEARBORN, MICHIGAN

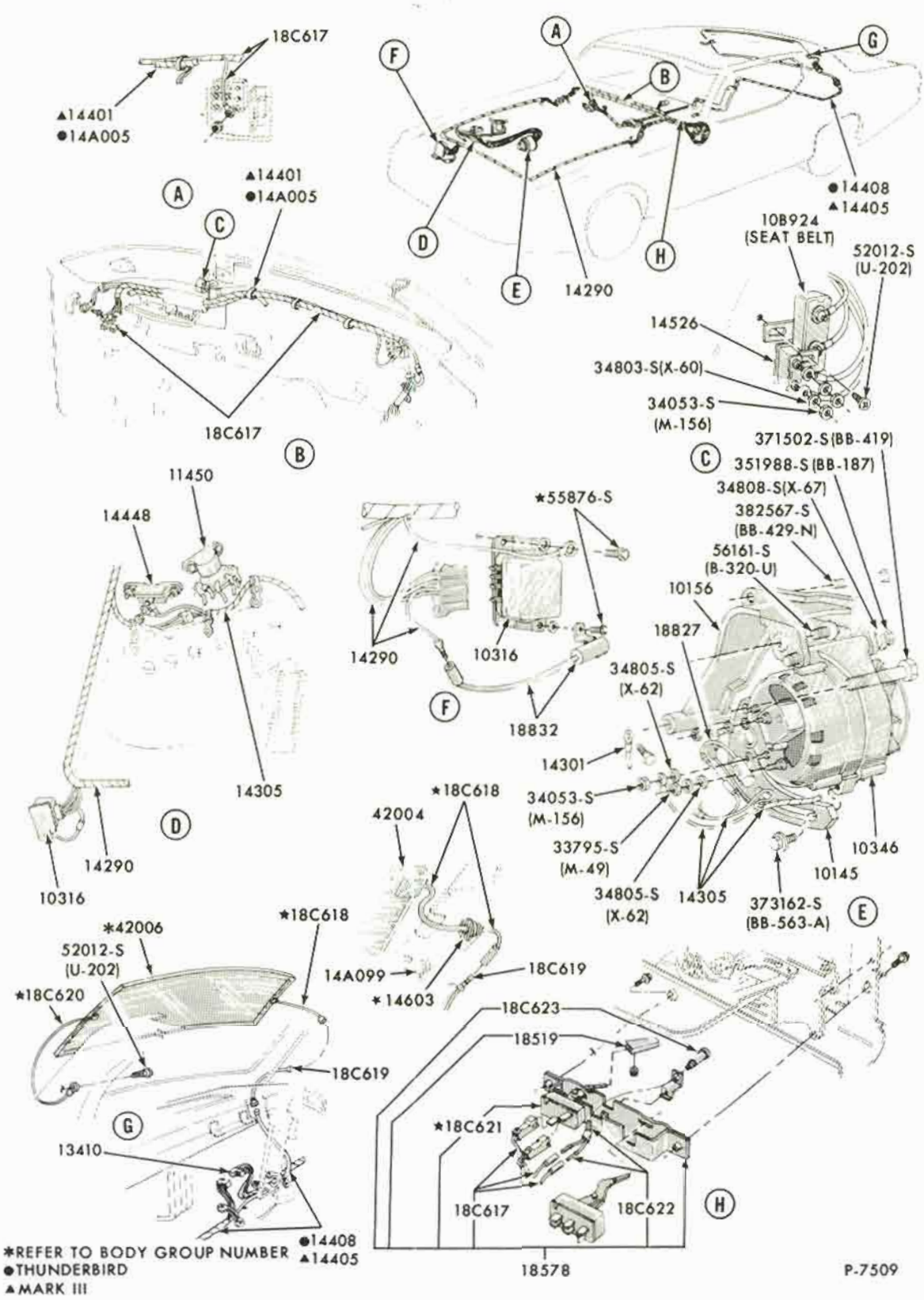

★REFER TO BODY GROUP NUMBER
●THUNDERBIRD
▲MARK III

HEATED BACK WINDOW (DEFROSTER)
1969 THUNDERBIRD

COPYRIGHT © 1975 — FORD MOTOR COMPANY — DEARBORN, MICHIGAN

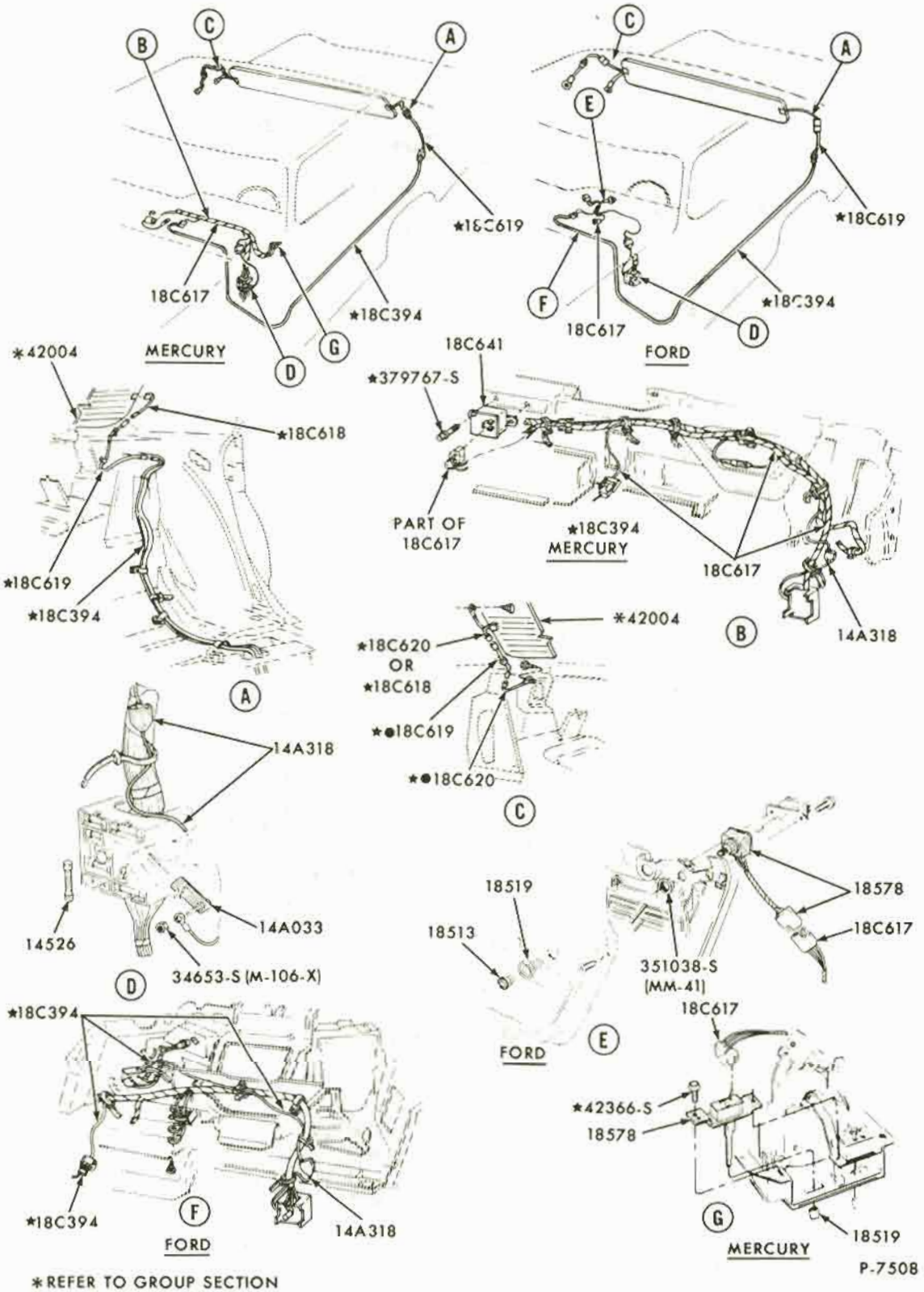

✱REFER TO GROUP SECTION
●BODY TYPE 54 ONLY (4-DOOR SEDAN)

P-7508

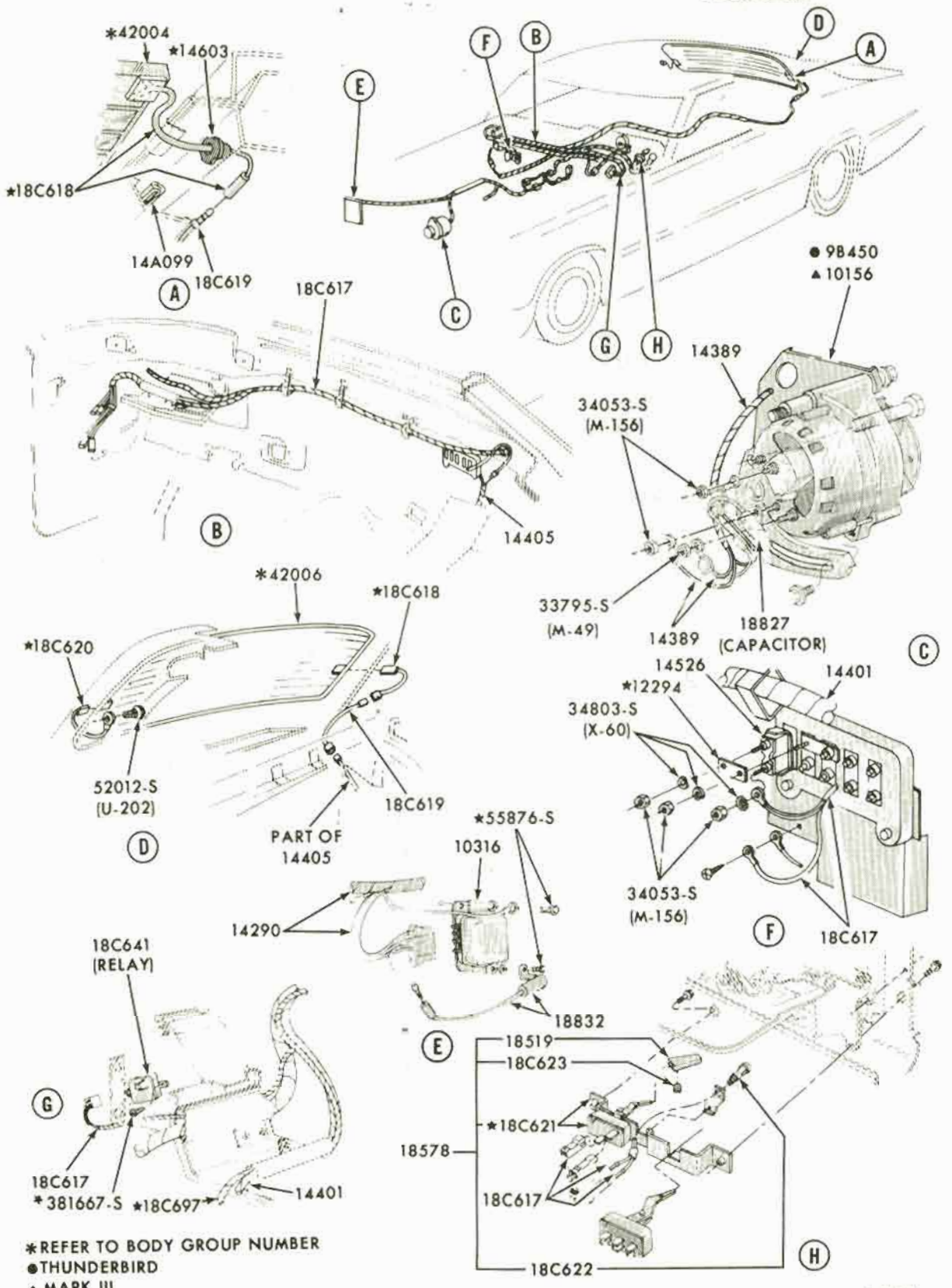

*REFER TO BODY GROUP NUMBER
●THUNDERBIRD
▲MARK III

P-7510

HEATED BACK WINDOW (DEFROSTER)
1970/71 THUNDERBIRD

COPYRIGHT © 1975 — FORD MOTOR COMPANY — DEARBORN, MICHIGAN

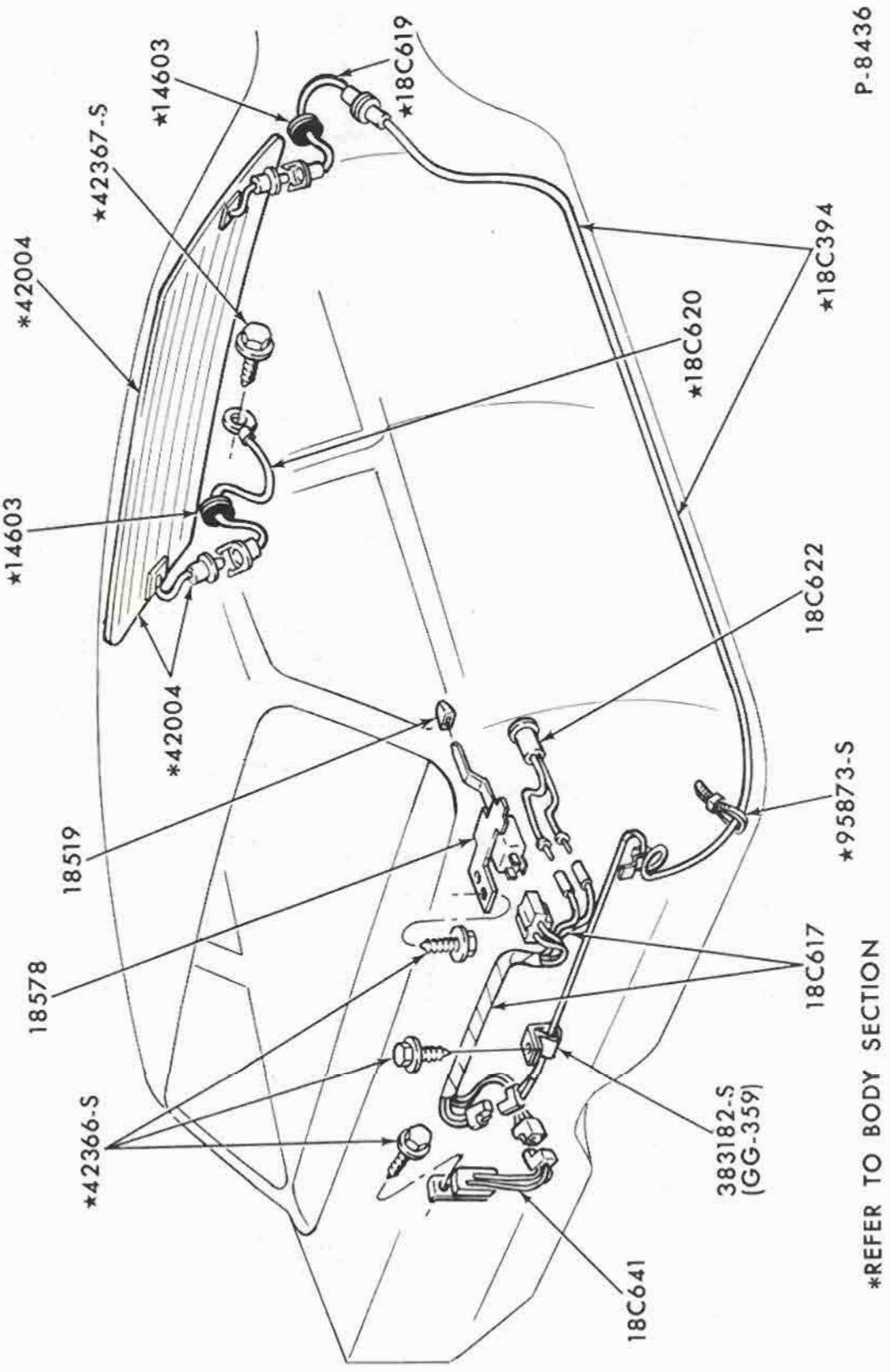

HEATED BACK WINDOW (DEFROSTER)
1971/72 FORD

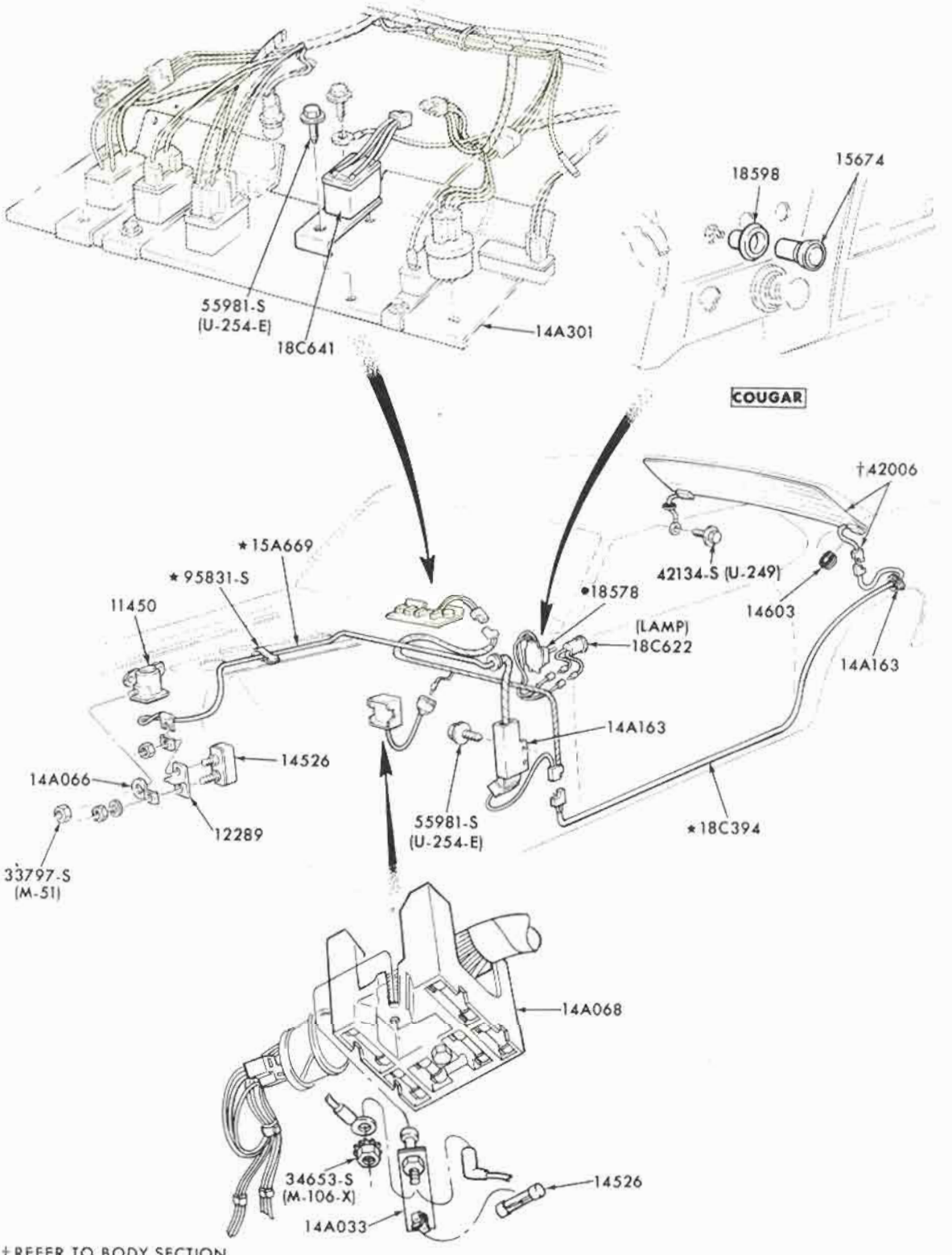

†REFER TO BODY SECTION
•COUGAR SWITCH ONLY—MUSTANG SWITCH AND KNOB

P-8431

HEATED BACK WINDOW (DEFROSTER)
1971/72 MUSTANG

COPYRIGHT © 1975 — FORD MOTOR COMPANY — DEARBORN, MICHIGAN

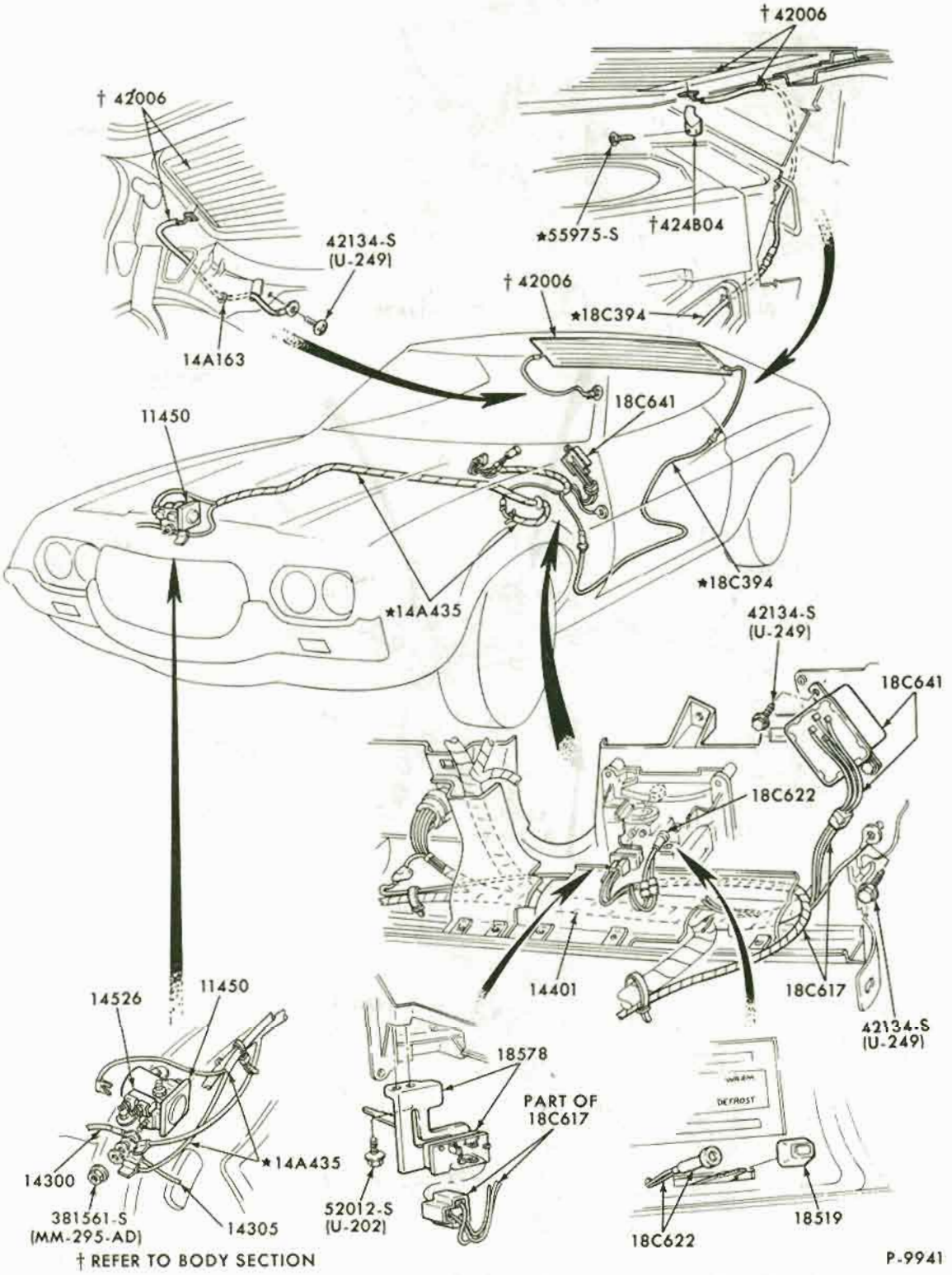

HEATED BACK WINDOW (DEFROSTER)
1972 TORINO

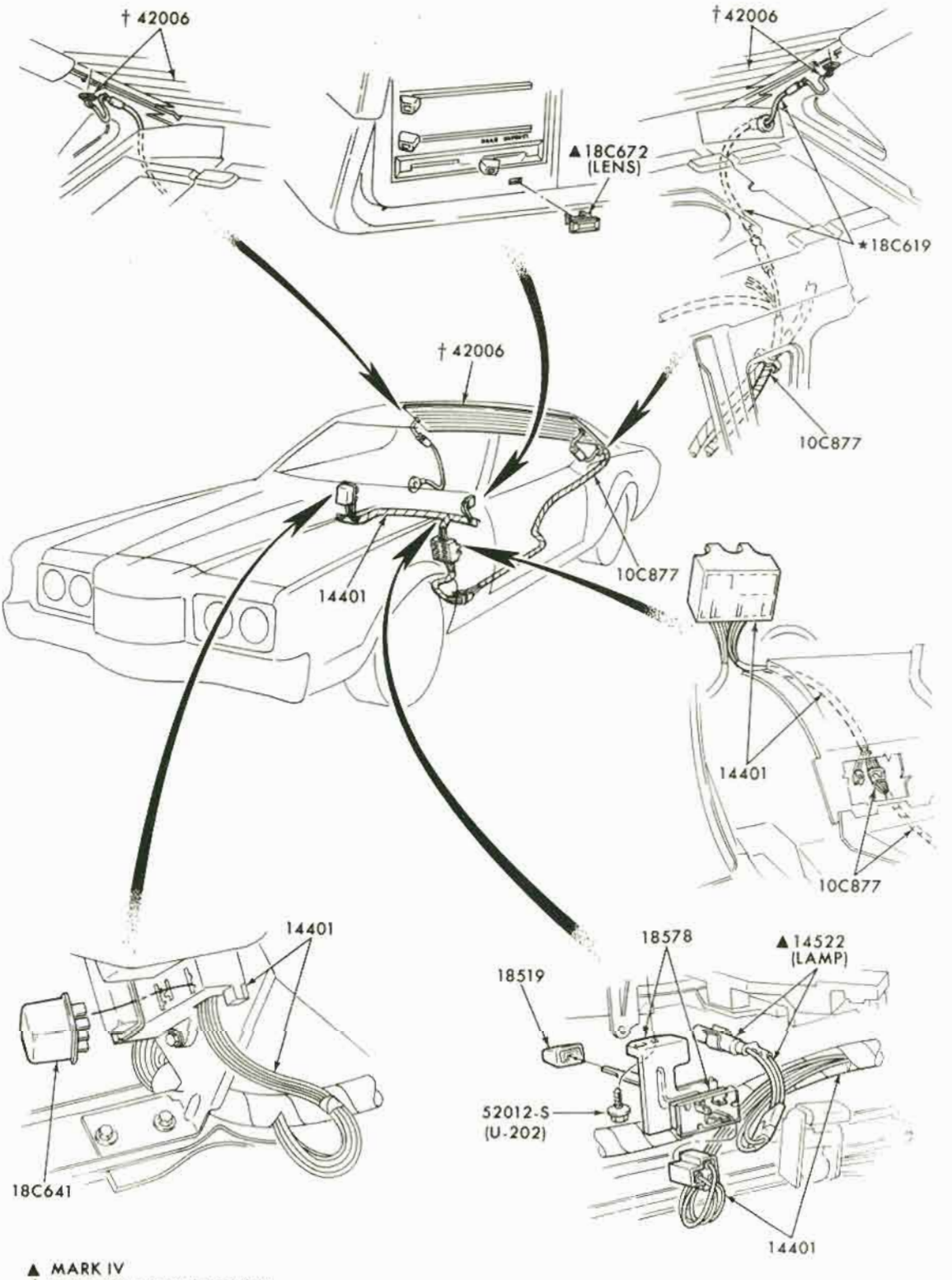

▲ MARK IV
† REFER TO BODY SECTION

P-9942

HEATED BACK WINDOW (DEFROSTER)
1972 THUNDERBIRD

COPYRIGHT © 1975 — FORD MOTOR COMPANY — DEARBORN, MICHIGAN

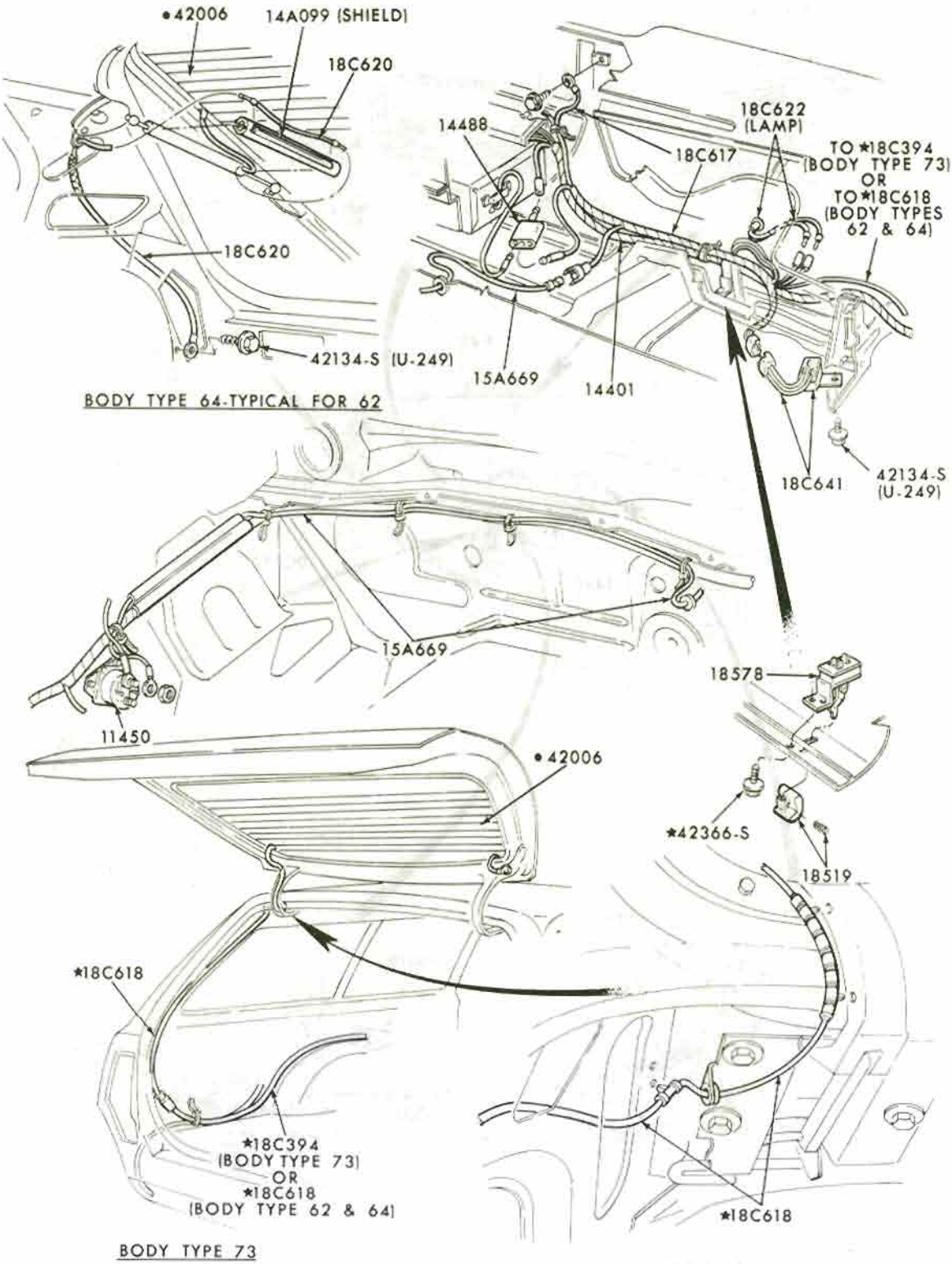

• REFER TO BODY SECTION

P-10166

HEATED BACK WINDOW (DEFROSTER)
1972 PINTO

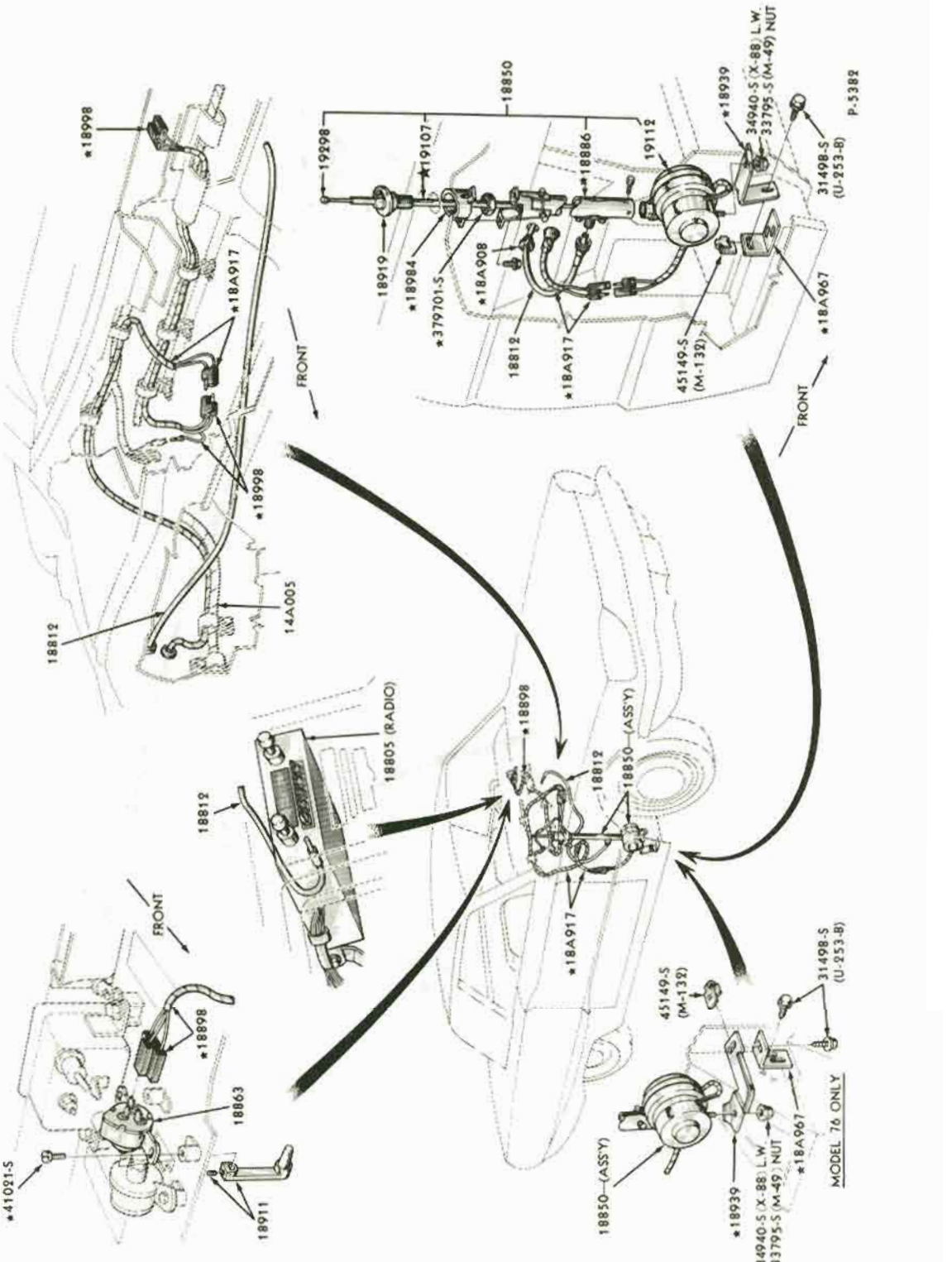

ANTENNA and RELATED PARTS - ELECTRIC
1965/66 THUNDERBIRD

COPYRIGHT © 1975 — FORD MOTOR COMPANY — DEARBORN, MICHIGAN

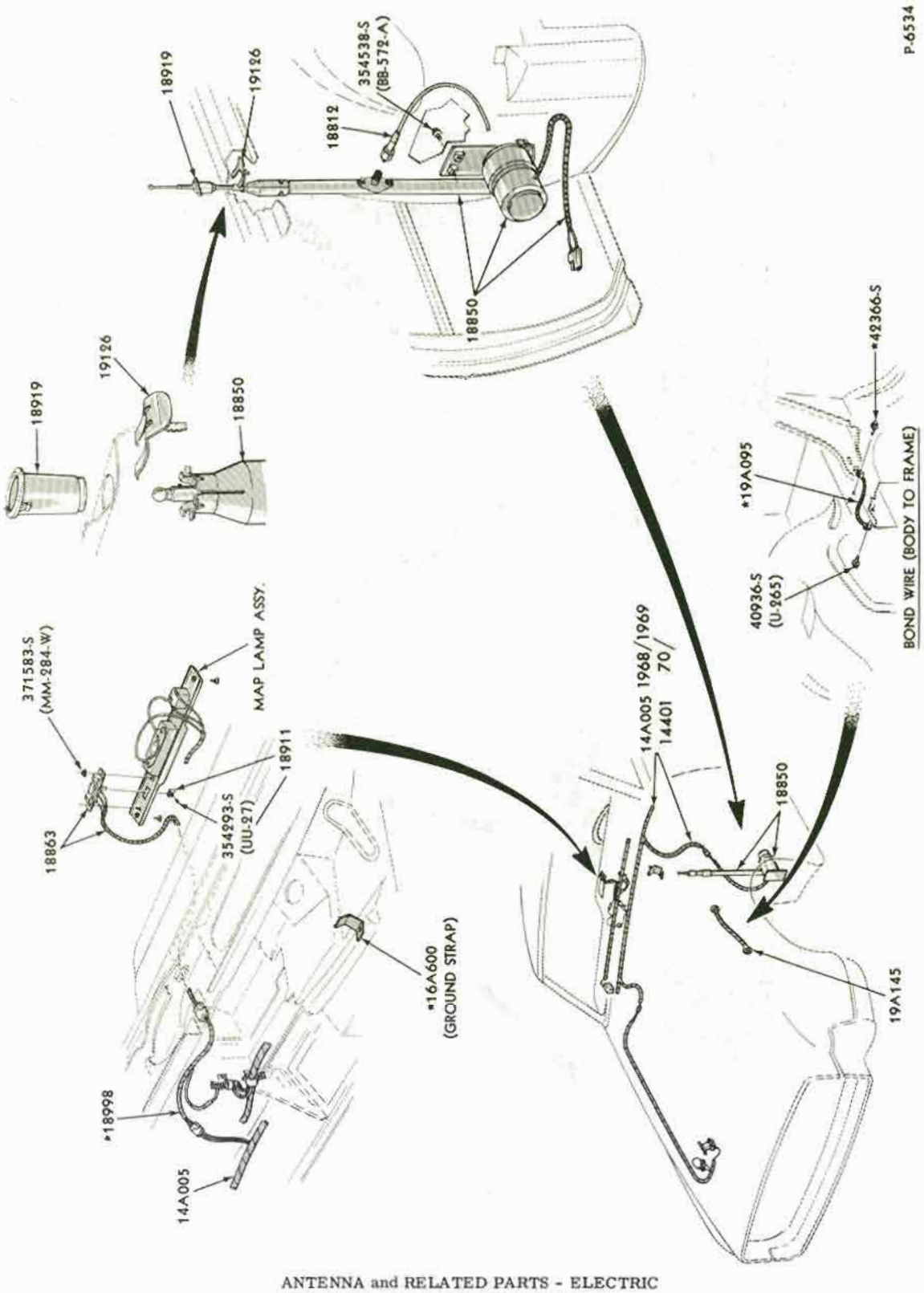

ANTENNA and RELATED PARTS - ELECTRIC
1968/71 THUNDERBIRD

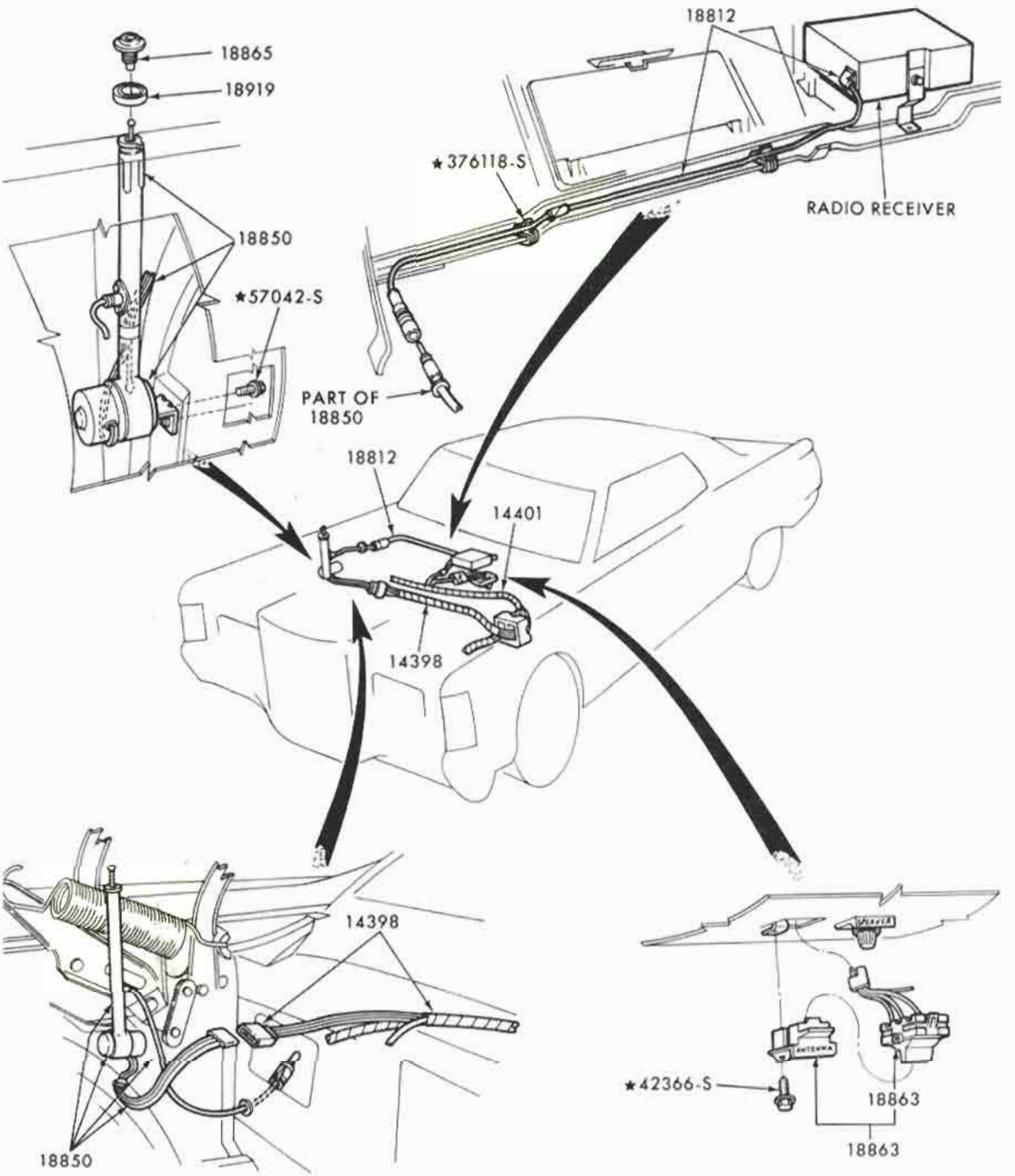

P-9926

ANTENNA and RELATED PARTS - ELECTRIC
1972 THUNDERBIRD

COPYRIGHT © 1975 — FORD MOTOR COMPANY — DEARBORN, MICHIGAN

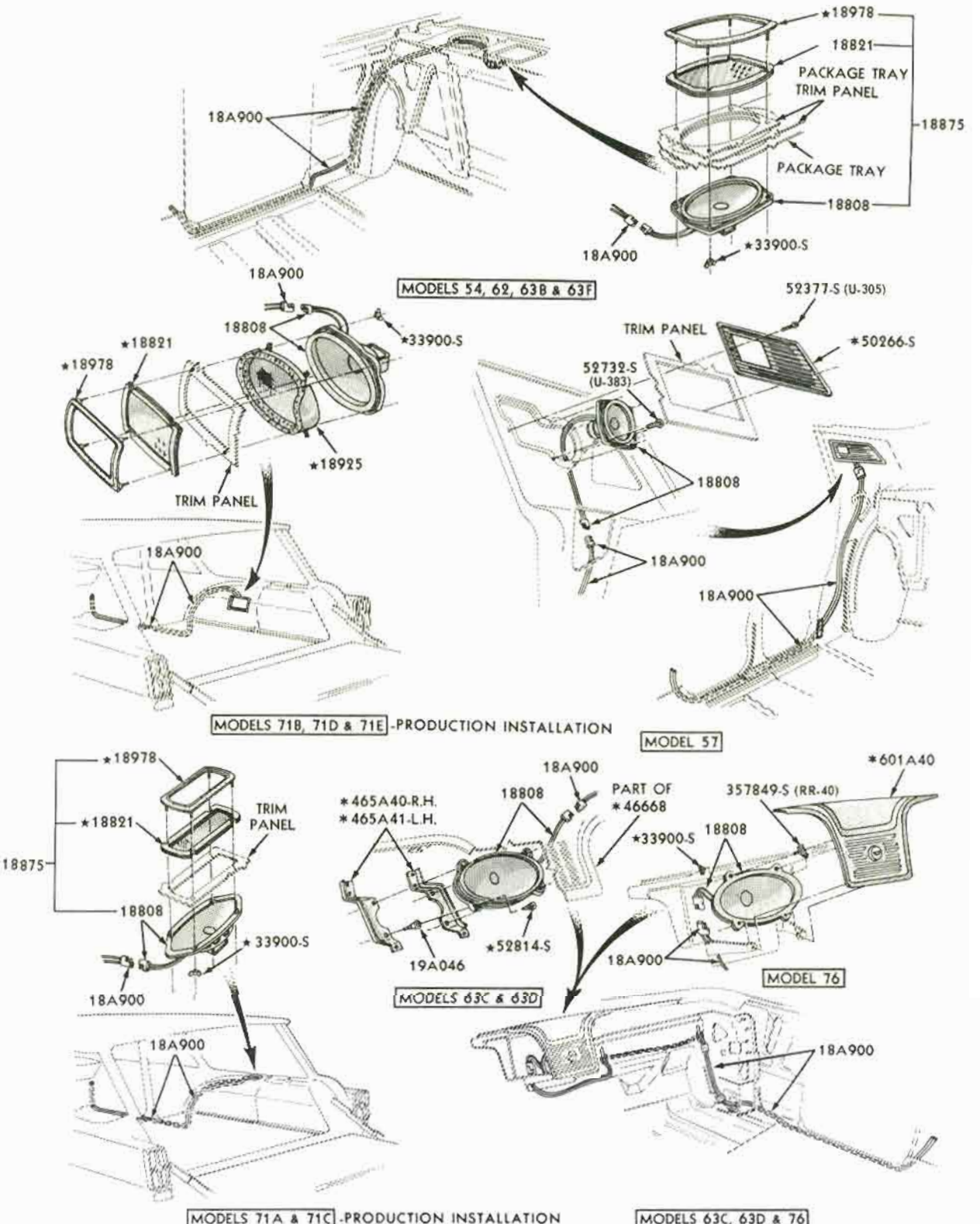

REAR SEAT SPEAKERS
1966 FORD - w/ STEREO TAPE PLAYER

COPYRIGHT © 1975 — FORD MOTOR COMPANY — DEARBORN, MICHIGAN

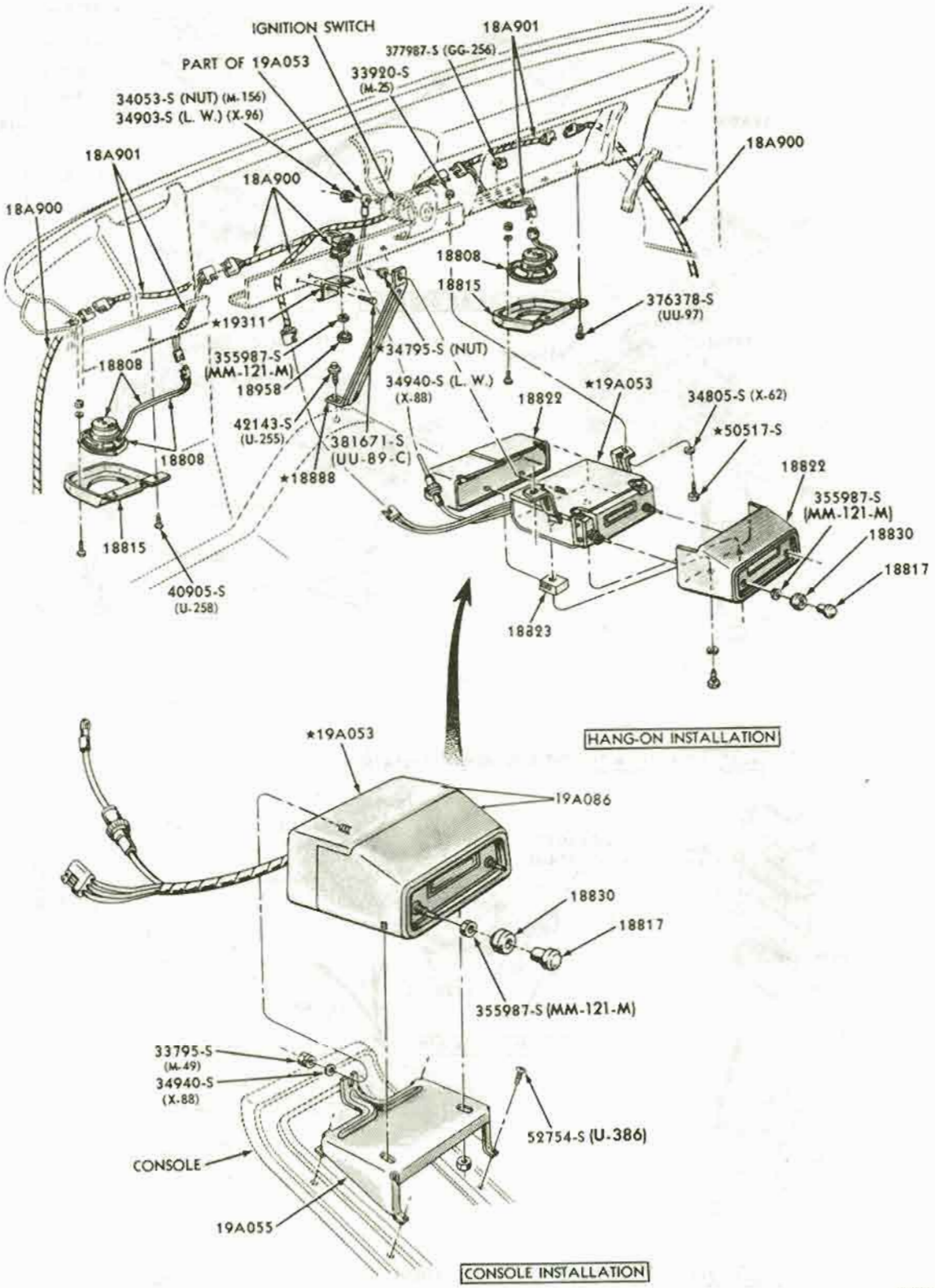

STEREO TAPE PLAYER and SPEAKERS - HANG-ON and CONSOLE MOUNTED
1966 FORD

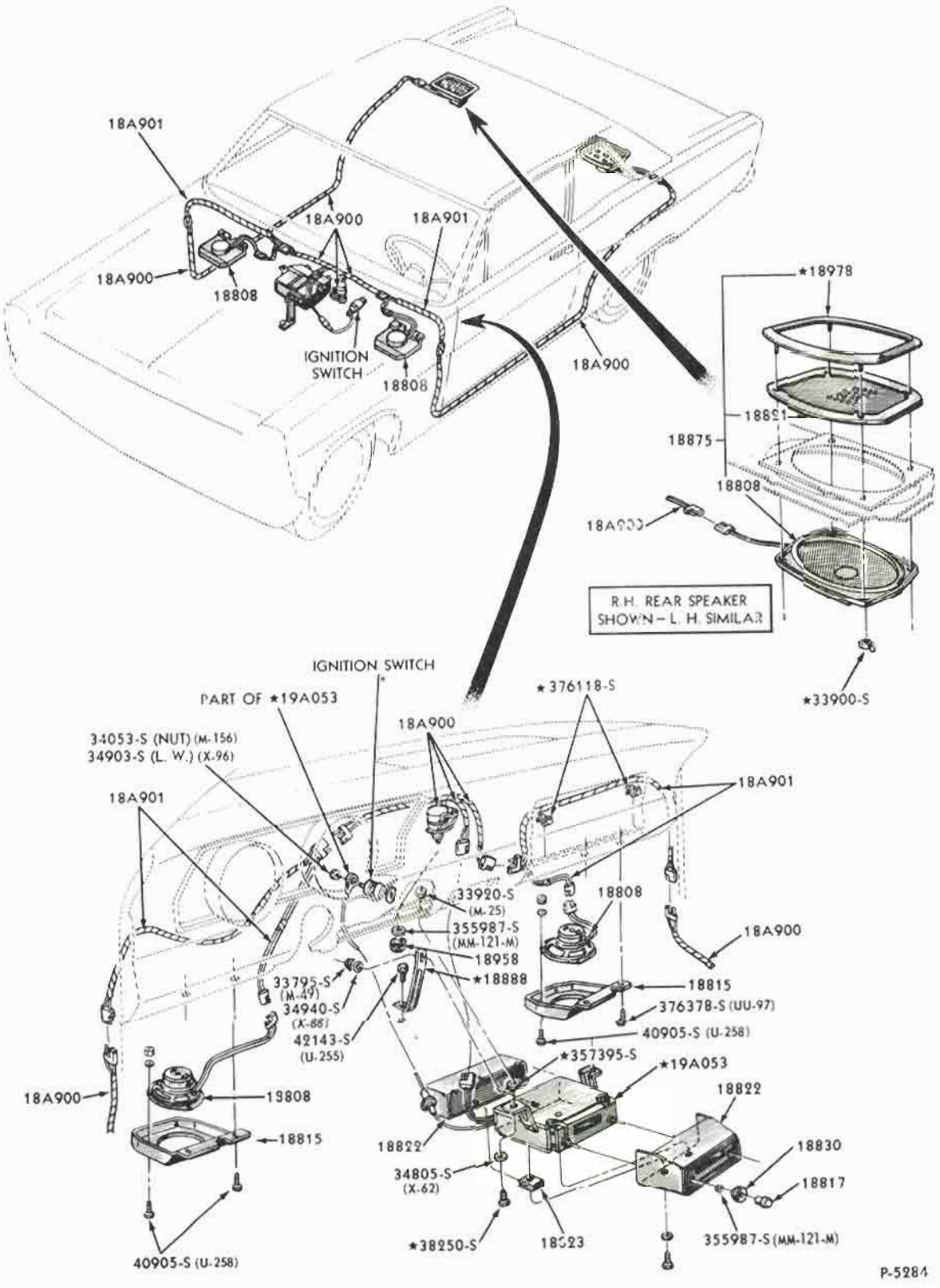

STEREO TAPE PLAYER and SPEAKERS - HANG-ON
1966 FAIRLANE and FALCON

COPYRIGHT © 1975 — FORD MOTOR COMPANY — DEARBORN, MICHIGAN

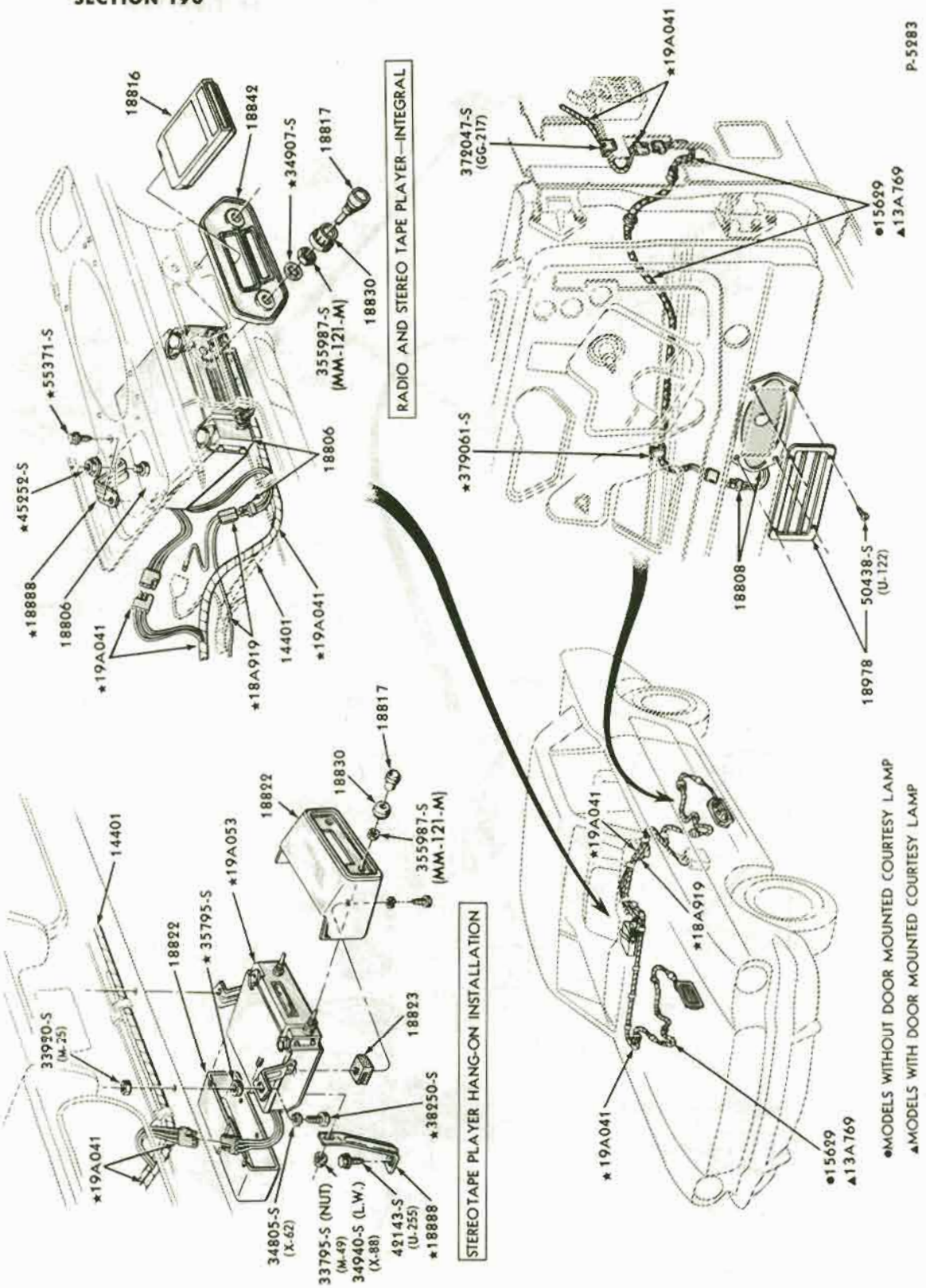

AM RADIO and SPEAKERS with STEREO TAPEPLAYER - INTEGRAL and HANG-ON
1966 MUSTANG

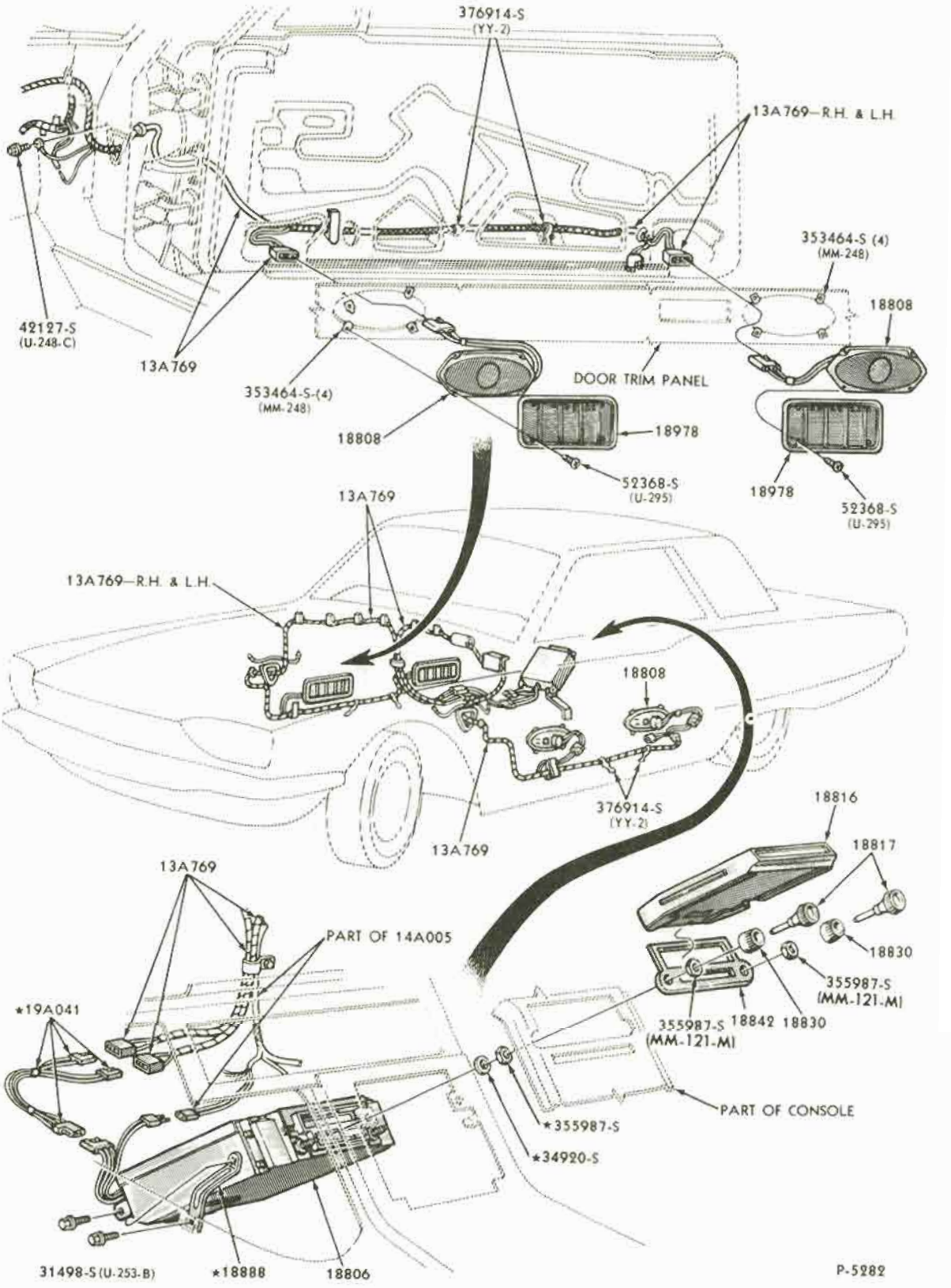

AM RADIO and SPEAKERS with STEREO TAPE PLAYER - INTEGRAL
1966 THUNDERBIRD

COPYRIGHT © 1975 — FORD MOTOR COMPANY — DEARBORN, MICHIGAN

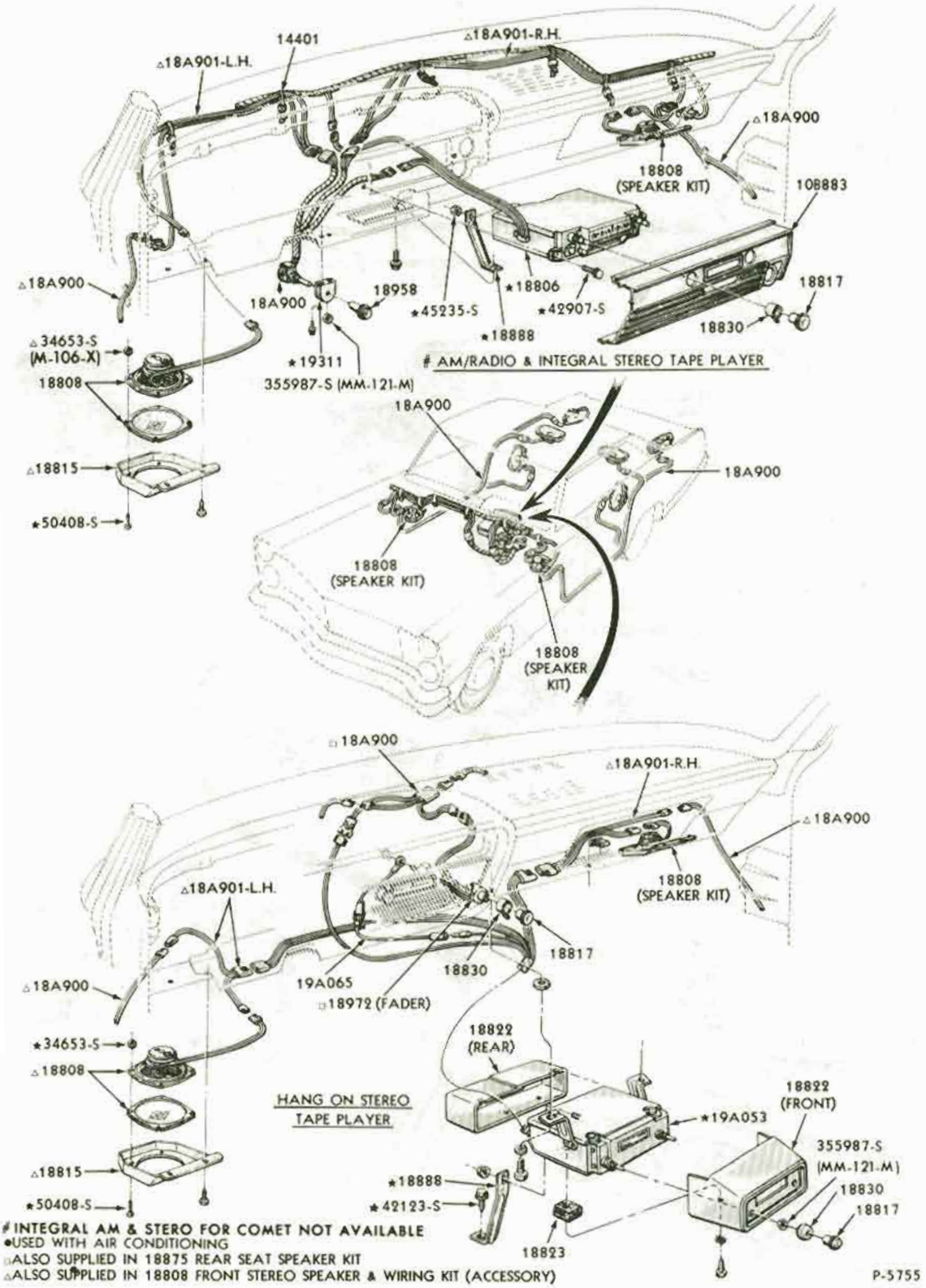

AM RADIO and SPEAKERS with STEREO TAPE PLAYER - INTEGRAL and HANG-ON
1967 FORD

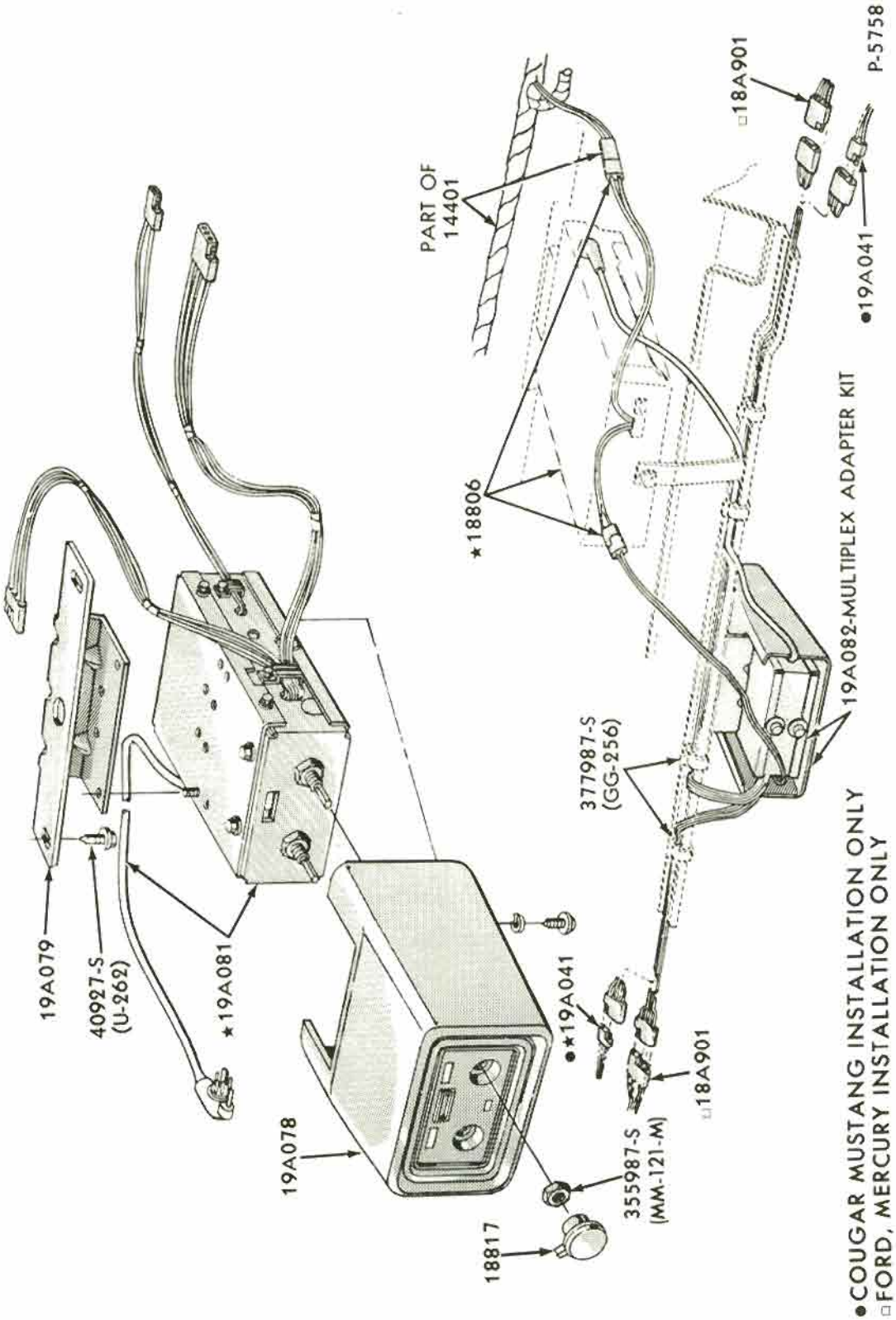

MULTIPLEX ADAPTER FOR AM/FM RADIO
1967 FORD and MUSTANG

COPYRIGHT © 1975 — FORD MOTOR COMPANY — DEARBORN, MICHIGAN

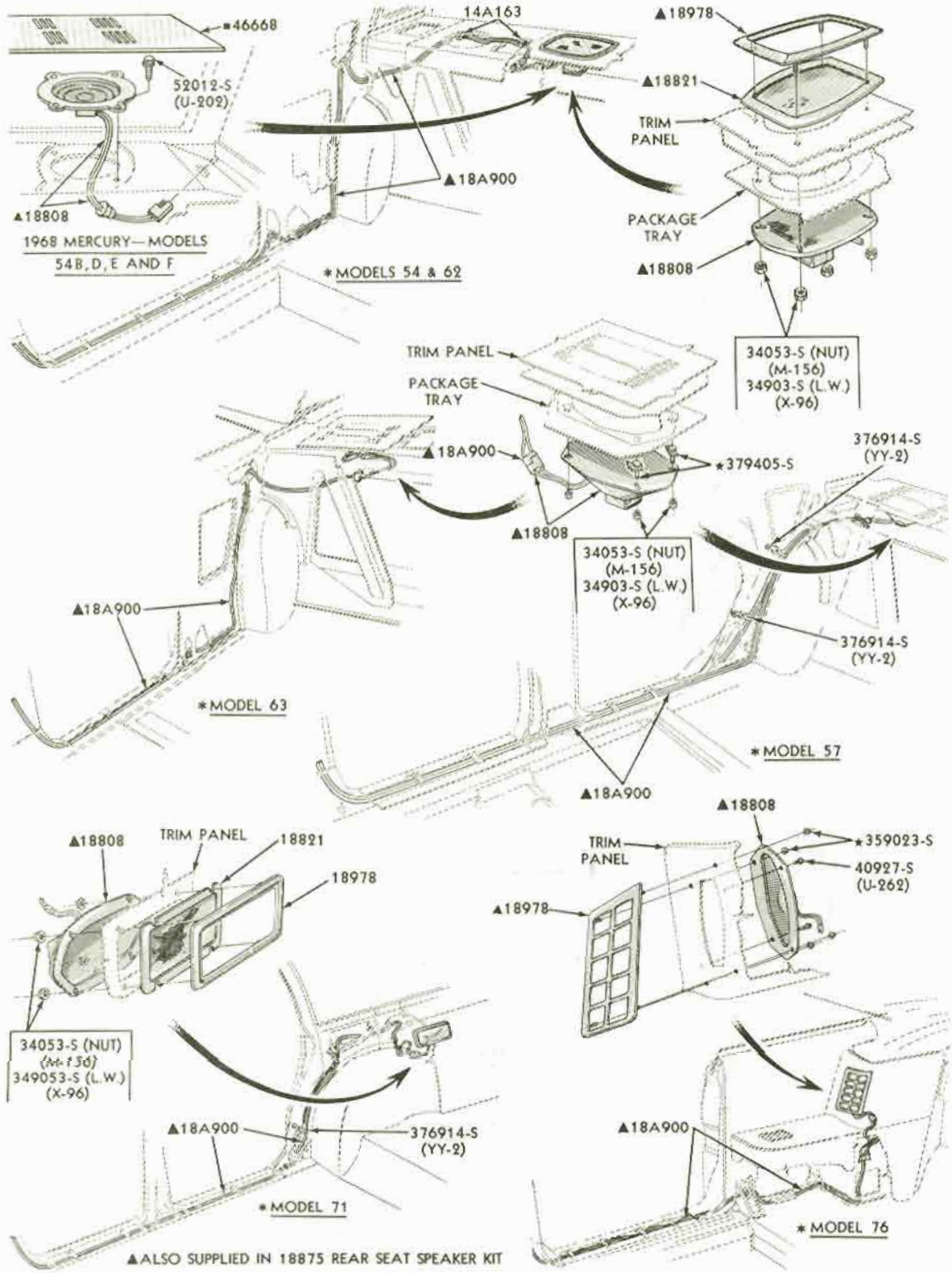

▲ALSO SUPPLIED IN 18875 REAR SEAT SPEAKER KIT

*RIGHT HAND INSTALLATION SHOWN, LEFT HAND INSTALLATION IDENTICAL

▪REFER TO SOFT TRIM GROUP NUMBER

P-5754

REAR SEAT SPEAKERS
1967/68 FORD - w/ STEREO TAPE PLAYER

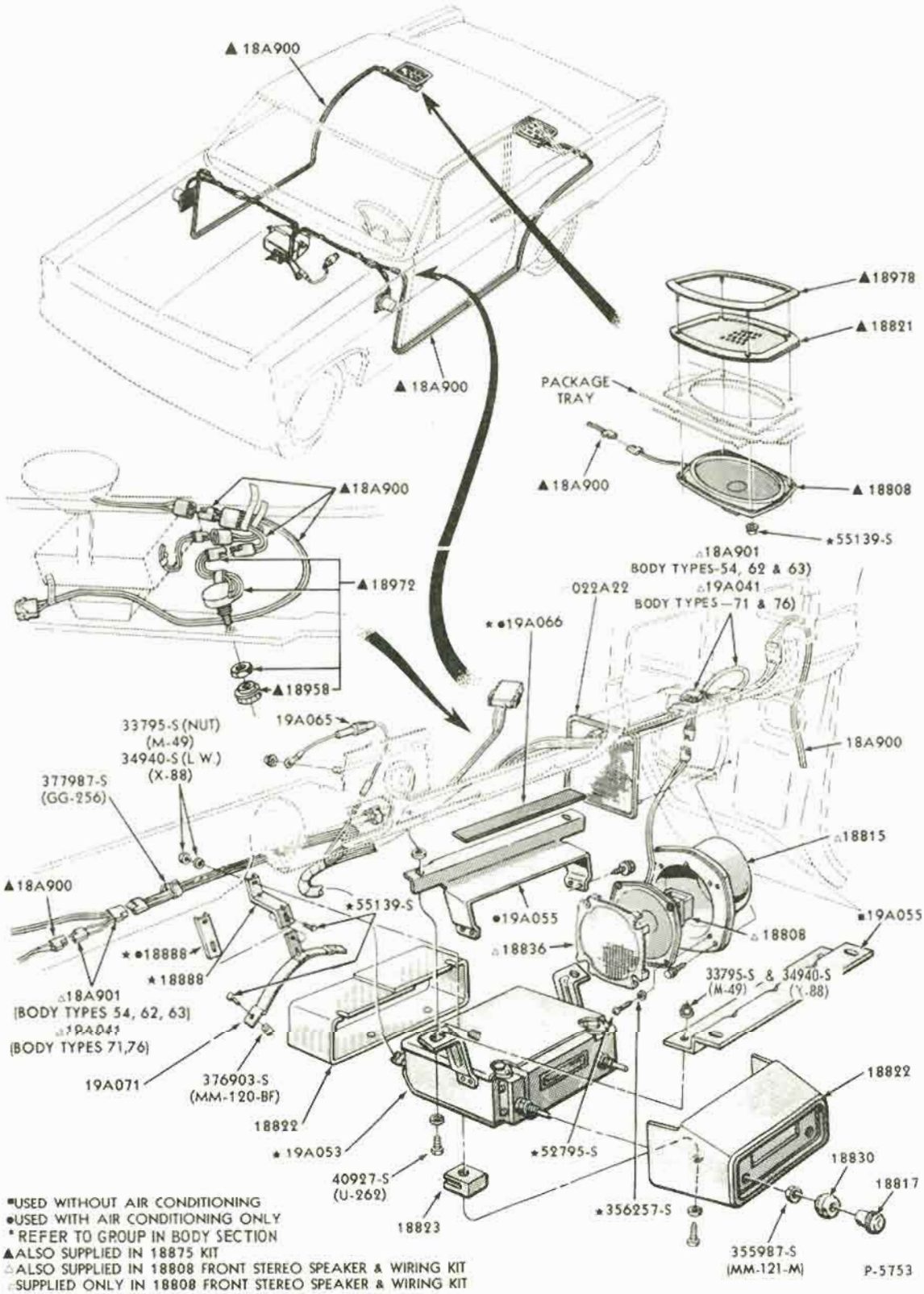

■USED WITHOUT AIR CONDITIONING
●USED WITH AIR CONDITIONING ONLY
* REFER TO GROUP IN BODY SECTION
▲ALSO SUPPLIED IN 18875 KIT
△ALSO SUPPLIED IN 18808 FRONT STEREO SPEAKER & WIRING KIT
□SUPPLIED ONLY IN 18808 FRONT STEREO SPEAKER & WIRING KIT

STERO TAPE PLAYER and SPEAKERS - HANG-ON
1967 FAIRLANE and FALCON

COPYRIGHT © 1975— FORD MOTOR COMPANY —DEARBORN, MICHIGAN

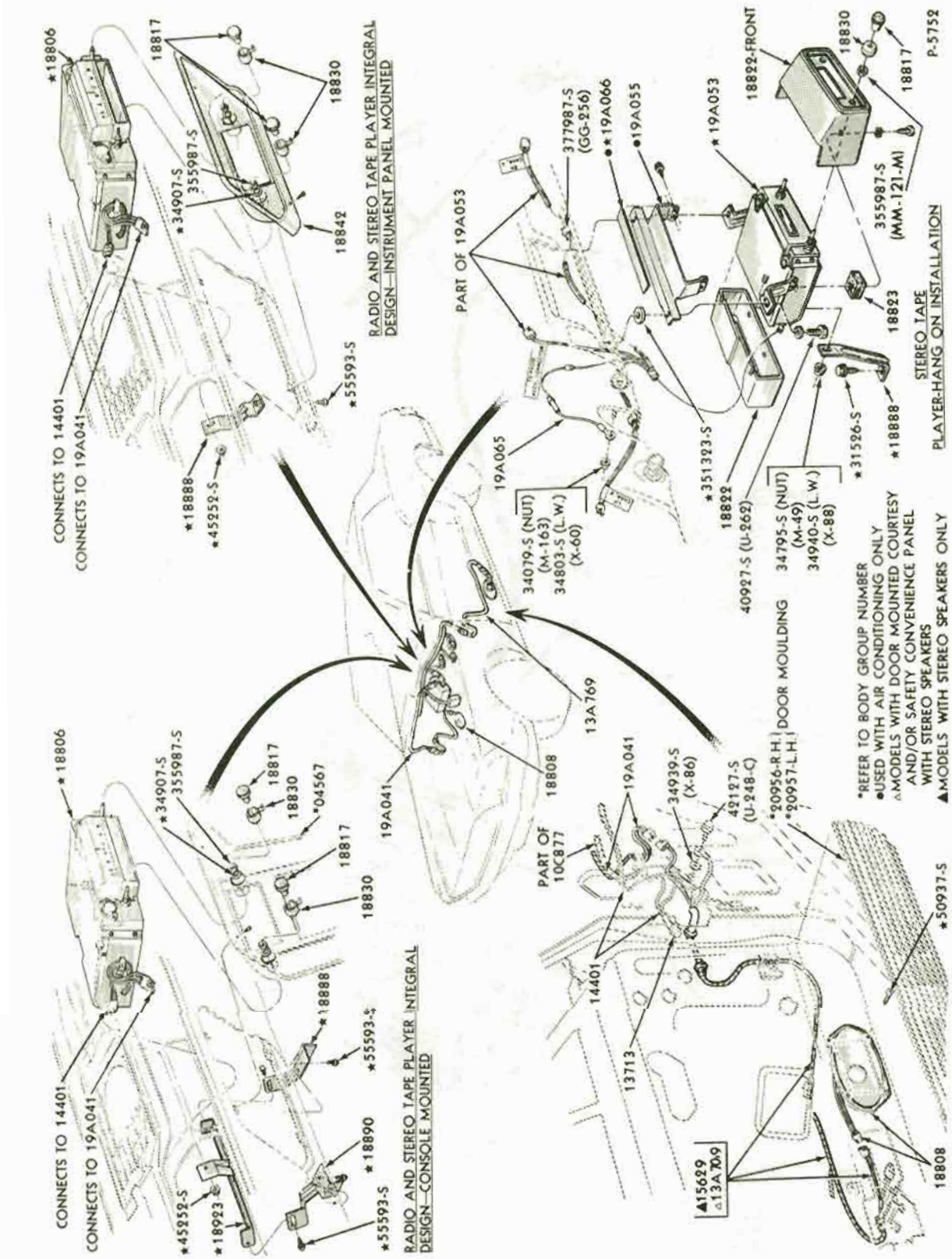

AM RADIO and SPEAKERS with STEREO TAPE PLAYER - INTEGRAL and HANG-ON
1967 MUSTANG

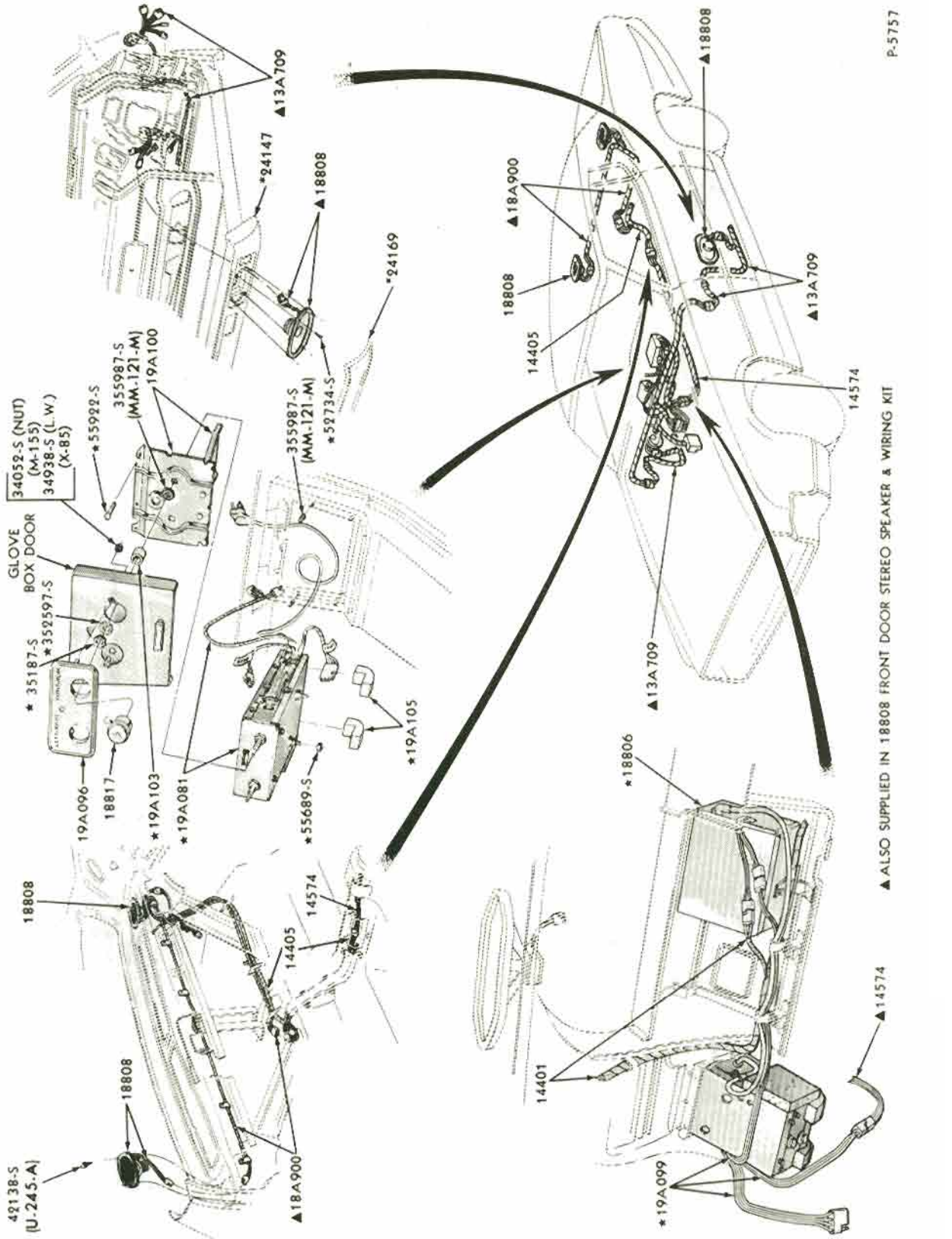

MULTIPLEX ADAPTER and SPEAKERS for AM/FM RADIO
1967 THUNDERBIRD

COPYRIGHT © 1975 — FORD MOTOR COMPANY — DEARBORN, MICHIGAN

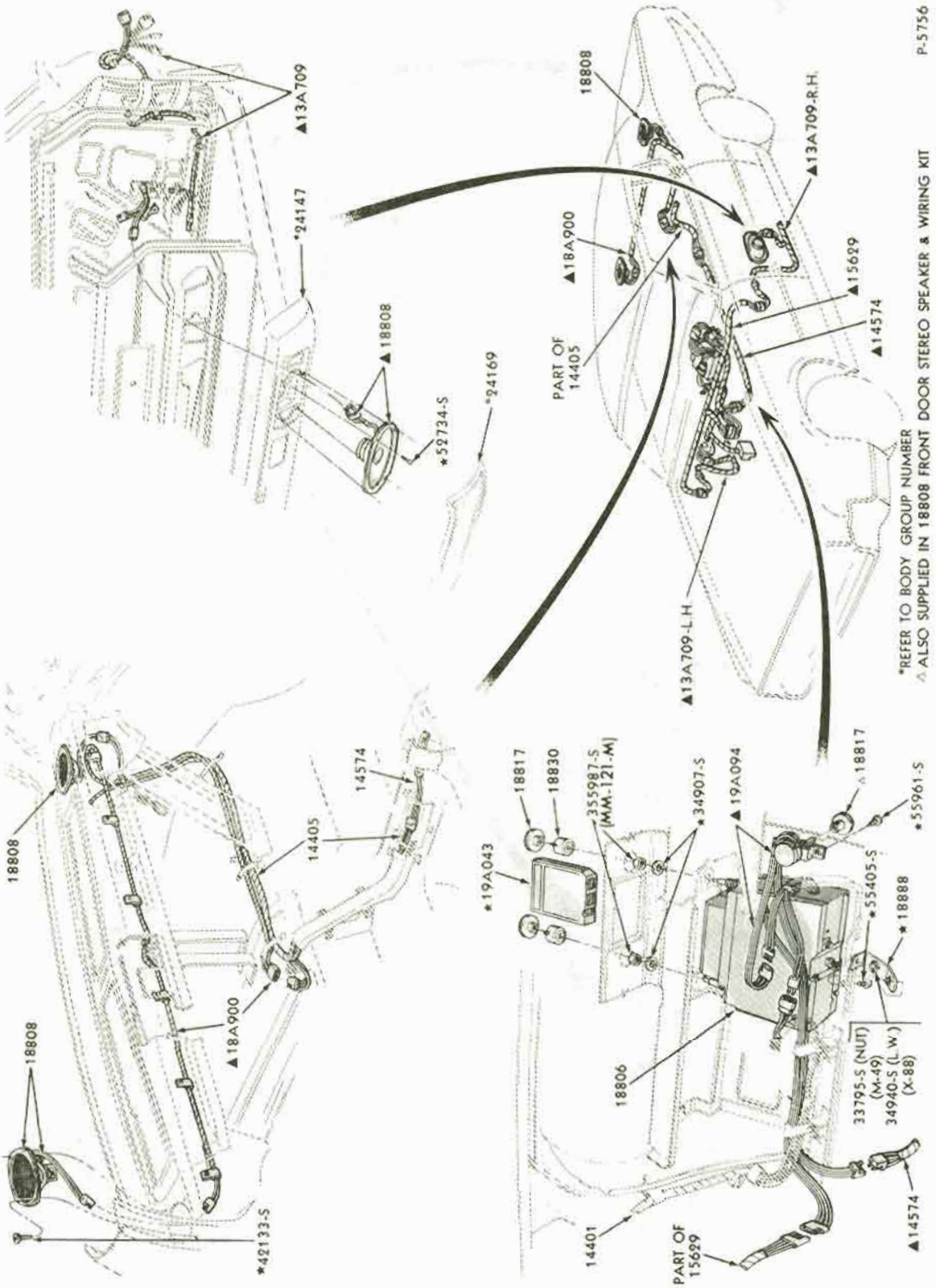

AM RADIO and SPEAKERS with STEREO TAPE PLAYER - INTEGRAL
1967 THUNDERBIRD

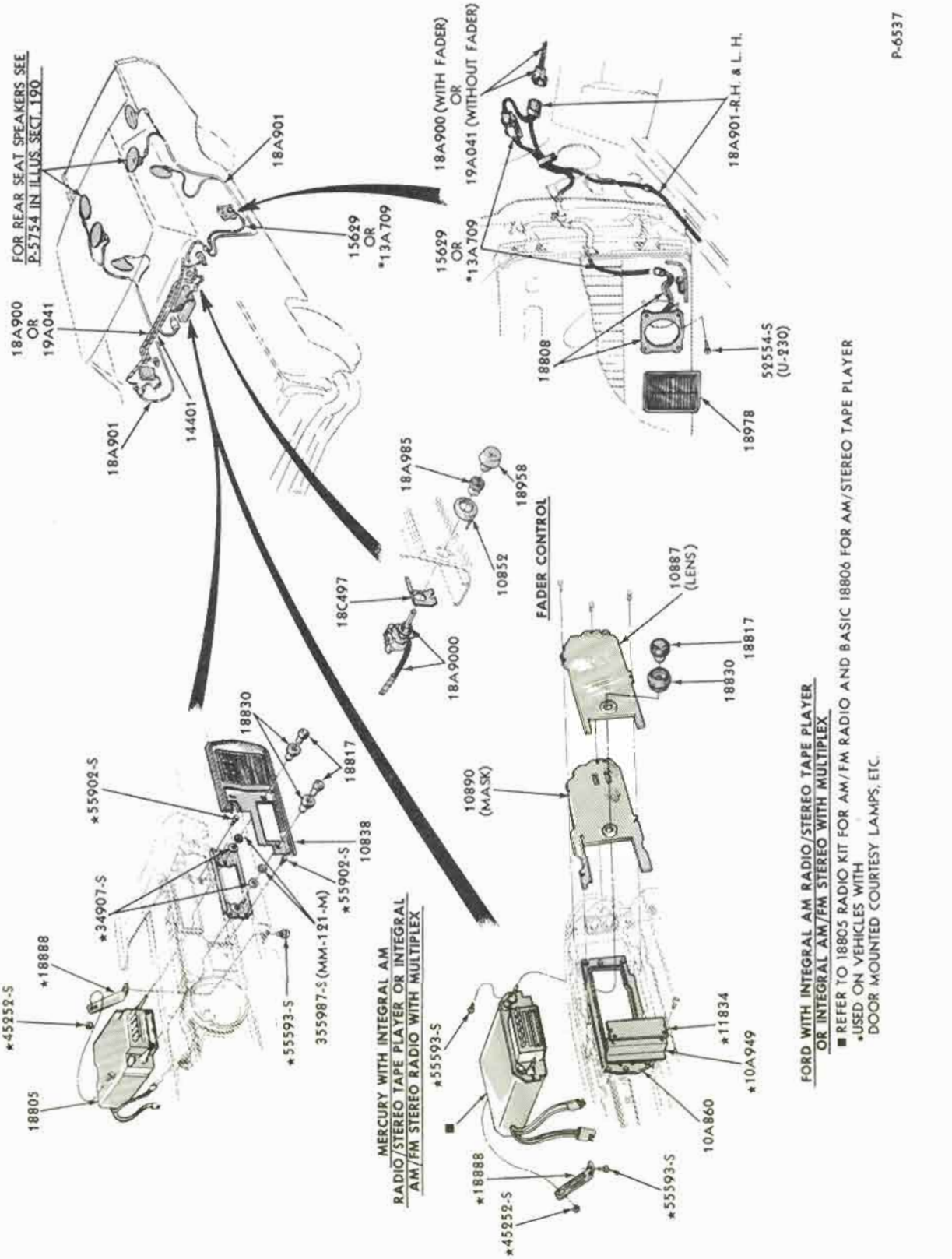

AM/STEREO TAPE PLAYER, AM/FM MULTIPLEX RADIO and SPEAKERS - INTEGRAL
1968 FORD

COPYRIGHT © 1975 — FORD MOTOR COMPANY — DEARBORN, MICHIGAN

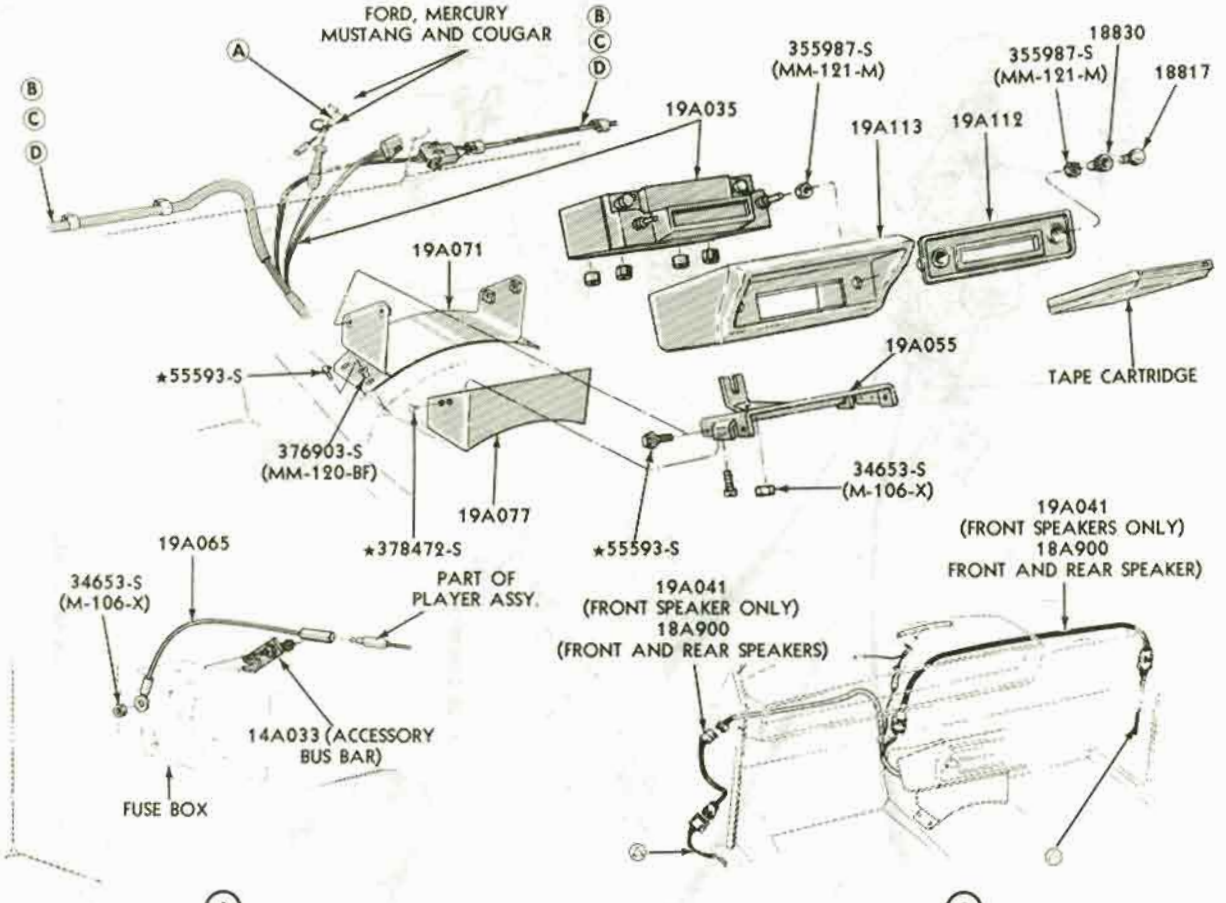

(A) FAIRLANE, FALCON AND COMET

(B) FORD AND MERCURY

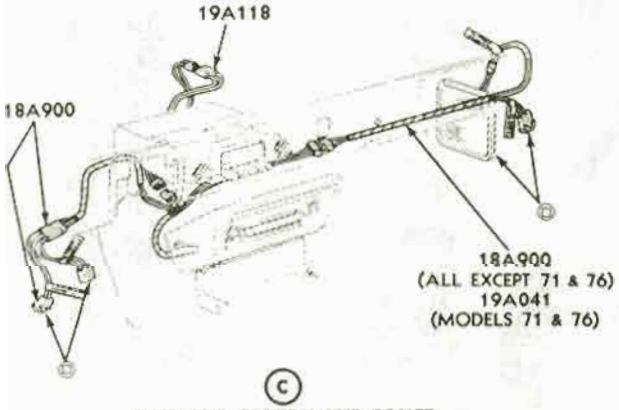

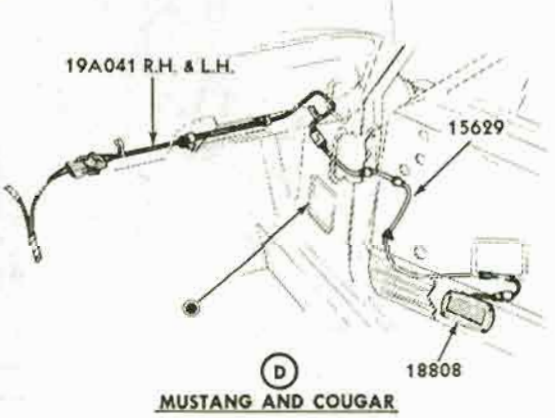

(C) FAIRLANE, FALCON AND COMET

(D) MUSTANG AND COUGAR

●FOR COUGAR COWL MOUNTED SPEAKER SEE P-6539 IN ILLUSTRATION SECTION 190 FOR DETAILS
ⒶFOR REAR SPEAKERS SEE P-5754 AND FOR FRONT DOOR MOUNTED SPEAKERS SEE P-6537 IN ILLUS. SECT. 190
ⒷFOR FRONT AND REAR SPEAKERS SEE P-6538 IN ILLUS. SECT. 190 FOR DETAILS

P-6540

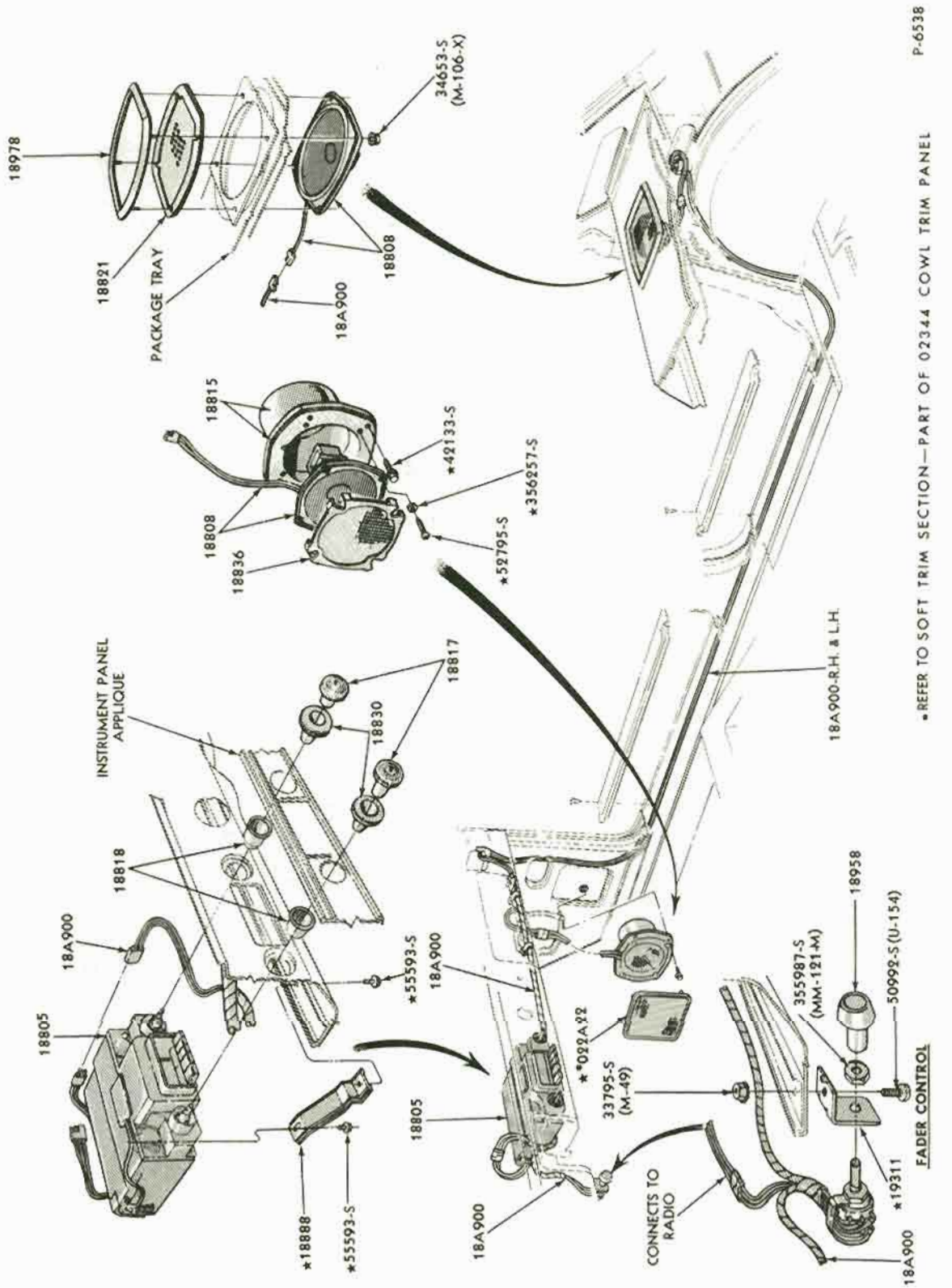

AM/FM MULTIPLEX RADIO and SPEAKERS - INTEGRAL
1968/71 FAIRLANE/TORINO and 1968/70 FALCON

COPYRIGHT © 1975 — FORD MOTOR COMPANY — DEARBORN, MICHIGAN

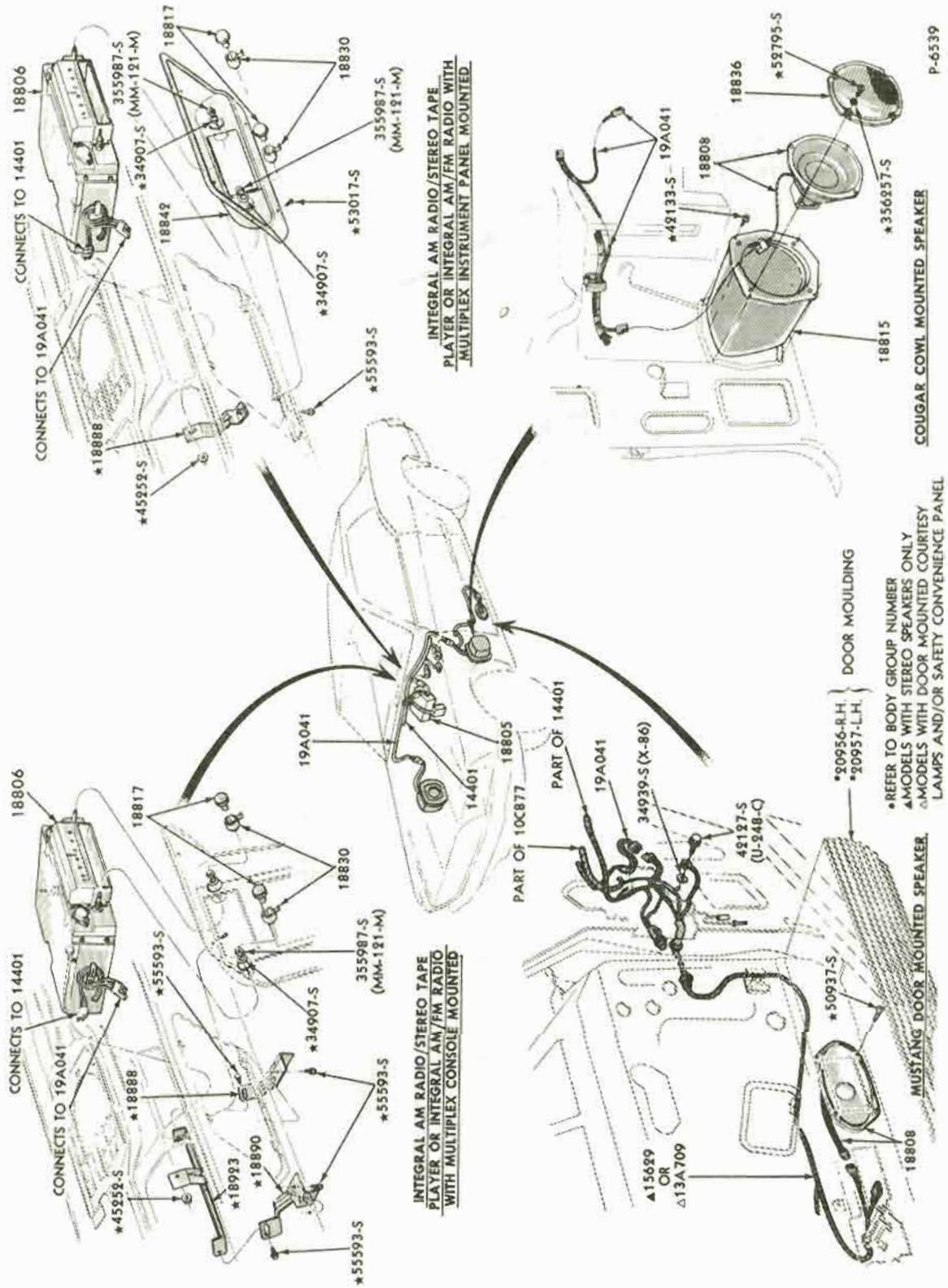

AM/STEREO TAPE PLAYER, AM/FM MULTIPLEX RADIO and SPEAKERS - INTEGRAL
1968 MUSTANG

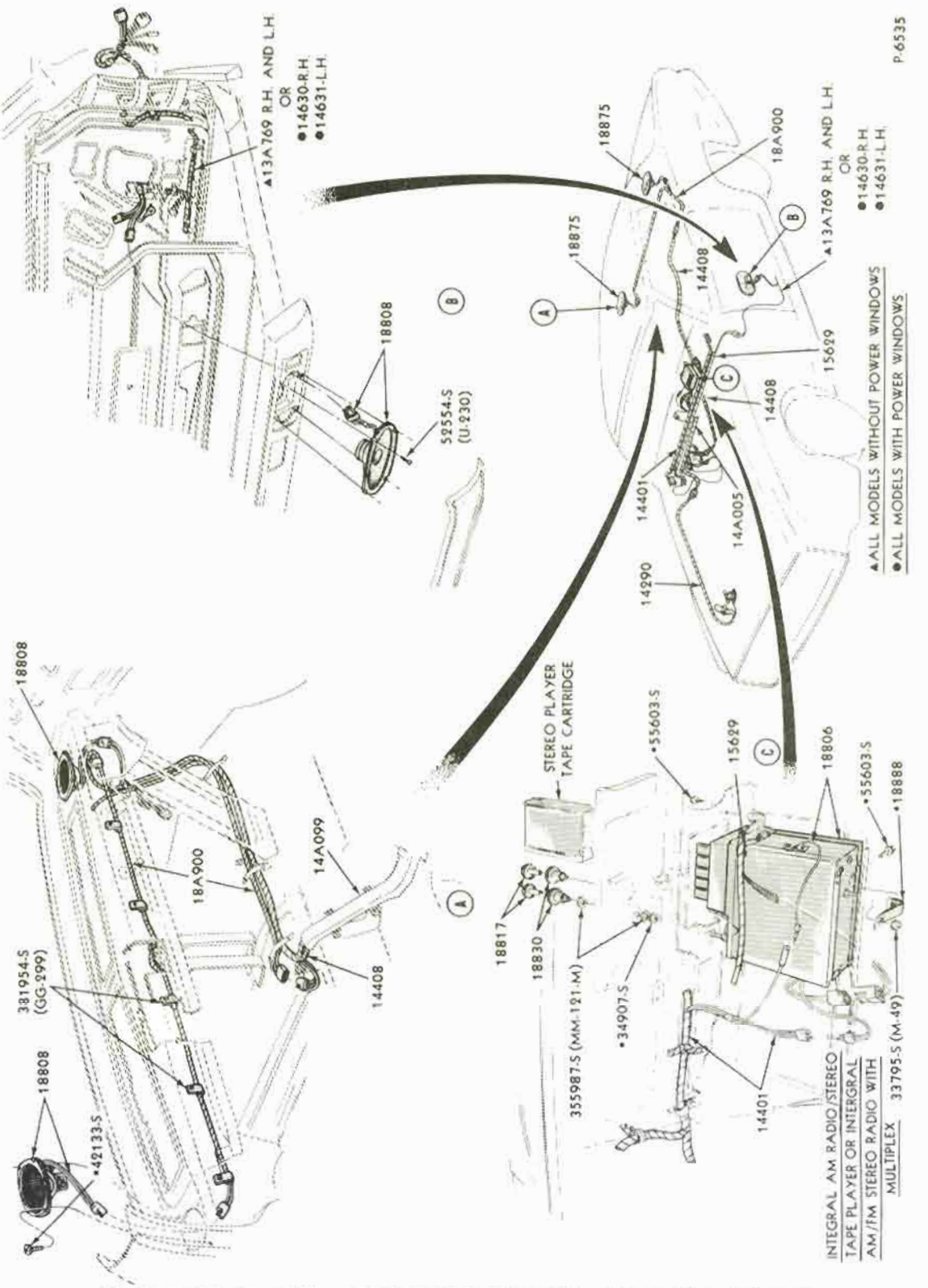

AM/STEREO TAPE PLAYER, AM/FM MULTIPLEX RADIO and SPEAKERS - INTEGRAL
1968/71 THUNDERBIRD

COPYRIGHT © 1975 — FORD MOTOR COMPANY — DEARBORN, MICHIGAN

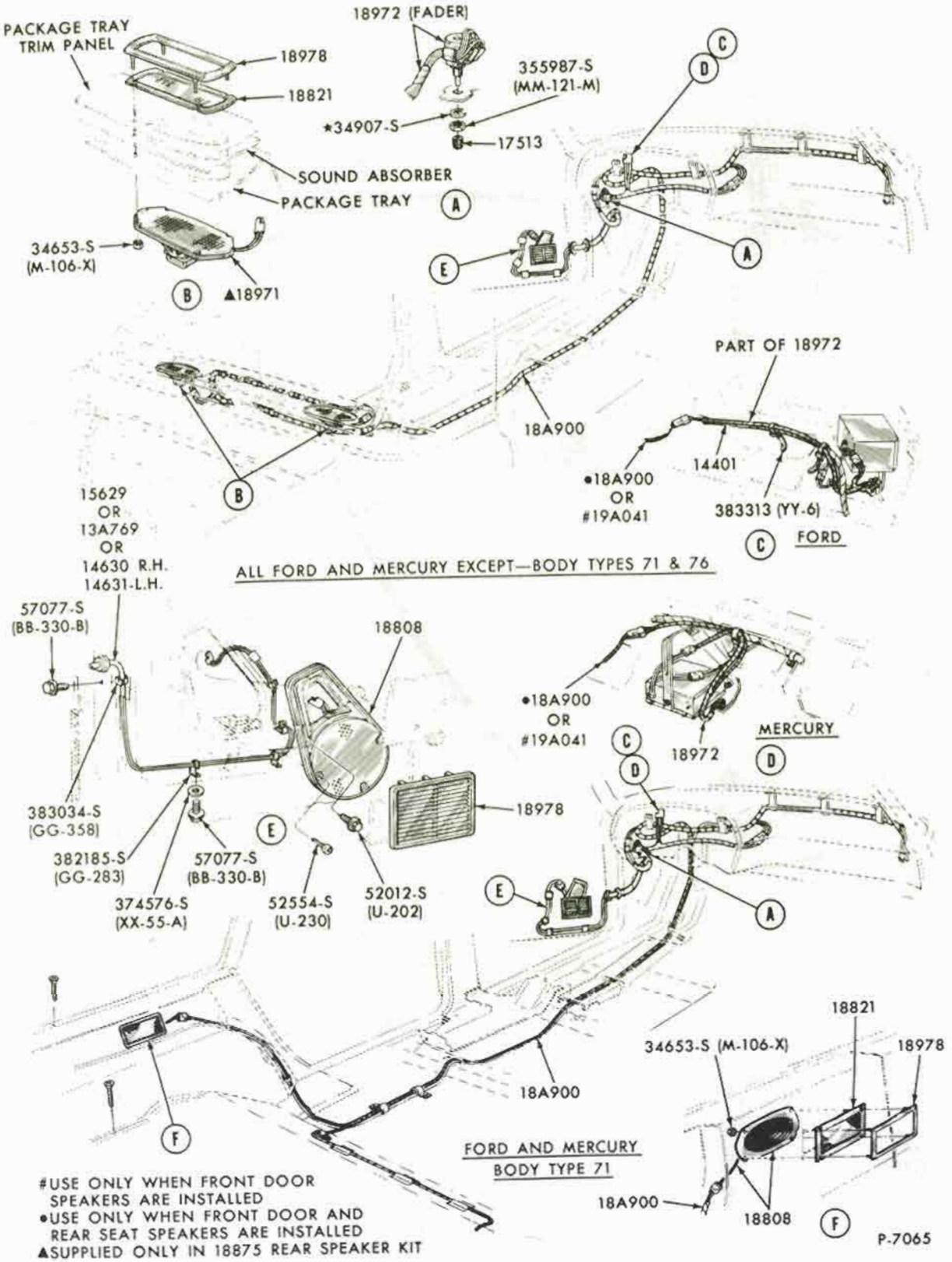

RADIO SPEAKERS - FRONT DOOR and REAR PACKAGE TRAY
1969/70 FORD

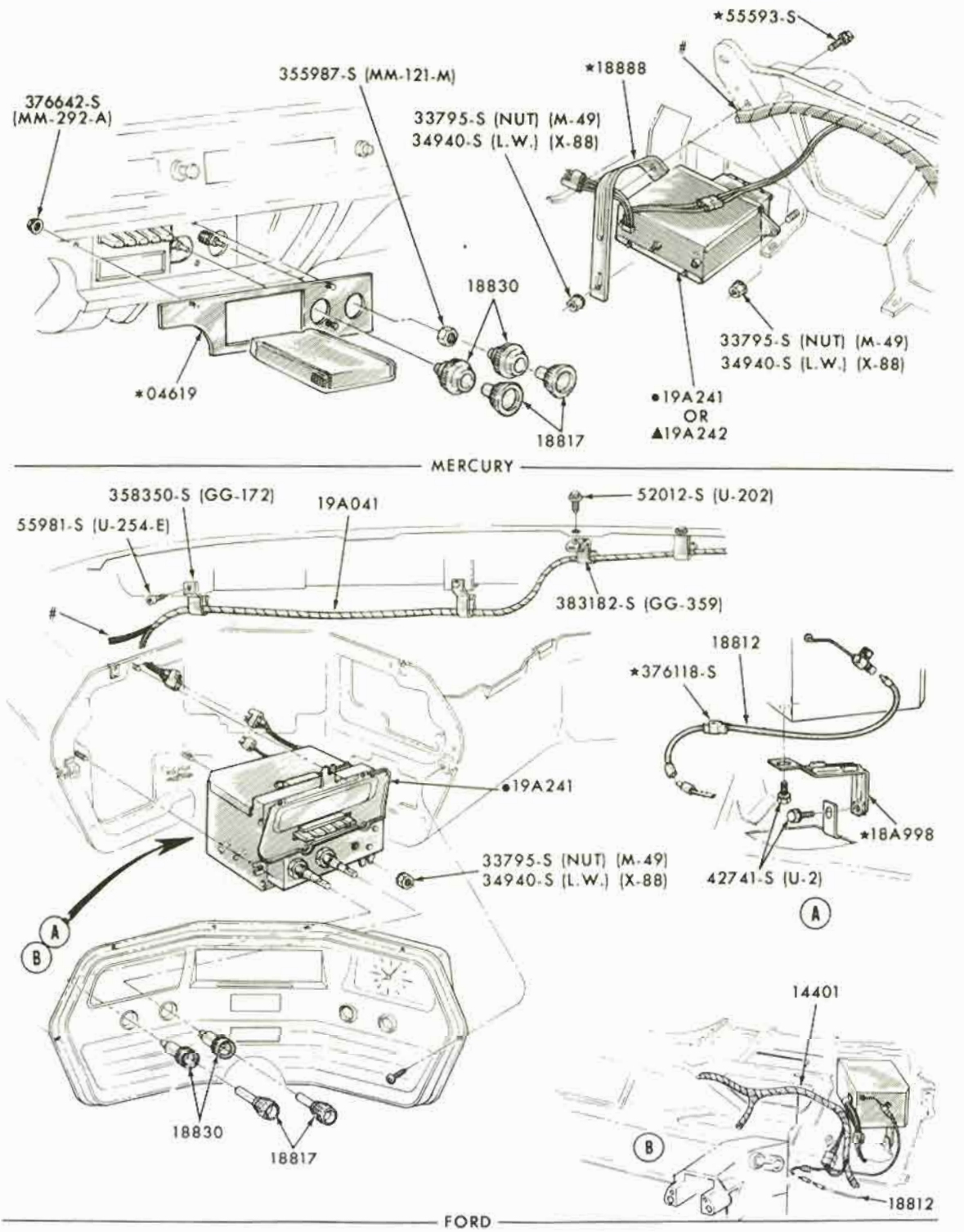

* REFER TO BODY GROUP NUMBER
• AM/FM STEREO RADIO RECEIVER WITH MULTIPLEX-SERVICED IN 18805 RADIO KIT
▲ AM RADIO WITH INTEGRAL STEREO TAPE PLAYER-SERVICED IN 18805 RADIO KIT
REFER TO P-7065 IN SECTION 190 FOR FRONT AND REAR SPEAKER INSTALLATION

P-7076

AM/FM MULTIPLEX RADIO
1969/70 FORD

COPYRIGHT © 1975 — FORD MOTOR COMPANY — DEARBORN, MICHIGAN

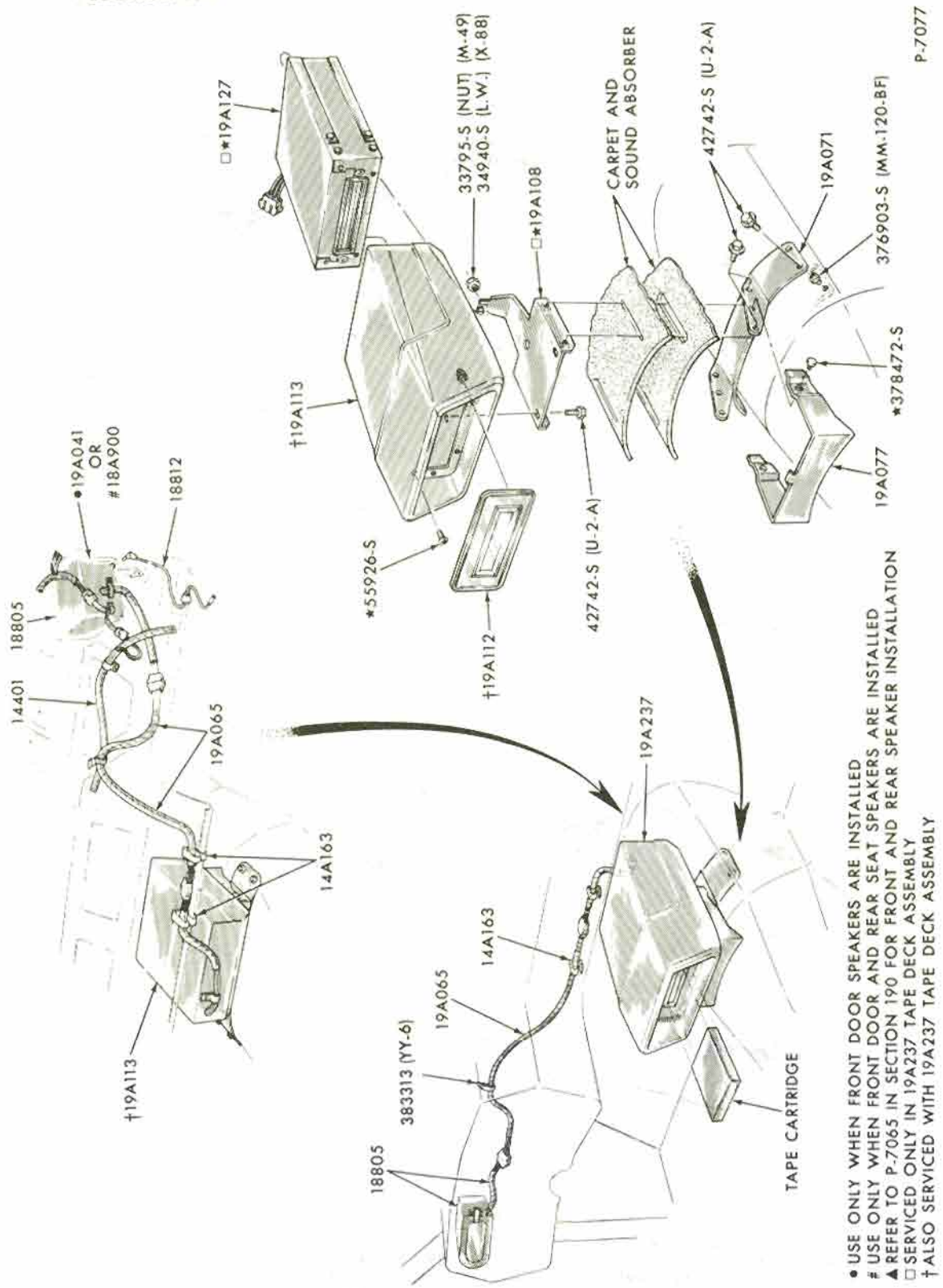

AM RADIO with STEREO TAPE PLAYER - TUNNEL MOUNTED
1969/70 FORD

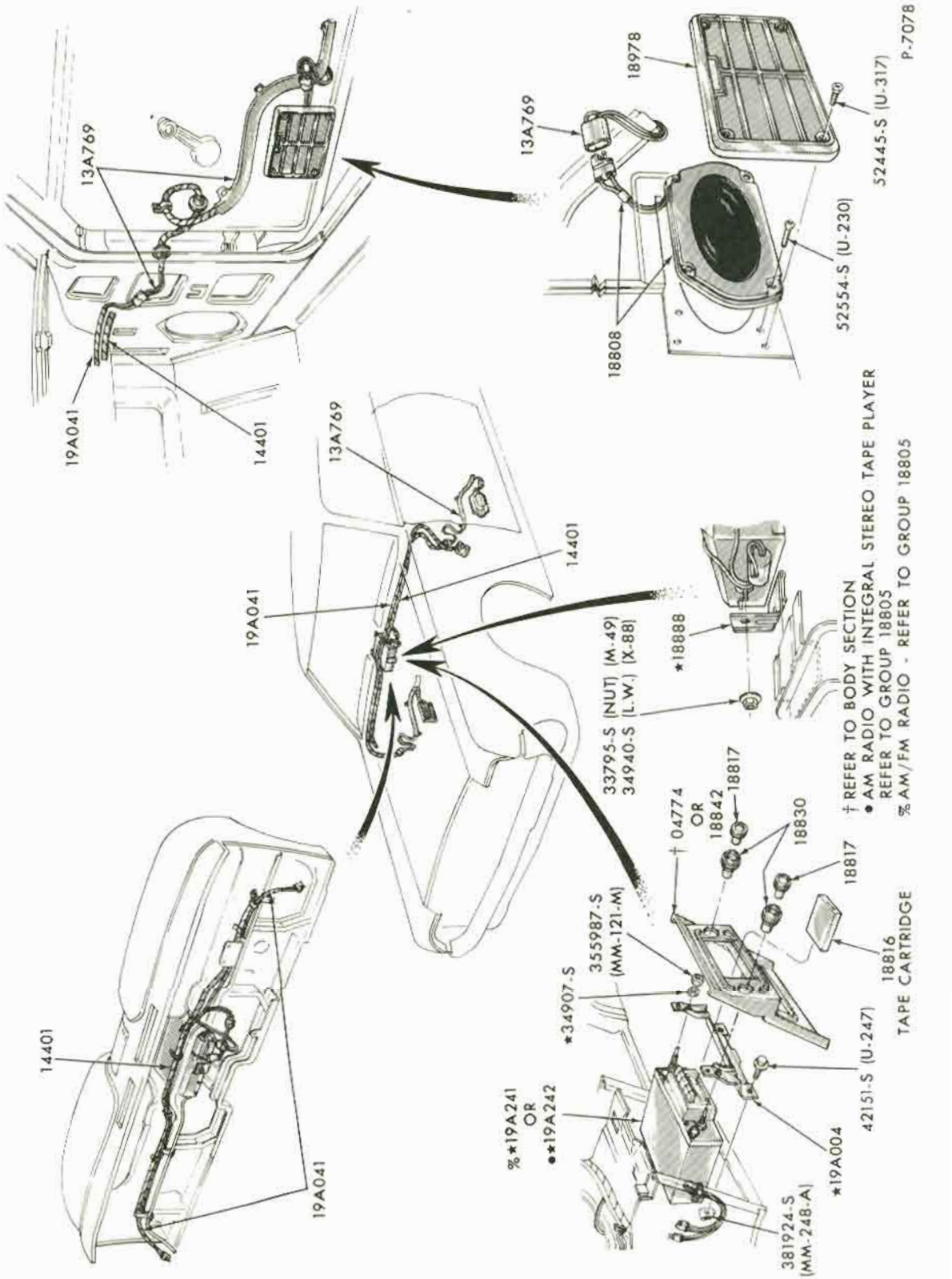

AM/STEREO TAPE PLAYER, AM/FM MULTIPLEX RADIO and SPEAKERS - INTEGRAL
1969/72 MUSTANG

COPYRIGHT © 1975 — FORD MOTOR COMPANY — DEARBORN, MICHIGAN

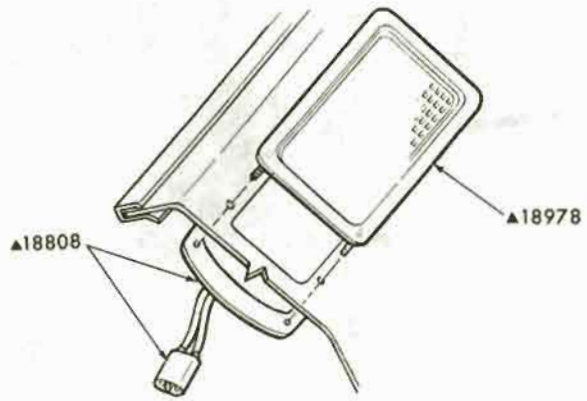

BODY TYPE 71

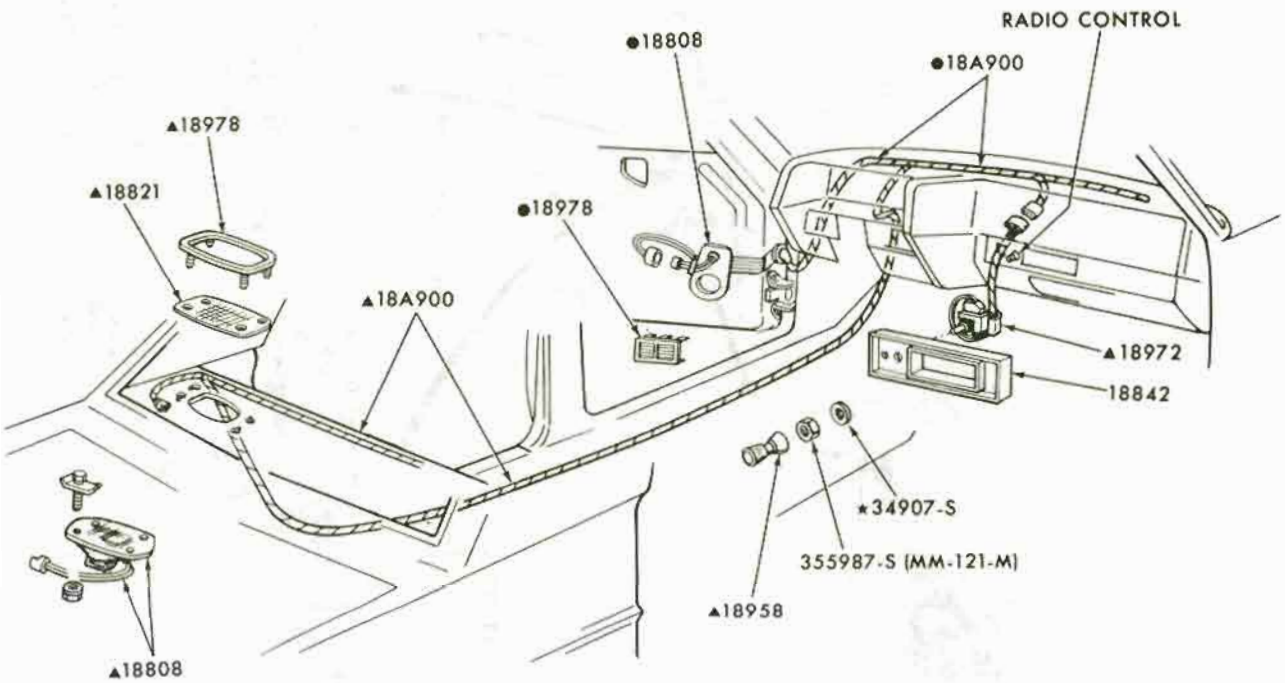

▲ALSO AVAILABLE IN BASIC 18875 REAR SEAT SPEAKER KIT
●ALSO AVAILABLE IN 18808 STEREO SPEAKER KIT

P-8450

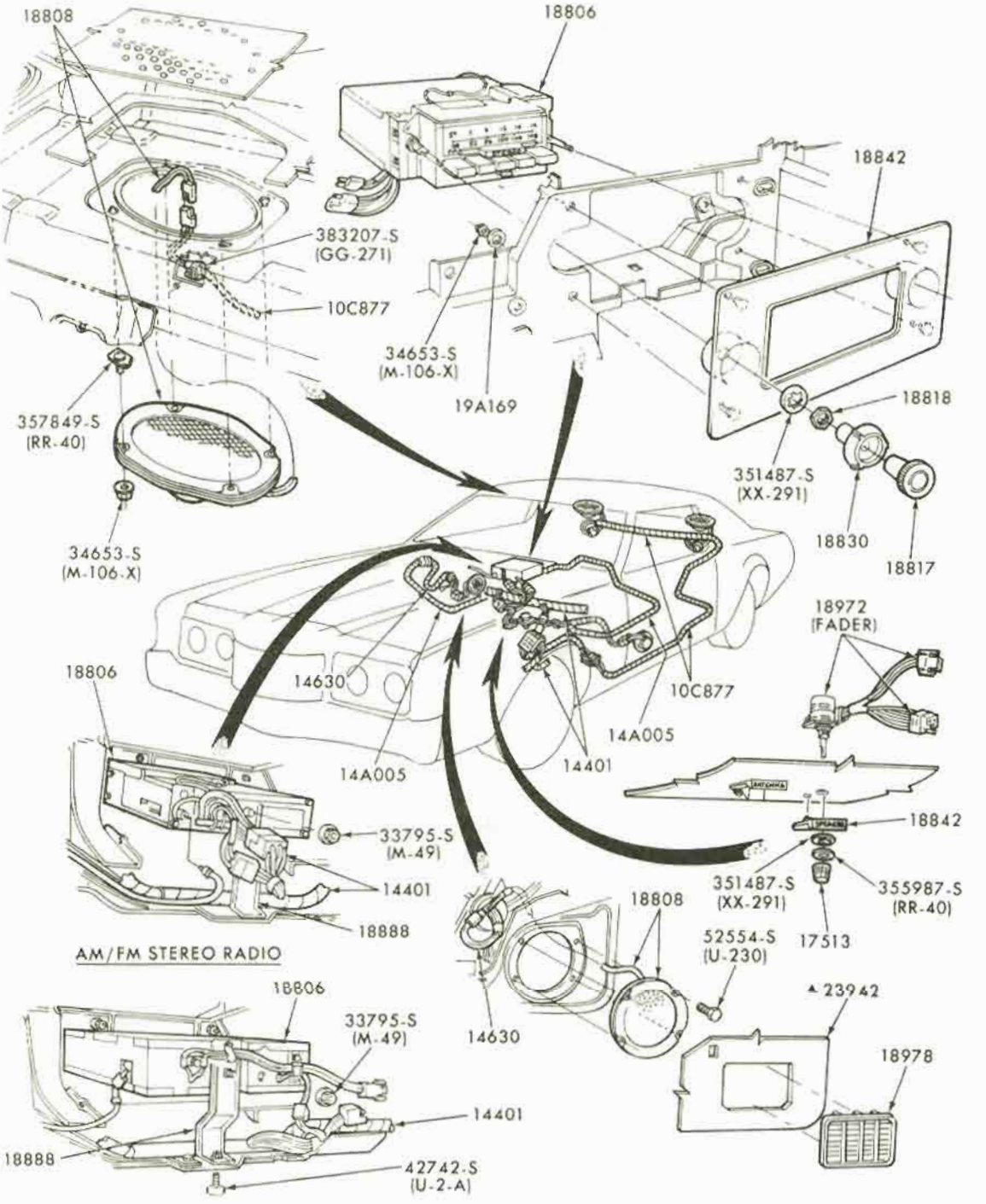

AM/STEREO TAPE PLAYER, AM/FM MULTIPLEX RADIC and SPEAKERS - INTEGRAL
1972 THUNDERBIRD

COPYRIGHT © 1975 — FORD MOTOR COMPANY — DEARBORN, MICHIGAN

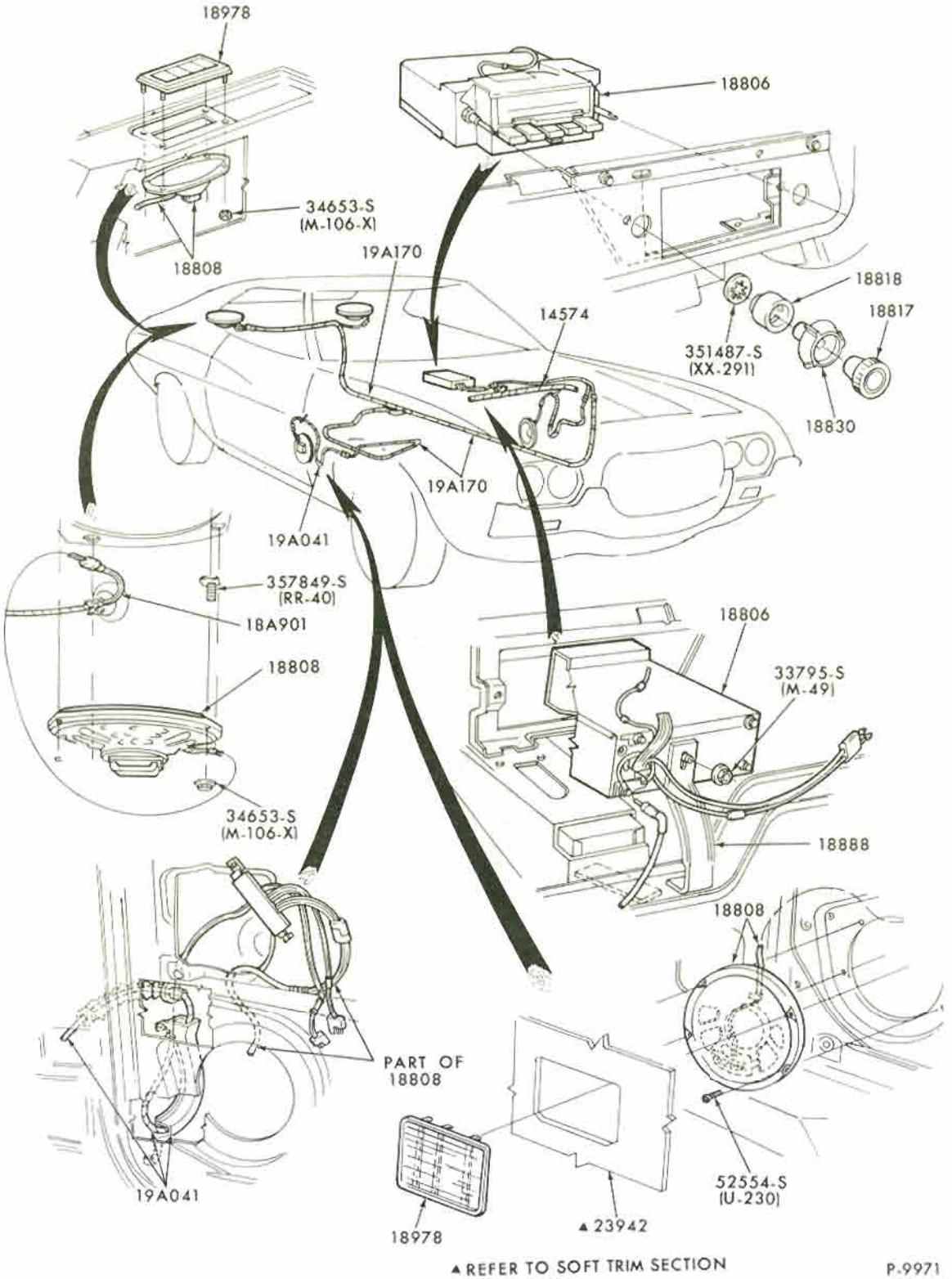

AM/FM MULTIPLEX RADIO and SPEAKERS - INTEGRAL
1972 TORINO

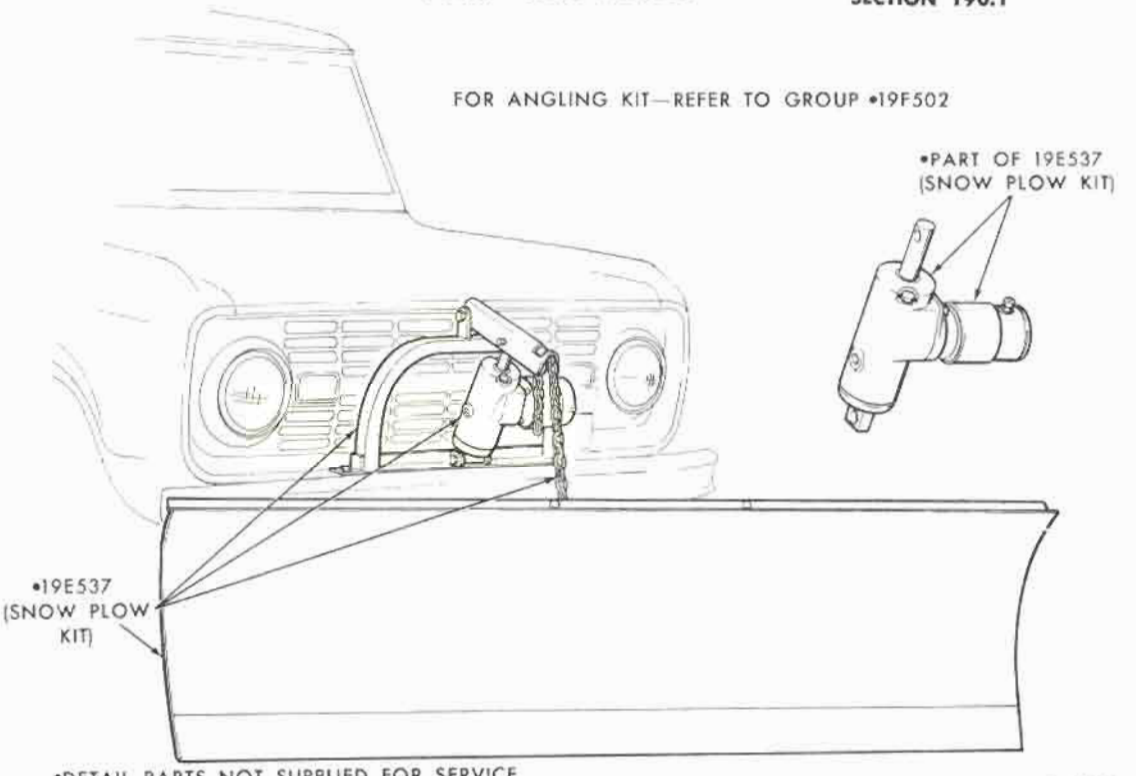

SNOW PLOW
1966/72 BRONCO

COPYRIGHT © 1975 — FORD MOTOR COMPANY — DEARBORN, MICHIGAN

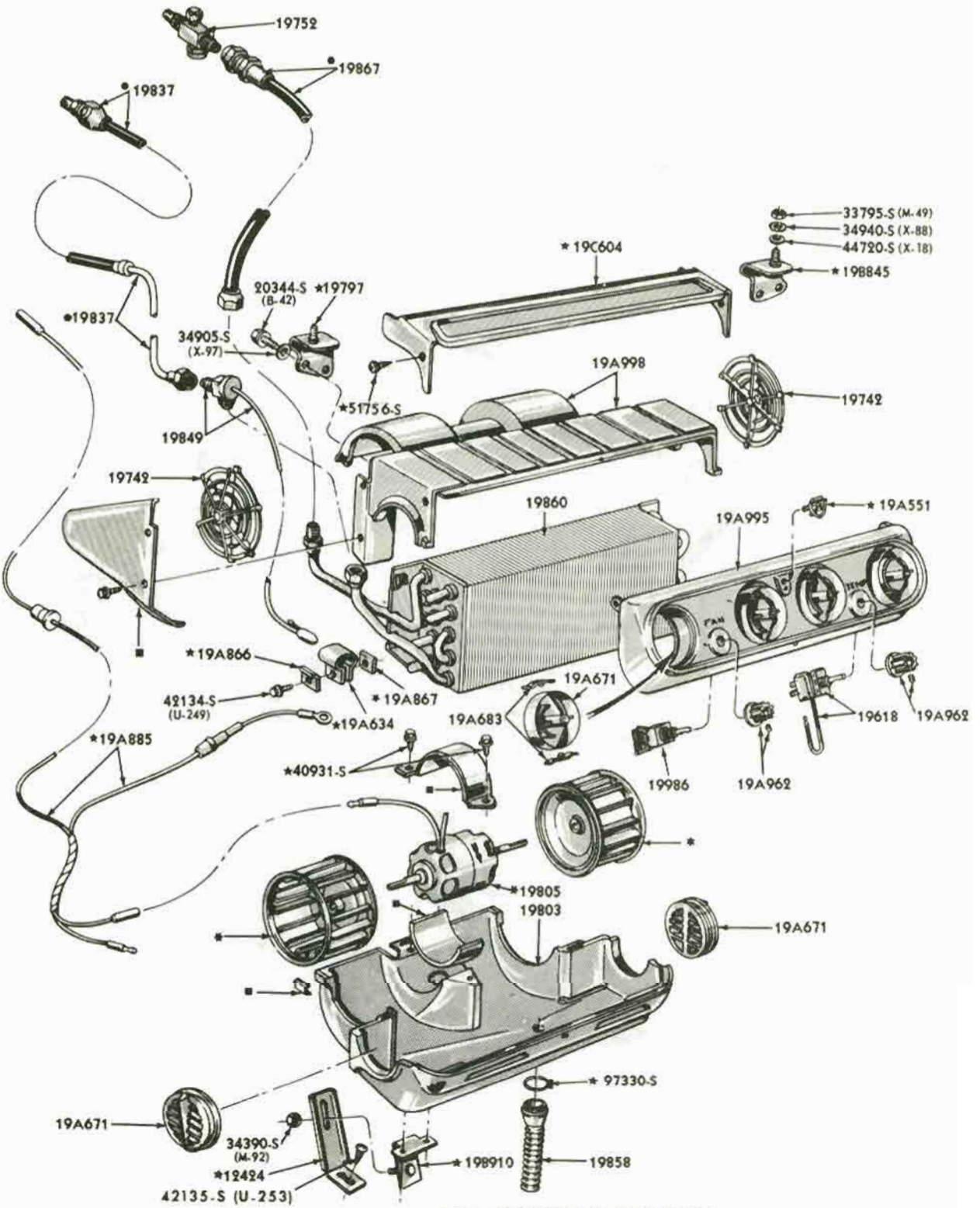

■ SUPPLIED IN 19700 AIR CONDITIONER KIT ONLY
* SUPPLIED IN 19805 MOTOR AND WHEEL ASSY. ONLY

*REFER TO GROUP 19C705-8 FOR SERVICE ASSEMBLY OR SERVICE DETAILS

P-4804

AIR CONDITIONING PARTS (PASSENGER COMPARTMENT)
1965/66 FORD - w/ HANG-ON A/C

COPYRIGHT © 1975 — FORD MOTOR COMPANY — DEARBORN, MICHIGAN

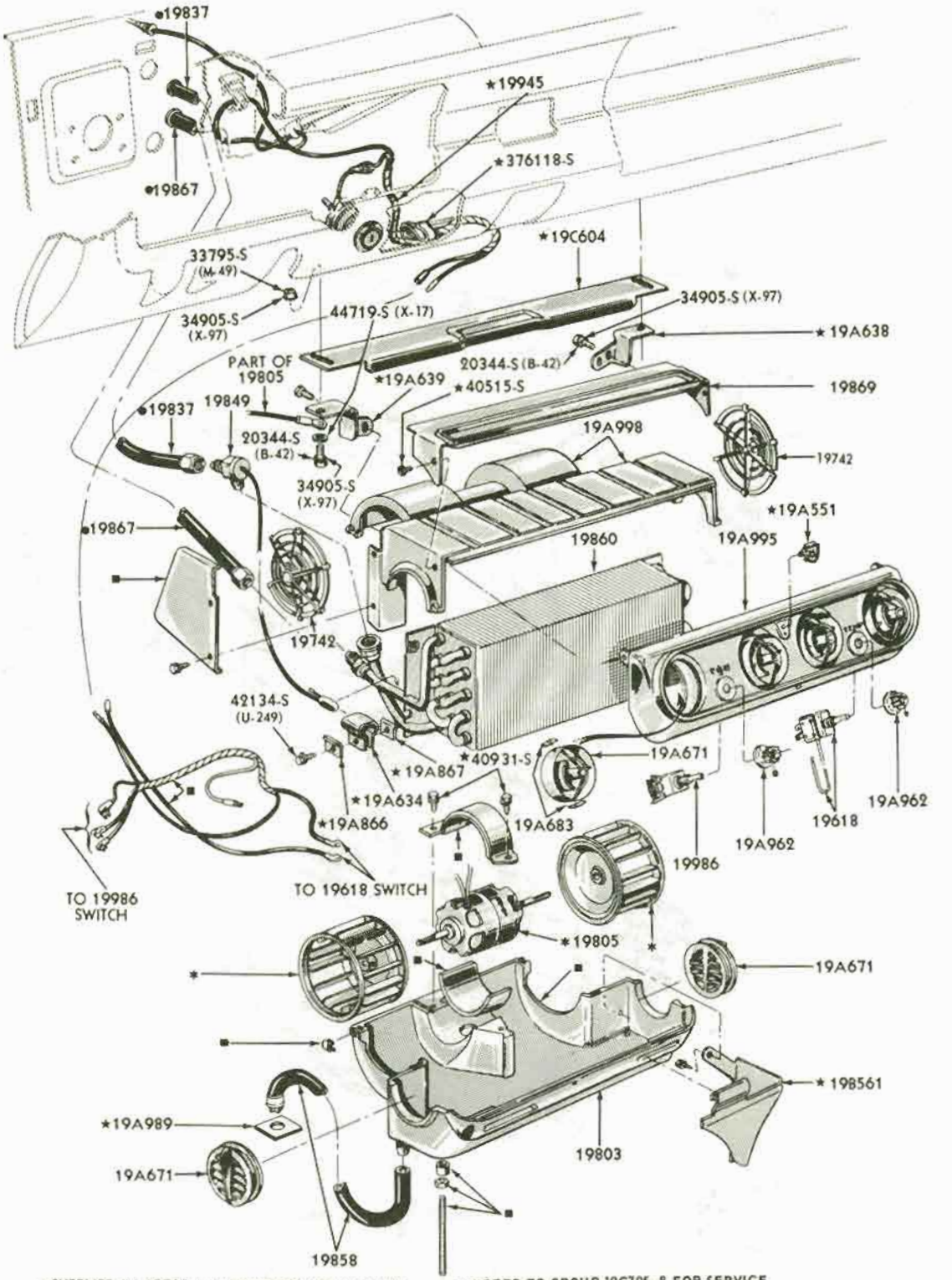

■ SUPPLIED IN 19700 AIR CONDITIONER KIT ONLY
★ SUPPLIED IN 19805 MOTOR AND WHEEL ASS'Y. ONLY
• REFER TO GROUP 19C705-8 FOR SERVICE ASSEMBLY OR SERVICE DETAILS

P-4549

AIR CONDITIONING PARTS (PASSENGER COMPARTMENT)
1965/66 FALCON and MUSTANG - w/ HANG-ON A/C

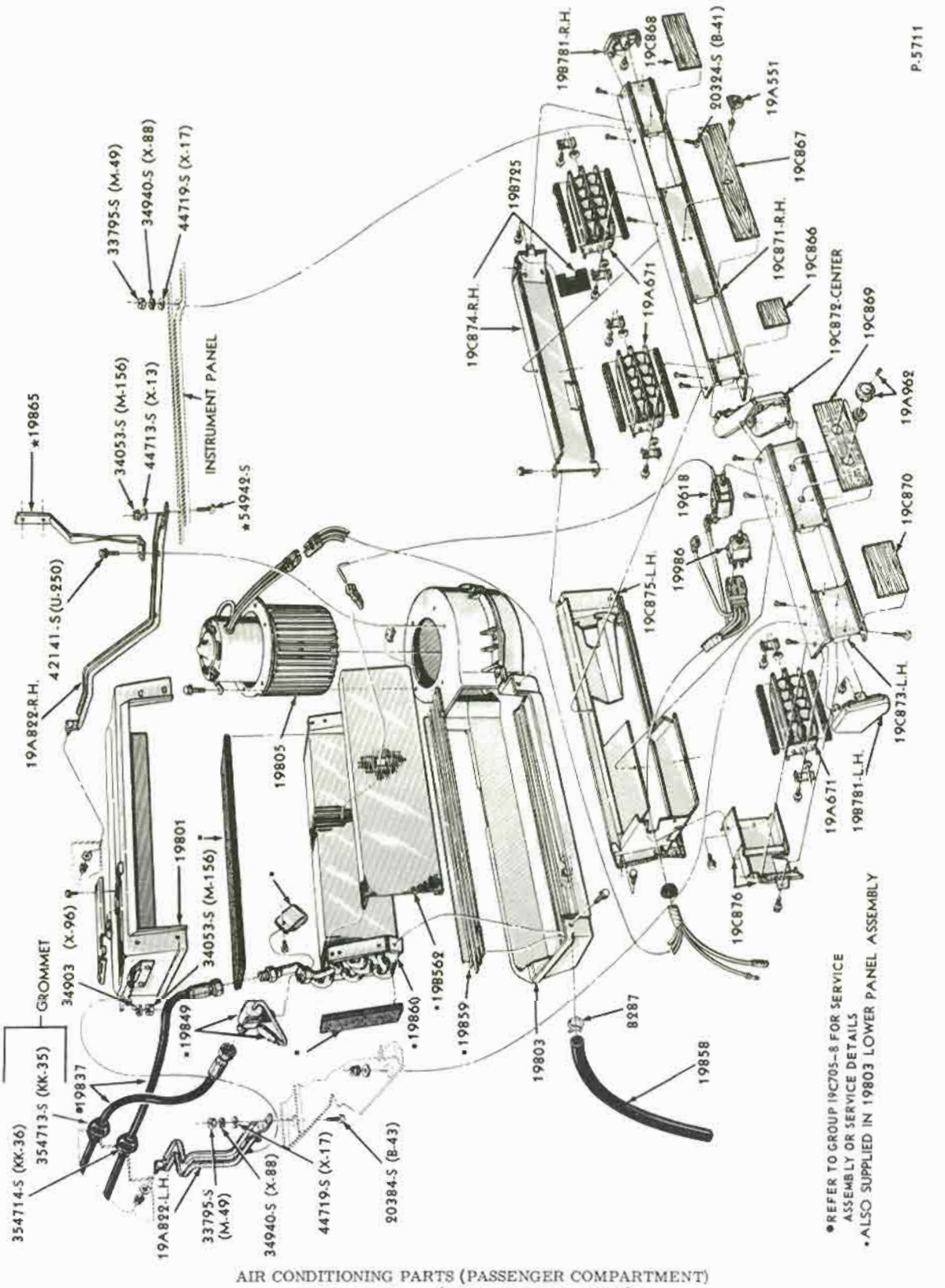

AIR CONDITIONING PARTS (PASSENGER COMPARTMENT)
1967 FORD - w/ DELUXE HANG-ON A/C

COPYRIGHT © 1975 — FORD MOTOR COMPANY — DEARBORN, MICHIGAN

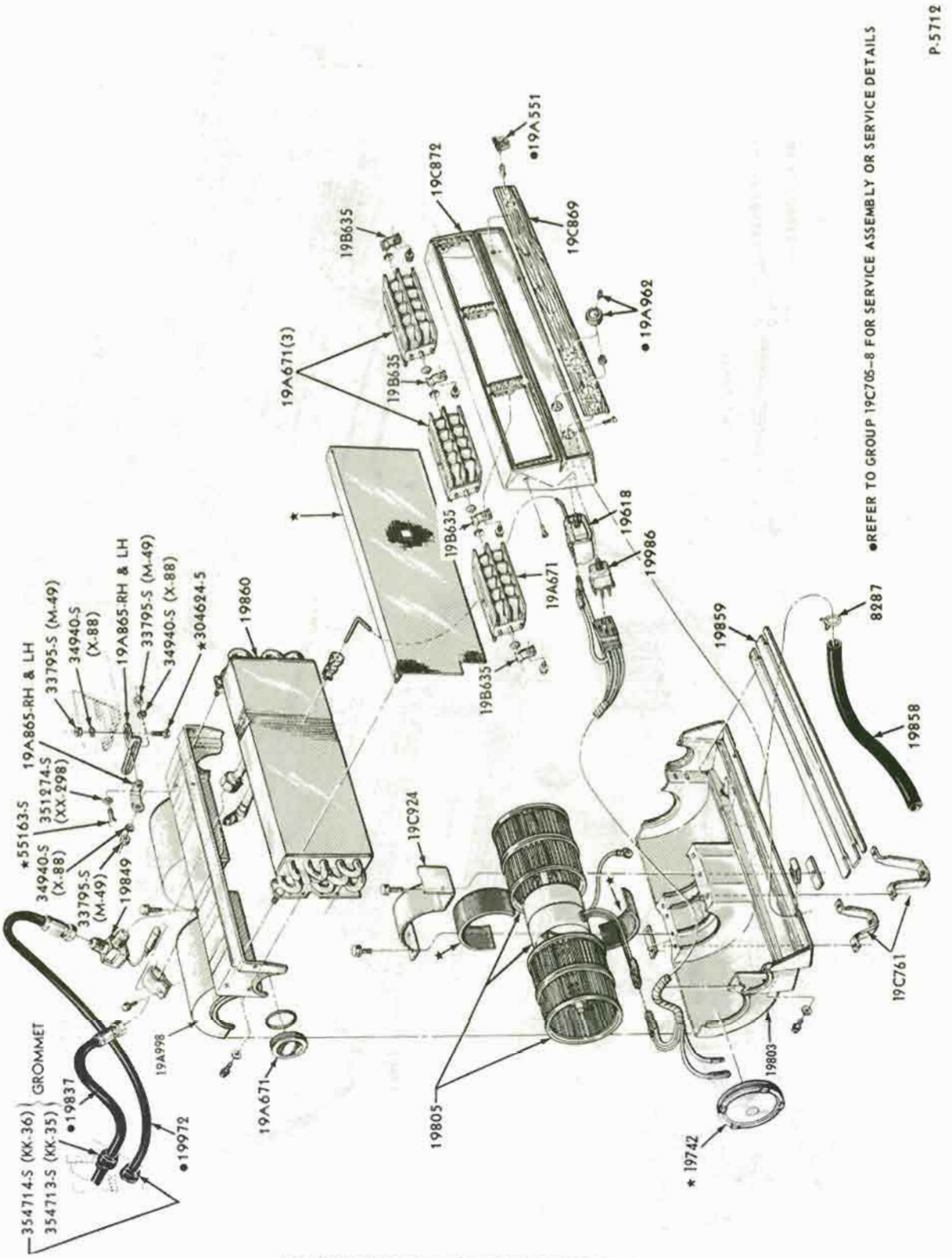

AIR CONDITIONING PARTS (PASSENGER COMPARTMENT)
1967/68 FORD and MUSTANG - w/ECONOMY HANG - ON A/C
1967/70 FAIRLANE/TORINO and 1967/70 FALCON - w/ECONOMY HANG-ON A/C

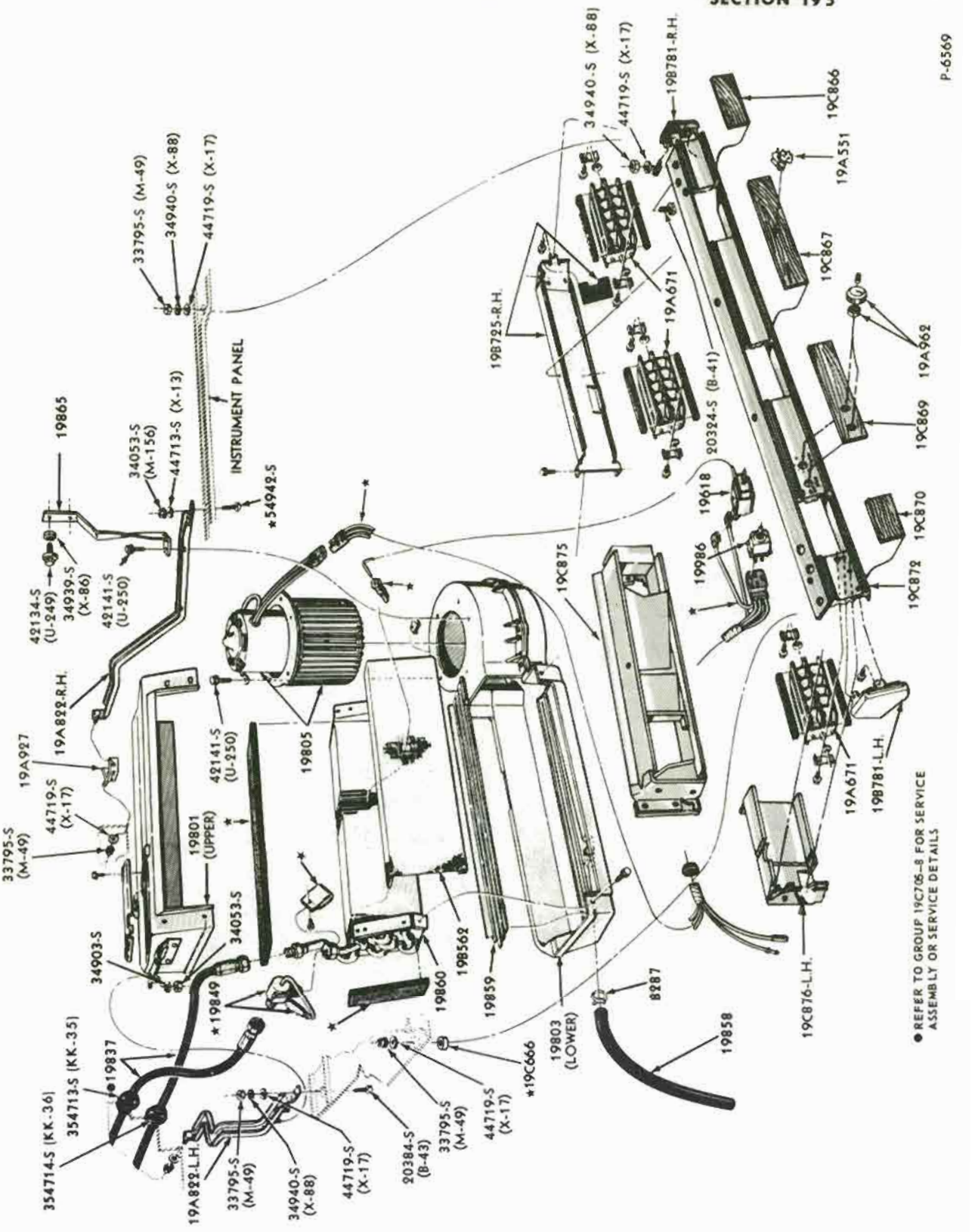

AIR CONDITIONING PARTS (PASSENGER COMPARTMENT)
1958 FORD - w/ DELUXE HANG-ON A/C

COPYRIGHT © 1975 — FORD MOTOR COMPANY — DEARBORN, MICHIGAN

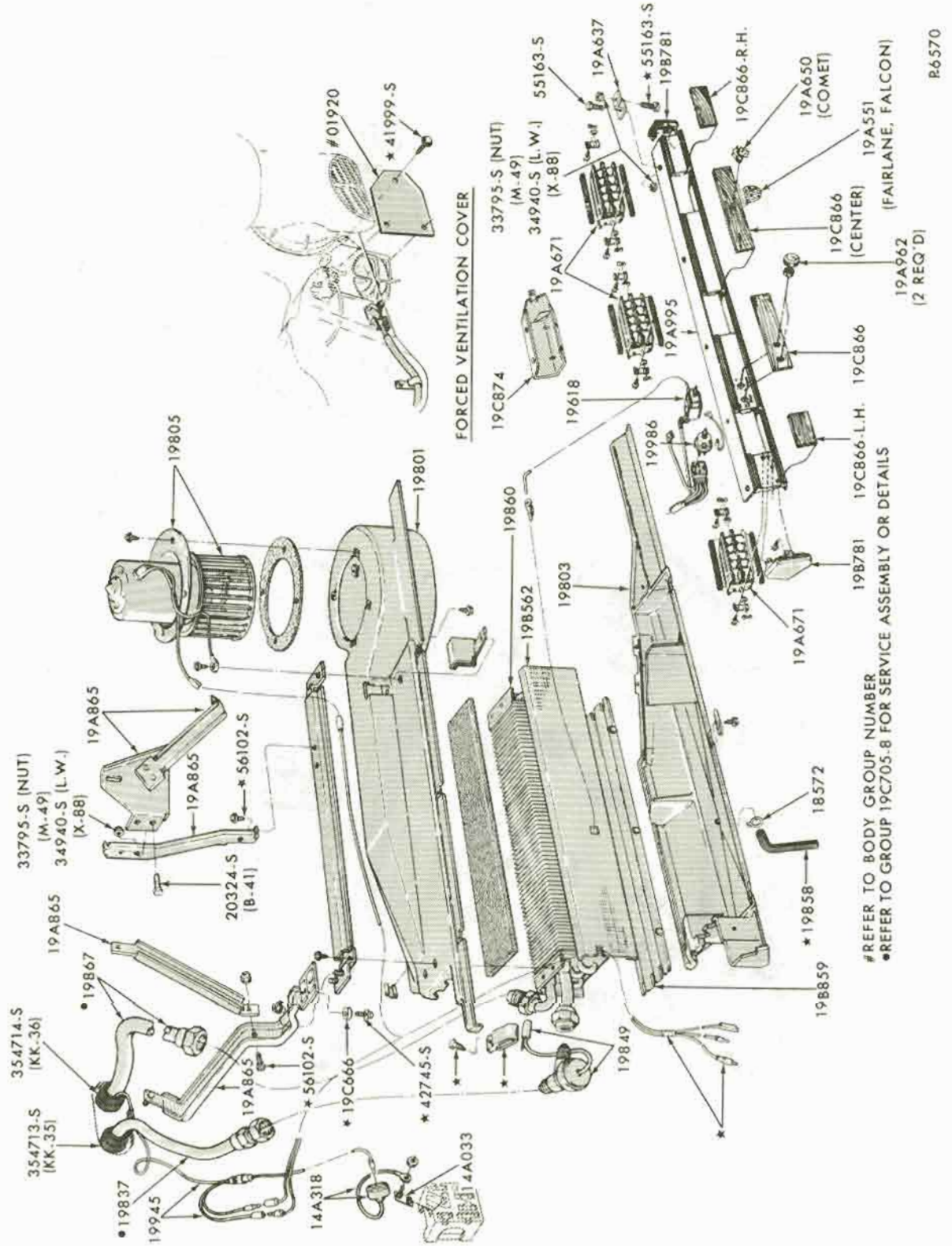

AIR CONDITIONING PARTS (PASSENGER COMPARTMENT)
1968/71 FAIRLANE/TORINO and 1968/70 FALCON - w/ DELUXE HANG-ON A/C

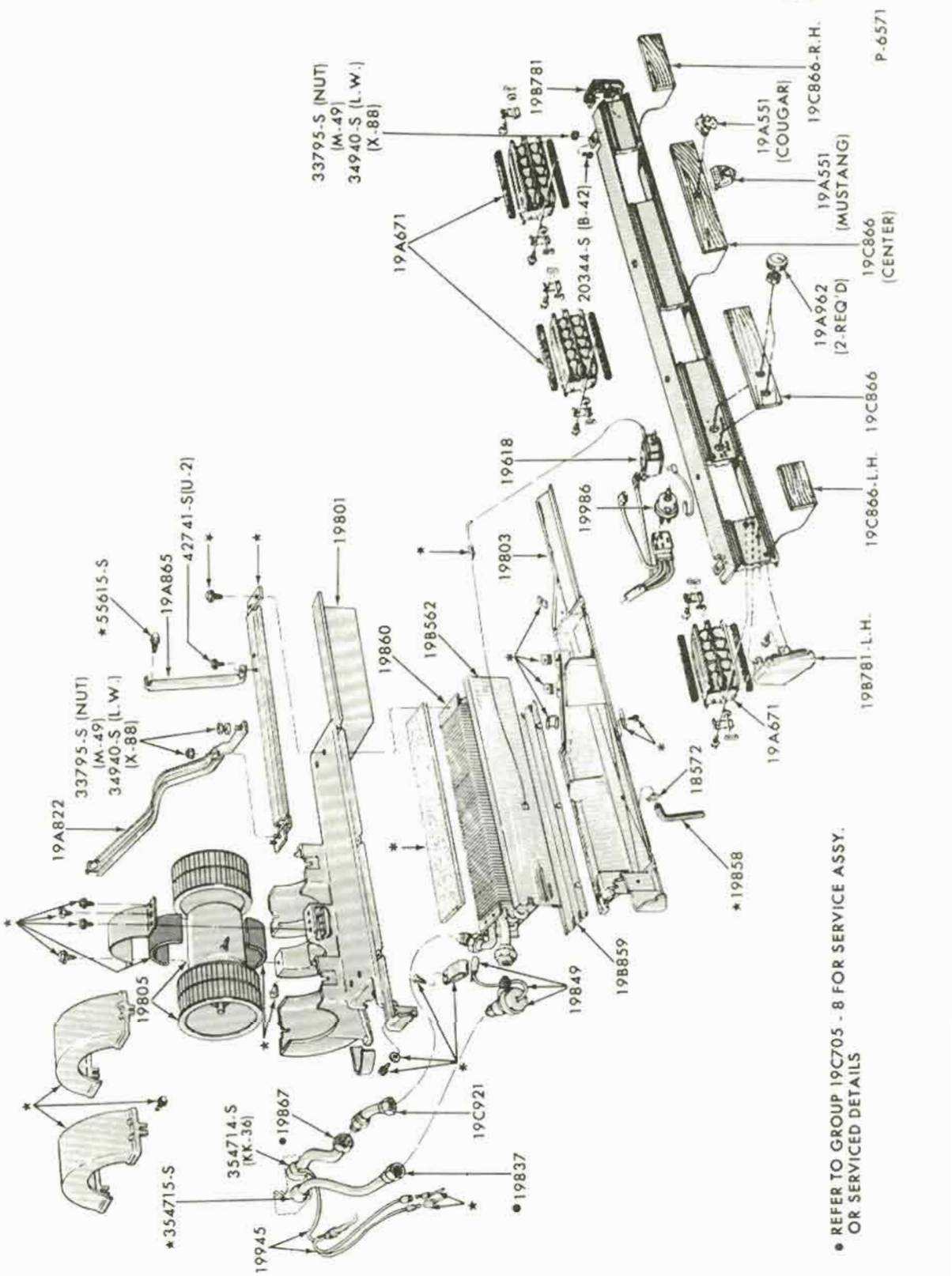

AIR CONDITIONING PARTS (PASSENGER COMPARTMENT)
1968 MUSTANG - w/ DELUXE HANG-ON A/C

COPYRIGHT © 1975 — FORD MOTOR COMPANY — DEARBORN, MICHIGAN

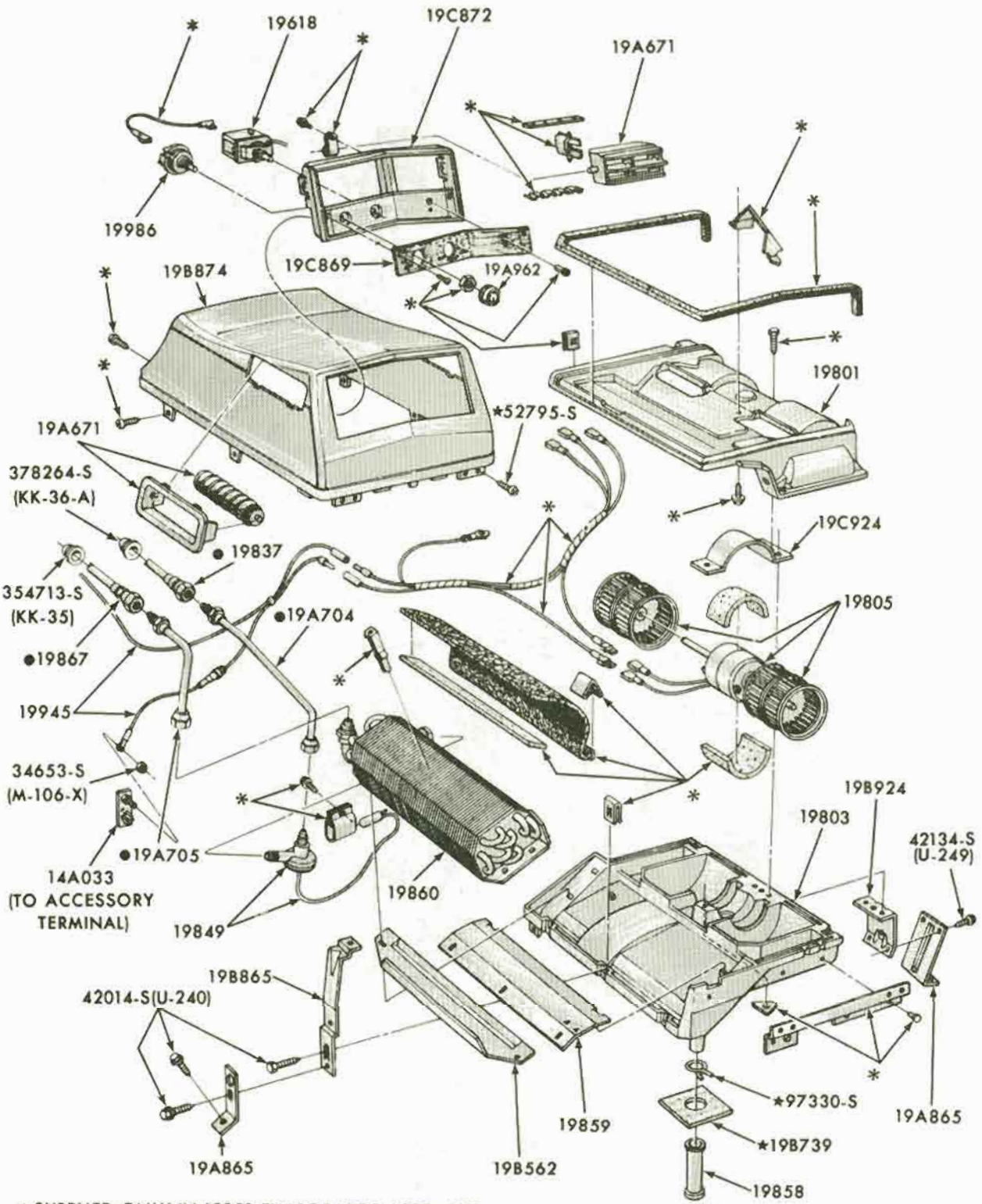

*SUPPLIED ONLY IN 19850 EVAPORATOR ASSEMBLY

● REFER TO GROUP 19C705-8 FOR SERVICE ASSEMBLY OR DETAILS

P-7064

AIR CONDITIONING PARTS (PASSENGER COMPARTMENT)
1969/70 FORD - w/HANG-ON A/C - CONSOLE DESIGN

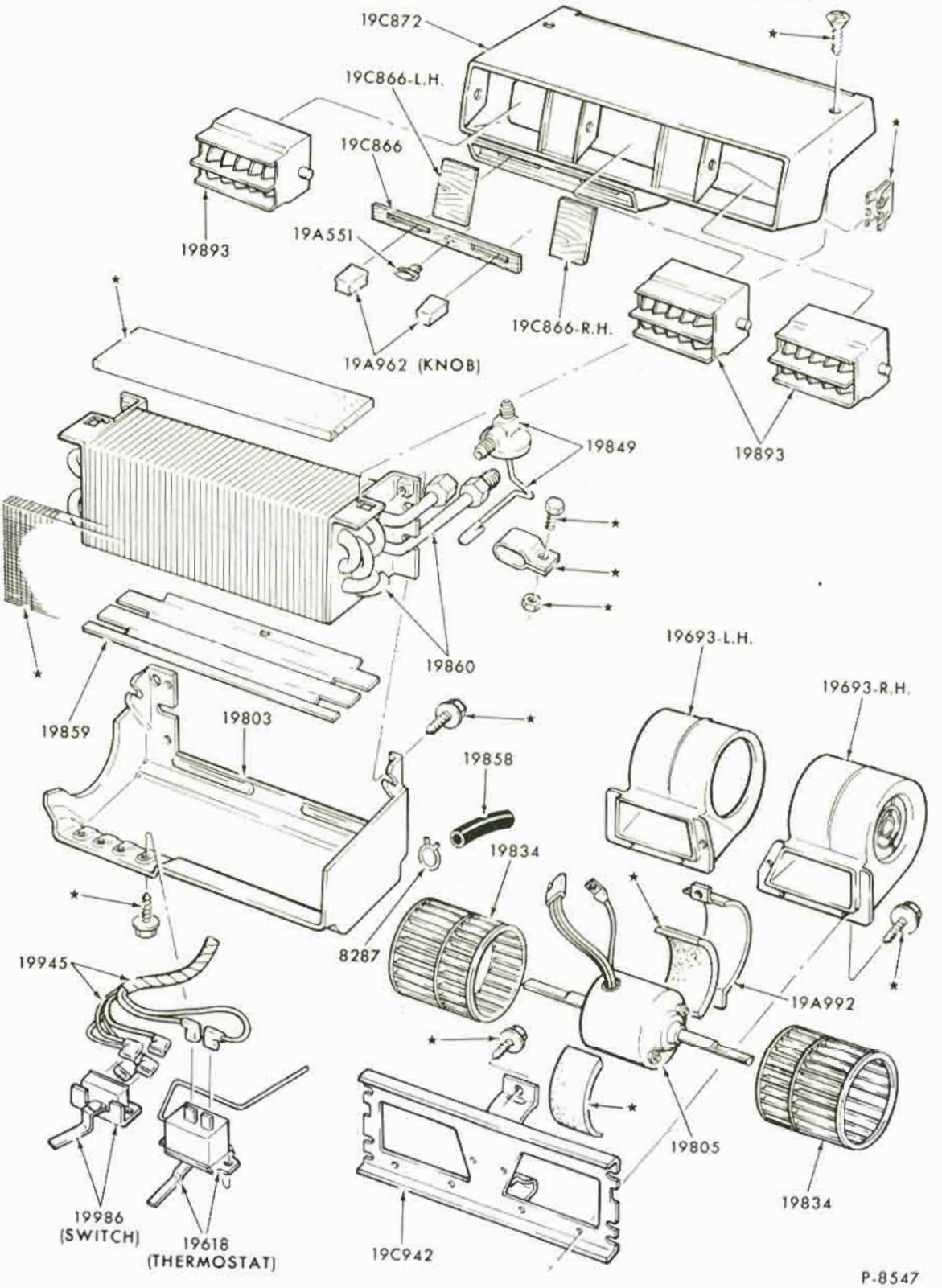

AIR CONDITIONING PARTS (PASSENGER COMPARTMENT)
1970/71 PINTO, MAVERICK - w/HANG-ON A/C - ECONOMY

COPYRIGHT © 1975 — FORD MOTOR COMPANY — DEARBORN, MICHIGAN

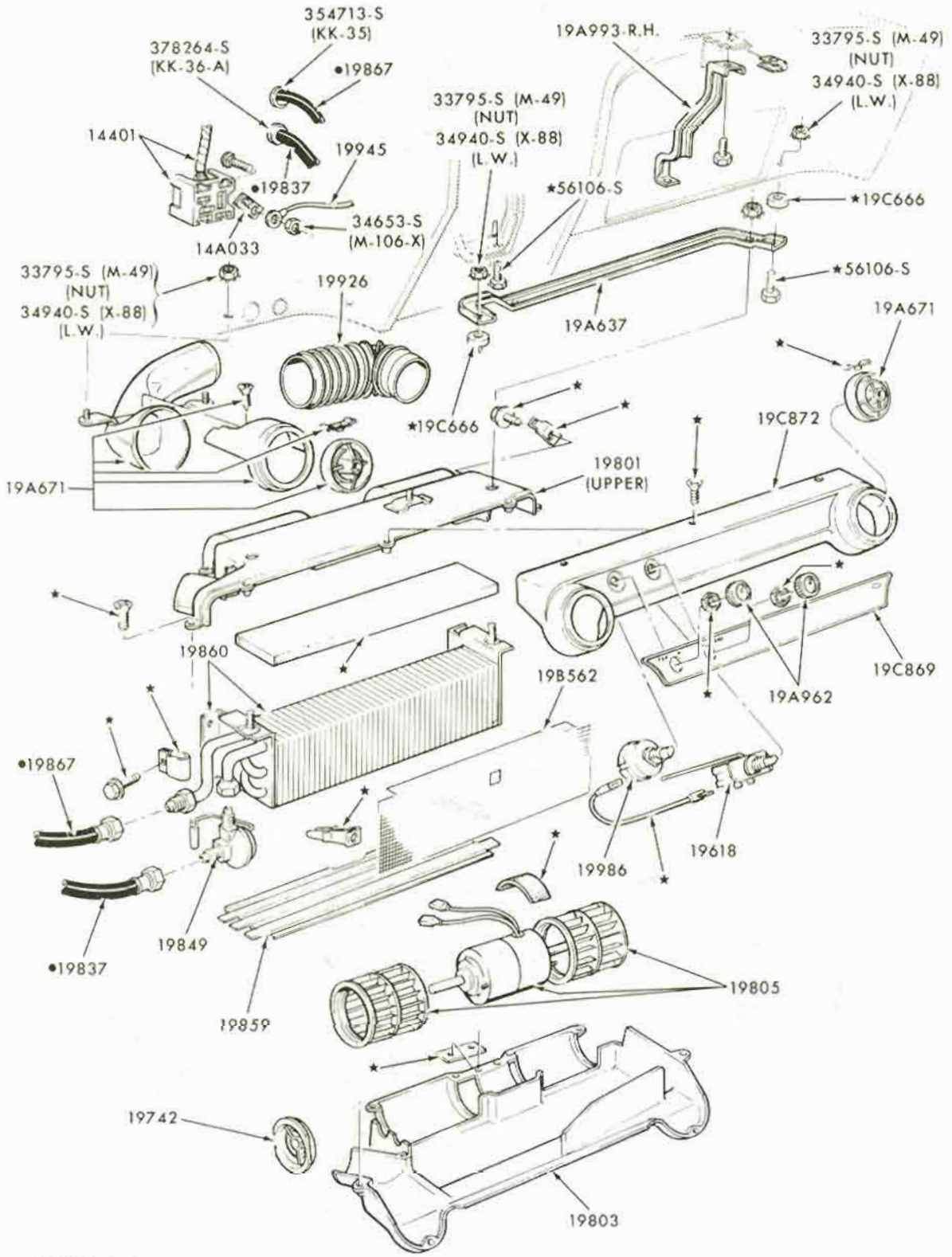

•REFER TO GROUP 19C705-8 FOR SERVICE ASSEMBLY OR DETAILS

P-8503

AIR CONDITIONING PARTS (PASSENGER COMPARTMENT)
1969/71 MUSTANG, MAVERICK - w/HANG-ON A/C - SLIMLINE

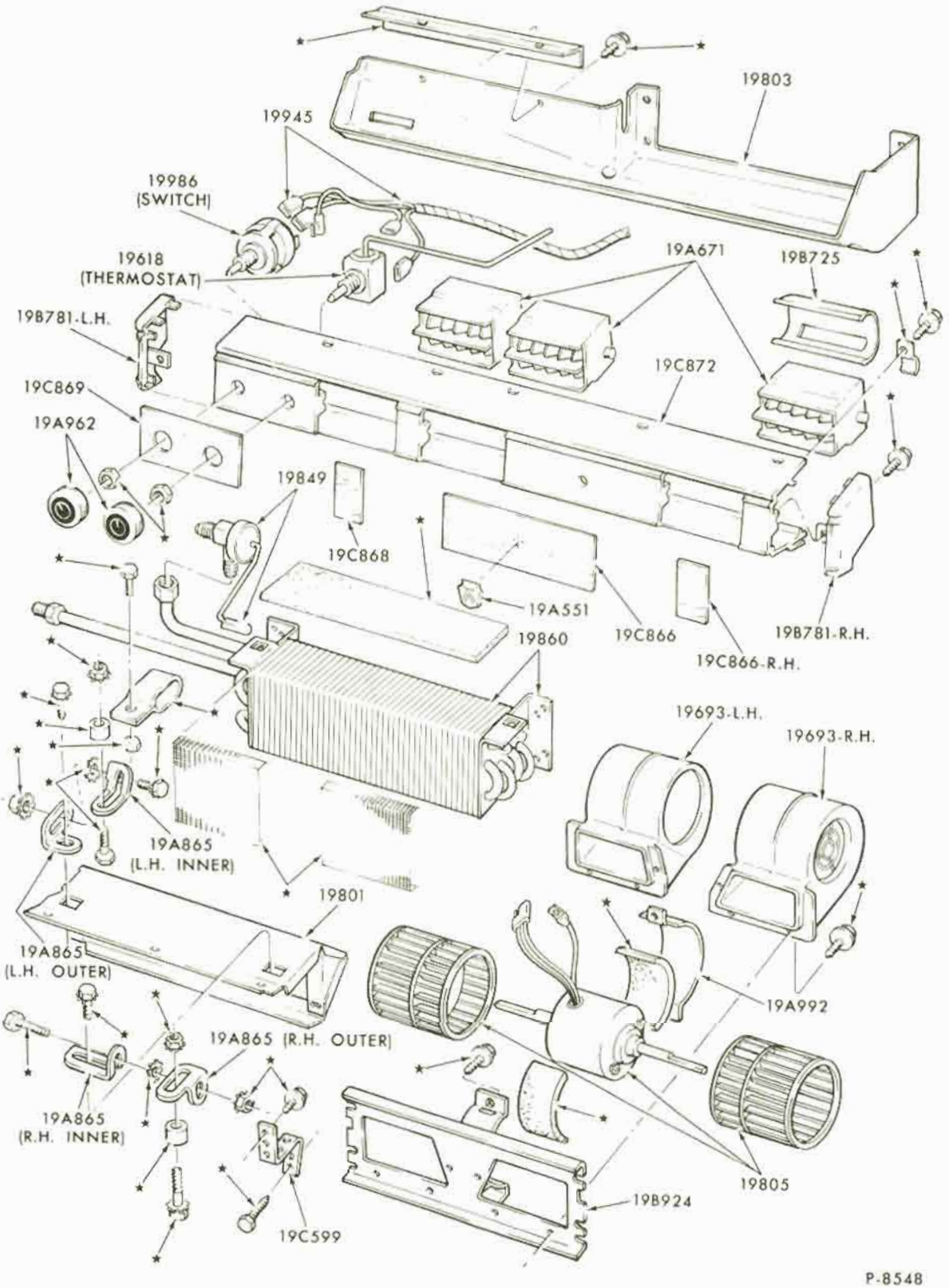

AIR CONDITIONING PARTS (PASSENGER COMPARTMENT)
1969/71 FORD - w/HANG-ON A/C - SLIMLINE

COPYRIGHT © 1975 — FORD MOTOR COMPANY — DEARBORN, MICHIGAN

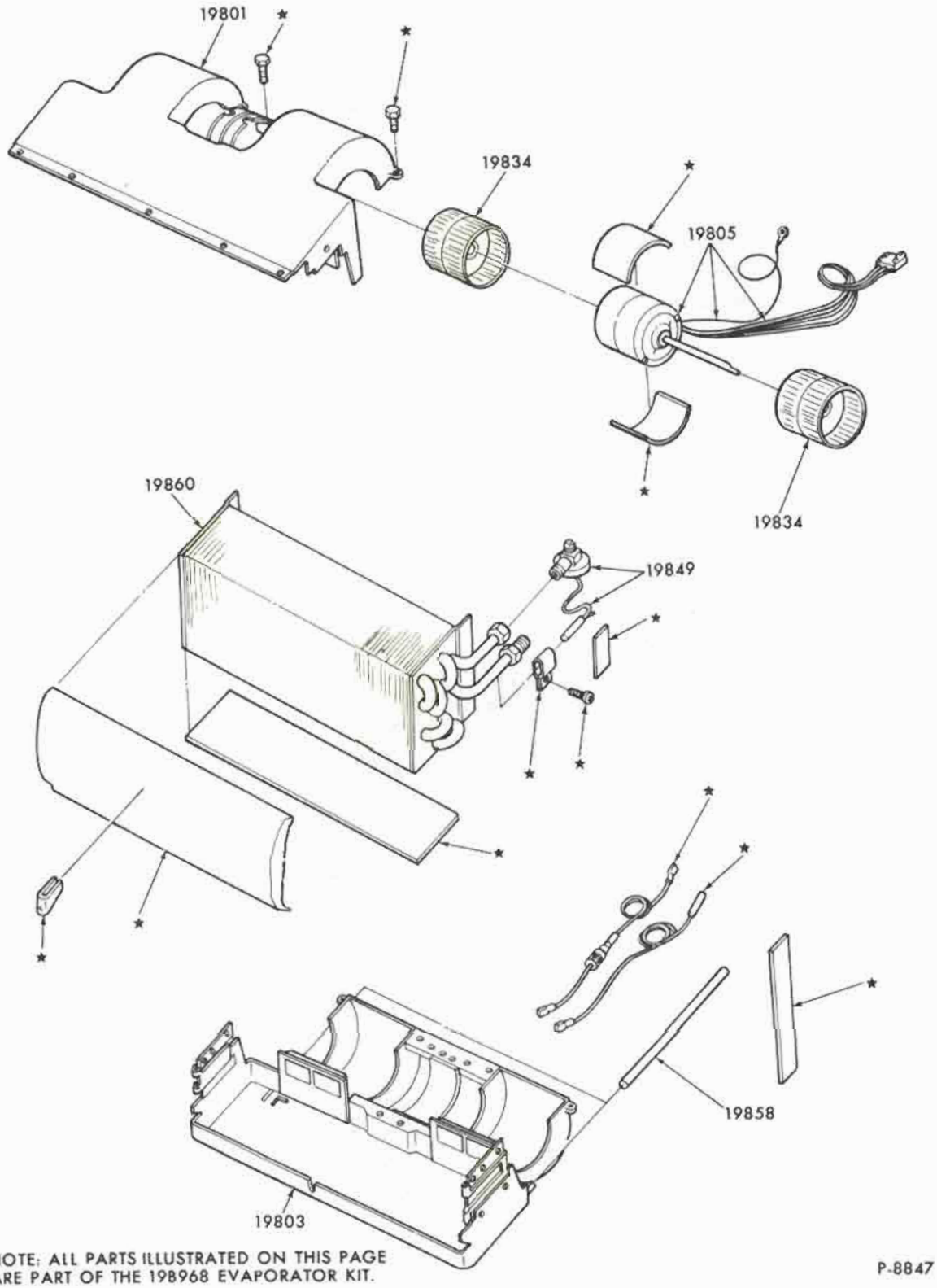

NOTE: ALL PARTS ILLUSTRATED ON THIS PAGE ARE PART OF THE 198968 EVAPORATOR KIT.

P-8847

AIR CONDITIONING EVAPORATOR PARTS-DELUXE and ECONOMY HANG-ON (PASSENGER COMPARTMENT)
1972 ALL

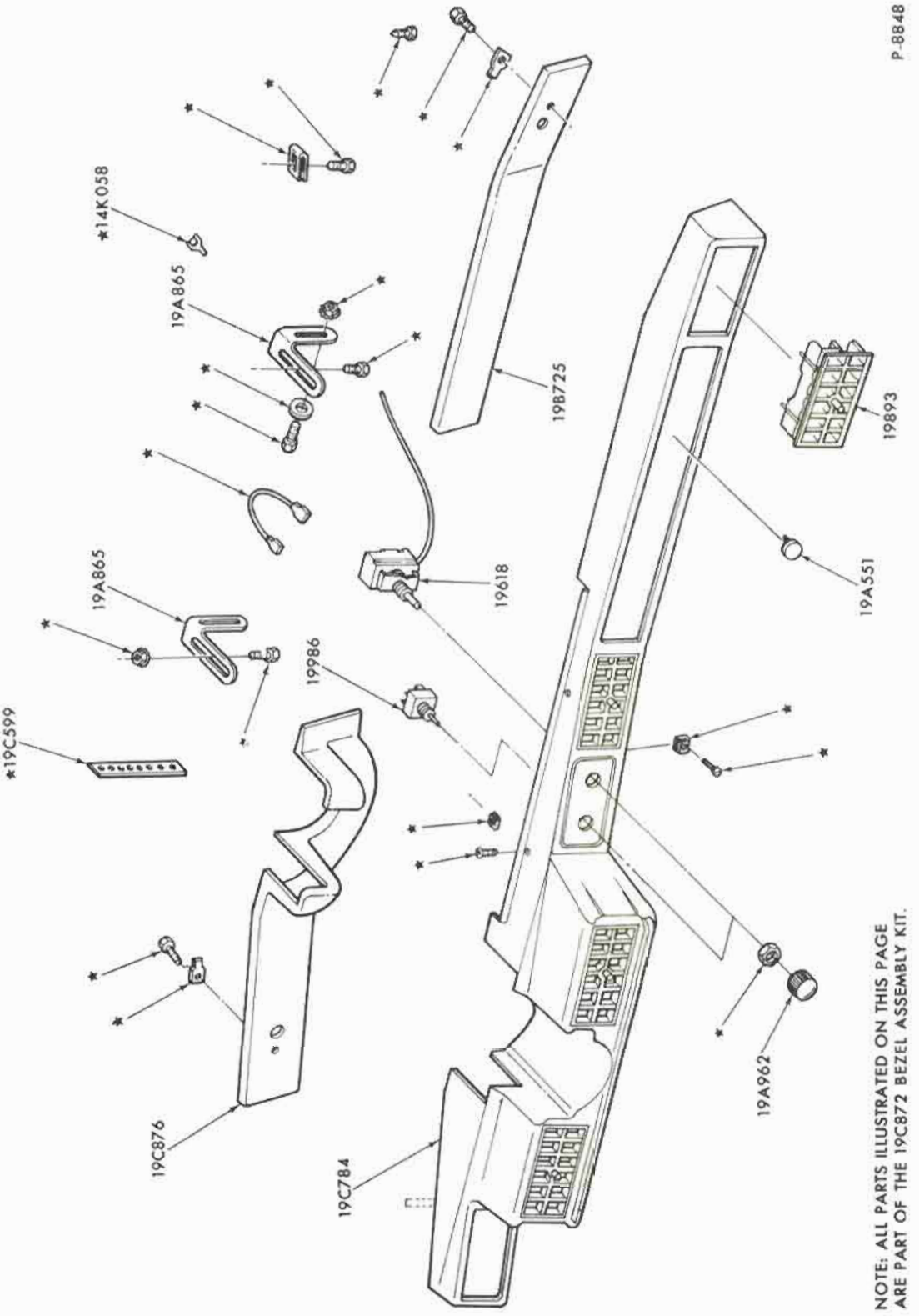

AIR CONDITIONING DELUXE HANG-ON - BEZEL and CONTROLS (PASSENGER COMPARTMENT)
1972 PINTO

COPYRIGHT © 1975 — FORD MOTOR COMPANY — DEARBORN, MICHIGAN

P-8849

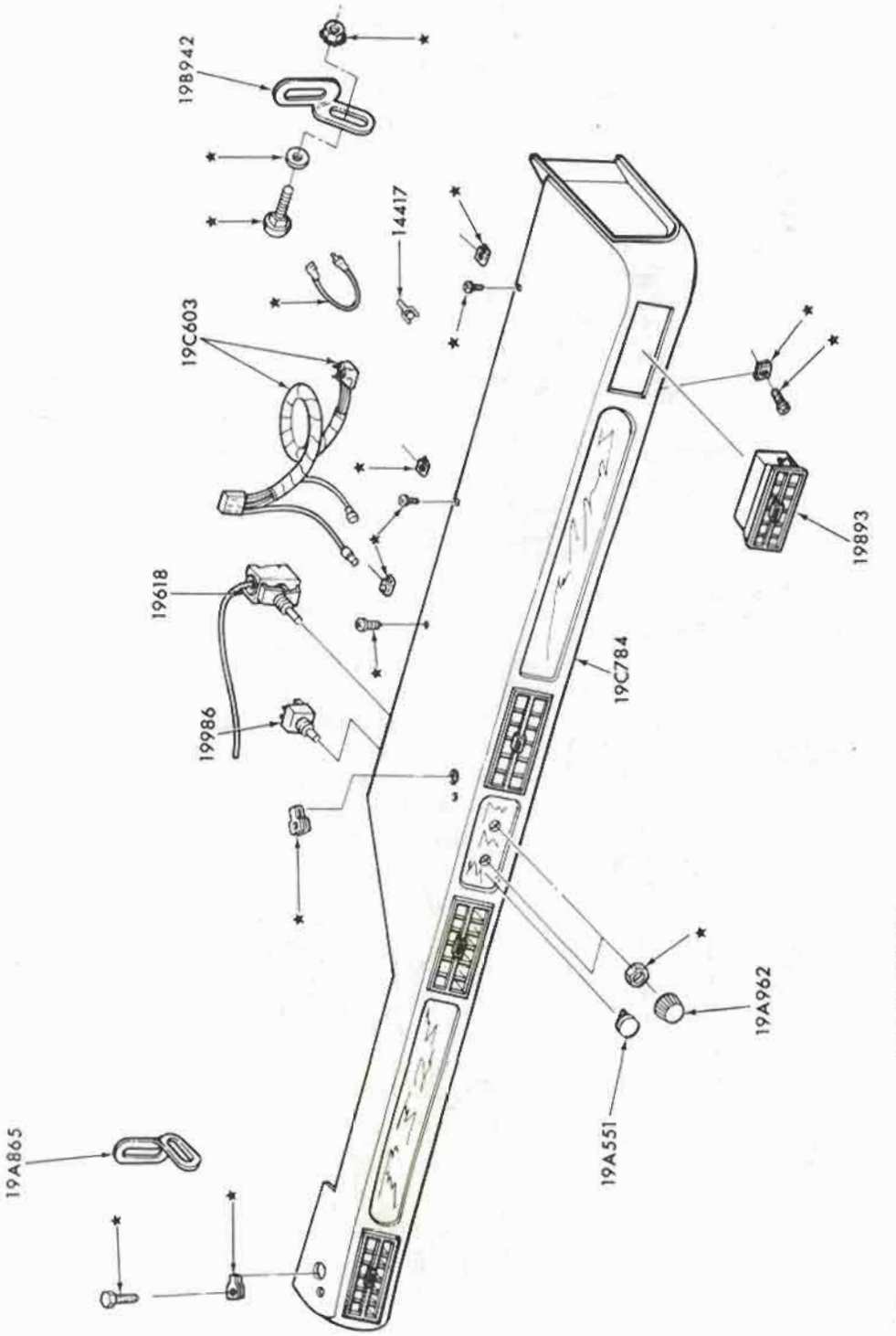

NOTE: ALL PARTS ILLUSTRATED ON THIS PAGE ARE PART OF THE 19C872 BEZEL KIT.

AIR CONDITIONING DELUXE HANG-ON-BEZEL and CONTROLS (PASSENGER COMPARTMENT)
1972 MAVERICK

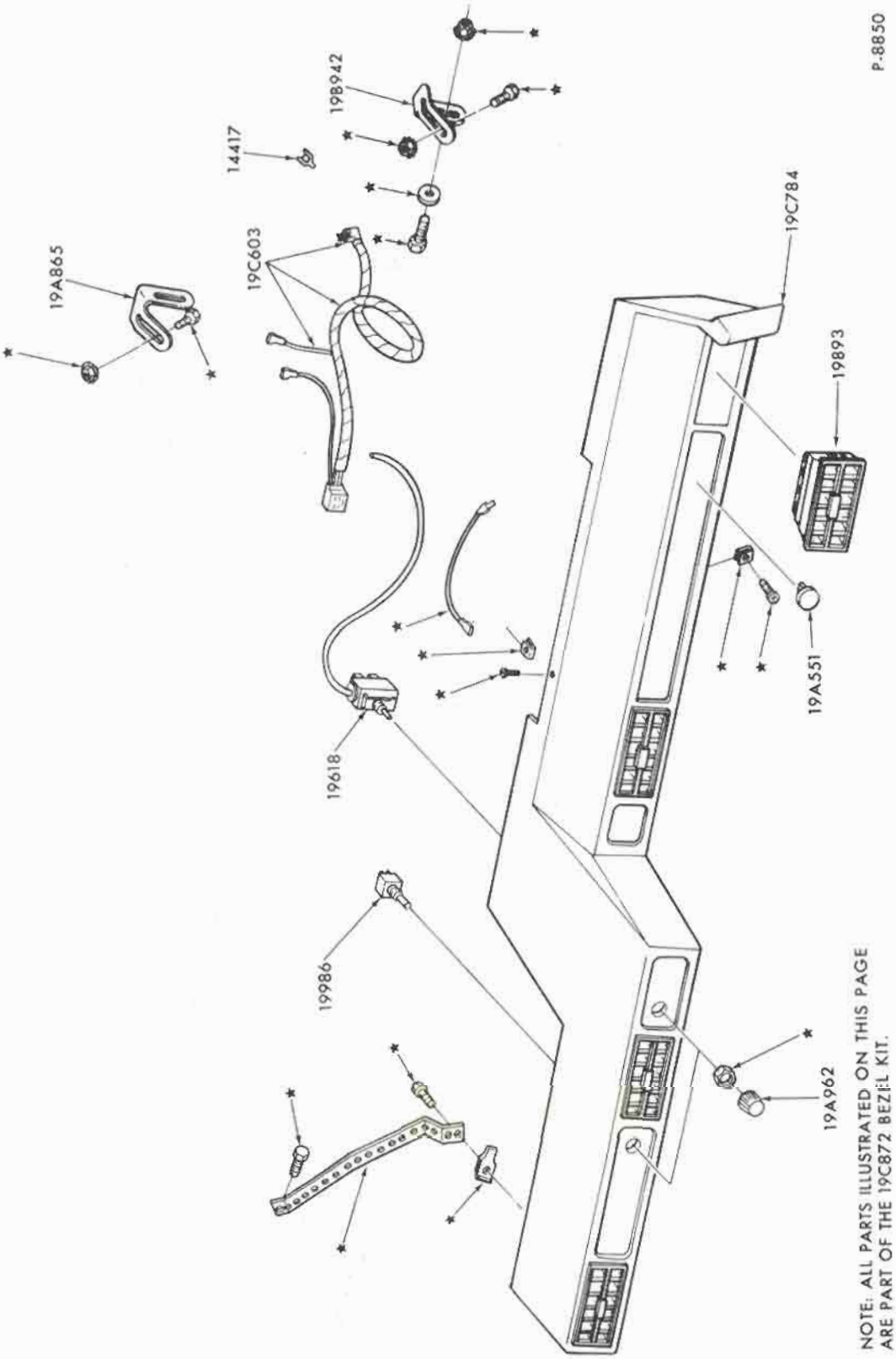

AIR CONDITIONING DELUXE HANG-ON - BEZEL and CONTROLS (PASSENGER COMPARTMENT)
1972 FORD

COPYRIGHT © 1975 — FORD MOTOR COMPANY — DEARBORN, MICHIGAN

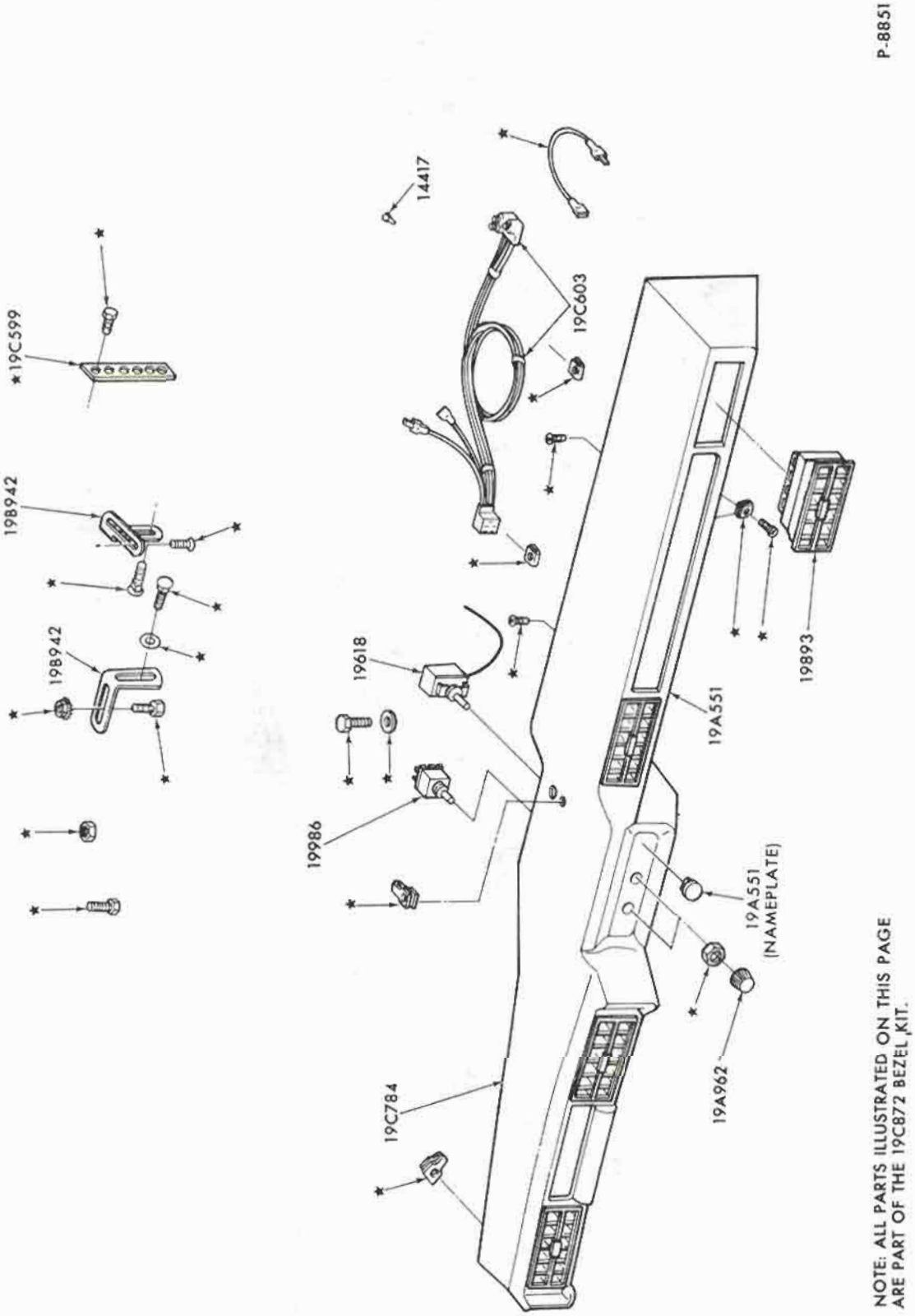

AIR CONDITIONING DELUXE HANG-ON - BEZEL and CONTROLS (PASSENGER COMPARTMENT)
1972 TORINO

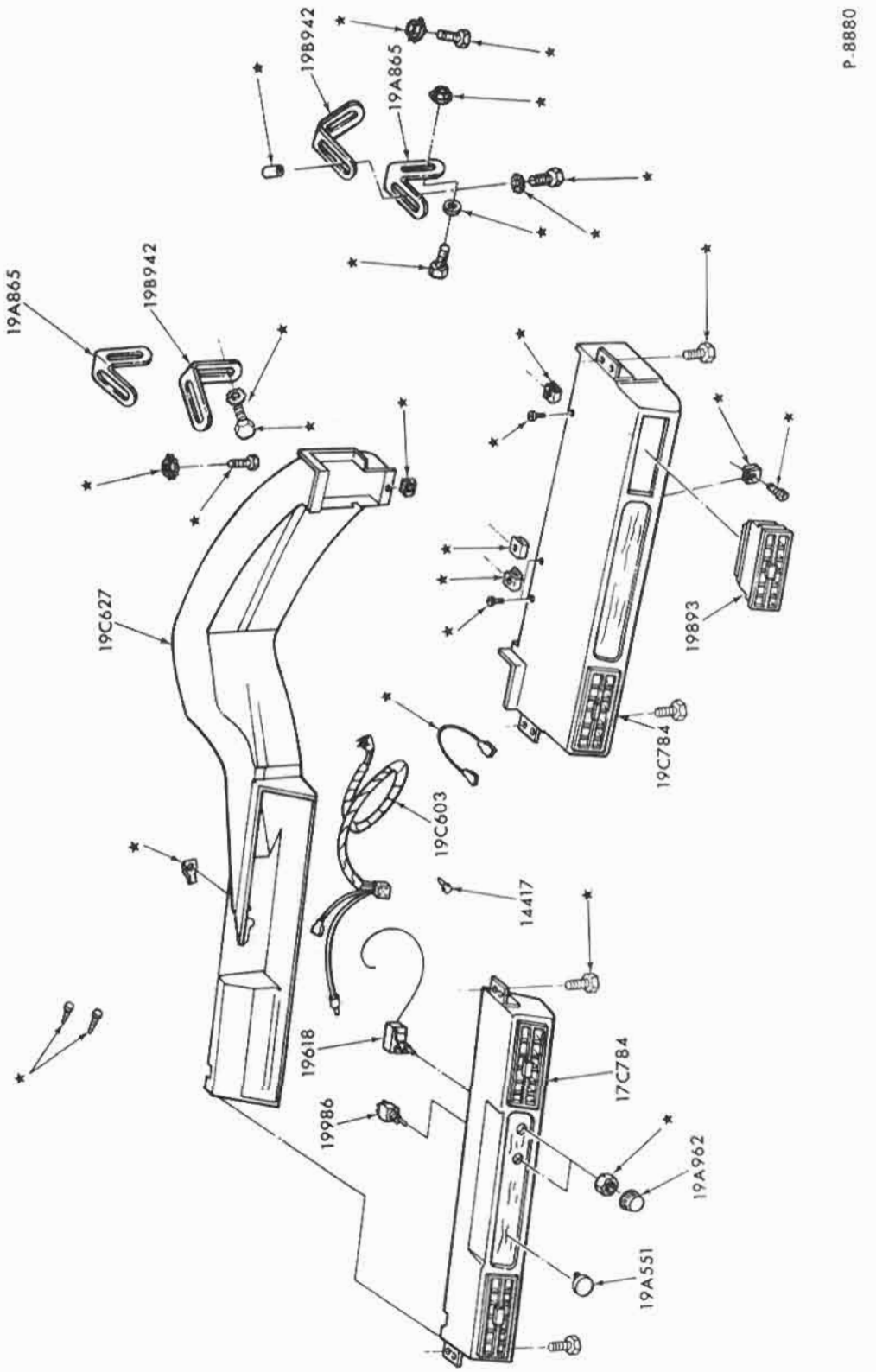

AIR CONDITIONING DELUXE HANG-ON - BEZEL and CONTROLS (PASSENGER COMPARTMENT)
1972 MUSTANG

COPYRIGHT © 1975 — FORD MOTOR COMPANY — DEARBORN, MICHIGAN

P-8881

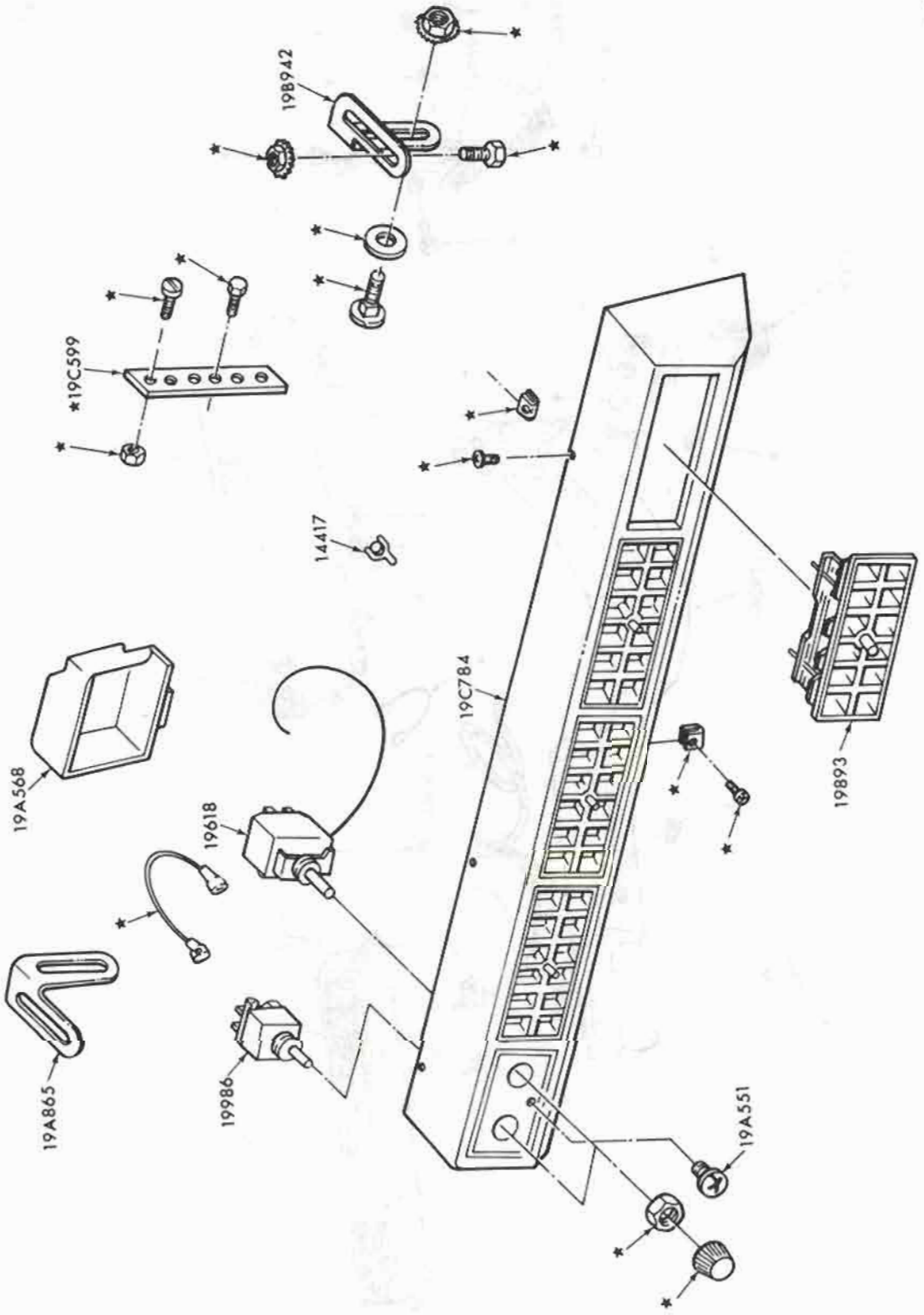

AIR CONDITIONING ECONOMY HANG-ON - BEZEL and CONTROLS (PASSENGER COMPARTMENT)
1972 ALL

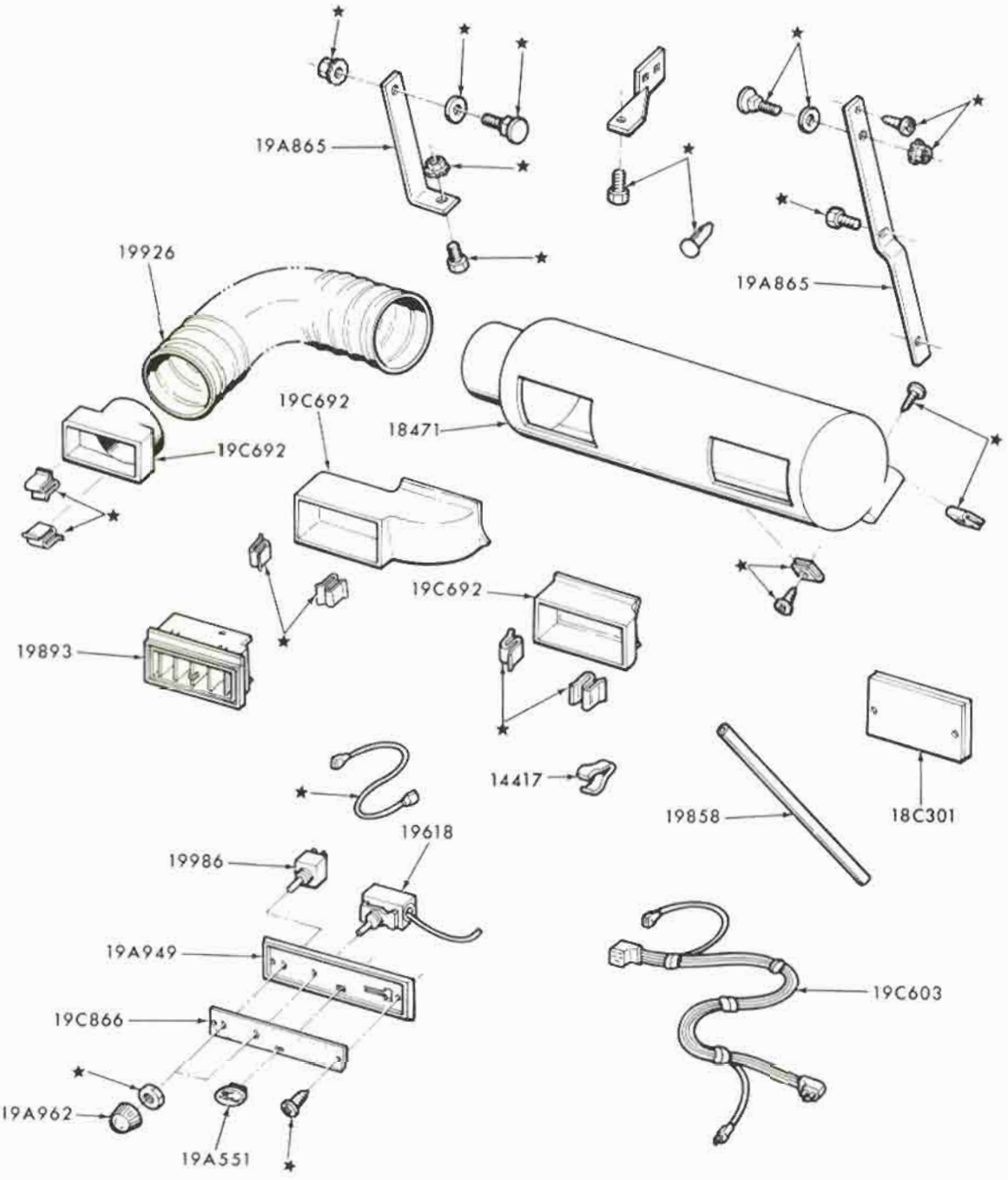

NOTE: ALL PARTS ILLUSTRATED ON THIS PAGE ARE PART OF 19C872 BEZEL KIT

P-11327

AIR CONDITIONER BEZEL and CONTROLS
BUILT-IN A/C (DEALER INSTALLED)
1972 PINTO

COPYRIGHT © 1975 — FORD MOTOR COMPANY — DEARBORN, MICHIGAN

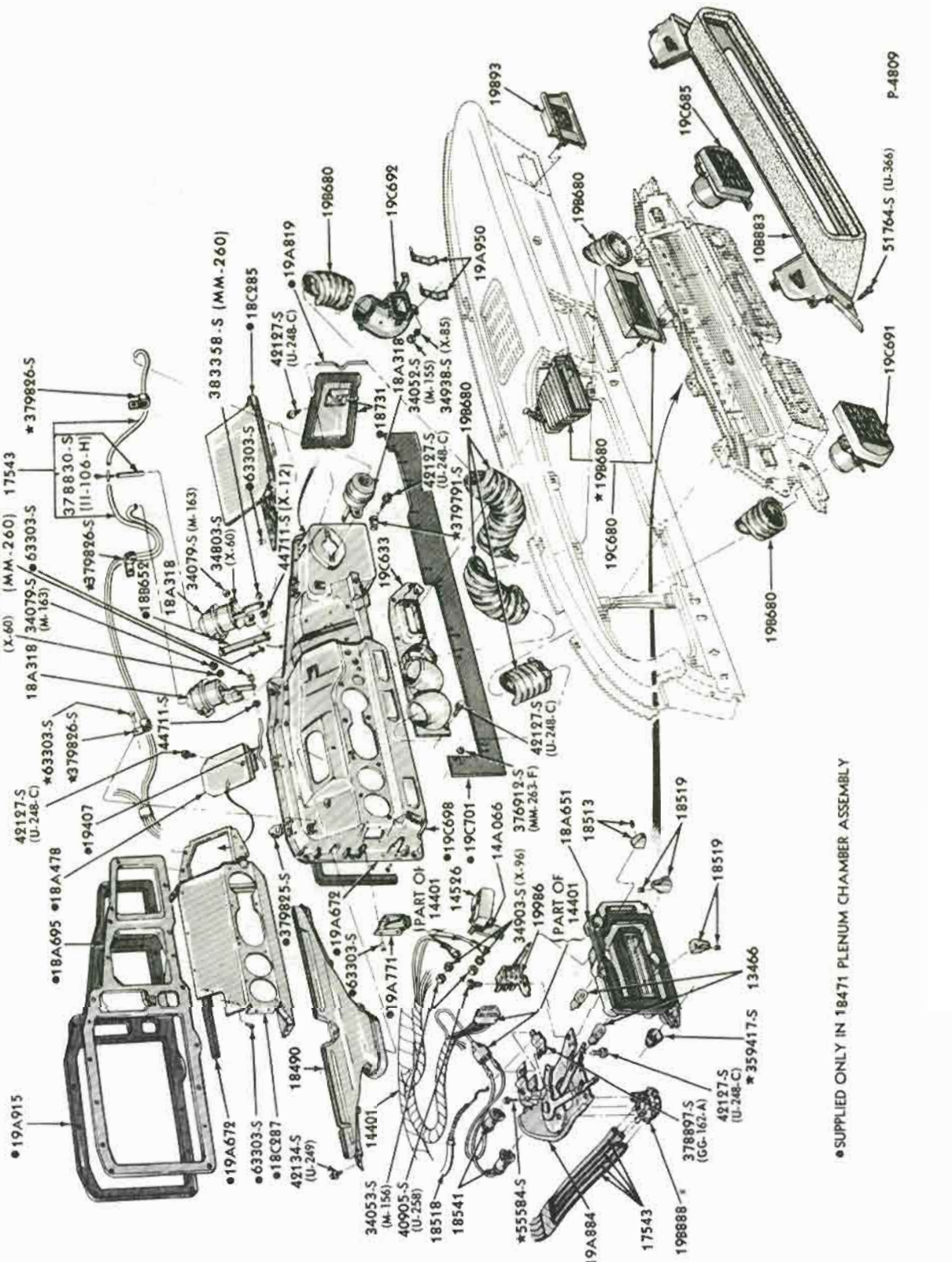

AIR CONDITIONING CONTROLS and RELATED PARTS
1965/66 FORD - w/ INTEGRAL A/C

COPYRIGHT © 1975 — FORD MOTOR COMPANY — DEARBORN, MICHIGAN

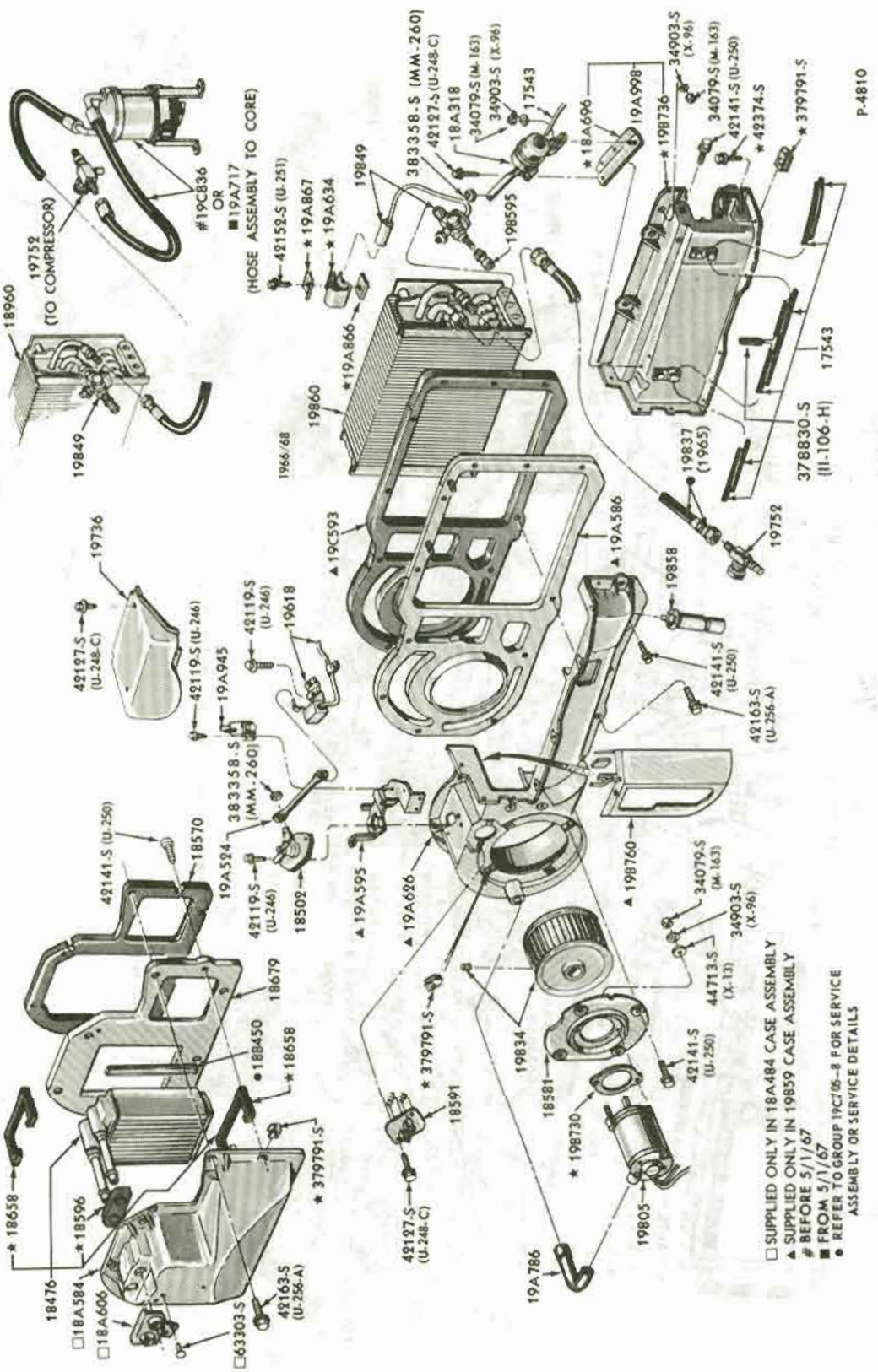

AIR CONDITIONING PARTS (PASSENGER COMPARTMENT)
1965/68 FORD-w/ INTEGRAL A/C

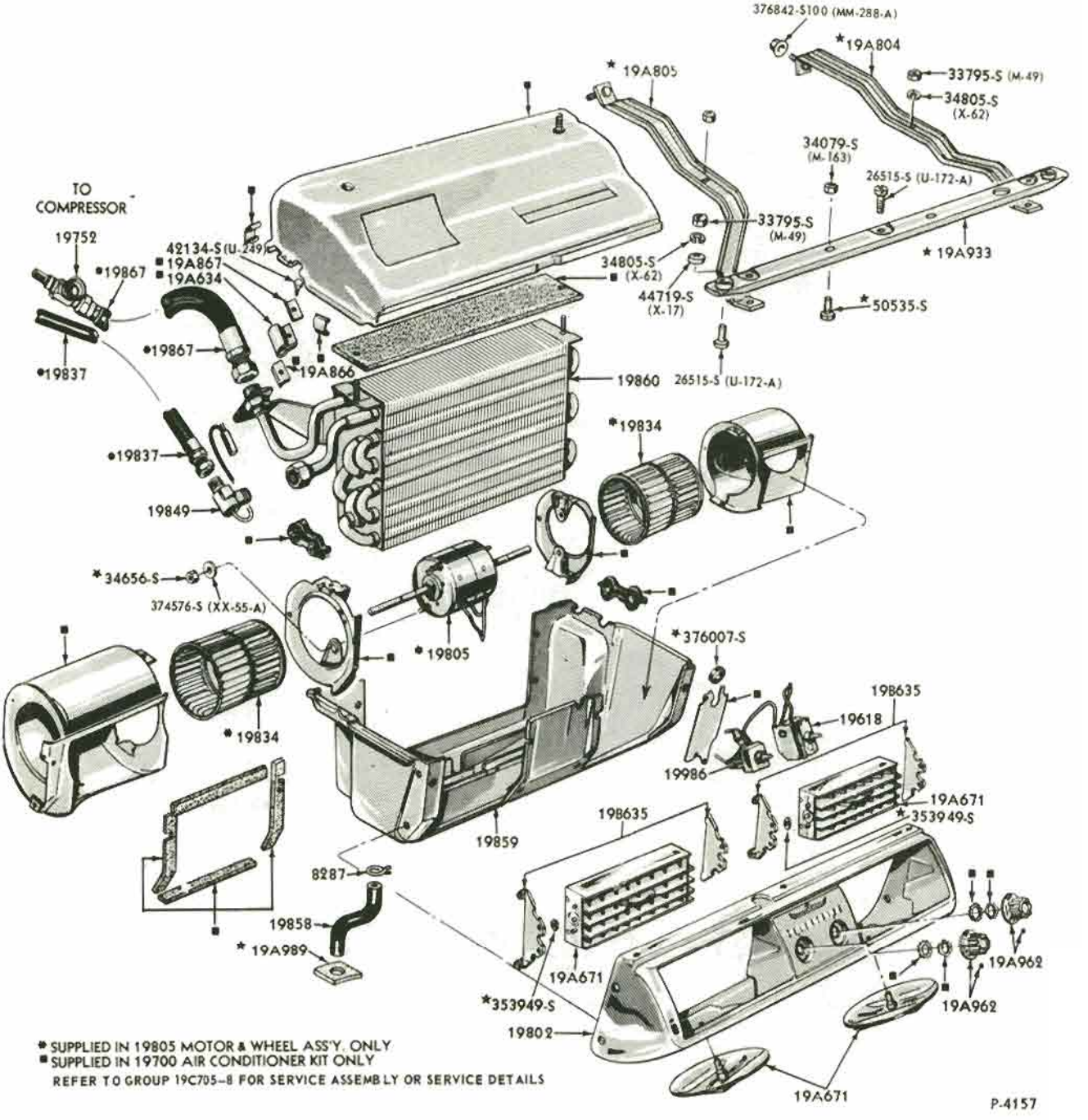

AIR CONDITIONING PARTS (PASSENGER COMPARTMENT)
1965 FAIRLANE - w/ INTEGRAL A/C

COPYRIGHT © 1975 — FORD MOTOR COMPANY — DEARBORN, MICHIGAN

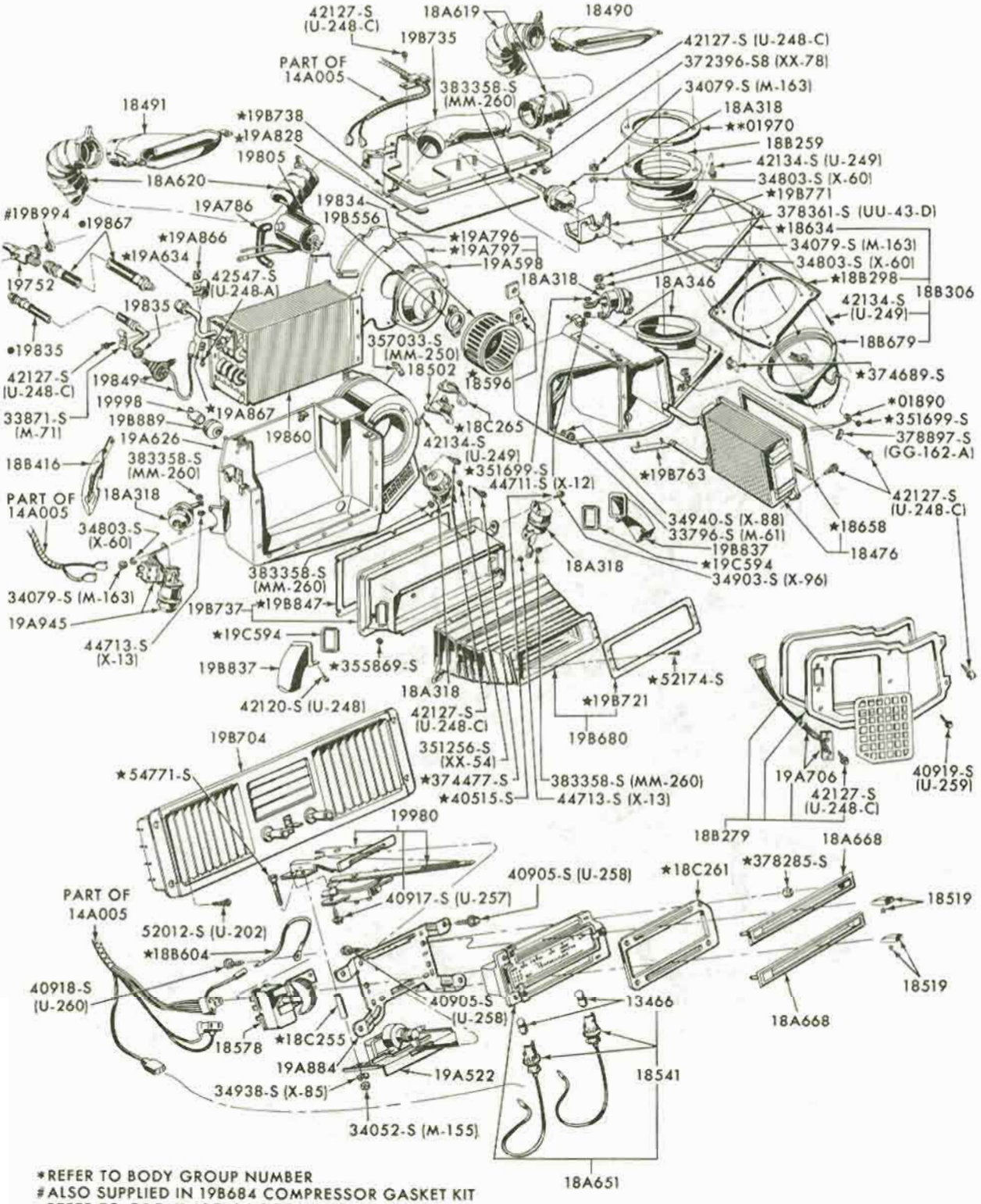

*REFER TO BODY GROUP NUMBER
#ALSO SUPPLIED IN 19B684 COMPRESSOR GASKET KIT
•REFER TO GROUP 19C705-B FOR SERVICE ASSEMBLY OR SERVICE DETAILS

P-4415

AIR CONDITIONING PARTS (PASSENGER COMPARTMENT)
1965/66 THUNDERBIRD - w/ INTEGRAL A/C

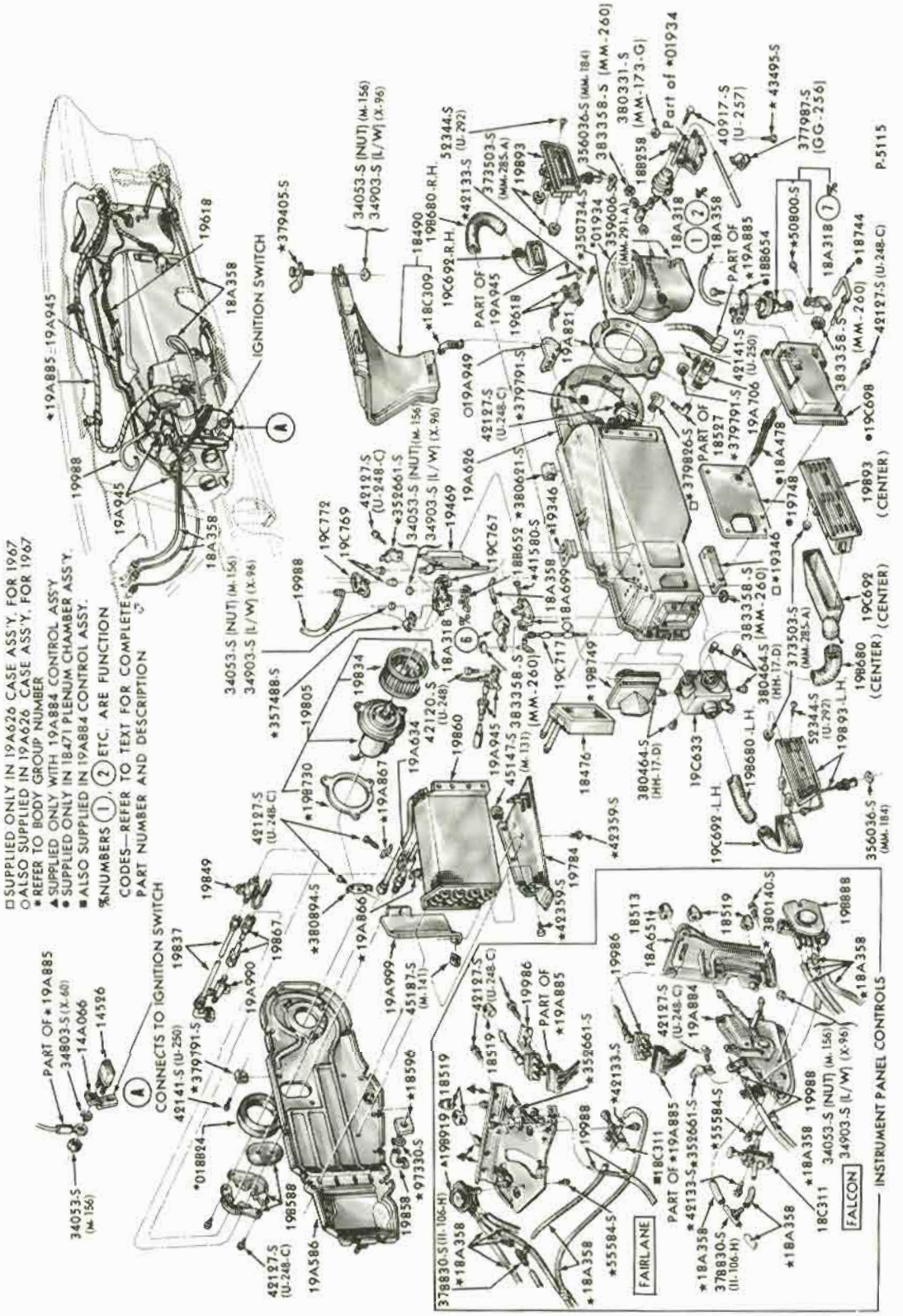

AIR CONDITIONING PARTS (PASSENGER COMPARTMENT)
1966/67 FAIRLANE and FALCON - w/INTEGRAL A/C

COPYRIGHT © 1975 — FORD MOTOR COMPANY — DEARBORN, MICHIGAN

ILLUSTRATION SECTION 195.1

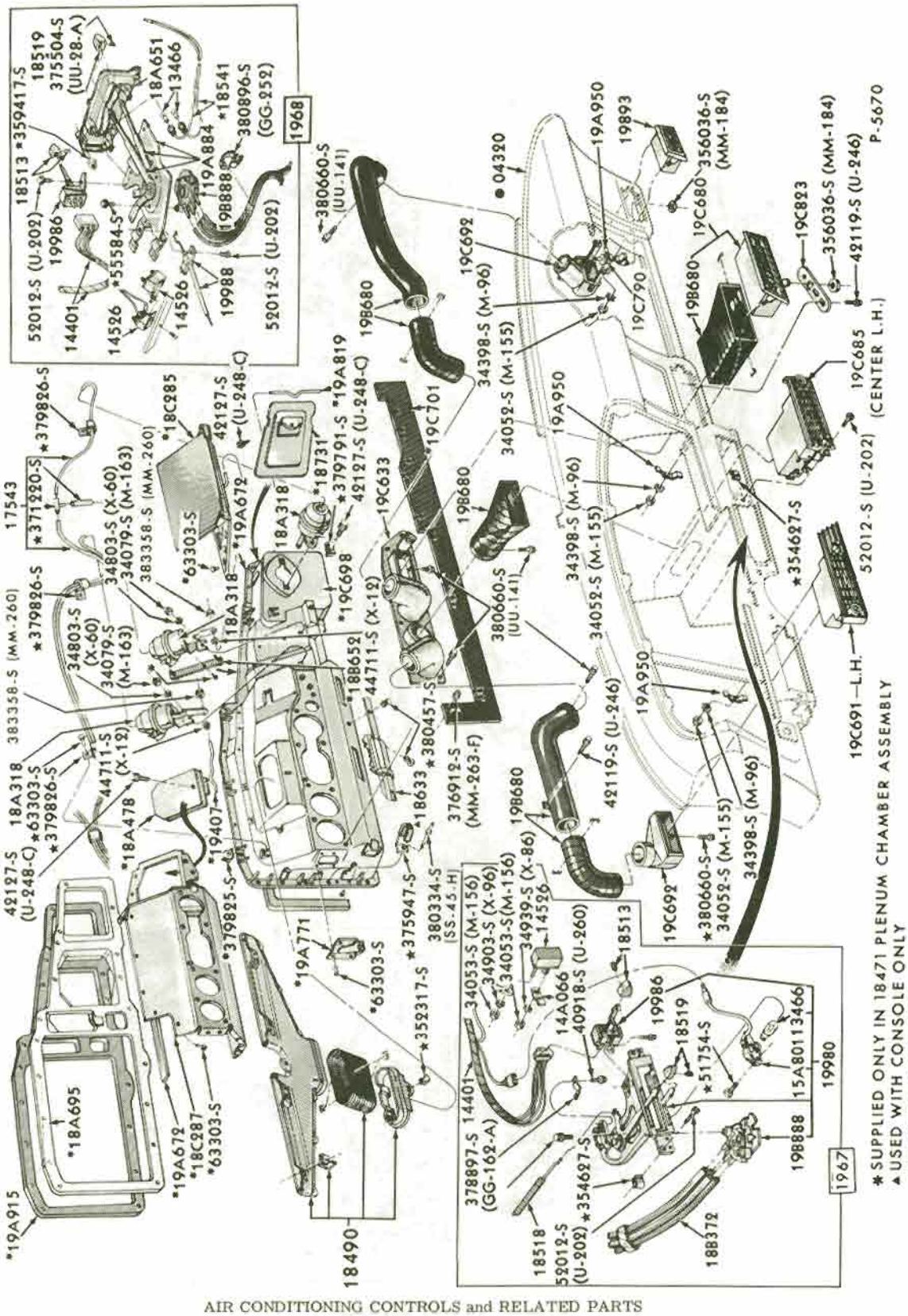

* SUPPLIED ONLY IN 18471 PLENUM CHAMBER ASSEMBLY
▲ USED WITH CONSOLE ONLY
● REFER TO BODY GROUP NUMBER

AIR CONDITIONING CONTROLS and RELATED PARTS
1967/68 FORD - w/ INTEGRAL A/C

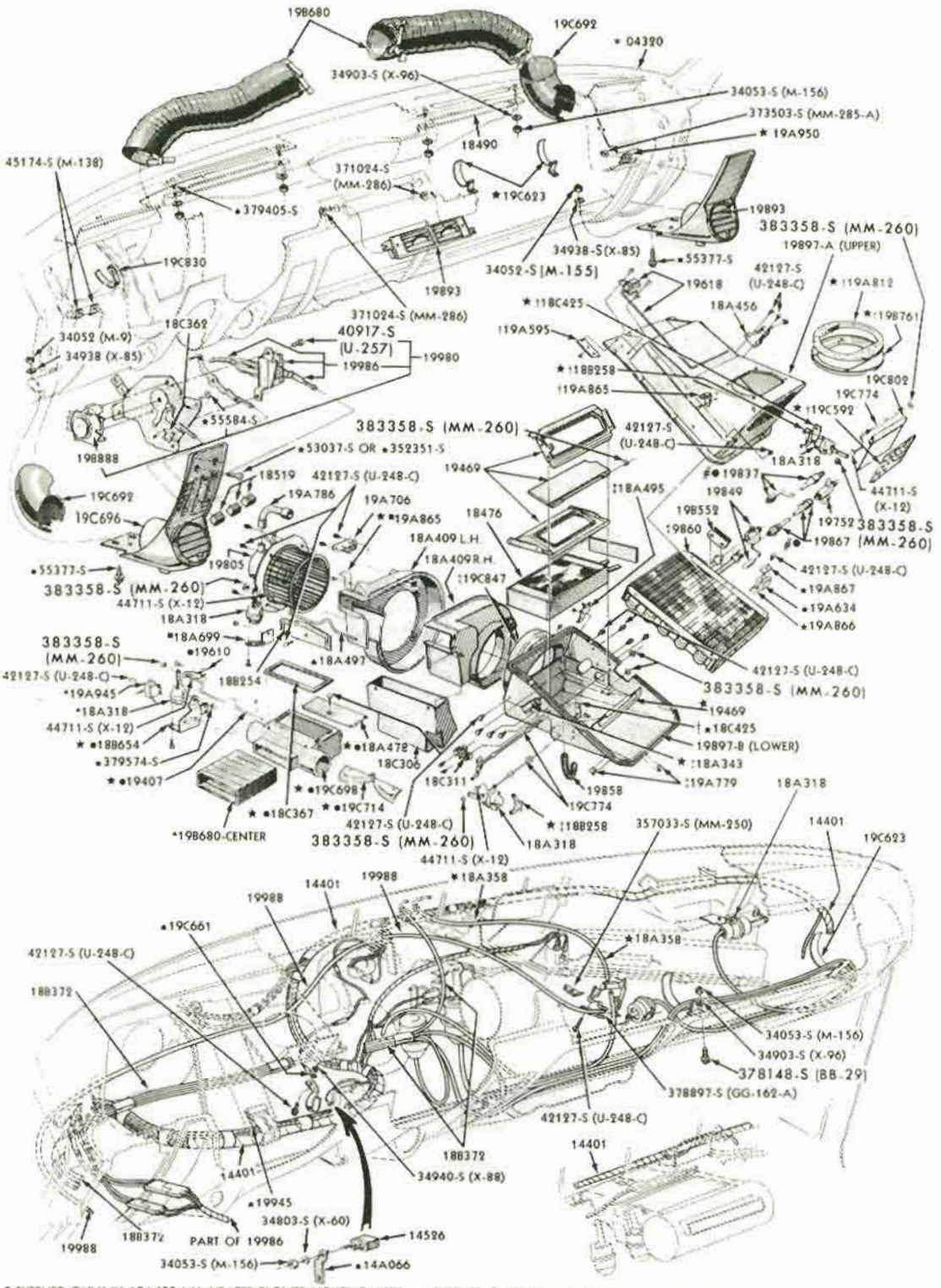

* SUPPLIED ONLY IN 18A409 L.H. HEATER BLOWER HOUSING ASSY
‡ SUPPLIED ONLY IN 19897-A (UPPER) EVAPORATOR CASE ASSY
‡ SUPPLIED ONLY IN 19897-B (LOWER) EVAPORATOR CASE ASSY
• SUPPLIED ONLY IN 18471 PLENUM CHAMBER ASSY
• ALSO SUPPLIED IN 18471 PLENUM CHAMBER ASSY
*REFER TO BODY GROUP NUMBER.
#REFER TO GROUP 19C705-B FOR SERVICE ASSEMBLY OR DETAILS

P-5676

AIR CONDITIONING PARTS (PASSENGER COMPARTMENT)
1967/68 MUSTANG - w/ INTEGRAL A/C

COPYRIGHT © 1975 — FORD MOTOR COMPANY — DEARBORN, MICHIGAN

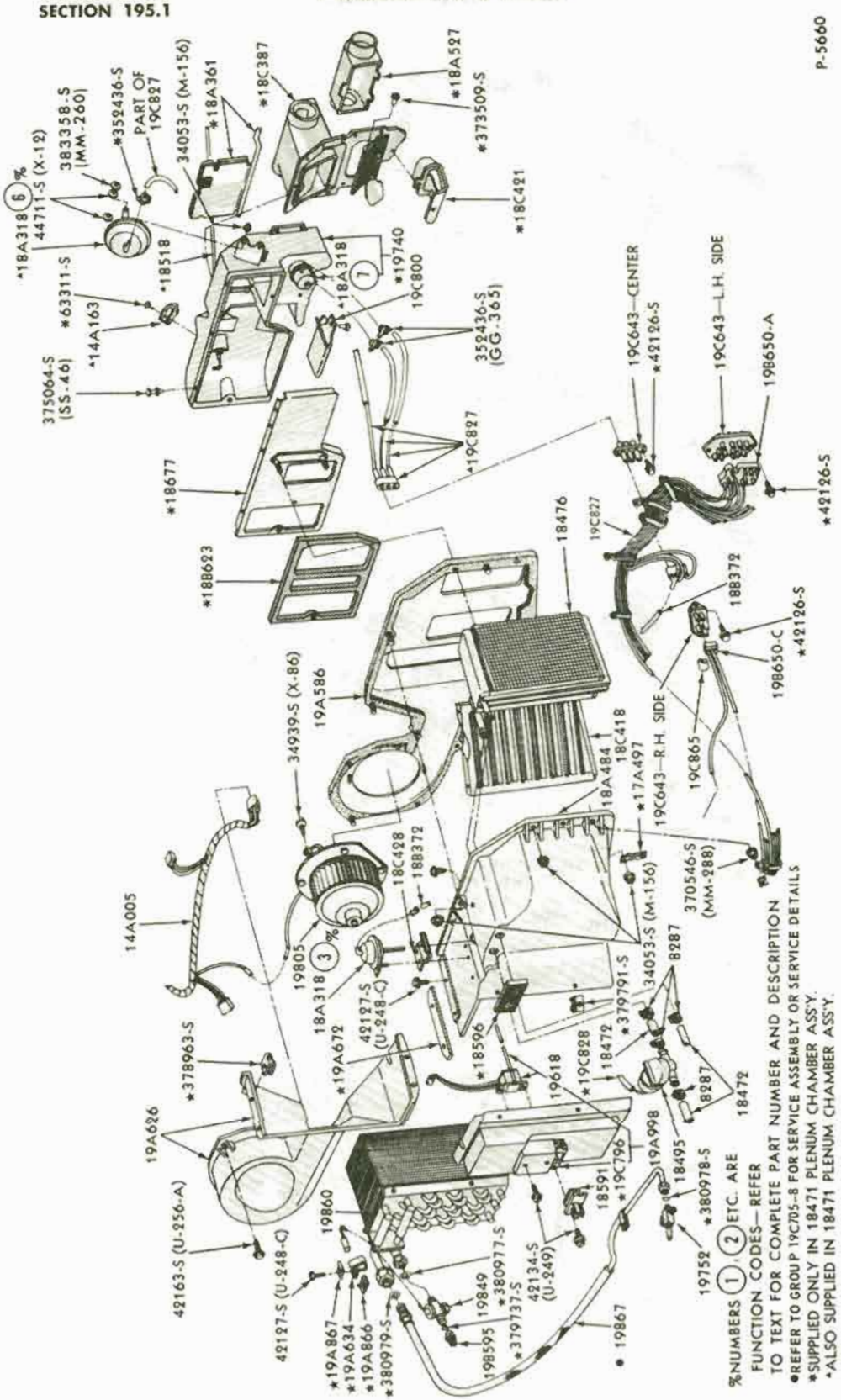

AIR CONDITIONING PARTS (PASSENGER COMPARTMENT)
1967 THUNDERBIRD - w/ INTEGRAL A/C

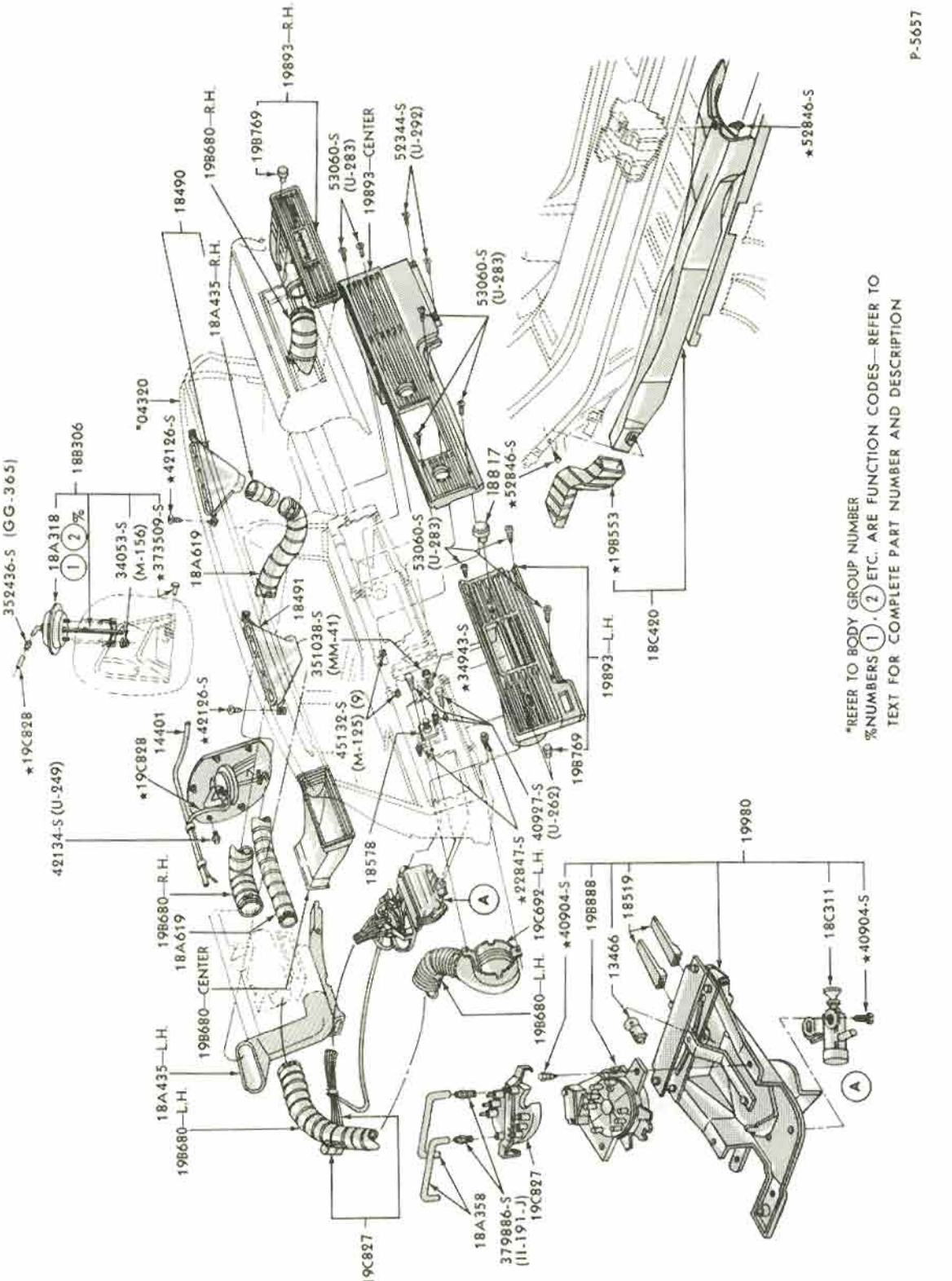

AIR CONDITIONING CONTROLS and RELATED PARTS
1967 THUNDERBIRD - w/ INTEGRAL A/C

COPYRIGHT © 1975 — FORD MOTOR COMPANY — DEARBORN, MICHIGAN

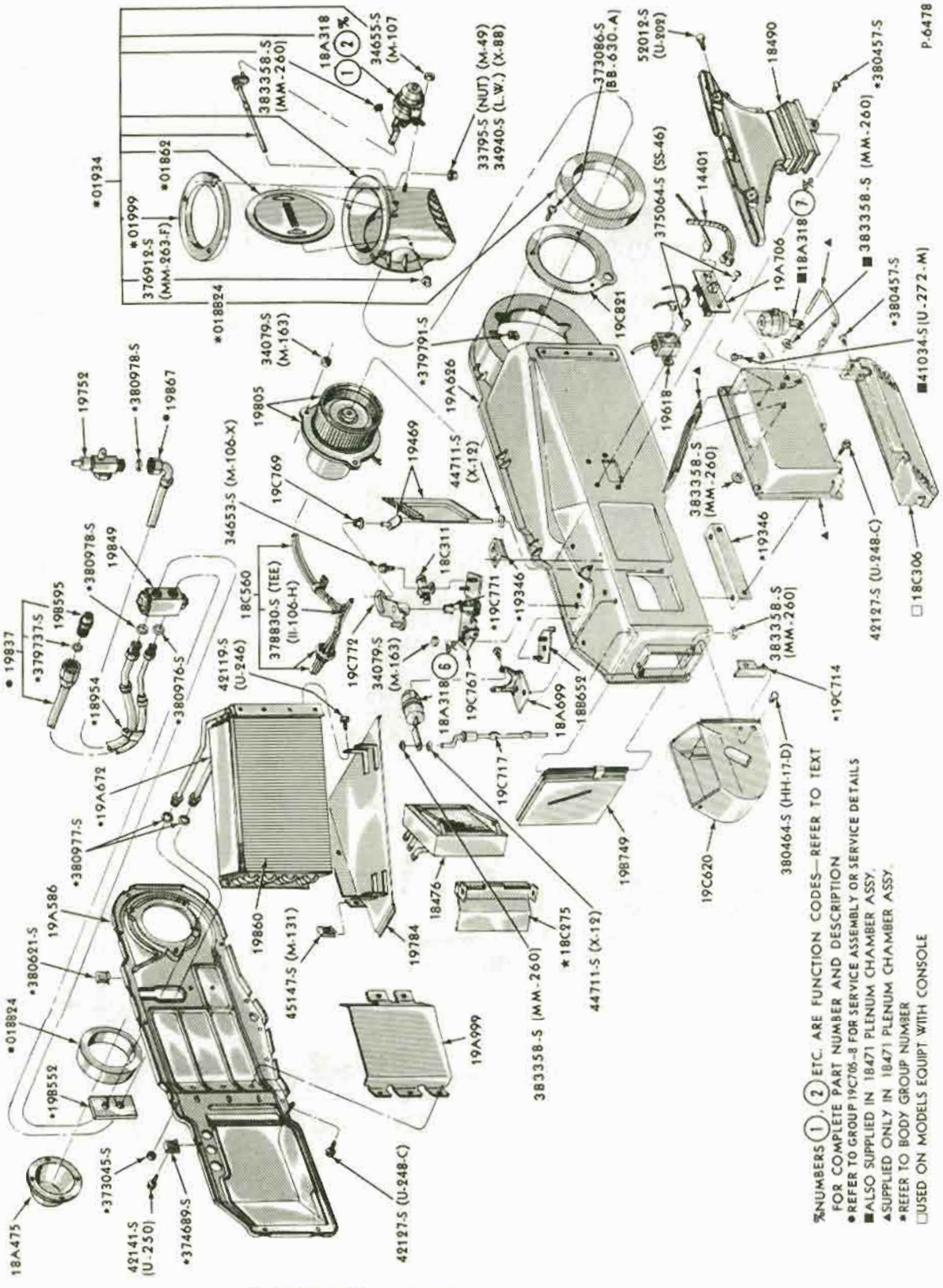

AIR CONDITIONING PARTS (PASSENGER COMPARTMENT)
1968/71 FAIRLANE/TORINO and 1968/70 FALCON - w/INTEGRAL A/C

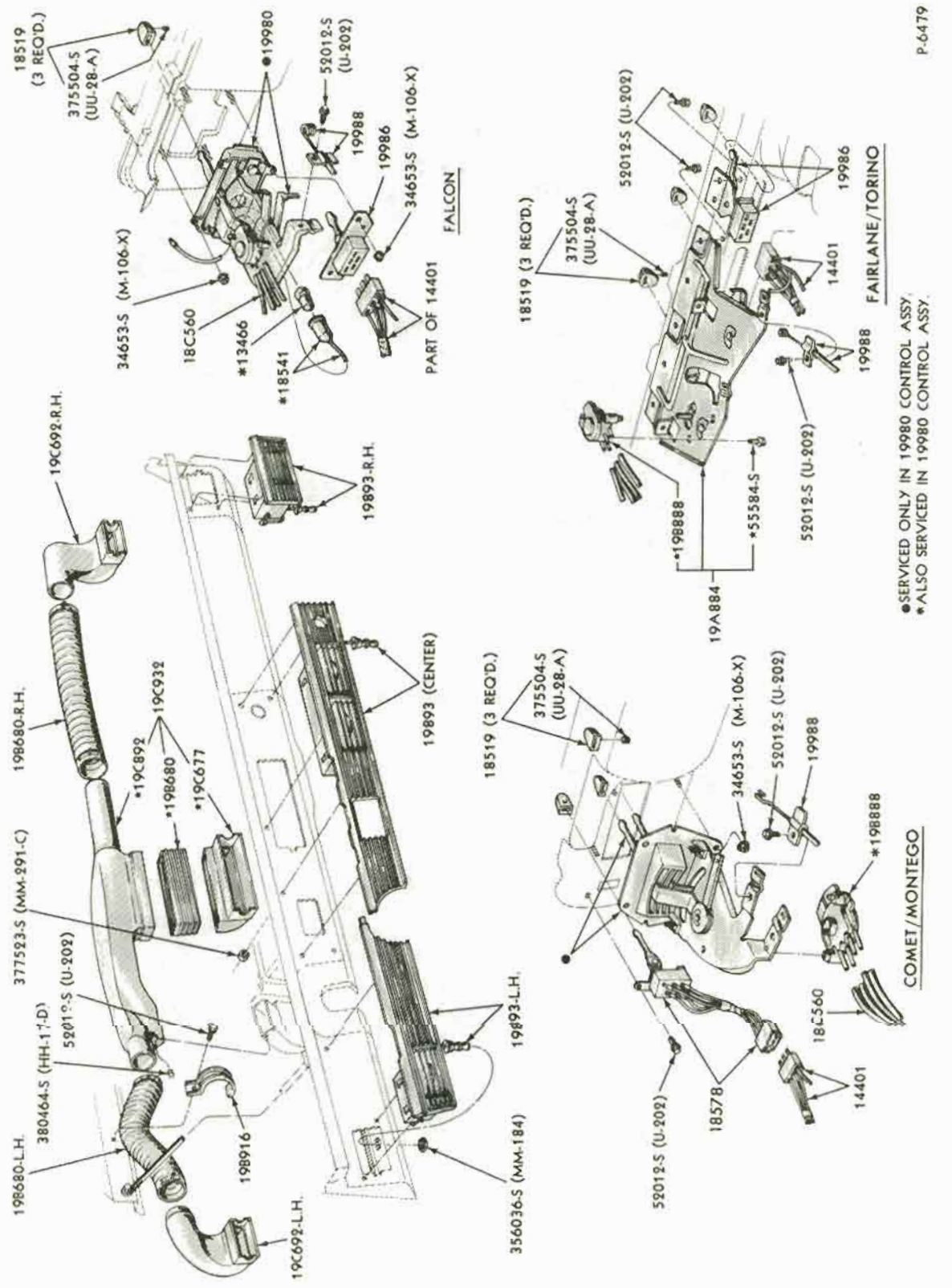

AIR CONDITIONING CONTROLS and RELATED PARTS
1968/69 FAIRLANE/TORINO and 1968/70 FALCON - w/INTEGRAL A/C

COPYRIGHT © 1975 — FORD MOTOR COMPANY — DEARBORN, MICHIGAN

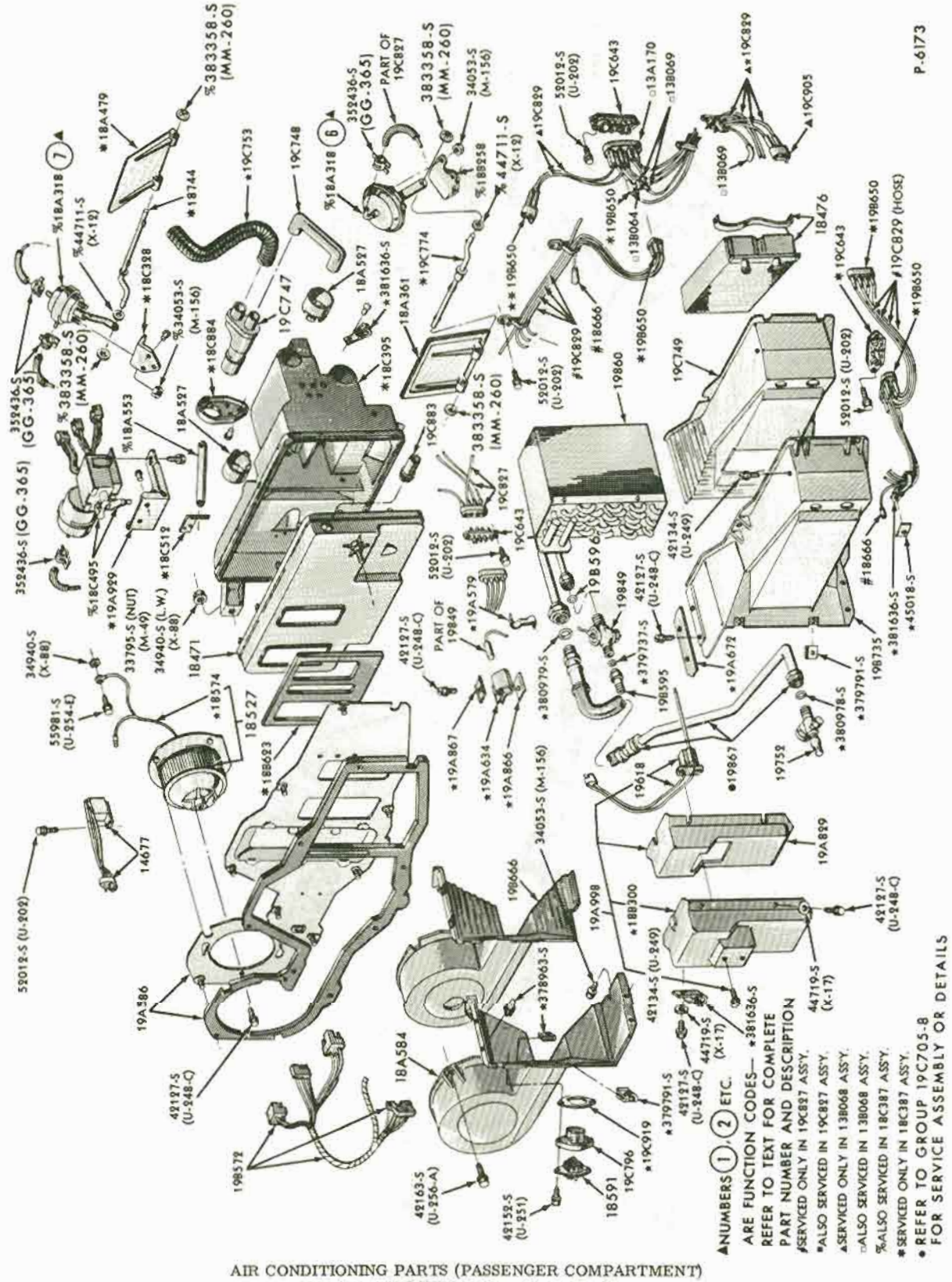

AIR CONDITIONING PARTS (PASSENGER COMPARTMENT)
1968/71 THUNDERBIRD- with A. T. C.

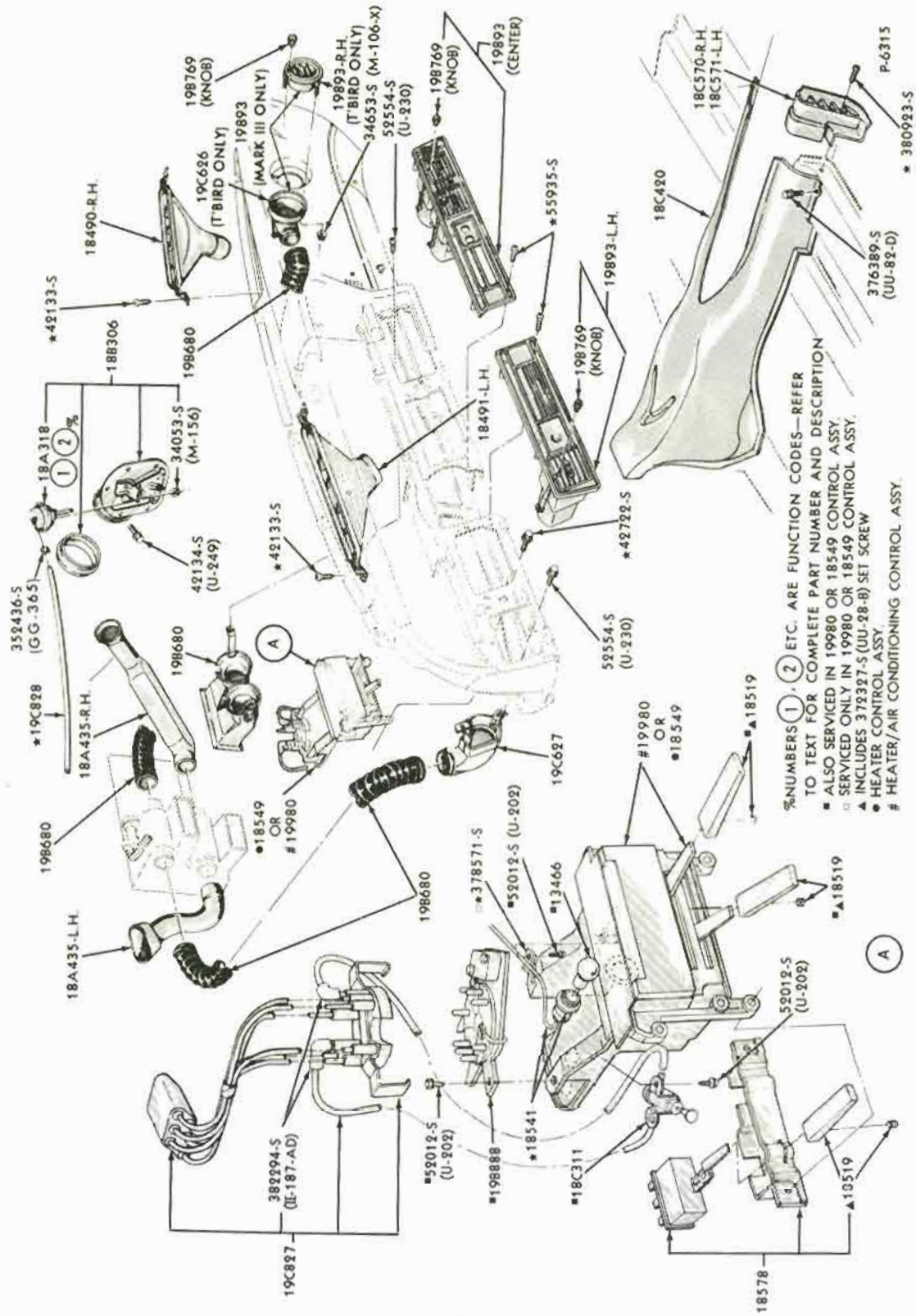

AIR CONDITIONING CONTROLS and RELATED PARTS
1968/69 THUNDERBIRD - w/ MANUAL A/C

COPYRIGHT © 1975 — FORD MOTOR COMPANY — DEARBORN, MICHIGAN

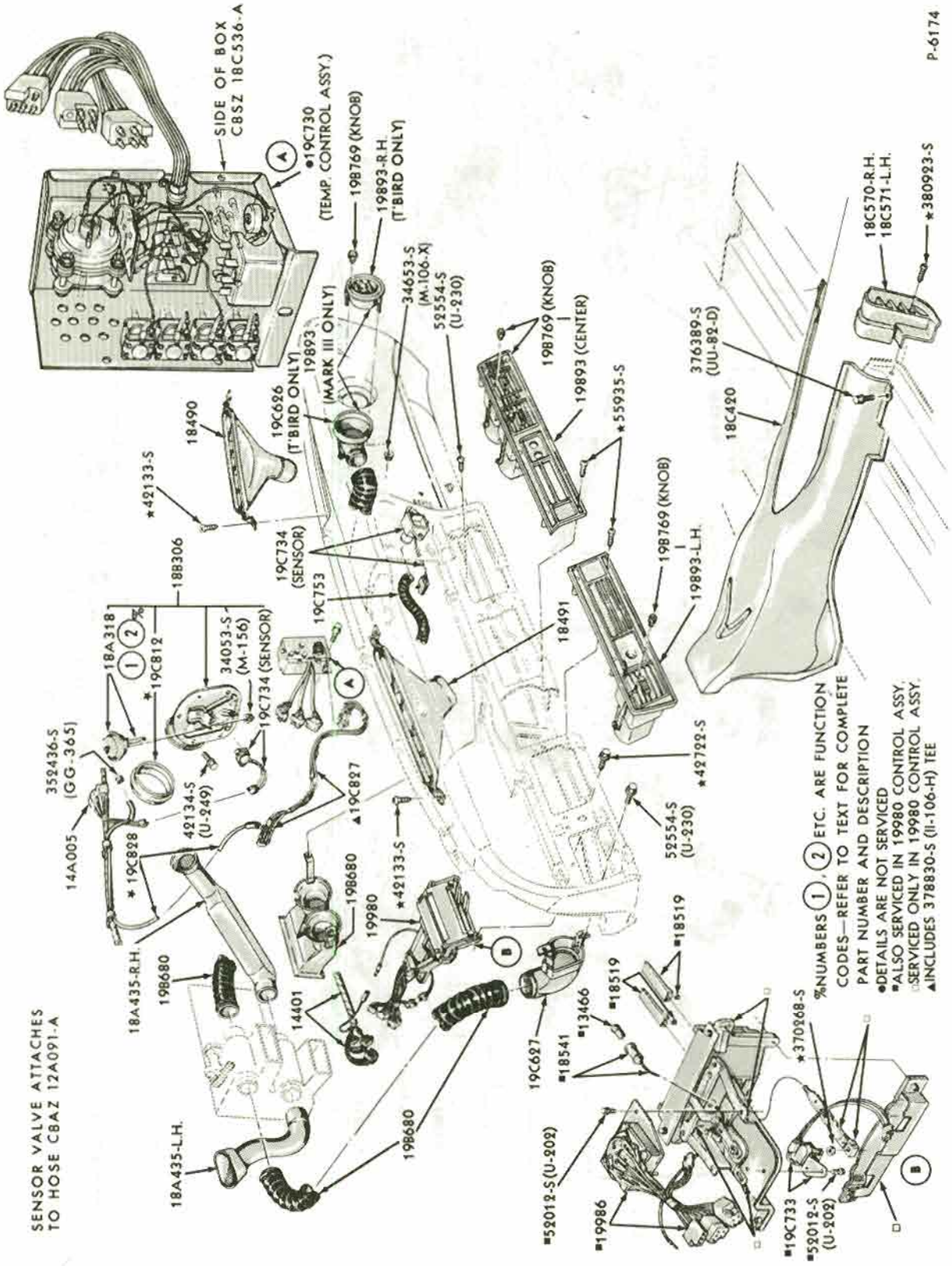

AUTOMATIC TEMPERATURE CONTROLS and RELATED PARTS
1968/69 THUNDERBIRD - w/INTEGRAL A. T. C.

AIR CONDITIONING PARTS (PASSENGER COMPARTMENT)
1968/71 THUNDERBIRD - w/ MANUAL A/C

COPYRIGHT © 1975 — FORD MOTOR COMPANY — DEARBORN, MICHIGAN

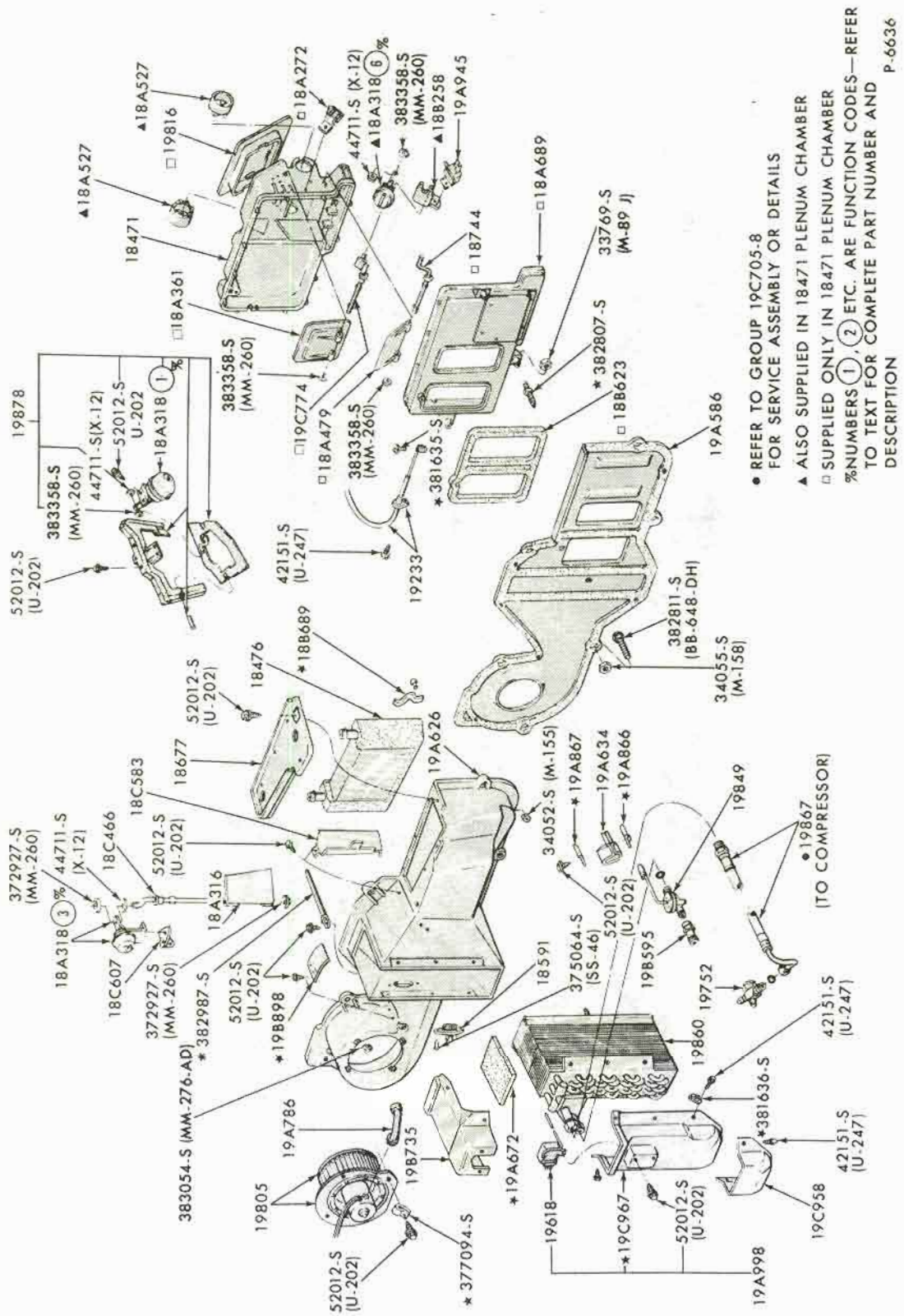

AIR CONDITIONING PARTS (PASSENGER COMPARTMENT)
1969/70 FORD - w/INTEGRAL A/C

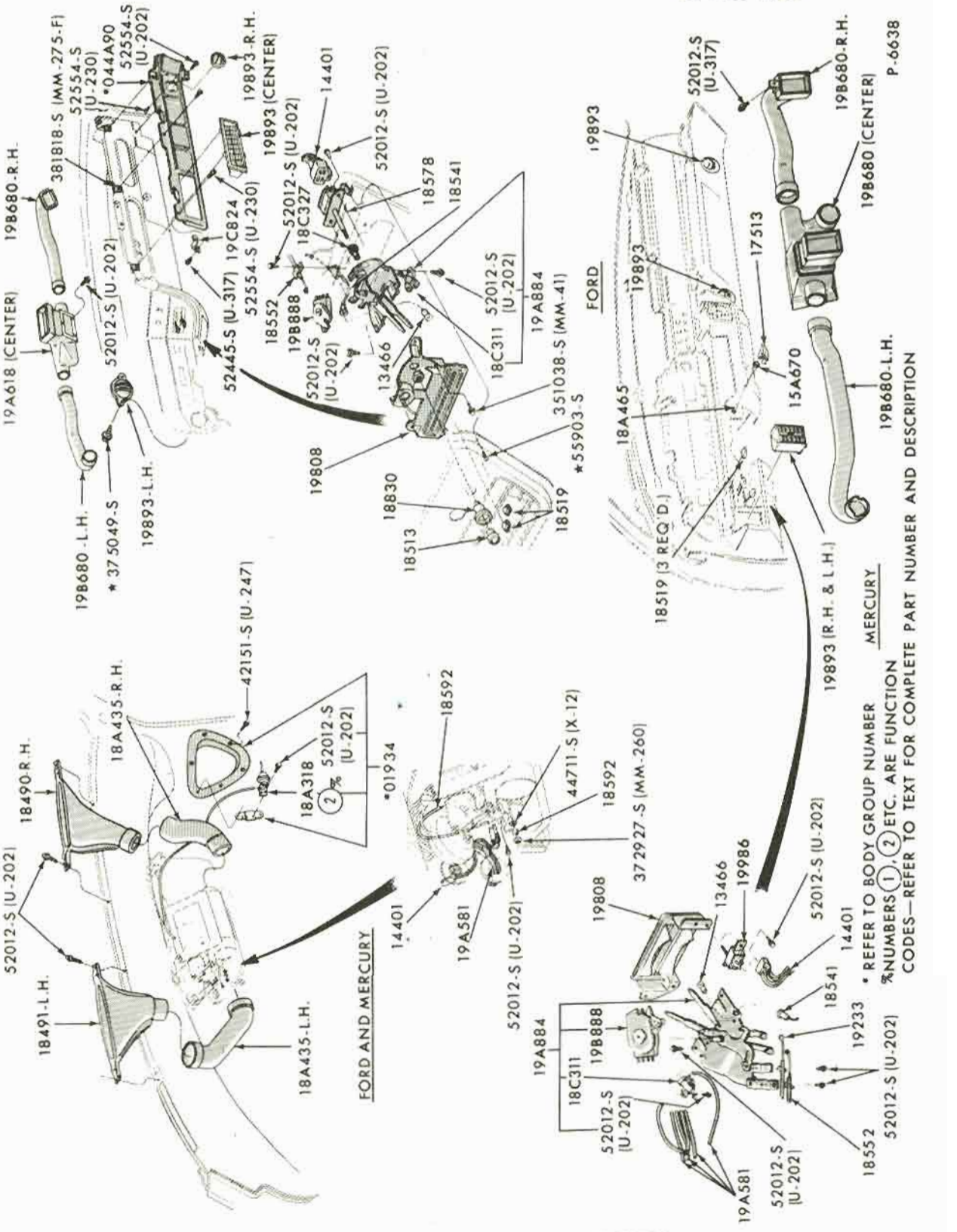

AIR CONDITIONING CONTROLS and RELATED PARTS
1969/70 FORD -w/ INTEGRAL A/C

COPYRIGHT © 1975 — FORD MOTOR COMPANY — DEARBORN, MICHIGAN

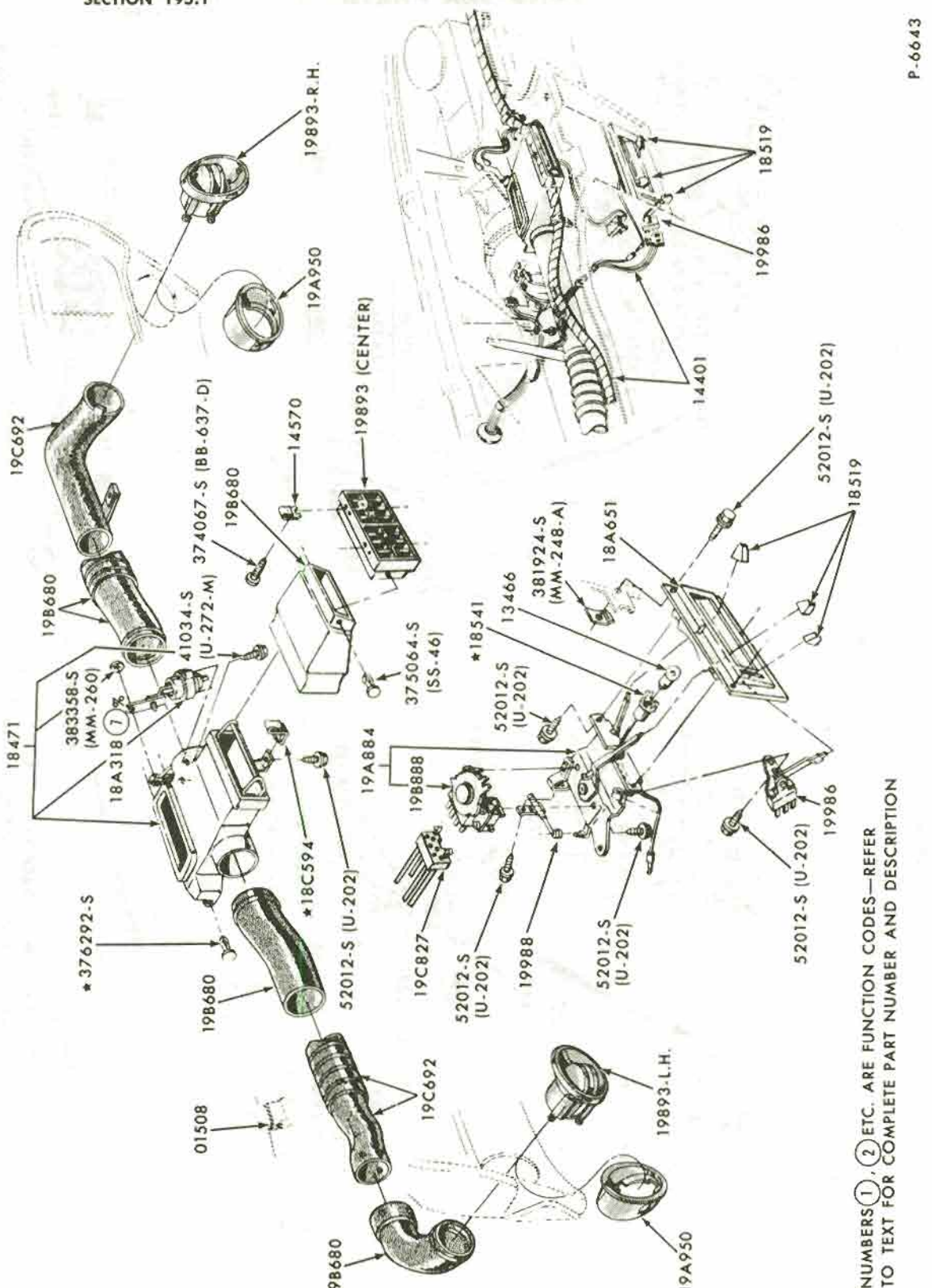

%NUMBERS (1), (2) ETC. ARE FUNCTION CODES—REFER TO TEXT FOR COMPLETE PART NUMBER AND DESCRIPTION

AIR CONDITIONING CONTROLS and RELATED PARTS
1969/70 MUSTANG -w/ INTEGRAL A/C

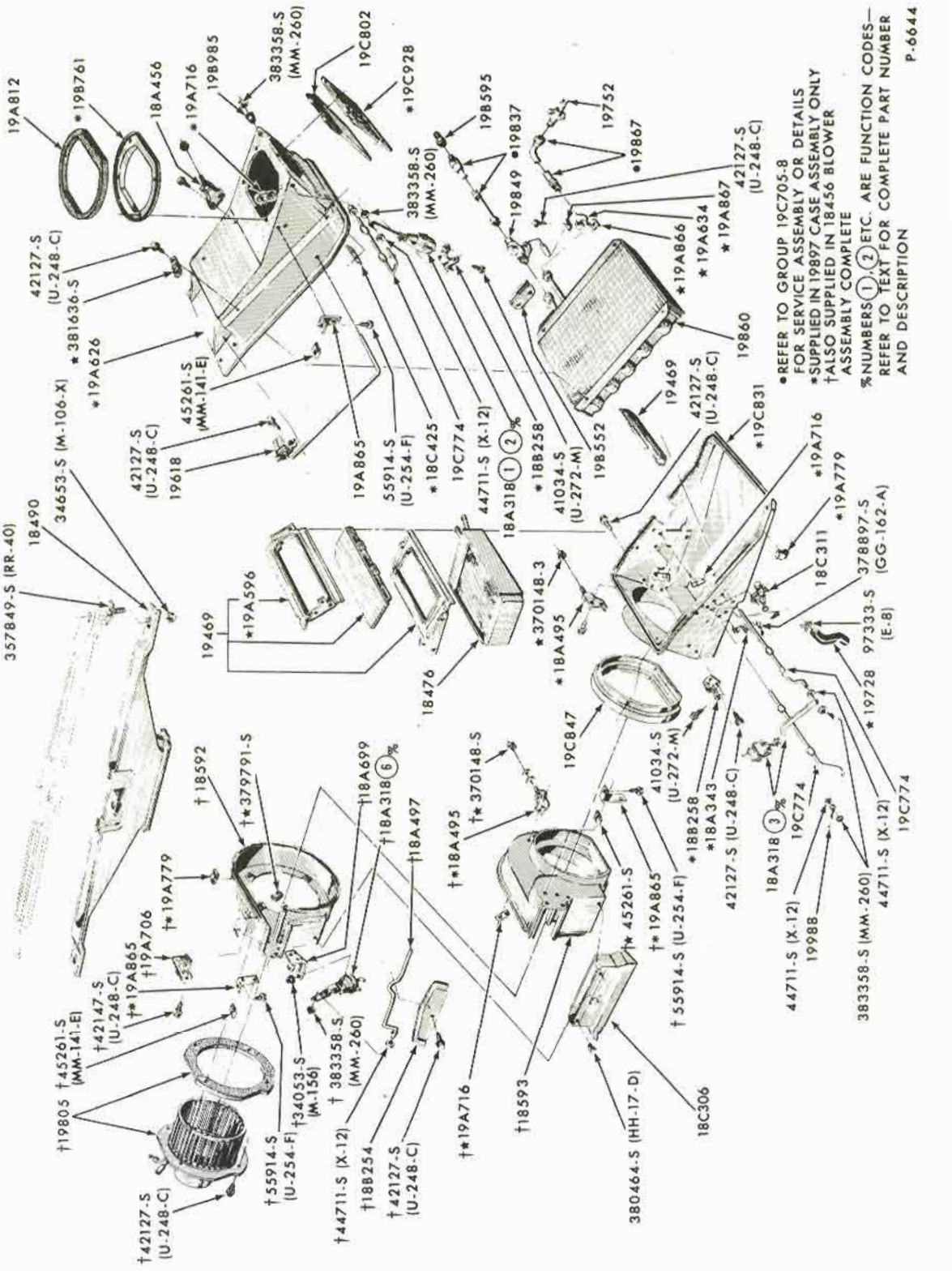

AIR CONDITIONING PARTS (PASSENGER COMPARTMENT)
1969/70 MUSTANG - w/ INTEGRAL A/C

COPYRIGHT © 1975 — FORD MOTOR COMPANY — DEARBORN, MICHIGAN

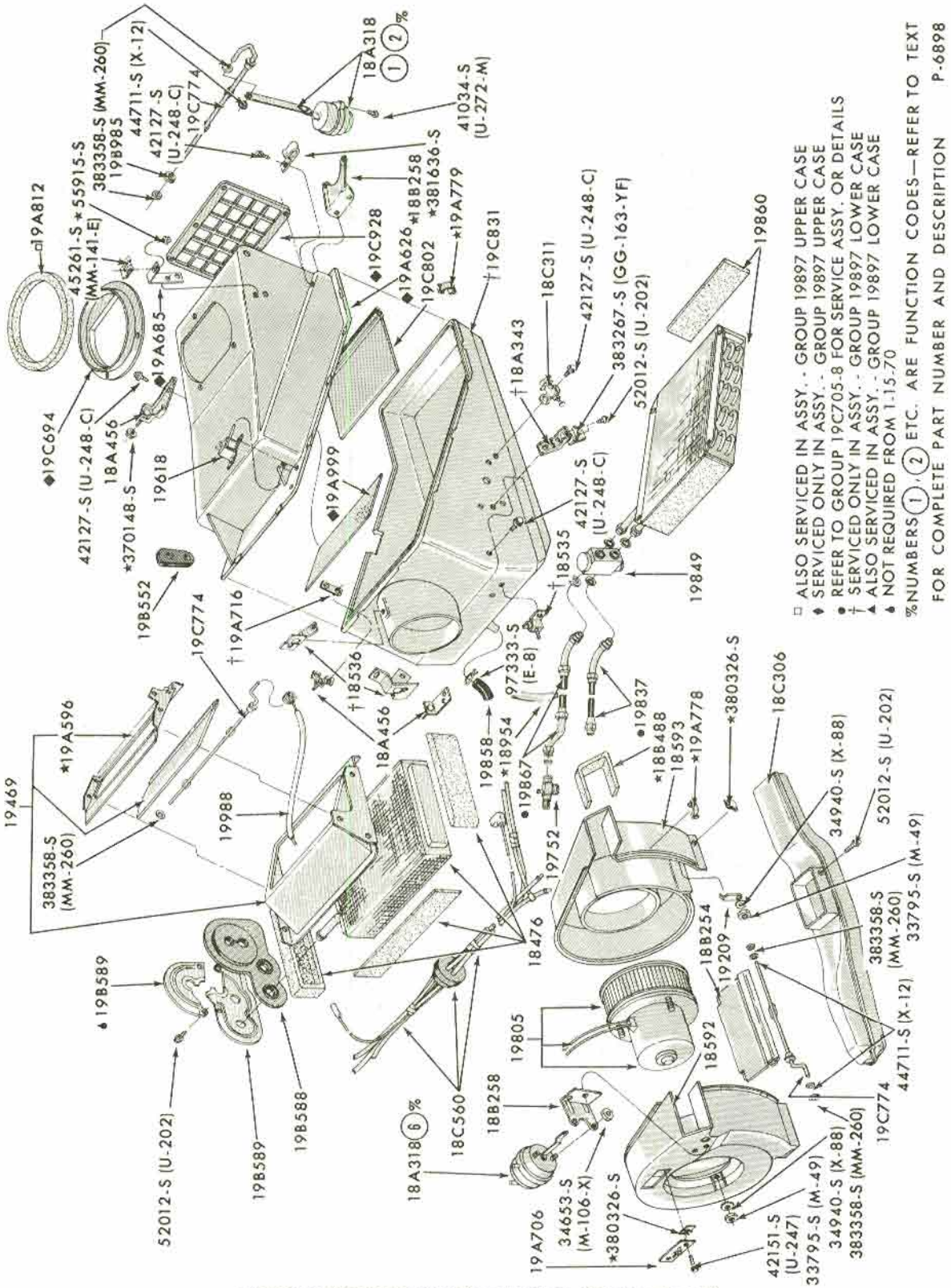

AIR CONDITIONING PARTS (PASSENGER COMPARTMENT)
1970/72 MAVERICK - w/ INTEGRAL A/C

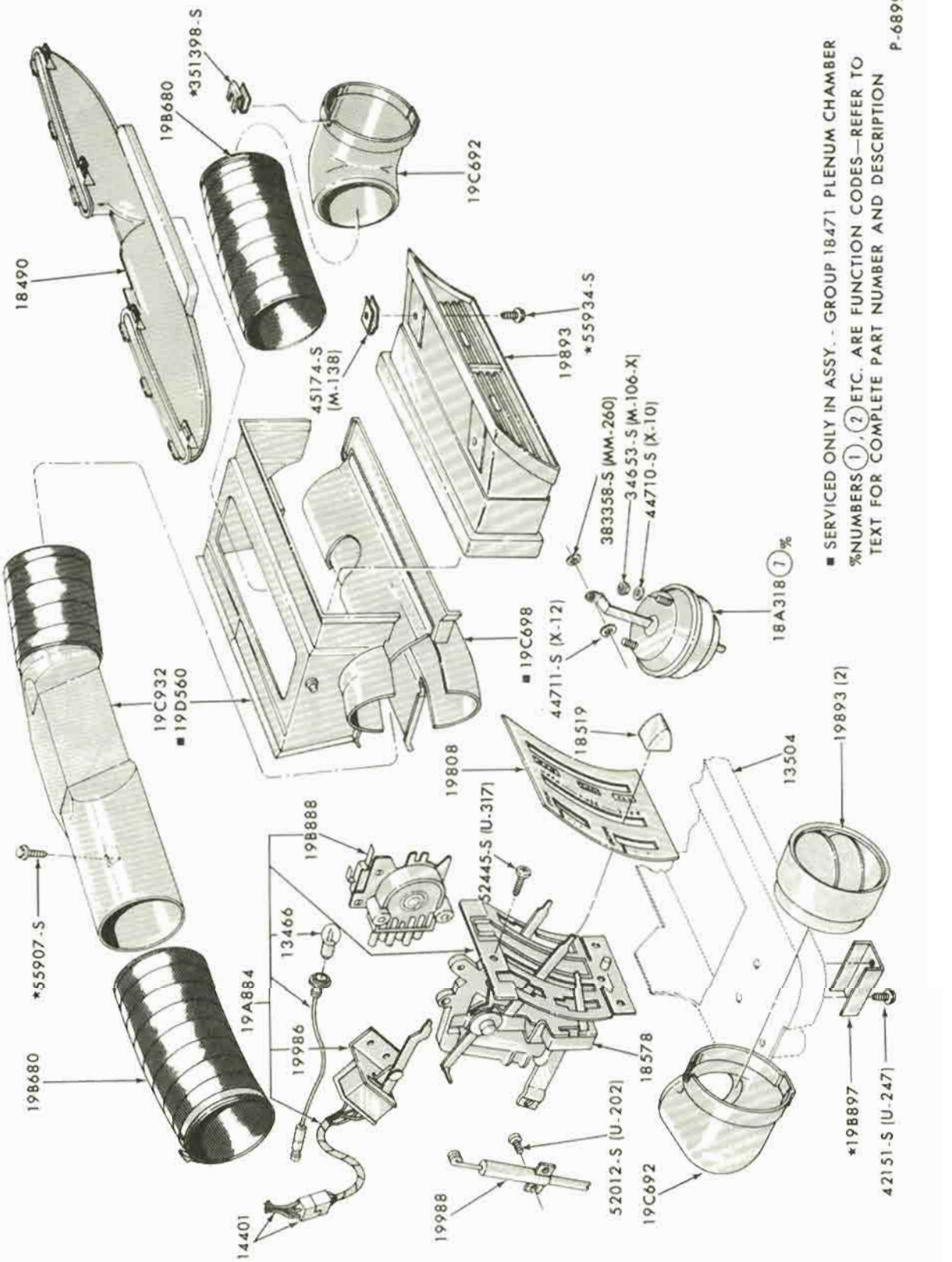

AIR CONDITIONING CONTROLS and RELATED PARTS
1970/72 MAVERICK - w/ INTEGRAL A/C

COPYRIGHT © 1975— FORD MOTOR COMPANY —DEARBORN, MICHIGAN

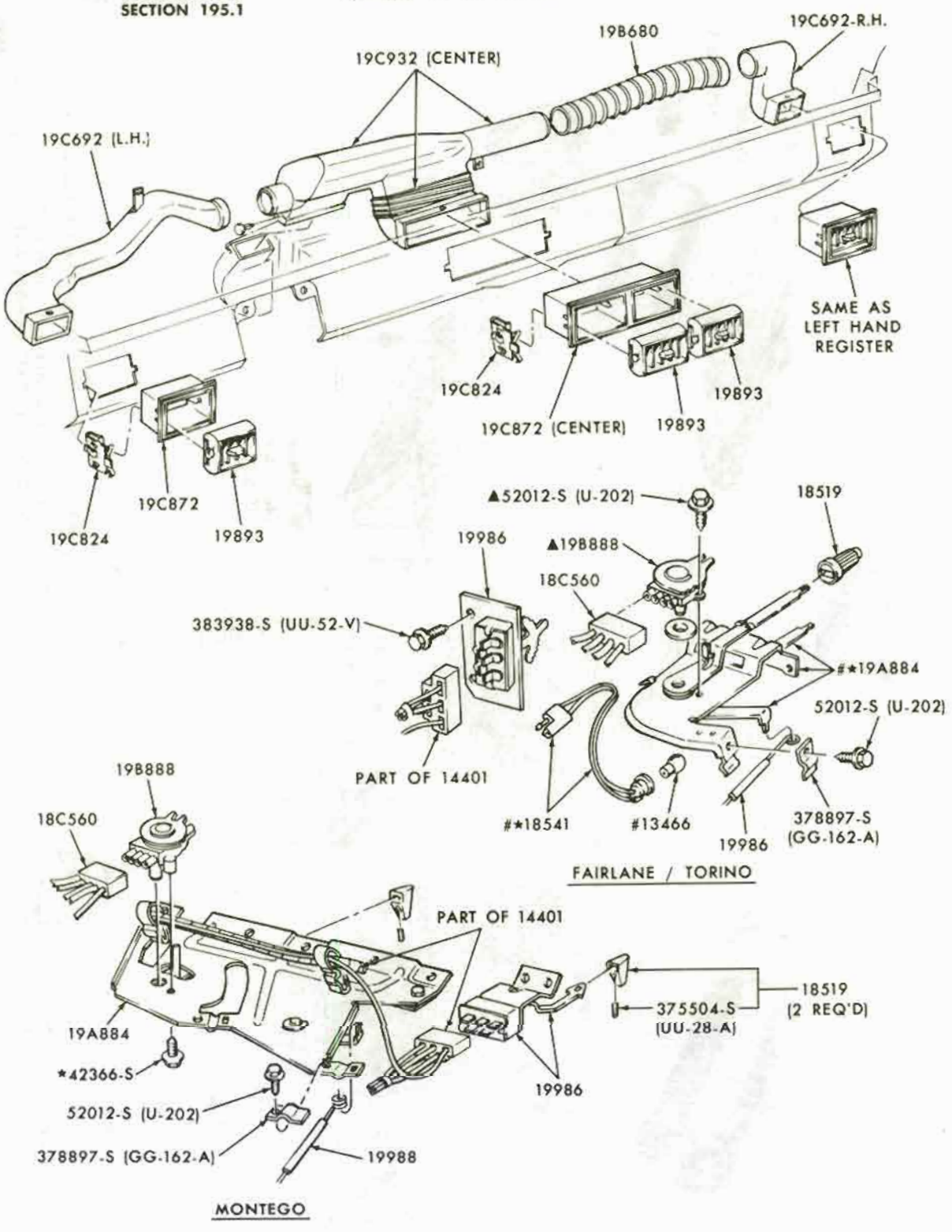

PART OF 19980 CONTROL ASSEMBLY
▲ALSO SERVICE WITH 19980 CONTROL ASSEMBLY

P-7734

AIR CONDITIONING CONTROL and RELATED PARTS
1970/71 FAIRLANE/TORINO-w/INTEGRAL A/C

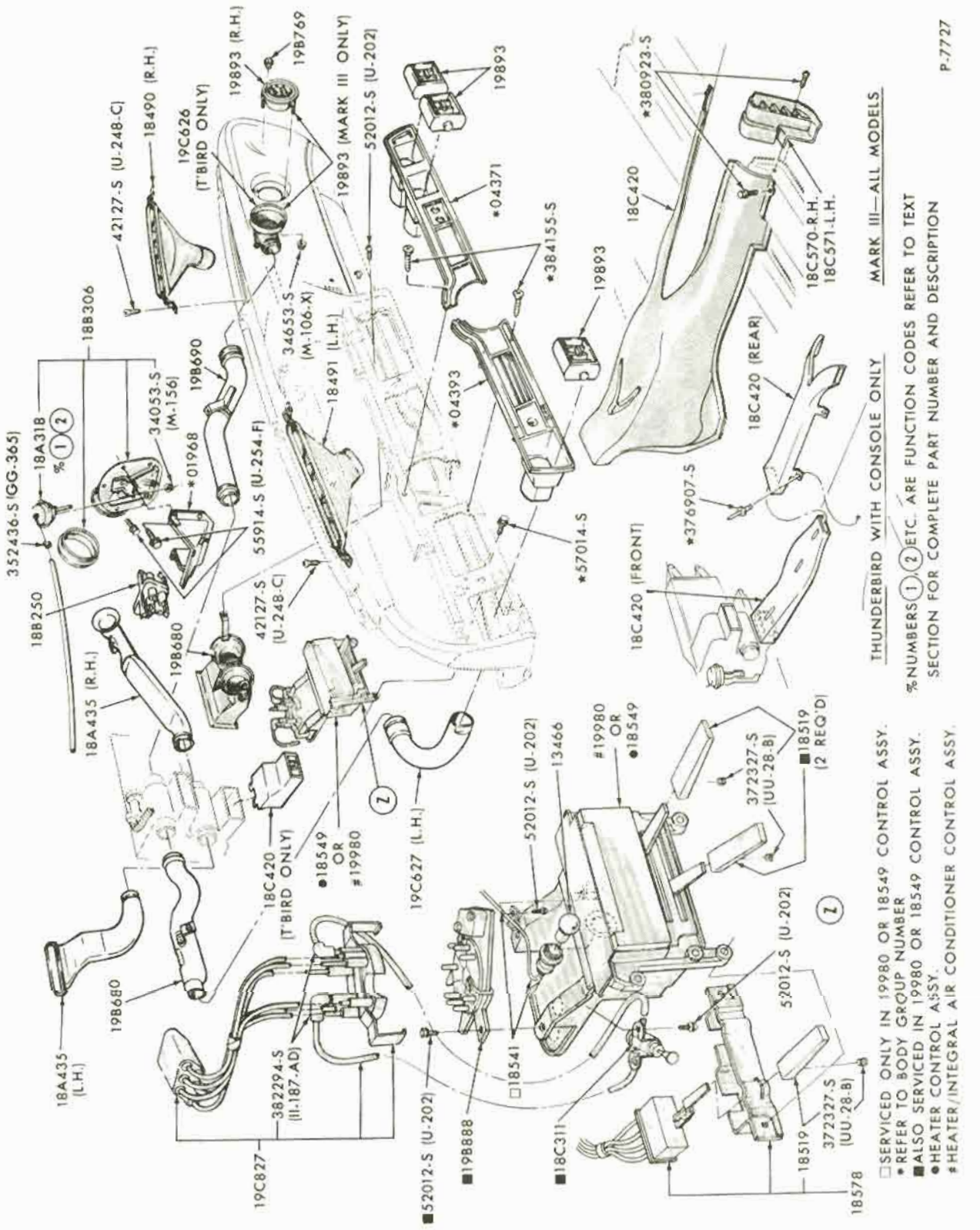

AIR CONDITIONING CONTROLS and RELATED PARTS
1970/71 THUNDERBIRD-w/INTEGRAL MANUAL A/C

COPYRIGHT © 1975 — FORD MOTOR COMPANY — DEARBORN, MICHIGAN

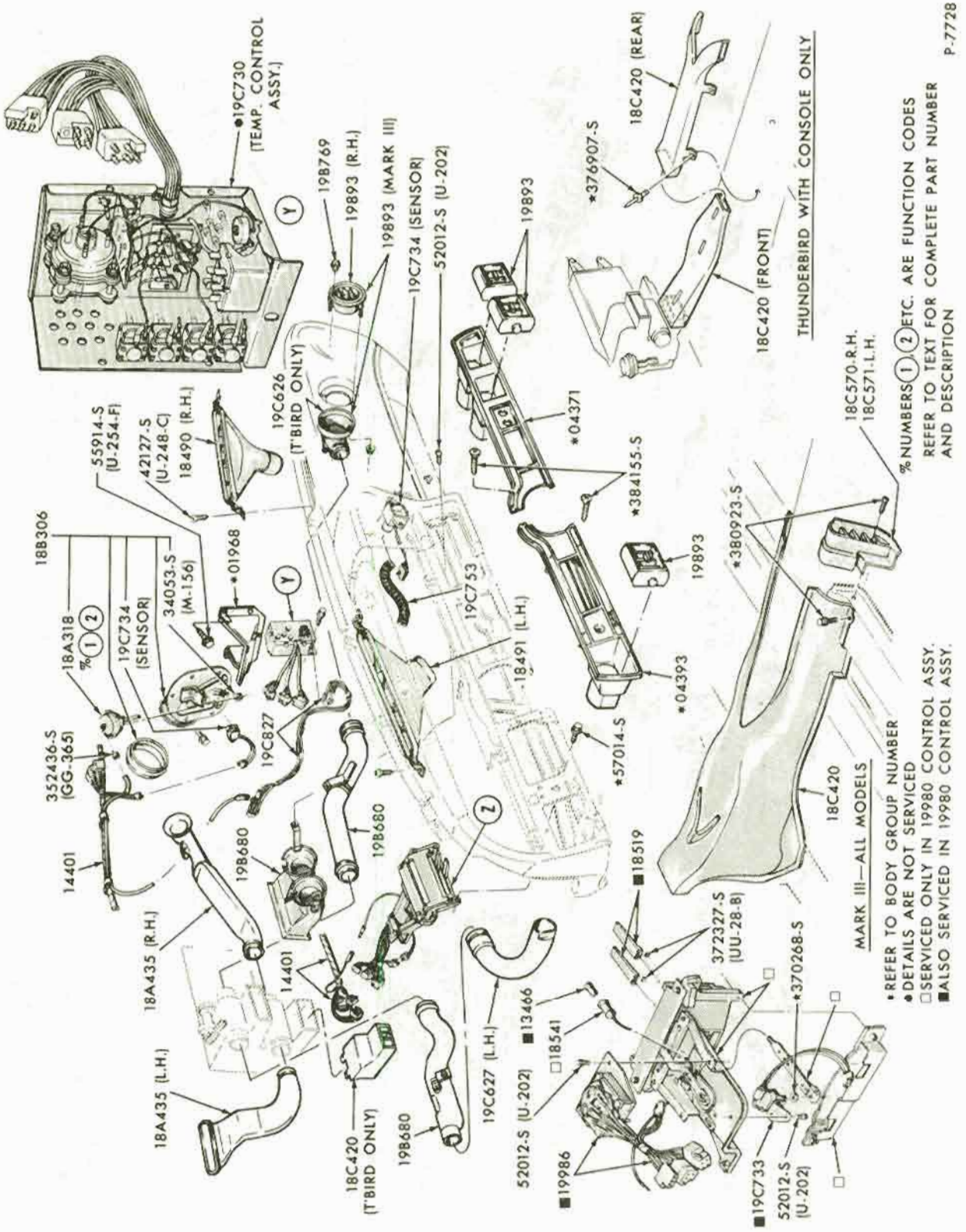

AUTOMATIC TEMPERATURE CONTROLS and RELATED PARTS
1970/71 THUNDERBIRD

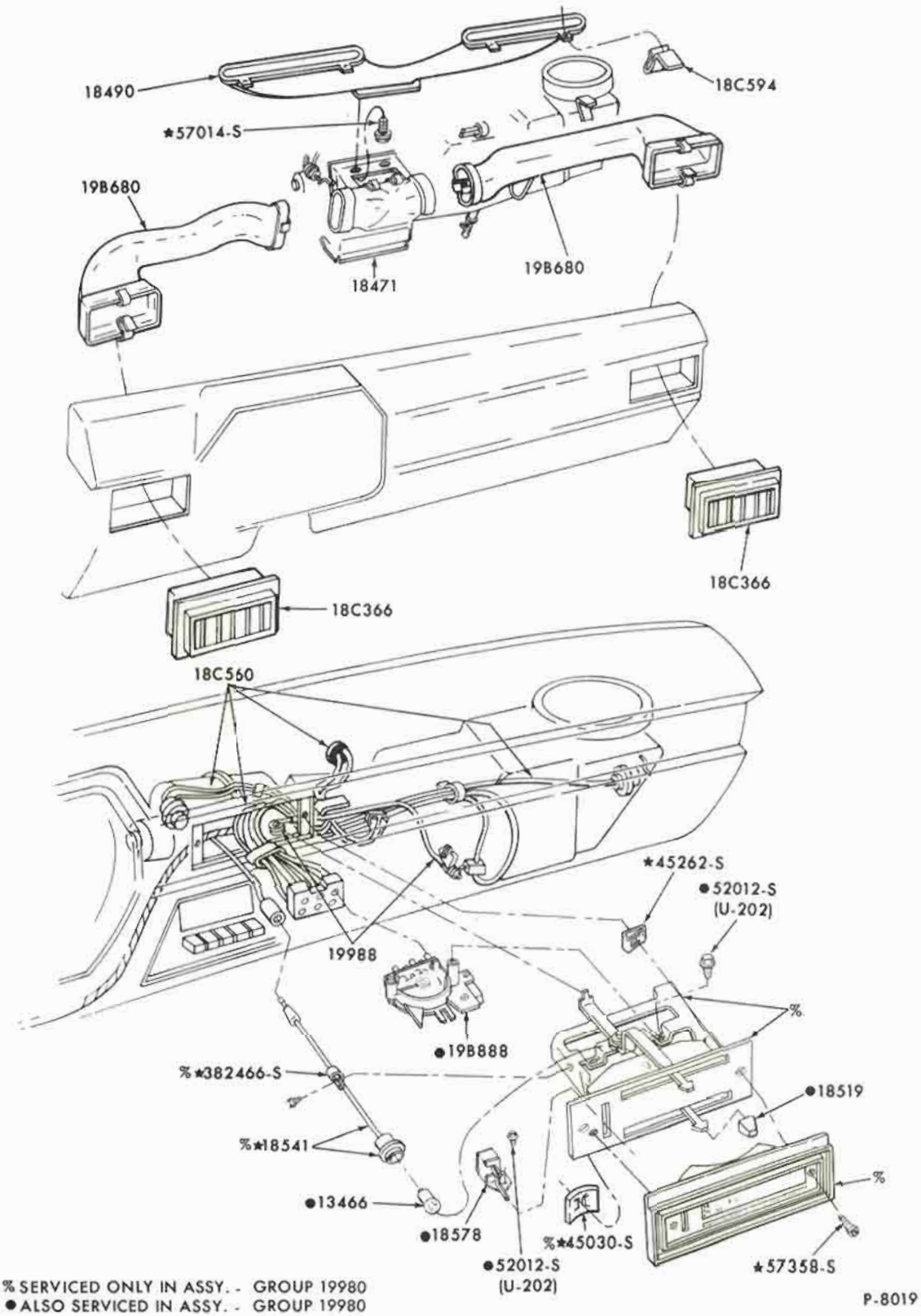

% SERVICED ONLY IN ASSY. - GROUP 19980
● ALSO SERVICED IN ASSY. - GROUP 19980

P-8019

AIR CONDITIONING CONTROLS and RELATED PARTS
1971/72 PINTO

COPYRIGHT © 1975 — FORD MOTOR COMPANY — DEARBORN, MICHIGAN

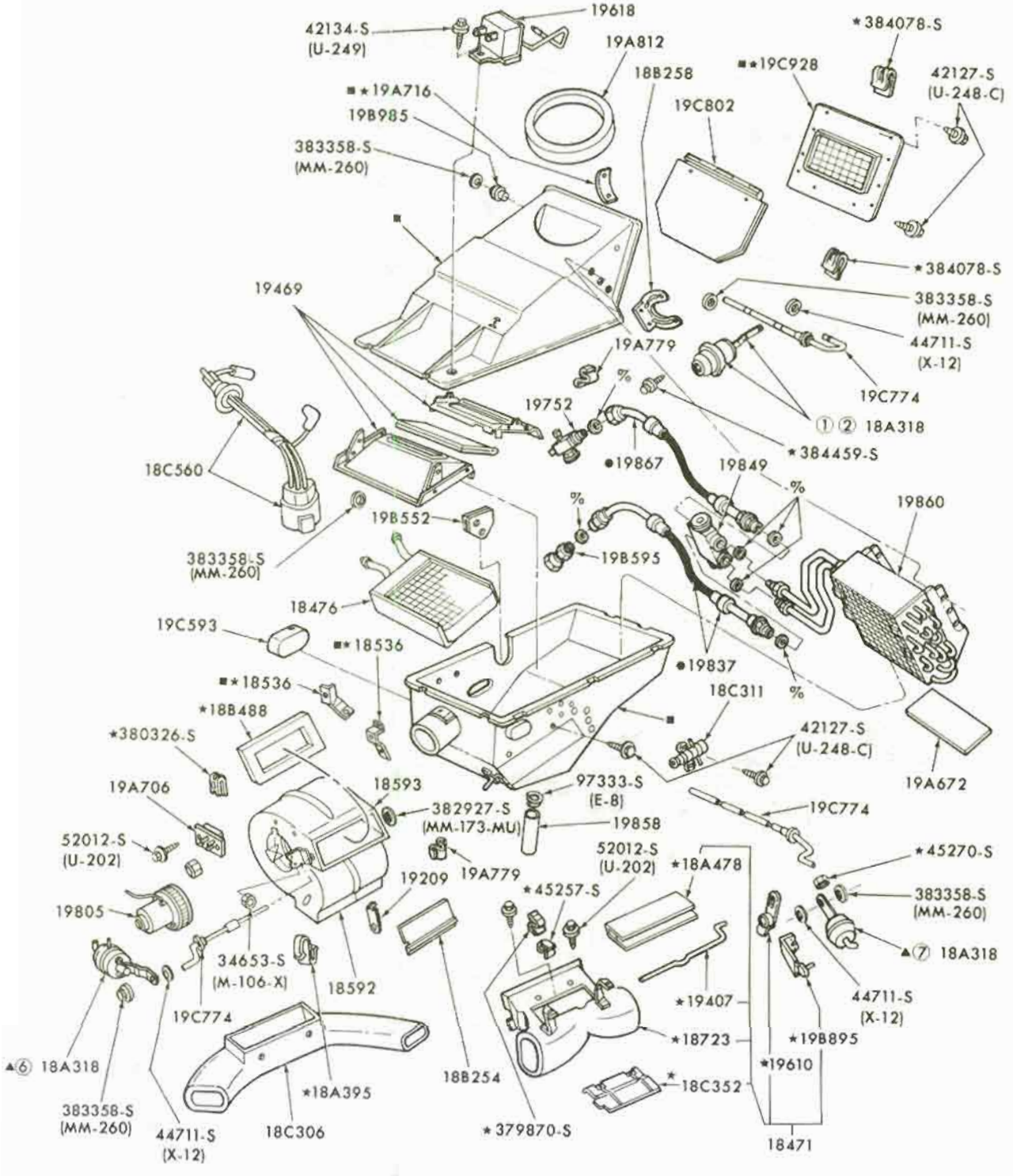

● REFER TO GROUP 19C705 THRU 19C708 FOR SERVICED ASSY OR SERVICED DETAILS
% PART OF 19B596 "O" RING KIT
▲ NUMBERS ① , ② , ETC. ARE FUNCTION CODES REFER TO TEXT SECTION FOR COMPLETE PART NUMBER AND DESCRIPTION.
■ SERVICED ONLY IN ASSY. - GROUP 19897

P-8018

AIR CONDITIONER PARTS (PASSENGER COMPARTMENT)
1971/72 PINTO

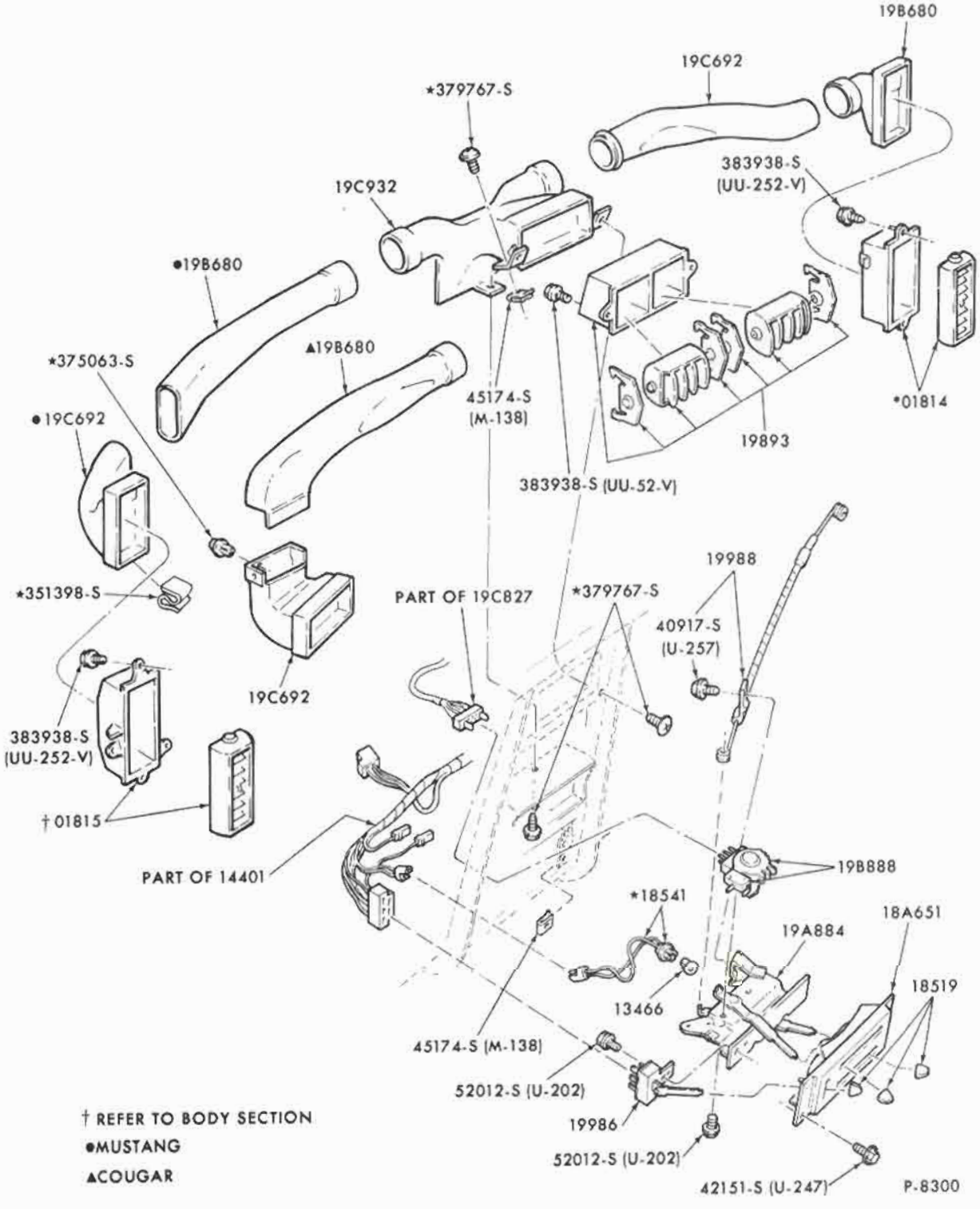

COPYRIGHT © 1975 — FORD MOTOR COMPANY — DEARBORN, MICHIGAN

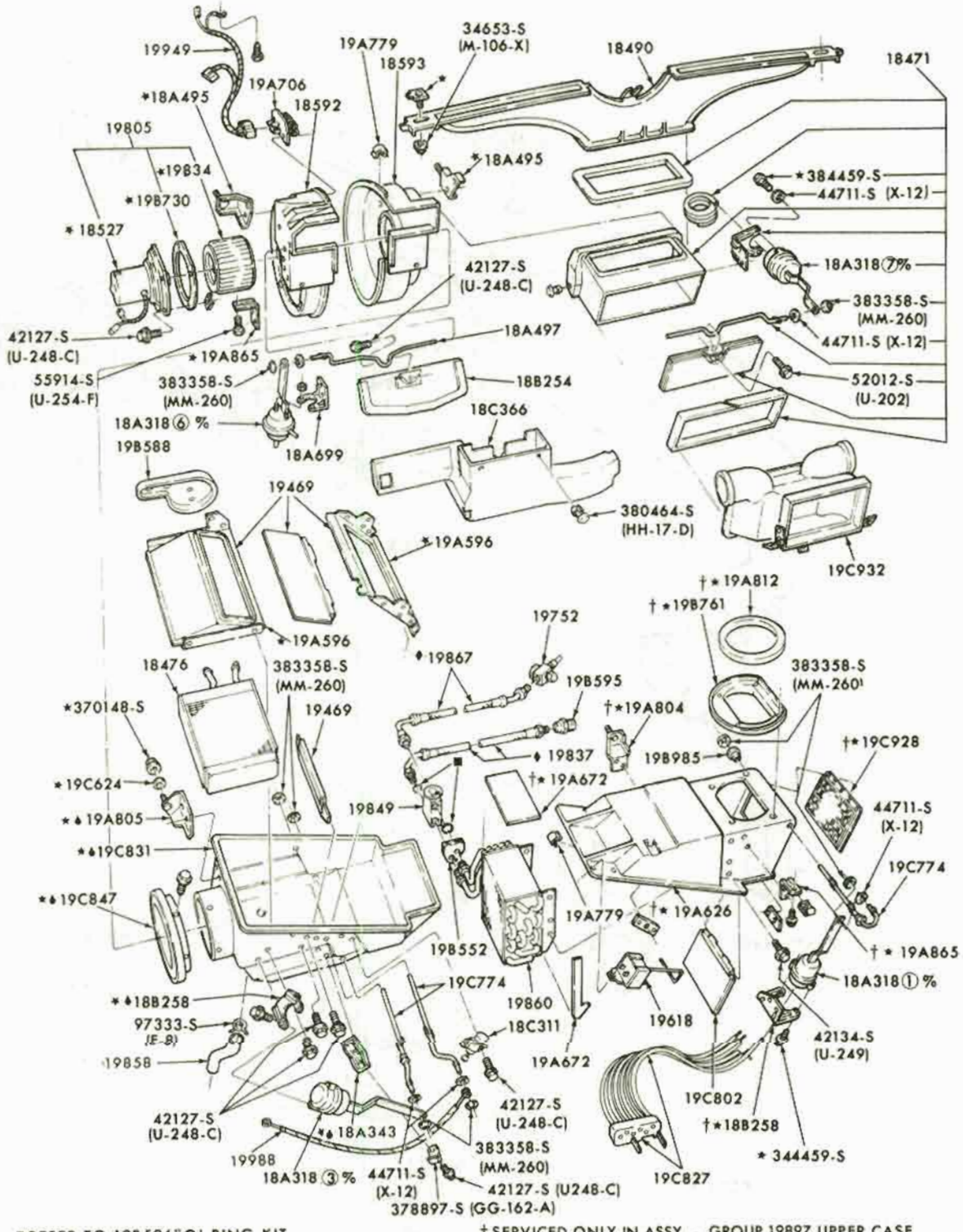

■REFER TO 19B596 "O' RING KIT.
♦REFER TO GROUP 19C705-8 FOR SERVICED ASSY. OR DETAILS
♦ SERVICED ONLY IN ASSY. - GROUP 19897 LOWER CASE

† SERVICED ONLY IN ASSY. - GROUP 19897 UPPER CASE
% NUMBERS ①②, ETC. ARE FUNCTION CODES-REFER TO TEXT FOR COMPLETE PART NUMBER AND DESCRIPTION.

P-8301

AIR CONDITIONING PARTS (PASSENGER COMPARTMENT)
1971/72 MUSTANG-w/INTEGRAL A/C

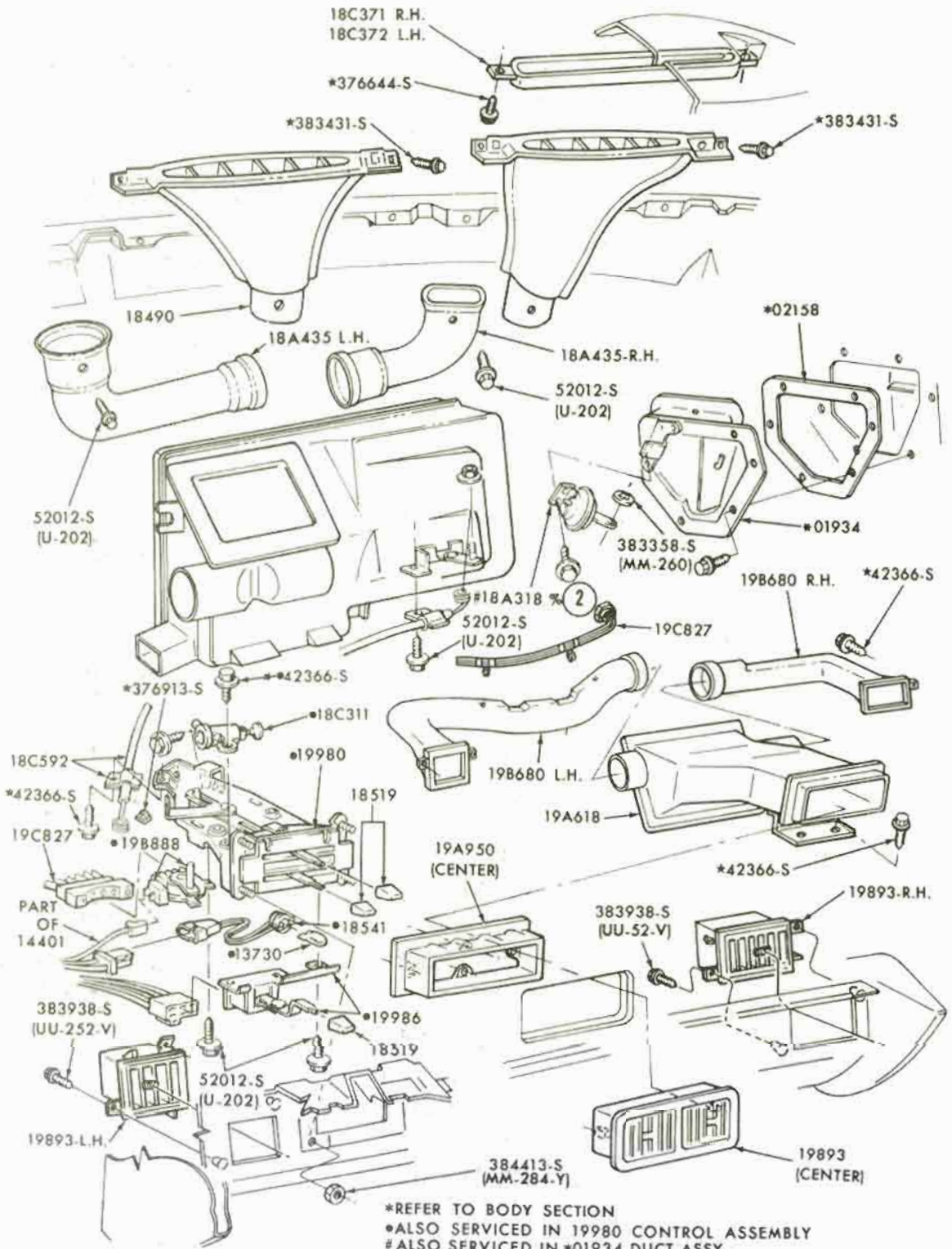

*REFER TO BODY SECTION
•ALSO SERVICED IN 19980 CONTROL ASSEMBLY
#ALSO SERVICED IN *01934 DUCT ASSY.
%NUMBERS (1), (2) ETC. ARE FUNCTION CODES - REFER TO TEXT FOR COMPLETE PART NUMBER & DESCRIPTION

P-8308

May, 1975 COPYRIGHT © 1975 — FORD MOTOR COMPANY — DEARBORN, MICHIGAN

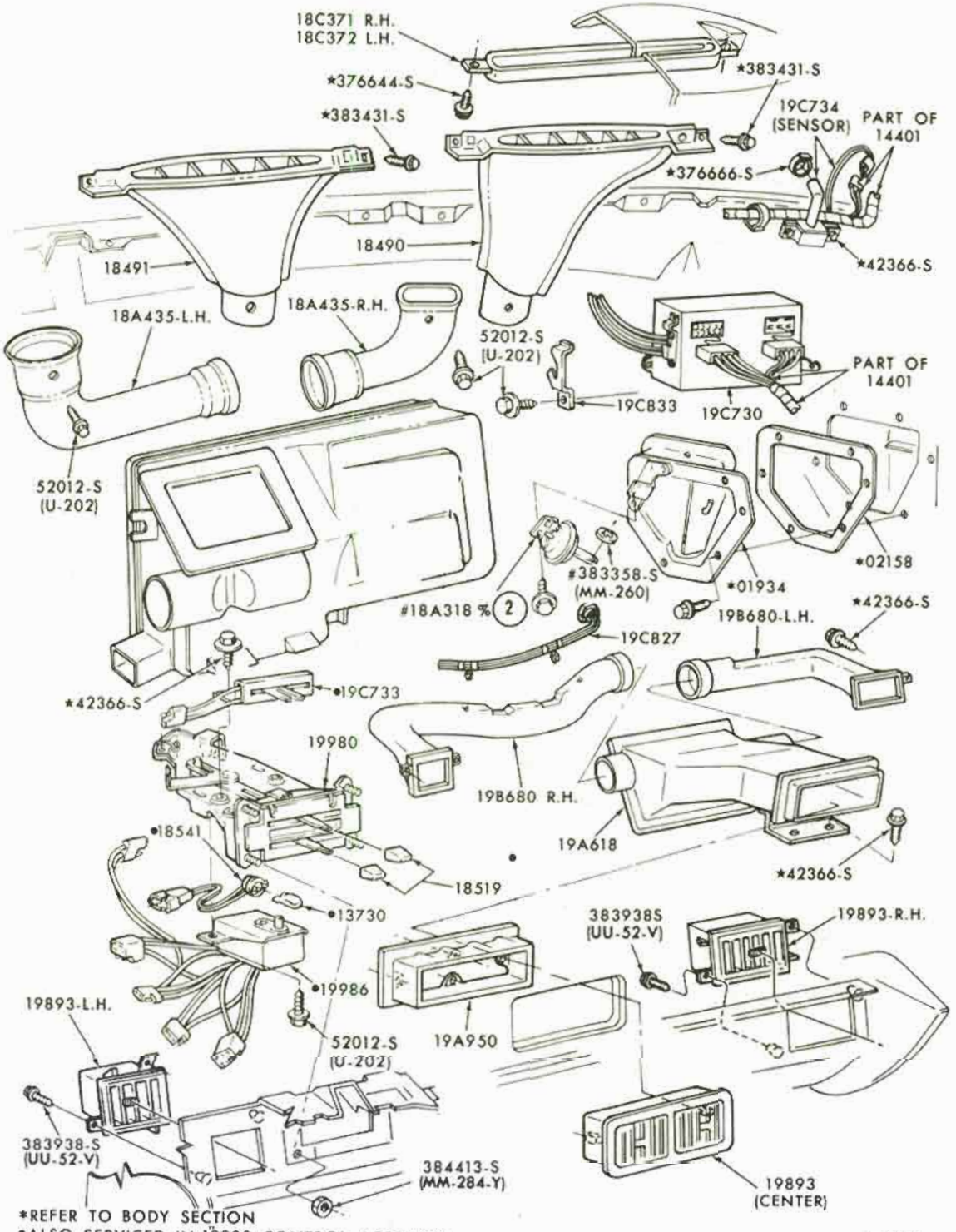

*REFER TO BODY SECTION
•ALSO SERVICED IN 19980 CONTROL ASSEMBLY
#ALSO SERVICED IN *01934 DUCT ASSY.
%NUMBERS (1), (2) ETC. ARE FUNCTION CODES - REFER TO TEXT
FOR COMPLETE PART NUMBER & DESCRIPTION

P-8307

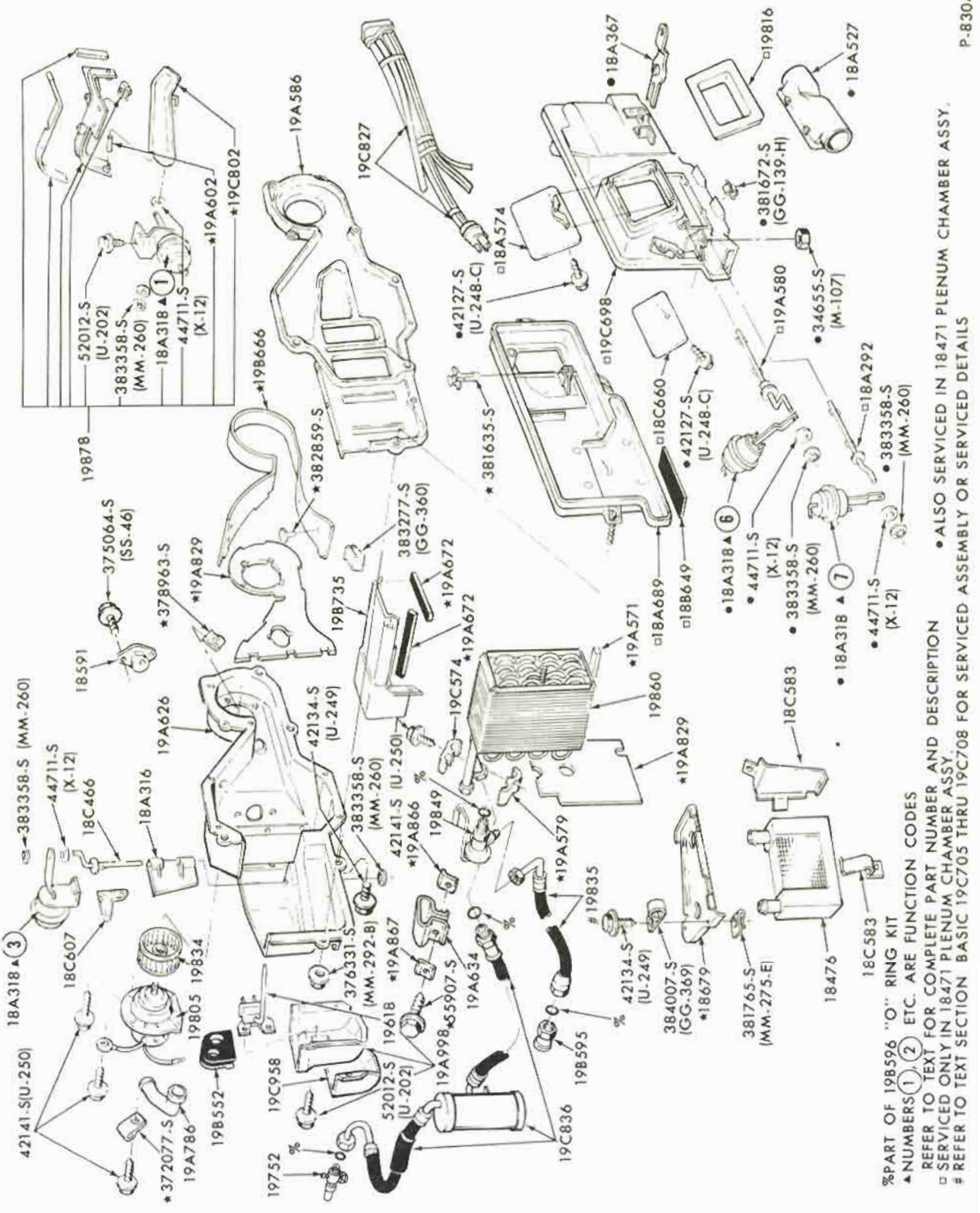

%PART OF 198596 "O" RING KIT
▲NUMBERS (1) (2) ETC. ARE FUNCTION CODES
REFER TO TEXT FOR COMPLETE PART NUMBER AND DESCRIPTION
□ SERVICED ONLY IN 18471 PLENUM CHAMBER ASSY.
REFER TO TEXT SECTION BASIC 19C705 THRU 19C708 FOR SERVICED ASSEMBLY OR SERVICED DETAILS
•ALSO SERVICED IN 18471 PLENUM CHAMBER ASSY.

P-8304

AIR CONDITIONER PARTS (PASSENGER COMPARTMENT)-MANUAL
1971/72 FORD-w/INTEGRAL A/C

COPYRIGHT © 1975 — FORD MOTOR COMPANY — DEARBORN, MICHIGAN

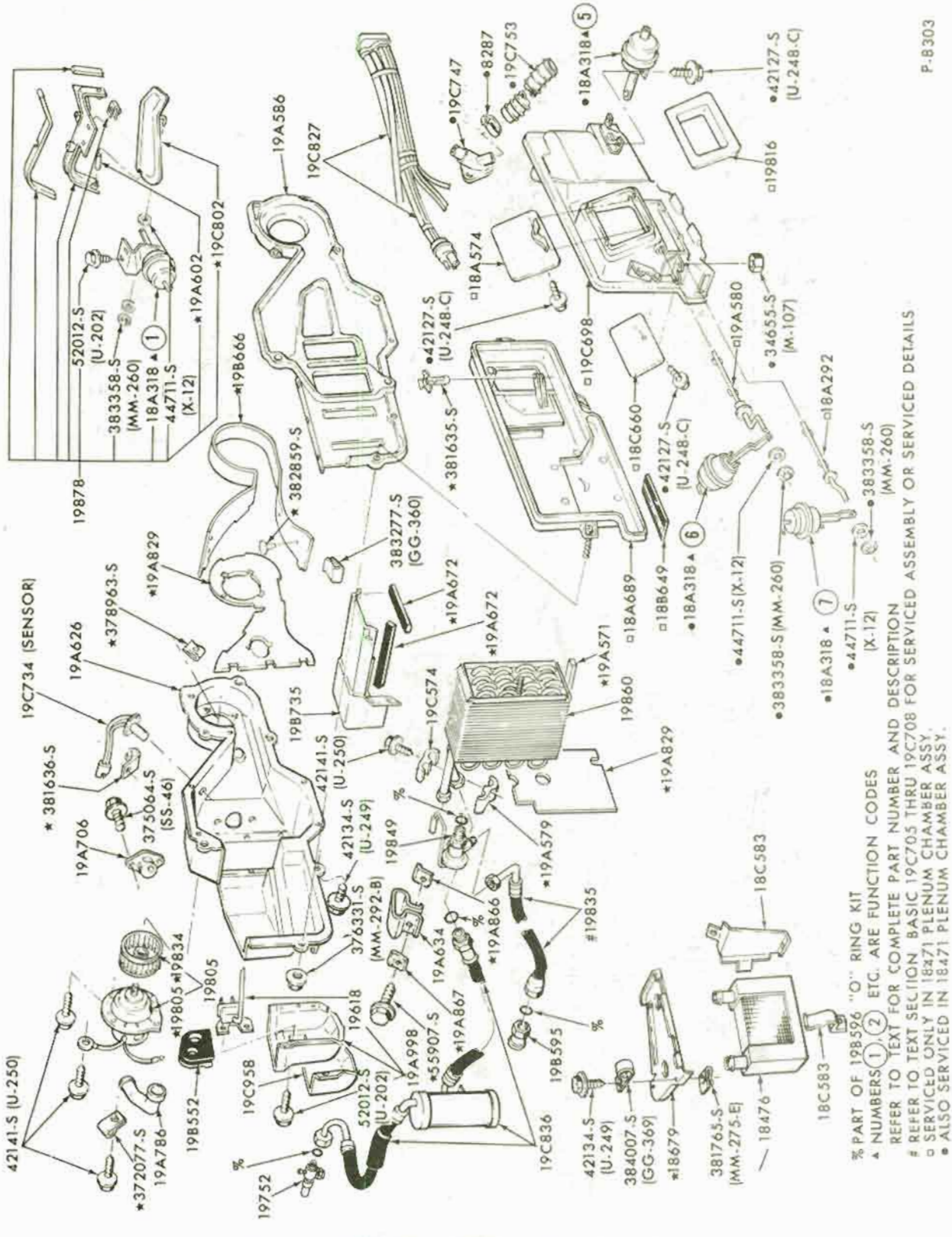

% PART OF 19B596 "O" RING KIT
▲ NUMBERS (1), (2) ETC. ARE FUNCTION CODES
REFER TO TEXT FOR COMPLETE PART NUMBER AND DESCRIPTION
REFER TO TEXT SECTION BASIC 19C705 THRU 19C708 FOR SERVICED ASSEMBLY OR SERVICED DETAILS
□ SERVICED ONLY IN 18471 PLENUM CHAMBER ASSY.
• ALSO SERVICED IN 18471 PLENUM CHAMBER ASSY.

P-8303

AUTOMATIC TEMPERATURE CONTROL PARTS (PASSENGER COMPARTMENT)
1971/72 FORD

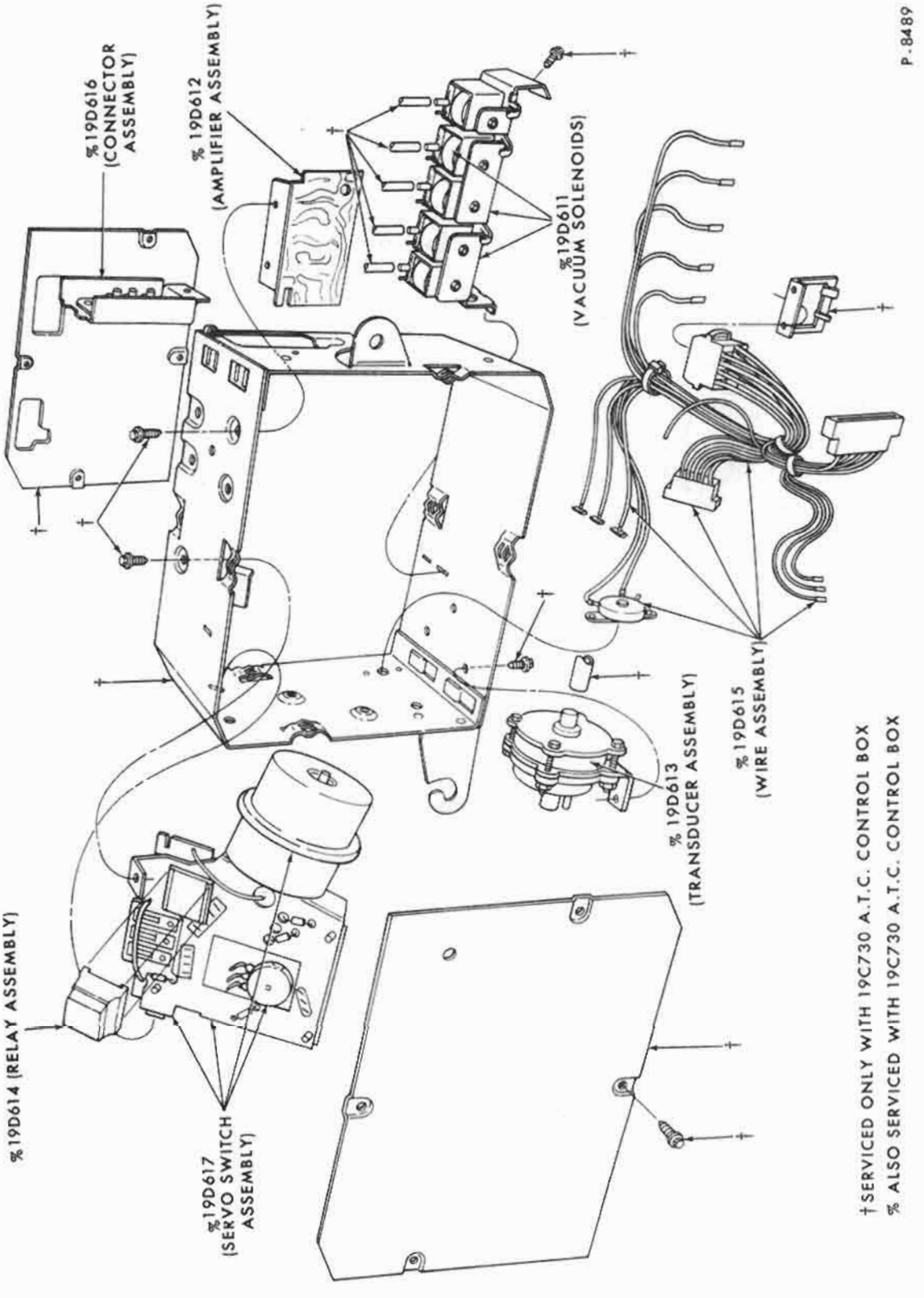

AUTOMATIC TEMPERATURE CONTRCL BOX
1971/72 FORD, 1972 THUNDERBIRD

COPYRIGHT © 1975 — FORD MOTOR COMPANY — DEARBORN, MICHIGAN

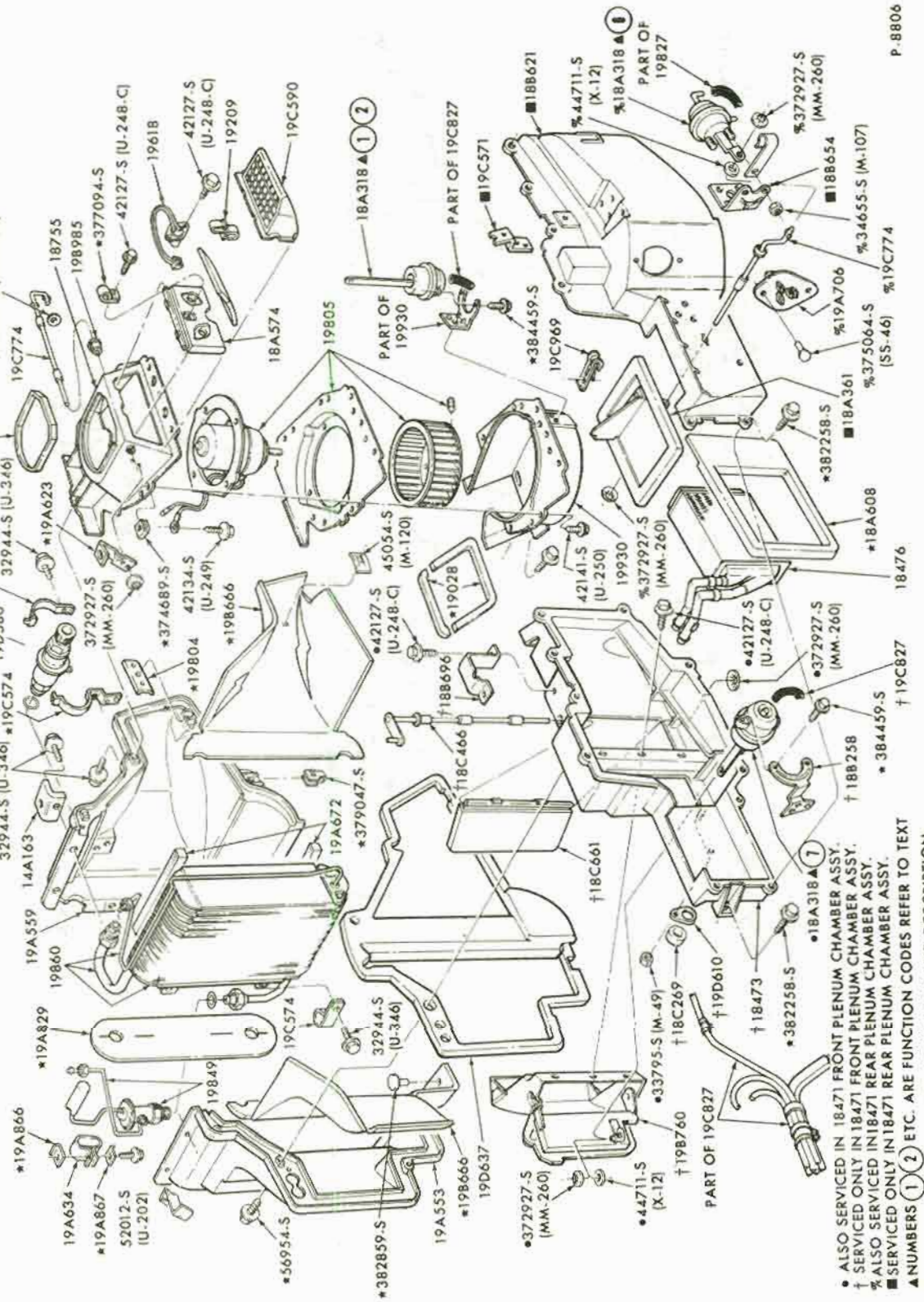

AIR CONDITIONER PARTS (PASSENGER COMPARTMENT)
1972 TORINO, THUNDERBIRD - MANUAL INTEGRAL A/C

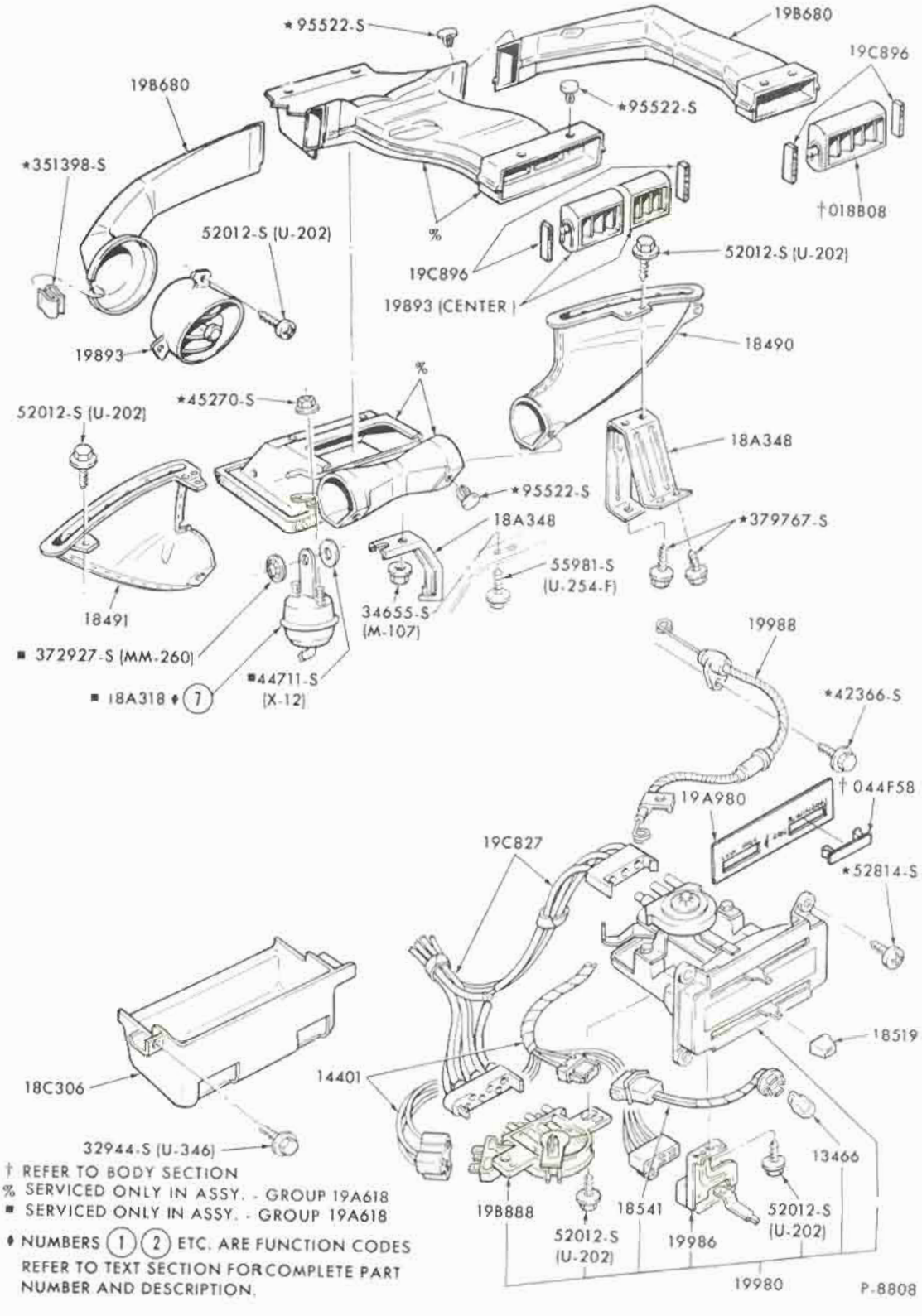

† REFER TO BODY SECTION
% SERVICED ONLY IN ASSY. - GROUP 19A618
■ SERVICED ONLY IN ASSY. - GROUP 19A618
♦ NUMBERS (1) (2) ETC. ARE FUNCTION CODES REFER TO TEXT SECTION FOR COMPLETE PART NUMBER AND DESCRIPTION.

AIR CONDITIONER CONTROLS and RELATED PARTS
1972 TORINO - INTEGRAL A/C

COPYRIGHT © 1975 — FORD MOTOR COMPANY — DEARBORN, MICHIGAN

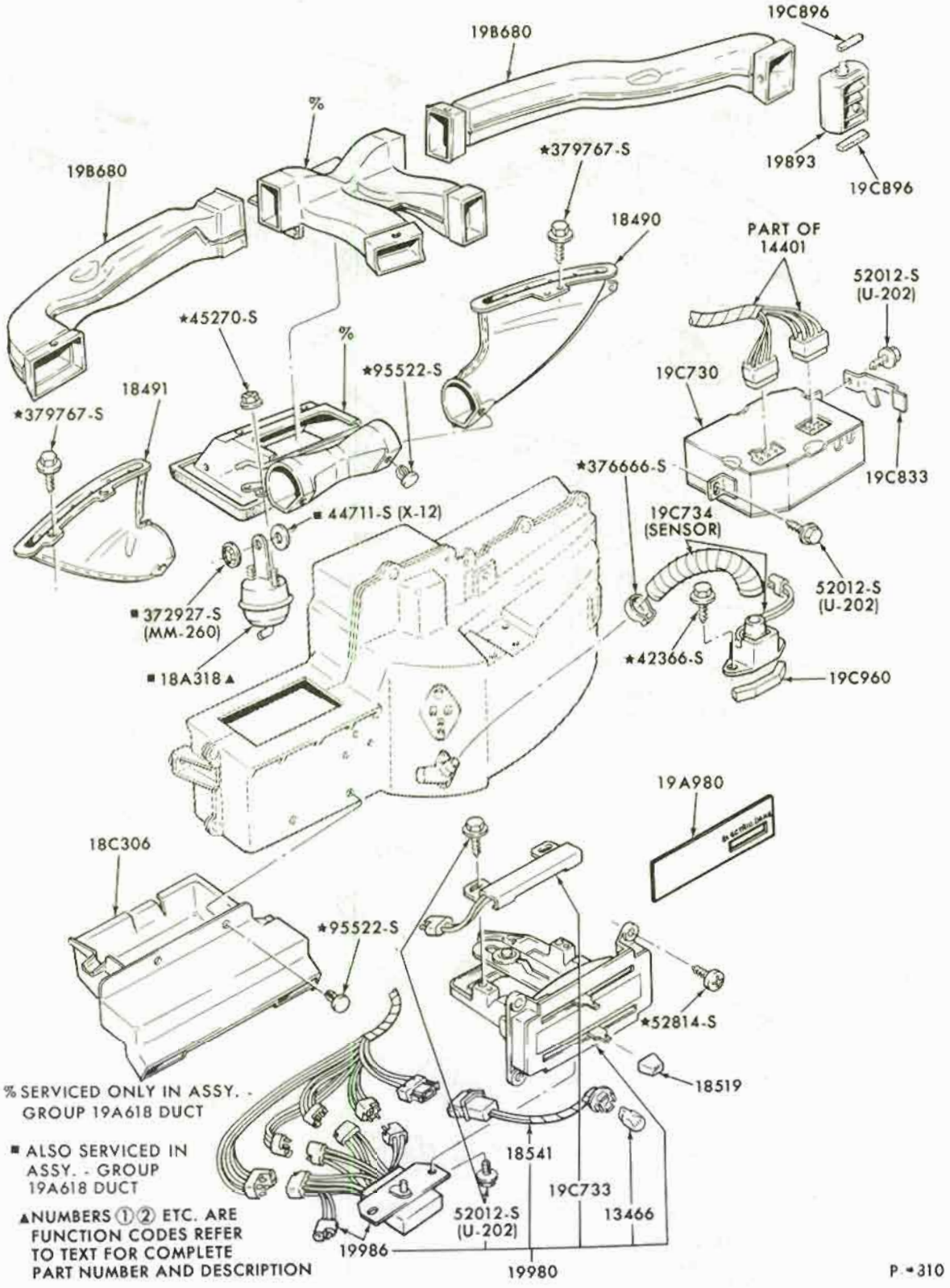

AUTOMATIC TEMPERATURE CONTROLS and RELATED PARTS
1972 THUNDERBIRD

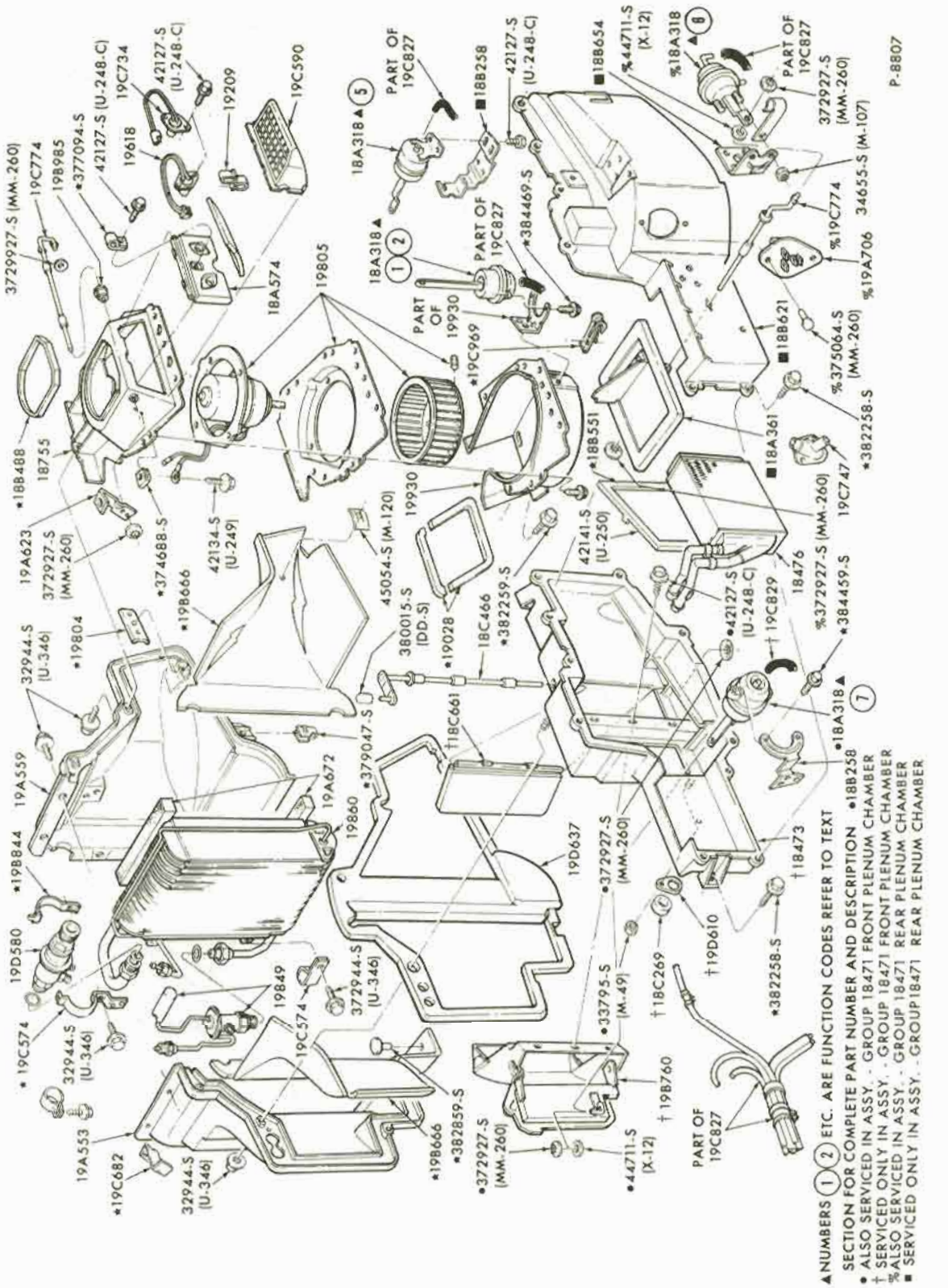

AIR CONDITIONER PARTS (PASSENGER COMPARTMENT)-A.T.C.
1972 THUNDERBIRD

COPYRIGHT © 1975 — FORD MOTOR COMPANY — DEARBORN, MICHIGAN

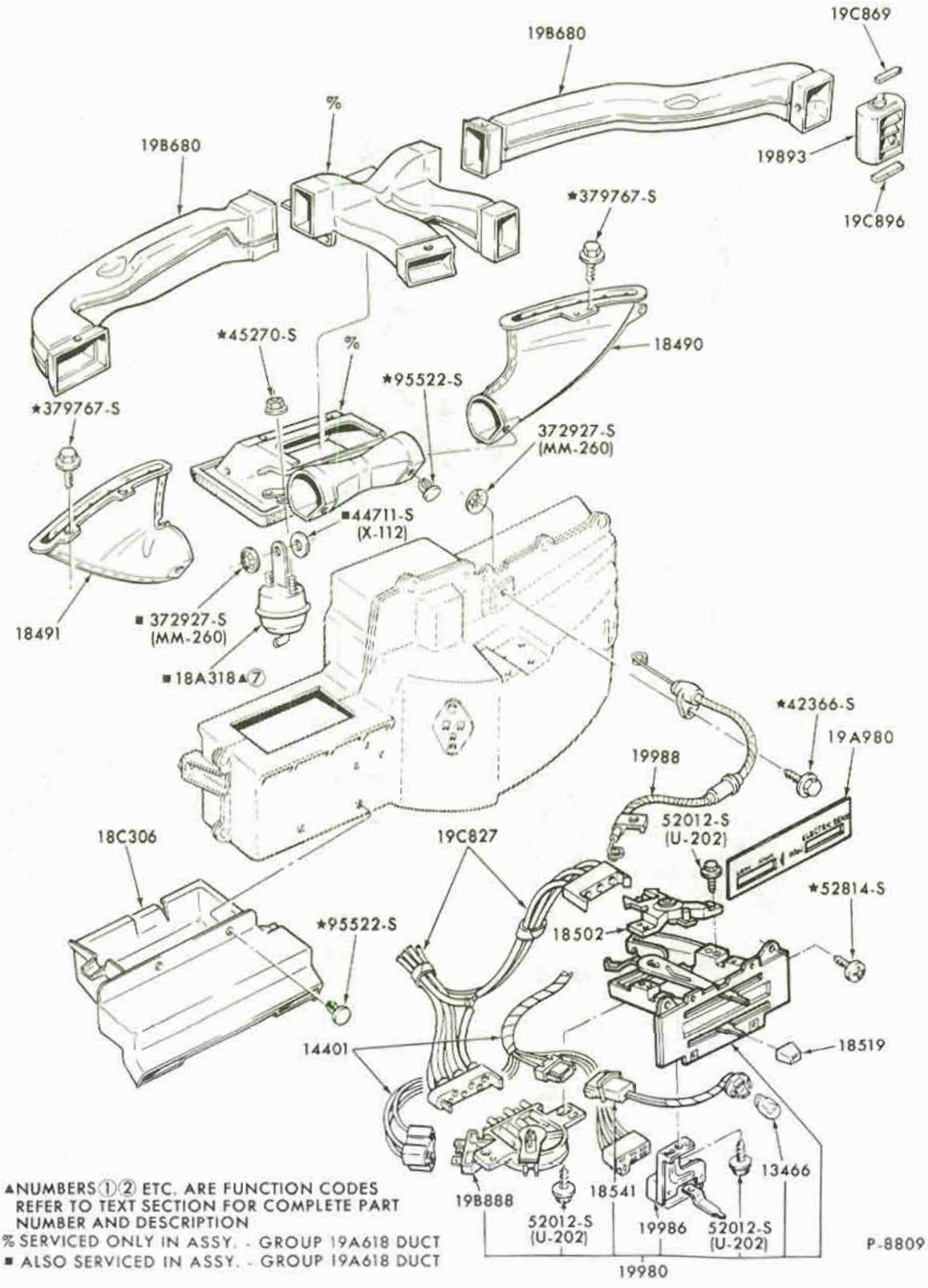

AIR CONDITIONER CONTROLS and RELATED PARTS - MANUAL
1972 THUNDERBIRD

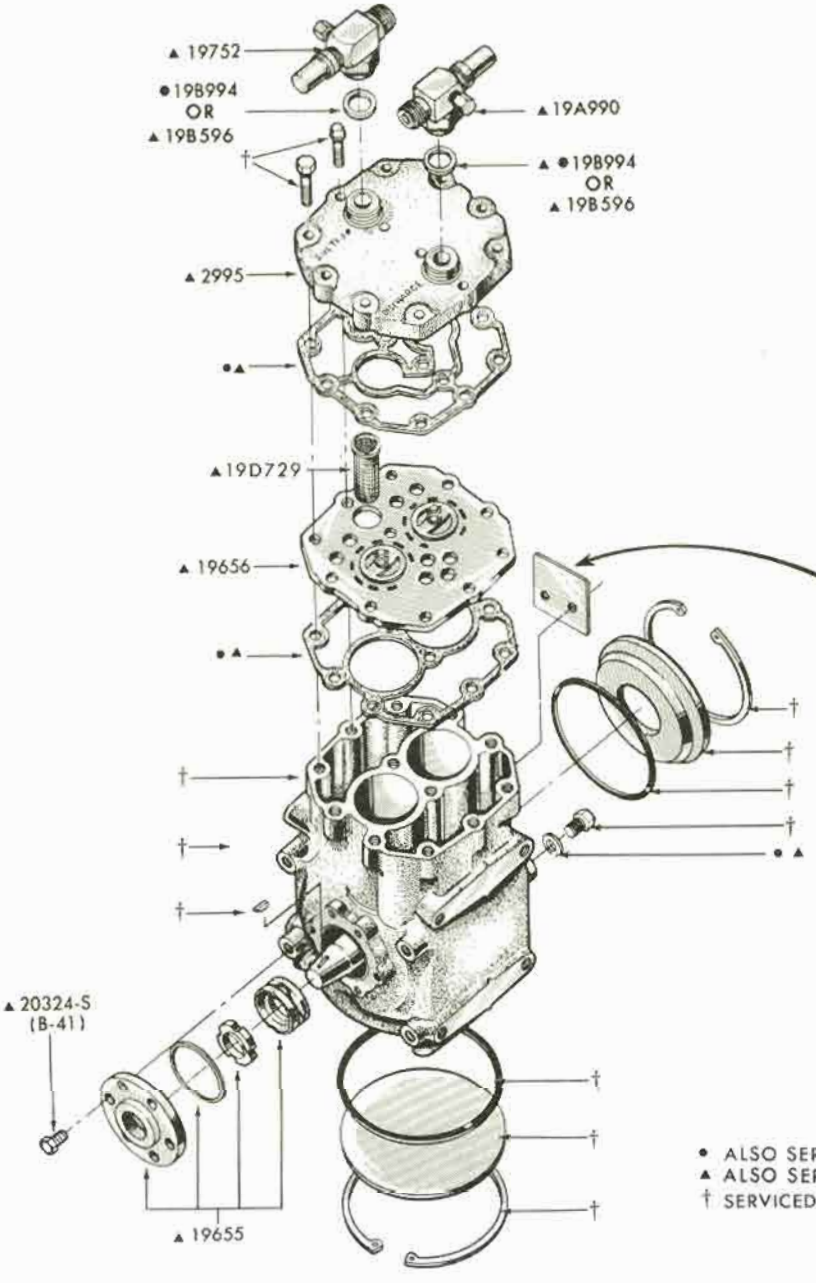

● ALSO SERVICED IN KIT - GROUP 19B684 GASKET
▲ ALSO SERVICED IN ASSY-GROUP 19703 COMPRESSOR
† SERVICED ONLY IN ASSY. - GROUP 19703 COMPRESSOR

P-4381

COMPRESSOR-AIR CONDITIONER (TECUMSEH DESIGN)(CAST IRON)
1965/72 - ALL

COPYRIGHT © 1975 — FORD MOTOR COMPANY — DEARBORN, MICHIGAN

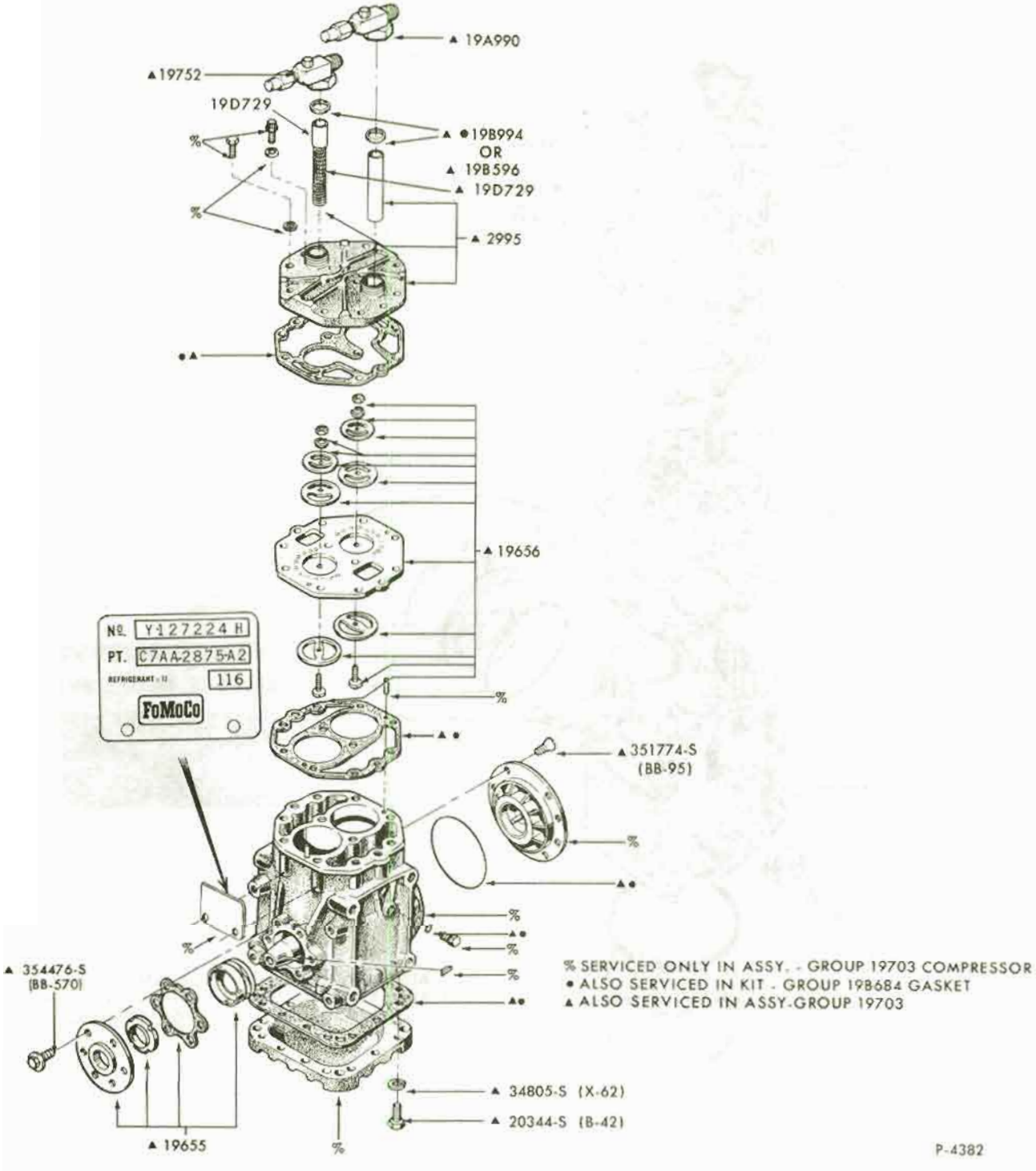

COMPRESSOR-AIR CONDITIONER (YORK DESIGN)(ALUMINUM)
1965/72 - ALL

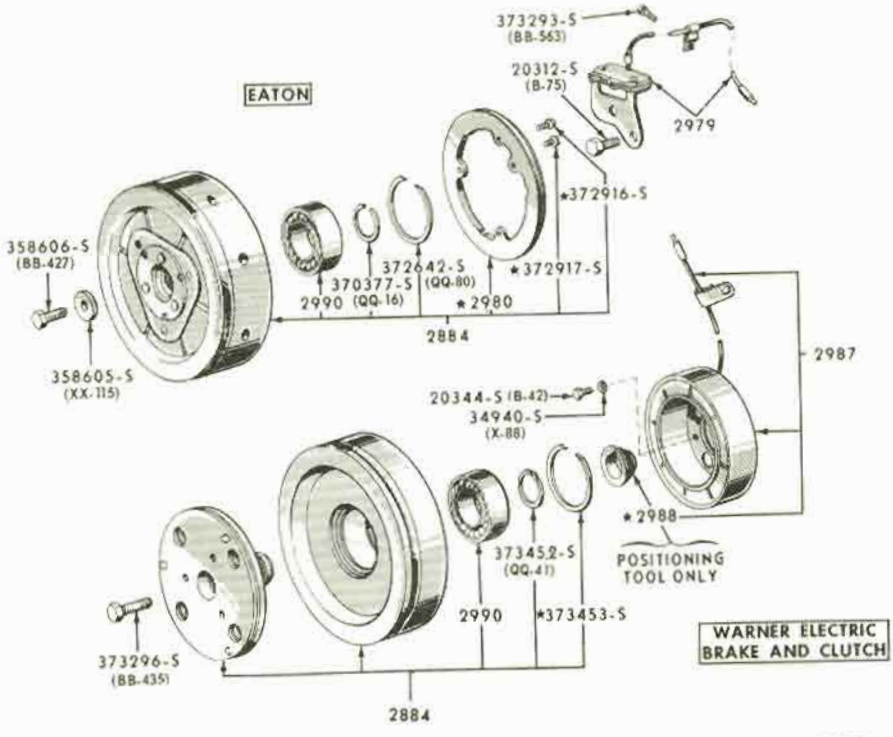

CLUTCHES and RELATED PARTS - AIR CONDITIONER COMPRESSOR
1965/72 - ALL - INTEGRAL A/C

COPYRIGHT © 1975 — FORD MOTOR COMPANY — DEARBORN, MICHIGAN

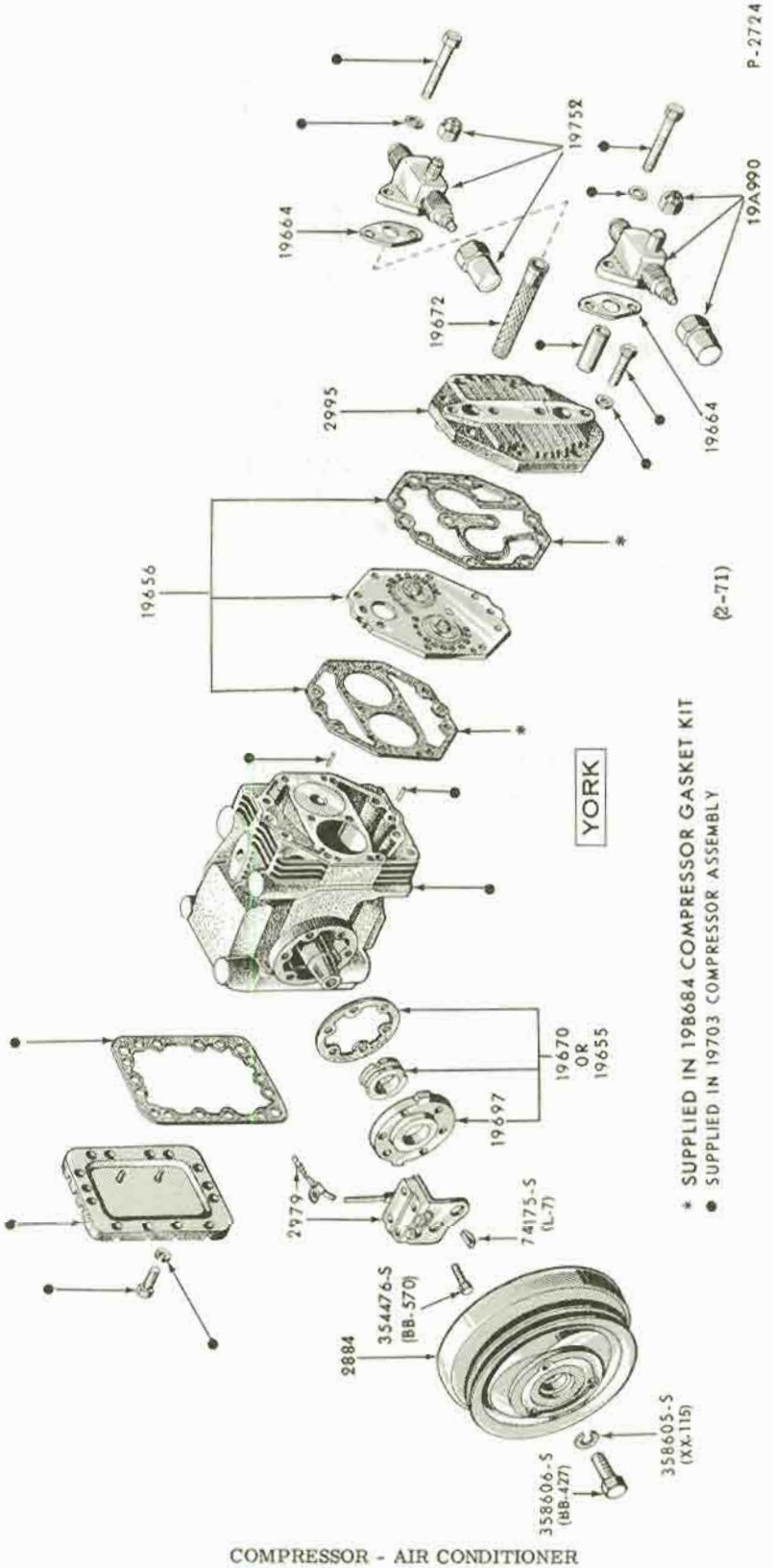

COMPRESSOR - AIR CONDITIONER
1965/70 FALCON - w/ INTEGRAL A/C

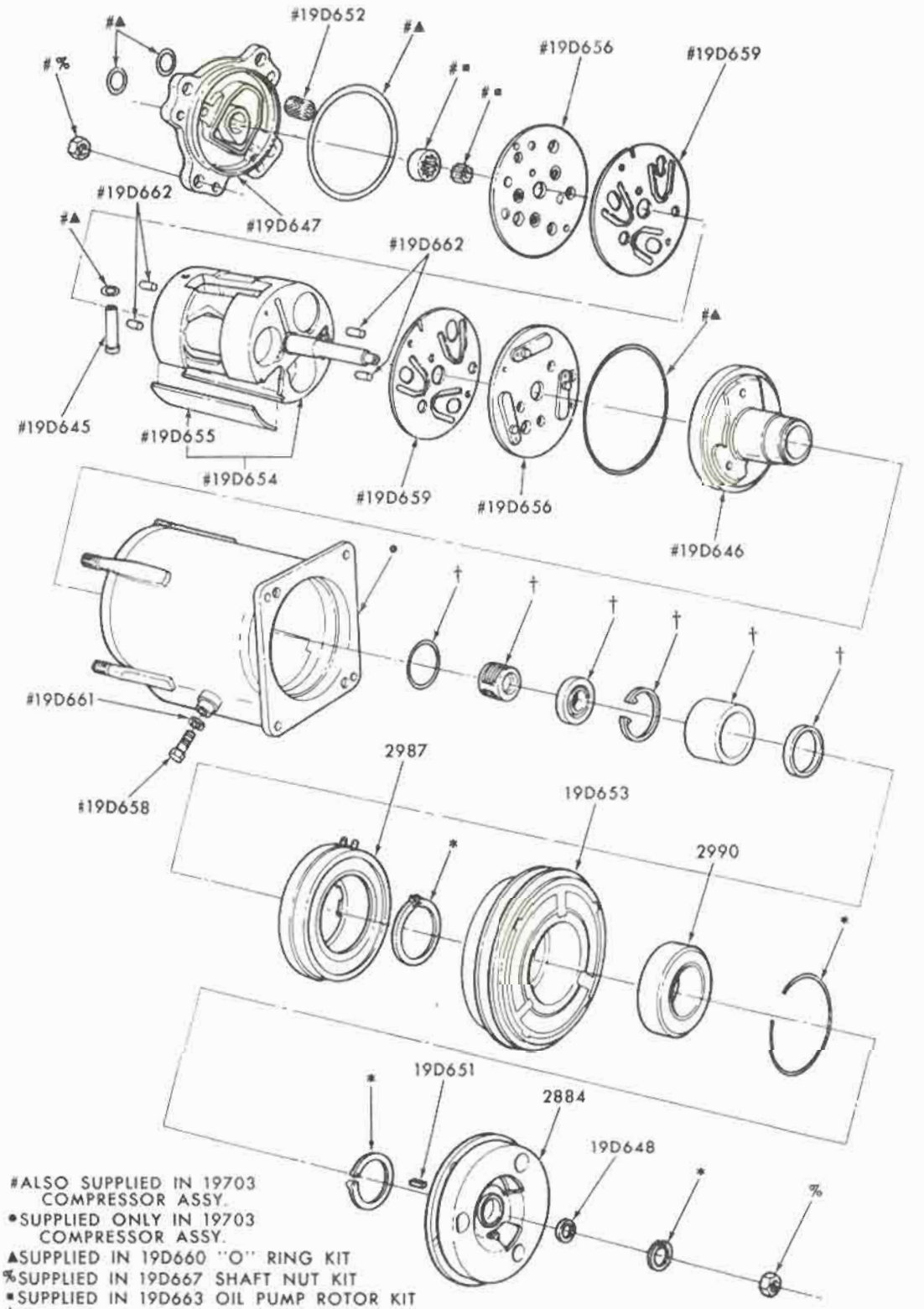

#ALSO SUPPLIED IN 19703 COMPRESSOR ASSY.
•SUPPLIED ONLY IN 19703 COMPRESSOR ASSY.
▲SUPPLIED IN 19D660 "O" RING KIT
%SUPPLIED IN 19D667 SHAFT NUT KIT
■SUPPLIED IN 19D663 OIL PUMP ROTOR KIT
†SUPPLIED IN 19D665 SEAL KIT
*SUPPLIED IN 19D664 RETAINER RING KIT

P-8492

COMPRESSOR - AIR CONDITIONER (SWASH PLATE DESIGN)
1972 THUNDERBIRD

COPYRIGHT © 1975 — FORD MOTOR COMPANY — DEARBORN, MICHIGAN

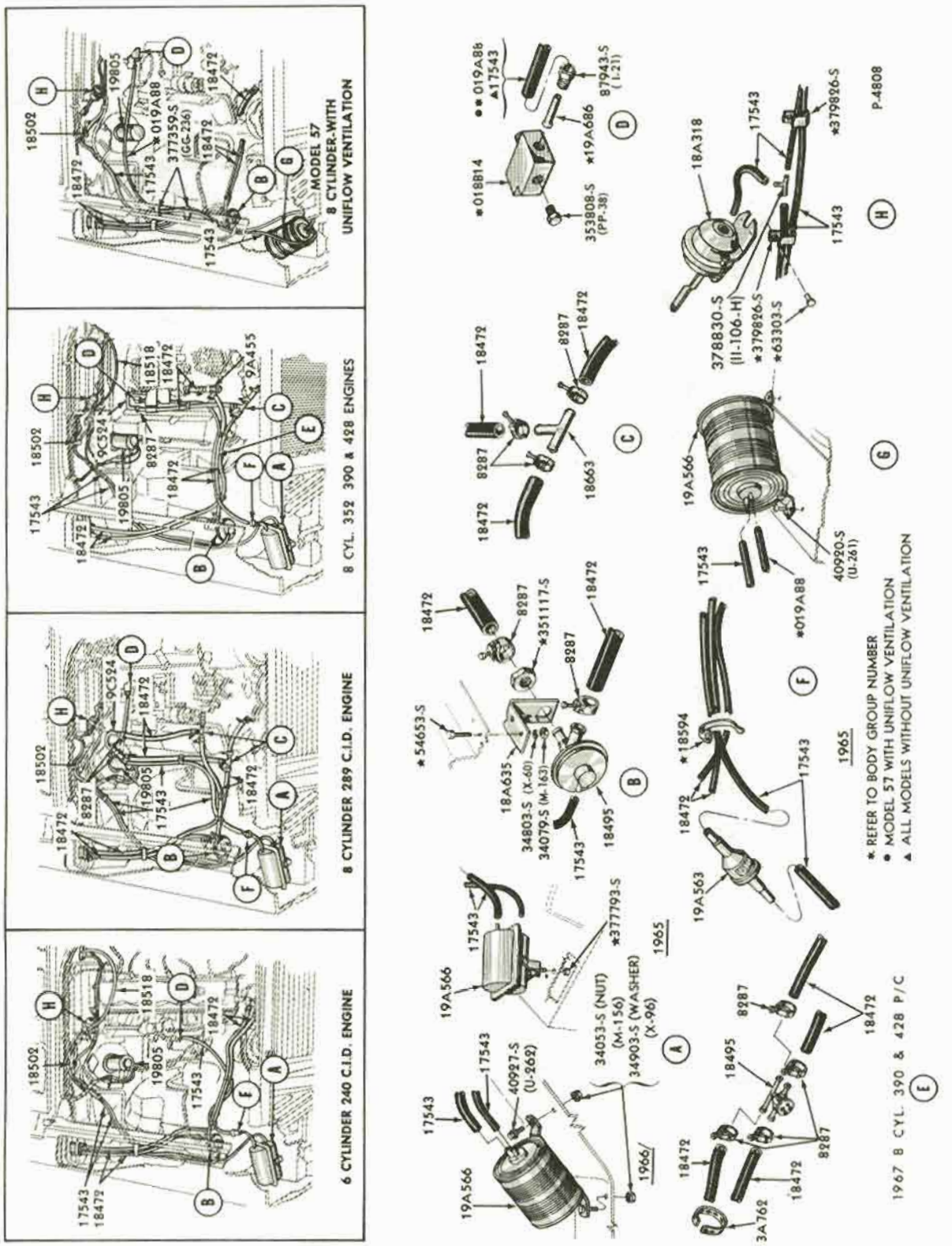

VACUUM HOSES - AIR CONDITIONER and HEATER
1965/68 FORD - w/ INTEGRAL A/C

COPYRIGHT © 1975 — FORD MOTOR COMPANY — DEARBORN, MICHIGAN

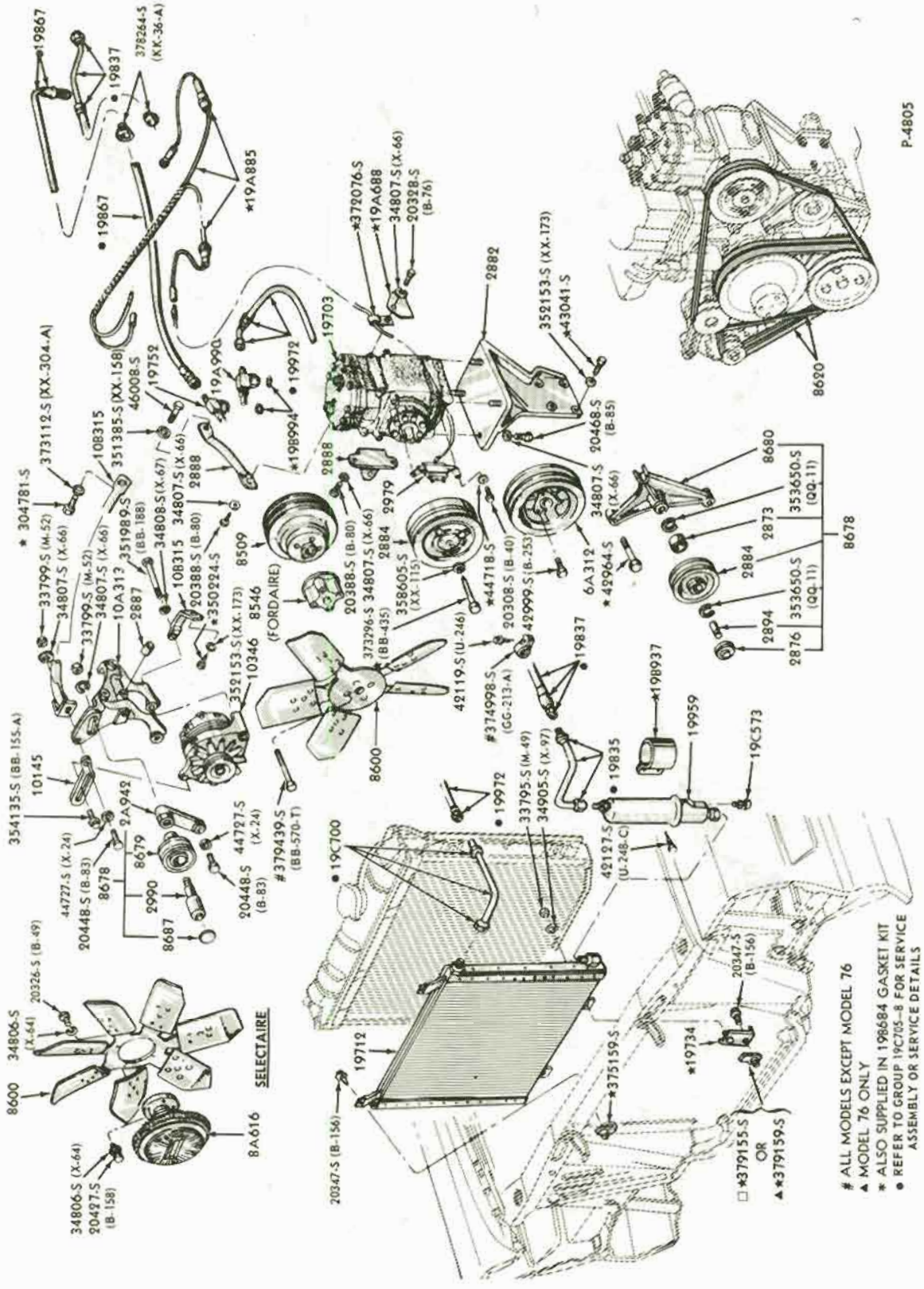

AIR CONDITIONING PARTS (ENGINE COMPARTMENT)
1965/66 FORD - 6 CYL

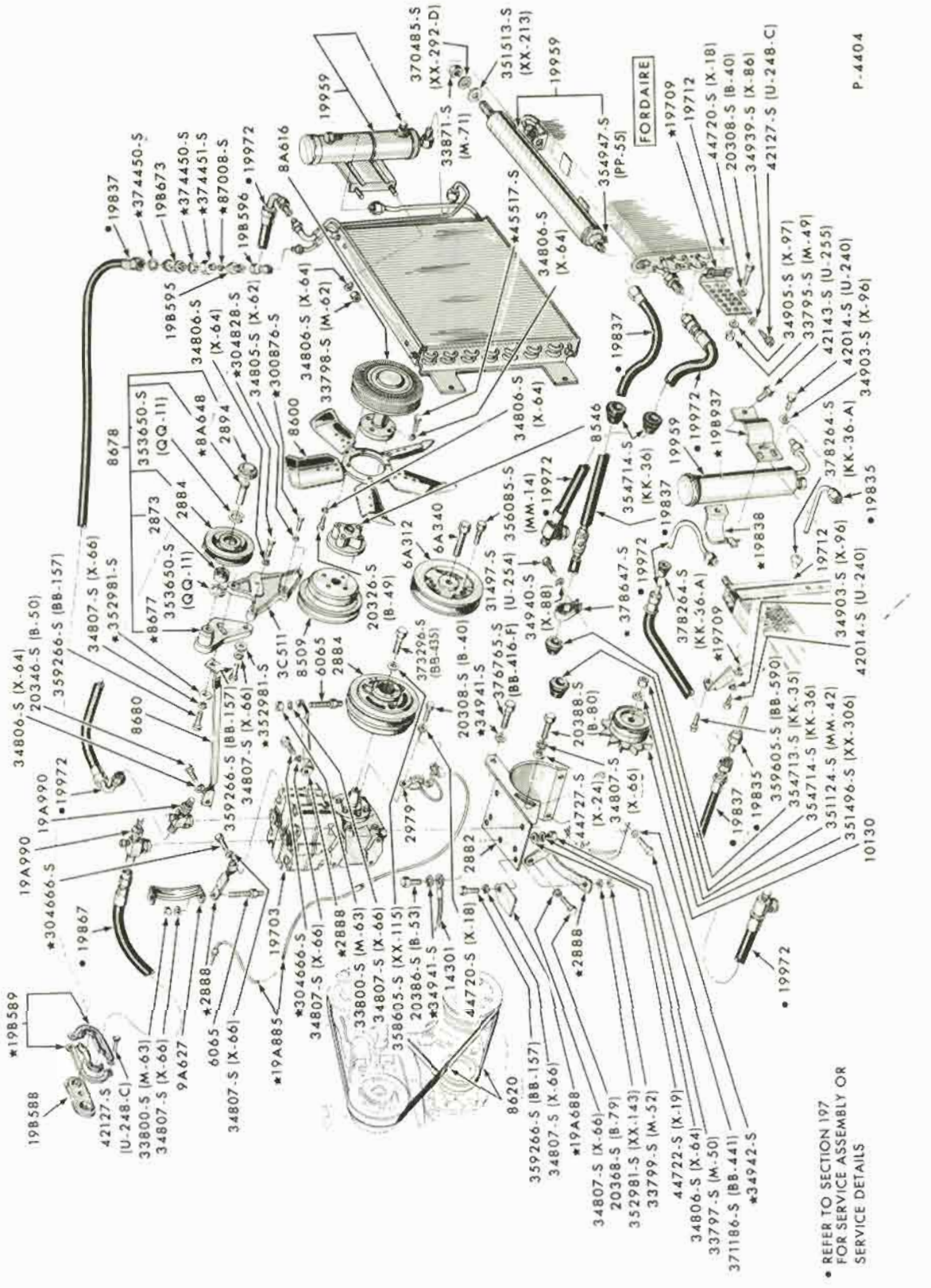

AIR CONDITIONING PARTS (ENGINE COMPARTMENT)
1965 FAIRLANE - 6 CYL.

COPYRIGHT © 1975 — FORD MOTOR COMPANY — DEARBORN, MICHIGAN

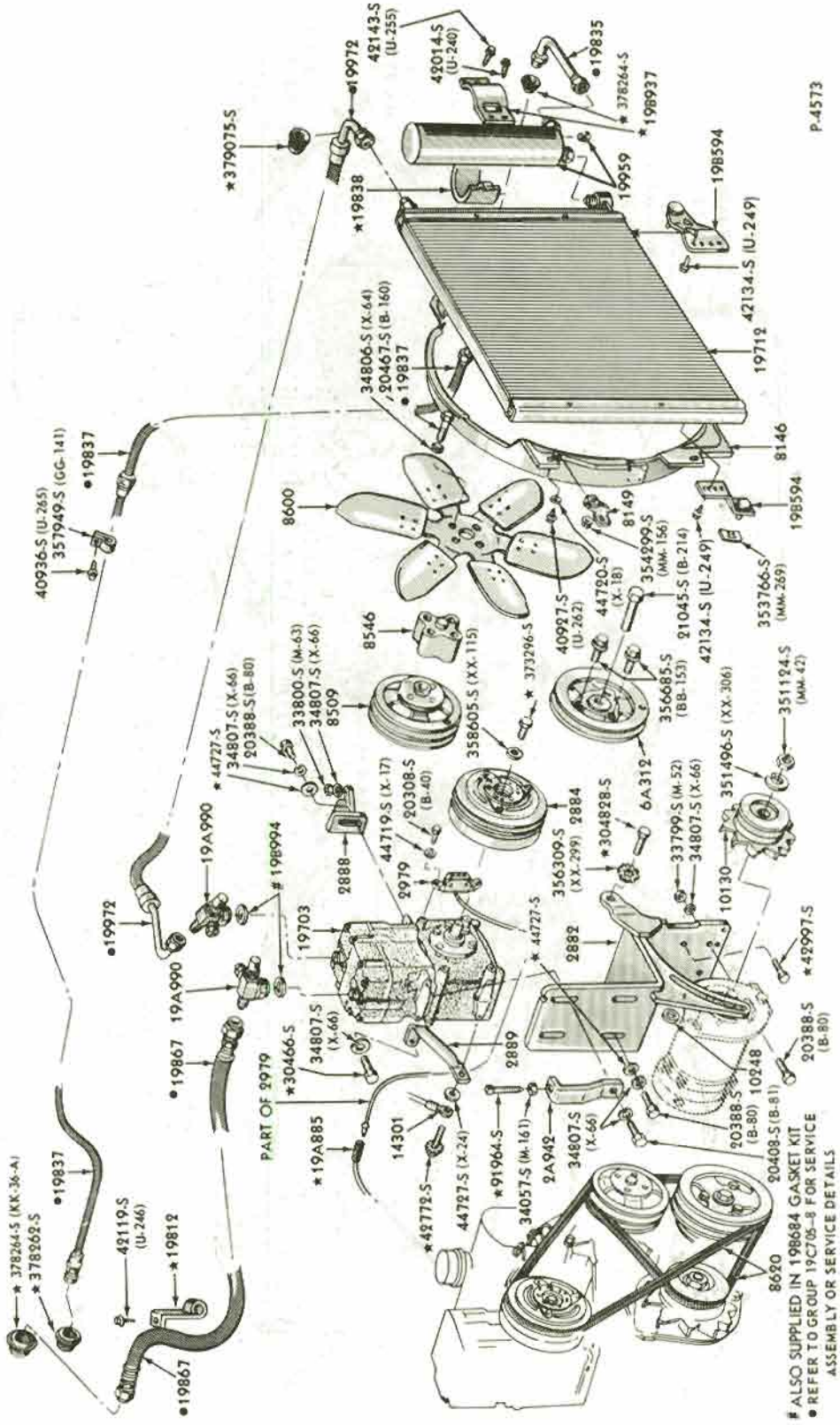

AIR CONDITIONING PARTS (ENGINE COMPARTMENT)
1965/66 MUSTANG - 6 CYL. - w/ HANG-ON A/C

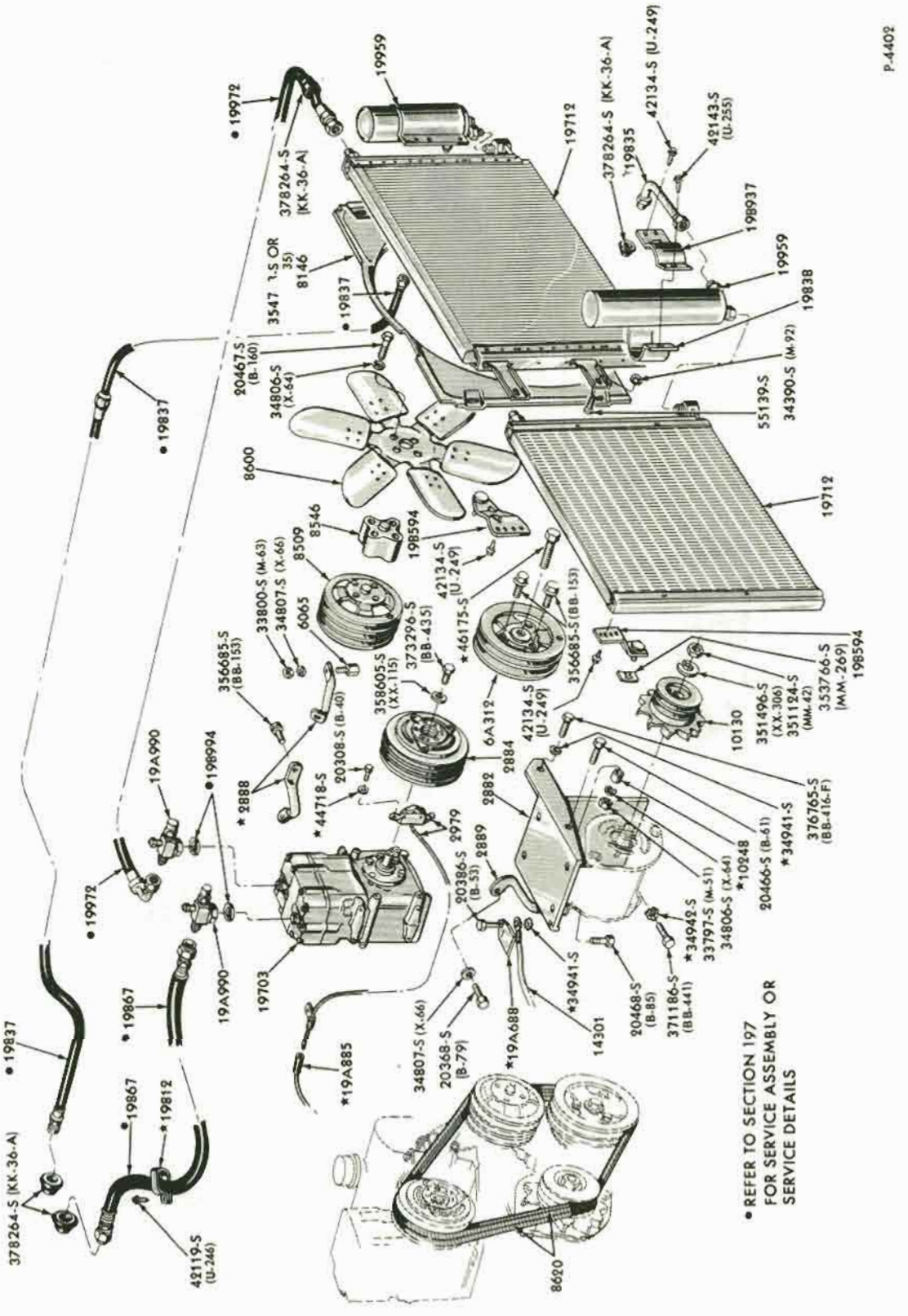

AIR CONDITIONING PARTS (ENGINE COMPARTMENT)
1965 FALCON - 6 CYL. - w/ HANG-ON A/C

COPYRIGHT © 1975 — FORD MOTOR COMPANY — DEARBORN, MICHIGAN

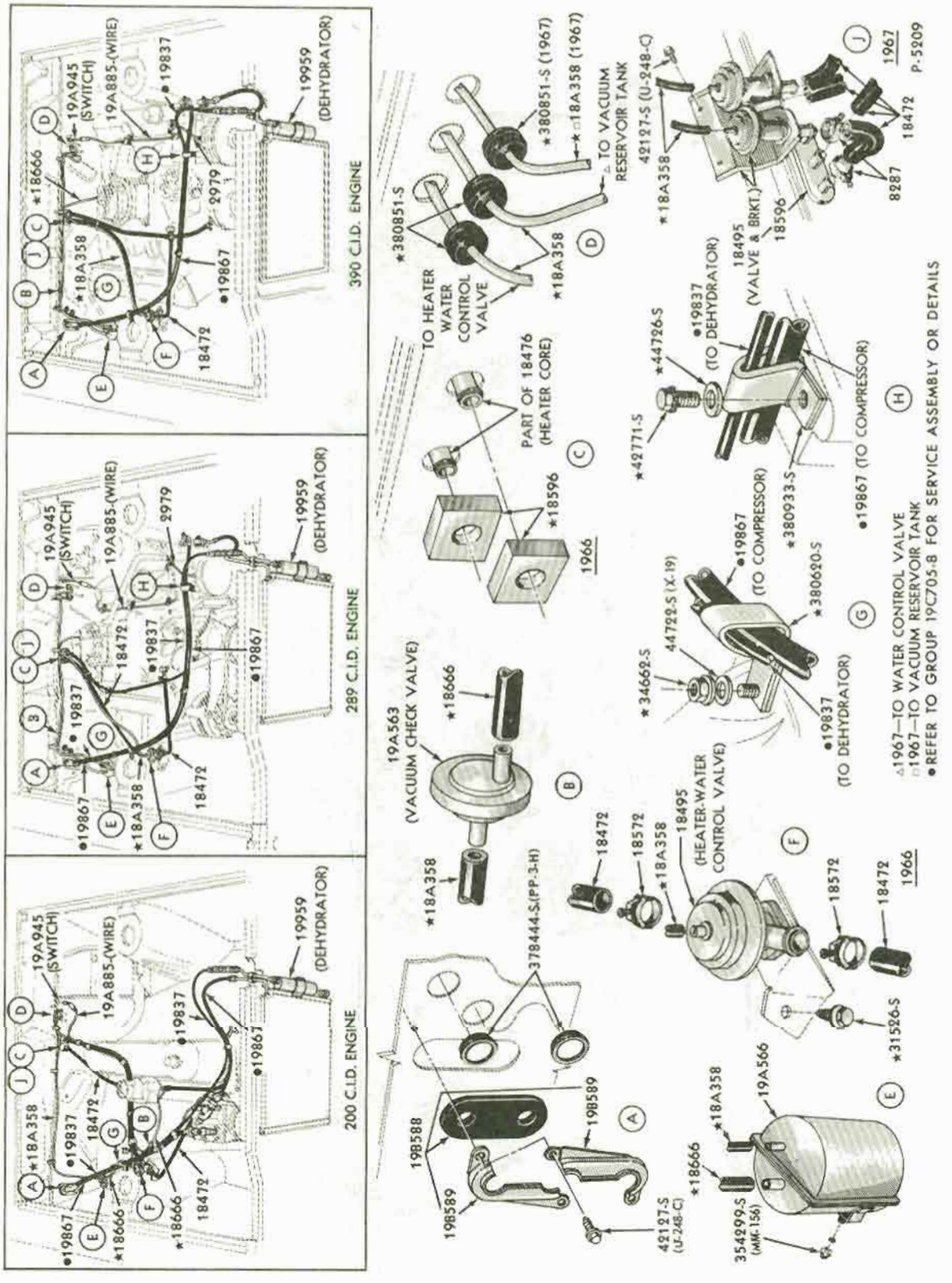

VACUUM HOSES - AIR CONDITIONER and HEATER
1966/67 FAIRLANE and FALCON

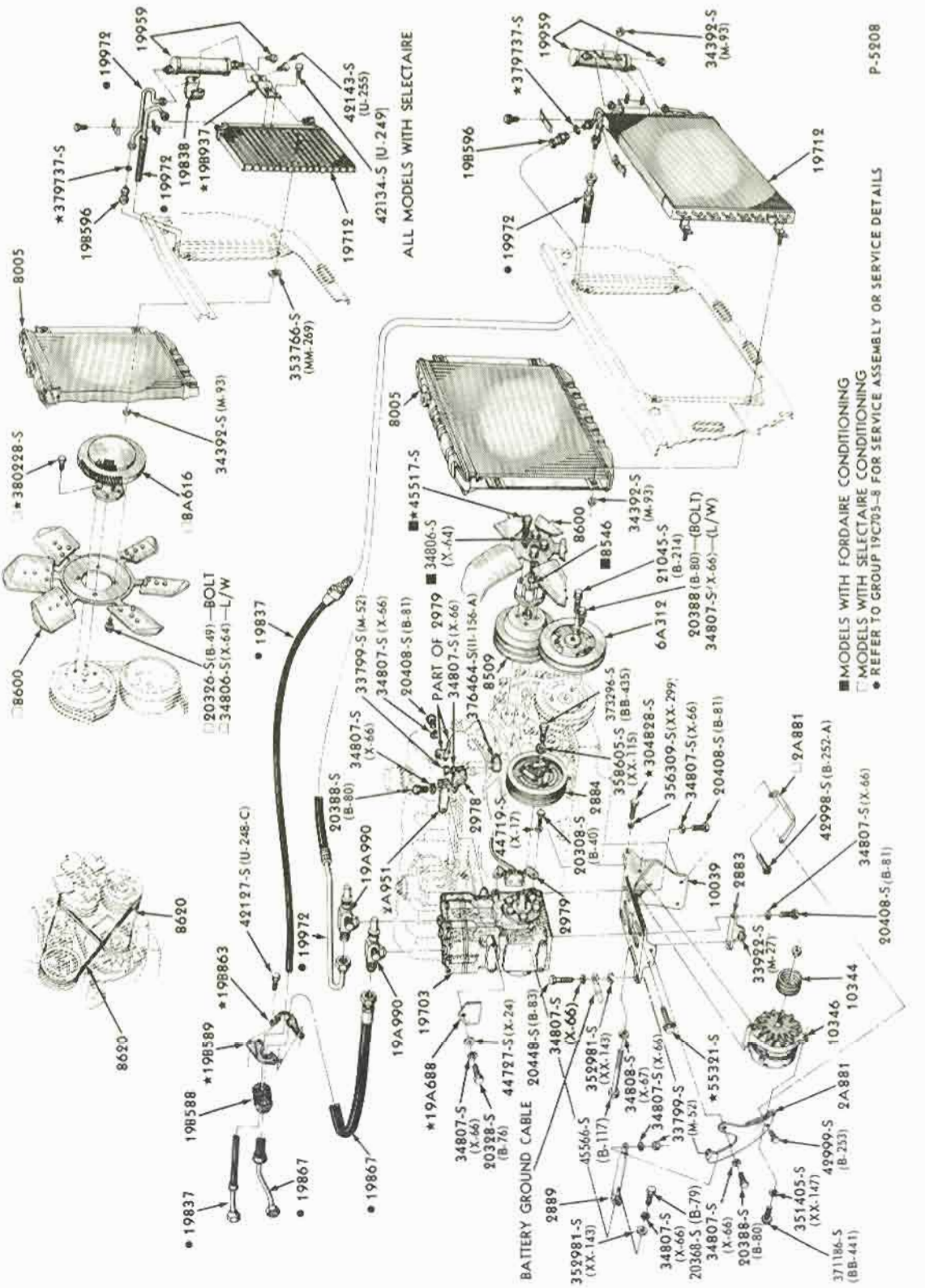

AIR CONDITIONING PARTS (ENGINE COMPARTMENT)
1966 FAIRLANE and FALCON - 6 CYL. - w/ HANG-ON A/C

COPYRIGHT © 1975 — FORD MOTOR COMPANY — DEARBORN, MICHIGAN

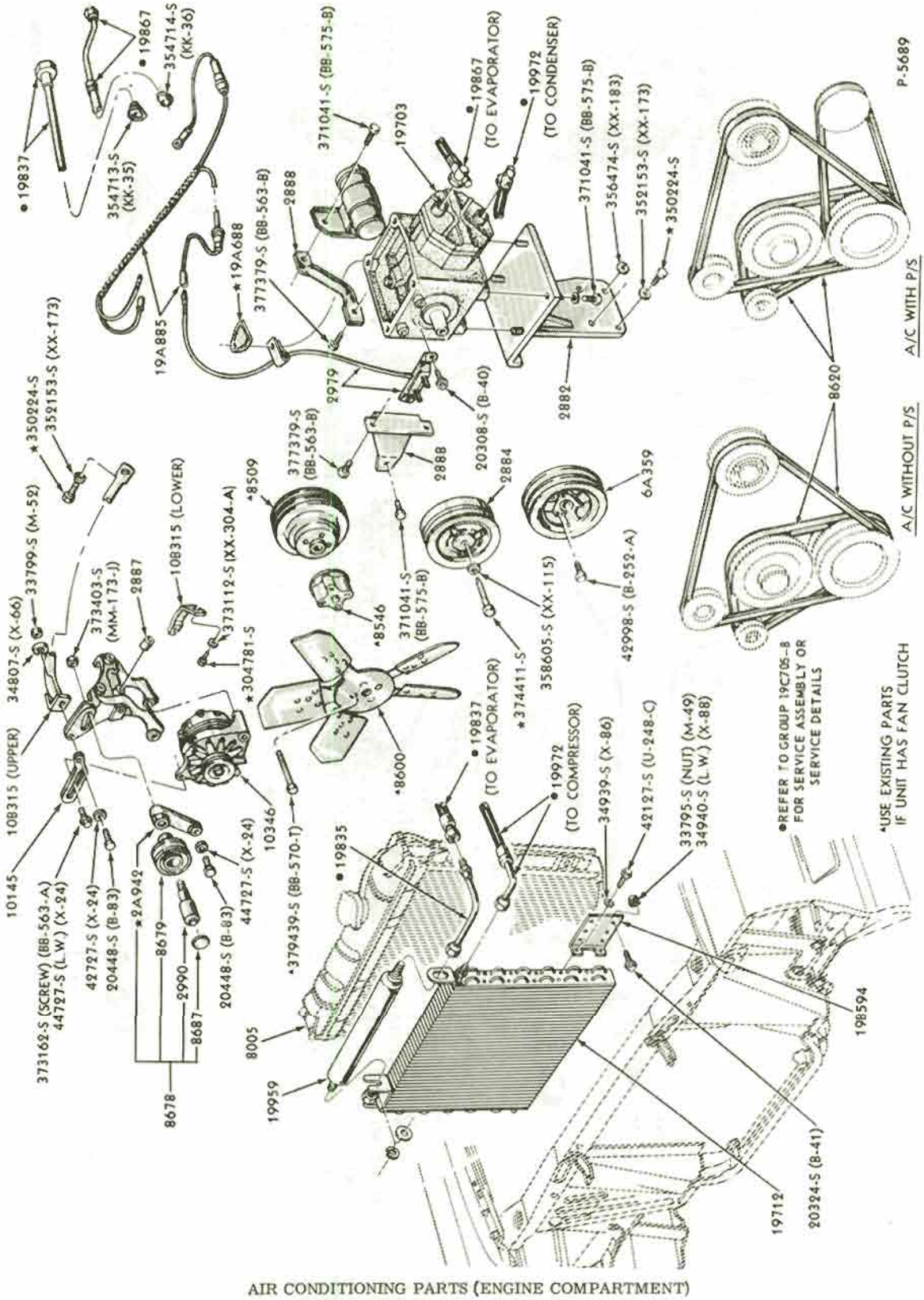

AIR CONDITIONING PARTS (ENGINE COMPARTMENT)
1967 FORD - 6 CYL. - w/ HANG-ON A/C

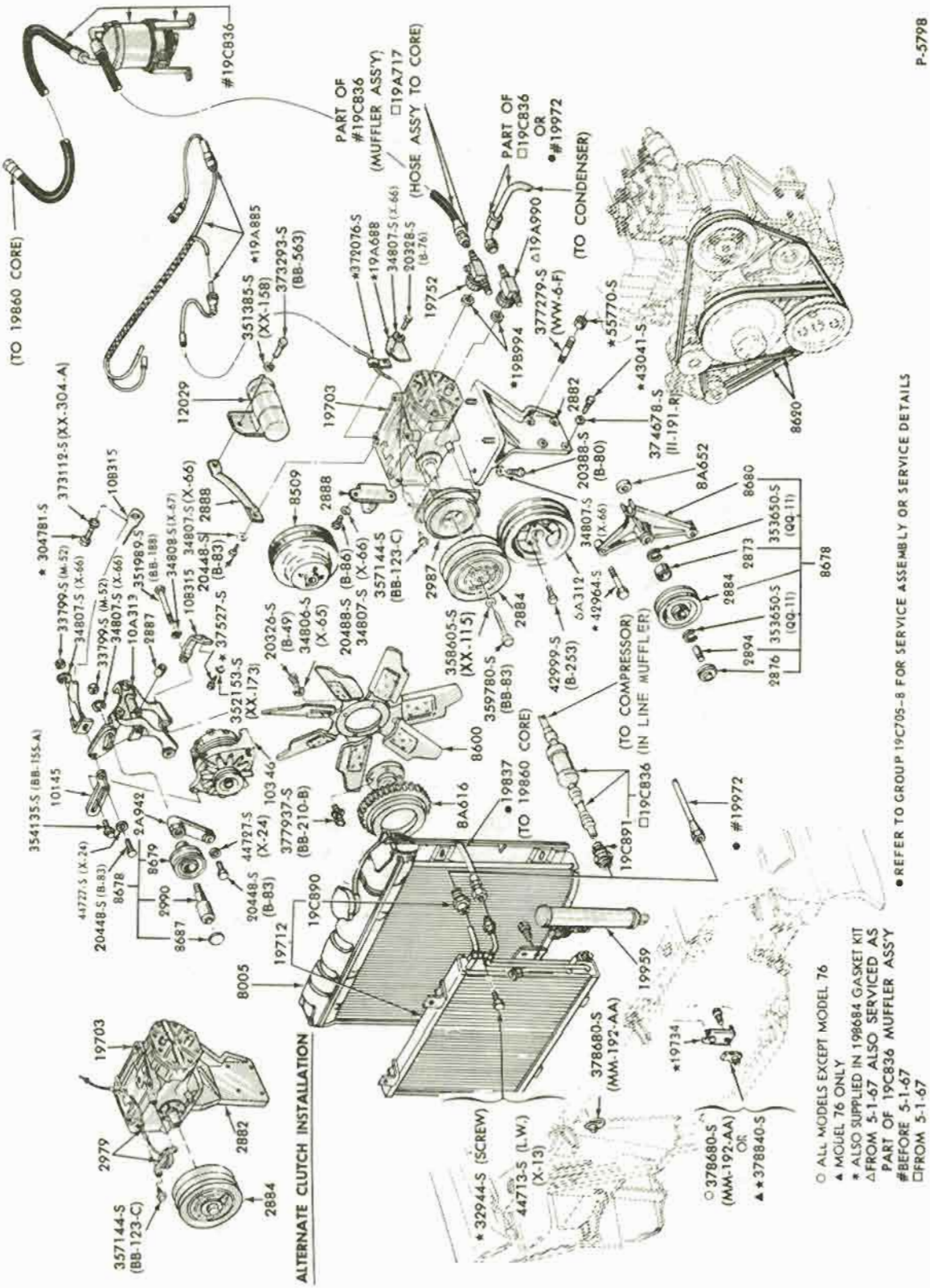

AIR CONDITIONING PARTS (ENGINE COMPARTMENT)
1967/68 FORD - 6 CYL. - w/ INTEGRAL A/C

COPYRIGHT © 1975 — FORD MOTOR COMPANY — DEARBORN, MICHIGAN

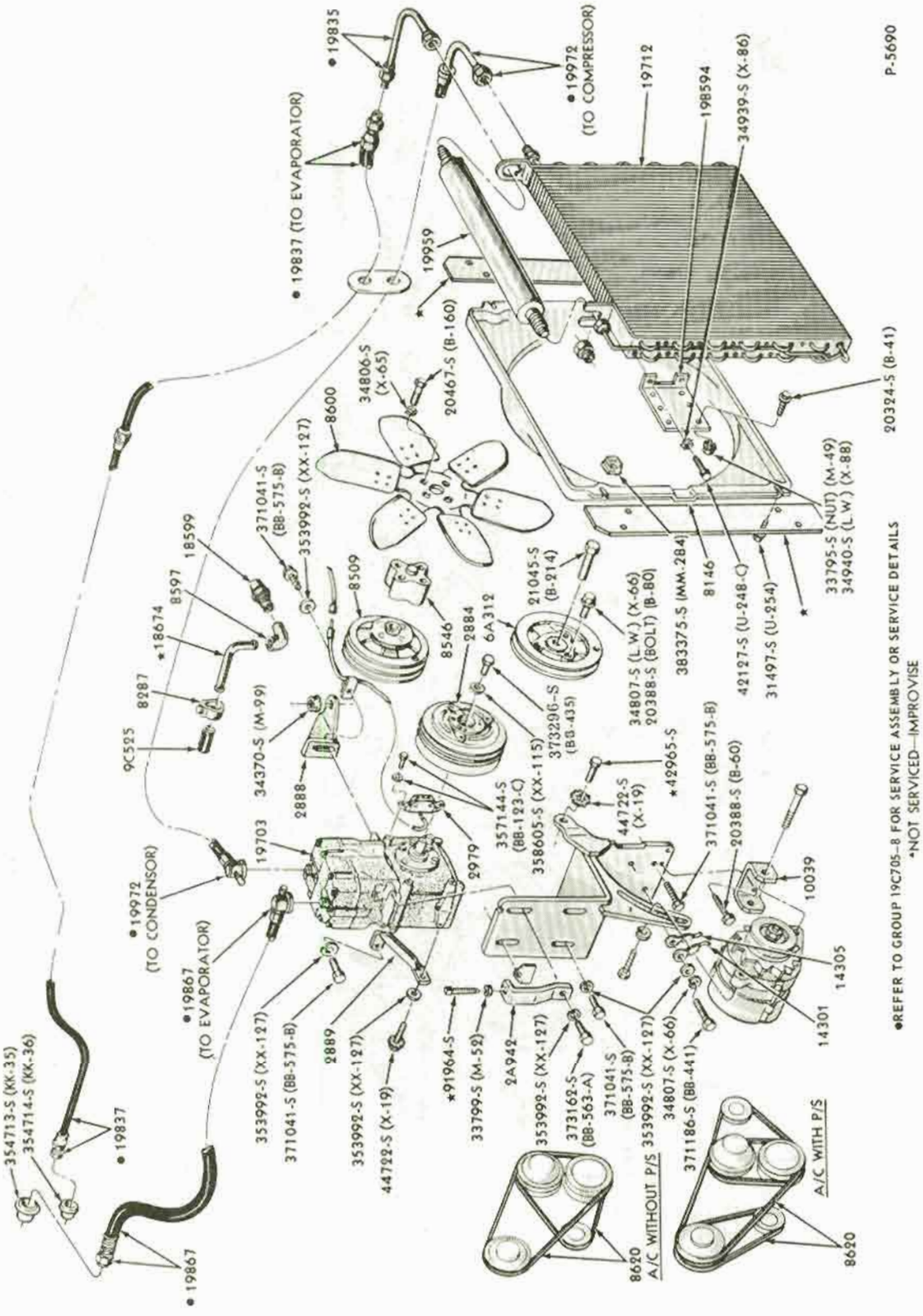

AIR CONDITIONING PARTS (ENGINE COMPARTMENT)
1967 FAIRLANE, FALCON and MUSTANG - 6 CYL. - w/ HANG-ON A/C

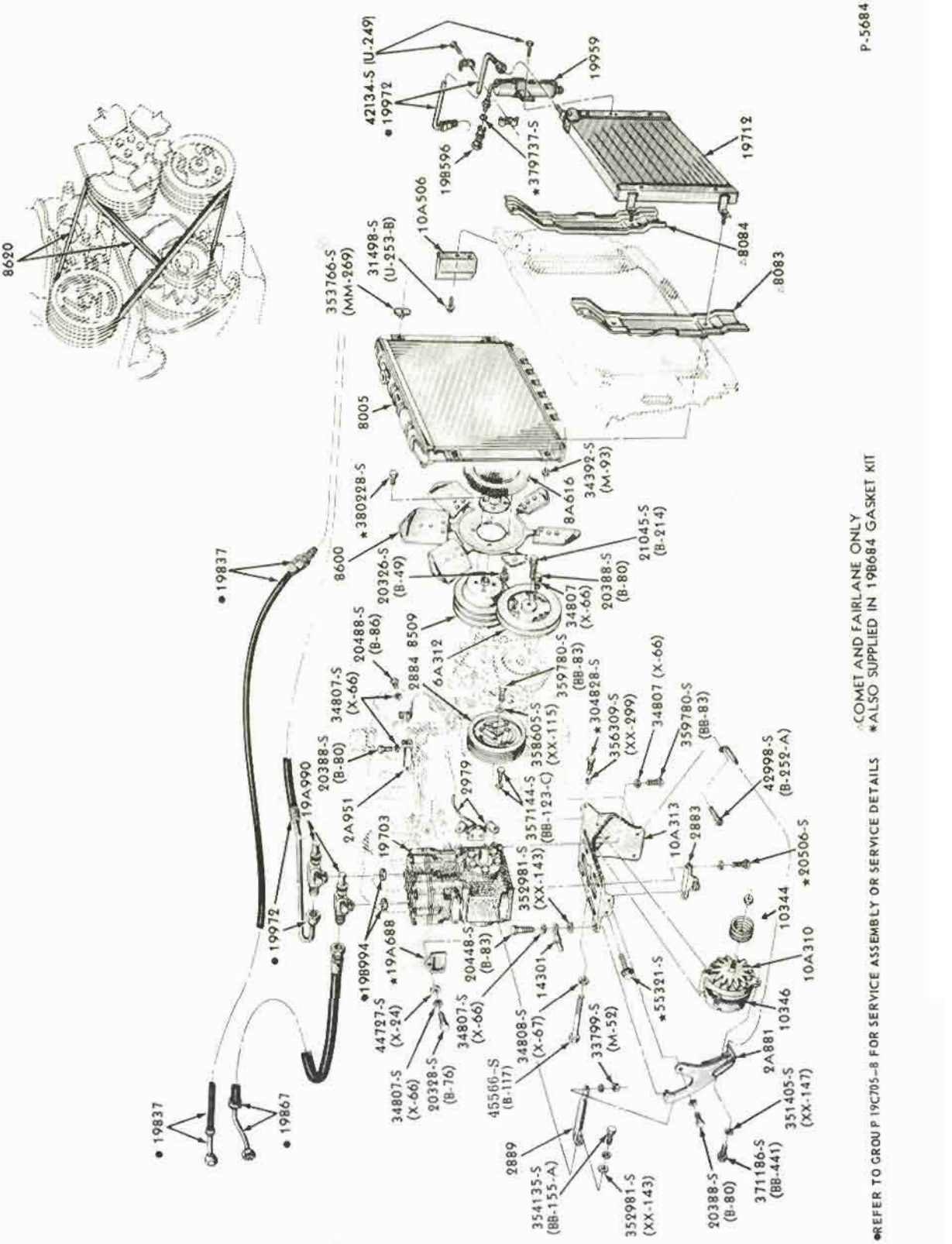

AIR CONDITIONING PARTS (ENGINE COMPARTMENT)
1967 FAIRLANE and FALCON - 6 CYL. - w/ INTEGRAL A/C

COPYRIGHT © 1975 — FORD MOTOR COMPANY — DEARBORN, MICHIGAN

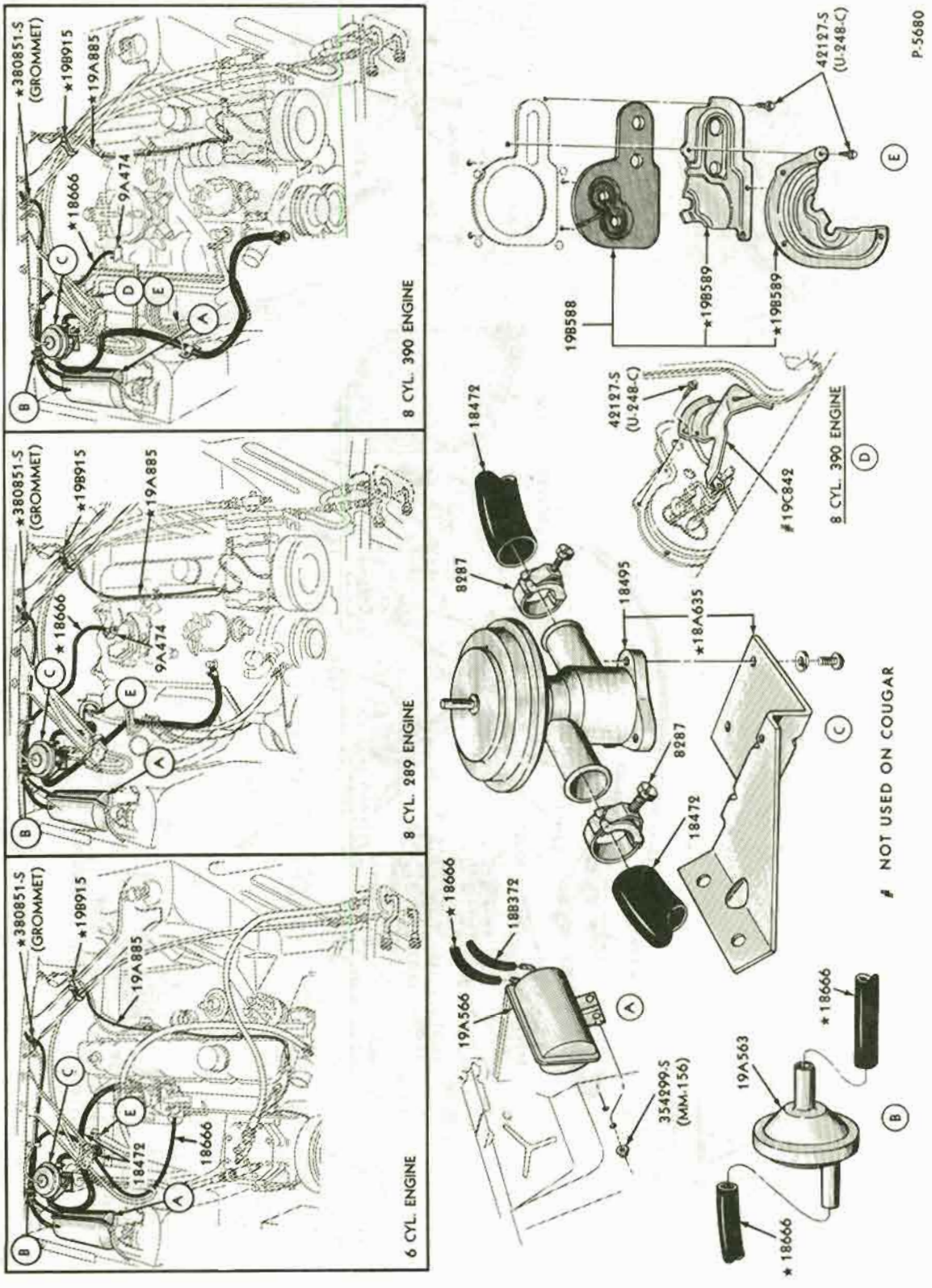

VACUUM HOSES - AIR CONDITIONER and HEATER
1967 MUSTANG - w/ INTEGRAL A/C

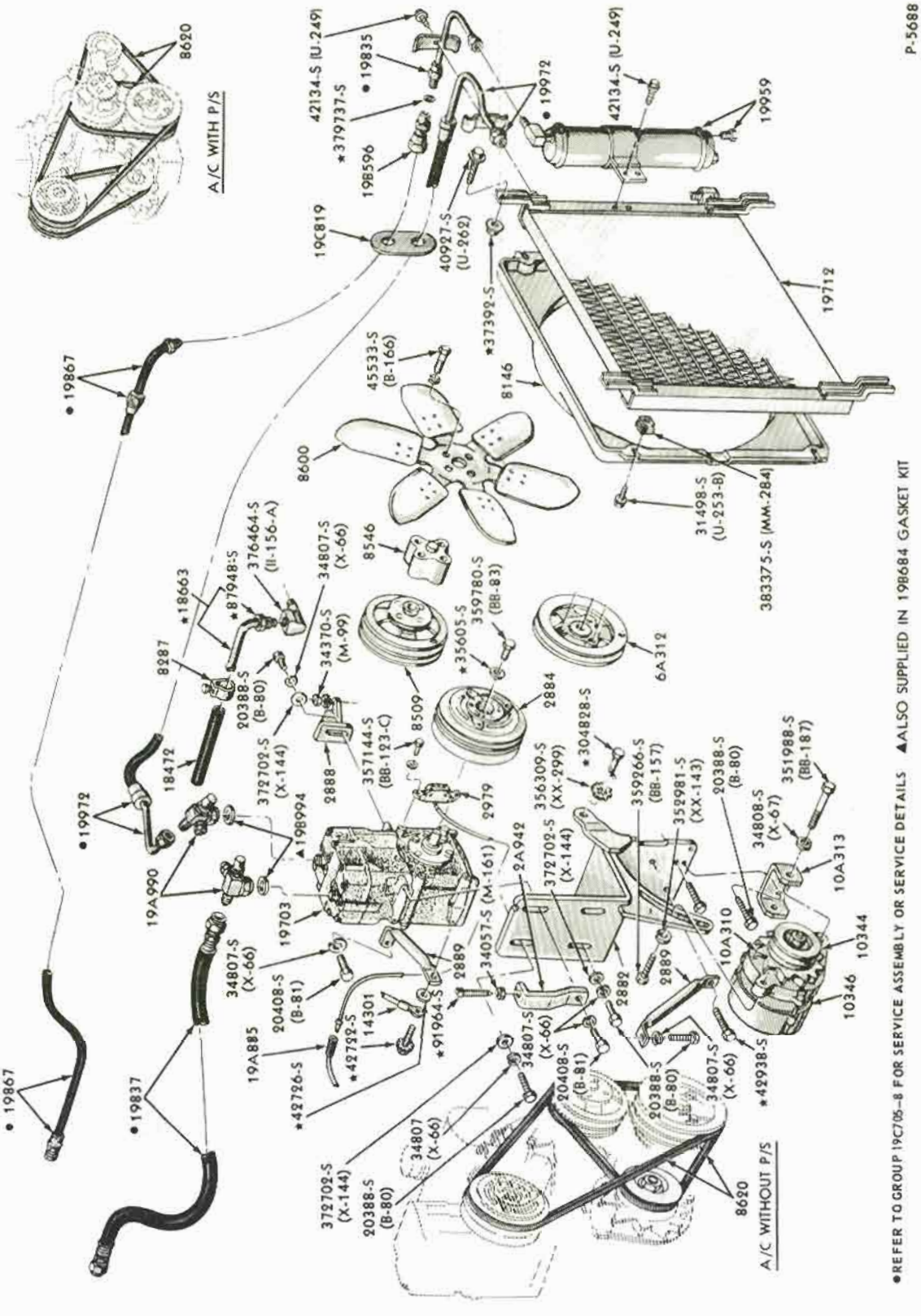

AIR CONDITIONING PARTS (ENGINE COMPARTMENT)
1967 MUSTANG - 6 CYL. - w/ INTEGRAL A/C

COPYRIGHT © 1975 — FORD MOTOR COMPANY — DEARBORN, MICHIGAN

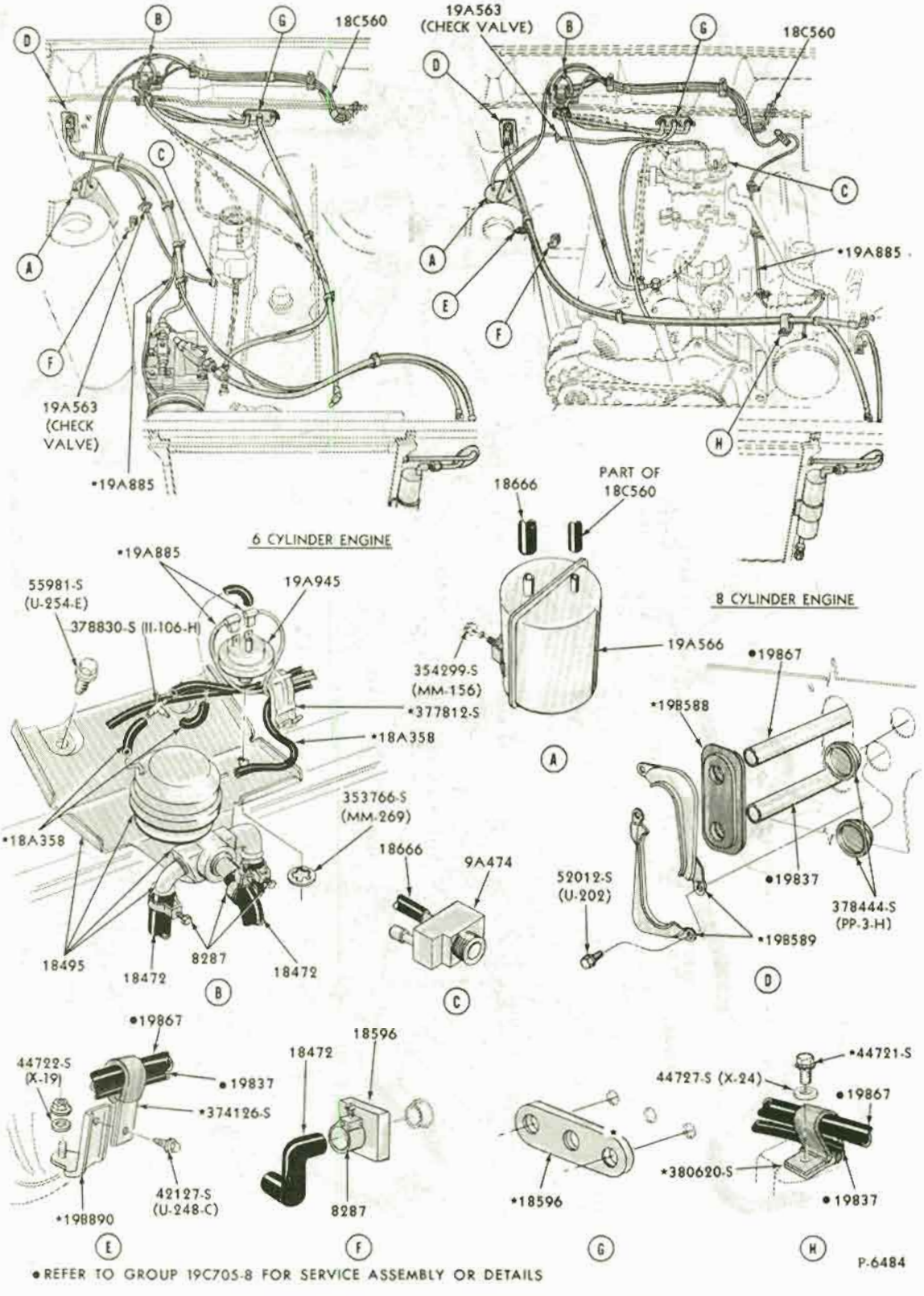

•REFER TO GROUP 19C705-8 FOR SERVICE ASSEMBLY OR DETAILS

P-6484

VACUUM HOSES - AIR CONDITIONER and HEATER
1968/69 FAIRLANE/TORINO and 1968/70 FALCON - w/INTEGRAL A/C

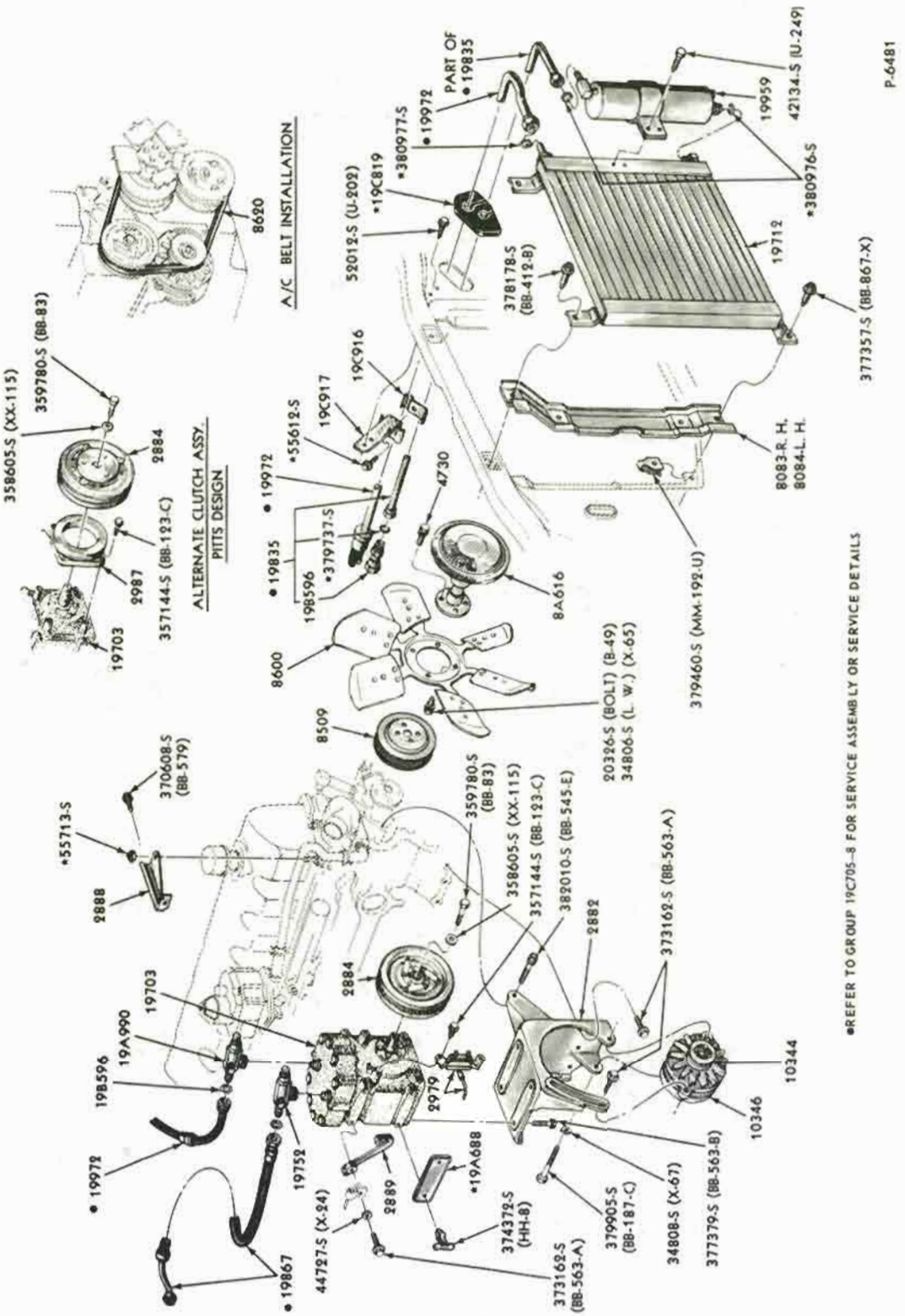

AIR CONDITIONING PARTS (ENGINE COMPARTMENT)*

1968/69 FAIRLANE/TORINO and 1968/70 FALCON - 6 CYL. 200 - w/INTEGRAL A/C

COPYRIGHT © 1975 — FORD MOTOR COMPANY — DEARBORN, MICHIGAN

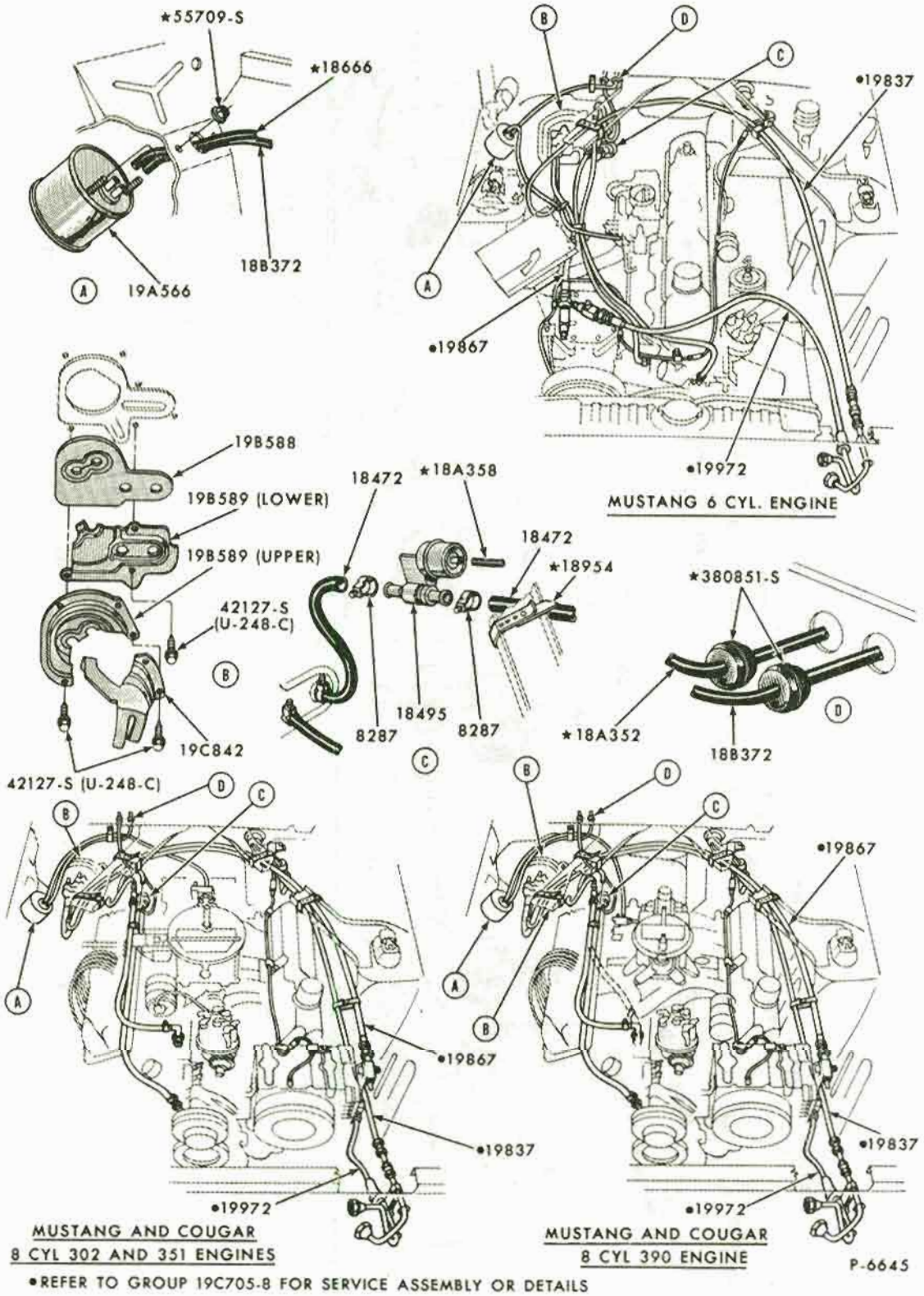

•REFER TO GROUP 19C705-8 FOR SERVICE ASSEMBLY OR DETAILS

VACUUM HOSES - AIR CONDITIONER and HEATER
1969/70 MUSTANG - w/ INTEGRAL A/C

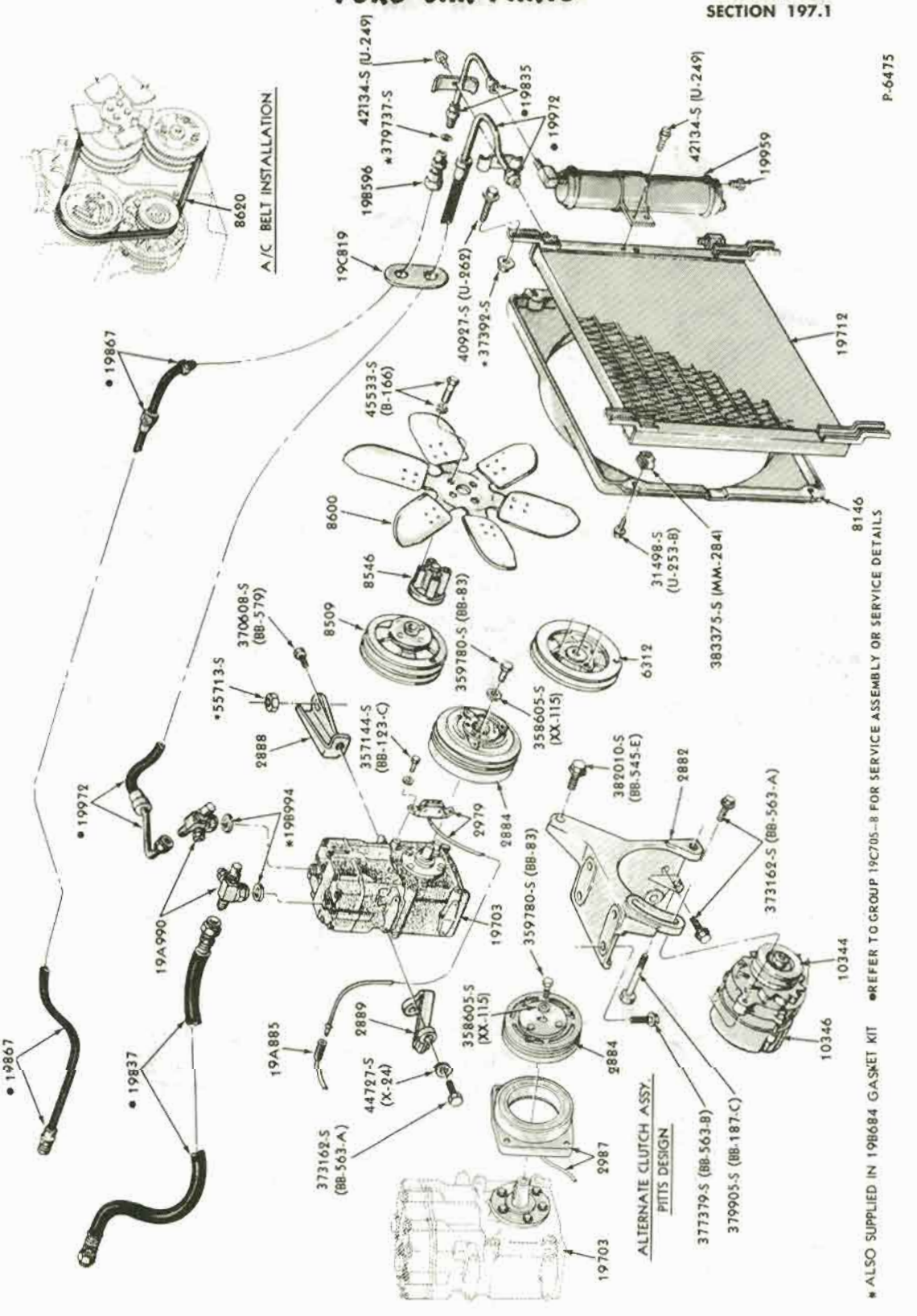

AIR CONDITIONING PARTS (ENGINE COMPARTMENT)
1968/70 MUSTANG - 6 CYL. - w/ INTEGRAL A/C

COPYRIGHT © 1975 — FORD MOTOR COMPANY — DEARBORN, MICHIGAN

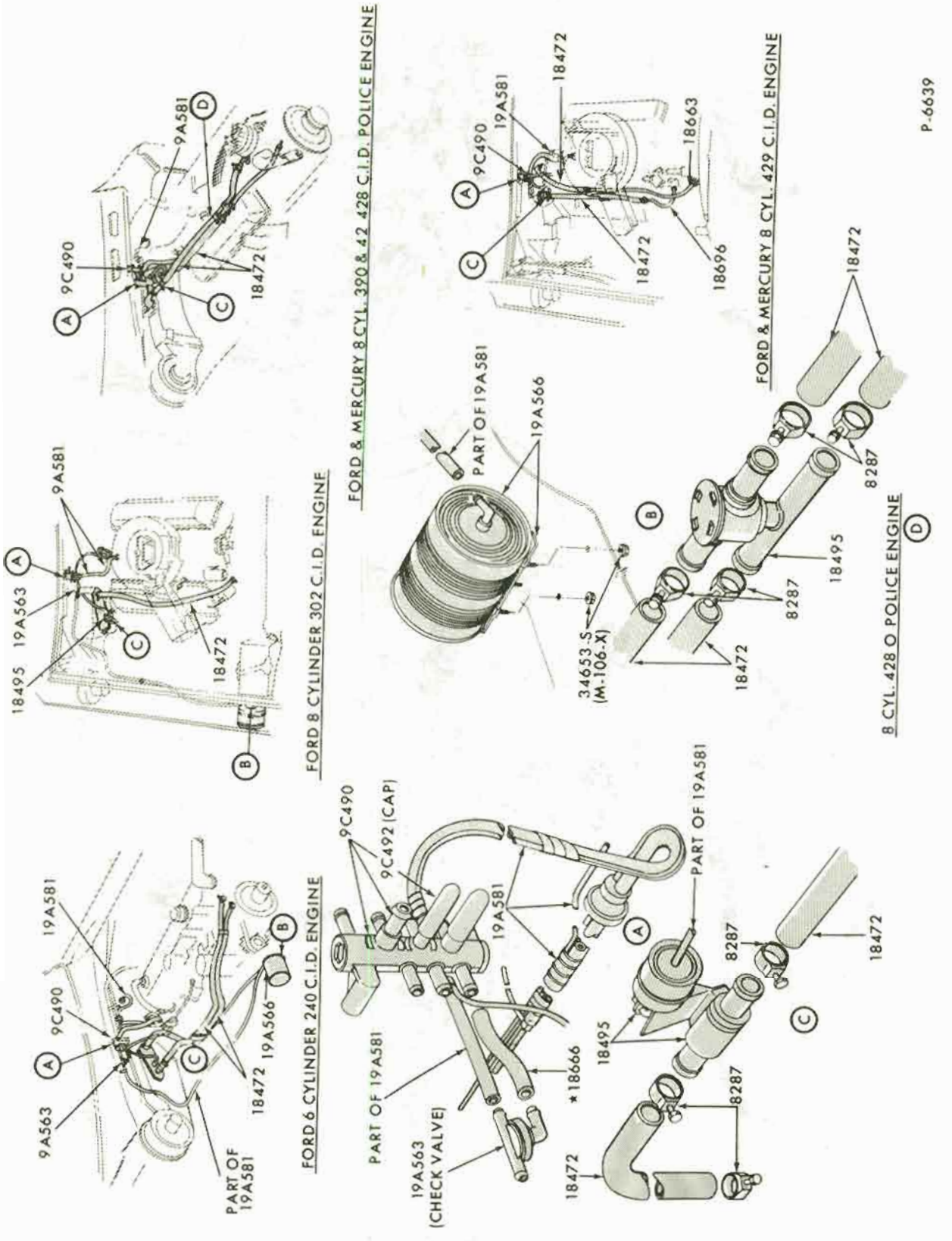
FORD 8 CYLINDER 302 C.I.D. ENGINE
9A581
9C490
18472
19A563
18495
FORD & MERCURY 8 CYL. 390 & 42 428 C.I.D. POLICE ENGINE
9A581
9C490
18472
18663
18696
PART OF 19A581
19A566
34653-S (M-106-X)
FORD & MERCURY 8 CYL. 429 C.I.D. ENGINE
18472
8287
18495
18472
8 CYL. 428 O POLICE ENGINE
FORD 6 CYLINDER 240 C.I.D. ENGINE
19A581
9C490
9A563
18472
19A566
PART OF 19A581
9C490
9C492 (CAP)
19A581
PART OF 19A581
*18666
19A563 (CHECK VALVE)
PART OF 19A581
8287
18472
18495
8287
18472
P-6639

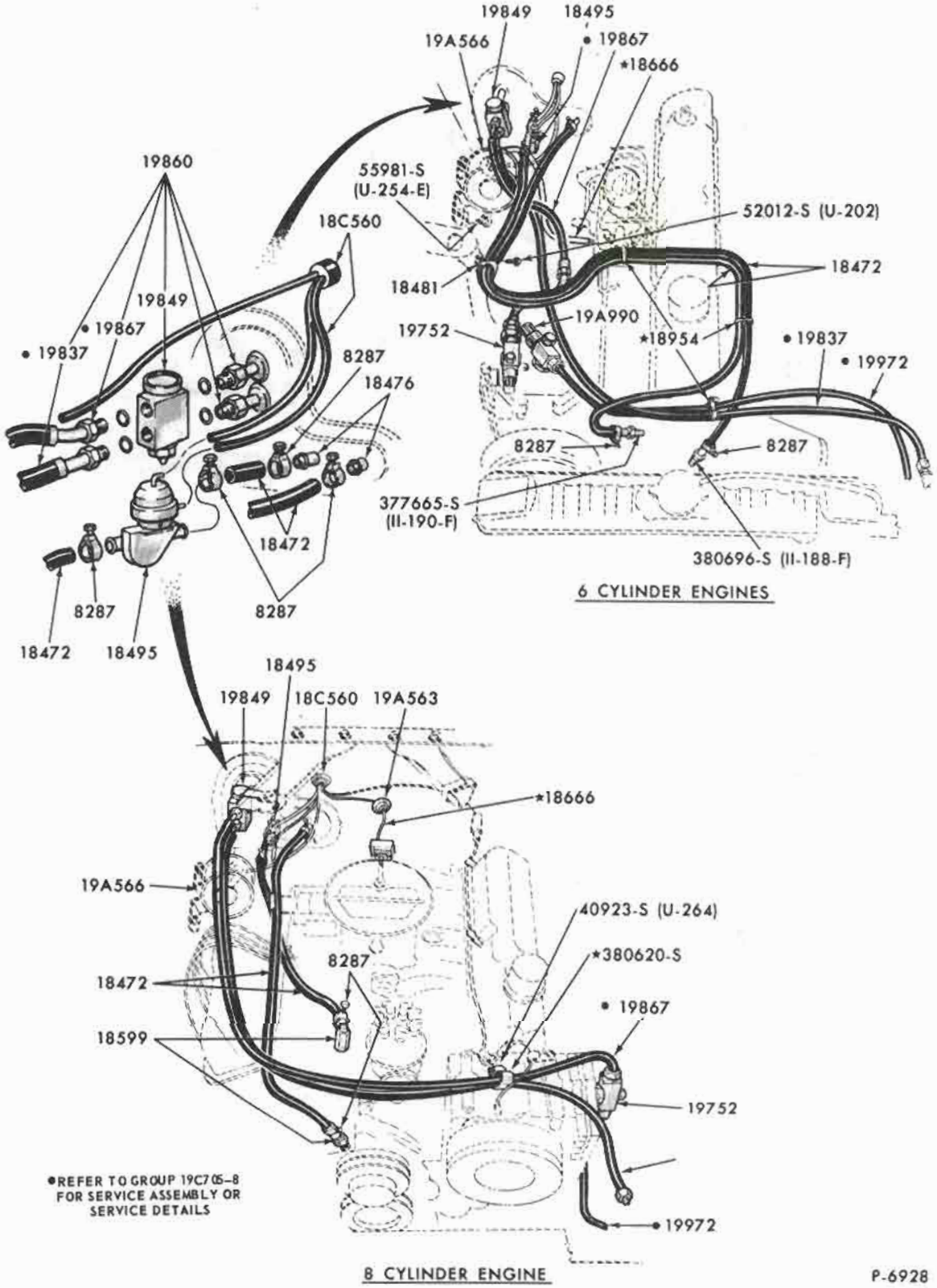

VACUUM HOSES - AIR CONDITIONER and HEATER
1970/72 MAVERICK - w/INTEGRAL A/C

COPYRIGHT © 1975 — FORD MOTOR COMPANY — DEARBORN, MICHIGAN

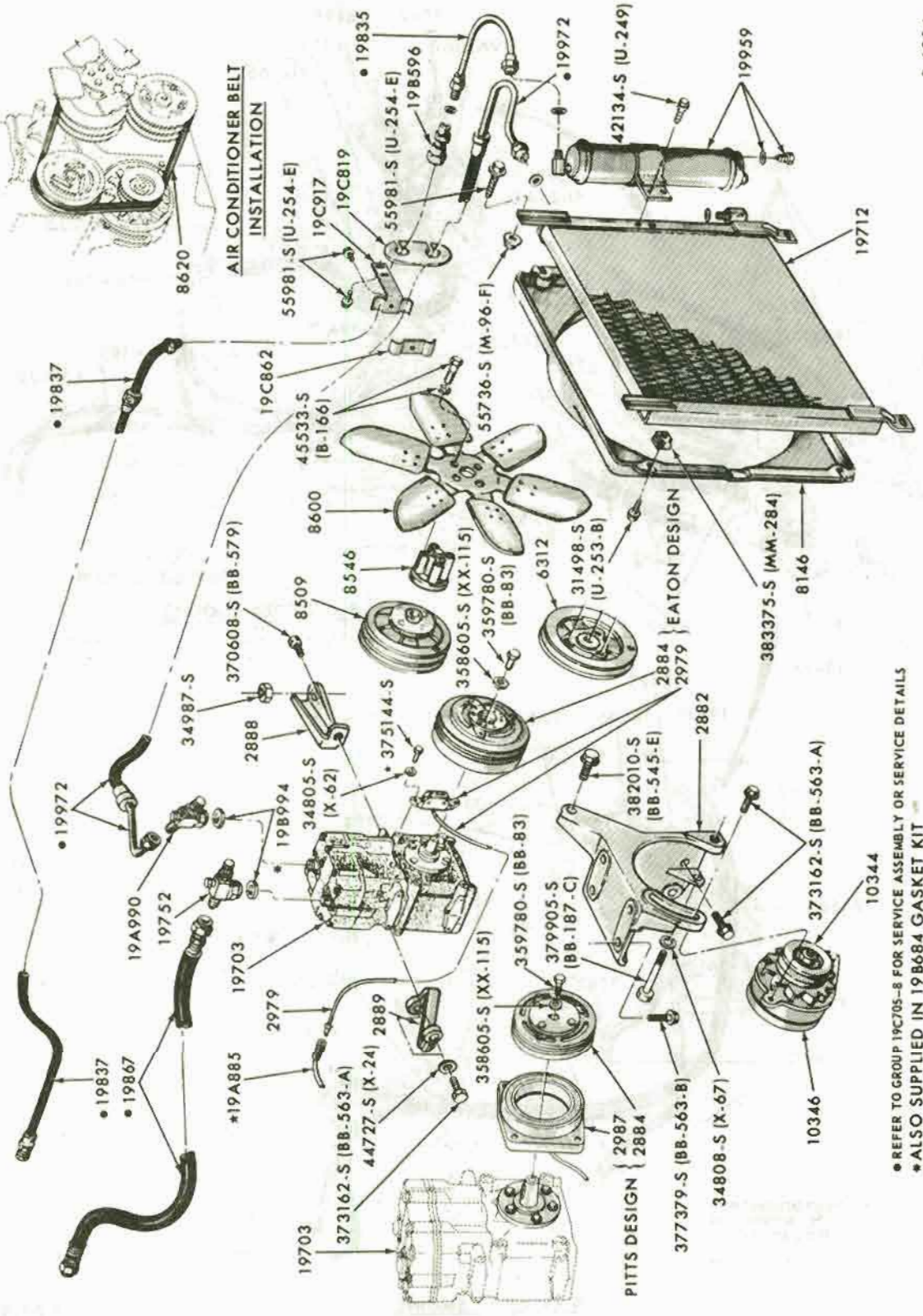

AIR CONDITIONING PARTS (ENGINE COMPARTMENT)
1970/72 MAVERICK-6 CYL. 170, 200, 250-w/INTEGRAL A/C

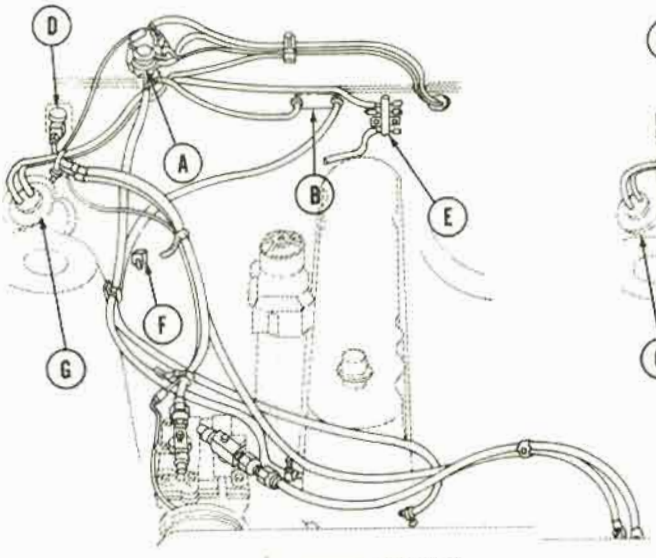

6 CYLINDER ENGINE

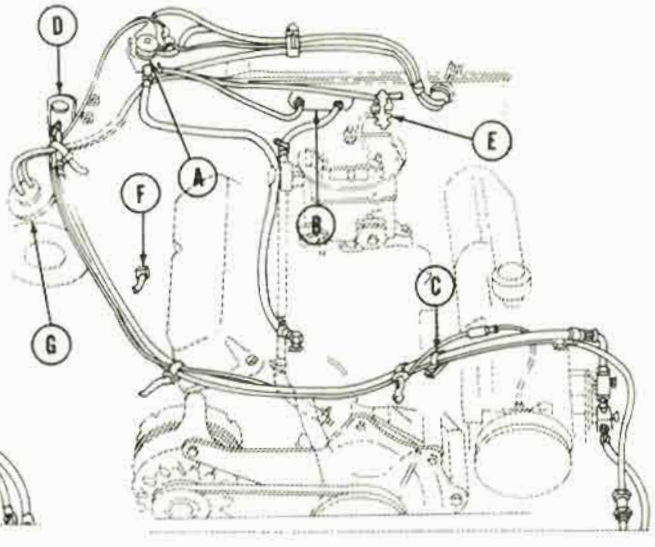

8CYLINDER 302 ENGINE

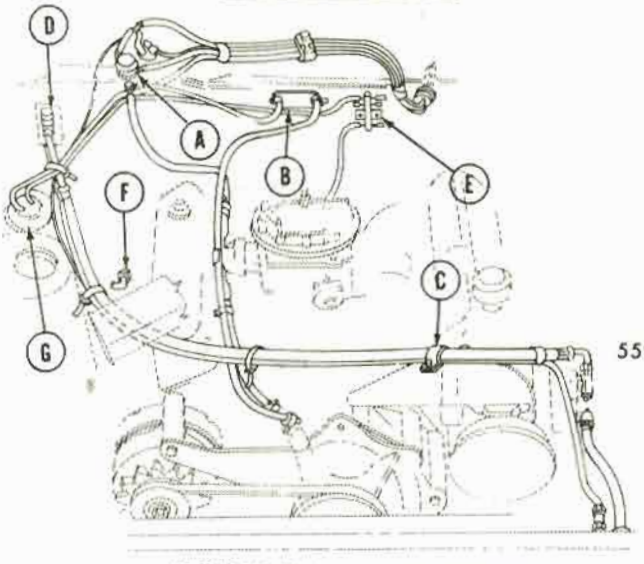

8 CYLINDER 351 & 429 ENGINES

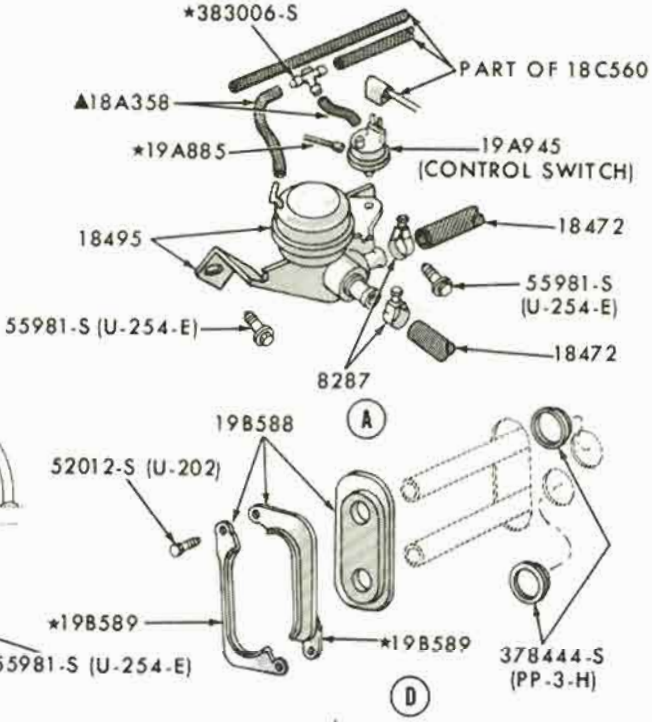

▲CUT FROM 17543 BULK HOSE

P-7744

VACUUM HOSES - AIR CONDITIONER
1970/71 FAIRLANE/TORINO-w/INTEGRAL A/C

COPYRIGHT © 1975 — FORD MOTOR COMPANY — DEARBORN, MICHIGAN

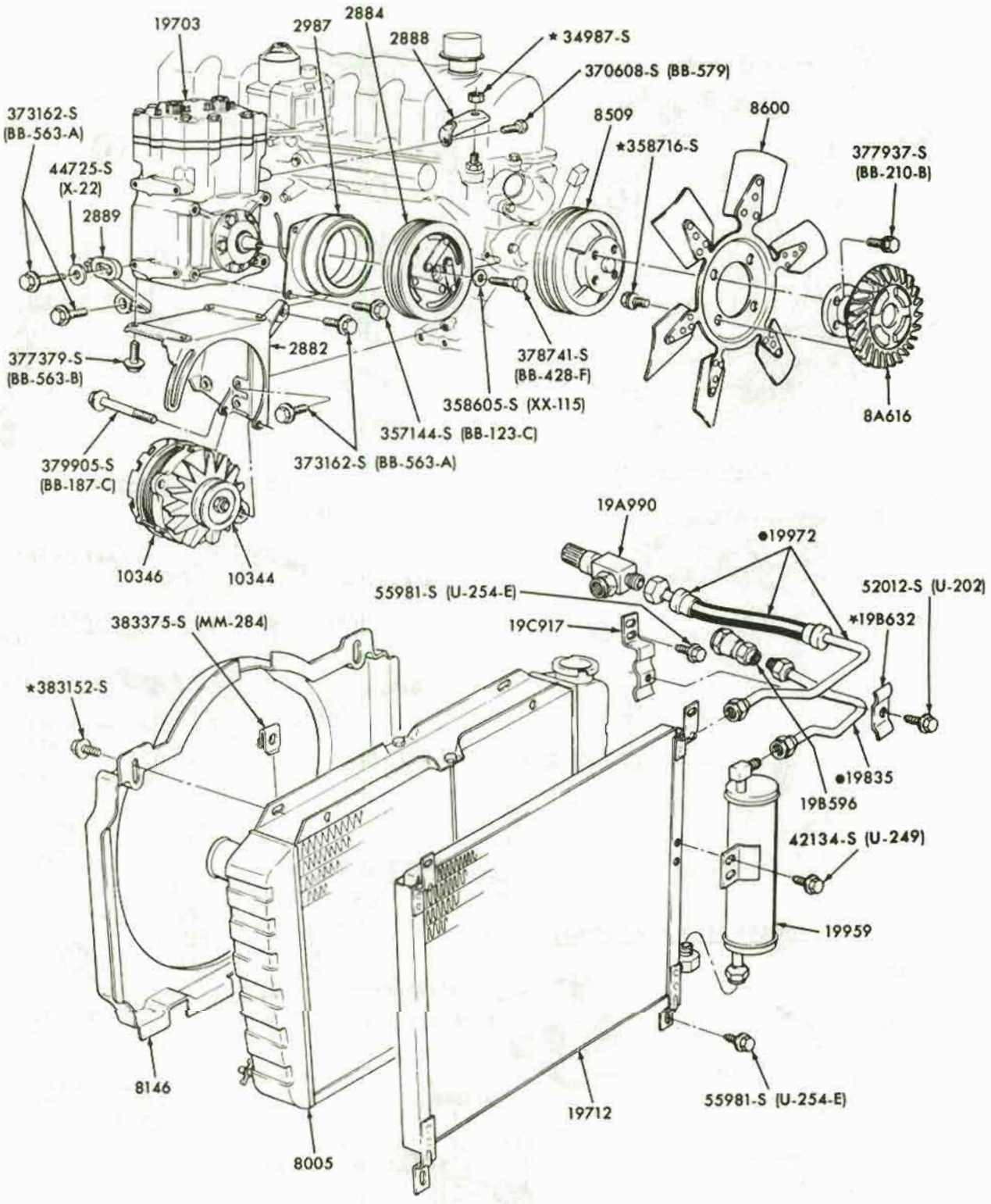

●REFER TO GROUP 19C705 THRU 19C705 FOR SERVICED ASSEMBLY OR SERVICED DETAILS P-7741

AIR CONDITIONING PARTS (ENGINE COMPARTMENT)
1970/71 FAIRLANE/TORINO, 1971/72 MUSTANG-6 CYL. 250-w/INTEGRAL A/C

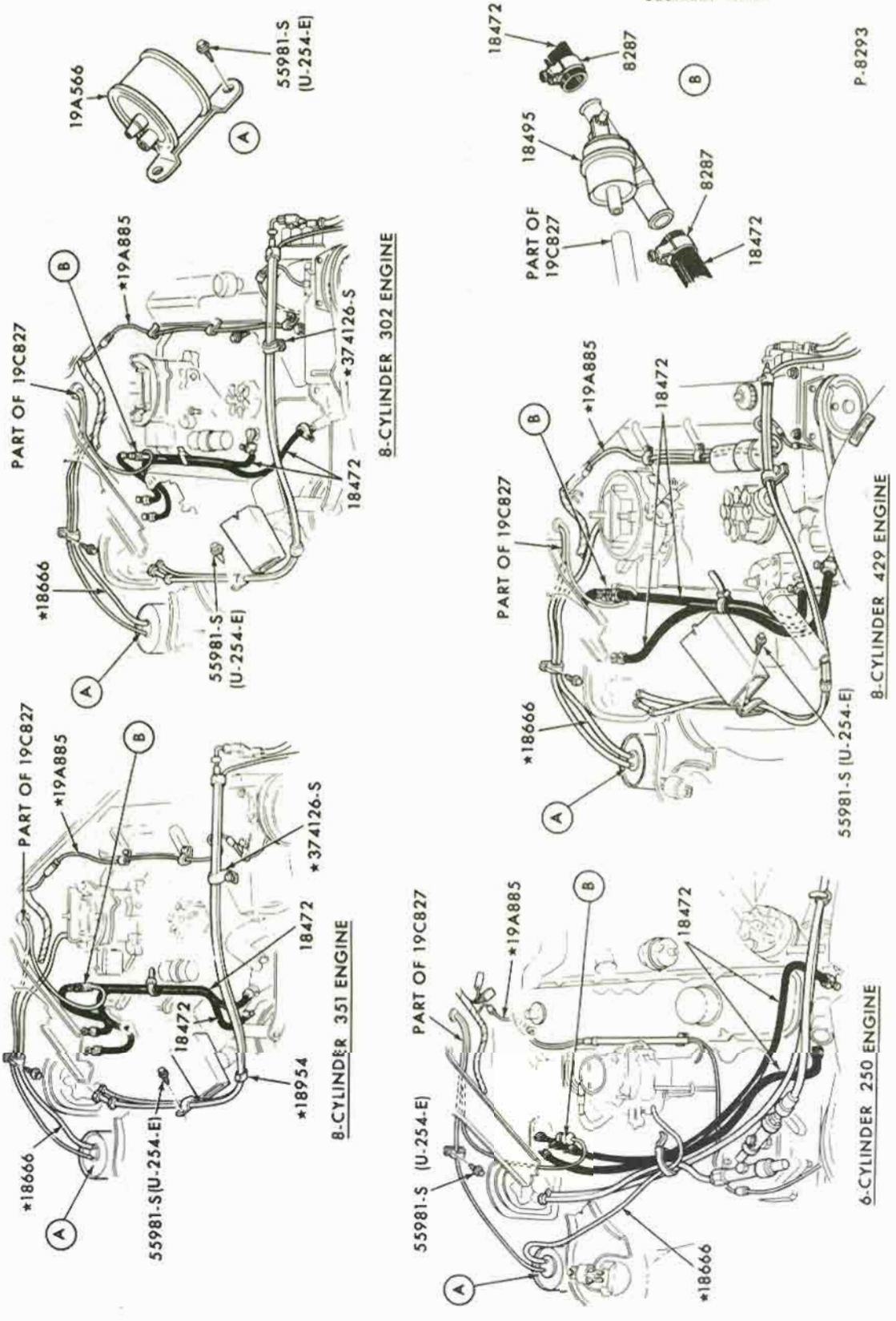

VACUUM HOSES-AIR CONDITONER
1971/72 MUSTANG-6 CYL.-w/INTEGRAL A/C

COPYRIGHT © 1975 — FORD MOTOR COMPANY — DEARBORN, MICHIGAN

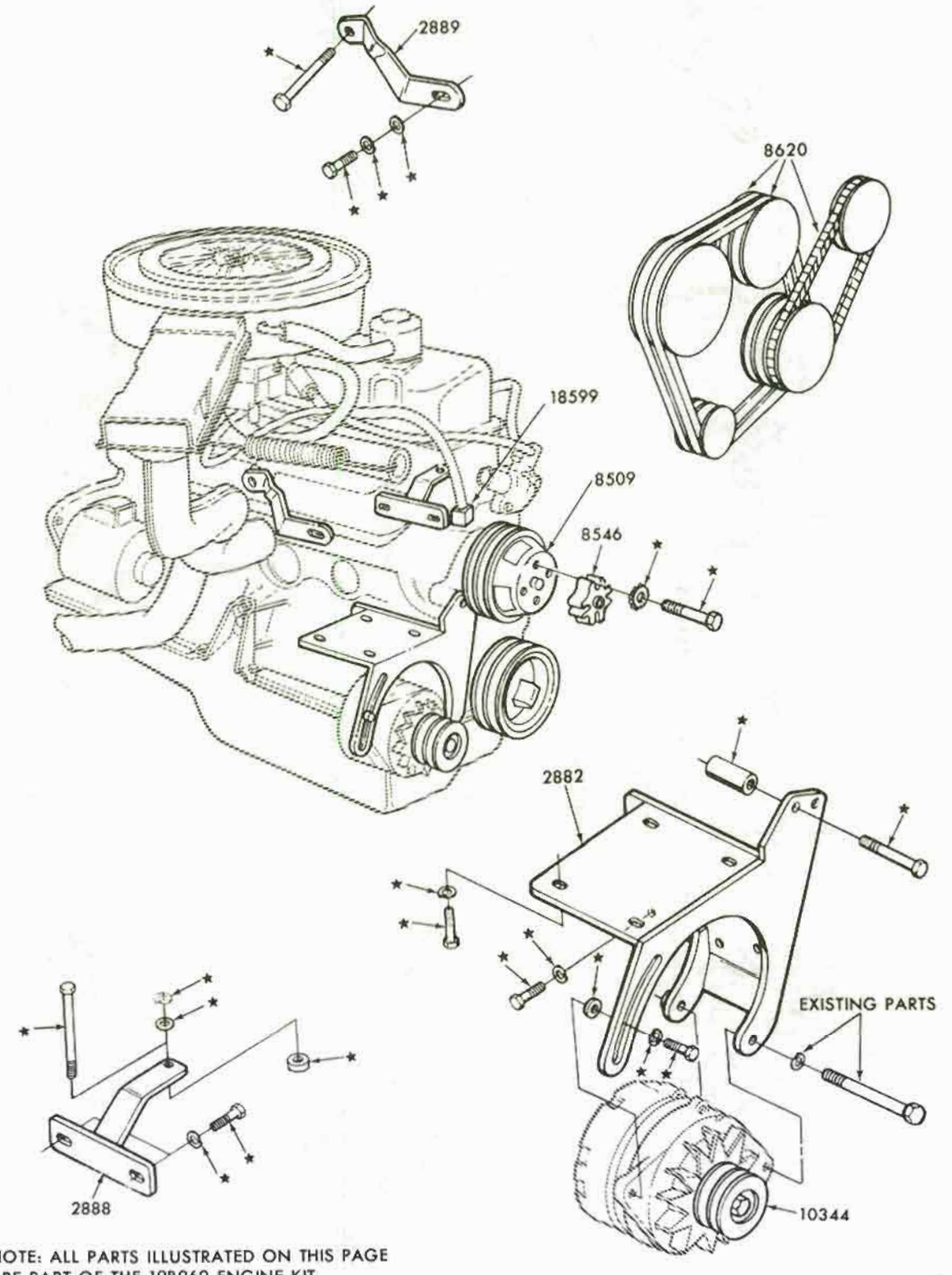

NOTE: ALL PARTS ILLUSTRATED ON THIS PAGE ARE PART OF THE 19B969 ENGINE KIT.

P-8853

AIR CONDITIONING PARTS (ENGINE COMPARTMENT)
1972 TORINO, MUSTANG, MAVERICK - 6 CYL. W/HANG-ON A/C

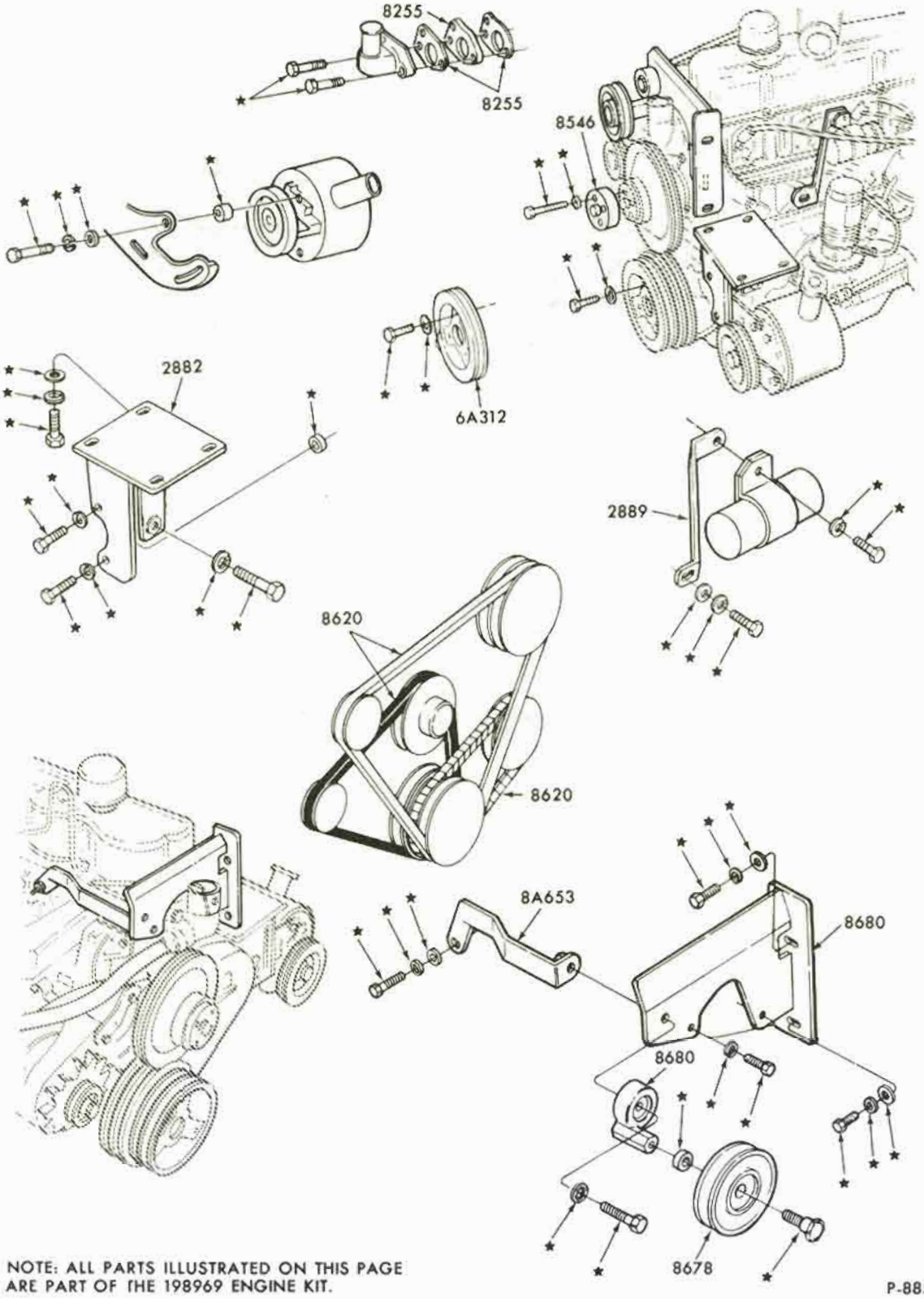

NOTE: ALL PARTS ILLUSTRATED ON THIS PAGE ARE PART OF THE 198969 ENGINE KIT.

P-8857

AIR CONDITIONING PARTS (ENGINE COMPARTMENT)

1972 FORD - 6 CYL.-w/ HANG-ON A/C

COPYRIGHT © 1975 — FORD MOTOR COMPANY — DEARBORN, MICHIGAN

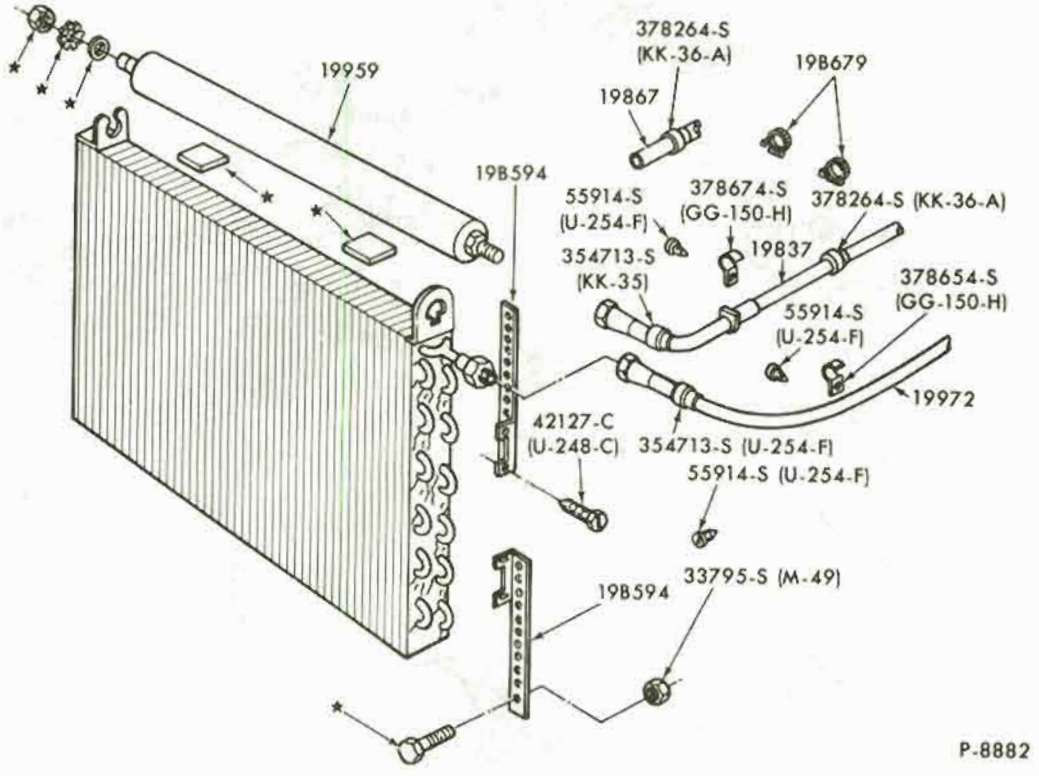

AIR CONDITIONER CONDENSER, DEHYDRATOR and RELATED PARTS
1972 FORD, TORINO, MUSTANG, MAVERICK - 6 CYL. - W/HANG-ON A/C

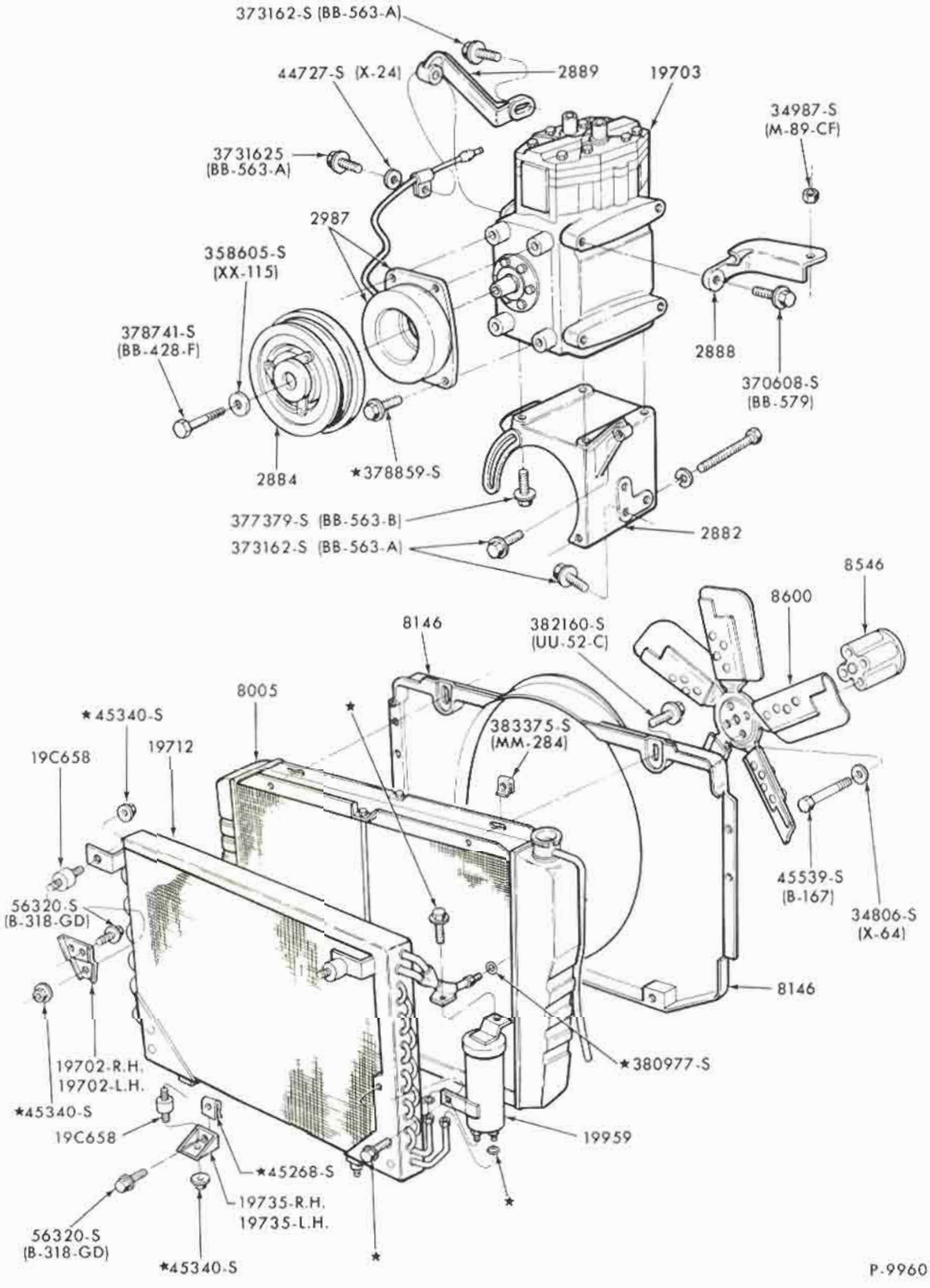

AIR CONDITIONING PARTS (ENGINE COMPARTMENT)
1972 TORINO - 6 CYLINDER 250-w/INTEGRAL A/C

COPYRIGHT © 1975 — FORD MOTOR COMPANY — DEARBORN, MICHIGAN

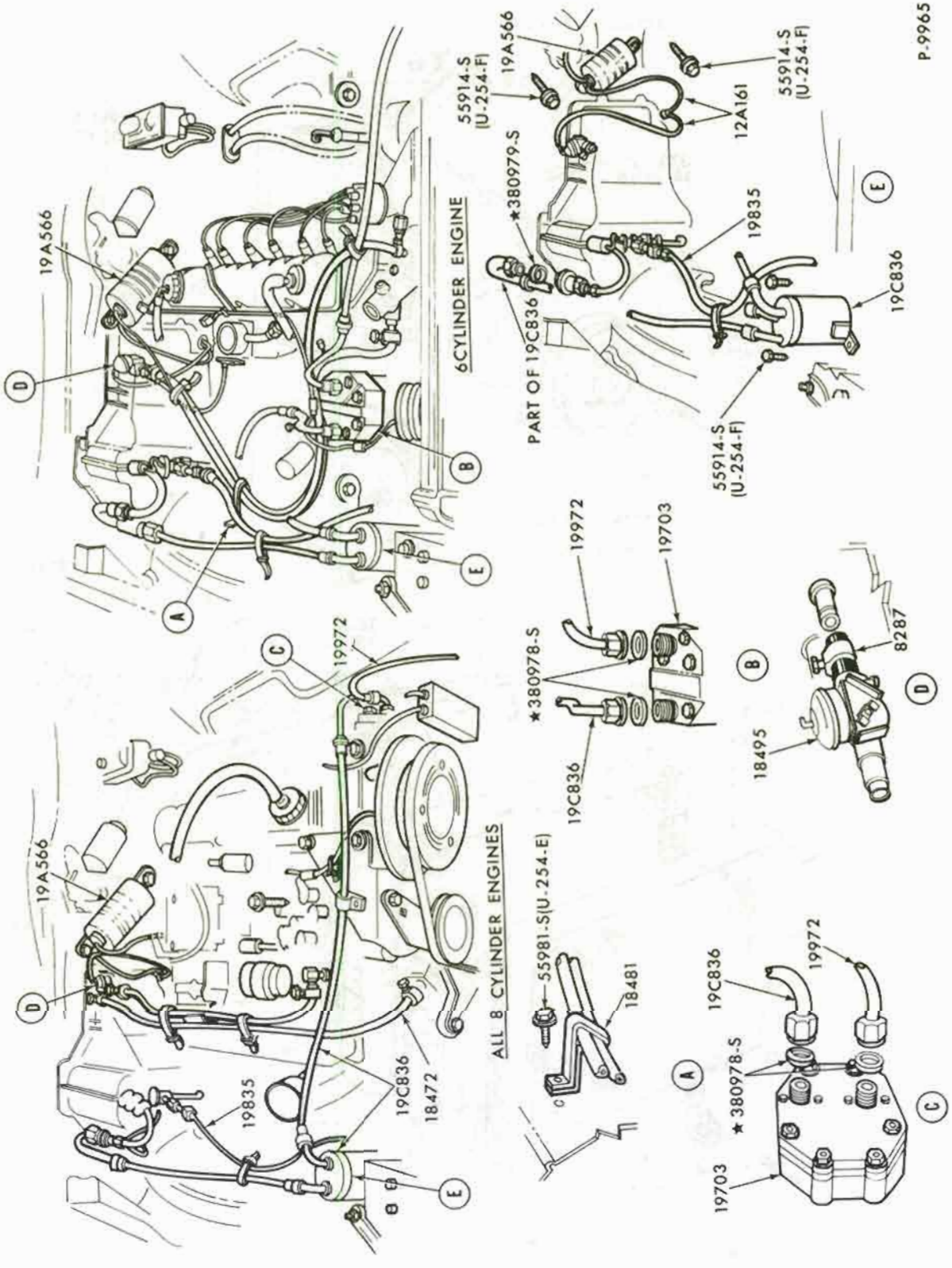

VACUUM HOSES - AIR CONDITIONING
1972 TORINO - w/INTEGRAL A/C

VACUUM HOSES - AIR CONDITIONER and HEATER
1965/68 FORD - w/ INTEGRAL A/C

COPYRIGHT © 1975 — FORD MOTOR COMPANY — DEARBORN, MICHIGAN

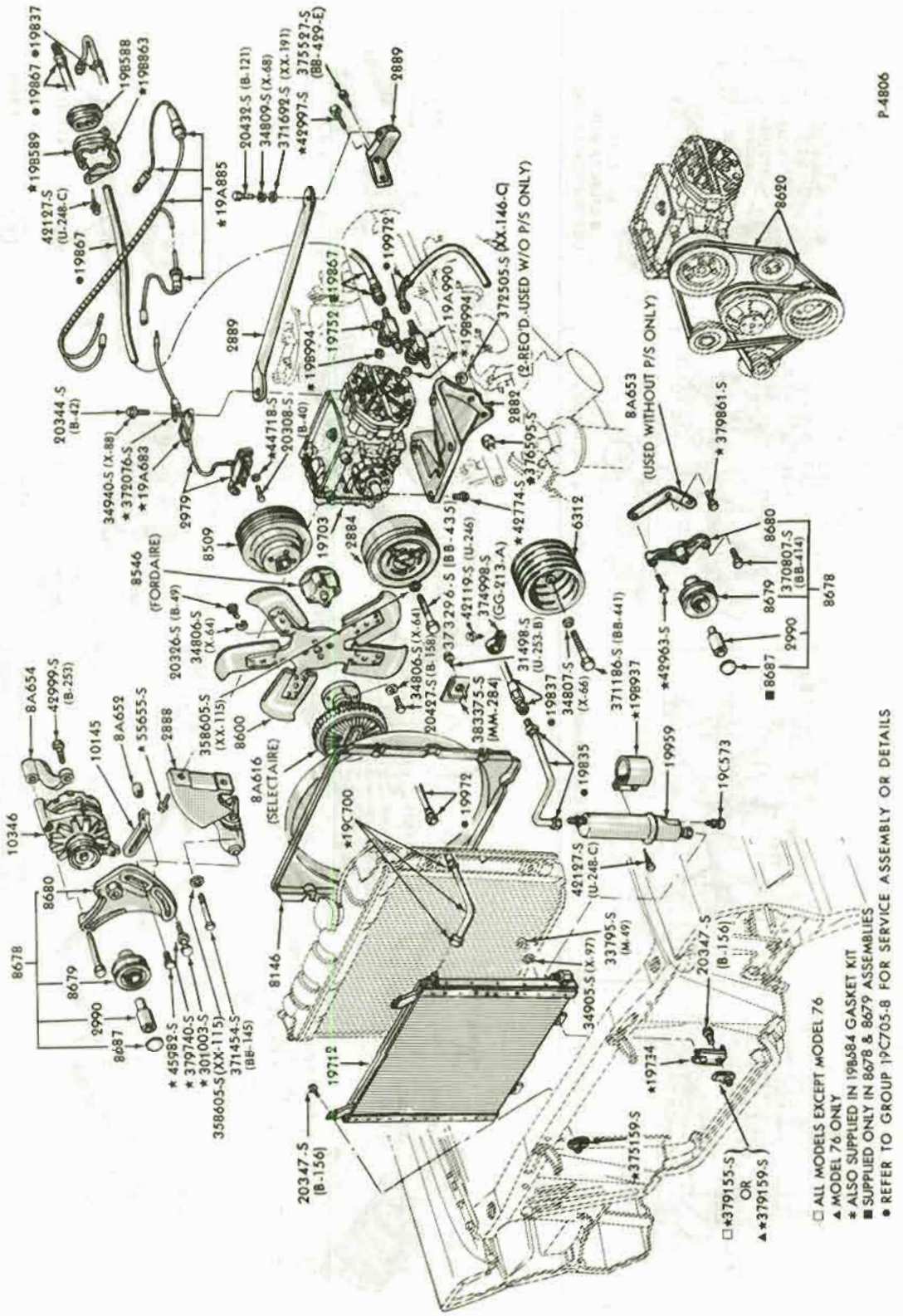

AIR CONDITIONING PARTS (ENGINE COMPARTMENT)
1965/66 FORD - 8 CYL. 289 - w/ HANG-ON A/C

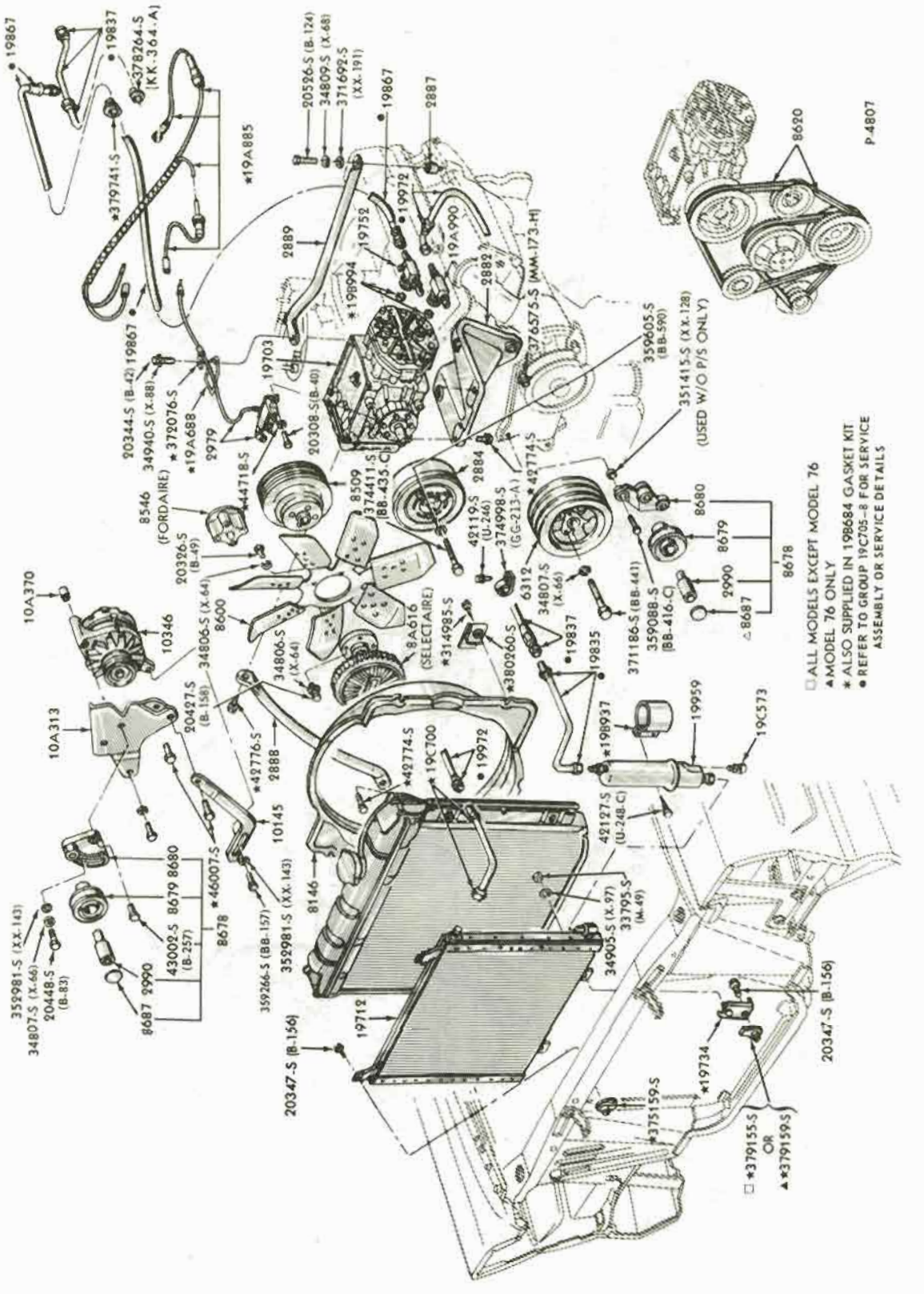

AIR CONDITIONING PARTS (ENGINE COMPARTMENT)
1965/66 FORD - 8 CYL. 352, 390

COPYRIGHT © 1975 — FORD MOTOR COMPANY — DEARBORN, MICHIGAN

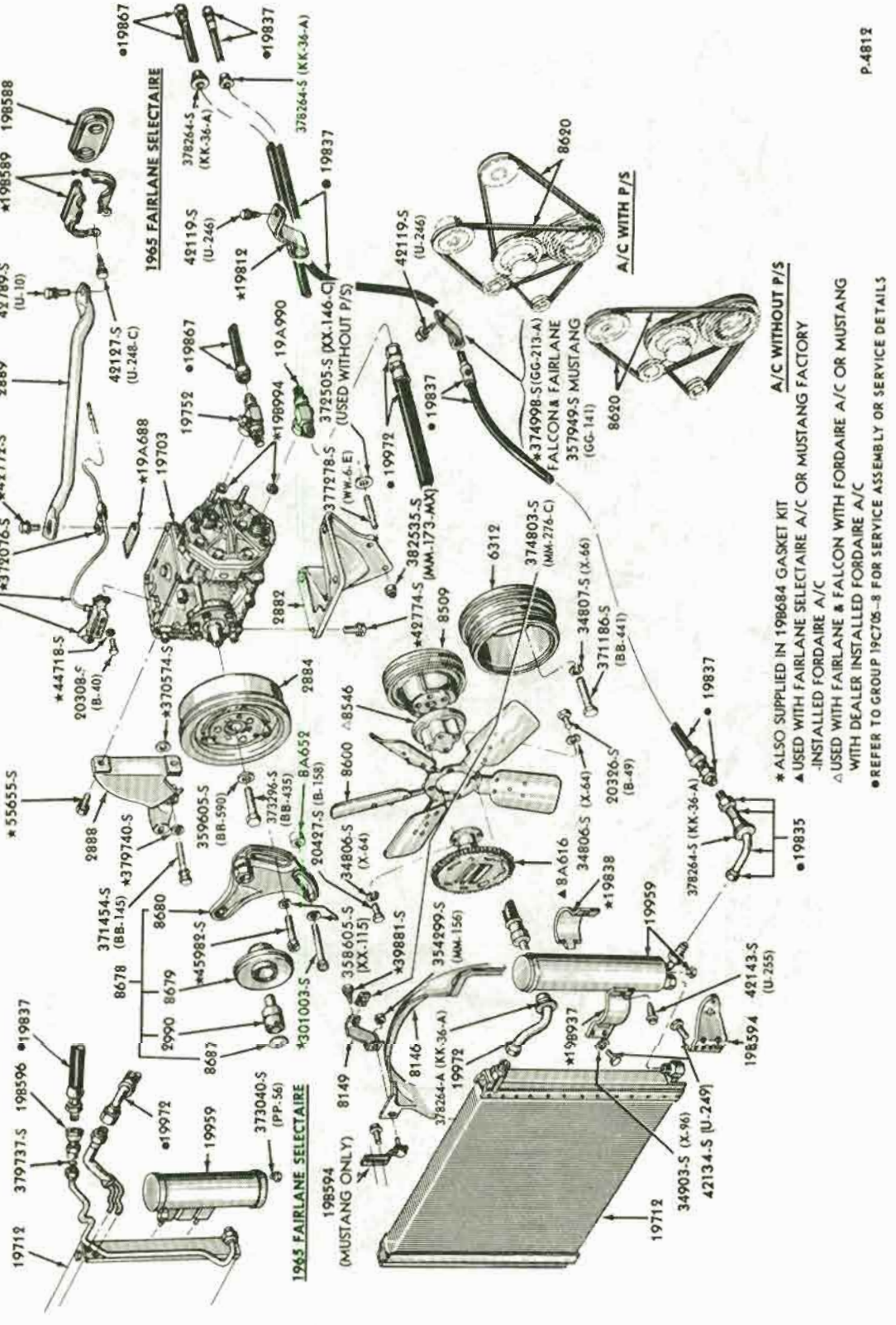

AIR CONDITIONING PARTS (ENGINE COMPARTMENT)
1965 FAIRLANE and FALCON and 1965/66 MUSTANG (w/ ALTERNATOR) - 8 CYL.

P4811

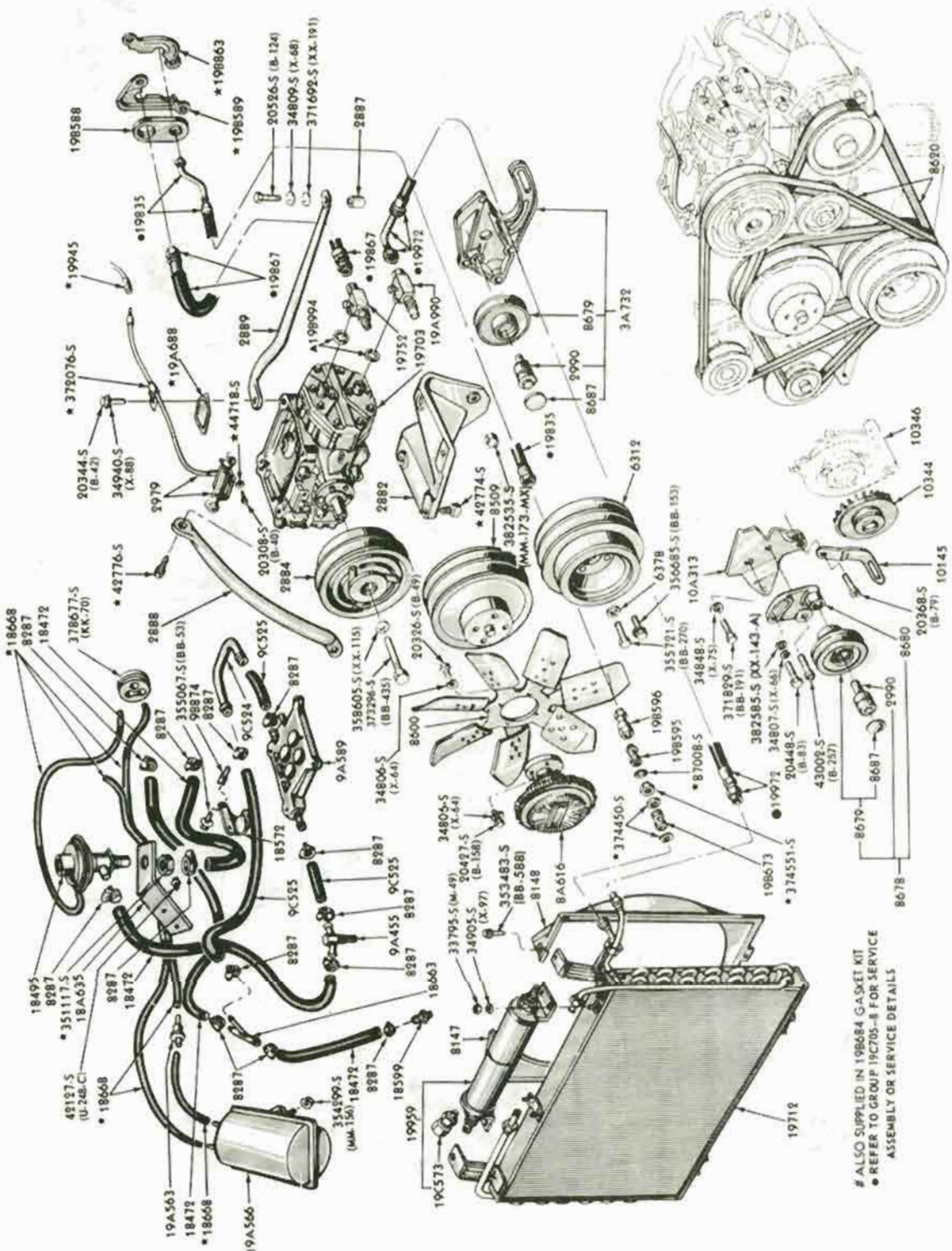

AIR CONDITIONING PARTS (ENGINE COMPARTMENT)
1965/66 THUNDERBIRD - w/ INTEGRAL A/C

COPYRIGHT © 1975 — FORD MOTOR COMPANY — DEARBORN, MICHIGAN

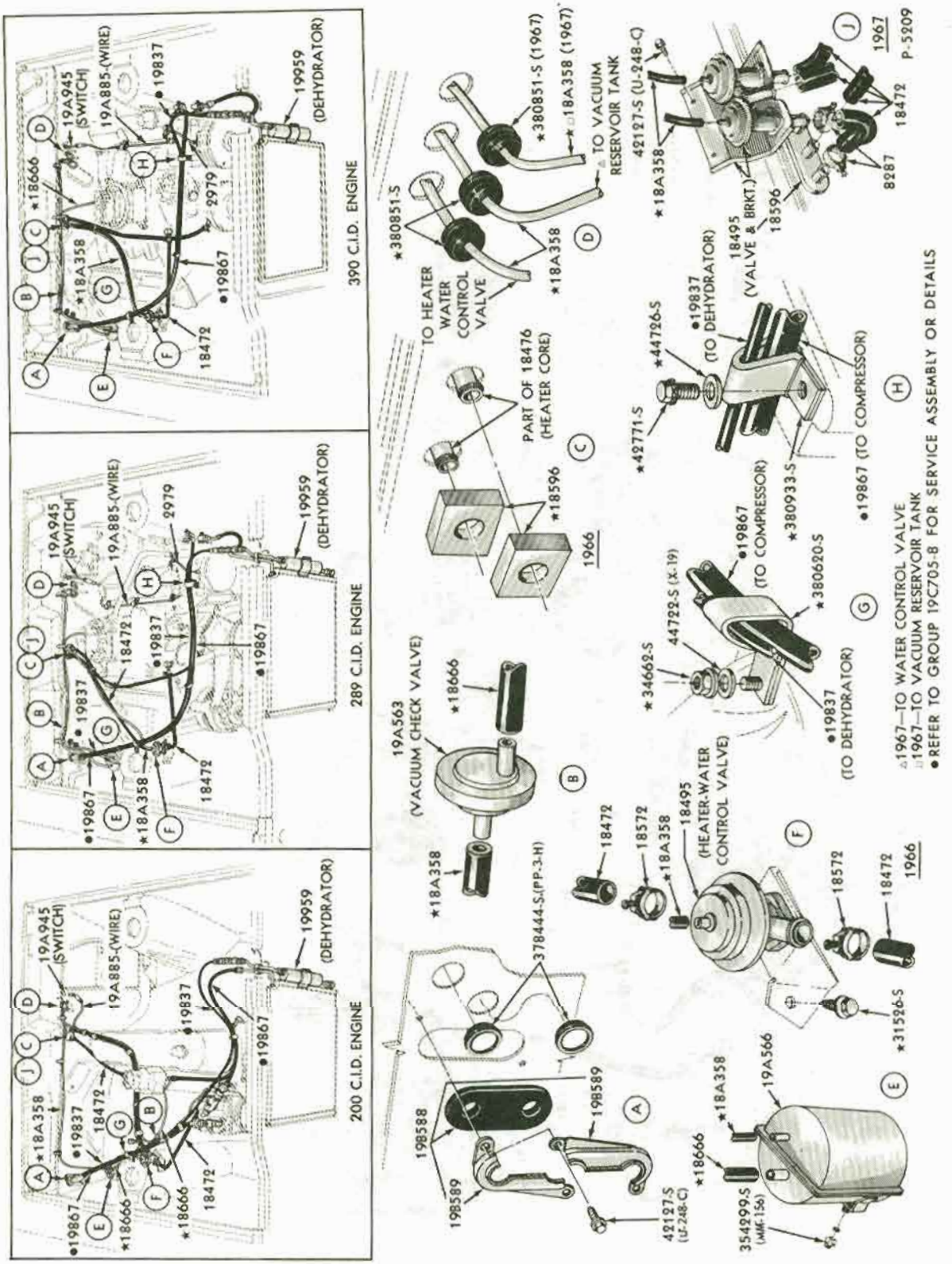

VACUUM HOSES - AIR CONDITIONER and HEATER
1966/67 FAIRLANE and FALCON

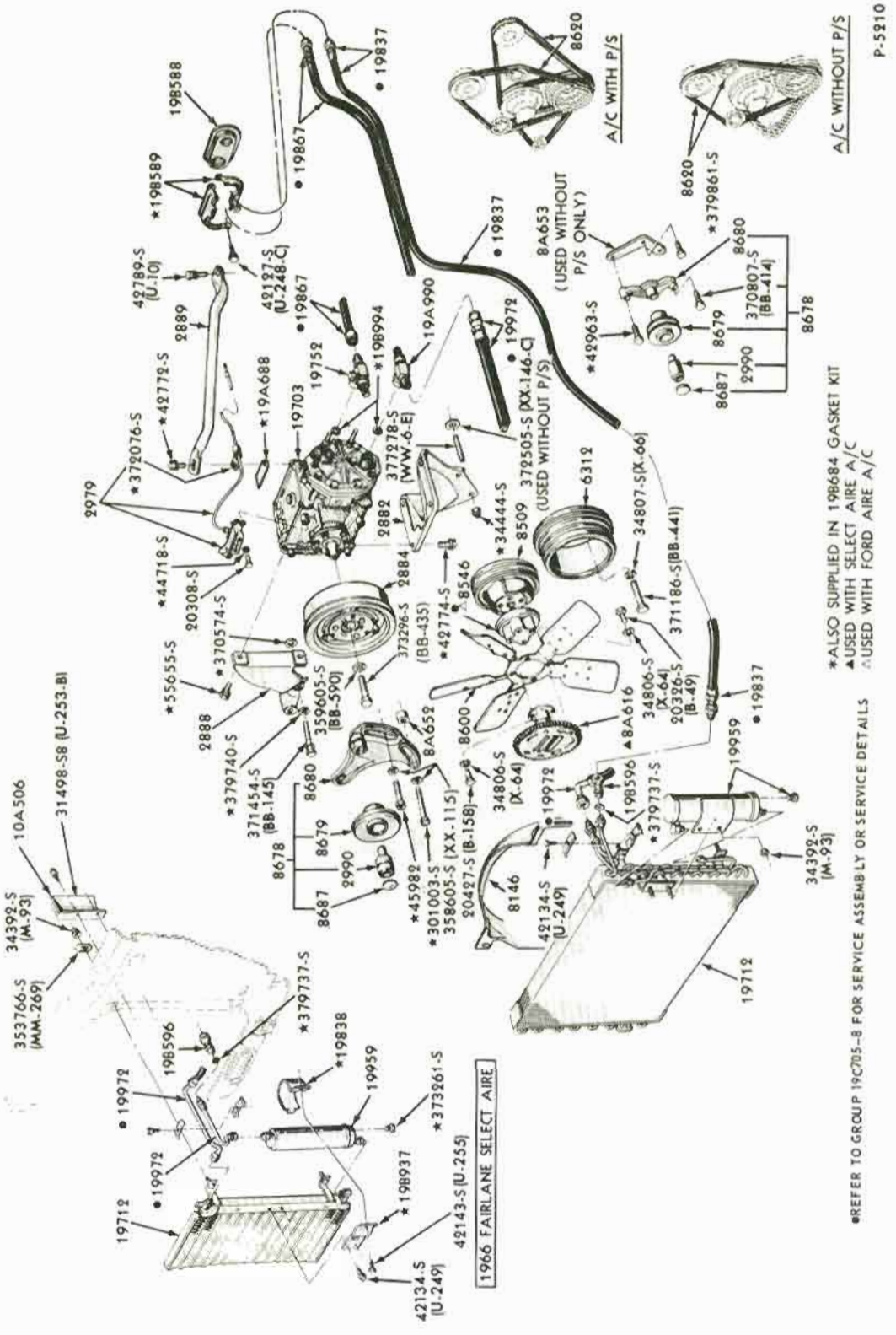

AIR CONDITIONING PARTS (ENGINE COMPARTMENT)
1966 FAIRLANE and FALCON - 8 CYL. 289

COPYRIGHT © 1975 — FORD MOTOR COMPANY — DEARBORN, MICHIGAN

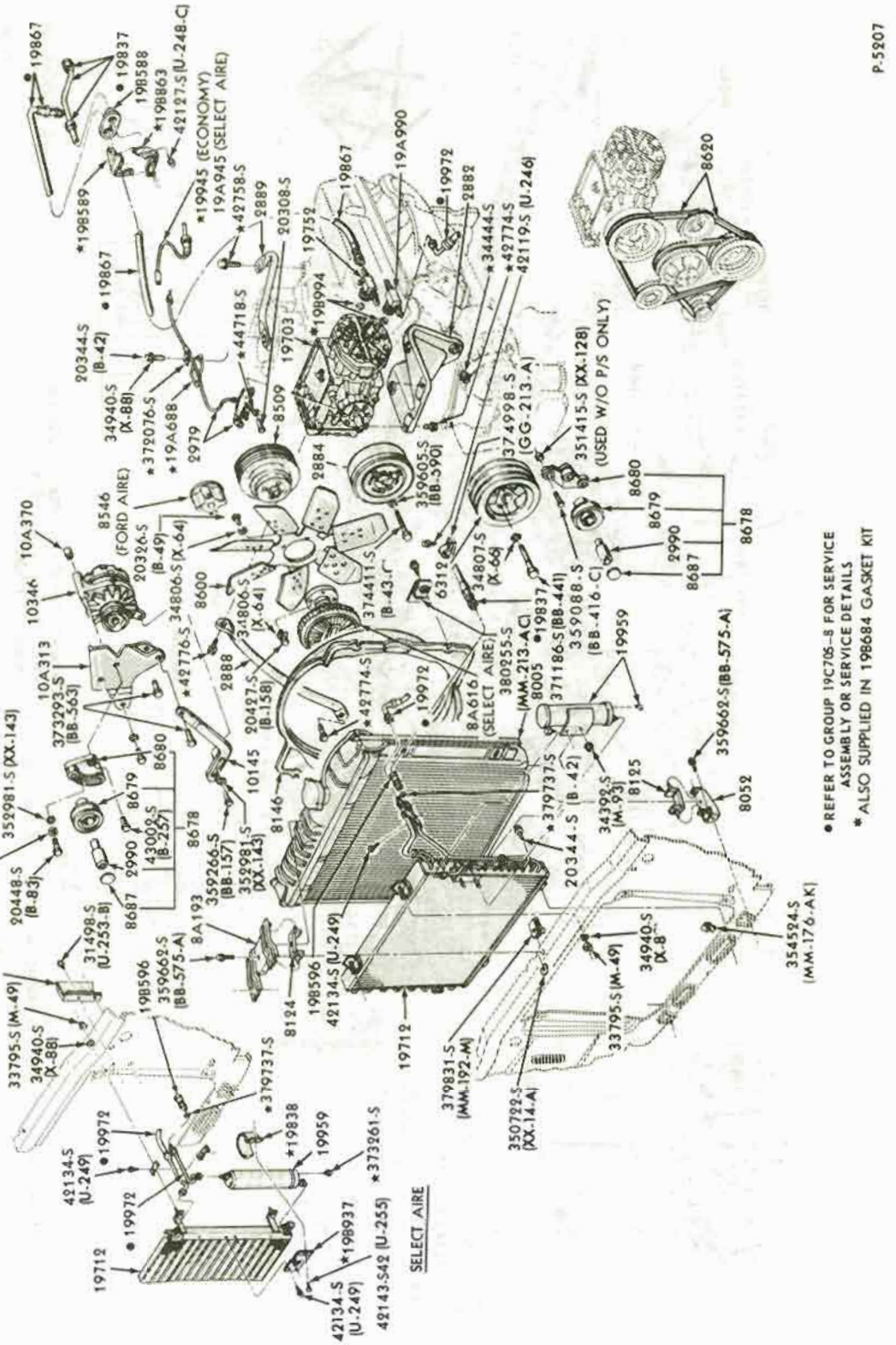

AIR CONDITIONING PARTS (ENGINE COMPARTMENT)
1966 FAIRLANE - 8 CYL. 390

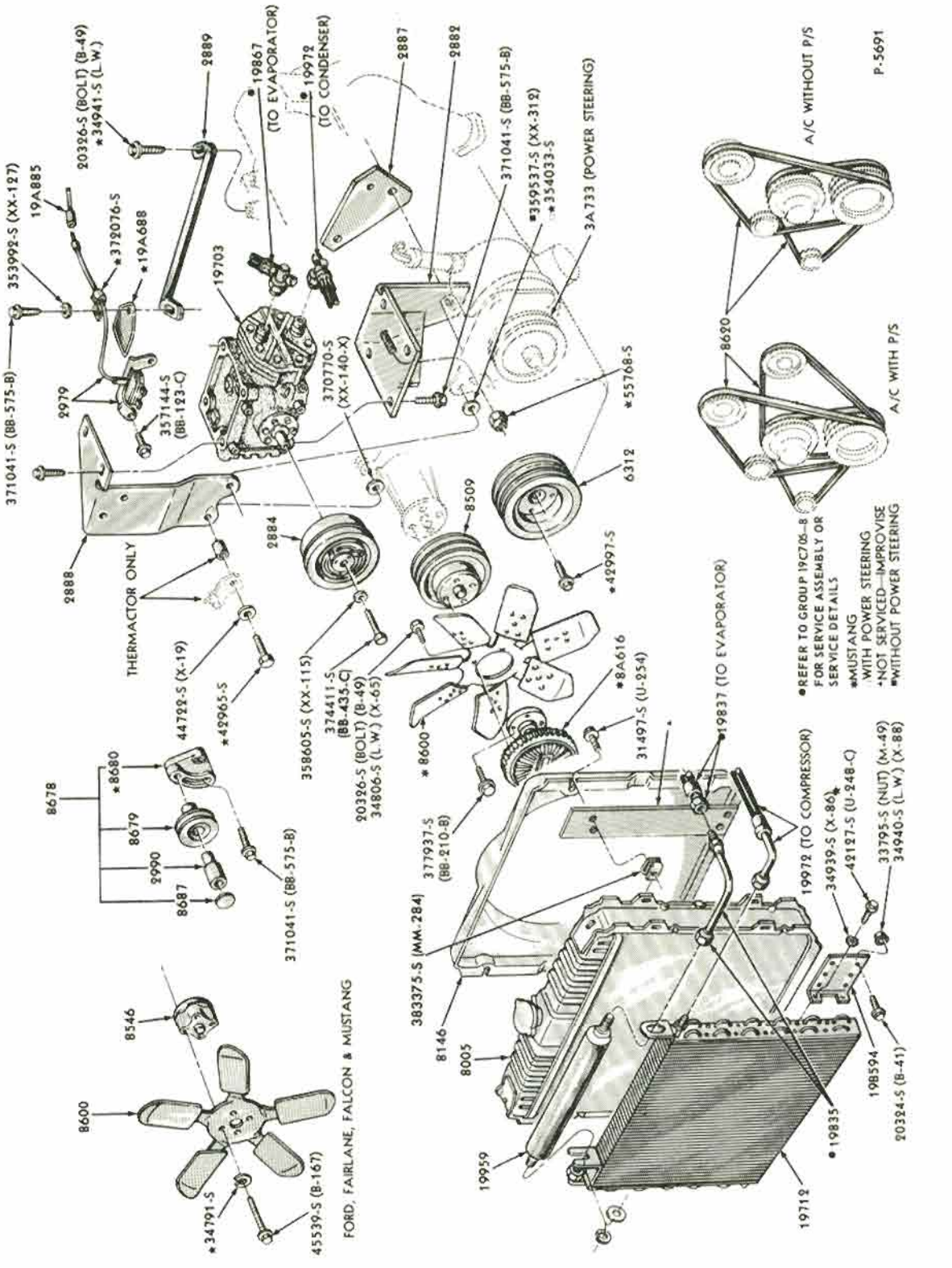

AIR CONDITIONING PARTS (ENGINE COMPARTMENT)
1967 FORD, FAIRLANE, FALCON and MUSTANG - 8 CYL. 289 - w/ HANG-ON A/C

COPYRIGHT © 1975 — FORD MOTOR COMPANY — DEARBORN, MICHIGAN

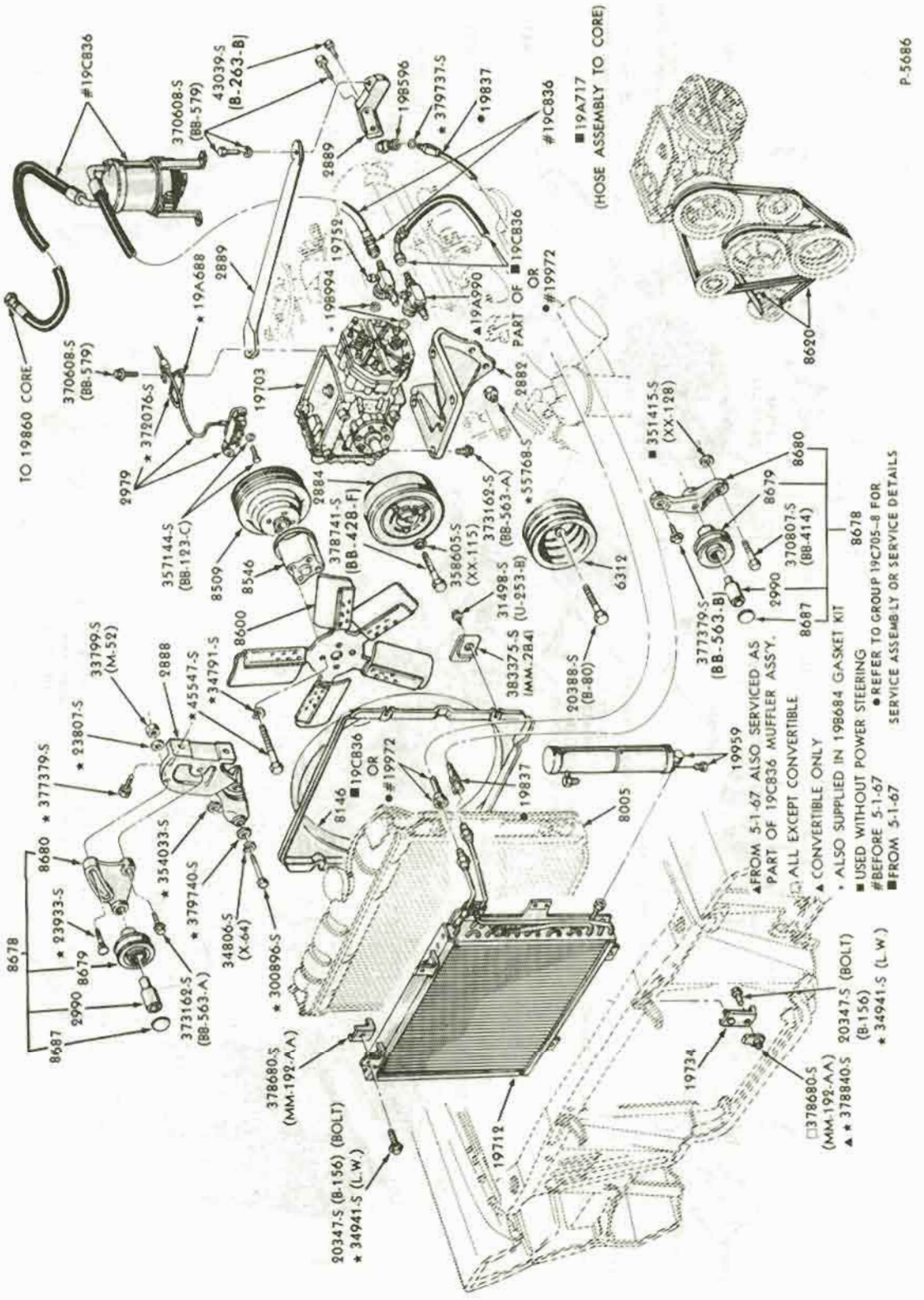

AIR CONDITIONING PARTS (ENGINE COMPARTMENT)
1967 FORD - 8 CYL. 289 - w/ INTEGRAL A/C

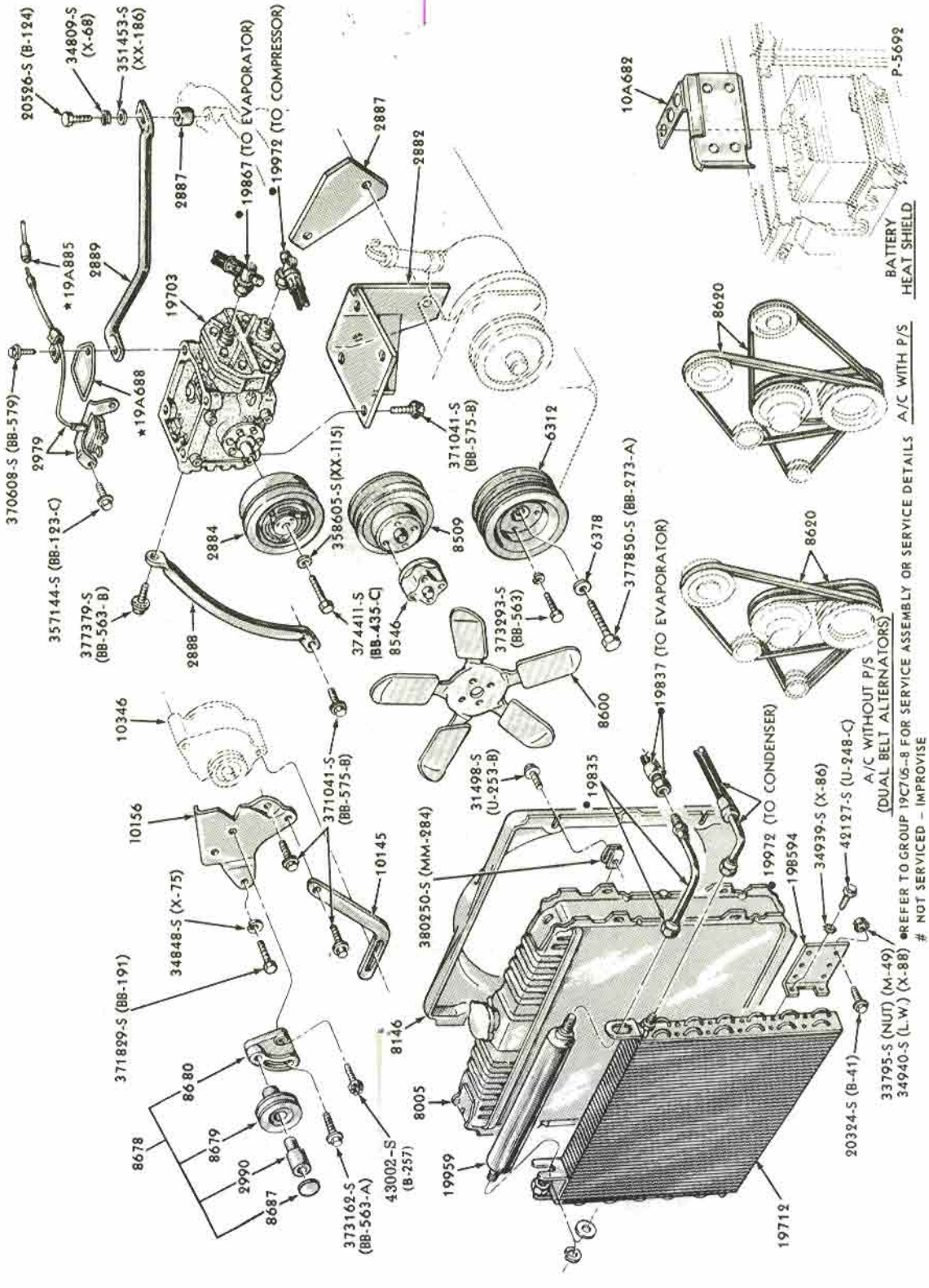

AIR CONDITIONING PARTS (ENGINE COMPARTMENT)
1967 FORD, FAIRLANE and MUSTANG - 8 CYL. 390, 428 - w/ HANG-ON A/C

COPYRIGHT © 1975 — FORD MOTOR COMPANY — DEARBORN, MICHIGAN

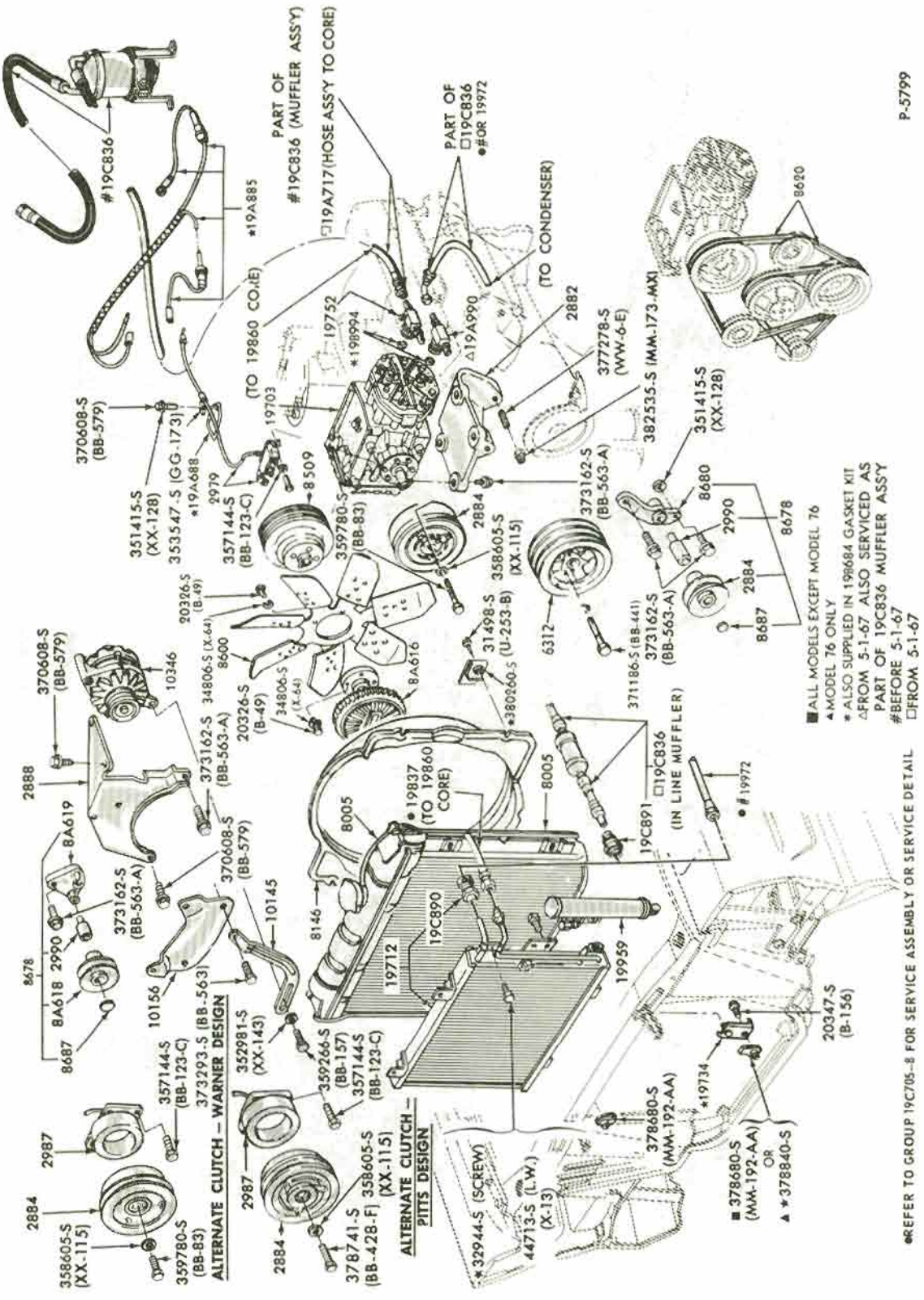

AIR CONDITIONING PARTS (ENGINE COMPARTMENT)
1967/68 FORD - 8 CYL. 390, 428 - w/ INTEGRAL A/C

P-5685

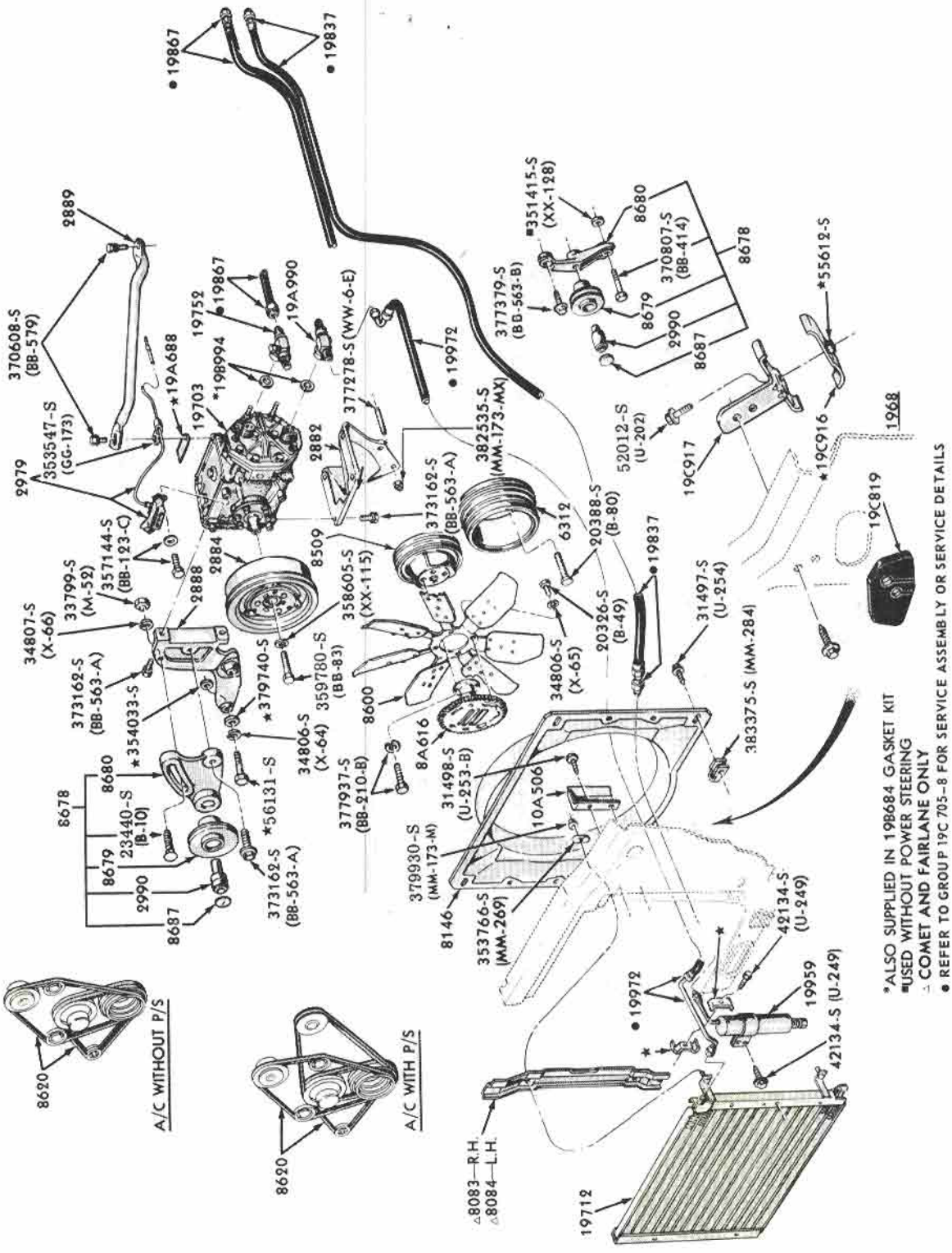

AIR CONDITIONING PARTS (ENGINE COMPARTMENT)
1967 FAIRLANE and FALCON - 8 CYL. 289 - w/ INTEGRAL A/C

COPYRIGHT © 1975 — FORD MOTOR COMPANY — DEARBORN, MICHIGAN

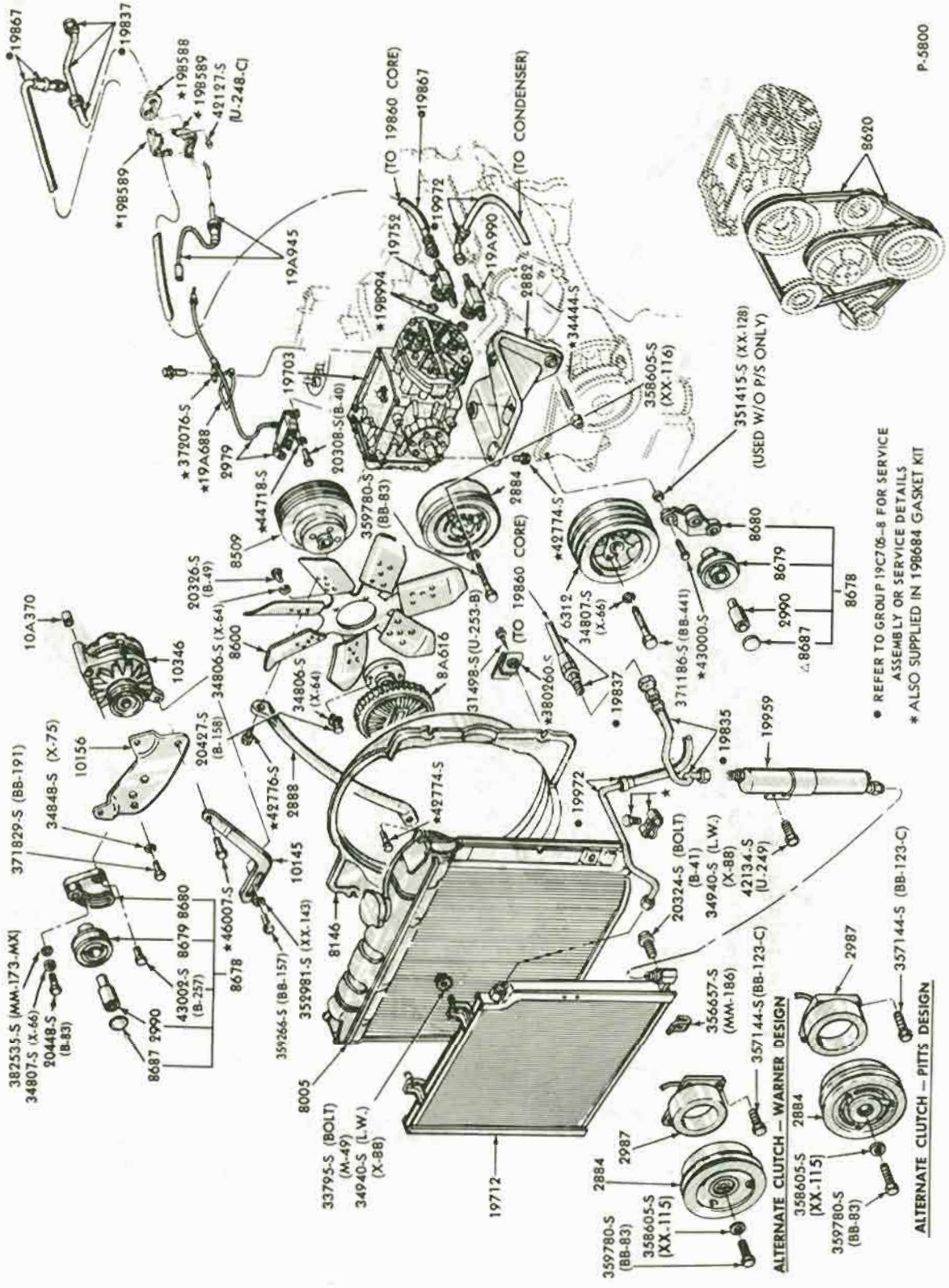

AIR CONDITIONING PARTS (ENGINE COMPARTMENT)
1967 FAIRLANE -8 CYL. 390 -w/ INTEGRAL A/C

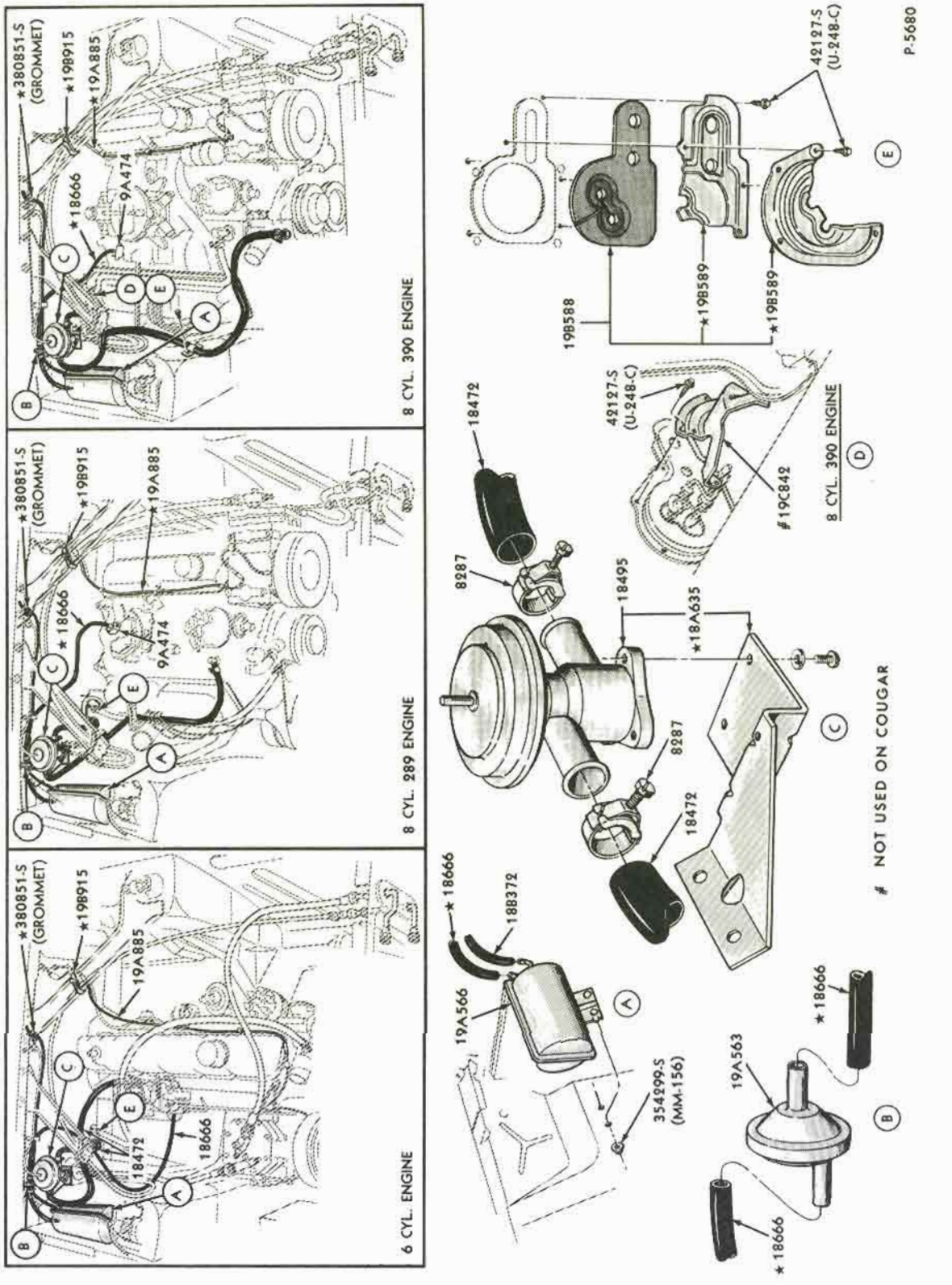

VACUUM HOSES - AIR CONDITIONER and HEATER
1967 MUSTANG - w/ INTEGRAL A/C

COPYRIGHT © 1975 — FORD MOTOR COMPANY — DEARBORN, MICHIGAN

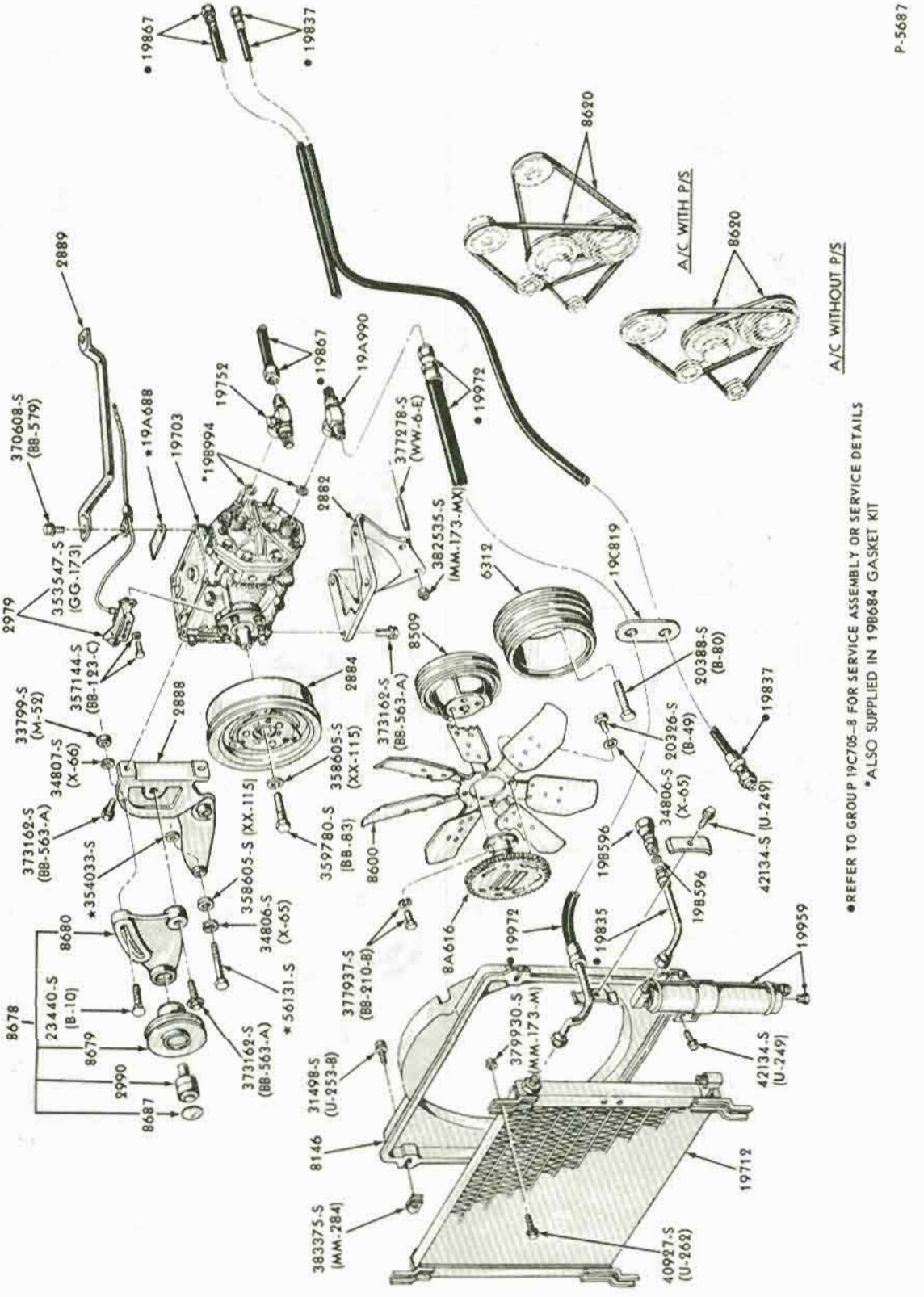

AIR CONDITIONING PARTS (ENGINE COMPARTMENT)
1967 MUSTANG - 8 CYL. 289 - w/ INTEGRAL A/C

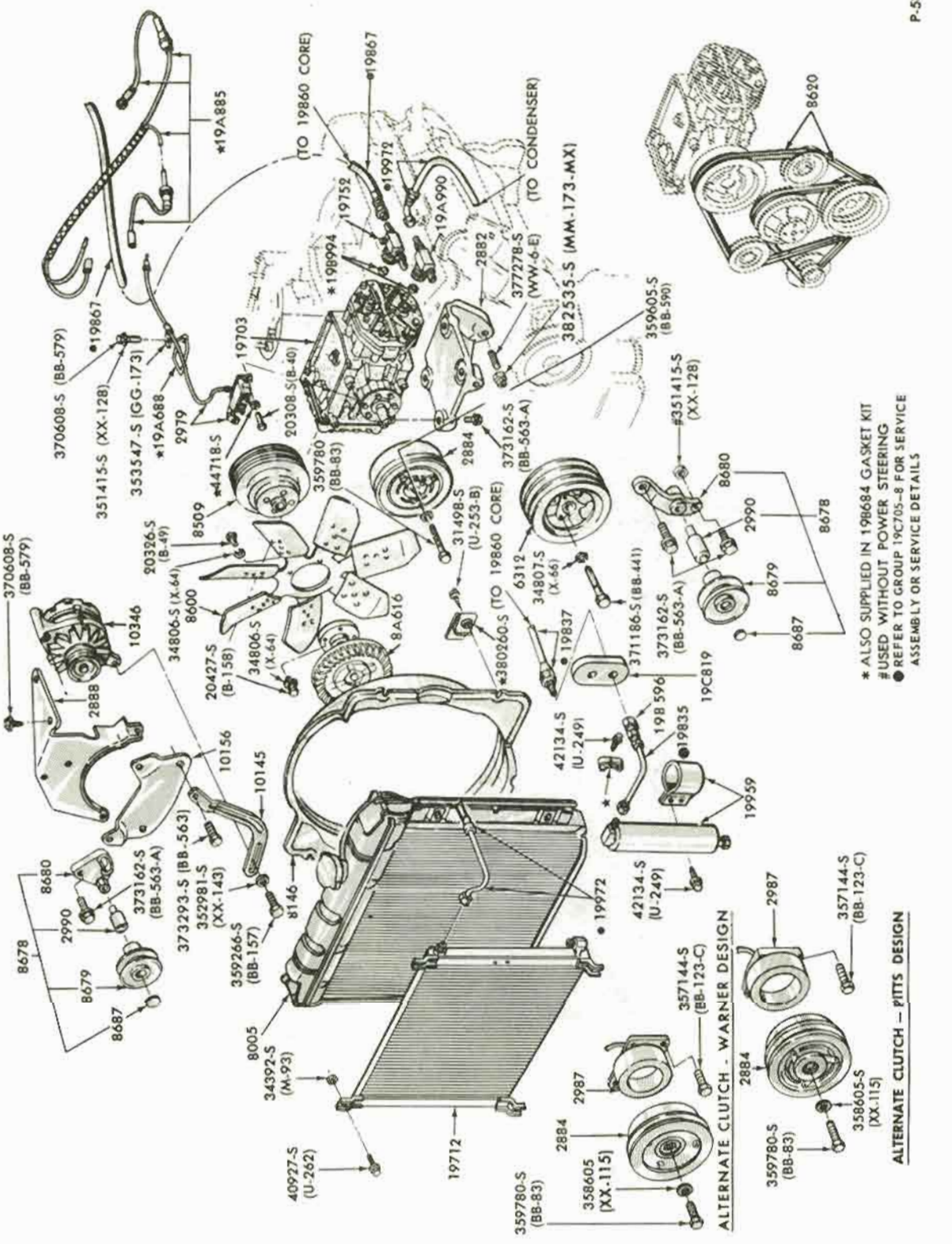

AIR CONDITIONING PARTS (ENGINE COMPARTMENT)
1967/70 MUSTANG - 8 CYL. 390, 428 (TYPICAL) - w/ INTEGRAL A/C

COPYRIGHT © 1975 — FORD MOTOR COMPANY — DEARBORN, MICHIGAN

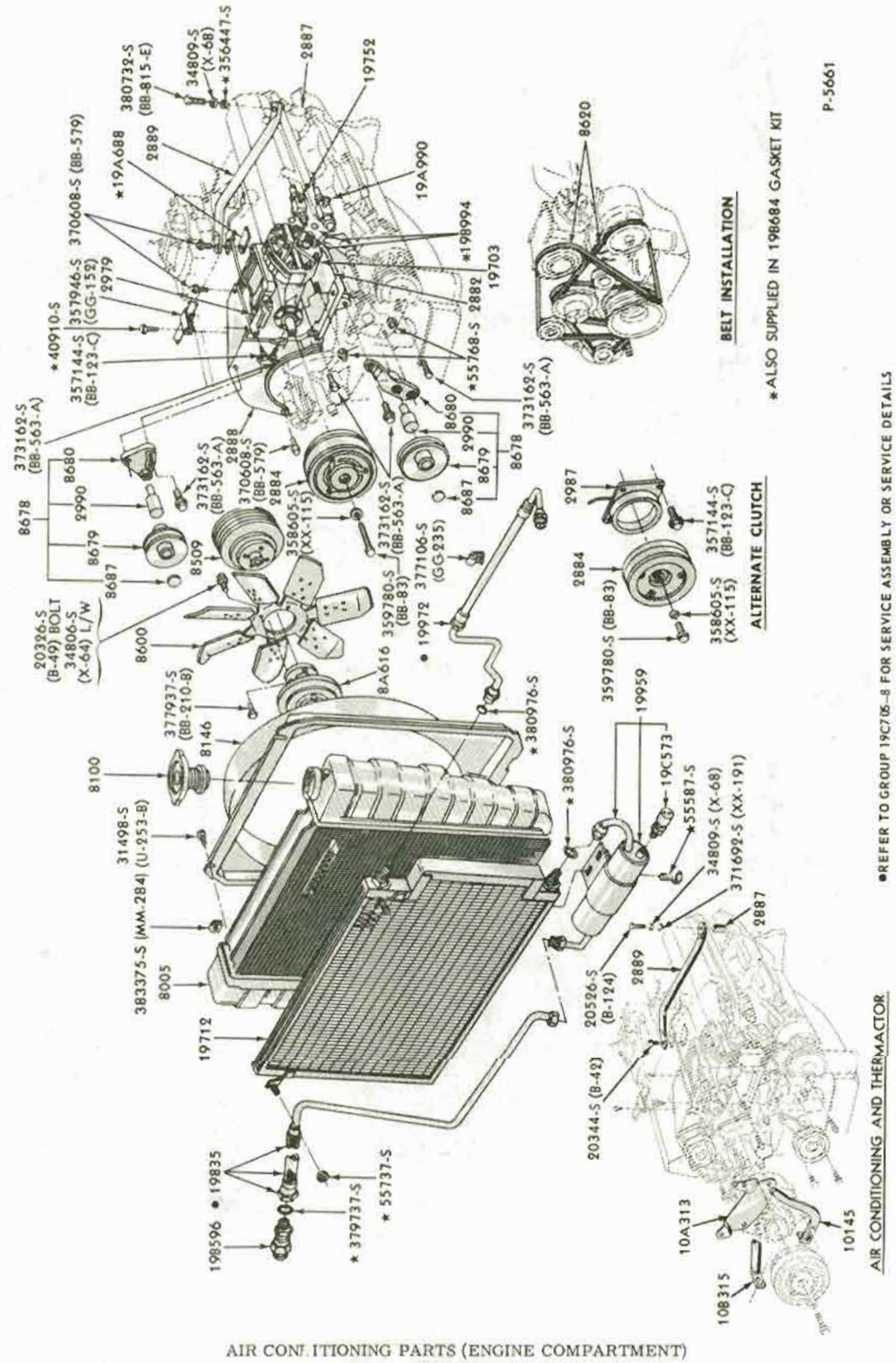

AIR CONDITIONING PARTS (ENGINE COMPARTMENT)
1967 THUNDERBIRD - w/ INTEGRAL A/C

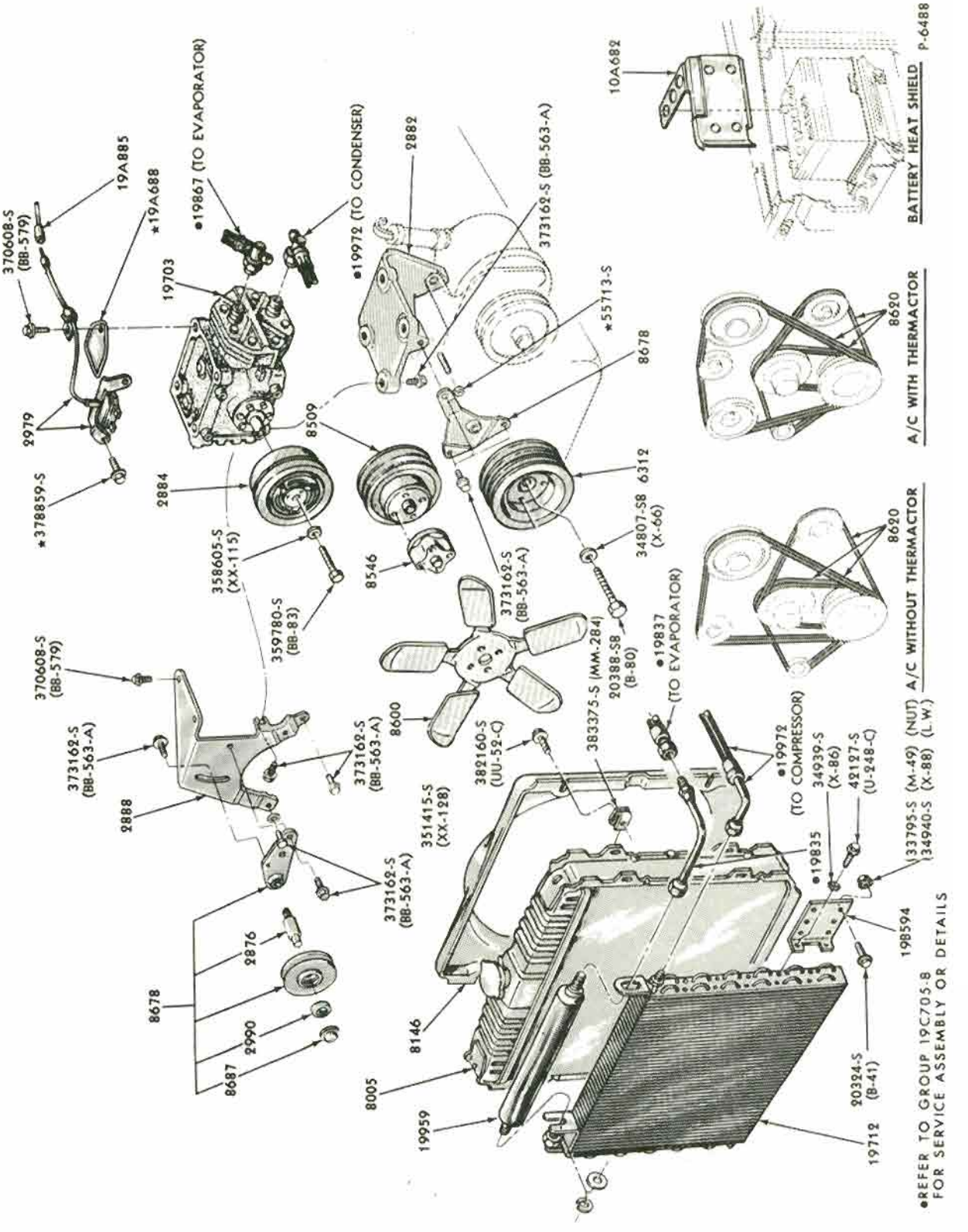

AIR CONDITIONING PARTS (ENGINE COMPARTMENT)

1968 FORD, FAIRLANE/ TORINO and MUSTANG - 8 CYL. 390, 428 - w/ HANG-ON A/C

COPYRIGHT © 1975— FORD MOTOR COMPANY —DEARBORN, MICHIGAN

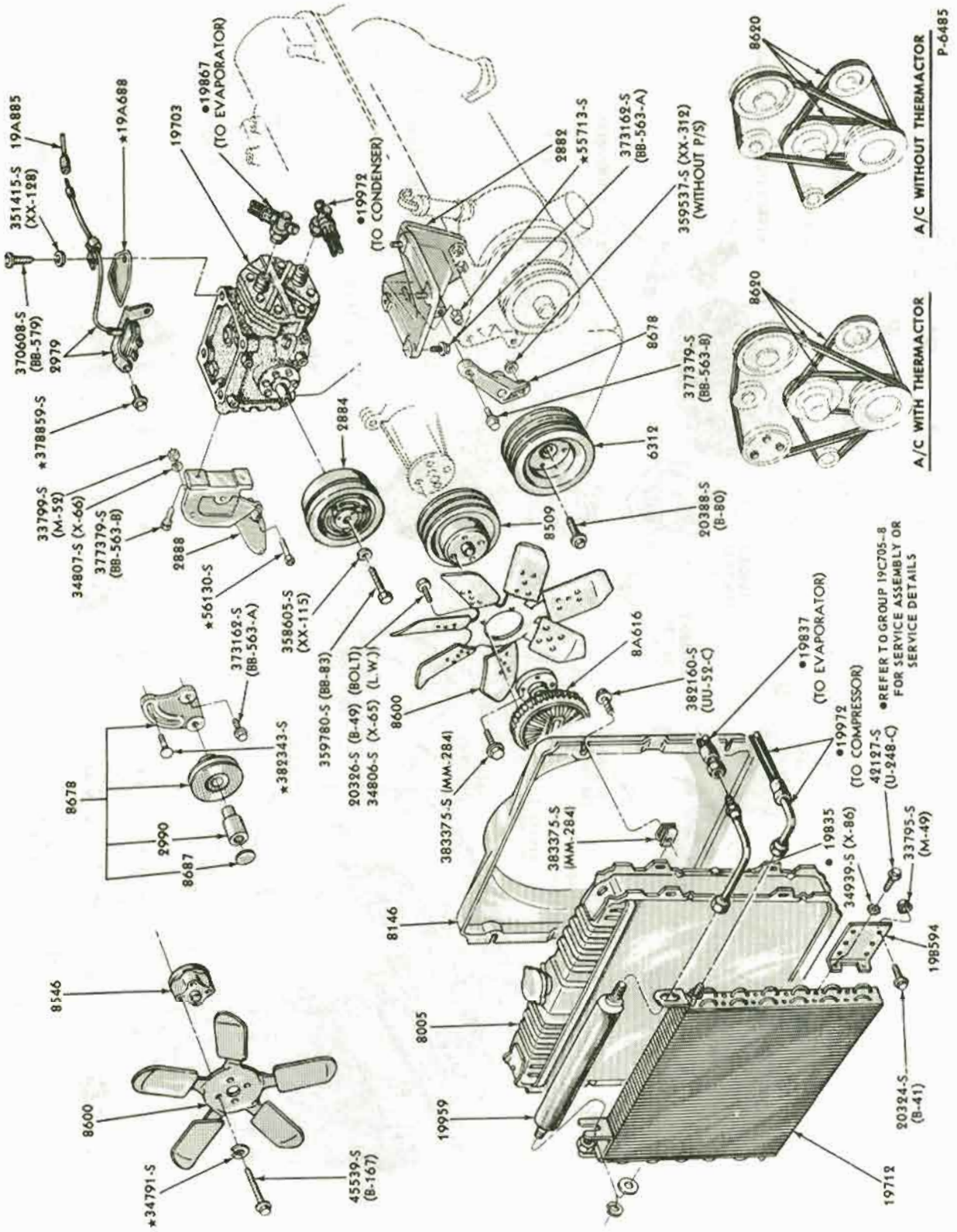

AIR CONDITIONING PARTS (ENGINE COMPARTMENT)

1968 FORD, FAIRLANE/ TORINO, FALCON and MUSTANG - 8 CYL. 289, 302 - w/ HANG-ON A/C

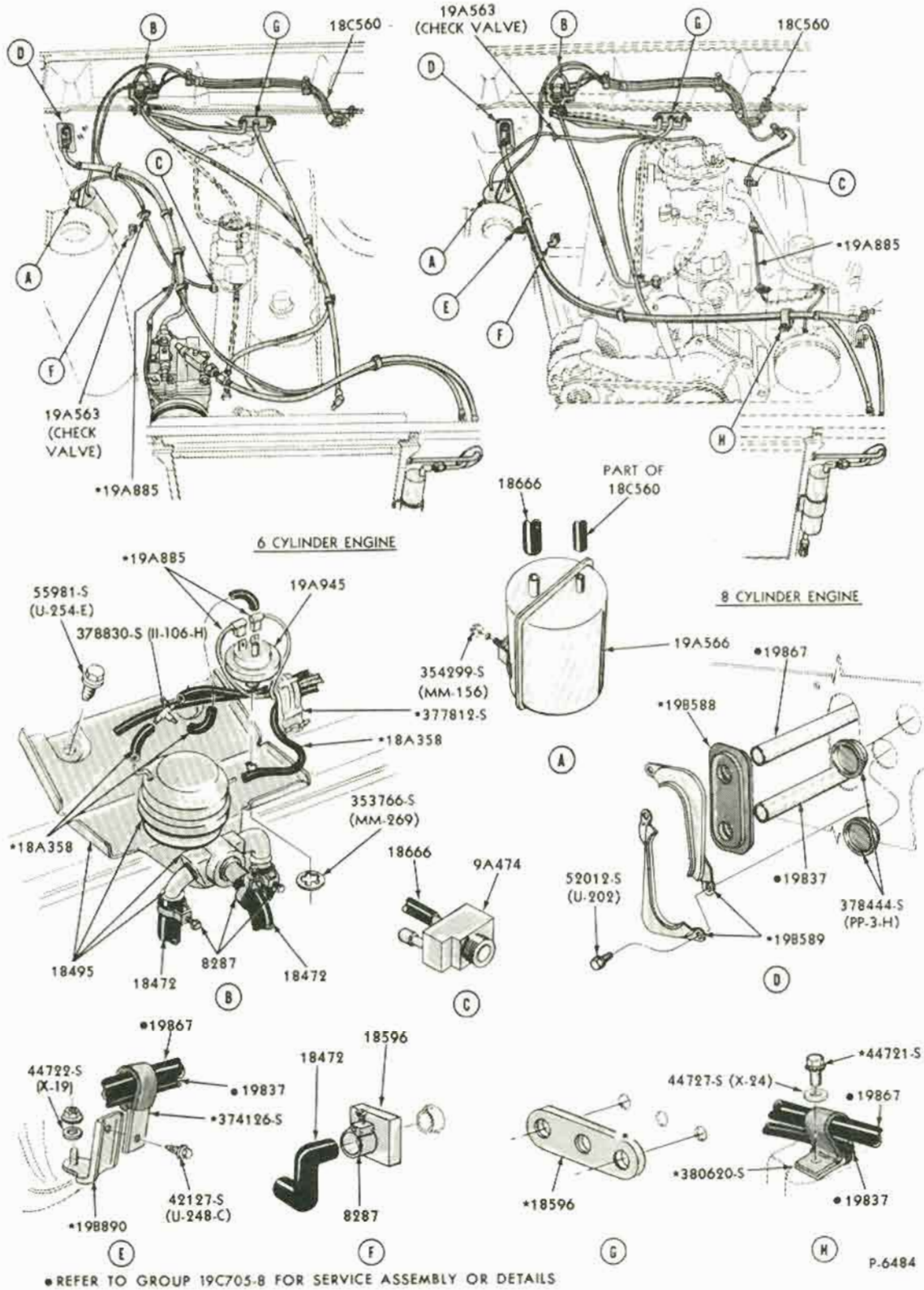

• REFER TO GROUP 19C705-8 FOR SERVICE ASSEMBLY OR DETAILS

VACUUM HOSES - AIR CONDITIONER
1968/69 FAIRLANE/TORINO and 1968/70 FALCON - w/INTEGRAL A/C

COPYRIGHT © 1975 — FORD MOTOR COMPANY — DEARBORN, MICHIGAN

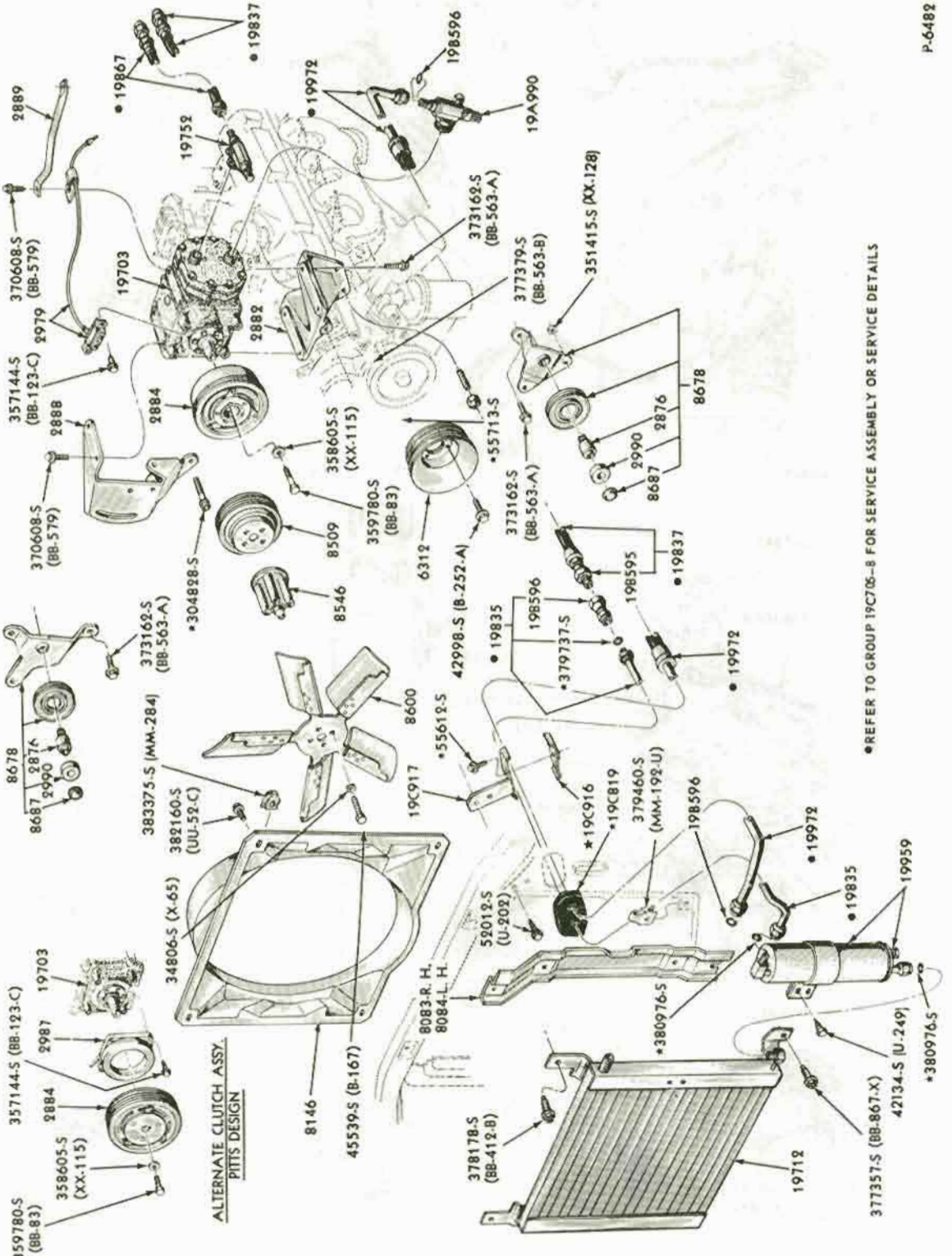

AIR CONDITIONING PARTS (ENGINE COMPARTMENT)
1968/69 FAIRLANE/TORINO and 1968/70 FALCON - 8 CYL. 289, 302 - w/INTEGRAL A/C

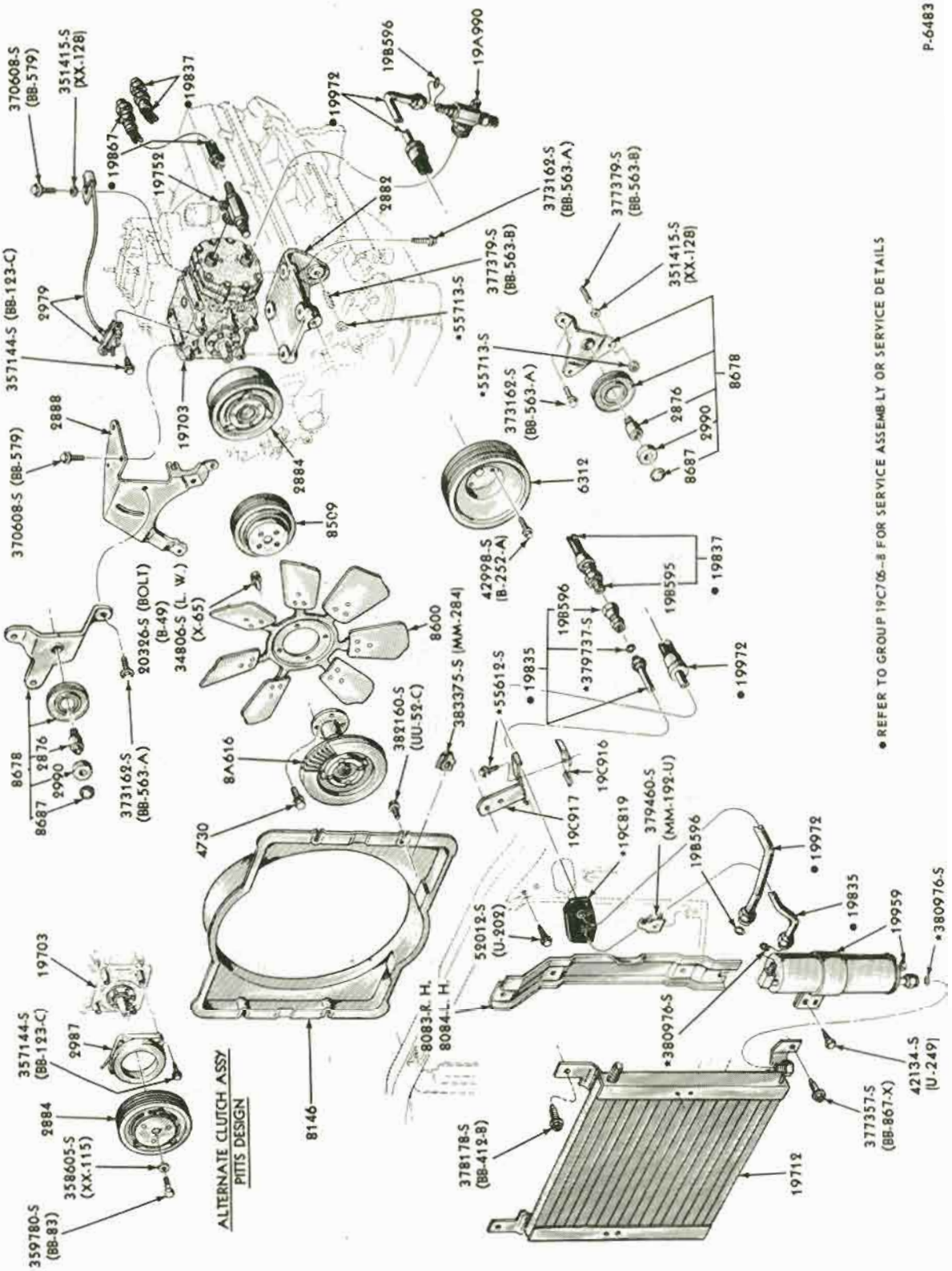

AIR CONDITIONING PARTS (ENGINE COMPARTMENT)
1968/69 FAIRLANE/ TORINO - 8 CYL. 390 - w/ INTEGRAL A/C

COPYRIGHT © 1975 — FORD MOTOR COMPANY — DEARBORN, MICHIGAN

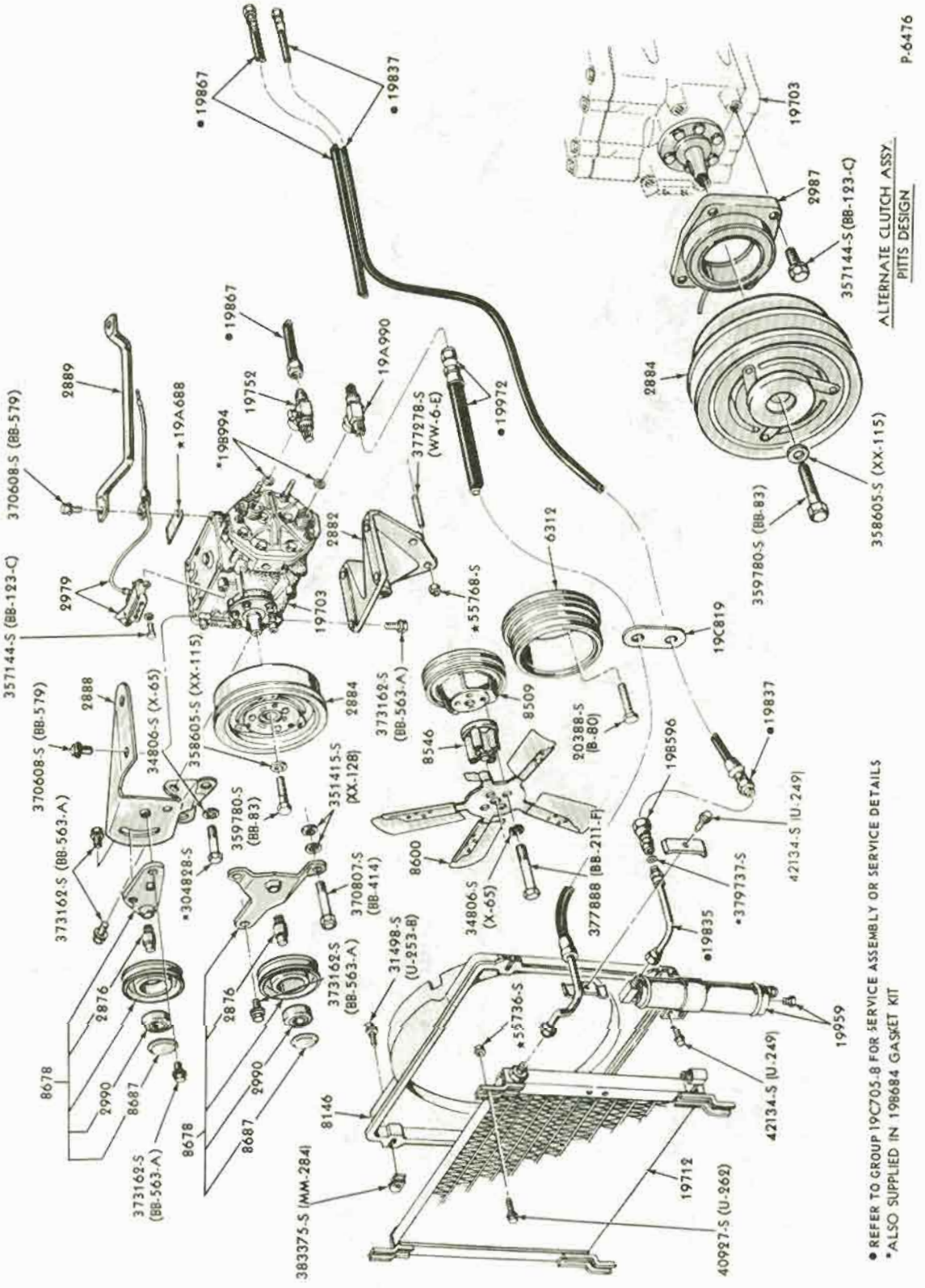

AIR CONDITIONING PARTS (ENGINE COMPARTMENT)
1968/70 MUSTANG - 8 CYL. 302, 351 - w/ INTEGRAL A/C

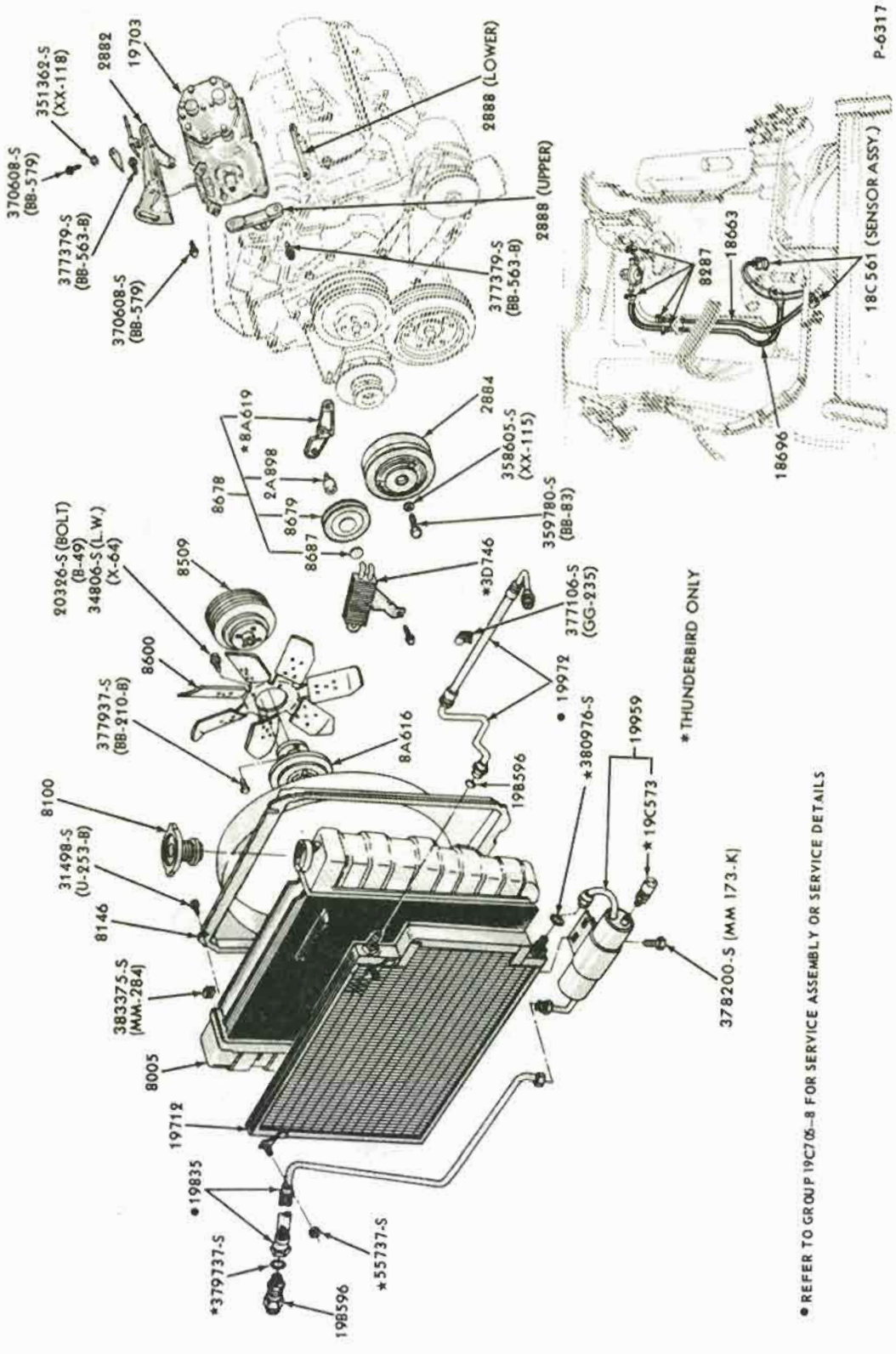

AIR CONDITIONING PARTS (ENGINE COMPARTMENT)
1968/69 THUNDERBIRD - 8 CYL. 429 - w/ INTEGRAL A/C

COPYRIGHT © 1975 — FORD MOTOR COMPANY — DEARBORN, MICHIGAN

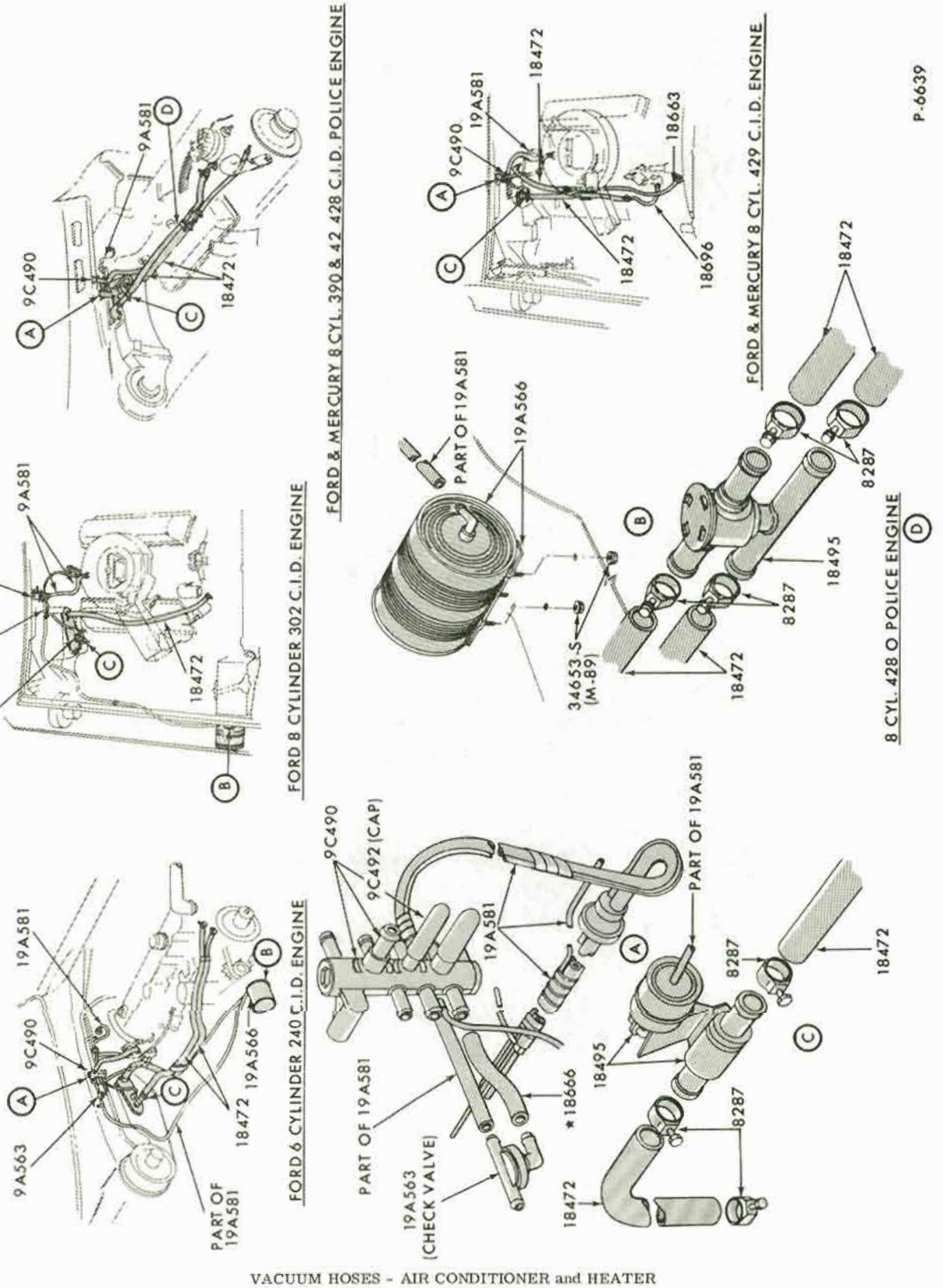

VACUUM HOSES - AIR CONDITIONER and HEATER
1969/70 FORD - w/ INTEGRAL A/C

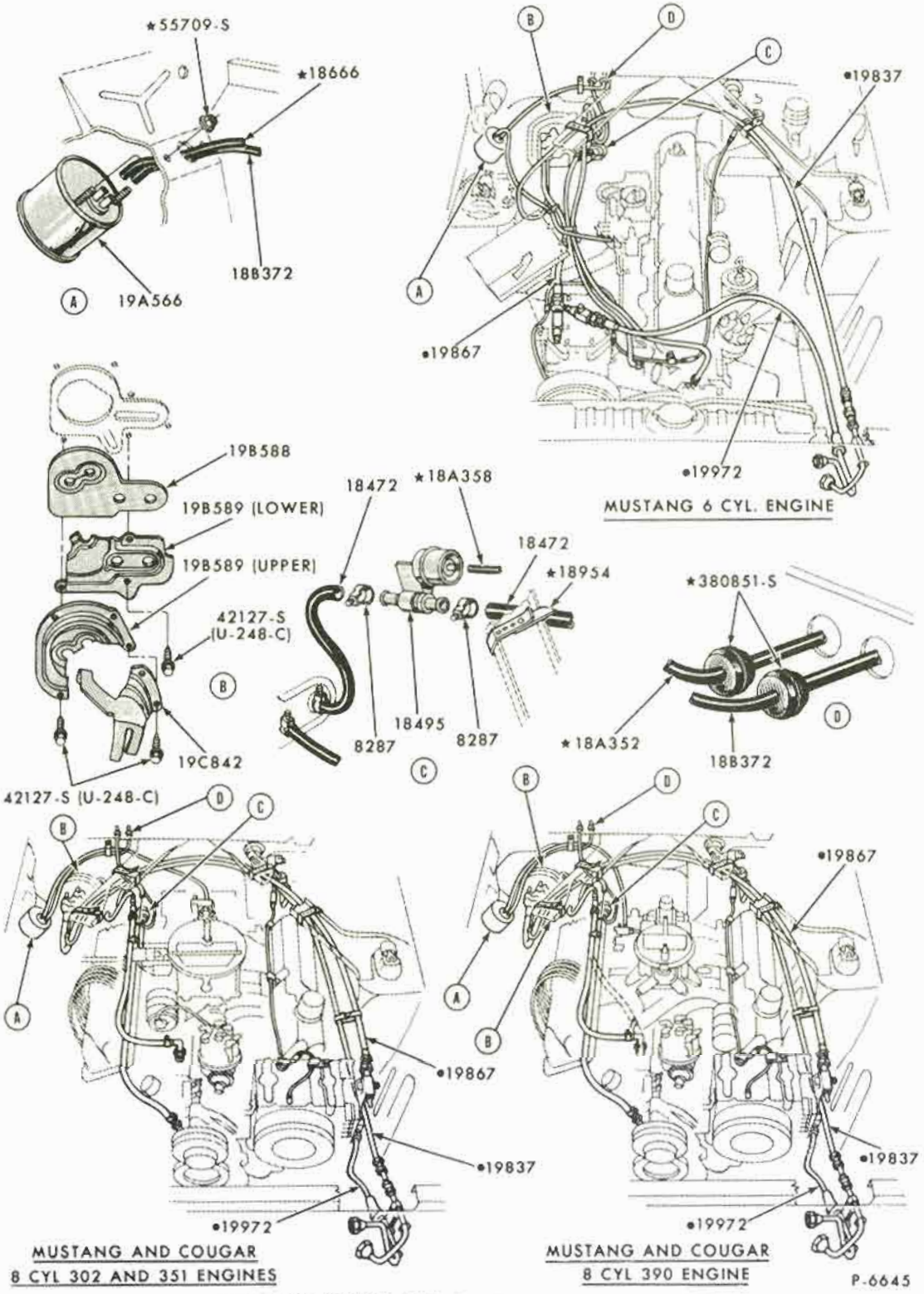

•REFER TO GROUP 19C705-8 FOR SERVICE ASSEMBLY OR DETAILS

VACUUM HOSES - AIR CONDITIONER and HEATER
1969/70 MUSTANG - w/ INTEGRAL A/C

COPYRIGHT © 1975 — FORD MOTOR COMPANY — DEARBORN, MICHIGAN

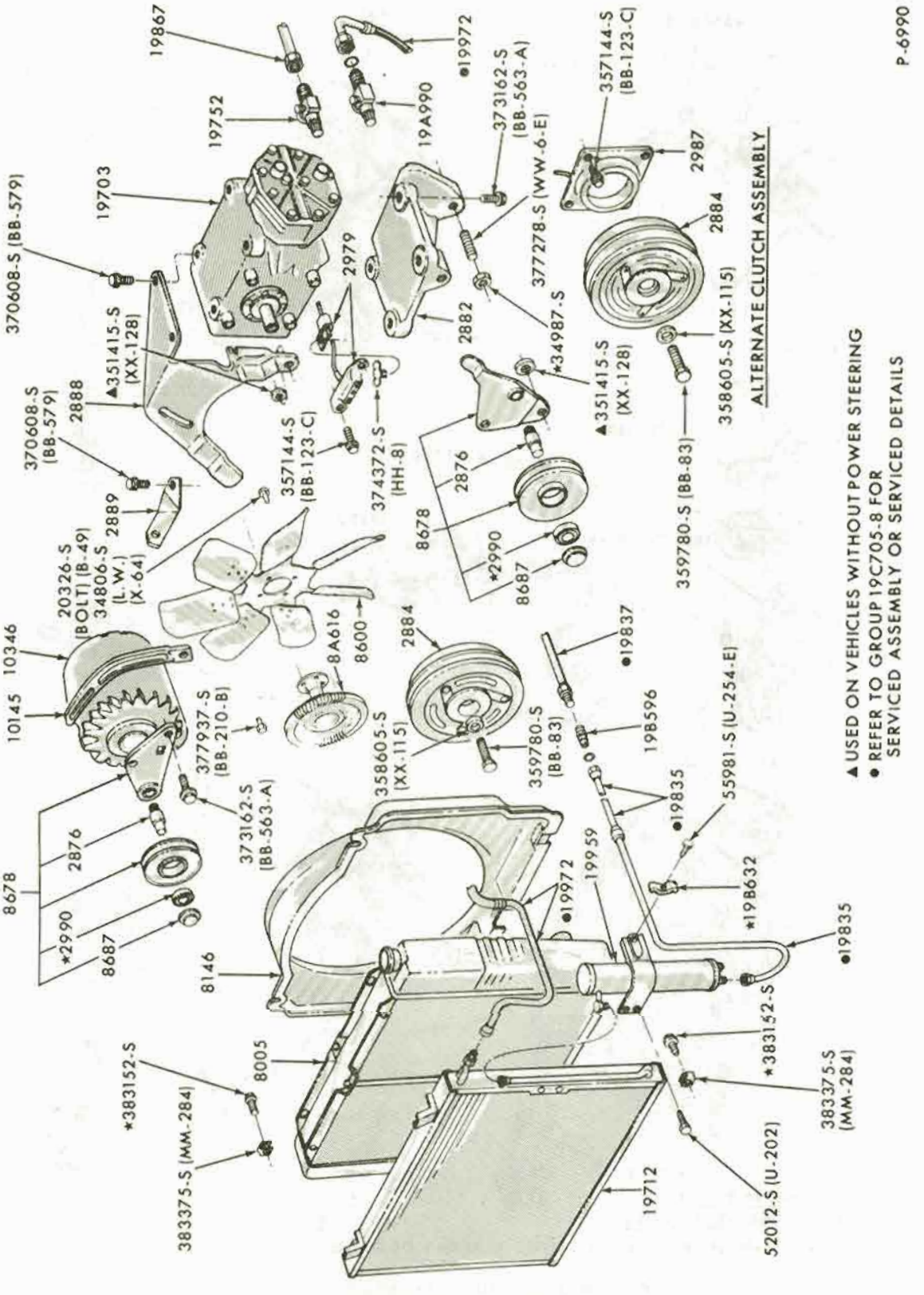

AIR CONDITIONING PARTS (ENGINE COMPARTMENT)
1969/71 FORD - 8 CYL. 390, 428-w/INTEGRAL A/C

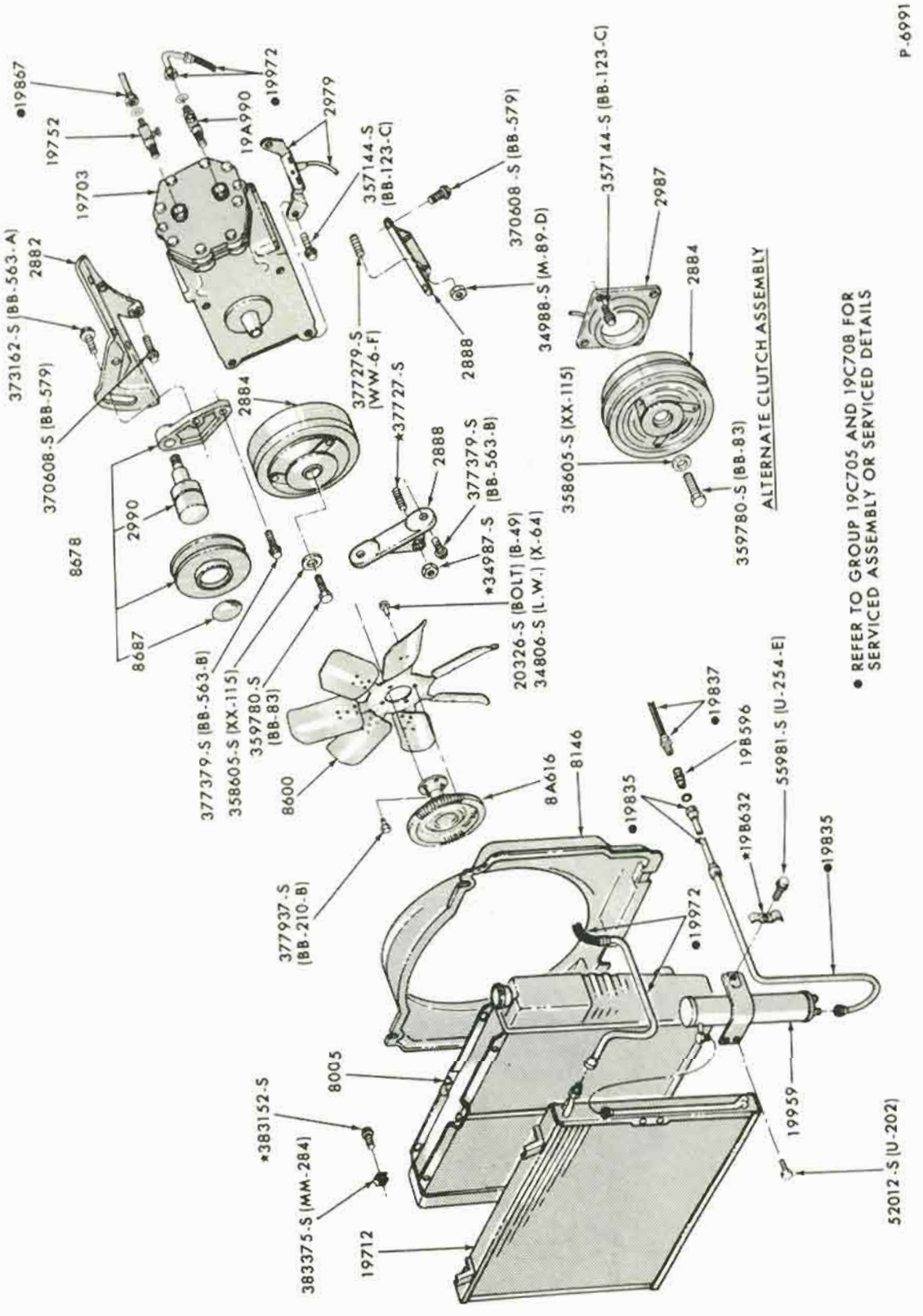

AIR CONDITIONING PARTS (ENGINE COMPARTMENT)
1969 FORD - 8 CYL. 429-w/INTEGRAL A/C

COPYRIGHT © 1975 — FORD MOTOR COMPANY — DEARBORN, MICHIGAN

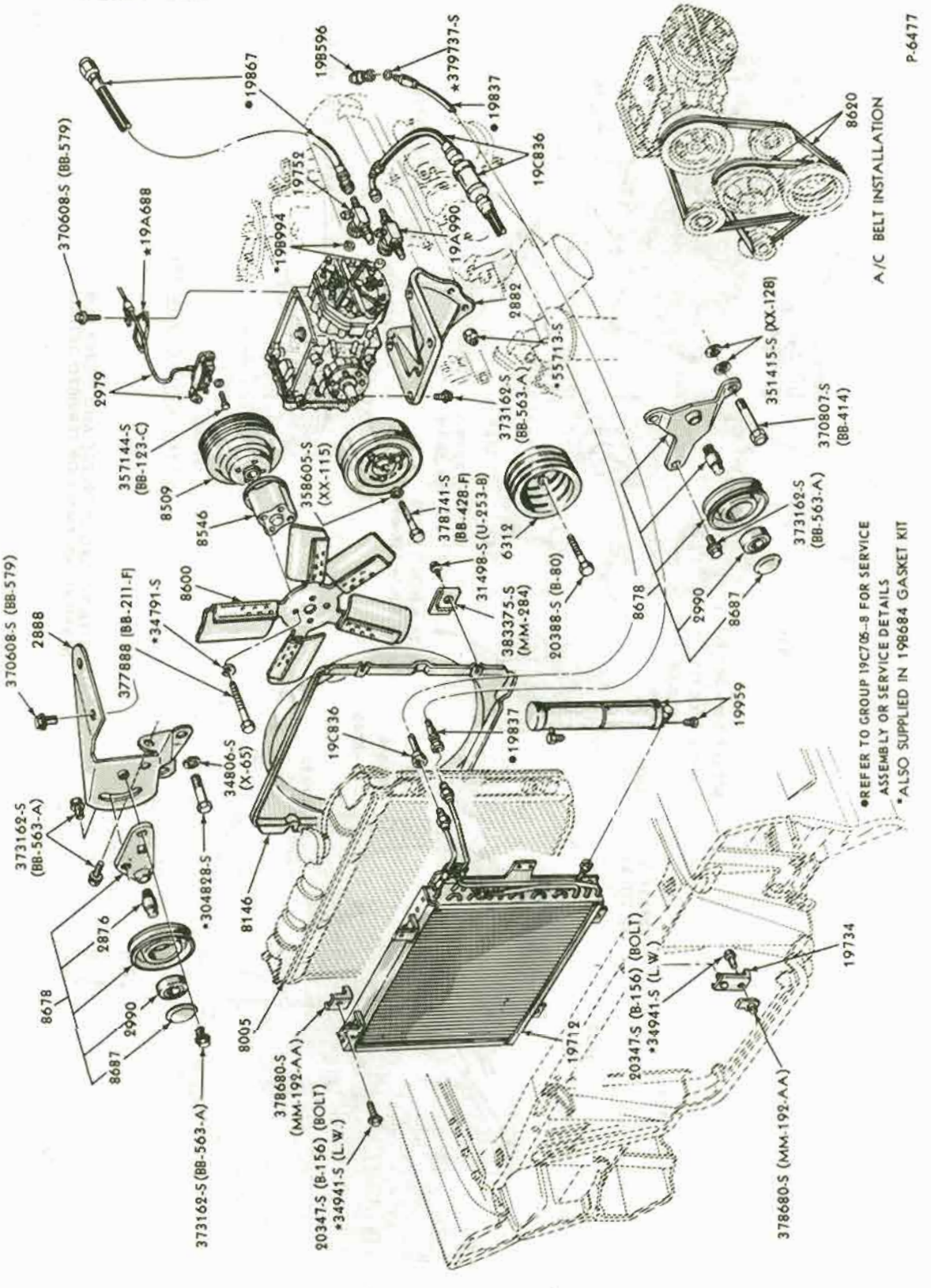

AIR CONDITIONING PARTS (ENGINE COMPARTMENT)
1968 FORD - 8 CYL. 302 - w/INTEGRAL A/C

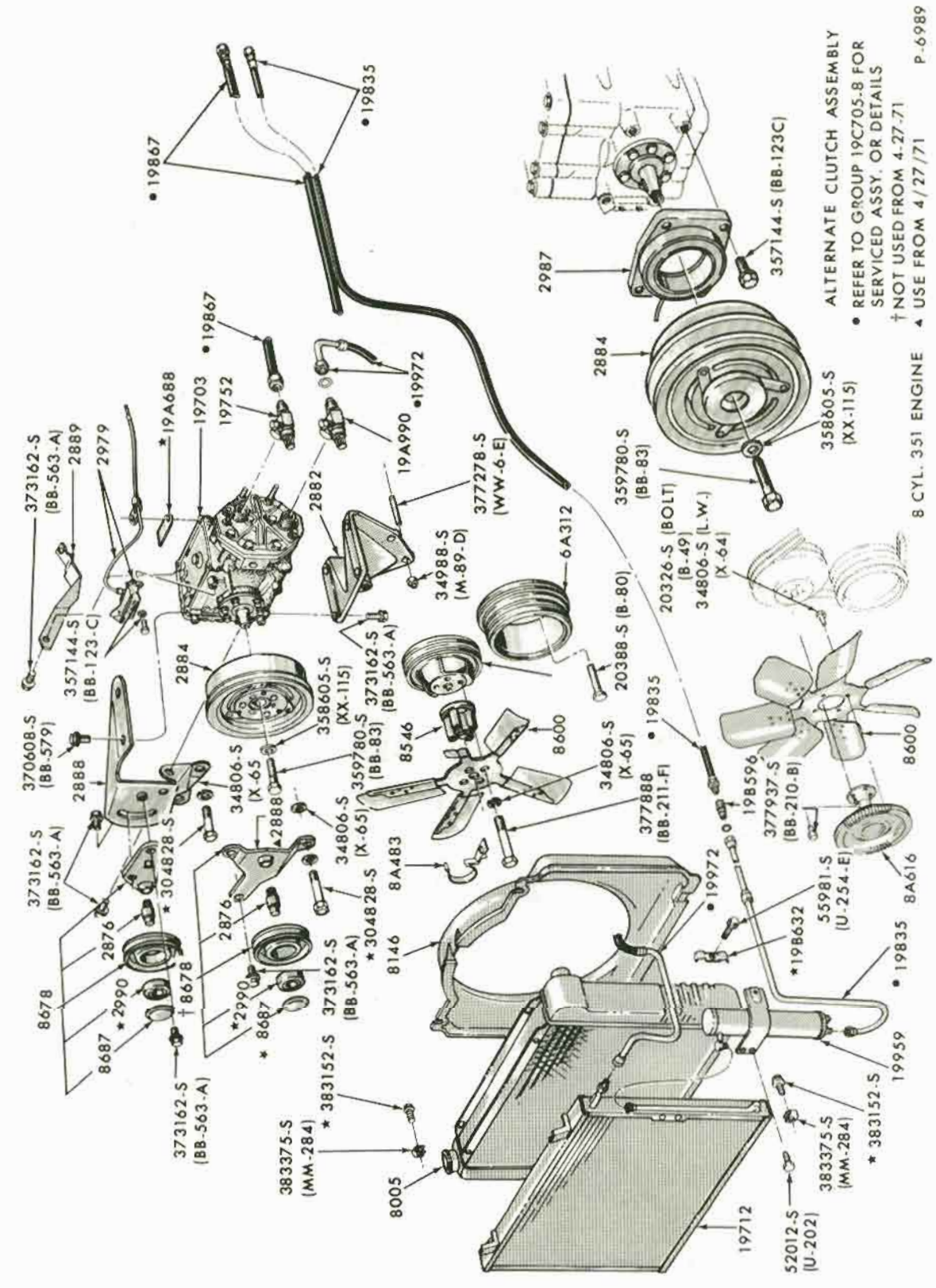

AIR CONDITIONING PARTS (ENGINE COMPARTMENT)
1969/72 FORD-8 CYL. 302, 351, 400-w/INTEGRAL A/C

COPYRIGHT © 1975 — FORD MOTOR COMPANY — DEARBORN, MICHIGAN

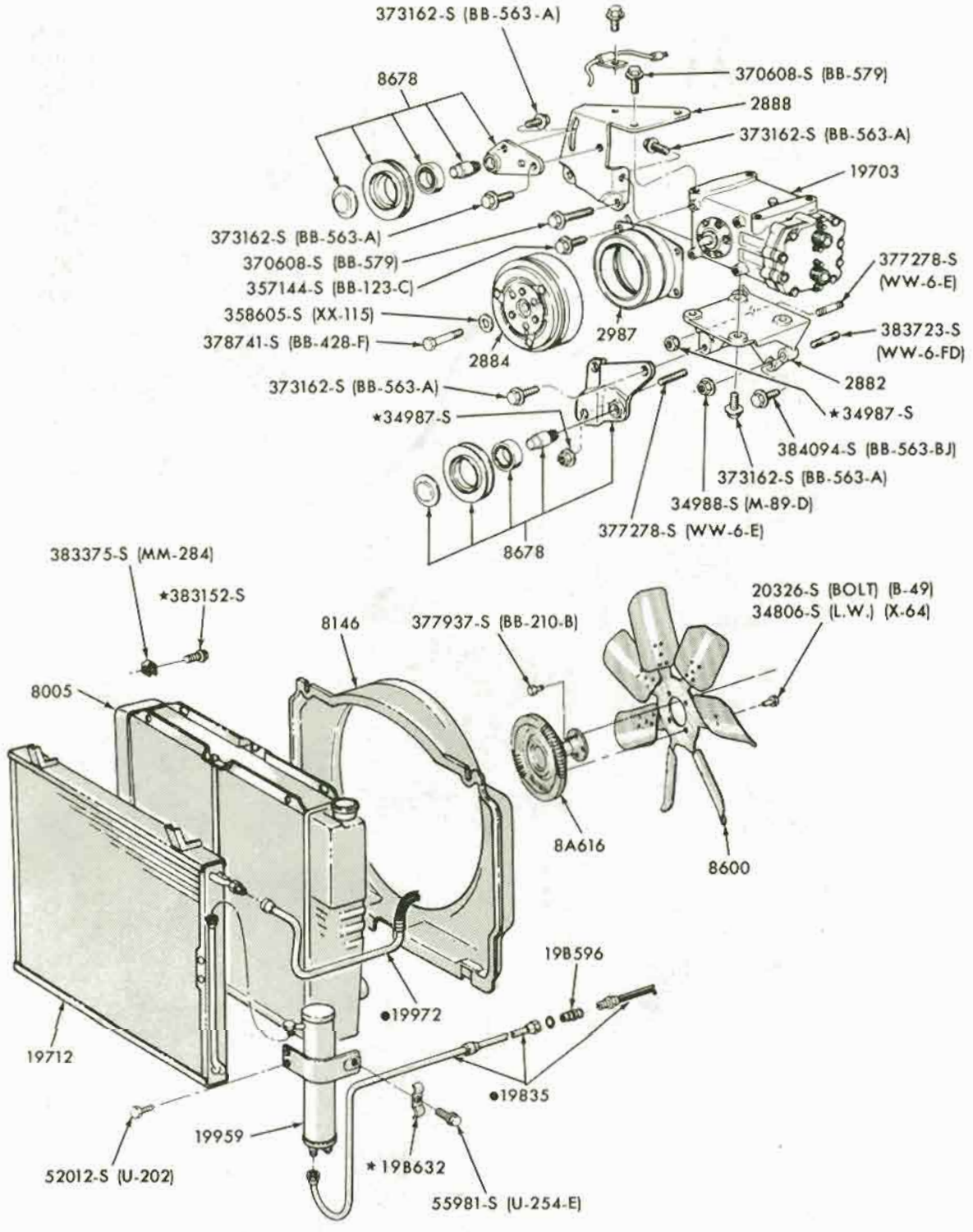

•REFER TO GROUP 19C705 THRU 19C708 FOR SERVICED ASSEMBLY OR SERVICED DETAILS

P-7746

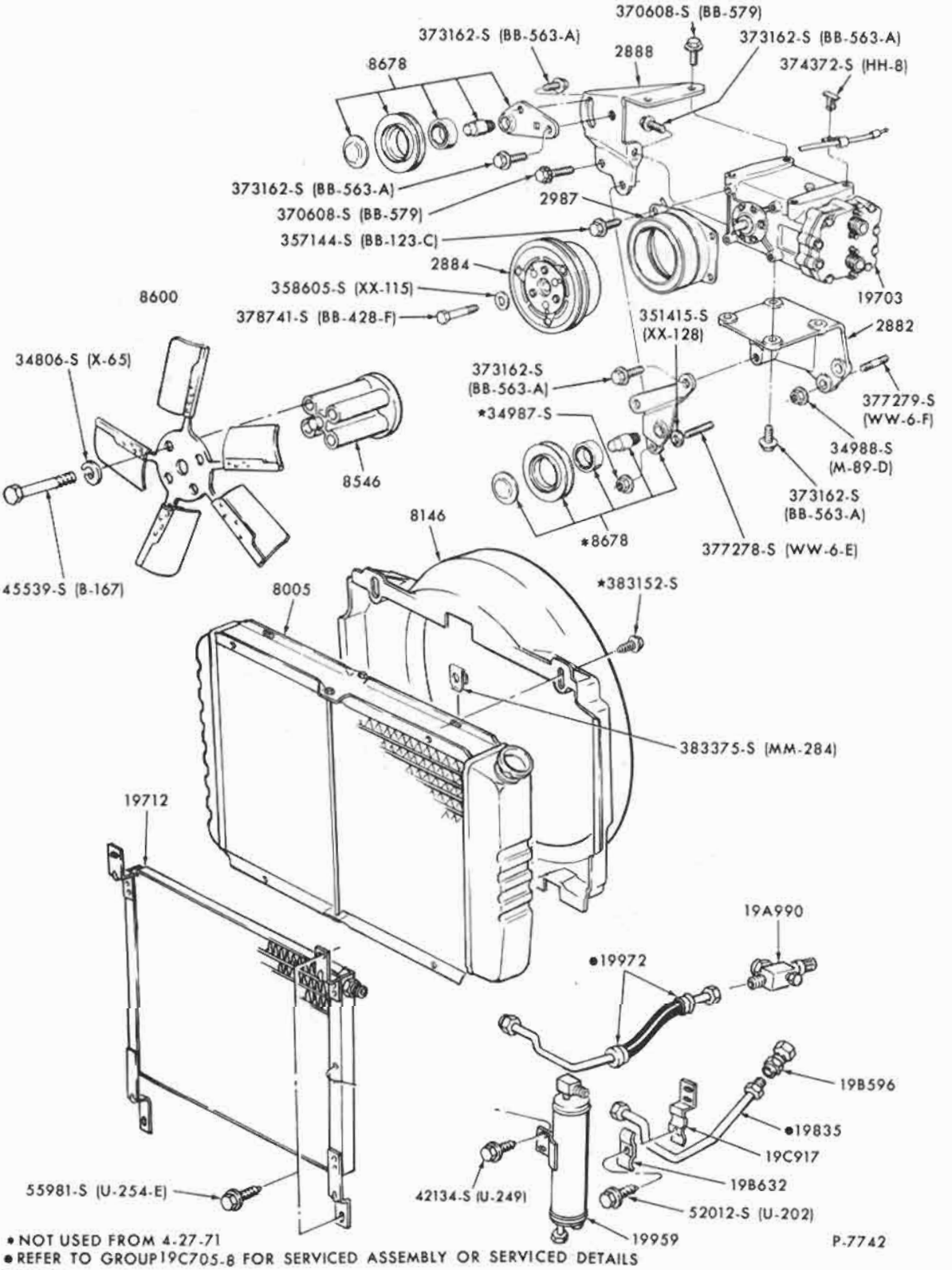

* NOT USED FROM 4-27-71
• REFER TO GROUP 19C705-8 FOR SERVICED ASSEMBLY OR SERVICED DETAILS

AIR CONDITIONING PARTS (ENGINE COMPARTMENT)
1970/71 FAIRLANE/TORINO, 1971/72 MUSTANG-8 CYL. 302,351-w/INTEGRAL A/C

COPYRIGHT © 1975 — FORD MOTOR COMPANY — DEARBORN, MICHIGAN

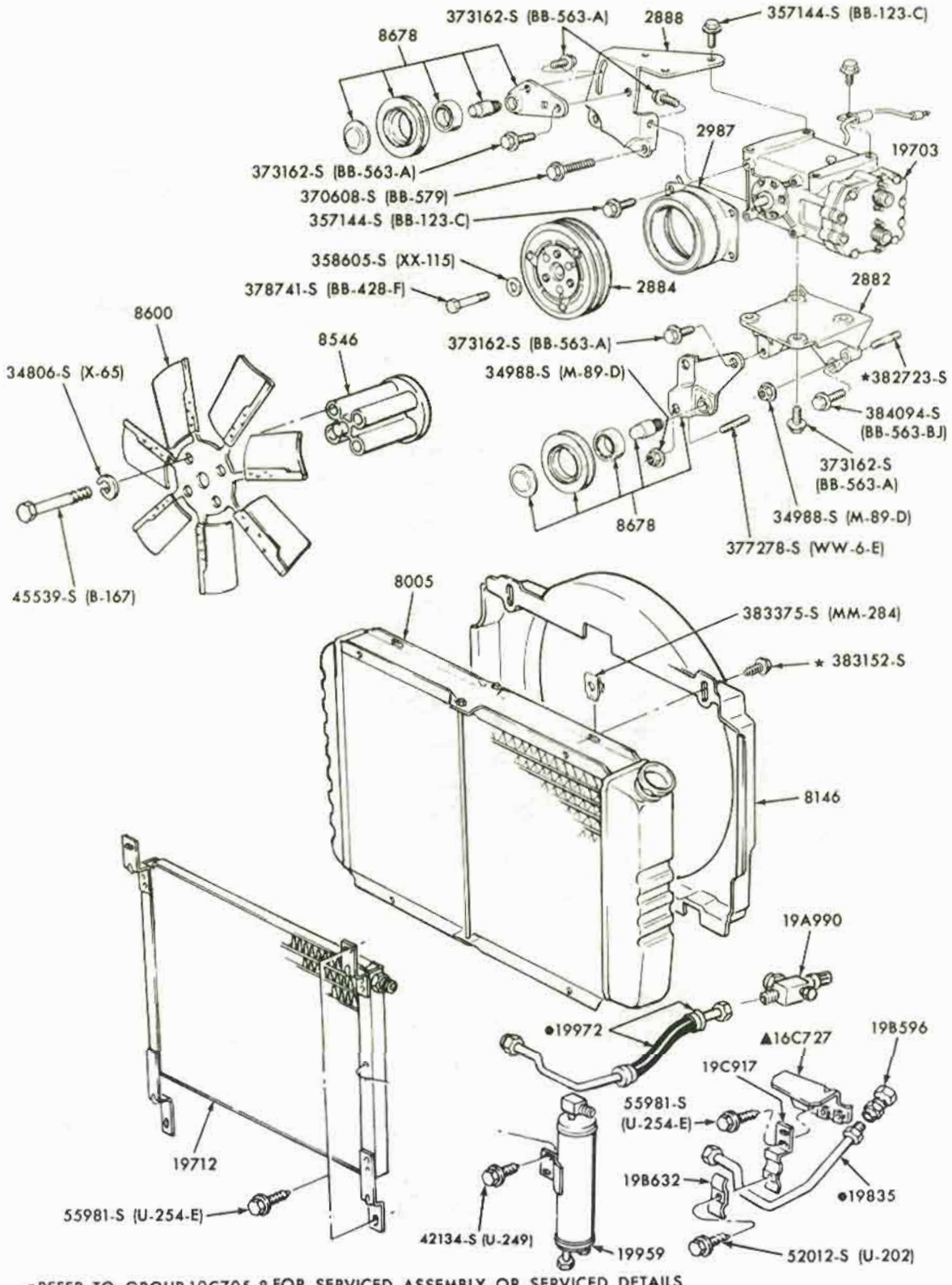

•REFER TO GROUP 19C705-8 FOR SERVICED ASSEMBLY OR SERVICED DETAILS
▲INSTALLATION OF 429 CID. WITH "RALLY PACK"

P-7743

AIR CONDITIONING PARTS (ENGINE COMPARTMENT)
1970/71 FAIRLANE/TORINO, 1971/72 MUSTANG-8 CYL. 429- w/INTEGRAL A/C

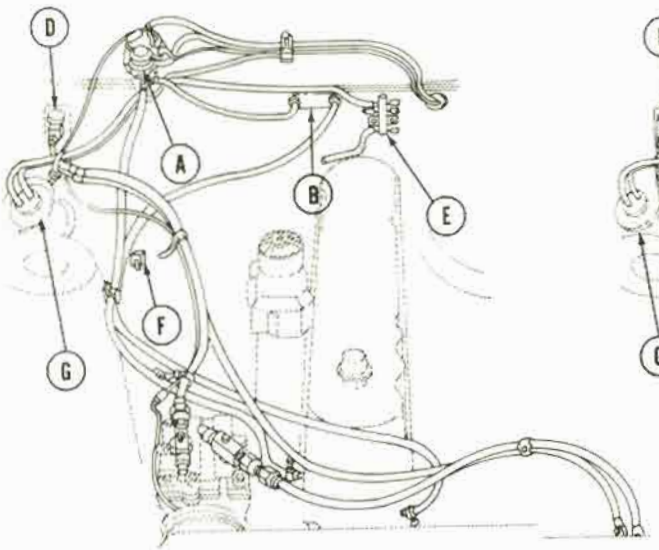

6 CYLINDER ENGINE

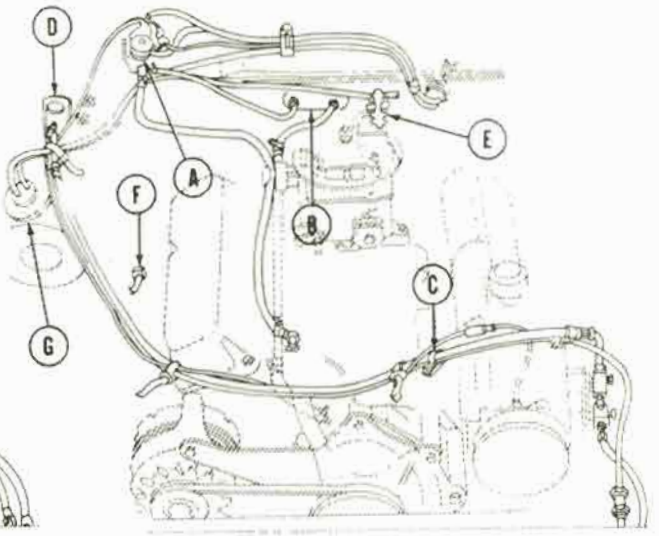

8CYLINDER 302 ENGINE

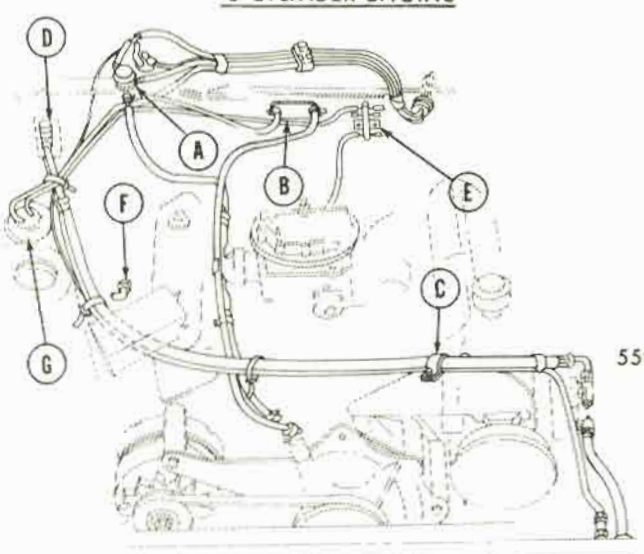

8 CYLINDER 351 & 429 ENGINES

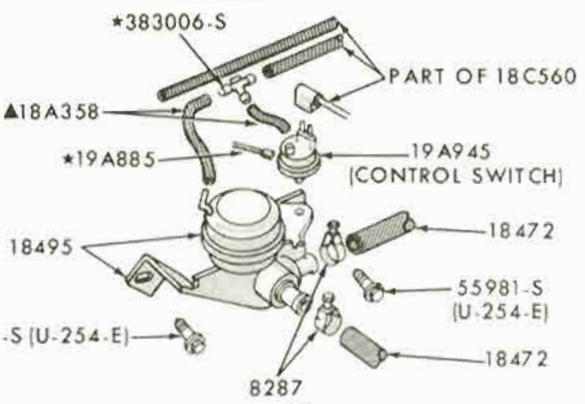

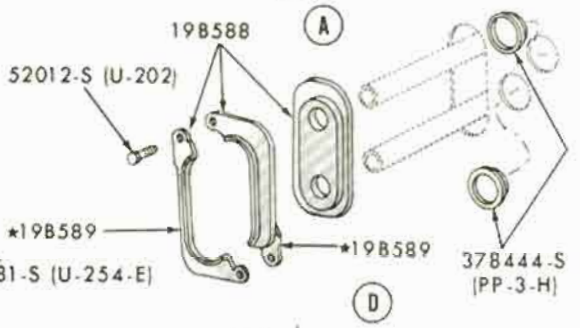

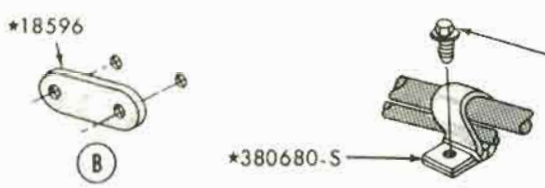

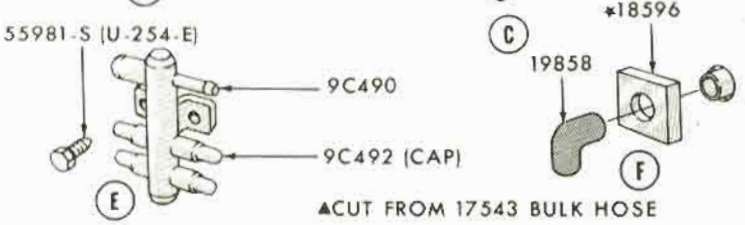

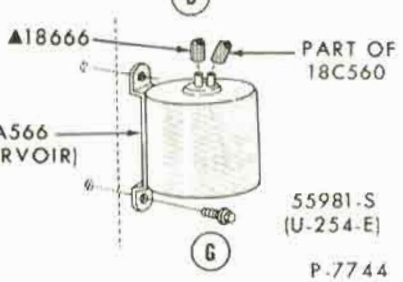

▲CUT FROM 17543 BULK HOSE

P-7744

VACUUM HOSES - AIR CONDITIONER
1970/71 FAIRLANE/TORINO-w/INTEGRAL A/C

COPYRIGHT © 1975 — FORD MOTOR COMPANY — DEARBORN, MICHIGAN

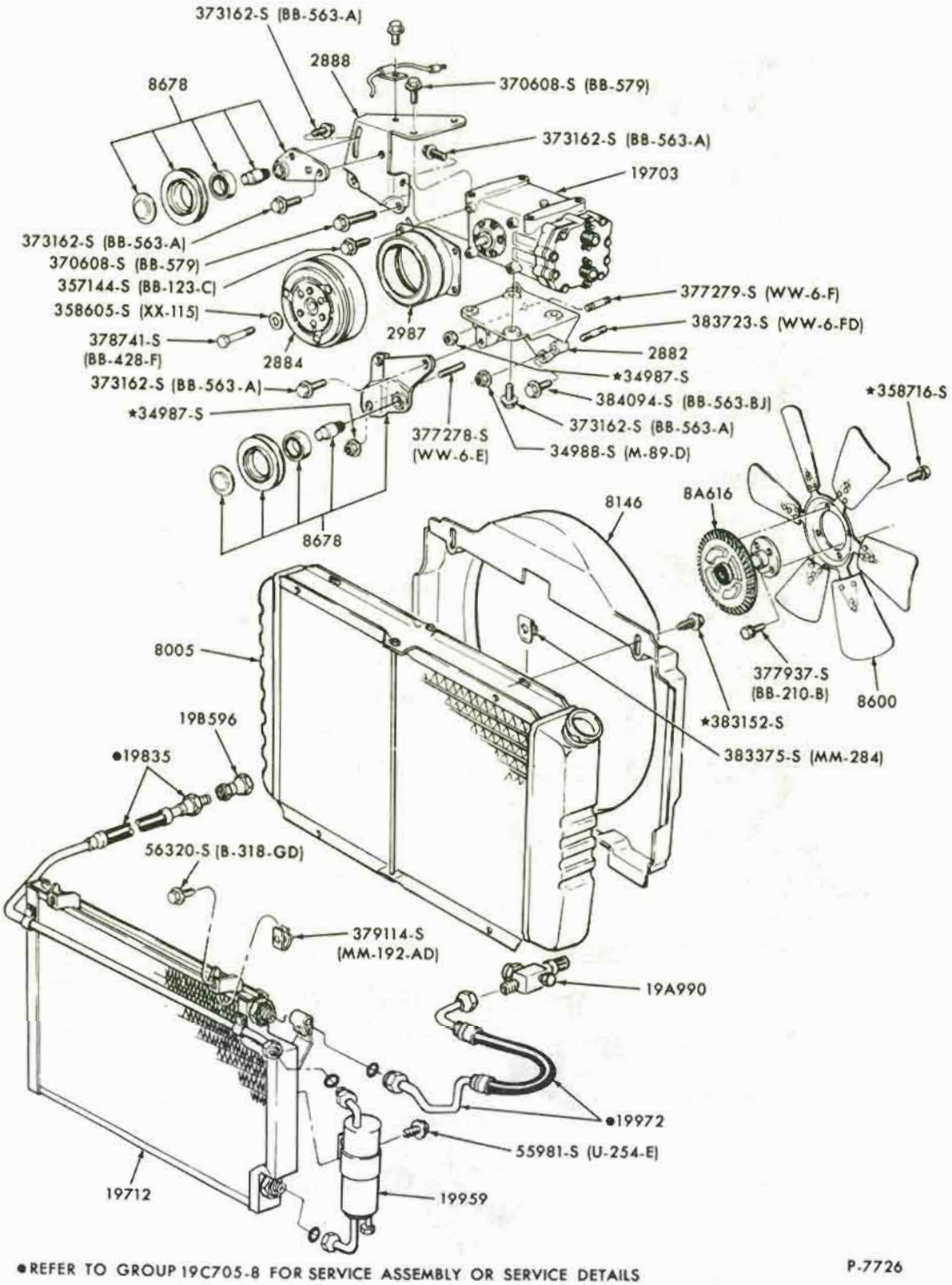

•REFER TO GROUP 19C705-8 FOR SERVICE ASSEMBLY OR SERVICE DETAILS

P-7726

AIR CONDITIONING PARTS (ENGINE COMPARTMENT)
1970/71 THUNDERBIRD-8 CYL. 429-w/INTEGRAL A/C

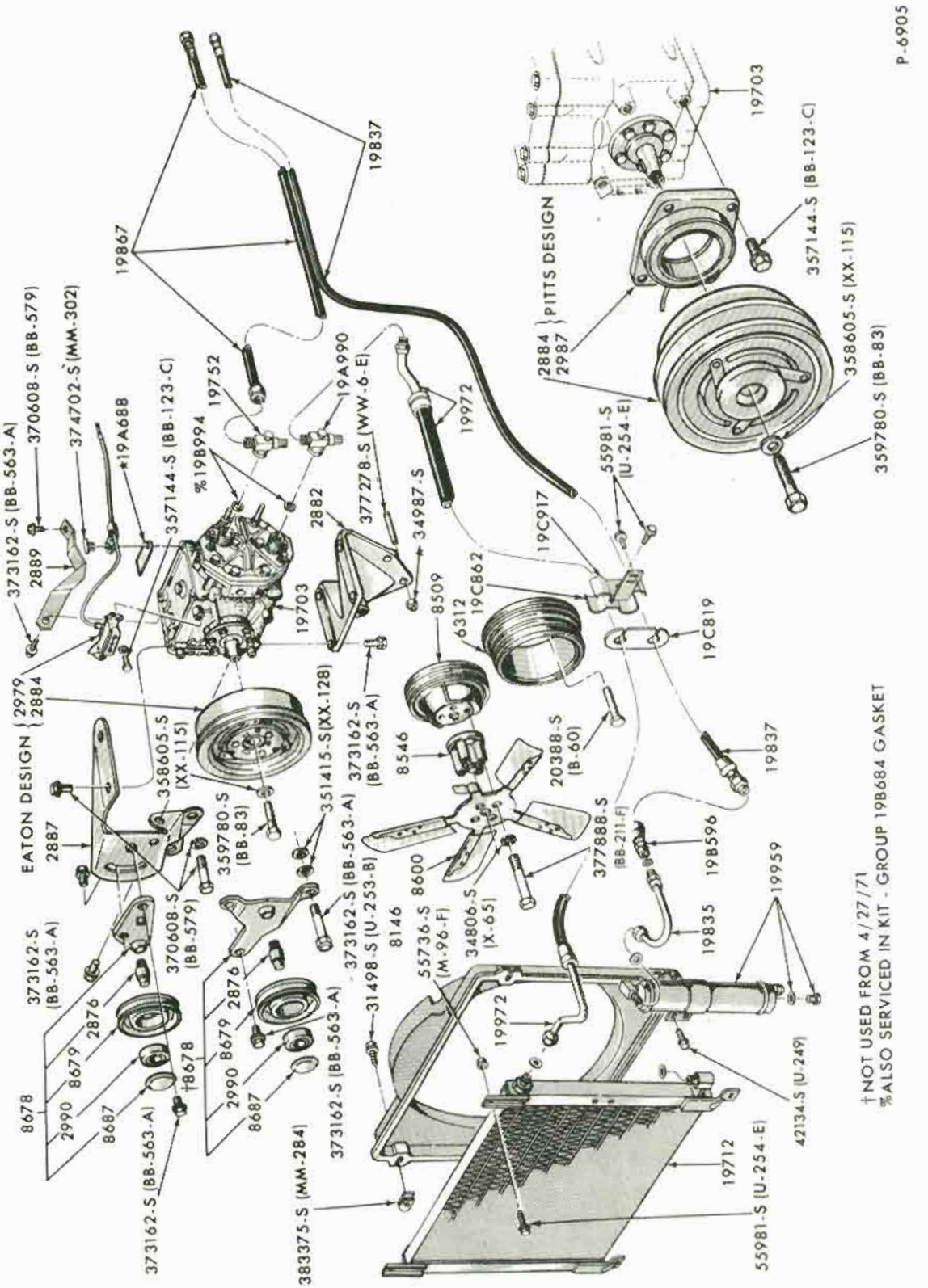

AIR CONDITIONING PARTS (ENGINE COMPARTMENT)
1971/72 MAVERICK-8 CYL.302-w/INTEGRAL A/C

COPYRIGHT © 1975 — FORD MOTOR COMPANY — DEARBORN, MICHIGAN

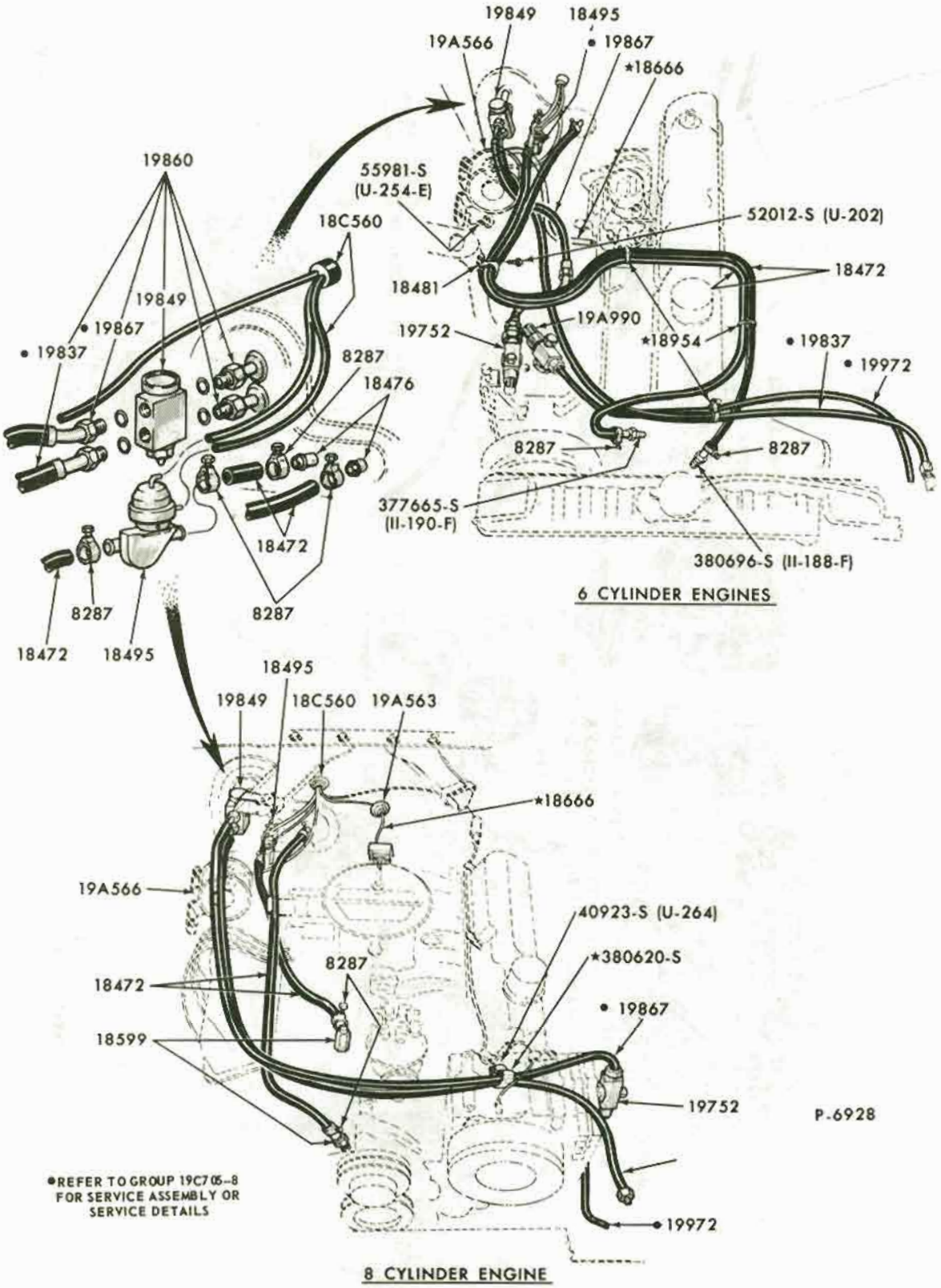

VACUUM HOSES-AIR CONDITIONING
1971/72 MAVERICK-8 CYL.302-w/INTEGRAL A/C

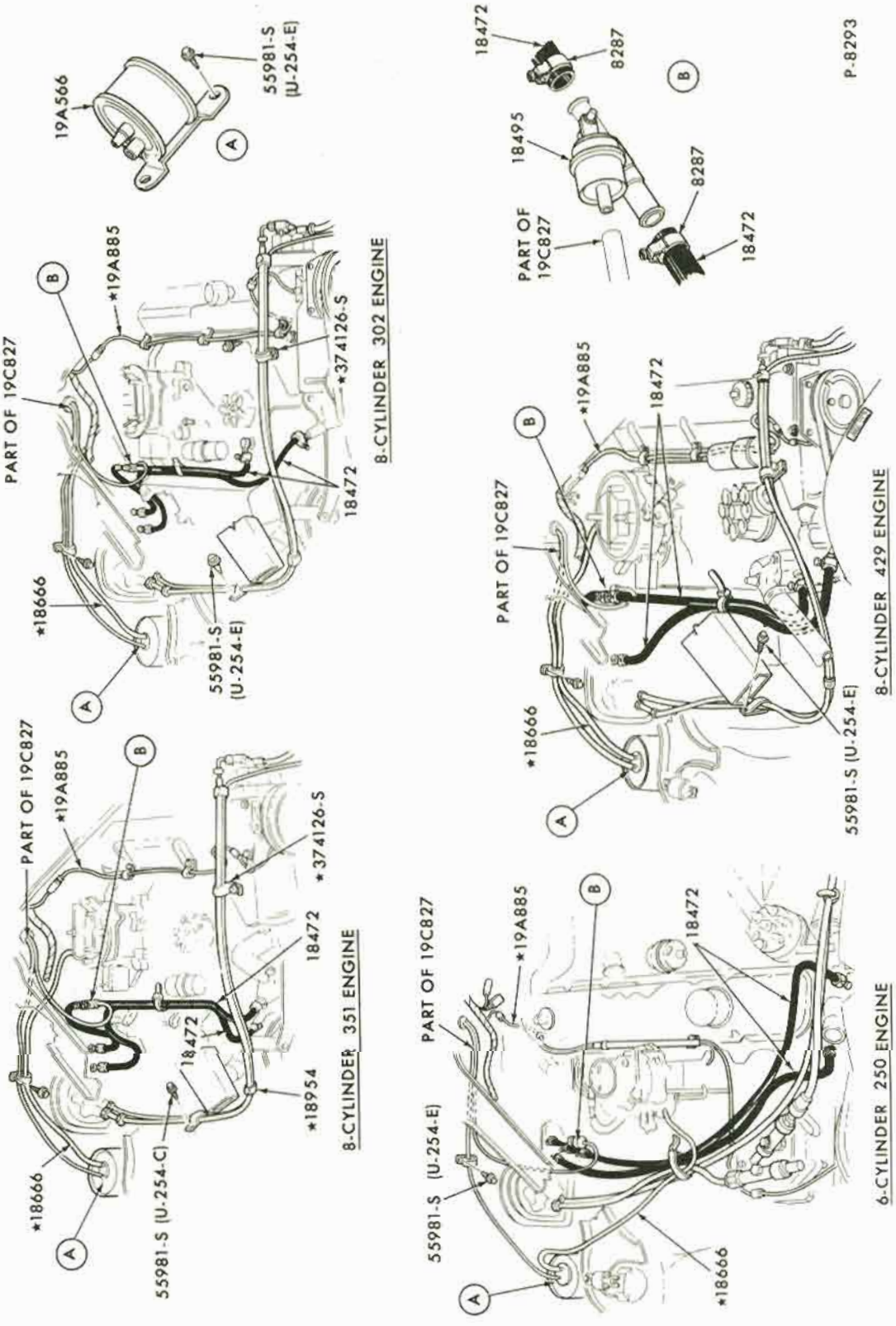

VACUUM HOSES-AIR CONDITIONING
1971/72 MUSTANG-8 CYL.-w/INTEGRAL A/C

COPYRIGHT © 1975 — FORD MOTOR COMPANY — DEARBORN, MICHIGAN

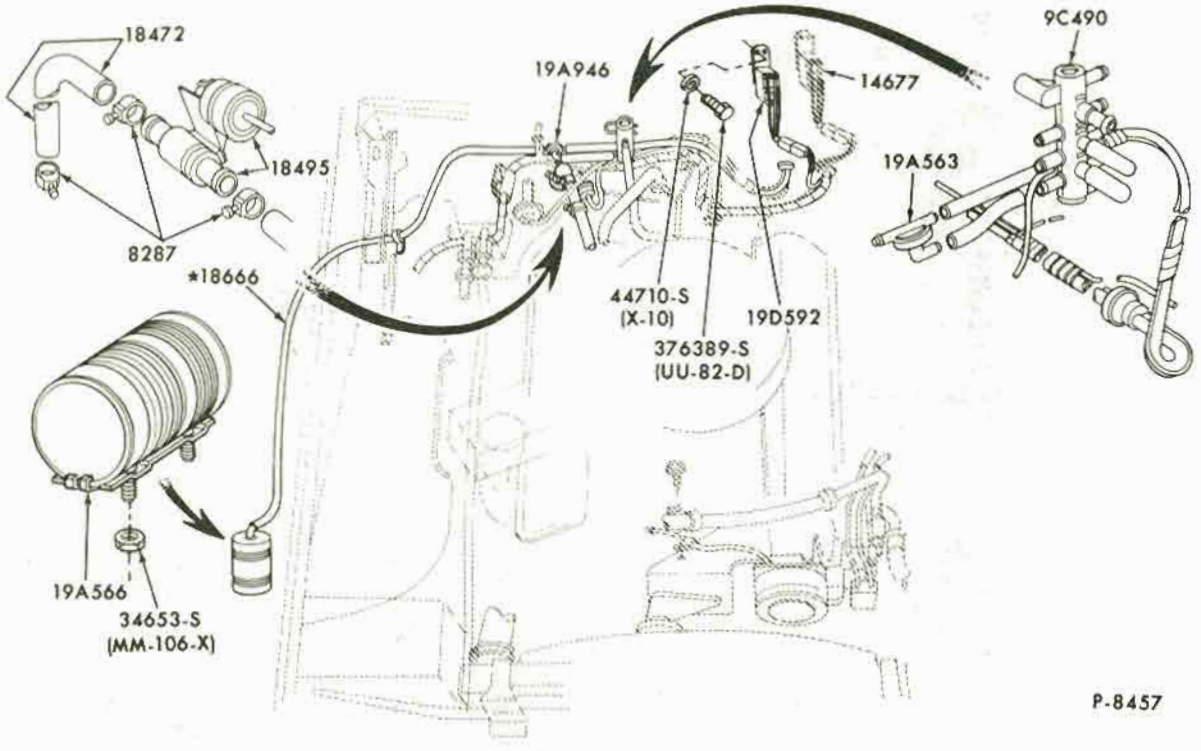

VACUUM HOSES - AIR CONDITIONING
1971/72 FORD-8 CYL.-w/INTEGRAL A/C

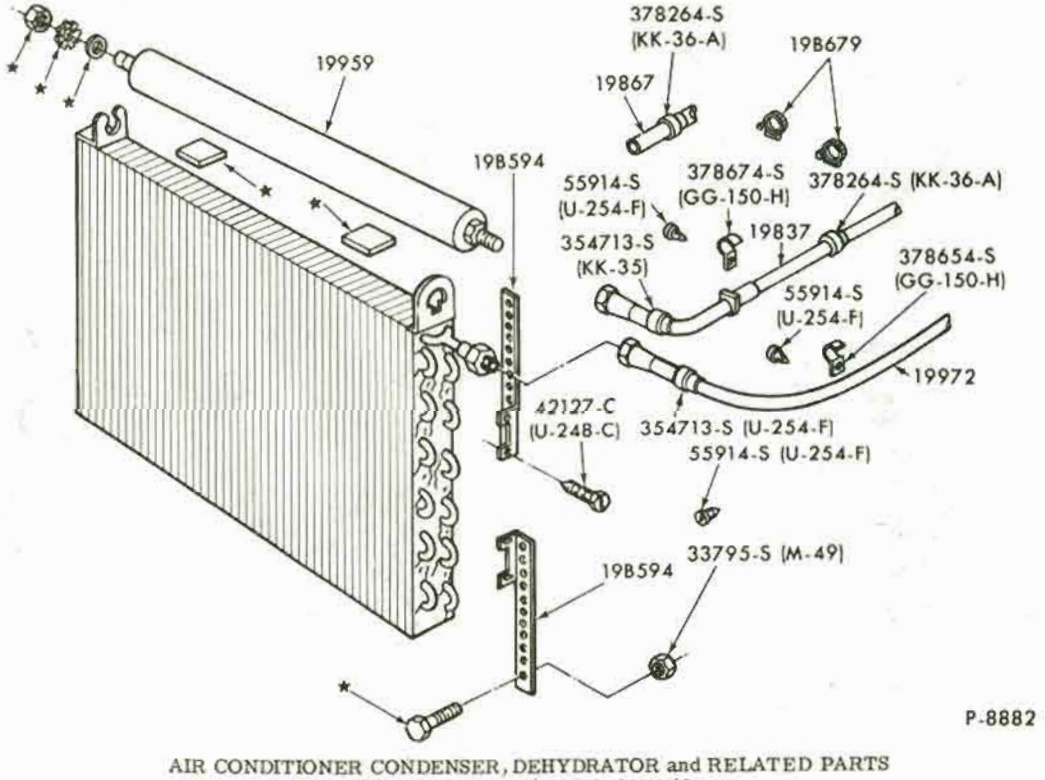

AIR CONDITIONER CONDENSER, DEHYDRATOR and RELATED PARTS
1972 8 CYL. - w/ HANG-ON A/C

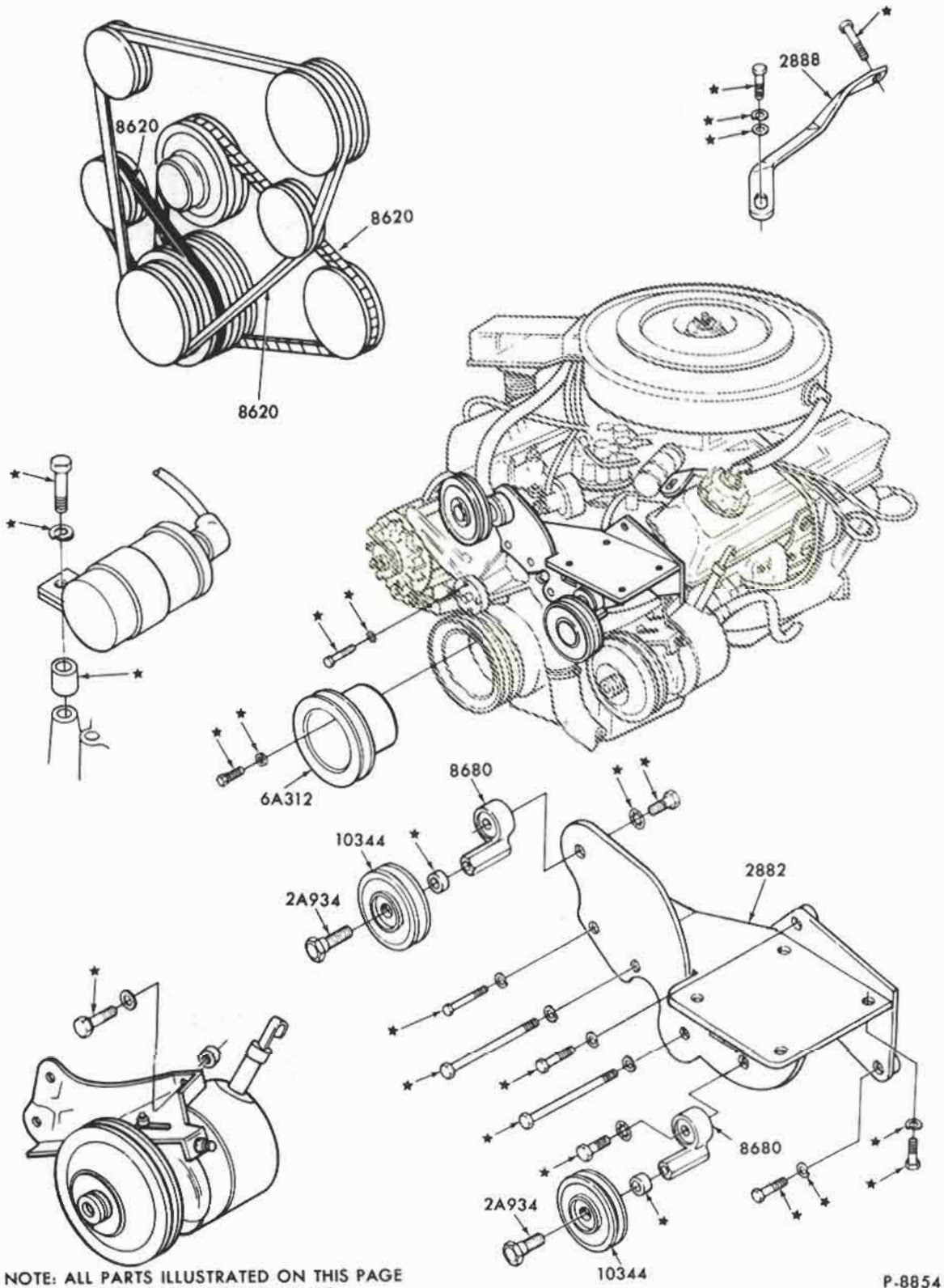

NOTE: ALL PARTS ILLUSTRATED ON THIS PAGE ARE PART OF THE 19B969 ENGINE KIT.

P-8854

AIR CONDITIONING PARTS (ENGINE COMPARTMENT)
1972 FORD, TORINO - 8 CYL.429 - W/HANG-ON A/C

COPYRIGHT © 1975 — FORD MOTOR COMPANY — DEARBORN, MICHIGAN

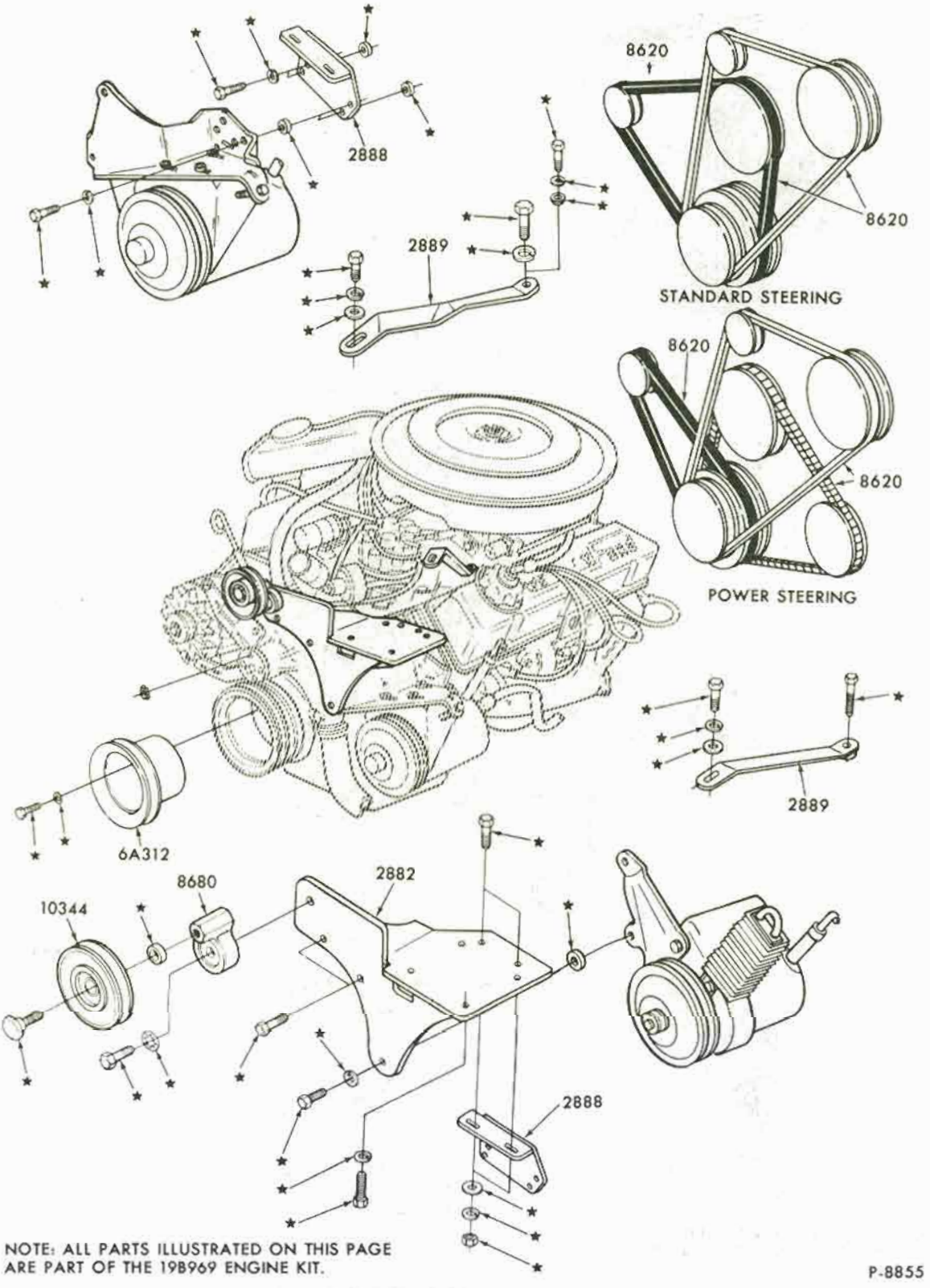

NOTE: ALL PARTS ILLUSTRATED ON THIS PAGE ARE PART OF THE 19B969 ENGINE KIT.

P-8855

AIR CONDITIONING PARTS (ENGINE COMPARTMENT)

1972 FORD, TORINO, MUSTANG - 8 CYL. 351-C, 400 -w/ HANG-ON A/C

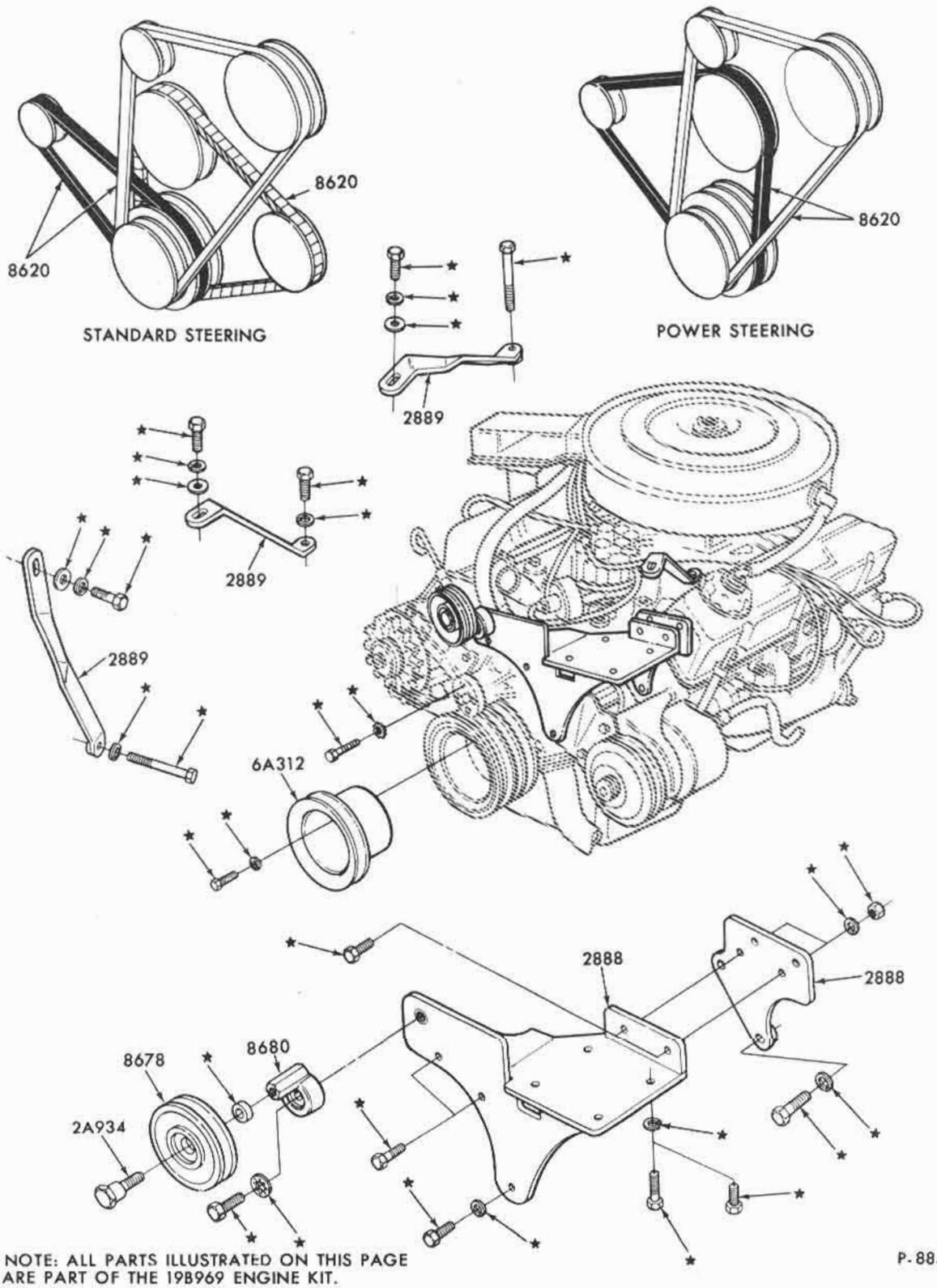

NOTE: ALL PARTS ILLUSTRATED ON THIS PAGE ARE PART OF THE 19B969 ENGINE KIT.

P-8856

AIR CONDITIONING PARTS (ENGINE COMPARTMENT)

1972 FORD, TORINO, MUSTANG, MAVERICK - 8 CYL. 302, 351 - W/HANG-ON A/C

COPYRIGHT © 1975 — FORD MOTOR COMPANY — DEARBORN, MICHIGAN

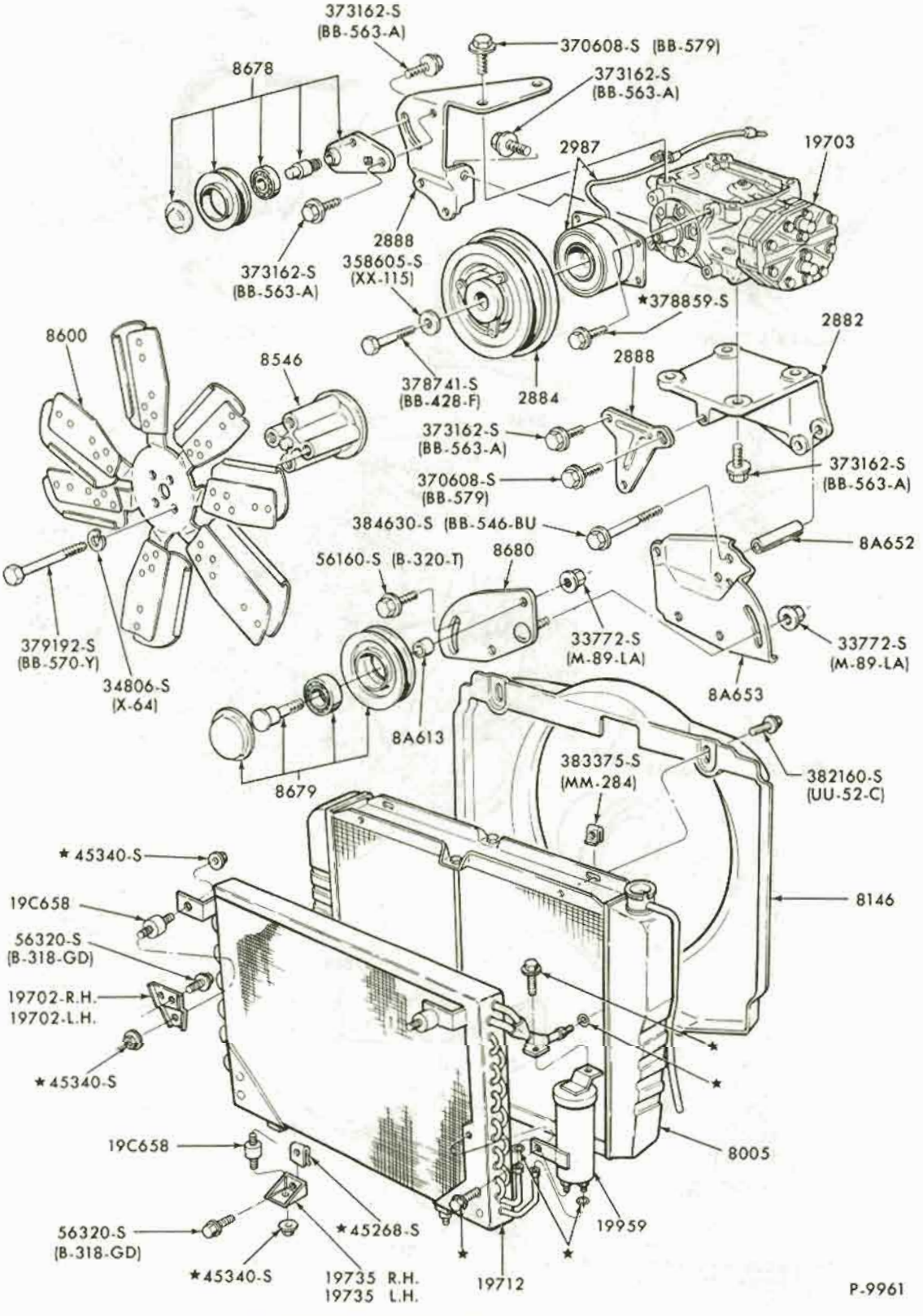

AIR CONDITIONING PARTS (ENGINE COMPARTMENT)
1972 TORINO - 8 CYLINDER 302,351 -w/INTEGRAL A/C

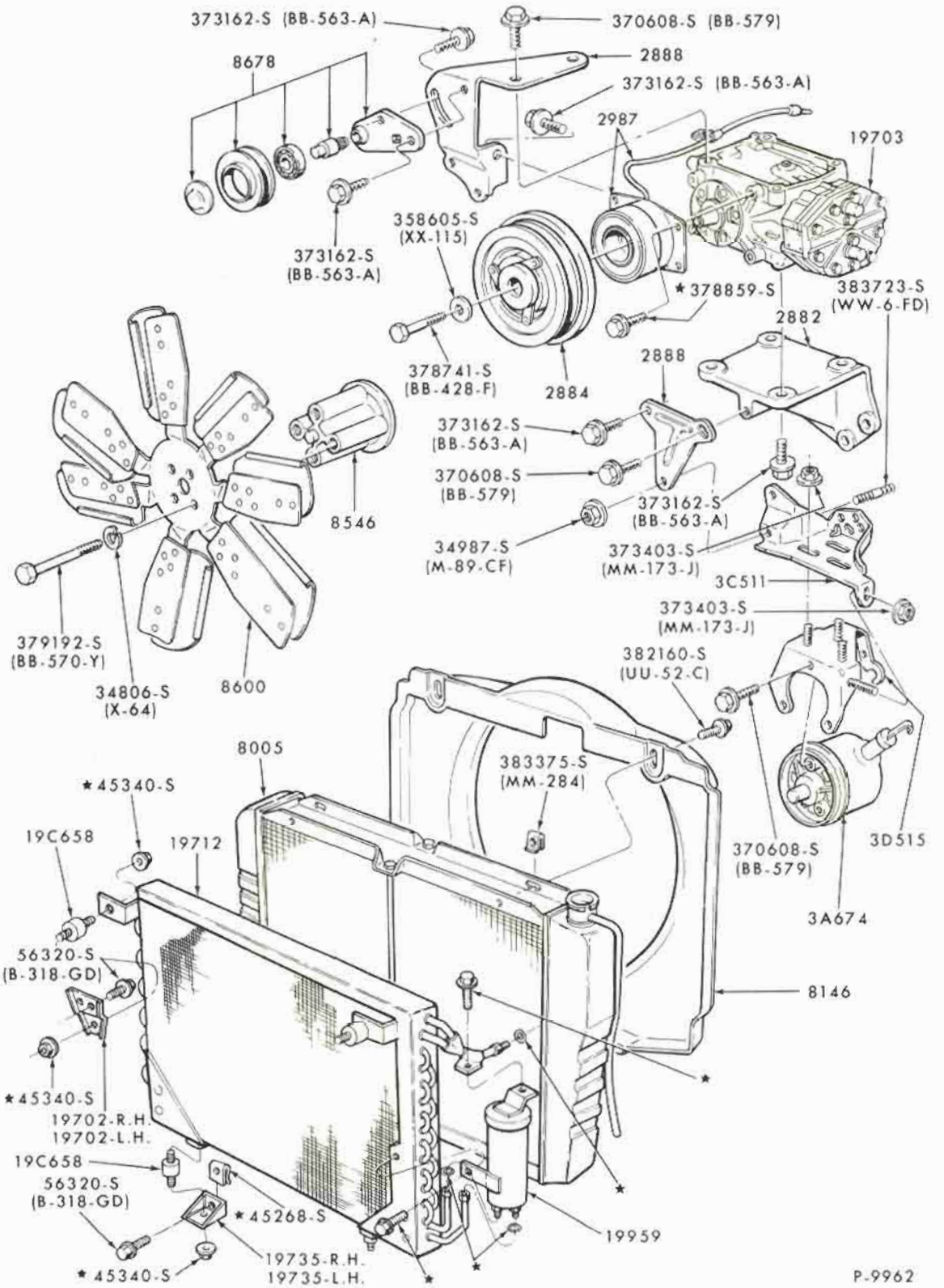

AIR CONDITIONING PARTS (ENGINE COMPARTMENT)
1972 TORINO - 8 CYLINDER 400 - w/INTEGRAL A/C

COPYRIGHT © 1975 — FORD MOTOR COMPANY — DEARBORN, MICHIGAN

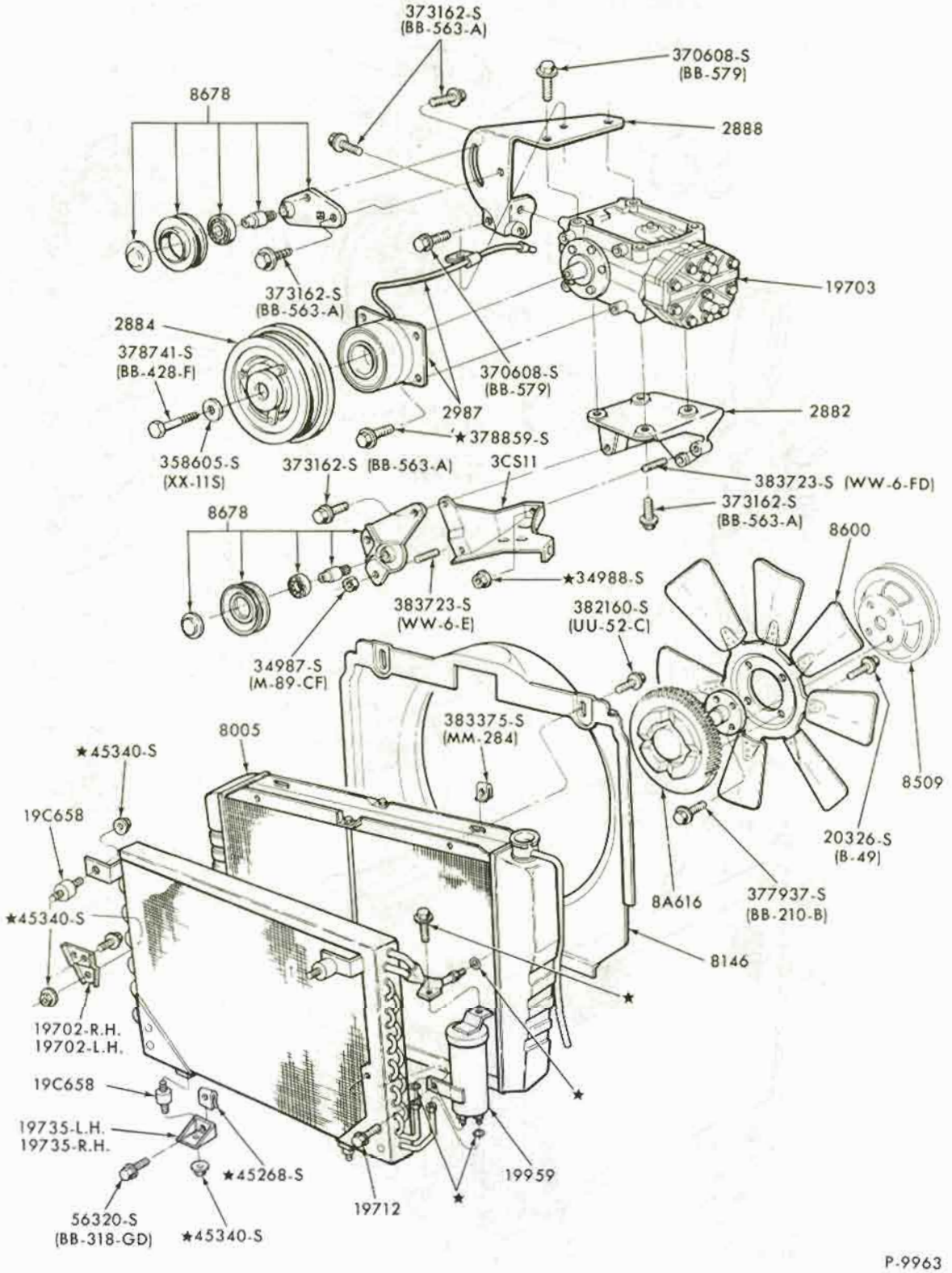

P-9963

AIR CONDITIONING PARTS (ENGINE COMPARTMENT)
1972 TORINO - 8 CYLINDER 429 - w/INTEGRAL A/C

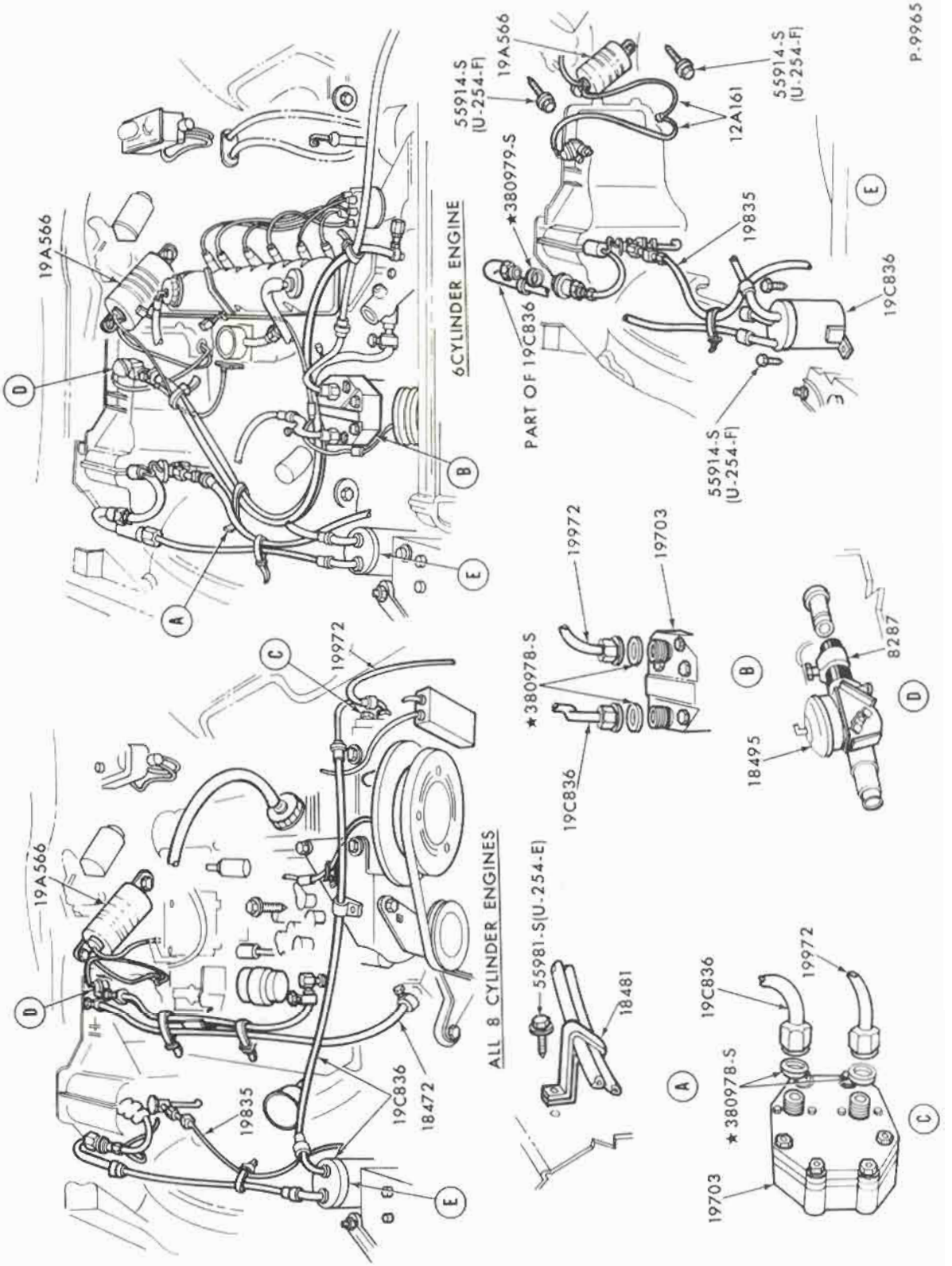

VACUUM HOSES - AIR CONDITIONER
1972 TORINO - w/INTEGRAL A/C

COPYRIGHT © 1975 — FORD MOTOR COMPANY — DEARBORN, MICHIGAN

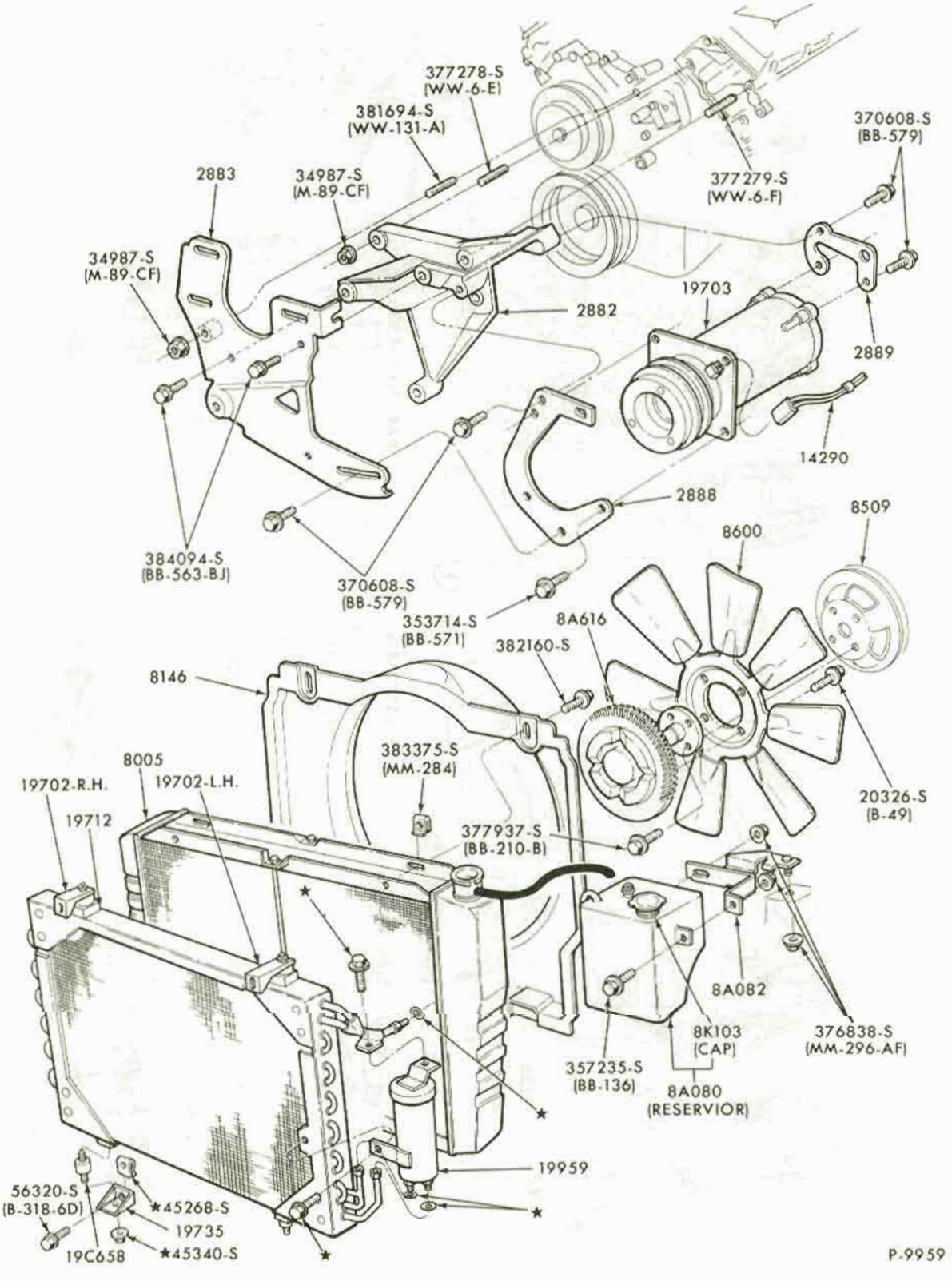

AIR CONDITICNING PARTS (ENGINE CCMPARTMENT)
1972 THUNDERBIRD - 8 CYLINDER 429,460 - w/INTEGRAL A/C

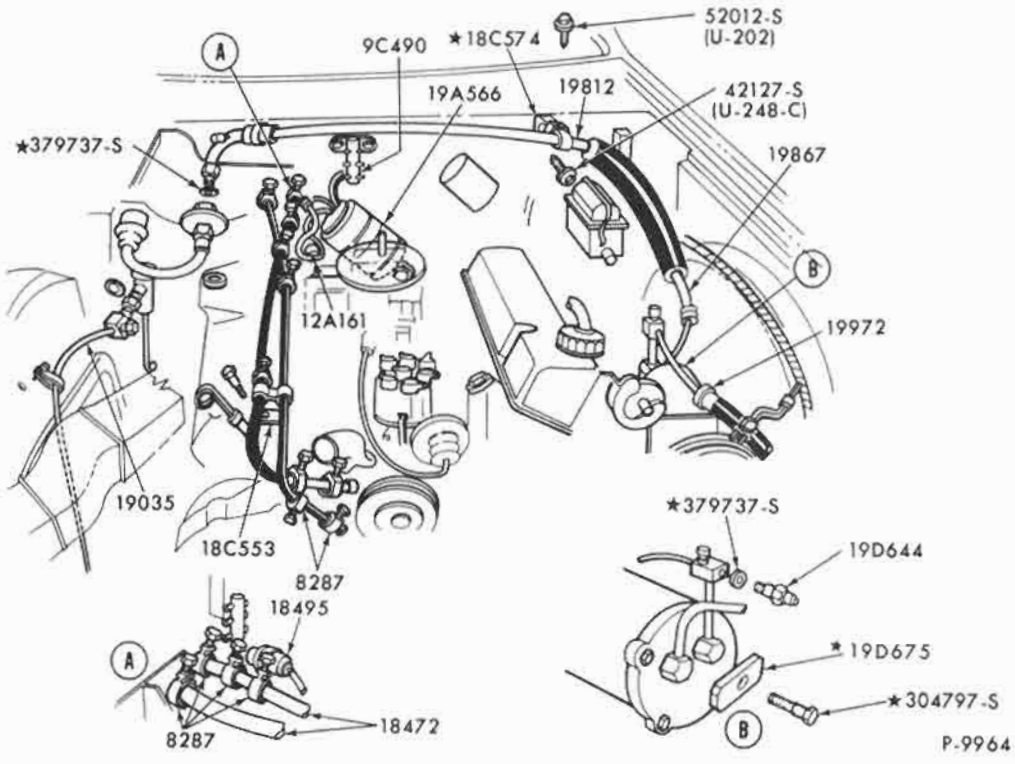

VACUUM HOSES - AIR CONDITIONING
1972 THUNDERBIRD - w/INTEGRAL A/C

COPYRIGHT © 1975 — FORD MOTOR COMPANY — DEARBORN, MICHIGAN

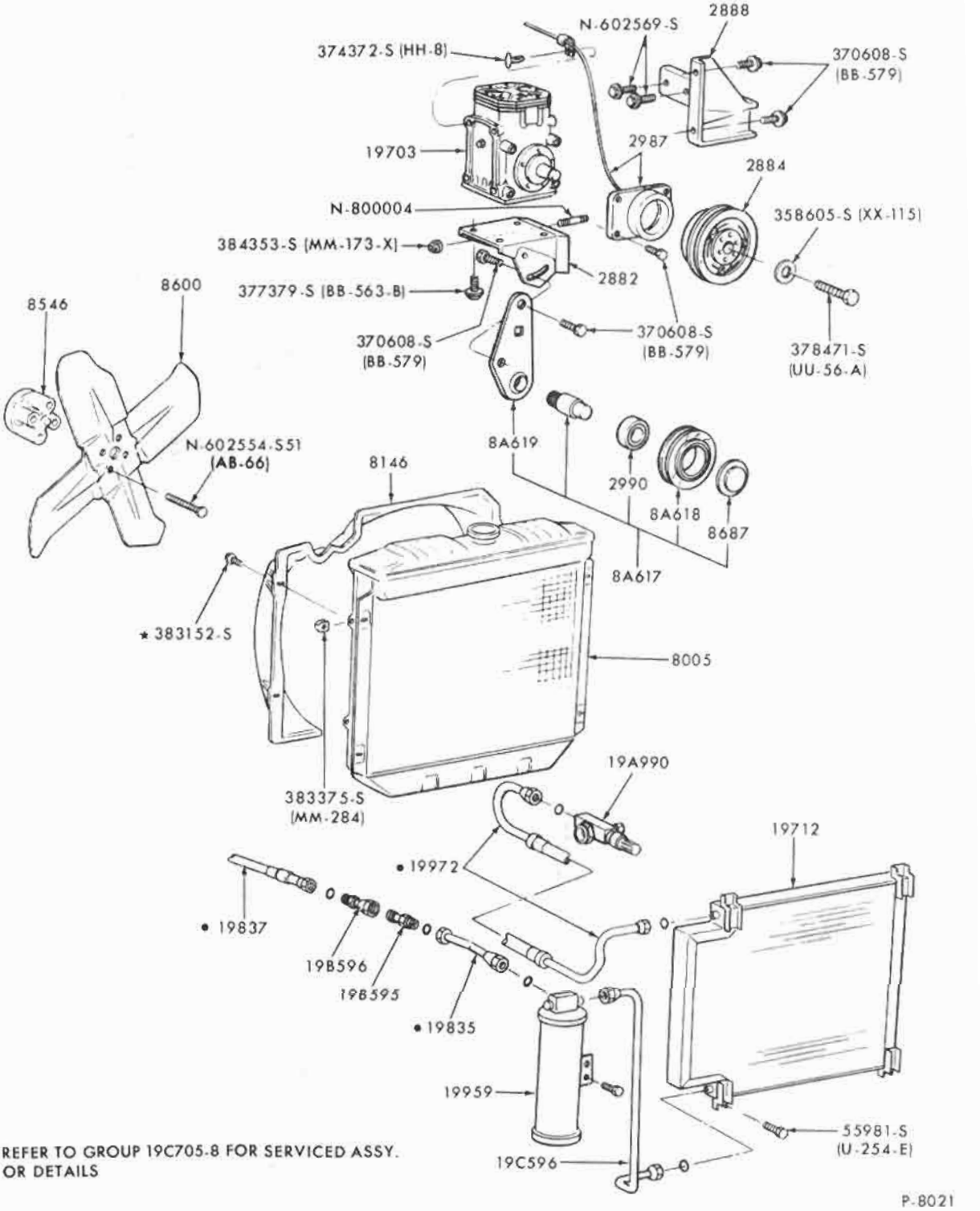

• REFER TO GROUP 19C705-8 FOR SERVICED ASSY. OR DETAILS

P-8021

AIR CONDITIONING PARTS (ENGINE COMPARTMENT)
1971/72 PINTO - 4 CYL. 122 - w/INTEGRAL A/C

COPYRIGHT © 1975 — FORD MOTOR COMPANY — DEARBORN, MICHIGAN

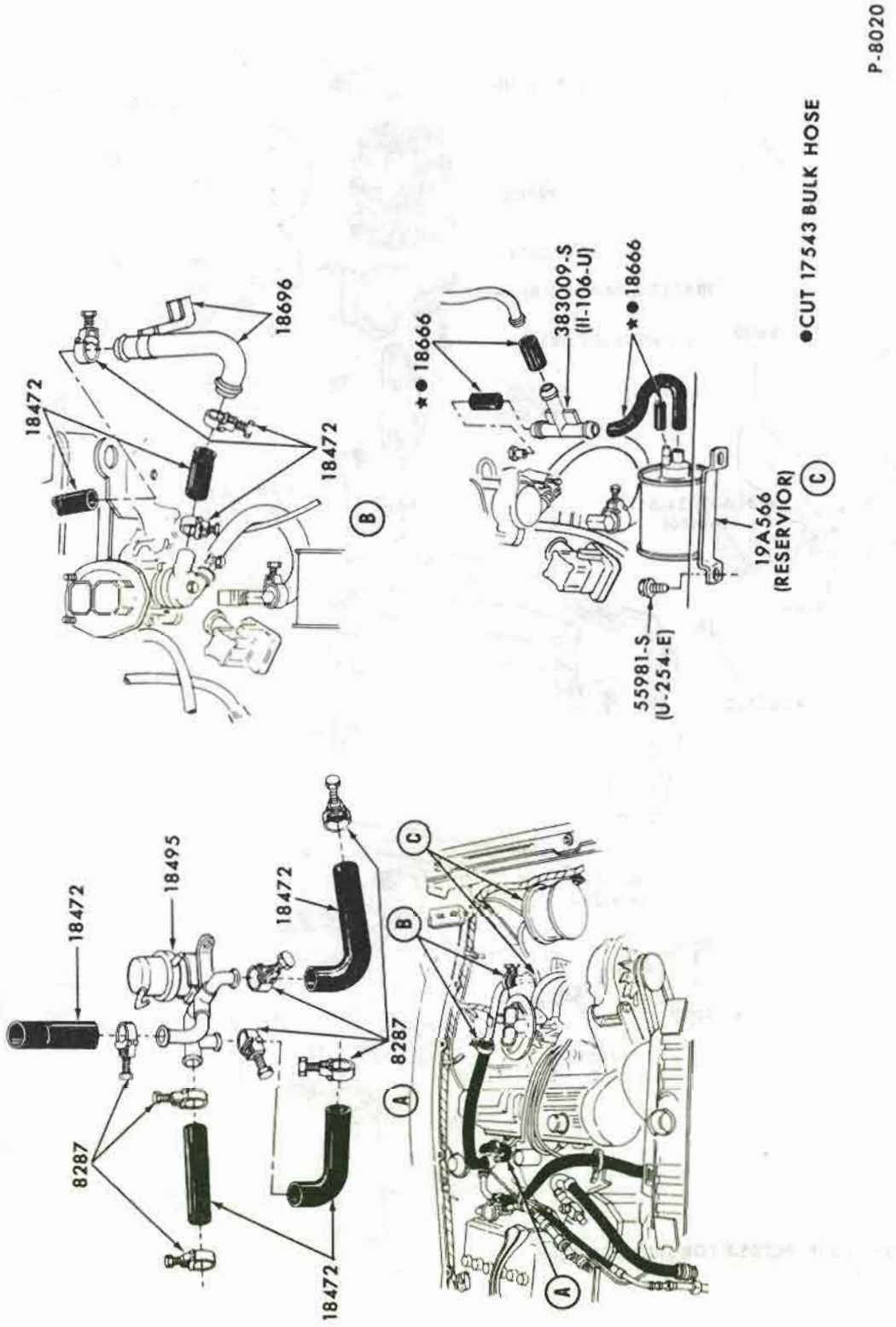

VACUUM HOSES - AIR CONDITIONER
1971/72 PINTO -w/INTEGRAL A/C

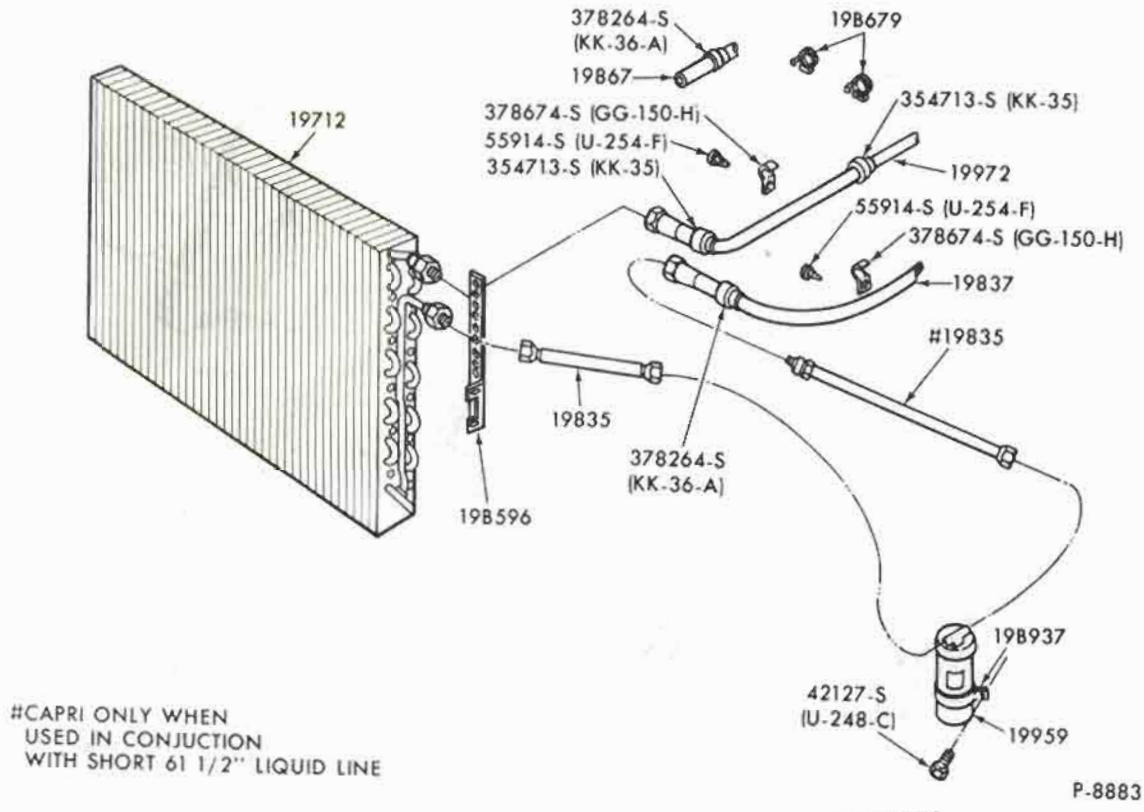

AIR CONDITIONER CONDENSER, DEHYDRATOR and RELATED PARTS
1972 PINTO - 4 CYL/ 98 ENGINE - W/HANG-ON A/C

COPYRIGHT © 1975 — FORD MOTOR COMPANY — DEARBORN, MICHIGAN

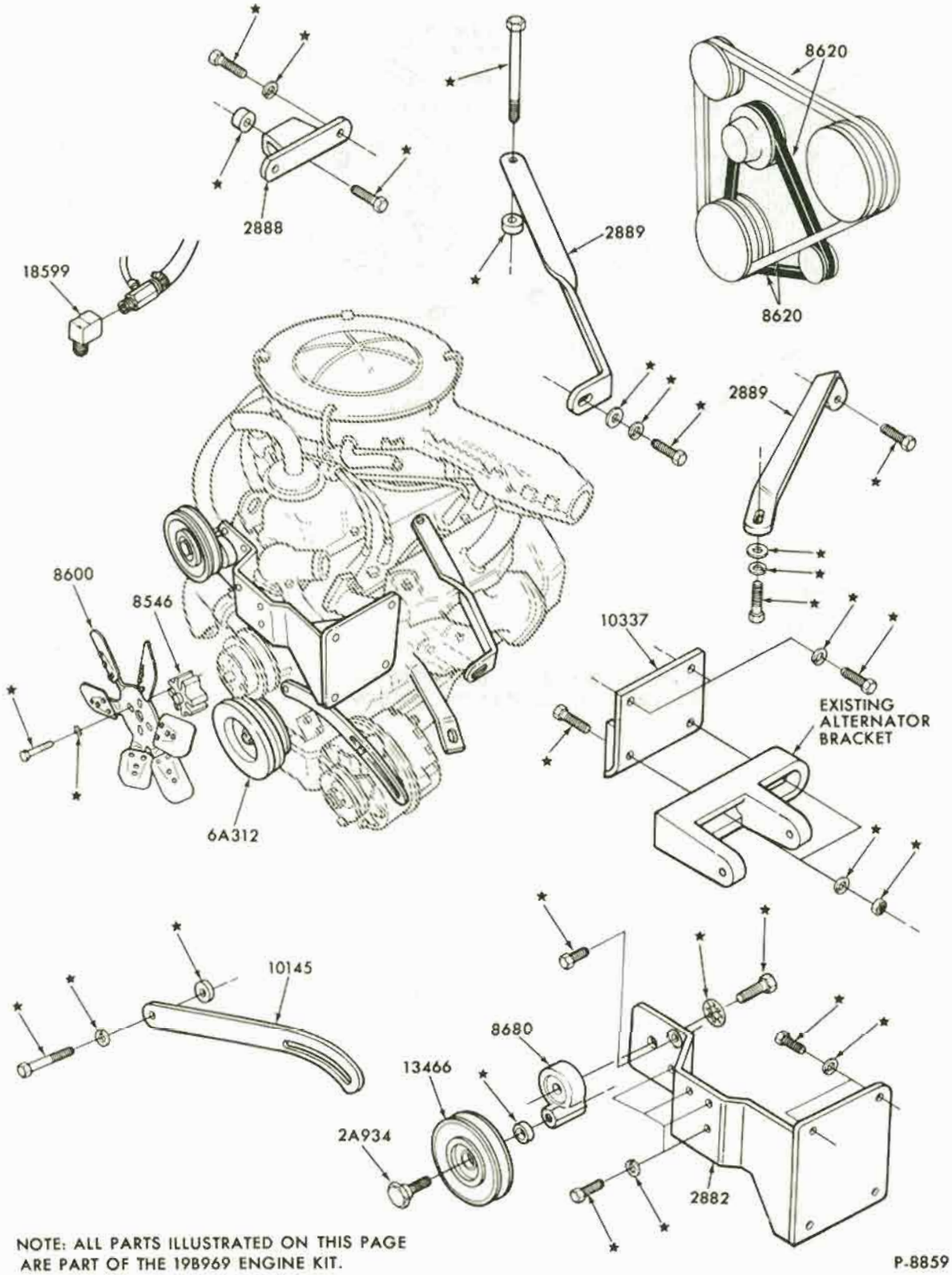

NOTE: ALL PARTS ILLUSTRATED ON THIS PAGE ARE PART OF THE 19B969 ENGINE KIT.

P-8859

AIR CONDITIONER PARTS (ENGINE COMPARTMENT)

1972 PINTO - 4 CYL. 98 ENGINE - W/HANG-ON A/C

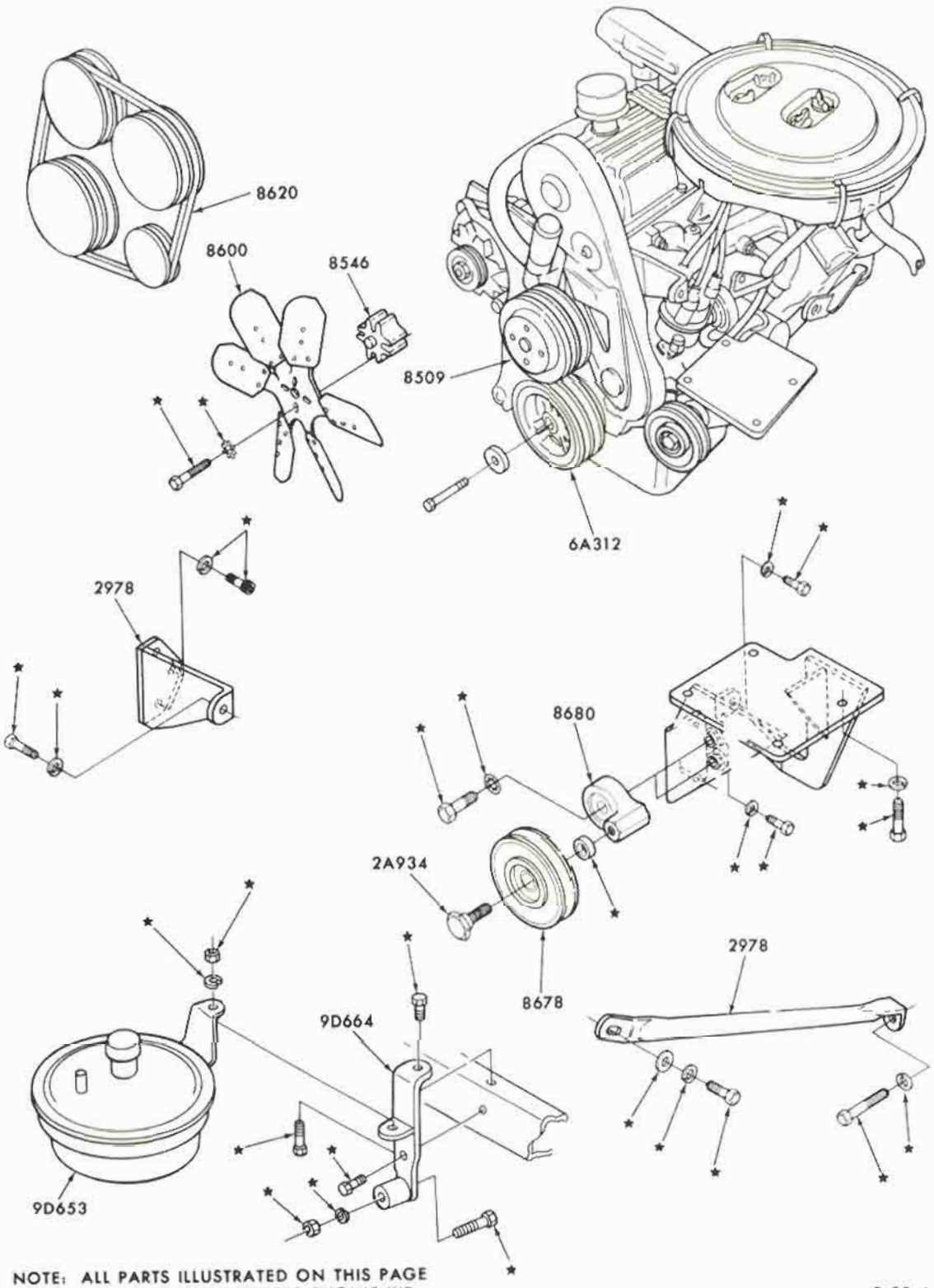

NOTE: ALL PARTS ILLUSTRATED ON THIS PAGE ARE PART OF THE 19B969 ENGINE KIT.

P-8941

AIR CONDITIONER PARTS (ENGINE COMPARTMENT)

1972 PINTO - 4 CYL. 98(1600cc), 122(2000cc) ENGINES - w/HANG-ON A/C

COPYRIGHT © 1975 — FORD MOTOR COMPANY — DEARBORN, MICHIGAN

INDEX

THIS INDEX SECTION INCLUDES THE FOLLOWING MAJOR GROUPS:

BODY BOLTS, MOUNTINGS and RELATED PARTS
CONSOLE and RELATED PARTS, FLOOR and ROOF
FLOOR PAN RUBBER PLUGS and RELATED PARTS
INSTRUMENT PANEL, PAD
VENTILATING SYSTEMS
WINDSHIELD and RELATED PARTS

TITLE	SECTION	PAGE	ILLUS. NO.
1965			
A (FORD)			
Console	045	1	P-4737
Forced air ventilation system - body type 57	000	2	P-4633
Instrument panel and pad	042	5	P-8990
Ventilating ducts	000	1	P-4020
Windshield - body types 54, 62, 71	030	1	P-4649
- body types 57, 63, 65	030	1	P-4652
- body type 76	030	2	P-4736
B (FAIRLANE)			
Console - except body type 65B	045	2	P-3618
- body type 65B	045	2	P-3971
Instrument panel and pad	042	6	P-8988
Ventilating ducts	000	1	P-4020
Windshield - body types 54, 62, 71	030	2	P-3759
- body type 65	030	3	P-4018
F (MUSTANG)			
Console - with A/C	045	3	P-4602
-without A/C	045	3	P-4493
Instrument panel and pad - w/gauges	042	1	P-8972
- w/indicator lights	042	2	P-8984
Ventilating ducts	000	1	P-4020
Windshield - body types 63, 65	030	3	P-4491
- body type 76	030	4	P-4492
S (THUNDERBIRD)			
Console	045	4	P-4355
Forced air ventilation system - body type 63	000	3	P-4406
Instrument panel and pad	042	4	P-8982
Windshield - body type 63	030	4	P-4336
- body type 76	030	5	P-4337
X (FALCON)			
Console - except body types 63C, D, 66G, H, 76B, D	045	2	P-3618
- body types 63C, D, 66G, H, 76B, D	045	5	P-4497
Instrument panel and pad	042	3	P-8994
Ventilating ducts	000	1	P-4020
Windshield - except body types 63, 76	030	5	P-3156
- body type 63	030	6	P-4092
- body type 76	030	6	P-4019

COPYRIGHT © 1975 — FORD MOTOR COMPANY — DEARBORN, MICHIGAN

INDEX

TITLE	SECTION	PAGE	ILLUS. NO.
1966			
A (FORD)			
Console	045	1	P-4737
Forced air ventilation system - body type 57	000	2	P-4633
Instrument panel and pad	042	5	P-8990
Ventilating ducts	000	1	P-4020
Windshield - body types 54, 62, 71	030	1	P-4649
- body types 57, 63, 65	030	1	P-4652
- body type 76	030	2	P-4736
B (FAIRLANE)			
Console	045	6	P-5093
Instrument panel	042	11	P-8976
Ventilating ducts	000	1	P-4020
Windshield - except body type 76	030	7	P-5068
- body type 76	030	7	P-5069
F (MUSTANG)			
Console - with A/C	045	3	P-4602
- without A/C	045	3	P-4493
Instrument panel and pad - w/gauges	042	1	P-8972
Ventilating ducts	000	1	P-4020
Windshield - body types 63, 65	030	3	P-4491
- body type 76	030	4	P-4492
S (THUNDERBIRD)			
Console	045	4	P-4355
Forced air ventilation system - body type 63	000	3	P-4406
Instrument panel and pad	042	4	P-8982
Windshield - body type 63	030	4	P-4336
- body type 76	030	5	P-4337
U (BRONCO)			
Instrument panel and pad	042	7	P-8980
Windshield	030	8	P-4970
X (FALCON)			
Console	045	6	P-5093
Instrument panel and pad	042	13	P-8986
Ventilating ducts	000	1	P-4020
Windshield	030	7	P-5068

INDEX

TITLE	SECTION	PAGE	ILLUS. NO.
1967			
A (FORD)			
Console	045	7	P-5529
Instrument panel	042	10	P-8992
Instrument panel pad and attaching parts	042	20	P-7671
Ventilating ducts	000	1	P-4020
Windshield - body types 54, 62, 71	030	1	P-4649
- body types 57, 63, 65	030	1	P-4652
- body type 76	030	2	P-4736
B (FAIRLANE)			
Console	045	6	P-5093
Instrument panel	042	11	P-8976
Ventilating ducts	000	1	P-4020
Windshield - except body type 76	030	7	P-5068
- body type 76	030	7	P-5069
F (MUSTANG)			
Console	045	5	P-5539
Instrument panel	042	8	P-8974
Instrument panel pad and attaching parts	042	20	P-7661
Ventilating ducts	000	1	P-4020
Windshield - body types 63, 65	030	3	P-4491
- body type 76	030	4	P-4492
S (THUNDERBIRD)			
Console (floor) - body type 57	045	8	P-5477
- body type 65	045	8	P-5478
Instrument panel	042	9	P-8978
Instrument panel pad and attaching parts	042	22	P-7663
Windshield	030	8	P-5358
U (BRONCO)			
Instrument panel and pad	042	7	P-8980
Windshield	030	8	P-4970
X (FALCON)			
Instrument panel and pad	042	13	P-8986
Ventilating ducts	000	1	P-4020
Windshield	030	7	P-5068

COPYRIGHT © 1975 — FORD MOTOR COMPANY — DEARBORN, MICHIGAN

INDEX

TITLE	SECTION	PAGE	ILLUS. NO.
1968			
A (FORD)			
Console	045	10	P-6185
Instrument panel and pad	042	17	P-5994
Ventilating ducts	000	1	P-4020
Windshield - body types 54, 62, 71	030	1	P-4649
- body types 57, 63, 65	030	1	P-4652
- body type 76	030	2	P-4736
B (FAIRLANE/TORINO)			
Console	045	11	P-6186
Instrument panel	042	15	P-6190
Instrument panel pad and attaching parts	042	21	P-7660
Ventilating ducts	000	1	P-4020
Windshield - except body type 76	030	7	P-5068
- body type 76	030	7	P-5069
F (MUSTANG)			
Console	045	12	P-6184
Instrument panel	042	8	P-8974
Instrument panel pad and attaching parts	042	20	P-7661
Ventilating ducts	000	1	P-4020
Windshield - body types 63, 65	030	3	P-4491
- body type 76	030	4	P-4492
S (THUNDERBIRD)			
Console (floor)	045	14	P-6183
Instrument panel	042	16	P-6036
Instrument panel pad and attaching parts	042	22	P-7664
Windshield	030	8	P-5358
U (BRONCO)			
Instrument panel and pad	042	12	P-8996
Windshield	030	8	P-4970
X (FALCON)			
Instrument panel	042	15	P-6190
Instrument panel pad and attaching parts	042	21	P-7660
Ventilating ducts	000	1	P-4020
Windshield	030	7	P-5068

INDEX

TITLE	SECTION	PAGE	ILLUS. NO.
1969			
A (FORD)			
Console	045	13	P-6726
Instrument panel	042	19	P-6653
Instrument panel pad and attaching parts	042	22	P-7673
Ventilating ducts	000	4	P-6977
Windshield - body types 54, 57, 62, 63, 65, 71	030	9	P-6684
- body type 76	030	9	P-6685
B (FAIRLANE/TORINO)			
Console	045	11	P-6186
Instrument panel	042	15	P-6190
Instrument panel pad and attaching parts	042	21	P-7660
Ventilating ducts	000	4	P-6977
Windshield - except body type 76	030	7	P-5068
- body type 76	030	7	P-5069
F (MUSTANG)			
Console - except Shelby GT350/500	045	12	P-6737
- Shelby GT350/500	045	16	P-6949
Instrument panel	042	14	P-6659
Instrument panel pad and attaching parts	042	23	P-7662
Ventilating ducts	000	4	P-6977
Windshield - body types 63, 65	030	10	P-6740
- body type 76	030	10	P-6741
P (MAVERICK)			
Ventilating ducts	000	4	P-6977
S (THUNDERBIRD)			
Console (floor) - before 4/1/69	045	14	P-6183
- from 4/1/69	045	15	P-6873
Instrument panel	042	16	P-6036
Instrument panel pad and attaching parts	042	22	P-7664
Ventilating ducts	000	4	P-6977
Windshield	030	8	P-5358
U (BRONCO)			
Instrument panel and pad	042	12	P-8996
Windshield	030	8	P-4970
X (FALCON)			
Instrument panel	042	15	P-6190
Instrument panel pad and attaching parts	042	21	P-7660
Ventilating ducts	000	4	P-6977
Windshield	030	7	P-5068

COPYRIGHT © 1975 — FORD MOTOR COMPANY — DEARBORN, MICHIGAN

INDEX

TITLE	SECTION	PAGE	ILLUS. NO.
1970			
A (FORD)			
Console (floor)	045	13	P-6726
Instrument panel	042	19	P-6653
Instrument panel pad and attaching parts	042	22	P-7673
Windshield - body types 54, 57, 63, 65, 71	030	9	P-6684
- body type 76	030	9	P-6685
Ventilating ducts	000	4	P-6977
B (FAIRLANE/TORINO)			
B (FALCON) - FROM 1/2/70			
Console	045	21	P-8223
Instrument panel	042	18	P-7099
Instrument panel pad and attaching parts	042	23	P-7659
Ventilating ducts	000	4	P-6977
Windshield - body types 54, 57, 62, 65, 71	030	12	P-7186
- body type 63	030	12	P-7187
- body type 76	030	13	P-7188
F (MUSTANG)			
Console (floor)-except Shelby GT350/500	045	12	P-6737
Console (floor)-Shelby GT350/500	045	16	P-6949
Instrument panel	042	14	P-6659
Instrument panel pad and attaching parts	042	23	P-7662
Ventilating ducts	000	4	P-6977
Windshield - body types 63, 65	030	10	P-6740
- body type 76	030	10	P-6741
P (MAVERICK)			
Console	045	16	P-6948
Instrument panel and pad	042	29	P-6850
Ventilating ducts	000	4	P-6977
Windshield	030	11	P-6940
S (THUNDERBIRD)			
Console (floor)	045	20	P-8153
Console (roof) - body type 57	045	17	P-7198
- body type 65	045	17	P-7197
Forced air ventilation system	000	5	P-7703
Instrument panel	042	16	P-6036
Instrument panel pad and attaching parts	042	22	P-7664
Ventilating ducts	000	4	P-6977
Windshield - body type 57	030	11	P-7125
- body type 65	030	13	P-7384
U (BRONCO)			
Instrument panel and pad	042	12	P-8996
Windshield	030	8	P-4970
X (FALCON) - BEFORE 1/2/70			
FOR UNITS BUILT FROM 1/2/70 REFER TO B (FALCON)			
Instrument panel and pad	042	12	P-8996
Instrument panel	042	15	P-6190
Ventilating ducts	000	4	P-6977
Windshield	030	7	P-5068

INDEX

TITLE	SECTION	PAGE	ILLUS. NO.
1971			
A (FORD)			
Console (floor)	045	13	P-6726
Instrument panel	042	26	P-8139
Instrument panel pad and attaching parts	042	24	P-8096
Windshield - body types 53, 54, 57, 65, 71	030	16	P-7842
- body type 76	030	15	P-7843
Ventilating ducts	000	6	P-9108
B (TORINO)			
Console	045	21	P-8223
Instrument panel	042	18	P-7099
Instrument panel pad and attaching parts	042	23	P-7659
Ventilating ducts	000	4	P-6977
Windshield - body types 54, 57, 65, 66, 71	030	12	P-7186
- body type 63	030	12	P-7187
- body type 76	030	13	P-7188
F (MUSTANG)			
Console (floor)	045	18	P-8052
Consolette (floor)	045	19	P-8057
Instrument panel	042	27	P-8210
Instrument panel pad and attaching parts	042	25	P-8211
Ventilating ducts	000	6	P-9106
Windshield - body types 63, 65	030	14	P-8051
- body type 76	030	14	P-8059
L (PINTO)			
Consolette (floor)	045	19	P-7931
Instrument panel and pad	042	31	P-8037
Instrument panel pad and attaching parts	042	25	P-8036
Ventilating ducts	000	5	P-8200
Windshield	030	16	P-8033
P (MAVERICK)			
Console	045	16	P-6948
Instrument panel and pad	042	29	P-6850
Ventilating ducts	000	7	P-9105
Windshield	030	11	P-6940
S (THUNDERBIRD)			
Console (floor)	045	20	P-8153
Console (roof) - body type 57	045	17	P-7198
- body type 65	045	17	P-7197
Forced air ventilation system	000	5	P-7703
Instrument panel	042	16	P-6036
Instrument panel pad and attaching parts	042	22	P-7664
Ventilating ducts	000	4	P-6977
Windshield - body type 57	030	11	P-7125
- body type 65	030	13	P-7384
U (BRONCO)			
Instrument panel and pad	042	12	P-8996
Windshield	030	8	P-4970

COPYRIGHT © 1975 — FORD MOTOR COMPANY — DEARBORN, MICHIGAN

INDEX

TITLE	SECTION	PAGE	ILLUS. NO.
1972			
A (FORD)			
Instrument panel	042	26	P-8139
Instrument panel pad and attaching parts	042	24	P-8096
Windshield - body types 53, 54, 57, 65 ,71	030	16	P-7842
- body type 76	030	15	P-7843
Ventilating ducts	000	6	P-9108
B (TORINO)			
Console	045	22	P-8611
Instrument panel and pad	042	30	P-8719
Ventilating ducts	000	7	P-9104
Windshield	030	17	P-8600
F (MUSTANG)			
Console (floor)	045	18	P-8052
Consolette (floor)	045	19	P-8057
Instrument panel	042	27	P-8210
Instrument panel pad and attaching parts	042	25	P-8211
Ventilating ducts	000	6	P-9106
Windshield - body types 63, 65	030	14	P-8051
- body type 76	030	14	P-8059
L (PINTO)			
Consolette (floor)	045	19	P-7931
Instrument panel cover and brace	045	24	P-9925
Instrument panel and pad	042	31	P-8037
Instrument panel pad and attaching parts	042	25	P-8036
Ventilating ducts	000	5	P-8200
Windshield	030	16	P-8033
P (MAVERICK)			
Console	045	16	P-6948
Instrument panel and pad	042	29	P-6850
Ventilating ducts	000	7	P-9105
Windshield	030	11	P-6940
S (THUNDERBIRD)			
Console (floor)	045	23	P-8610
Instrument panel and pad	042	28	P-8619
Windshield	030	17	P-8691
U (BRONCO)			
Instrument panel and pad	042	12	P-8996
Windshield	030	8	P-4970

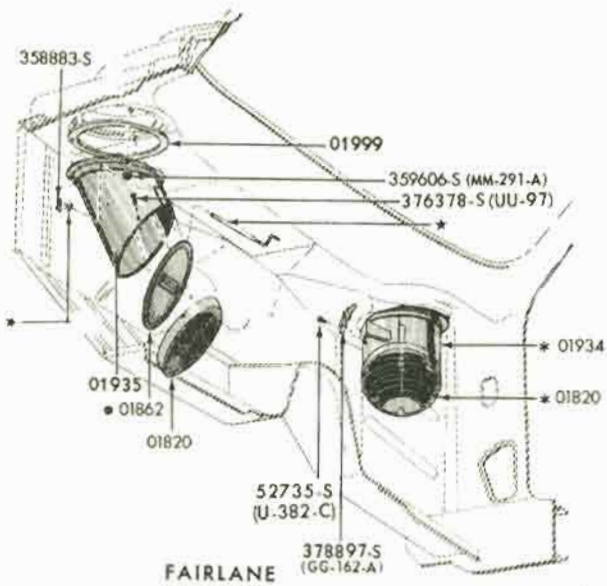

FAIRLANE

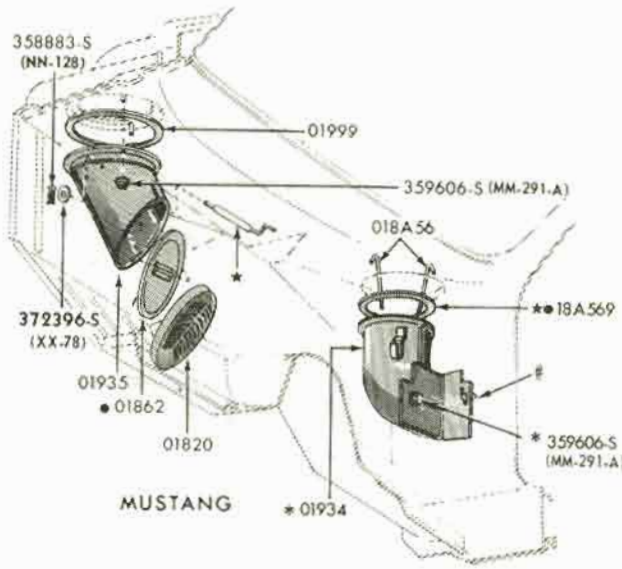

MUSTANG

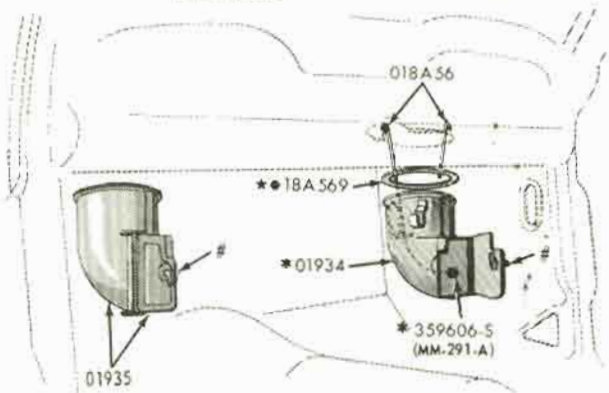

FALCON

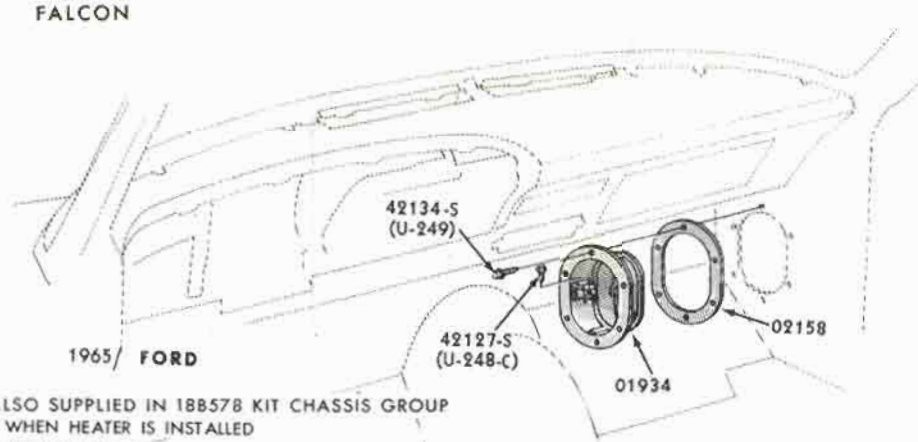

1965/ FORD

HANDLE ALSO SUPPLIED IN 188578 KIT CHASSIS GROUP
* NOT USED WHEN HEATER IS INSTALLED
• INCLUDED WITH 01934-S

P-4020

VENTILATING DUCTS
1965/68 FORD, FAIRLANE/TORINO, FALCON and MUSTANG - TYPICAL

COPYRIGHT © 1975 — FORD MOTOR COMPANY — DEARBORN, MICHIGAN

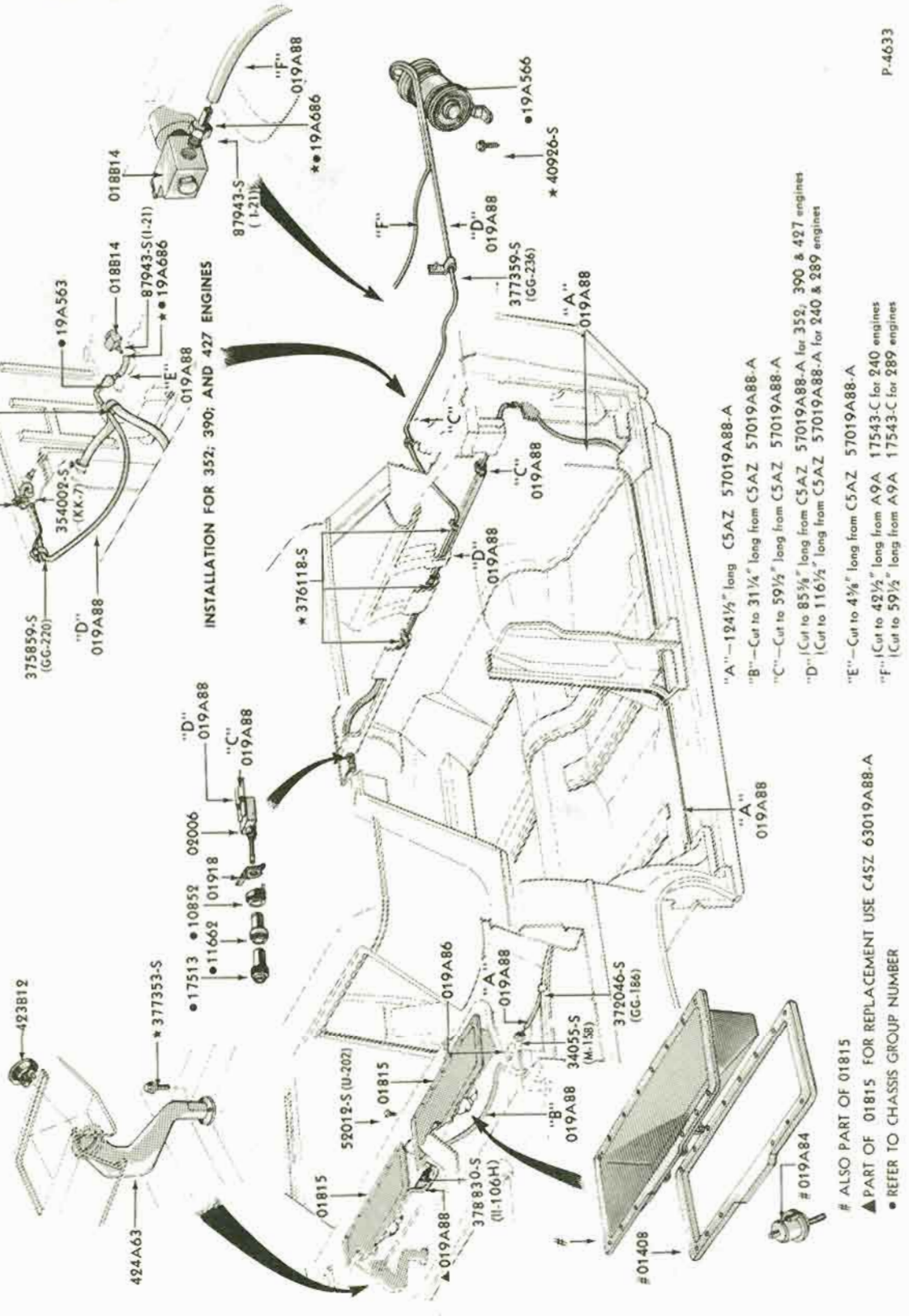

FORCED AIR VENTILATION SYSTEM
1965/66 FORD - BODY TYPE 57

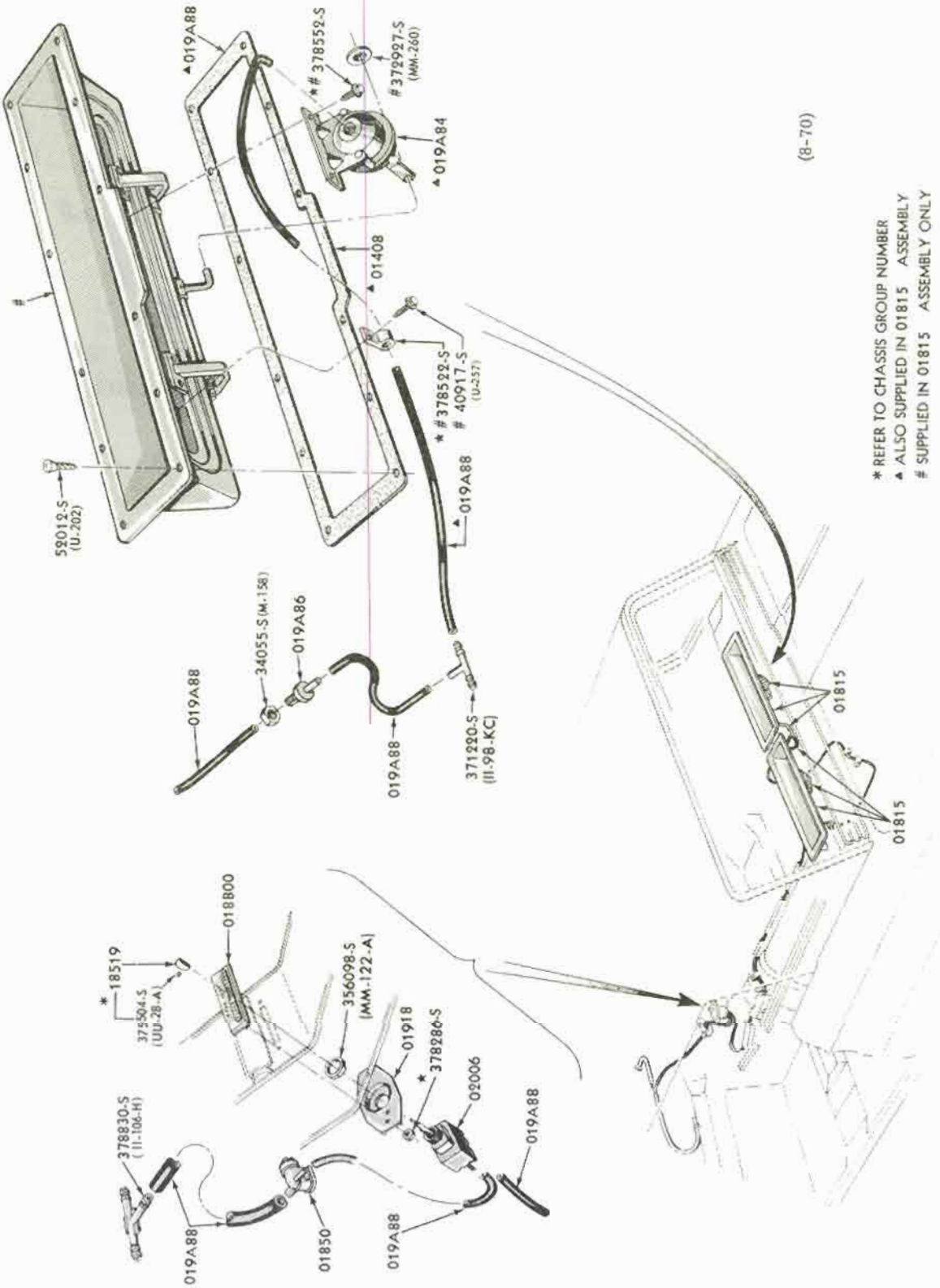

FORCED AIR VENTILATION SYSTEM
1965/66 THUNDERBIRD - BODY TYPE 63

COPYRIGHT © 1975 — FORD MOTOR COMPANY — DEARBORN, MICHIGAN

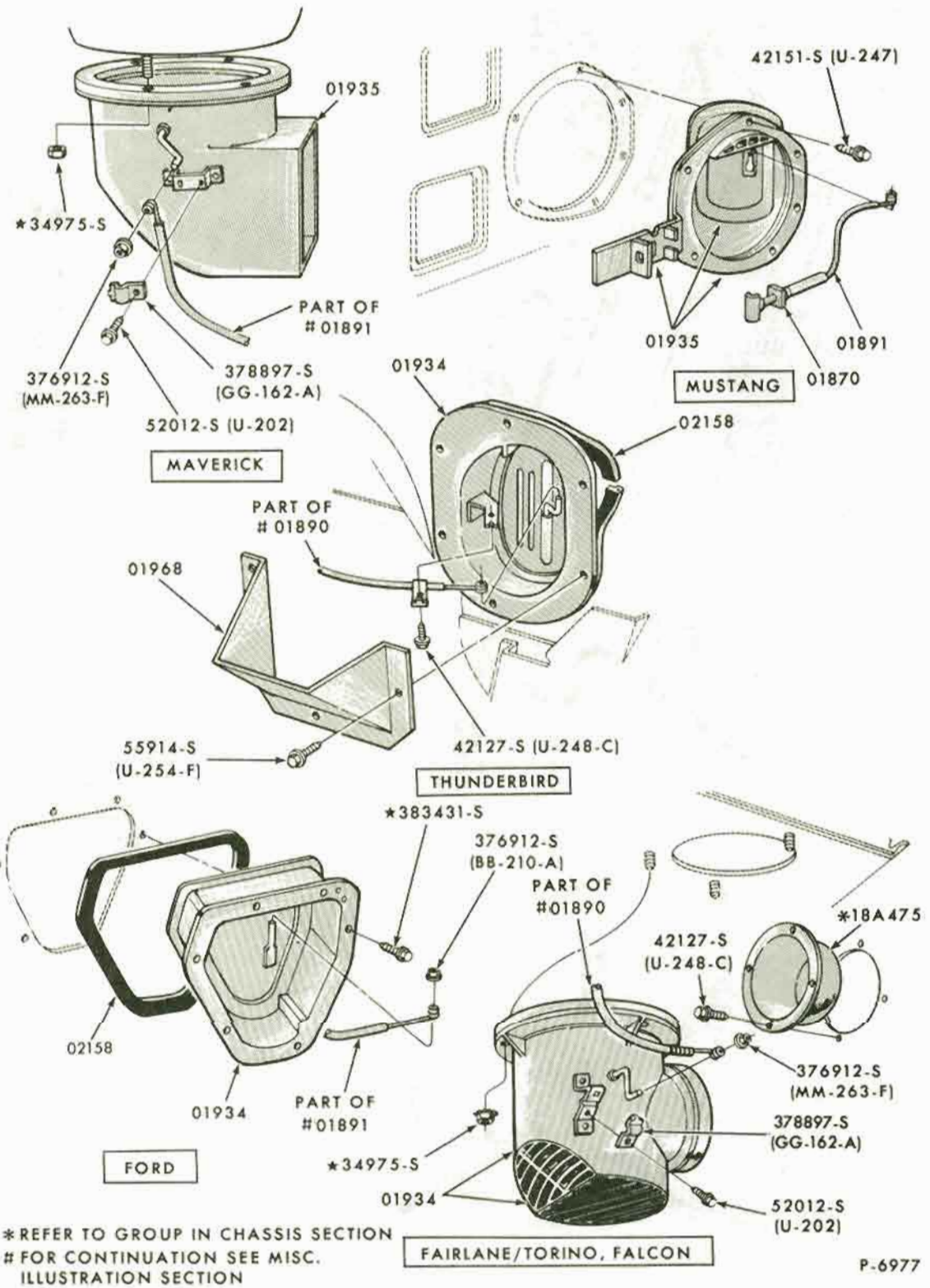

*REFER TO GROUP IN CHASSIS SECTION

FOR CONTINUATION SEE MISC. ILLUSTRATION SECTION

P-6977

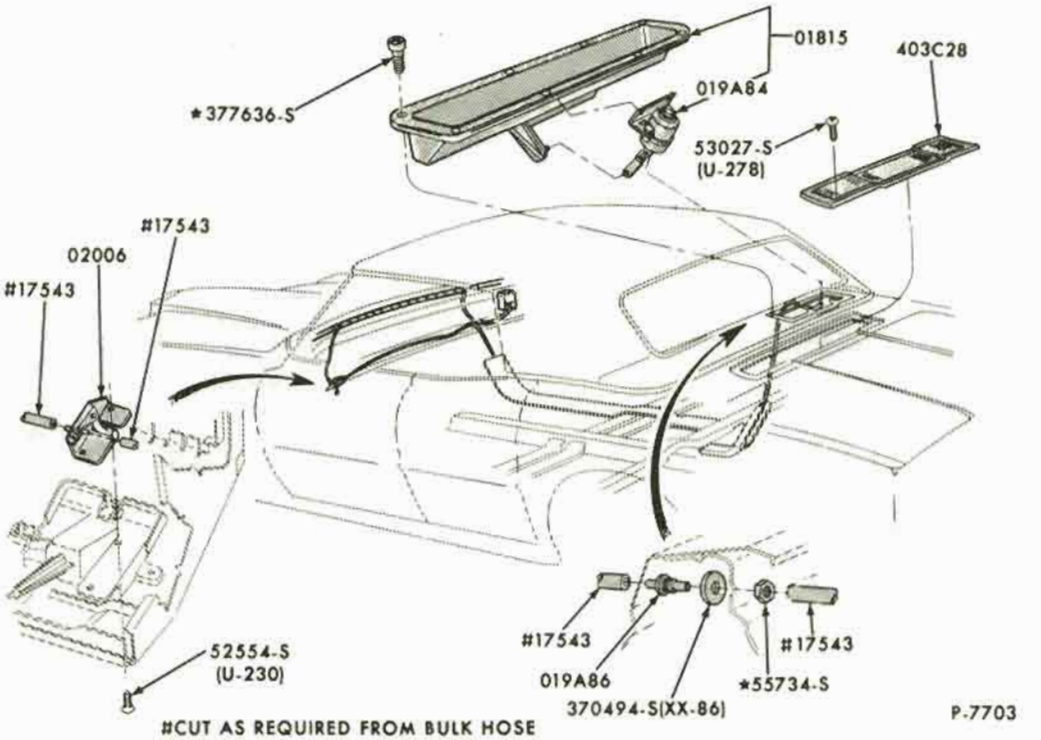

FORCED AIR VENTILATION SYSTEM
1970/71 THUNDERBIRD

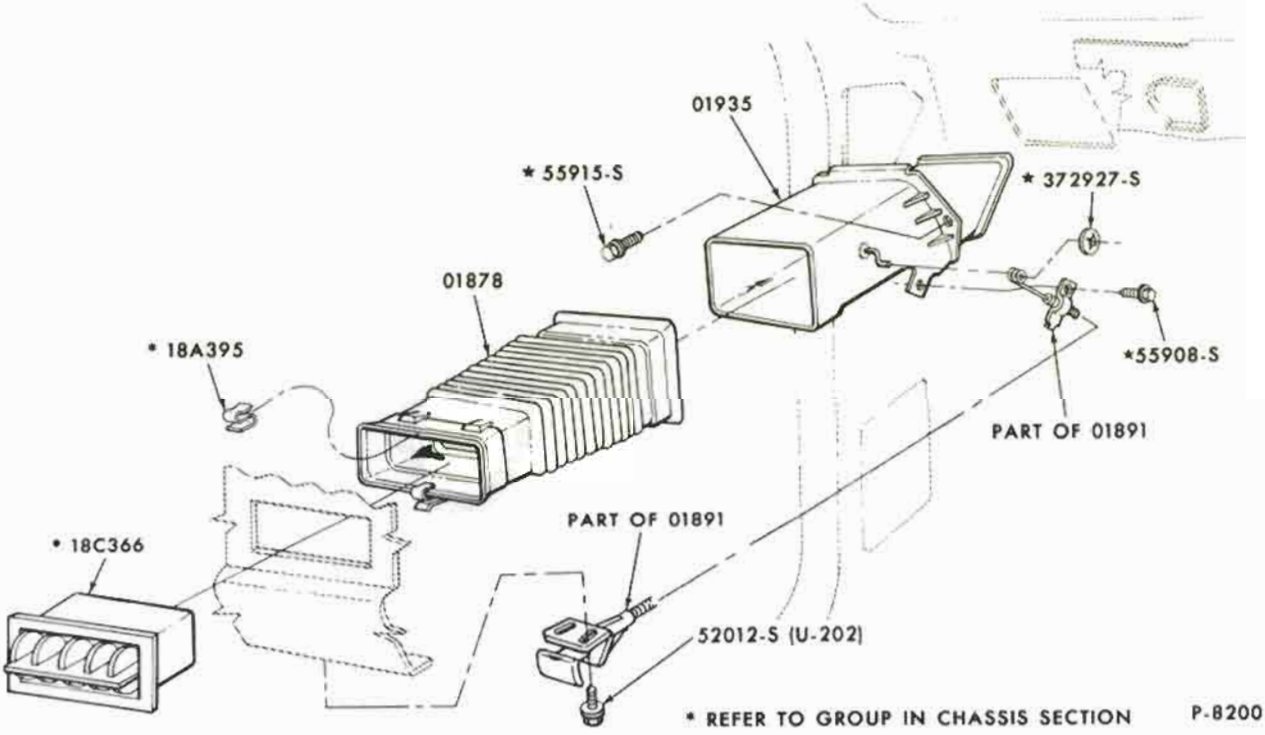

VENTILATING DUCTS
1971/72 PINTO

COPYRIGHT © 1975 — FORD MOTOR COMPANY — DEARBORN, MICHIGAN

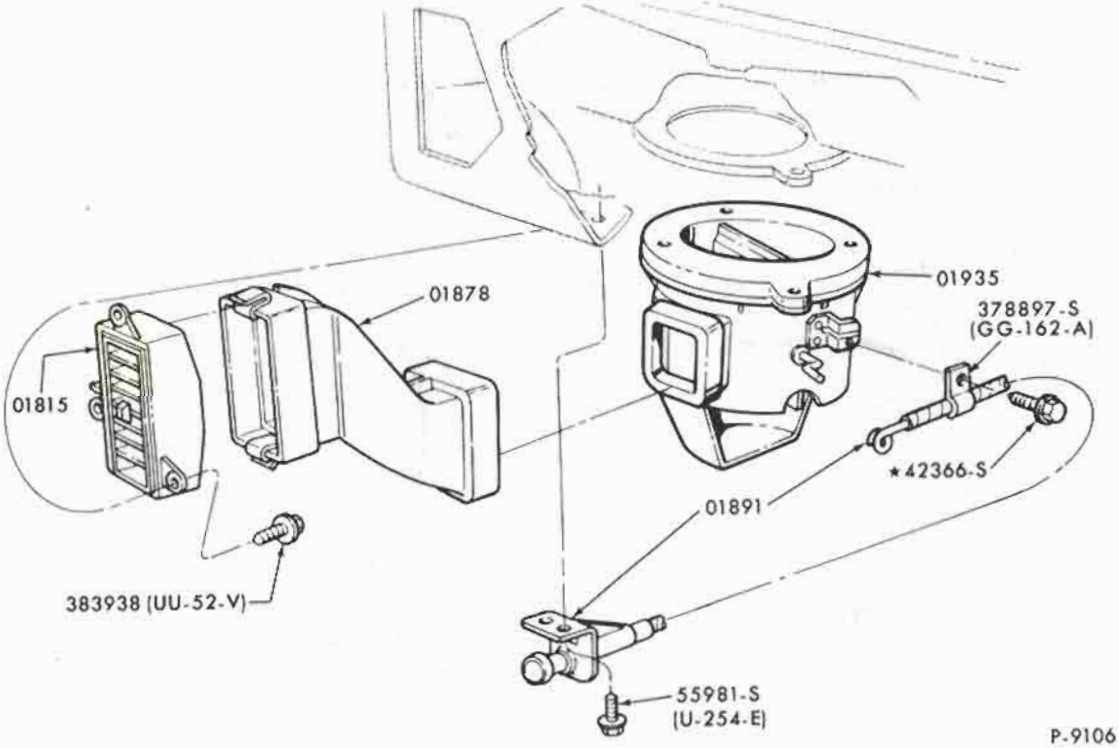

AIR VENT and RELATED PARTS
1971/72 MUSTANG

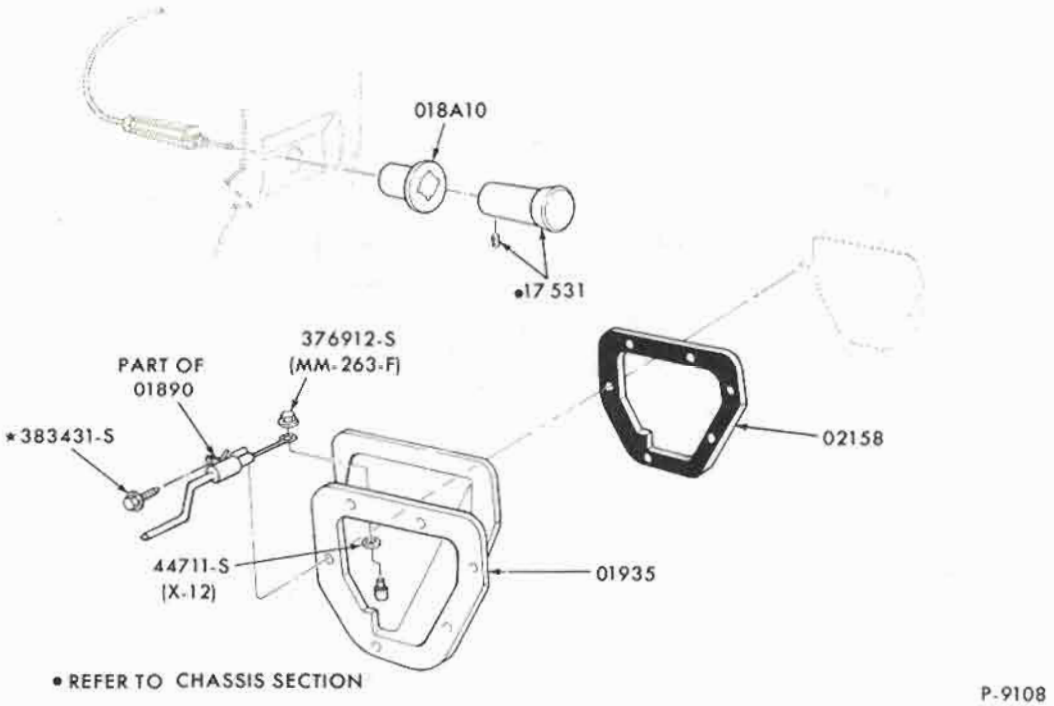

AIR VENT and RELATED PARTS
1971/72 FORD

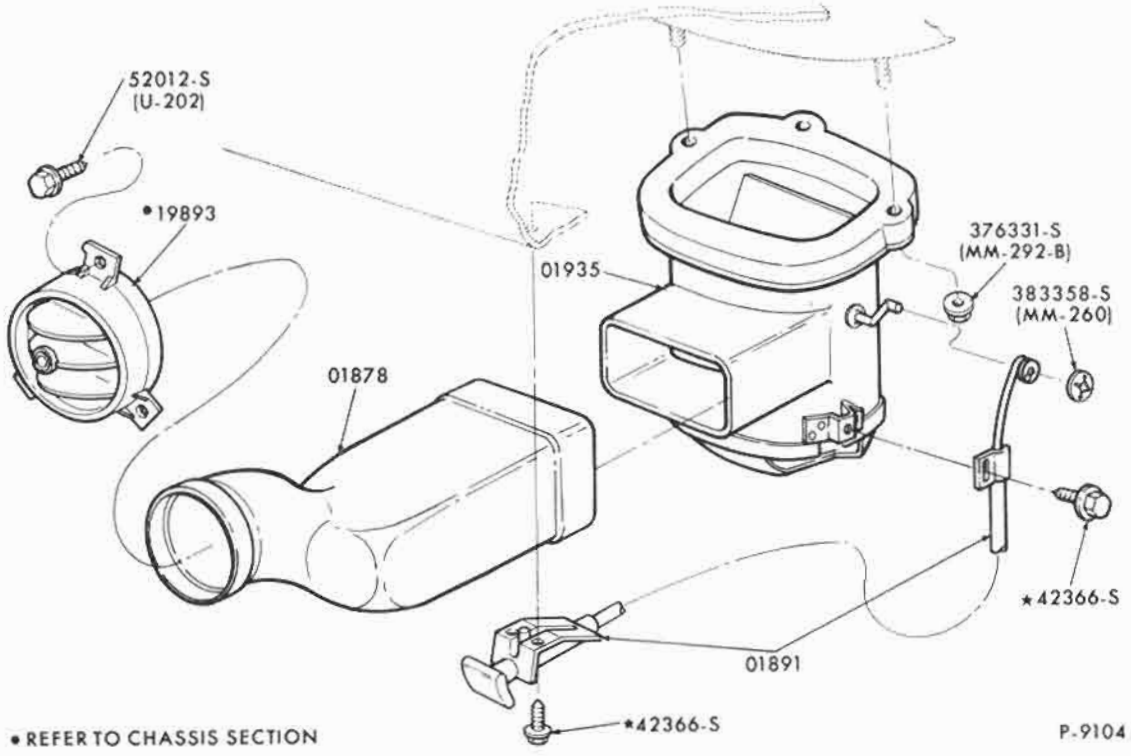

AIR VENT and RELATED PARTS
1972 TORINO

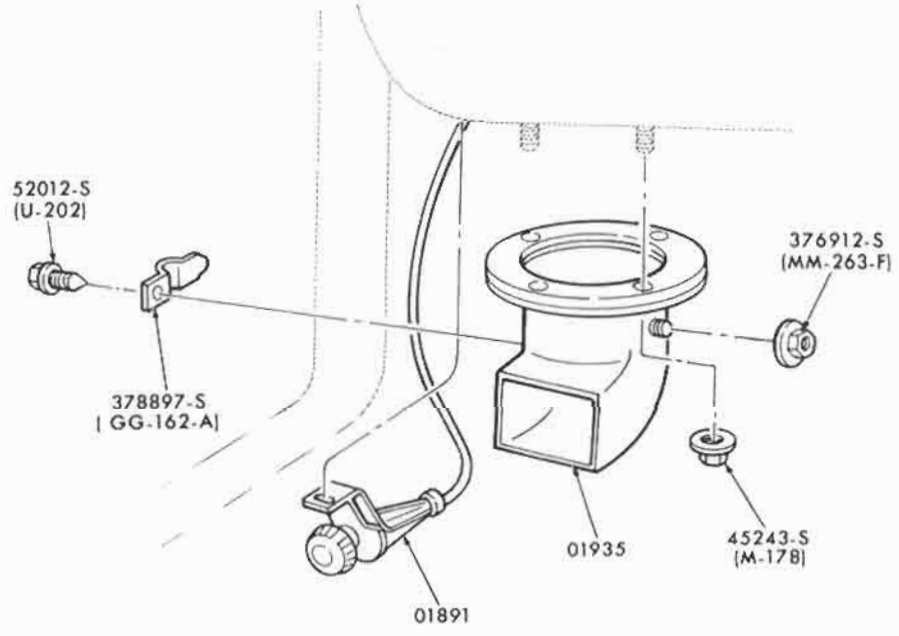

AIR VENT and RELATED PARTS
1971/72 MAVERICK

COPYRIGHT © 1975 — FORD MOTOR COMPANY — DEARBORN, MICHIGAN

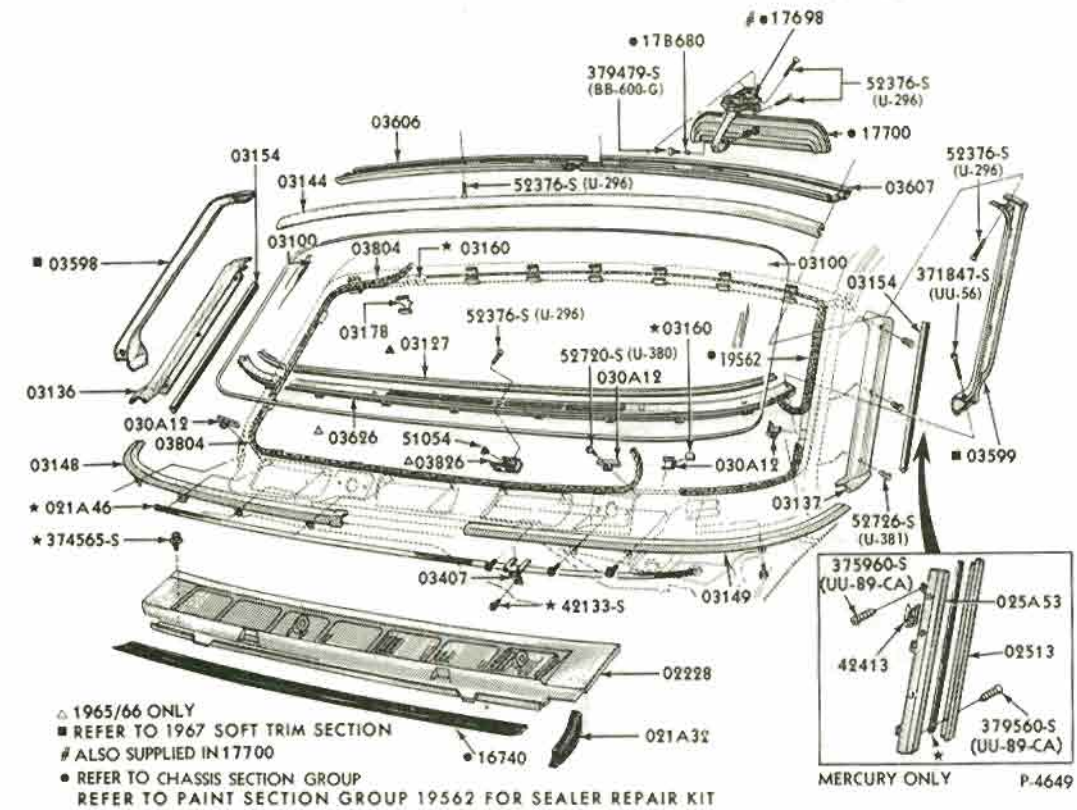

WINDSHIELD and RELATED PARTS
1965/68 FORD - BODY TYPES 54,62,71 - TYPICAL

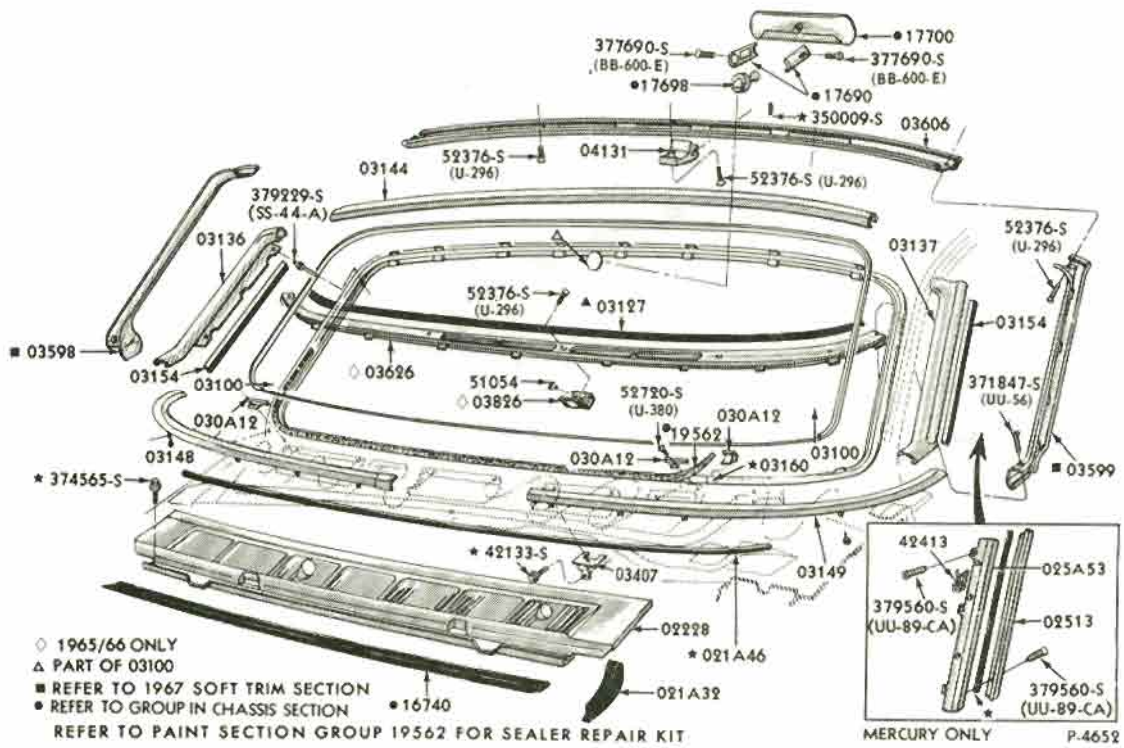

WINDSHIELD and RELATED PARTS
1965/68 FORD - BODY TYPES 57,63,65 - TYPICAL

COPYRIGHT © 1975 — FORD MOTOR COMPANY — DEARBORN, MICHIGAN

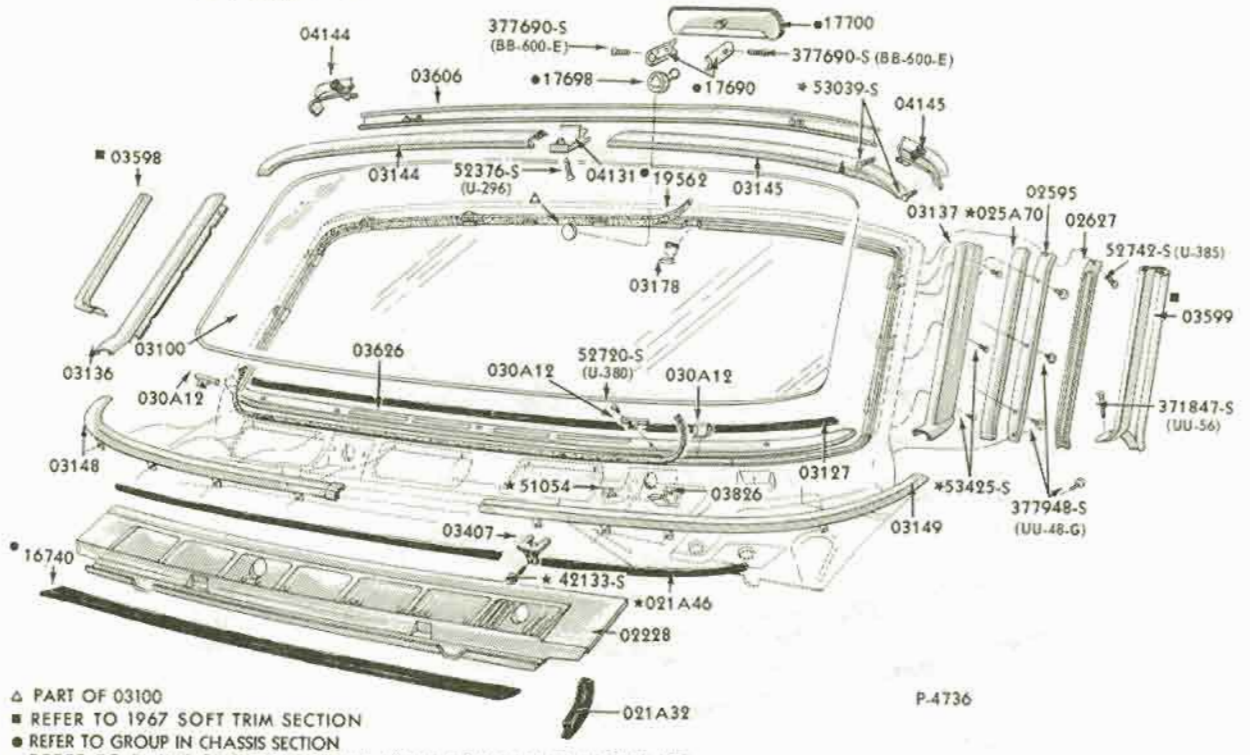

△ PART OF 03100
■ REFER TO 1967 SOFT TRIM SECTION
● REFER TO GROUP IN CHASSIS SECTION
REFER TO PAINT SECTION GROUP 19562 FOR SEALER REPAIR KIT

P-4736

WINDSHIELD and RELATED PARTS
1965/68 FORD - BODY TYPE 76 - TYPICAL

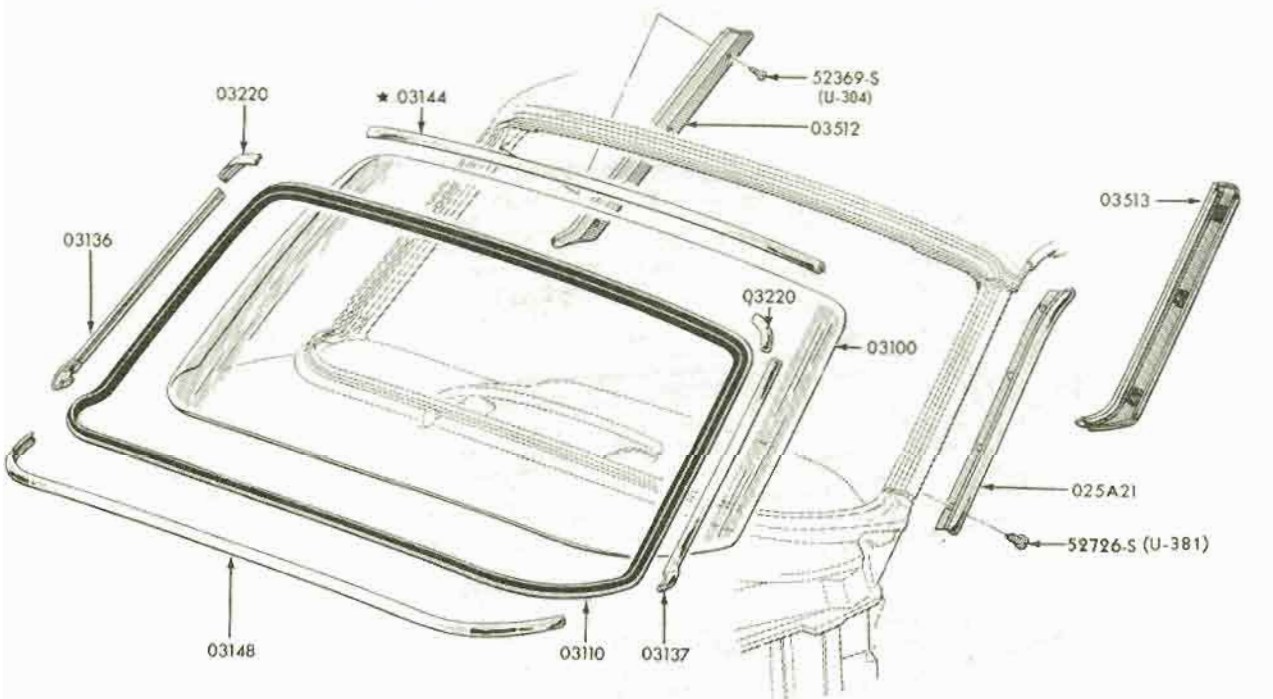

P-3759

WINDSHIELD and RELATED PARTS
1965 FAIRLANE - BODY TYPE 54, 62, 71

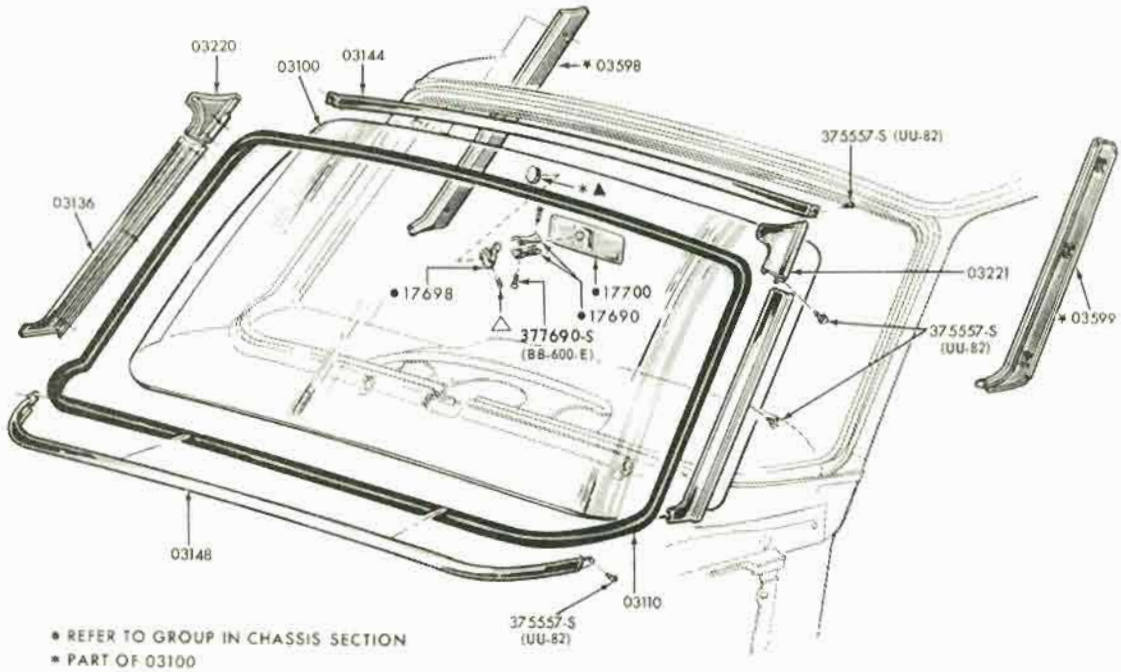

WINDSHIELD and RELATED PARTS
1965 FAIRLANE - BODY TYPE 65

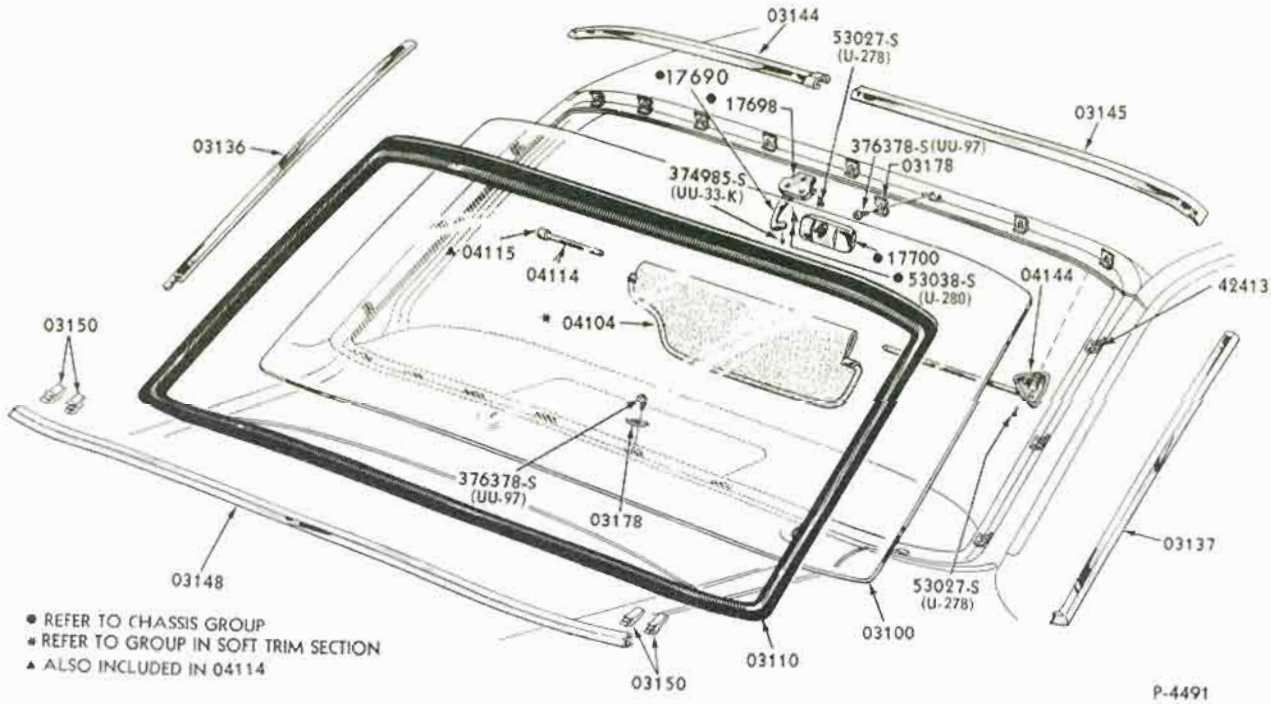

WINDSHIELD and RELATED PARTS
1965/68 MUSTANG - BODY TYPES 63, 65

COPYRIGHT © 1975 — FORD MOTOR COMPANY — DEARBORN, MICHIGAN

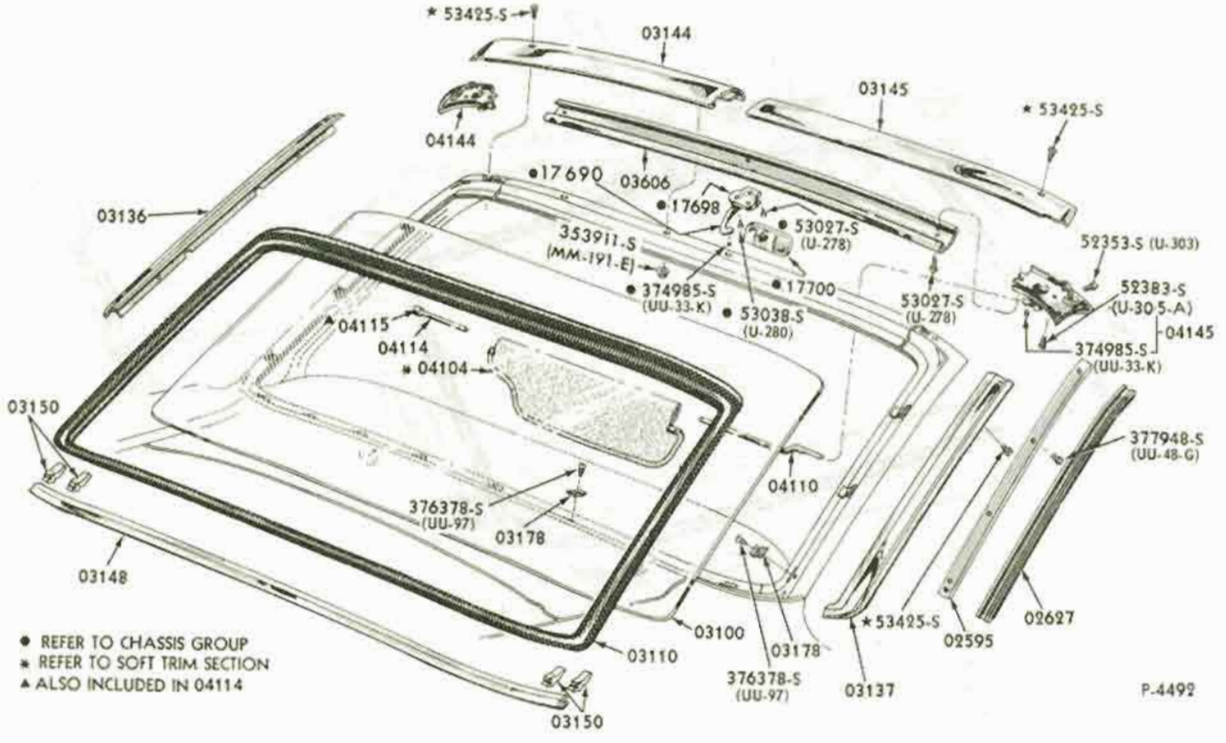

WINDSHIELD and RELATED PARTS
1965/68 MUSTANG - BODY TYPE 76

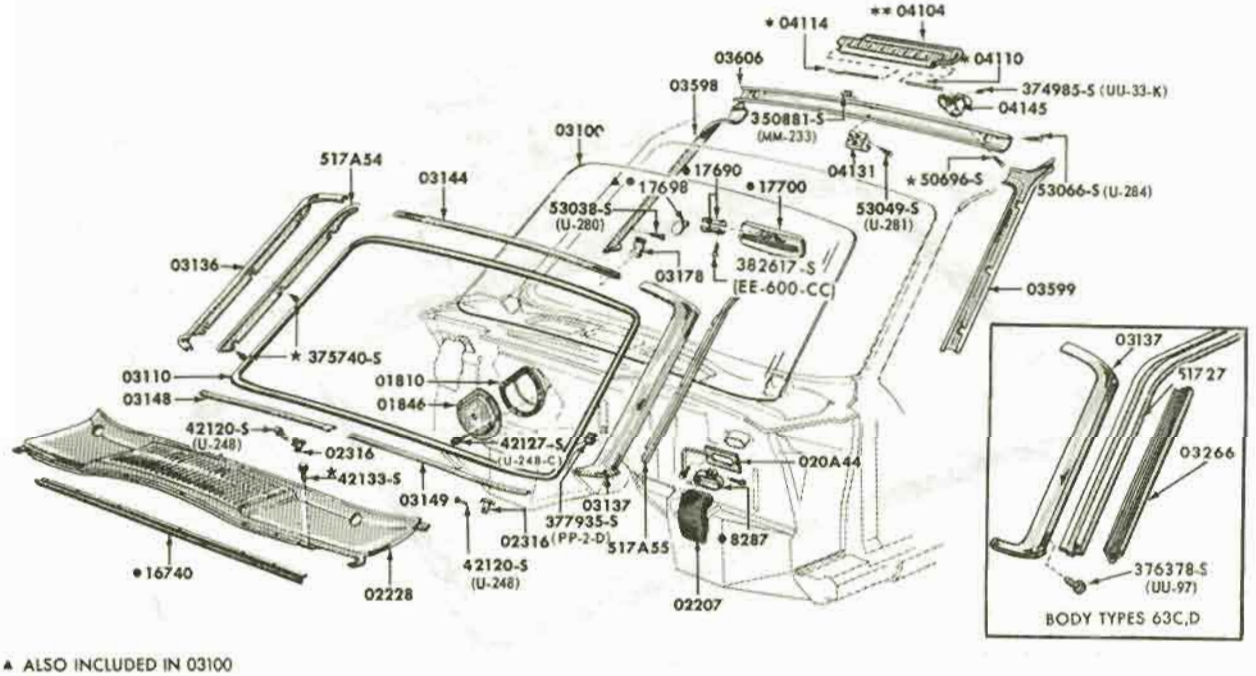

WINDSHIELD and RELATED PARTS
1965/66 THUNDERBIRD - BODY TYPE 63

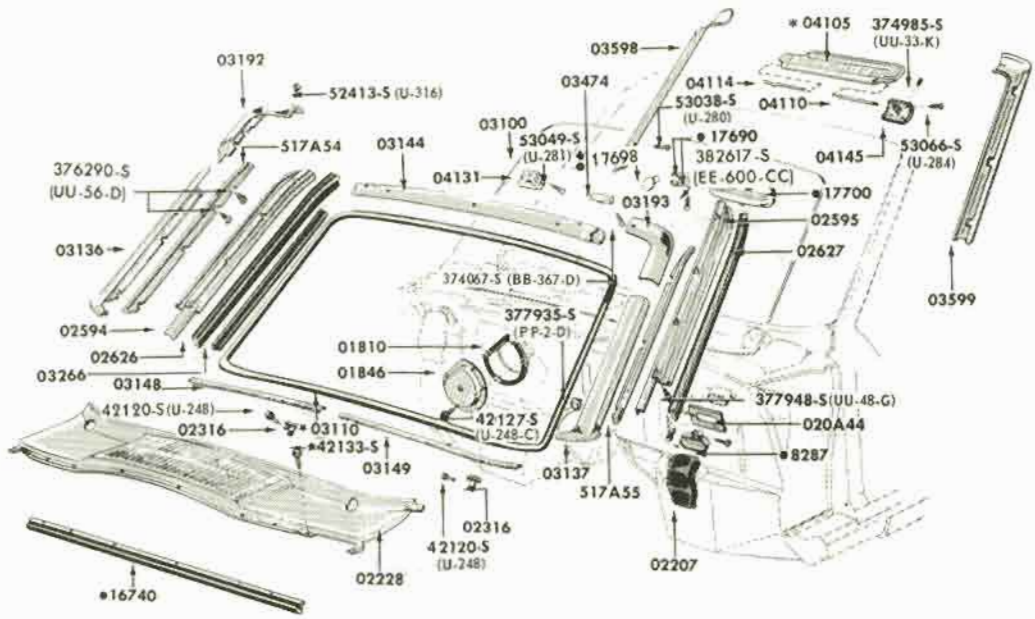

▲ ALSO INCLUDED IN 03100
• REFER TO GROUP IN CHASSIS SECTION
* REFER TO GROUP IN SOFT TRIM SECTION

P-4337

WINDSHIELD and RELATED PARTS
1965/66 THUNDERBIRD - BODY TYPE 76

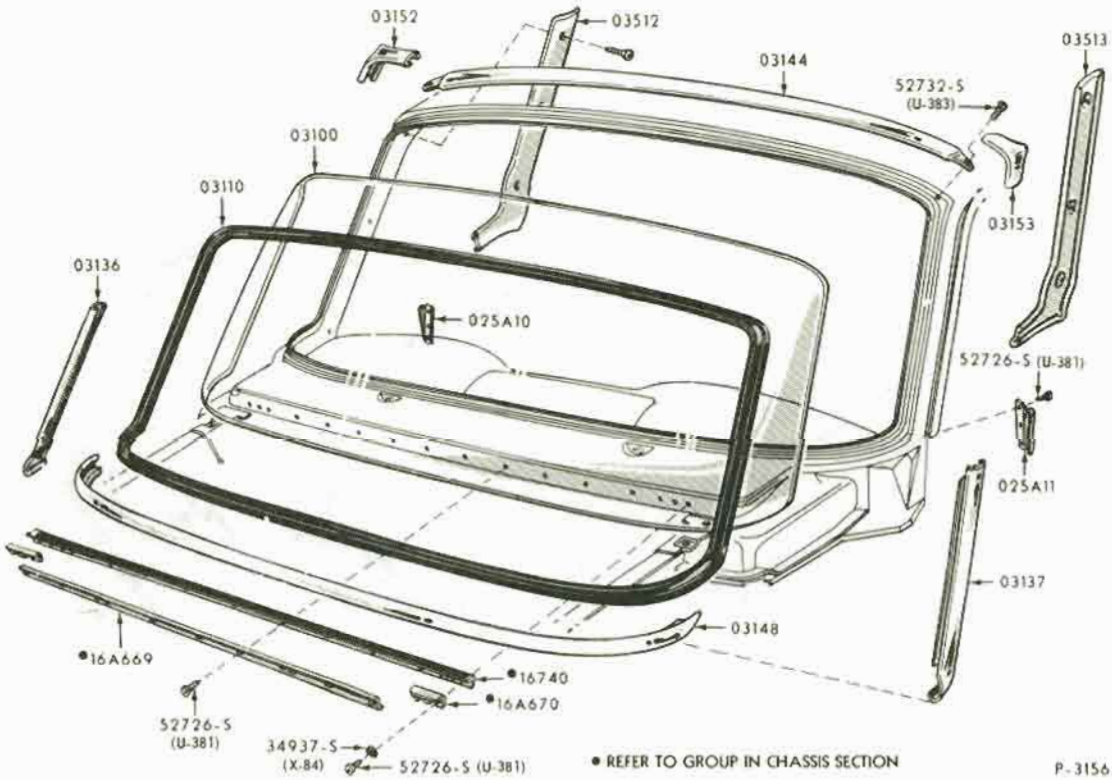

• REFER TO GROUP IN CHASSIS SECTION

P-3156

WINDSHIELD and RELATED PARTS
1965 FALCON - except BODY TYPES 63, 76

COPYRIGHT © 1975 — FORD MOTOR COMPANY — DEARBORN, MICHIGAN

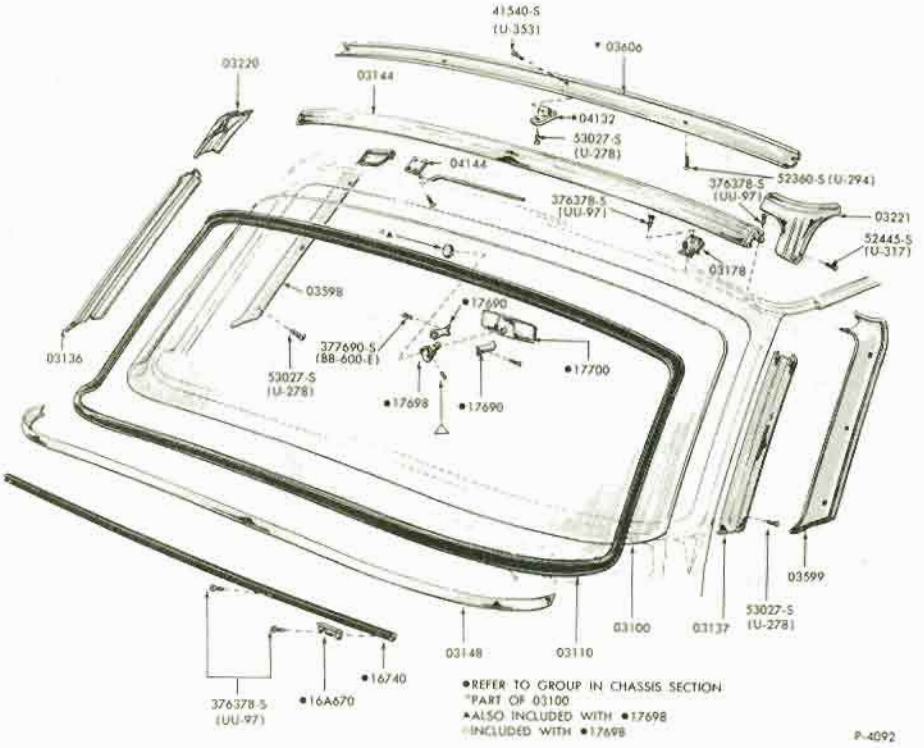

WINDSHIELD and RELATED PARTS
1965 FALCON - BODY TYPE 63

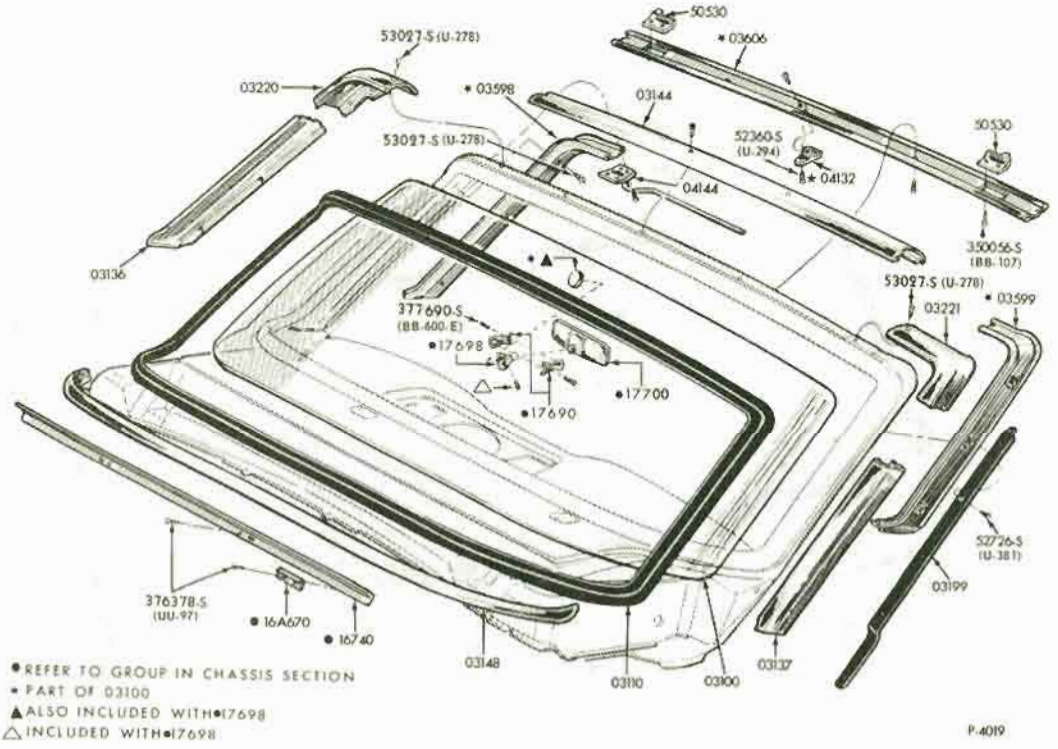

WINDSHIELD and RELATED PARTS
1965 FALCON - BODY TYPE 76

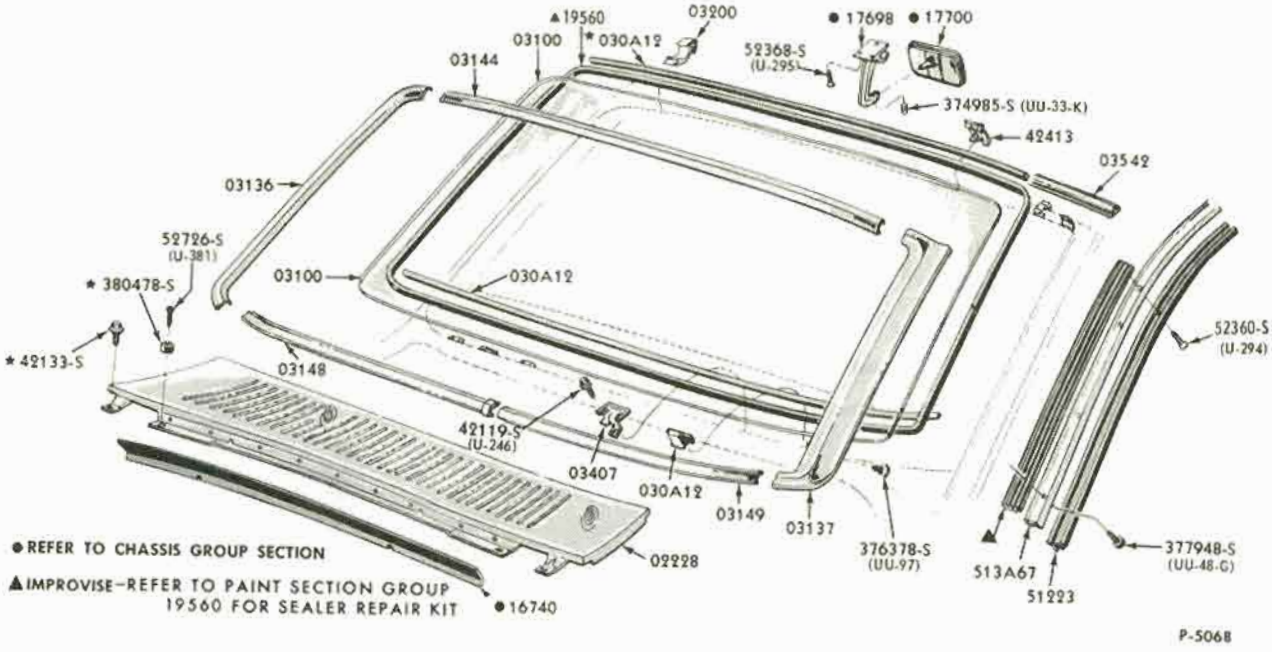

WINDSHIELD and RELATED PARTS
1966/69 FAIRLANE/TORINO - EXCEPT BODY TYPE 76 and 1966/70 FALCON

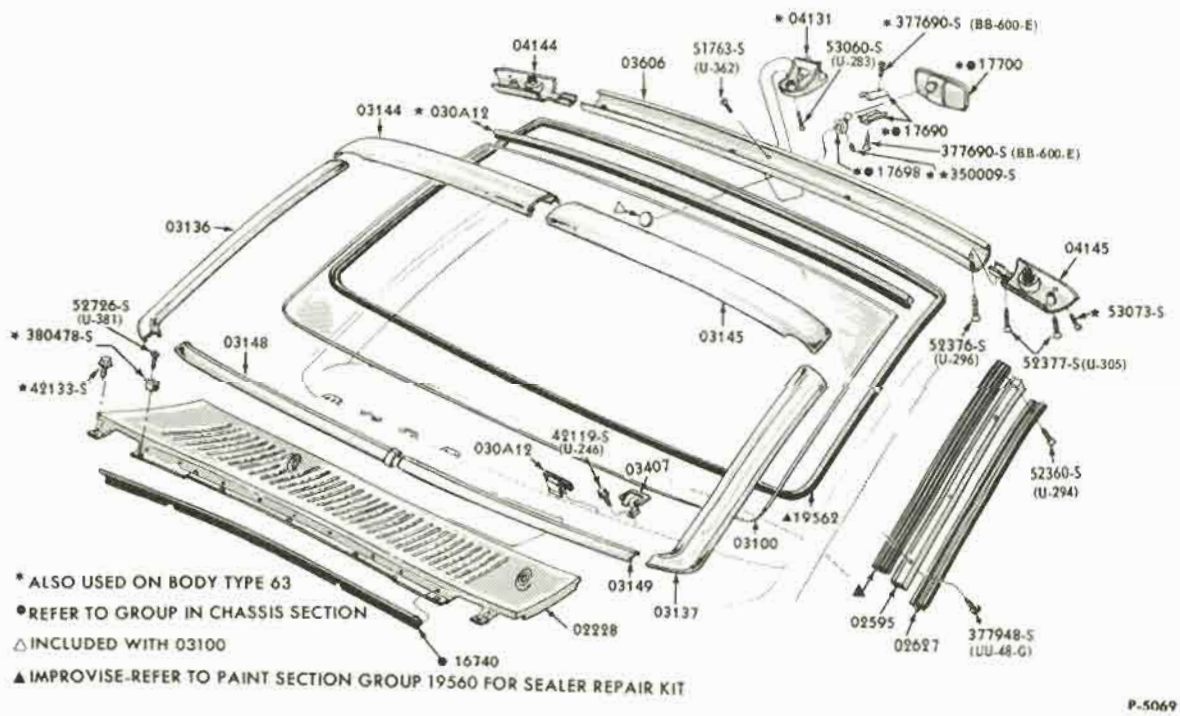

WINDSHIELD and RELATED PARTS
1966/69 FAIRLANE/TORINO - BODY TYPE 76

COPYRIGHT © 1975 — FORD MOTOR COMPANY — DEARBORN, MICHIGAN

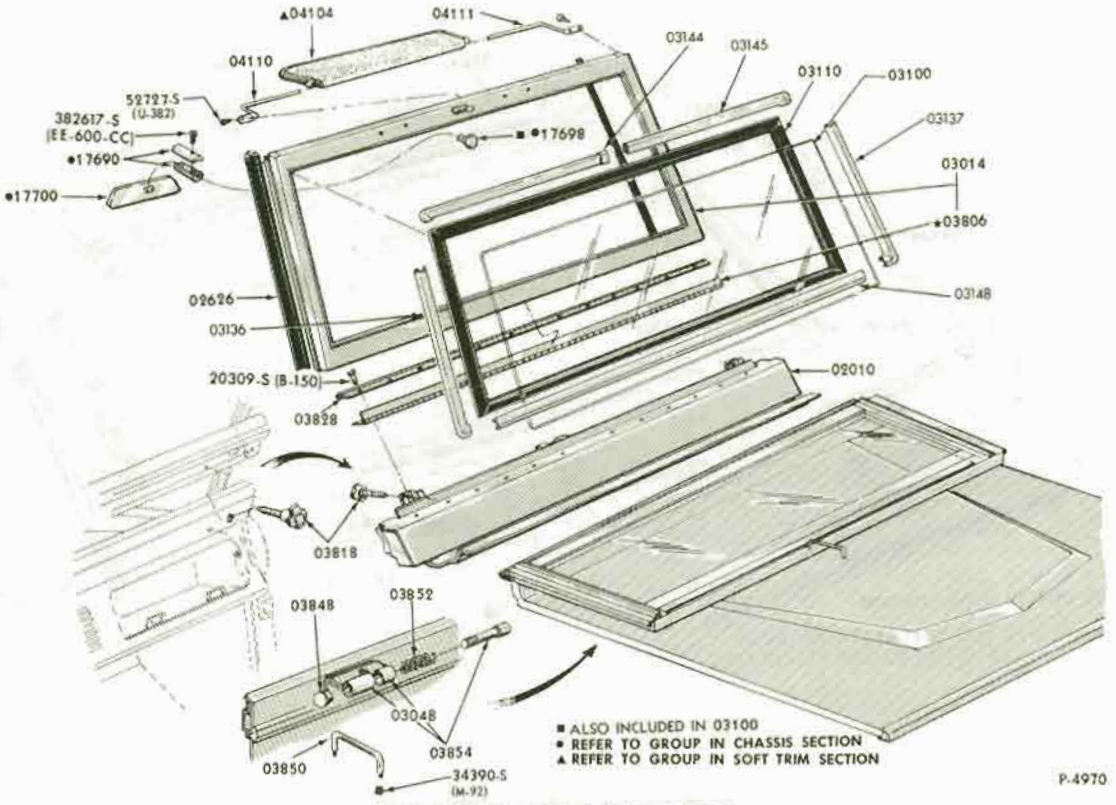

WINDSHIELD and RELATED PARTS
1966/72 BRONCO

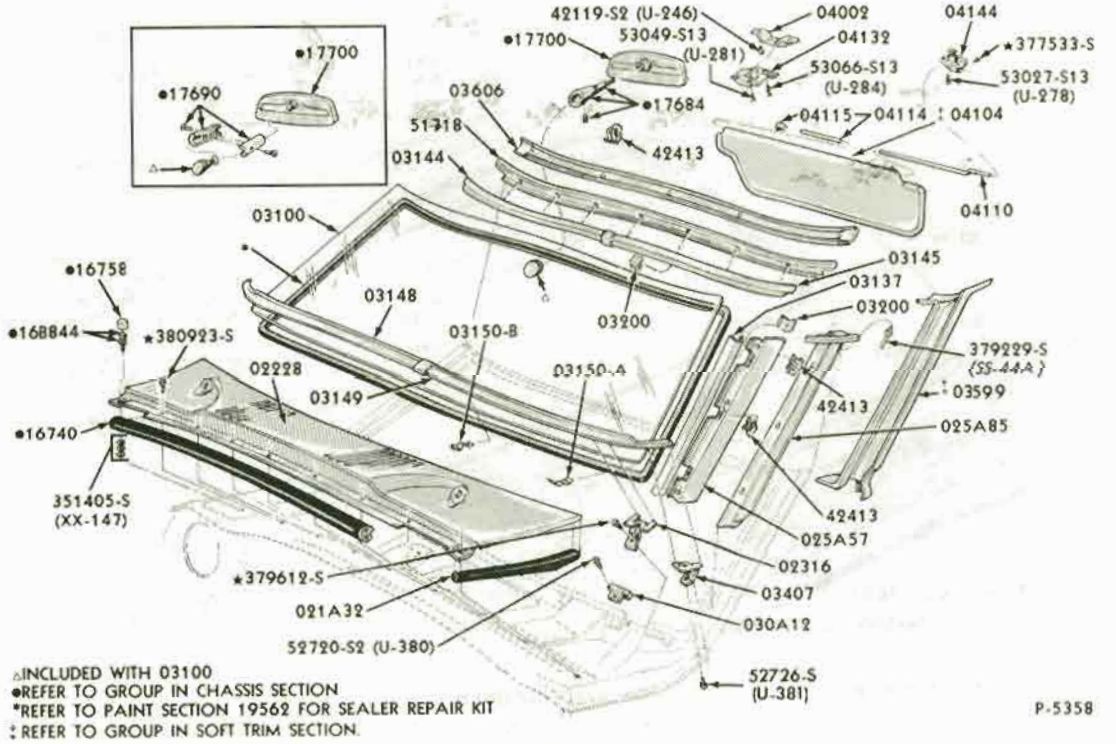

WINDSHIELD and RELATED PARTS
1967/69 THUNDERBIRD

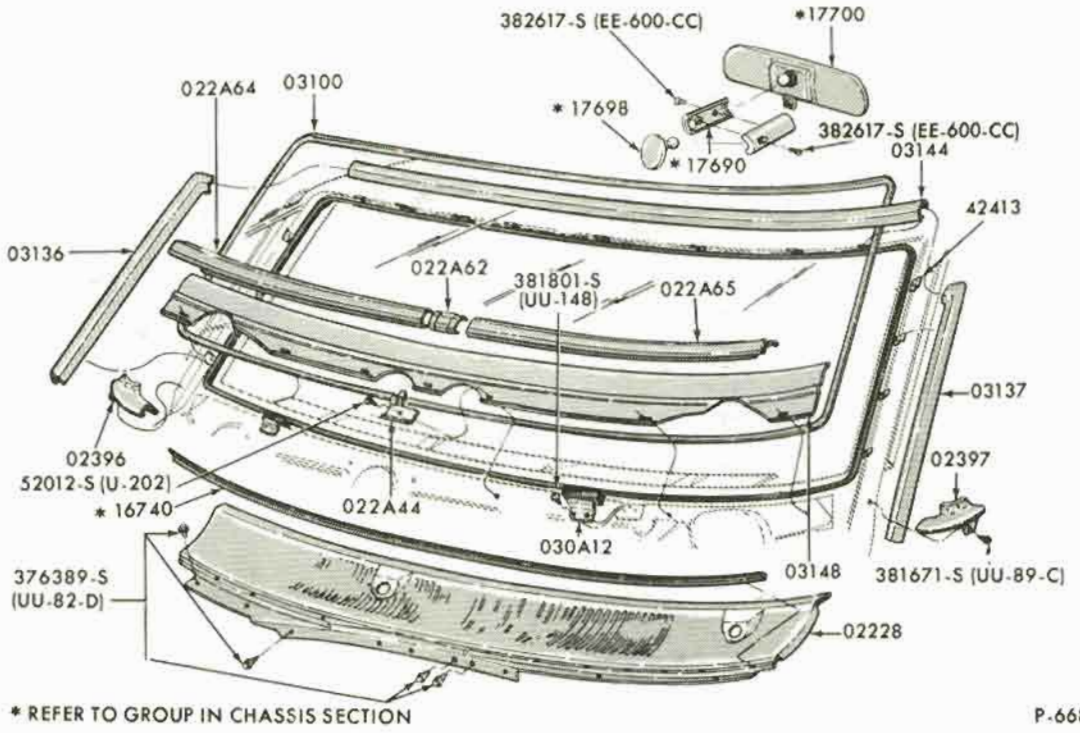

WINDSHIELD and RELATED PARTS
1969/70 FORD - BODY TYPES 54, 57, 62, 63, 65, 71

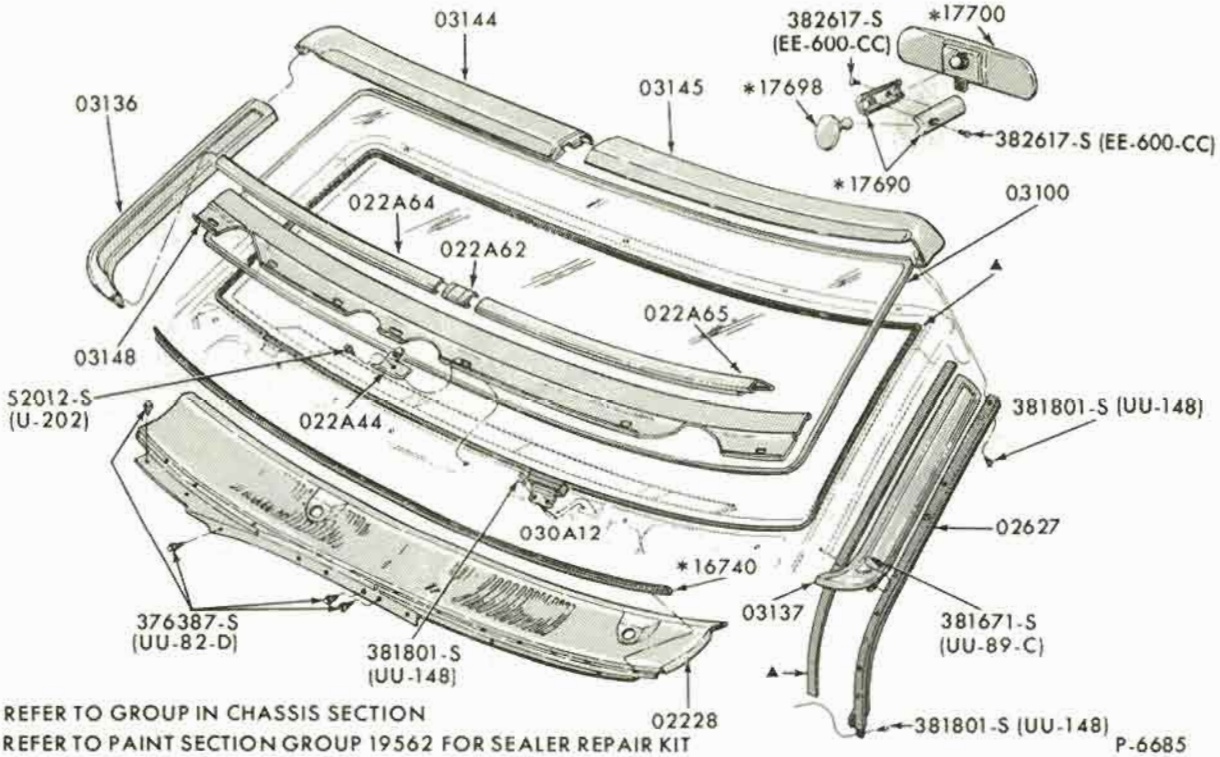

WINDSHIELD and RELATED PARTS
1969/70 FORD - BODY TYPE 76

COPYRIGHT © 1975 — FORD MOTOR COMPANY — DEARBORN, MICHIGAN

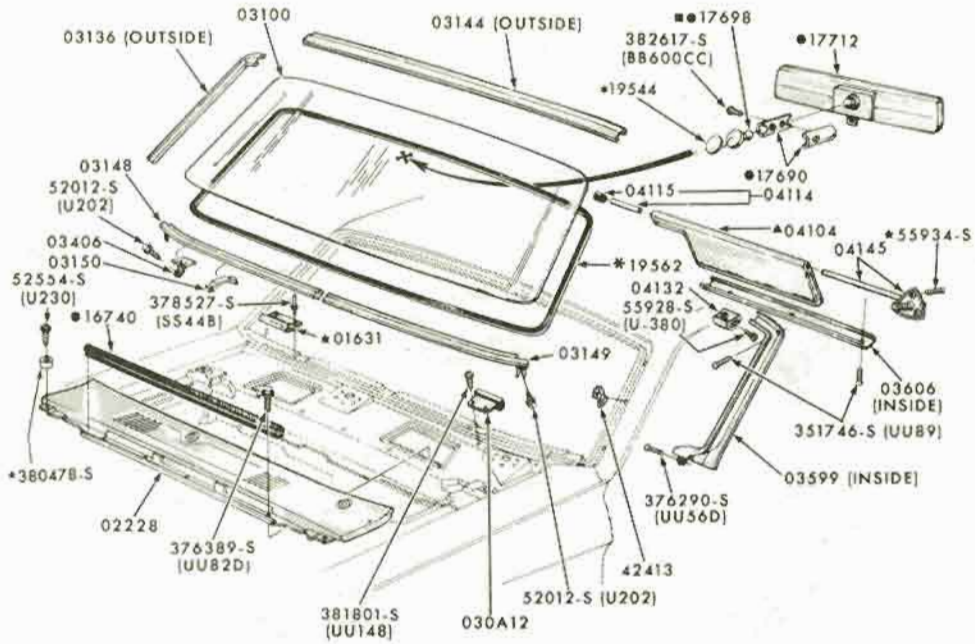

● REFER TO GROUP IN CHASSIS SECTION
* REFER TO GROUP IN PAINT SECTION
▲ REFER TO GROUP IN SOFT TRIM SECTION
■ ALSO SERVICED IN ASSEMBLY-GROUP 03100

P-6740

WINDSHIELD and RELATED PARTS
1969/70 MUSTANG - BODY TYPES 63, 65

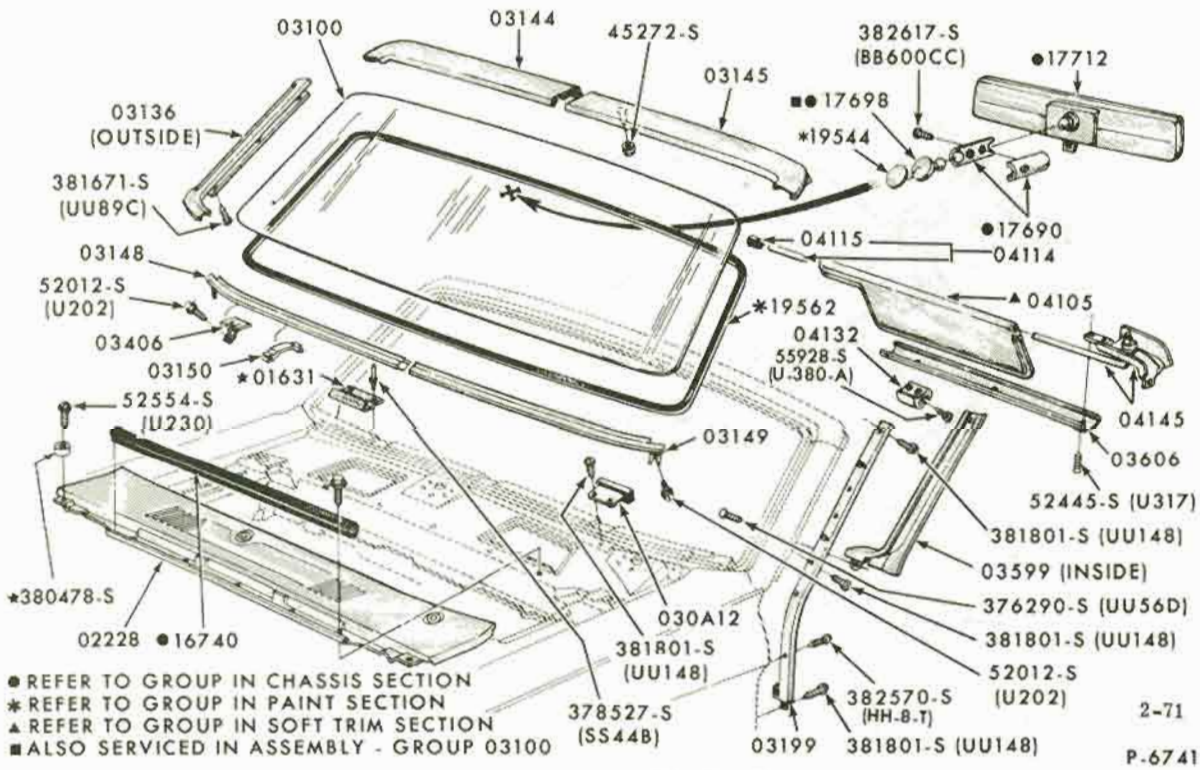

● REFER TO GROUP IN CHASSIS SECTION
* REFER TO GROUP IN PAINT SECTION
▲ REFER TO GROUP IN SOFT TRIM SECTION
■ ALSO SERVICED IN ASSEMBLY - GROUP 03100

2-71

P-6741

WINDSHIELD and RELATED PARTS
1969/70 MUSTANG - BODY TYPE 76

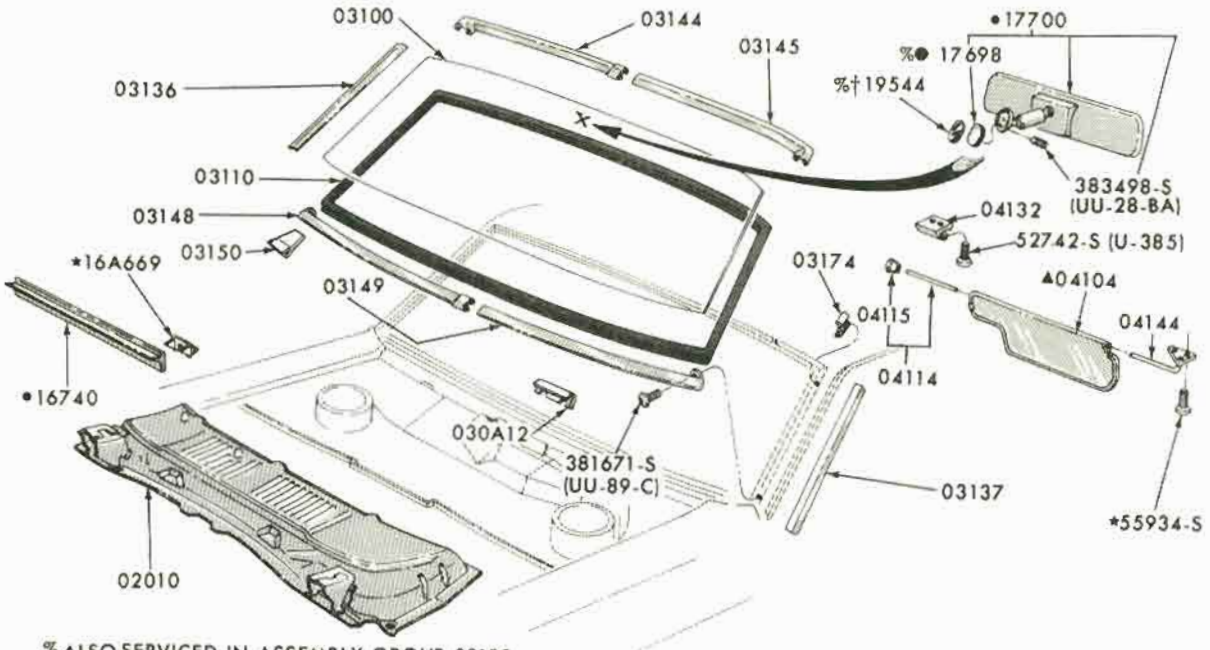

% ALSO SERVICED IN ASSEMBLY-GROUP 03100
•REFER TO GROUP IN CHASSIS SECTION
▲REFER TO GROUP IN SOFT TRIM SECTION
†REFER TO GROUP IN PAINT SECTION

P-6940

WINDSHIELD and RELATED PARTS
1970/72 MAVERICK

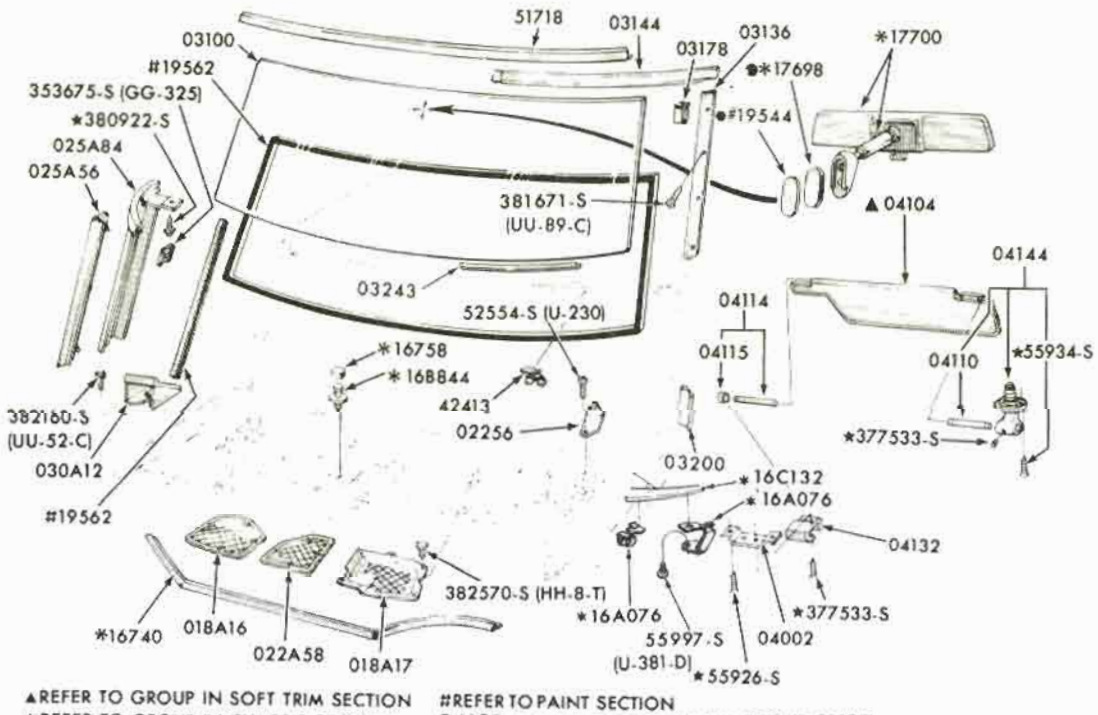

▲REFER TO GROUP IN SOFT TRIM SECTION
*REFER TO GROUP IN CHASSIS SECTION
#REFER TO PAINT SECTION
•ALSO SERVICED IN ASSEMBLY-GROUP 03100

P-7125

WINDSHIELD and RELATED PARTS
1970/71 THUNDERBIRD - BODY TYPE 57

COPYRIGHT © 1975 — FORD MOTOR COMPANY — DEARBORN, MICHIGAN

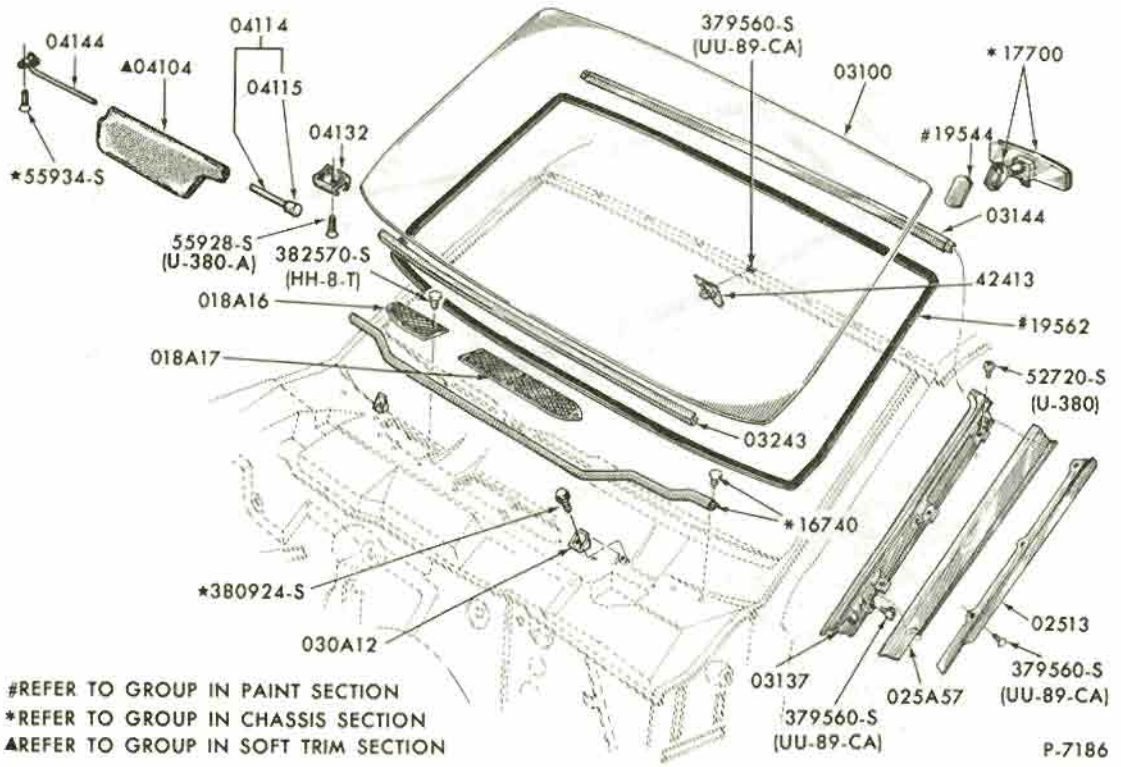

WINDSHIELD and RELATED PARTS
1970/71 FAIRLANE/TORINO - BODY TYPES 54, 57, 62, 65, 66, 71

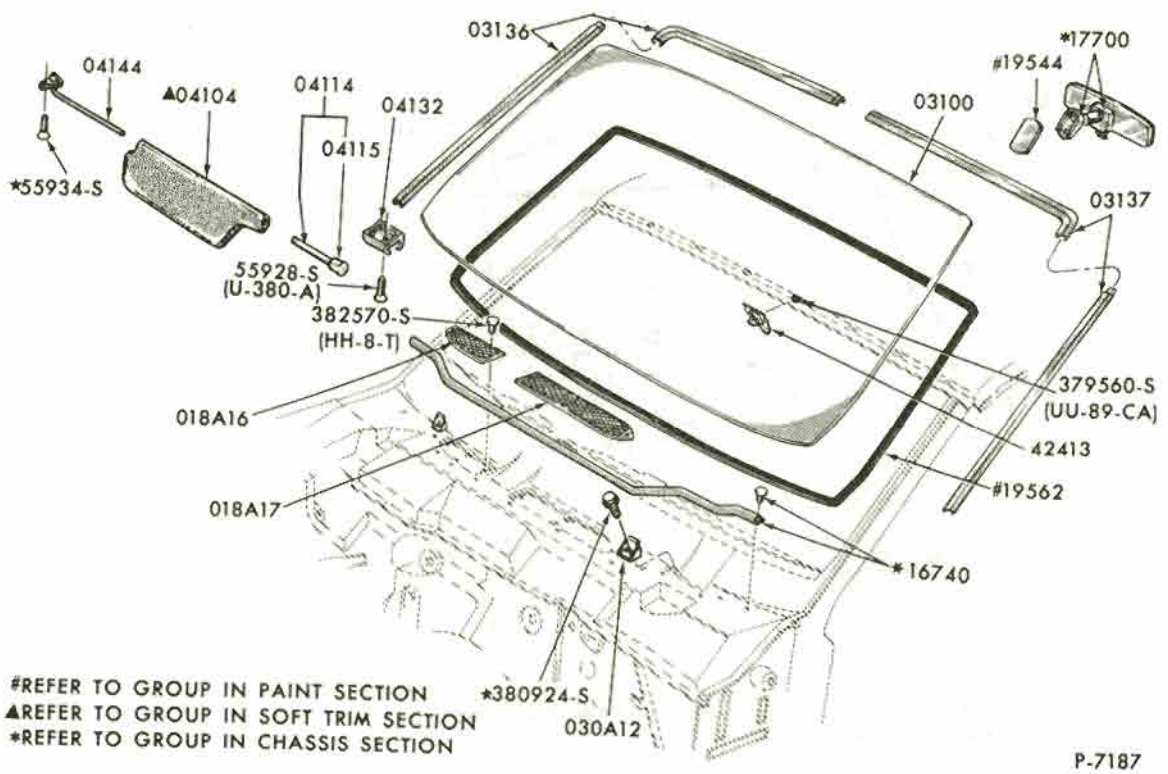

WINDSHIELD and RELATED PARTS
1970/71 FAIRLANE/TORINO - BODY TYPE 63

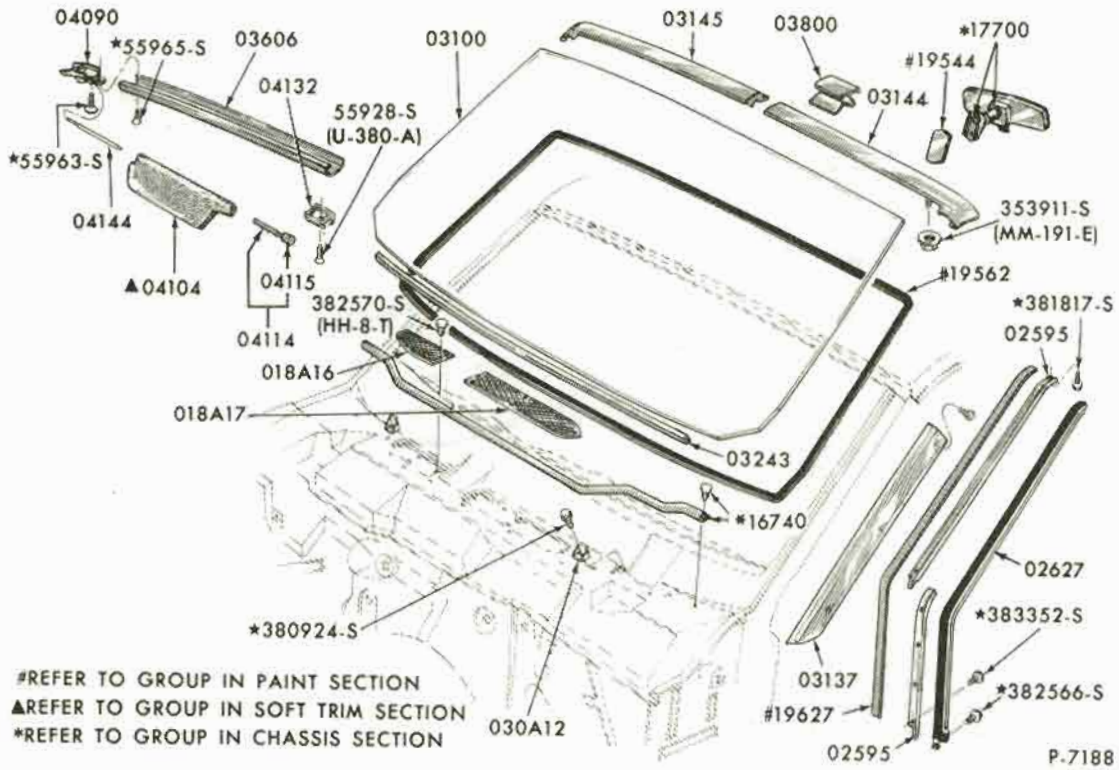

WINDSHIELD and RELATED PARTS
1970/71 FAIRLANE/TORINO - BODY TYPE 76

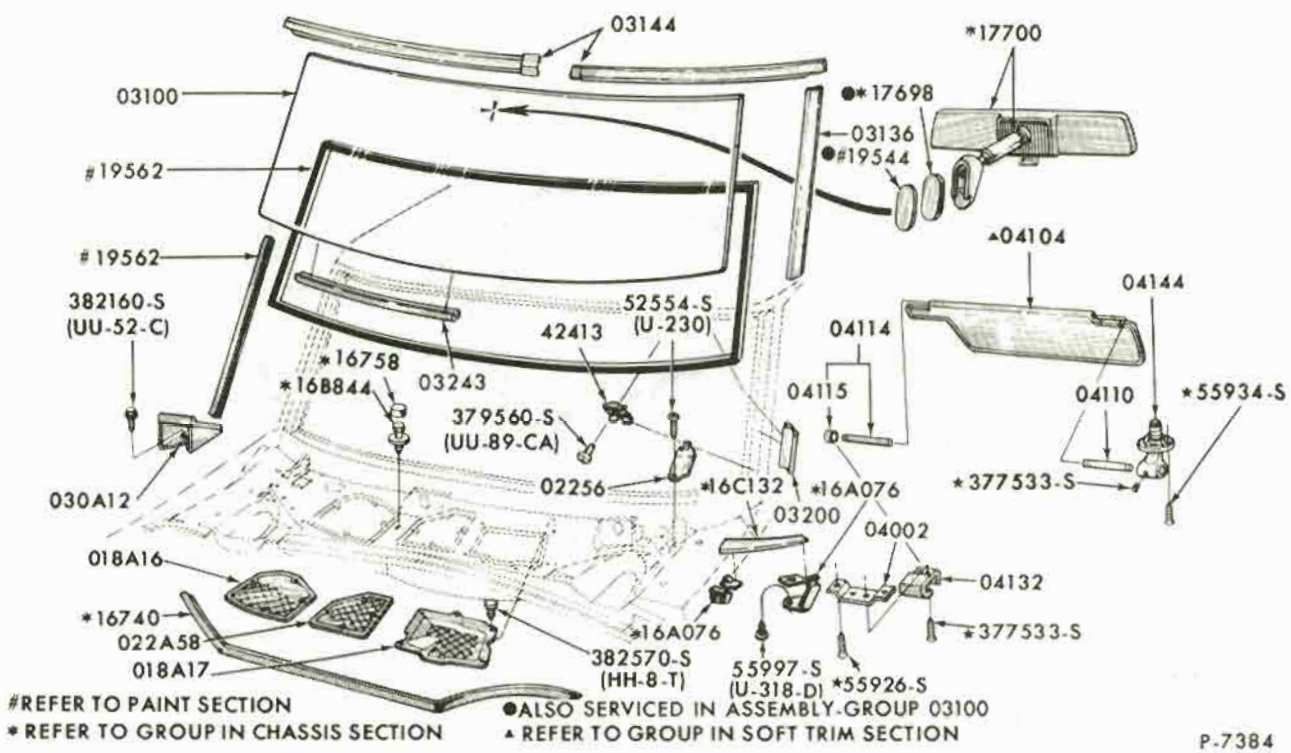

WINDSHIELD and RELATED PARTS
1970/71 THUNDERBIRD - BODY TYPE 65

COPYRIGHT © 1975 — FORD MOTOR COMPANY — DEARBORN, MICHIGAN

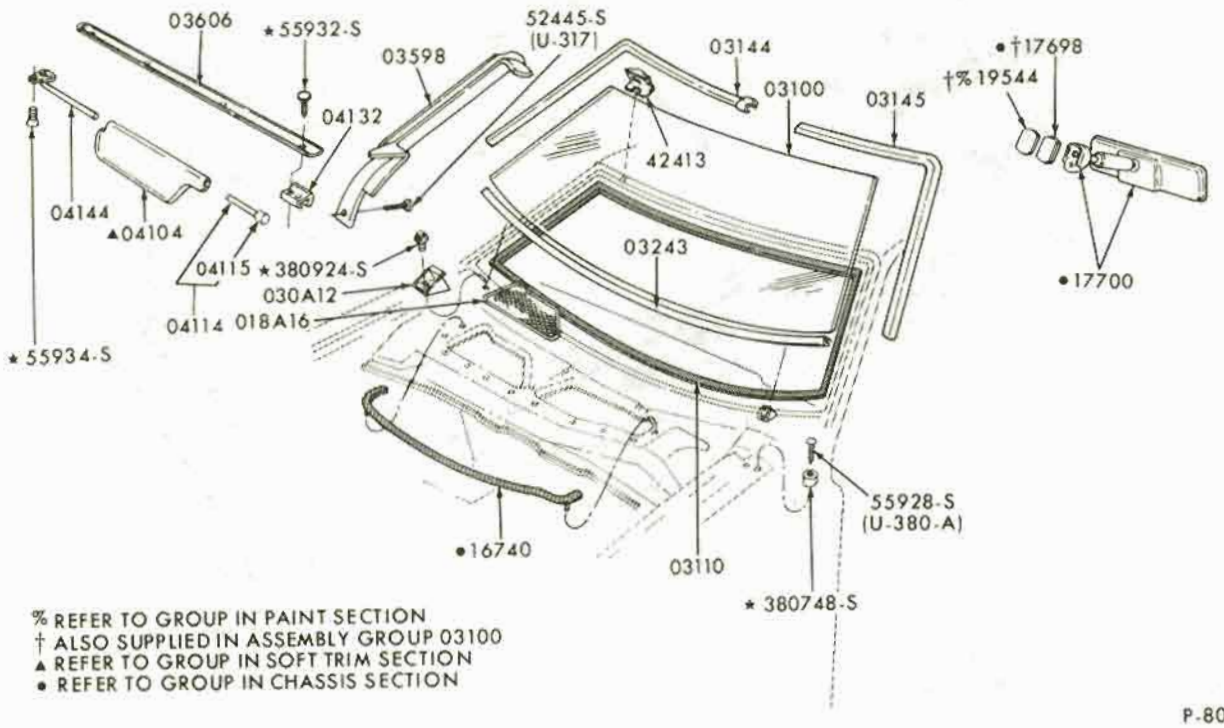

% REFER TO GROUP IN PAINT SECTION
† ALSO SUPPLIED IN ASSEMBLY GROUP 03100
▲ REFER TO GROUP IN SOFT TRIM SECTION
• REFER TO GROUP IN CHASSIS SECTION

P-8051

WINDSHIELD and RELATED PARTS
1971/72 MUSTANG - BODY TYPES 63, 65

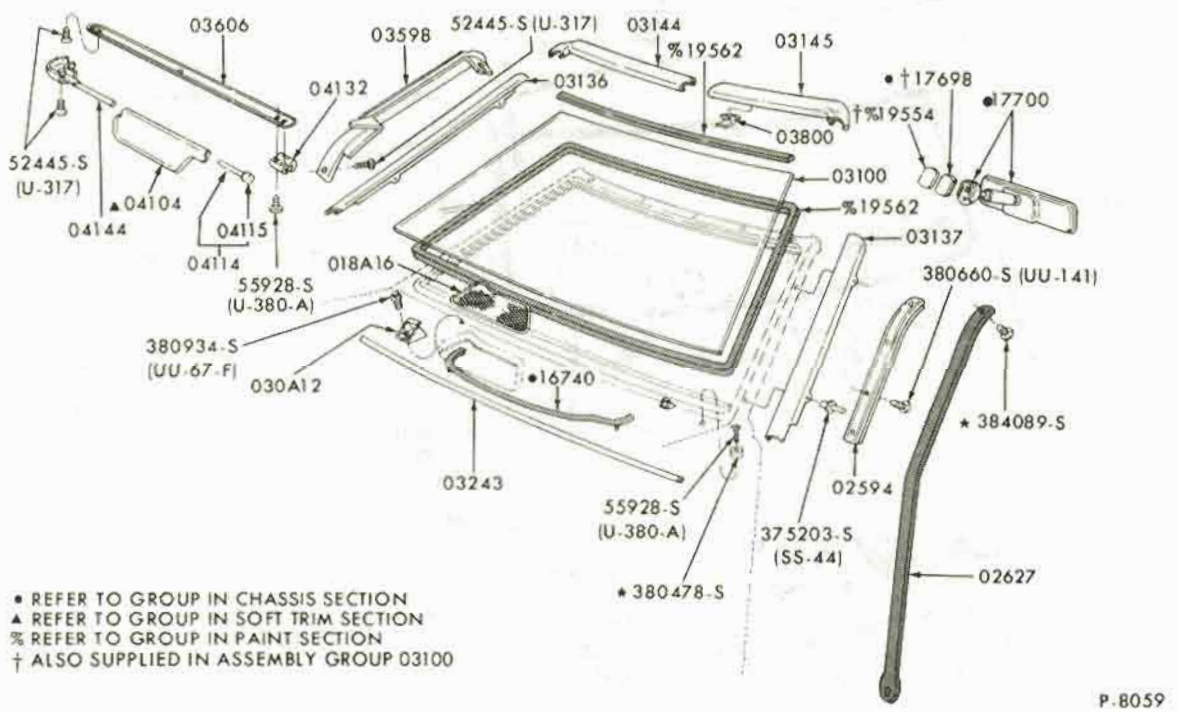

• REFER TO GROUP IN CHASSIS SECTION
▲ REFER TO GROUP IN SOFT TRIM SECTION
% REFER TO GROUP IN PAINT SECTION
† ALSO SUPPLIED IN ASSEMBLY GROUP 03100

P-8059

WINDSHIELD and RELATED PARTS
1971/72 MUSTANG - BODY TYPE 76

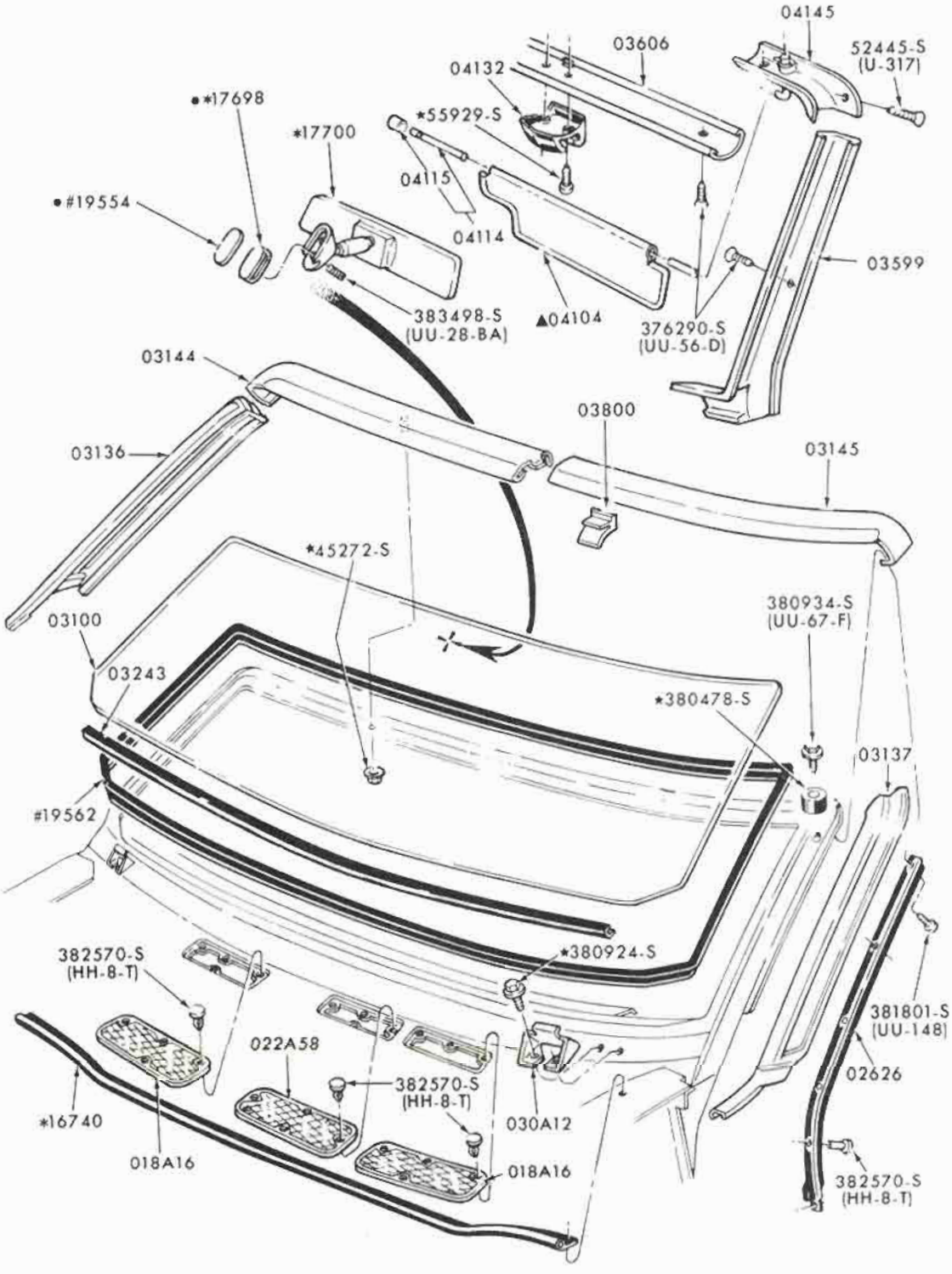

#REFER TO GROUP IN PAINT SECTION
*REFER TO GROUP IN CHASSIS SECTION
•ALSO SUPPLIED IN ASSEMBLY GROUP 03100
▲REFER TO GROUP IN SOFT TRIM SECTION

P-7843

COPYRIGHT © 1975 — FORD MOTOR COMPANY — DEARBORN, MICHIGAN

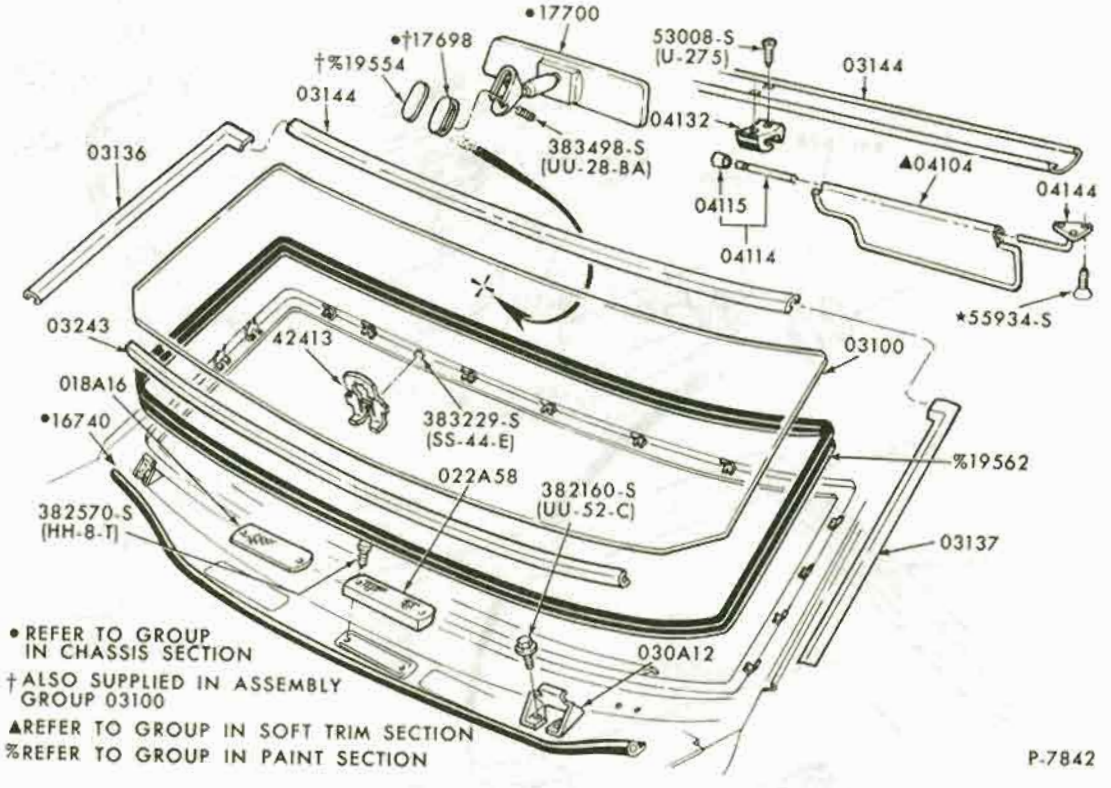

WINDSHIELD and RELATED PARTS
1971/72 FORD - BODY TYPES 53, 54, 57, 65, 71

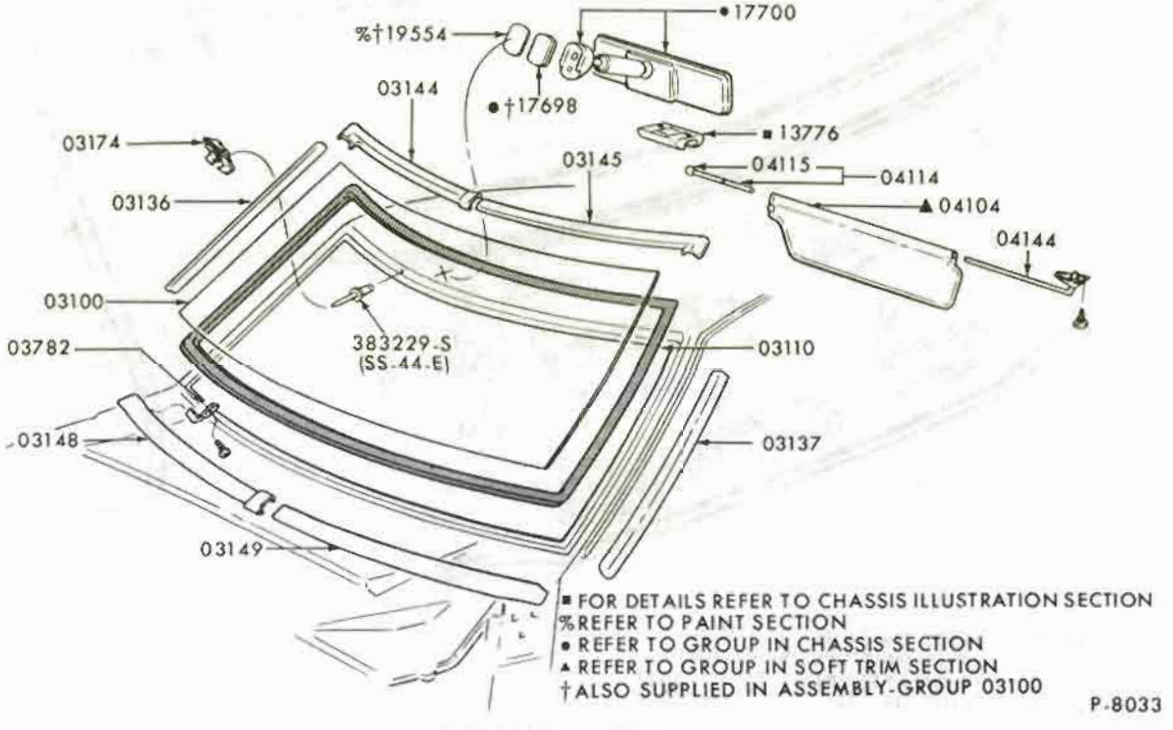

WINDSHIELD and RELATED PARTS
1971/72 PINTO

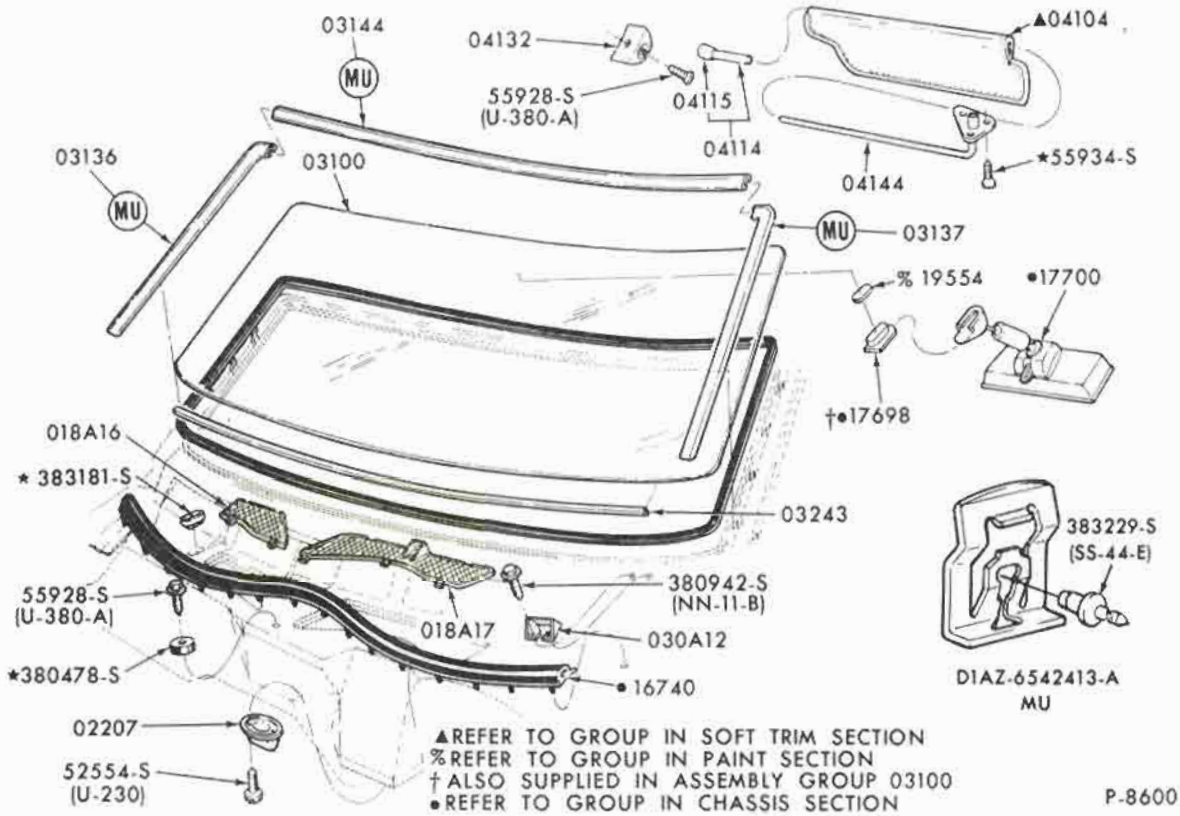

WINDSHIELD and RELATED PARTS
1972 TORINO

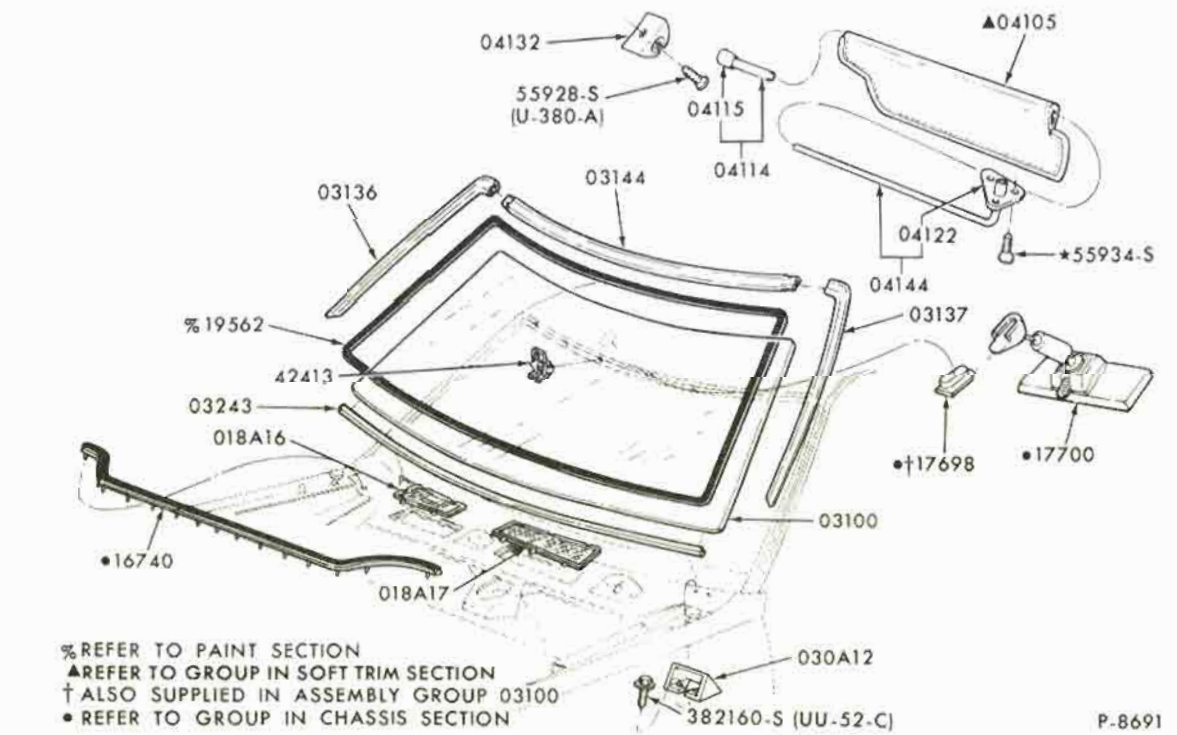

WINDSHIELD and RELATED PARTS
1972 THUNDERBIRD

COPYRIGHT © 1975 — FORD MOTOR COMPANY — DEARBORN, MICHIGAN

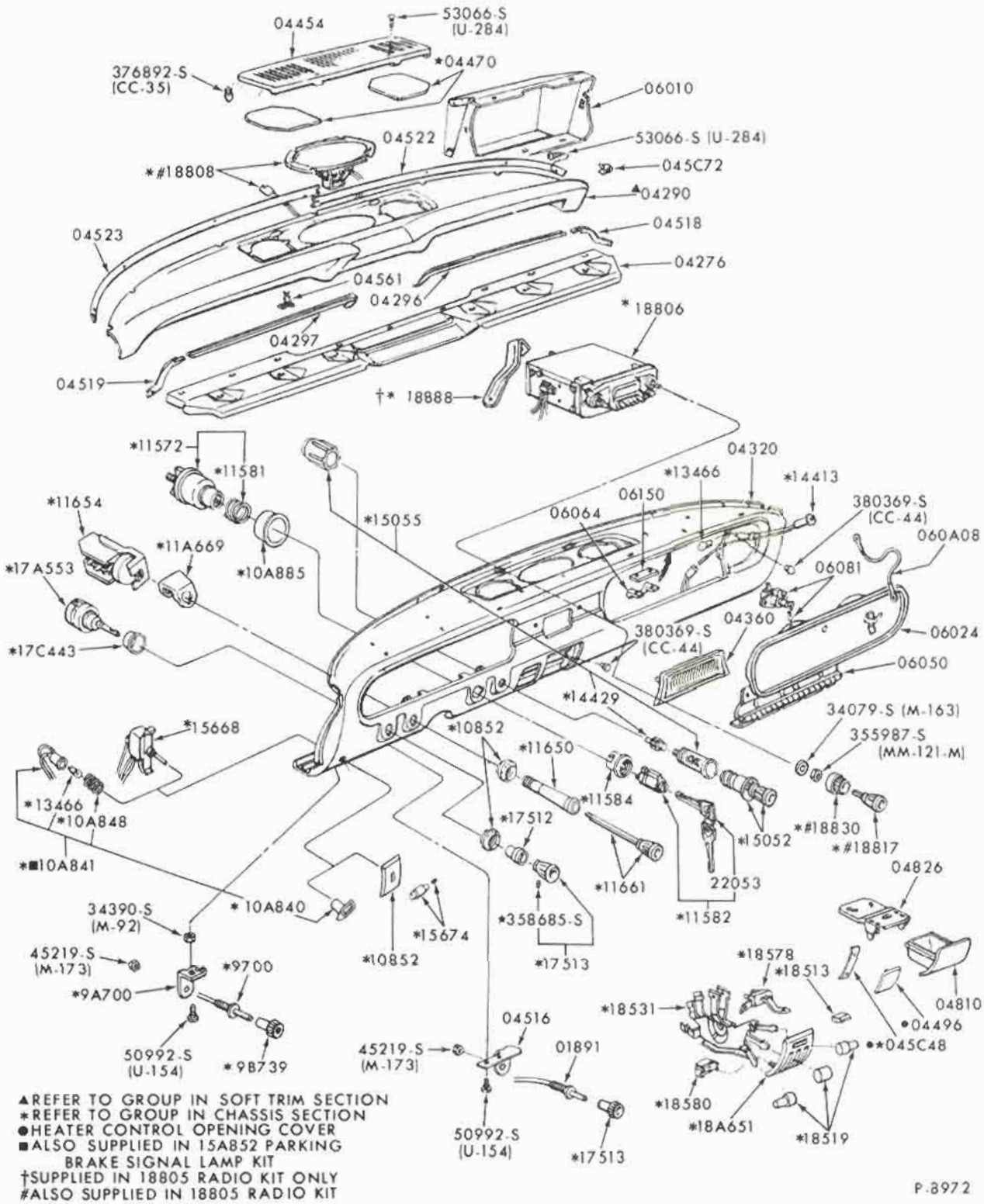

▲REFER TO GROUP IN SOFT TRIM SECTION
*REFER TO GROUP IN CHASSIS SECTION
●HEATER CONTROL OPENING COVER
■ALSO SUPPLIED IN 15A852 PARKING BRAKE SIGNAL LAMP KIT
†SUPPLIED IN 18805 RADIO KIT ONLY
#ALSO SUPPLIED IN 18805 RADIO KIT

P-8972

INSTRUMENT PANEL, PAD and RELATED PARTS
1965/66 MUSTANG - w/GAUGES

COPYRIGHT © 1975 — FORD MOTOR COMPANY — DEARBORN, MICHIGAN

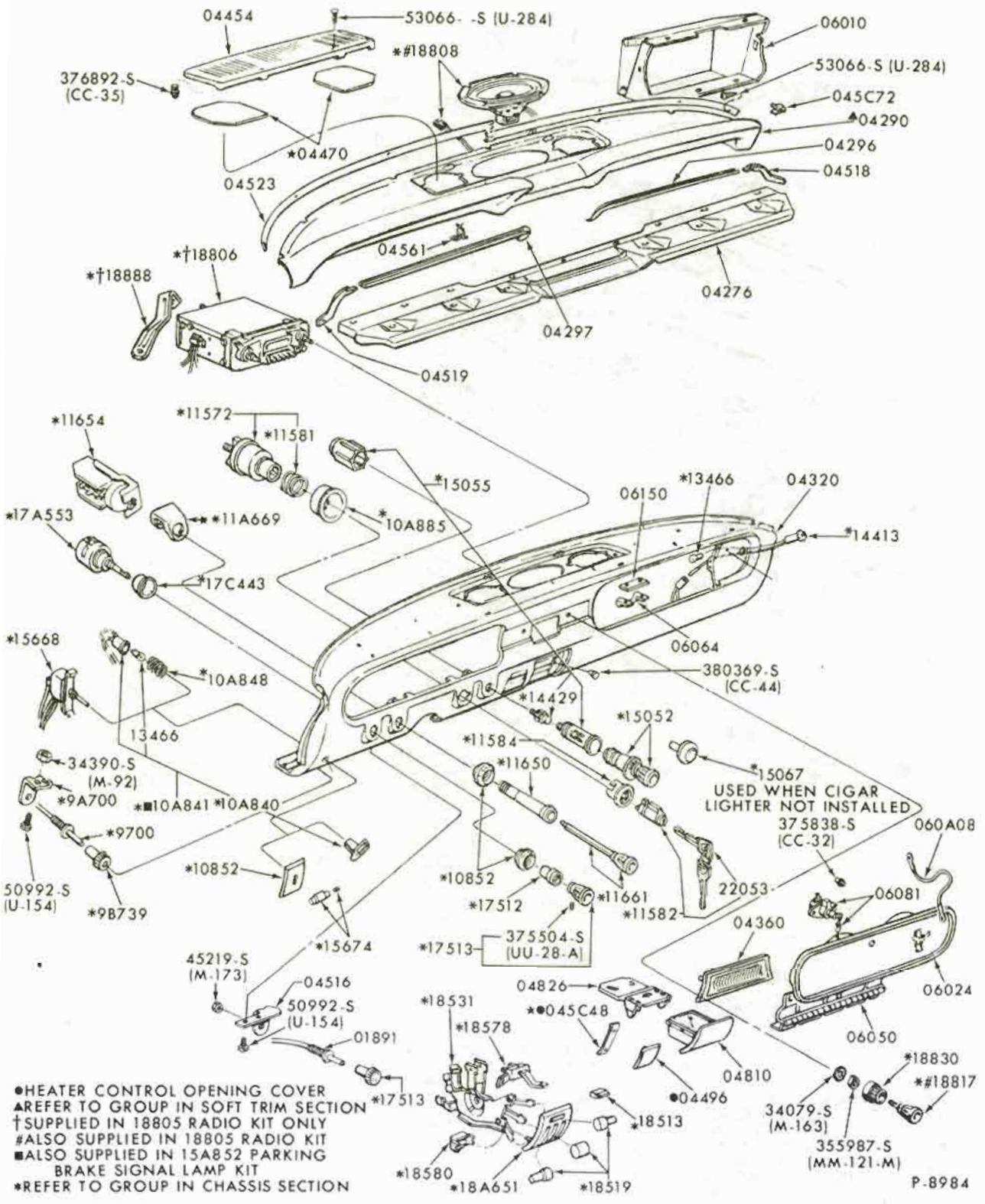

●HEATER CONTROL OPENING COVER
▲REFER TO GROUP IN SOFT TRIM SECTION
†SUPPLIED IN 18805 RADIO KIT ONLY
#ALSO SUPPLIED IN 18805 RADIO KIT
■ALSO SUPPLIED IN 15A852 PARKING BRAKE SIGNAL LAMP KIT
*REFER TO GROUP IN CHASSIS SECTION

INSTRUMENT PANEL, PAD and RELATED PARTS
1965 MUSTANG - w/INDICATOR LIGHTS

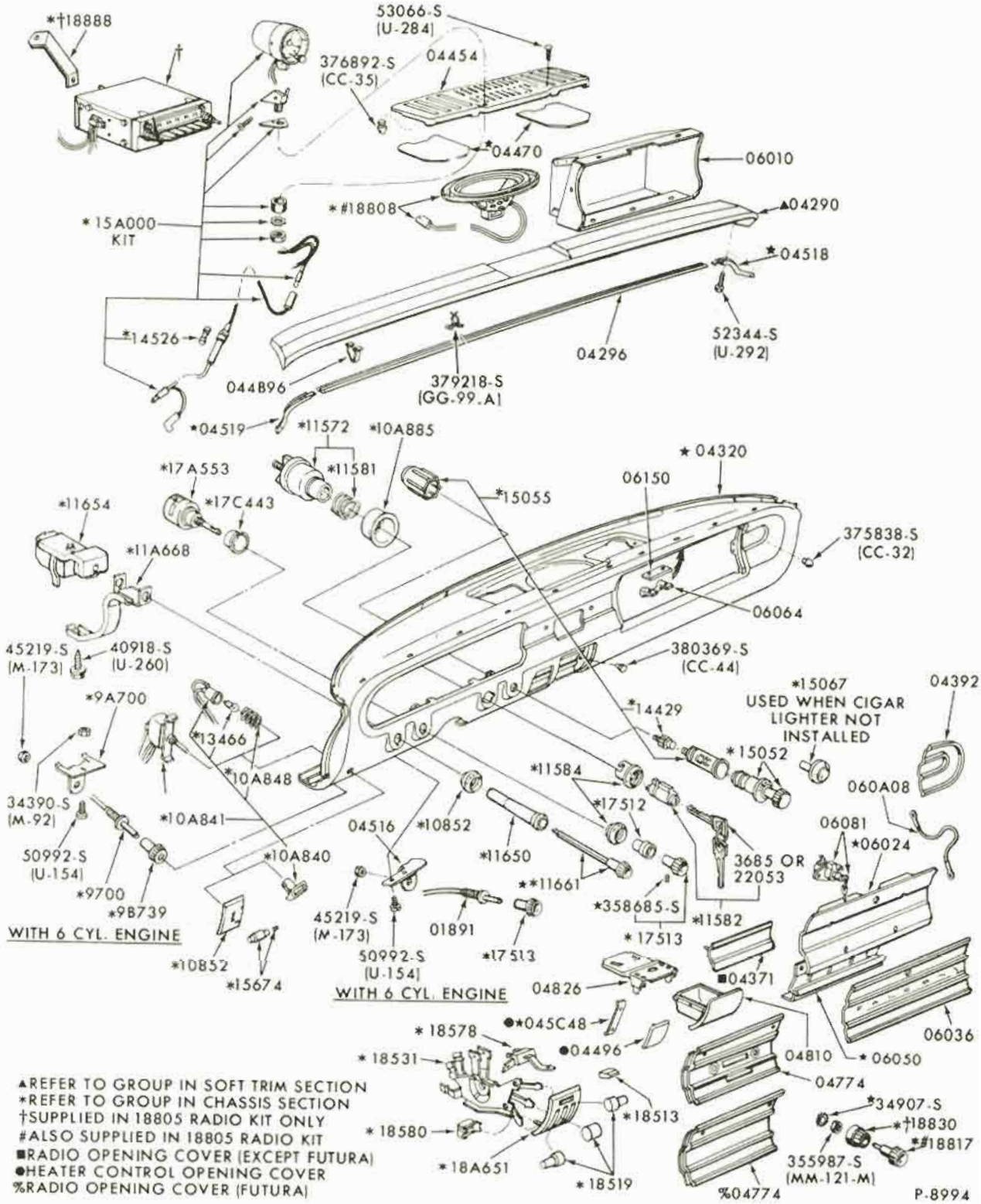

INSTRUMENT PANEL, PAD and RELATED PARTS
1965 FALCON

COPYRIGHT © 1975 — FORD MOTOR COMPANY — DEARBORN, MICHIGAN

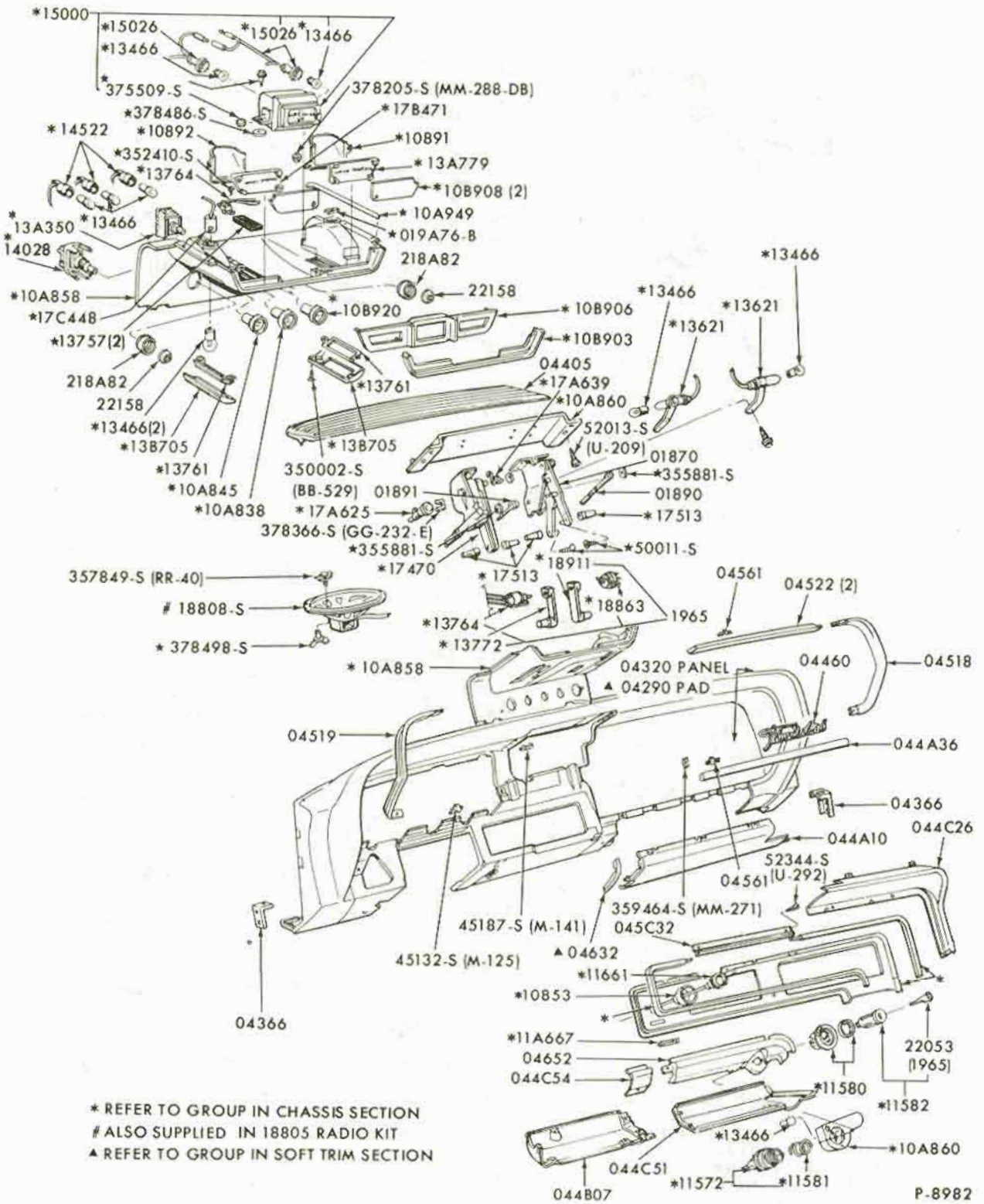

* REFER TO GROUP IN CHASSIS SECTION
\# ALSO SUPPLIED IN 18805 RADIO KIT
▲ REFER TO GROUP IN SOFT TRIM SECTION

INSTRUMENT PANEL, PAD and RELATED PARTS
1965/66 THUNDERBIRD

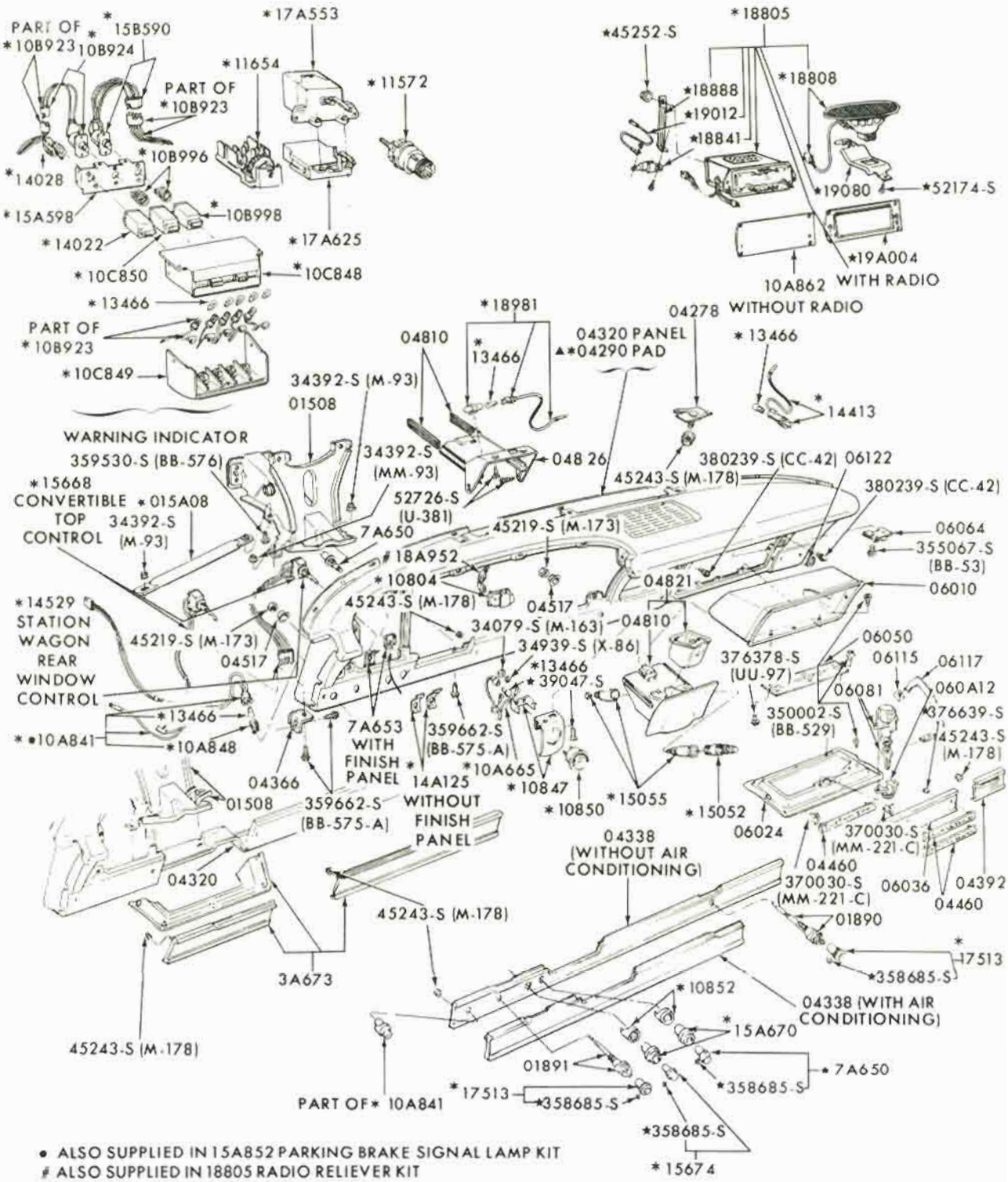

• ALSO SUPPLIED IN 15A852 PARKING BRAKE SIGNAL LAMP KIT
ALSO SUPPLIED IN 18805 RADIO RELIEVER KIT
* REFER TO GROUP IN CHASSIS SECTION
▲ REFER TO GROUP IN SOFT TRIM SECTION

P-8990

INSTRUMENT PANEL, PAD and RELATED PARTS
1965/66 FORD

COPYRIGHT © 1975 — FORD MOTOR COMPANY — DEARBORN, MICHIGAN

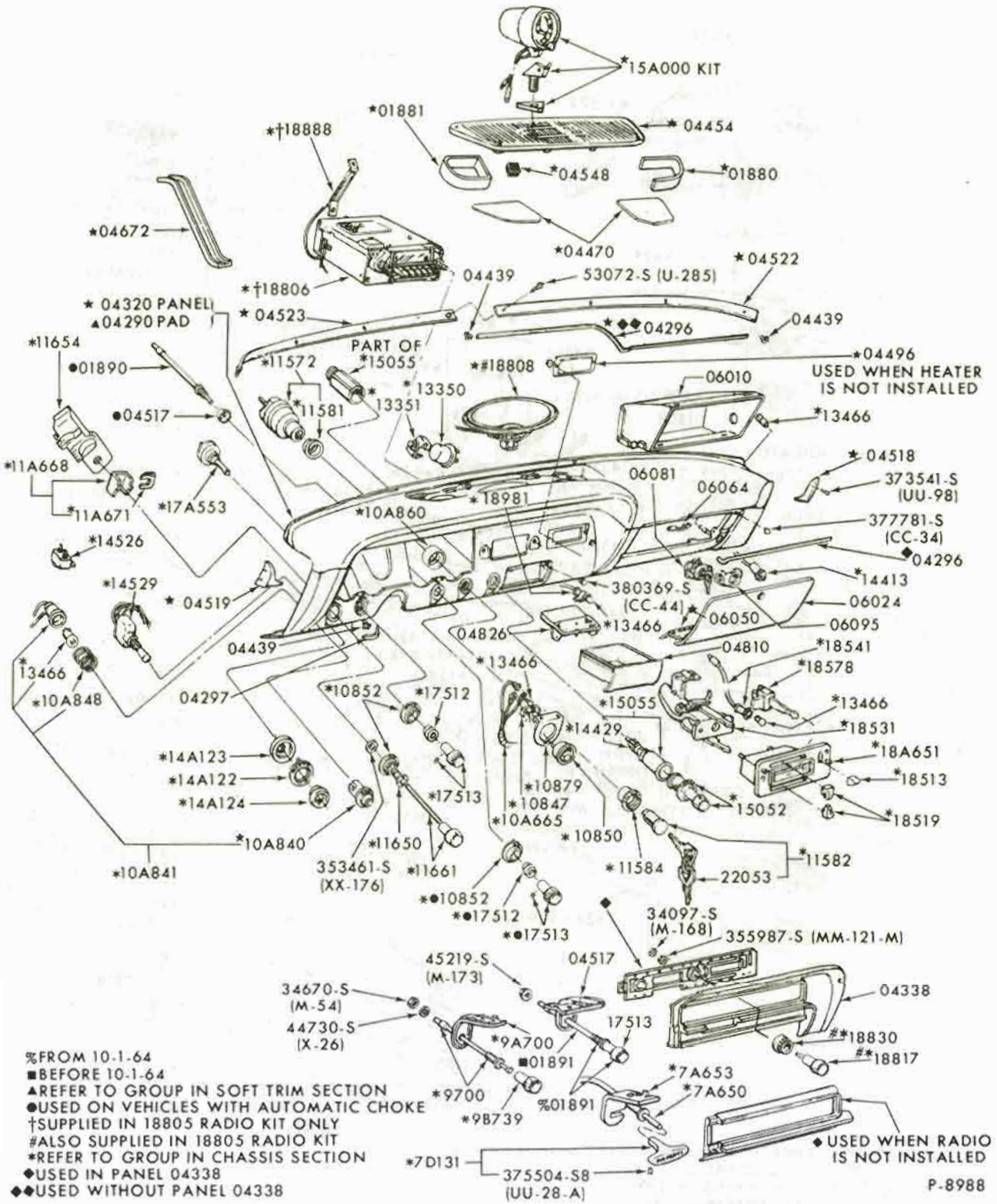

%FROM 10-1-64
■BEFORE 10-1-64
▲REFER TO GROUP IN SOFT TRIM SECTION
●USED ON VEHICLES WITH AUTOMATIC CHOKE
†SUPPLIED IN 18805 RADIO KIT ONLY
#ALSO SUPPLIED IN 18805 RADIO KIT
*REFER TO GROUP IN CHASSIS SECTION
◆USED IN PANEL 04338
◆◆USED WITHOUT PANEL 04338

INSTRUMENT PANEL, PAD and RELATED PARTS
1965 FAIRLANE

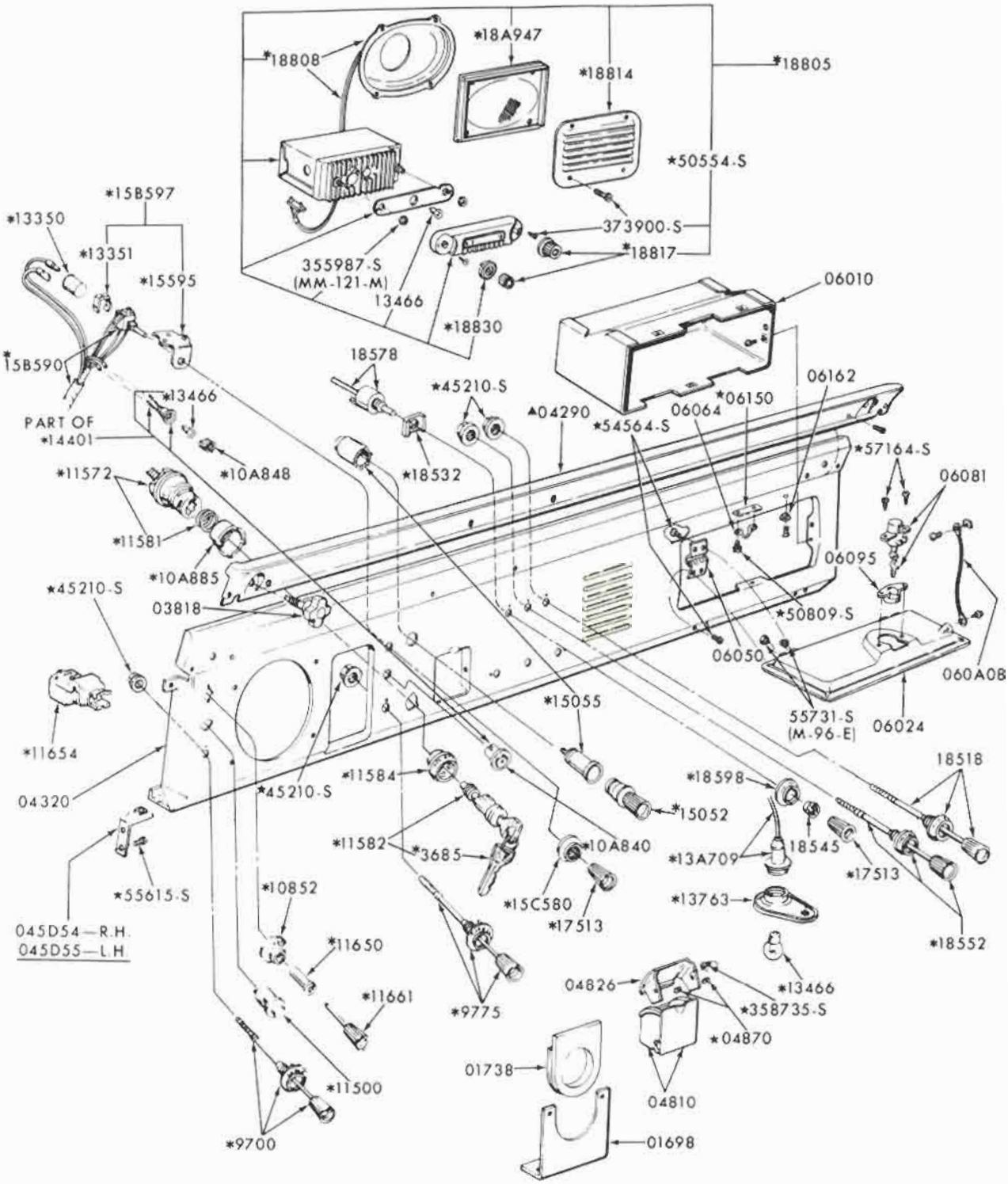

*REFER TO GROUP IN CHASSIS SECTION
▲REFER TO GROUP IN SOFT TRIM SECTION

P-8980

INSTRUMENT PANEL, PAD and RELATED PARTS
1966/67 BRONCO

COPYRIGHT © 1975— FORD MOTOR COMPANY —DEARBORN, MICHIGAN

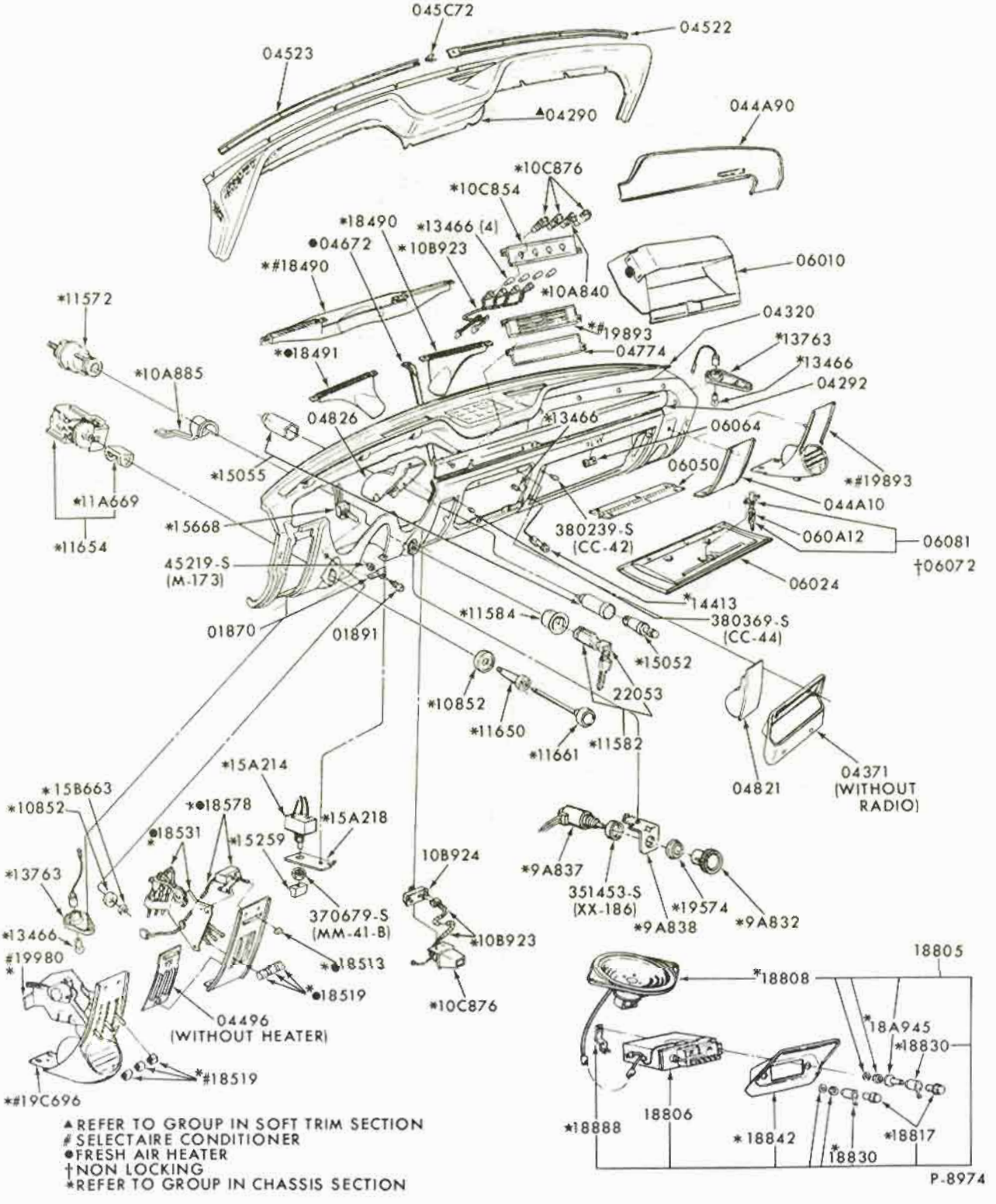

▲REFER TO GROUP IN SOFT TRIM SECTION
SELECTAIRE CONDITIONER
● FRESH AIR HEATER
† NON LOCKING
* REFER TO GROUP IN CHASSIS SECTION

INSTRUMENT PANEL and RELATED PARTS
1967/68 MUSTANG

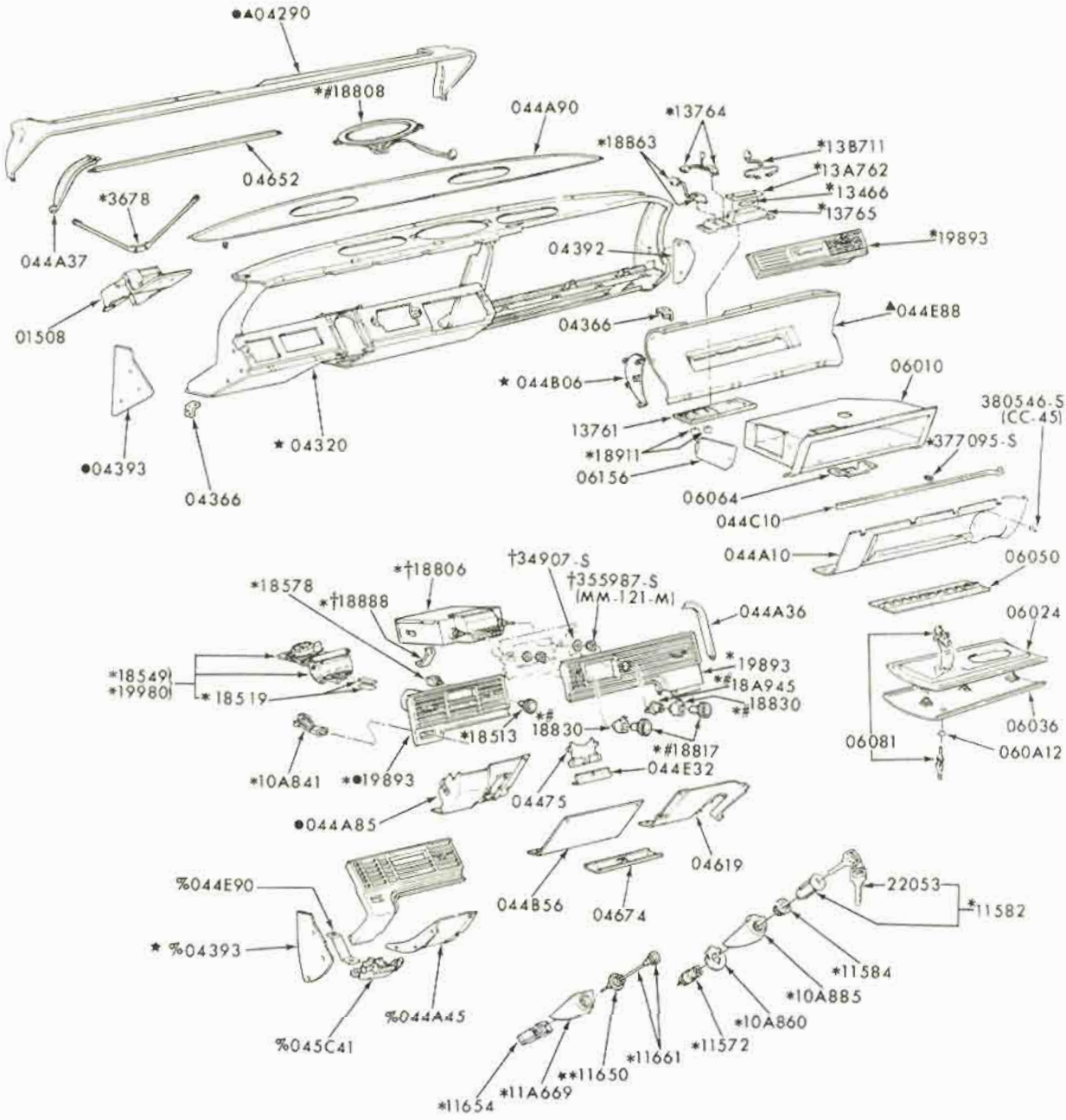

%MODEL 57
●MODEL 65
#ALSO SUPPLIED IN 18805 RADIO KIT
†SUPPLIED ONLY IN 10885 RADIO KIT
▲REFER TO GROUP IN SOFT TRIM SECTION
*REFER TO GROUP IN CHASSIS SECTION

P-8978

INSTRUMENT PANEL and RELATED PARTS
1967 THUNDERBIRD

COPYRIGHT © 1975 — FORD MOTOR COMPANY — DEARBORN, MICHIGAN

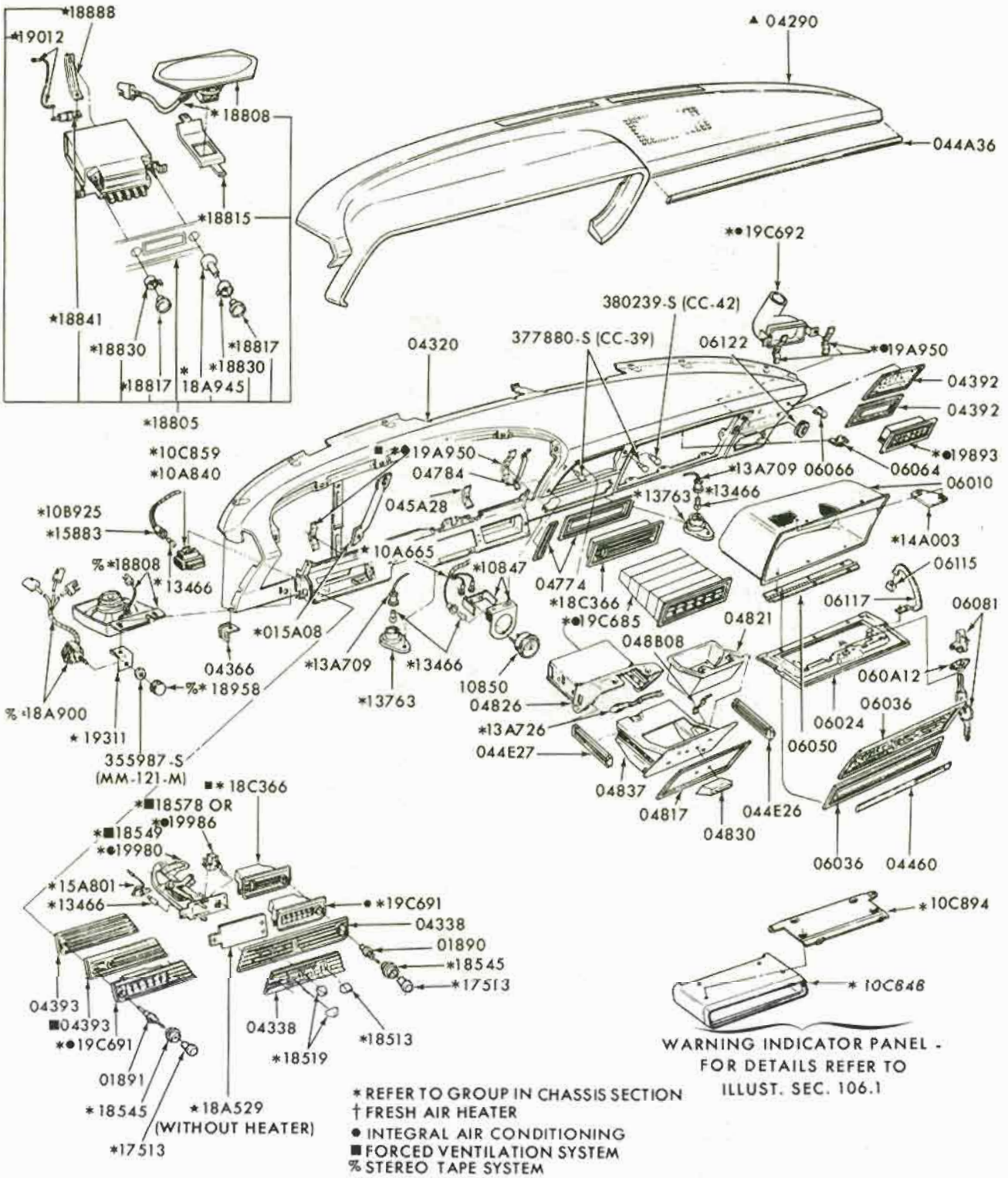

* REFER TO GROUP IN CHASSIS SECTION
† FRESH AIR HEATER
● INTEGRAL AIR CONDITIONING
■ FORCED VENTILATION SYSTEM
% STEREO TAPE SYSTEM
# MODEL 76 ONLY
▲ REFER TO SOFT TRIM SECTION

P-8992

INSTRUMENT PANEL and RELATED PARTS
1967 FORD

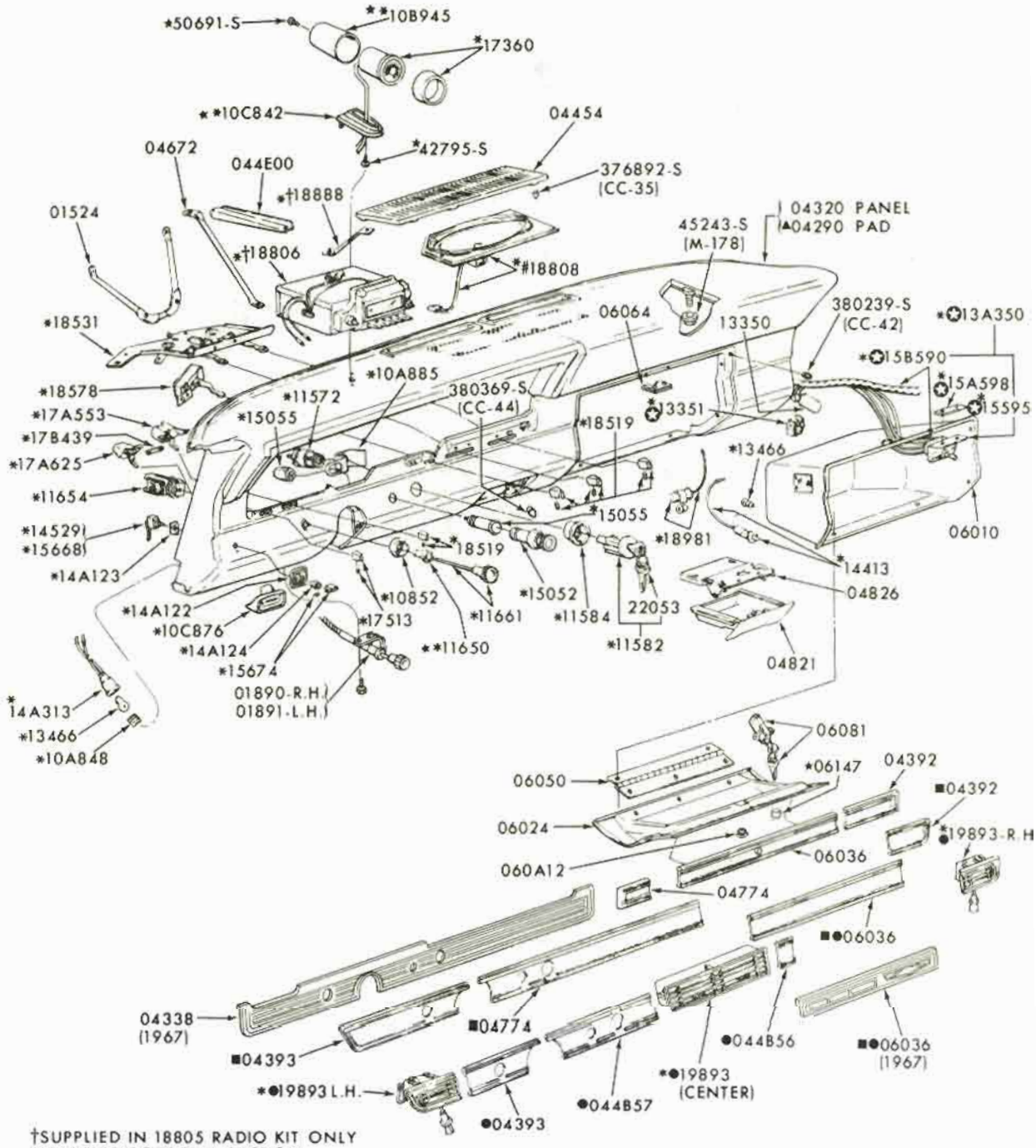

†SUPPLIED IN 18805 RADIO KIT ONLY
▲REFER TO SOFT TRIM SECTION
■LESS AIR CONDITIONING BODY TYPES B (63C, 63D, 71E, 76C, 76D)
●WITH AIR CONDITIONING BODY TYPES B (63C, 63D, 71E, 76C, 76D)
✪1966 ONLY
*REFER TO GROUP IN CHASSIS SECTION
#ALSO SUPPLIED IN 18805 RADIO KIT

P-8976

INSTRUMENT PANEL, PAD and RELATED PARTS
1966/67 FAIRLANE

COPYRIGHT © 1975 — FORD MOTOR COMPANY — DEARBORN, MICHIGAN

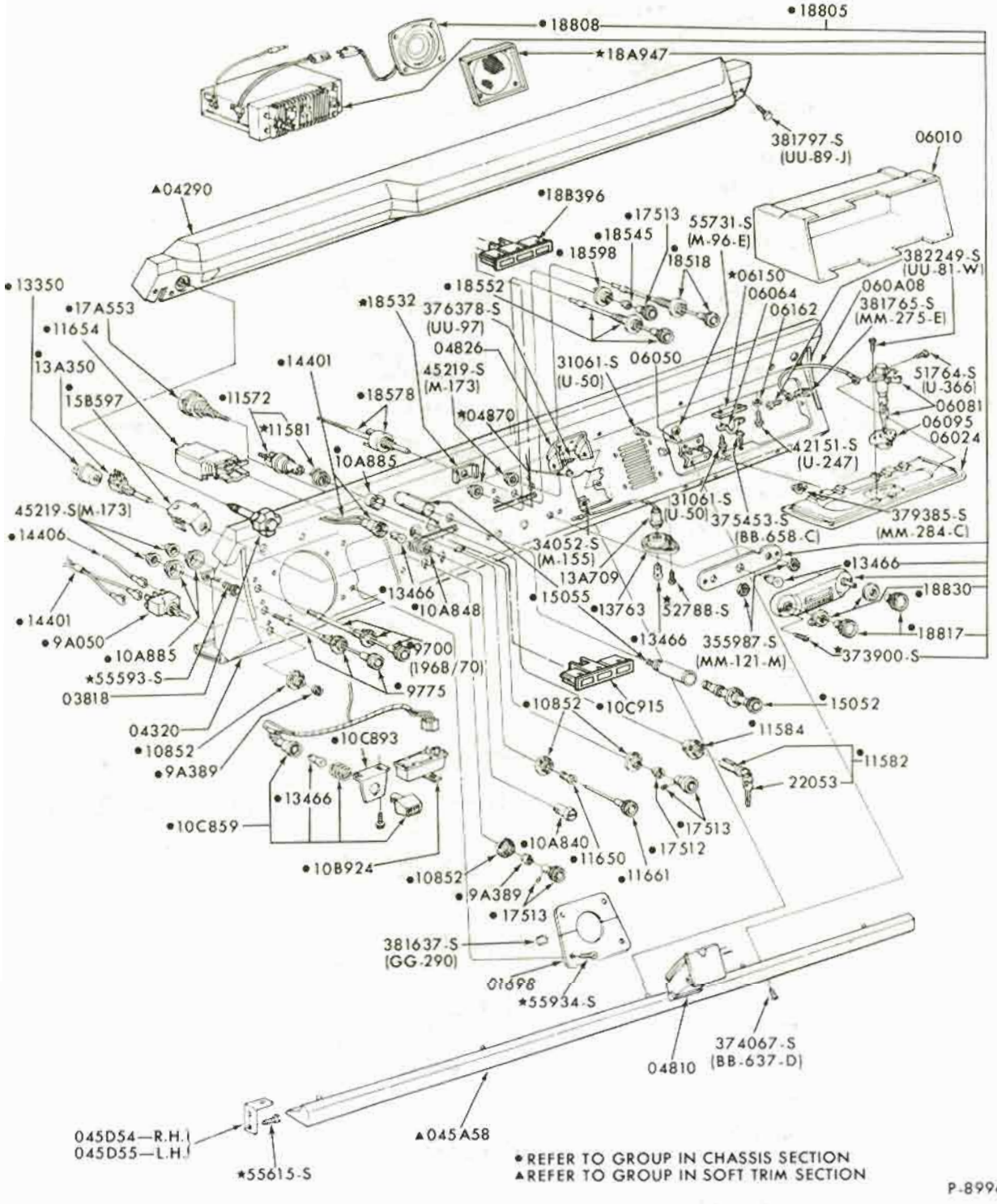

•REFER TO GROUP IN CHASSIS SECTION
▲REFER TO GROUP IN SOFT TRIM SECTION

P-8996

INSTRUMENT PANEL, PAD and RELATED PARTS
1968/72 BRONCO

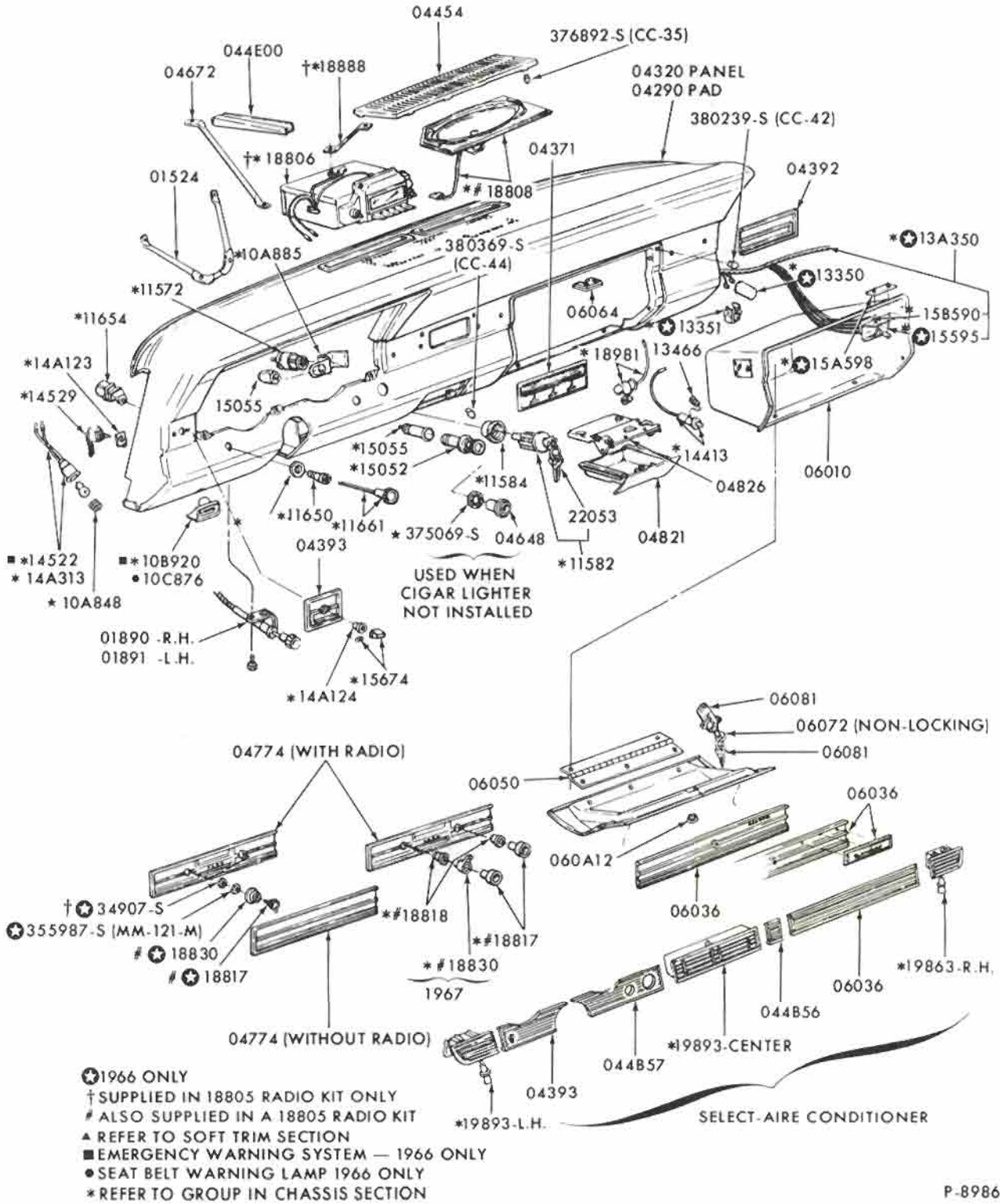

✪1966 ONLY
†SUPPLIED IN 18805 RADIO KIT ONLY
ALSO SUPPLIED IN A 18805 RADIO KIT
▲ REFER TO SOFT TRIM SECTION
■EMERGENCY WARNING SYSTEM — 1966 ONLY
•SEAT BELT WARNING LAMP 1966 ONLY
*REFER TO GROUP IN CHASSIS SECTION

P-8986

COPYRIGHT © 1975 — FORD MOTOR COMPANY — DEARBORN, MICHIGAN

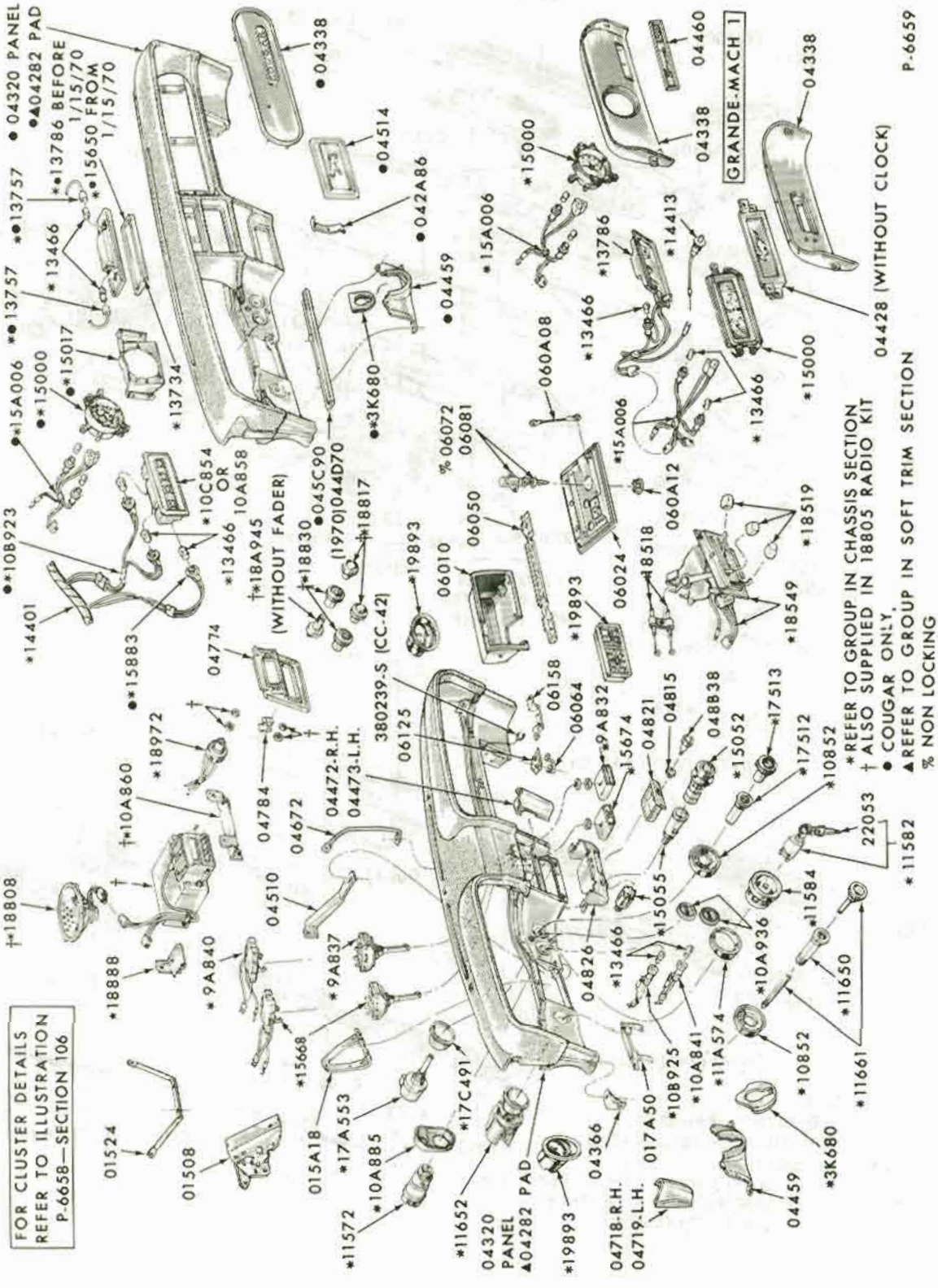
FOR CLUSTER DETAILS
REFER TO ILLUSTRATION
P-6658—SECTION 106
*REFER TO GROUP IN CHASSIS SECTION
† ALSO SUPPLIED IN 18805 RADIO KIT
● COUGAR ONLY.
▲REFER TO GROUP IN SOFT TRIM SECTION
% NON LOCKING
GRANDE-MACH 1
04428 (WITHOUT CLOCK)
P-6659

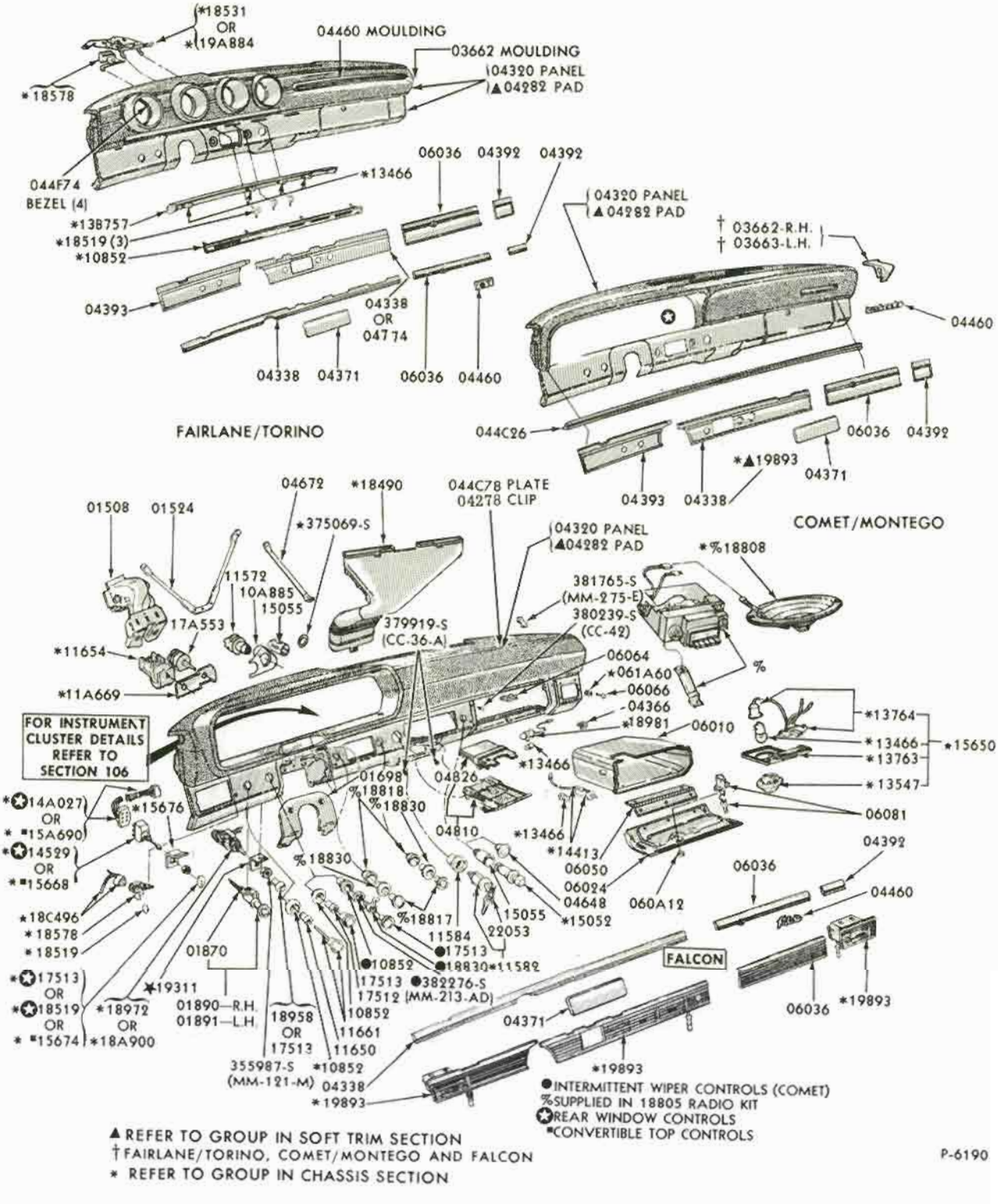

INSTRUMENT PANEL and RELATED PARTS
1968/69 FAIRLANE and 1968/70 FALCON

COPYRIGHT © 1975 — FORD MOTOR COMPANY — DEARBORN, MICHIGAN

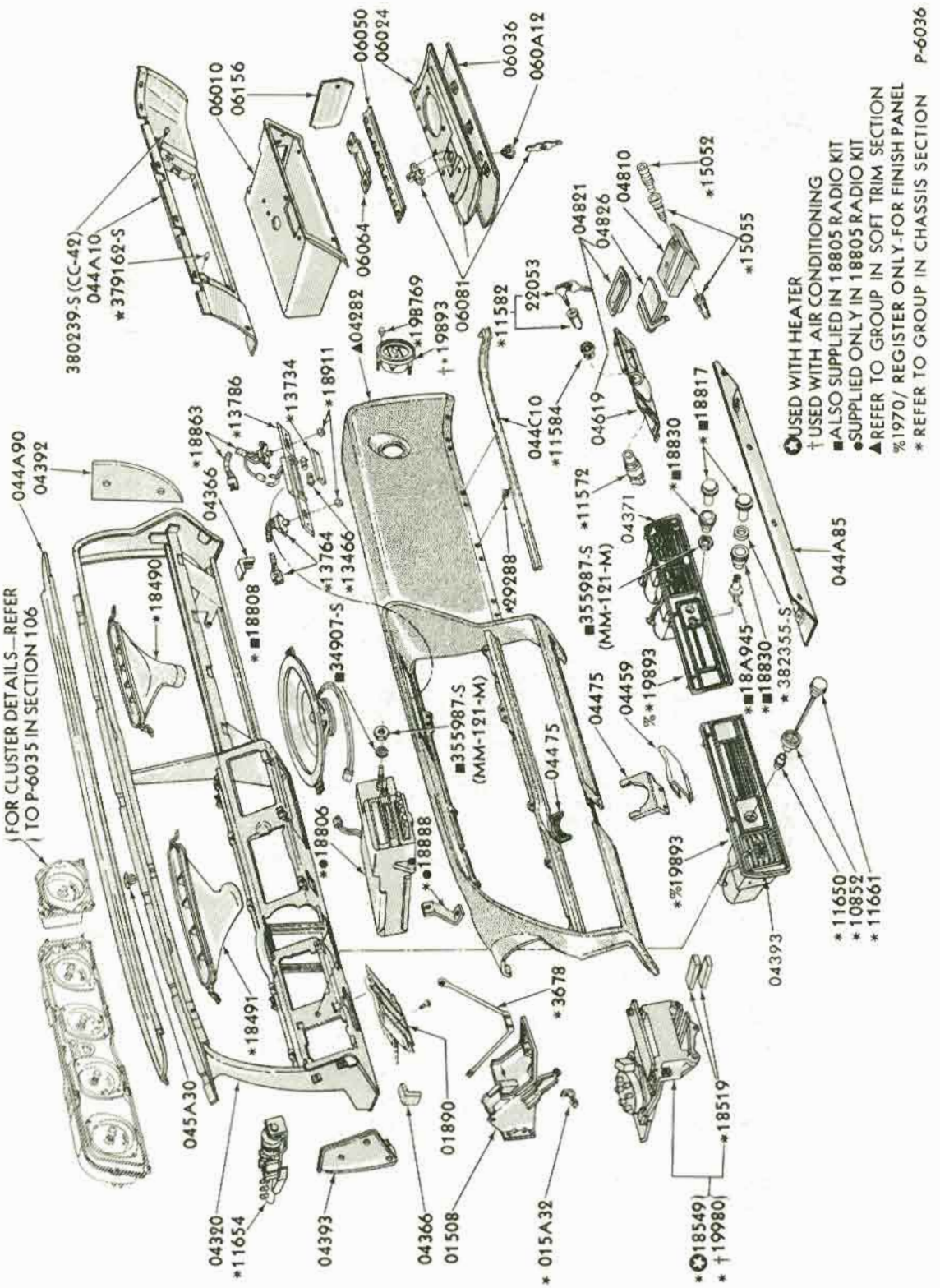

INSTRUMENT PANEL and RELATED PARTS
1968/71 THUNDERBIRD

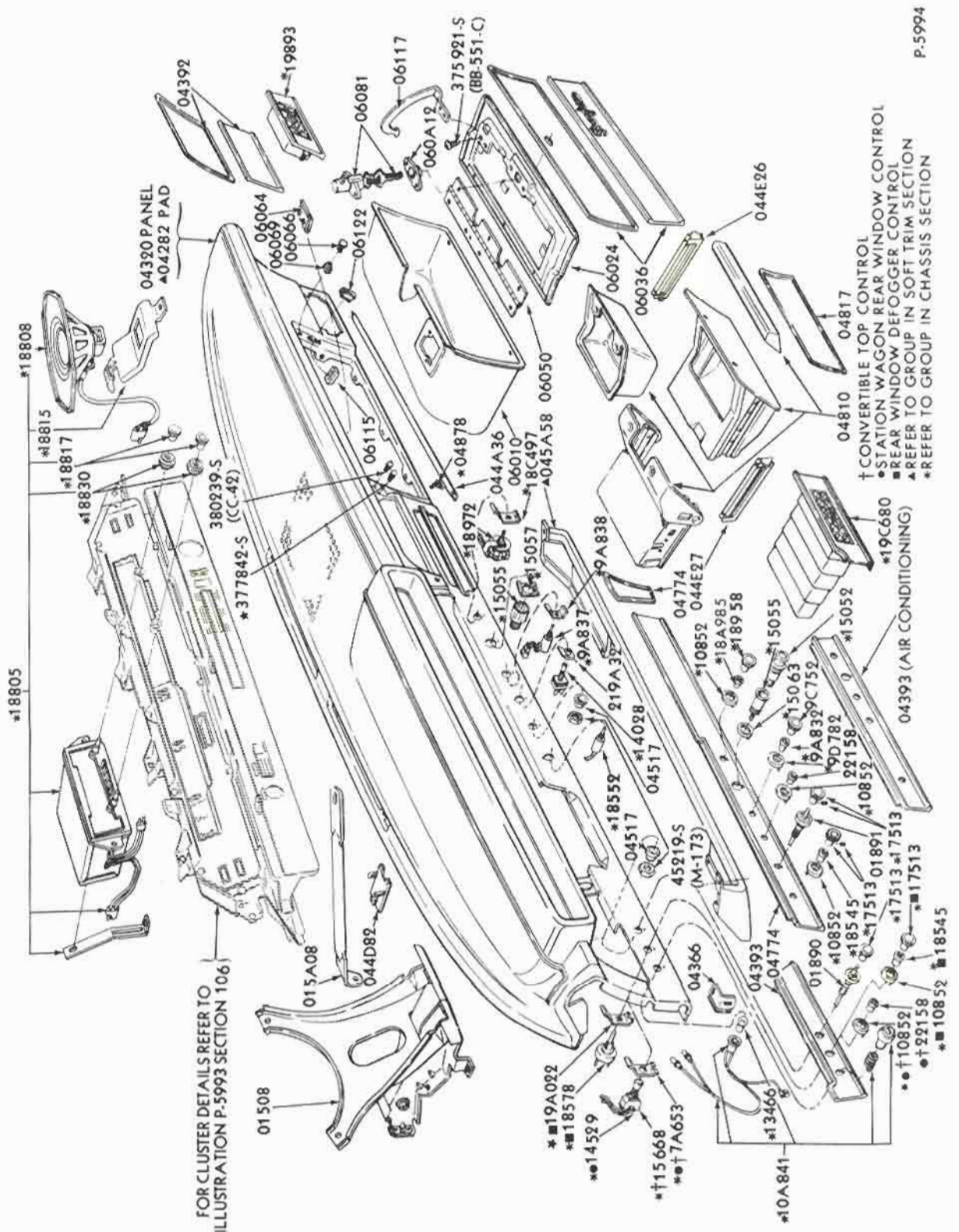

INSTRUMENT PANEL, PAD and RELATED PARTS
1968 FORD

COPYRIGHT © 1975 — FORD MOTOR COMPANY — DEARBORN, MICHIGAN

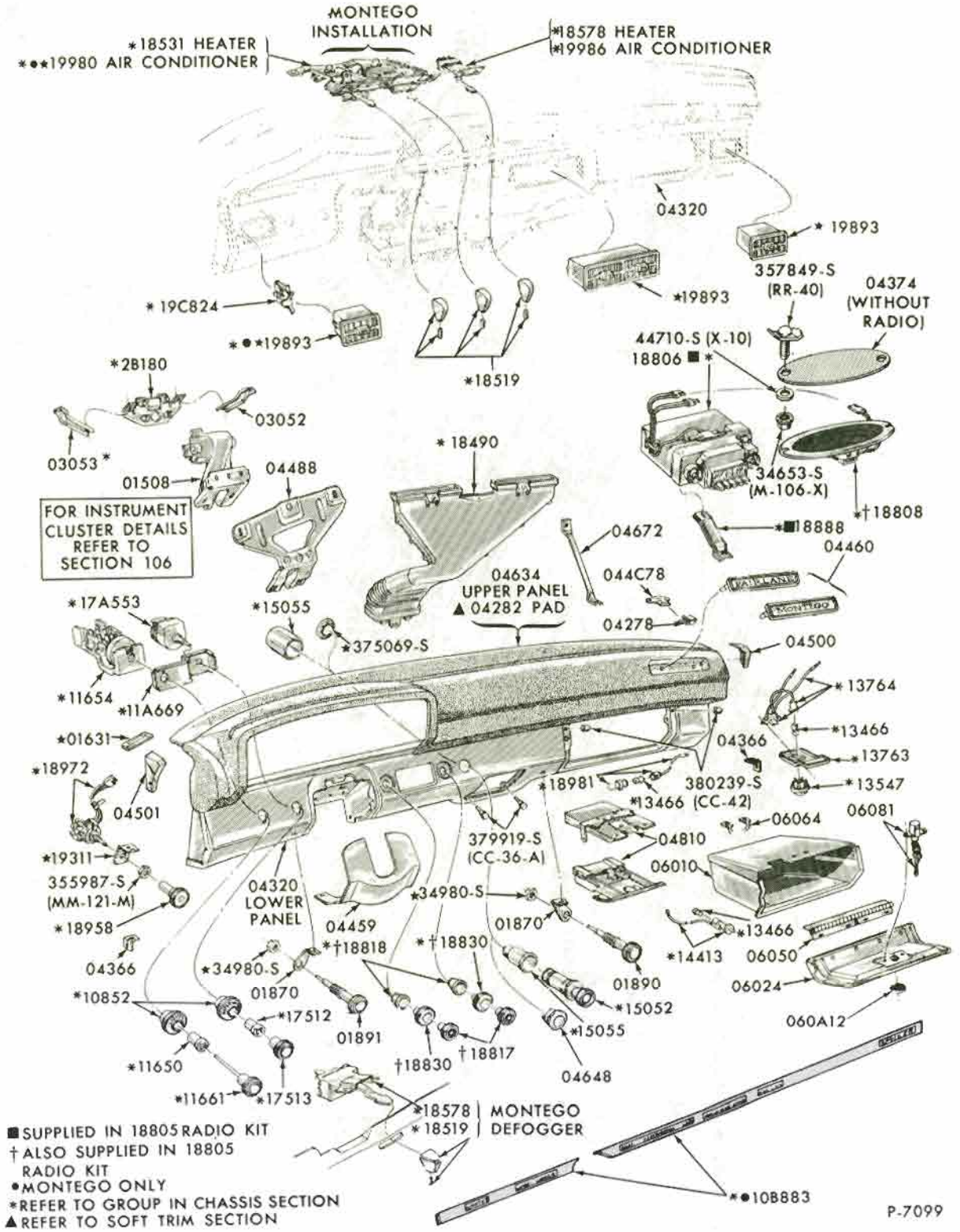

■ SUPPLIED IN 18805 RADIO KIT
† ALSO SUPPLIED IN 18805 RADIO KIT
• MONTEGO ONLY
* REFER TO GROUP IN CHASSIS SECTION
▲ REFER TO SOFT TRIM SECTION

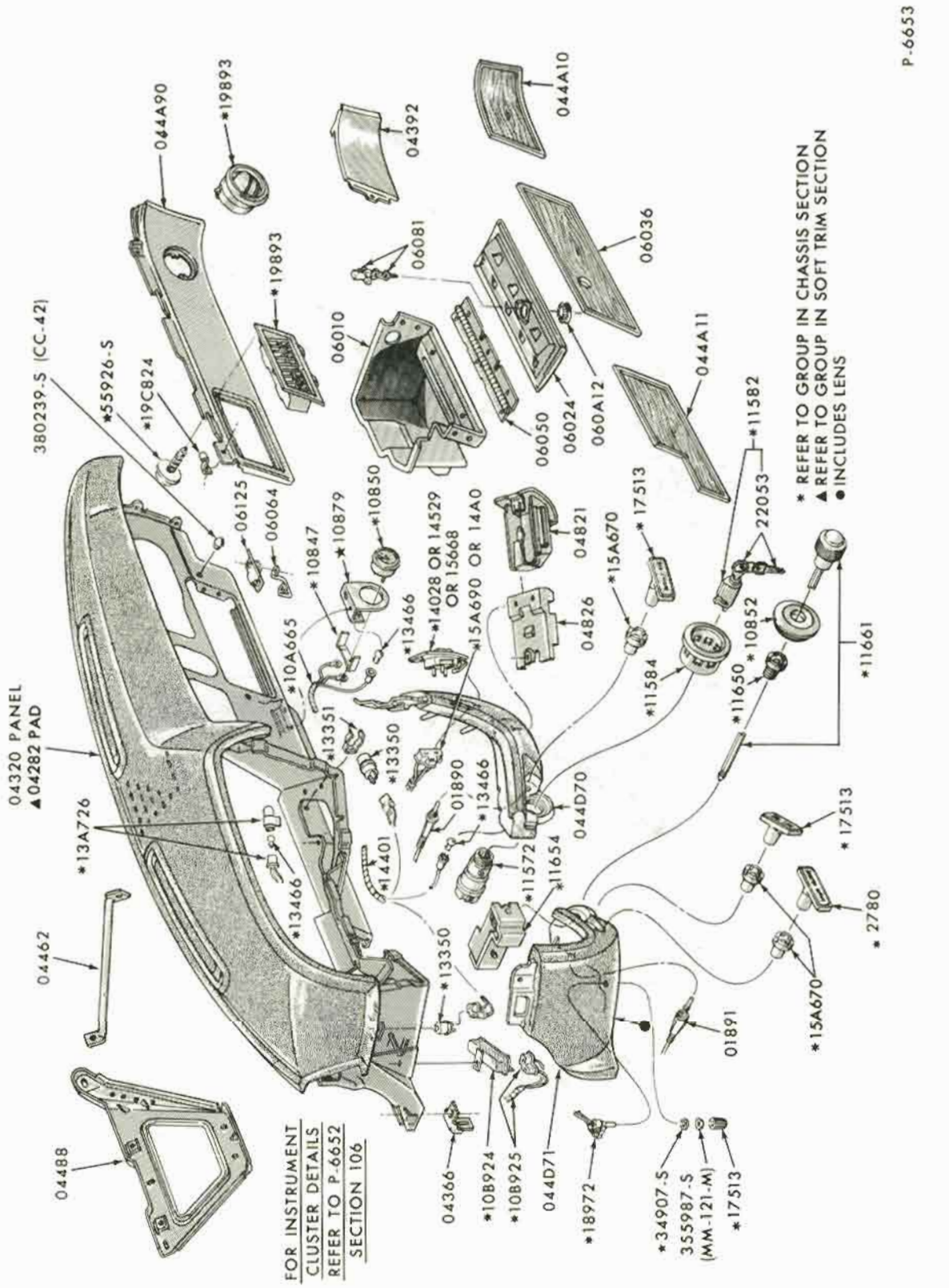

INSTRUMENT PANEL and RELATED PARTS
1969/70 FORD

COPYRIGHT © 1975 — FORD MOTOR COMPANY — DEARBORN, MICHIGAN

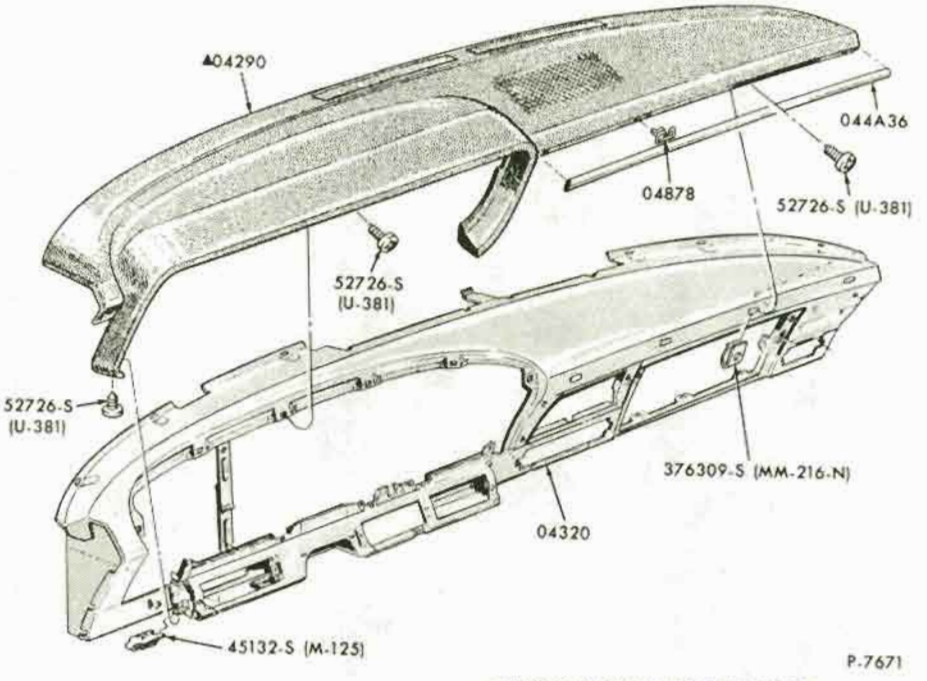

INSTRUMENT PANEL PAD and ATTACHING PARTS
1967 FORD

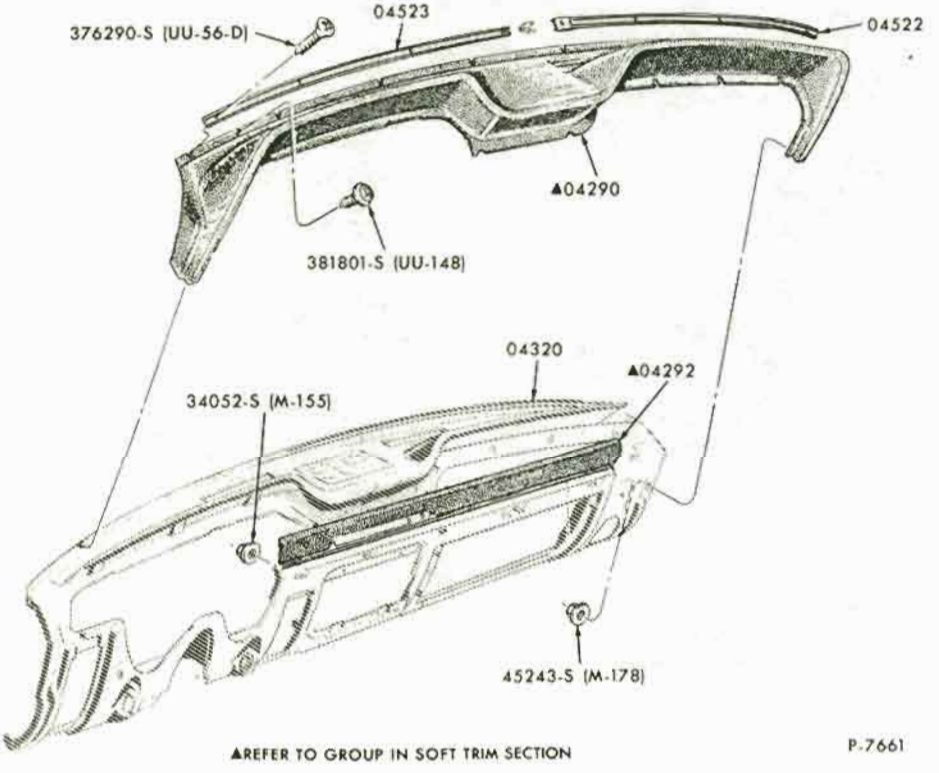

INSTRUMENT PANEL PAD and ATTACHING PARTS
1967/ 68 MUSTANG

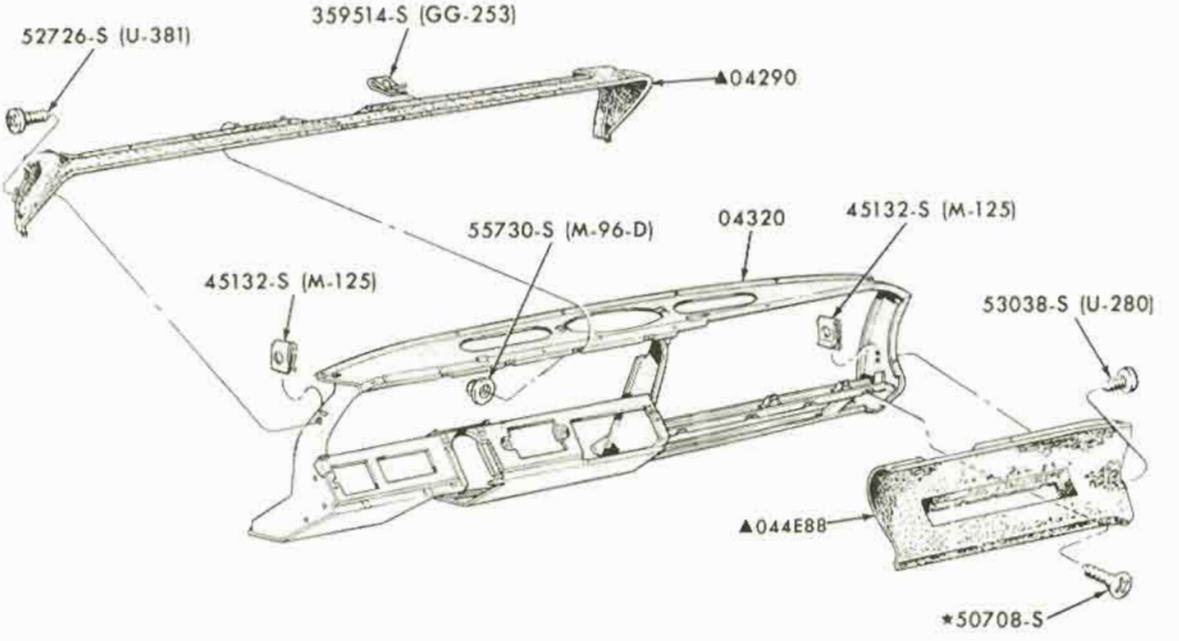

▲REFER TO GROUP IN SOFT TRIM SECTION

INSTRUMENT PANEL PAD and ATTACHING PARTS
1967 THUNDERBIRD

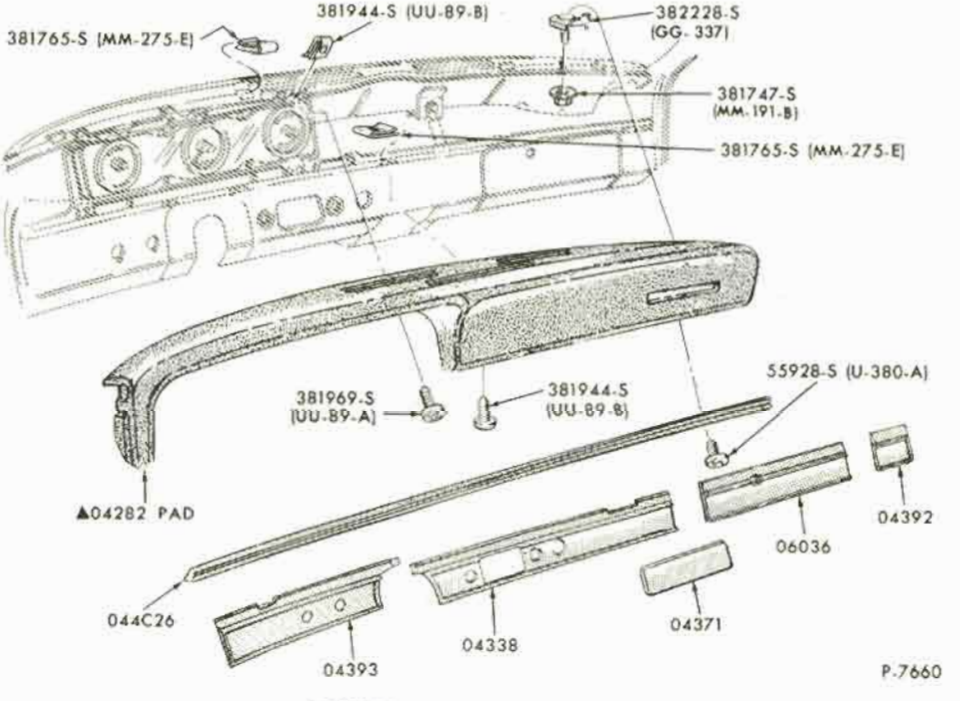

▲REFER TO GROUP IN SOFT TRIM SECTION

INSTRUMENT PANEL PAD and ATTACHING PARTS
1968/69 FAIRLANE/TORINO, FALCON

COPYRIGHT © 1975 — FORD MOTOR COMPANY — DEARBORN, MICHIGAN

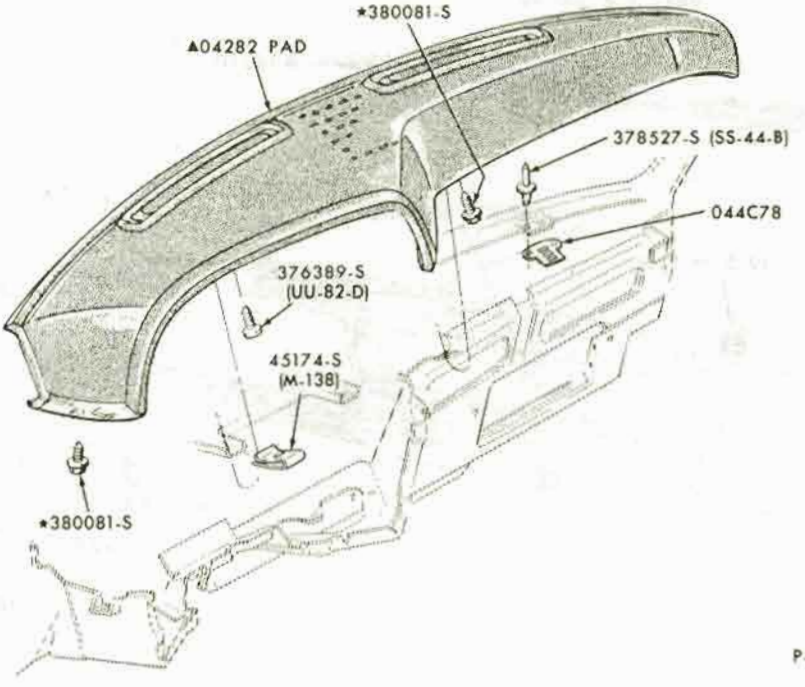

▲ REFER TO GROUP IN SOFT TRIM SECTION

INSTRUMENT PANEL PAD and ATTACHING PARTS
1969/70 FORD

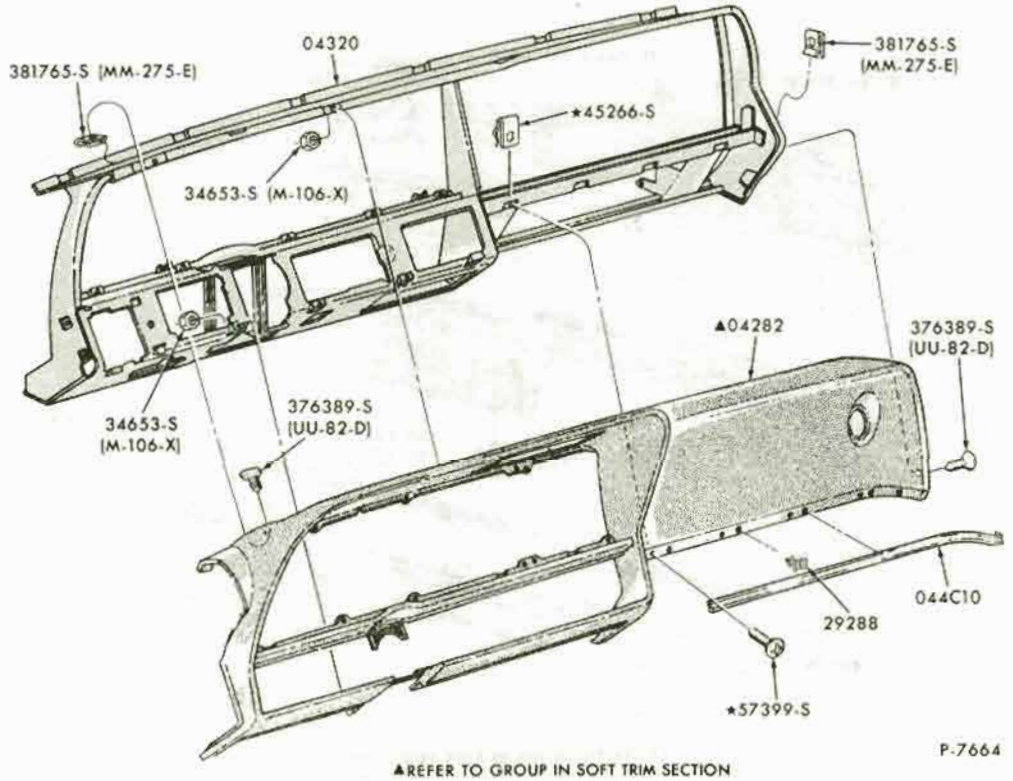

▲REFER TO GROUP IN SOFT TRIM SECTION

INSTRUMENT PANEL PAD and ATTACHING PARTS
1968/71 THUNDERBIRD

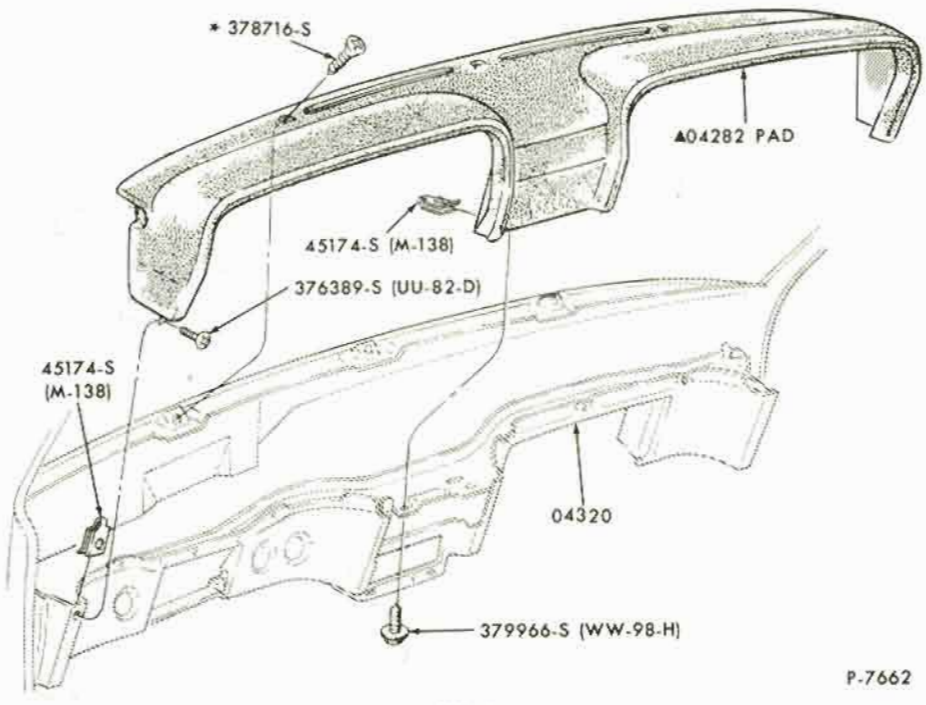

▲REFER TO GROUP IN SOFT TRIM SECTION

INSTRUMENT PANEL PAD and ATTACHING PARTS
1969/70 MUSTANG

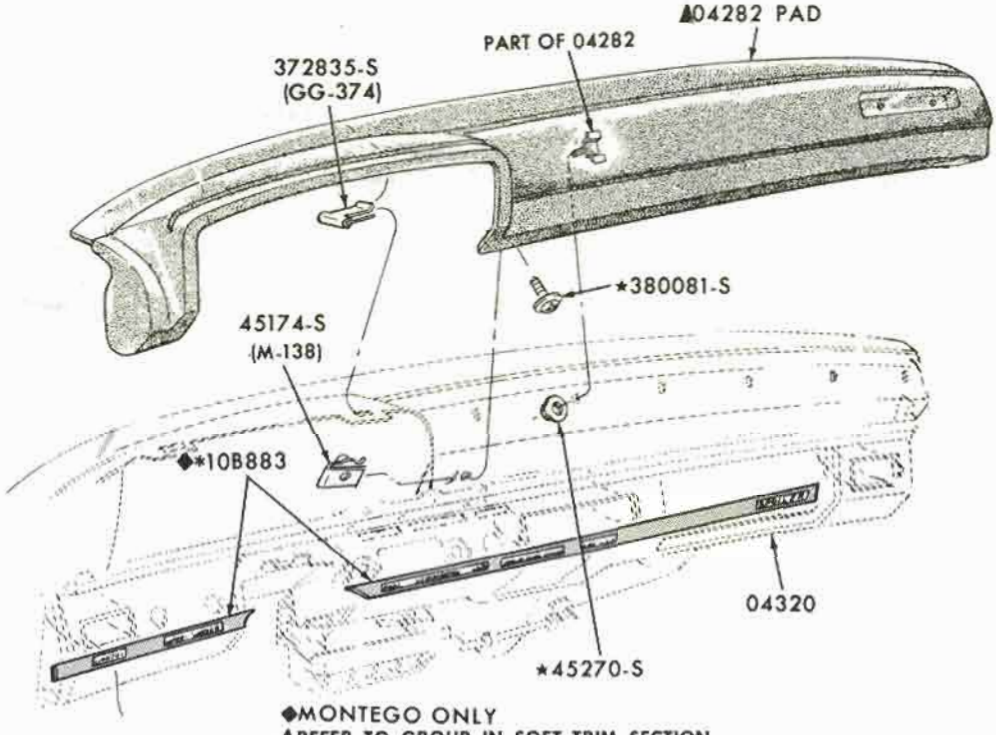

◆MONTEGO ONLY
▲REFER TO GROUP IN SOFT TRIM SECTION
* REFER TO GROUP IN CHASSIS SECTION

P-7659

INSTRUMENT PANEL PAD and ATTACHING PARTS
1970/71 FAIRLANE/TORINO

COPYRIGHT © 1975 — FORD MOTOR COMPANY — DEARBORN, MICHIGAN

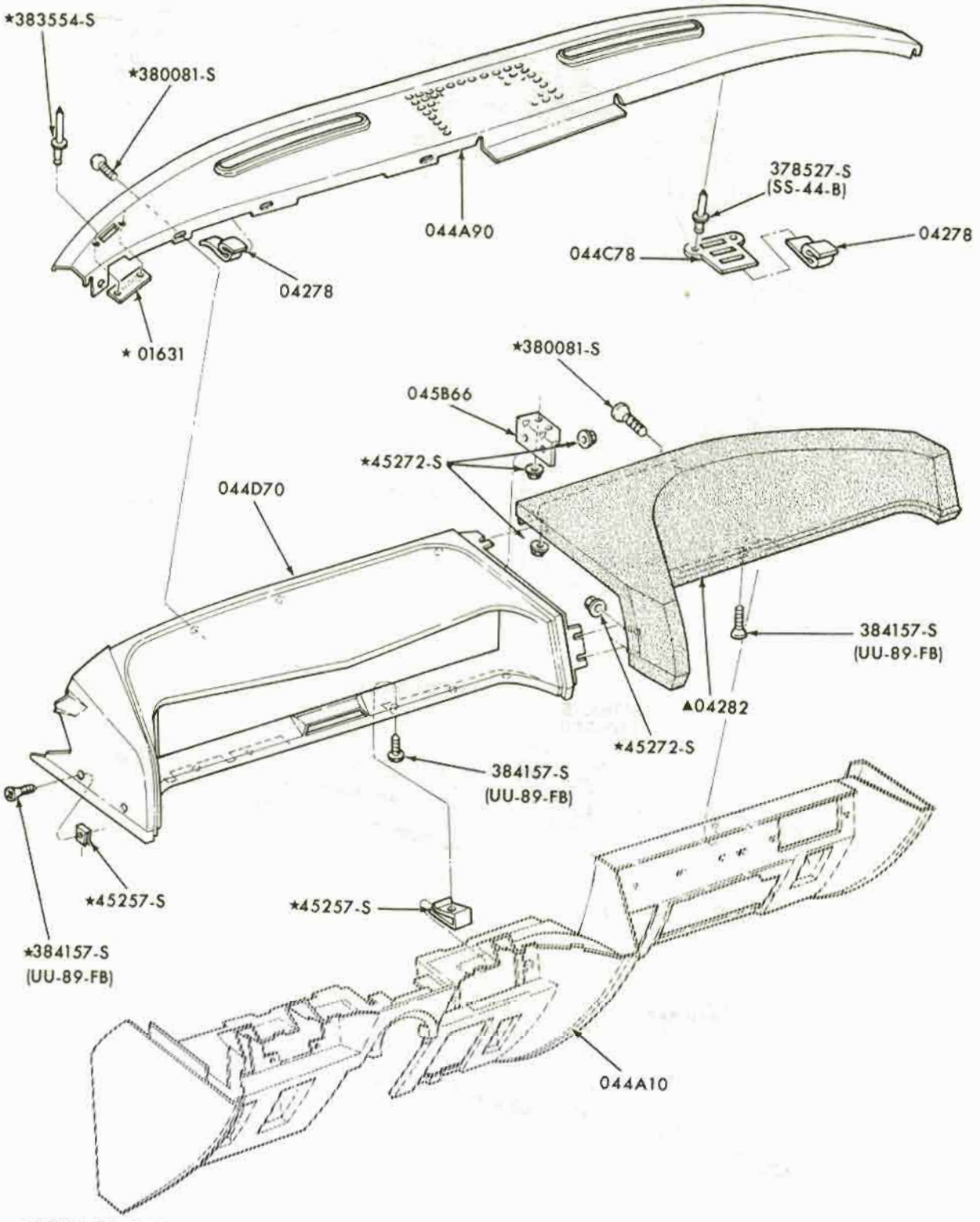

▲ REFER TO GROUP IN SOFT TRIM SECTION

P-8096

INSTRUMENT PANEL PAD and ATTACHING PARTS
1971/72 FORD

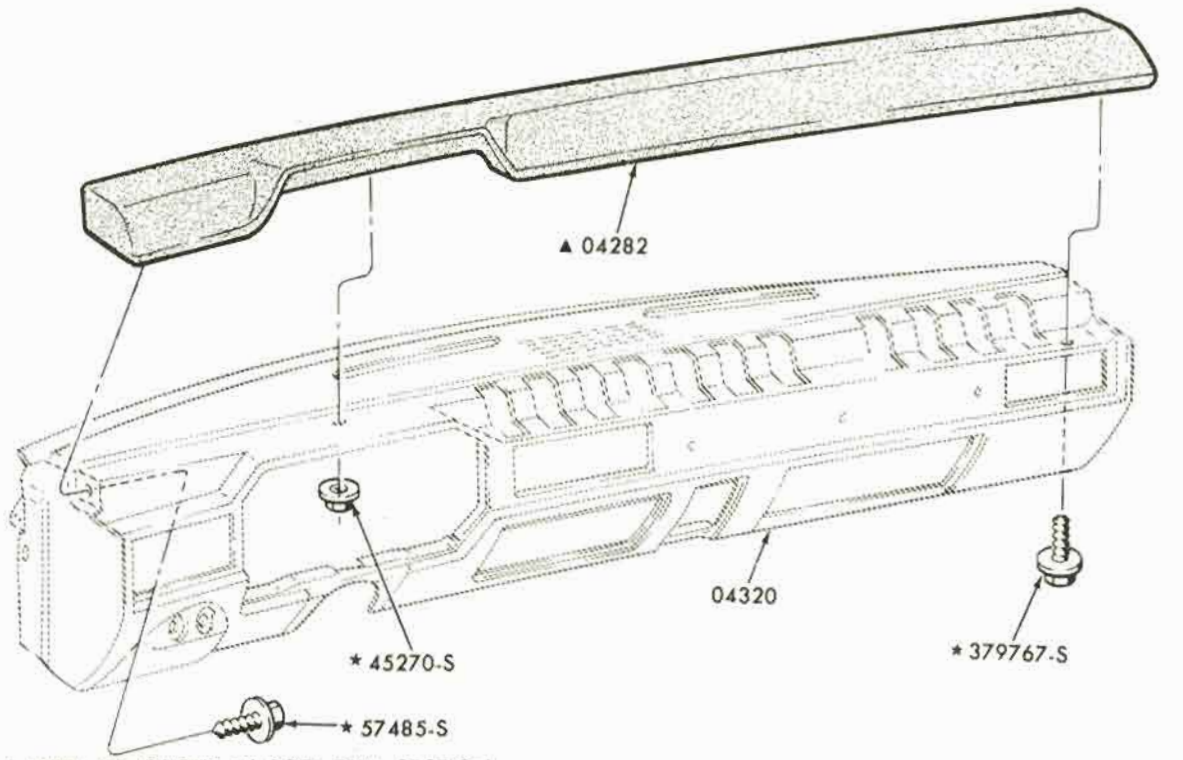

▲ REFER TO GROUP IN SOFT TRIM SECTION

P-8036

INSTRUMENT PANEL PAD and ATTACHING PARTS
1971/72 PINTO

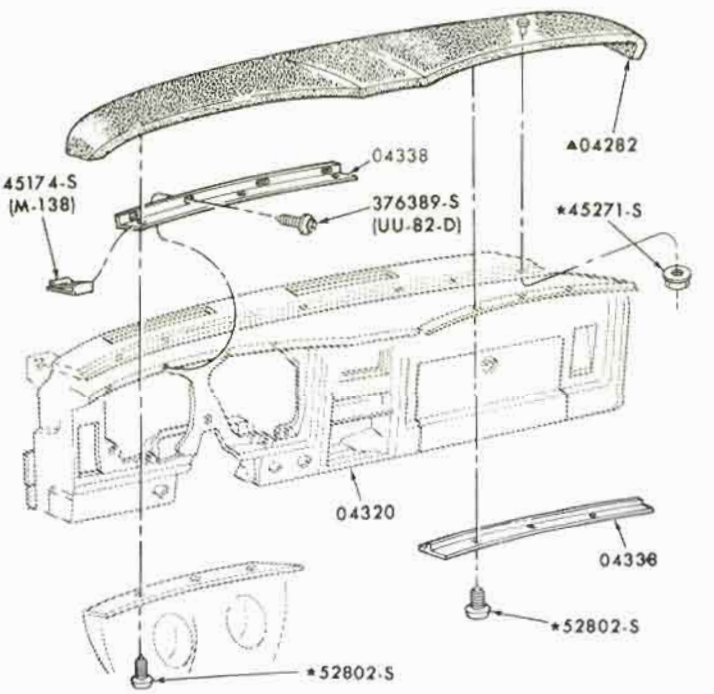

▲REFER TO GROUP IN SOFT TRIM SECTION

P-8211

INSTRUMENT PANEL PAD and ATTACHING PARTS
1971/72 MUSTANG

COPYRIGHT © 1975 — FORD MOTOR COMPANY — DEARBORN, MICHIGAN

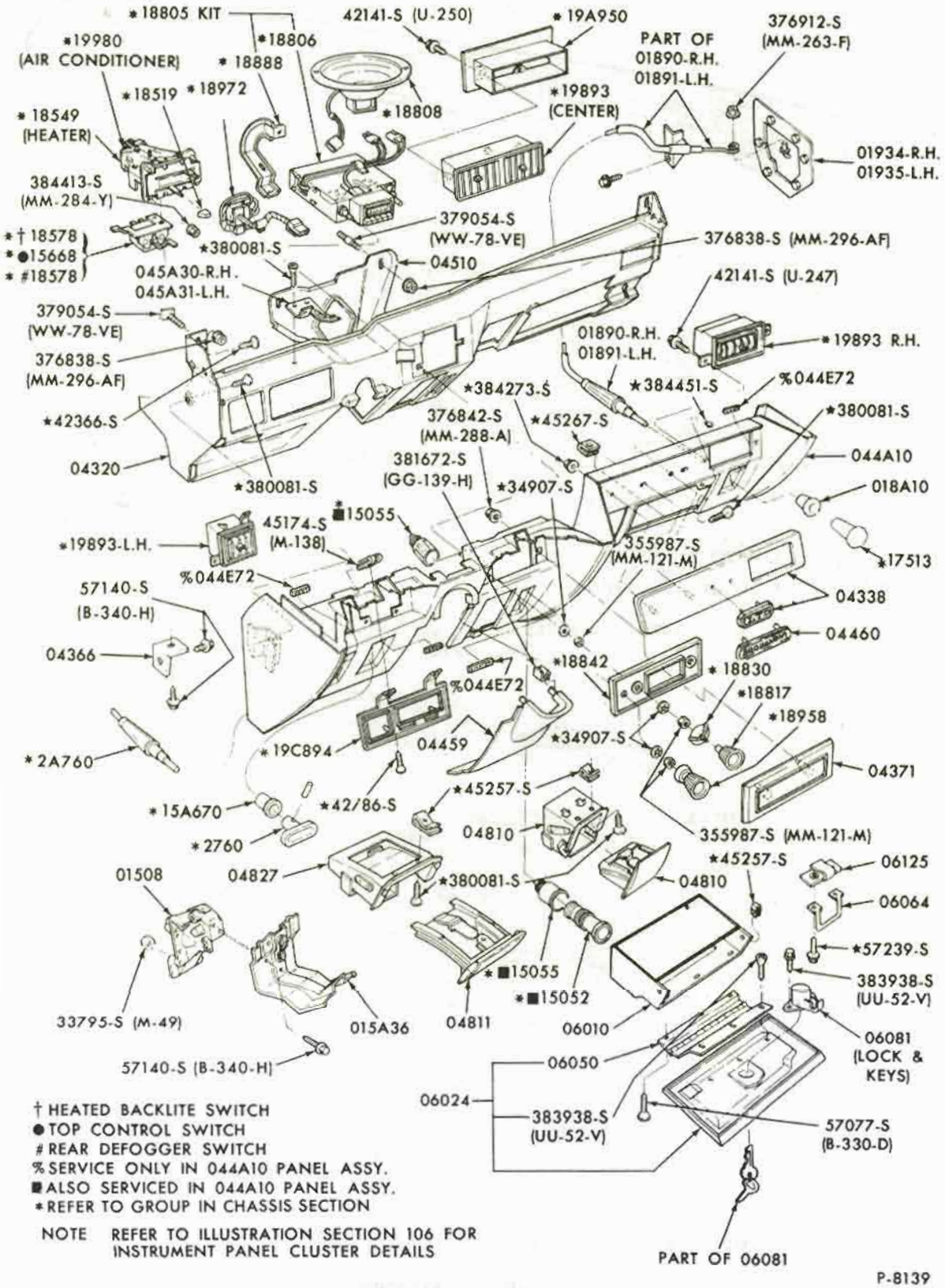

† HEATED BACKLITE SWITCH
● TOP CONTROL SWITCH
REAR DEFOGGER SWITCH
% SERVICE ONLY IN 044A10 PANEL ASSY.
■ ALSO SERVICED IN 044A10 PANEL ASSY.
* REFER TO GROUP IN CHASSIS SECTION

NOTE REFER TO ILLUSTRATION SECTION 106 FOR INSTRUMENT PANEL CLUSTER DETAILS

P-8139

INSTRUMENT PANEL and RELATED PARTS
1971/72 FORD

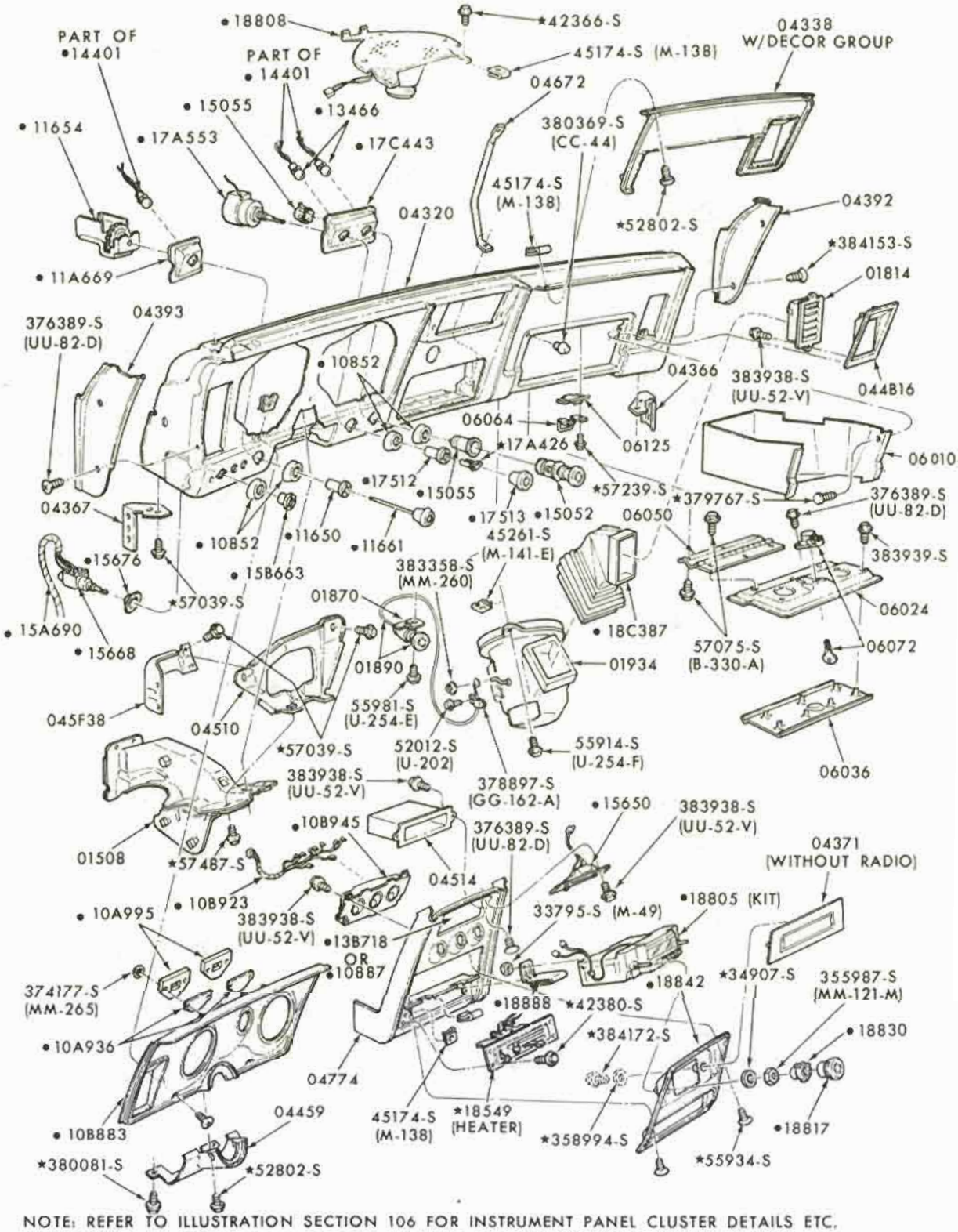

NOTE: REFER TO ILLUSTRATION SECTION 106 FOR INSTRUMENT PANEL CLUSTER DETAILS ETC.
NOTE: REFER TO ILLUSTRATION SECTION 140.1 FOR INSTRUMENT PANEL WIRING ETC.
• REFER TO CHASSIS SECTION

P-8210

INSTRUMENT PANEL and RELATED PARTS
1971/72 MUSTANG

COPYRIGHT © 1975 — FORD MOTOR COMPANY — DEARBORN, MICHIGAN

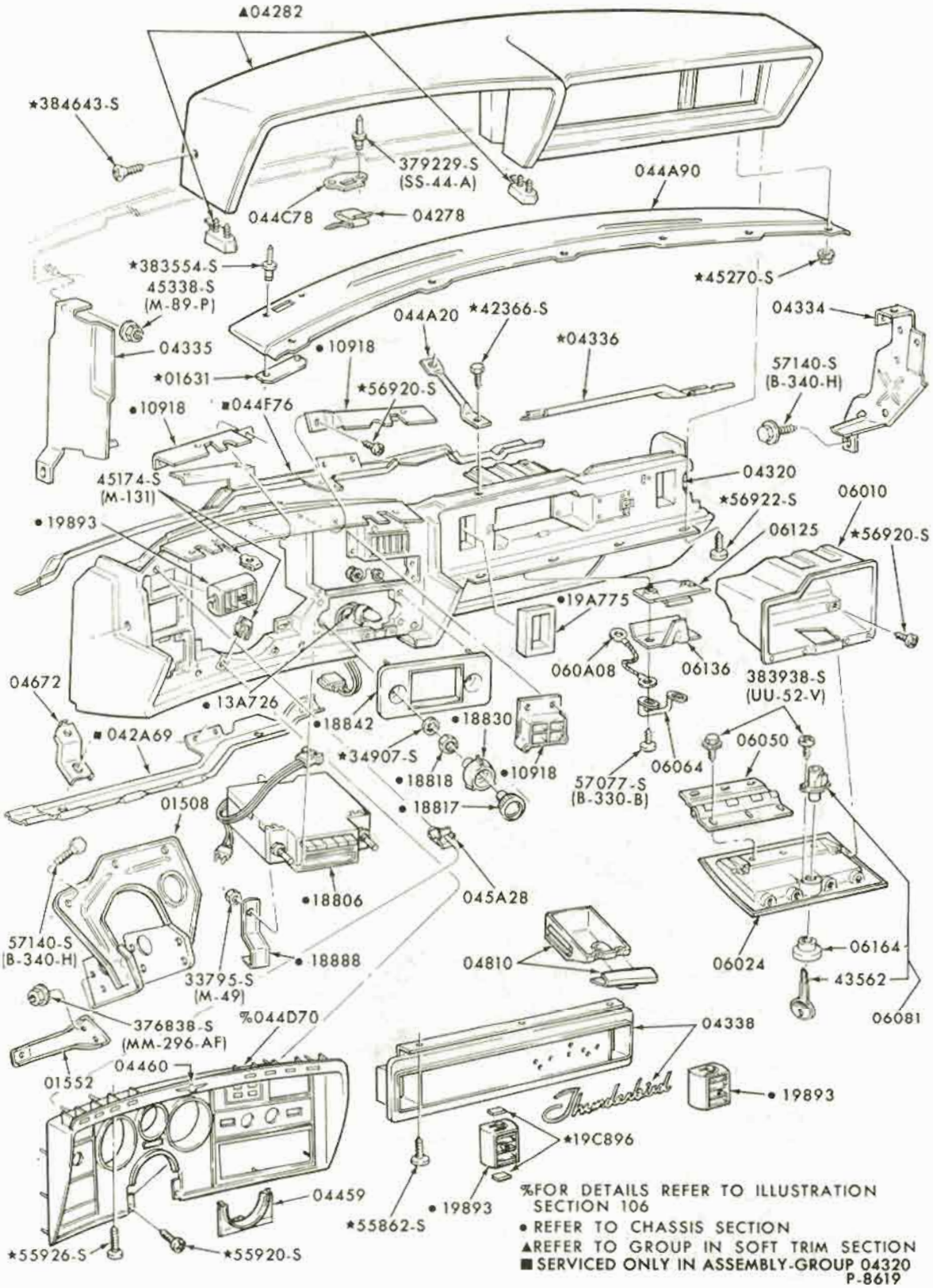

%FOR DETAILS REFER TO ILLUSTRATION SECTION 106
• REFER TO CHASSIS SECTION
▲REFER TO GROUP IN SOFT TRIM SECTION
■ SERVICED ONLY IN ASSEMBLY-GROUP 04320
P-8619

INSTRUMENT PANEL, PAD and RELATED PARTS
1972 THUNDERBIRD

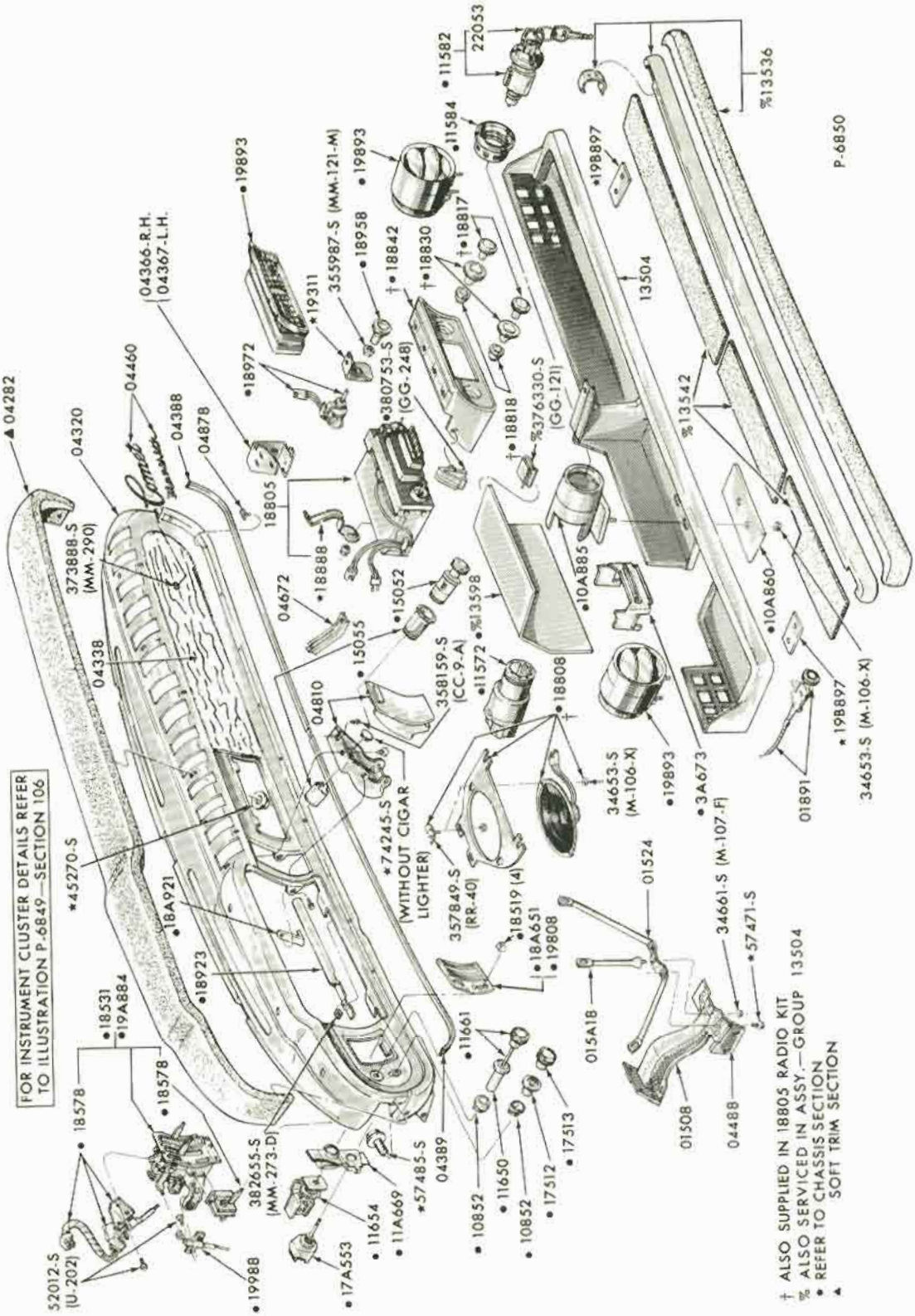

INSTRUMENT PANEL, PAD and RELATED PARTS
1970/72 MAVERICK

COPYRIGHT © 1975— FORD MOTOR COMPANY —DEARBORN, MICHIGAN

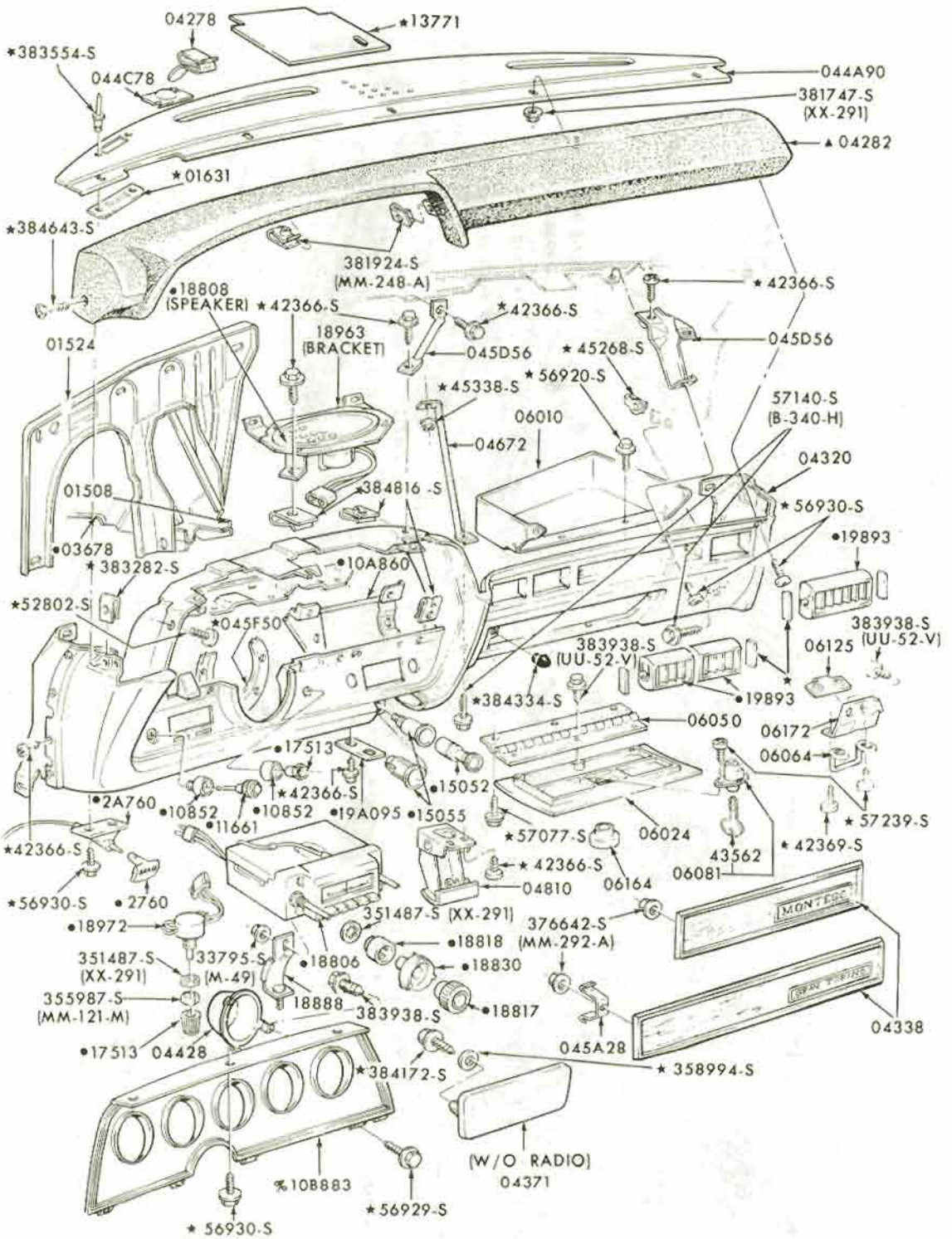

% FOR DETAILS OF CLUSTER, REFER TO CHASSIS ILLUSTRATION SECTION 106
▲ REFER TO GROUP IN SOFT TRIM SECTION
• REFER TO GROUP IN CHASSIS SECTION

P-8719

INSTRUMENT PANEL, PAD and RELATED PARTS
1972 TORINO

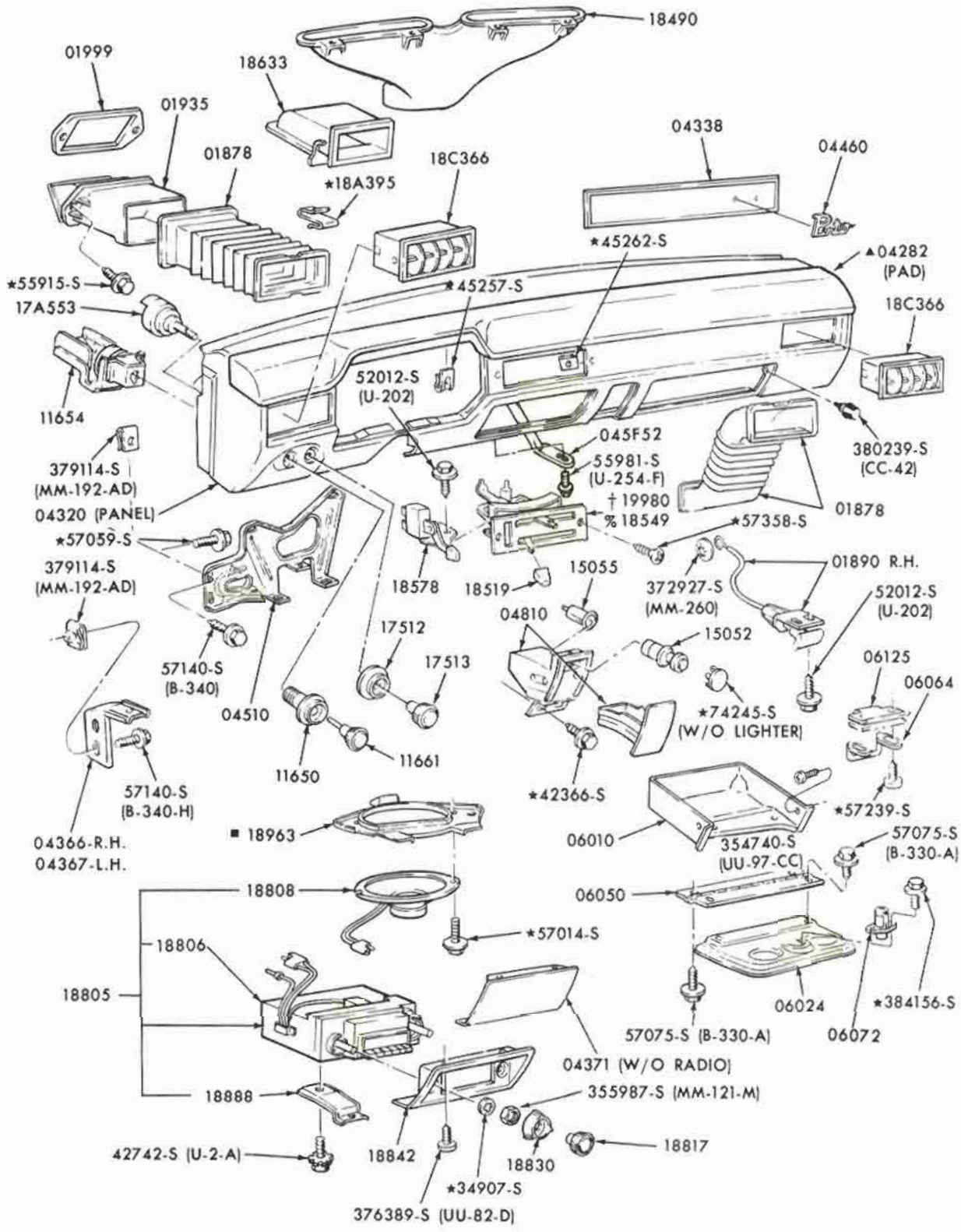

† WITH AIR CONDITIONING
% WITHOUT AIR CONDITIONING
■ ALSO USED WITH VEHICLES WITH A/C W/O RADIO
▲ REFER TO SOFT TRIM SECTION

P-8037

INSTRUMENT PANEL and RELATED PARTS

1971/72 PINTO

COPYRIGHT © 1975 — FORD MOTOR COMPANY — DEARBORN, MICHIGAN

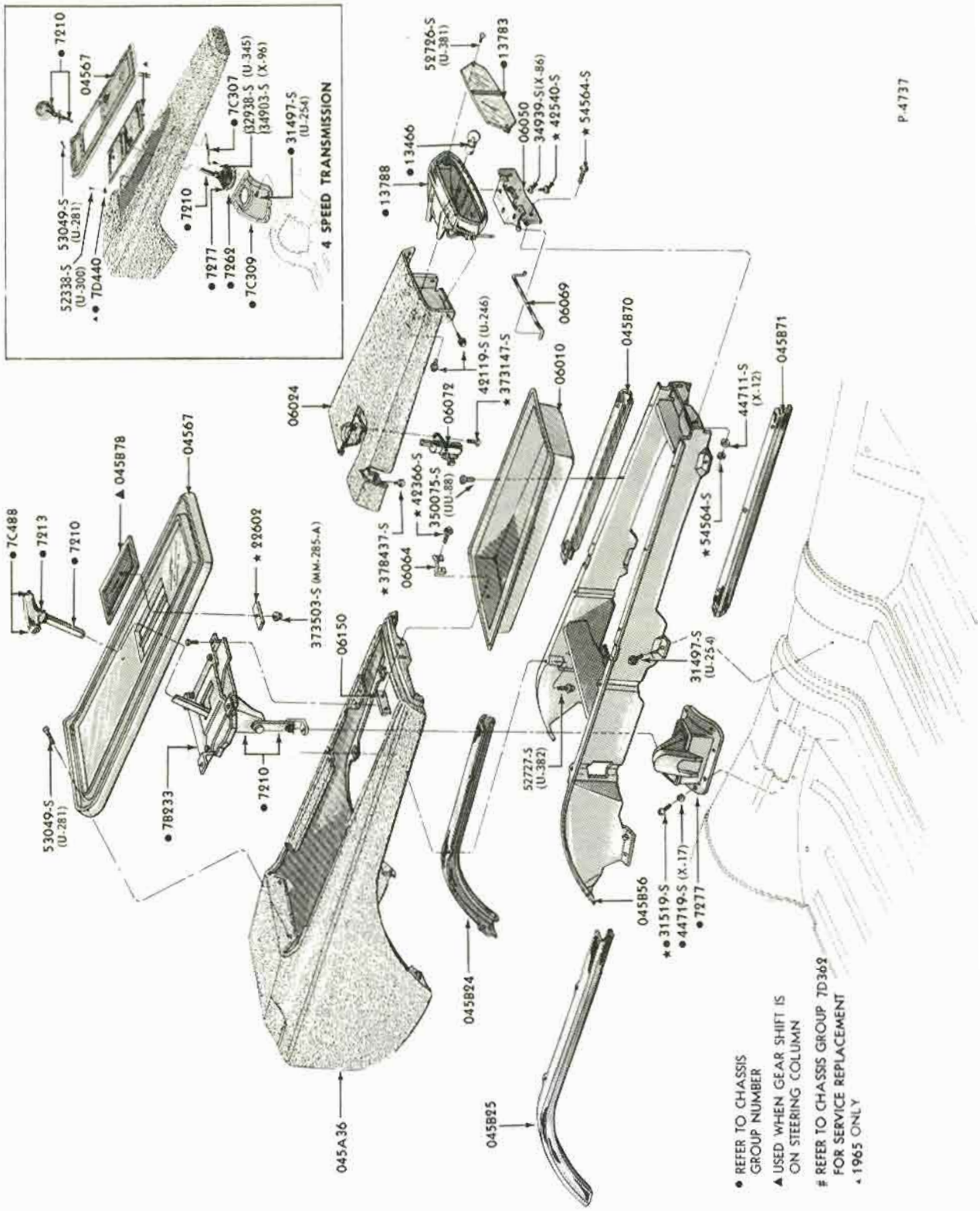

CONSOLE and RELATED PARTS

1965/66 FORD

COPYRIGHT © 1975 — FORD MOTOR COMPANY — DEARBORN, MICHIGAN

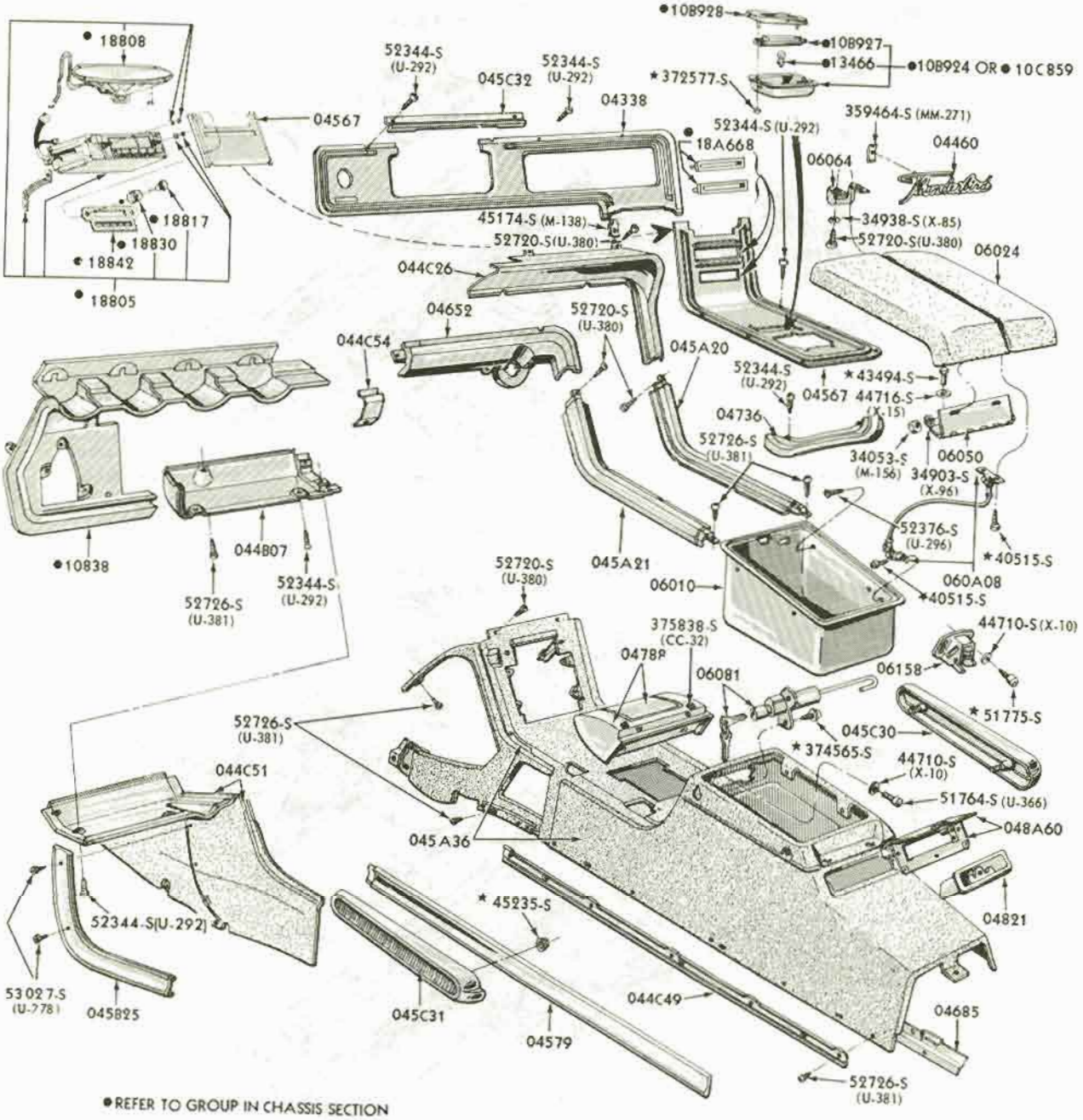

•REFER TO GROUP IN CHASSIS SECTION

P-4355

CONSOLE and RELATED PARTS
1965/66 THUNDERBIRD - TYPICAL

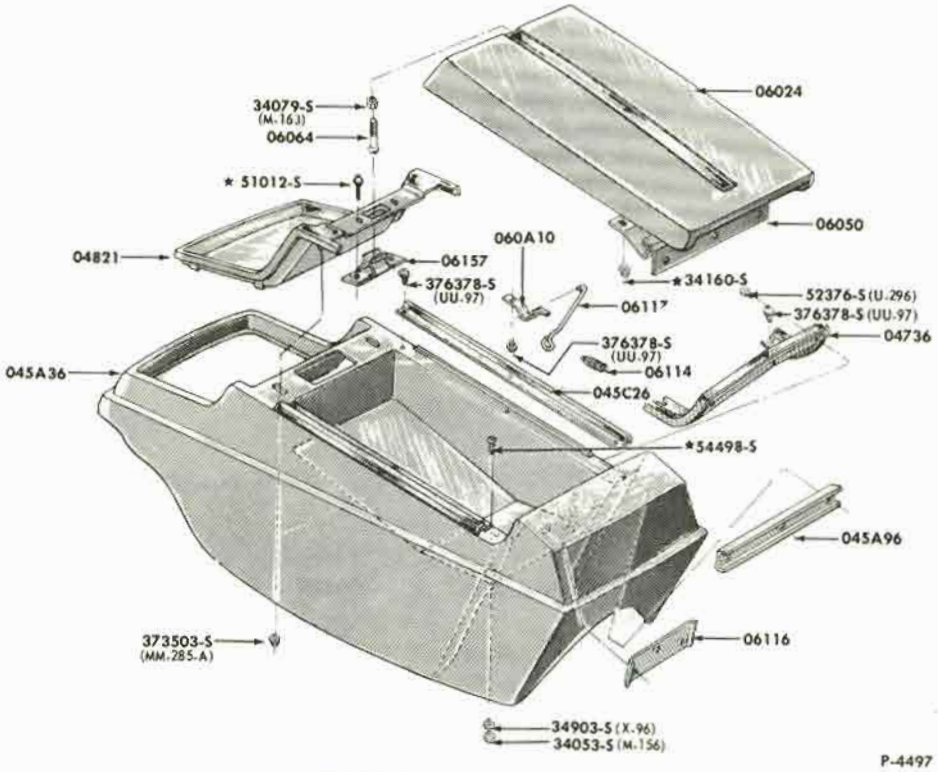

CONSOLE and RELATED PARTS
1965 FALCON - BODY TYPES 63C, D, 66G, H, 76B, D - TYPICAL

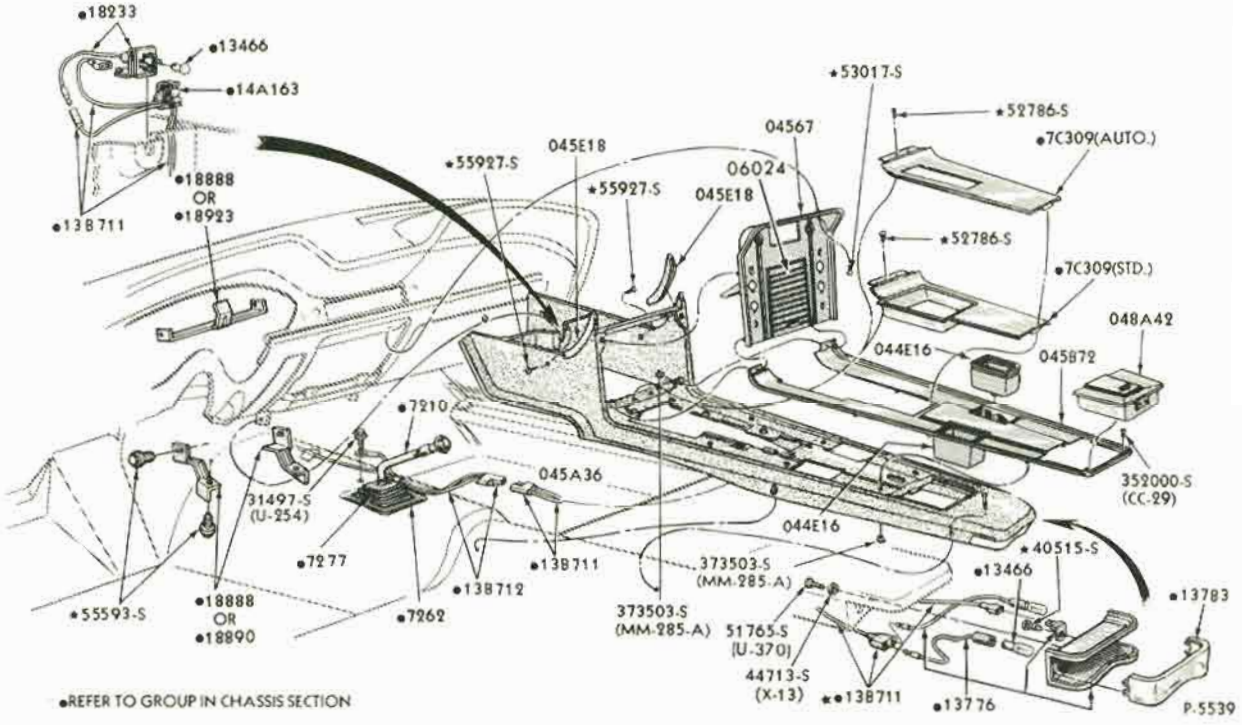

CONSOLE and RELATED PARTS
1967 MUSTANG

COPYRIGHT © 1975 — FORD MOTOR COMPANY — DEARBORN, MICHIGAN

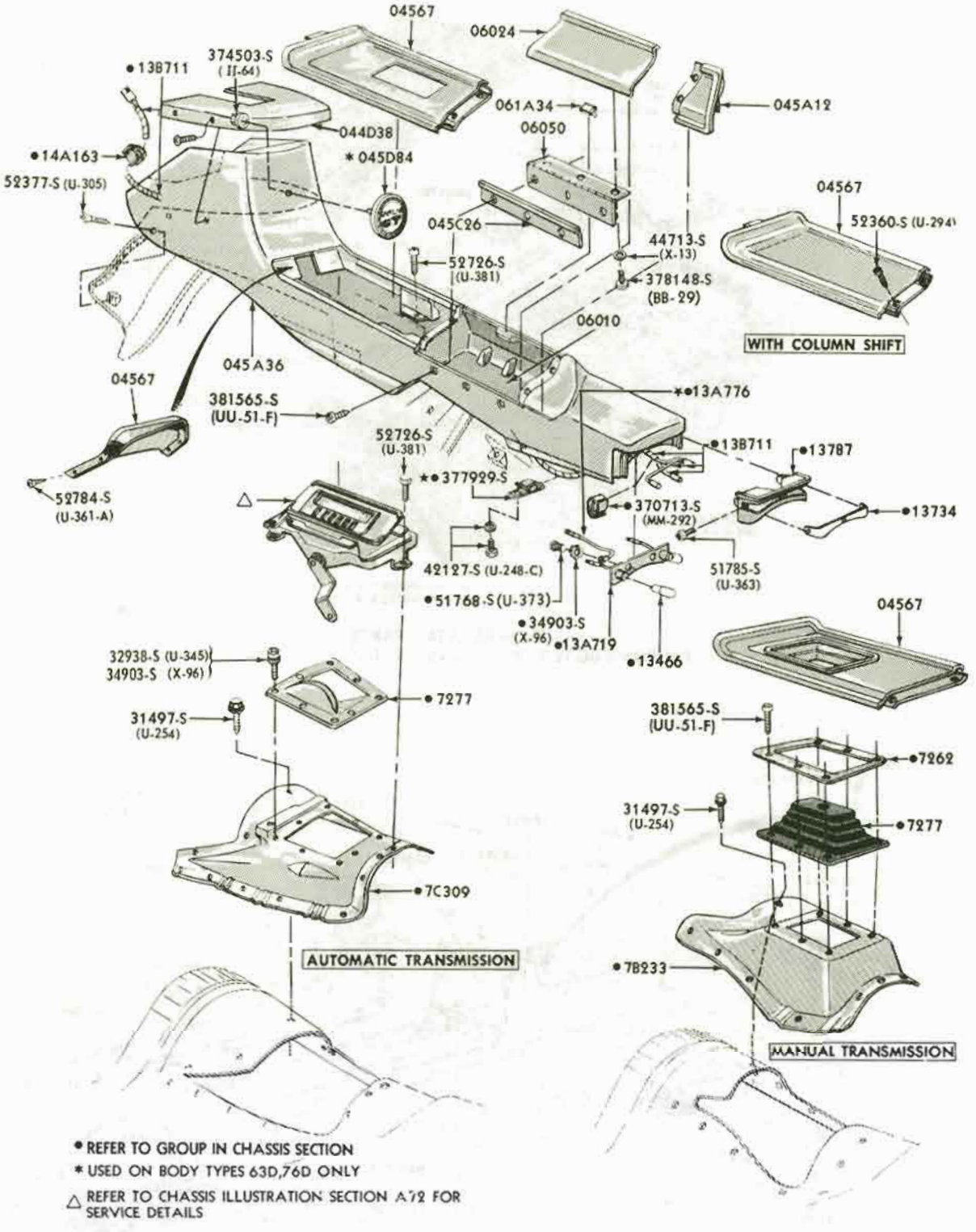

• REFER TO GROUP IN CHASSIS SECTION

* USED ON BODY TYPES 63D,76D ONLY

△ REFER TO CHASSIS ILLUSTRATION SECTION A72 FOR SERVICE DETAILS

P-5093

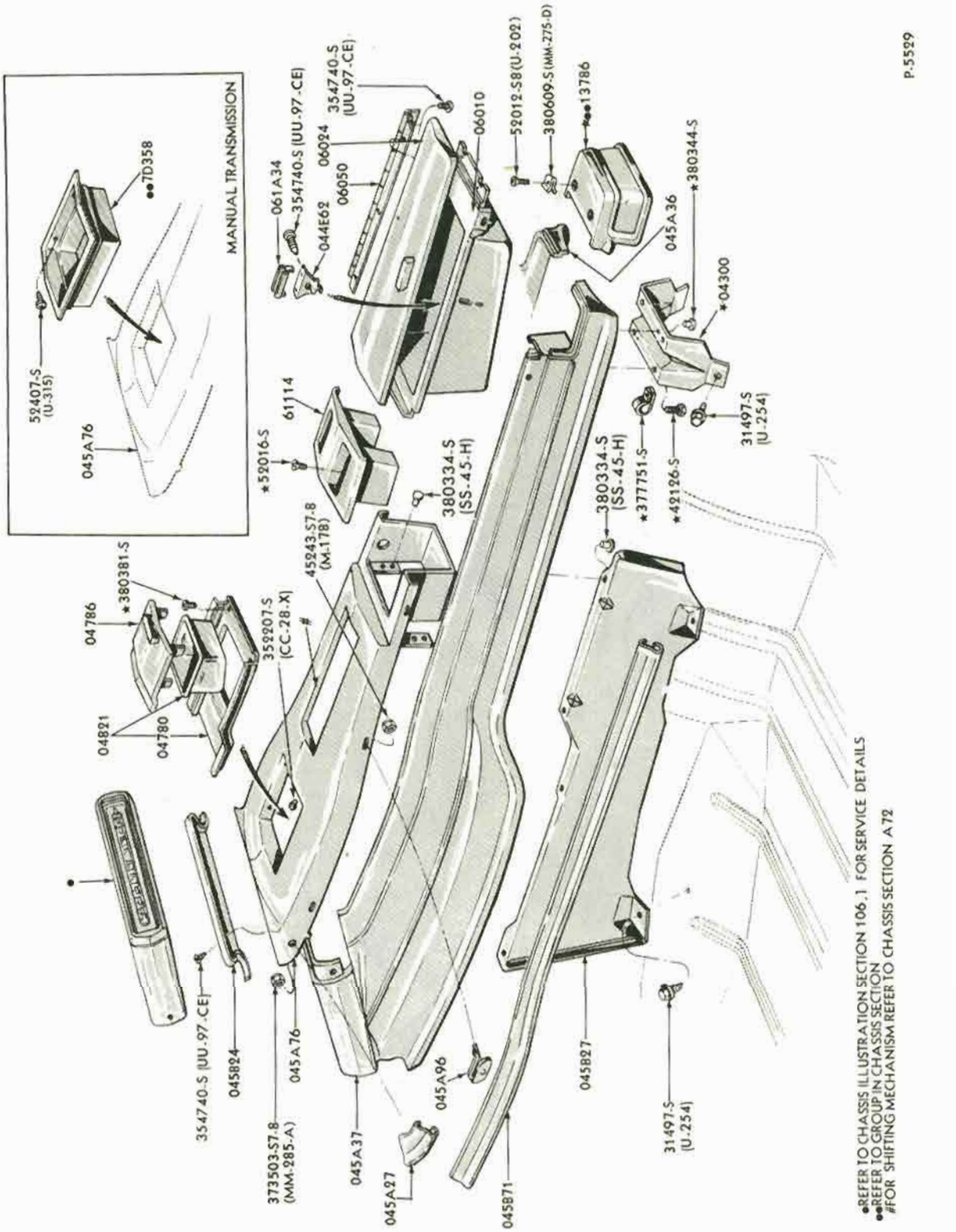

CONSOLE and RELATED PARTS
1967 FORD

COPYRIGHT © 1975 — FORD MOTOR COMPANY — DEARBORN, MICHIGAN

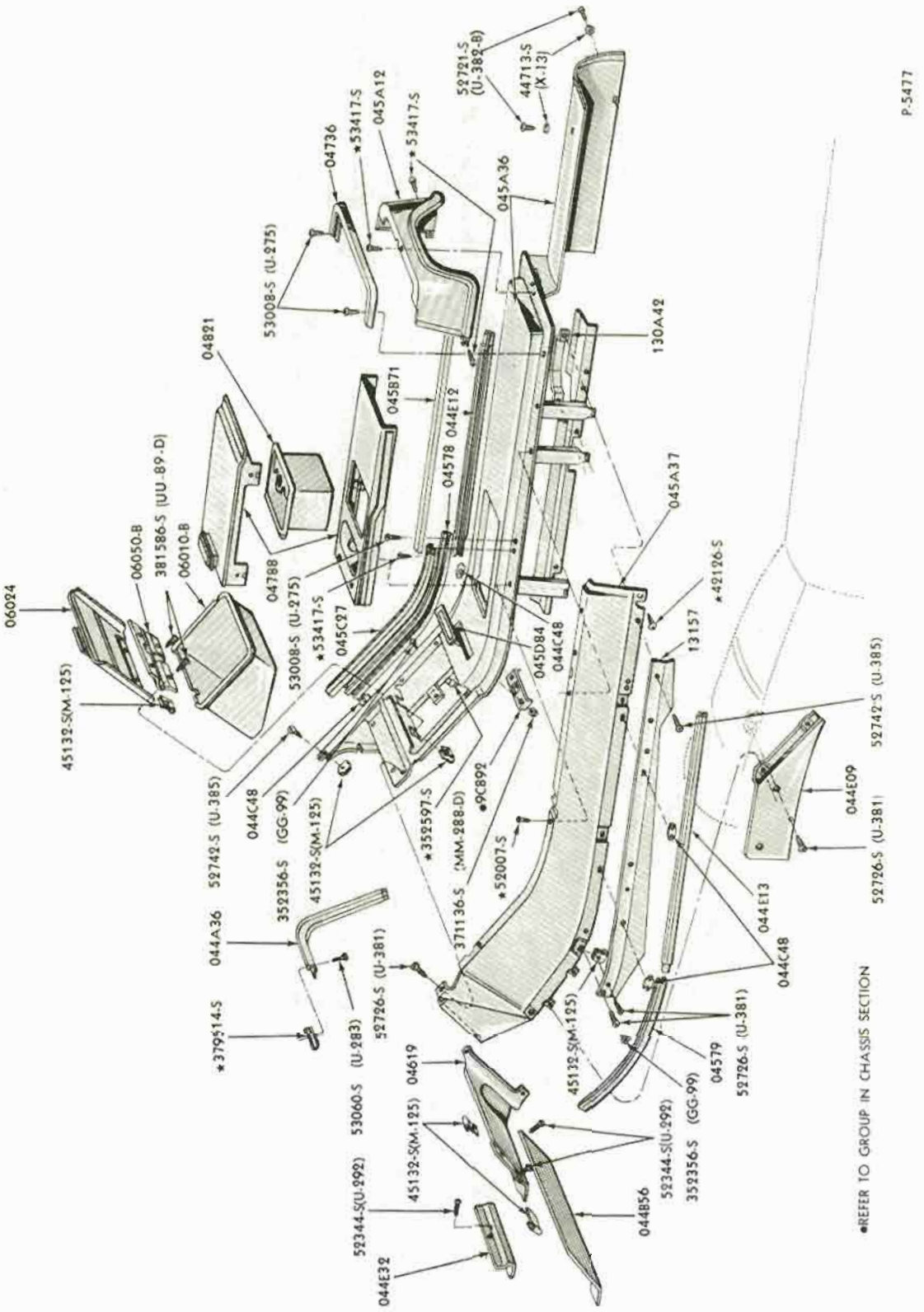

CONSOLE and RELATED PARTS (FLOOR)
1967 THUNDERBIRD - BODY TYPE 57

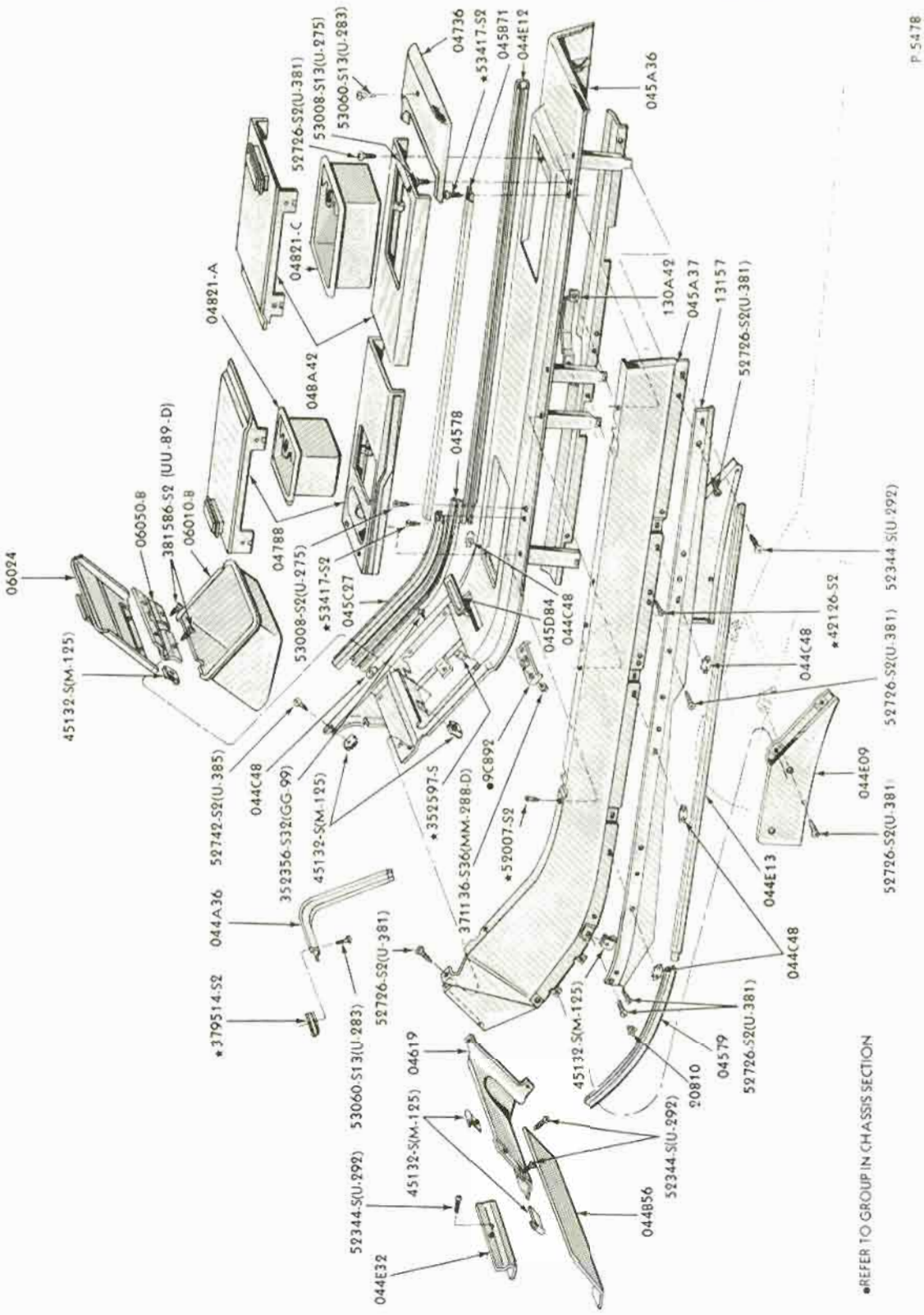

CONSOLE and RELATED PARTS (FLOOR)
1967 THUNDERBIRD - BODY TYPE 65

COPYRIGHT © 1975 — FORD MOTOR COMPANY — DEARBORN, MICHIGAN

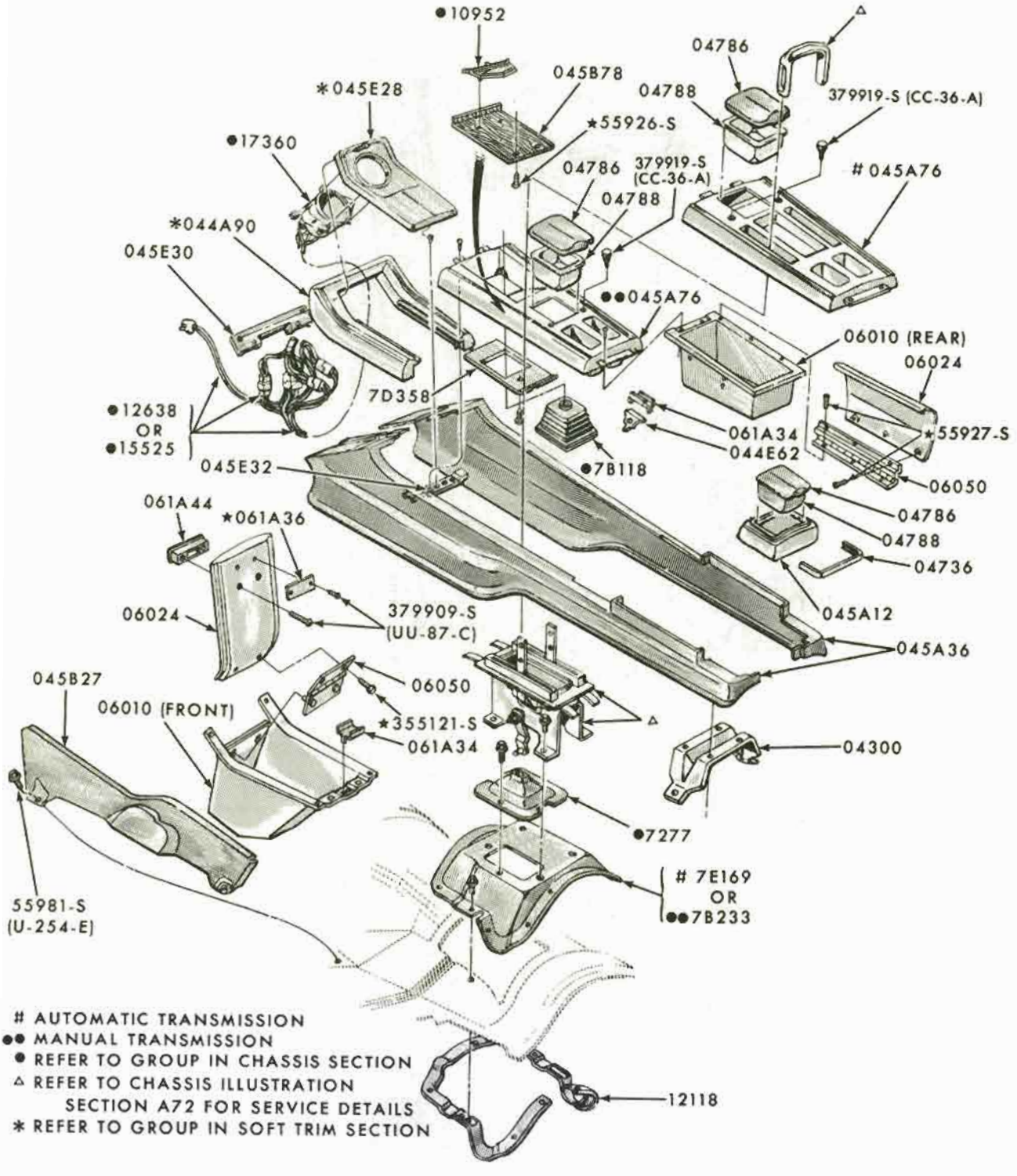

AUTOMATIC TRANSMISSION
●● MANUAL TRANSMISSION
● REFER TO GROUP IN CHASSIS SECTION
△ REFER TO CHASSIS ILLUSTRATION SECTION A72 FOR SERVICE DETAILS
* REFER TO GROUP IN SOFT TRIM SECTION

P-6185

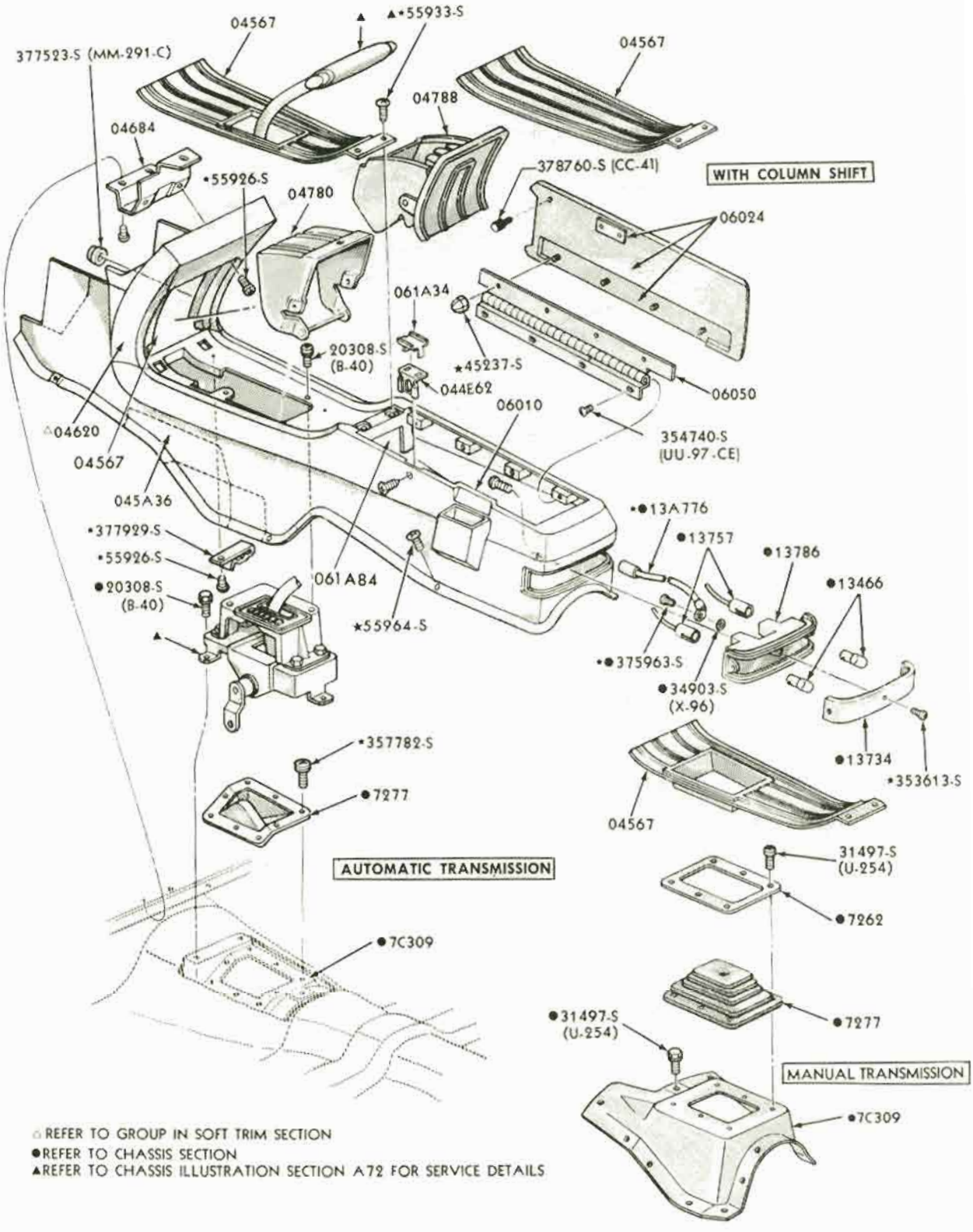

△ REFER TO GROUP IN SOFT TRIM SECTION
● REFER TO CHASSIS SECTION
▲ REFER TO CHASSIS ILLUSTRATION SECTION A72 FOR SERVICE DETAILS

P-6186

May, 1975 COPYRIGHT © 1975 — FORD MOTOR COMPANY — DEARBORN, MICHIGAN FINAL ISSUE

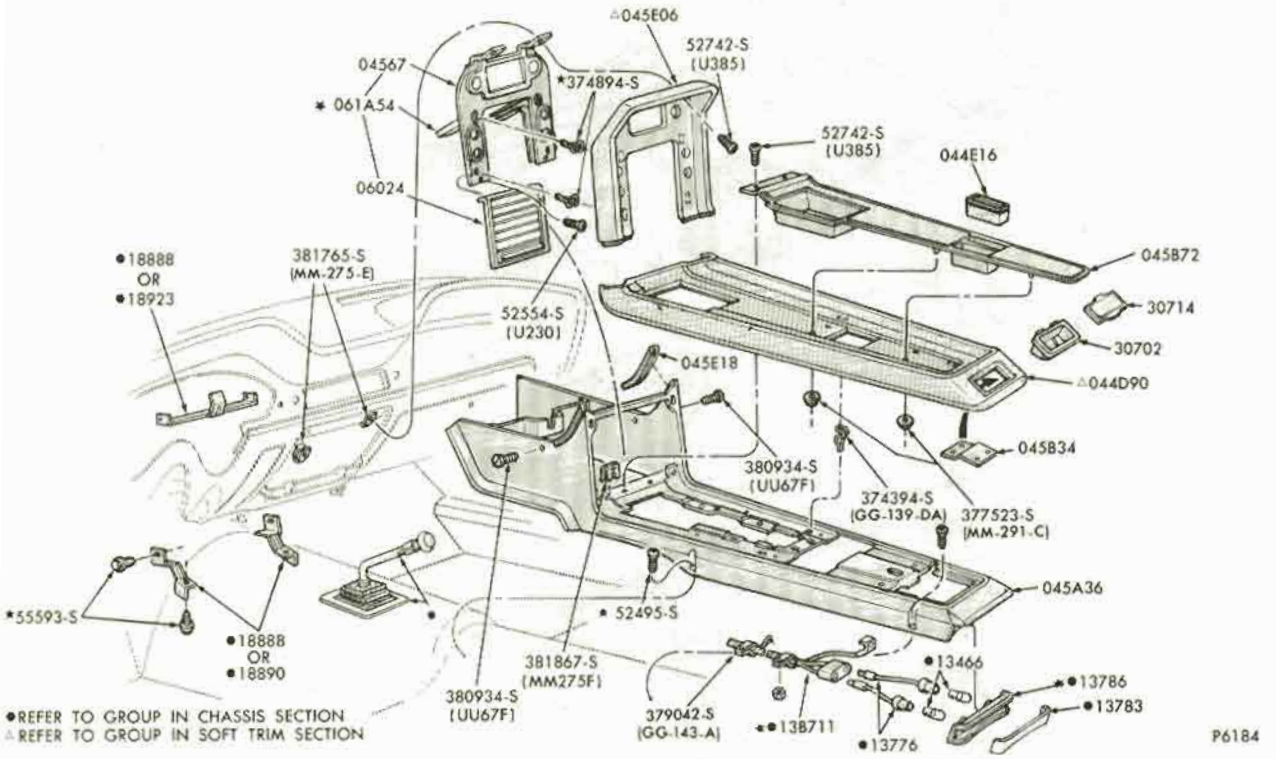

CONSOLE and RELATED PARTS
1968 MUSTANG

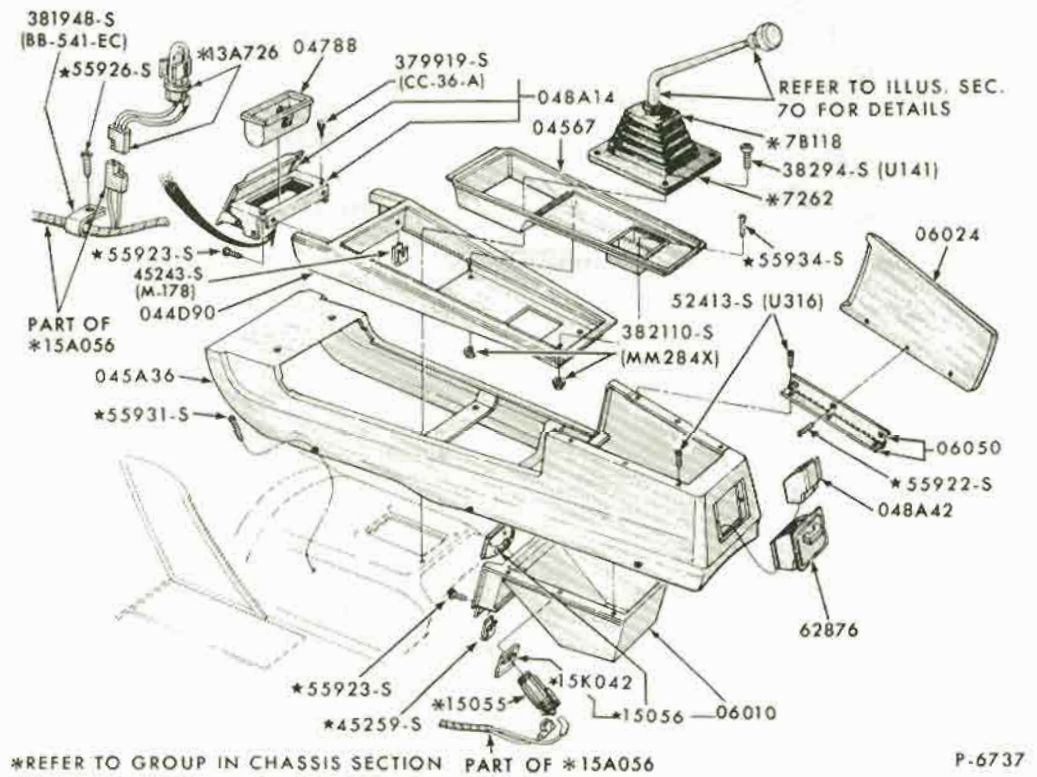

CONSOLE and RELATED PARTS
1969/70 MUSTANG - except SHELBY GT350/500

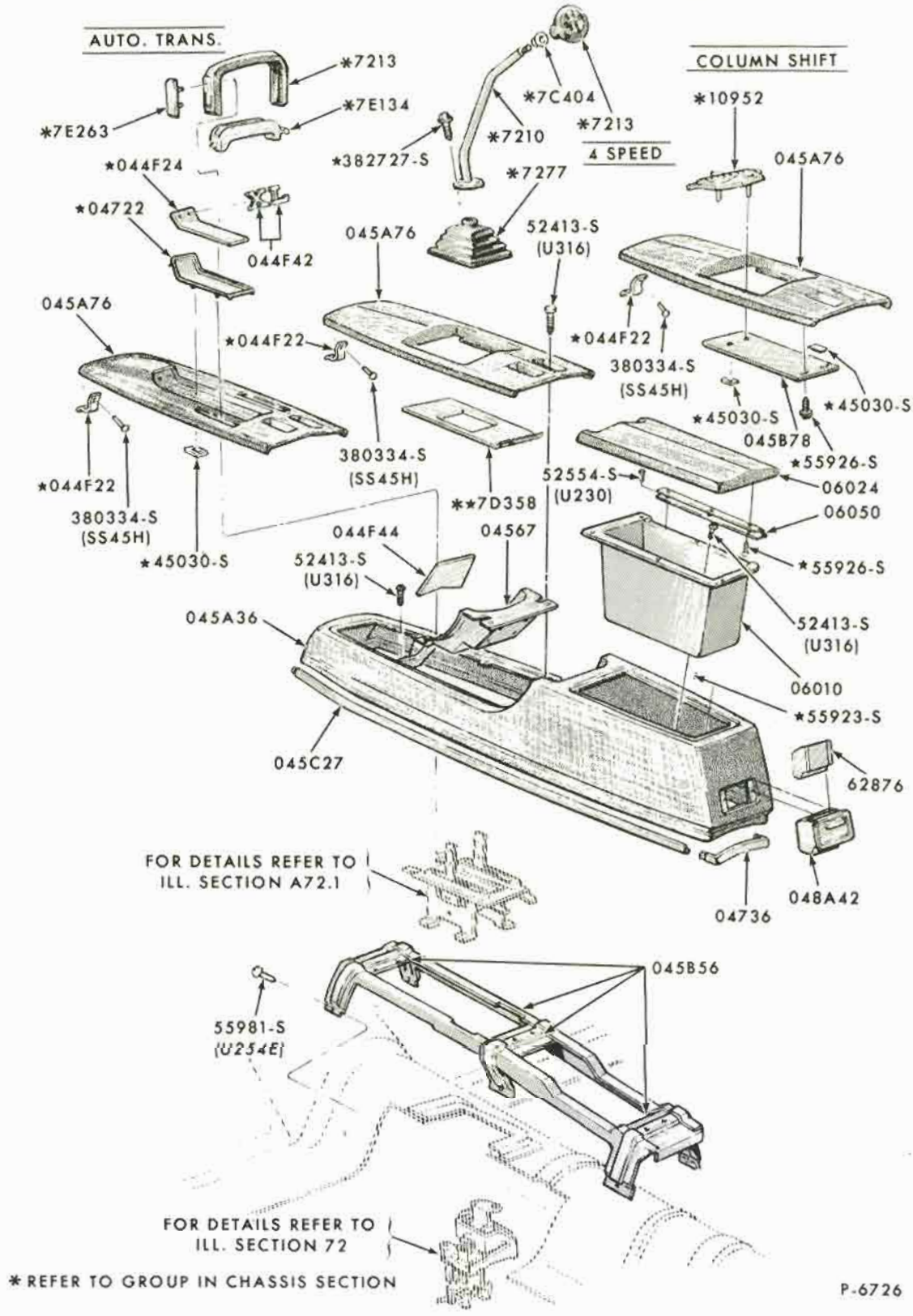

CONSOLE and RELATED PARTS
1969/71 FORD

COPYRIGHT © 1975 — FORD MOTOR COMPANY — DEARBORN, MICHIGAN

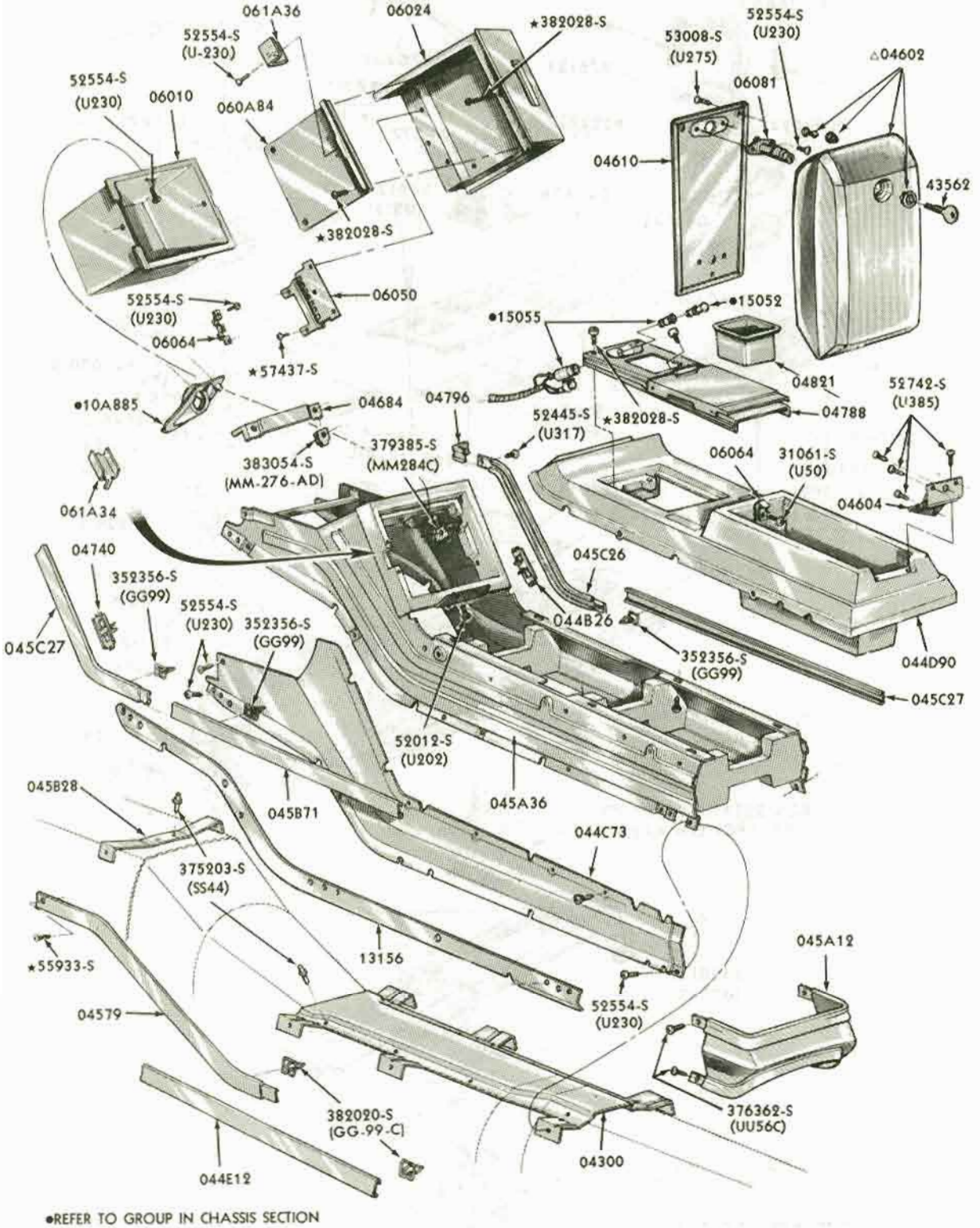

•REFER TO GROUP IN CHASSIS SECTION

△REFER TO GROUP IN SOFT TRIM SECTION

P-6183

FLOOR CONSOLE and RELATED PARTS
1968/69 THUNDERBIRD - "Before 4/1/69"

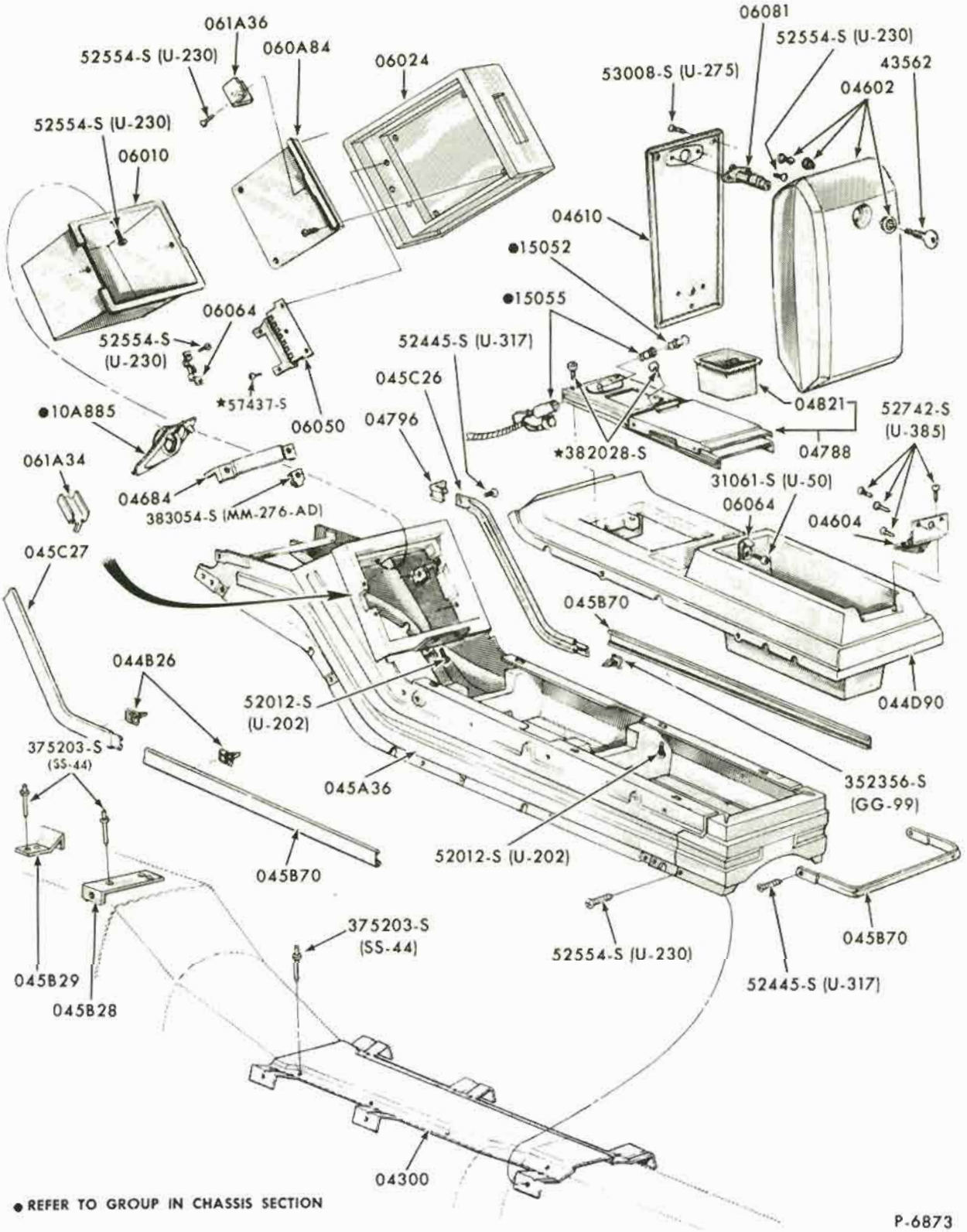

FLOOR CONSOLE and RELATED PARTS
1969 THUNDERBIRD - "From 4/1/69"

COPYRIGHT © 1975 — FORD MOTOR COMPANY — DEARBORN, MICHIGAN

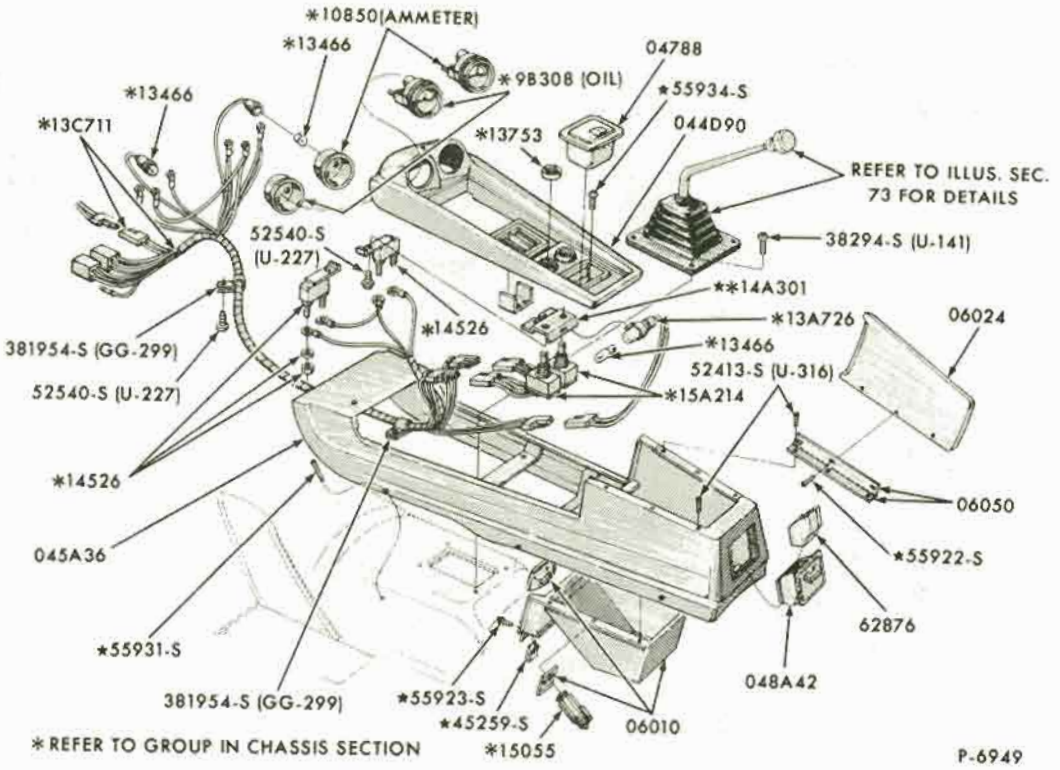

CONSOLE AND RELATED PARTS
1969/70 MUSTANG - SHELBY GT350/500

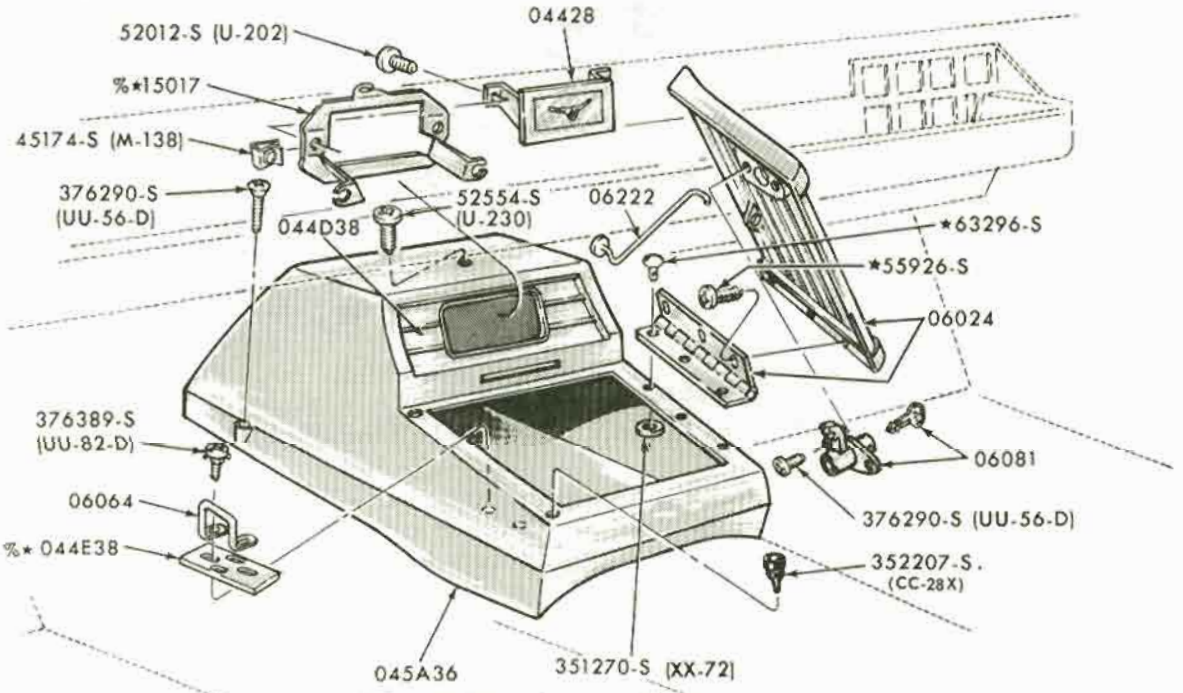

CONSOLETTE and RELATED PARTS
1970/72 MAVERICK

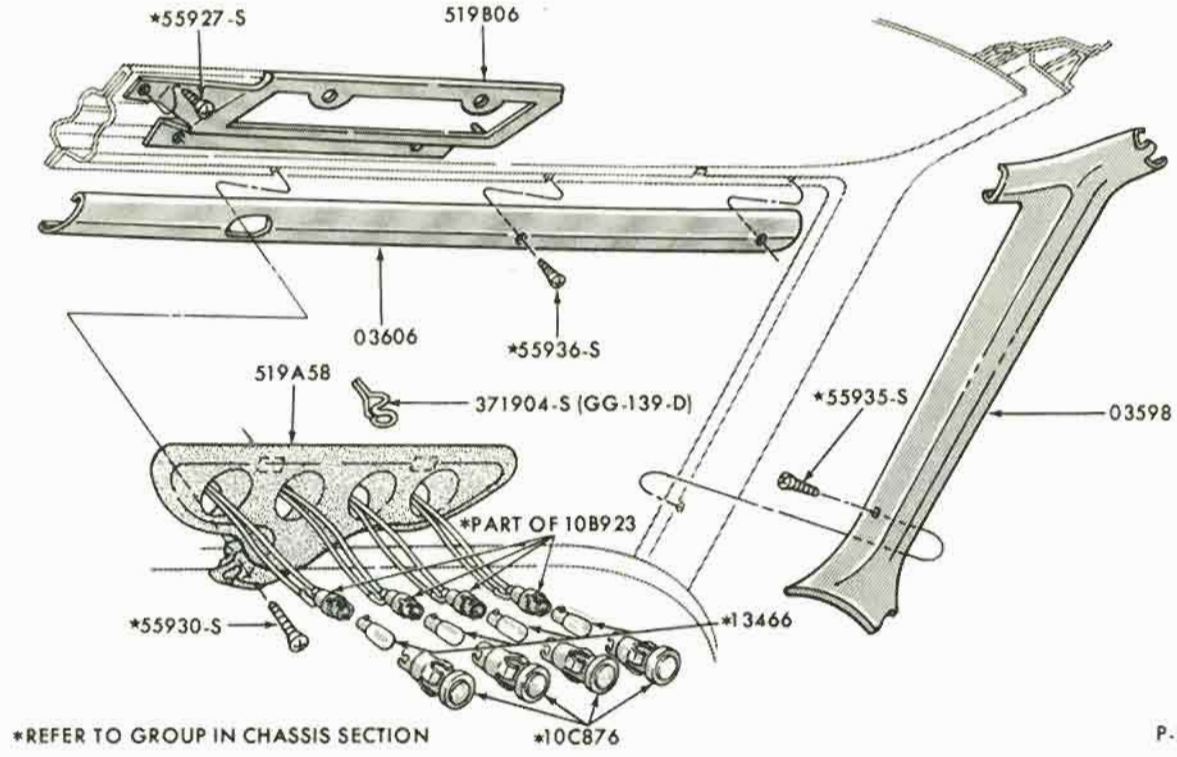

*REFER TO GROUP IN CHASSIS SECTION

P-7197

ROOF CONSOLE and RELATED PARTS
1970/71 THUNDERBIRD - BODY TYPE 65

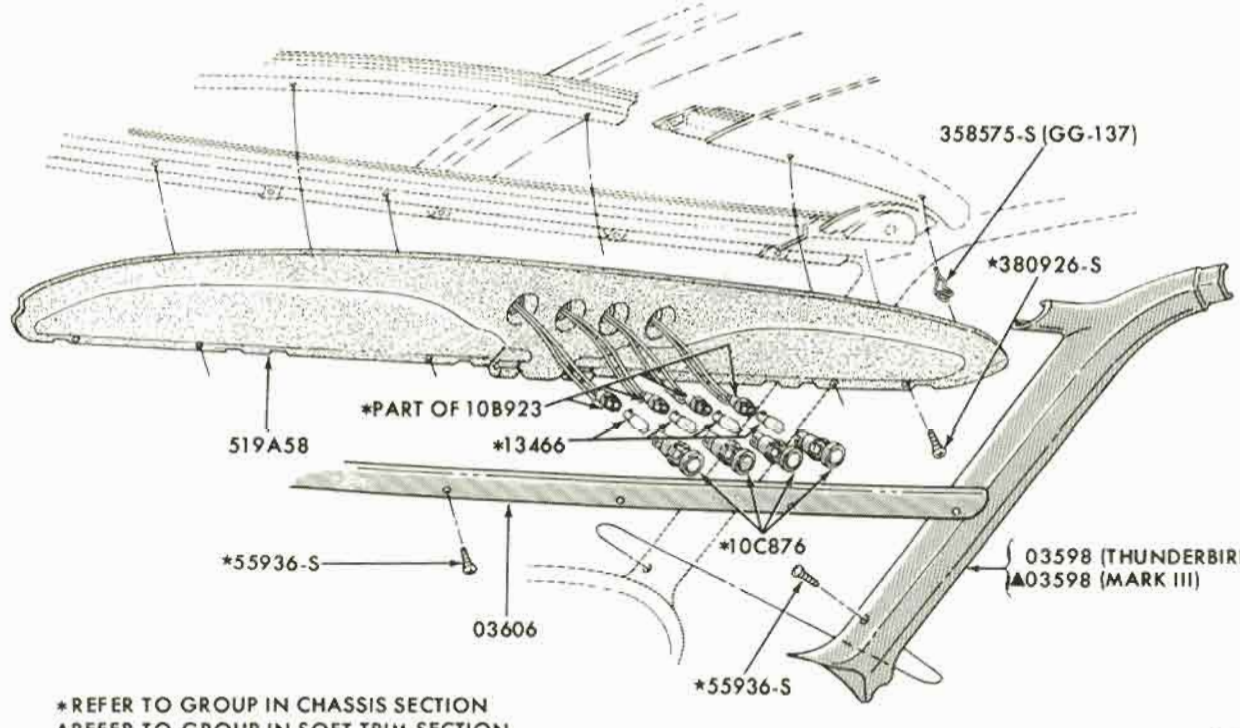

*REFER TO GROUP IN CHASSIS SECTION
▲REFER TO GROUP IN SOFT TRIM SECTION

P-7198

ROOF CONSOLE and RELATED PARTS
1970/71 THUNDERBIRD - BODY TYPE 57

COPYRIGHT © 1975 — FORD MOTOR COMPANY — DEARBORN, MICHIGAN

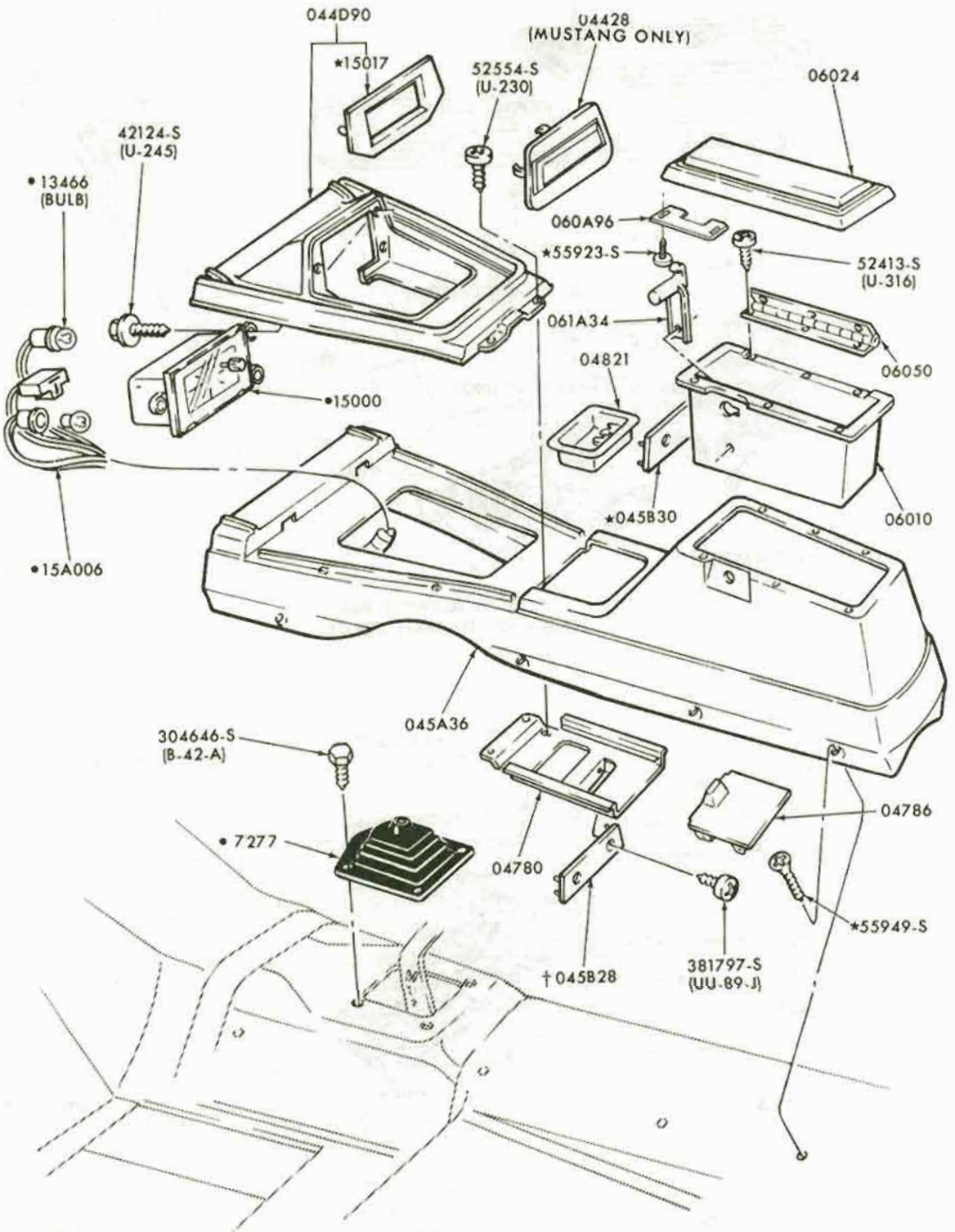

† SERVICED ONLY IN ASSY-GROUP 045A36
• REFER TO CHASSIS SECTION

P-8052

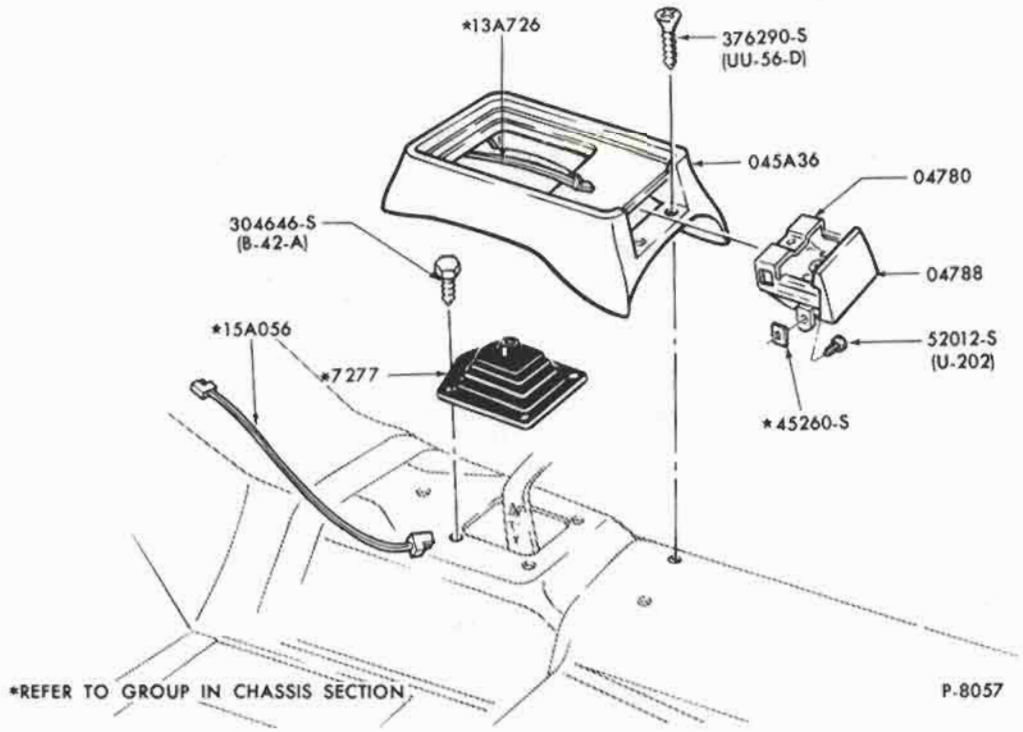

CONSOLETTE and RELATED PARTS
1971/72 MUSTANG

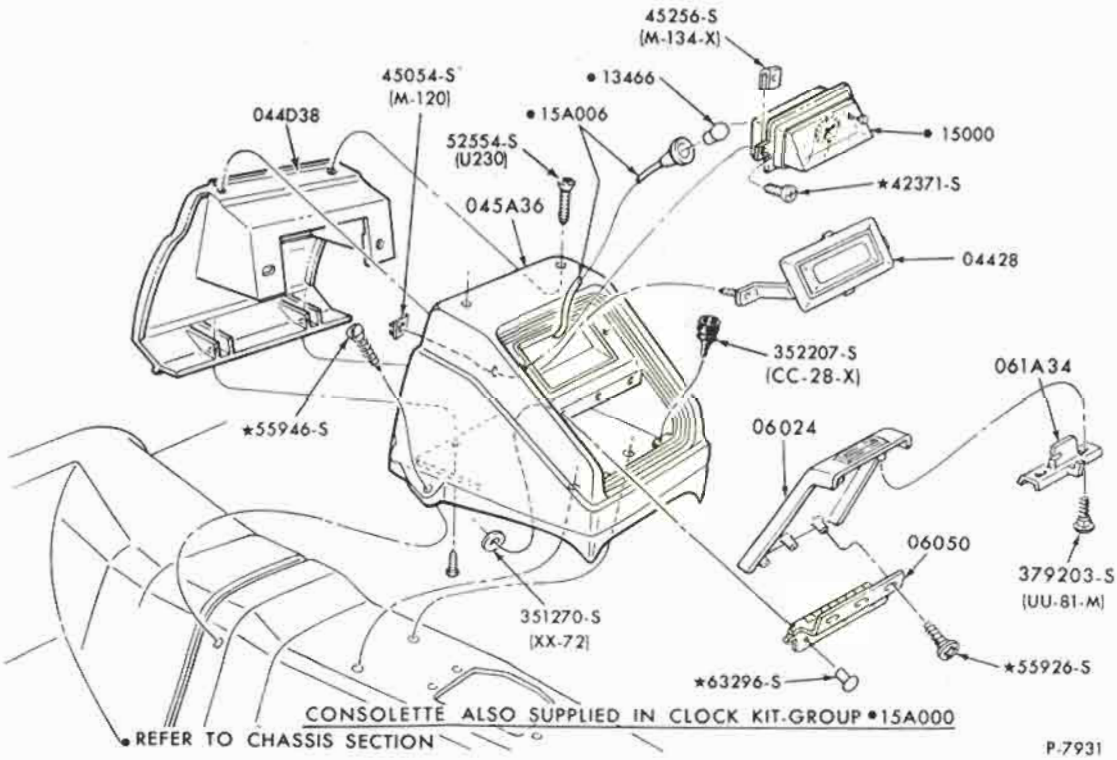

CONSOLETTE and RELATED PARTS
1971/72 PINTO

COPYRIGHT © 1975 — FORD MOTOR COMPANY — DEARBORN, MICHIGAN

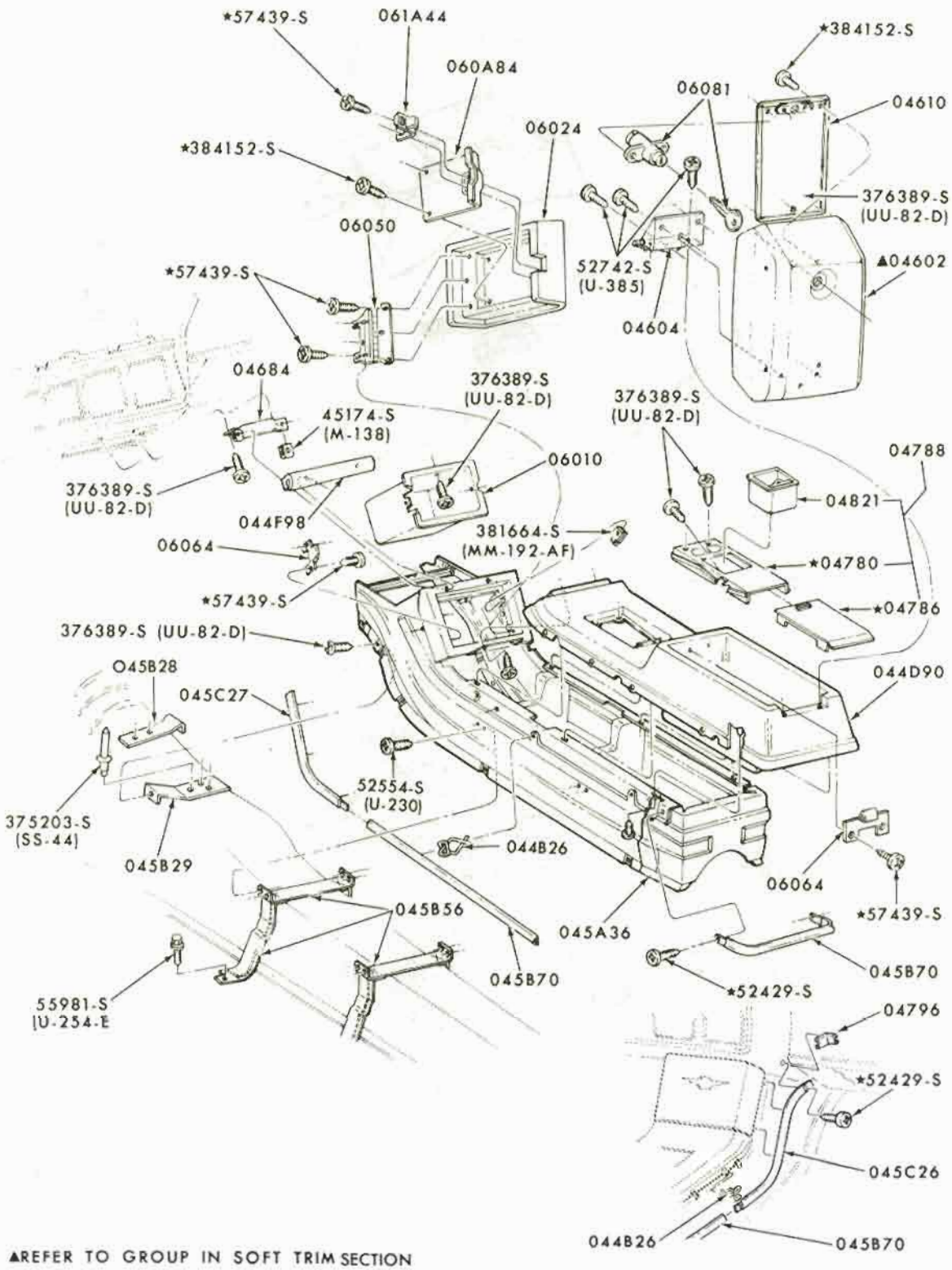

▲REFER TO GROUP IN SOFT TRIM SECTION

P-8153

FLOOR CONSOLE and RELATED PARTS
1970/71 THUNDERBIRD

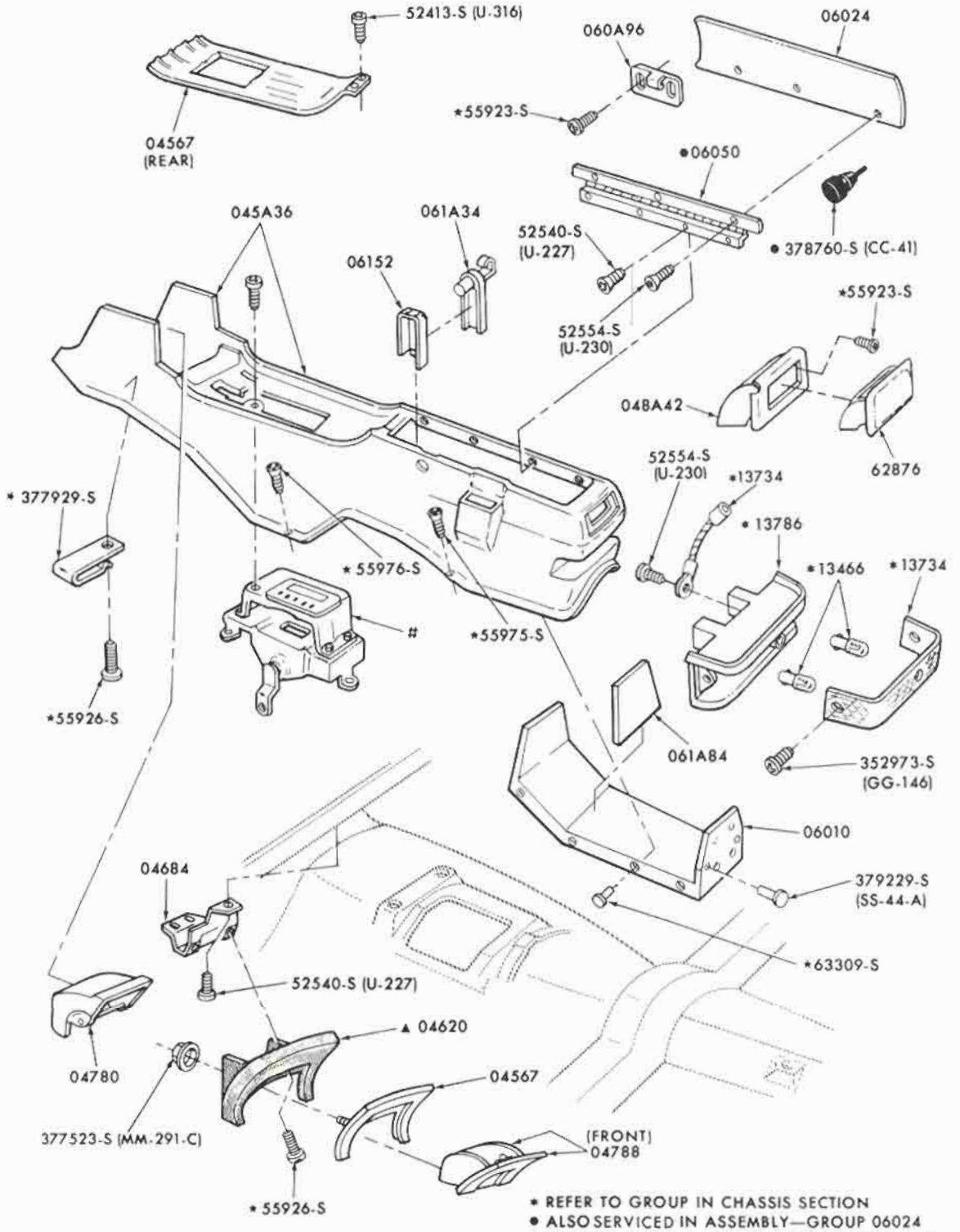

* REFER TO GROUP IN CHASSIS SECTION
• ALSO SERVICED IN ASSEMBLY—GROUP 06024
REFER TO CHASSIS ILLUSTRATION SECTION A72
▲ REFER TO GROUP IN SOFT TRIM SECTION

P-8223

FLOOR CONSOLE and RELATED PARTS
1970/71 FAIRLANE/TORINO

COPYRIGHT © 1975 — FORD MOTOR COMPANY — DEARBORN, MICHIGAN

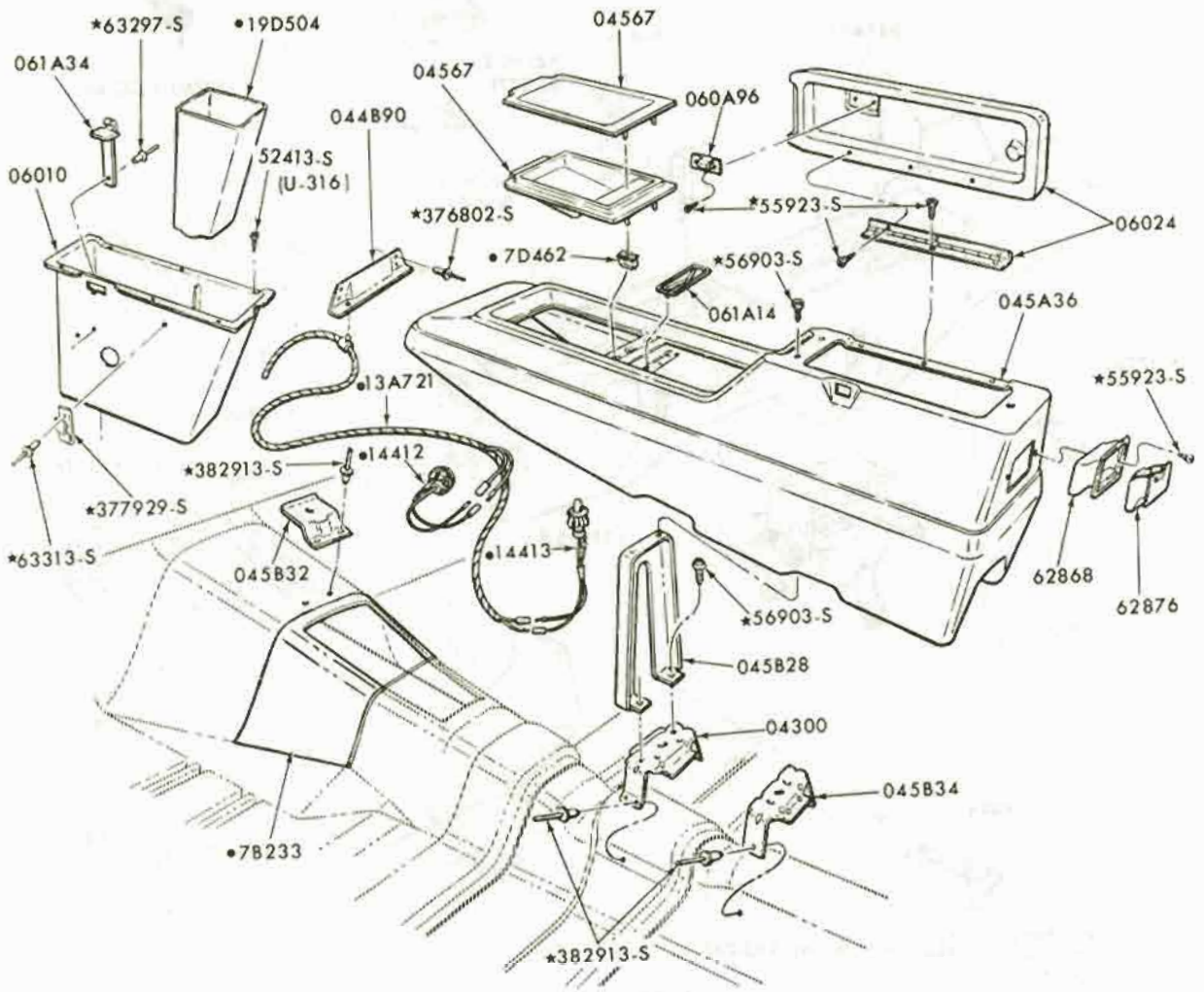

P-8611

• REFER TO CHASSIS SECTION

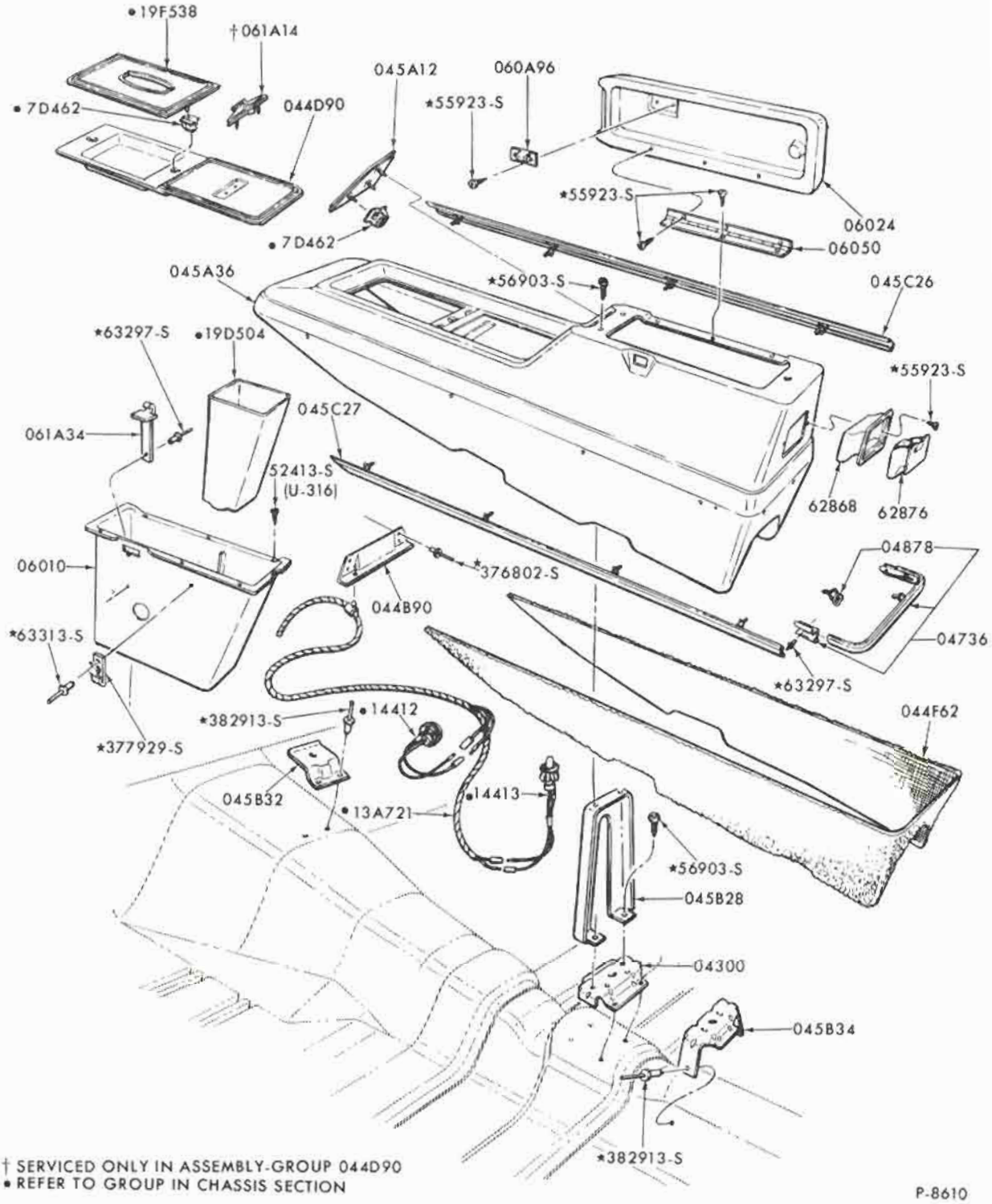

† SERVICED ONLY IN ASSEMBLY-GROUP 044D90
• REFER TO GROUP IN CHASSIS SECTION

P-8610

May, 1975 COPYRIGHT © 1975 — FORD MOTOR COMPANY — DEARBORN, MICHIGAN

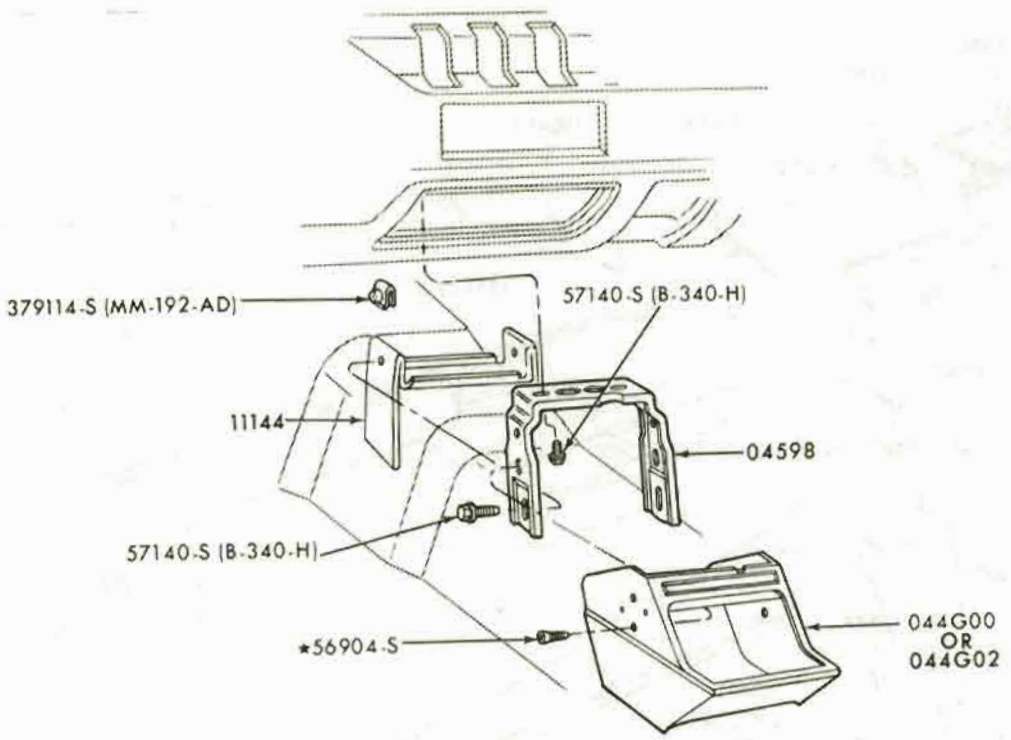

INSTRUMENT PANEL BRACE COVER
1972 PINTO

INDEX

THIS INDEX SECTION INCLUDES THE FOLLOWING MAJOR GROUPS:

FRONT DOOR and RELATED PARTS (WINDOWS, LOCKS, HANDLES, ETC.)
REAR DOOR and RELATED PARTS (WINDOWS, LOCKS, HANDLES, ETC.)
QUARTER WINDOW and RELATED PARTS
VACUUM DOOR LATCH SYSTEM

TITLE	SECTION	PAGE	ILLUS. NO.
1965			
A (FORD)			
Handles and latch parts (front door)	230.1	1	P-4741
Handles and latch parts (rear door) - body types 54, 57, 71	240.1	1	P-4744
Hinges - front door lower	230	27	P-6981
Hinges - front door upper	230	27	P-6980
Hinges - rear door lower	240	17	P-6983
Hinges - rear door upper	240	17	P-6982
Vacuum door latch system	230.2	1	P-4840
Window parts (front door) - body types 54, 62, 71	230	1	P-4738
- body types 57, 63, 65, 76	230	2	P-4740
Window parts (quarter) - body type 62	290	1	P-4745
- body type 63	290	2	P-4746
Window parts (quarter) - body type 76	290	3	P-4747
Window parts (quarter outside) - body type 71	290.1	1	P-4632
(quarter inside) - body type 71	290.1	2	P-4754
Window parts (rear door) - body types 54, 71	240	1	P-4742
- body type 57	240	2	P-4743
B (FAIRLANE)			
Handles and latch parts (front door) - body type 65	230	4	P-4031
- body types 54, 62, 71	230	3	P-4857
(rear door) - body types 54, 71	240	3	P-3763
Hinges - front door lower	230	27	P-6981
Hinges - front door upper	230	27	P-6980
Hinges - rear door lower	240	17	P-6983
Hinges - rear door upper	240	17	P-6982
Window parts (front door) - body type 65	230	4	P-4031
- body types 54, 62, 71	230	3	P-4857
Window parts (rear door) - body types 54, 71	240	3	P-3763
(quarter) - body type 62	290	4	P-3764
- body type 65	290	5	P-4032
- body type 71	290.1	3	P-4033
F (MUSTANG)			
Air extractor parts (quarter) - body type 63	290.1	4	P-4795
Handles and latch parts (front door)	230.1	2	P-4495
Hinges - front door lower	230	27	P-6981
Hinges - front door upper	230	27	P-6980
Window parts (front door)	230	5	P-4494
Window parts (quarter) - body types 65, 76	290	6	P-4496

COPYRIGHT © 1975 — FORD MOTOR COMPANY — DEARBORN, MICHIGAN

INDEX

TITLE	SECTION	PAGE	ILLUS. NO.
1965			
S (THUNDERBIRD)			
Handles and latch parts (front door)	230.1	1	P-4755
Hinges - front door lower	230	27	P-6981
Hinges - front door upper	230	27	P-6980
Vacuum door latch system	230.2	2	P-4902
Window parts (front door)	230	6	P-4858
Window parts (quarter)	290	7	P-4344
X (FALCON)			
Handles and latch parts (front door) - except body types 63, 76	230	7	P-4339
- body types 63, 76	230	8	P-4035
Hinges - front door lower	230	27	P-6981
Hinges - front door upper	230	27	P-6980
Hinges - rear door lower	240	17	P-6983
Hinges - rear door upper	240	17	P-6982
Window parts (front door) - except body types 63, 76	230	7	P-4339
- body types 63, 76	230	8	P-4035
Window panel parts (quarter) - body type 78	290.1	5	P-3593
Window parts (rear door) - body type 54	240	4	P-4342
- body type 71	240	5	P-4343
(quarter) - body types 59, 62	290	8	P-3160
- body type 63	290	9	P-3952
- body type 76	290	10	P-4036
1966			
A (FORD)			
Handles and latch parts (front door)	230.1	1	P-4741
Handles and latch parts (rear door) - body types 54, 57, 71	240.1	1	P-4744
Hinges - front door lower	230	27	P-6981
Hinges - front door upper	230	27	P-6980
Hinges - rear door lower	240	17	P-6983
Hinges - rear door upper	240	17	P-6982
Vacuum door latch system	230.2	1	P-4840
Window parts (front door) - body types 54, 62, 71	230	1	P-4738
- body types 57, 63, 65, 76	230	2	P-4740
Window parts (quarter) - body type 62	290	1	P-4745
- body type 63	290	2	P-4746
Window parts (quarter) - body type 76	290	3	P-4747
Window parts (quarter outside) - body type 71	290.1	1	P-4632
(quarter inside) - body type 71	290.1	2	P-4754
Window parts (rear door) - body types 54, 71	240	1	P-4742
- body type 57	240	2	P-4743

INDEX

1966

TITLE	SECTION	PAGE	ILLUS. NO.
B (FAIRLANE)			
Handles and latch parts (front door)	230.1	3	P-5074
Handles and latch parts (rear door) - body types 54, 71	240.1	2	P-5075
Hinges - front door lower	230	27	P-6981
Hinges - front door upper	230	27	P-6980
Hinges - rear door lower	240	17	P-6983
Hinges - rear door upper	240	17	P-6982
Window parts (front door) - body types 54, 71	230	9	P-5070
- body type 62	230	10	P-5071
- body types 63, 76	230	11	P-5072
Window parts (quarter) - body type 62	290	11	P-5076
- body type 63	290	12	P-5077
- body type 76	290	13	P-5078
Window parts (quarter outside) - body type 71	290.1	9	P-6030
Window parts (rear door) - body types 54, 71	240	6	P-5073
F (MUSTANG)			
Air extractor parts (quarter) - body type 63	290.1	4	P-4795
Handles and latch parts (front door)	230.1	2	P-4495
Hinges - front door lower	230	27	P-6981
Hinges - front door upper	230	27	P-6980
Window parts (front door)	230	5	P-4494
Window parts (quarter) - body types 65, 76	290	6	P-4496
S (THUNDERBIRD)			
Handles and latch parts (front door)	230.1	1	P-4755
Hinges - front door lower	230	27	P-6981
Hinges - front door upper	230	27	P-6980
Vacuum door latch system	230.2	2	P-4902
Window parts (front door)	230	6	P-4858
Window parts (quarter)	290	7	P-4344
U (BRONCO)			
Handles and latch parts (front door)	230	12	P-4964
Hinges - front door lower	230	27	P-6981
Hinges - front door upper	230	27	P-6980
Window parts (front door)	230	12	P-4964
Window parts (quarter) - body type 98	290.1	5	P-6775
X (FALCON)			
Handles and latch parts (front door)	230.1	3	P-5074
Handles and latch parts (rear door) - body types 54, 71	240.1	2	P-5075
Hinges - front door lower	230	27	P-6981
Hinges - front door upper	230	27	P-6980
Hinges - rear door lower	240	17	P-6983
Hinges - rear door upper	240	17	P-6982
Window parts (front door) - body types 54, 71	230	9	P-5070
- body types 62, 66	230	10	P-5071
Window parts (quarter) - body type 62	290	11	P-5076
Window parts (quarter outside) - body type 71	290.1	9	P-6030
Window parts (rear door) - body types 54, 71	240	6	P-5073

COPYRIGHT © 1975 — FORD MOTOR COMPANY — DEARBORN, MICHIGAN

INDEX

TITLE	SECTION	PAGE	ILLUS. NO.
1967			
A (FORD)			
Handles and latch parts (front door)	230.1	1	P-4741
Handles and latch parts (rear door) - body types 54, 57, 71	240.1	1	P-4744
Hinges - front door lower	230	27	P-6981
Hinges - front door upper	230	27	P-6980
Hinges - rear door lower	240	17	P-6983
Hinges - rear door upper	240	17	P-6982
Vacuum door latch system	230.2	3	P-5643
Window parts (front door) - body types 54, 62, 71	230	1	P-4738
- body types 57, 63, 65, 76	230	2	P-4740
Window parts (quarter) - body type 62	290	1	P-4745
- body type 63	290	2	P-4746
Window parts (quarter) - body type 76	290	3	P-4747
Window parts (quarter outside) - body type 71	290.1	6	P-5530
(quarter inside) - body type 71	290.1	7	P-5791
Window parts (rear door) - body types 54, 71	240	1	P-4742
- body type 57	240	2	P-4743
B (FAIRLANE)			
Handles and latch parts (front door)	230.1	3	P-5074
Handles and latch parts (rear door) - body types 54, 71	240.1	2	P-5075
Hinges - front door lower	230	27	P-6981
Hinges - front door upper	230	27	P-6980
Hinges - rear door lower	240	17	P-6983
Hinges - rear door upper	240	17	P-6982
Window parts (front door) - body types 54, 71	230	9	P-5070
- body types 62, 66	230	10	P-5071
- body types 63, 76	230	11	P-5072
Window parts (quarter) - body type 62	290	11	P-5076
- body type 63	290	12	P-5077
- body type 76	290	13	P-5078
Window parts (quarter outside) - body type 71	290.1	9	P-6030
Window parts (rear door) - body types 54, 71	240	6	P-5073
F (MUSTANG)			
Air extractor parts (quarter) - body type 63	290.1	8	P-5538
Handles and latch parts (front door)	230.1	4	P-5627
Hinges - front door lower	230	27	P-6981
Hinges - front door upper	230	27	P-6980
Window parts (front door)	230	13	P-5628
Window parts (quarter) - body types 65, 76	290	14	P-5537

INDEX

TITLE	SECTION	PAGE	ILLUS. NO.
1967			
S (THUNDERBIRD)			
Handles and latch parts (front door)	230.1	5	P-5361
Handles and latch parts (rear door) - body type 57	240.1	3	P-5362
Hinges - front door lower	230	27	P-6981
Hinges - front door upper	230	27	P-6980
Hinges - rear door lower	240	17	P-6983
Hinges - rear door upper	240	17	P-6982
Vacuum door latch system	230.2	5	P-5644
Window parts (front door) - body type 57	230	14	P-5360
- body type 65	230	15	P-5371
Window parts (quarter) - body type 65	290	15	P-5366
Window parts (rear door) - body type 57	240	7	P-5363
U (BRONCO)			
Handles and latch parts (front door)	230	12	P-4964
Hinges - front door lower	230	27	P-6981
Hinges - front door upper	230	27	P-6980
Window parts (front door)	230	12	P-4964
Window parts (quarter) - body type 98	290.1	5	P-6775
X (FALCON)			
Handles and latch parts (front door)	230.1	3	P-5074
Handles and latch parts (rear door) - body types 54, 71	240.1	2	P-5075
Hinges - front door lower	230	27	P-6981
Hinges - front door upper	230	27	P-6980
Hinges - rear door lower	240	17	P-6983
Hinges - rear door upper	240	17	P-6982
Window parts (front door) - body types 54, 71	230	9	P-5070
- body type 62	230	10	P-5071
Window parts (quarter) - body type 62	290	11	P-5076
Window parts (quarter outside) - body type 71	290.1	9	P-6030
Window parts (rear door) - body types 54, 71	240	6	P-5073
1968			
A (FORD)			
Handles and latch parts (front door)	230.1	1	P-4741
Handles and latch parts (rear door) - body types 54, 57, 71	240.1	1	P-4744
Hinges - front door lower	230	27	P-6981
Hinges - front door upper	230	27	P-6980
Hinges - rear door lower	240	17	P-6983
Hinges - rear door upper	240	17	P-6982
Window parts (front door) - body types 54, 62, 71	230	1	P-4738
- body types 57, 63, 65, 76	230	2	P-4740
Window parts (quarter) - body type 62	290	1	P-4745
- body types 63, 65	290	16	P-6197
- body type 76	290	3	P-4747
Window parts (quarter outside) - body type 71	290.1	6	P-5530
(quarter inside) - body type 71	290.1	7	P-5791
Window parts (rear door) - body types 54, 71	240	1	P-4742
- body type 57	240	2	P-4743

COPYRIGHT © 1975 — FORD MOTOR COMPANY — DEARBORN, MICHIGAN

INDEX

TITLE	SECTION	PAGE	ILLUS. NO.
1968			
B (FAIRLANE/TORINO)			
Handles and latch parts (front door)	230.1	3	P-5074
Handles and latch parts (rear door) - body types 54, 71	240.1	2	P-5075
Hinges - front door lower	230	27	P-6981
Hinges - front door upper	230	27	P-6980
Hinges - rear door lower	240	17	P-6983
Hinges - rear door upper	240	17	P-6982
Window parts (front door) - body types 54, 71	230	16	P-6290
- body types 63, 65, 66, 76	230	17	P-6291
Window parts (quarter) - body types 63, 65, 76	290	17	P-6158
Window parts (quarter outside) - body type 71	290.1	9	P-6030
Window parts (rear door) - body type 54	240	8	P-6292
Window parts (rear door) - body type 71	240	9	P-6293
F (MUSTANG)			
Air extractor parts (quarter) - body type 63	290.1	8	P-5538
Handles and latch parts (front door)	230.1	4	P-5627
Hinges - front door lower	230	27	P-6981
Hinges - front door upper	230	27	P-6980
Window parts (front door)	230	13	P-5628
Window parts (quarter) - body types 65, 76	290	14	P-5537
S (THUNDERBIRD)			
Handles and latch parts (front door)	230.1	5	P-5361
Handles and latch parts (rear door) - body type 57	240.1	3	P-5362
Hinges - front door lower	230	27	P-6981
Hinges - front door upper	230	27	P-6980
Hinges - rear door lower	240	17	P-6983
Hinges - rear door upper	240	17	P-6982
Window parts (front door) - body type 57	230	14	P-5360
- body type 65	230	15	P-5371
Window parts (quarter) - body type 65	290	15	P-5366
Window parts (rear door) - body type 57	240	7	P-5363
Vacuum door latch system -	230.2	9	P-6865-A
(continued)	230.2	10	P-6865-B
U (BRONCO)			
Handles and latch parts (front door)	230	12	P-4964
Hinges - front door lower	230	27	P-6981
Hinges - front door upper	230	27	P-6980
Window parts (front door)	230	12	P-4964
Window parts (quarter) - body type 98	290.1	5	P-6775
X (FALCON)			
Handles and latch parts (front door)	230.1	3	P-5074
Handles and latch parts (rear door) - body types 54, 71	240.1	2	P-5075
Hinges - front door lower	230	27	P-6981
Hinges - front door upper	230	27	P-6980
Hinges - rear door lower	240	17	P-6983
Hinges - rear door upper	240	17	P-6982
Window parts (front door) - body types 54, 71	230	9	P-5070
- body type 62	230	10	P-5071
Window parts (quarter) - body type 62	290	11	P-5076
Window parts (quarter outside) - body type 71	290.1	9	P-6030
Window parts (rear door) - body types 54, 71	240	6	P-5073

INDEX

1969

A (FORD)

TITLE	SECTION	PAGE	ILLUS. NO.
Handles and latch parts (front door)	230.1	6	P-7253
Handles and latch parts (rear door) - body types 54, 57, 71	240.1	4	P-7254
Hinges - front door lower	230	27	P-6981
Hinges - front door upper	230	27	P-6980
Hinges - rear door lower	240	17	P-6983
Hinges - rear door upper	240	17	P-6982
Vacuum door latch system	230.2	5	P-6863-A
Vacuum door latch system (cont'd)	230.2	6	P-6863-B
Window parts (front door) - body types 54, 62, 71	230	18	P-6693-A
- body types 54, 62, 71 (cont'd)	230	19	P-6693-B
- body types 57, 63, 65, 76	230	20	P-6694-A
- body types 57, 63, 65, 76 (cont'd)	230	21	P-6694-B
Window parts (quarter) - body type 62	290	1	P-4745
- body type 63	290	18	P-6814
- body types 65, 76	290	19	P-6815
Window parts (quarter outside) - body type 71	290.1	9	P-6774
(quarter inside) - body type 71	290.1	10	P-6891
Window parts (rear door) - body type 57	240	12	P-6696-A
- body type 57 - (cont'd)	240	13	P-6696-B
- body types 54, 71	240	10	P-6695-A
- body types 54, 71 (cont'd)	240	11	P-6695-B

B (FAIRLANE/TORINO)

Handles and latch parts (front door)	230.1	7	P-7251
Handles and latch parts (rear door) - body types 54, 71	240.1	5	P-7252
Hinges - front door lower	230	27	P-6981
Hinges - front door upper	230	27	P-6980
Hinges - rear door lower	240	17	P-6983
Hinges - rear door upper	240	17	P-6982
Window parts (front door) - body types 54, 71	230	16	P-6290
- body types 63, 65, 66, 76	230	17	P-6291
Window parts (quarter) - body types 63, 65, 76	290	17	P-6158
Window parts (quarter outside) - body type 71	290.1	9	P-6030
Window parts (rear door) - body type 54	240	8	P-6292
- body type 71	240	9	P-6293

F (MUSTANG)

Handles and latch parts (front door)	230.1	4	P-5627
Hinges - front door lower	230	27	P-6981
Hinges - front door upper	230	27	P-6980
Window parts (front door)	230	22	P-6816
Window parts (quarter) - body type 63	290	20	P-6732
- body types 65, 76	290	21	P-6733

COPYRIGHT © 1975 — FORD MOTOR COMPANY — DEARBORN, MICHIGAN

INDEX

TITLE	SECTION	PAGE	ILLUS. NO.
1969			
S (THUNDERBIRD)			
Handles and latch parts (front door)	230.1	5	P-5361
Handles and latch parts (rear door) - body type 57	240.1	3	P-5362
Hinges - front door lower	230	27	P-6981
Hinges - front door upper	230	27	P-6980
Hinges - rear door lower	240	17	P-6983
Hinges - rear door upper	240	17	P-6982
Vacuum door latch system	230.2	7	P-6864-A
Vacuum door latch system (cont'd)	230.2	8	P-6864-B
Window parts (front door) - body type 57	230	14	P-5360
- body type 65	230	15	P-5371
Window parts (quarter) - body type 65A, C	290	15	P-5366
Window parts (rear door) - body type 57	240	7	P-5363
U (BRONCO)			
Handles and latch parts (front door)	230.1	8	P-7407
Hinges - front door lower	230	27	P-6981
Hinges - front door upper	230	27	P-6980
Window parts (front door)	230	28	P-7408
Window parts (quarter) - body type 98	290.1	5	P-6775
X (FALCON)			
Handles and latch parts (front door)	230.1	7	P-7251
Handles and latch parts (rear door) - body types 54, 71	240.1	5	P-7252
Hinges - front door lower	230	27	P-6981
Hinges - front door upper	230	27	P-6980
Hinges - rear door lower	240	17	P-6983
Hinges - rear door upper	240	17	P-6982
Window parts (front door) - body types 54, 71	230	9	P-5070
- body type 62	230	10	P-5071
Window parts (quarter) - body type 62	290	11	P-5076
Window parts (quarter outside) - body type 71	290.1	9	P-6030
Window parts (rear door) - body types 54, 71	240	6	P-5073

INDEX

1970

TITLE	SECTION	PAGE	ILLUS. NO.
A (FORD)			
Bumpers door - rubber	230	30	P-6440
Handles and latch parts (front door)	230.1	6	P-7253
Handles and latch parts (rear door) - body types 54, 57, 71	240.1	4	P-7254
Hinges - front door lower	230	27	P-6981
- front door upper	230	27	P-6980
- rear door lower	240	17	P-6983
- rear door upper	240	17	P-6982
Pressure release vent - quarter	290	22	P-7183
Vacuum door latch system	230.2	5	P-6863-A
(cont'd)	230.2	6	P-6863-B
Window parts (front door) - body types 54, 71	230	18	P-6693-A
- body types 54, 71	230	19	P-6693-B
- body types 57, 63, 65, 76	230	20	P-6694-A
- body types 57, 63, 65, 76	230	21	P-6694-B
Window parts (rear door) - body types 54, 71	240	10	P-6695-A
- body types 54, 71	240	11	P-6695-B
- body type 57	240	12	P-6696-A
- body type 57	240	13	P-6696-B
Window parts (quarter) - body type 63	290	18	P-6814
- body types 65, 76	290	19	P-6815
Window parts (quarter inside) - body type 71	290.1	10	P-6891
Window parts (quarter outside) - body type 71	290.1	9	P-6774
B (FAIRLANE/TORINO) **B (FALCON) - FROM 1/2/70**			
Bumpers door - rubber	230	30	P-6440
Handles and latch parts (front door)	230.1	7	P-7251
Handles and latch parts (rear door) - body types 54, 57, 71	240.1	5	P-7252
Hinges - front door lower	230	27	P-6981
- front door upper	230	27	P-6980
- rear door lower	240	17	P-6983
- rear door upper	240	17	P-6982
Pressure release vent - quarter	290	22	P-7183
Window parts (front door) - body type 54	230	24	P-7097
- body type 57	230	25	P-7095
- body type 62	230	29	P-7467
- body types 63, 65, 66, 76	230	26	P-7094
- body type 71	230	16	P-6290
Window parts (rear door) - body type 54	240	14	P-7092
- body type 57	240	15	P-7096
- body type 71	240	16	P-7093
Window parts (quarter) - body type 62	290	25	P-7466
- body types 63, 65, 76	290	23	P-7045
Window parts (quarter outside) - body type 71	290.1	9	P-6030
F (MUSTANG)			
Bumpers door - rubber	230	30	P-6440
Handles and latch parts (front door)	230.1	4	P-5627
Hinges - front door lower	230	27	P-6981
- front door upper	230	27	P-6980
Pressure release vent - quarter	290	22	P-7183
Window parts (front door)	230	22	P-6816
Window parts (quarter) - body type 63	290	20	P-6732
- body types 65, 76	290	21	P-6733

COPYRIGHT © 1975 — FORD MOTOR COMPANY — DEARBORN, MICHIGAN

INDEX

TITLE	SECTION	PAGE	ILLUS. NO.
1970			
P (MAVERICK)			
Bumpers door - rubber	230	30	P-6440
Handles and latch parts (front door)	230.1	7	P-7251
Hinges - front door lower	230	27	P-6981
- front door upper	230	27	P-6980
Pressure release vent - quarter	290	22	P-7183
Window parts (front door)	230	23	P-6862
Window parts (quarter) - body type 62	290	22	P-6836
S (THUNDERBIRD)			
Bumpers door - rubber	230	30	P-6440
Handles and latch parts (front door) - body type 57	230.1	9	P-7983
- body type 65	230.1	10	P-7982
Handles and latch parts (rear door) - body type 57	240.1	3	P-5362
Hinges - front door lower	230	27	P-6981
- front door upper	230	27	P-6980
- rear door lower	240	17	P-6983
- rear door upper	240	17	P-6982
Pressure release vent - quarter	290	22	P-7183
Vacuum door latch system	230.2	7	P-6864-A
(cont'd)	230.2	8	P-6864-B
Window parts (front door) - body type 57	230	14	P-5360
- body type 65	230	15	P-5371
Window parts (quarter) - body type 65	290	24	P-7033
Window parts (rear door) - body type 57	240	7	P-5363
U (BRONCO)			
Bumpers door - rubber	230	30	P-6440
Handles and latch parts (front door)	230.1	8	P-7407
Hinges - front door lower	230	27	P-6981
- front door upper	230	27	P-6980
Window and related parts (quarter)	290.1	5	P-6775
Window parts (front door)	230	28	P-7408
X (FALCON) - BEFORE 1/2/70			
FOR UNITS BUILT FROM 1/2/70 REFER TO B (FALCON)			
Bumpers door - rubber	230	30	P-6440
Handles and latch parts (front door)	230.1	3	P-5074
Handle and latch parts (rear door) - body types 54, 71	240.1	2	P-5075
Hinges - front door lower	230	27	P-6981
- front door upper	230	27	P-6980
- rear door lower	240	17	P-6983
- rear door upper	240	17	P-6982
Window parts (front door) - body types 54, 71	230	9	P-5070
- body type 62	230	10	P-5071
Window parts (quarter) - body type 62	290	11	P-5076
Window parts (quarter outside) - body type 71	290.1	9	P-6030
Window parts (rear door) - body types 54, 71	240	6	P-5073

INDEX

1971

A (FORD)

TITLE	SECTION	PAGE	ILLUS. NO.
Bumpers door - rubber	230	30	P-6440
Handles and latch parts (front door)	230.1	11	P-7802
Handles and latch parts (rear door) - body types 53, 54, 57, 71	240.1	8	P-7803
Hinges - front door lower	230	27	P-6981
- front door upper	230	27	P-6980
- rear door lower	240	17	P-6983
- rear door upper	240	17	P-6982
Pressure release vent - quarter	290	22	P-7183
Vacuum door latch system	230.2	11	P-8192
Window parts (front door) - body types 54, 71	230	34	P-7781
- body types 53, 57	230	36	P-8174
- body types 65, 76	230	20	P-6694-A
- body types 65, 76 (cont'd)	230	21	P-6694-B
Window parts (rear door) - body types 54, 71	240	21	P-7910
- body types 53, 57	240	20	P-7909
Window parts (quarter) - body type 65	290	29	P-7874
- body type 76	290	19	P-6815
Window parts (quarter inside) - body type 71	290.1	10	P-6891
Window parts (quarter outside) - body type 71	290.1	9	P-6774

B (TORINO)

Bumpers door - rubber	230	30	P-6440
Handles and latch parts (front door)	230.1	7	P-7251
Handles and latch parts (rear door) - body types 54, 57, 71	240.1	5	P-7252
Hinges - front door lower	230	27	P-6981
- front door upper	230	27	P-6980
- rear door lower	240	17	P-6983
- rear door upper	240	17	P-6982
Pressure release vent - quarter	290	22	P-7183
Window parts (front door) - body type 54	230	24	P-7097
- body type 57	230	25	P-7095
- body types 63, 65, 66, 76	230	26	P-7094
- body type 71	230	16	P-6290
Window parts (rear door) - body type 54	240	14	P-7092
- body type 57	240	22	P-7782
- body type 71	240	16	P-7093
Window parts (quarter) - body type 63, 65, 76	290	23	P-7045
Window parts (quarter outside) - body type 71	290.1	9	P-6030

F (MUSTANG)

Bumpers door - rubber	230	30	P-6440
Handles and latch parts (front door)	230.1	11	P-7802
Hinges - front door lower	230	27	P-6981
- front door upper	230	27	P-6980
Pressure release vent - quarter	290	22	P-7183
Window parts (front door)	230	35	P-7824
Window parts - moveable - (quarter) - body type 63, 65, 76	290	27	P-7847
Window parts - stationary (quarter) - body type 63	290	28	P-7846

COPYRIGHT © 1975 — FORD MOTOR COMPANY — DEARBORN, MICHIGAN

INDEX

TITLE	SECTION	PAGE	ILLUS. NO.
1971			
L (PINTO)			
Bumpers door - rubber	230	30	P-6440
Handles and latch parts (front door)	230.1	12	P-7930
Hinges - front door lower	230	27	P-6981
- front door upper	230	27	P-6980
Pressure release vent - quarter	290	22	P-7183
Window parts (front door)	230	33	P-7785
Window parts - moveable (quarter)	290	26	P-7924
Window parts - stationary (quarter)	290	26	P-7923
P (MAVERICK)			
Bumpers door - rubber	230	30	P-6440
Handles and latch parts (front door)	230.1	4	P-5627
Handles and latch parts (rear door)	240.1	6	P-7838
Hinges - front door lower	230	27	P-6981
- front door upper	230	27	P-6980
- rear door lower	240	17	P-6983
- rear door upper	240	17	P-6982
Pressure release vent - quarter	290	22	P-7183
Window parts (front door)	230	23	P-6862
Window parts (rear door)	240	18	P-7786
Window parts (quarter) - body type 62	290	22	P-6836
S (THUNDERBIRD)			
Bumpers door - rubber	230	30	P-6440
Handles and latch parts (front door) - body type 57	230.1	9	P-7983
- body type 65	230.1	10	P-7982
Handles and latch parts (rear door) - body type 57	240.1	7	P-7984
Hinges - front door lower	230	27	P-6981
- front door upper	230	27	P-6980
- rear door lower	240	17	P-6983
- rear door upper	240	17	P-6982
Pressure release vent - quarter	290	22	P-7183
Vacuum door latch system	230.2	12	P-8281
Window parts (front door) - body type 57	230	31	P-7980
- body type 65	230	32	P-7979
Window parts (rear door) - body type 57	240	19	P-7981
Window parts (quarter) - body type 65	290	24	P-7033
U (BRONCO)			
Bumpers door - rubber	230	30	P-6440
Handles and latch parts (front door)	230.1	8	P-7407
Hinges - front door lower	230	27	P-6981
- front door upper	230	27	P-6980
Window and related parts (quarter)	290.1	5	P-6775
Window parts (front door)	230	28	P-7408

INDEX

TITLE	SECTION	PAGE	ILLUS. NO.
1972			
A (FORD)			
Bumpers door - rubber	230	30	P-6440
Door edge guards	230	40	P-10061
Handles and latch parts (front door)	230.1	11	P-7802
Handles and latch parts (rear door) - body types 53,54,57,71	240.1	8	P-7803
Hinges - front door lower	230	27	P-6981
- front door upper	230	27	P-6980
- rear door lower	240	17	P-6983
- rear door upper	240	17	P-6982
Pressure release vent - quarter	290	22	P-7183
Vacuum door latch system	230.2	12	P-8192
Window parts (front door) - body types 54, 71	230	34	P-7781
- body types 53, 57	230	36	P-8174
- body types 65, 76	230	20	P-6694-A
- body types 65, 76 (cont'd)	230	21	P-6694-B
Window parts (rear door) - body types 54, 71	240	21	P-7910
- body types 53, 57	240	20	P-7909
Window parts (quarter) - body type 65	290	29	P-7874
- body type 76	290	19	P-6815
Window parts (qtr. inside) - body type 71	290.1	10	P-6891
Window parts (qtr.outside) - body type 71	290.1	9	P-6774
B (TORINO)			
Bumpers door - rubber	230	30	P-6440
Door edge guards	230	40	P-10061
Handles and latch parts (front door)-manual-body types 53,71	230.1	14	P-8791
-manual-body types 63,65,97	230.1	15	P-8793
-electric	230.2	14	P-9099
Handles and latch parts (rear door)-manual-body types 53,71	240.1	9	P-8792
-electric	240.1	10	P-9100
Hinges - front door lower	230	27	P-6981
- front door upper	230	27	P-6980
- rear door lower	240	17	P-6983
- rear door upper	240	17	P-6982
Pressure release vent - quarter	290	22	P-7183
Window parts (front door) -body types 53,71	230	38	P-8789
-body types 63,65,97	230	39	P-8788
Window parts (rear door) -body types 53,71	240	23	P-8790
Window parts (quarter) - body type 63	290	32	P-8887
- body type 65	290	31	P-8888
Window parts (qtr.outside) - body type 71	290.1	11	P-8612
F (MUSTANG)			
Bumpers door - rubber	230	30	P-6440
Door edge guards	230	40	P-10061
Handles and latch parts (front door)	230.1	11	P-7802
Hinges - front door lower	230	27	P-6981
- front door upper	230	27	P-6980
Pressure release vent - quarter	290	22	P-7183
Window parts (front door)	230	35	P-7824
Window parts - moveable - (quarter) - body types 63, 65, 76	290	27	P-7847
Window parts - stationary - (quarter) - body type 63	290	28	P-7846

COPYRIGHT © 1975 — FORD MOTOR COMPANY — DEARBORN, MICHIGAN

INDEX

TITLE	SECTION	PAGE	ILLUS. NO.
1972			
L (PINTO)			
Bumpers door - rubber	230	30	P-6440
Door edge guards	230	40	P-10061
Handles and latch parts (front door)	230.1	12	P-7930
Hinges - front door lower	230	27	P-6981
- front door upper	230	27	P-6980
Pressure release vent - quarter	290	22	P-7183
Window parts (front door)	230	33	P-7785
Window parts - moveable (quarter) - body types 62,64 - "Before 5/1/72"	290	26	P-7924
"From 5/1/72"	290	34	P-10375
Window parts - stationary (quarter) - body types 62,64	290	26	P-7923
Window parts - moveable (quarter) - body type 73 - "Before 5/1/72"	290	33	P-8936
- "From 5/1/72"	290	33	P-10322
Window parts-stationary (quarter)-body type 73	290.1	11	P-10150
P (MAVERICK)			
Bumpers door - rubber	230	30	P-6440
Door edge guards	230	40	P-10061
Handles and latch parts (front door)	230.1	4	P-5627
Handles and latch parts (rear door)	240.1	6	P-7838
Hinges - front door lower	230	27	P-6981
- front door upper	230	27	P-6980
- rear door lower	240	17	P-6983
- rear door upper	240	17	P-6982
Pressure release vent - quarter	290	22	P-7183
Window parts (front door)	230	23	P-6862
Window parts (rear door)	240	18	P-7786
Window parts (quarter) - body type 62	290	22	P-6836
S (THUNDERBIRD)			
Bumpers door - rubber	230	30	P-6440
Door edge guards	230	40	P-10061
Handles and latch parts - manual - (front door) - body type 65	230.1	13	P-8604
- electric - (front door) - body type 65	230.2	13	P-8817
Hinges - front door lower	230	27	P-6981
- front door upper	230	27	P-6980
Pressure release vent - quarter	290	22	P-7183
Window parts (front door) - body type 65	230	37	P-8603
Window parts (quarter) - body type 65	290	30	P-8800
U (BRONCO)			
Bumpers door - rubber	230	30	P-6440
Handles and latch parts (front door)	230.1	8	P-7407
Hinges - front door lower	230	27	P-6981
- front door upper	230	27	P-6980
Window and related parts (quarter)	290.1	5	P-6775
Window parts (front door)	230	28	P-7408

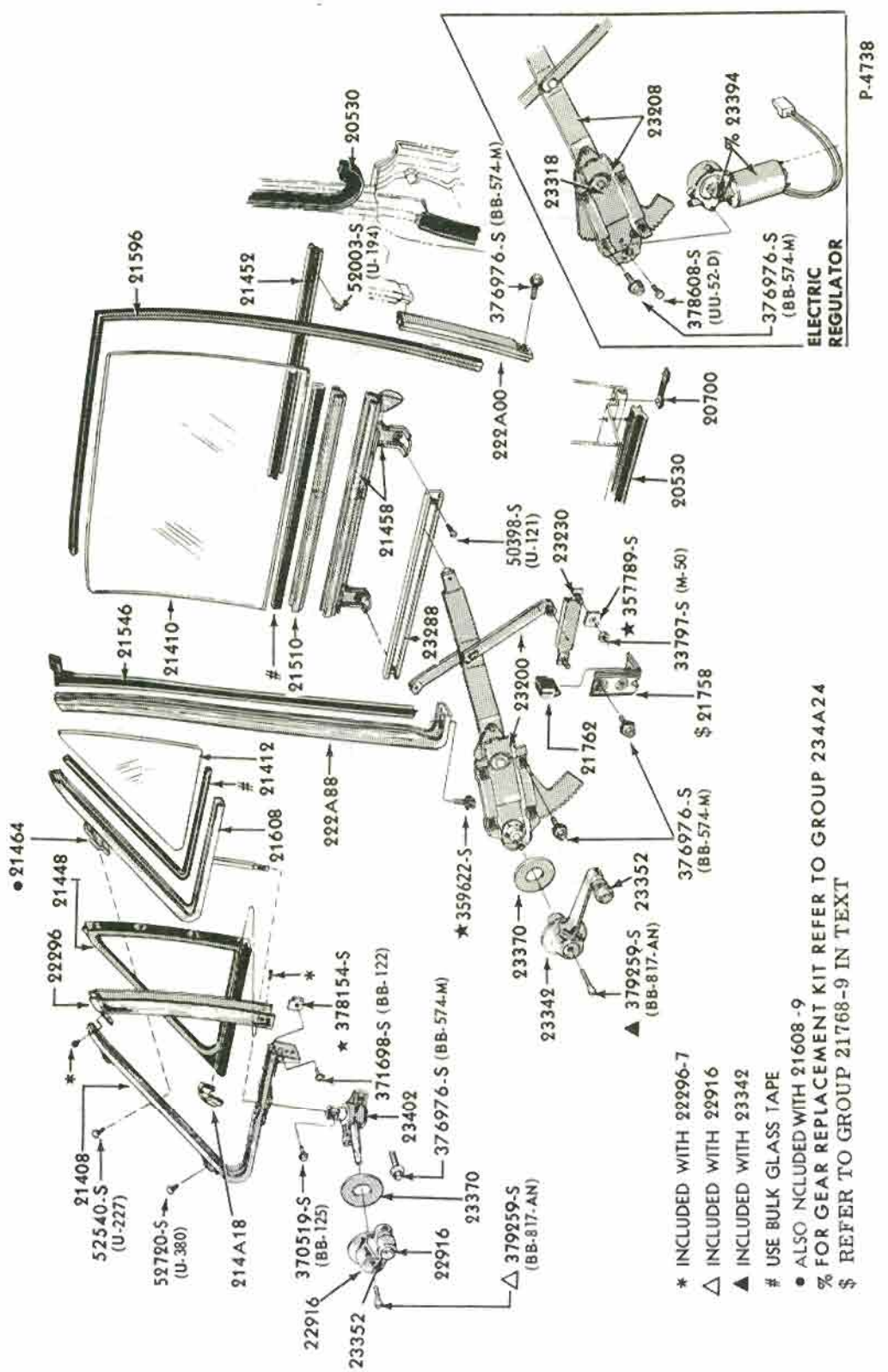

FRONT DOOR WINDOW and RELATED PARTS
1965/68 FORD - BODY TYPES 54,62,71

COPYRIGHT © 1975 — FORD MOTOR COMPANY — DEARBORN, MICHIGAN

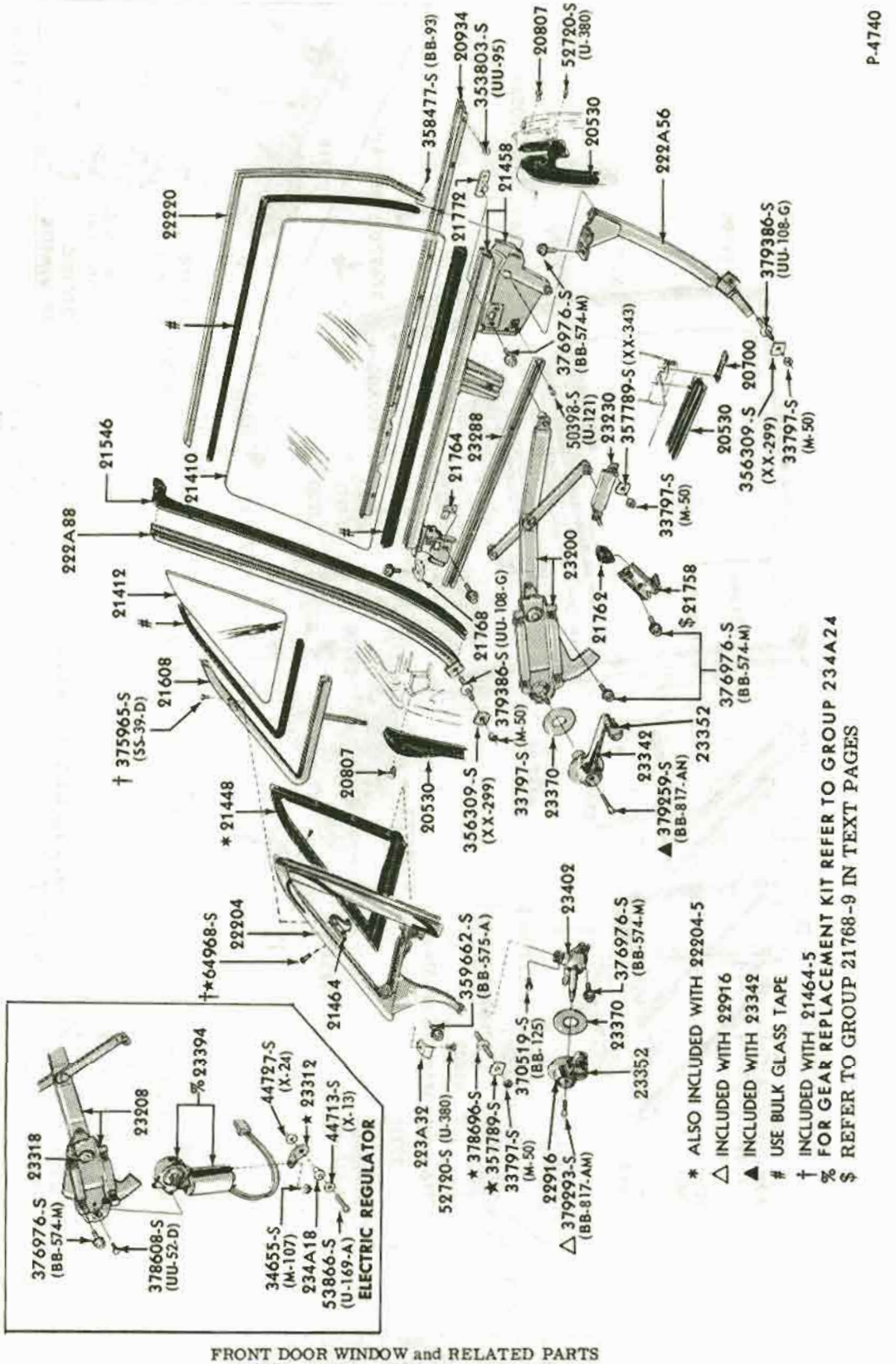

* ALSO INCLUDED WITH 22204-5
△ INCLUDED WITH 22916
▲ INCLUDED WITH 23342
USE BULK GLASS TAPE
† INCLUDED WITH 21464-5
% FOR GEAR REPLACEMENT KIT REFER TO GROUP 234A24
$ REFER TO GROUP 21768-9 IN TEXT PAGES

P-4740

FRONT DOOR WINDOW and RELATED PARTS
1965/68 FORD - BODY TYPES 57,63,65,76

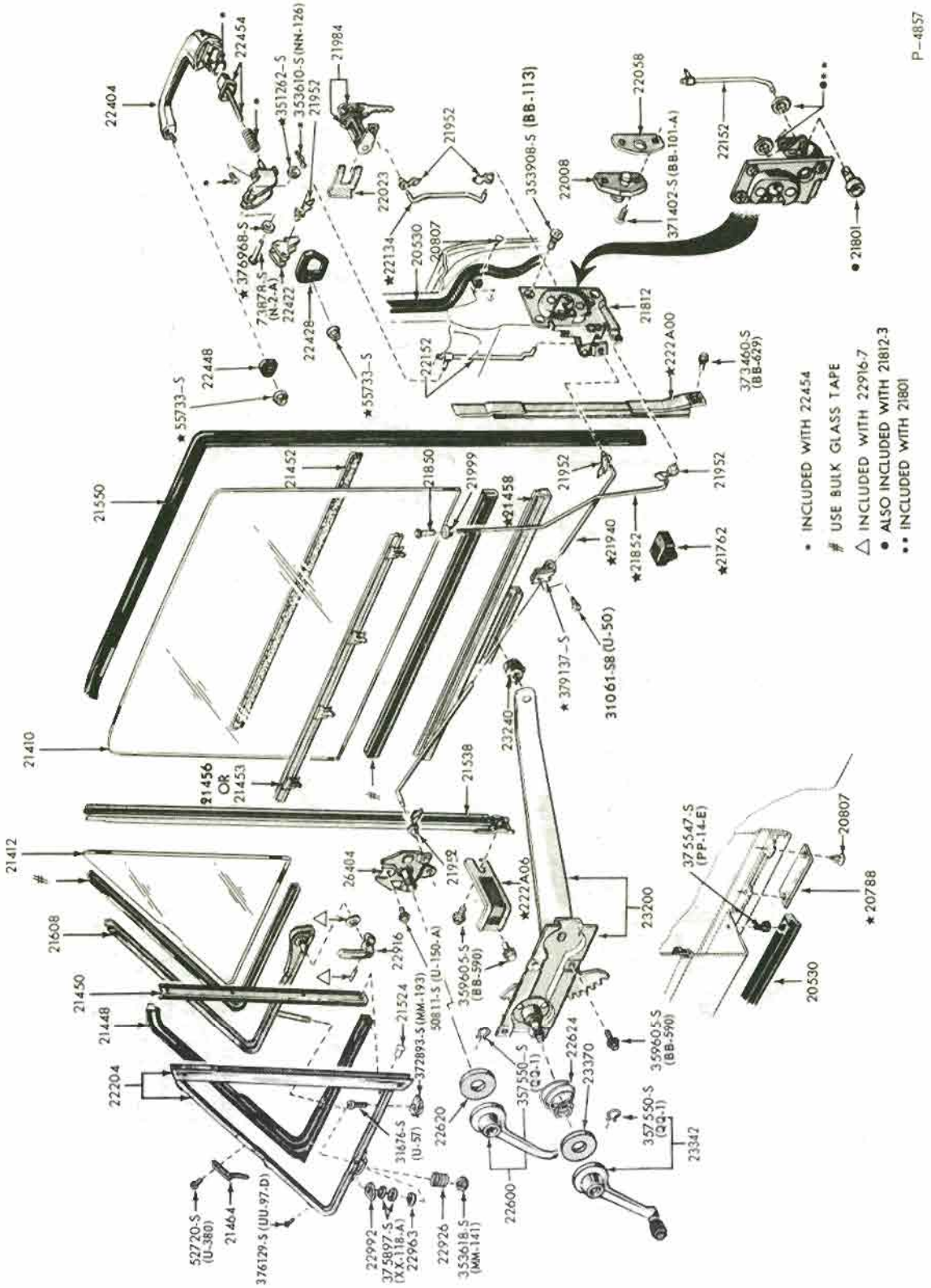

FRONT DOOR WINDOW and RELATED PARTS
1965 FAIRLANE - BODY TYPES 54,62,71

COPYRIGHT © 1975 — FORD MOTOR COMPANY — DEARBORN, MICHIGAN

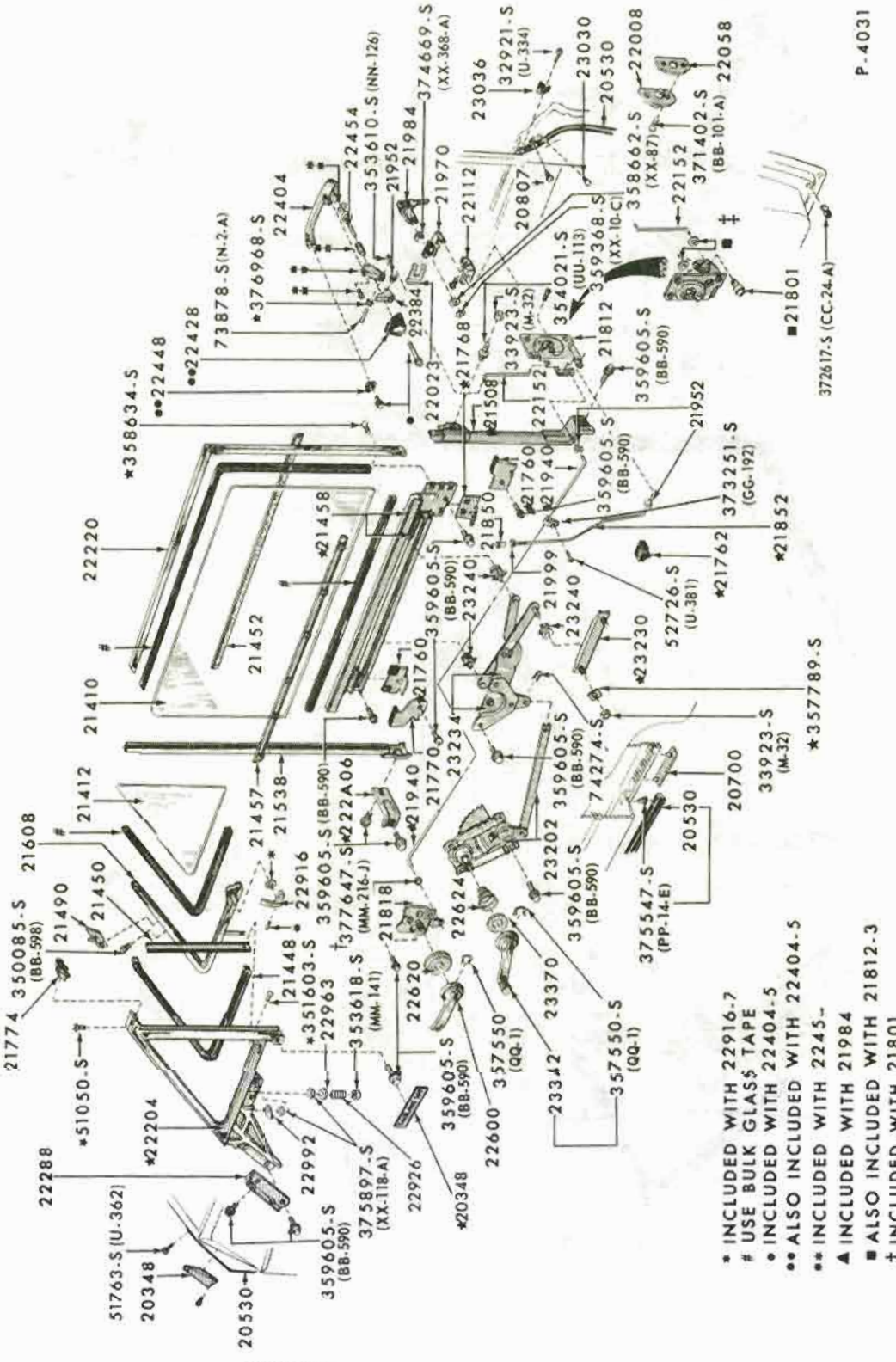

FRONT DOOR WINDOW and RELATED PARTS
1965 FAIRLANE - BODY TYPE 65

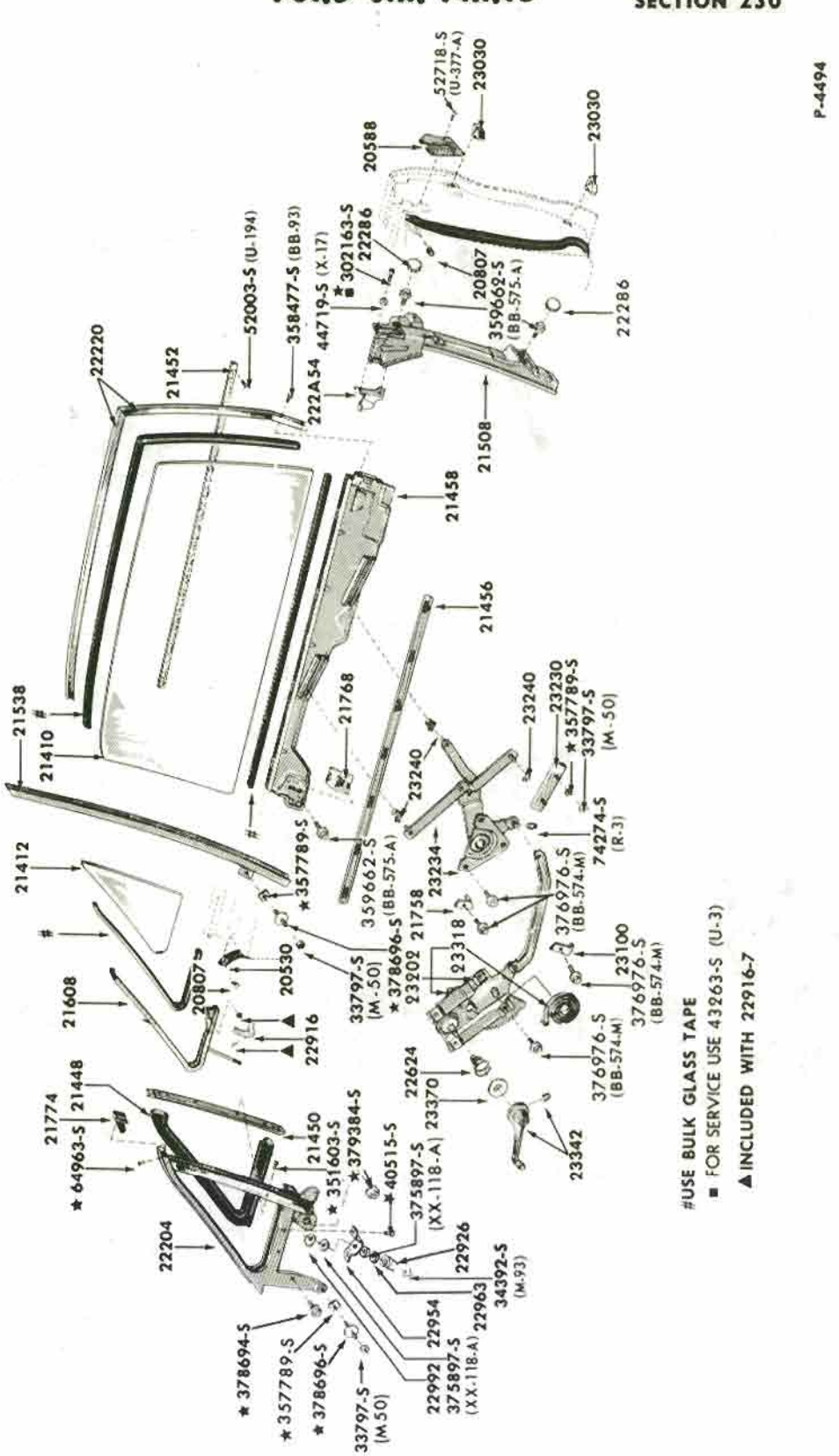

#USE BULK GLASS TAPE
■ FOR SERVICE USE 43263-S (U-3)
▲ INCLUDED WITH 22916-7

FRONT DOOR WINDOW and RELATED PARTS
1965/66 MUSTANG

COPYRIGHT © 1975 — FORD MOTOR COMPANY — DEARBORN, MICHIGAN

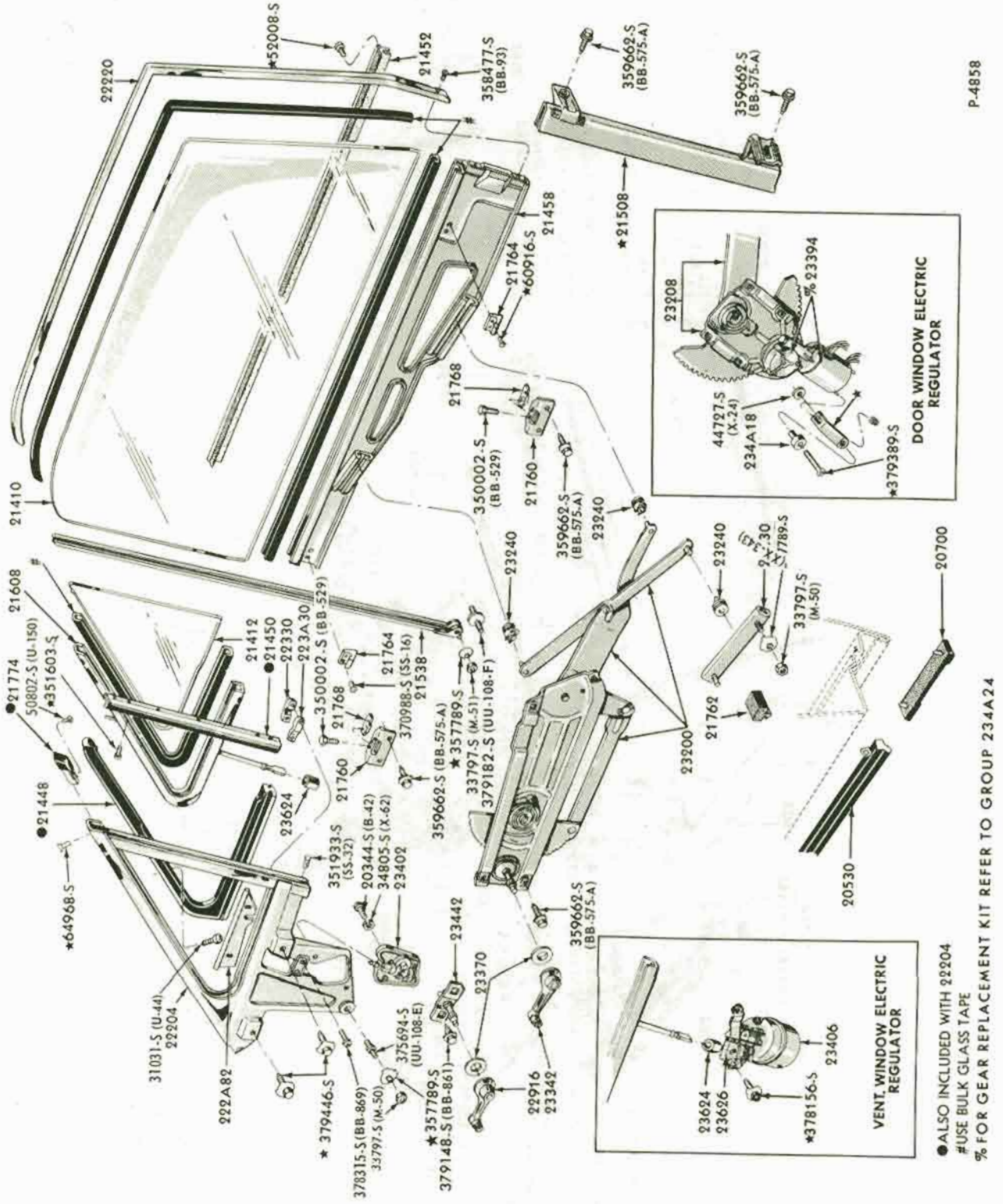

FRONT DOOR WINDOW and RELATED PARTS
1965/66 THUNDERBIRD

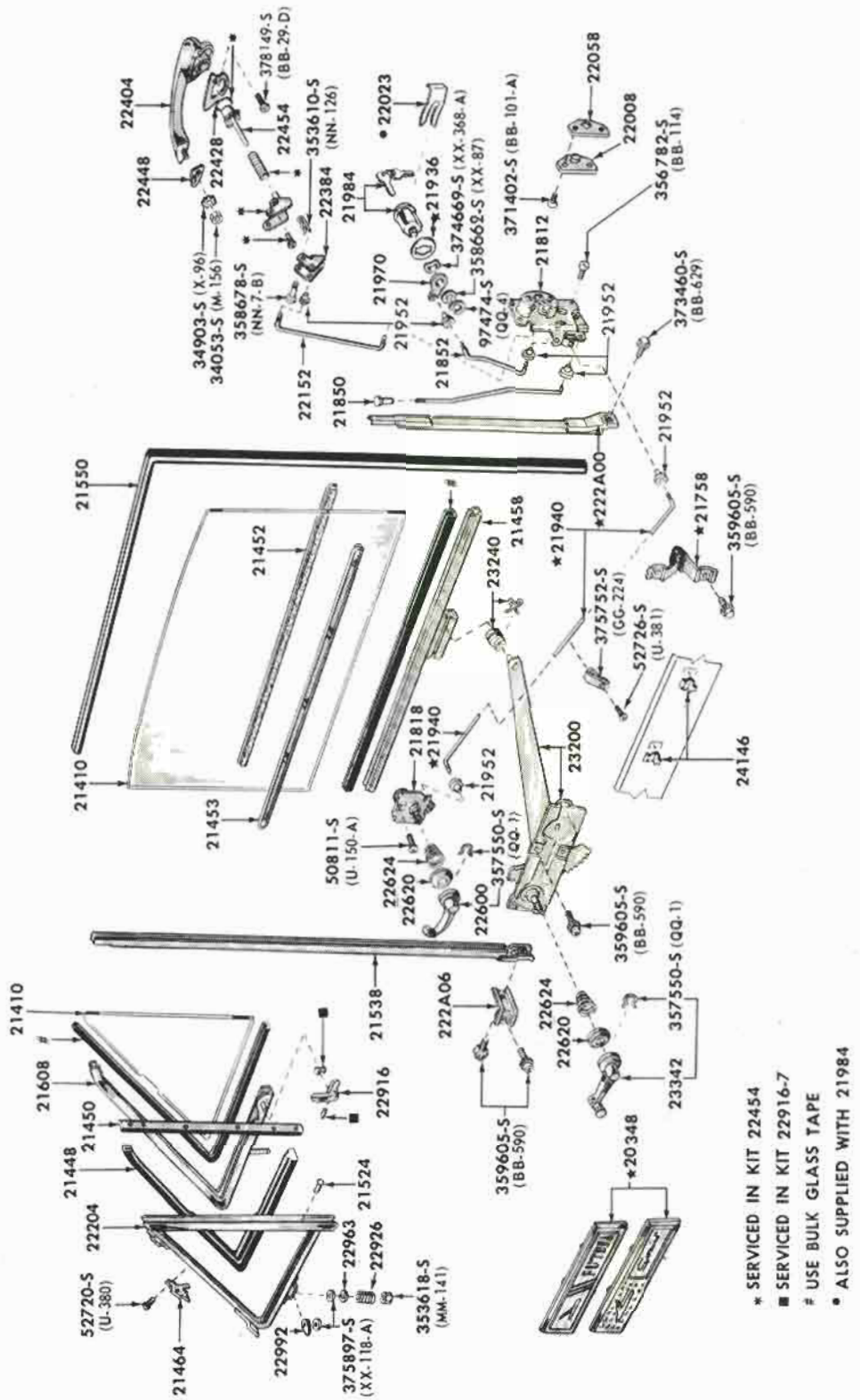

FRONT DOOR WINDOW and RELATED PARTS
1965 FALCON - except BODY TYPES 63, 76

COPYRIGHT © 1975 — FORD MOTOR COMPANY — DEARBORN, MICHIGAN

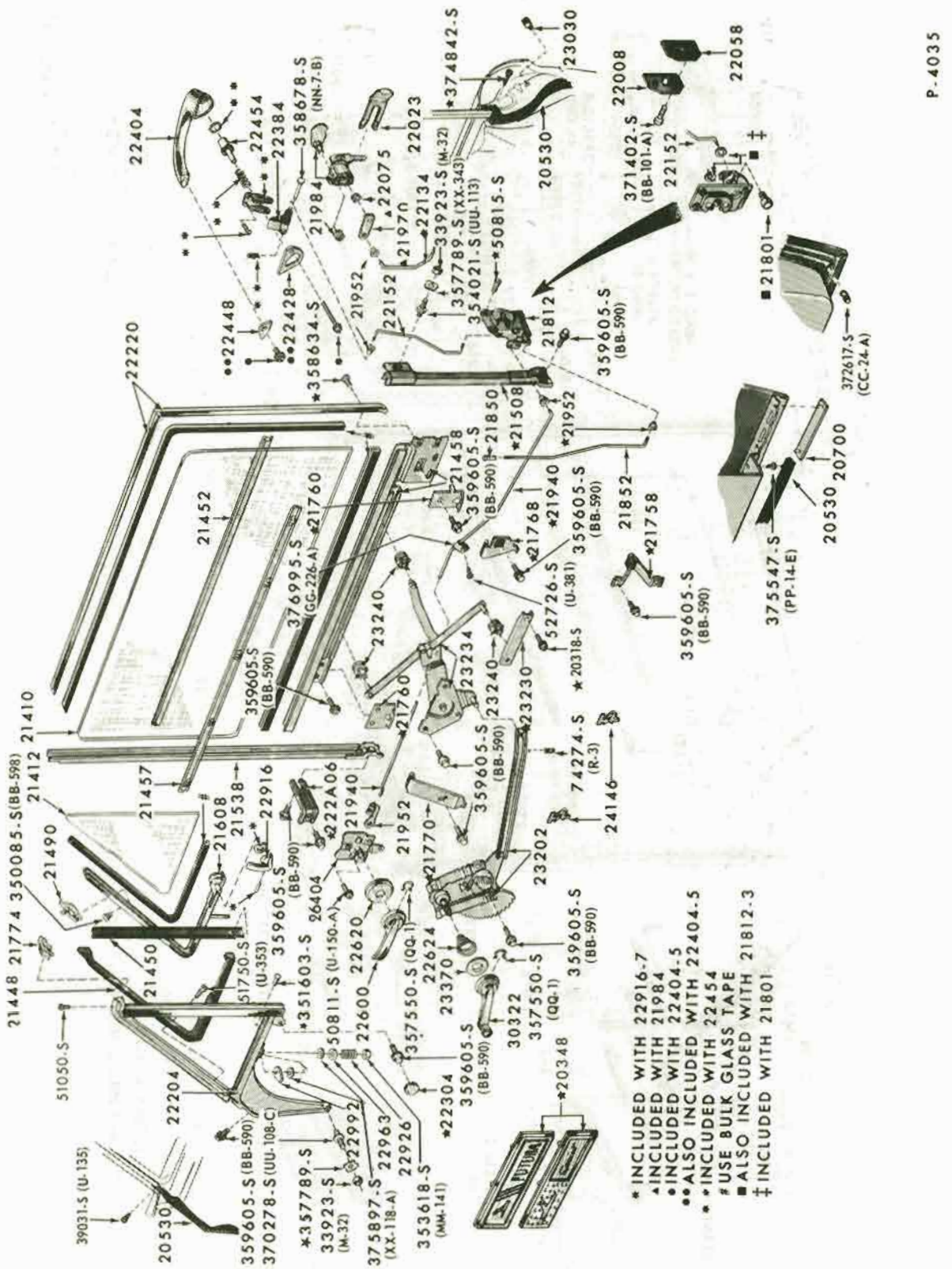

P-4035

FRONT DOOR WINDOW and RELATED PARTS
1965 FALCON - BODY TYPES 63, 76

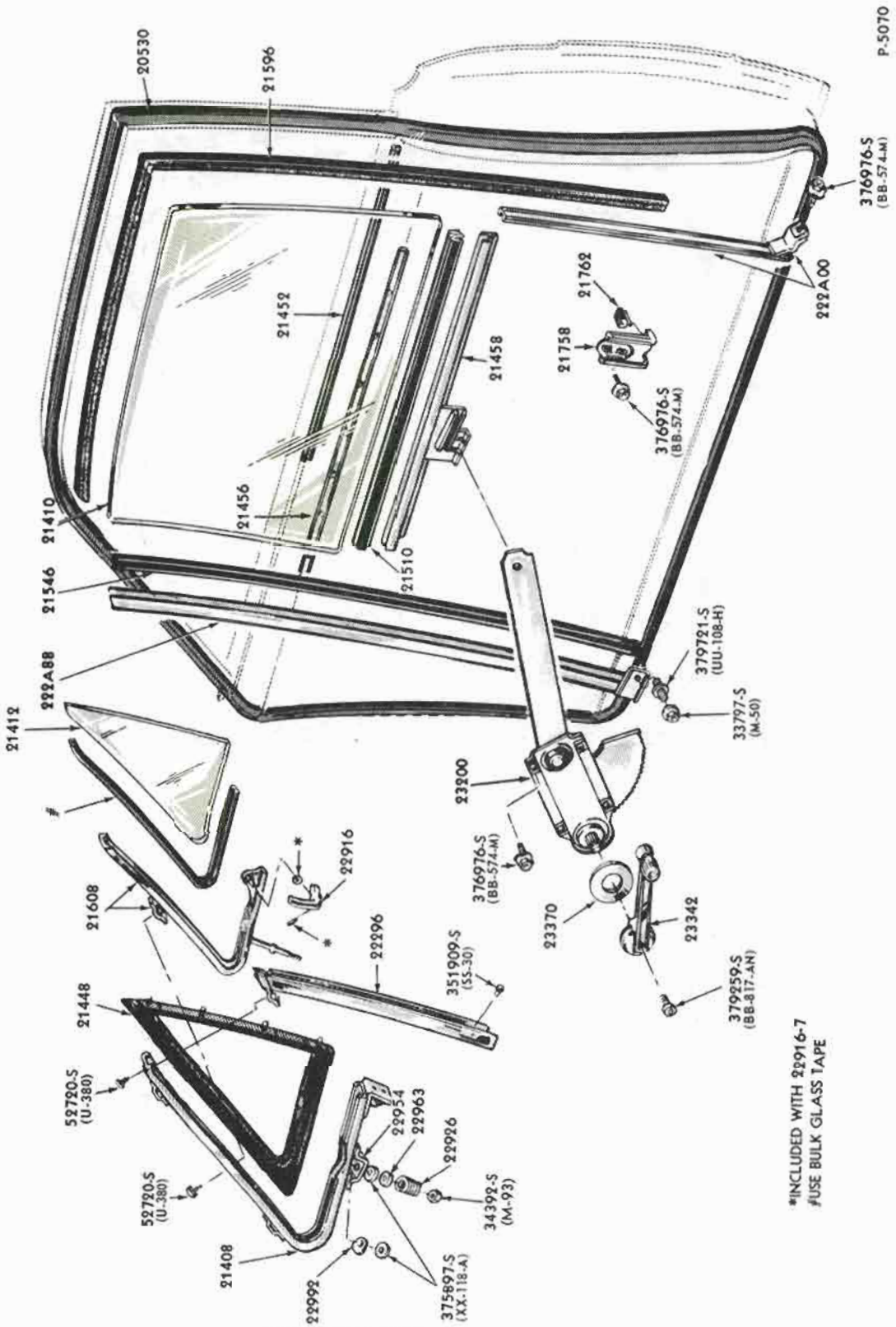

FRONT DOOR WINDOW and RELATED PARTS
1966/67 FAIRLANE - BODY TYPES 54, 71
1966/70 FALCON - BODY TYPES 54, 71

COPYRIGHT © 1975 — FORD MOTOR COMPANY — DEARBORN, MICHIGAN

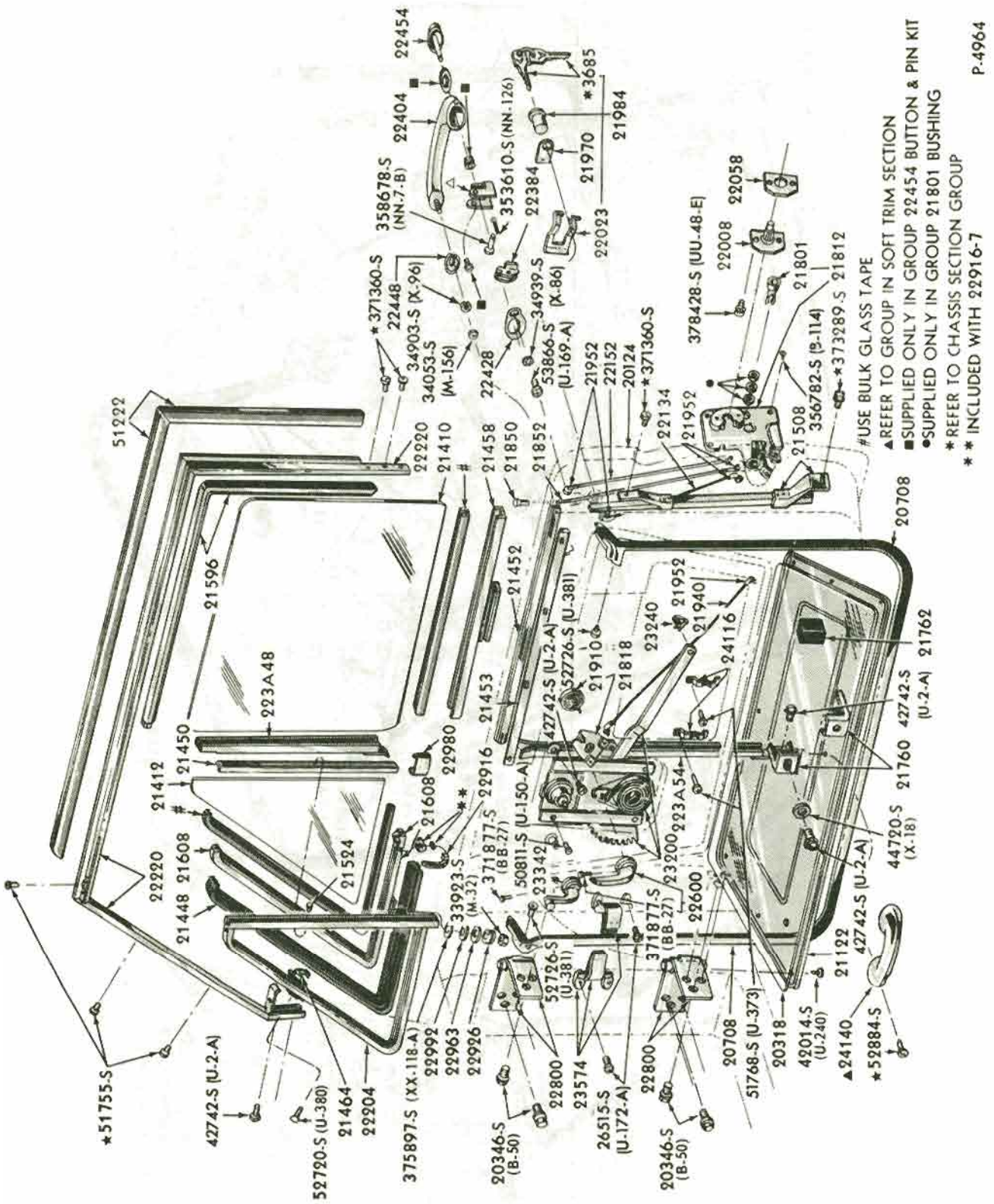

FRONT DOOR WINDOW and RELATED PARTS
1966/68 BRONCO

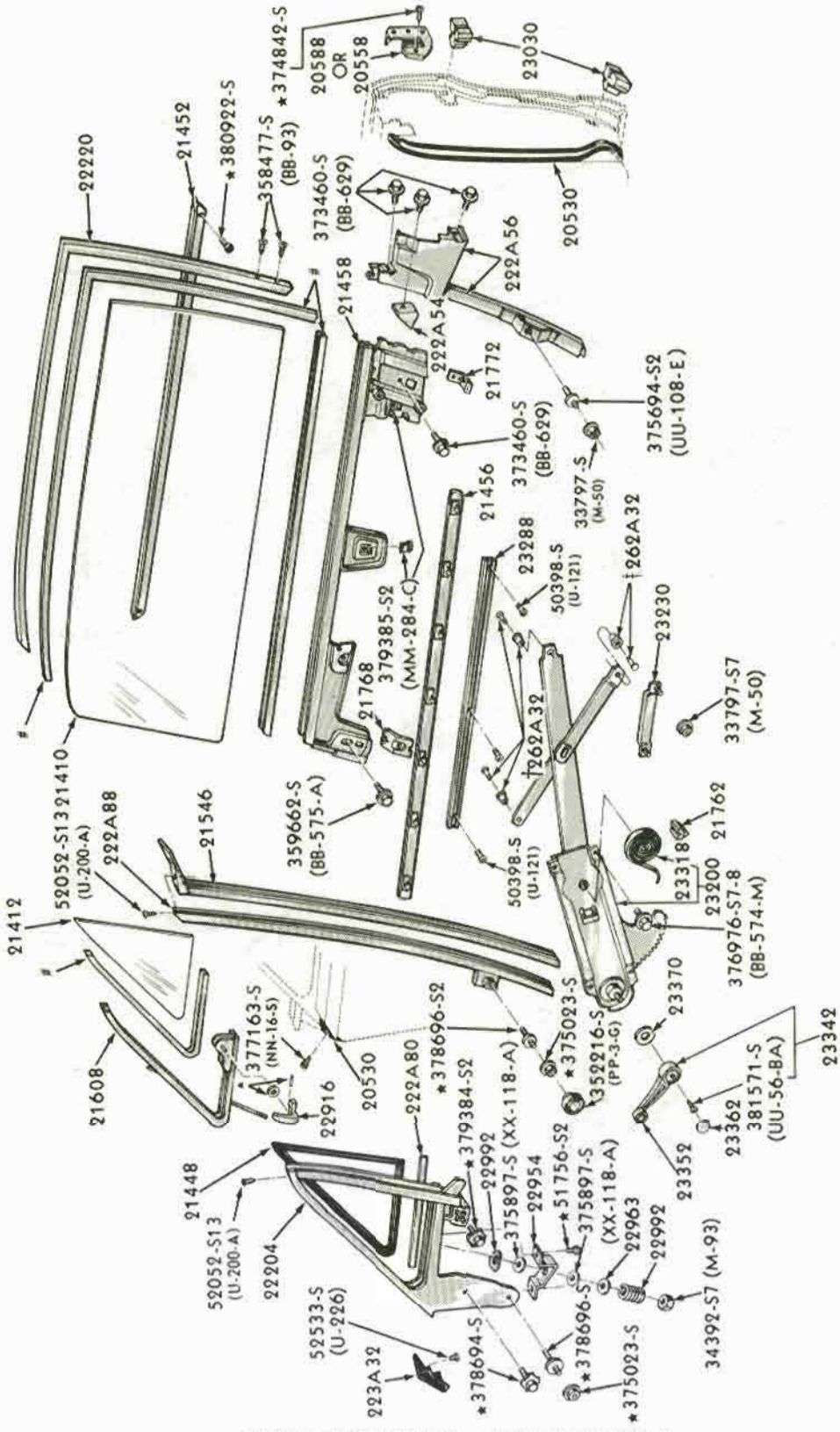

FRONT DOOR WINDOW and RELATED PARTS
1967/68 MUSTANG

COPYRIGHT © 1975 — FORD MOTOR COMPANY — DEARBORN, MICHIGAN

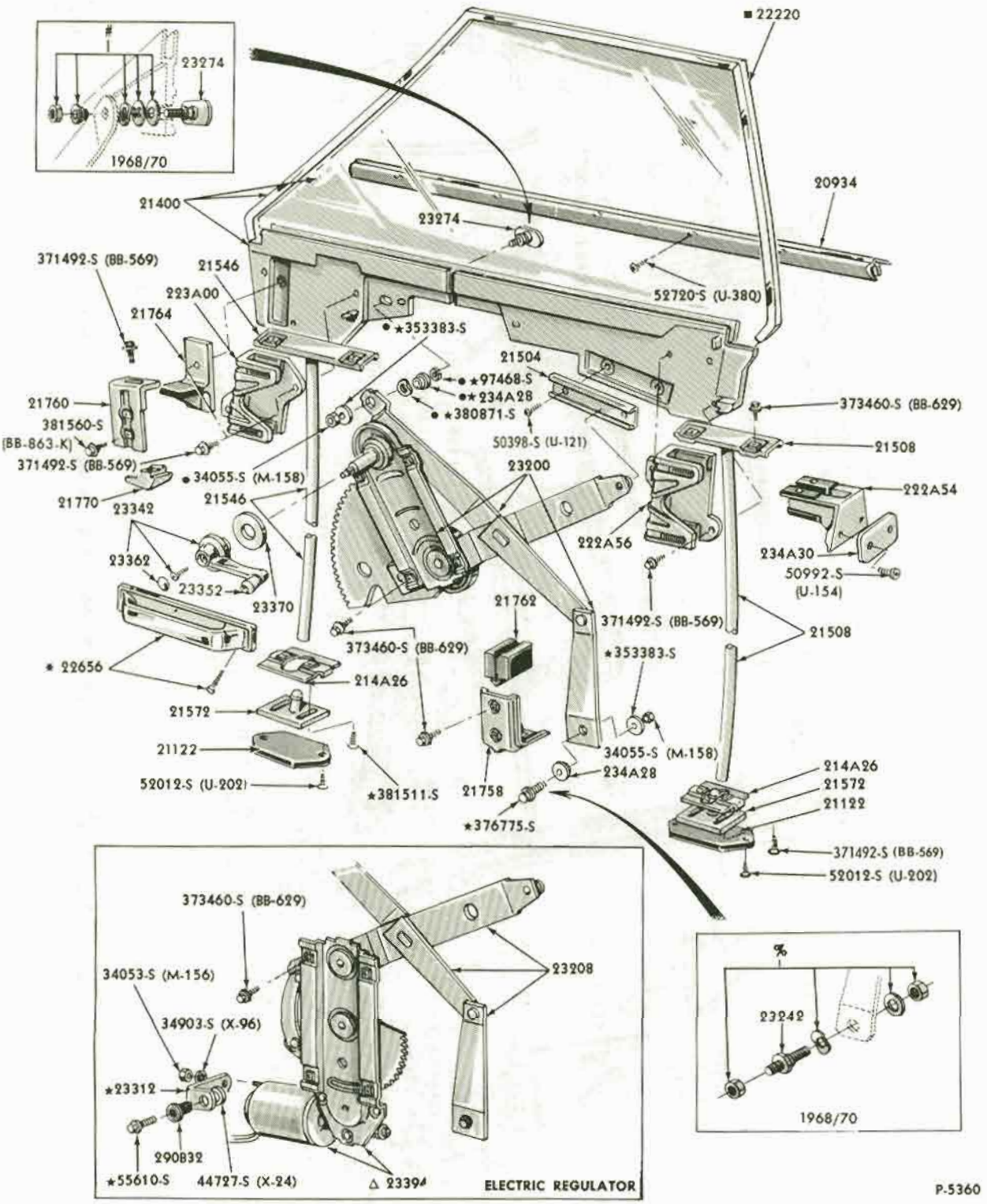

P-5360

• INCLUDED WITH 23274 # INCLUDED WITH 23274 ■1967/69
△ FOR GEAR REPLACEMENT KIT REFER TO GROUP 234A24
% INCLUDED WITH 23242 ★REFER TO SOFT TRIM SECTION

FRONT DOOR WINDOW and RELATED PARTS
1967/70 THUNDERBIRD - BODY TYPE 57

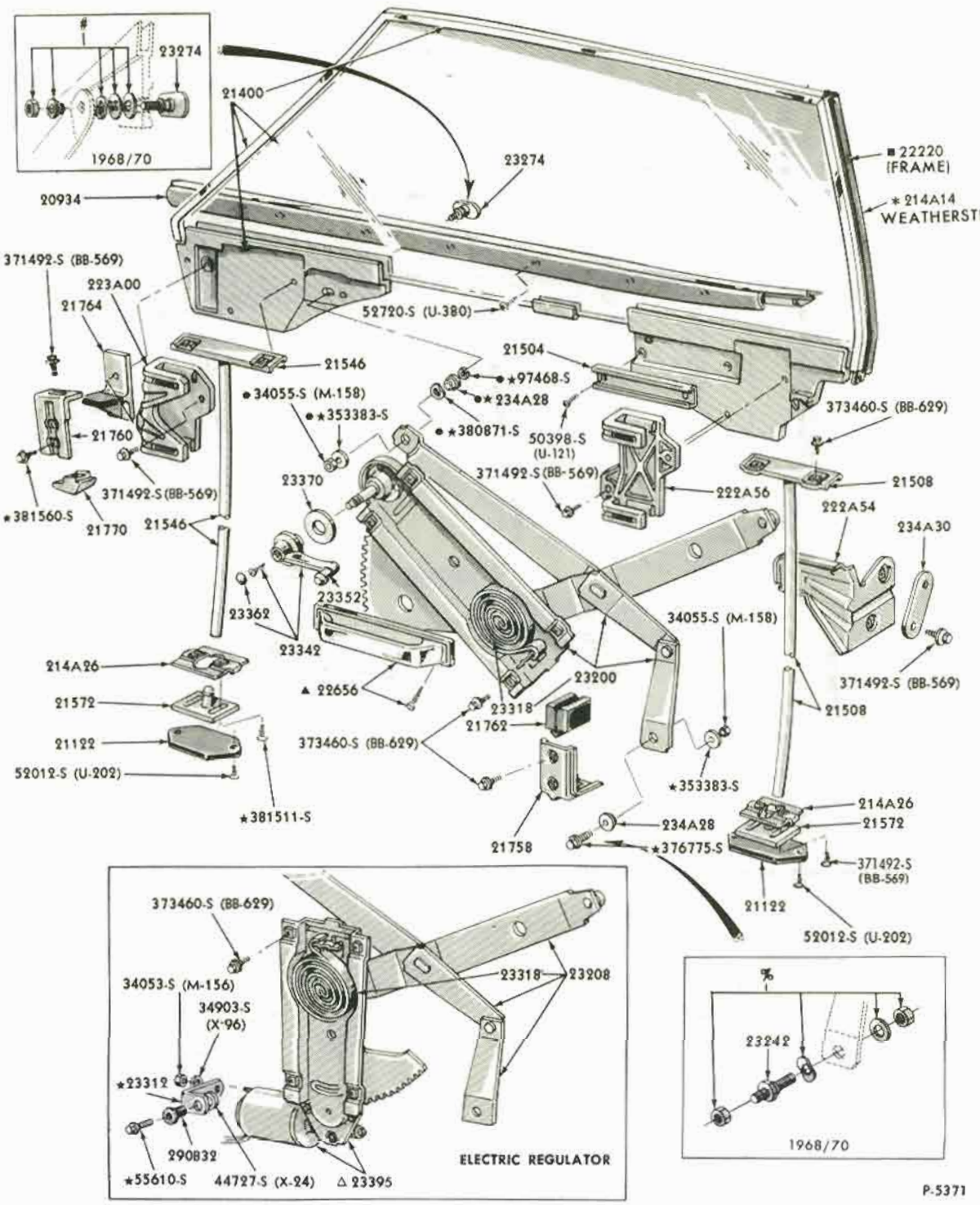

P-5371

•INCLUDED WITH 23274 * ALSO INCLUDED IN 21400 ▲ REFER TO SOFT TRIM SECTION
△ FOR GEAR REPLACEMENT KIT REFER TO GROUP 234A24 ■ 1967/69
% INCLUDED WITH 23242 # INCLUDED WITH 23274

FRONT DOOR WINDOW and RELATED PARTS
1967/70 THUNDERBIRD - BODY TYPE 65

COPYRIGHT © 1975 — FORD MOTOR COMPANY — DEARBORN, MICHIGAN

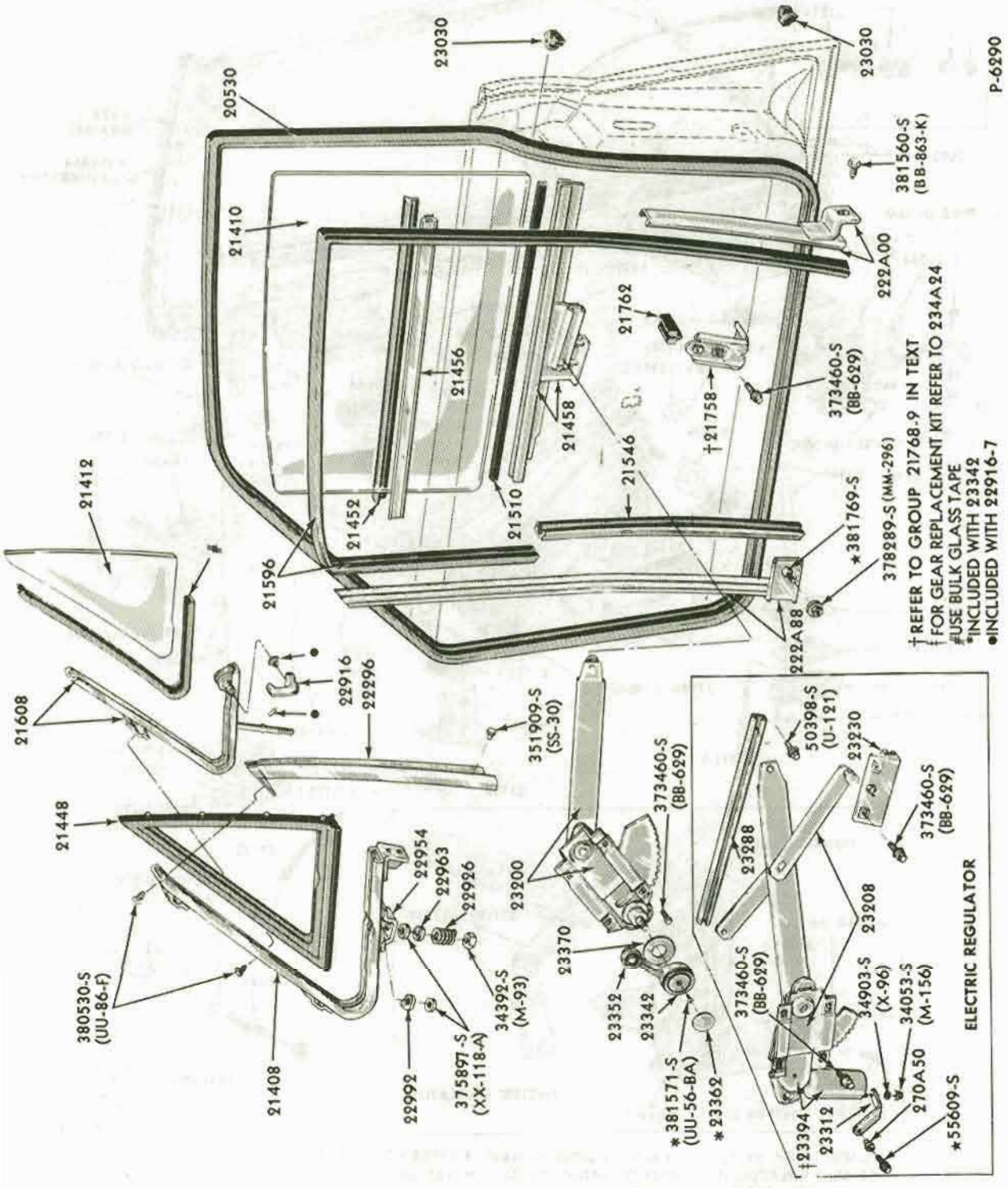

FRONT DOOR WINDOW and RELATED PARTS
1968/69 FAIRLANE/TORINO - BODY TYPE 54
1968/71 FAIRLANE/TORINO - BODY TYPE 71

FRONT DOOR WINDOW and RELATED PARTS
1968/69 FAIRLANE/TORINO - BODY TYPES 63, 65, 66, 76

COPYRIGHT © 1975 — FORD MOTOR COMPANY — DEARBORN, MICHIGAN

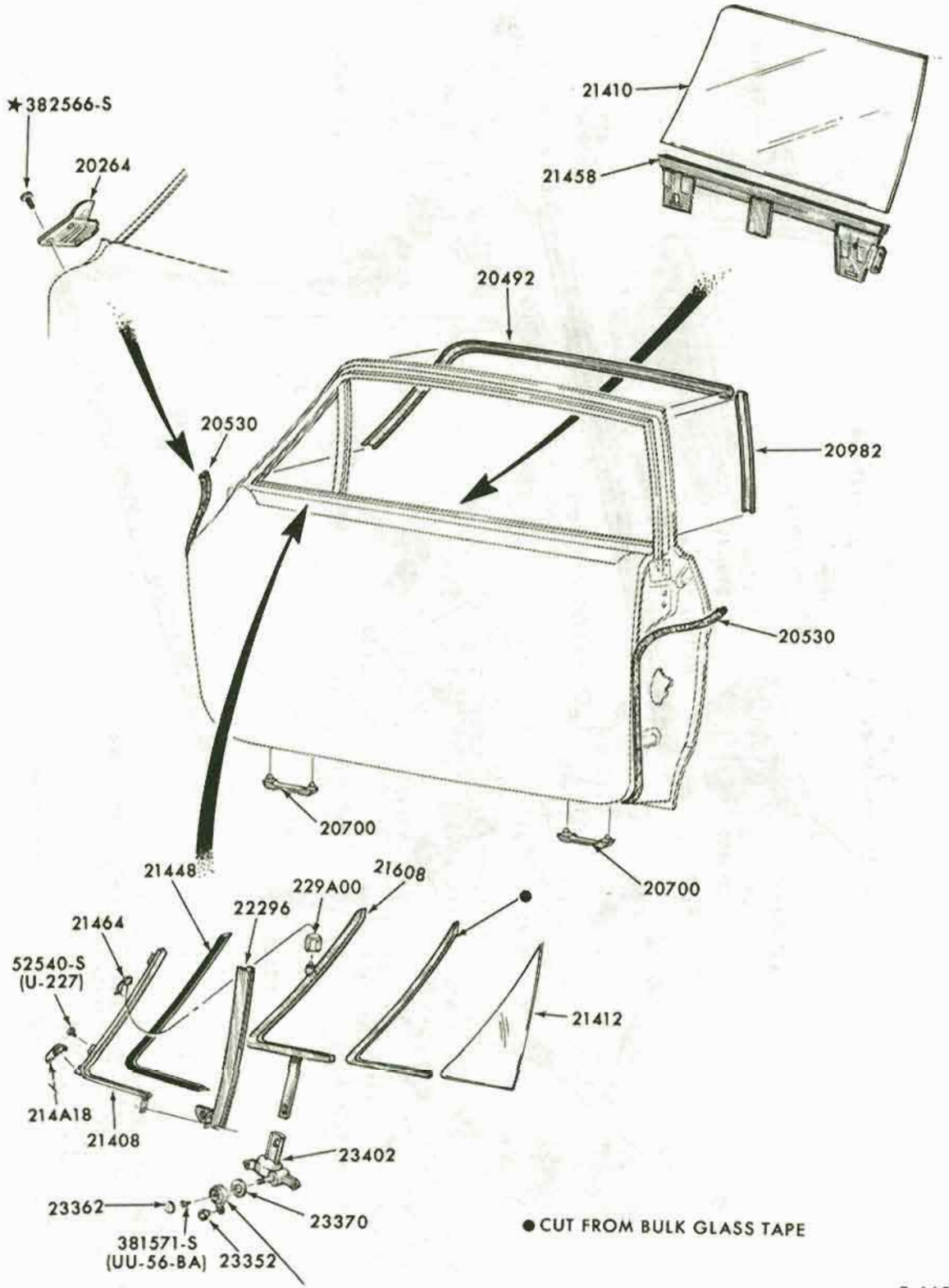

P-6693-A

FRONT DOOR WINDOW and RELATED PARTS
1969/70 FORD - BODY TYPES 54, 62, 71

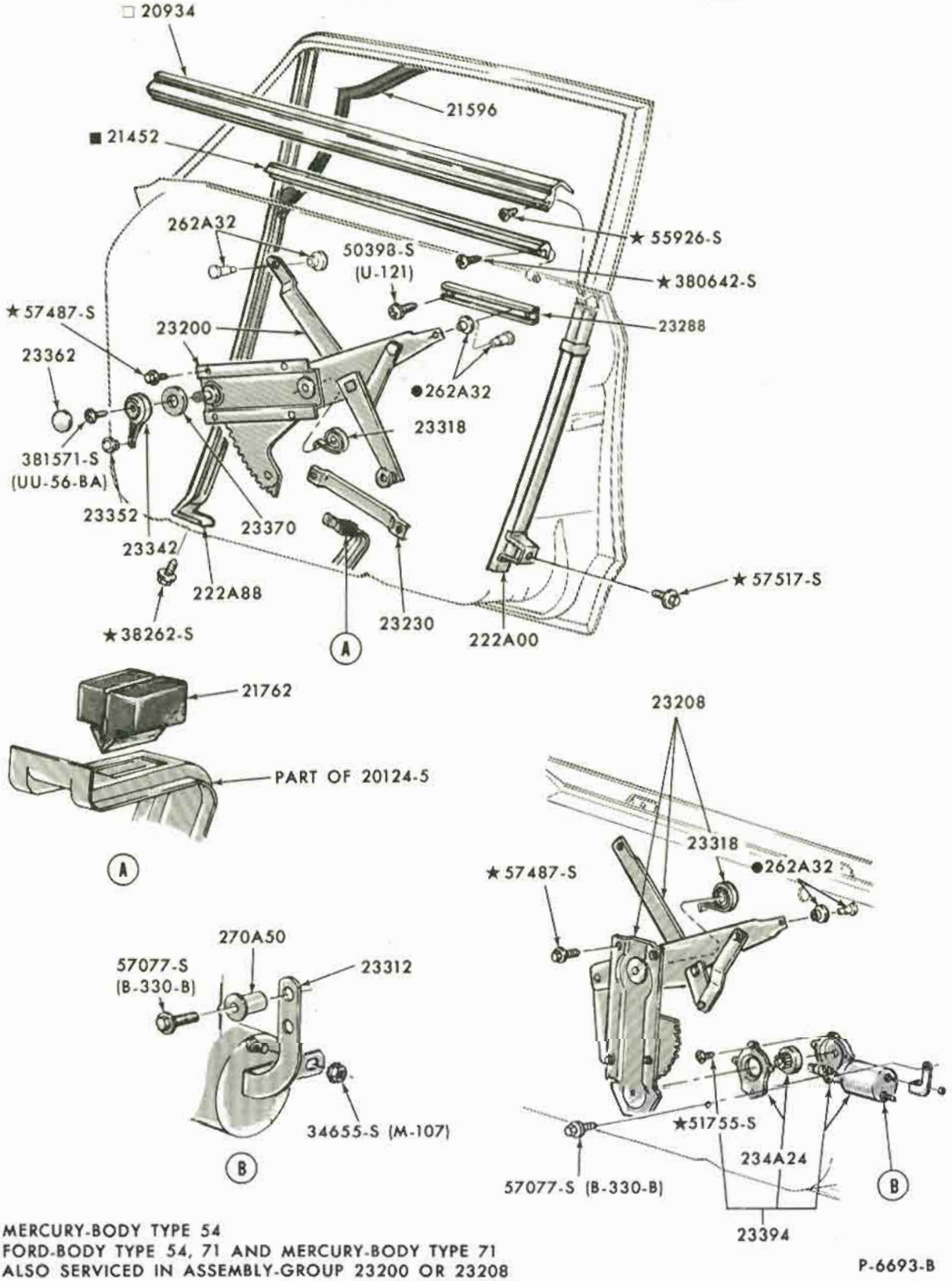

□ MERCURY-BODY TYPE 54
■ FORD-BODY TYPE 54, 71 AND MERCURY-BODY TYPE 71
● ALSO SERVICED IN ASSEMBLY-GROUP 23200 OR 23208

P-6693-B

FRONT DOOR WINDOW and RELATED PARTS - continued
1969/70 FORD - BODY TYPES 54, 62, 71

COPYRIGHT © 1975 — FORD MOTOR COMPANY — DEARBORN, MICHIGAN

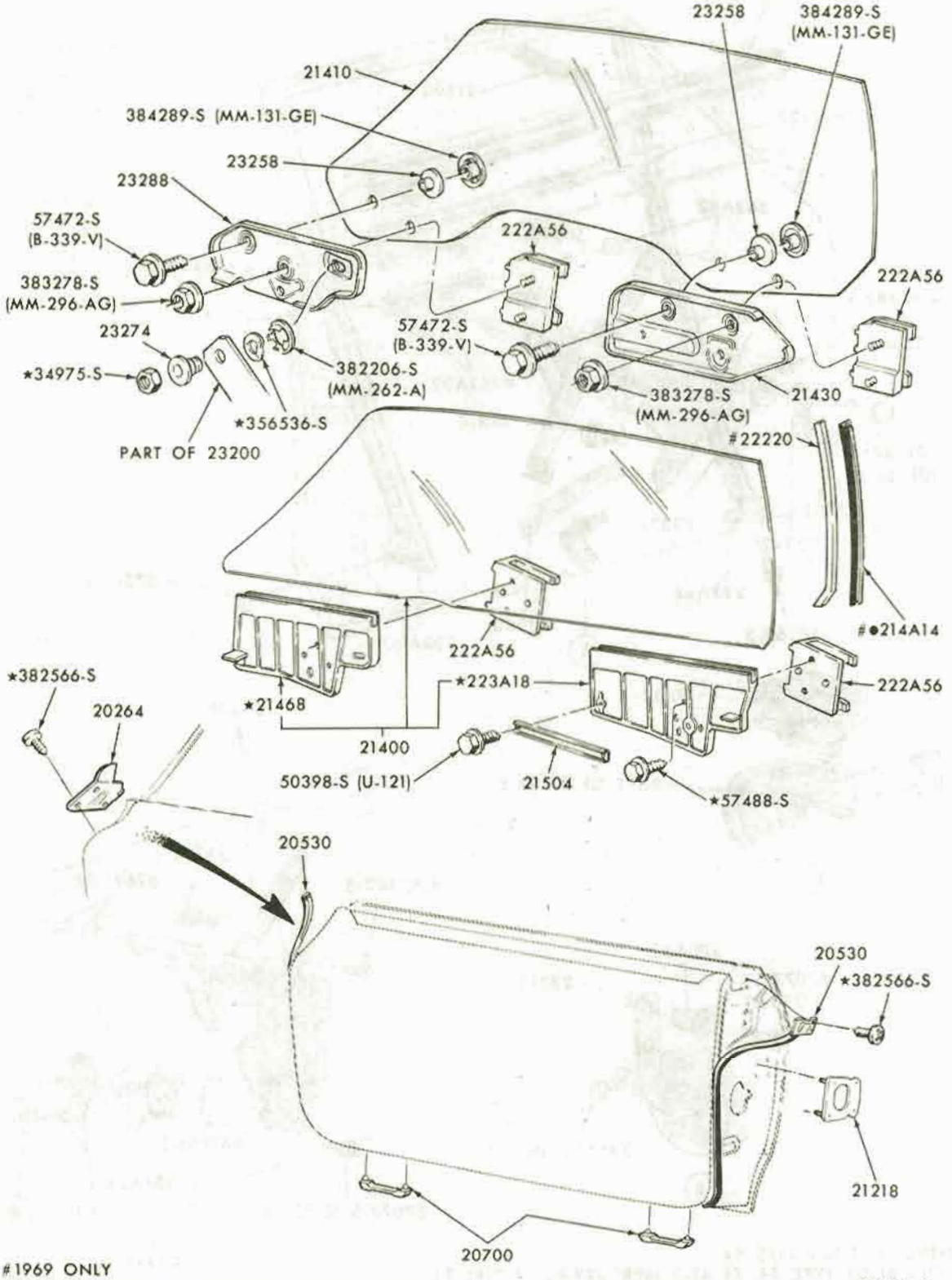

#1969 ONLY
●ALSO SUPPLIED IN ASSEMBLY—GROUP 21400-1

P-6694-A

FRONT DOOR WINDOW and RELATED PARTS
1969/70 FORD - BODY TYPES 57, 63, 65, 76
1971/72 FORD - BODY TYPES 65, 76

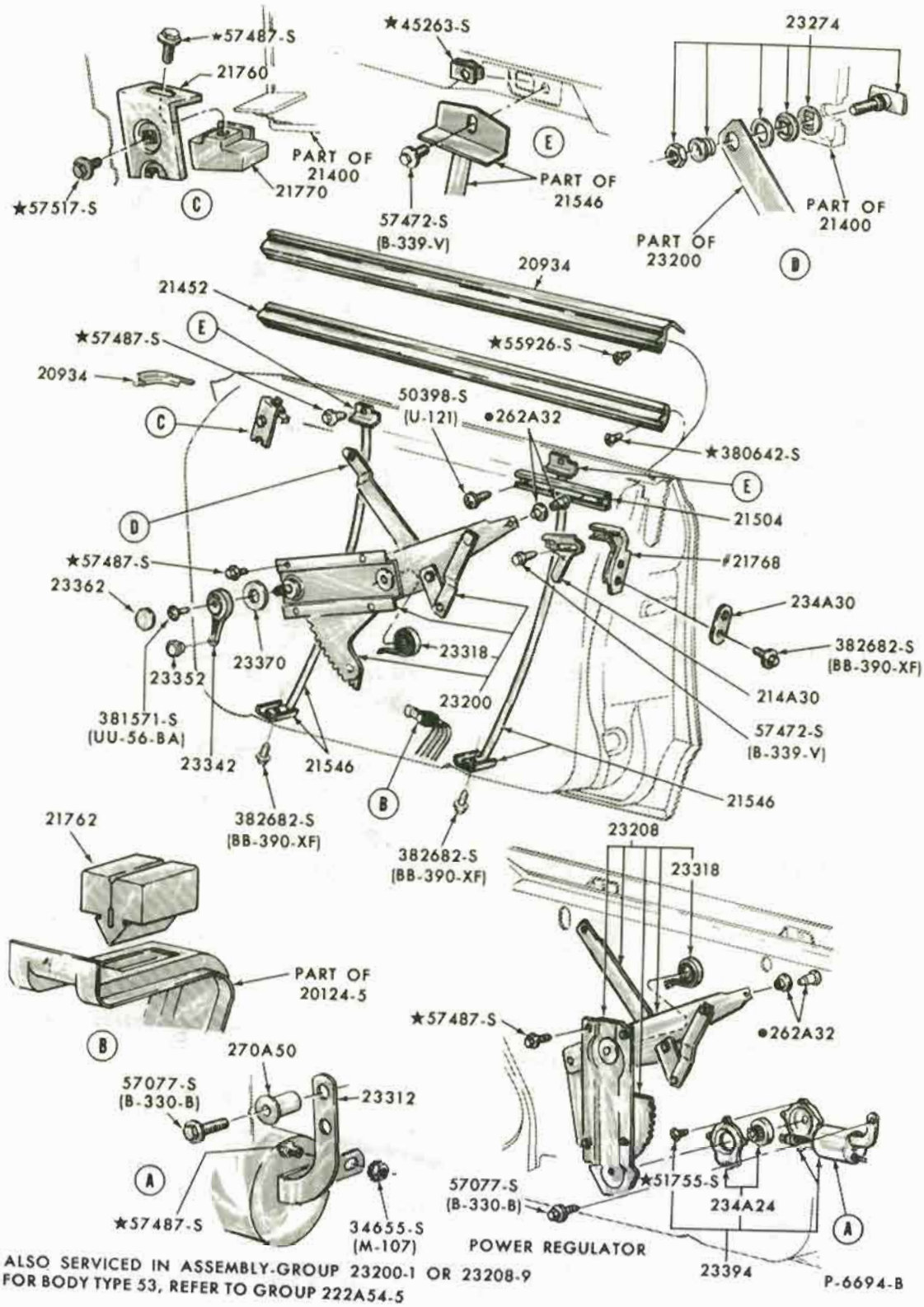

• ALSO SERVICED IN ASSEMBLY-GROUP 23200-1 OR 23208-9
FOR BODY TYPE 53, REFER TO GROUP 222A54-5

FRONT DOOR WINDOW and RELATED PARTS - continued
1969/70 FORD - BODY TYPES 57, 63, 65, 76
1971/72 FORD - BODY TYPES 65, 76

COPYRIGHT © 1975— FORD MOTOR COMPANY —DEARBORN, MICHIGAN

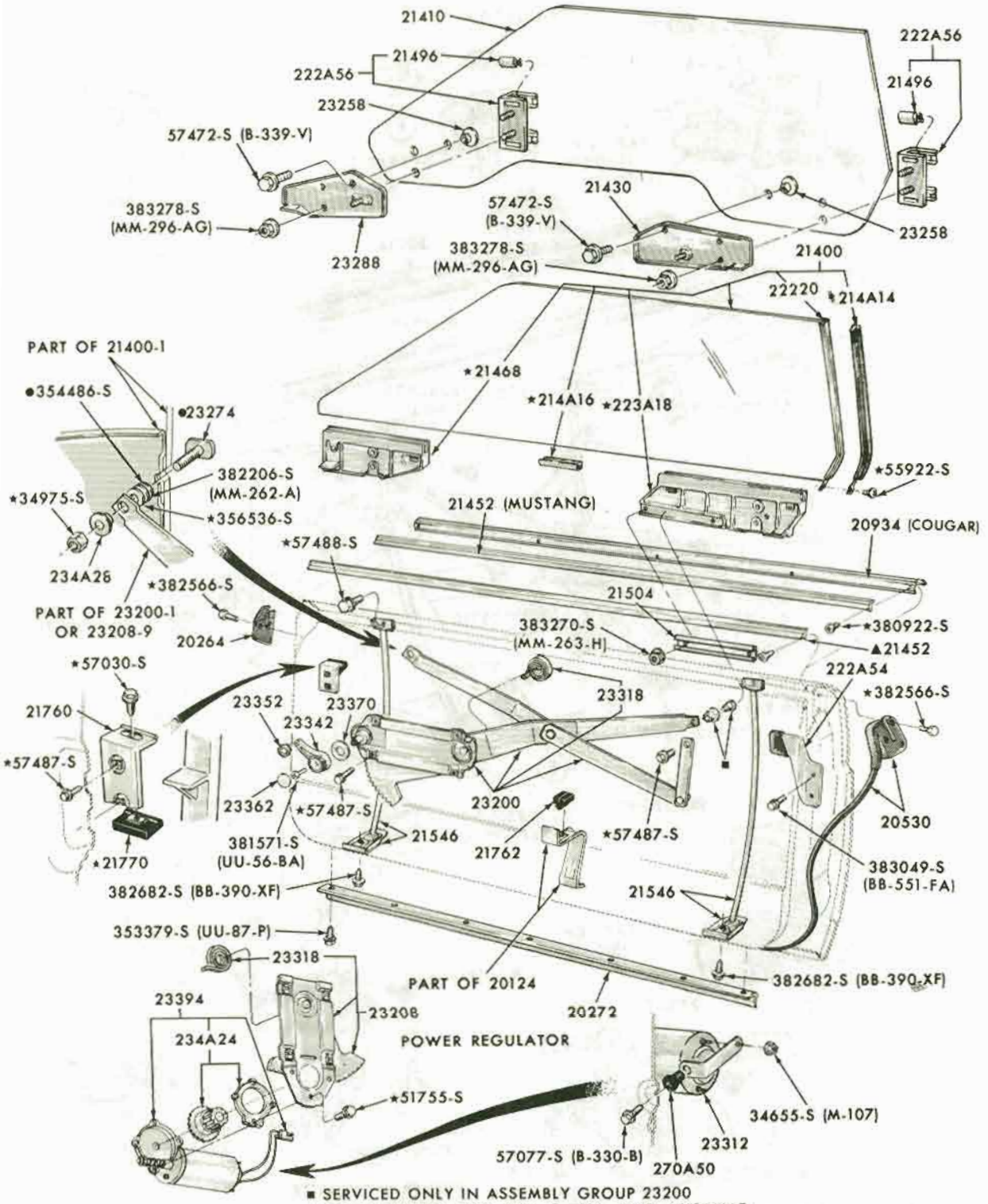

■ SERVICED ONLY IN ASSEMBLY GROUP 23200
▲ COUGAR-BODY TYPE 65A, C, 76A, AND MUSTANG
• SERVICED ONLY IN ASSEMBLY - GROUP 23288
* 1969 ONLY

P-6816

FRONT DOOR WINDOW and RELATED PARTS
1969/70 MUSTANG

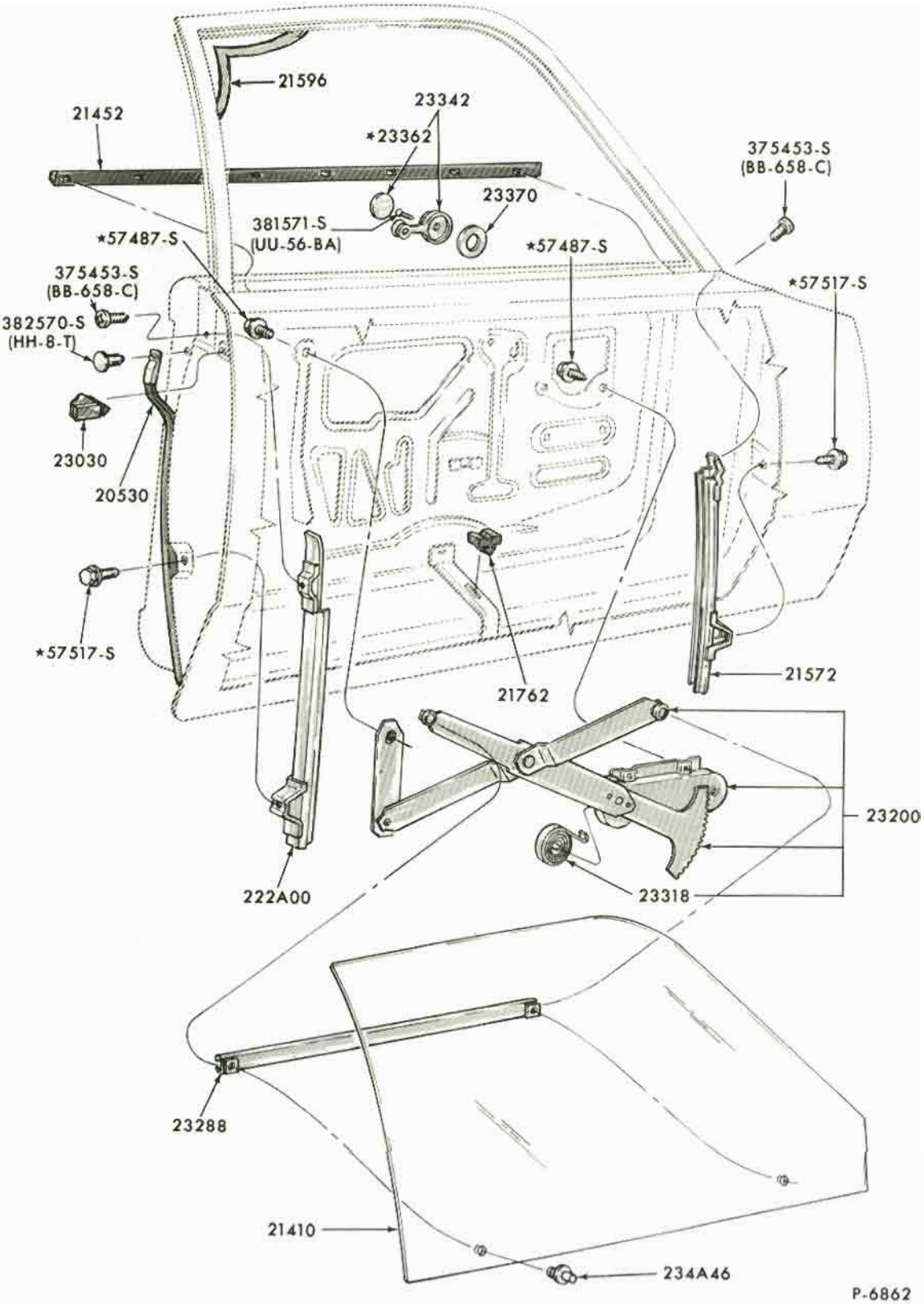

FRONT DOOR WINDOW and RELATED PARTS
1970/72 MAVERICK

COPYRIGHT © 1975 — FORD MOTOR COMPANY — DEARBORN, MICHIGAN

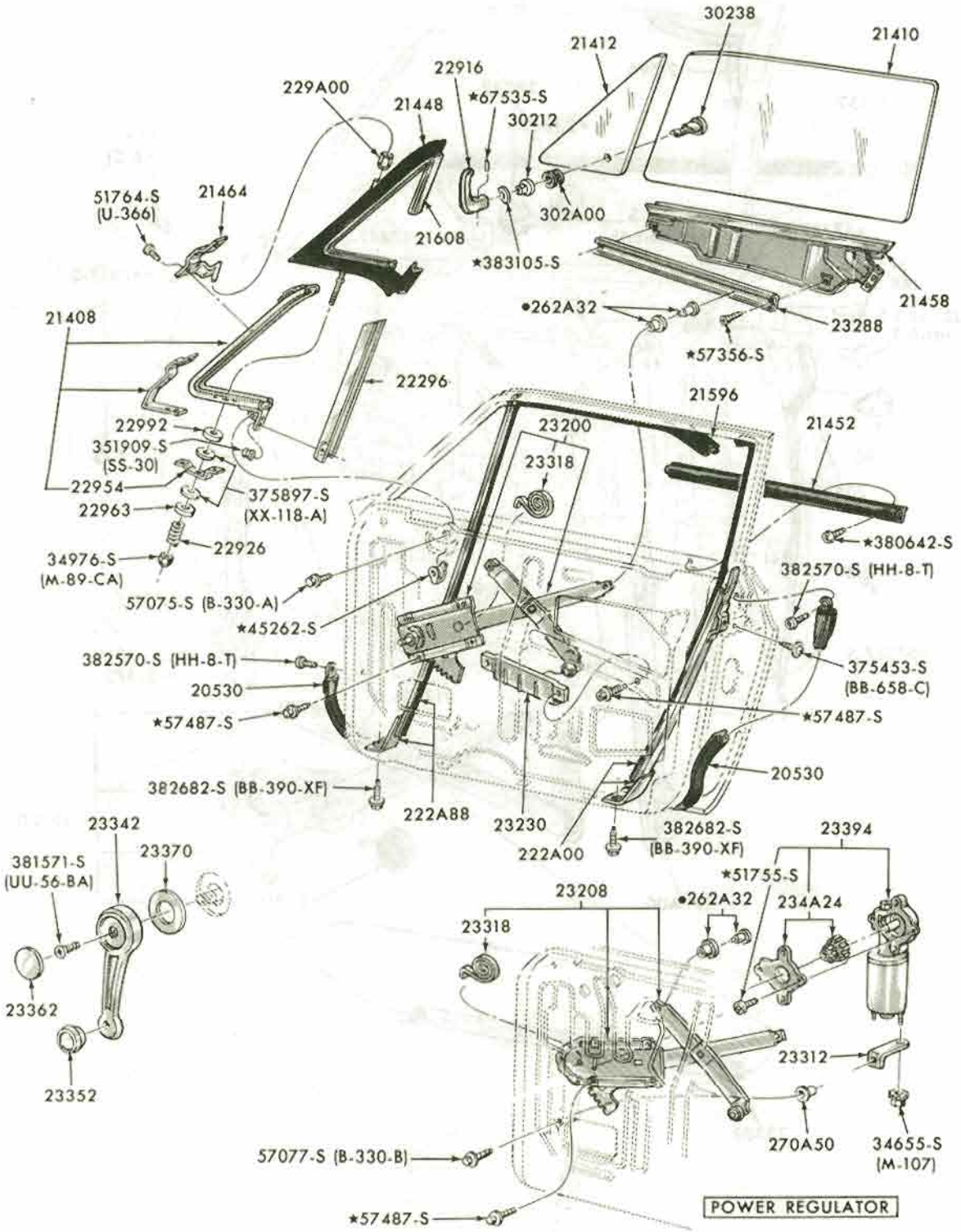

•ALSO SERVICED IN ASSEMBLY-GROUP 23200 OR 23208 P-7097

FRONT DOOR WINDOW MECHANISM and RELATED PARTS
1970/71 FAIRLANE/TORINO - BODY TYPE 54

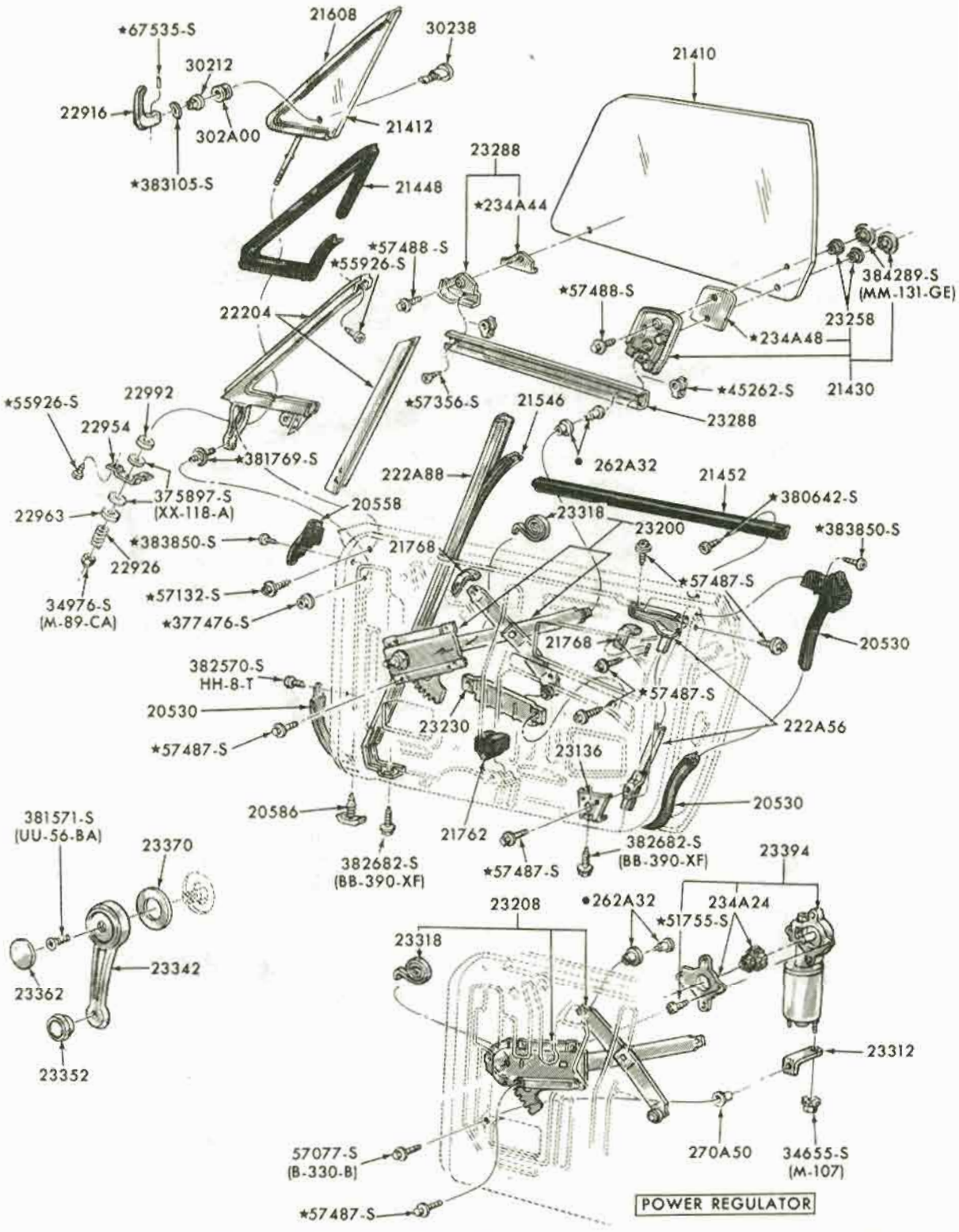

• ALSO SERVICED IN ASSEMBLY GROUP 23200 OR 23208

P-7095

FRONT DOOR WINDOW MECHANISM and RELATED PARTS
1970/71 FAIRLANE/TORINO - BODY TYPE 57

COPYRIGHT © 1975 — FORD MOTOR COMPANY — DEARBORN, MICHIGAN

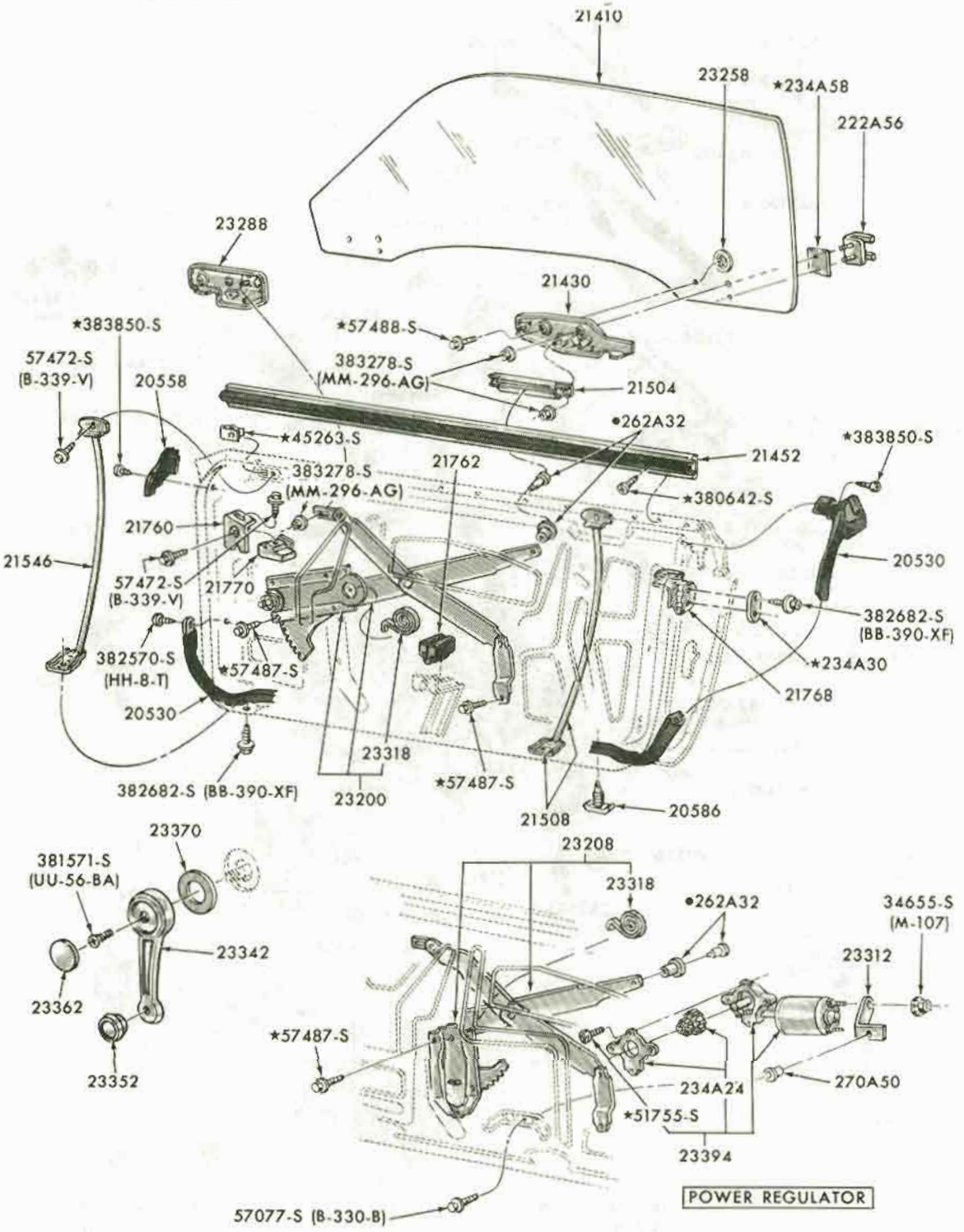

•ALSO SERVICED IN ASSEMBLY-GROUP 23200 OR 23208

P-7094

FRONT DOOR WINDOW and RELATED PARTS
1970/71 FAIRLANE/TORINO - BODY TYPE 63, 65, 66, 76

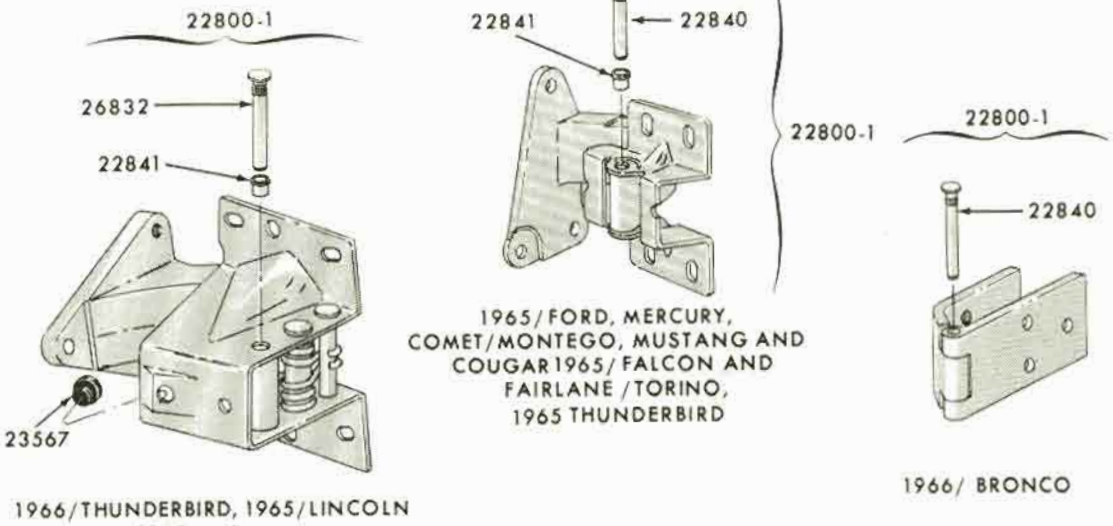

1966/THUNDERBIRD, 1965/LINCOLN
1969 MARK III

1965/FORD, MERCURY,
COMET/MONTEGO, MUSTANG AND
COUGAR 1965/FALCON AND
FAIRLANE/TORINO,
1965 THUNDERBIRD

1966/ BRONCO

P-6980

FRONT DOOR HINGES - UPPER
1965/72 ALL

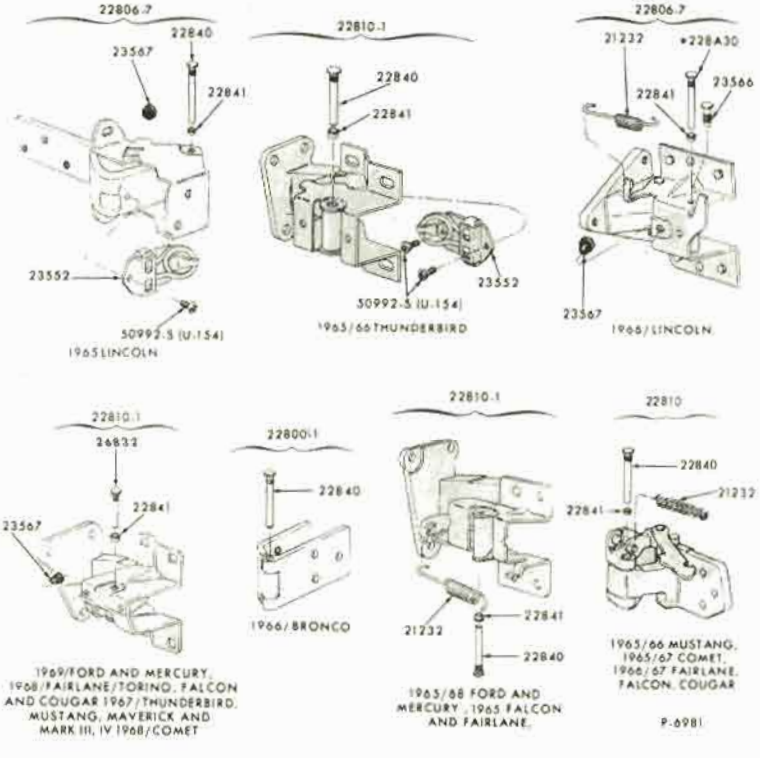

FRONT DOOR HINGES - LOWER
1965/72 ALL

COPYRIGHT © 1975 — FORD MOTOR COMPANY — DEARBORN, MICHIGAN

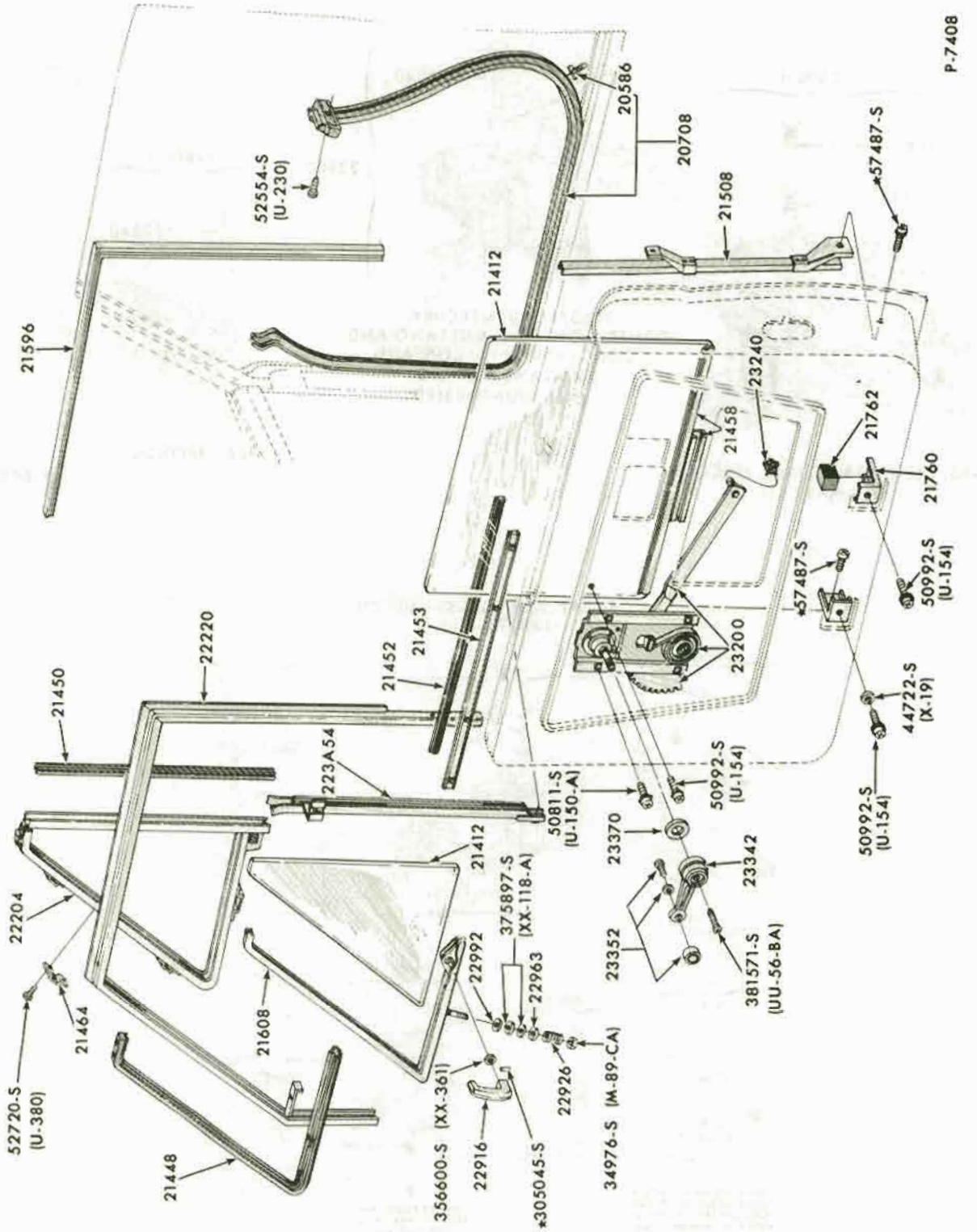

FRONT DOOR WINDOW MECHANISM and RELATED PARTS

1969/72 BRONCO

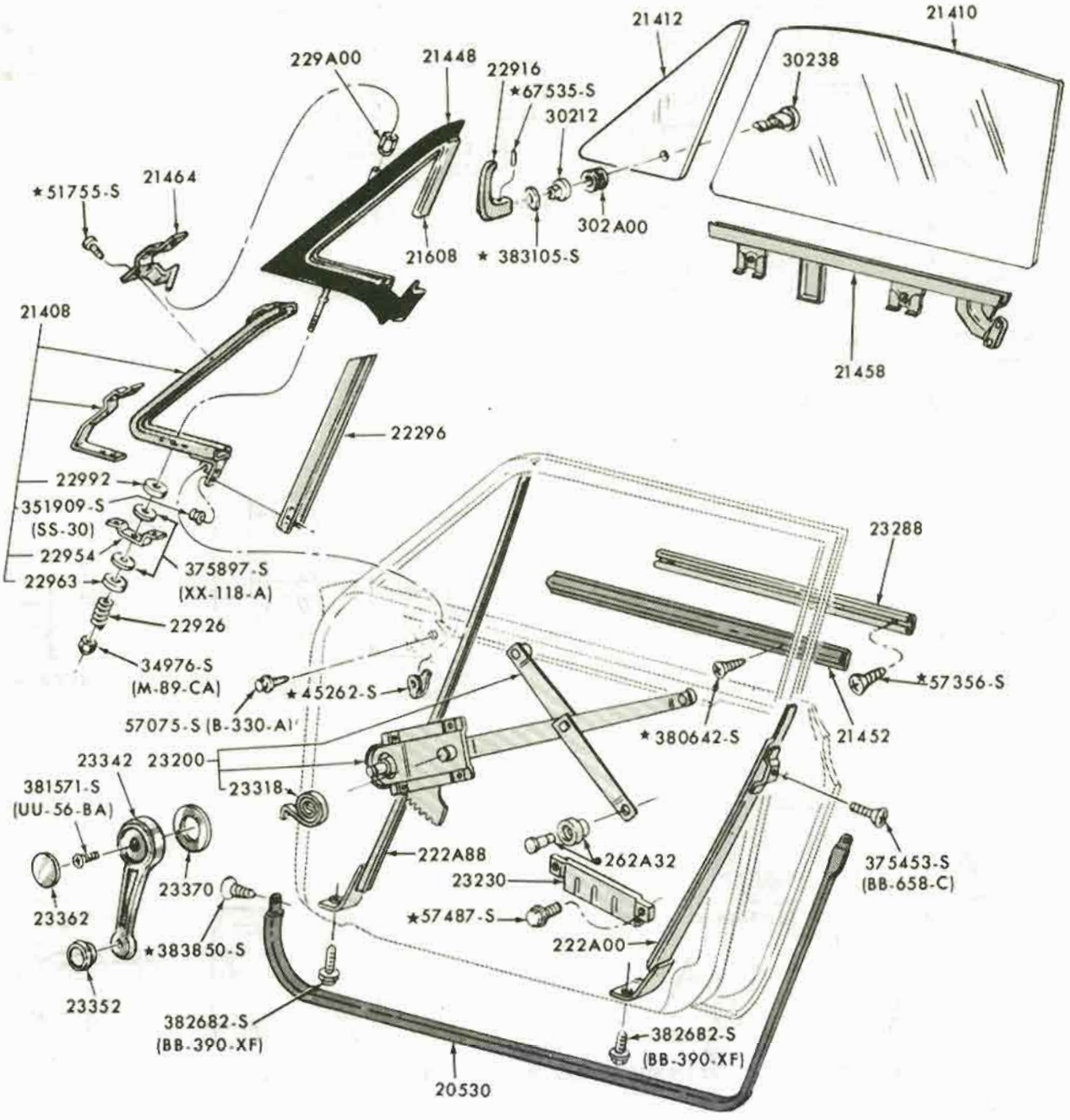

•ALSO SERVICED IN ASSEMBLY-GROUP 23200

P-7467

FRONT DOOR WINDOW and RELATED PARTS
1970 FAIRLANE - BODY TYPE 62

COPYRIGHT © 1975— FORD MOTOR COMPANY —DEARBORN, MICHIGAN

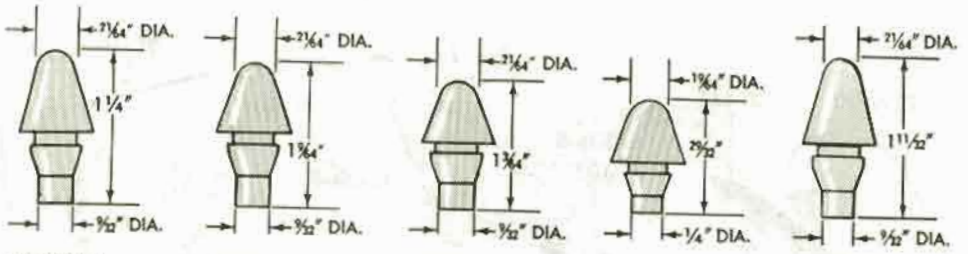

★352848-S
REPLACED BY 372486-S

358712-S
(CC-13)

358713-S
(CC-13)

354434-S
(CC-4)

359933-S
(CC-33)

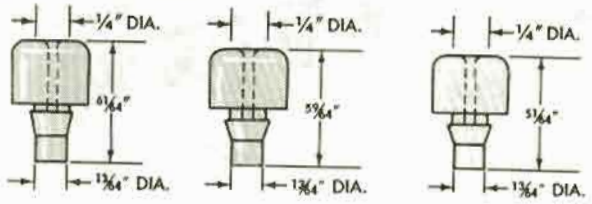

371496-S
(CC-2)

354860-S
(CC-6)

377781-S
(CC-34)

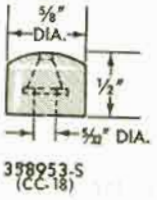

358953-S
(CC-18)

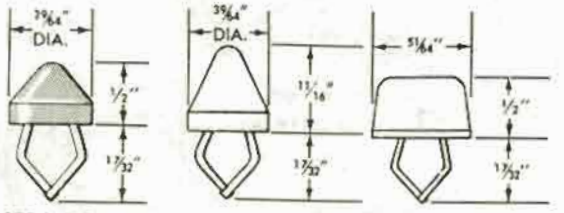

372617-S
(CC-24-A)

372486-S
(CC-24)

C2OZ-6223030-A

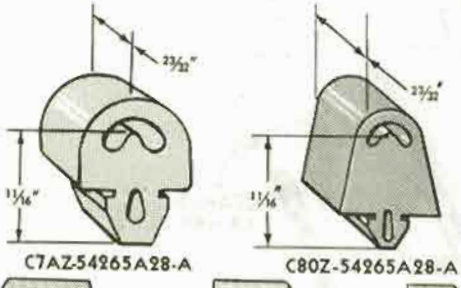

C7AZ-54265A28-A

C8OZ-54265A28-A

C2OZ-5427224-A

C2OZ-5423036-A

C2OZ-6223036-A

C2AZ-6223030-A

C3DZ7623030-A

C3AZ6223036-A

C7SZ6523030-A

C3AZ-5423030-A

C3OZ-6523036-A

C4SZ-6323030-A

C5AZ-57265A28-A

C7SZ5723036-A

P-6440

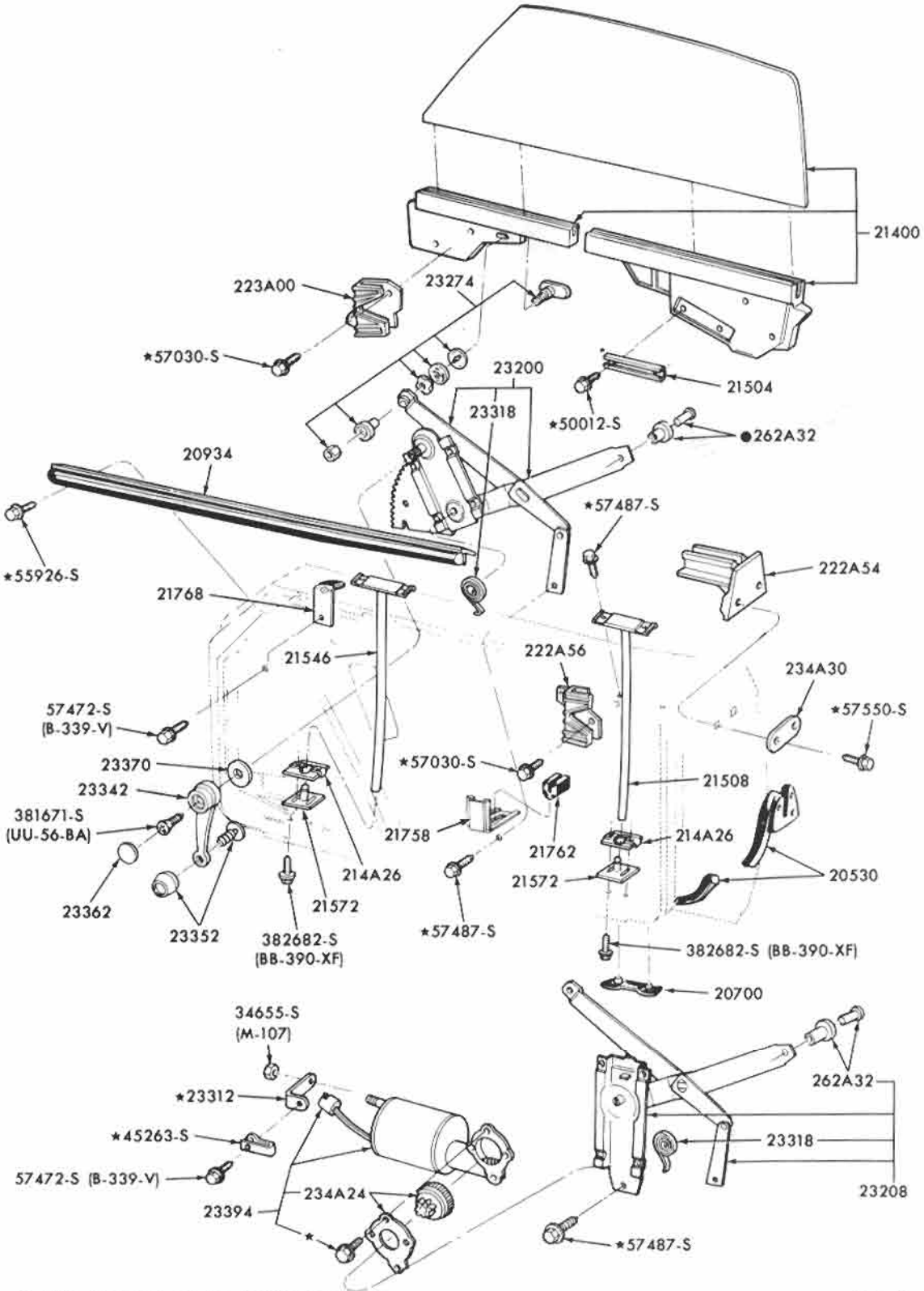

● ALSO SUPPLIED IN ASSEMBLY-GROUP 23200-1

P-7980

FRONT DOOR WINDOW and RELATED PARTS
1971 THUNDERBIRD - BODY TYPE 57

COPYRIGHT © 1975 — FORD MOTOR COMPANY — DEARBORN, MICHIGAN

FORD CAR PARTS

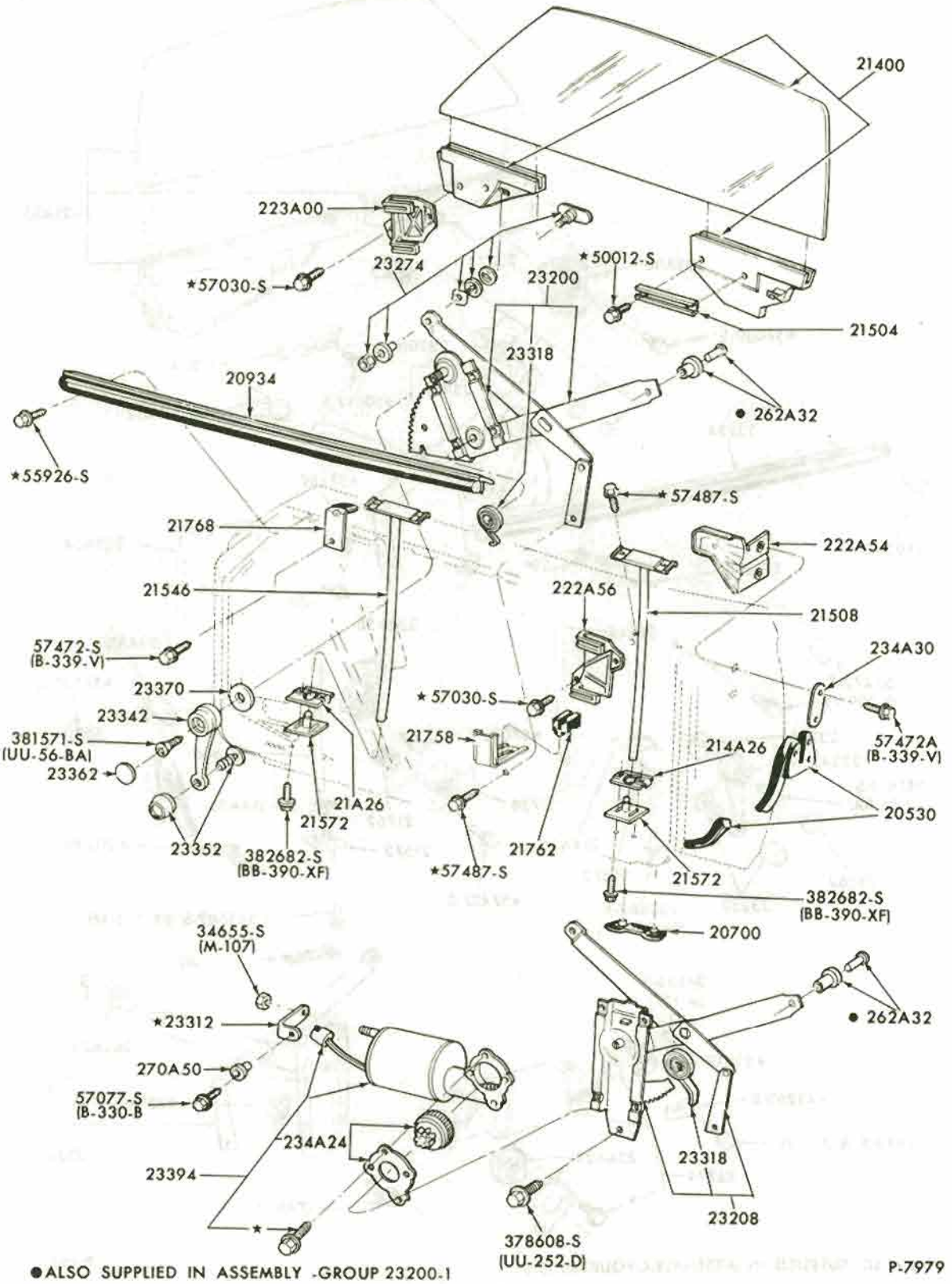

FRONT DOOR WINDOW and RELATED PARTS
1971 THUNDERBIRD - BODY TYPE 65

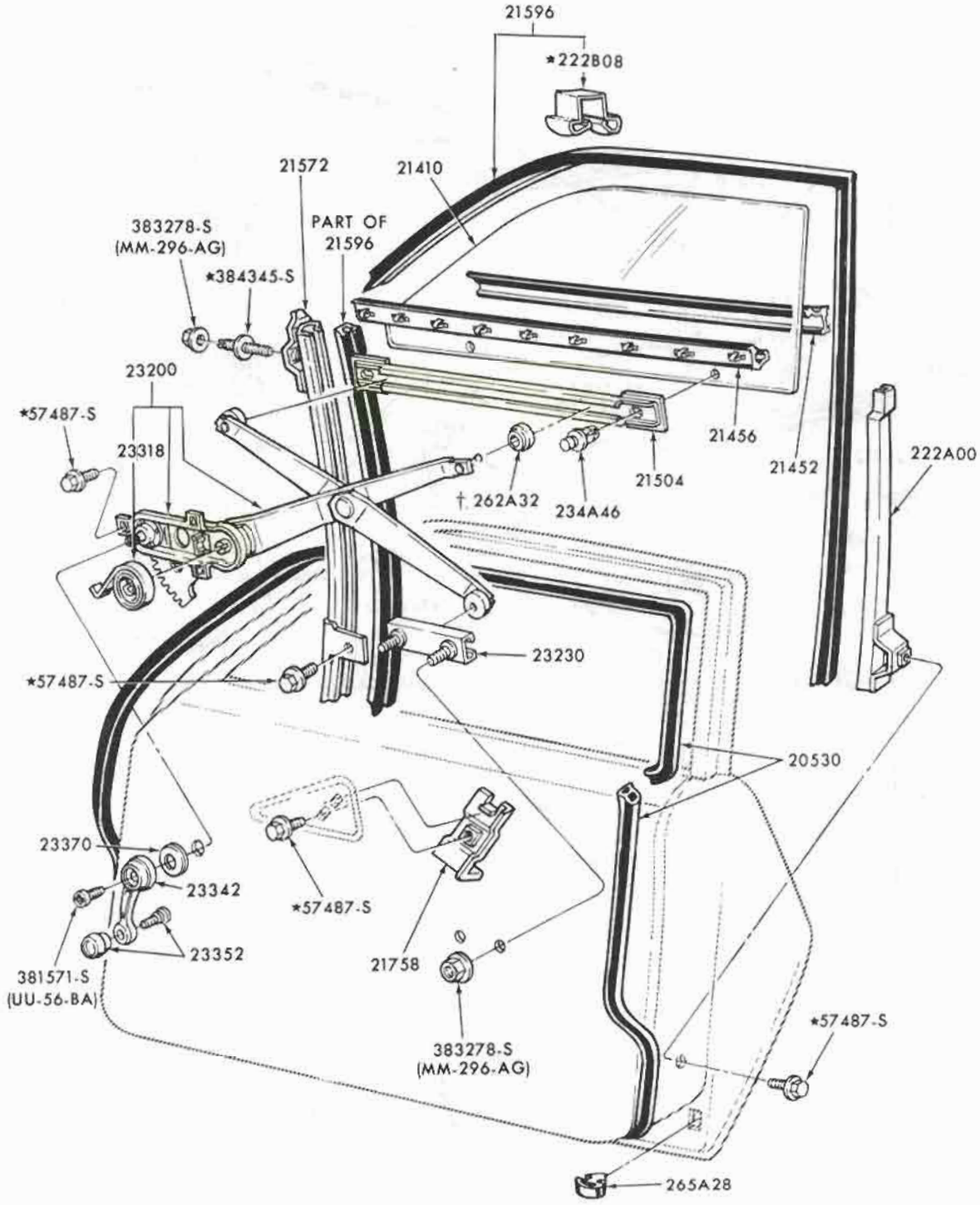

P-7785

† SERVICED ONLY IN ASSY-GROUP 23200-1

FRONT DOOR WINDOW and RELATED PARTS
1971/72 PINTO

COPYRIGHT © 1975 — FORD MOTOR COMPANY — DEARBORN, MICHIGAN

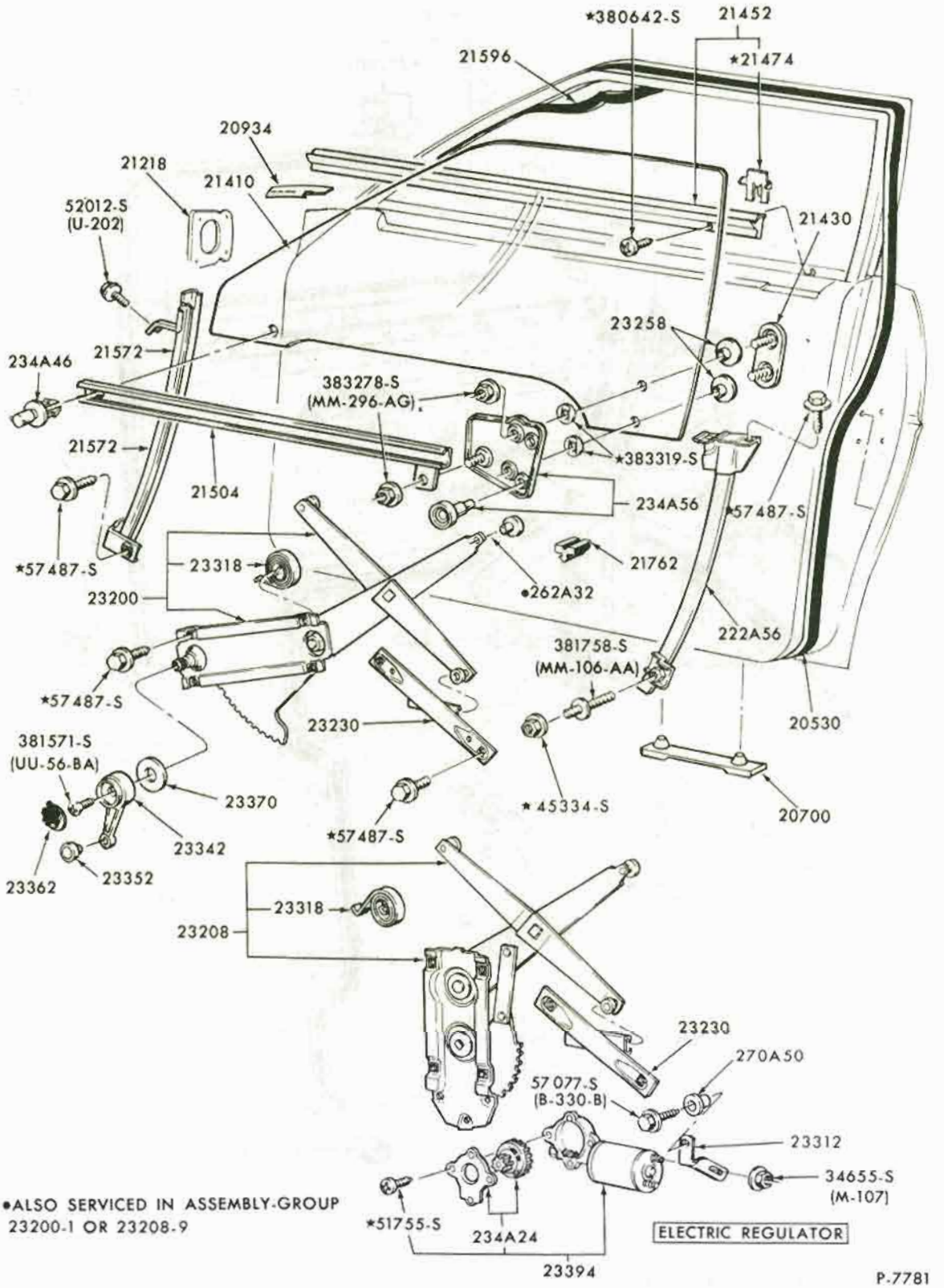

•ALSO SERVICED IN ASSEMBLY-GROUP 23200-1 OR 23208-9

P-7781

FRONT DOOR WINDOW and RELATED PARTS
1971/72 FORD - BODY TYPES 54, 71

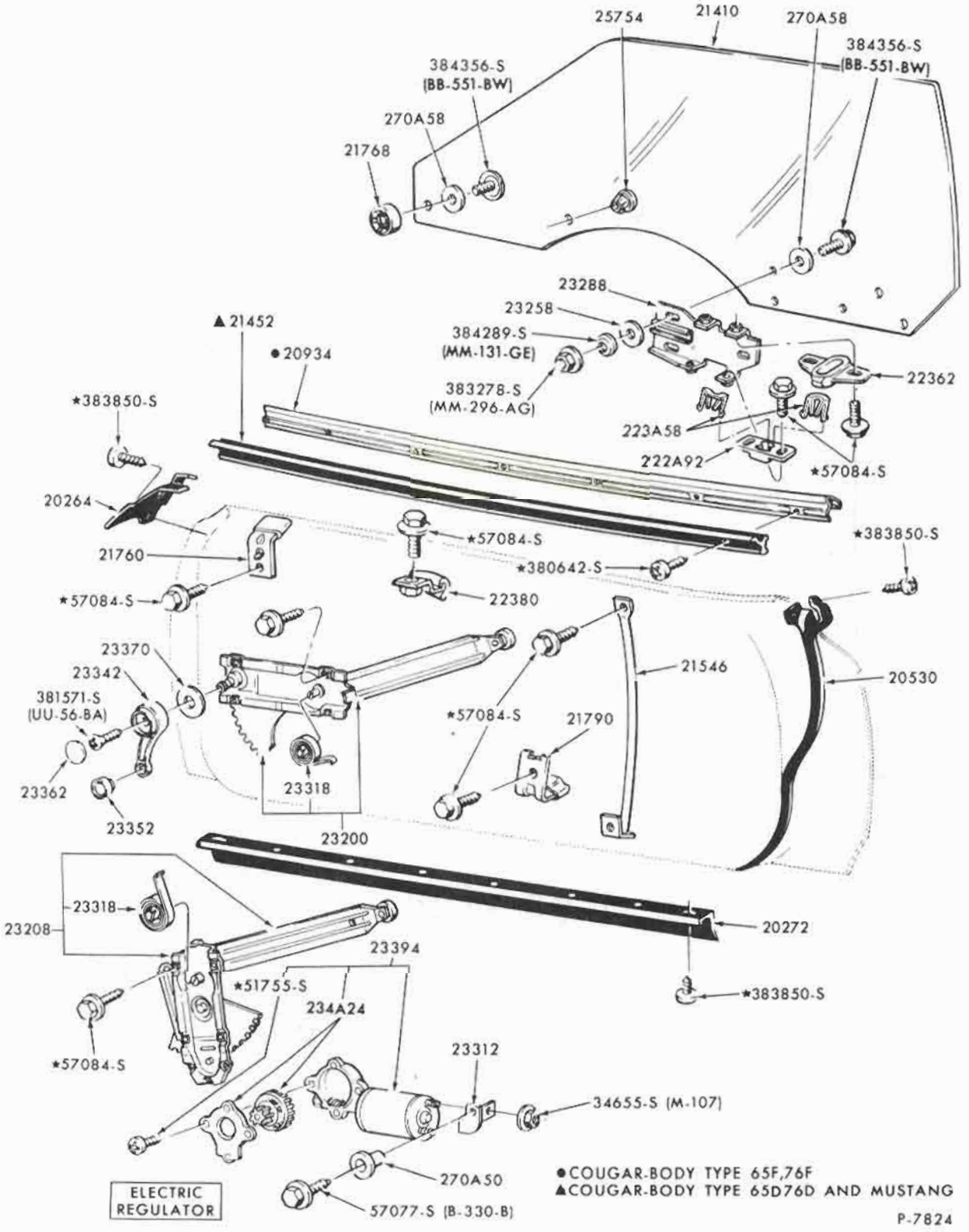

FRONT DOOR WINDOW and RELATED PARTS
1971/72 MUSTANG

COPYRIGHT © 1975 — FORD MOTOR COMPANY — DEARBORN, MICHIGAN

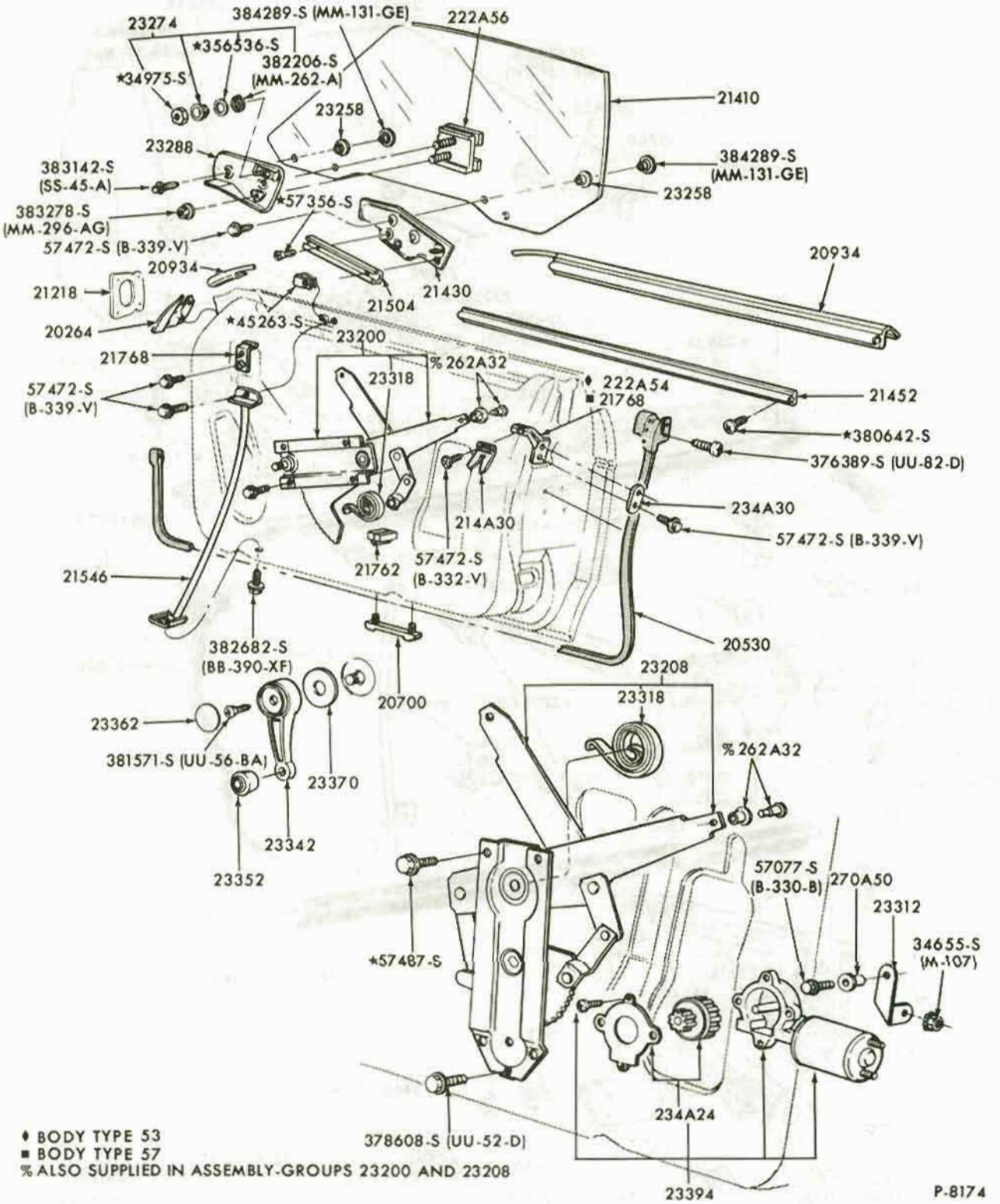

♦ BODY TYPE 53
■ BODY TYPE 57
% ALSO SUPPLIED IN ASSEMBLY-GROUPS 23200 AND 23208

P-8174

FRONT DOOR WINDOW and RELATED PARTS
1971/72 FORD - BODY TYPES 53, 57

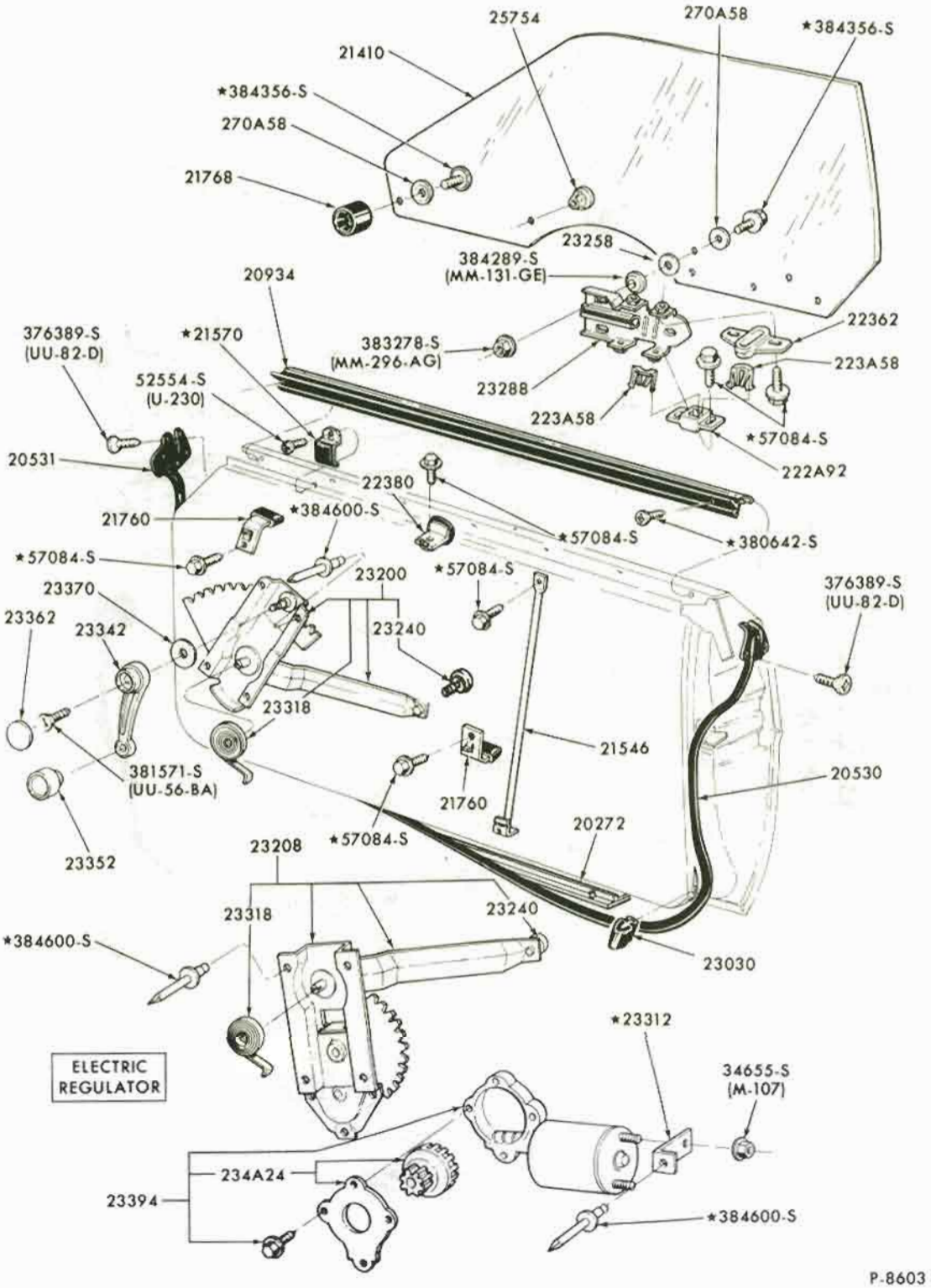

FRONT DOOR WINDOW and RELATED PARTS
1972 THUNDERBIRD

COPYRIGHT © 1975 — FORD MOTOR COMPANY — DEARBORN, MICHIGAN

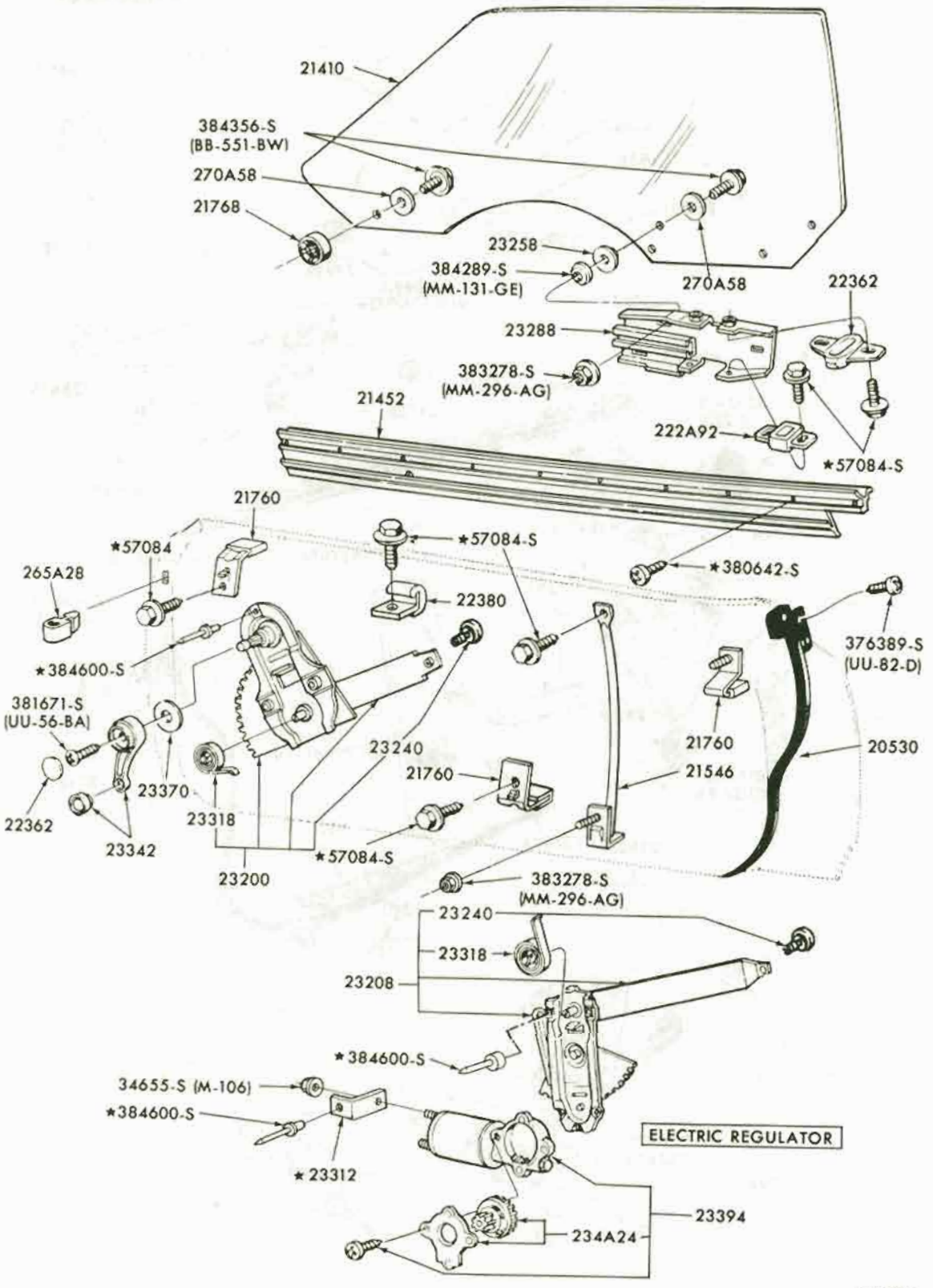

FRONT DOOR WINDOW and RELATED PARTS
1972 TORINO - BODY TYPES 53, 71

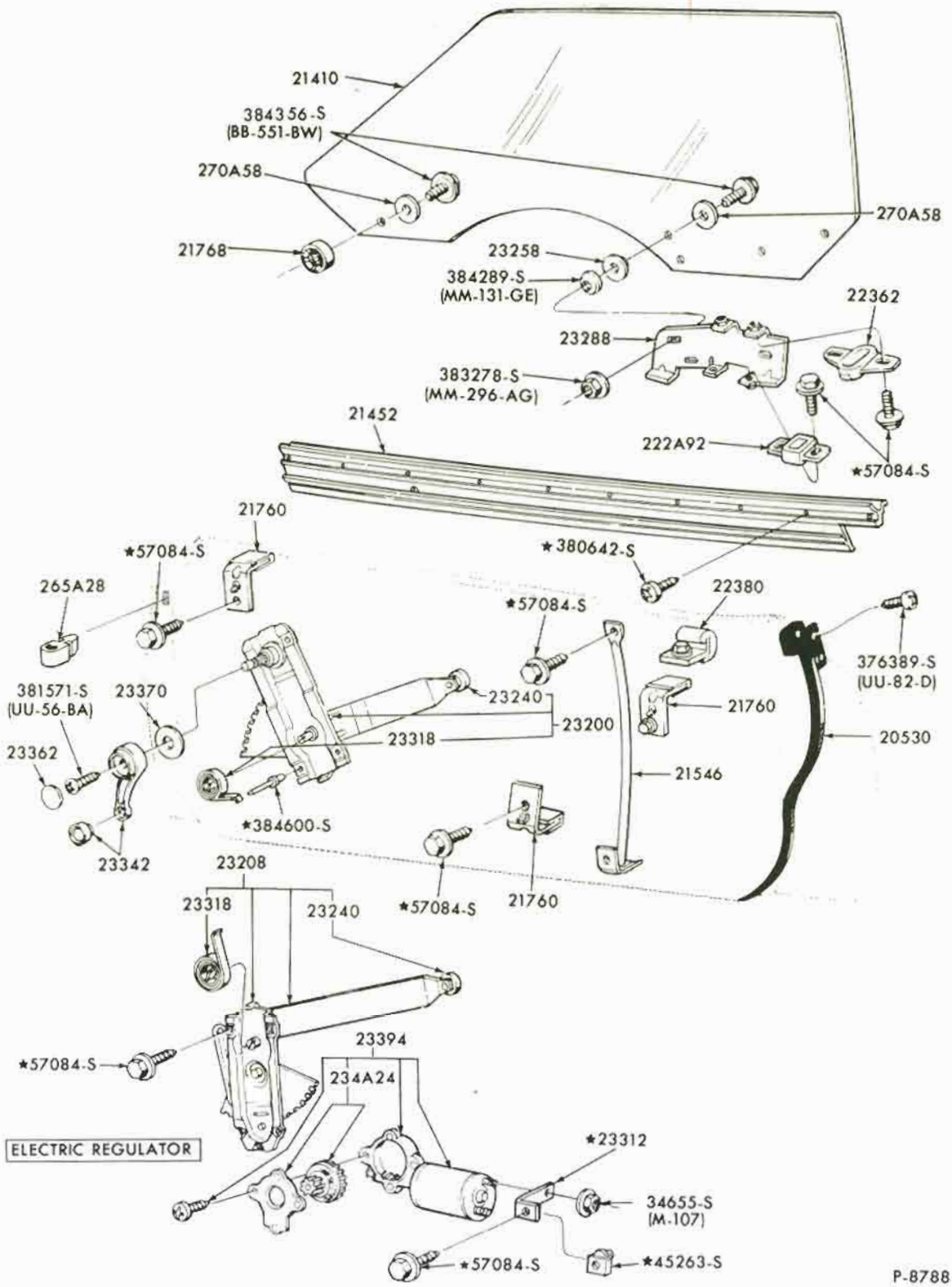

P-8788

FRONT DOOR WINDOW and RELATED PARTS
1972 TORINO - BODY TYPES 63,65,97

COPYRIGHT © 1975 — FORD MOTOR COMPANY — DEARBORN, MICHIGAN

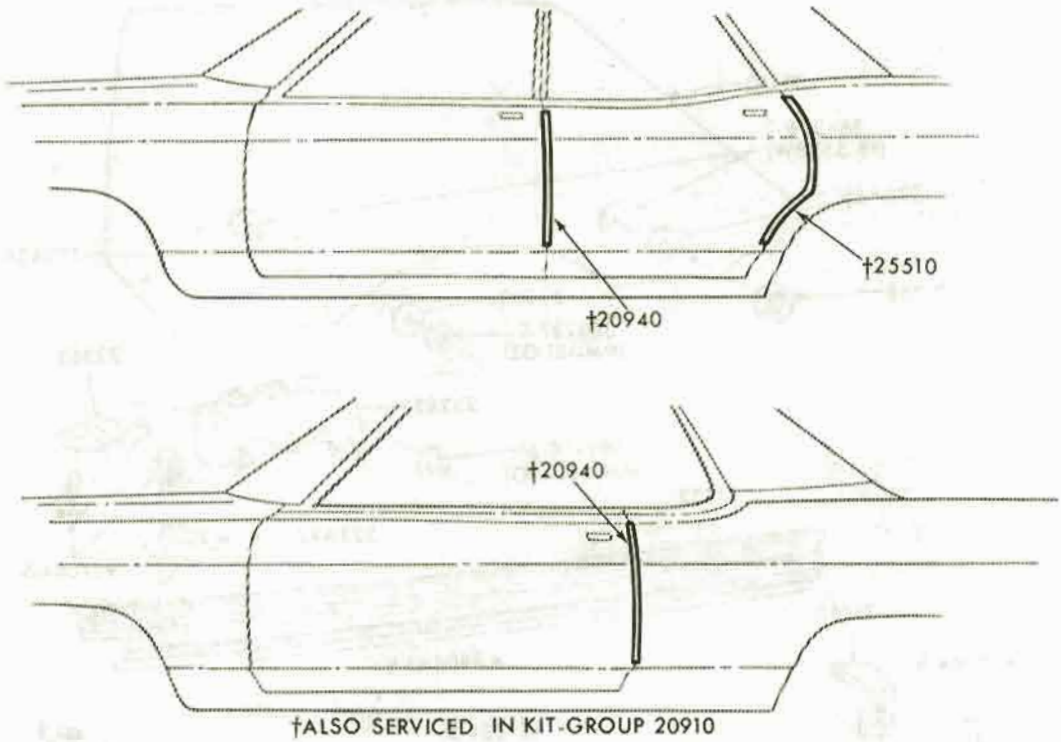

†ALSO SERVICED IN KIT-GROUP 20910

P-10061

DOOR EDGE GUARDS
1972 ALL

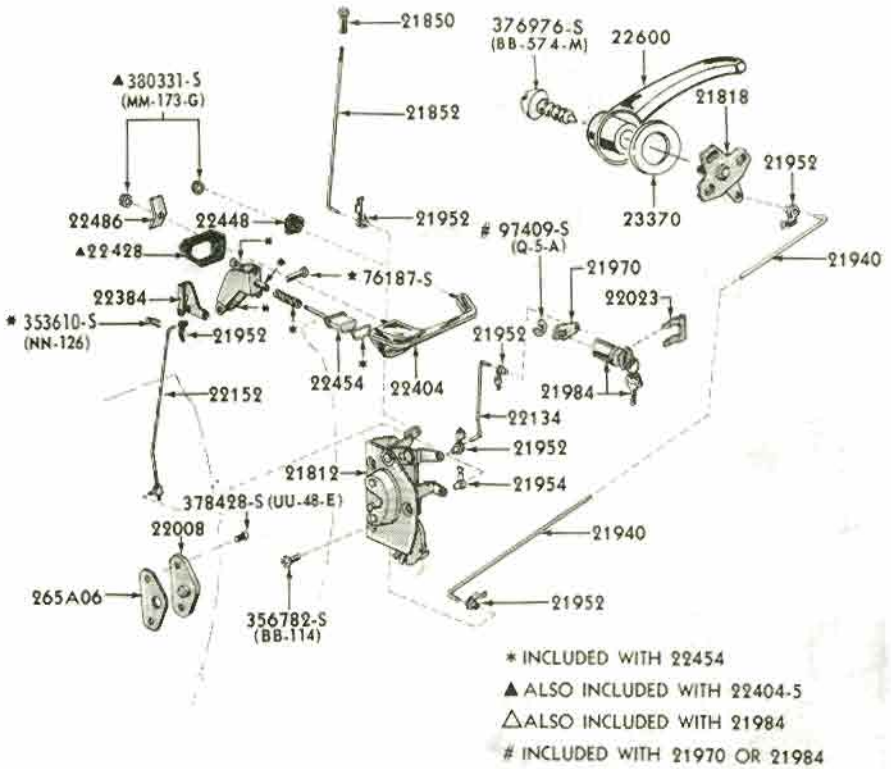

* INCLUDED WITH 22454
▲ ALSO INCLUDED WITH 22404-5
△ ALSO INCLUDED WITH 21984
INCLUDED WITH 21970 OR 21984

P-4741

FRONT DOOR HANDLES, LATCH and RELATED PARTS
1965/68 FORD

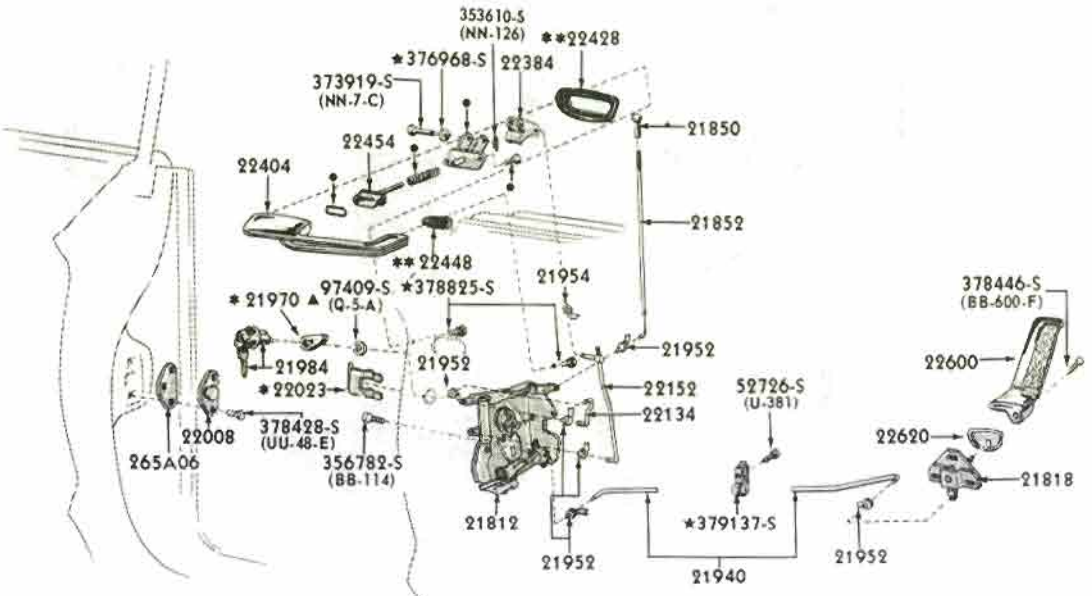

* ALSO INCLUDED WITH 21984
** ALSO INCLUDED WITH 22404
• INCLUDED WITH 22454
▲ INCLUDED WITH 21970 OR 21984

P-4755

DOOR HANDLES, LOCK & RELATED PARTS
1965/66 THUNDERBIRD

COPYRIGHT © 1975 — FORD MOTOR COMPANY — DEARBORN, MICHIGAN

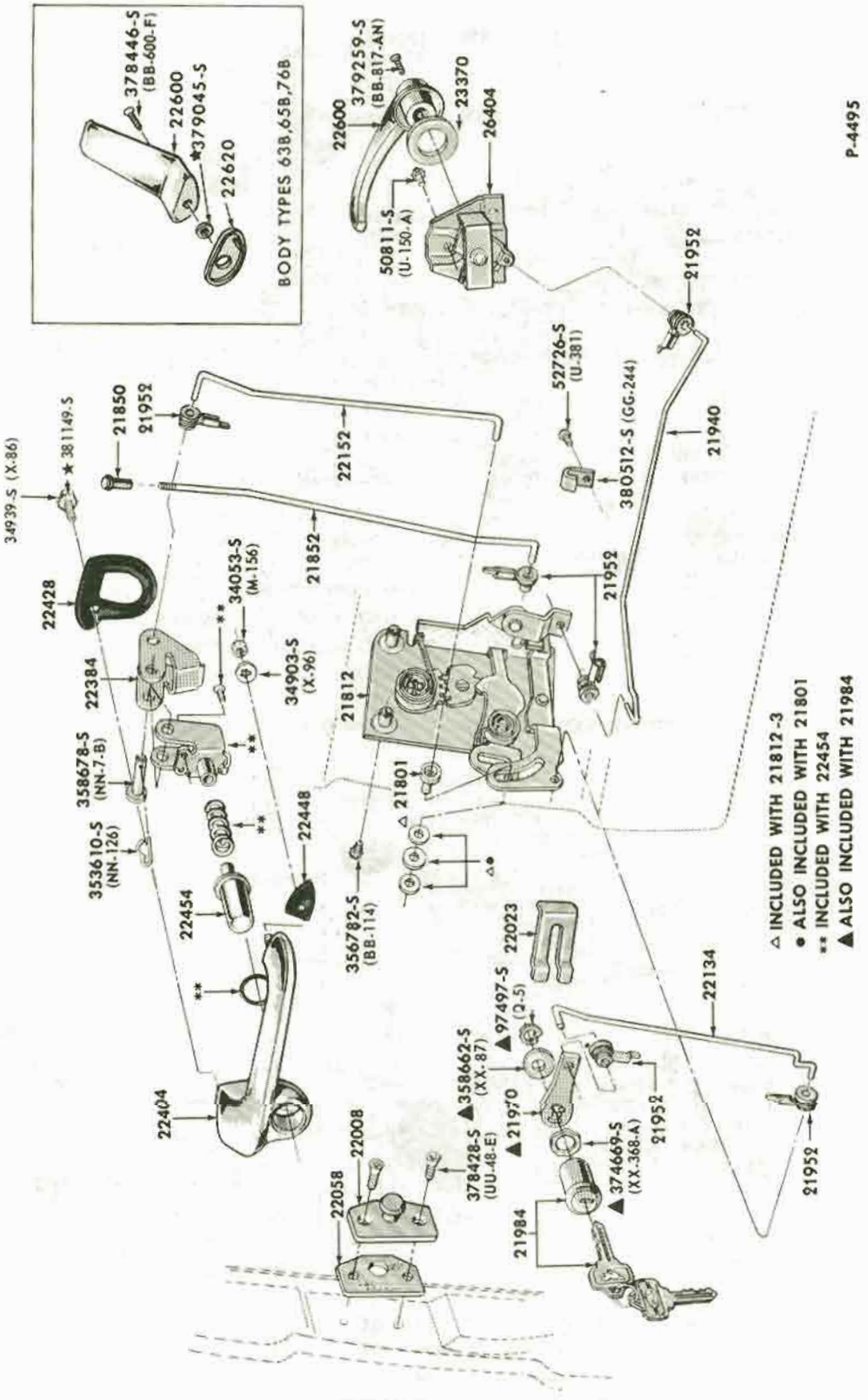

FRONT DOOR HANDLES, LATCH and RELATED PARTS
1965/66 MUSTANG

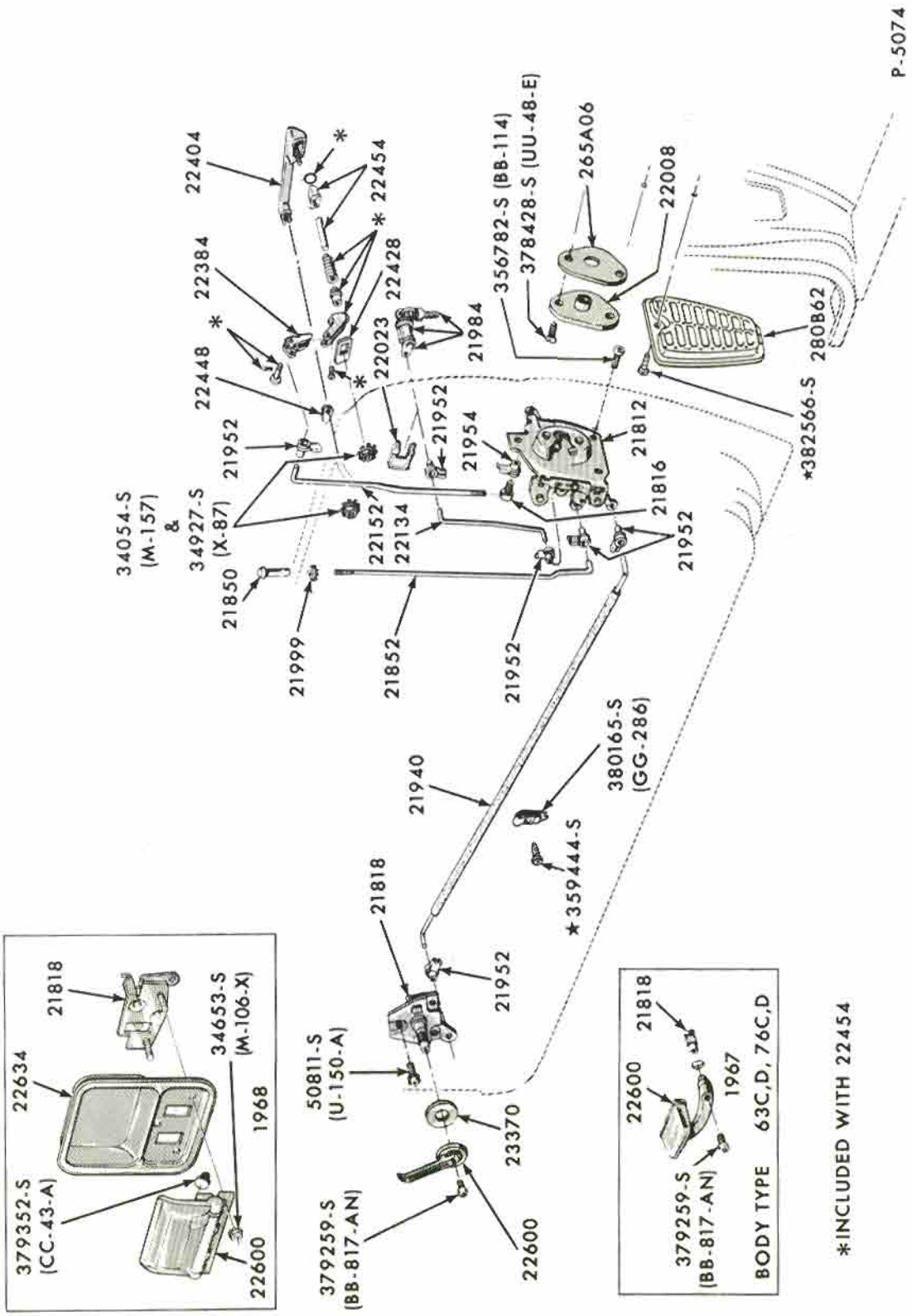

FRONT DOOR HANDLES, LATCH and RELATED PARTS
1966/68 FAIRLANE/TORINO, FALCON

COPYRIGHT © 1975 — FORD MOTOR COMPANY — DEARBORN, MICHIGAN

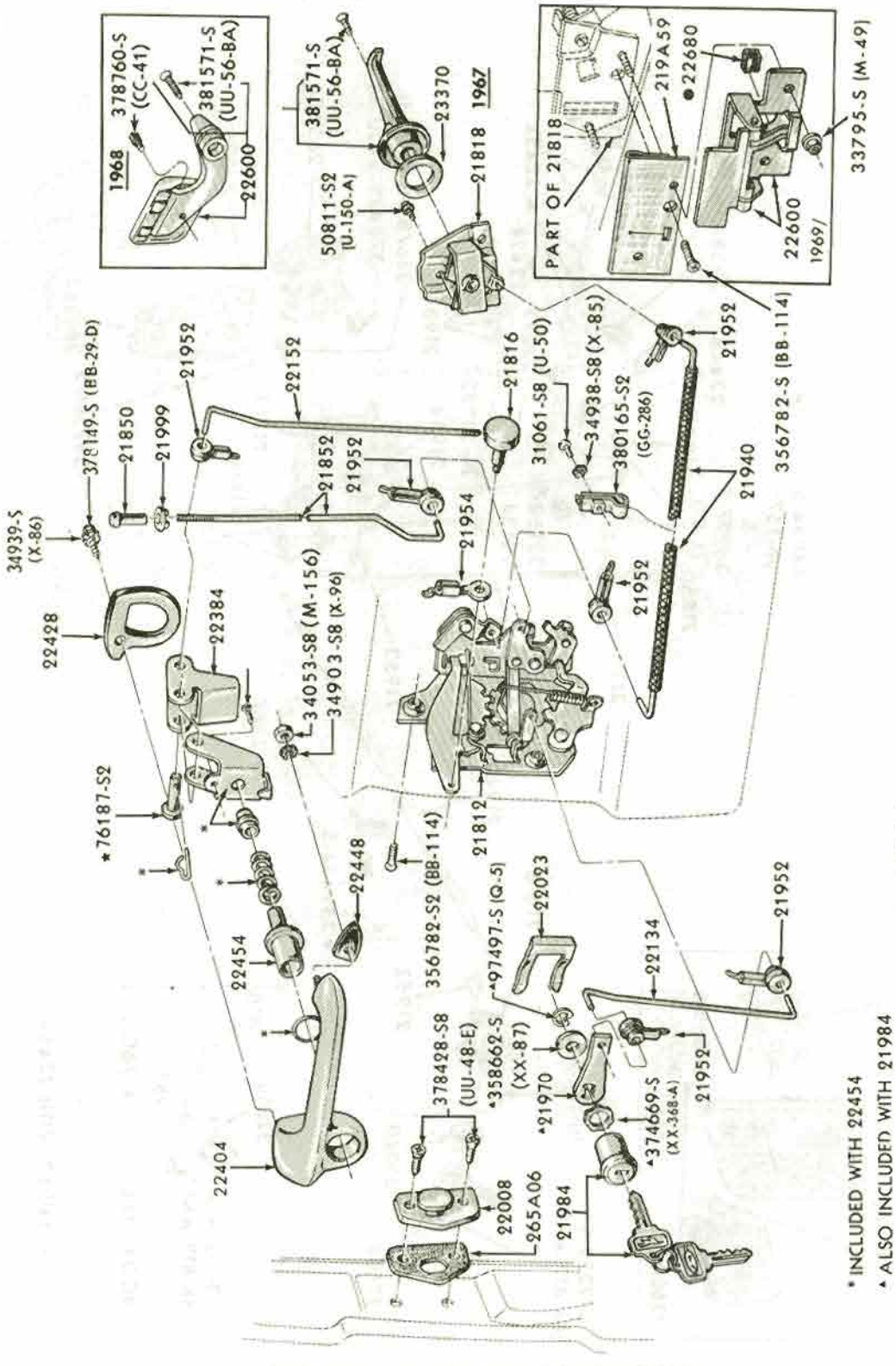

FRONT DOOR HANDLES, LATCH and RELATED PARTS
1967/70 MUSTANG 1970/72 MAVERICK

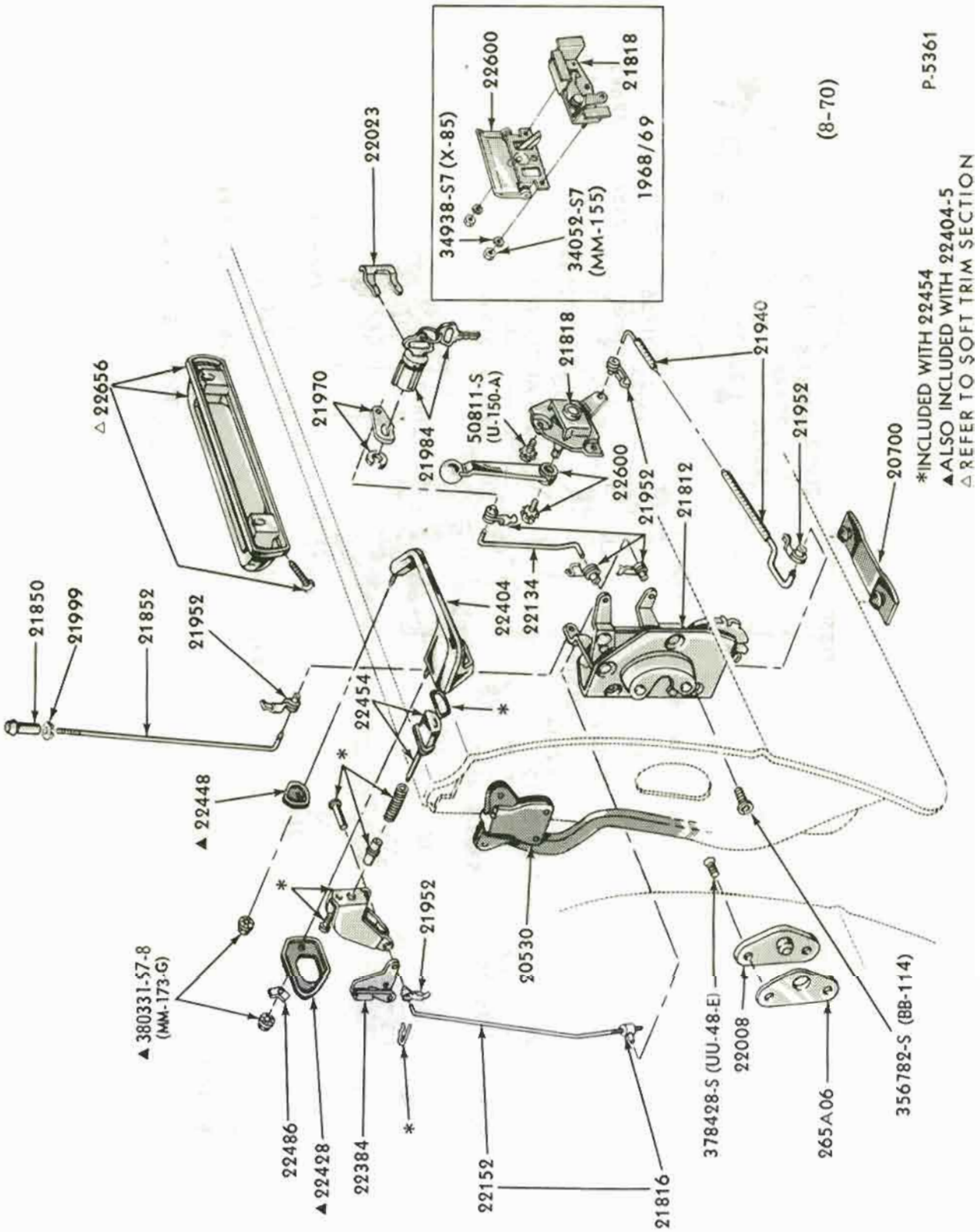

FRONT DOOR HANDLES, LATCH and RELATED PARTS
1967/69 THUNDERBIRD

COPYRIGHT © 1975 — FORD MOTOR COMPANY — DEARBORN, MICHIGAN

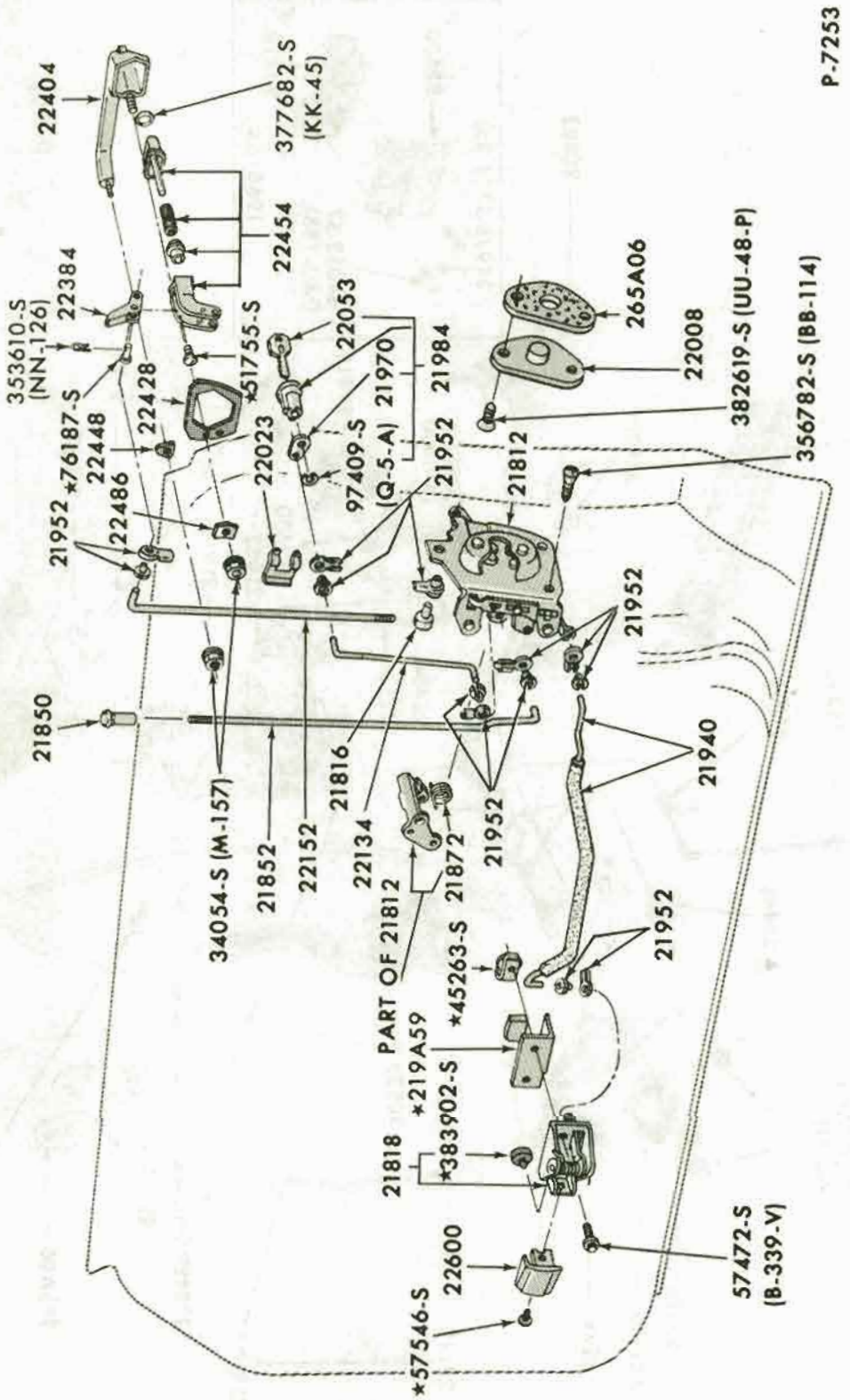

FRONT DOOR HANDLES, LATCH and RELATED PARTS
1969/70 FORD

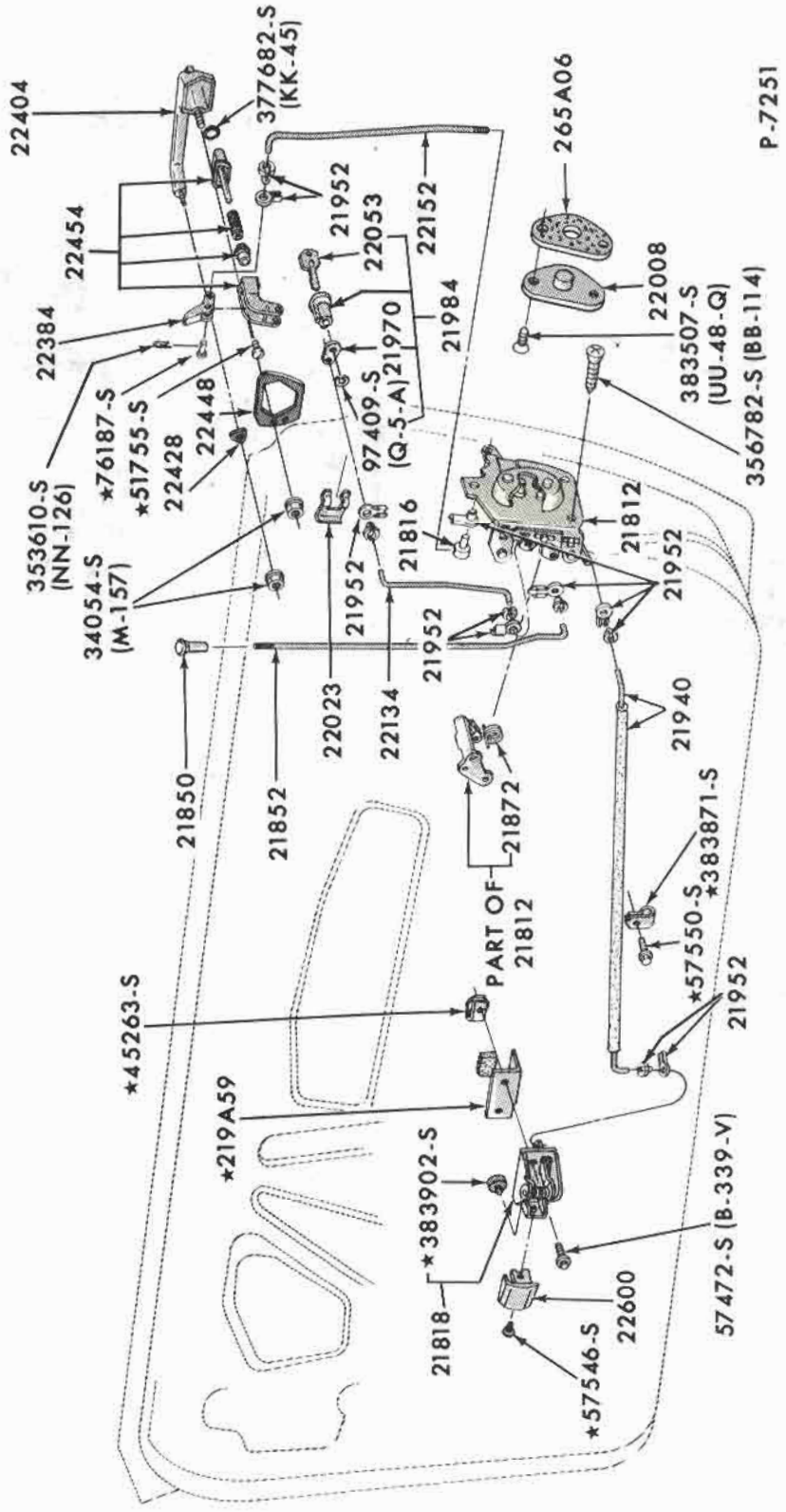

FRONT DOOR HANDLES, LATCH and RELATED PARTS
1969/71 FAIRLANE/TORINO and FALCON

COPYRIGHT © 1975 — FORD MOTOR COMPANY — DEARBORN, MICHIGAN

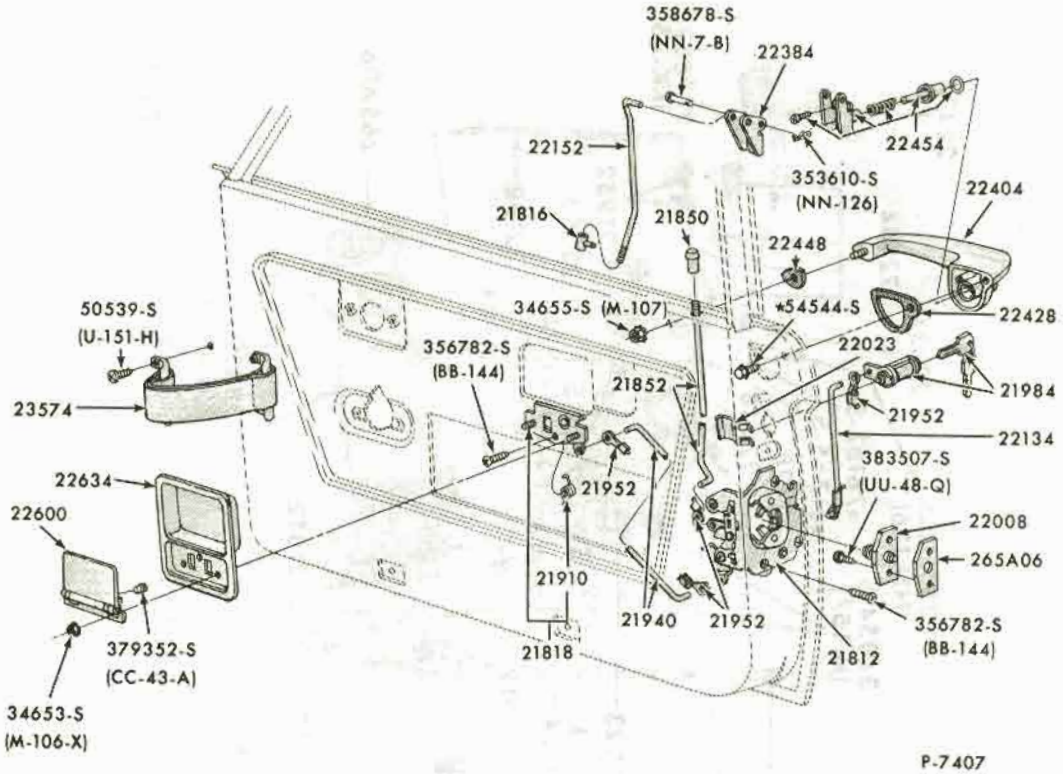

DOOR LATCH, HANDLES and RELATED PARTS
1969/72 BRONCO

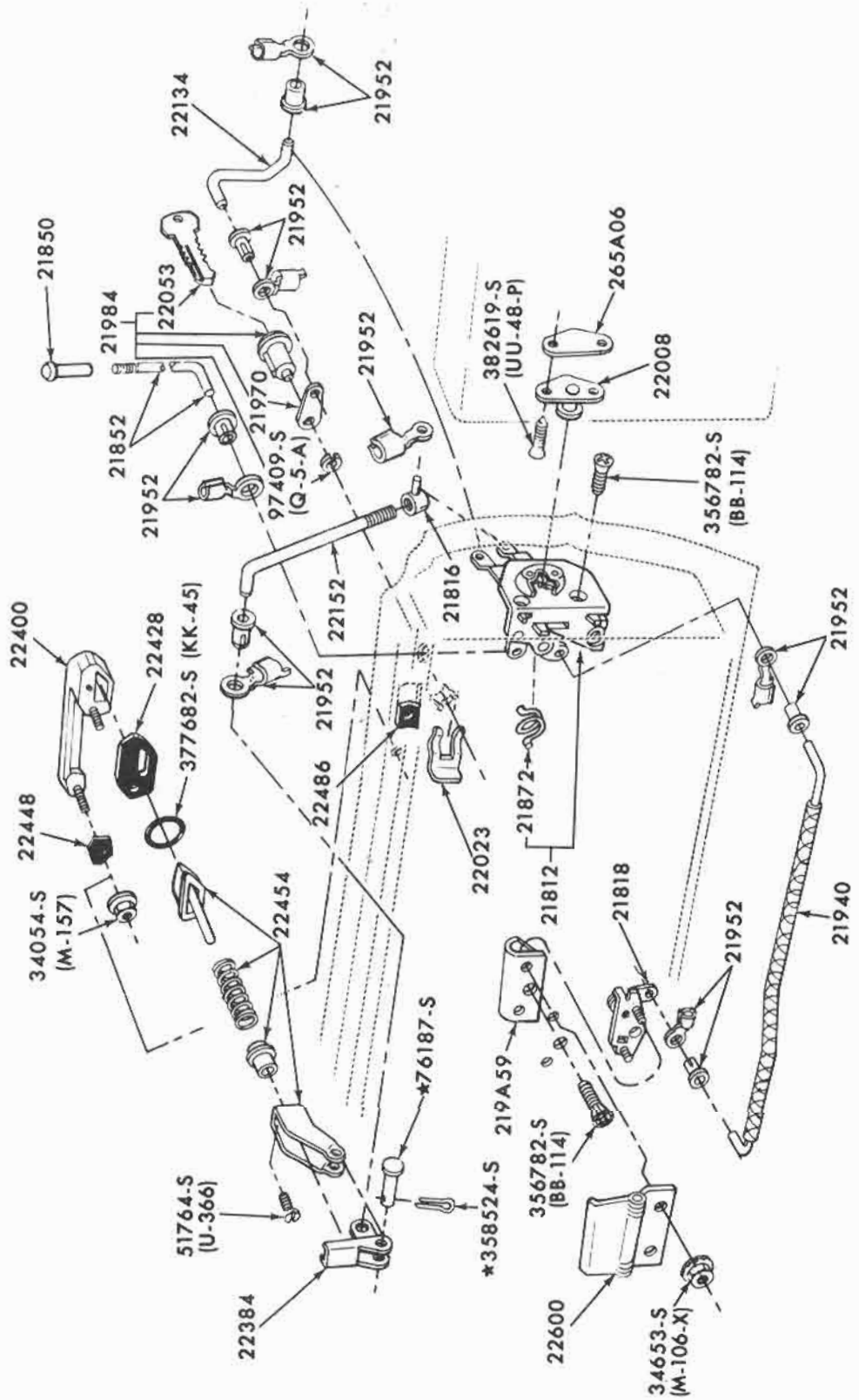

FRONT DOOR HANDLES, LATCH and RELATED PARTS
1970/71 THUNDERBIRD - BODY TYPE 57

COPYRIGHT © 1975 — FORD MOTOR COMPANY — DEARBORN, MICHIGAN

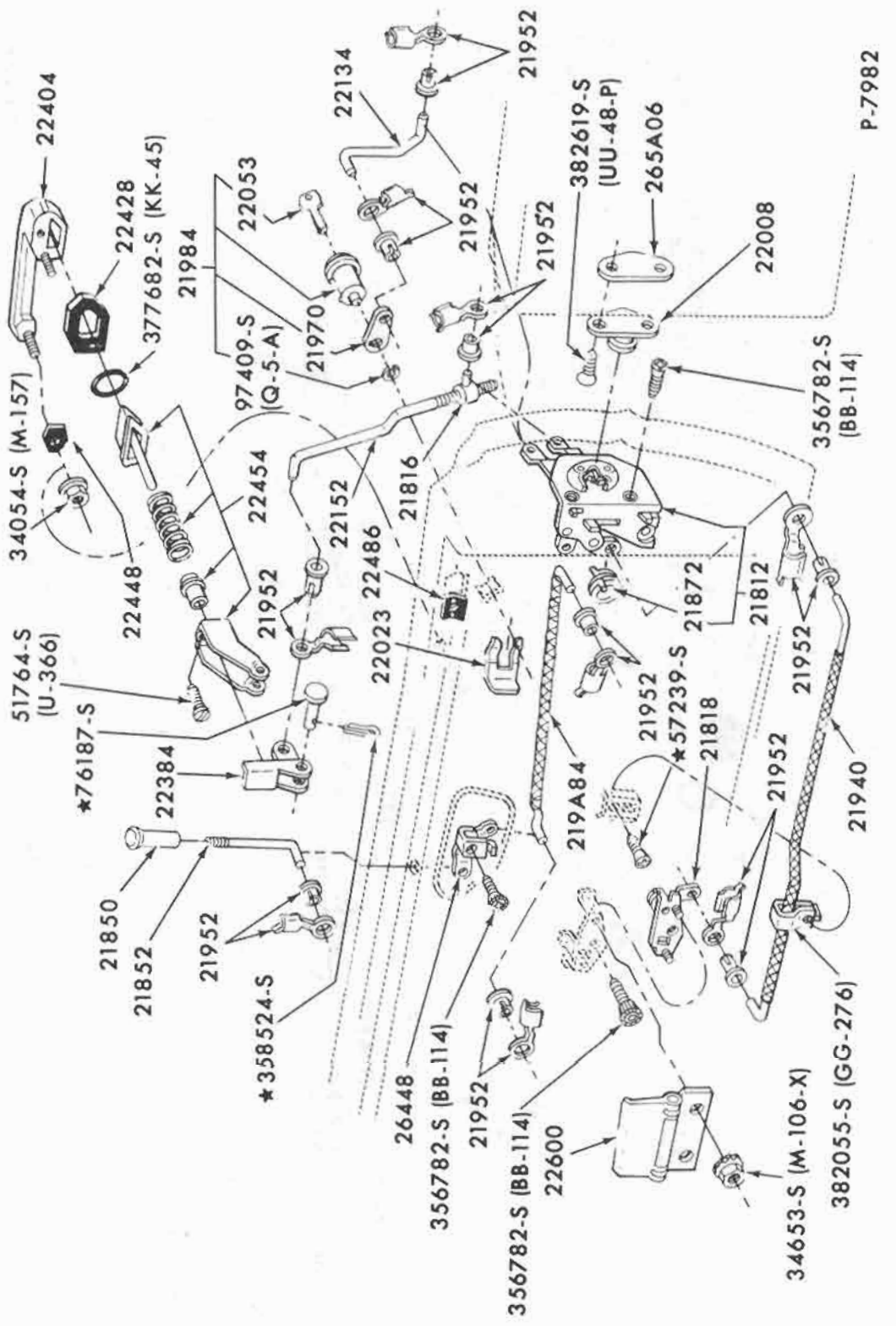

FRONT DOOR HANDLES, LATCH and RELATED PARTS
1970/71 THUNDERBIRD - BODY TYPE 65

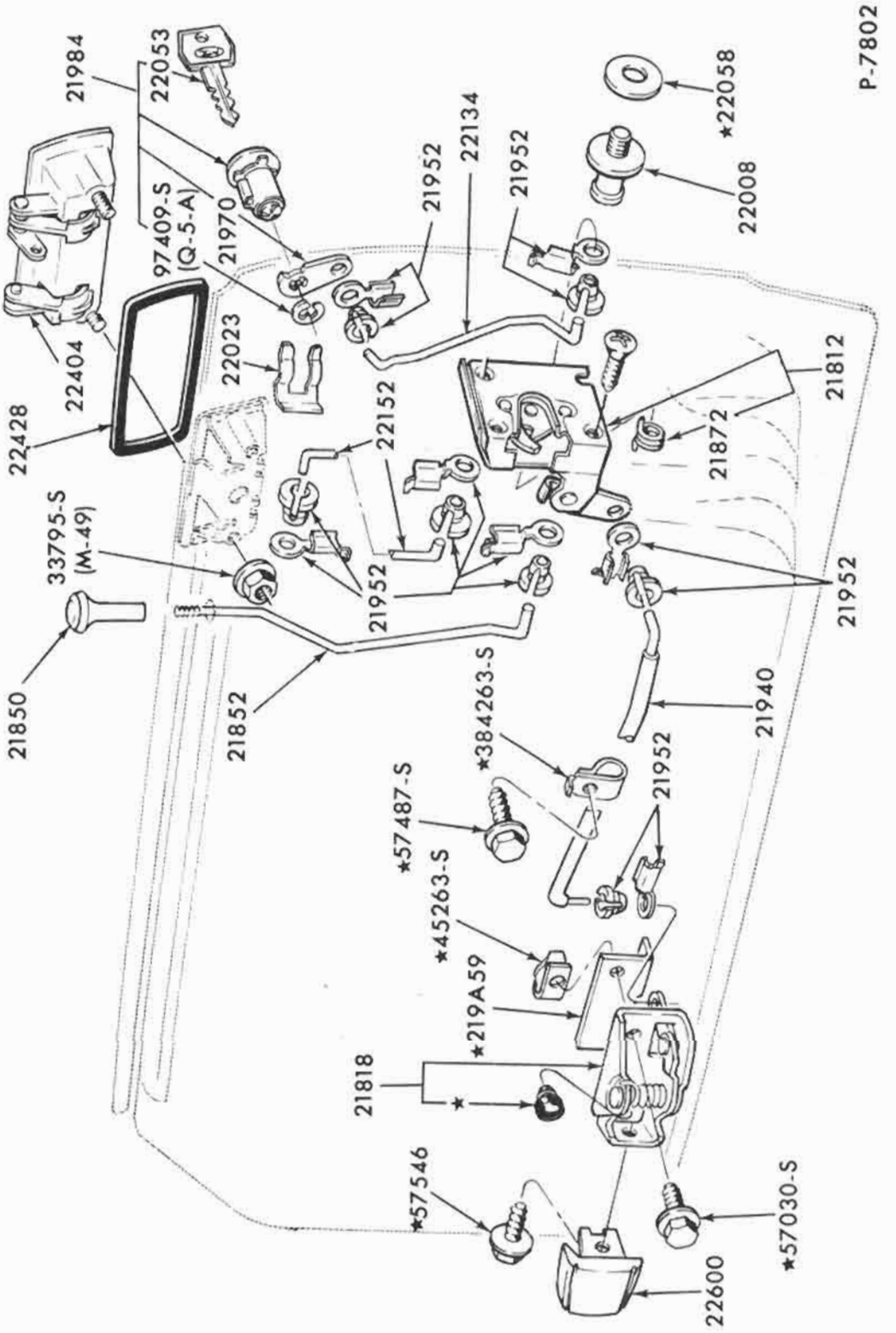

FRONT DOOR HANDLES, LATCH and RELATED PARTS
1971/72 FORD, MUSTANG

COPYRIGHT © 1975 — FORD MOTOR COMPANY — DEARBORN, MICHIGAN

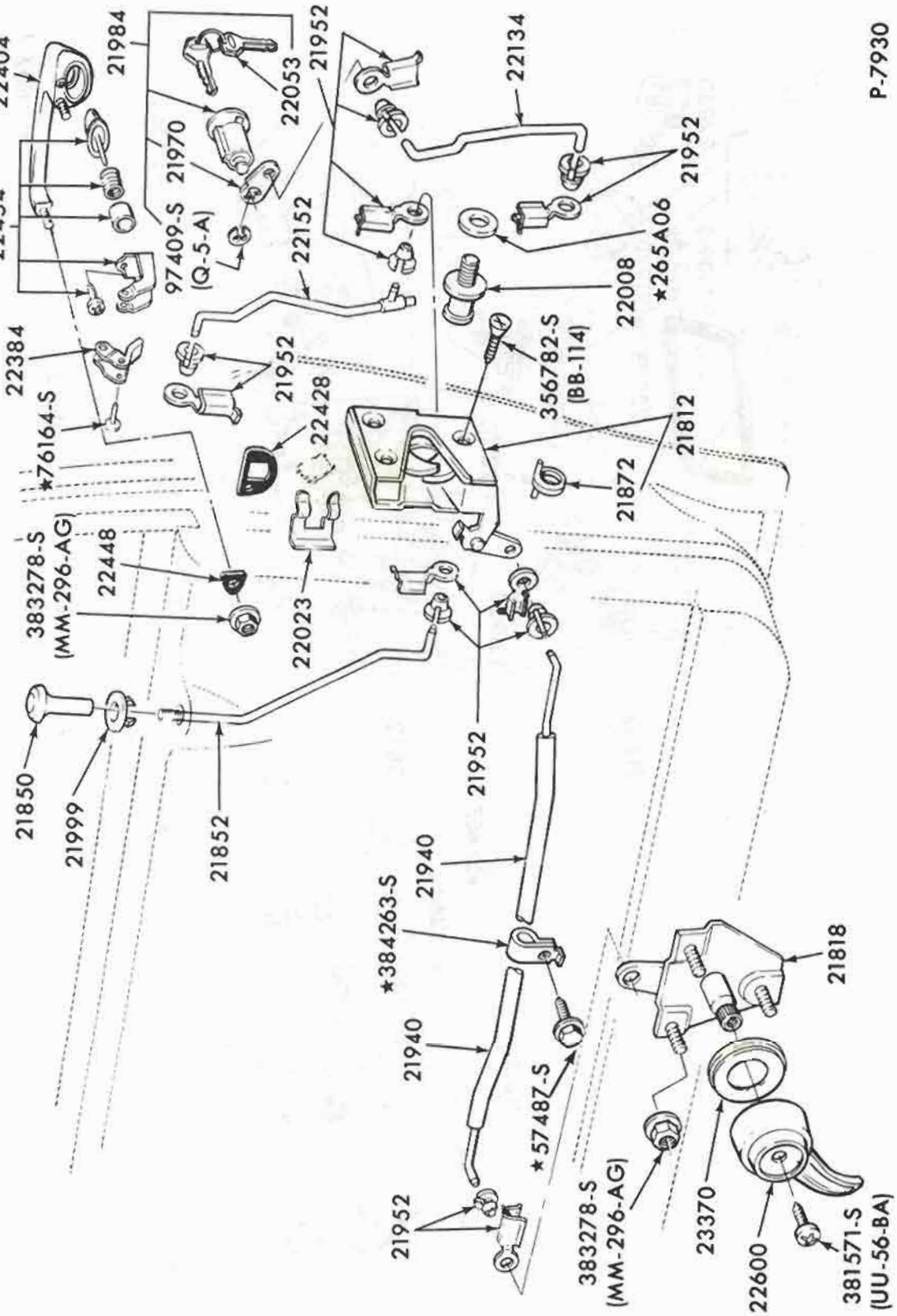

FRONT DOOR HANDLES, LATCH and RELATED PARTS
1971/72 PINTO

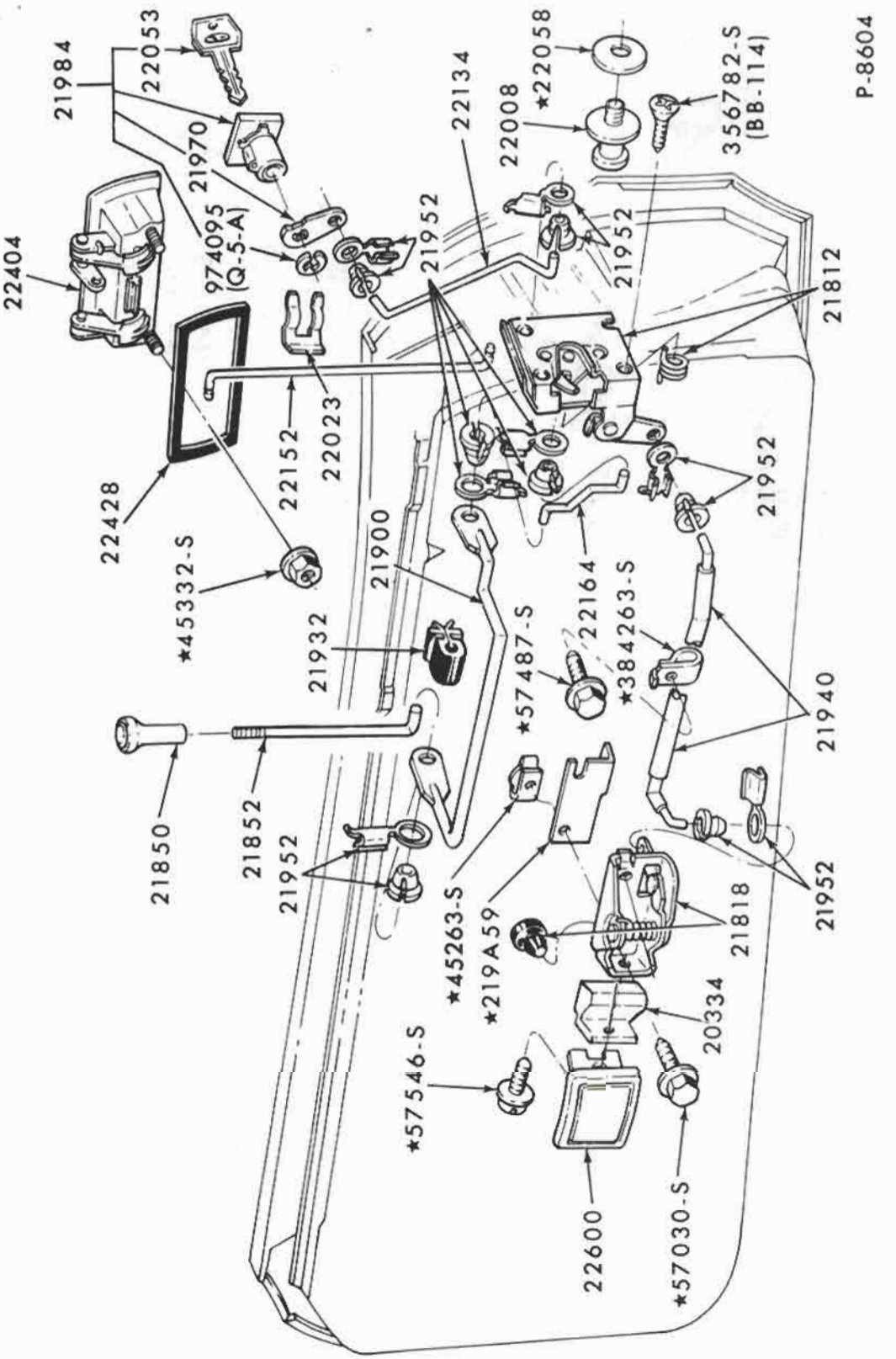

FRONT DOOR HANDLES, LATCH and RELATED PARTS
1972 THUNDERBIRD

COPYRIGHT © 1975 — FORD MOTOR COMPANY — DEARBORN, MICHIGAN

FORD CAR PARTS

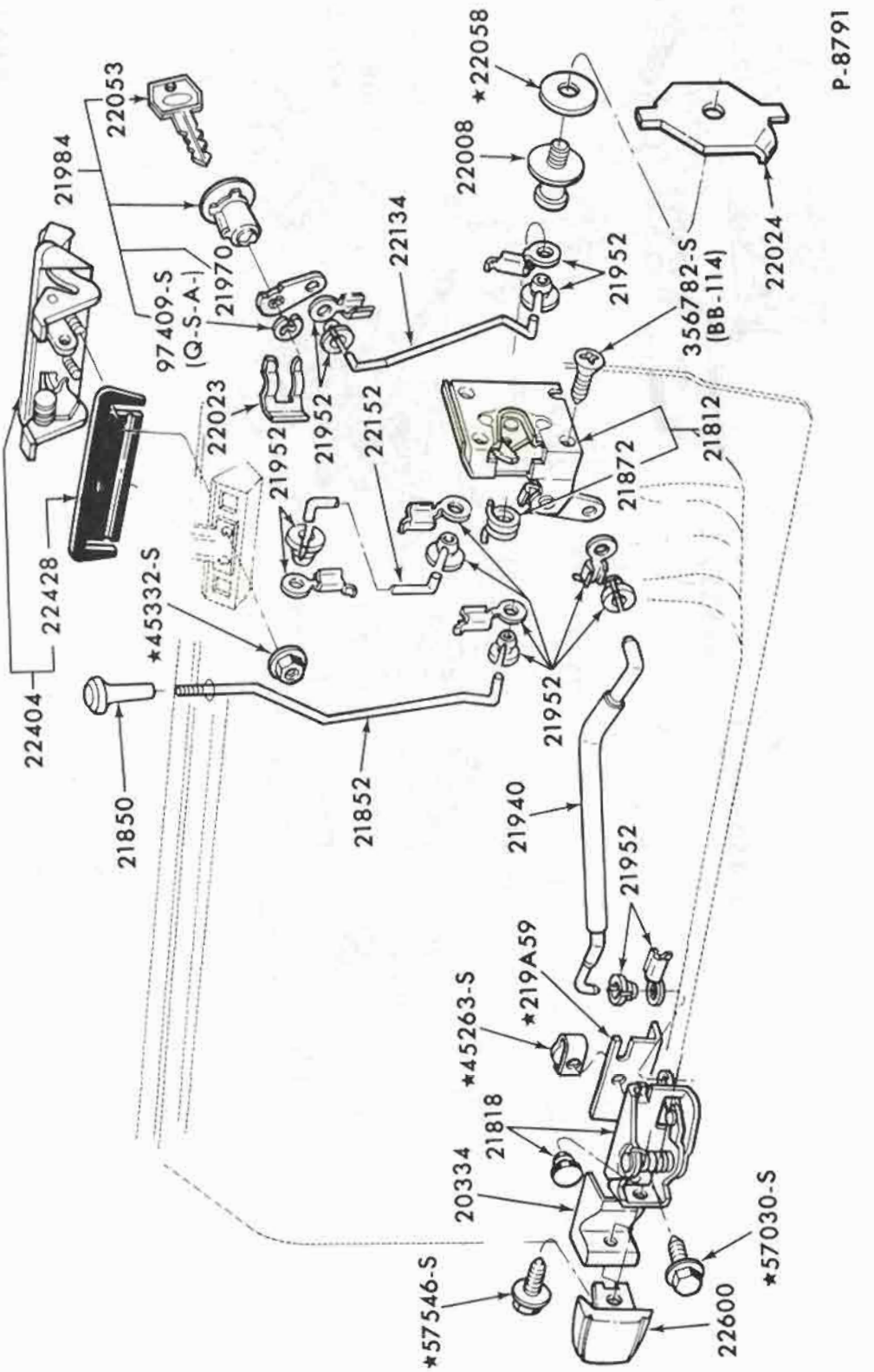

FRONT DOOR HANDLES, LATCH and RELATED PARTS
1972 TORINO - BODY TYPES 53,71

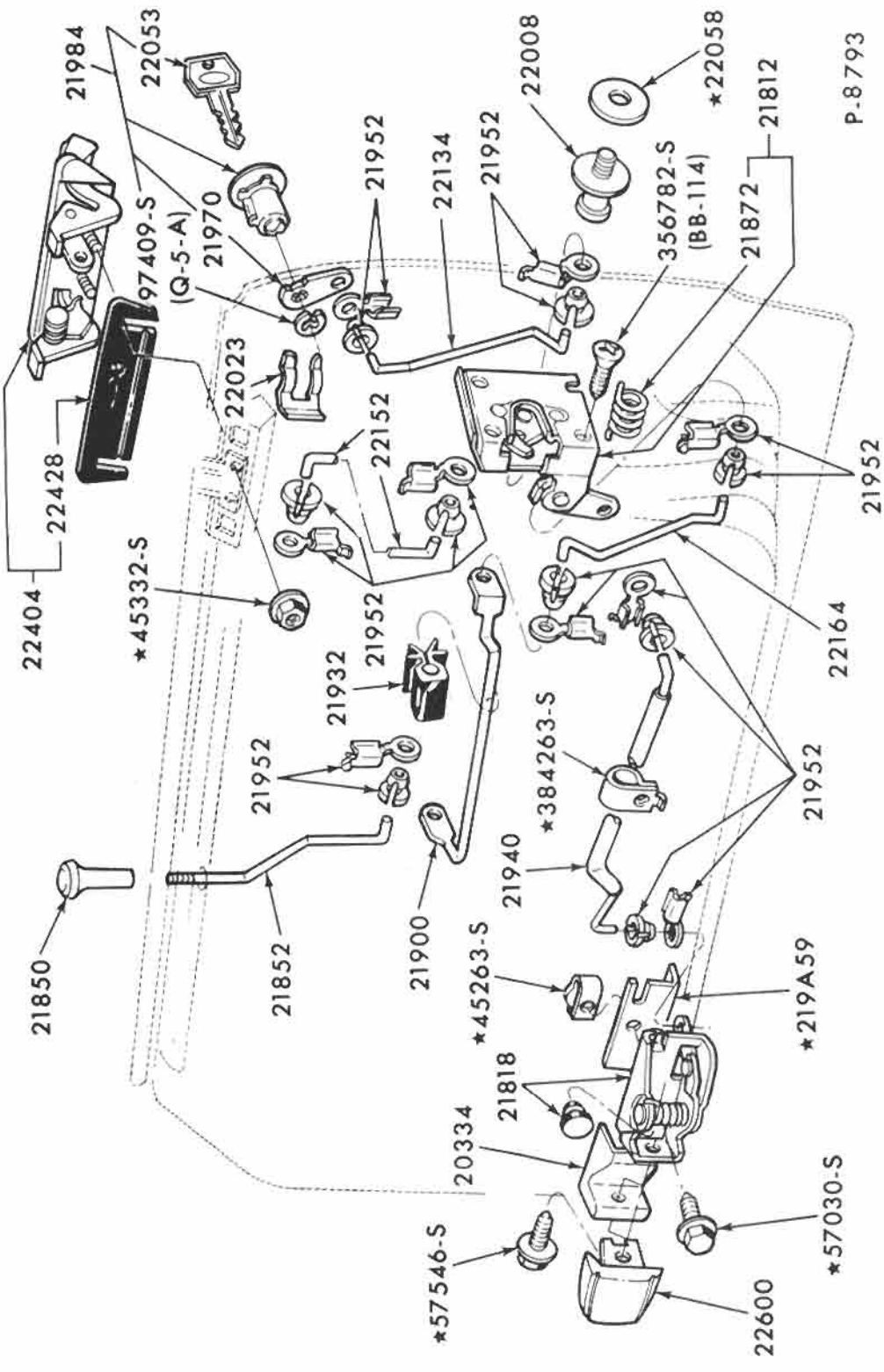

FRONT DOOR HANDLES, LATCH and RELATED PARTS
1972 TORINO - BODY TYPES 63,65,97

COPYRIGHT © 1975 — FORD MOTOR COMPANY — DEARBORN, MICHIGAN

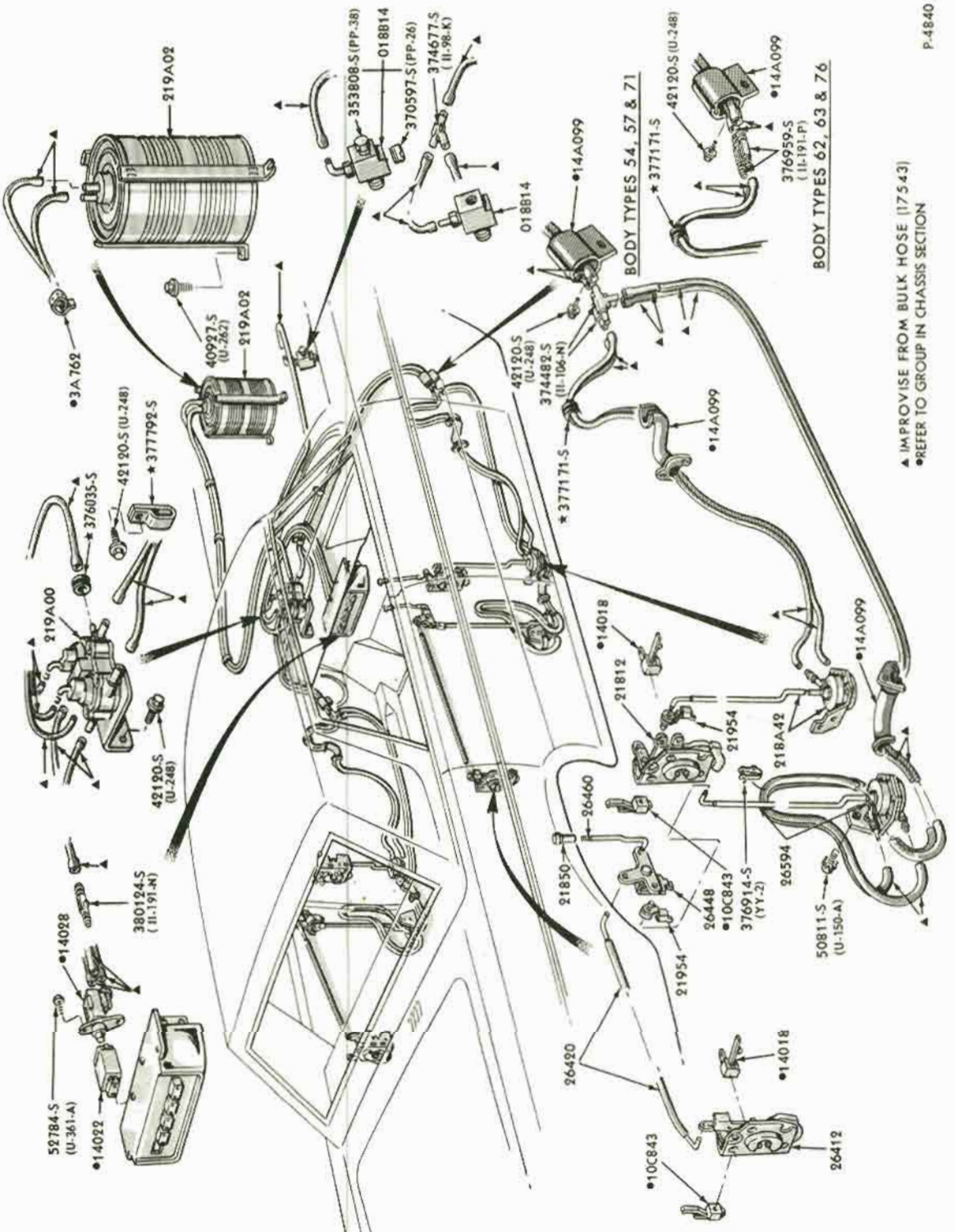

VACUUM DOOR LATCH SYSTEM
1965/66 FORD

COPYRIGHT © 1975 — FORD MOTOR COMPANY — DEARBORN, MICHIGAN

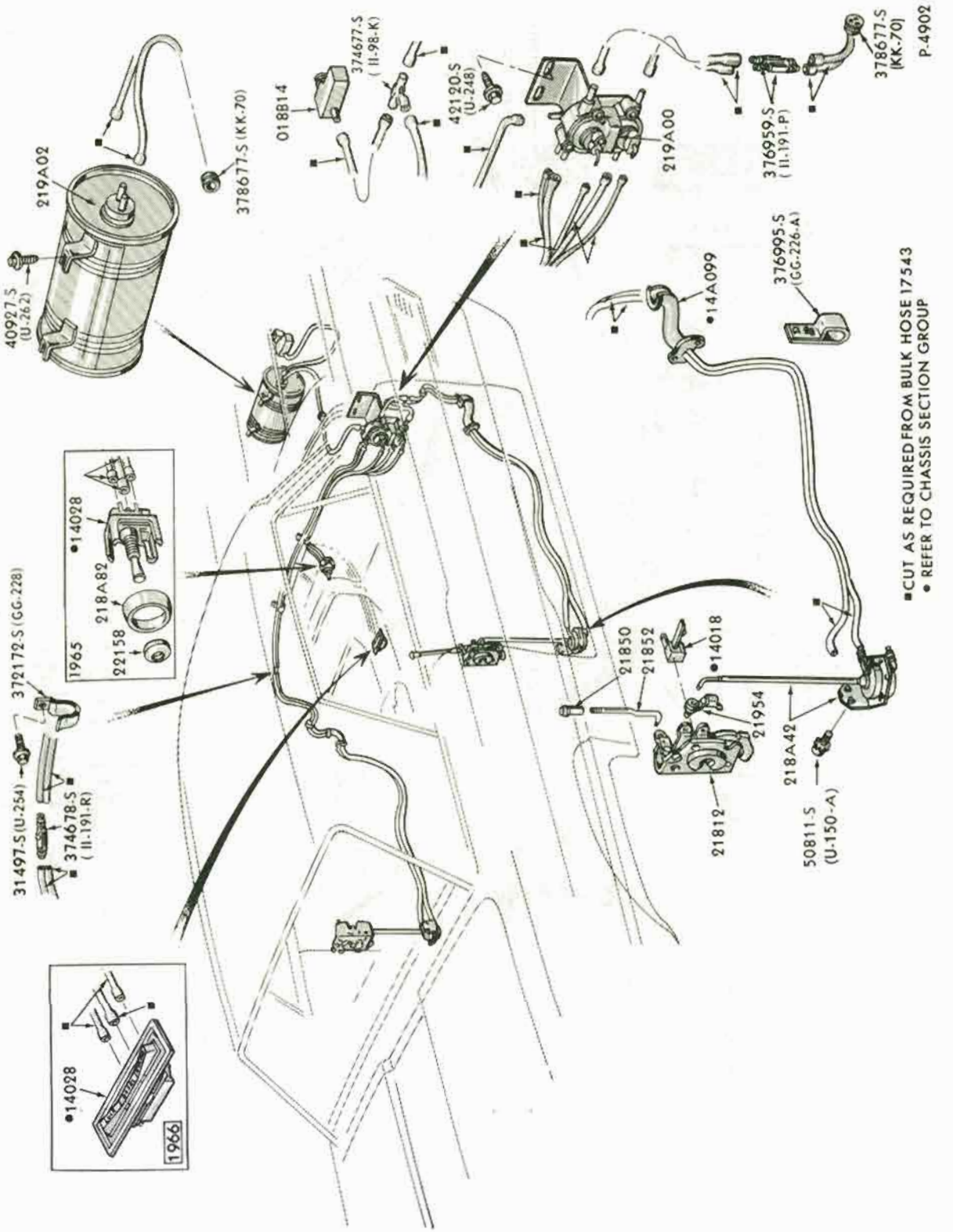

VACUUM DOOR LATCH SYSTEM
1965/66 THUNDERBIRD

P-5643

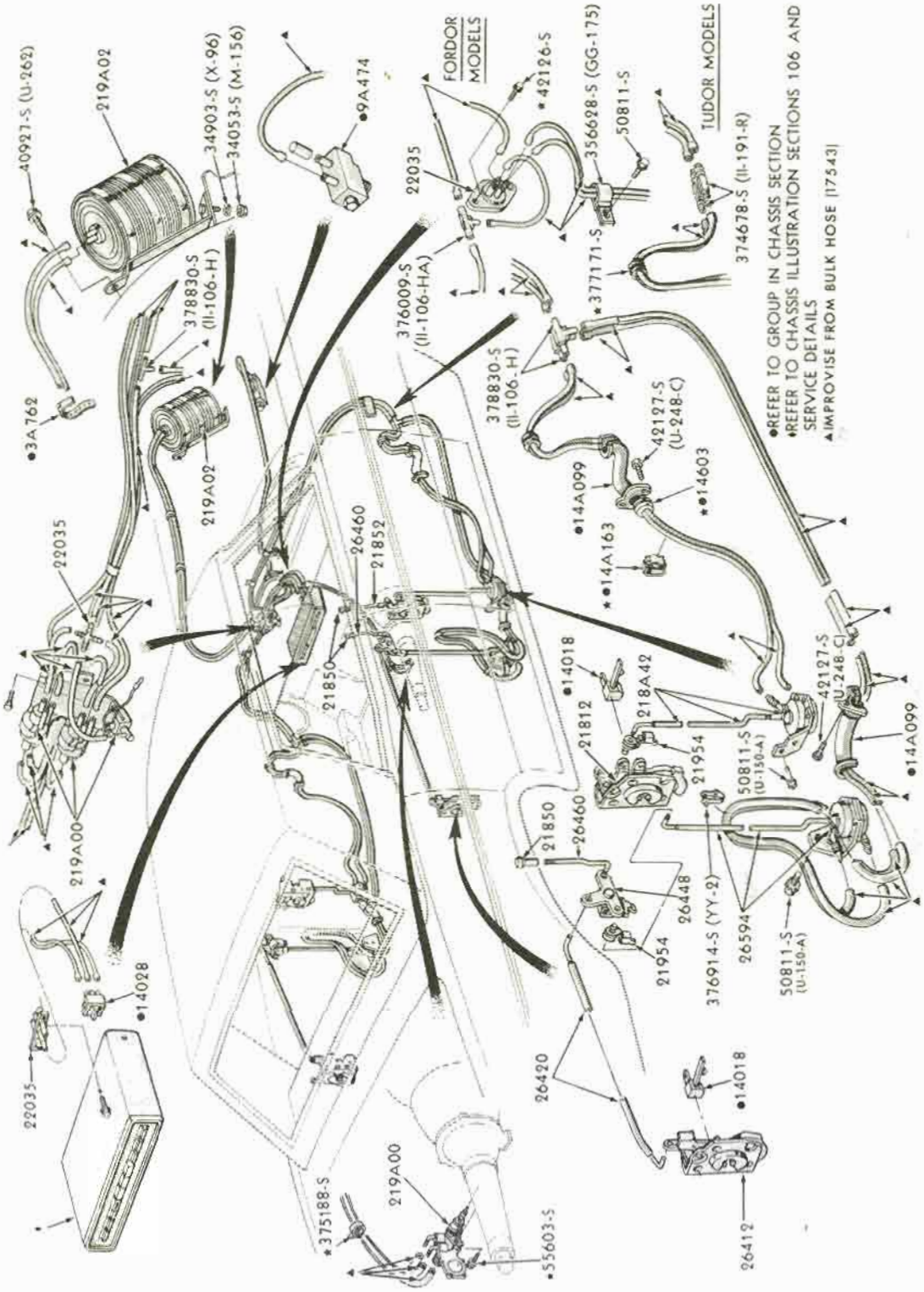

VACUUM DOOR LATCH SYSTEM
1967 FORD

COPYRIGHT © 1975 — FORD MOTOR COMPANY — DEARBORN, MICHIGAN

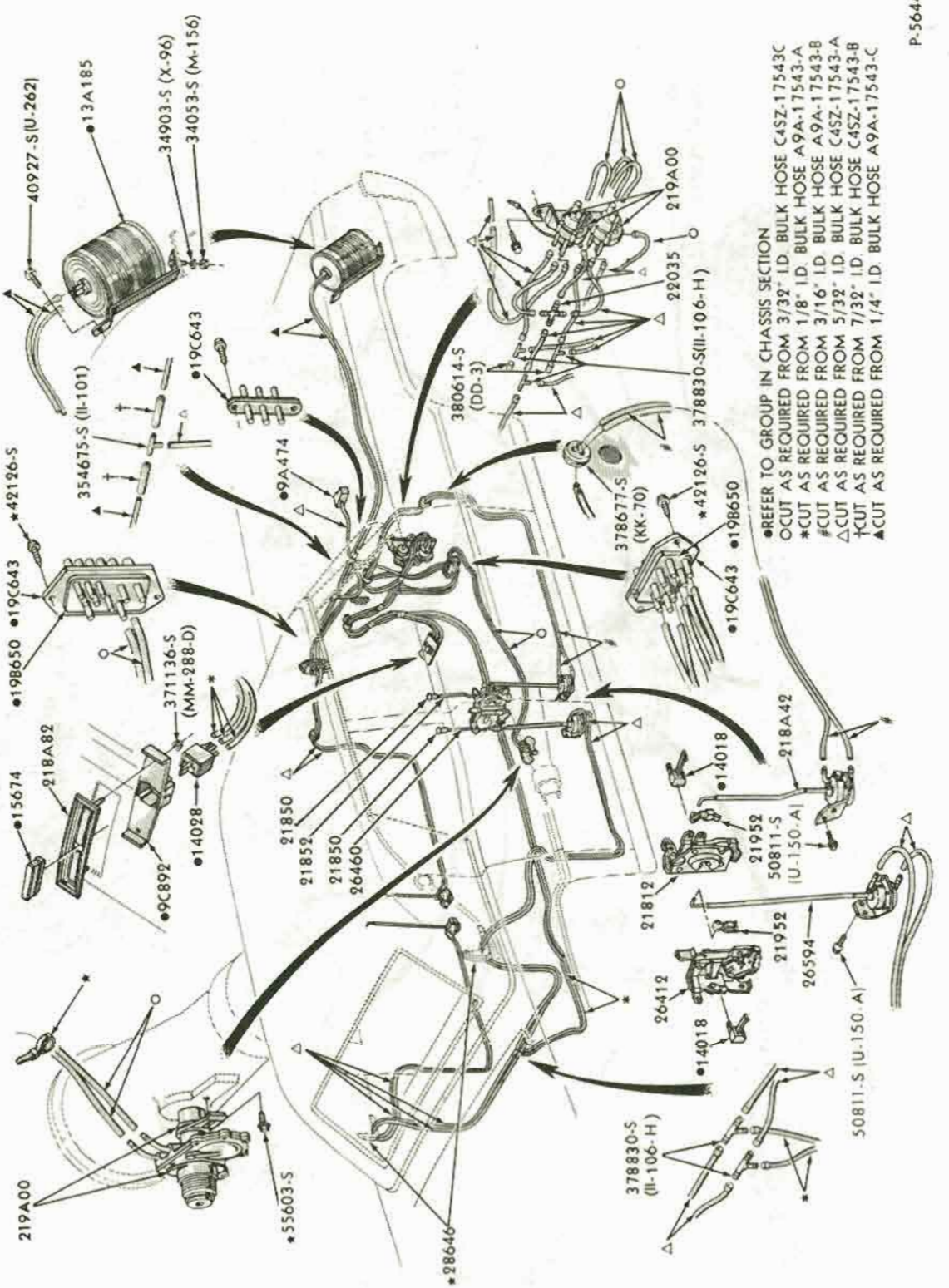

VACUUM DOOR LATCH SYSTEM
1967 THUNDERBIRD

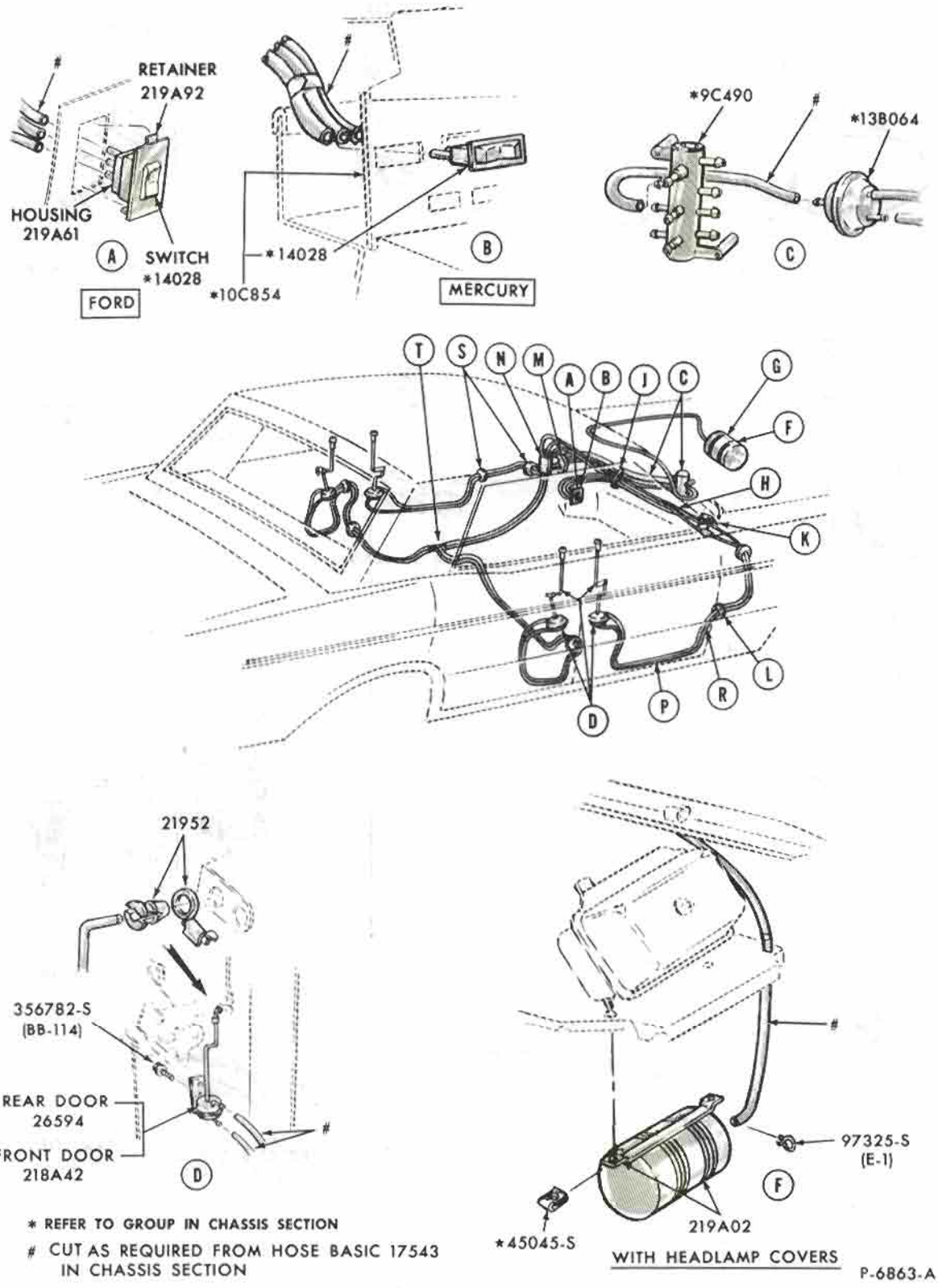

* REFER TO GROUP IN CHASSIS SECTION

\# CUT AS REQUIRED FROM HOSE BASIC 17543 IN CHASSIS SECTION

P-6863-A

VACUUM DOOR LATCH SYSTEM
1969/70 FORD

COPYRIGHT © 1975 — FORD MOTOR COMPANY — DEARBORN, MICHIGAN

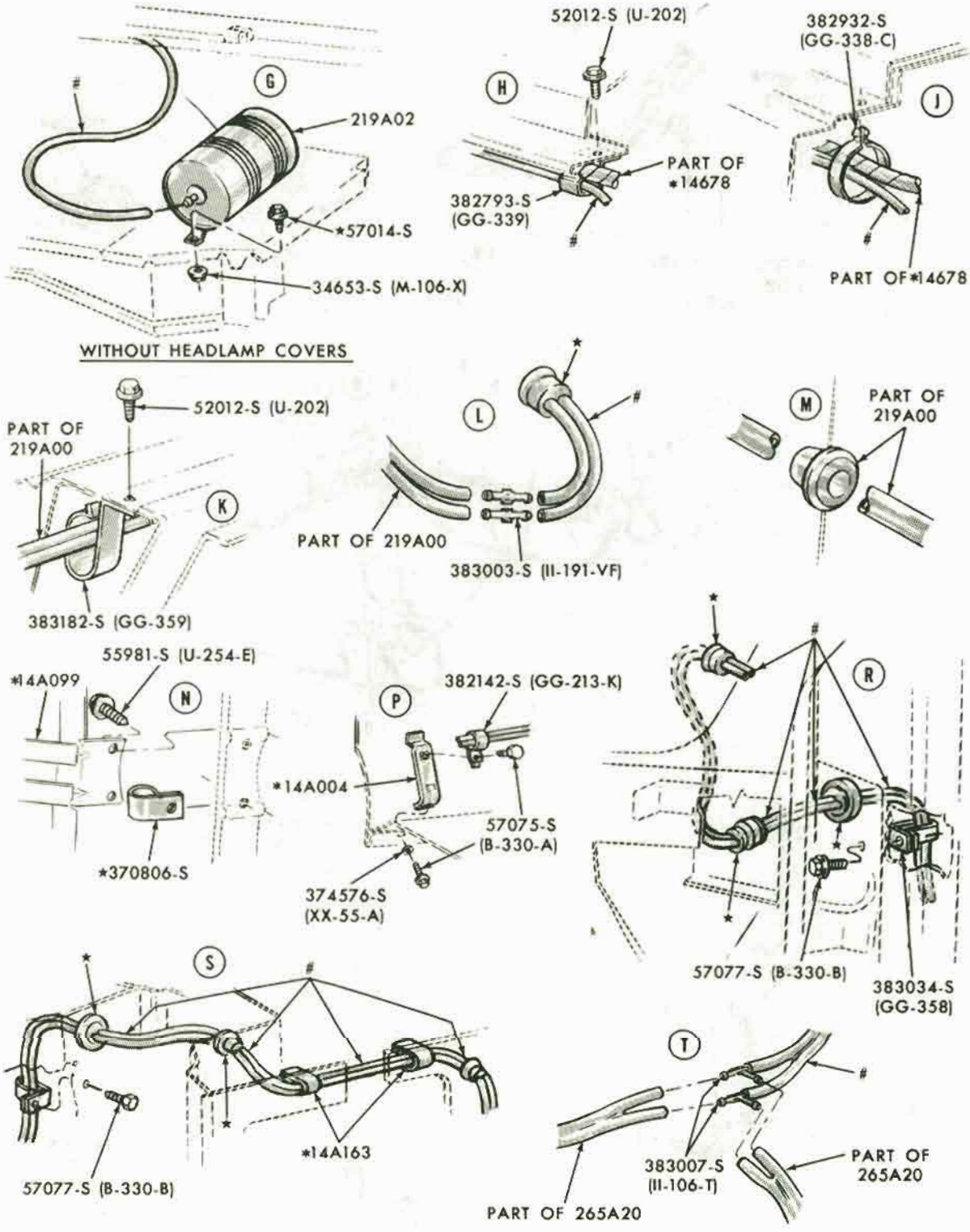

* REFER TO GROUP IN CHASSIS SECTION

CUT AS REQUIRED FROM BULK HOSE, BASIC 17543 IN CHASSIS SECTION P-6863-B

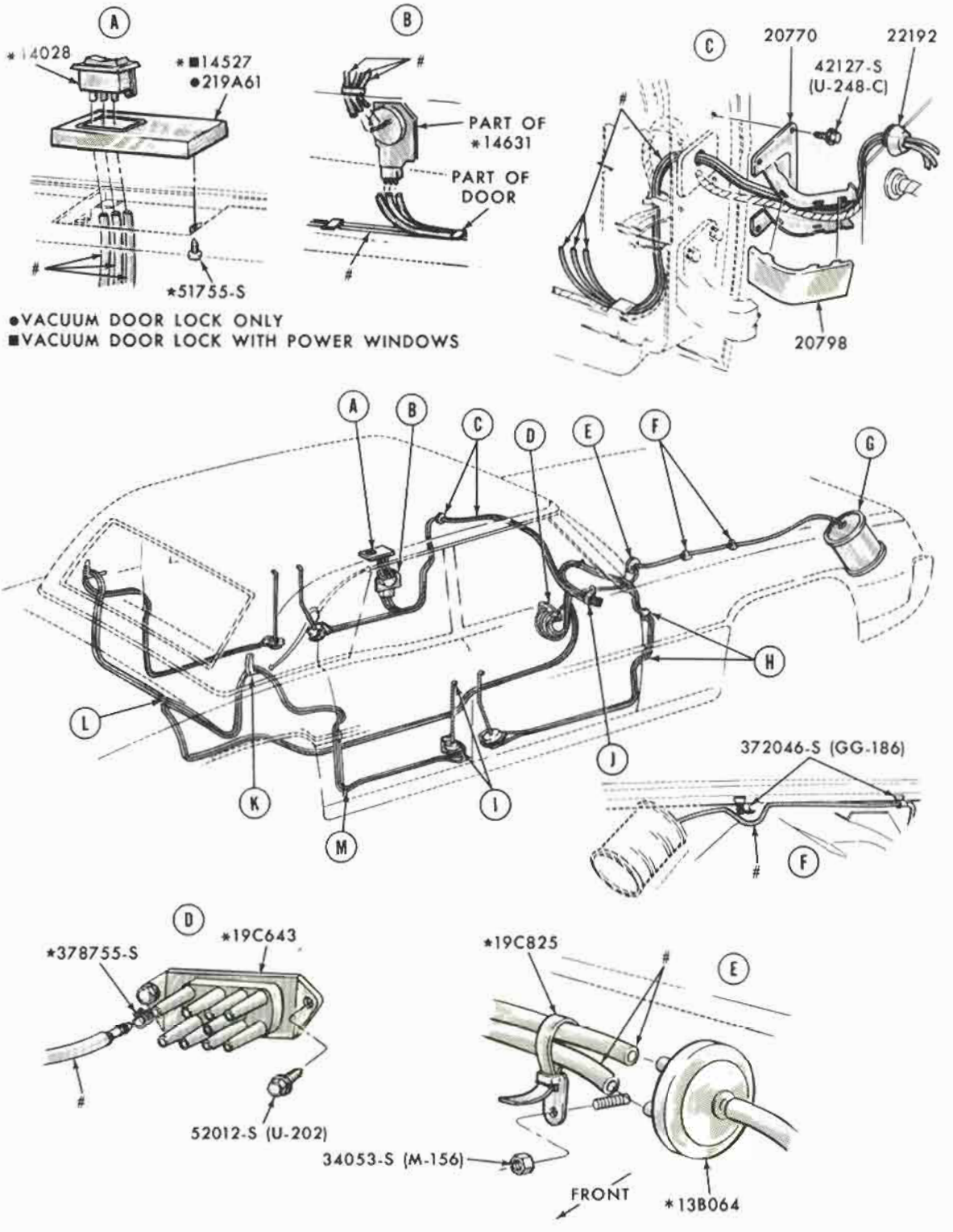

●VACUUM DOOR LOCK ONLY
■VACUUM DOOR LOCK WITH POWER WINDOWS

* REFER TO GROUP IN CHASSIS SECTION
#CUT AS REQUIRED FROM BULK HOSE, BASIC 17543 IN CHASSIS SECTION

P-6864-A

VACUUM DOOR LATCH SYSTEM
1969/70 THUNDERBIRD

COPYRIGHT © 1975 — FORD MOTOR COMPANY — DEARBORN, MICHIGAN

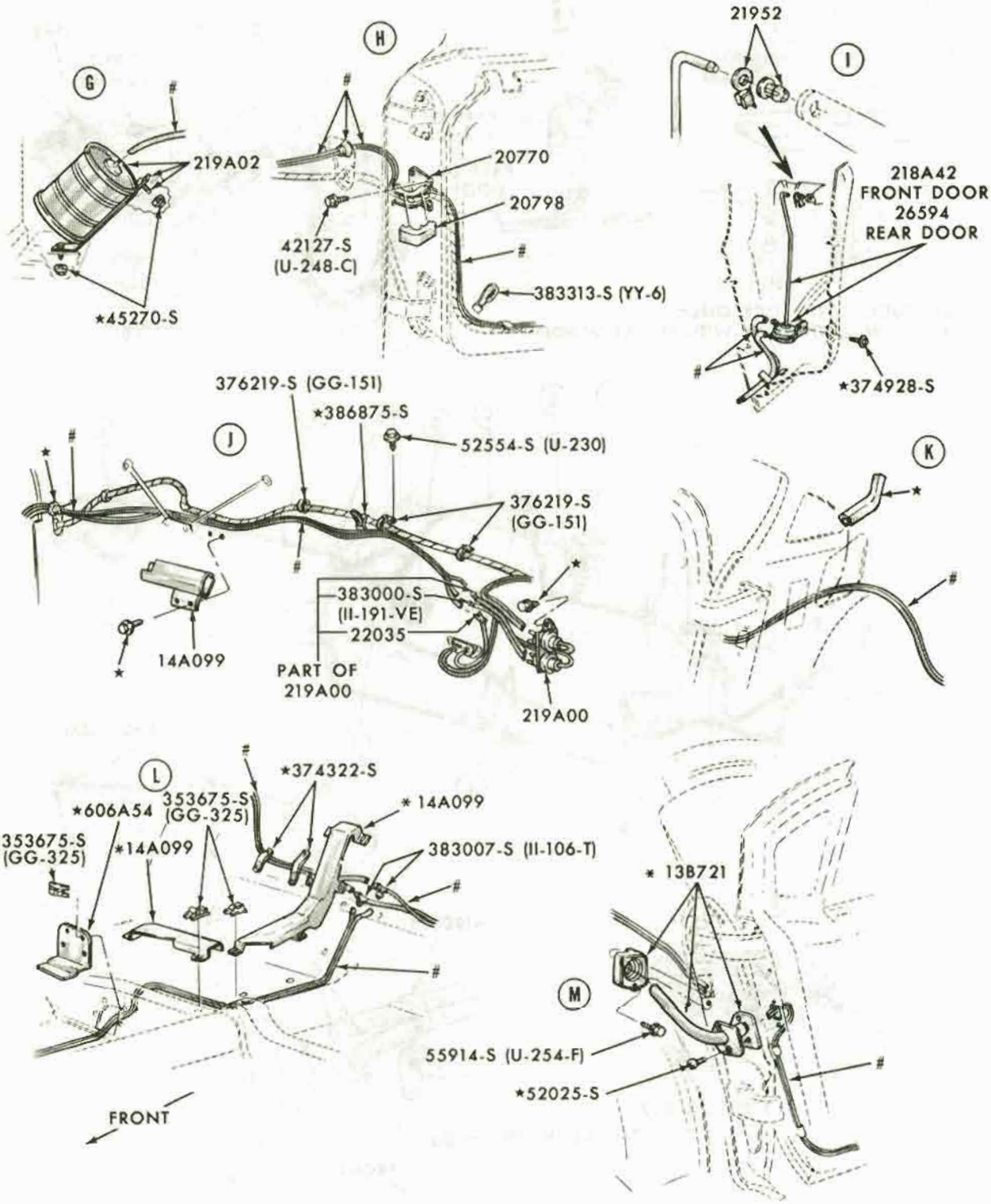

* REFER TO GROUP IN CHASSIS SECTION
#CUT AS REQUIRED FROM BULK HOSE, BASIC 17543 IN CHASSIS SECTION

P-6864-B

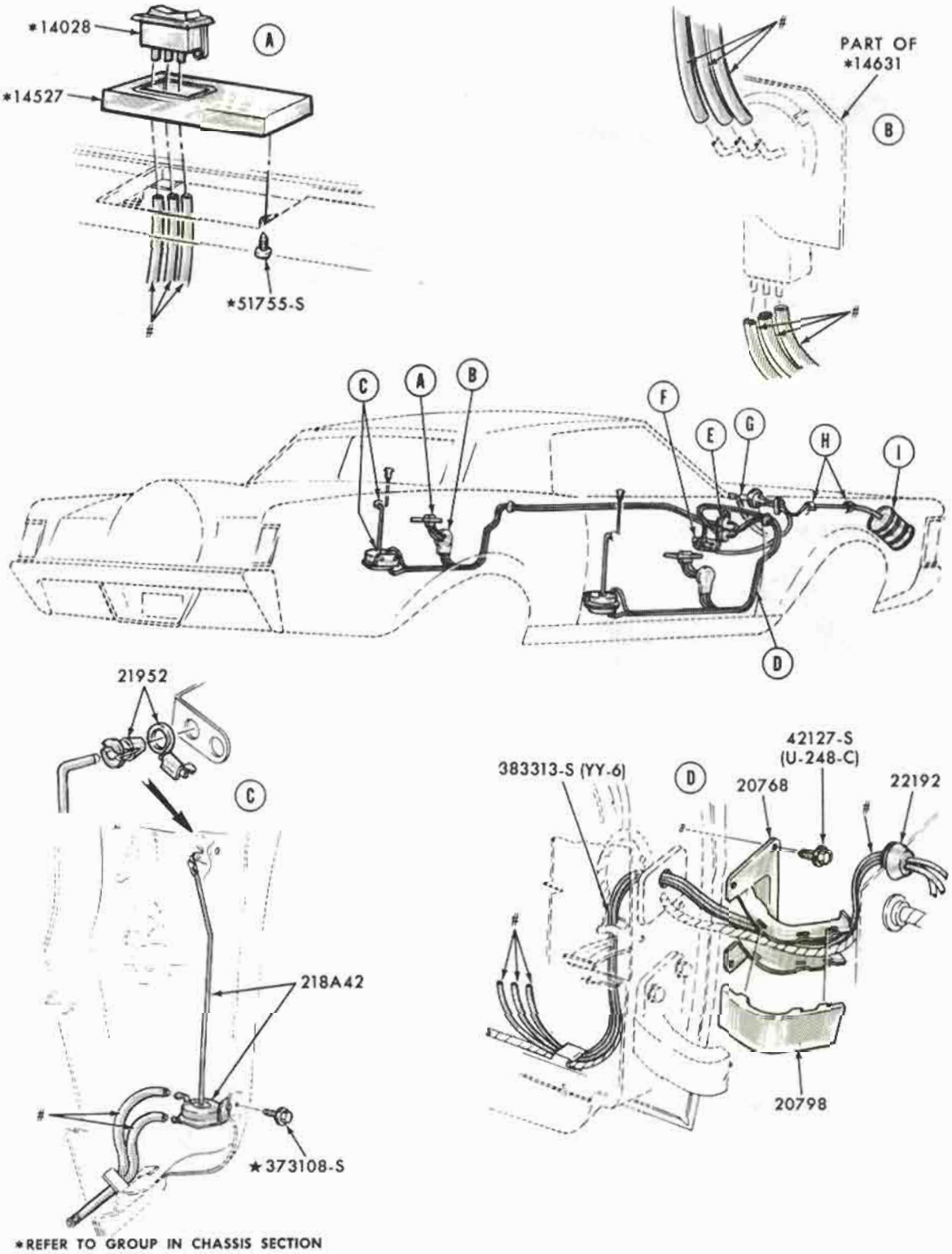

*REFER TO GROUP IN CHASSIS SECTION

#CUT AS REQUIRED FROM BULK HOSE, BASIC 17543 IN CHASSIS SECTION

P-6865-A

VACUUM DOOR LATCH SYSTEM
1968 THUNDERBIRD

COPYRIGHT © 1975 — FORD MOTOR COMPANY — DEARBORN, MICHIGAN

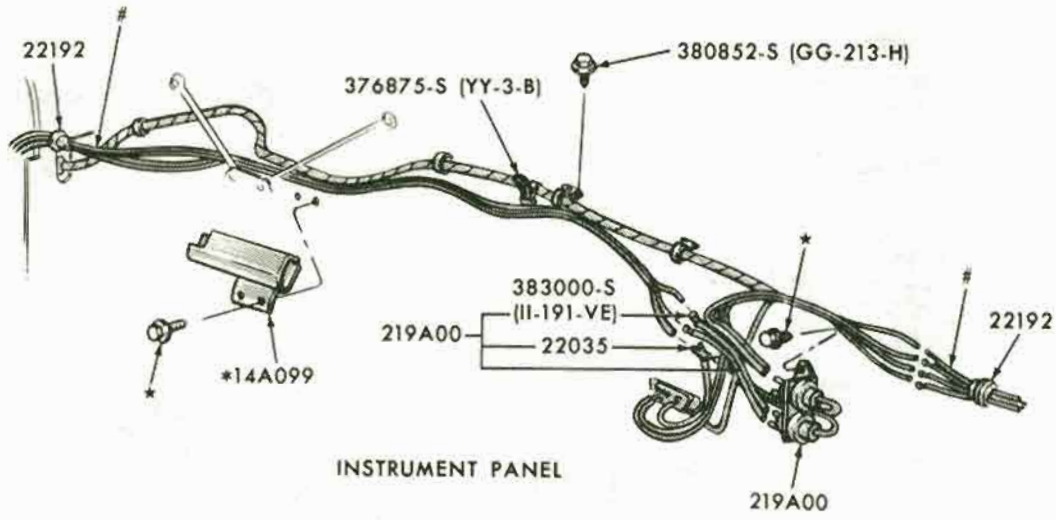

INSTRUMENT PANEL

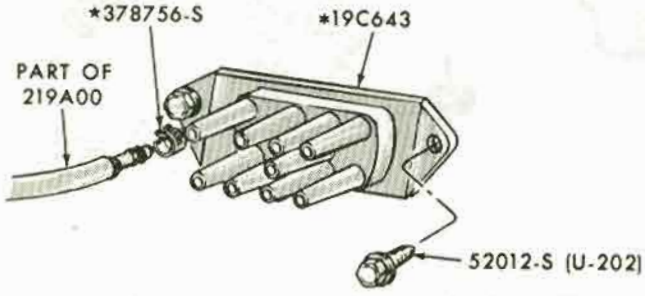

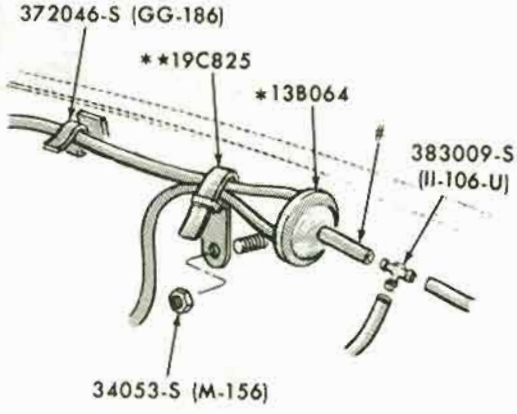

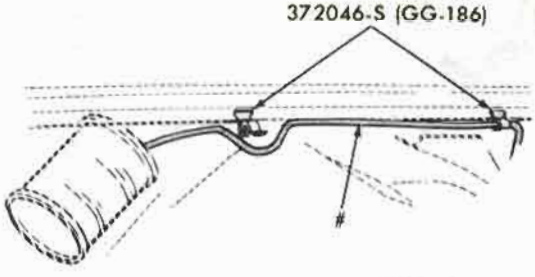

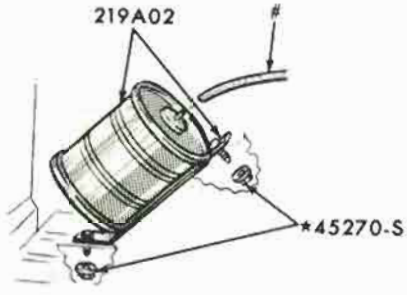

* REFER TO GROUP IN CHASSIS SECTION

CUT AS REQUIRED FROM BULK HOSE, BASIC 17543 IN CHASSIS SECTION

P-6865-B

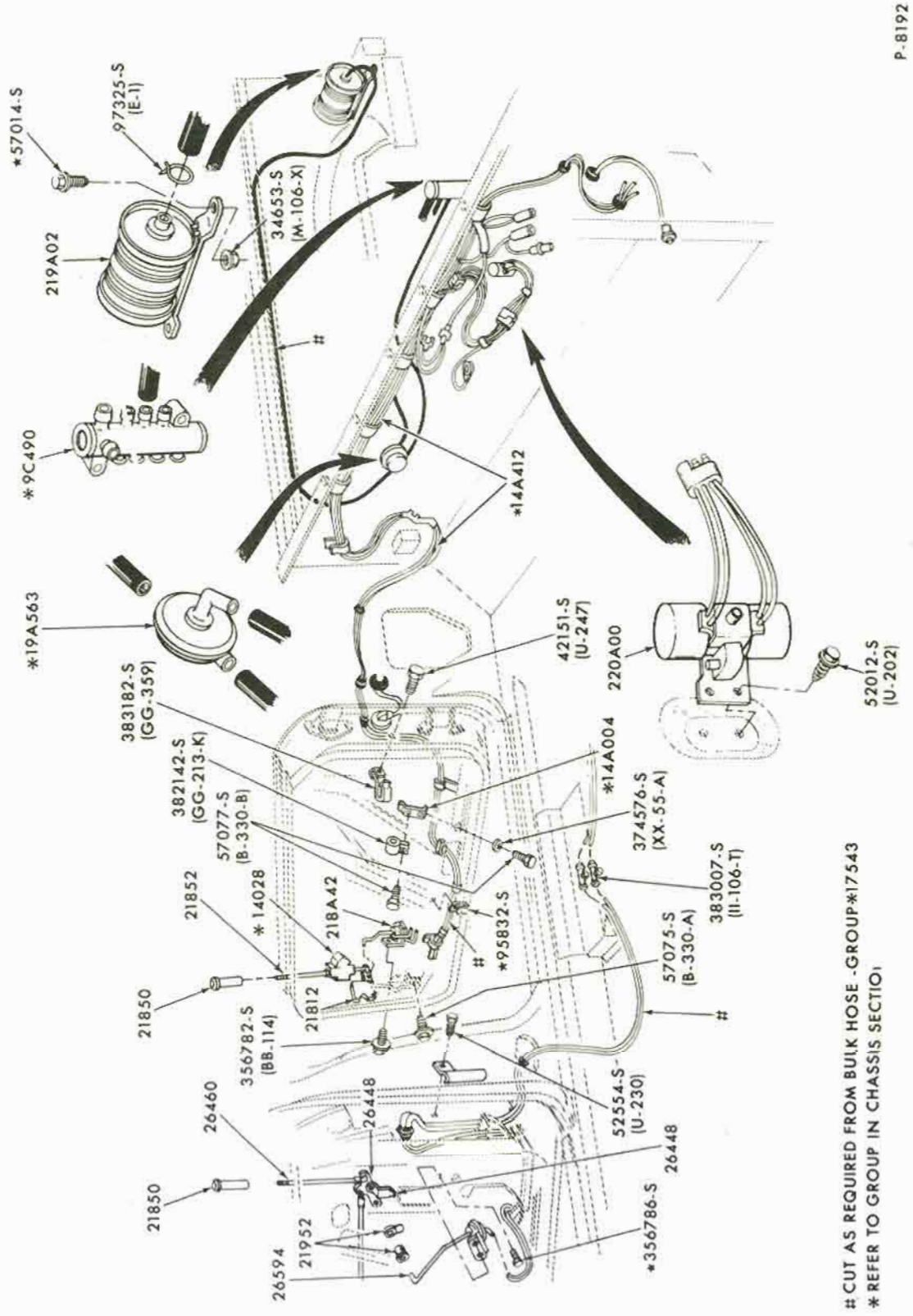

VACUUM DOOR LATCH SYSTEM

1971/72 FORD

COPYRIGHT © 1975 — FORD MOTOR COMPANY — DEARBORN, MICHIGAN

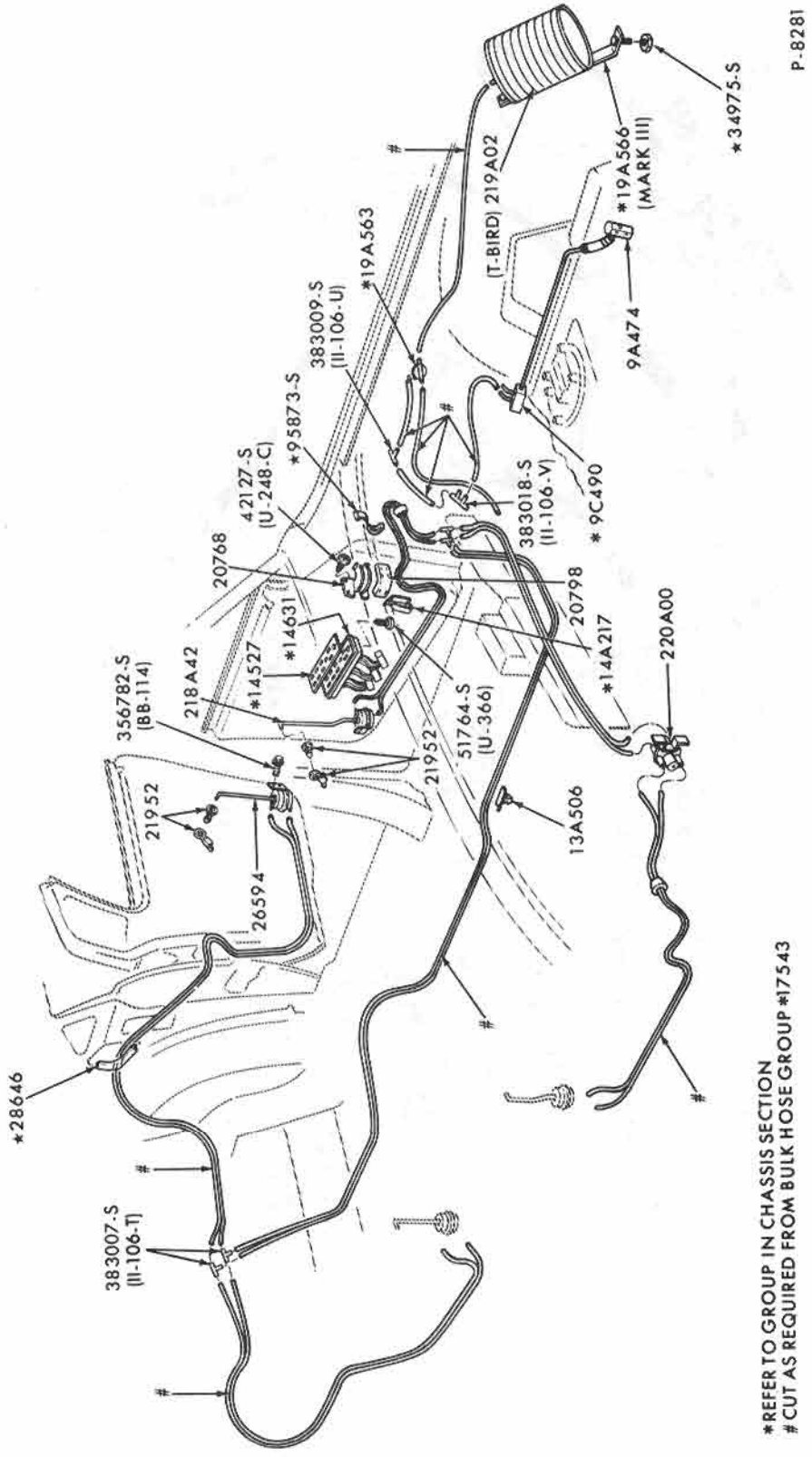

VACUUM DOOR LATCH SYSTEM
1971 THUNDERBIRD

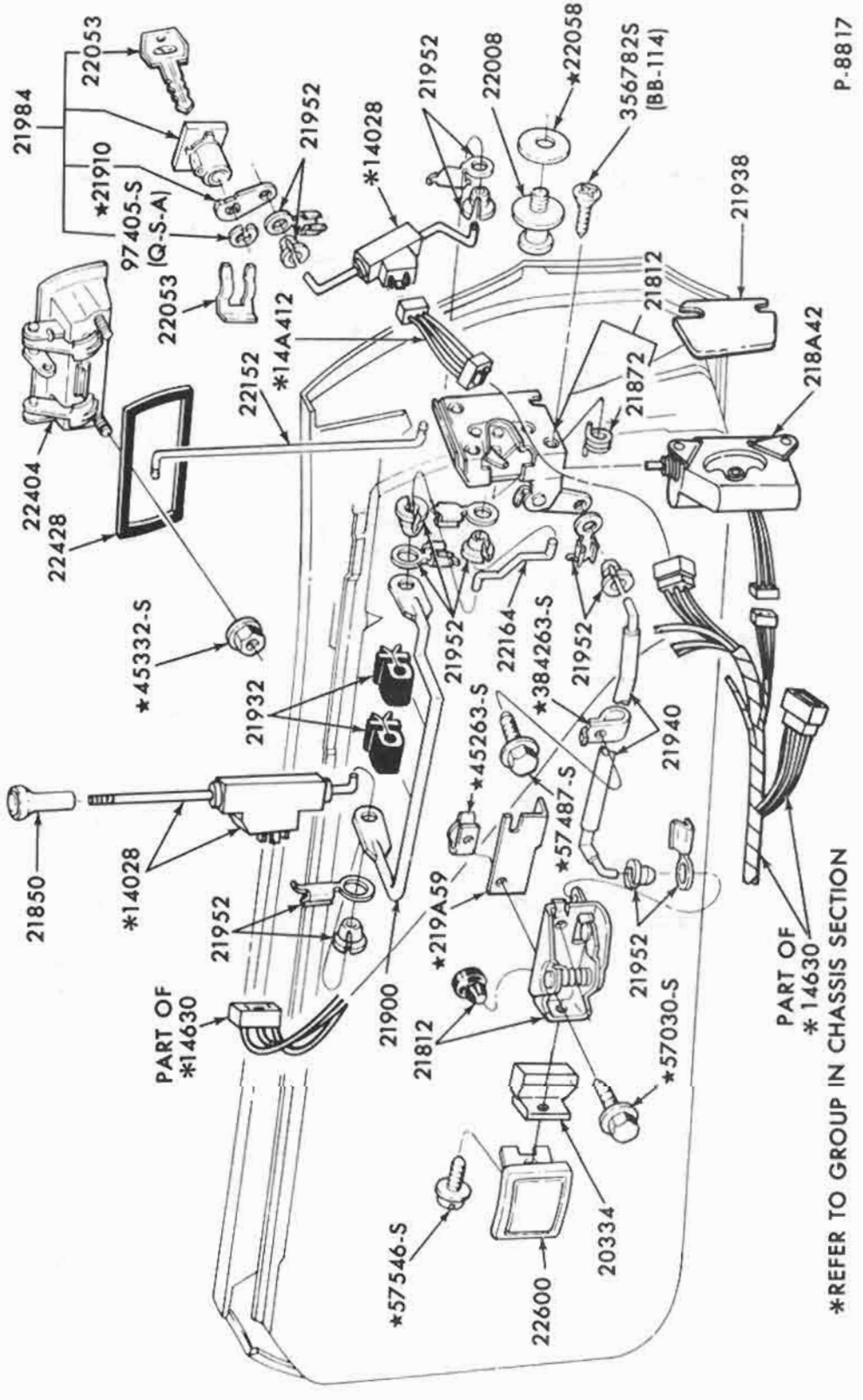

ELECTRIC DOOR LATCH SYSTEM
1972 THUNDERBIRD

COPYRIGHT © 1975— FORD MOTOR COMPANY —DEARBORN, MICHIGAN

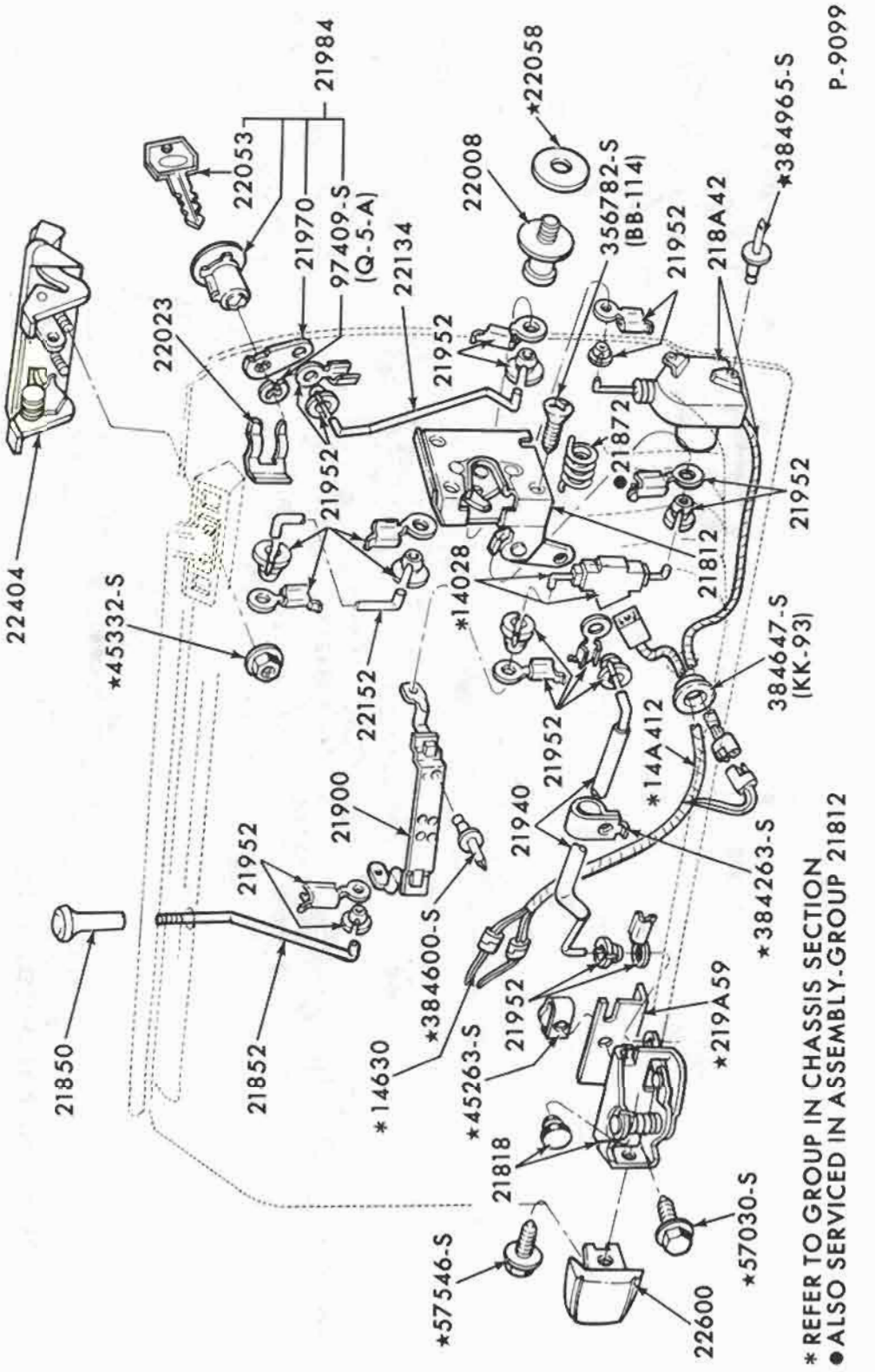

ELECTRIC FRONT DOOR LATCH SYSTEM
1972 TORINO

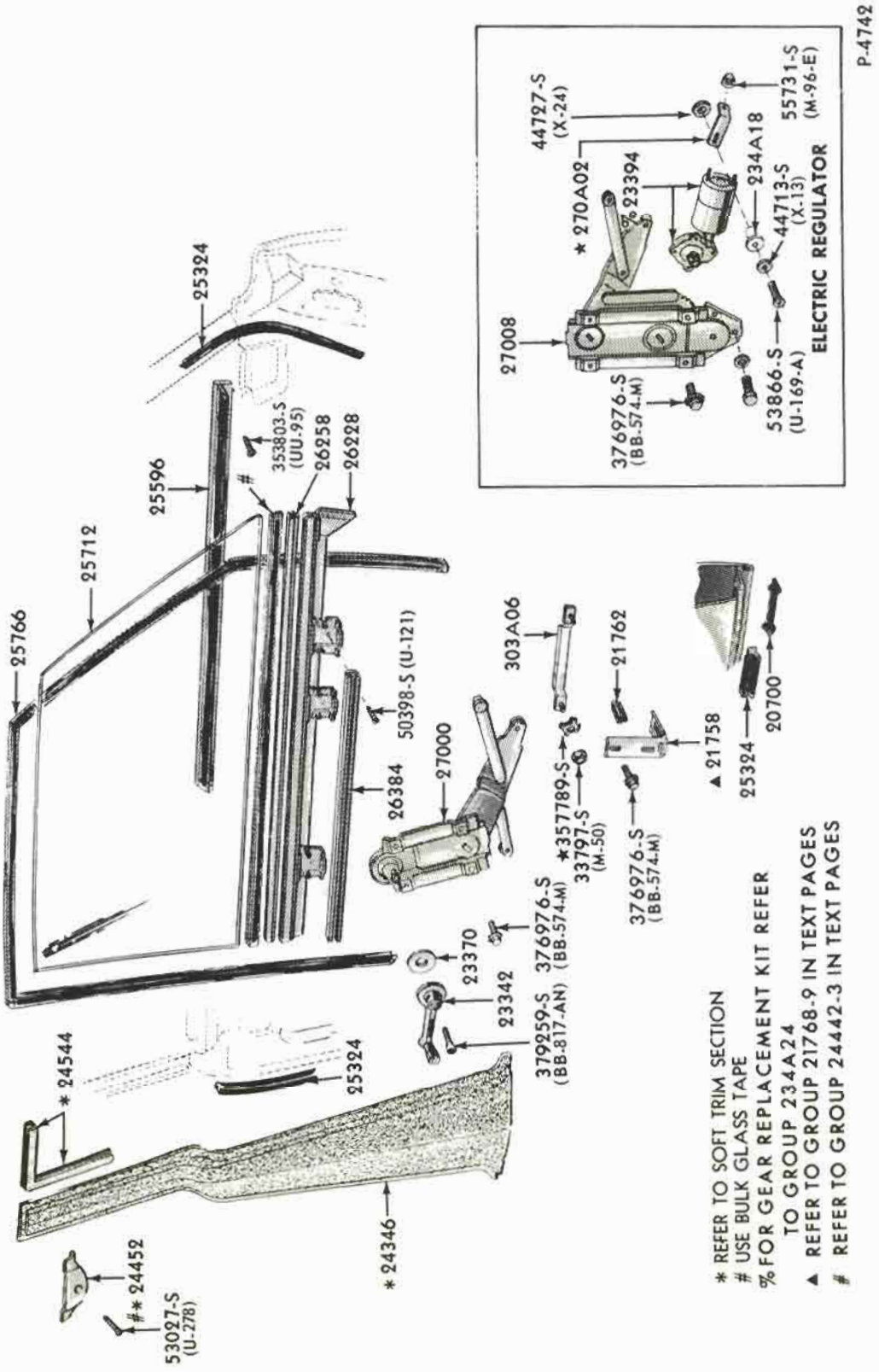

REAR DOOR WINDOW and RELATED PARTS
1965/68 FORD - BODY TYPES 54, 71

COPYRIGHT © 1975 — FORD MOTOR COMPANY — DEARBORN, MICHIGAN

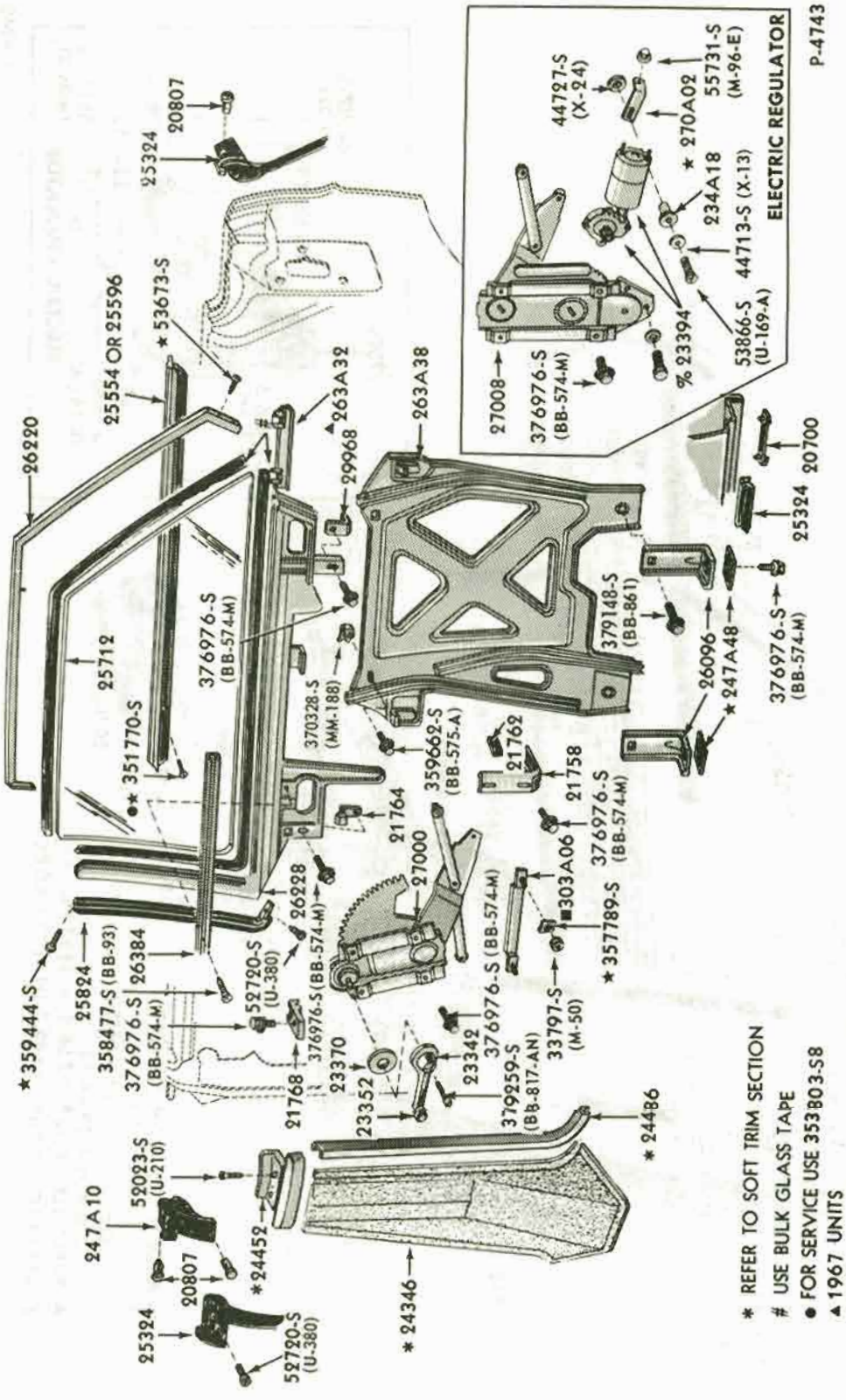

REAR DOOR WINDOW and RELATED PARTS
1965/68 FORD - BODY TYPE 57

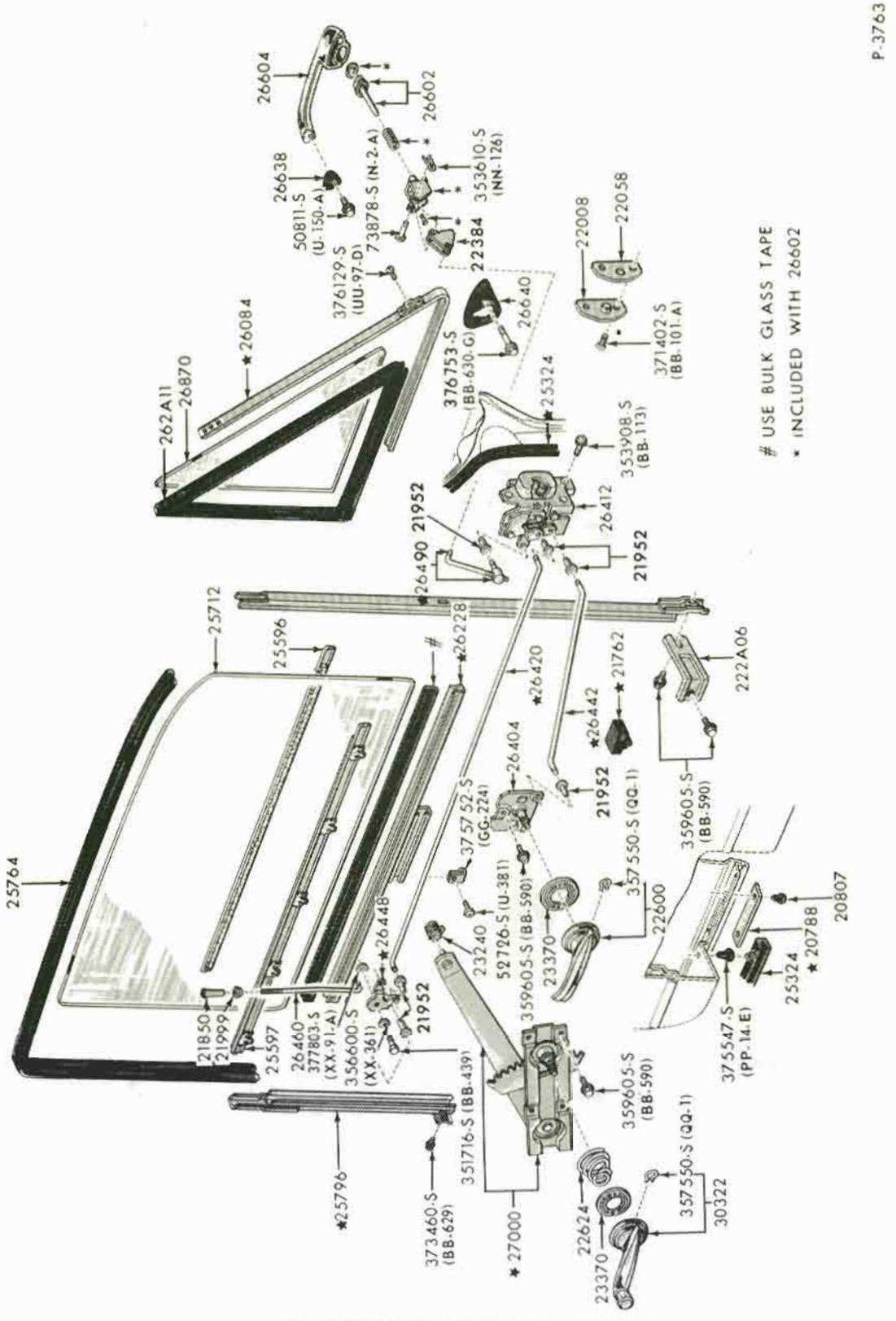

REAR DOOR WINDOW and RELATED PARTS
1965 FAIRLANE - BODY TYPES 54, 71

COPYRIGHT © 1975 — FORD MOTOR COMPANY — DEARBORN, MICHIGAN

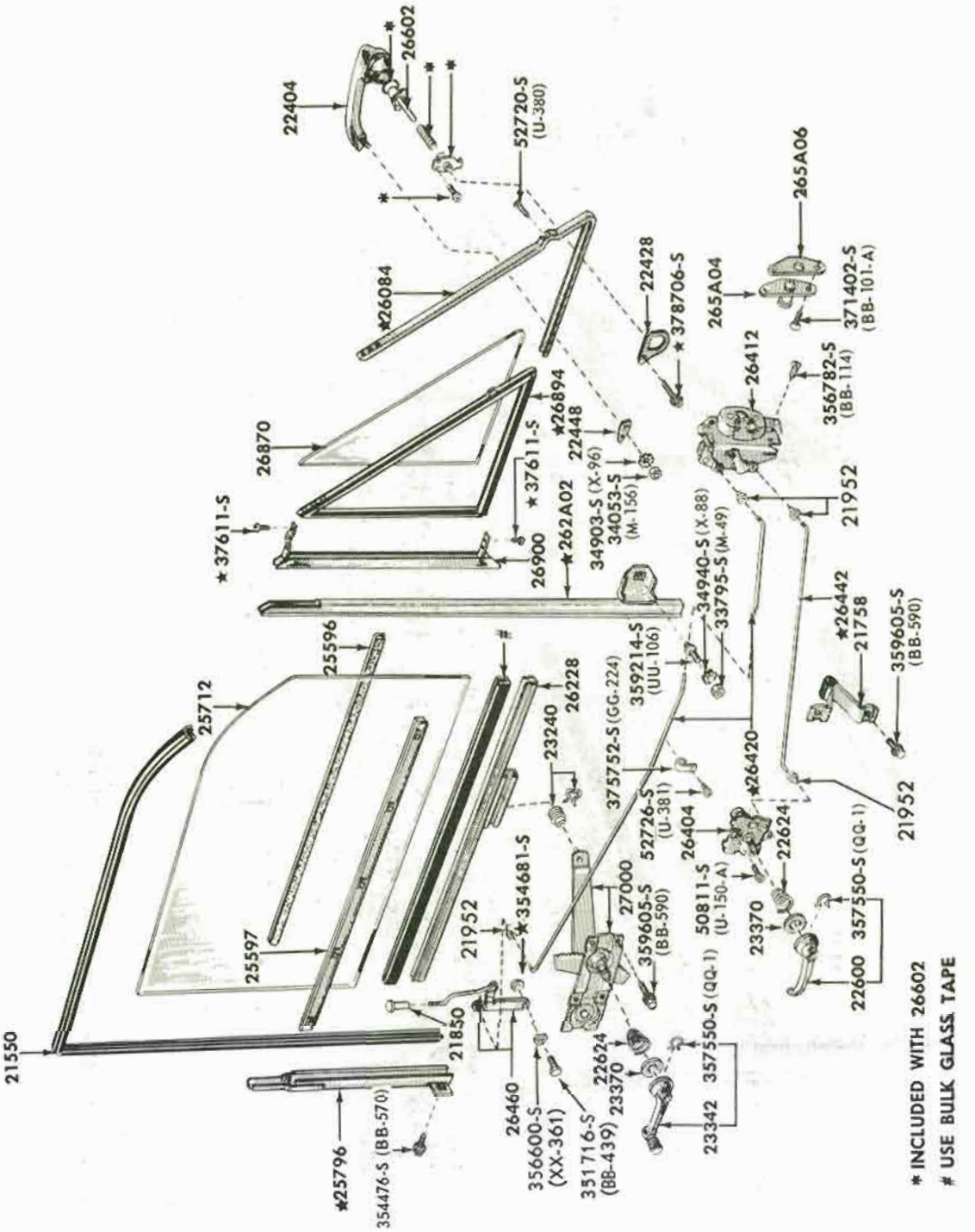

REAR DOOR WINDOW and RELATED PARTS
1965 FALCON - BODY TYPE 54

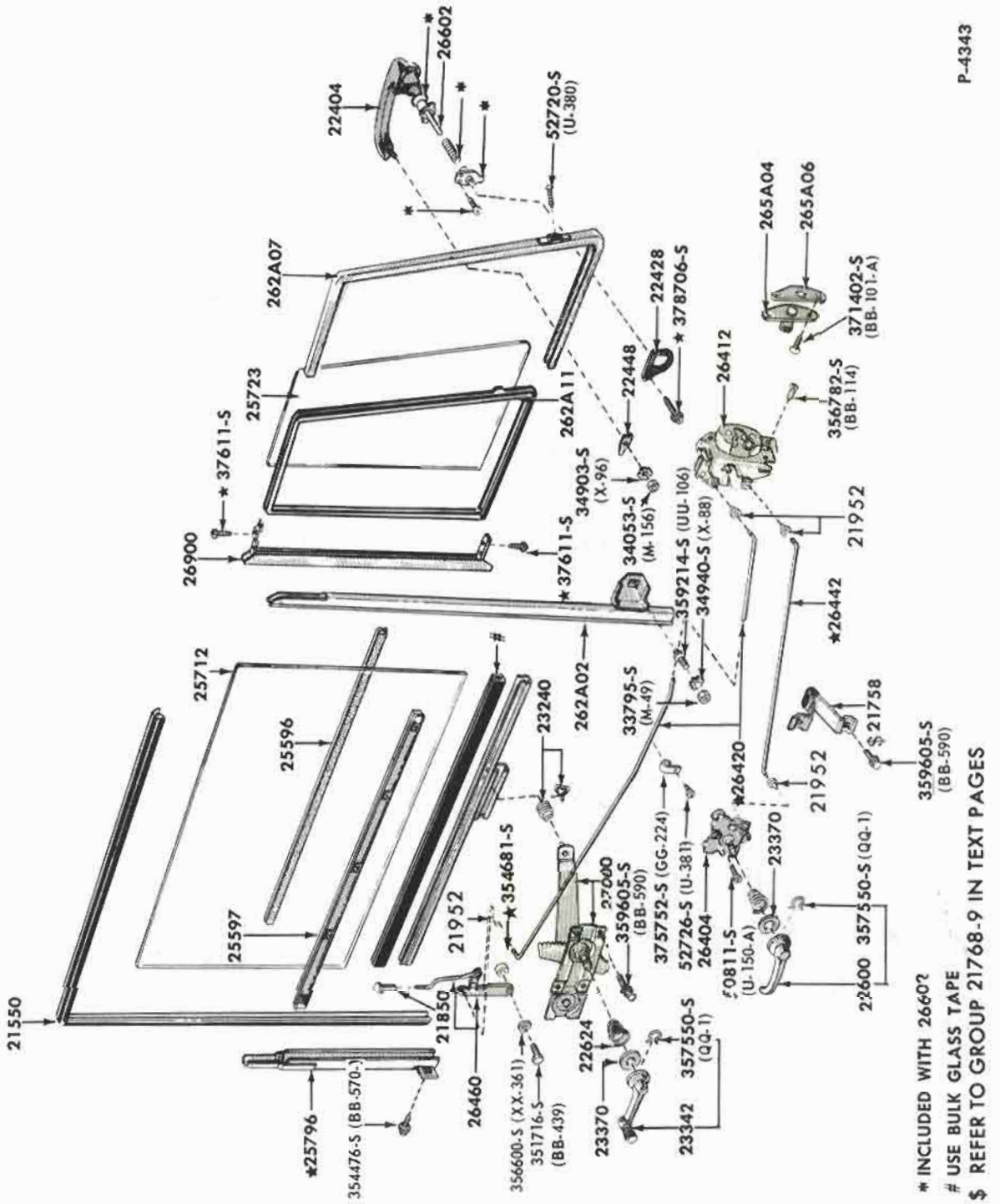

REAR DOOR WINDOW and RELATED PARTS
1965 FALCON - BODY TYPE 71

COPYRIGHT © 1975 — FORD MOTOR COMPANY — DEARBORN, MICHIGAN

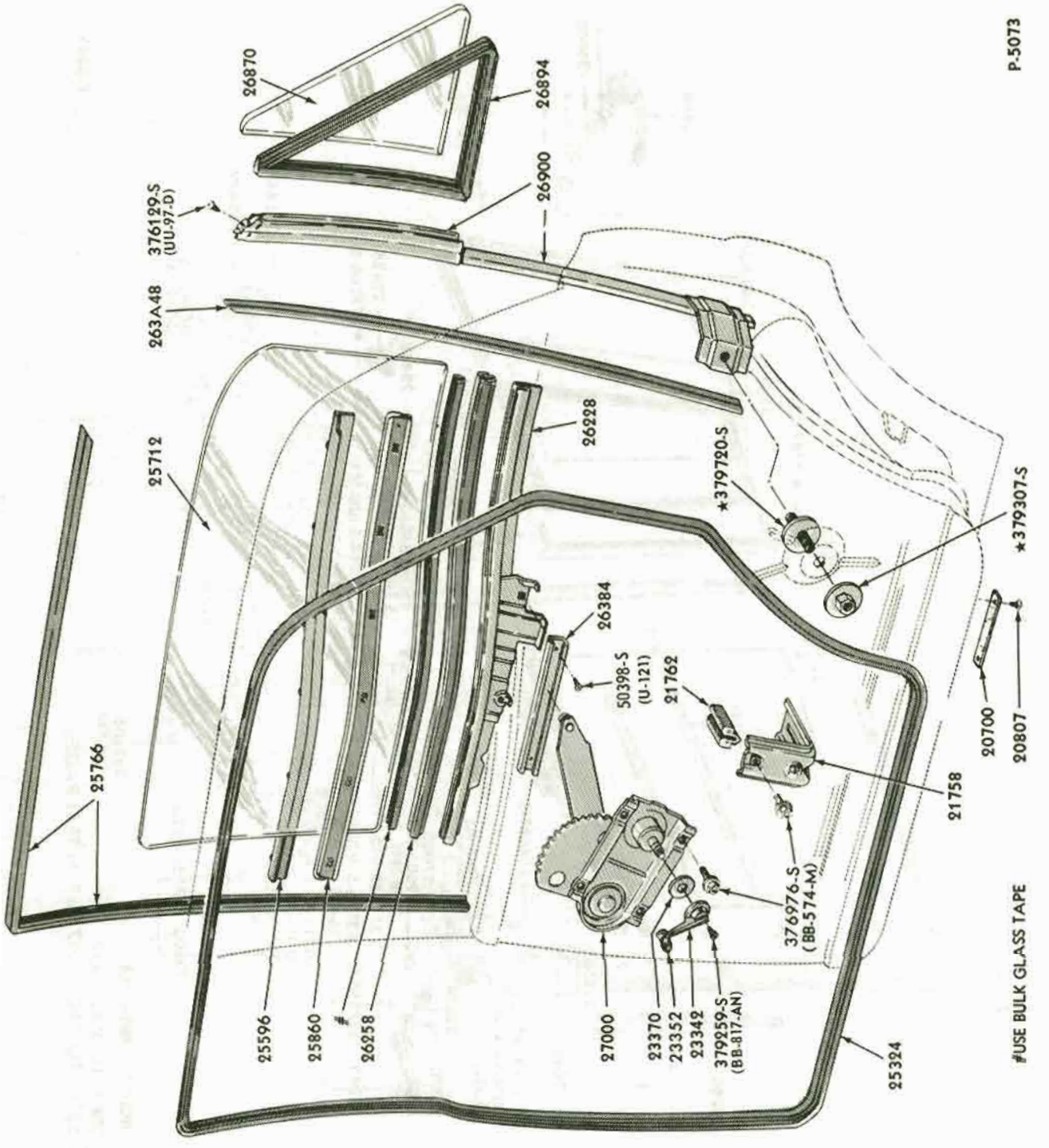

REAR DOOR WINDOW and RELATED PARTS
1966/67 FAIRLANE - BODY TYPES 54, 71
1966/70 FALCON - BODY TYPES 54, 71

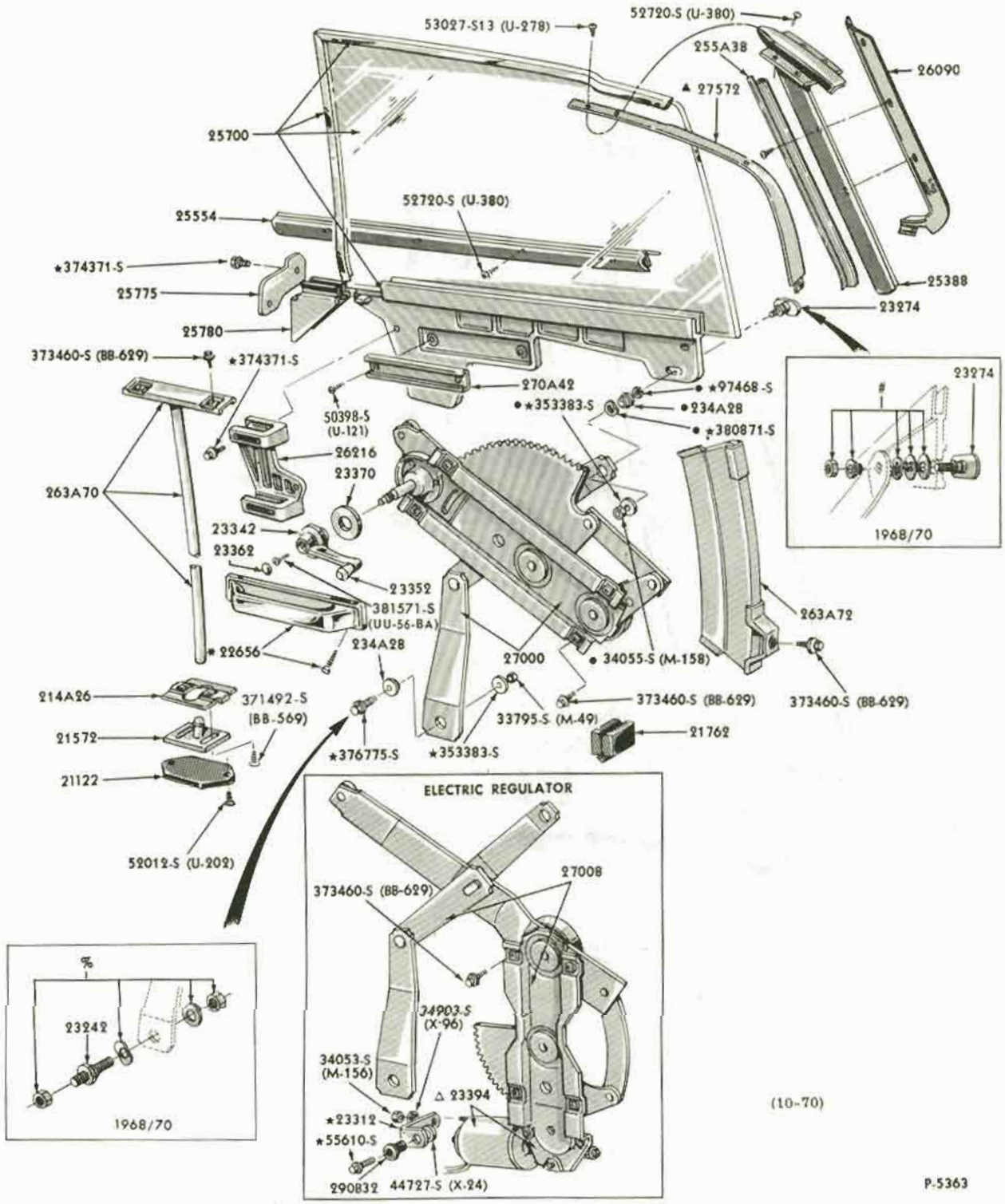

● INCLUDED WITH 23274 ▲ 1967 ONLY * REFER TO SOFT TRIM SECTION
△ FOR GEAR REPLACEMENT KIT REFER TO GROUP 234A24
% INCLUDED WITH 23242 # INCLUDED WITH 23274

REAR DOOR WINDOW and RELATED PARTS
1967/70 THUNDERBIRD - BODY TYPE 57

COPYRIGHT © 1975 — FORD MOTOR COMPANY — DEARBORN, MICHIGAN

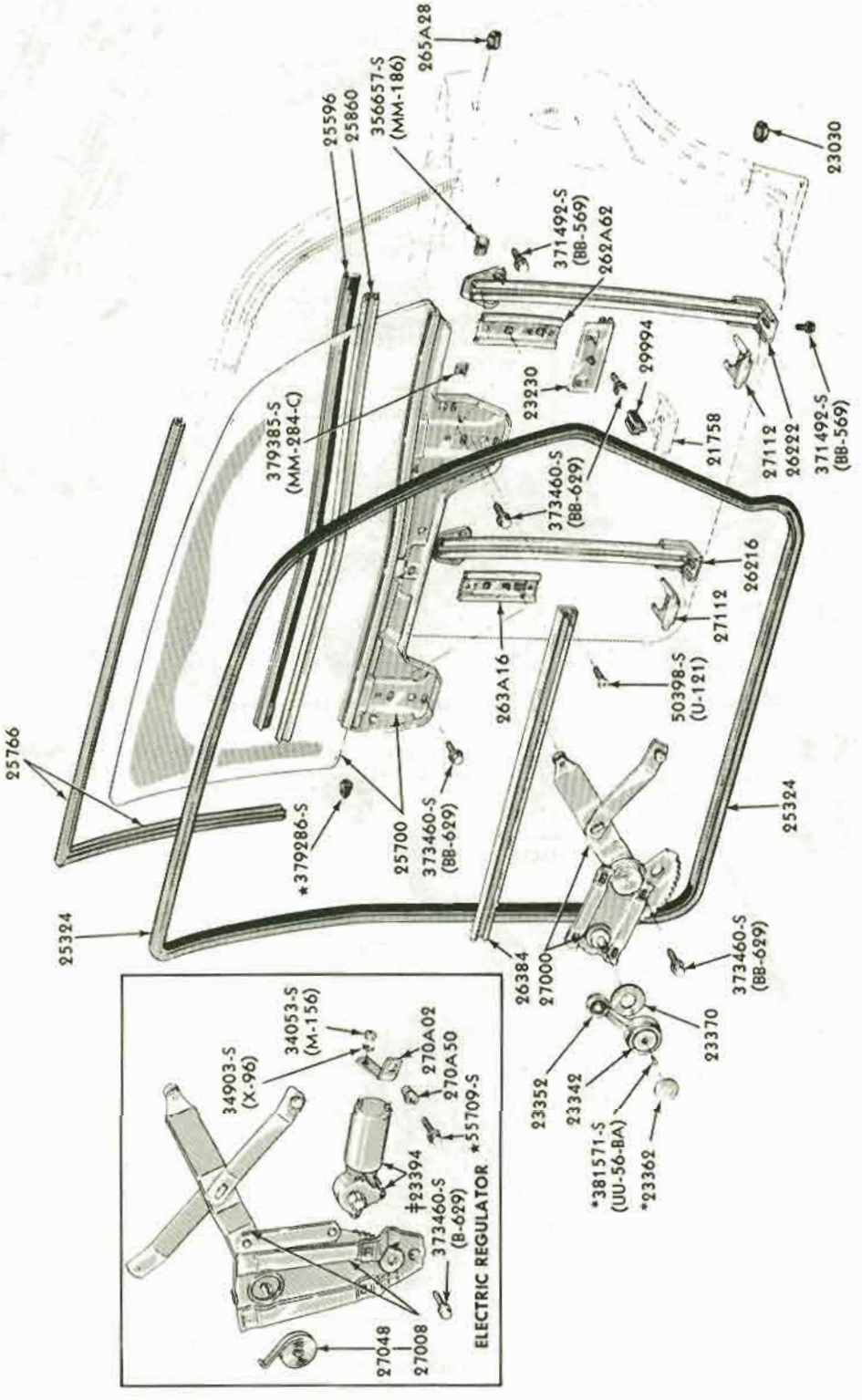

‡FOR GEAR REPLACEMENT KIT REFER TO GROUP 234A24
*ALSO INCLUDED WITH 23342

REAR DOOR WINDOW and RELATED PARTS
1968/69 FAIRLANE/TORINO - BODY TYPE 54

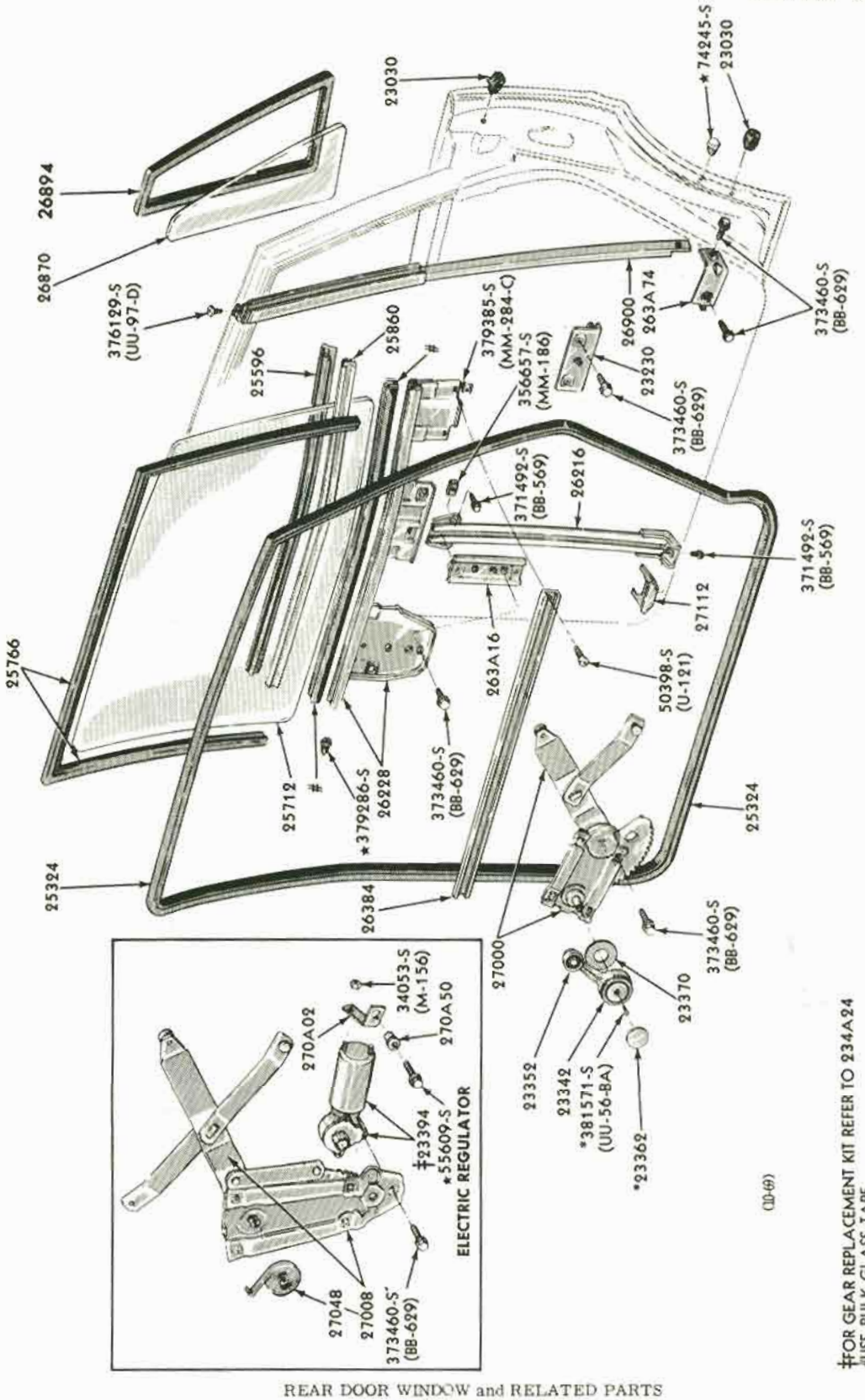

REAR DOOR WINDOW and RELATED PARTS
1968/69 FAIRLANE/TORINO - BODY TYPE 71

COPYRIGHT © 1975 — FORD MOTOR COMPANY — DEARBORN, MICHIGAN

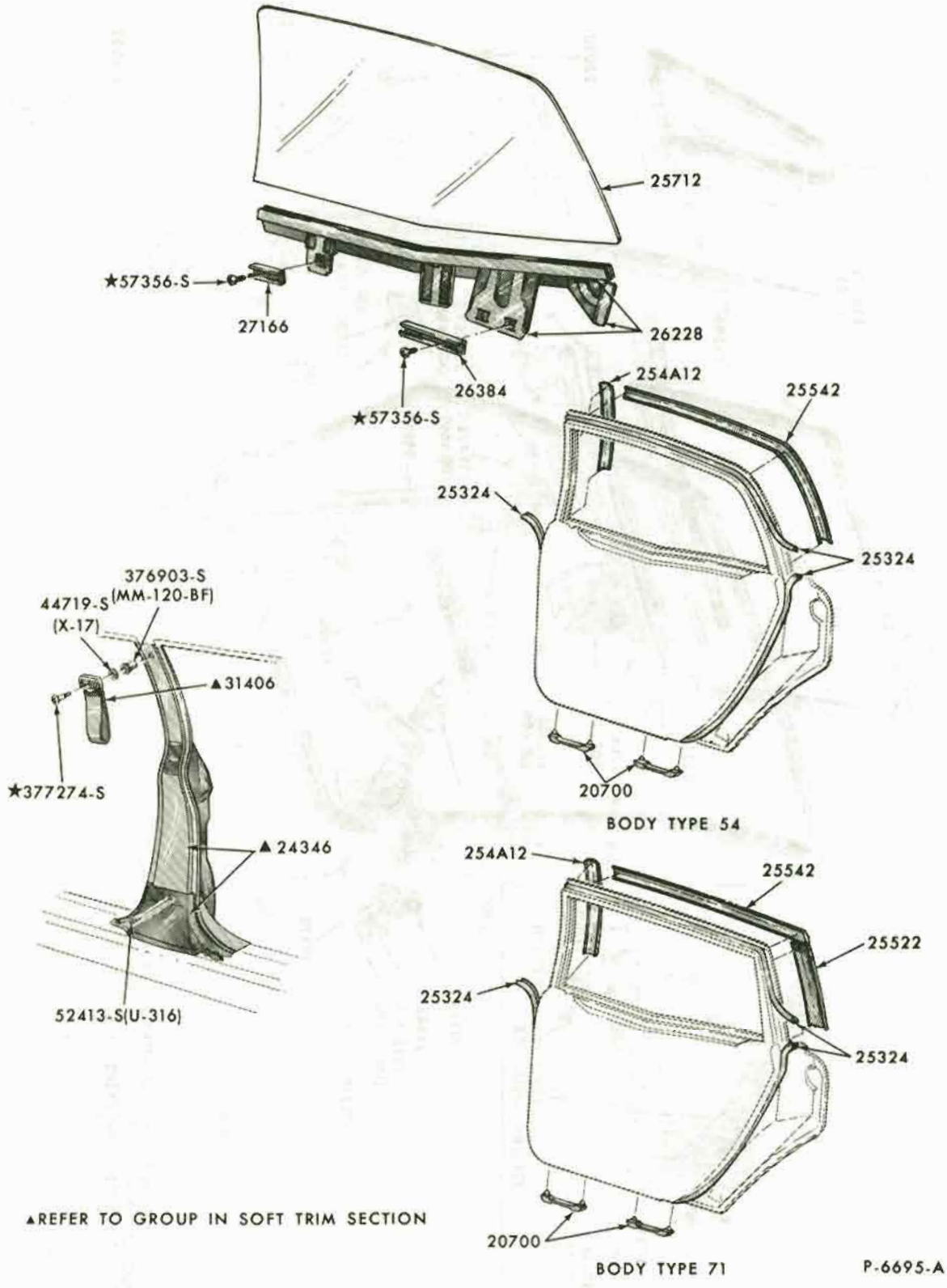

▲REFER TO GROUP IN SOFT TRIM SECTION

REAR DOOR WINDOW and RELATED PARTS
1969/70 FORD - BODY TYPES 54, 71

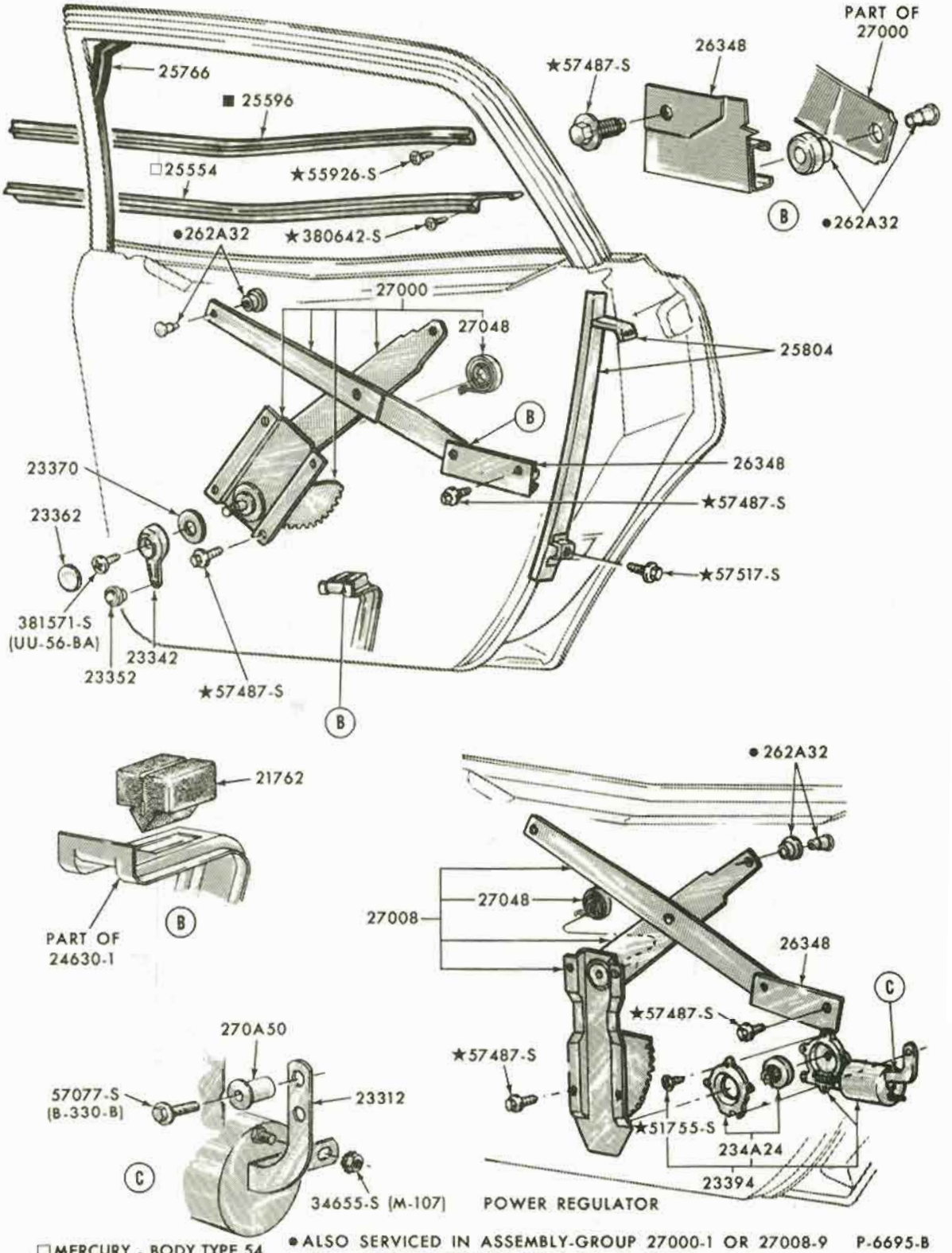

□MERCURY - BODY TYPE 54 ●ALSO SERVICED IN ASSEMBLY-GROUP 27000-1 OR 27008-9 P-6695-B
■FORD - BODY TYPE 54, 71 and MERCURY - BODY TYPE 71

REAR DOOR WINDOW and RELATED PARTS - continued
1969/70 FORD - BODY TYPES 54, 71

COPYRIGHT © 1975 — FORD MOTOR COMPANY — DEARBORN, MICHIGAN

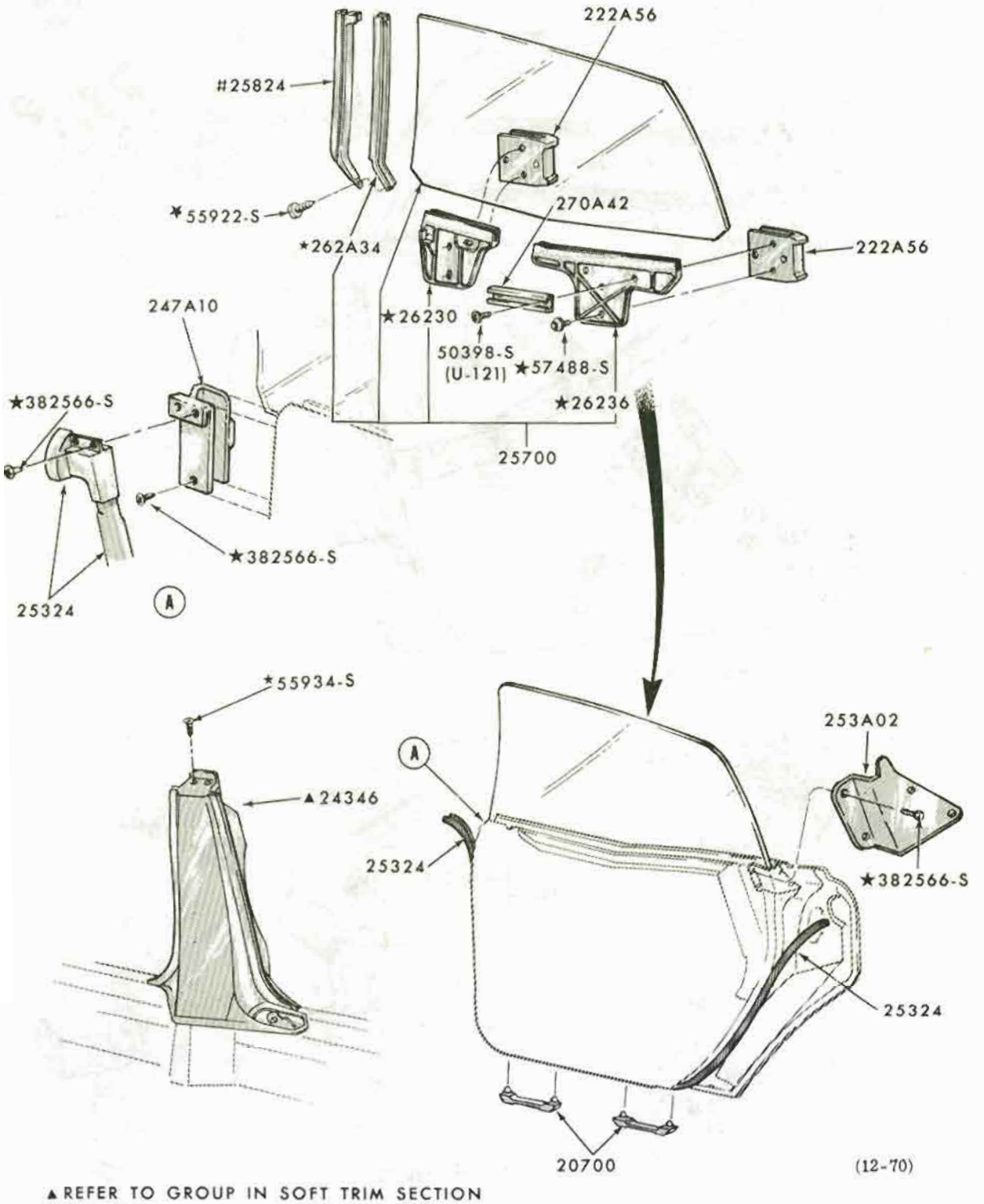

(12-70)

▲ REFER TO GROUP IN SOFT TRIM SECTION
#1970 ONLY

P-6696-A

REAR DOOR WINDOW and RELATED PARTS
1969/70 FORD - BODY TYPE 57

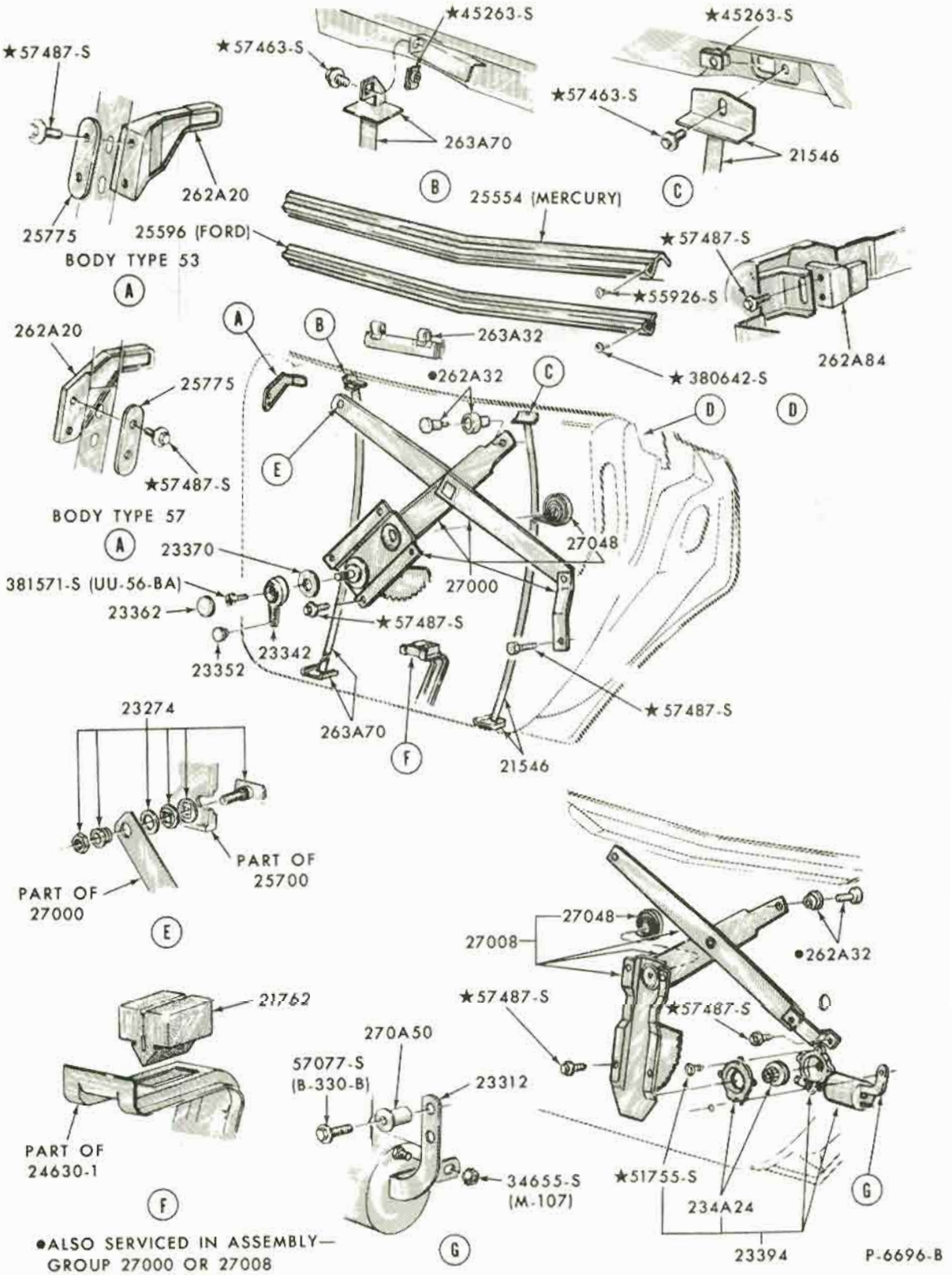

REAR DOOR WINDOW and RELATED PARTS - continued
1969/70 FORD - BODY TYPE 57

COPYRIGHT © 1975 — FORD MOTOR COMPANY — DEARBORN, MICHIGAN

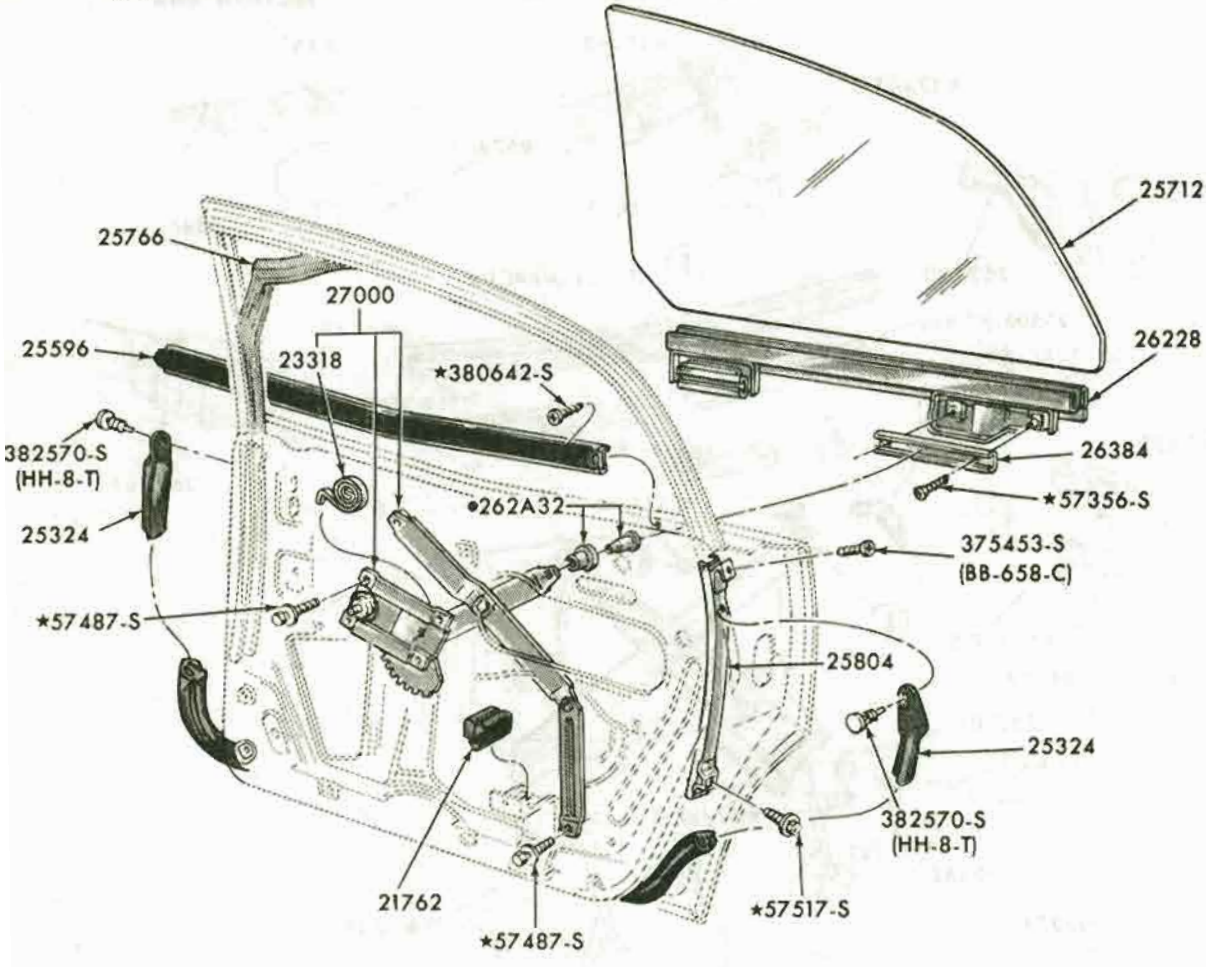

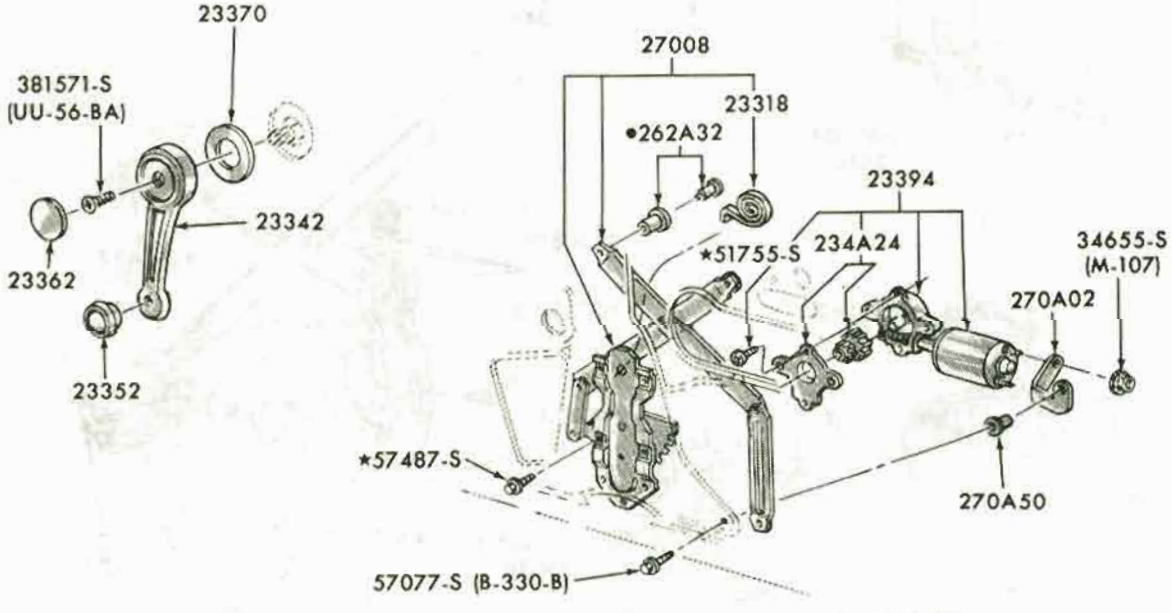

•ALSO SERVICED IN ASSEMBLY - GROUP 27000 OR 27008 P-7092

REAR DOOR WINDOW MECHANISM and RELATED PARTS
1970/71 FAIRLANE/TORINO - BODY TYPE 54

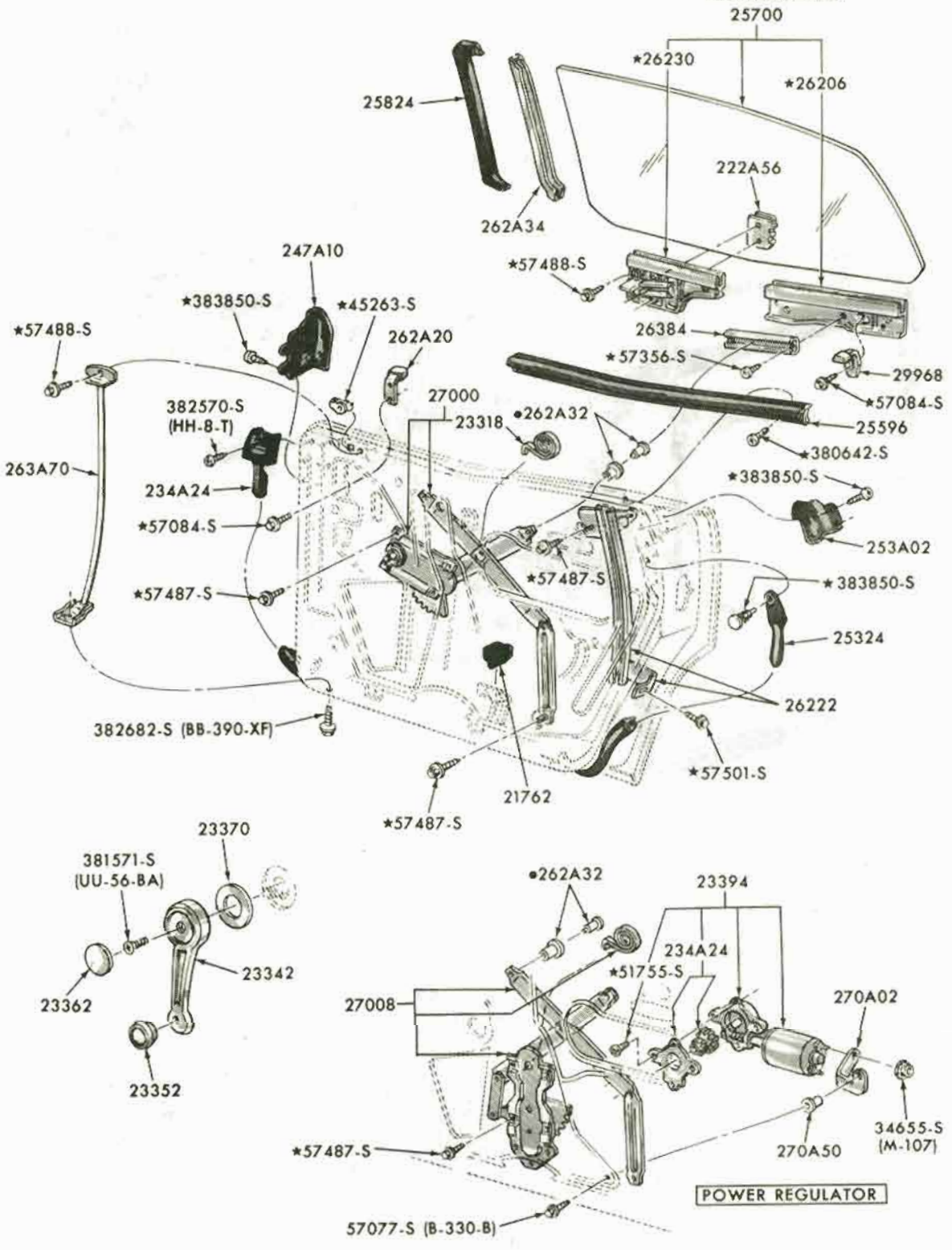

•ALSO SERVICED IN ASSEMBLY-GROUP 27000 OR 27008

P-7096

REAR DOOR WINDOW MECHANISM and RELATED PARTS
1970 FAIRLANE/TORINO - BODY TYPE 57

COPYRIGHT © 1975 — FORD MOTOR COMPANY — DEARBORN, MICHIGAN

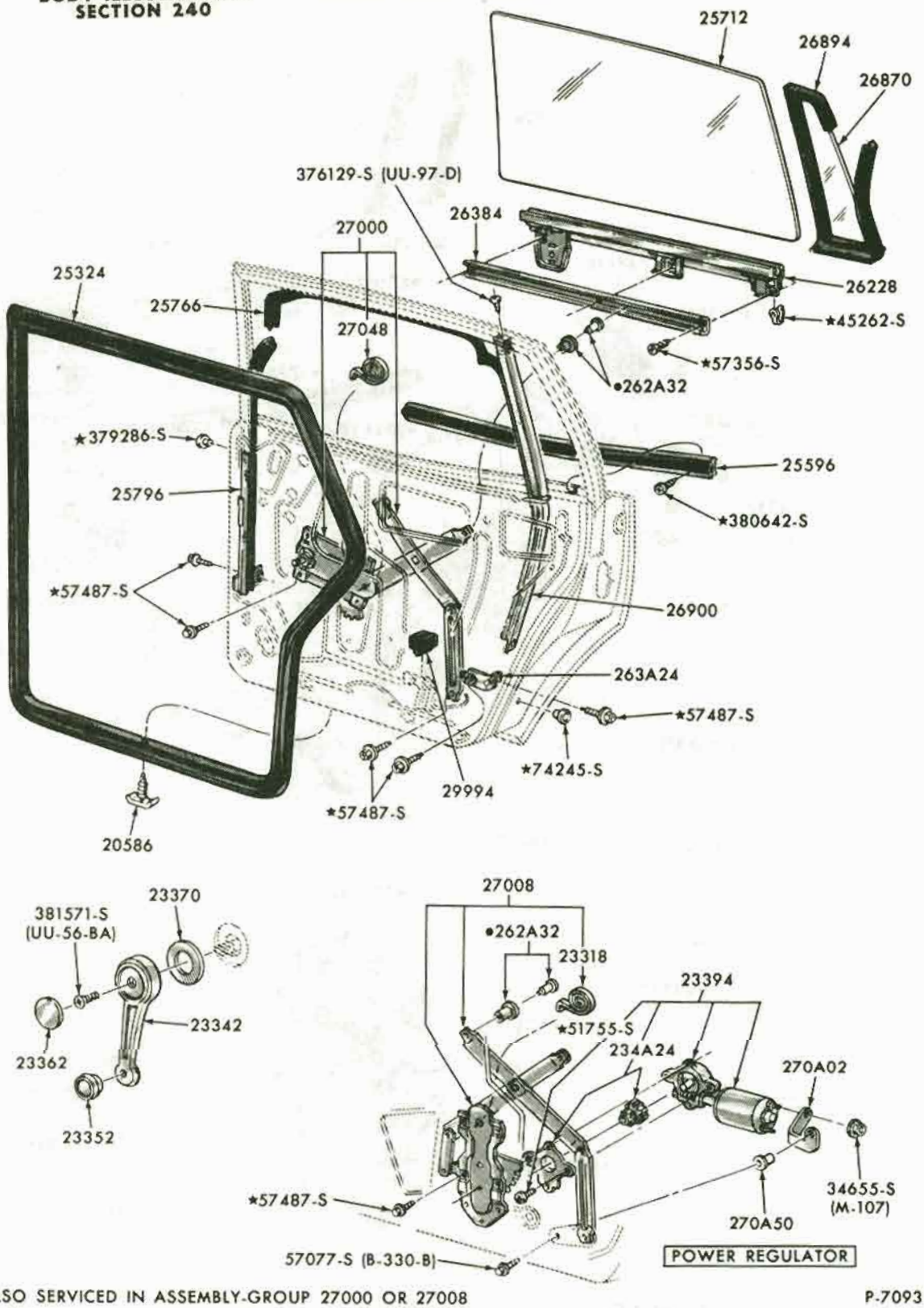

•ALSO SERVICED IN ASSEMBLY-GROUP 27000 OR 27008

P-7093

REAR DOOR WINDOW MECHANISM and RELATED PARTS
1970/71 FAIRLANE/TORINO - BODY TYPE 71

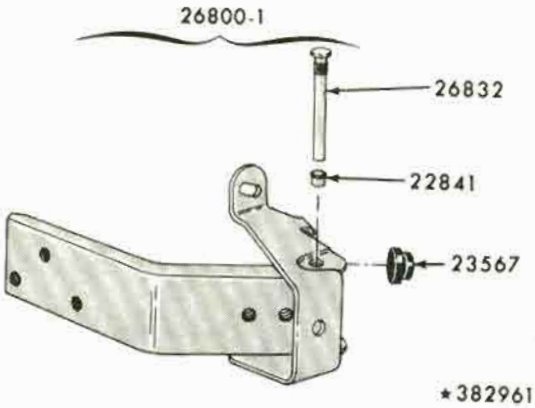

1965 LINCOLN

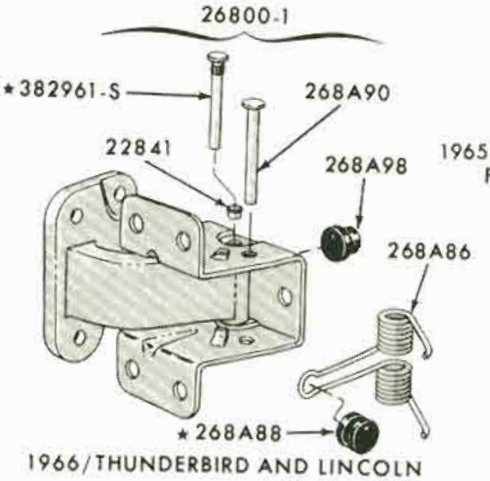

1966/THUNDERBIRD AND LINCOLN

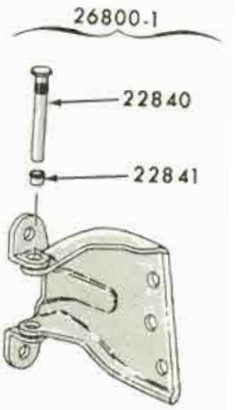

1965/FORD, FAIRLANE/TORINO, FALCON, MERCURY AND COMET/MONTEGO

P-6982

REAR DOOR HINGES - UPPER
1965/72 ALL

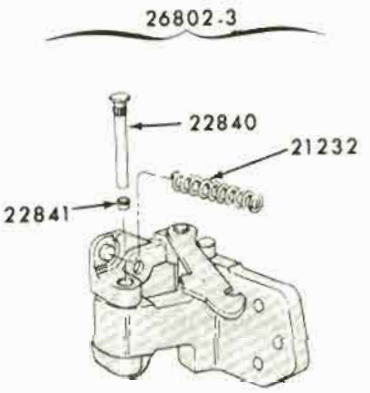

1965/68 FORD AND MERCURY, 1965 FAIRLANE 1965/70 FALCON, 1965/67 COMET

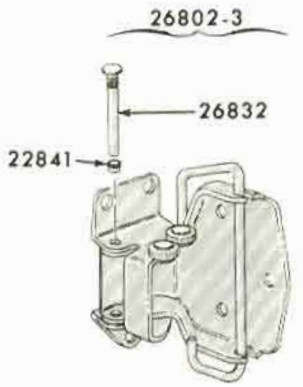

1969 FORD AND MERCURY, 1965/FAIRLANE/TORINO, FALCON AND THUNDERBIRD 1968/COMET/MONTEGO, 1965/LINCOLN

P-6983

REAR DOOR HINGES - LOWER
1965/72 ALL

COPYRIGHT © 1975 — FORD MOTOR COMPANY — DEARBORN, MICHIGAN

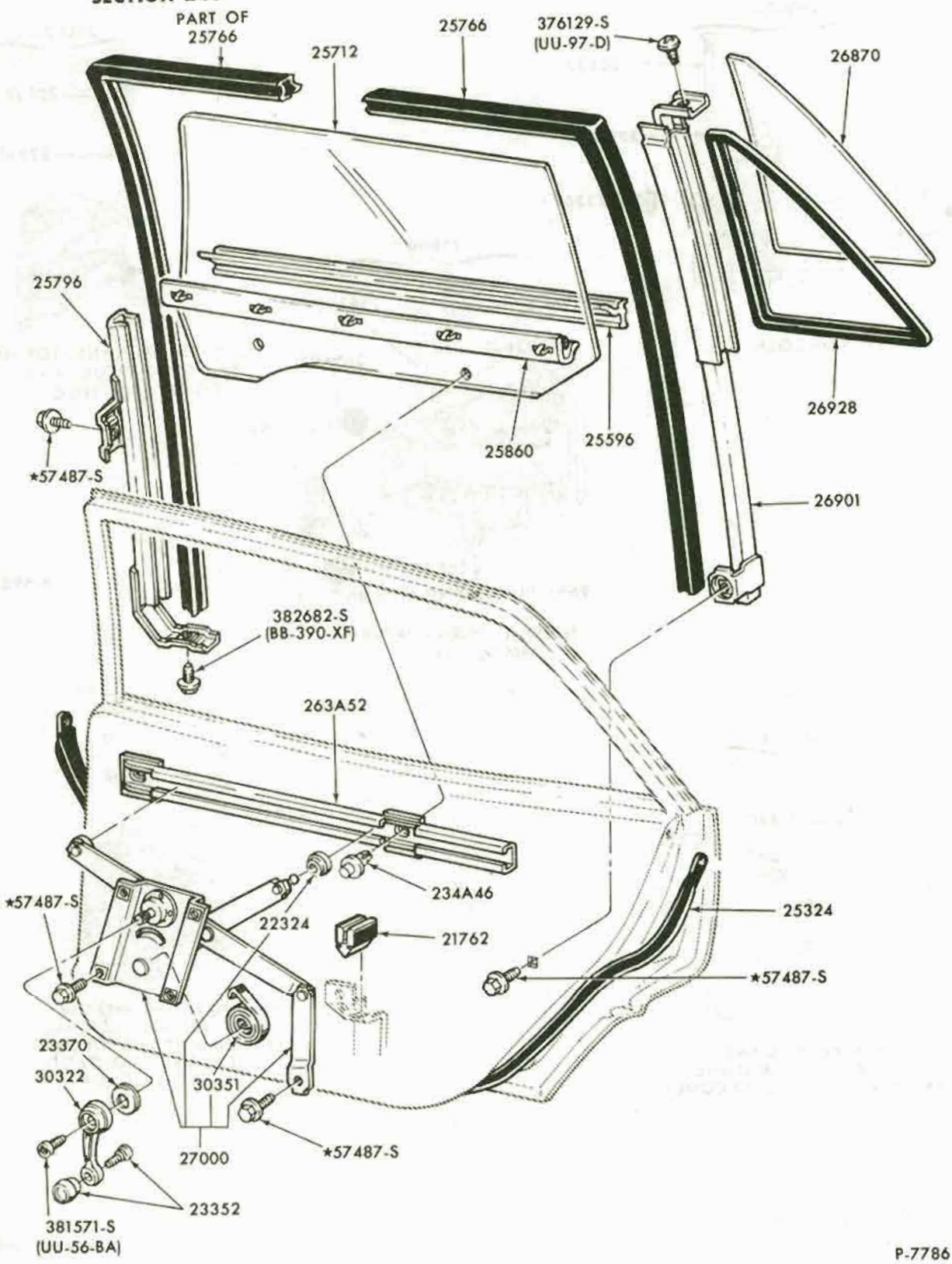

REAR DOOR WINDOW and RELATED PARTS
1971/72 MAVERICK - BODY TYPE 54

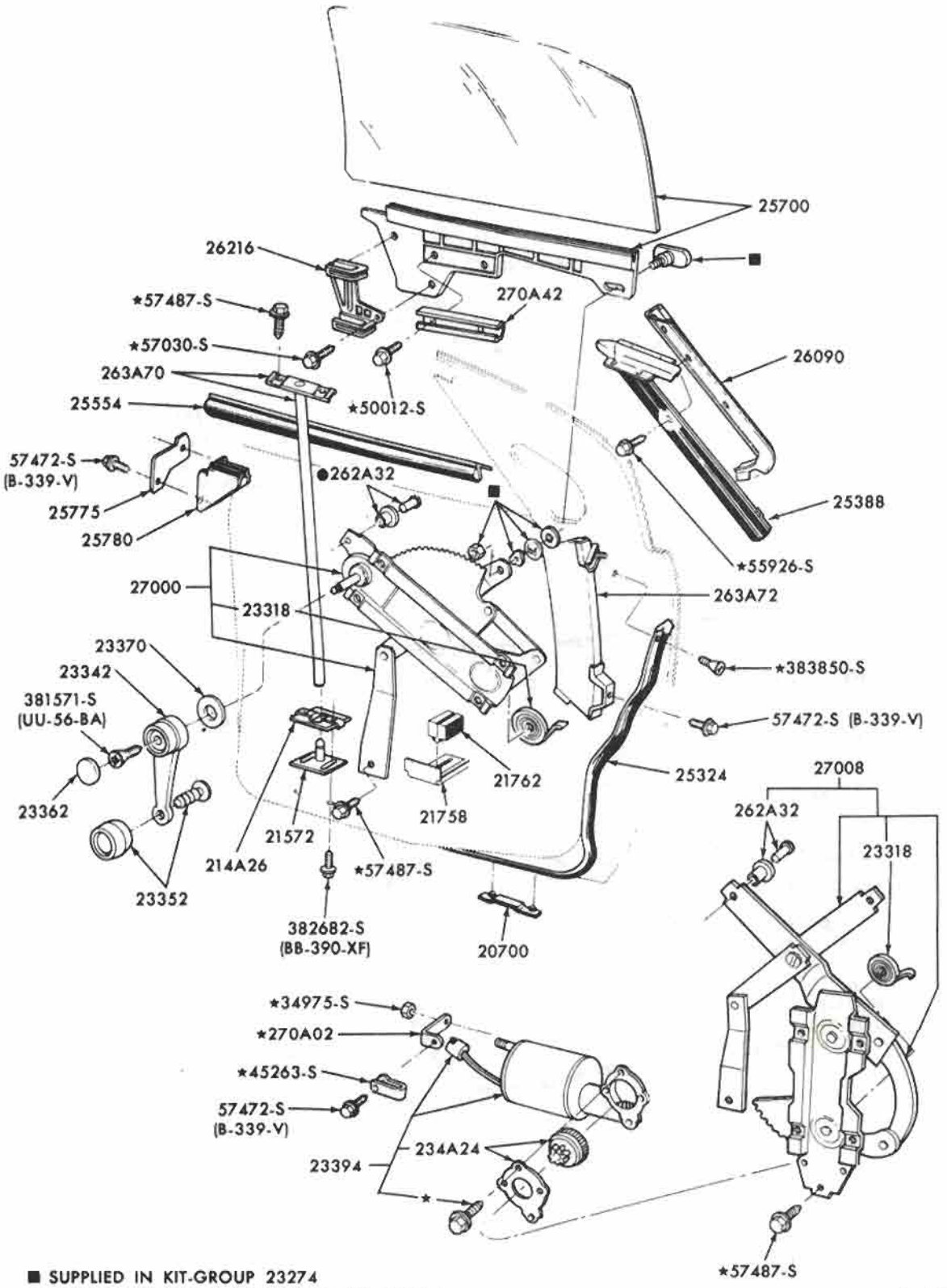

■ SUPPLIED IN KIT-GROUP 23274
● ALSO SUPPLIED IN ASSEMBLY-GROUP 27000-1

P-7981

REAR DOOR WINDOW and RELATED PARTS
1971 THUNDERBIRD - BODY TYPE 57

COPYRIGHT © 1975 — FORD MOTOR COMPANY — DEARBORN, MICHIGAN

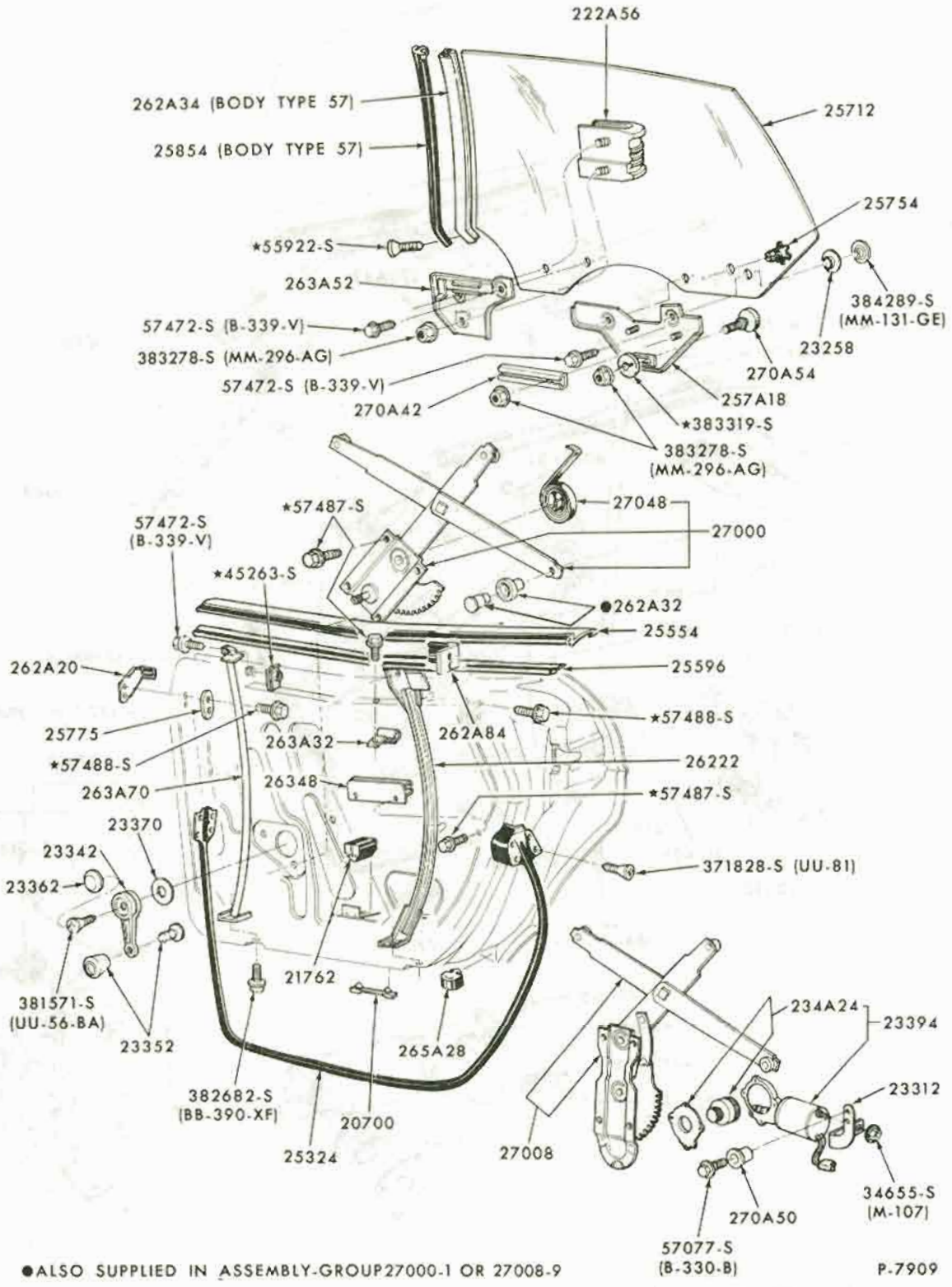

●ALSO SUPPLIED IN ASSEMBLY-GROUP27000-1 OR 27008-9

P-7909

REAR DOOR WINDOW and RELATED PARTS
1971/72 FORD - BODY TYPES 53, 57

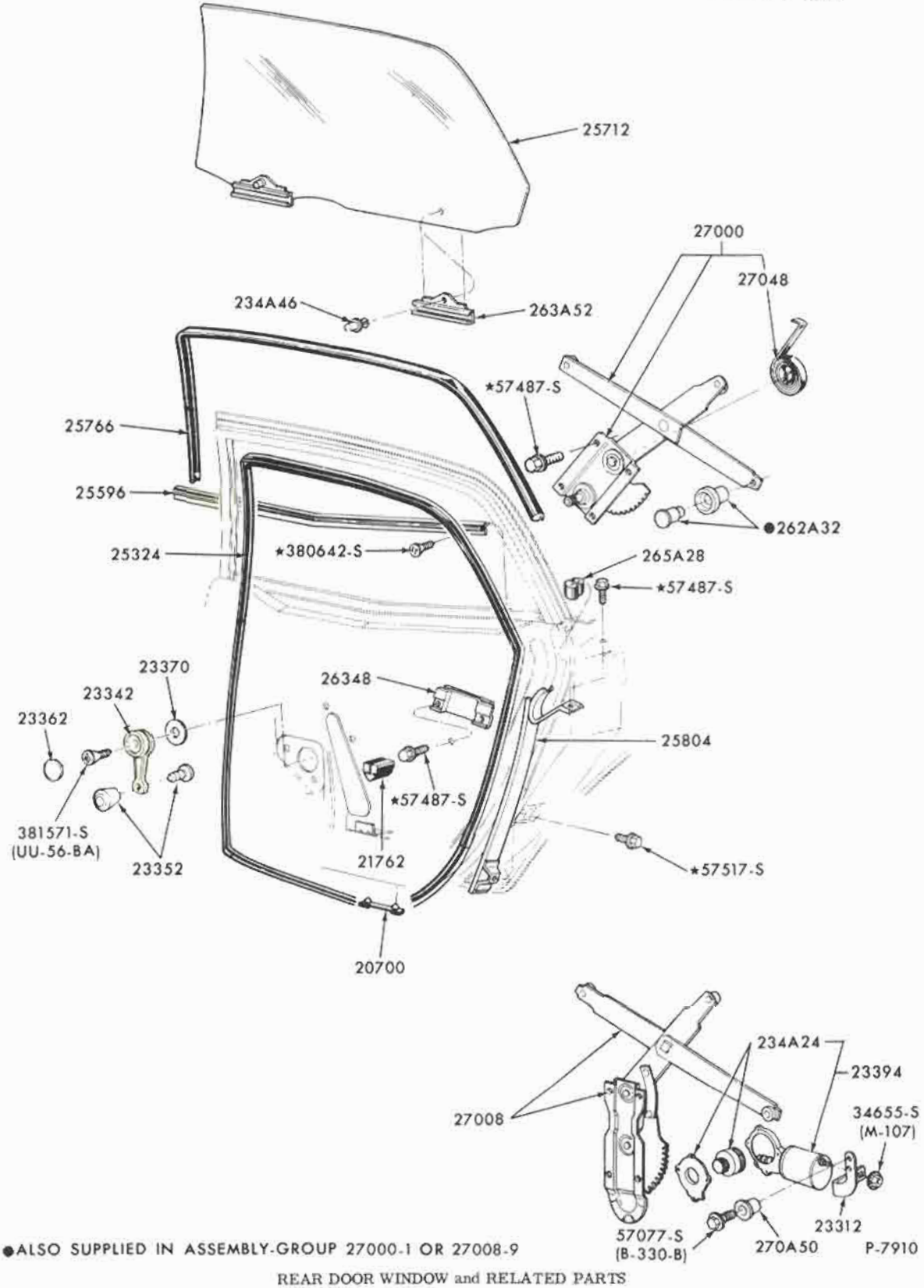

●ALSO SUPPLIED IN ASSEMBLY-GROUP 27000-1 OR 27008-9

REAR DOOR WINDOW and RELATED PARTS
1971/72 FORD - BODY TYPES 54, 71

COPYRIGHT © 1975 — FORD MOTOR COMPANY — DEARBORN, MICHIGAN

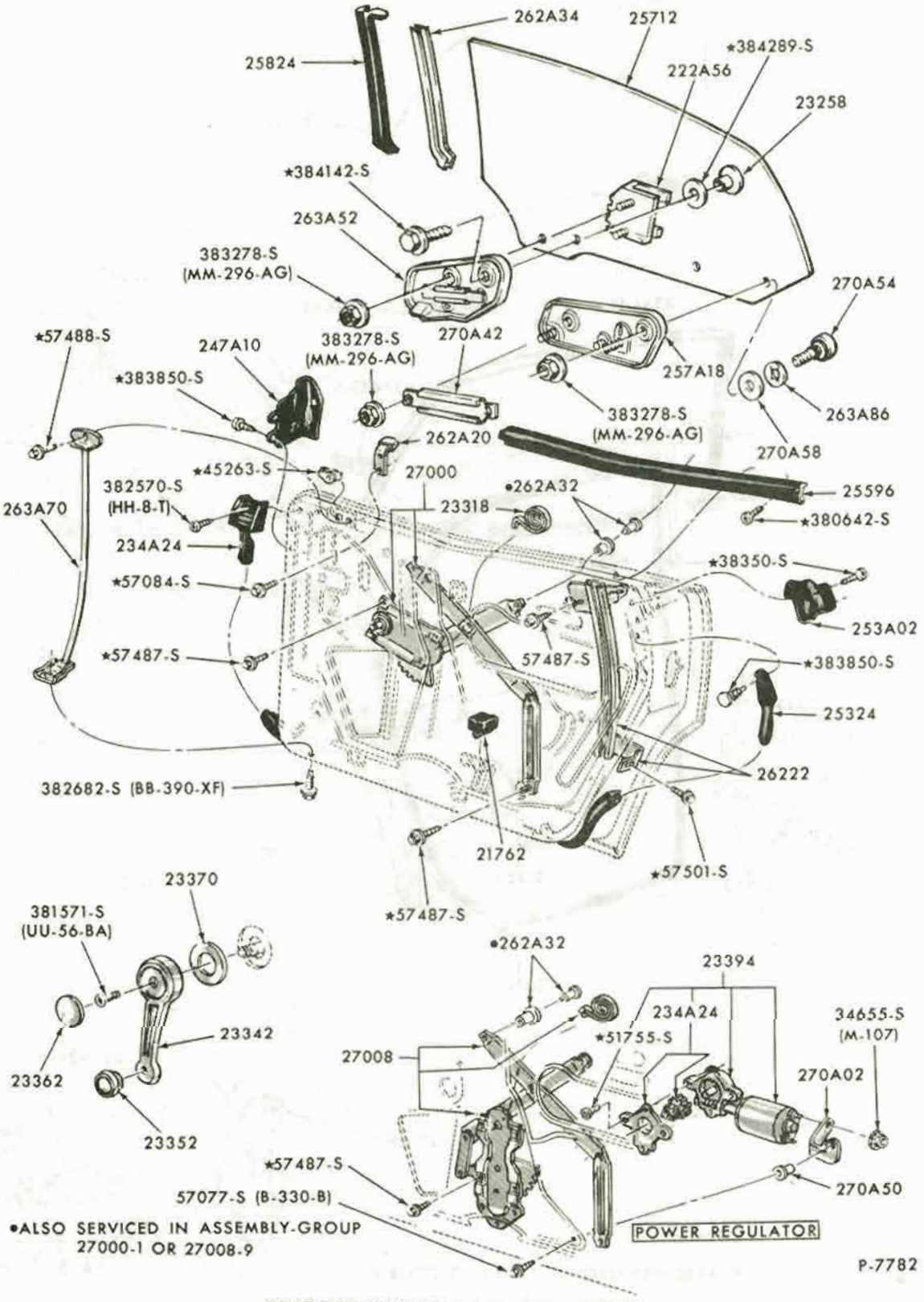

•ALSO SERVICED IN ASSEMBLY-GROUP 27000-1 OR 27008-9

P-7782

REAR DOOR WINDOW and RELATED PARTS
1971 TORINO - BODY TYPE 57

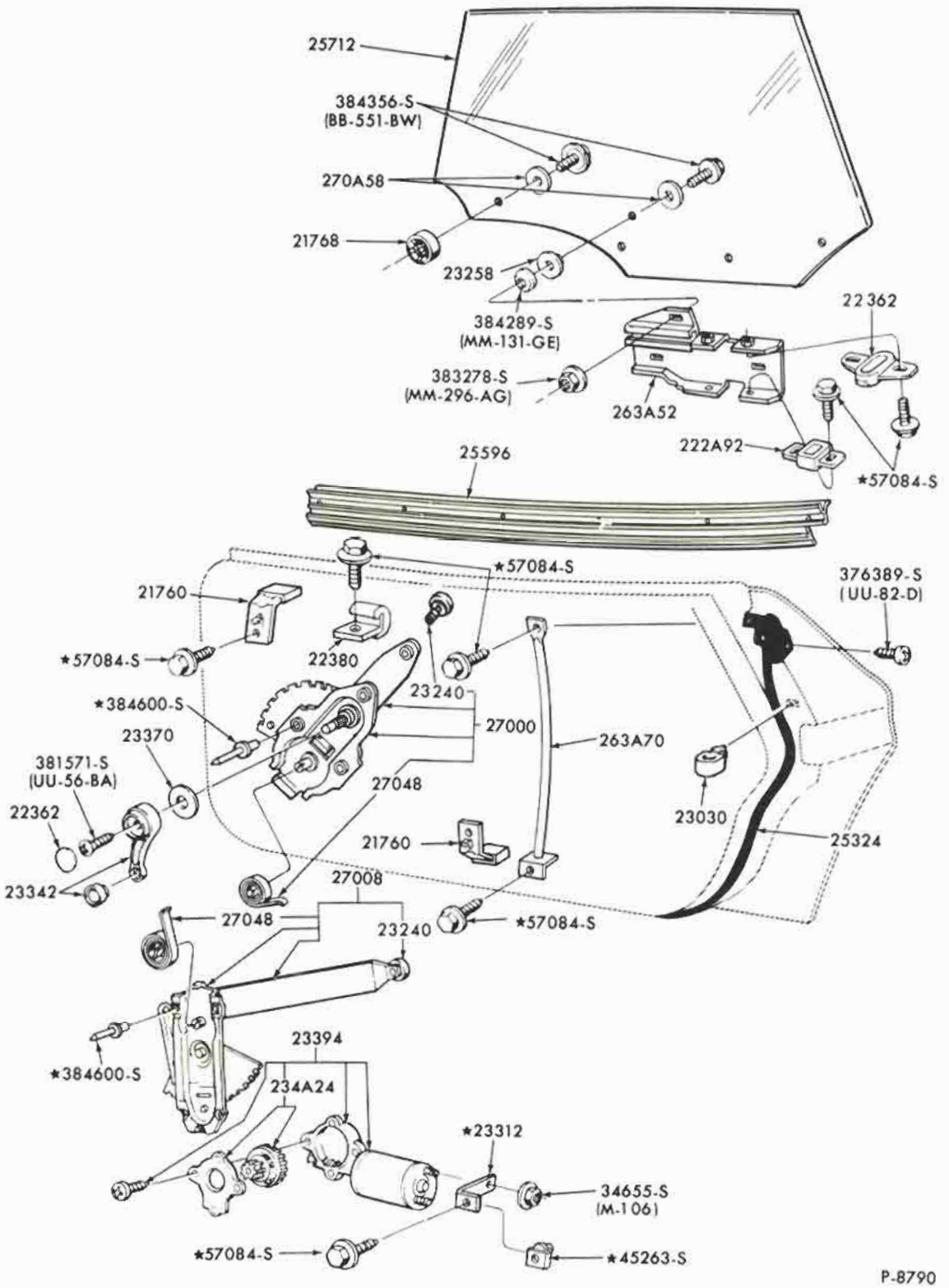

REAR DOOR WINDOW and RELATED PARTS
1972 TORINO - BODY TYPES 53, 71

COPYRIGHT © 1975 — FORD MOTOR COMPANY — DEARBORN, MICHIGAN

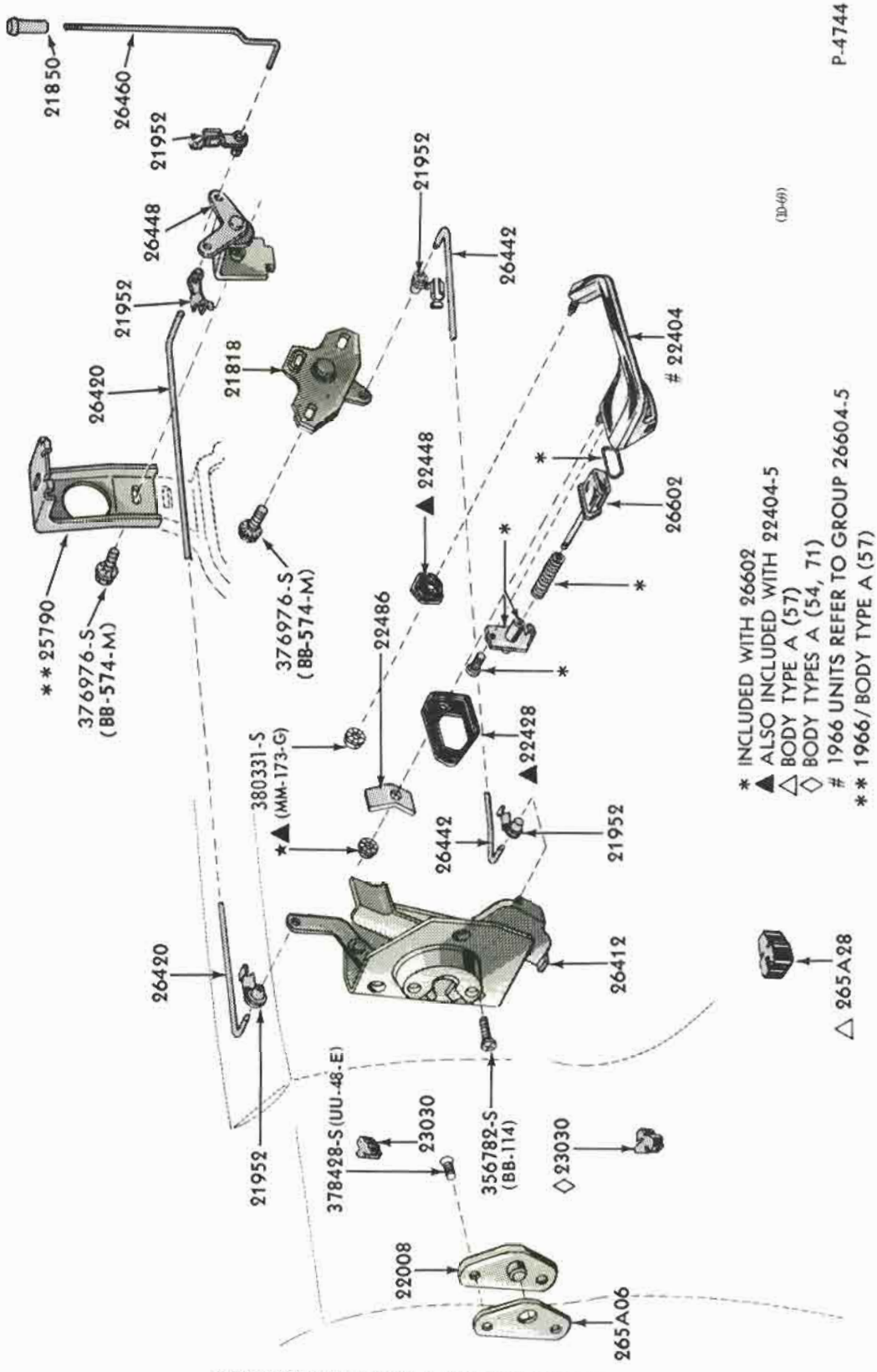

REAR DOOR HANDLES, LATCH and RELATED PARTS
1965/68 FORD - BODY TYPES 54, 57, 71

COPYRIGHT © 1975 — FORD MOTOR COMPANY — DEARBORN, MICHIGAN

P-5075

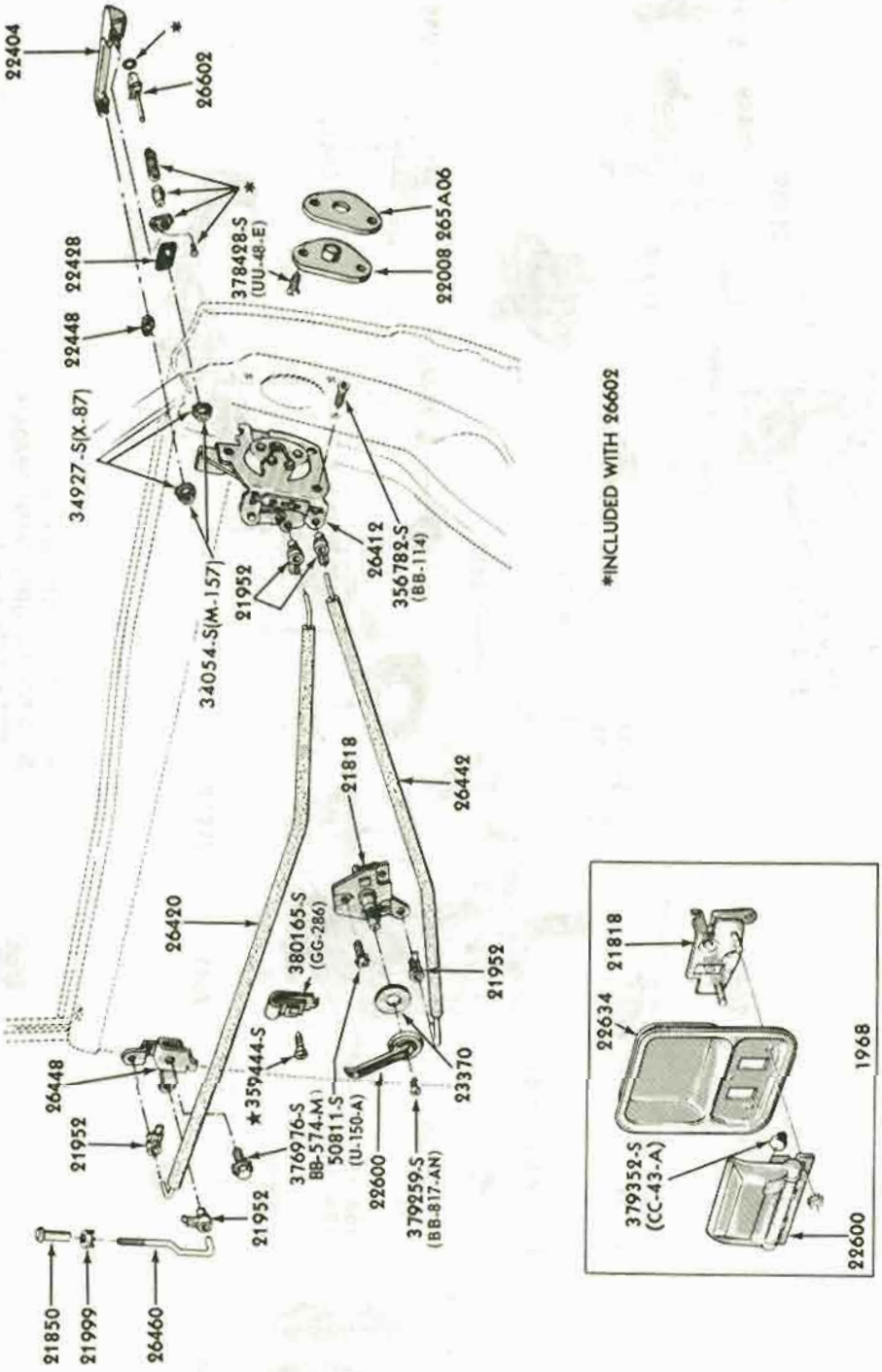

REAR DOOR HANDLES, LATCH, and RELATED PARTS

1966/68 FAIRLANE/TORINO and FALCON - BODY TYPES 54, 71

P-5362

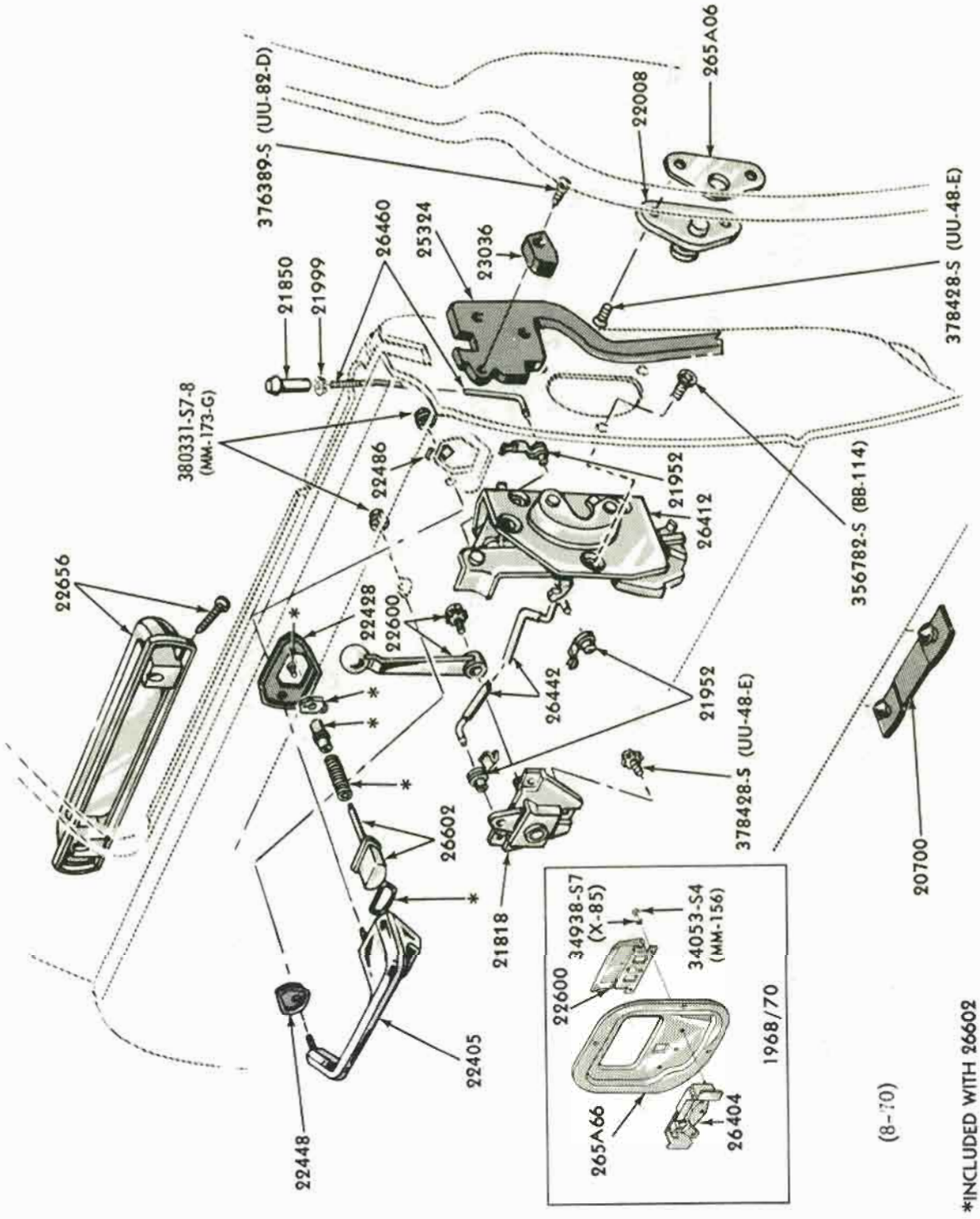

REAR DOOR HANDLES, LATCH, and RELATED PARTS
1967/70 THUNDERBIRD - BODY TYPE 57

COPYRIGHT © 1975 — FORD MOTOR COMPANY — DEARBORN, MICHIGAN

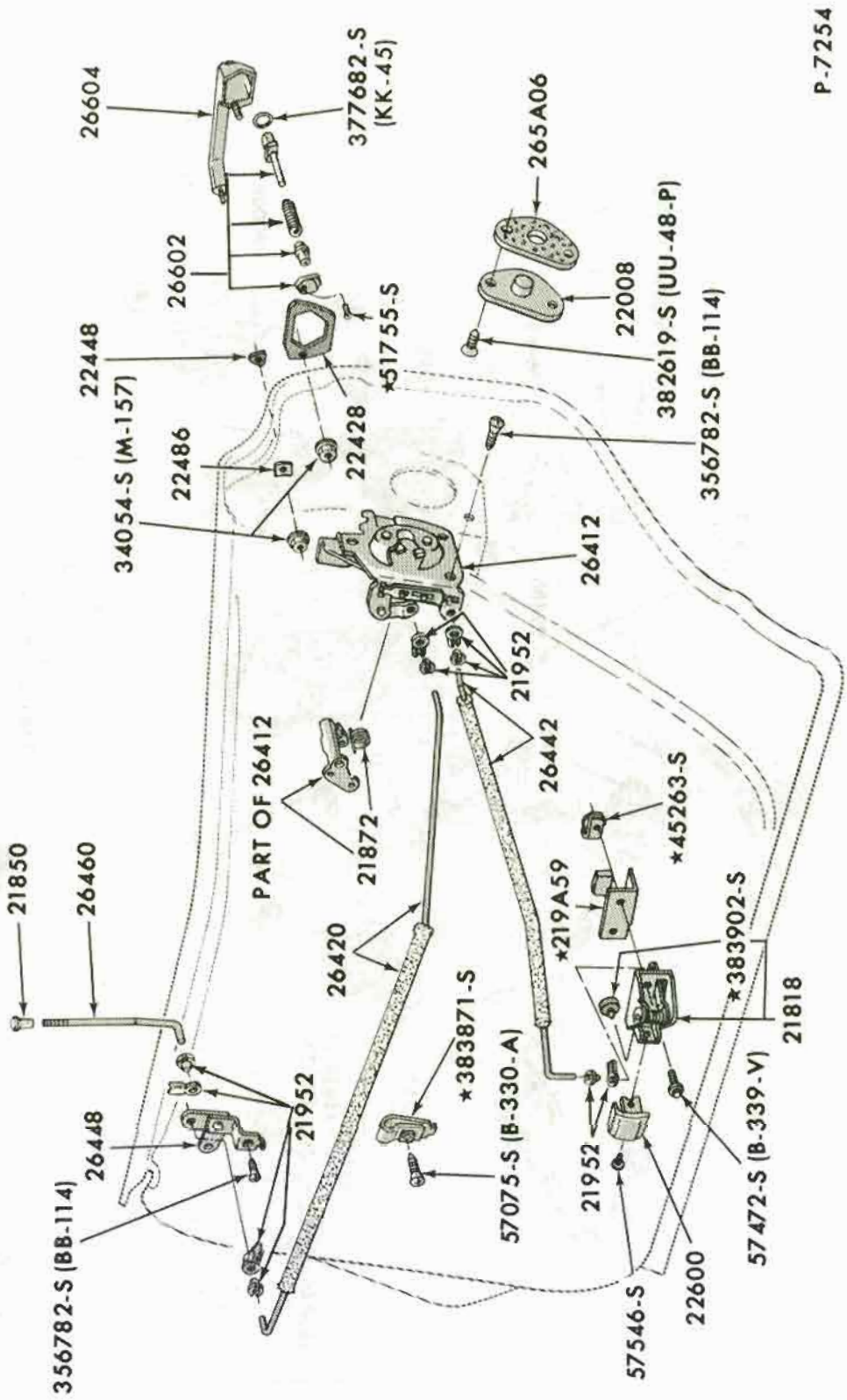

REAR DOOR HANDLES, LATCH and RELATED PARTS
1969/70 FORD - BODY TYPES 54, 57, 71

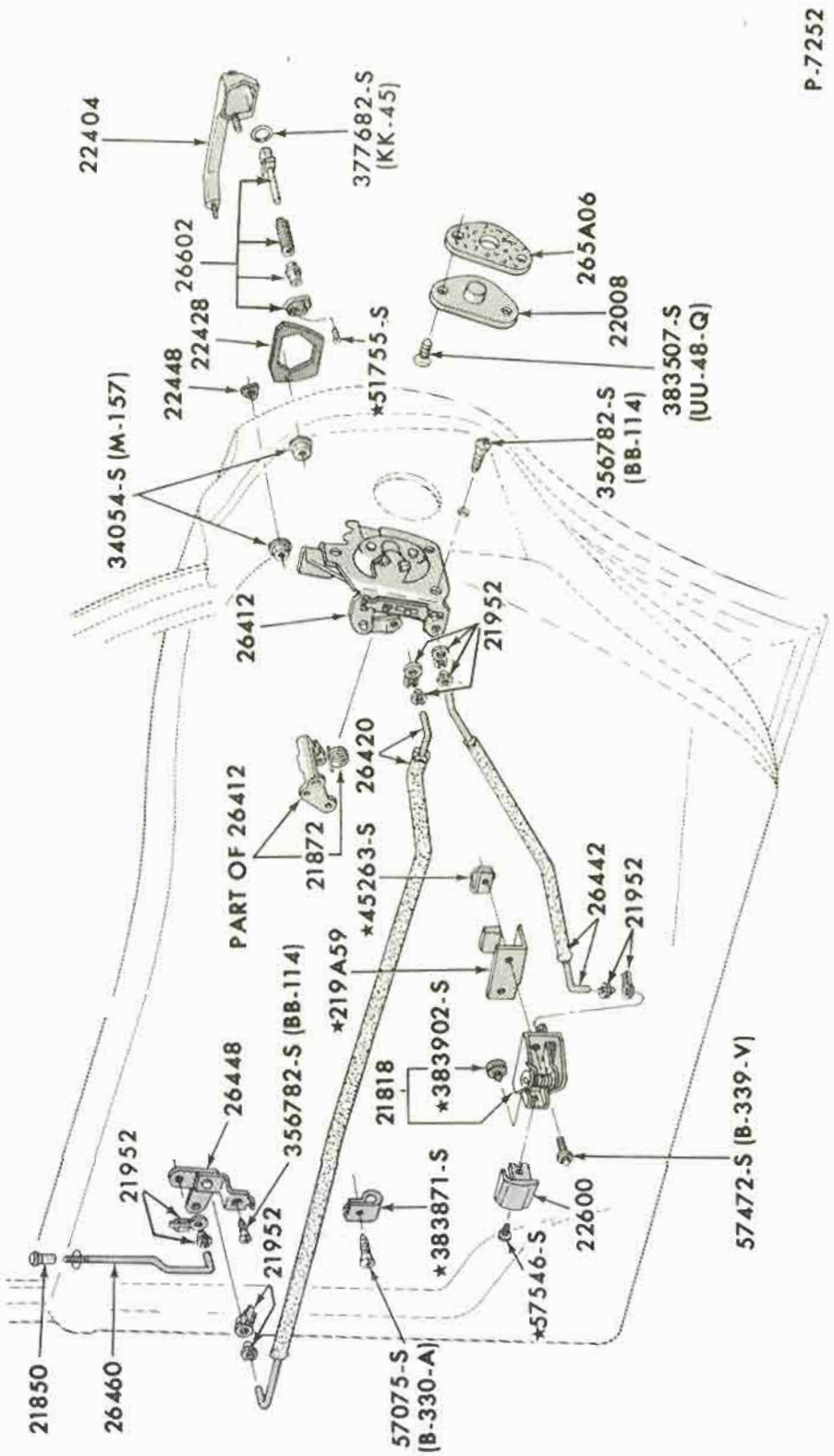

REAR DOOR HANDLES, LATCH and RELATED PARTS
1969/71 FAIRLANE/TORINO and FALCON - BODY TYPE 54, 57, 71

COPYRIGHT © 1975 — FORD MOTOR COMPANY — DEARBORN, MICHIGAN

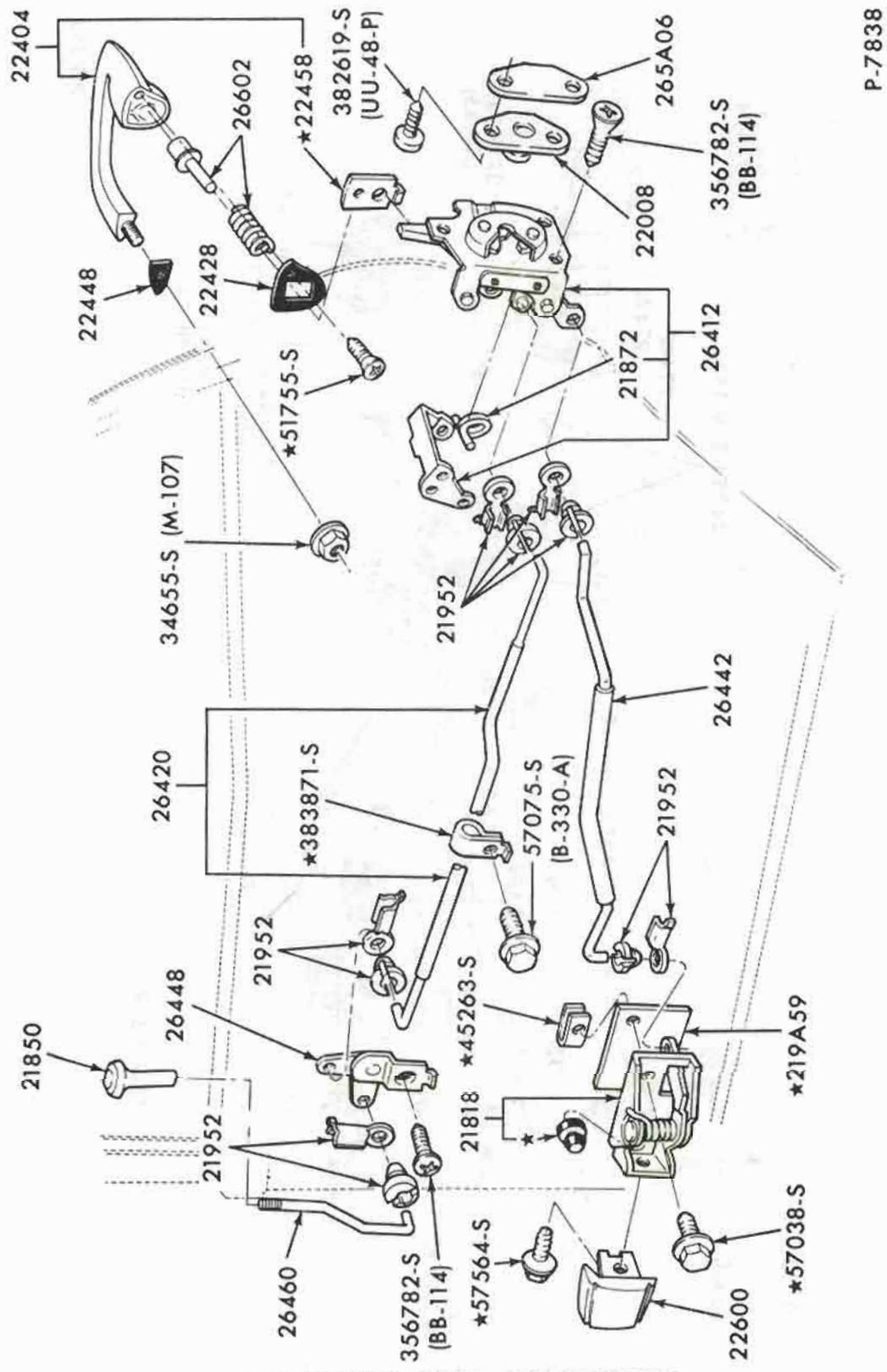

REAR DOOR HANDLES, LATCH and RELATED PARTS
1971/72 MAVERICK - BODY TYPE 54

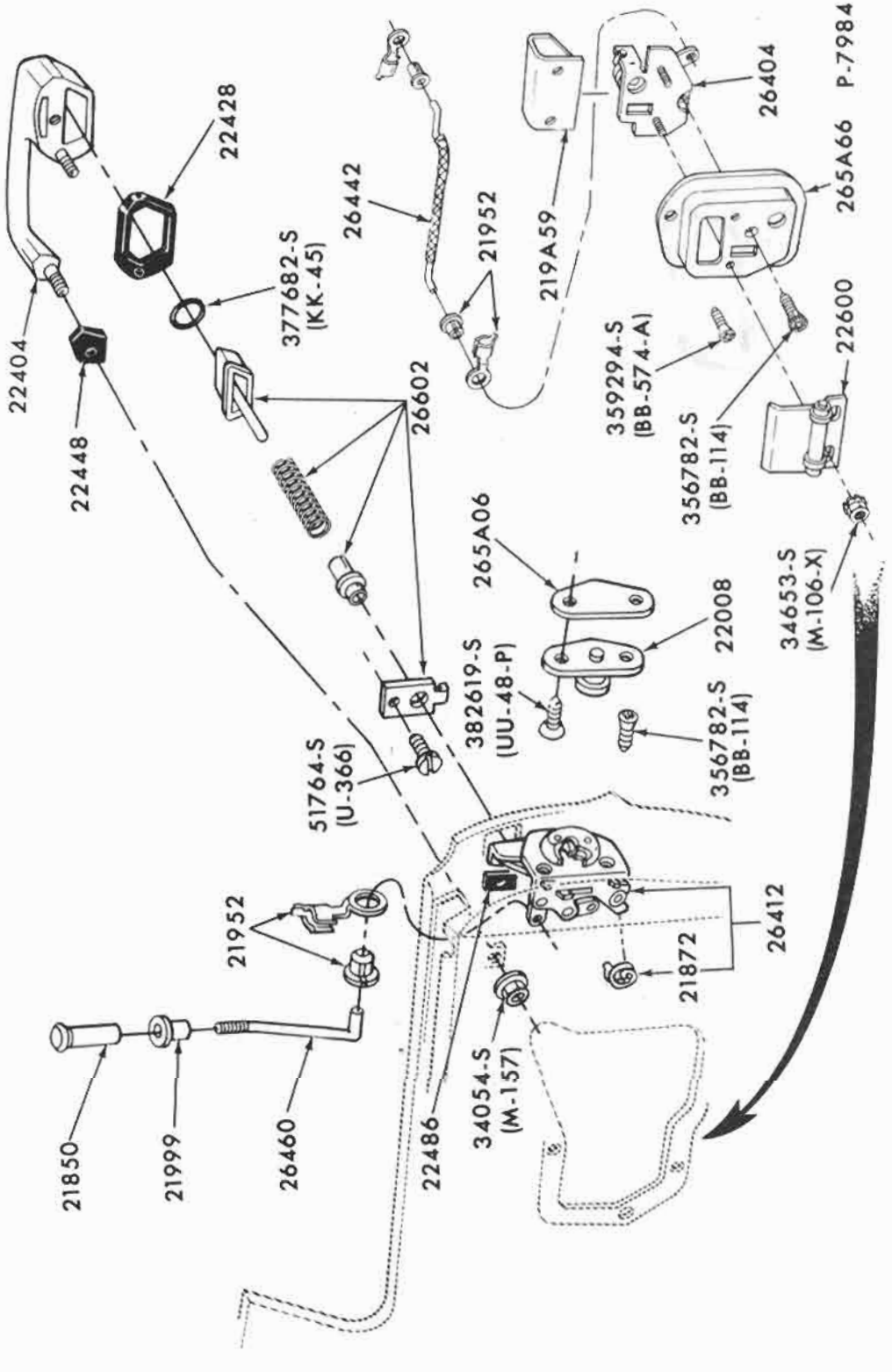

REAR DOOR HANDLES, LATCH and RELATED PARTS
1971 THUNDERBIRD - BODY TYPE 57

COPYRIGHT © 1975 — FORD MOTOR COMPANY — DEARBORN, MICHIGAN

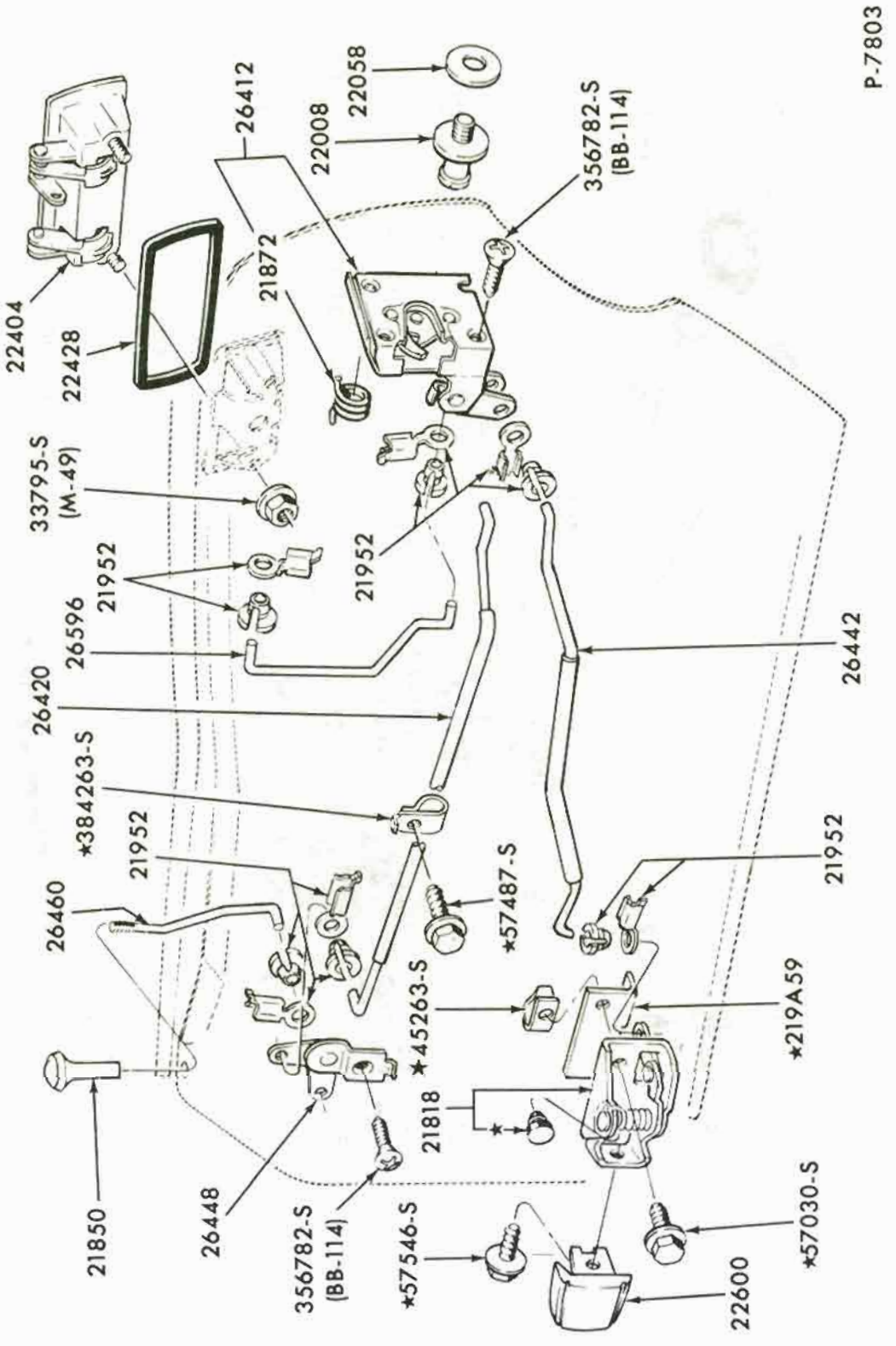

REAR DOOR HANDLES, LATCH and RELATED PARTS
1971/72 FORD - BODY TYPES 53, 54, 57, 71

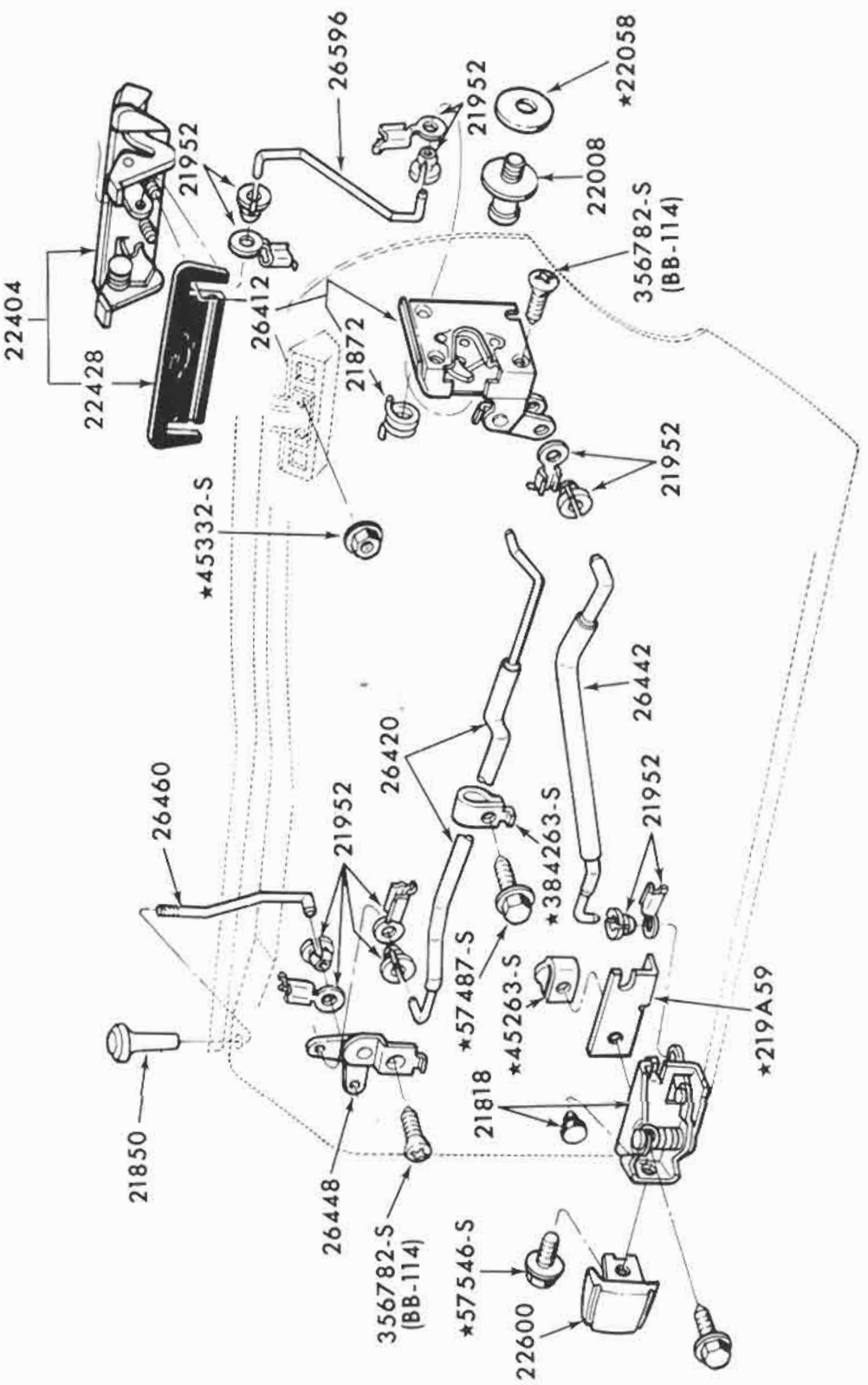

REAR DOOR LATCH and RELATED PARTS
1972 TORINO - BODY TYPES 53,71

COPYRIGHT © 1975 — FORD MOTOR COMPANY — DEARBORN, MICHIGAN

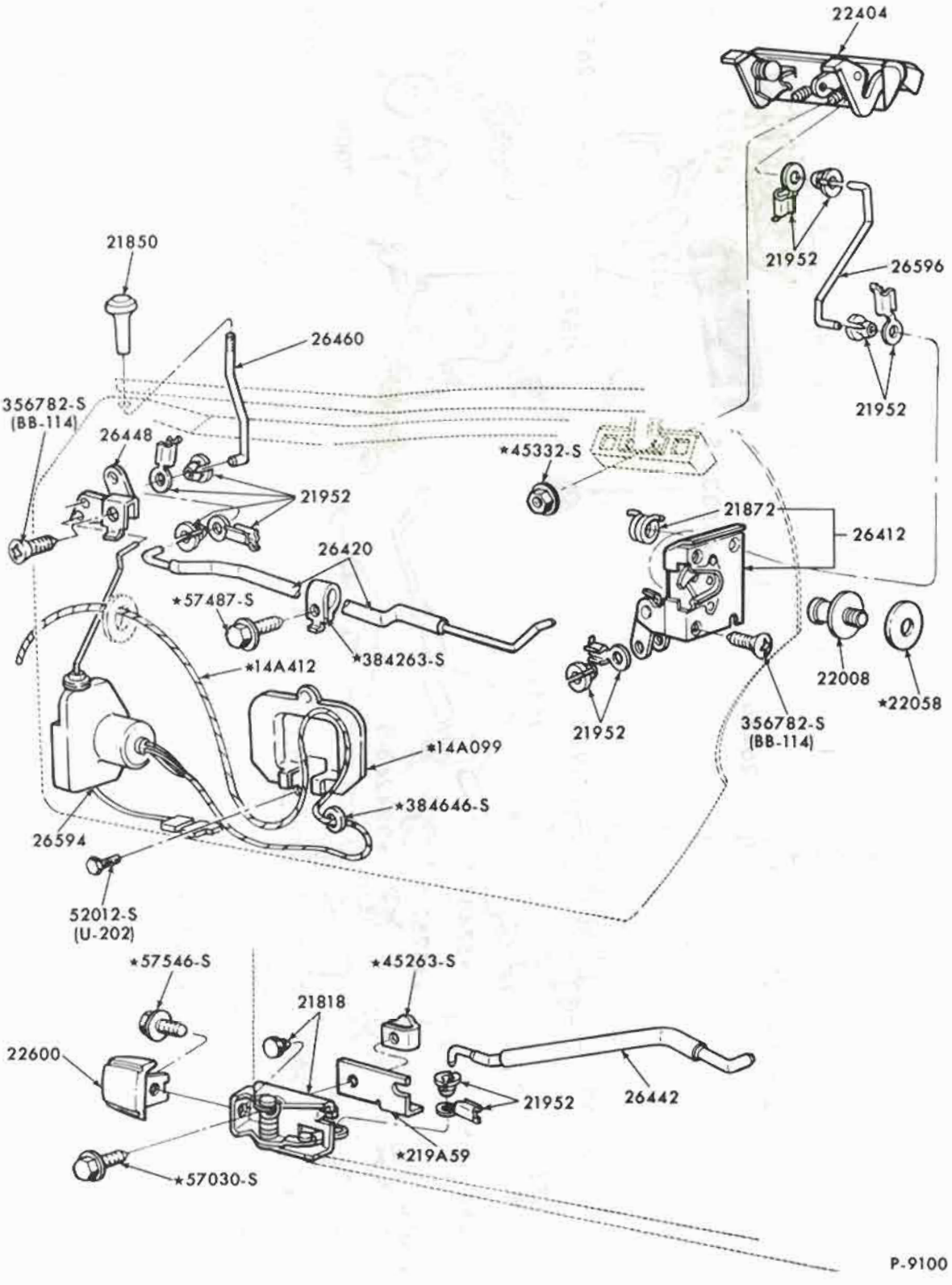

ELECTRIC REAR DOOR LATCH SYSTEM
1972 TORINO - BODY TYPES 53,71

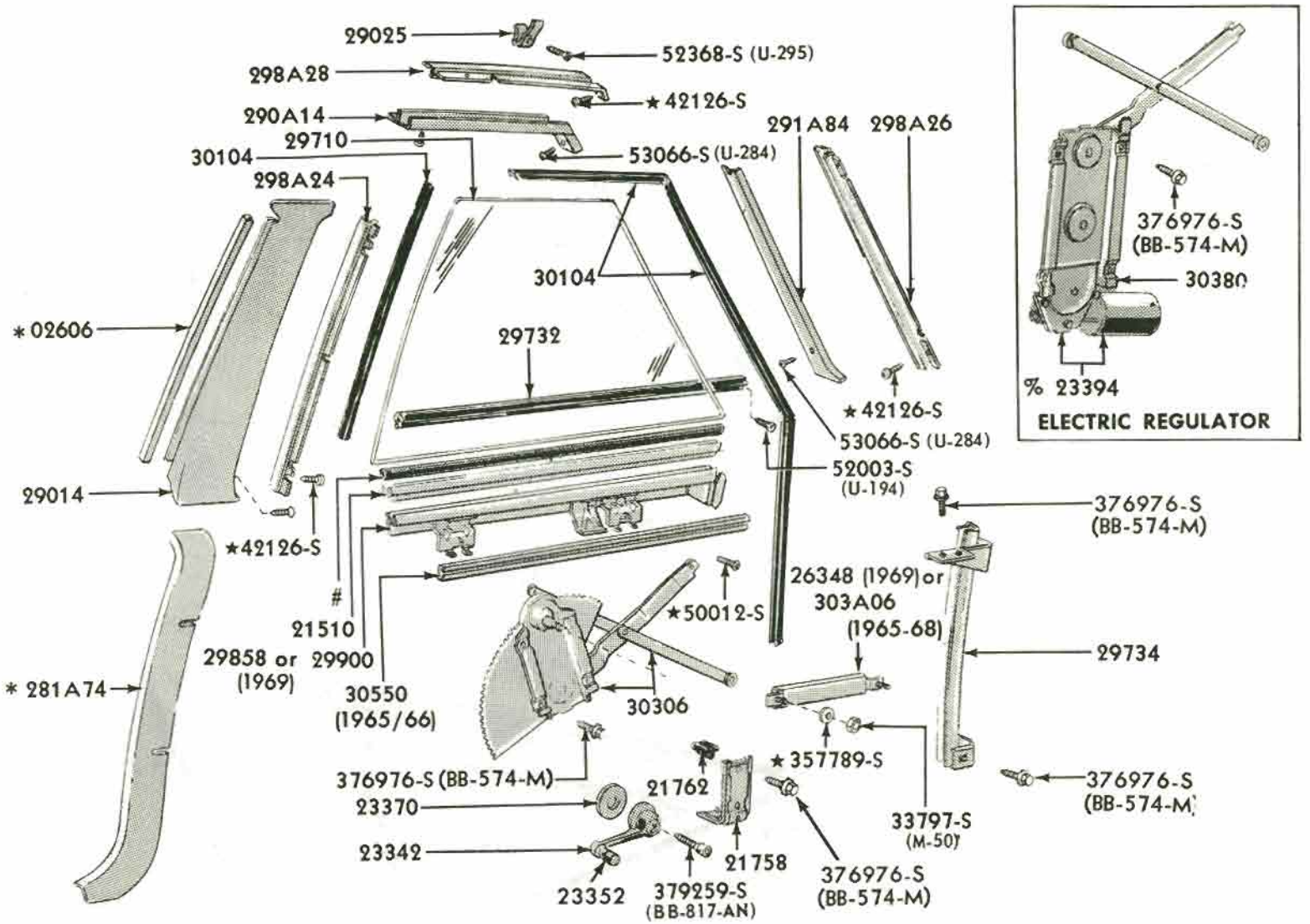

* REFER TO SOFT TRIM SECTION

\# USE BULK GLASS TAPE

%FOR GEAR REPLACEMENT KIT REFER TO GROUP 234A24

P-4745

May, 1975

QUARTER WINDOW and RELATED PARTS
1965/69 FORD - BODY TYPE 62

COPYRIGHT © 1975 — FORD MOTOR COMPANY — DEARBORN, MICHIGAN

FINAL ISSUE

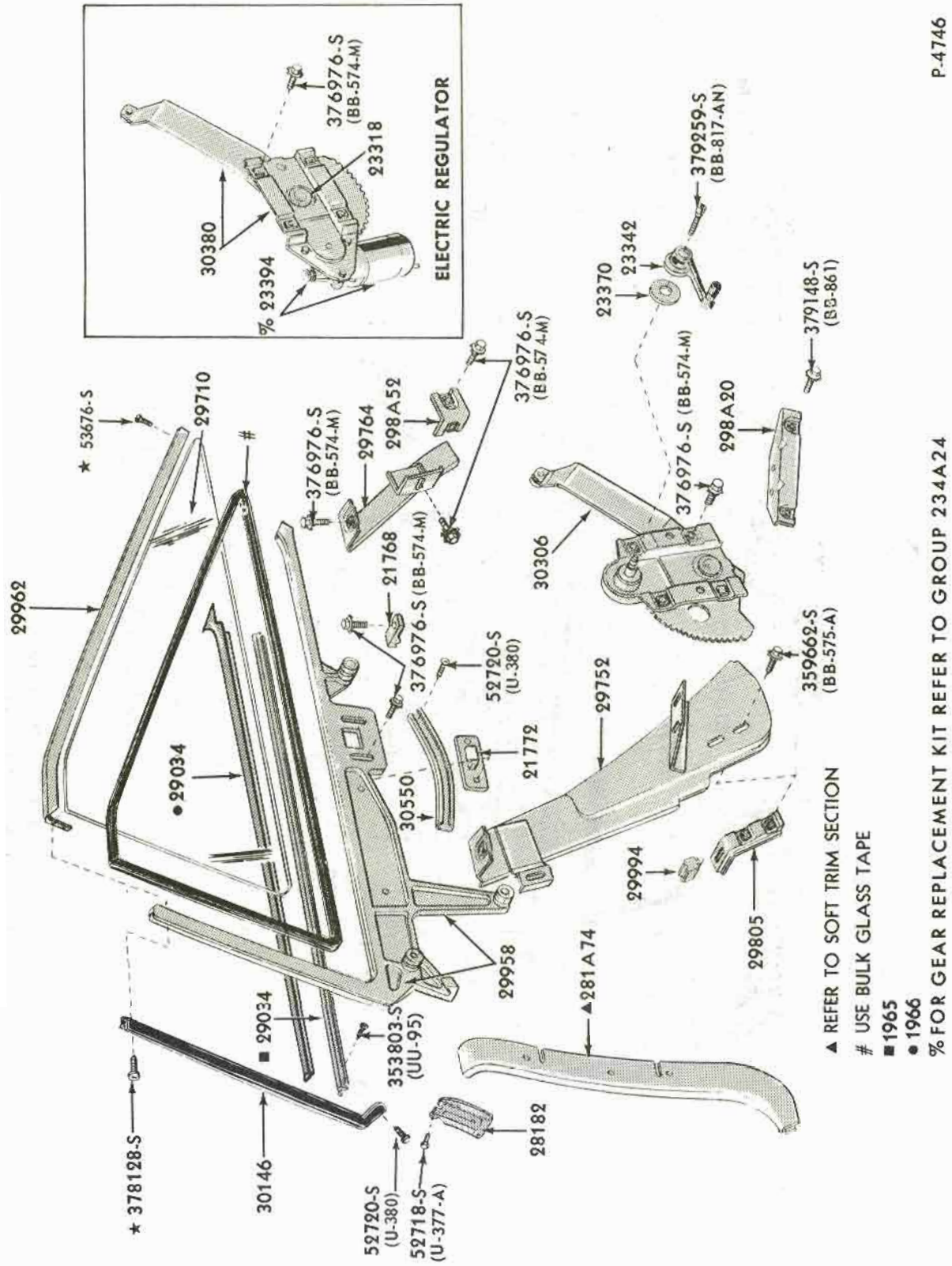

QUARTER WINDOW and RELATED PARTS
1965/67 FORD - BODY TYPE 63

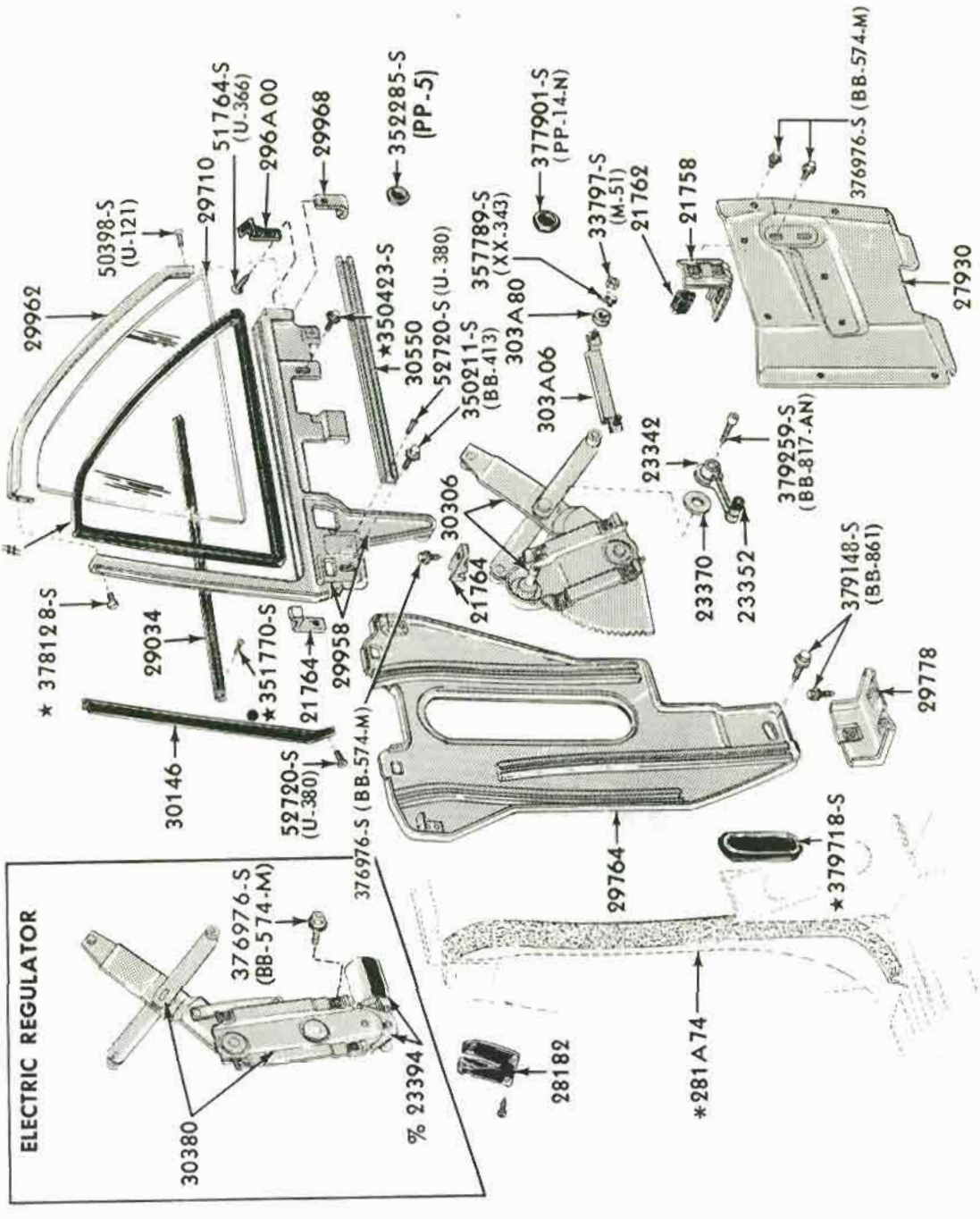

QUARTER WINDOW and RELATED PARTS
1965/68 FORD - BODY TYPE 76

COPYRIGHT © 1975 — FORD MOTOR COMPANY — DEARBORN, MICHIGAN

FORD CAR PARTS

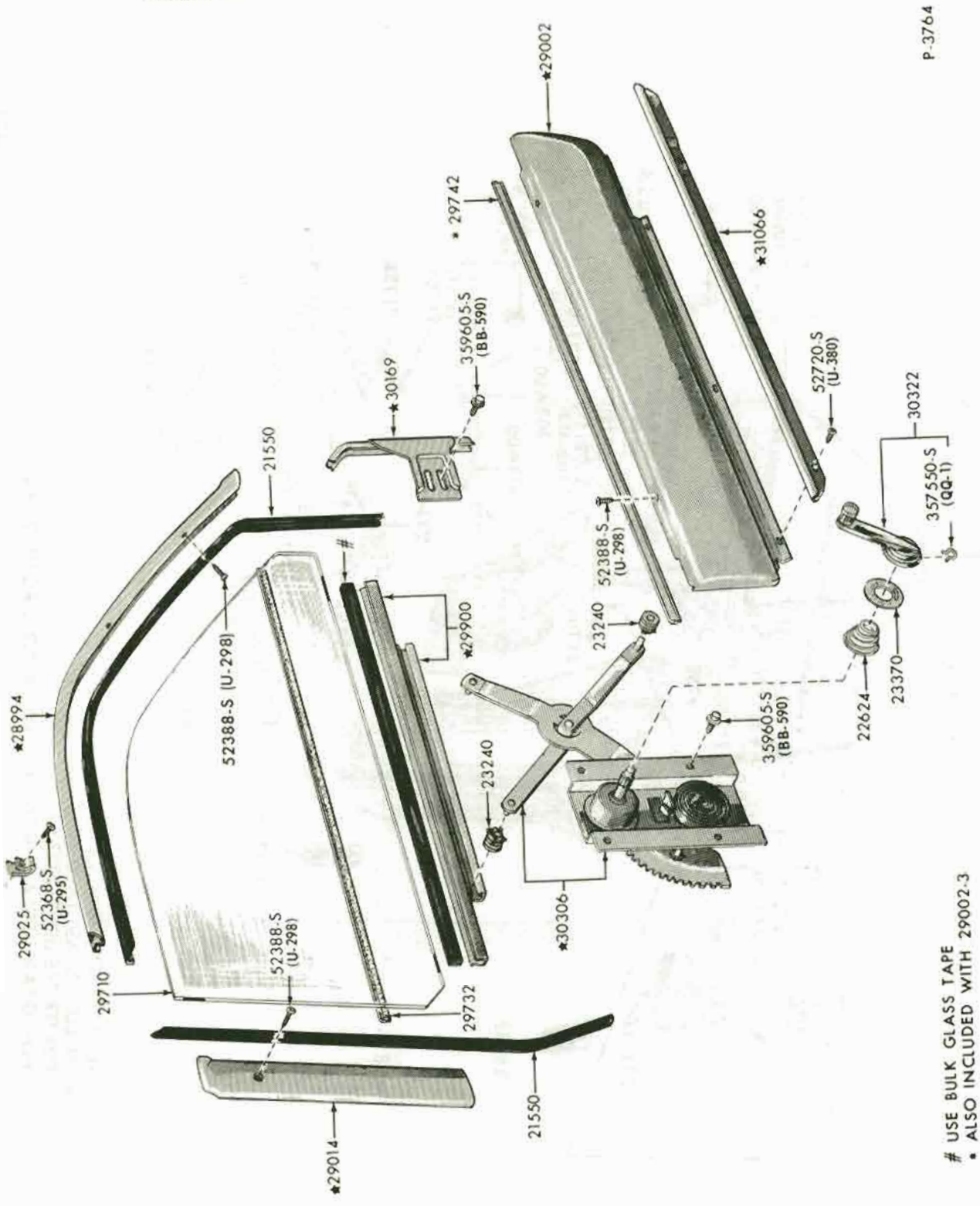

QUARTER WINDOW and RELATED PARTS
1965 FAIRLANE - BODY TYPE 62

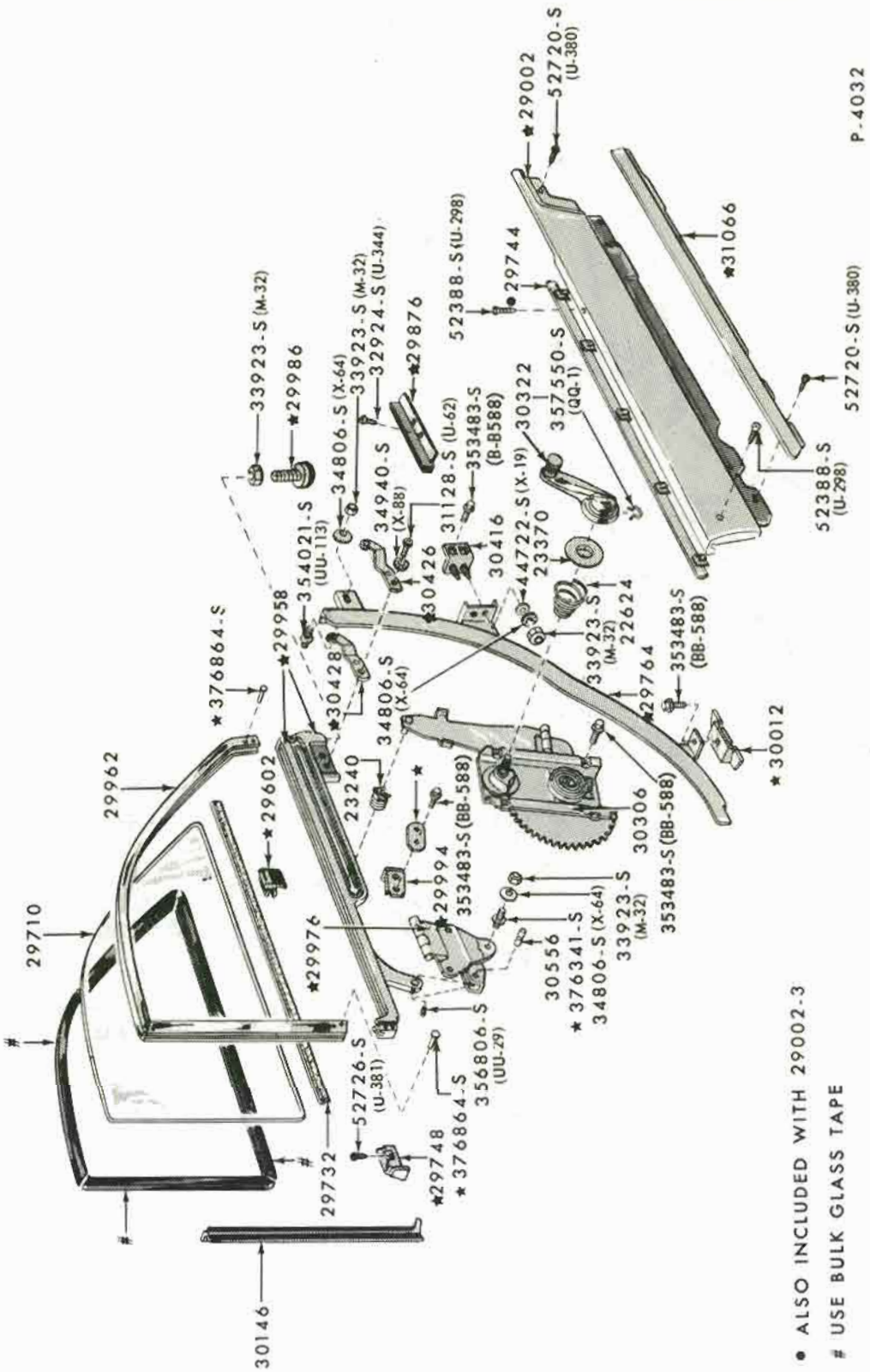

QUARTER WINDOW and RELATED PARTS
1965 FAIRLANE - BODY TYPE 65

COPYRIGHT © 1975 — FORD MOTOR COMPANY — DEARBORN, MICHIGAN

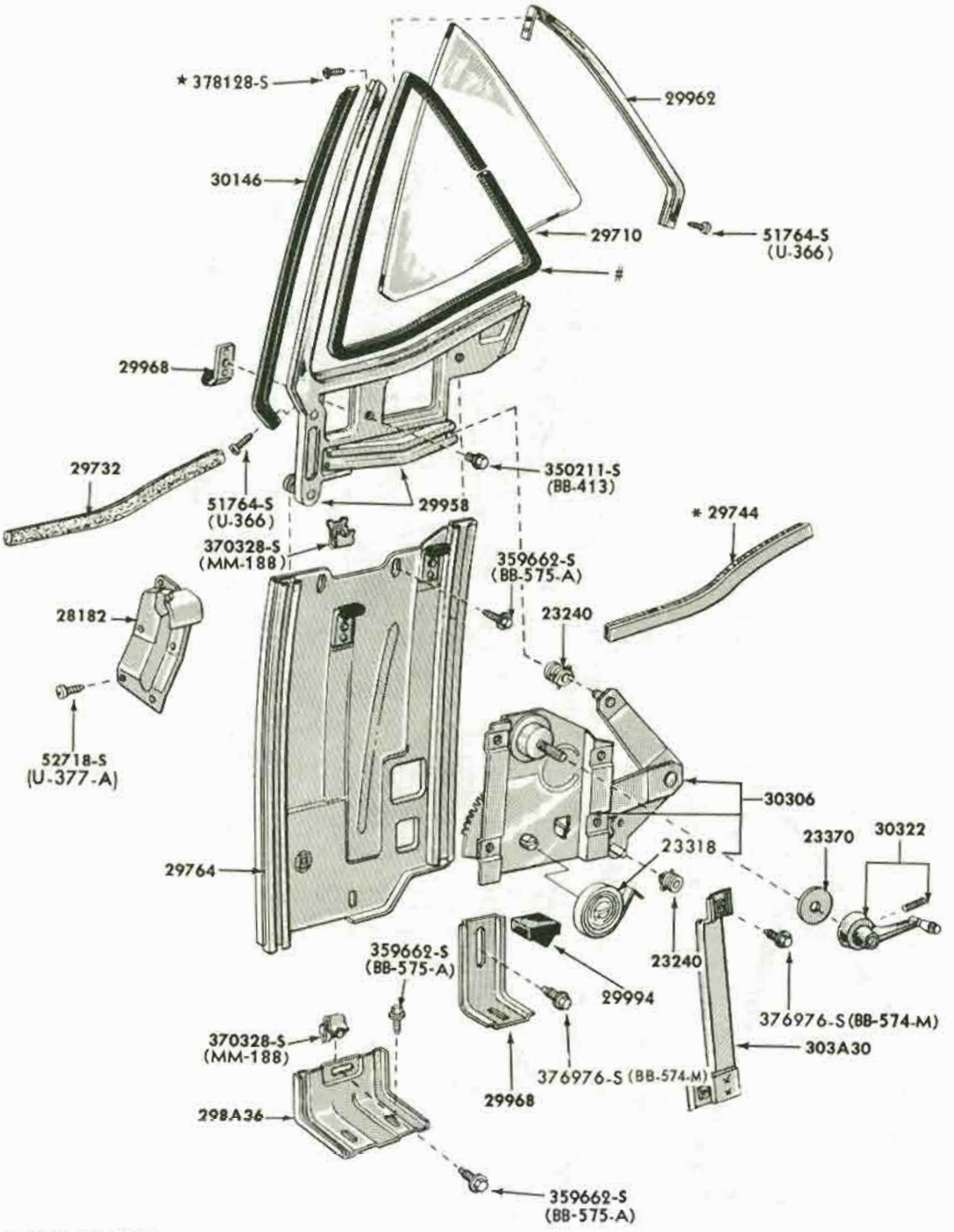

* ALSO INCLUDED WITH 31136-7

USE BULK GLASS TAPE

P-4496

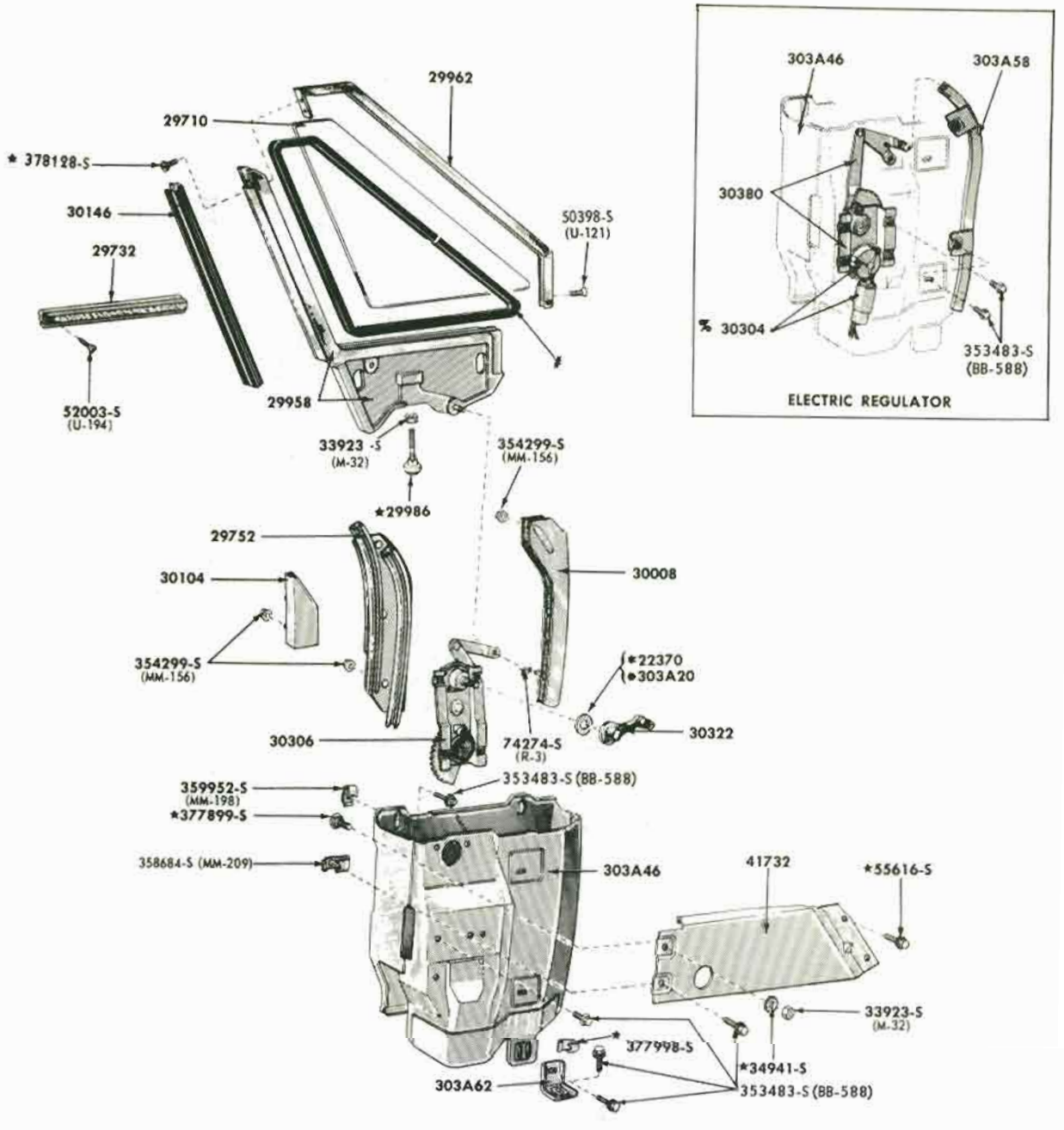

#USE BULK GLASS TAPE
*BODY TYPES S(63A, 76)
•BODY TYPE S(63B)
% FOR GEAR REPLACEMENT KIT REFER TO GROUP 234A24

P-4344

May, 1975 COPYRIGHT © 1975 — FORD MOTOR COMPANY — DEARBORN, MICHIGAN

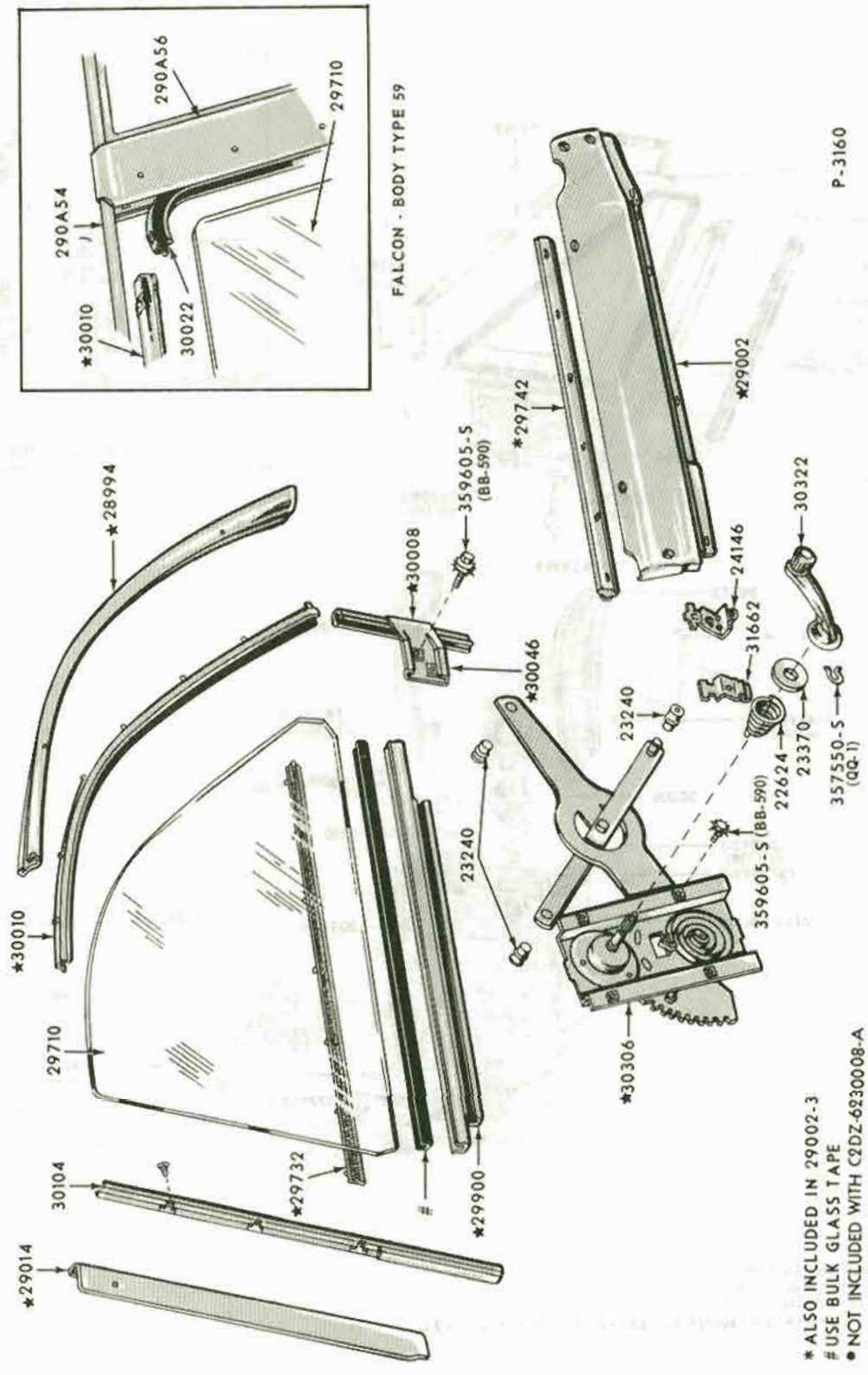

QUARTER WINDOW and RELATED PARTS
1965 FALCON - BODY TYPES 59, 62

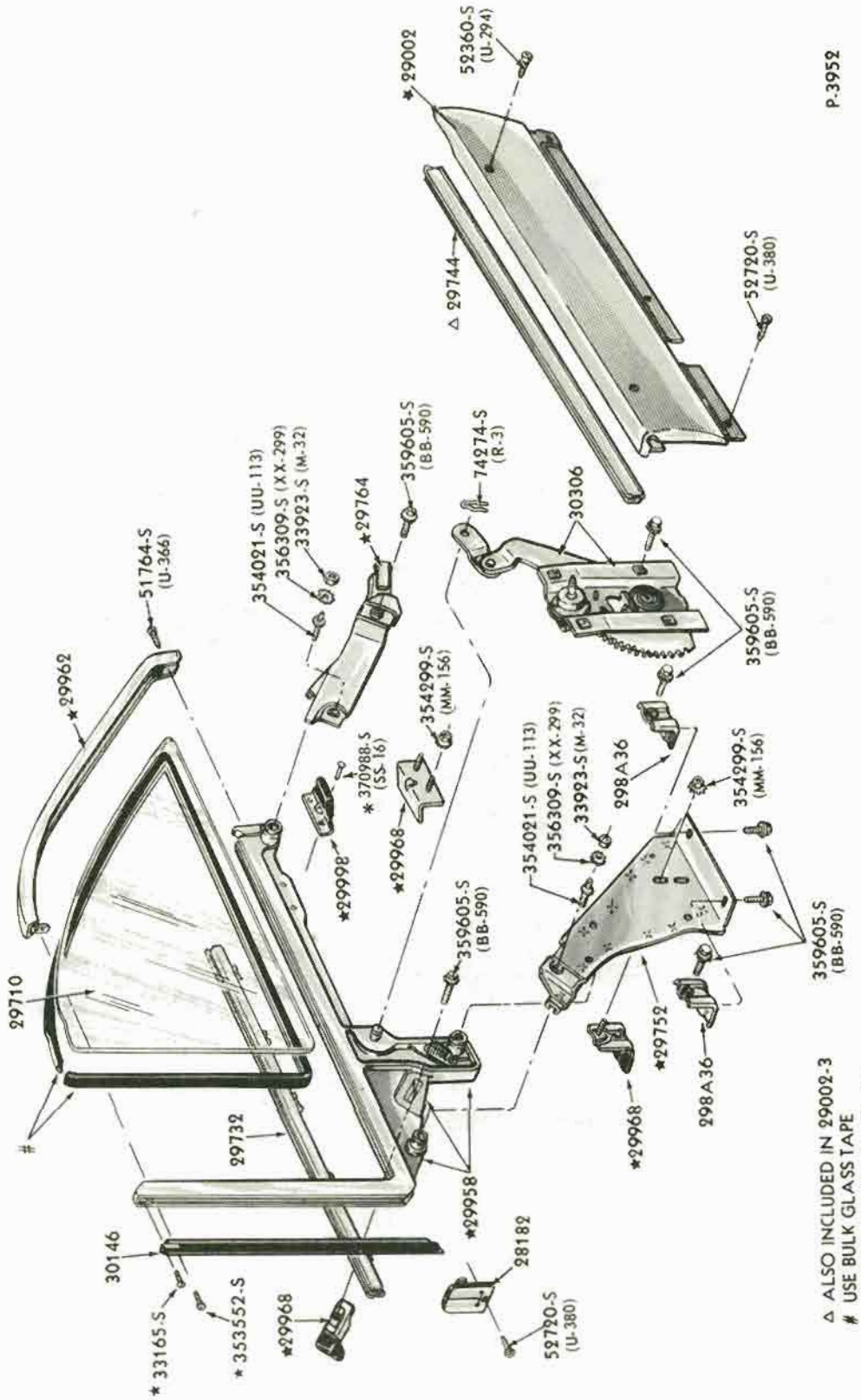

QUARTER WINDOW and RELATED PARTS
1965 FALCON - BODY TYPE 63

COPYRIGHT © 1975 — FORD MOTOR COMPANY — DEARBORN, MICHIGAN

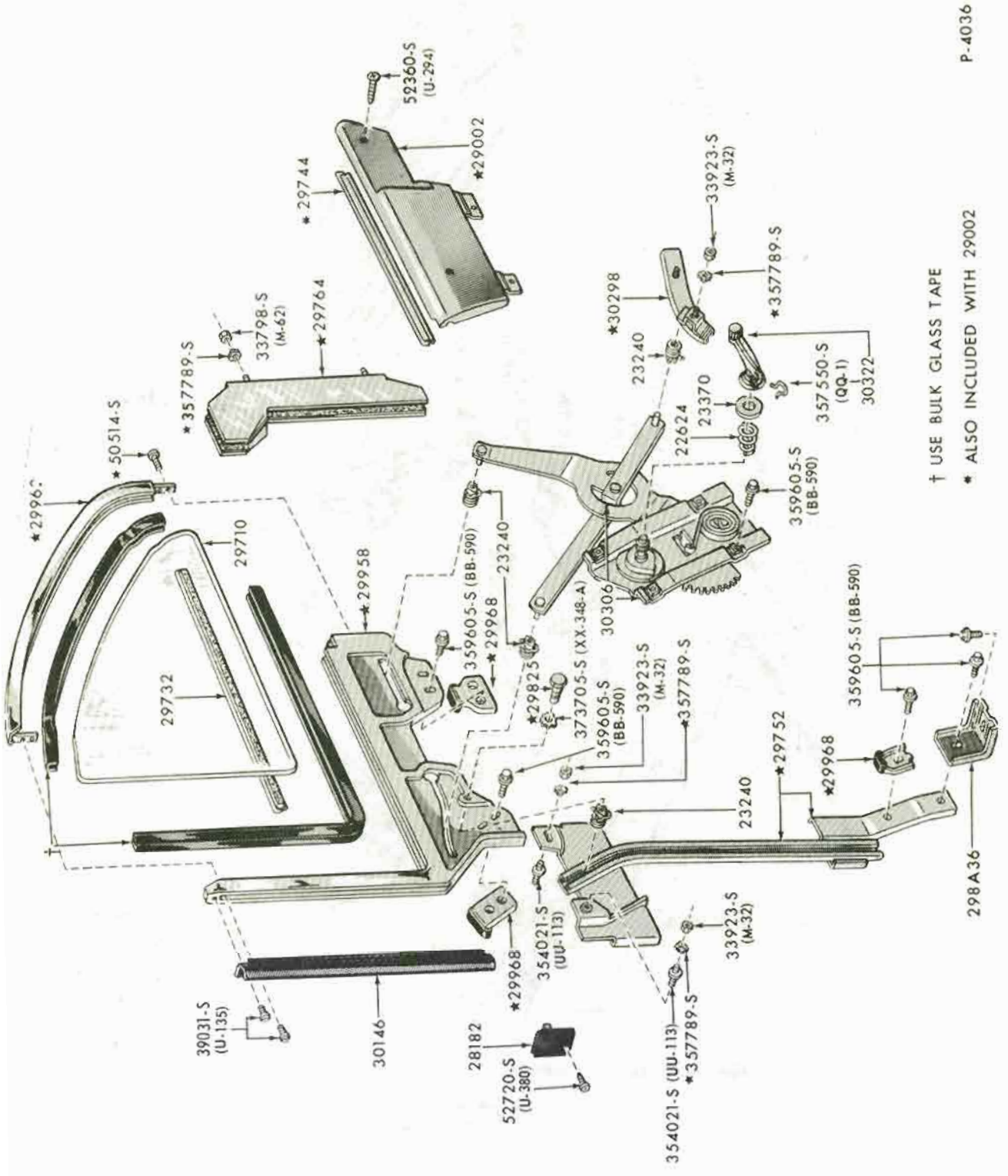

QUARTER WINDOW and RELATED PARTS
1965 FALCON - BODY TYPE 76

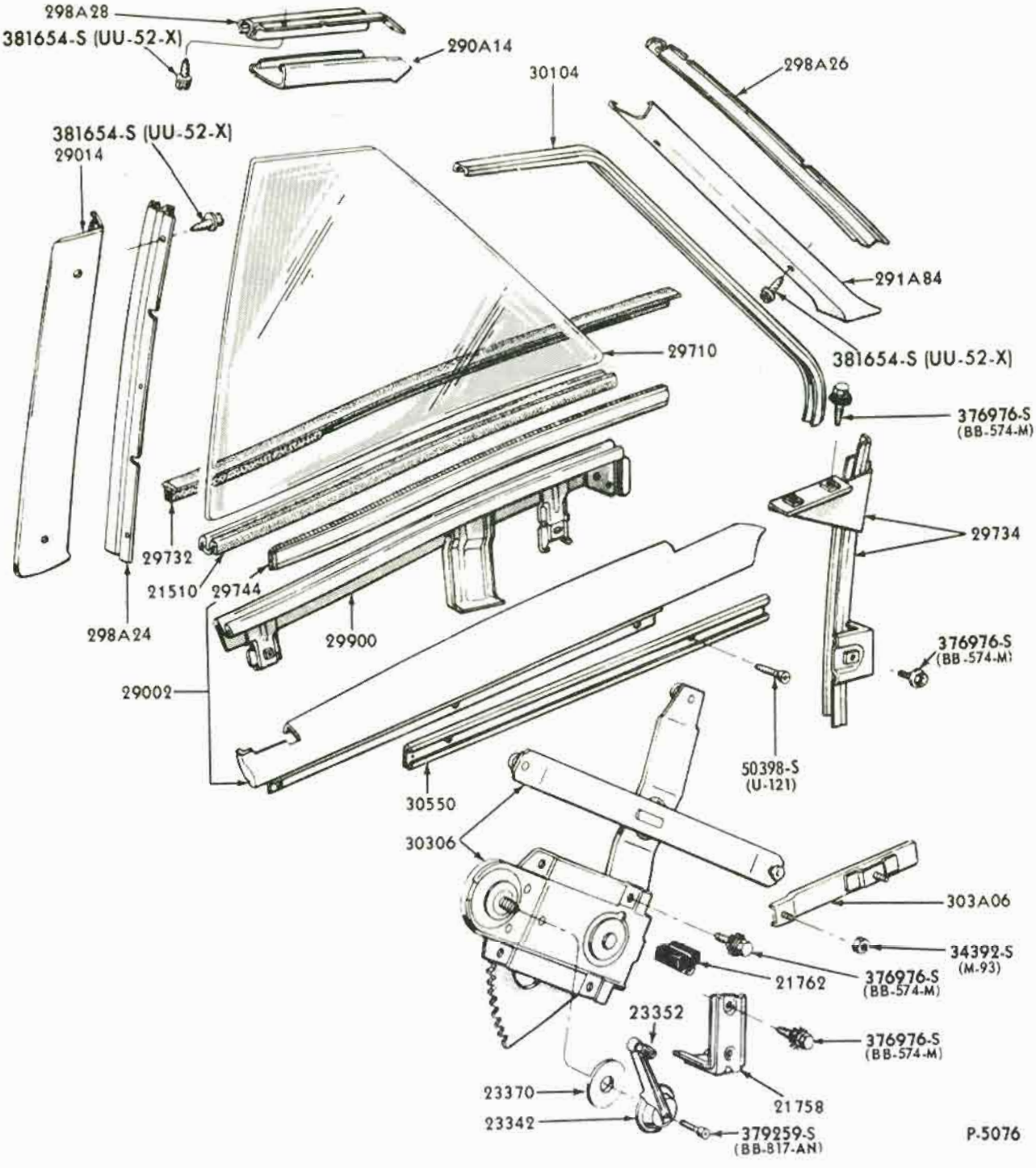

QUARTER WINDOW and RELATED PARTS
1966/67 FAIRLANE - BODY TYPE 62
1966/70 FALCON - BODY TYPE 62

COPYRIGHT © 1975 — FORD MOTOR COMPANY — DEARBORN, MICHIGAN

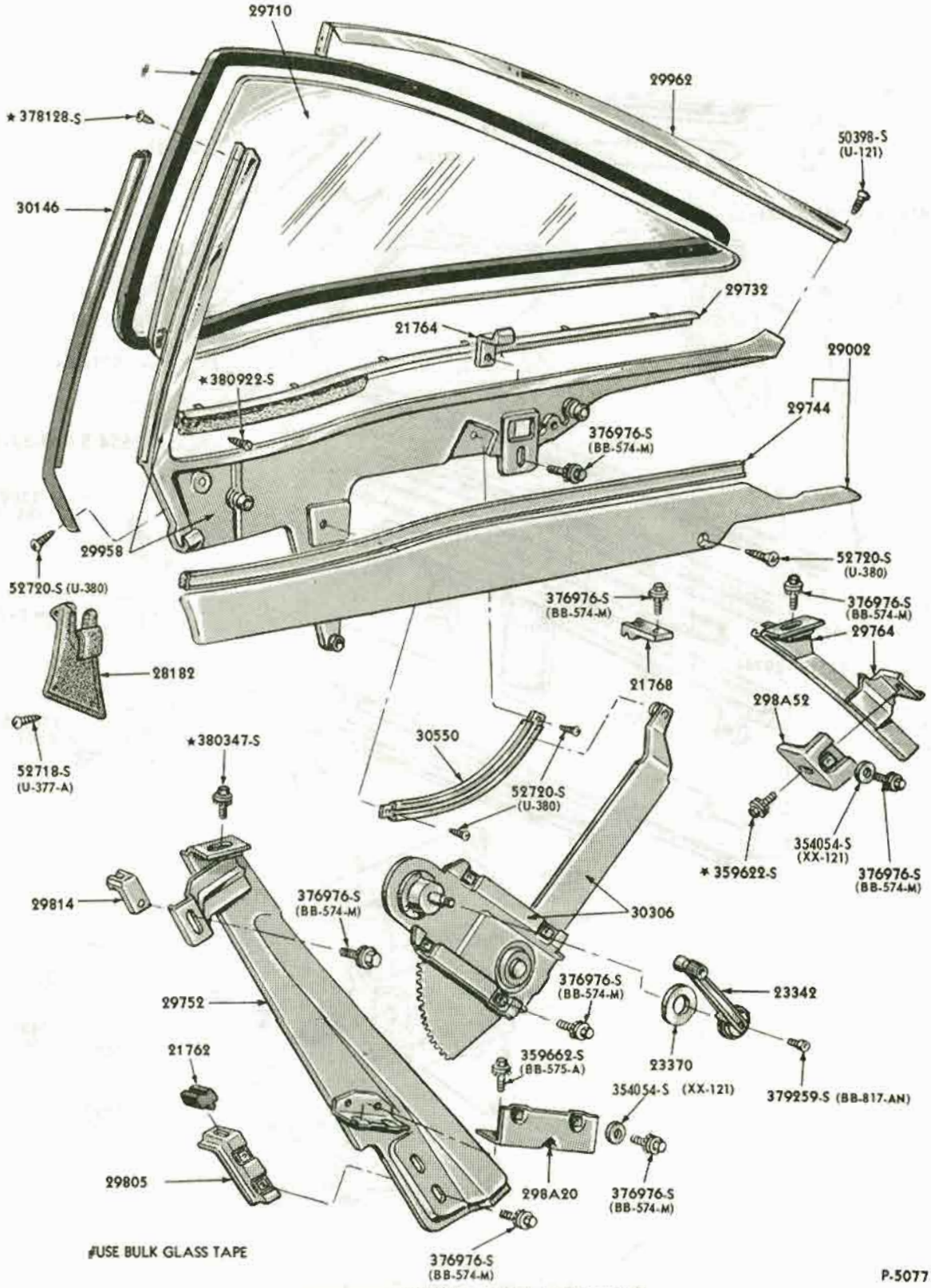

QUARTER WINDOW and RELATED PARTS
1966/67 FAIRLANE - BODY TYPE 63

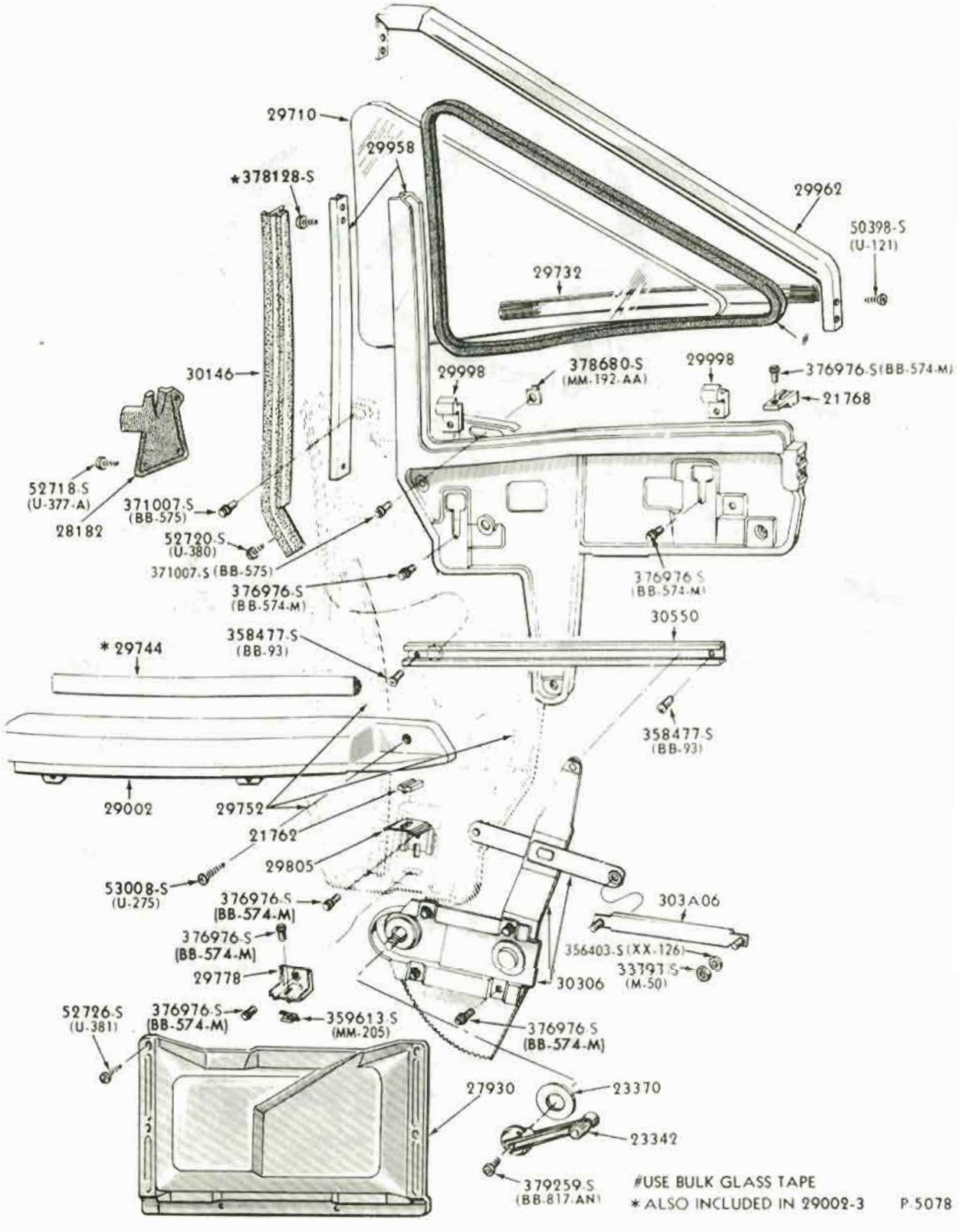

QUARTER WINDOW and RELATED PARTS
1966/67 FAIRLANE - BODY TYPE 76

COPYRIGHT © 1975 — FORD MOTOR COMPANY — DEARBORN, MICHIGAN

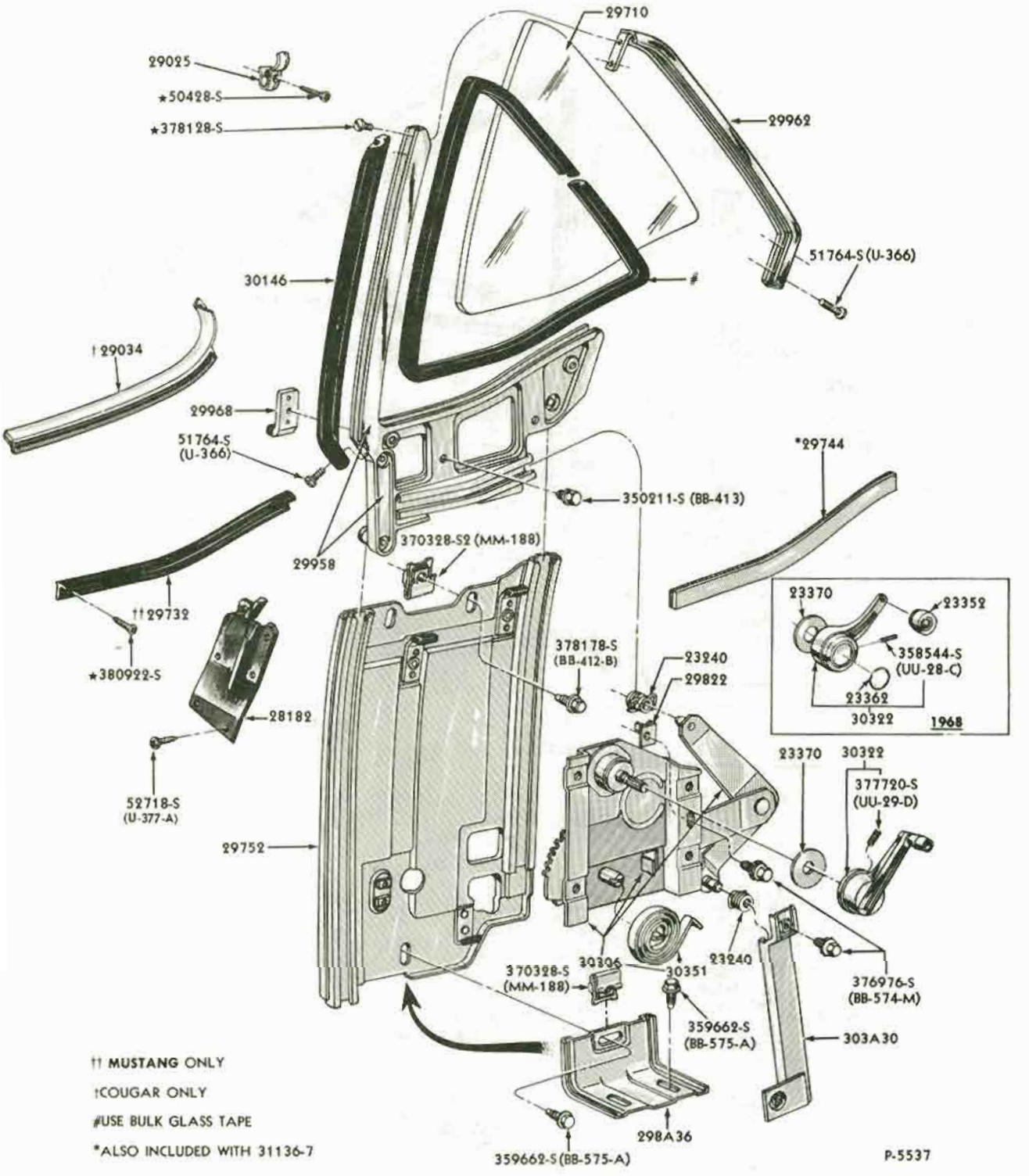

†† MUSTANG ONLY

†COUGAR ONLY

#USE BULK GLASS TAPE

*ALSO INCLUDED WITH 31136-7

QUARTER WINDOW and RELATED PARTS
1967/68 MUSTANG - BODY TYPES 65, 76

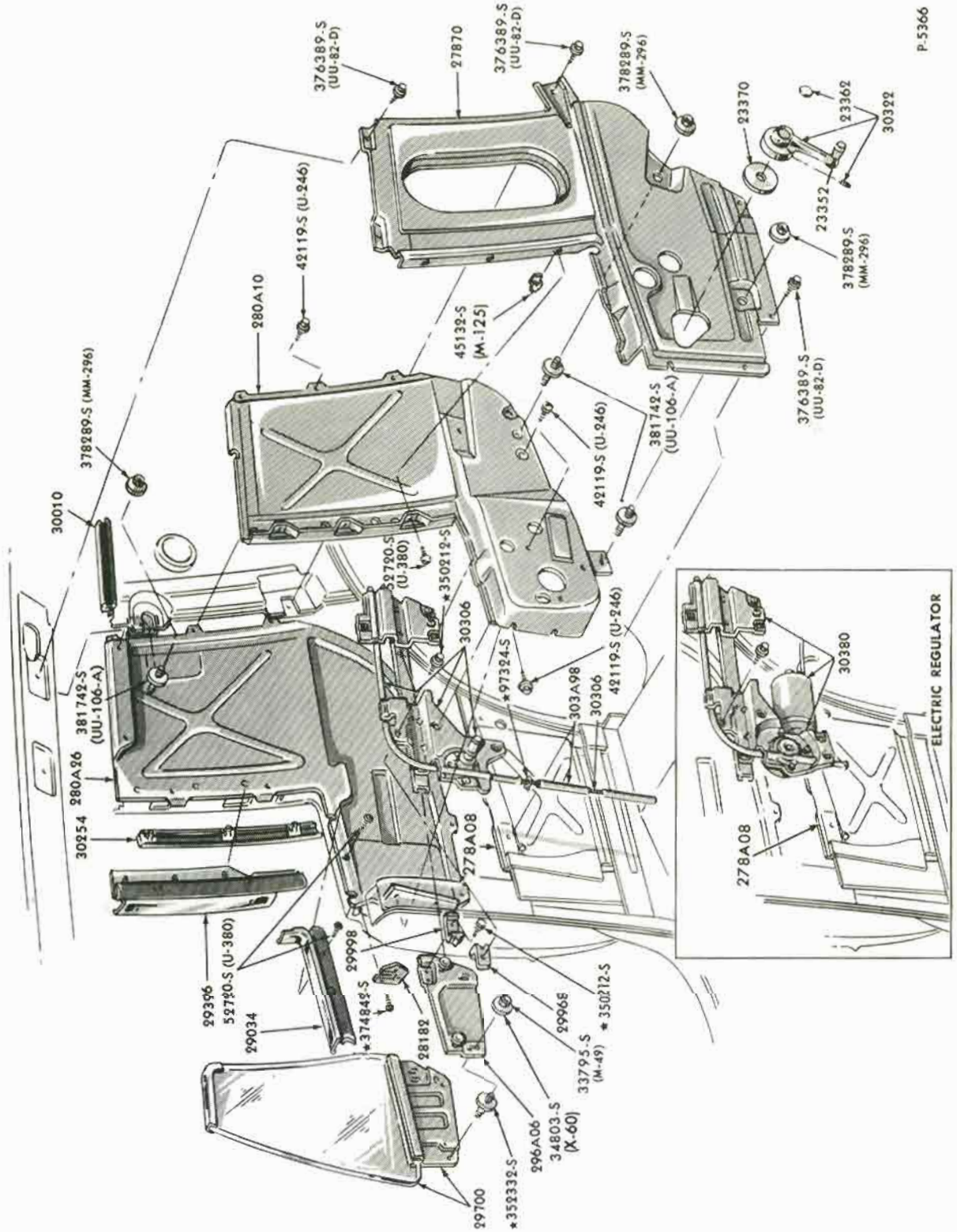

QUARTER WINDOW and RELATED PARTS
1967/68 THUNDERBIRD - BODY TYPE 65
1969 THUNDERBIRD - BODY TYPES 55A, C

COPYRIGHT © 1975 — FORD MOTOR COMPANY — DEARBORN, MICHIGAN

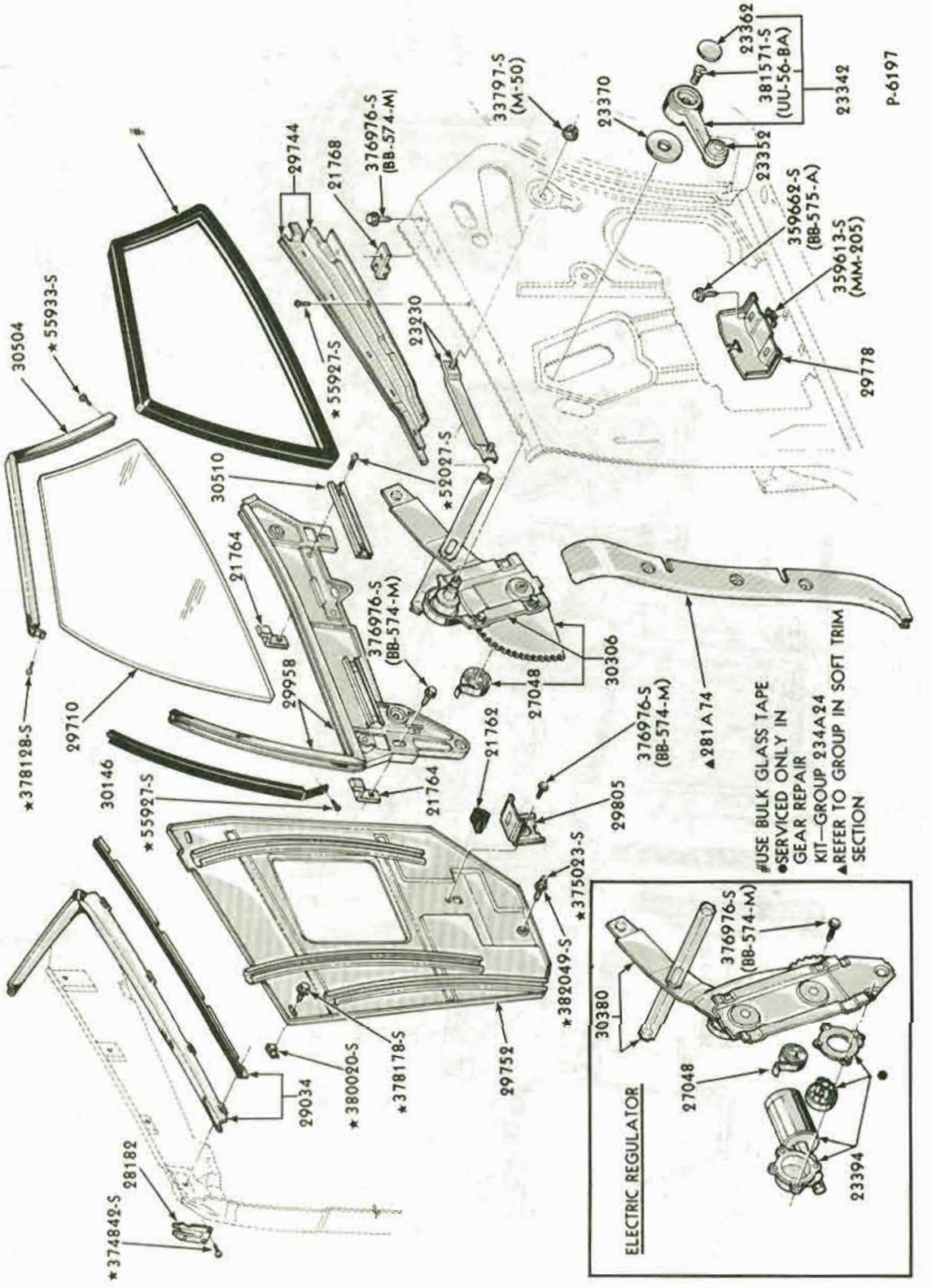

QUARTER WINDOW and RELATED PARTS
1968 FORD - BODY TYPES 63, 65

P-6158

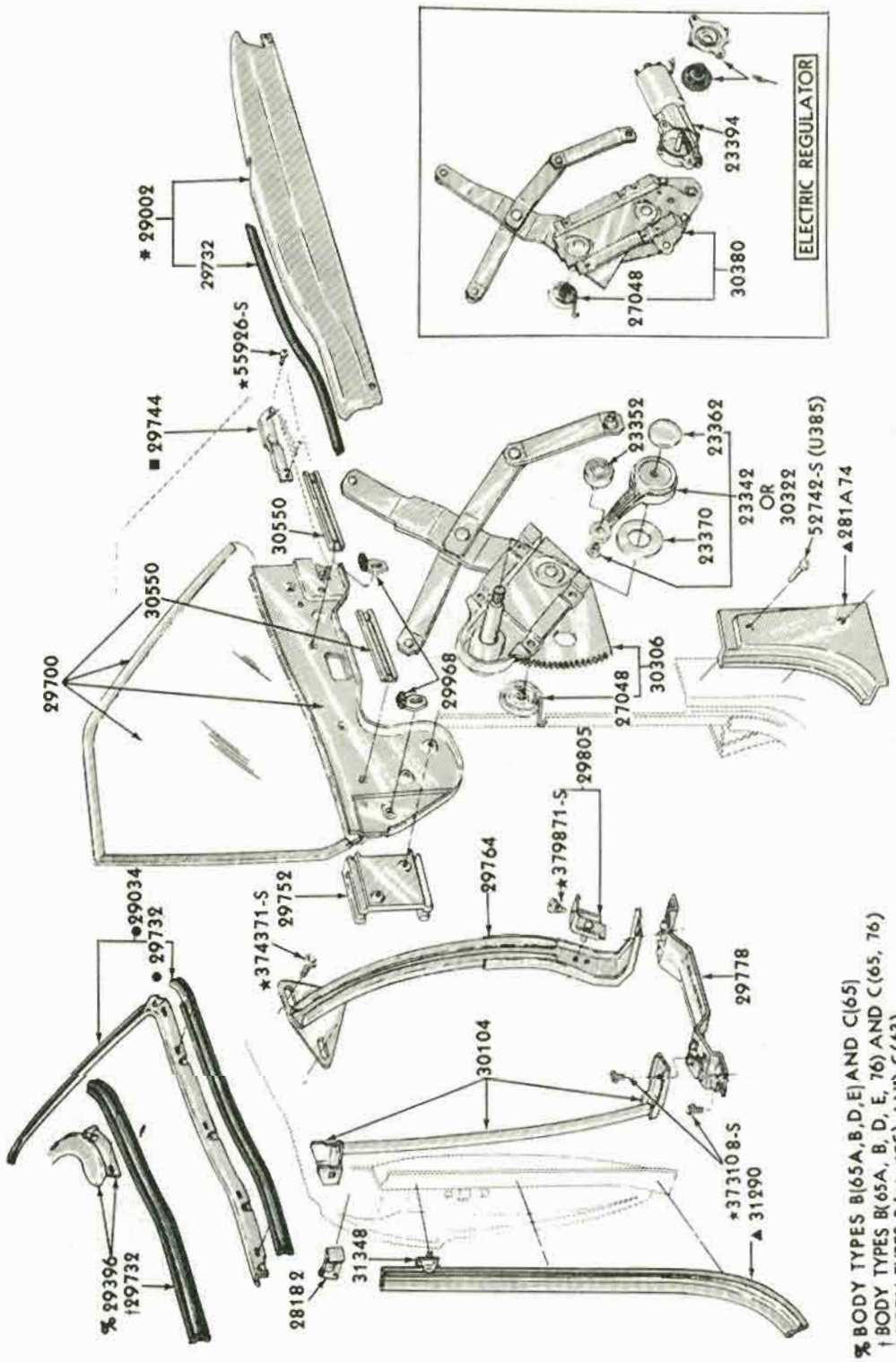

% BODY TYPES B(65A,B,D,E) AND C(65)
† BODY TYPES B(65A, B, D, E, 76) AND C(65, 76)
● BODY TYPES B(63, 65C) AND C(63)
▲ REFER TO GROUP IN SOFT TRIM SECTION
#SERVICED ONLY IN GEAR REPAIR KIT—GROUP 234A24
■ BODY TYPE 65
* NOT USED ON B(76D)

QUARTER WINDOW and RELATED PARTS
1968/69 FAIRLANE/TORINO - BODY TYPES 63, 65, 76

COPYRIGHT © 1975 — FORD MOTOR COMPANY — DEARBORN, MICHIGAN

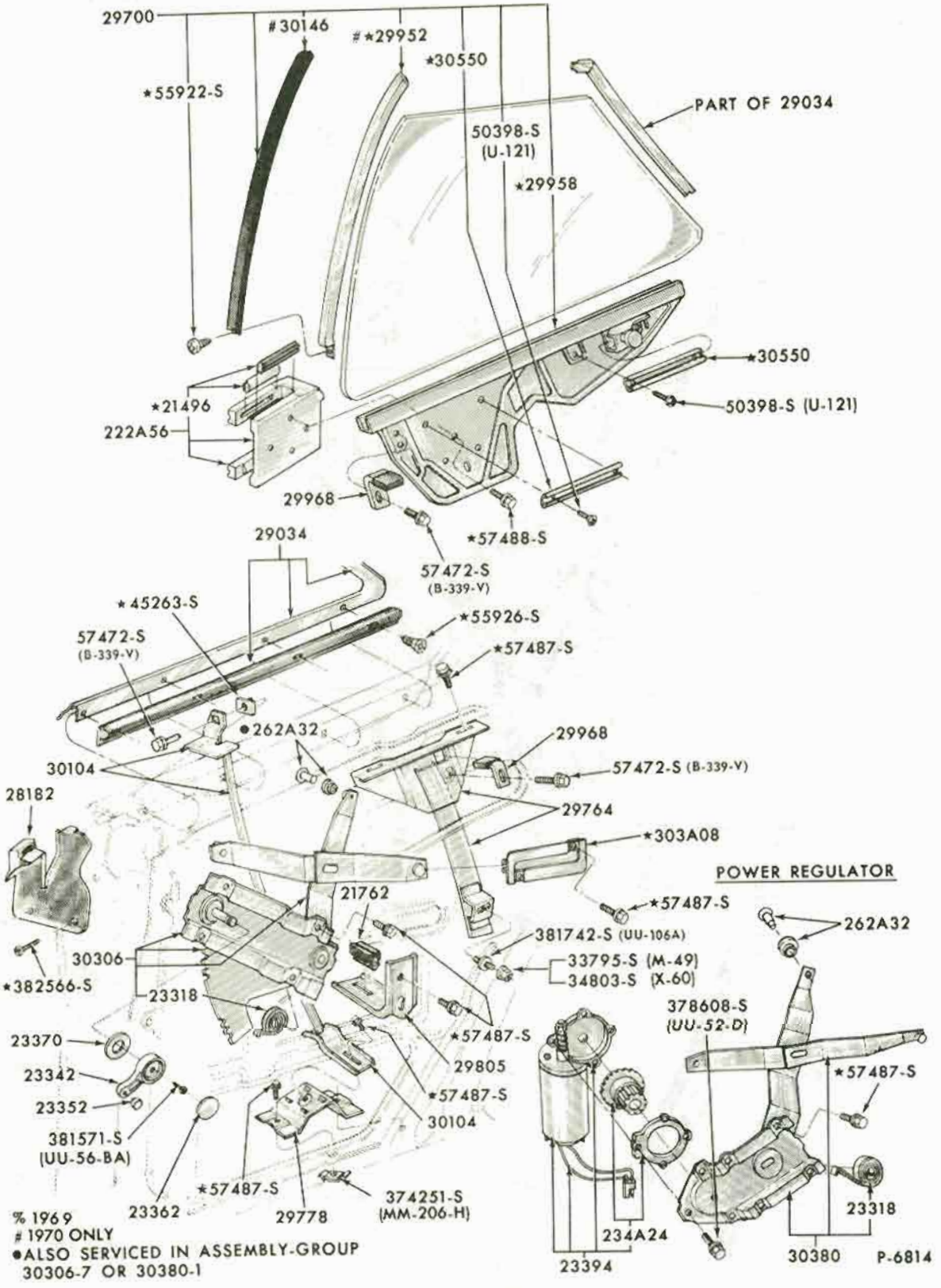

% 1969
# 1970 ONLY
•ALSO SERVICED IN ASSEMBLY-GROUP 30306-7 OR 30380-1

QUARTER WINDOW and RELATED PARTS
1969/70 FORD - BODY TYPE 63

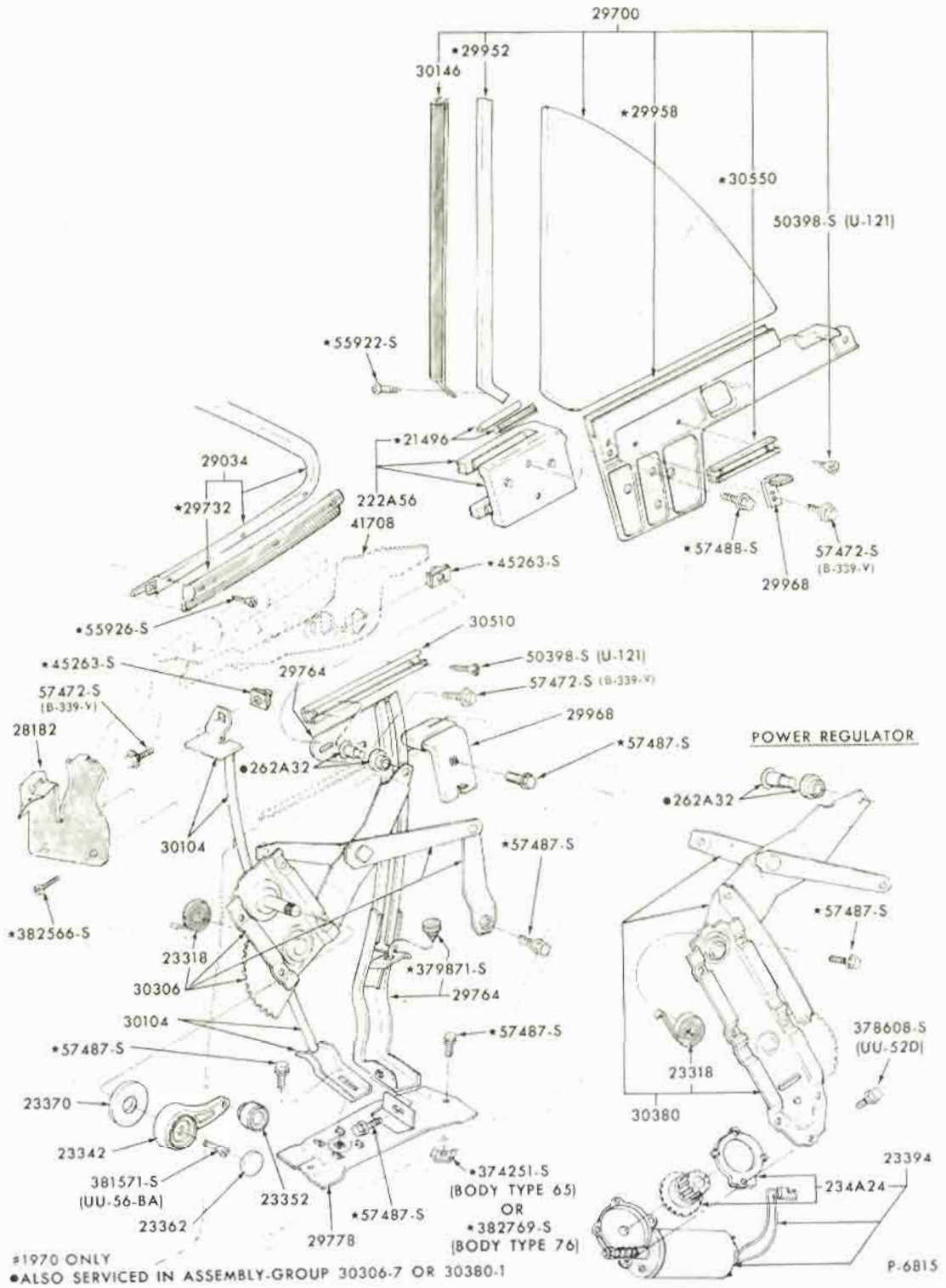

QUARTER WINDOW and RELATED PARTS
1969/70 FORD-BODY TYPES 65, 76
1971/72 FORD - BODY TYPE 76

COPYRIGHT © 1975 — FORD MOTOR COMPANY — DEARBORN, MICHIGAN

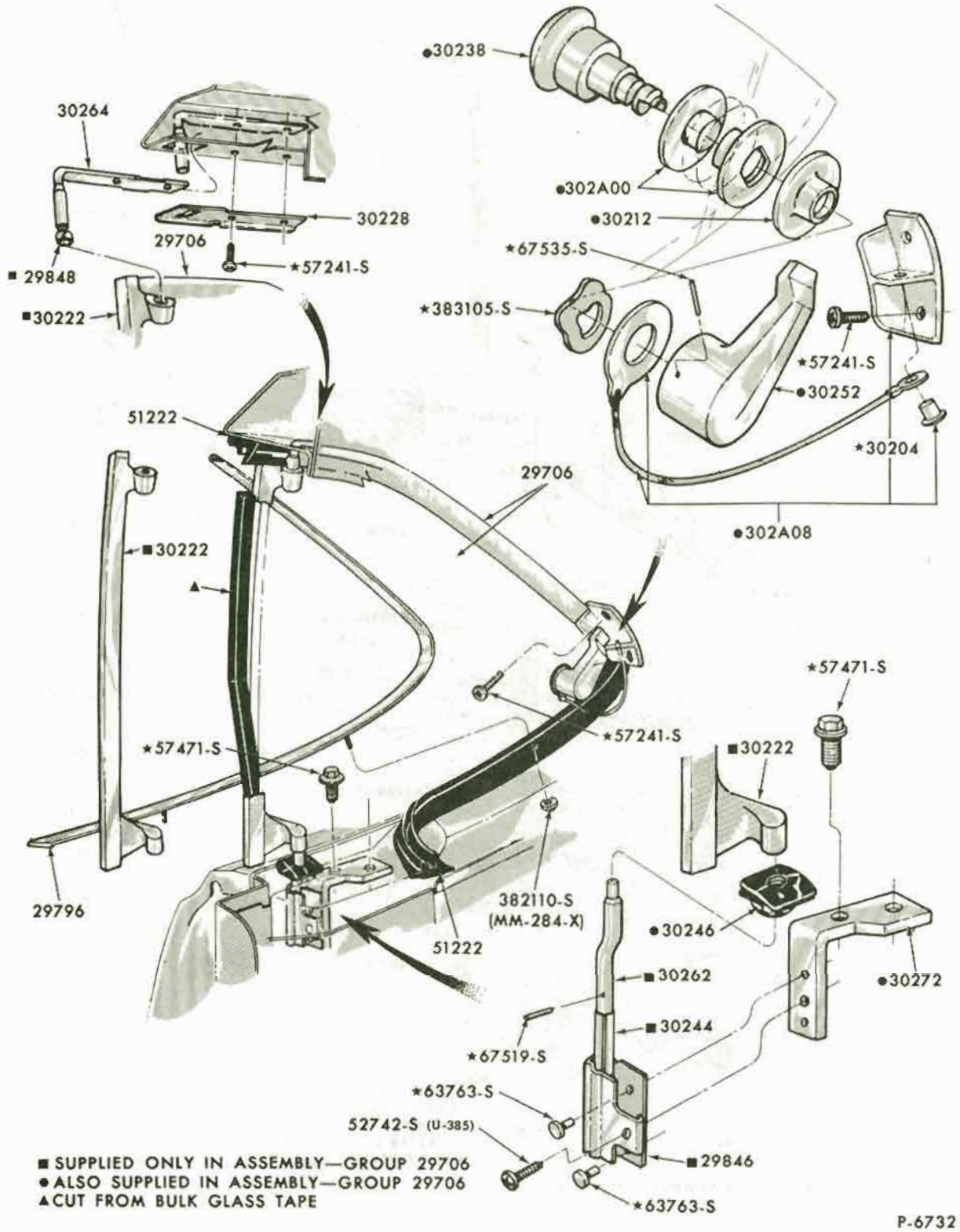

■ SUPPLIED ONLY IN ASSEMBLY—GROUP 29706
● ALSO SUPPLIED IN ASSEMBLY—GROUP 29706
▲ CUT FROM BULK GLASS TAPE

P-6732

QUARTER WINDOW and RELATED PARTS
1969/70 MUSTANG - BODY TYPE 63

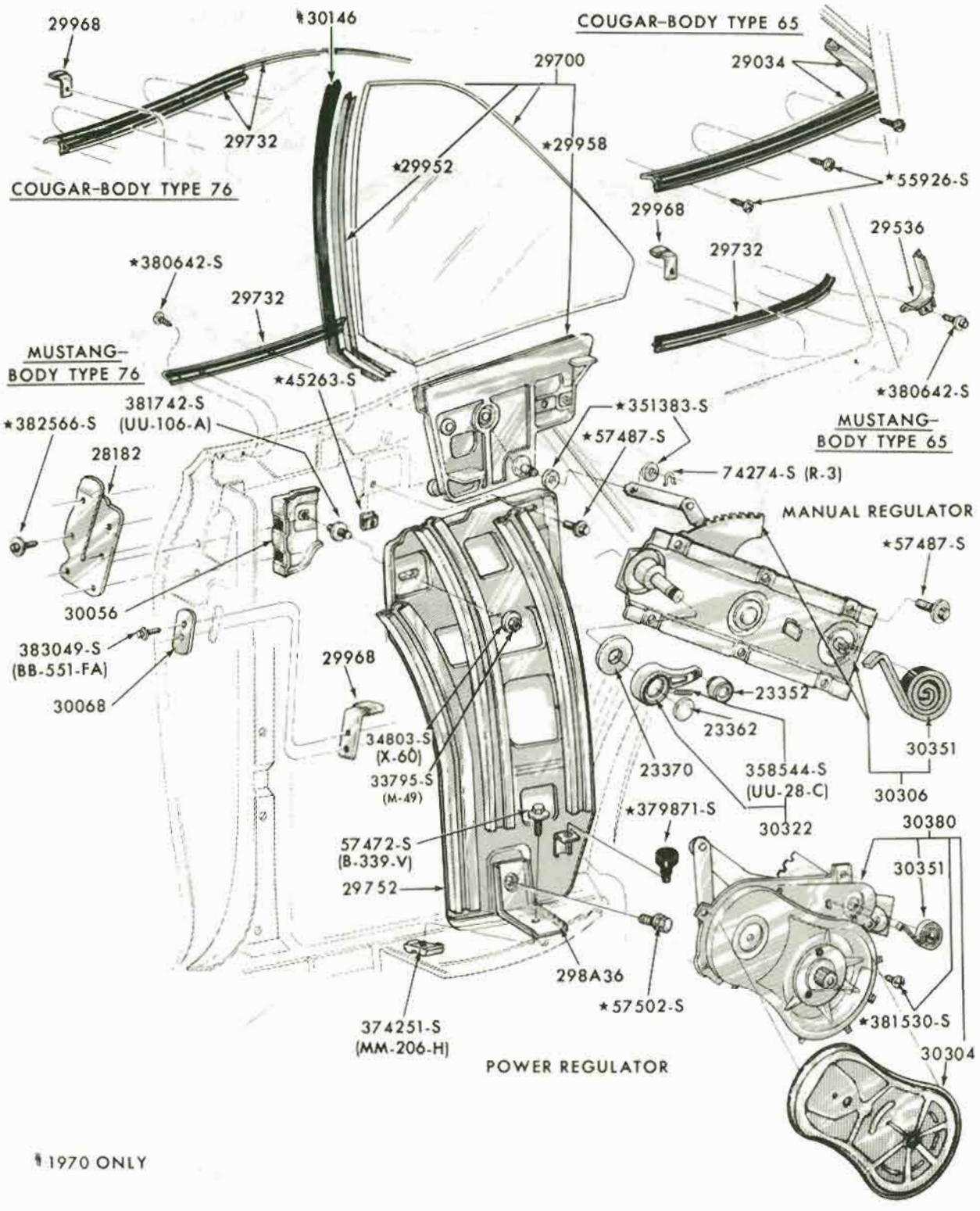

† 1970 ONLY

P-6733

QUARTER WINDOW and RELATED PARTS
1969/70 MUSTANG - BODY TYPES 65, 76

COPYRIGHT © 1975 — FORD MOTOR COMPANY — DEARBORN, MICHIGAN

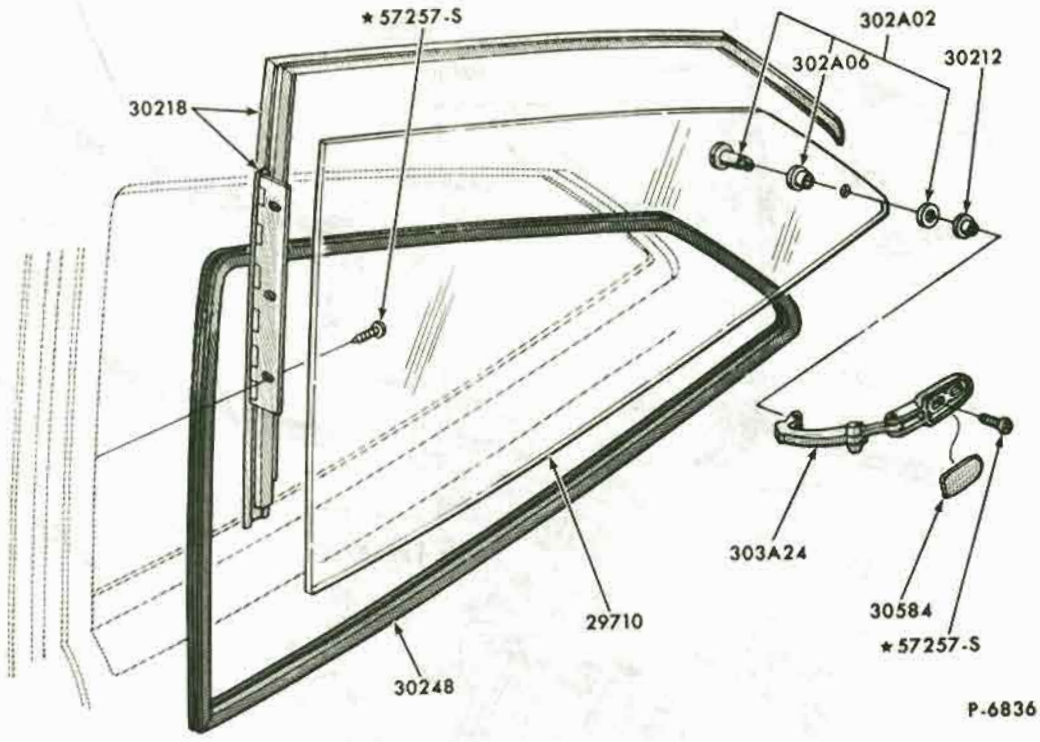

QUARTER WINDOW and RELATED PARTS
1970/72 MAVERICK - BODY TYPE 62

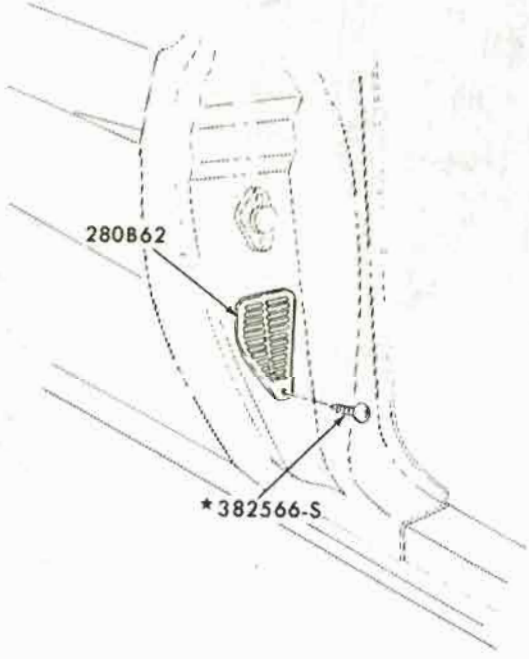

PRESSURE RELEASE VENT - QUARTER
1970/72 ALL

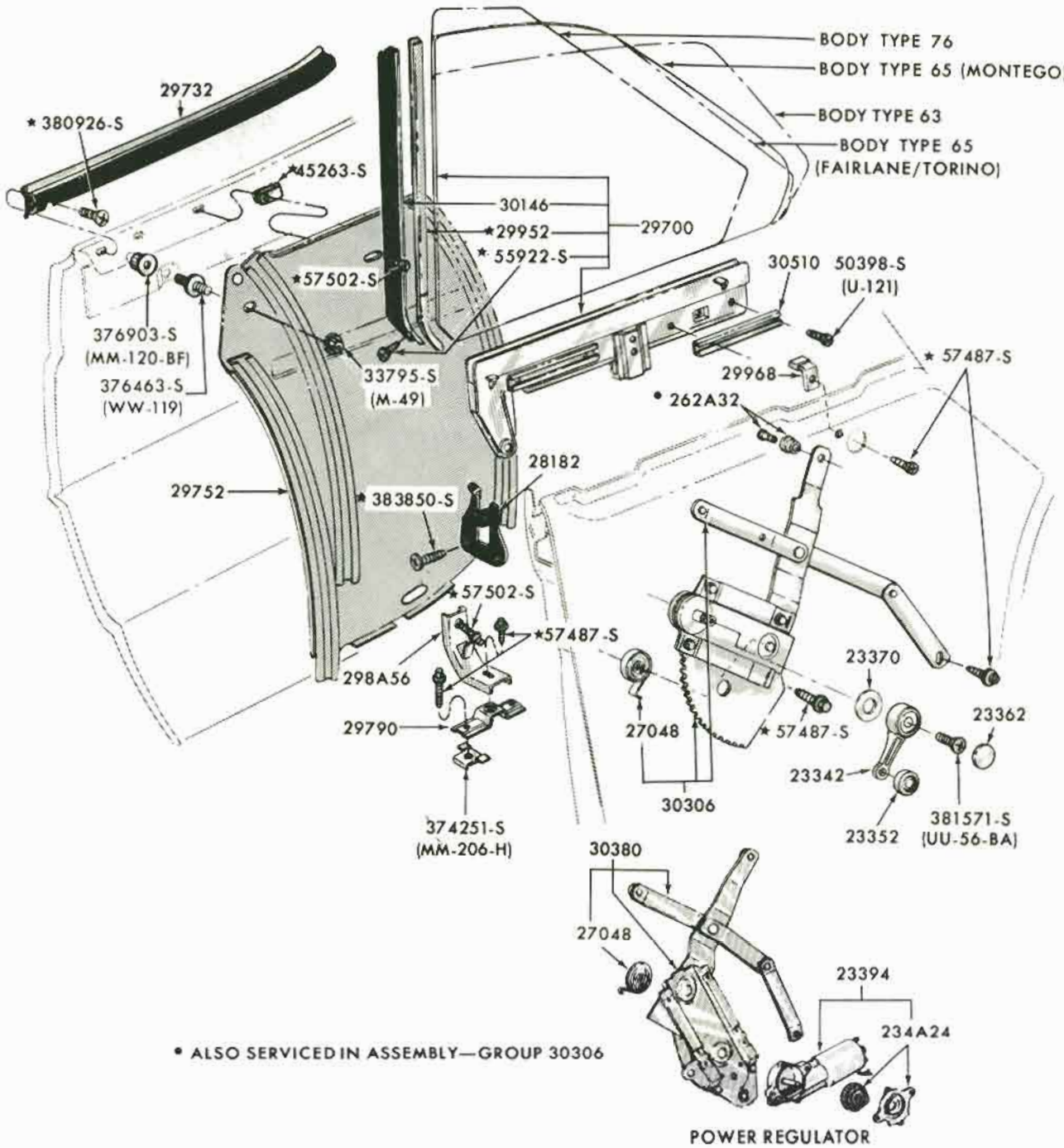

• ALSO SERVICED IN ASSEMBLY—GROUP 30306

P-7045

QUARTER WINDOW and RELATED PARTS
1970/71 FAIRLANE/TORINO - BODY TYPES 63, 65, 76

COPYRIGHT © 1975 — FORD MOTOR COMPANY — DEARBORN, MICHIGAN

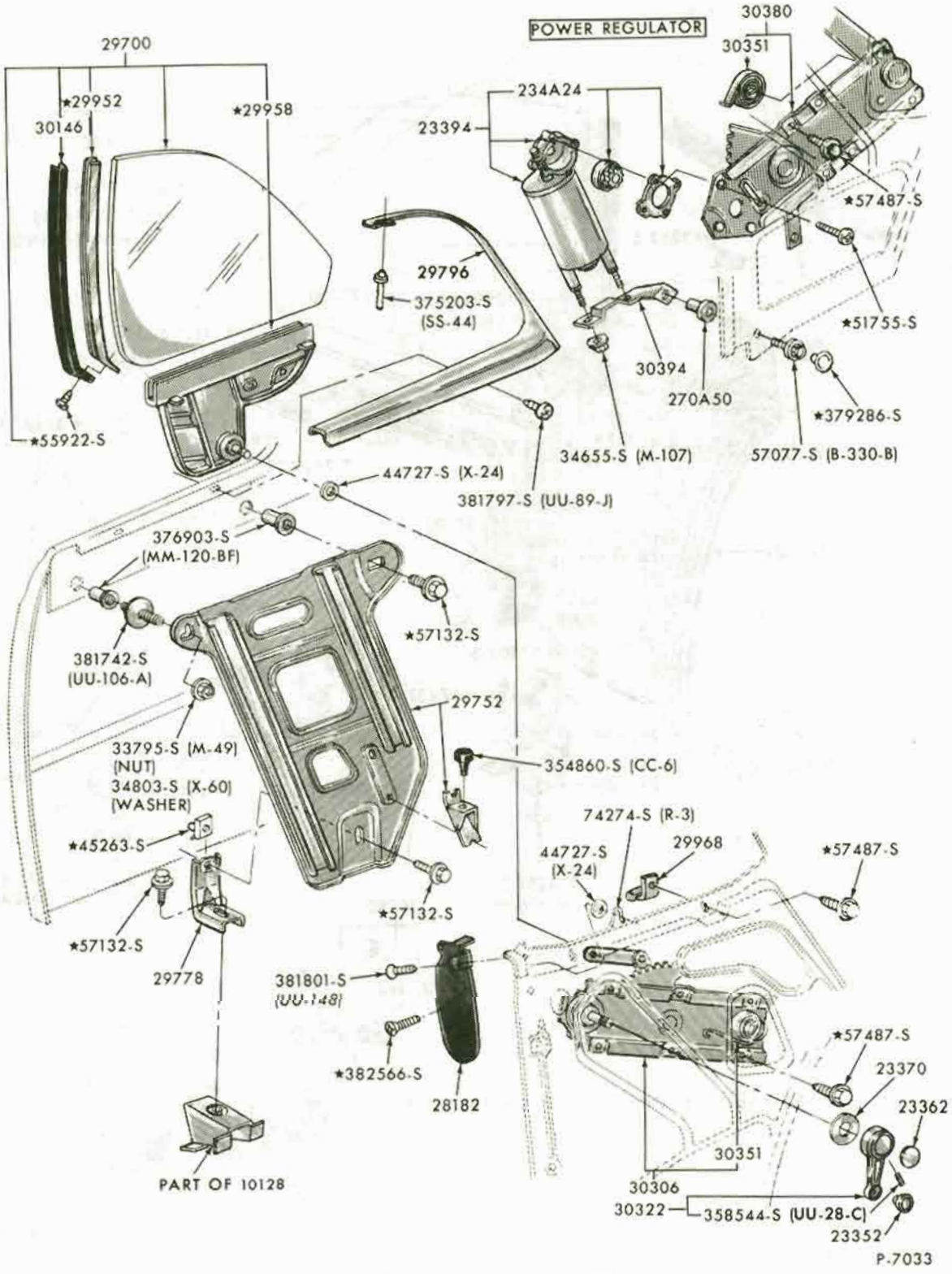

QUARTER WINDOW and RELATED PARTS
1970/71 THUNDERBIRD - BODY TYPE 65

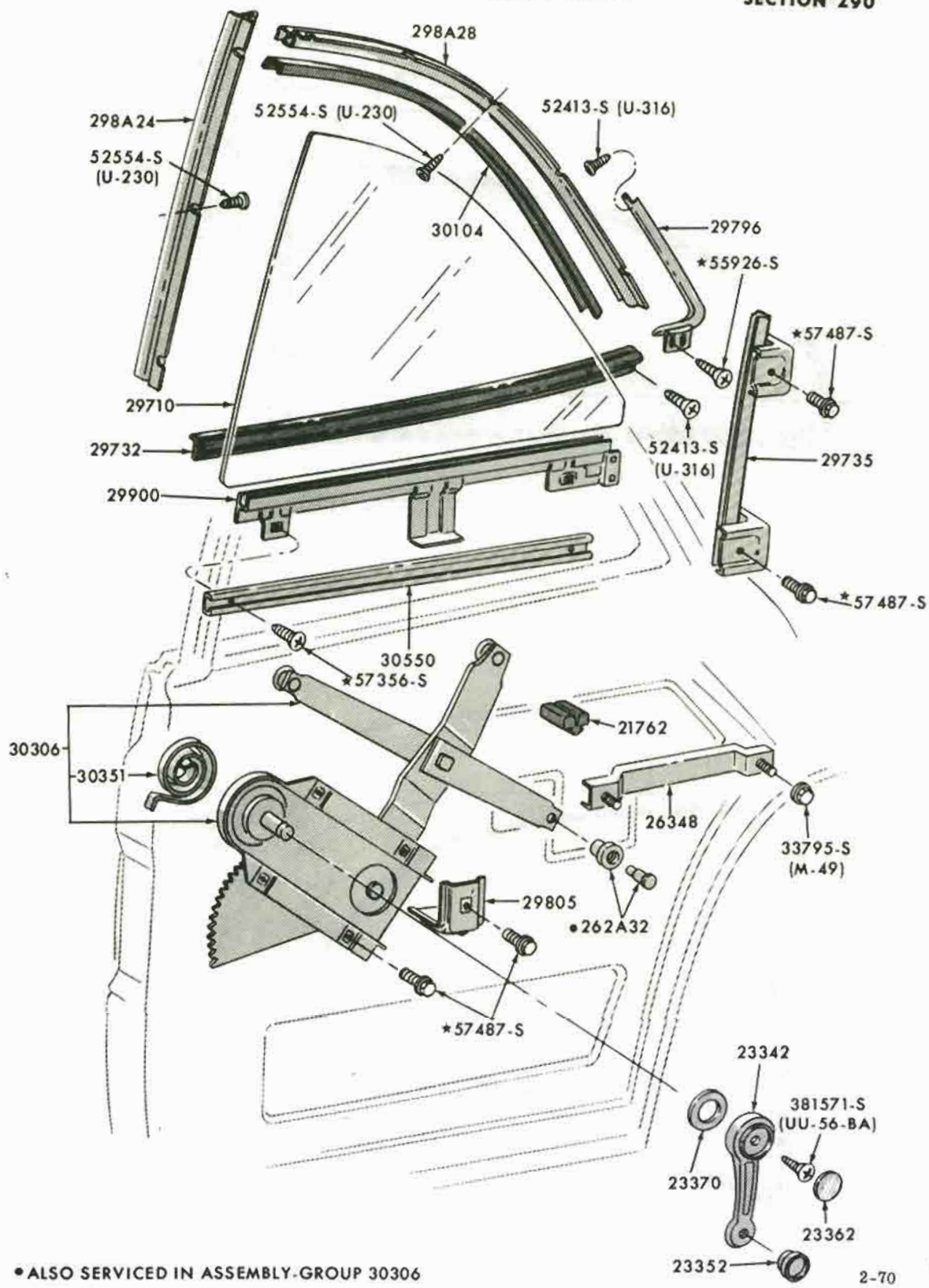

•ALSO SERVICED IN ASSEMBLY-GROUP 30306

2-70 P-7466

QUARTER WINDOW and RELATED PARTS
1970 FAIRLANE - BODY TYPE 62

COPYRIGHT © 1975 — FORD MOTOR COMPANY — DEARBORN, MICHIGAN

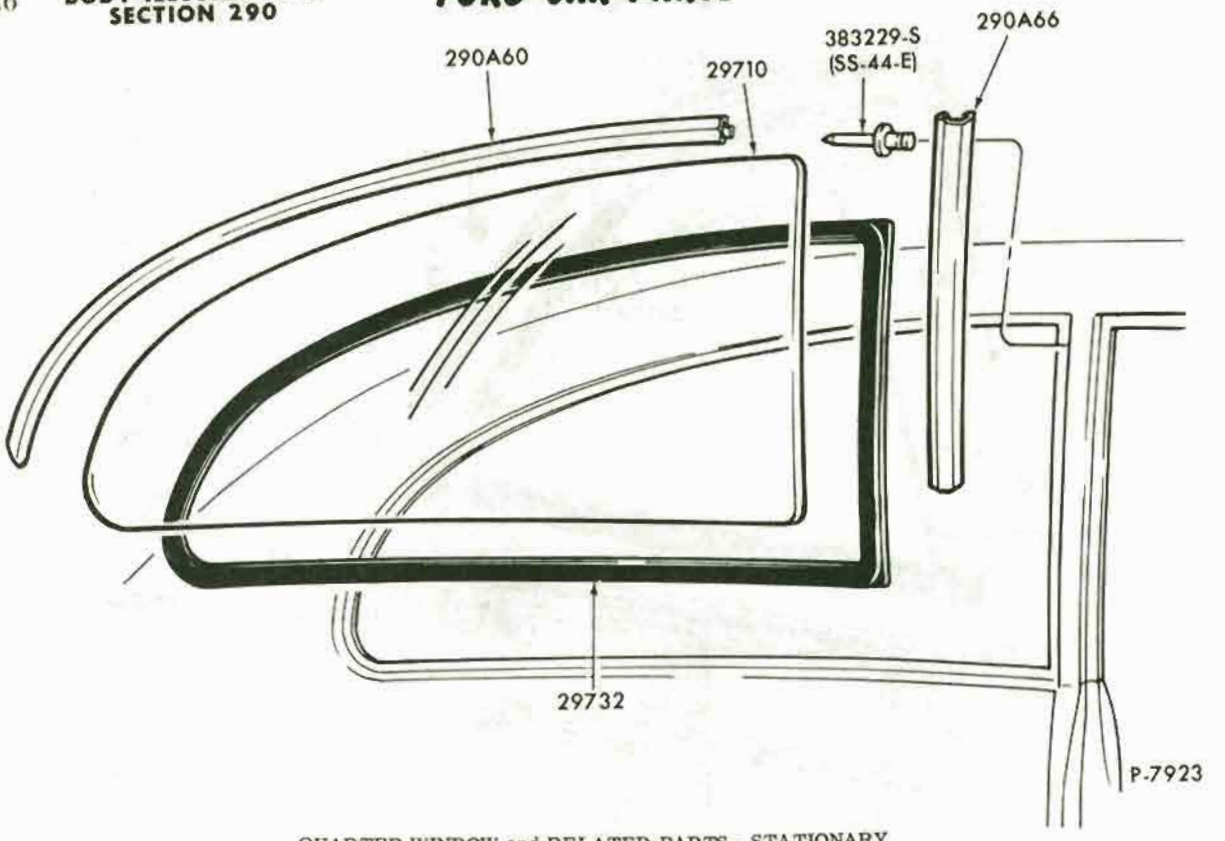

QUARTER WINDOW and RELATED PARTS - STATIONARY
1971/72 PINTO - BODY TYPES 62, 64

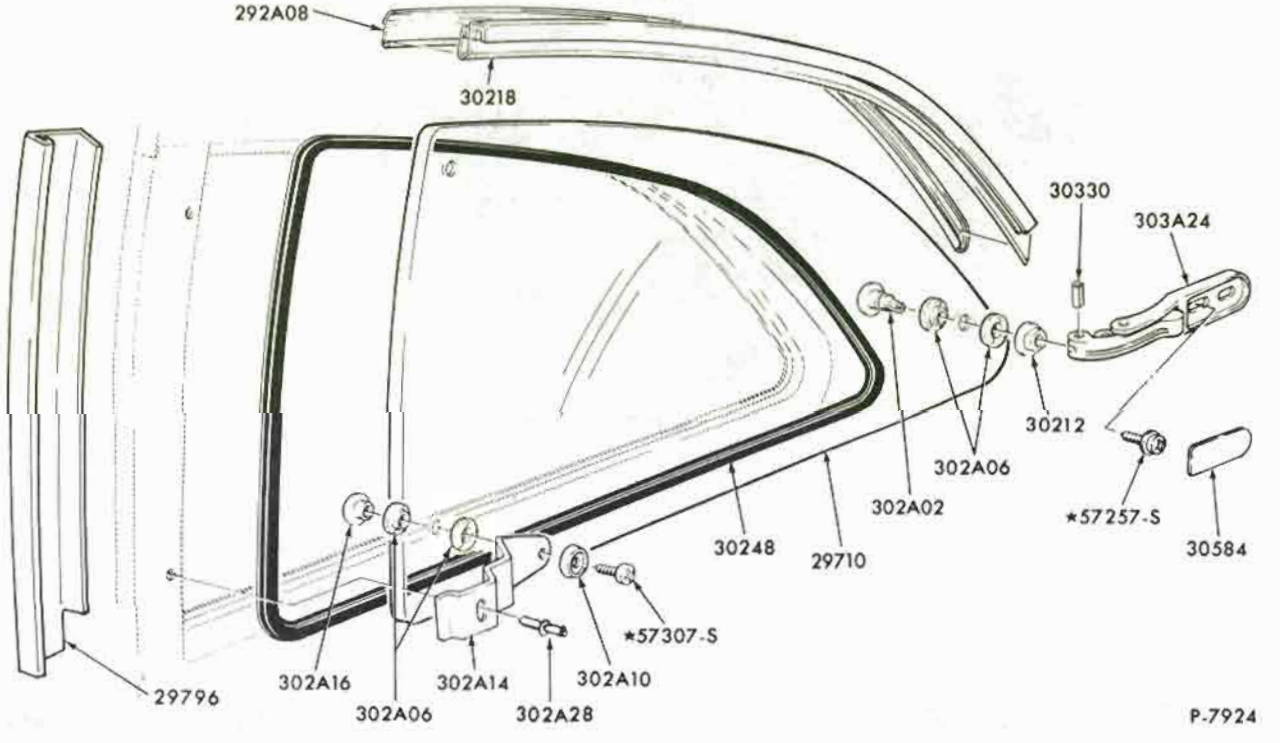

QUARTER WINDOW and RELATED PARTS - MOVEABLE
1971/72 PINTO - BODY TYPES 62, 64 - "Before 5/1/72"

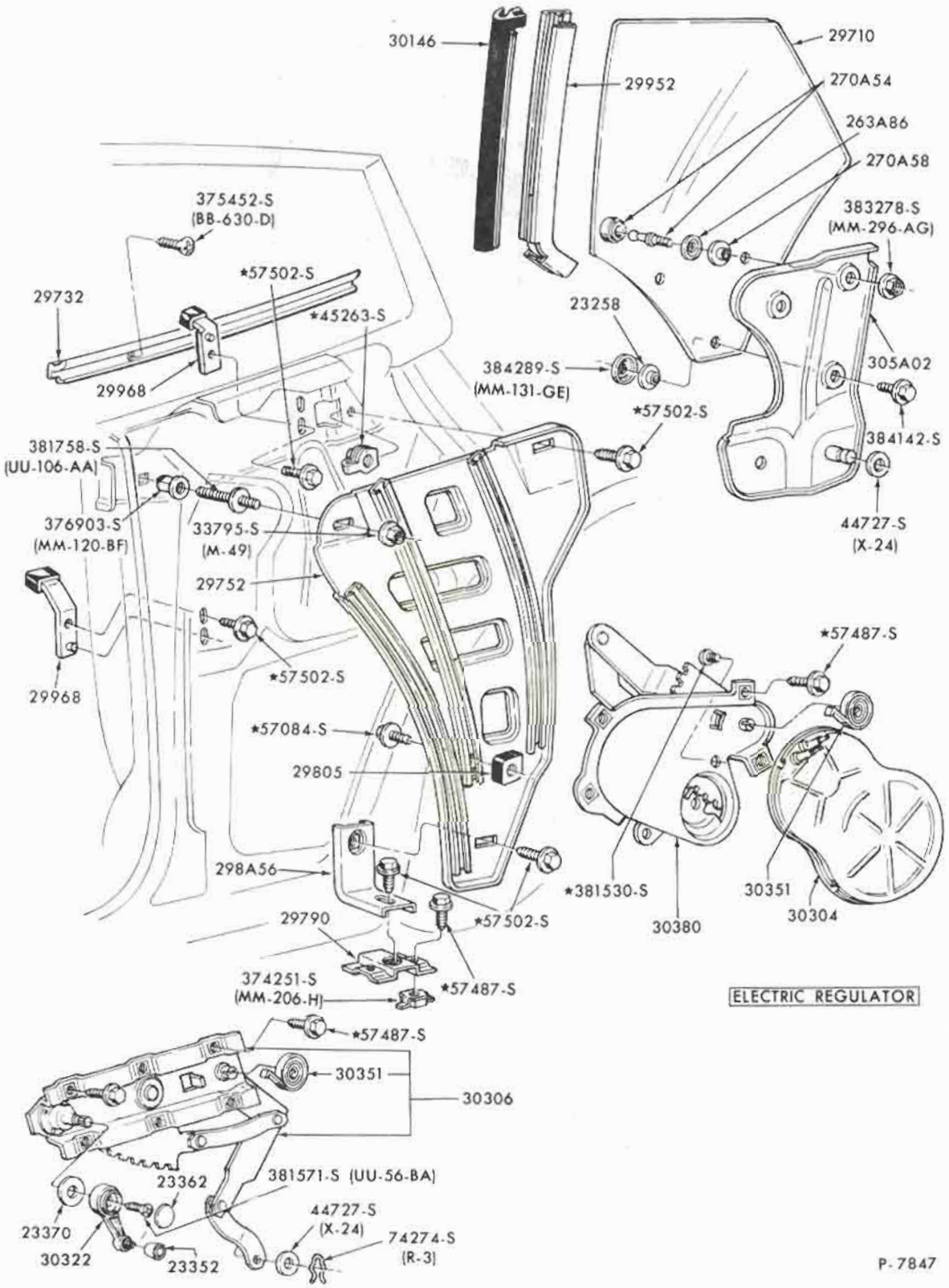

QUARTER WINDOW and RELATED PARTS - MOVEABLE
1971/72 MUSTANG

COPYRIGHT © 1975 — FORD MOTOR COMPANY — DEARBORN, MICHIGAN

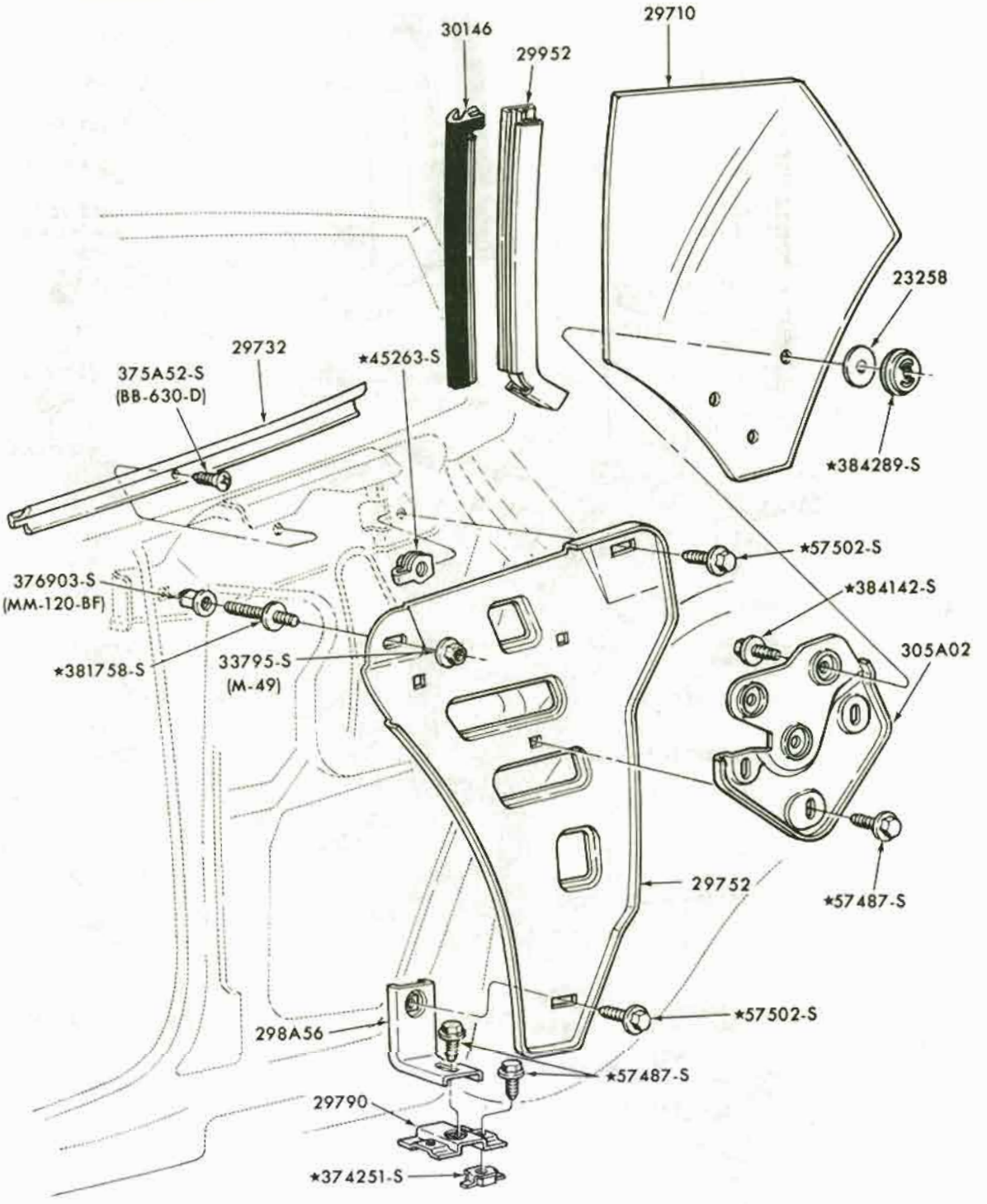

P-7846

QUARTER WINDOW and RELATED PARTS - STATIONARY
1971/72 MUSTANG - BODY TYPE 63

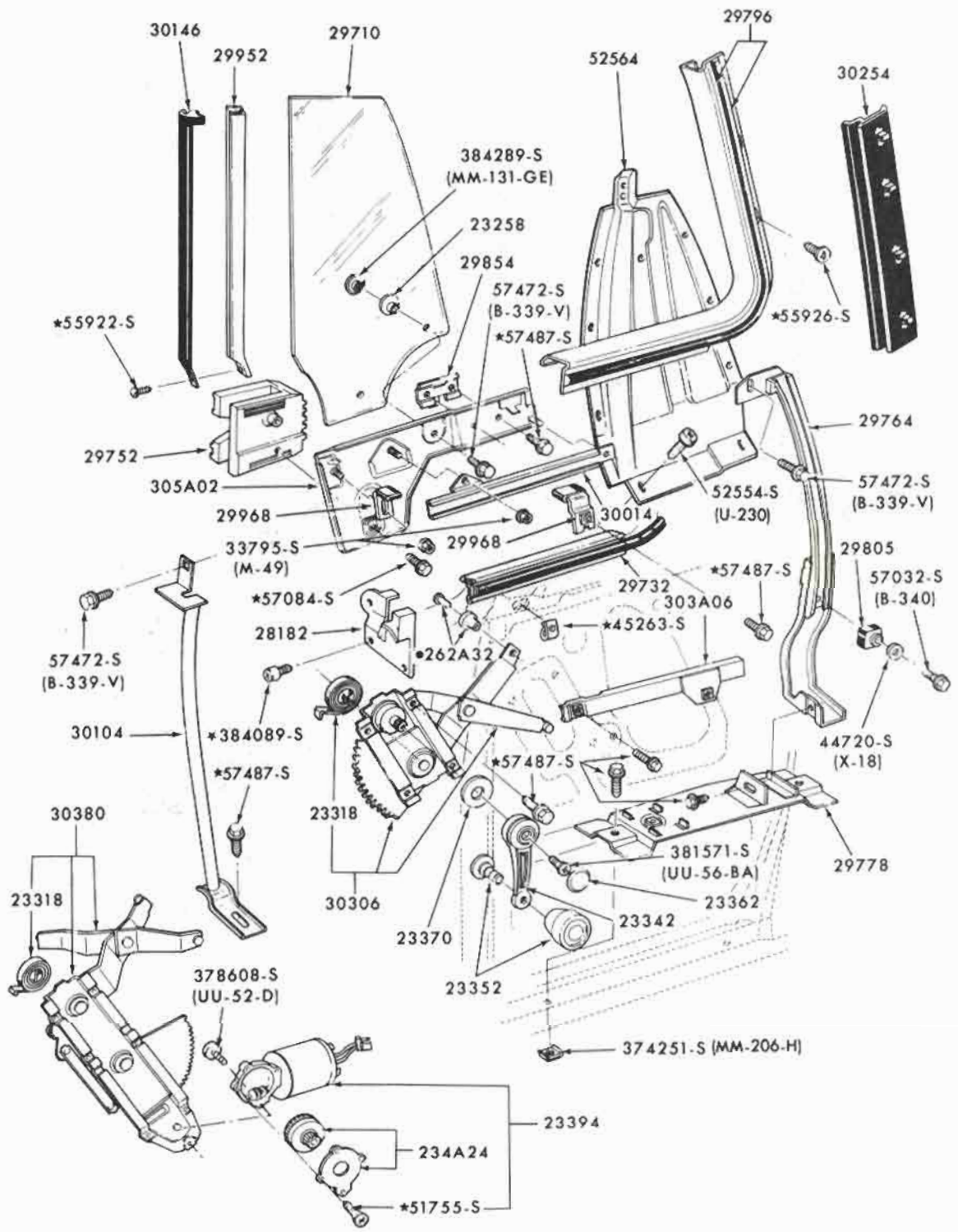

•ALSO SUPLIED IN ASSEMBLY-GROUP 30306-7

P-7874

QUARTER WINDOW and RELATED PARTS
1971/72 FORD - BODY TYPE 65

COPYRIGHT © 1975 — FORD MOTOR COMPANY — DEARBORN, MICHIGAN

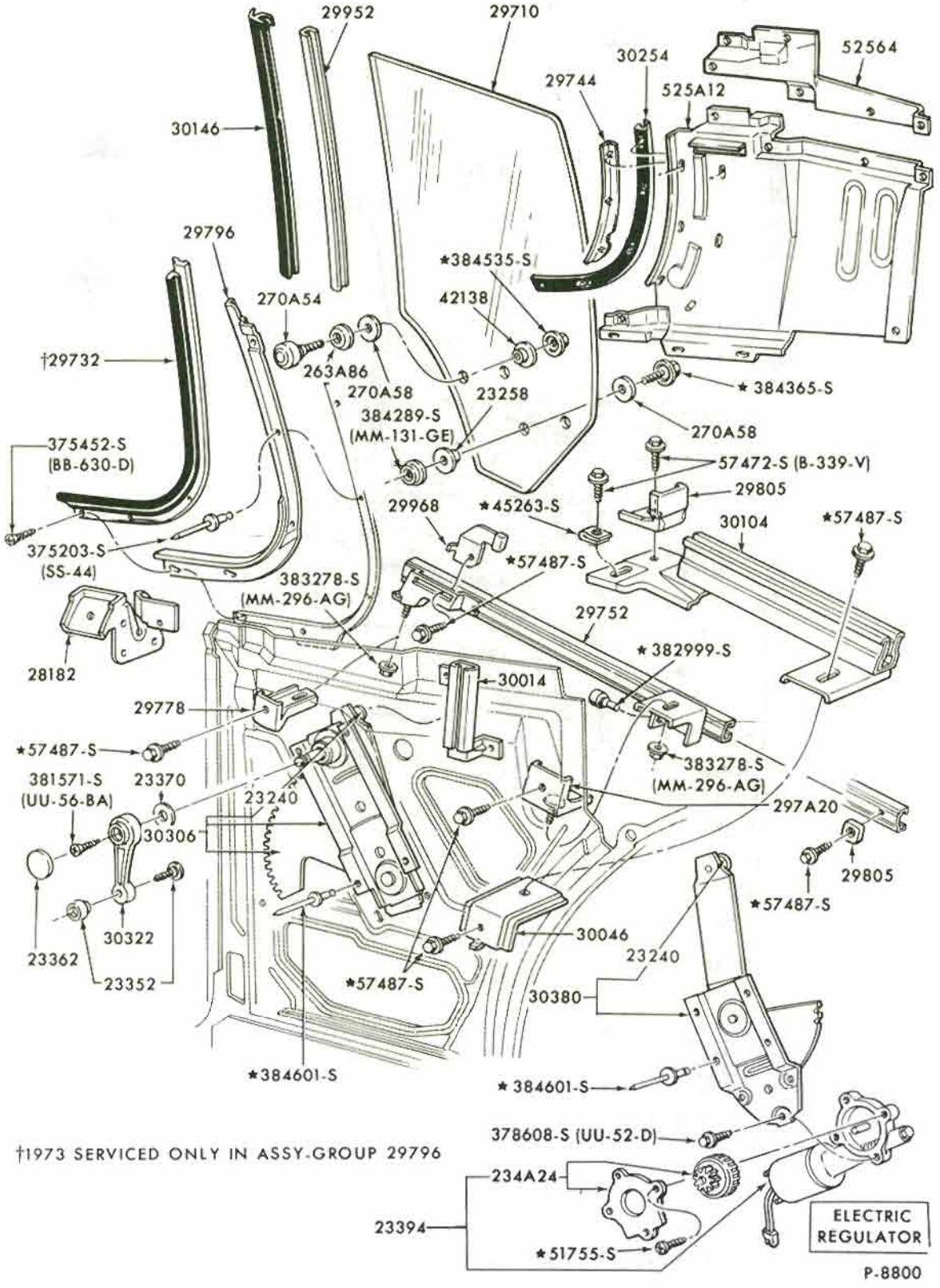

†1973 SERVICED ONLY IN ASSY-GROUP 29796

QUARTER WINDOW and RELATED PARTS
1972 THUNDERBIRD

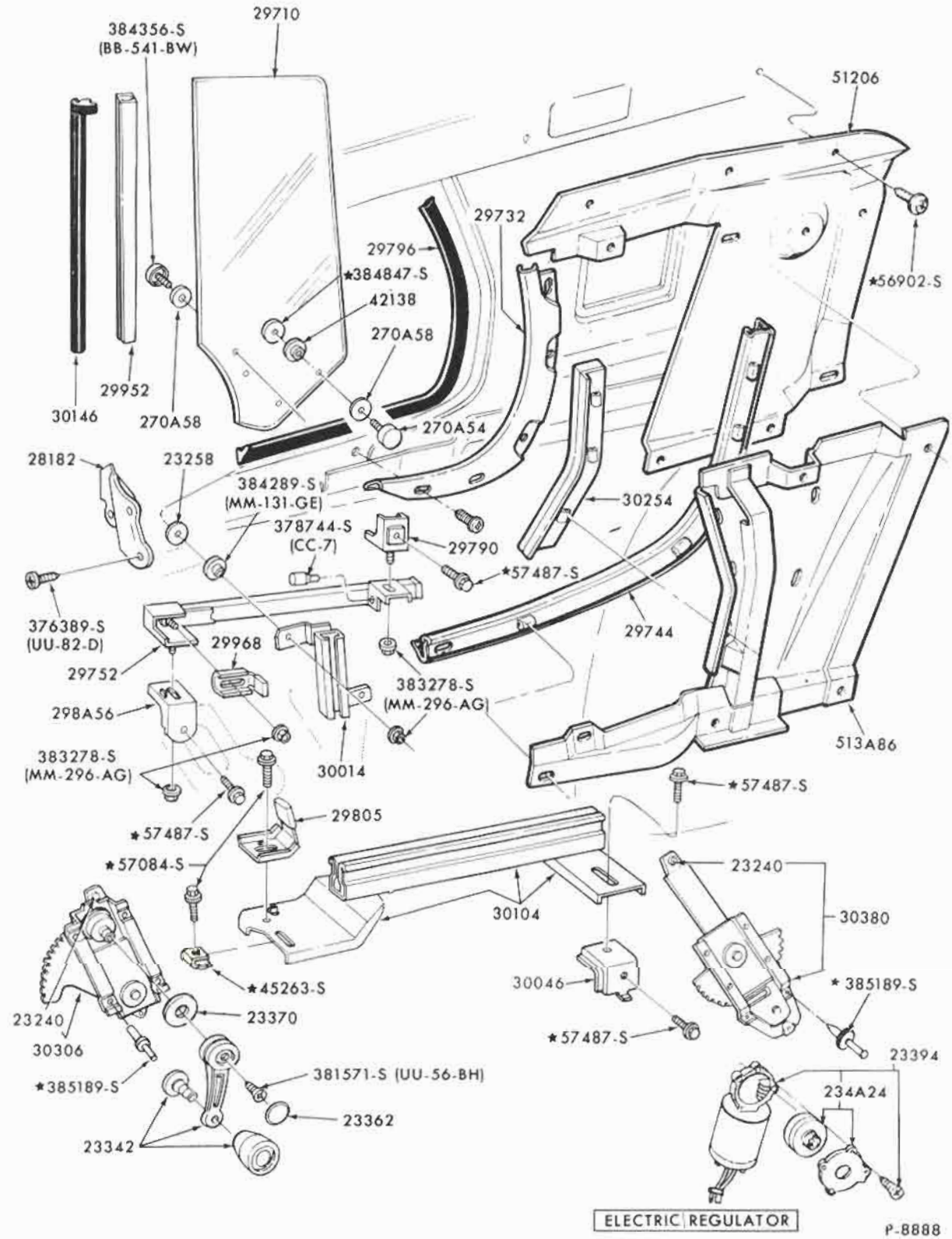

QUARTER WINDOW and RELATED PARTS
1972 TORINO - BODY TYPE 65

COPYRIGHT © 1975 — FORD MOTOR COMPANY — DEARBORN, MICHIGAN

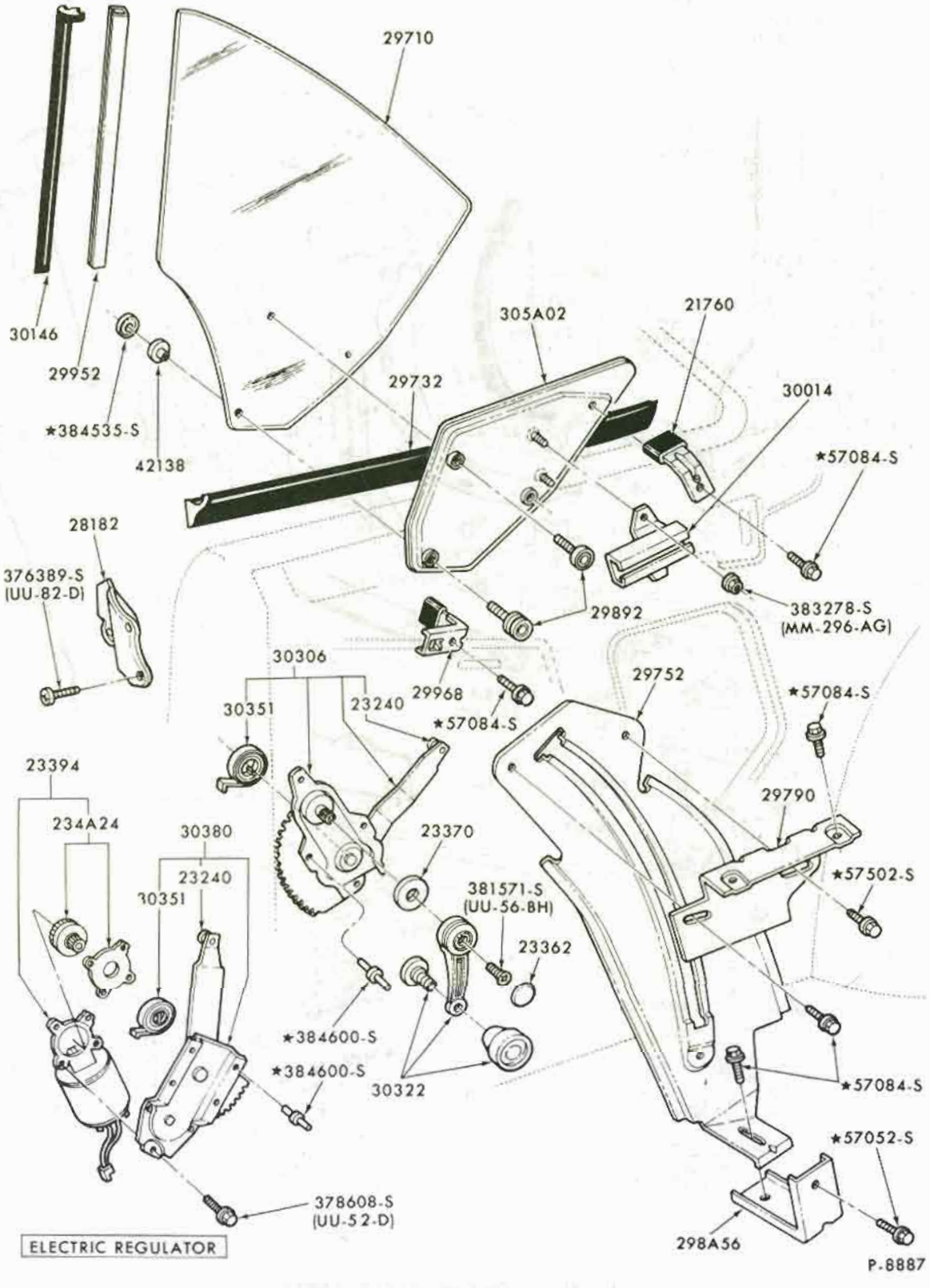

QUARTER WINDOW and RELATED PARTS
1972 TORINO - BODY TYPE 63

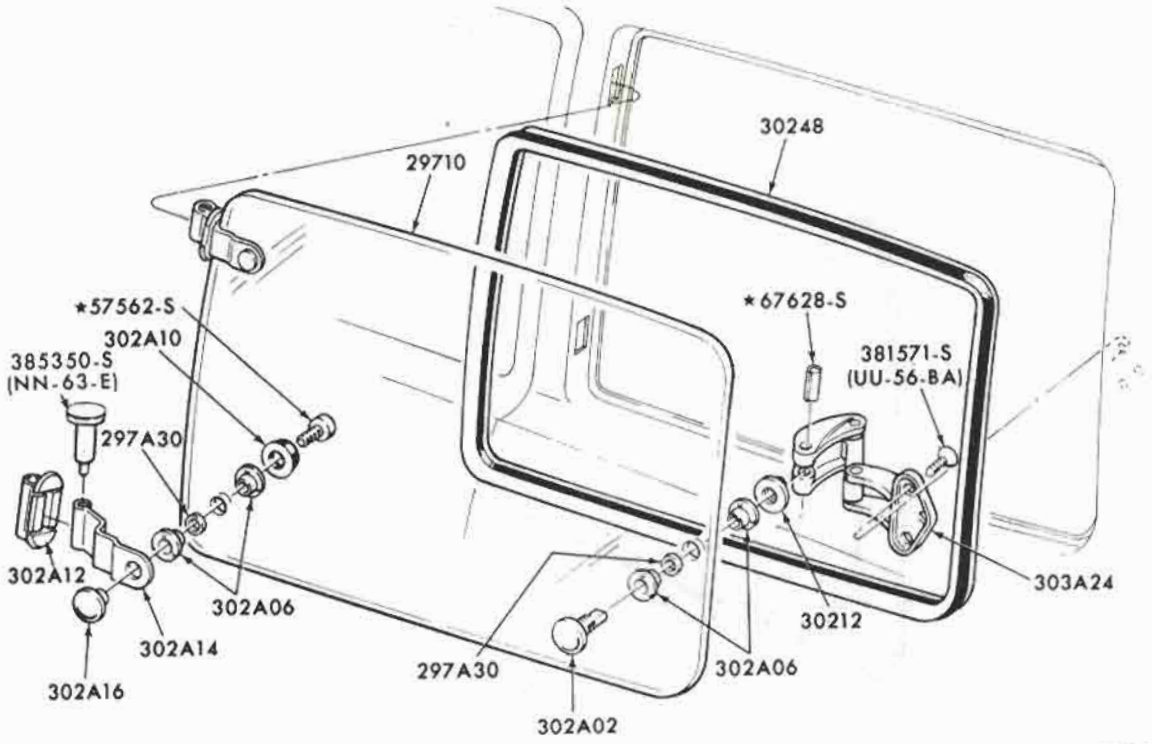

P-8936

QUARTER WINDOW and RELATED PARTS - MOVEABLE
1972 PINTO - BODY TYPE 73 - "BEFORE 5/1/72"

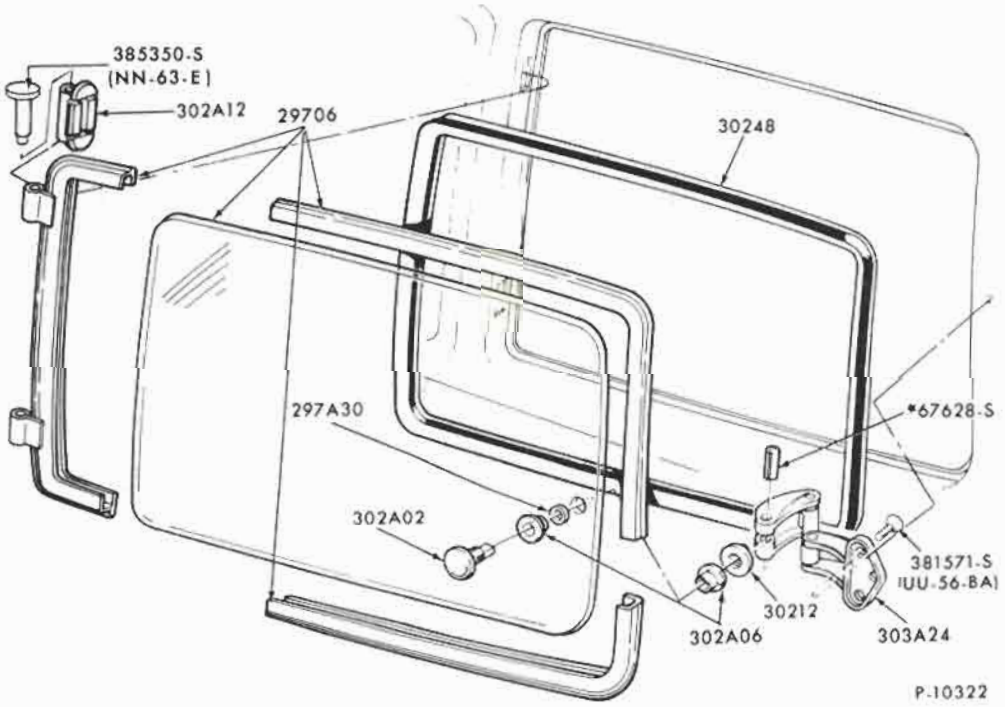

P-10322

QUARTER WINDOW and RELATED PARTS - MOVEABLE
1972 PINTO - BODY TYPE 73 - "FROM 5/1/72"

COPYRIGHT © 1975 — FORD MOTOR COMPANY — DEARBORN, MICHIGAN

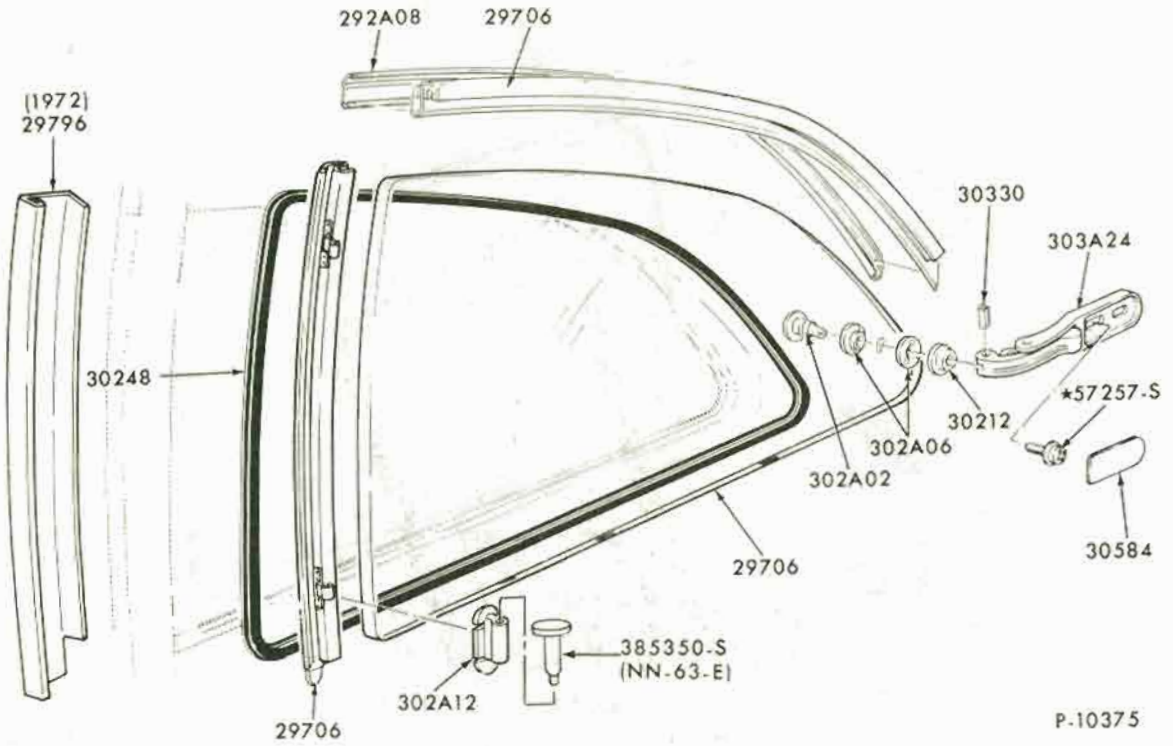

QUARTER WINDOW and RELATED PARTS - MOVEABLE
1972 PINTO - BODY TYPES 62, 64 - "From 5/1/72"

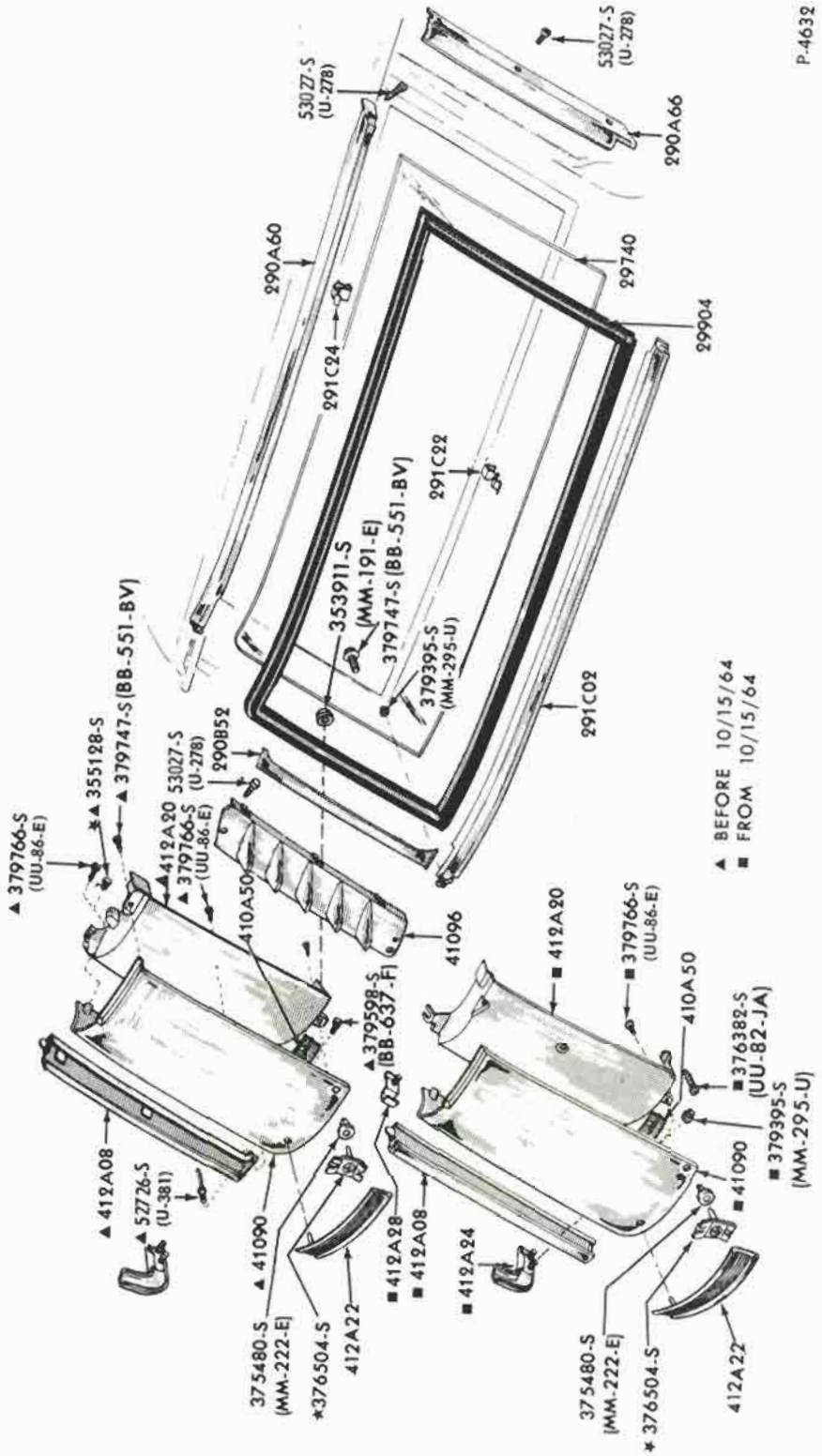

QUARTER WINDOW and RELATED PARTS
1965/66 FORD - BODY TYPE 71

COPYRIGHT © 1975 — FORD MOTOR COMPANY — DEARBORN, MICHIGAN

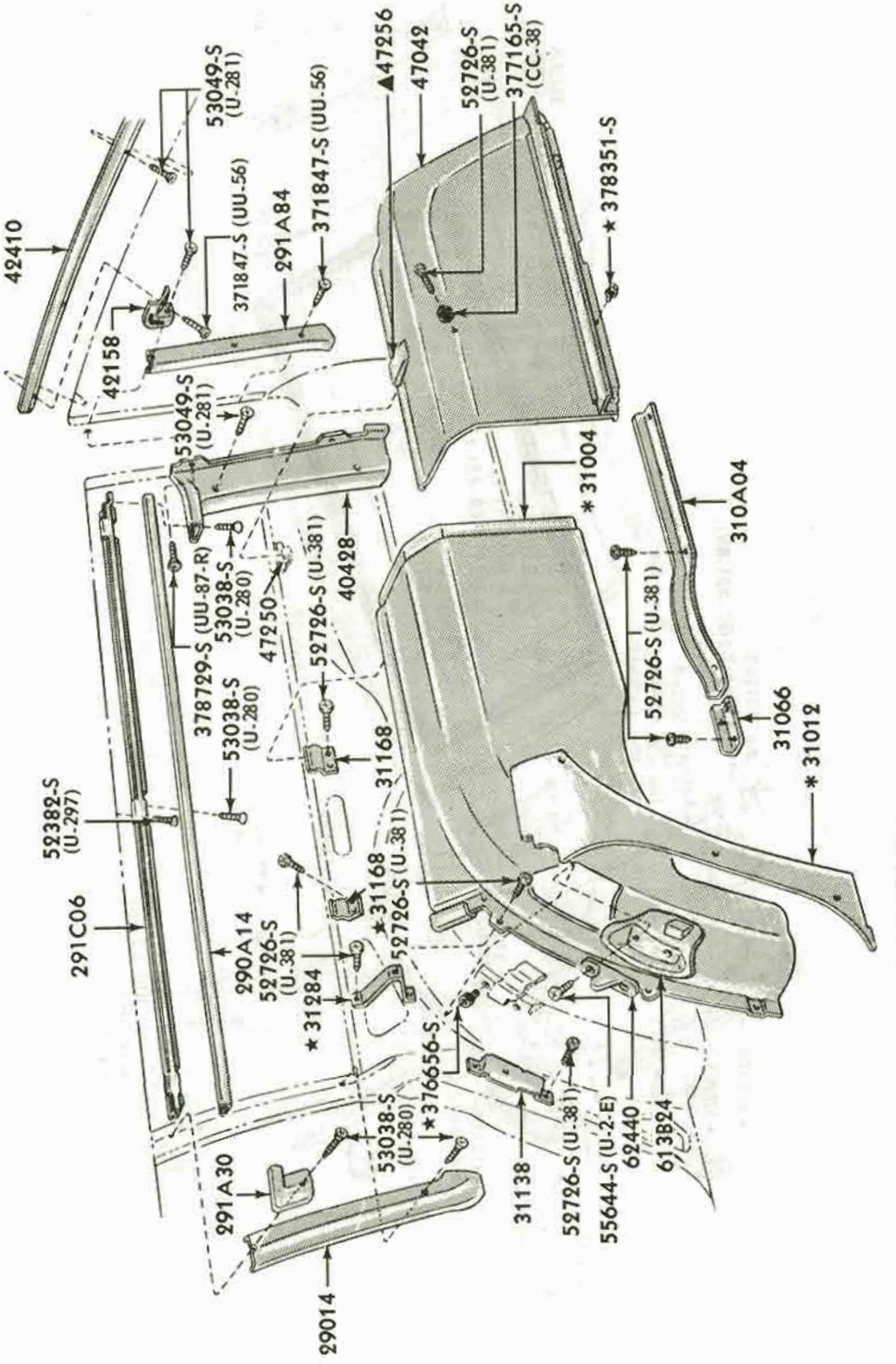

P-4754

★ REFER TO SOFT TRIM SECTION
▲ ALSO INCLUDED IN 47042

QUARTER WINDOW and RELATED PARTS - INSIDE
1965/66 FORD - BODY TYPE 71

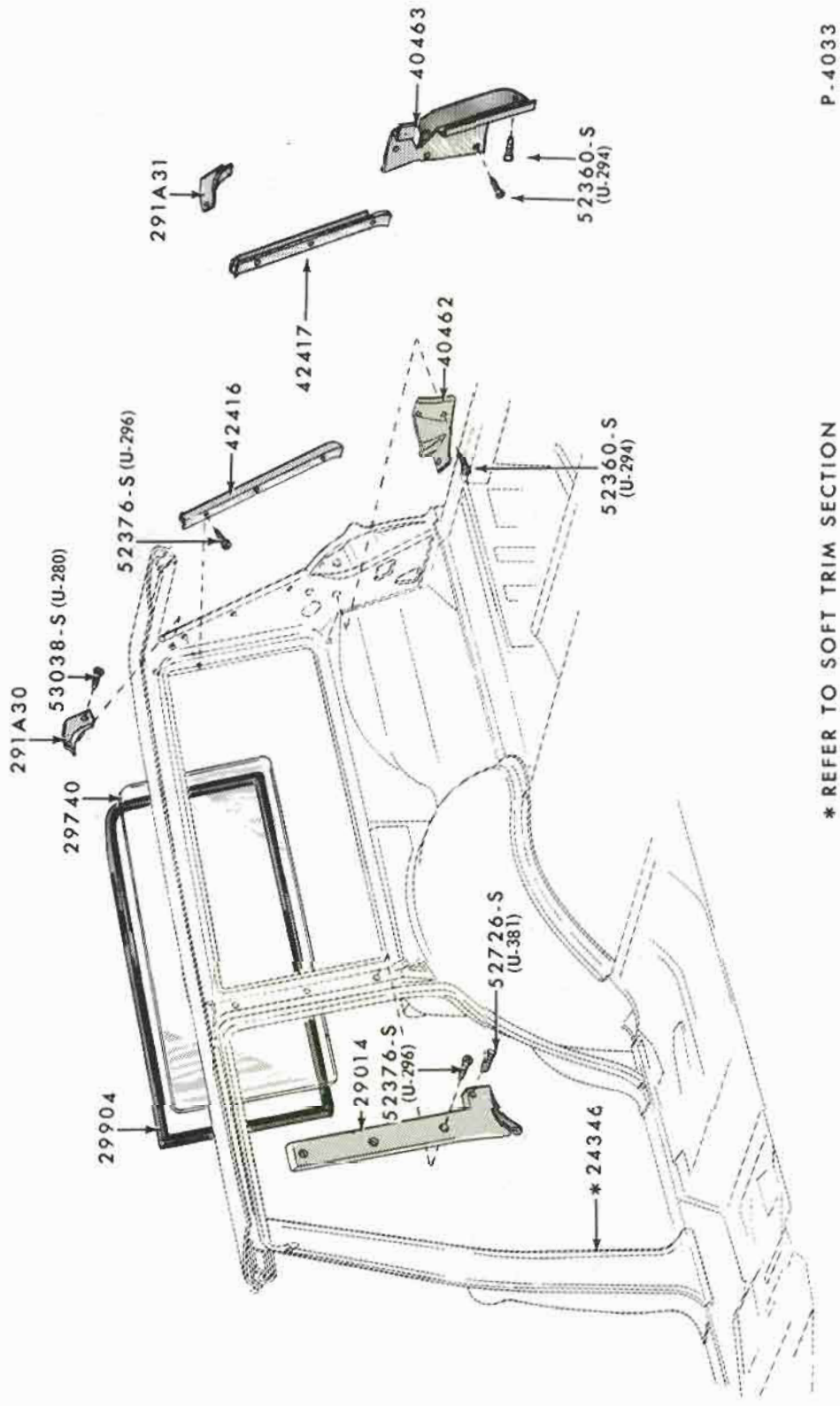

QUARTER WINDOW and RELATED PARTS - REAR
1965 FAIRLANE - BODY TYPE 71

COPYRIGHT © 1975— FORD MOTOR COMPANY —DEARBORN, MICHIGAN

FORD CAR PARTS

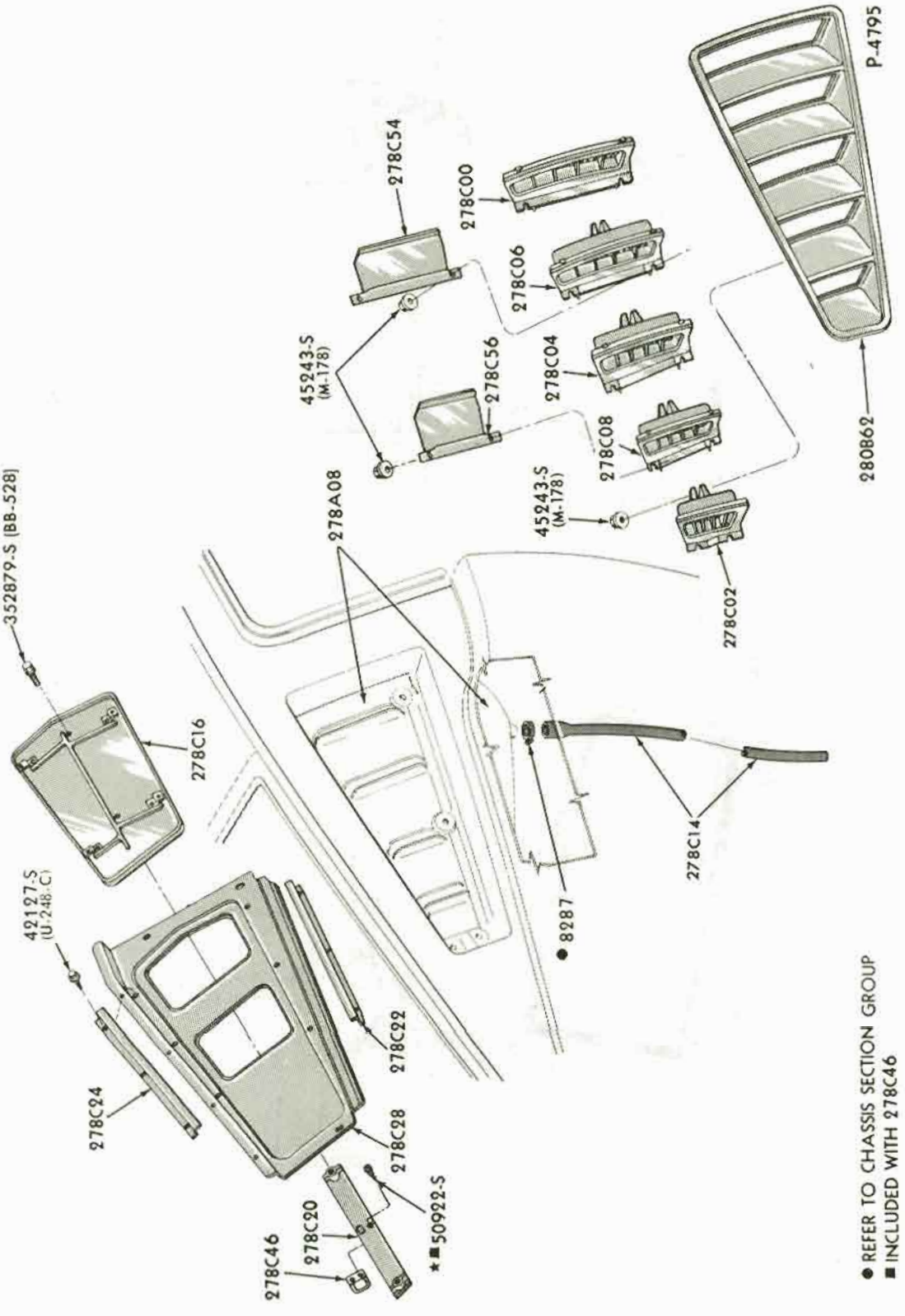

QUARTER AIR EXTRACTOR and RELATED PARTS
1965/66 MUSTANG - BODY TYPE 63

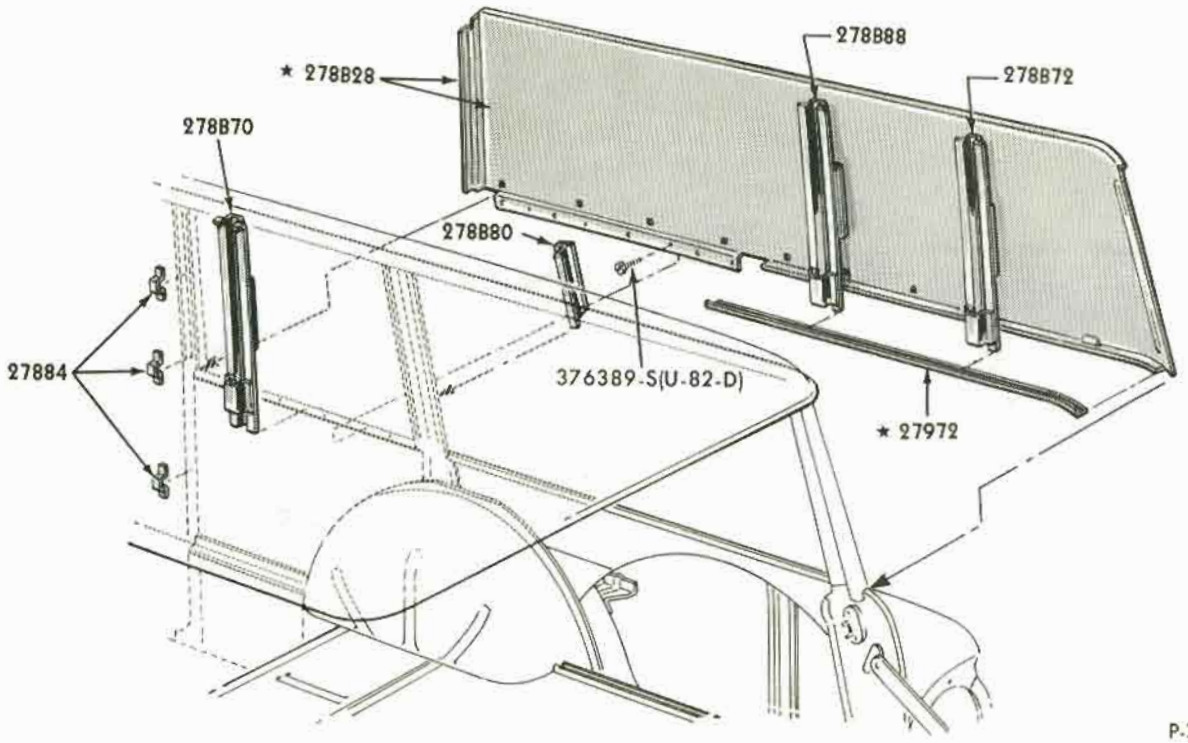

QUARTER WINDOW PANEL and RELATED PARTS
1965 FALCON - BODY TYPE 78

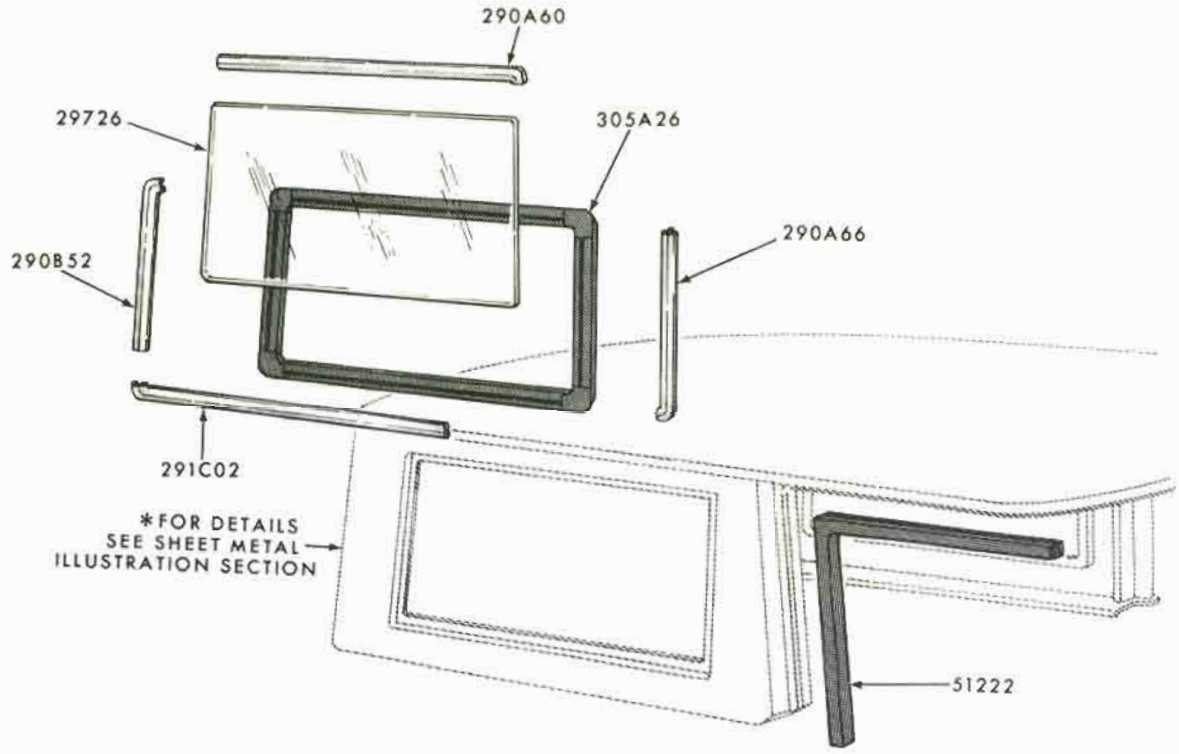

QUARTER WINDOW and RELATED PARTS - OUTSIDE
1966/72 BRONCO - BODY TYPE 98

COPYRIGHT © 1975 — FORD MOTOR COMPANY — DEARBORN, MICHIGAN

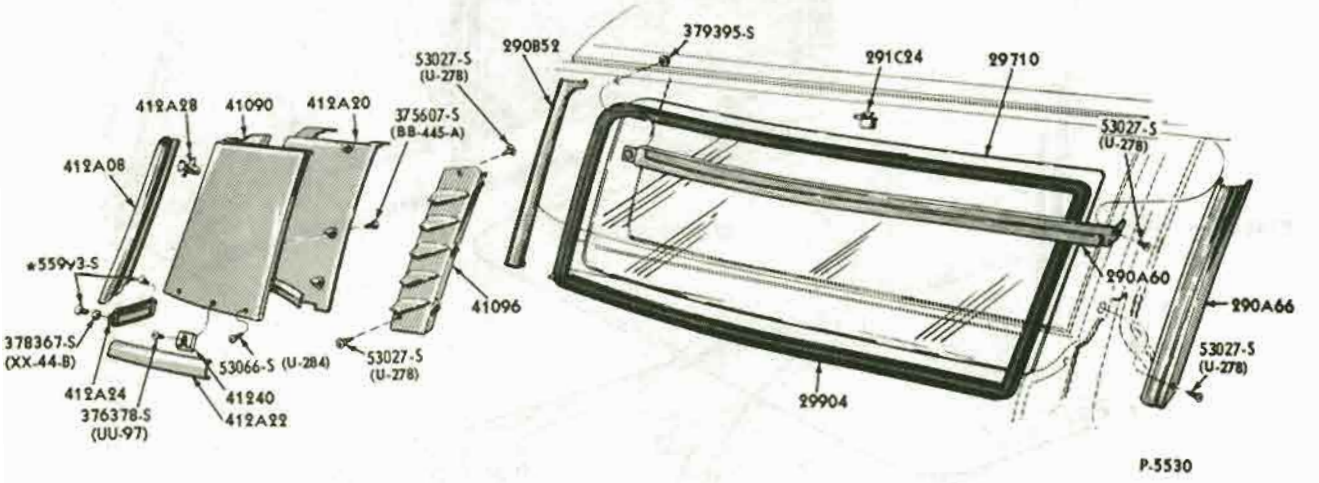

QUARTER WINDOW and RELATED PARTS - OUTSIDE
1967/68 FORD - BODY TYPE 71

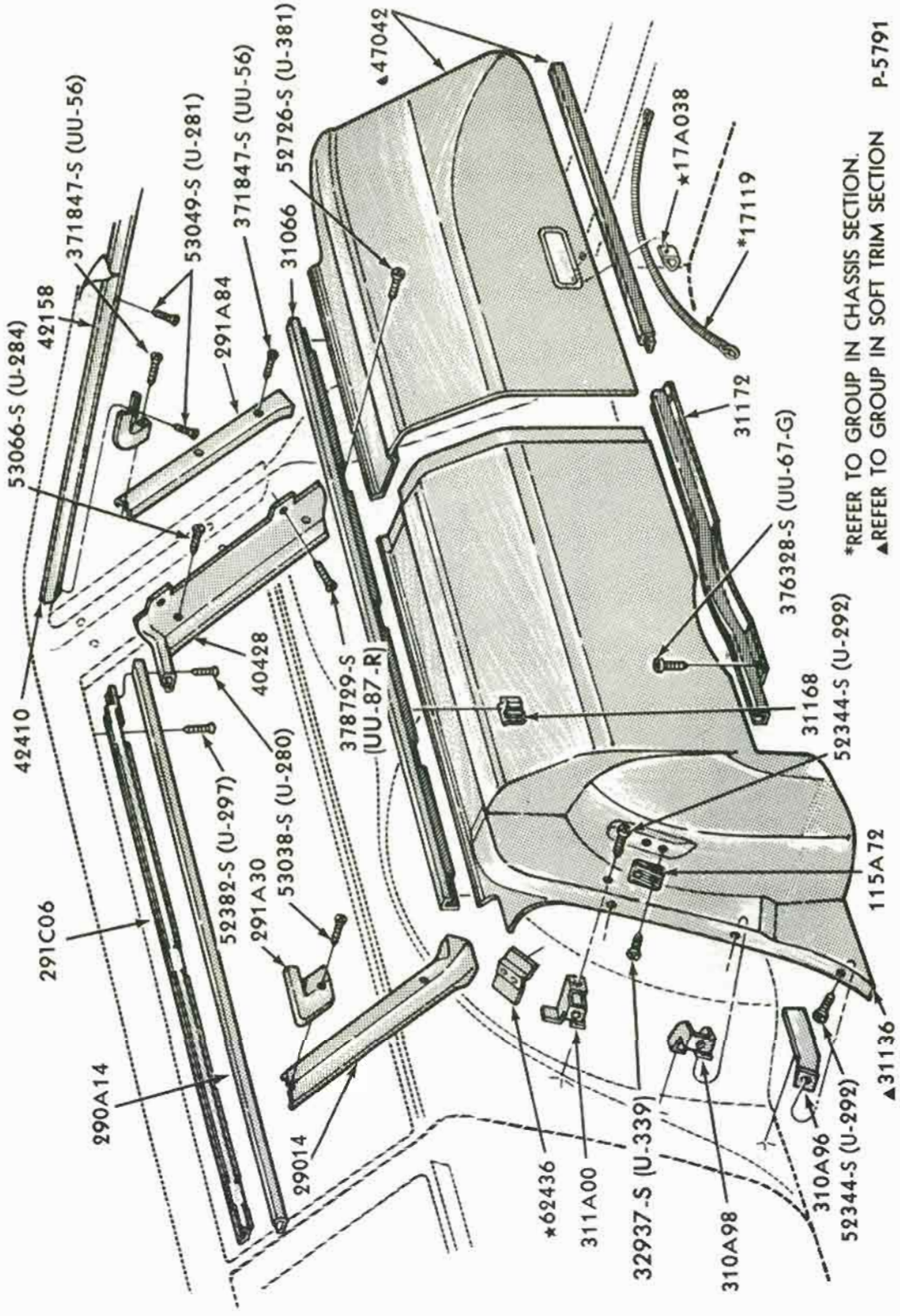

QUARTER WINDOW and RELATED PARTS - INSIDE
1967/68 FORD - BODY TYPE 71

COPYRIGHT © 1975 — FORD MOTOR COMPANY — DEARBORN, MICHIGAN

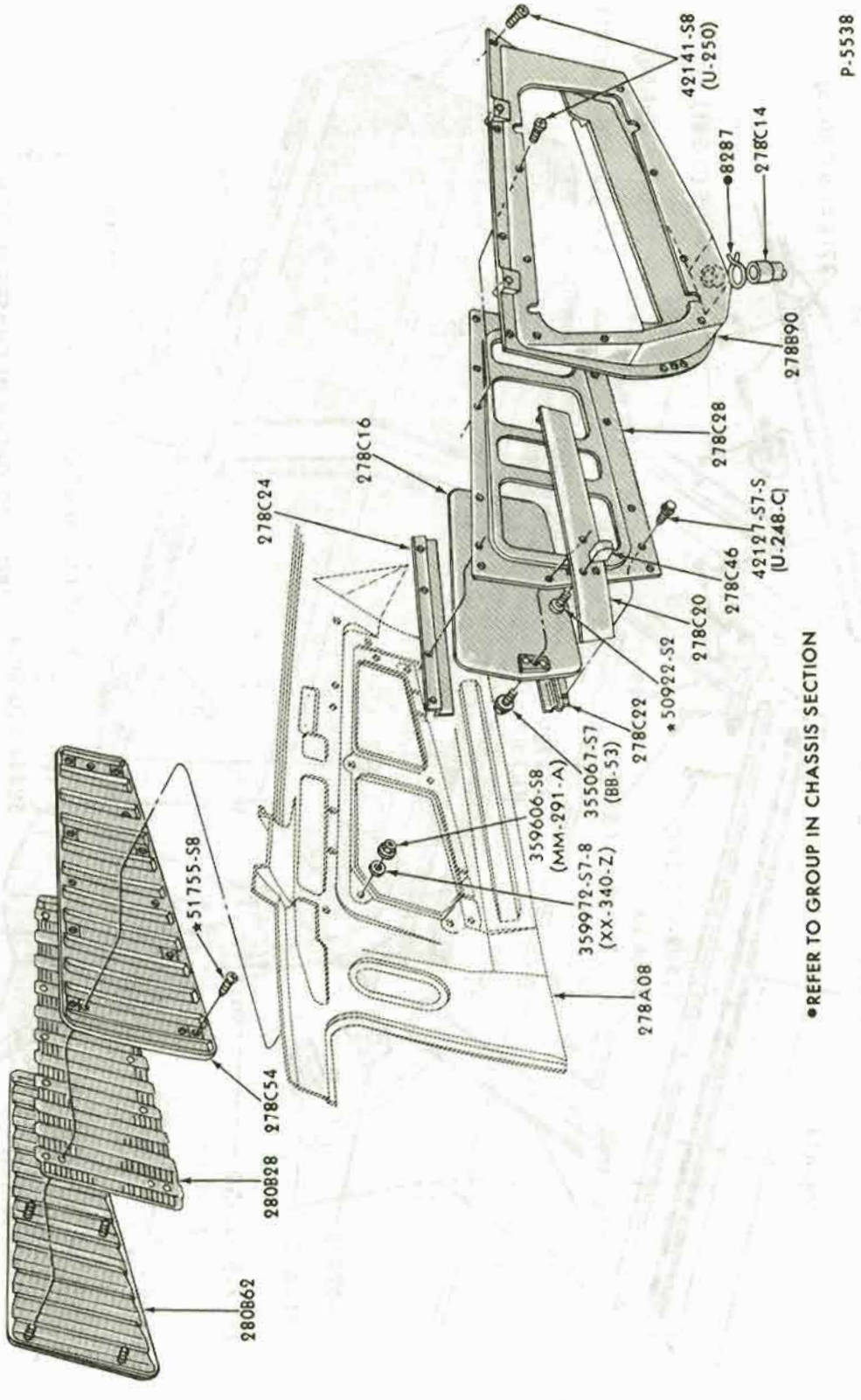

QUARTER AIR EXTRACTOR and RELATED PARTS

1967/68 MUSTANG - BODY TYPE 63

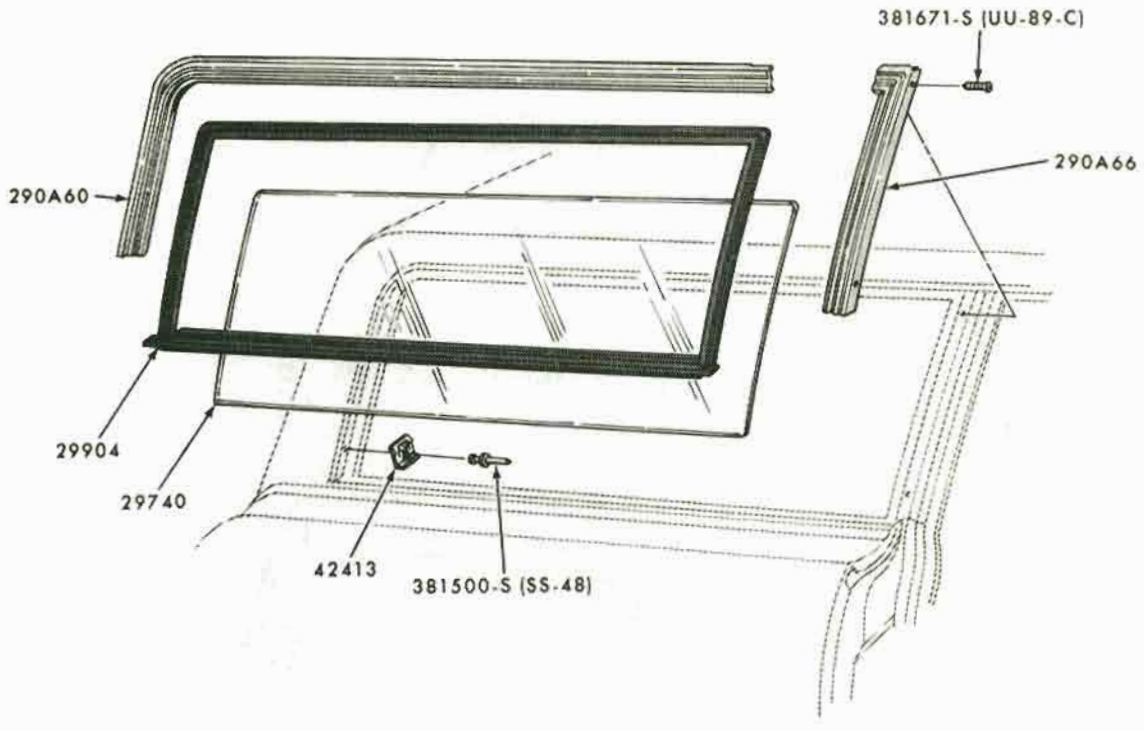

P-6774

QUARTER WINDOW and RELATED PARTS - OUTSIDE
1969/72 FORD - BODY TYPE 71

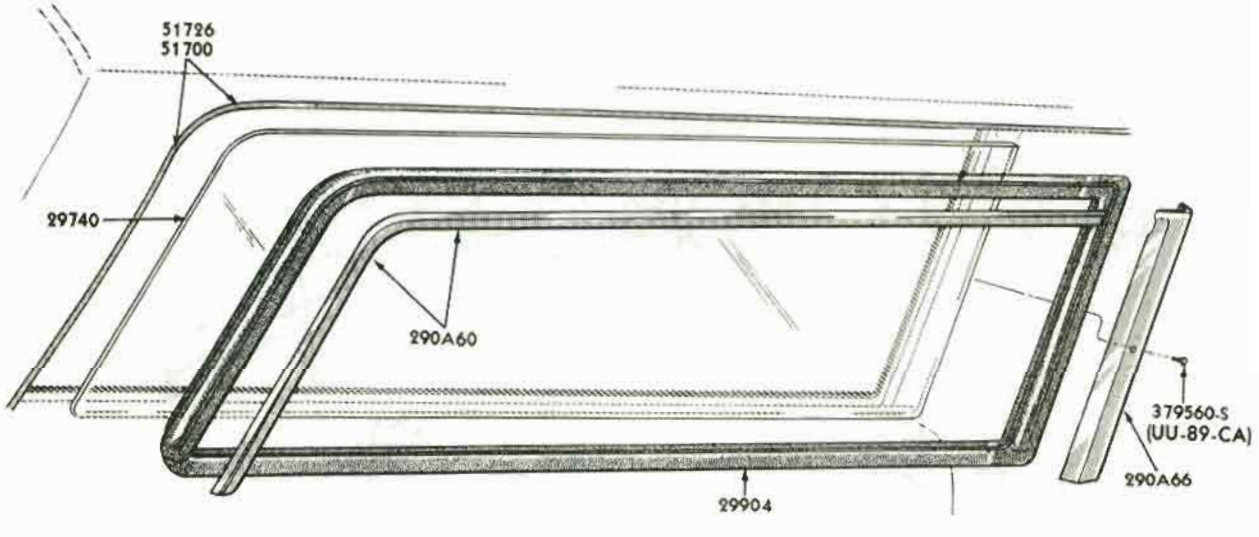

P-6030

QUARTER WINDOW and RELATED PARTS - OUTSIDE
1966/71 FAIRLANE/TORINO and FALCON - BODY TYPE 71

COPYRIGHT © 1975 — FORD MOTOR COMPANY — DEARBORN, MICHIGAN

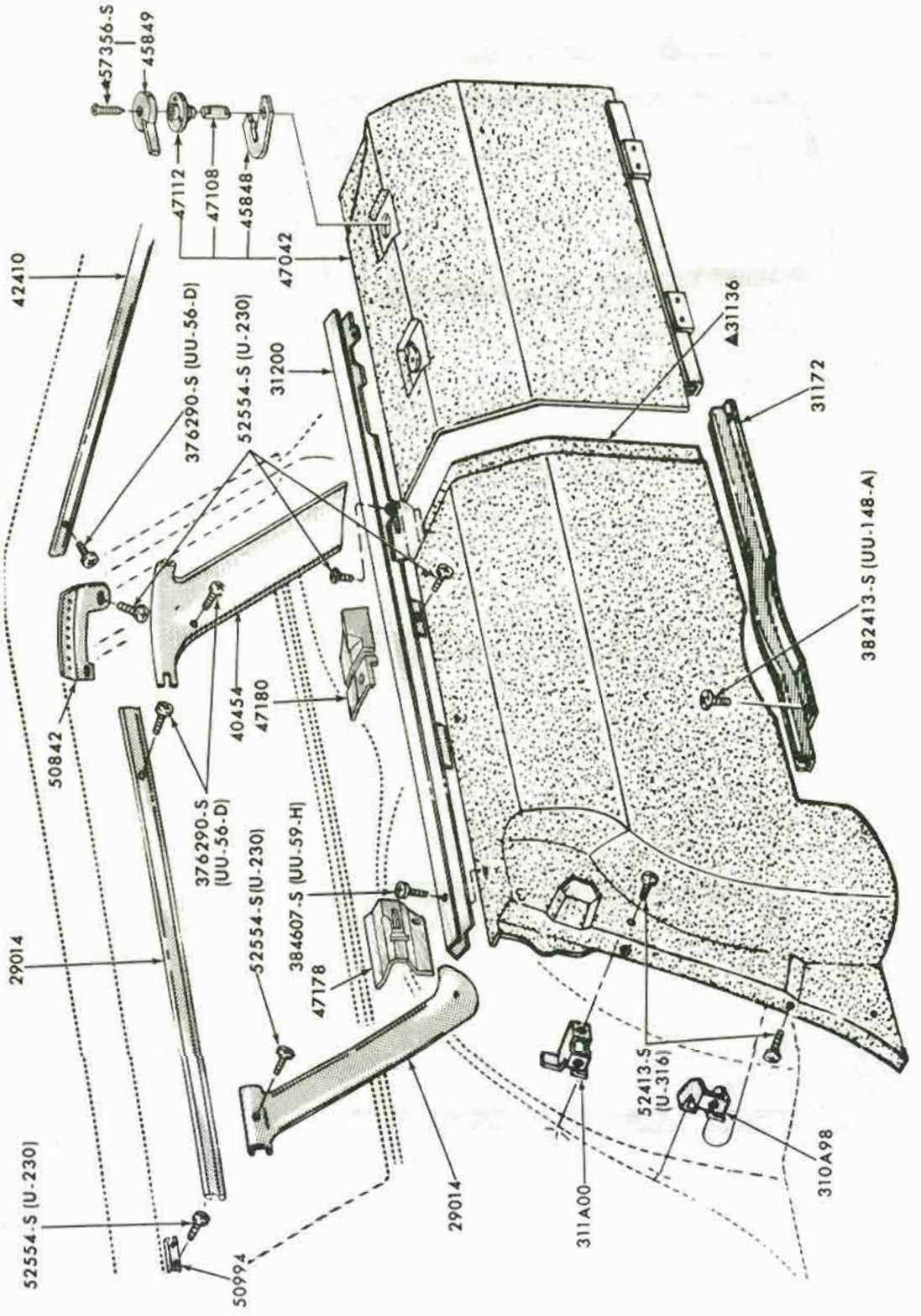

QUARTER WINDOW and RELATED PARTS - INSIDE

1969/72 FORD - BODY TYPE 71

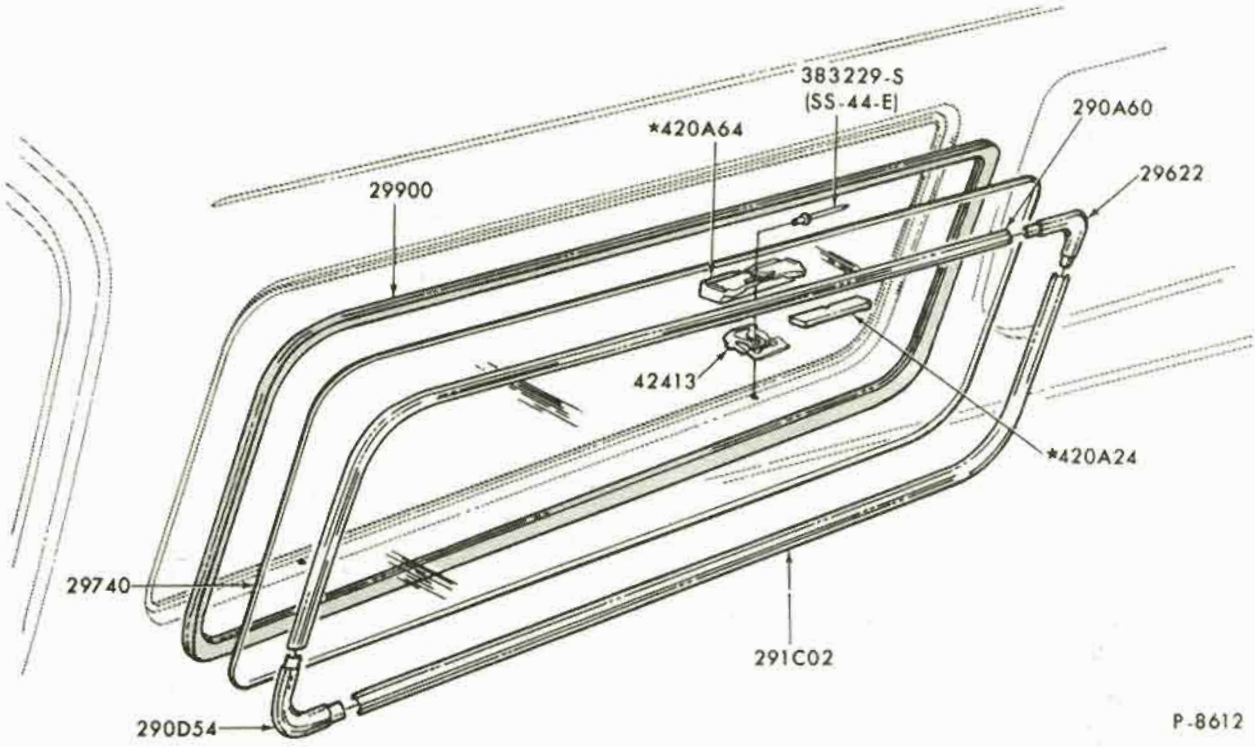

QUARTER WINDOW and RELATED PARTS - OUTSIDE
1972 TORINO - BODY TYPE 71

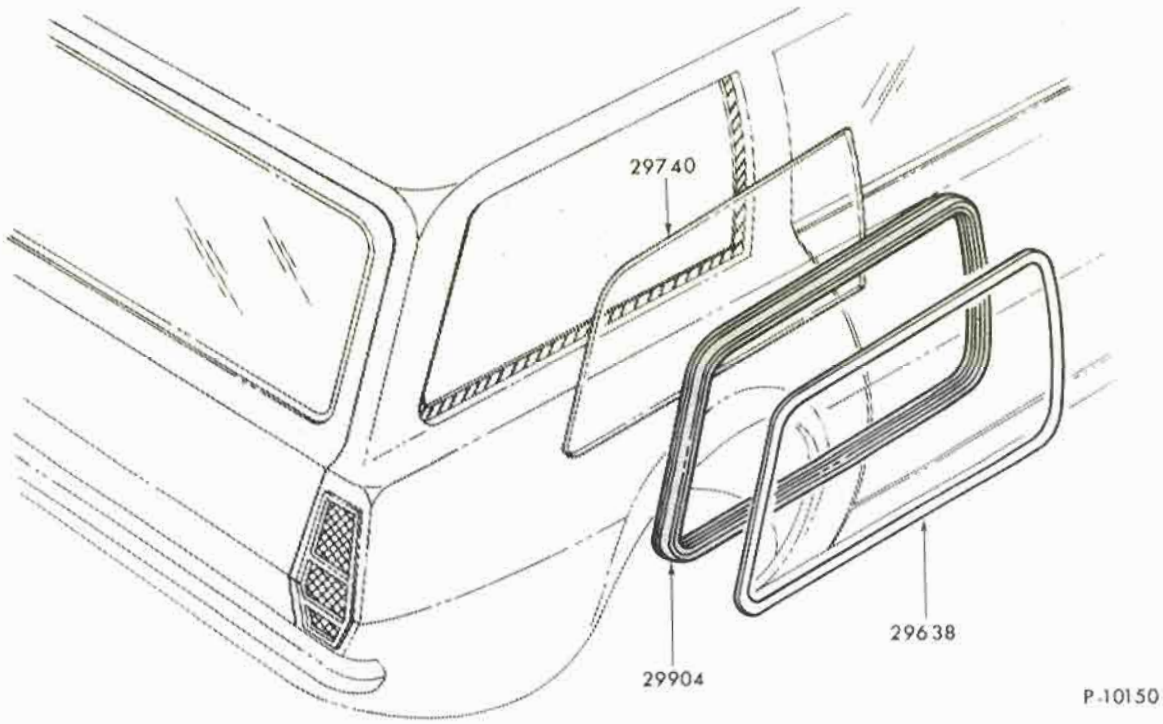

QUARTER WINDOW and RELATED PARTS
1972 PINTO - BODY TYPE 73

COPYRIGHT © 1975 — FORD MOTOR COMPANY — DEARBORN, MICHIGAN

INDEX

THIS INDEX SECTION INCLUDES THE FOLLOWING MAJOR PARTS:

BACK BELT MOULDINGS
BACK WINDOW - TAIL & LIFT GATE
FOLDING TOP PARTS
FOLDING TOP and LUGGAGE COMPARTMENT HYDRAULIC LIFT
LUGGAGE COMPARTMENT LATCH PARTS
LUGGAGE and SKI CARRIERS and RACKS
ROOF SIDE MOULDINGS and WEATHERSTRIPS
SLIDING ROOF PARTS
VACUUM DOOR LATCH SYSTEM
TAIL GATE WEATHERSTRIPS
TAIL GATE WINDOW PARTS

TITLE	SECTION	PAGE	ILLUS. NO.
1965			
A (FORD)			
Back window - body types 54, 62	420	1	P-4748
Back window - outside - body type 57	420	1	P-4750
Back window and roof side mouldings - inside - body type 57	420	2	P-4751
Back window - outside - body type 63	420	2	P-4752
Back window and roof side mouldings - inside - body type 63	420	3	P-4753
Folding top parts - less trim - body type 76	530	1	P-4859
Latch parts - except body type 71 (LUGGAGE COMPARTMENT)	430	1	P-5086
Luggage and ski carrier - non adjustable - roof mounted	550	2	P-4863
Ski carrier - roof mounted	550	1	P-4050
Tail gate weatherstrips - body type 71	400	1	P-4758
Tail gate window - body type 71	400	2	P-4759
B (FAIRLANE)			
Back window - body types 54, 62	420	3	P-3760
Back window - body type 65	420	4	P-4037
Latch parts - body types 54, 62, 65 (LUGGAGE COMPARTMENT)	430	1	P-4359
Luggage and ski carrier - non adjustable - roof mounted	550	2	P-4863
Ski carrier - roof mounted	550	1	P-4050
Tail gate weatherstrips - body type 71	400	3	P-4040
Tail gate window - body type 71	400	4	P-4041
F (MUSTANG)			
Back window - body type 65	420	5	P-4476
Back window - body type 63	420	4	P-4839
Folding top parts - less trim - body type 76	530	2	P-4479
Latch parts - body type 63 (LUGGAGE COMPARTMENT)	430	2	P-4844
Latch parts - body types 65, 76 (LUGGAGE COMPARTMENT)	430	2	P-4477
Luggage and ski carrier - non adjustable - roof mounted	550	2	P-4863
Roof side mouldings and weatherstrips - body type 65	500	1	P-4478
Roof side mouldings and weatherstrips - body type 63	500	1	P-4838
S (THUNDERBIRD)			
Back window - body type 63	420	6	P-4756
Folding top parts - less trim - body type 76	530	3	P-4385
Folding top and luggage compartment hydraulic lift - body type 76	530	4	P-4386
Latch parts - body type 63 (LUGGAGE COMPARTMENT)	430	3	P-4357
Luggage and ski carrier - non adjustable - roof mounted	550	2	P-4863
Roof side weatherstrips - body type 63A, B	500	2	P-4354
Ski carrier - roof mounted	550	1	P-4050
Vacuum door latch system - body type 63	430.1	1	P-4900
Weatherstrips and related parts - body type 76	430	3	P-4387

COPYRIGHT © 1975 — FORD MOTOR COMPANY — DEARBORN, MICHIGAN

INDEX

TITLE	SECTION	PAGE	ILLUS. NO.
1965			
X (FALCON)			
Back window - body types 54, 62	420	5	P-3815
Back window - body type 63	420	7	P-3982
Folding top parts - less trim - body type 76	530	5	P-4006
Latch parts - body types 54, 62, 63, 76 (LUGGAGE COMPARTMENT)	430	4	P-4360
Luggage and ski carrier - non adjustable - roof mounted	550	2	P-4863
Ski carrier - roof mounted	550	1	P-4050
Tail gate parts - body type 66	400	7	P-3202
Tail gate weatherstrips - body types 59, 71	400	5	P-4151
Tail gate window - body types 59, 71	400	6	P-3199
1966			
A (FORD)			
Back window and roof side mouldings - inside - body type 57	420	2	P-4751
Back window and roof side mouldings - inside - body type 63	420	8	P-5291
Back window - body types 54, 62	420	1	P-4748
Back window - outside - body type 57	420	1	P-4750
Back window - outside - body type 63	420	7	P-5233
Folding top parts - less trim - body type 76	530	1	P-4859
Latch parts - except body type 71 (LUGGAGE COMPARTMENT)	430	1	P-5086
Luggage and ski carrier - non adjustable - roof mounted	550	2	P-4863
Luggage carrier - adjustable (5 slats) - body type 71	550	3	P-5079
Luggage carrier - non adjustable - roof mounted - body type 71	550	1	P-5091
Tail gate weatherstrips - body type 71	400	8	P-5095
Tail gate window - dual action - body type 71	400	9	P-5094
B (FAIRLANE)			
Back window - body type 54	420	8	P-5080
Back window - body type 62	420	9	P-5081
Back window - body type 63	420	9	P-5082
Folding top parts - less trim - body type 76	530	6	P-5090
Latch parts - except body type 71 (LUGGAGE COMPARTMENT)	430	1	P-5086
Luggage and ski carrier - non adjustable - roof mounted	550	2	P-4863
Luggage carrier - adjustable (5 slats) - body type 71	550	3	P-5079
Luggage carrier - non adjustable - roof mounted - body type 71	550	1	P-5091
Roof side weatherstrips - body type 63	500	2	P-5089
Tail gate weatherstrips - body type 71	400	10	P-5085
Tail gate window - dual action - body type 71	400	11	P-5084
F (MUSTANG)			
Back window - body type 63	420	4	P-4839
Back window - body type 65	420	5	P-4476
Folding top parts - less trim - body type 76	530	2	P-4479
Latch parts - body type 63 (LUGGAGE COMPARTMENT)	430	2	P-4844
Latch parts - body types 65, 76 (LUGGAGE COMPARTMENT)	430	2	P-4477
Luggage and ski carrier - non adjustable - roof mounted	550	2	P-4863
Roof side mouldings and weatherstrips - body type 63	500	1	P-4838
Roof side mouldings and weatherstrips - body type 65	500	1	P-4478
S (THUNDERBIRD)			
Back window - body type 63A	420	10	P-5030
Back window - body types 63C, D	420	11	P-5013
Back window, roof side mouldings and console - inside - body types 63C, D	420	11	P-5014
Folding top and luggage compartment hydraulic lift - body type 76	530	4	P-4386
Folding top parts - less trim - body type 76	530	3	P-4385

INDEX

TITLE	SECTION	PAGE	ILLUS. NO.
1966			
S (THUNDERBIRD)			
Latch parts - body type 63 (LUGGAGE COMPARTMENT)	430	3	P-4357
Luggage and ski carrier - non adjustable - roof mounted	550	2	P-4863
Roof side weatherstrips - body type 63A, B	500	2	P-4354
Vacuum door latch system - body type 63	430.1	1	P-4900
U (BRONCO)			
Back window - body type 97	420	12	P-6811
Back window - body type 98	420	12	P-6812
Tail gate and lift gate parts	400	13	P-4965
X (FALCON)			
Back window - body type 54	420	8	P-5080
Back window - body type 62	420	9	P-5081
Back window - body type 66	420	10	P-6380-A
Latch parts - body types 54, 62 (LUGGAGE COMPARTMENT)	430	4	P-5087
Luggage and ski carrier - non adjustable - roof mounted	550	2	P-4863
Luggage carrier - non adjustable - roof mounted - body type 71	550	1	P-5091
Luggage carrier - adjustable (5 slats) - body type 71	550	3	P-5079
Tail gate parts - body type 66	400	12	P-5088
Tail gate weatherstrips - body type 71	400	10	P-5085
Tail gate window - dual action - body type 71	400	11	P-5084
Tail gate window - single action - body type 71	400	14	P-5083
1967			
A (FORD)			
Back window - outside - body type 57	420	13	P-5533
Back window - outside - body type 63	420	14	P-5535
Back window and roof side mouldings - inside - body type 57	420	14	P-5534
Back window and roof side mouldings - inside - body type 63	420	15	P-5536
Back window - body types 54, 62	420	13	P-5532
Folding top parts - less trim - body type 76	530	1	P-4859
Latch parts - except body type 71 (LUGGAGE COMPARTMENT)	430	1	P-5086
Luggage carrier - adjustable (5 slats) - body type 71	550	3	P-5079
Luggage carrier - non adjustable - roof mounted - body type 71	550	1	P-5091
Tail gate weatherstrips - body type 71	400	8	P-5095
Tail gate window - dual action - body type 71	400	9	P-5094
B (FAIRLANE)			
Back window - body type 54	420	8	P-5080
Back window - body type 62	420	9	P-5081
Back window - body type 63	420	9	P-5082
Back window - body type 66	420	10	P-6380-A
Folding top parts - less trim - body type 76	530	7	P-5531
Latch parts - except body type 71 (LUGGAGE COMPARTMENT)	430	1	P-5086
Luggage carrier - adjustable (5 slats) - body type 71	550	3	P-5079
Luggage carrier - non adjustable - roof mounted - body type 71	550	1	P-5091
Roof side weatherstrips - body type 63	500	2	P-5089
Tail gate parts - body type 66	400	12	P-5088
Tail gate weatherstrips - body type 71	400	10	P-5085
Tail gate window - dual action - body type 71	400	11	P-5084
F (MUSTANG)			
Back window - body type 63	420	16	P-5629
Back window - body type 65	420	15	P-5630
Folding top parts - less trim - body type 76	530	2	P-4479
Latch parts (LUGGAGE COMPARTMENT)	430	5	P-5634
Roof side mouldings and weatherstrips - body type 63	500	1	P-4838
Roof side mouldings and weatherstrips - body type 65	500	1	P-4478

COPYRIGHT © 1975 — FORD MOTOR COMPANY — DEARBORN, MICHIGAN

INDEX

TITLE	SECTION	PAGE	ILLUS. NO.
1967			
S (THUNDERBIRD)			
Back window - outside - body type 57	420	16	P-5355
Back window - outside - body type 65	420	17	P-5359
Back window and roof side mouldings - inside - body type 57	420	17	P-5472
Back window and roof side mouldings - inside - body type 65	420	18	P-5473
Latch parts (LUGGAGE COMPARTMENT)	430	6	P-5368
Vacuum door latch system	430.1	2	P-5369
Roof side weatherstrips - body type 57	500	3	P-5370
Roof side weatherstrips - body type 65	500	3	P-5367
U (BRONCO)			
Back window - body type 97	420	12	P-6811
Back window - body type 98	420	12	P-6812
Tail gate and lift gate parts	400	13	P-4965
X (FALCON)			
Back window - body type 54	420	8	P-5080
Back window - body type 62	420	9	P-5081
Latch parts - body types 54, 62 (LUGGAGE COMPARTMENT)	430	4	P-5087
Luggage carrier - adjustable (5 slats) - body type 71	550	3	P-5079
Luggage carrier - non adjustable - roof mounted - body type 71	550	1	P-5091
Tail gate weatherstrips - body type 71	400	10	P-5085
Tail gate window - dual action - body type 71	400	11	P-5084
Tail gate window - single action - body type 71	400	14	P-5083
1968			
A (FORD)			
Back window - body types 54, 62	420	13	P-5532
Back window - outside - body types 57, 65	420	18	P-6851
Back window - outside - body type 63	420	19	P-6852
Back window - inside - body types 57, 65	420	19	P-6853
Folding top parts - less trim - body type 76	530	1	P-4859
Latch parts - except body type 71 (LUGGAGE COMPARTMENT)	430	1	P-5086
Luggage carrier - non adjustable - roof mounted - body type 71	550	1	P-5091
Luggage carrier - adjustable (5 slats) - body type 71	550	3	P-5079
Tail gate weatherstrips - body type 71	400	8	P-5095
Tail gate window - dual action - body type 71	400	9	P-5094
B (FAIRLANE/TORINO)			
Back window - body type 54	420	8	P-5080
Back window - body type 63	420	20	P-6379
Back window - body type 66	420	20	P-6380-B
Back window - body type 65	420	26	P-6917
Folding top parts - less trim - body type 76	530	7	P-5531
Latch parts - except body type 71 (LUGGAGE COMPARTMENT)	430	1	P-5086
Luggage carrier - non adjustable - roof mounted - body type 71	550	1	P-5091
Luggage carrier - adjustable (5 slats) - body type 71	550	3	P-5079
Roof side weatherstrips - body type 63	500	2	P-5089
Tail gate parts - body type 66	400	12	P-5088
Tail gate weatherstrips - body type 71	400	10	P-5085
Tail gate window - dual action - body type 71	400	11	P-5084

INDEX

TITLE	SECTION	PAGE	ILLUS. NO.
1968			
F (MUSTANG)			
Back window - body type 63	420	16	P-5629
Back window - body type 65	420	15	P-5630
Folding top parts - less trim - body type 76	530	2	P-4479
Latch parts - except body type 65 GT/CS (LUGGAGE COMPT.)	430	5	P-5634
Latch parts - body type 65 GT/CS (LUGGAGE COMPARTMENT)	430	5	P-6456
Roof side mouldings and weatherstrips - body type 65	500	1	P-4478
Roof side mouldings and weatherstrips - body type 63	500	1	P-4838
S (THUNDERBIRD)			
Back window - outside - body type 57	420	16	P-5355
Back window - outside - body type 65	420	17	P-5359
Back window and roof side mouldings - inside - body type 57	420	17	P-5472
Back window and roof side mouldings - inside - body type 65	420	18	P-5473
Latch parts (LUGGAGE COMPARTMENT)	430	6	P-5368
Roof side weatherstrips - body type 57	500	3	P-5370
Roof side weatherstrips - body type 65	500	3	P-5367
Vacuum door latch system - body type 63	430.1	2	P-5369
U (BRONCO)			
Back window - body type 97	420	12	P-6811
Back window - body type 98	420	12	P-6812
Tail gate and lift gate parts	400	13	P-4965
X (FALCON)			
Back window - body type 54	420	8	P-5080
Back window - body type 62	420	9	P-5081
Latch parts - body types 54, 62 (LUGGAGE COMPARTMENT)	430	4	P-5087
Luggage carrier - non adjustable - roof mounted - body type 71	550	1	P-5091
Luggage carrier - adjustable (5 slats) - body type 71	550	3	P-5079
Tail gate weatherstrips - body type 71	400	10	P-5085
Tail gate window - dual action - body type 71	400	11	P-5084
Tail gate window - single action - body type 71	400	14	P-5083
1969			
A (FORD)			
Back window - outside - body types 54, 62	420	21	P-6748
Back window - outside - body type 57	420	21	P-6747
Back window - outside - body type 63 - without vinyl roof cover	420	22	P-6749
Back window - outside - body type 63 - with vinyl roof cover	420	22	P-6750
Back window - outside - body type 65	420	23	P-6752
Back window - inside - body types 54, 57, 62, 63	420	23	P-6855
Back window - inside - body type 65	420	24	P-6856
Back belt mouldings - body type 76	420	24	P-6753
Latch parts - except body type 71 (LUGGAGE COMPARTMENT)	430	1	P-5086
Luggage carrier - luggage compartment mounted -Removable	550	3	P-6738
Luggage carrier - non adjustable - roof mounted - body type 71	550	1	P-5091
Luggage carrier - roof mounted - adjustable - body type 71	550	4	P-6739
Roof side mouldings and weatherstrips - body type 57	500	6	P-6914
Roof side mouldings and weatherstrips - body types 63, 65	500	6	P-6915
Tail gate parts - body type 71	400	16	P-6745-A
Tail gate parts - body type 71 (continued)	400	17	P-6745-B

COPYRIGHT © 1975 — FORD MOTOR COMPANY — DEARBORN, MICHIGAN

INDEX

1969

TITLE	SECTION	PAGE	ILLUS. NO.
B (FAIRLANE/TORINO)			
Back window - body type 54	420	8	P-5080
Back window - body type 63	420	20	P-6379
Back window - body type 65	420	26	P-6917
Back window - body type 66	420	20	P-6380-B
Folding top parts - less trim - body type 76	530	7	P-5531
Latch parts - except body type 71 (LUGGAGE COMPARTMENT)	430	1	P-5086
Luggage carrier - adjustable (5 slats) - body type 71	550	3	P-5079
Luggage carrier - luggage compartment mounted -Removable	550	3	P-6738
Luggage carrier - non adjustable - roof mounted - body type 71	550	1	P-5091
Roof side weatherstrips - body type 63	500	2	P-5089
Tail gate parts - body type 66	400	12	P-5088
Tail gate weatherstrips - body type 71	400	10	P-5085
Tail gate window - dual action - body type 71	400	11	P-5084
F (MUSTANG)			
Back window - body type 63	420	25	P-6789
Back window - body type 65	420	25	P-6790
Back belt mouldings - body type 76	420	26	P-6788
Latch parts (LUGGAGE COMPARTMENT)	430	5	P-5634
Louvers - back window - body type 63	420	30	P-7412
Luggage carrier - luggage compartment mounted -Removable	550	3	P-6738
Roof side mouldings and weatherstrips - body type 65	500	4	P-6808
Roof side mouldings and weatherstrips - body type 63	500	7	P-7104
Folding top parts - less trim - body type 76	530	10	P-6987-A
Folding top parts - less trim - body type 76 (continued)	530	11	P-6987-B
S (THUNDERBIRD)			
Back window - outside - body type 57	420	16	P-5355
Back window - outside - body type 65	420	17	P-5359
Back window and roof side mouldings - inside body type 57	420	17	P-5472
Back window and roof side mouldings - inside - body type 65	420	18	P-5473
Latch parts (LUGGAGE COMPARTMENT)	430	6	P-5368
Roof side weatherstrips - body type 57	500	3	P-5370
Roof side weatherstrips - body type 65A, C	500	3	P-5367
Roof side weatherstrips body type 65B, D	500	4	P-6807
Sliding roof parts	500	5	P-6954
Vacuum door latch system	430.1	2	P-5369
U (BRONCO)			
Back window - body type 97	420	12	P-6811
Back window - body type 98	420	12	P-6812
Tail gate and lift gate parts	400	15	P-6858
X (FALCON)			
Back window - body type 54	420	8	P-5080
Back window - body type 62	420	9	P-5081
Latch parts - body types 54, 62 (LUGGAGE COMPARTMENT)	430	4	P-5087
Luggage carrier - adjustable (5 slats) - body type 71	550	3	P-5079
Luggage carrier - luggage compartment mounted -Removable	550	3	P-6738
Luggage carrier - non adjustable - roof mounted - body type 71	550	1	P-5091
Tail gate window - dual action - body type 71	400	11	P-5084
Tail gate window - single action - body type 71	400	14	P-5083
Tail gate weatherstrips - body type 71	400	10	P-5085

INDEX

1970

A (FORD)

TITLE	SECTION	PAGE	ILLUS. NO.
Back belt mouldings - body type 76	420	24	P-6753
Back window - heated	186	2	P-7508
Back window - inside - body types 54, 57, 63	420	23	P-6855
Back window - inside - body type 65	420	24	P-6856
Back window - outside - body type 54	420	21	P-6748
- body type 57	420	21	P-6747
- body type 65	420	23	P-6752
Back window - outside - body type 63 - without vinyl roof cover	420	22	P-6749
Back window - outside - body type 63 - with vinyl roof cover	420	22	P-6750
Folding top parts - less trim - body type 76	530	8	P-6776-A
(cont'd)	530	9	P-6776-B
Fuel filler door	430	7	P-7413
Latch parts - except body type 71 (LUGGAGE COMPARTMENT)	430	1	P-5086
Latch parts - vacuum system (LUGGAGE COMPARTMENT)	430.1	4	P-7471
Luggage carrier - Luggage compartment mounted - Removable	550	3	P-6738
Luggage carrier - roof mounted - non adjustable - body type 71	550	7	P-8173
Luggage carrier - roof mounted - adjustable - body type 71	550	5	P-7403
Luggage carrier, ski rack, luggage cover-Luggage compartment mounted	550	6	P-7402
Roof side mouldings and weatherstrips - body type 54, 57	500	10	P-7458
- body types 63, 65	500	10	P-7459
Tail gate parts - body type 71	400	16	P-6745-A
(cont'd)	400	17	P-6745-B
Tail gate - vacuum latch system - body type 71	430.1	3	P-7468

B (FAIRLANE/TORINO)
B (FALCON) - FROM 1/2/70

Back window - body types 54, 57, 62, 65	420	28	P-7138
- body type 63	420	20	P-6379
- body type 66	420	28	P-7128
Folding top parts - less trim	530	12	P-7435-A
(cont'd)	530	13	P-7435-B
Fuel filler door	430	7	P-7413
Latch parts - except body type 71 (LUGGAGE COMPARTMENT)	430	1	P-5086
Latch parts - vacuum system (LUGGAGE COMPARTMENT)	430.1	4	P-7471
Louvers - back window - body type 63	420	29	P-7228
Luggage carrier - adjustable - body type 71	550	5	P-7403
Luggage carrier - non adjustable - roof mounted - body type 71	550	7	P-8173
Luggage carrier - Luggage compartment mounted - Removable	550	3	P-6738
Luggage carrier, ski rack, luggage cover-Luggage compartment mounted	550	6	P-7402
Roof side mouldings and weatherstrips - body type 57	500	10	P-8169
- body type 63	500	8	P-7180
- body type 65	500	8	P-7181
- body type 66	500	9	P-7182
Tail gate parts - body type 66	400	12	P-5088
Tail gate - vacuum latch system - Body type 71	430.1	3	P-7468
Tail gate weatherstrips - body type 71	400	10	P-5085
Tail gate window - dual action - body type 71	400	11	P-5084

COPYRIGHT © 1975 — FORD MOTOR COMPANY — DEARBORN, MICHIGAN

INDEX

TITLE	SECTION	PAGE	ILLUS. NO.
1970			
F (MUSTANG)			
Back belt mouldings - body type 76	420	26	P-6788
Back window - outside - body type 63	420	25	P-6789
- body type 65	420	27	P-7179
Folding top parts - less trim - body type 76	530	10	P-6987-A
(cont'd)	530	11	P-6987-B
Latch parts (LUGGAGE COMPARTMENT)	430	5	P-5634
Louvers - back window - body type 63	420	30	P-7412
Luggage carrier - Luggage compartment mounted-Removable	550	3	P-6738
Luggage carrier, ski rack, luggage cover-Luggage compartment mounted	550	6	P-7402
Spoiler - rear deck	E/MT	9	P-7102
Roof side weatherstrips - body type 63	500	7	P-7104
- body type 65	500	4	P-6808
P (MAVERICK)			
Back window	420	27	P-6837
Latch parts (LUGGAGE COMPARTMENT)	430	1	P-5086
Luggage carrier - Luggage compartment mounted-Removable	550	3	P-6738
Luggage carrier, ski rack, luggage cover-Luggage compartment mounted	550	6	P-7402
S (THUNDERBIRD)			
Back window and roof side mouldings - inside - body type 57	420	17	P-5472
- body type 65	420	18	P-5473
Back window - heated	186	3	P-7510
Back window - outside - body type 57	420	16	P-5355
- body type 65A, C	420	29	P-7126
- body type 65 B, D	420	17	P-5359
Fuel filler door	430	7	P-7413
Latch parts (LUGGAGE COMPARTMENT)	430	6	P-5368
Latch parts - vacuum system (LUGGAGE COMPARTMENT)	430.1	4	P-7471
Luggage carrier - Luggage compartment mounted-Removable	550	3	P-6738
Luggage carrier, ski rack, luggage cover-Luggage compartment mounted	550	6	P-7402
Roof side weatherstrips - body type 57	500	3	P-5370
- body type 65	500	7	P-7101
- body type 65 B, D	500	14	P-8177
Sliding roof and related parts	500	5	P-6954
Vacuum door latch system - body type 63	430.1	2	P-5369
Window parts (back) - body type 65	420	29	P-7126
U (BRONCO)			
Back window - body type 97	420	12	P-6811
- body type 98			
Tail gate and lift gate parts	400	15	P-6858
X (FALCON) - BEFORE 1/2/70			
FOR UNITS BUILT FROM 1/2/70 REFER TO B (FALCON)			
Back window - body type 54	420	8	P-5080
- body type 62	420	9	P-5081
Latch parts - body types 54, 62 (LUGGAGE COMPARTMENT)	430	4	P-5087
Luggage carrier - non adjustable - roof mounted - body type 71	550	1	P-5091
Tail gate weatherstrips - body type 71	400	10	P-5085
Tail gate window - dual action - body type 71	400	11	P-5084
Tail gate window - single action - body type 71	400	14	P-5083

† Exterior Mouldings

INDEX

1971

A (FORD)

TITLE	SECTION	PAGE	ILLUS. NO.
Back belt mouldings - body type 76	420	33	P-7971
Back window - heated	186	4	P-8436
Back window - inside - body type 53, 54, 57	420	23	P-6855
- body type 65	420	24	P-6856
Back window - outside - body type 54	420	31	P-7972
- body type 53, 57	420	32	P-7973
- body type 65	420	32	P-7974
Folding top parts - less trim - body type 76	530	8	P-6776-A
(cont'd)	530	9	P-6776-B
Fuel filler door	430	7	P-7413
Latch parts - except body type 71 (LUGGAGE COMPARTMENT)	430	1	P-5086
Latch parts - vacuum system (LUGGAGE COMPARTMENT	430.1	4	P-7471
Luggage carrier - Luggage compartment mounted - Removable	550	3	P-6738
Luggage carrier - non adjustable - body type 71	550	7	P-8173
Luggage carrier - adjustable - body type 71 - (aluminum)	550	5	P-7403
Luggage carrier - adjustable - body type 71 - (stainless steel)	550	8	P-8224
Luggage carrier, ski rack, luggage cover-Luggage compartment mounted	550	6	P-7402
Roof side mouldings and weatherstrips - body type 53	500	11	P-7839
- body type 54, 57	500	10	P-7458
- body type 65	500	12	P-7817
Roof cover parts - body type 71	530	16	P-6963
Tail gate parts - window mechanism - body type 71	400	18	P-8152-A
- hinge and latch - body type 71	400	19	P-8152-B
- washer, wiper system - body type 71	400	20	P-8152-C
Tail gate - vacuum latch system - body type 71	430.1	3	P-7468

B (TORINO)

Back window - body types 54, 57, 65	420	28	P-7138
- body type 63	420	20	P-6379
- body type 66	420	28	P-7128
Folding top parts - less trim	530	12	P-7435-A
(cont'd)	530	13	P-7435
Fuel filler door	430	7	P-7413
Latch parts - except body type 71 (LUGGAGE COMPARTMENT)	430	1	P-5086
Latch parts - vacuum system (LUGGAGE COMPARTMENT)	430.1	4	P-7471
Louvers - back window - body type 63	420	29	P-7228
Luggage carrier - adjustable - body type 71 - (aluminum)	550	5	P-7403
Luggage carrier - non adjustable - body type 71	550	7	P-8173
Luggage carrier - Luggage compartment mounted - Removable	550	3	P-6738
Luggage carrier, ski rack, luggage cover-Luggage compartment mounted	550	6	P-7402
Roof side mouldings and weatherstrips - body type 54	500	15	P-8294
- body type 57	500	14	P-8169
- body type 63	500	8	P-7180
- body type 65	500	8	P-7181
- body type 66	500	9	P-7182
Roof cover moulding - body type 65C	500	15	P-8529
Tail gate parts - body type 66	400	12	P-5088
Tail gate - vacuum latch system - body type 71	430.1	3	P-7468
Tail gate weatherstrips - body type 71	400	10	P-5085
Tail gate window - dual action - body type 71	400	11	P-5084

COPYRIGHT © 1975 — FORD MOTOR COMPANY — DEARBORN, MICHIGAN

INDEX

1971

TITLE	SECTION	PAGE	ILLUS. NO.
F (MUSTANG)			
Back belt mouldings - body type 76	420	35	P-8277
Back window - outside - body type 63	420	34	P-7857
- body type 65	420	35	P-7856
Folding top parts - less trim - body type 76	530	14	P-8225-A
(cont'd)	530	15	P-8225-B
Latch parts (LUGGAGE COMPARTMENT)	430	7	P-8179
Luggage carrier - Luggage compartment mounted - Removable	550	3	P-6738
Luggage carrier, ski rack, luggage cover-Luggage compartment mounted	550	6	P-7402
Roof cover mouldings - body type 65	500	16	P-8571
Roof side weatherstrips - body type 63	500	13	P-8172
- body type 65	500	13	P-9199
Spoiler - rear deck	E/M†	10	P-8112
L (PINTO)			
Back window - outside - body types 62, 64	420	31	P-7783
Latch parts (luggage compartment) - body types 62, 64	430	6	P-7784
Luggage carrier - roof mounted - non adjustable	550	4	P-7927
Luggage compartment door - body type 64	430	8	P-8272
Roof side weatherstrip	230	33	P-7785
P (MAVERICK)			
Back window - outside	420	27	P-6837
Latch parts (LUGGAGE COMPARTMENT)	430	1	P-5086
Luggage carrier - Luggage compartment mounted - Removeable	550	3	P-6738
Luggage carrier, ski rack, luggage cover-Luggage compartment mounted	550	6	P-7402
Roof side mouldings and weatherstrips - body type 54	500	11	P-7925
- body type 62	500	12	P-7876
S (THUNDERBIRD)			
Back window - heated	186	3	P-7510
Back window - outside - body type 57	420	16	P-5355
- body type 65A, C	420	29	P-7126
- body type 65B, D	420	17	P-5359
Fuel filler door	430	7	P-7413
Latch parts (LUGGAGE COMPARTMENT)	430	6	P-5368
Latch parts - vacuum system (LUGGAGE COMPARTMENT)	430.1	4	P-7471
Luggage carrier - Luggage compartment mounted-Removable	550	3	P-6738
Luggage carrier, ski rack, luggage cover-Luggage compartment mounted	550	6	P-7402
Roof side weatherstrips - body type 57	500	3	P-5370
- body type 65 A, C	500	7	P-7101
- body type 65B, D	500	14	P-8177
Sliding roof and related parts	500	19	P-8891
Window parts (back) - body type 65	420	29	P-7126
U (BRONCO)			
Back window - body type 97	420	12	P-6811
- body type 98	420	12	P-6812
Tail gate and lift gate parts	400	15	P-6858

† Exterior mouldings

INDEX

TITLE	SECTION	PAGE	ILLUS. NO.
1972			
A (FORD)			
Back belt mouldings - body type 76	420	33	P-7971
Back window - heated	186	2	P-7508
Back window - inside - body type 53,54,57	420	23	P-6855
- body type 65	420	24	P-6856
Back window - outside - body type 54	420	31	P-7972
- body type 53,57	420	32	P-7973
- body type 65	420	32	P-7974
Folding top parts - less trim - body type 76	530	8	P-6776-A
(cont'd.)	530	9	P-6776-B
Fuel filler door	430	12	P-8889
Latch parts - except body type 71 (LUGGAGE COMPARTMENT)	430	10	P8837
Latch parts - vacuum system (LUGGAGE COMPARTMENT)	430.1	4	P-7471
Luggage carrier - Luggage compartment mounted - Removable	550	3	P-6738
Luggage carrier - non adjustable - body type 71	550	7	P-8173
Luggage carrier - adjustable - body type 71 - (aluminum)	550	5	P-7403
Luggage carrier - adjustable - body type 71 - (stainless steel)	550	8	P-8224
Luggage carrier, ski rack, luggage cover - Luggage compartment mounted	550	6	P-7402
Roof side mouldings and weatherstrips - body type 53	500	11	P-7839
- body types 54,57	500	10	P-7458
- body type 65	500	12	P-7817
Roof cover parts - body type 71	530	16	P-6963
Sliding roof and related parts	500	19	P-8891
Tailgate parts - window mechanism - body type 71	400	18	P-8152-A
- hinge and latch - body type 71	400	19	P-8152-B
- washer, wiper system - body type 71	400	20	P-8152-C
Tailgate - vacuum latch system - body type 71	430.1	3	P-7468
B (TORINO)			
Back window - body type 53	420	37	P-8794
- body type 63	420	37	P-8795
- body type 65	420	38	P-8796
- body type 97	420	36	P-8594
Folding top parts - less trim	530	12	P-7435-A
(cont'd.)	530	13	P-7435
Fuel filler door	430	12	P-8889
Latch parts - except body type 71 (LUGGAGE COMPARTMENT)	430	11	P-8595
Latch parts - vacuum system (LUGGAGE COMPARTMENT)	*430.1*	*4*	*P-7471*
Luggage carrier - adjustable - body type 71 - (aluminum)	550	7	P-8173
Luggage carrier - non adjustable - body type 71	550	3	P-6738
Luggage carrier - Luggage compartment mounted - Removable	550	6	P-7402
Luggage carrier, ski rack, luggage cover - Luggage compartment mtd.	550	6	P-7402
Roof cover parts - body type 53	530	16	P-9241
Roof side mouldings and weatherstrips - body types 53,71	500	18	P-8597
- body type 63	500	17	P-8598
- body type 65	500	18	P-8596
- body type 97	500	17	P-8599
Tailgate parts - window mechanism - body type 71	400	22	P-8751
- hinge and latch - body type 71	400	23	P-8752
Tailgate - vacuum latch system - body type 71	430.1	3	P-7468
- electric latch system - body type 71	400	23	P-8752
Tailgate parts - hinge and latch - body type 97	400	21	P-8818

COPYRIGHT © 1975 — FORD MOTOR COMPANY — DEARBORN, MICHIGAN

INDEX

TITLE	SECTION	PAGE	ILLUS. NO.
1972			
F (MUSTANG)			
Back belt mouldings - body type 76	420	35	P-8277
Back window - outside - body type 63	420	34	P-7857
- body type 65	420	35	P-7856
Folding top parts - less trim - body type 76	530	14	P-8225-A
(cont'd.)	530	15	P-8225-B
Latch parts (LUGGAGE COMPARTMENT)	430	12	P-10159
Luggage carrier - Luggage compartment mounted - Removable	550	3	P-6738
Luggage carrier, ski rack, luggage cover - Luggage compartment mtd.	550	6	P-7402
Roof cover mouldings - body type 65	500	16	P-8571
Roof side weatherstrips - body type 63	500	13	P-8172
- body type 65	500	13	P-9199
Spoiler - rear deck	E/M†	10	P-8112
L (PINTO)			
Back window - outside - body type 62	420	31	P-7783
- body type 64	420	36	P-8787
Latch parts (luggage compartment) - body types 62, 64	430	6	P-7784
Luggage carrier - roof mounted - non adjustable	550	4	P-7927
Luggage compartment door - body type 64 - "Before 12/1/71"	430	8	P-8272
- "From 12/1/71"	430	9	P-8938
Roof side weatherstrip	230	33	P-7785
Sliding roof and related parts	500	20	P-9240
Tailgate parts - window - body type 73	400	24	P-8913
- latch - body type 73	400	24	P-8914
- hinges - body type 73	400	25	P-8937
P (MAVERICK)			
Back window - body type 62	420	27	P-6837
- body type 54	420	33	P-7926
Latch parts (LUGGAGE COMPARTMENT)	430	10	P-8838
Luggage carrier - Luggage compartment mounted - Removeable	550	3	P-6738
Luggage carrier, ski rack, luggage cover - Luggage compartment mtd.	550	6	P-7402
Roof side mouldings and weatherstrips - body type 54	500	11	P-7925
- body type 62	500	12	P-7876
S (THUNDERBIRD)			
Back window - heated	186	3	P-7510
Back window - outside	420	38	P-8802
Latch parts (LUGGAGE COMPARTMENT)	430	11	P-8592
- vacuum system (LUGGAGE COMPARTMENT)	430.1	4	P-7471
- electric (LUGGAGE COMPARTMENT)	430.1	4	P-8932
Luggage carrier - Luggage compartment mounted - Removable	550	3	P-6738
Luggage carrier, ski rack, luggage cover - Luggage compartment mtd.	550	6	P-7402
Roof side weatherstrips	500	16	P-8935
Sliding roof and related parts	500	19	P-8891
U (BRONCO)			
Back window - body type 97	420	12	P-6811
- body type 98	420	12	P-6812
Tail gate and lift gate parts	400	15	P-6858

† Exterior mouldings

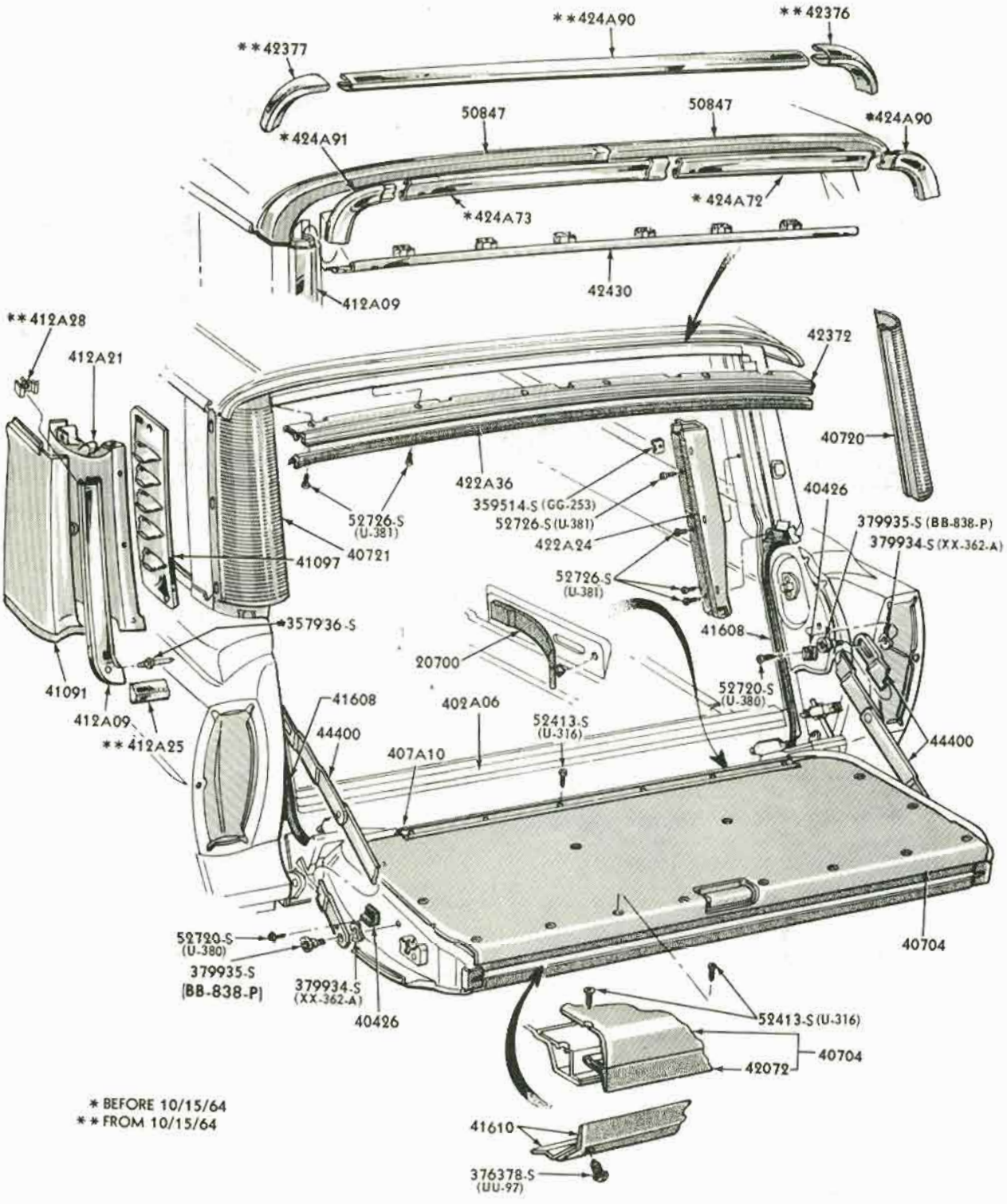

* BEFORE 10/15/64
** FROM 10/15/64

P-4758

TAIL GATE WEATHERSTRIPS and RELATED PARTS
1965 FORD - BODY TYPE 71

COPYRIGHT © 1975 — FORD MOTOR COMPANY — DEARBORN, MICHIGAN

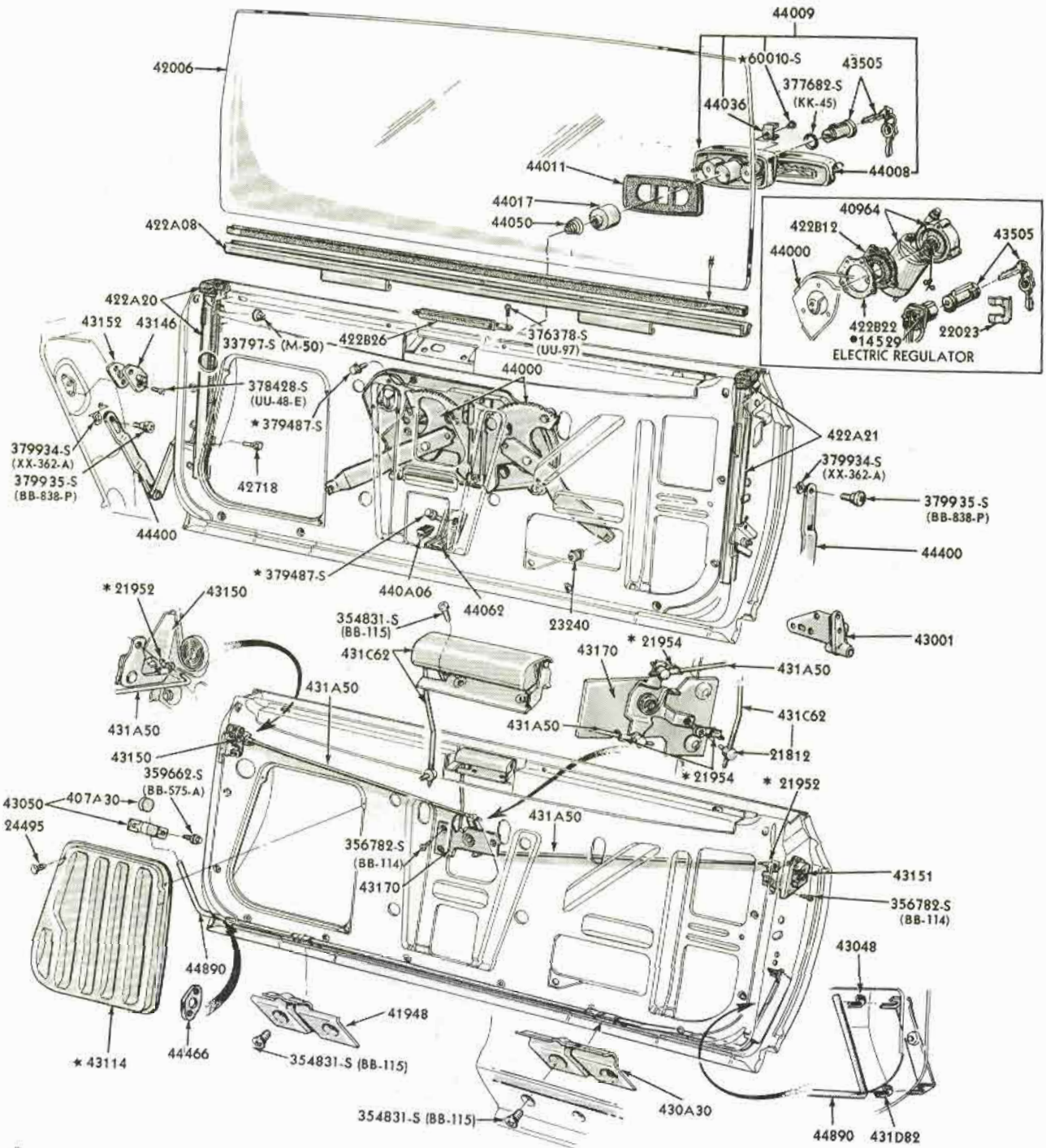

USE BULK GLASS TAPE
* ALSO INCLUDED WITH 431A50
•REFER TO GROUP IN CHASSIS SECTION
%FOR GEAR REPLACEMENT KIT REFER TO GROUP 234A24

P-4759

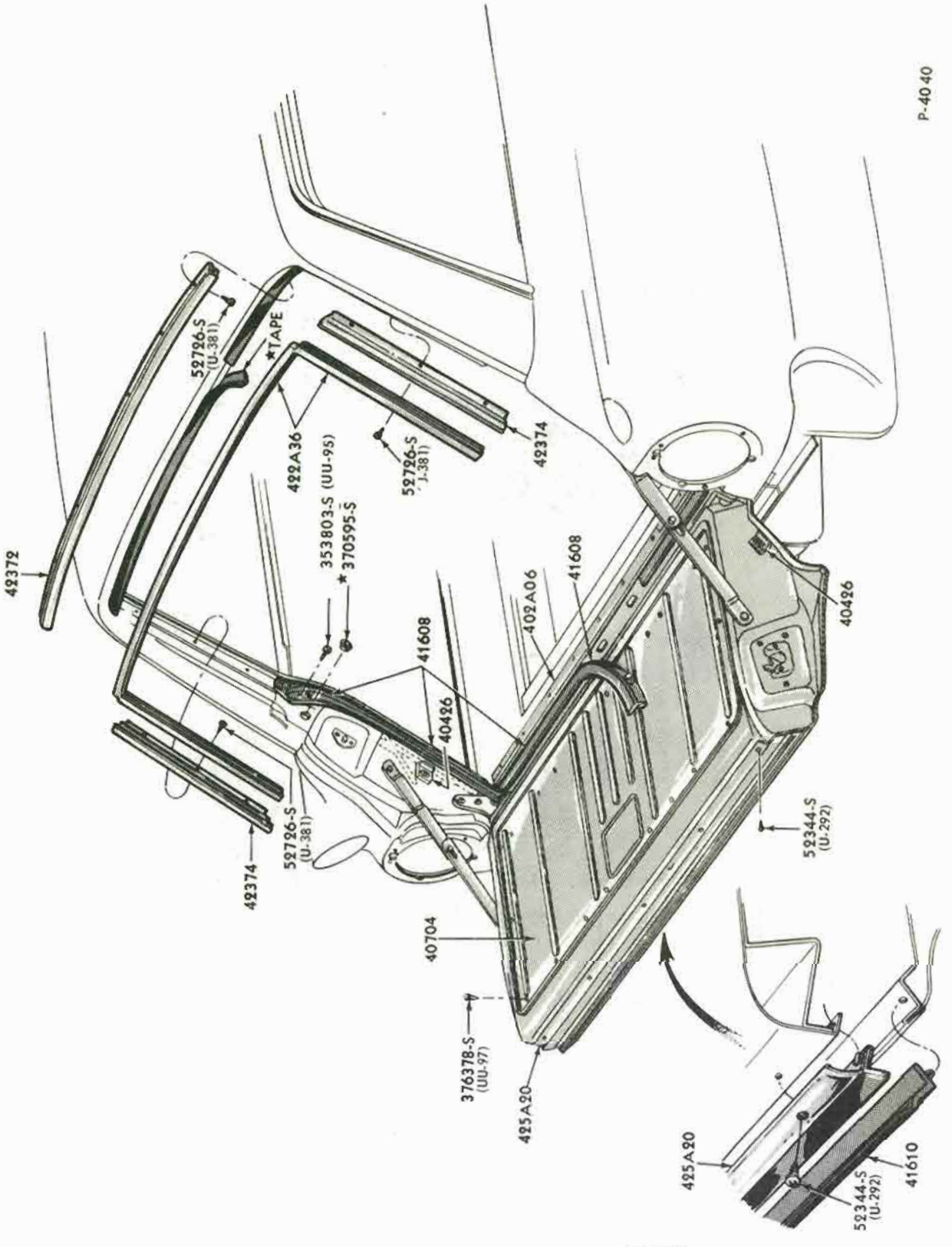

TAIL GATE WEATHERSTRIPS and RELATED PARTS
1965 FAIRLANE - BODY TYPE 71

COPYRIGHT © 1975 — FORD MOTOR COMPANY — DEARBORN, MICHIGAN

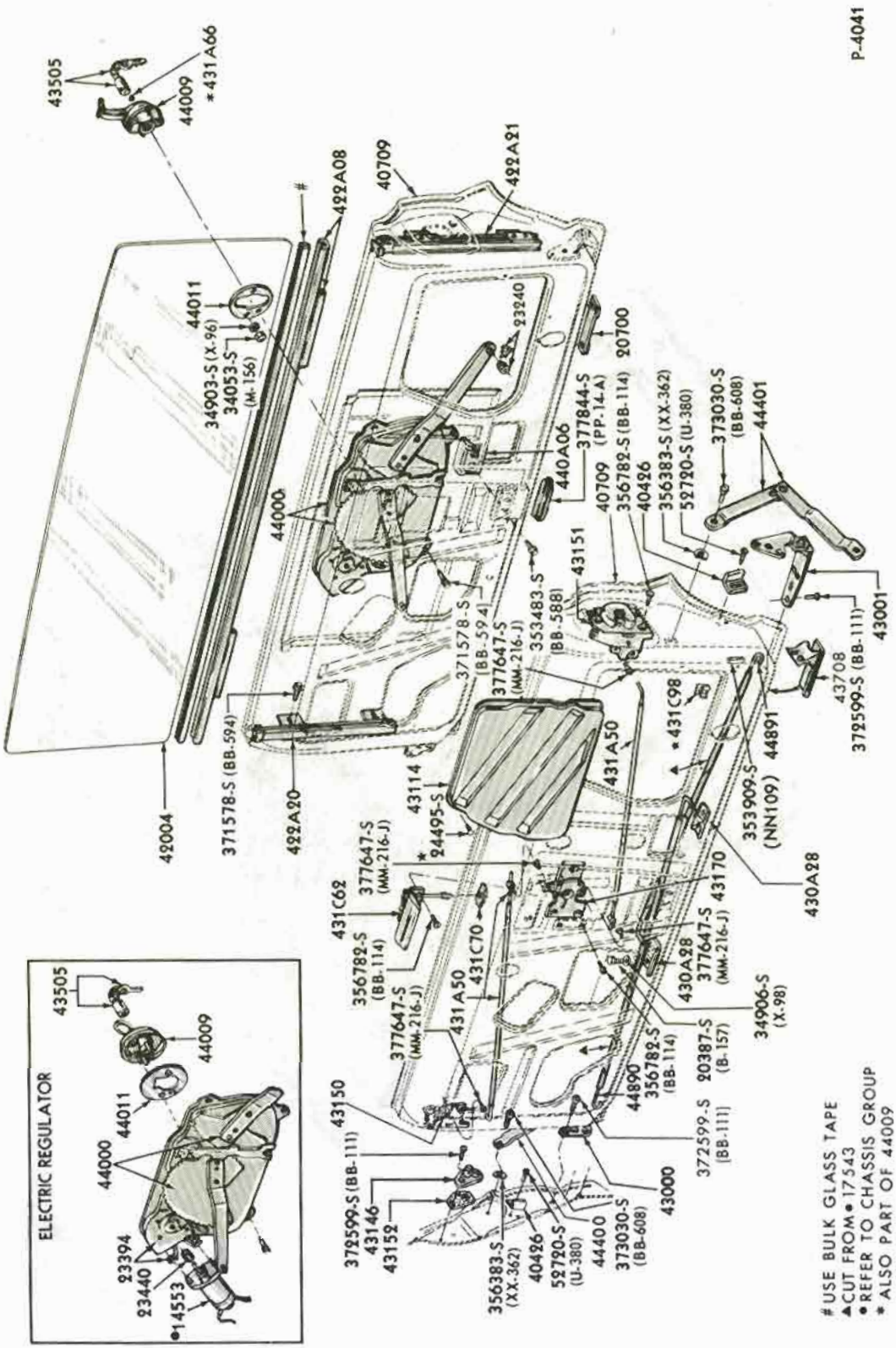

TAIL GATE WINDOW and RELATED PARTS
1965 FAIRLANE - BODY TYPE 71

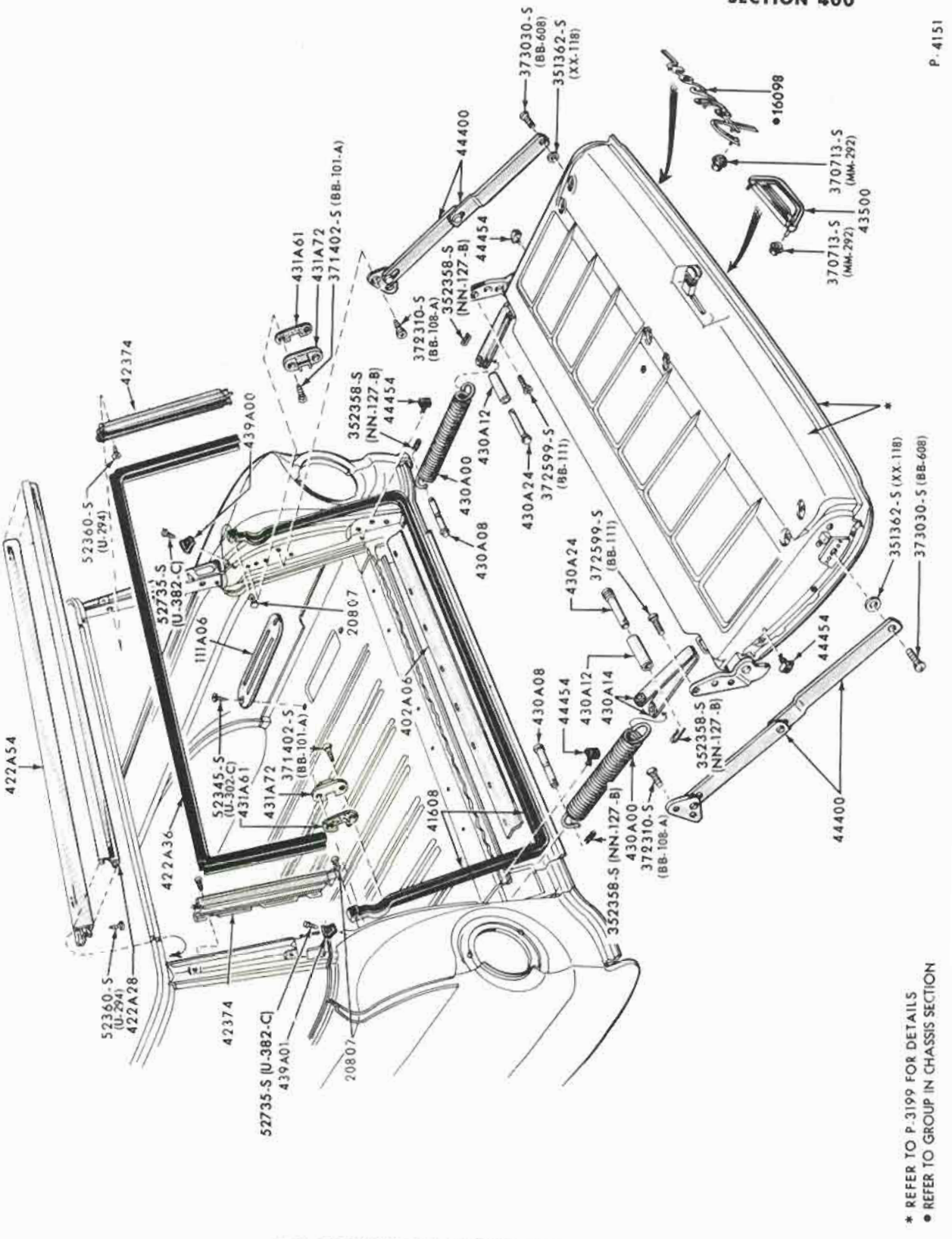

TAIL GATE WEATHERSTRIPS and RELATED PARTS
1965 FALCON - BODY TYPES 59, 71

COPYRIGHT © 1975 — FORD MOTOR COMPANY — DEARBORN, MICHIGAN

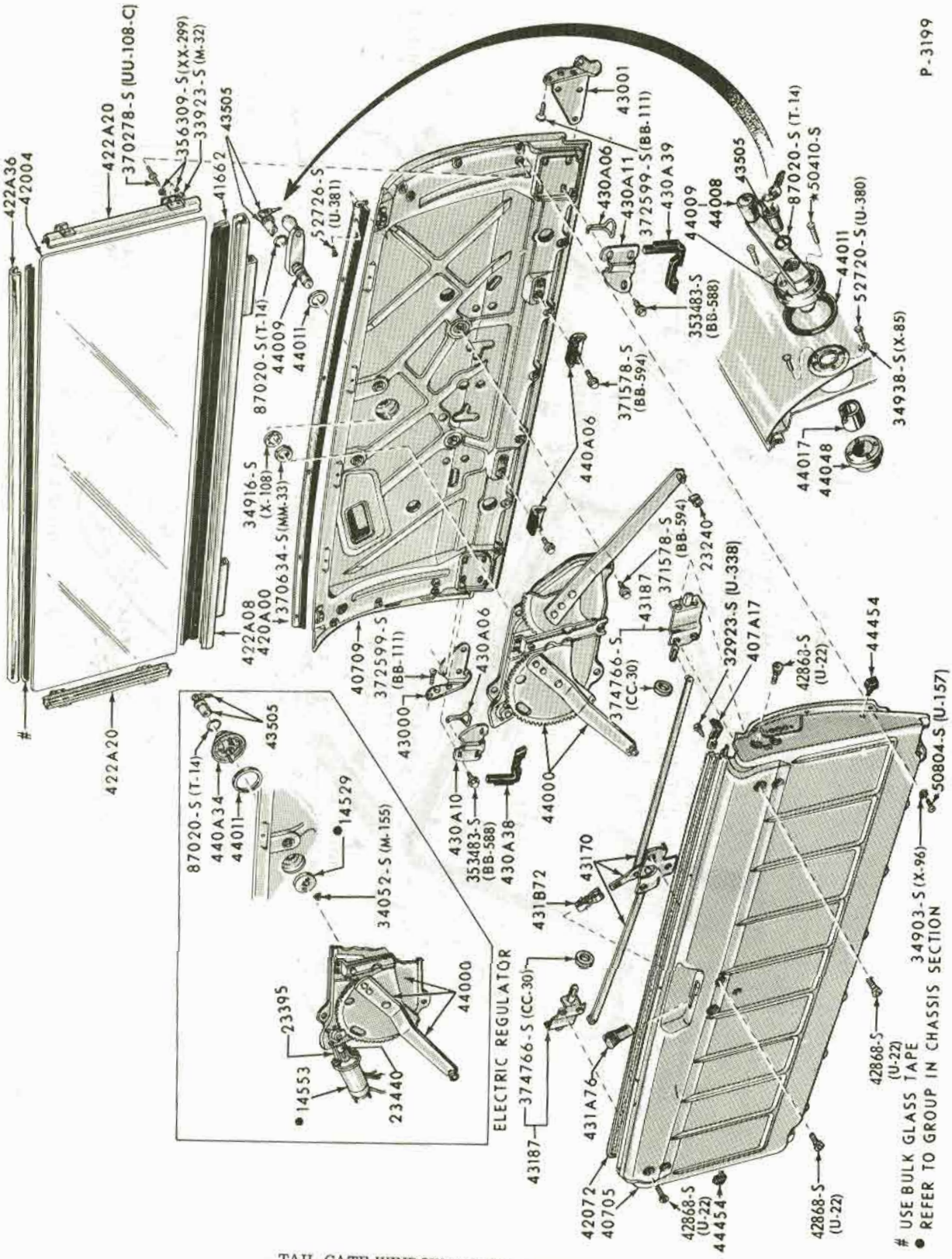

TAIL GATE WINDOW and RELATED PARTS
1965 FALCON - BODY TYPES 59, 71

P-3202

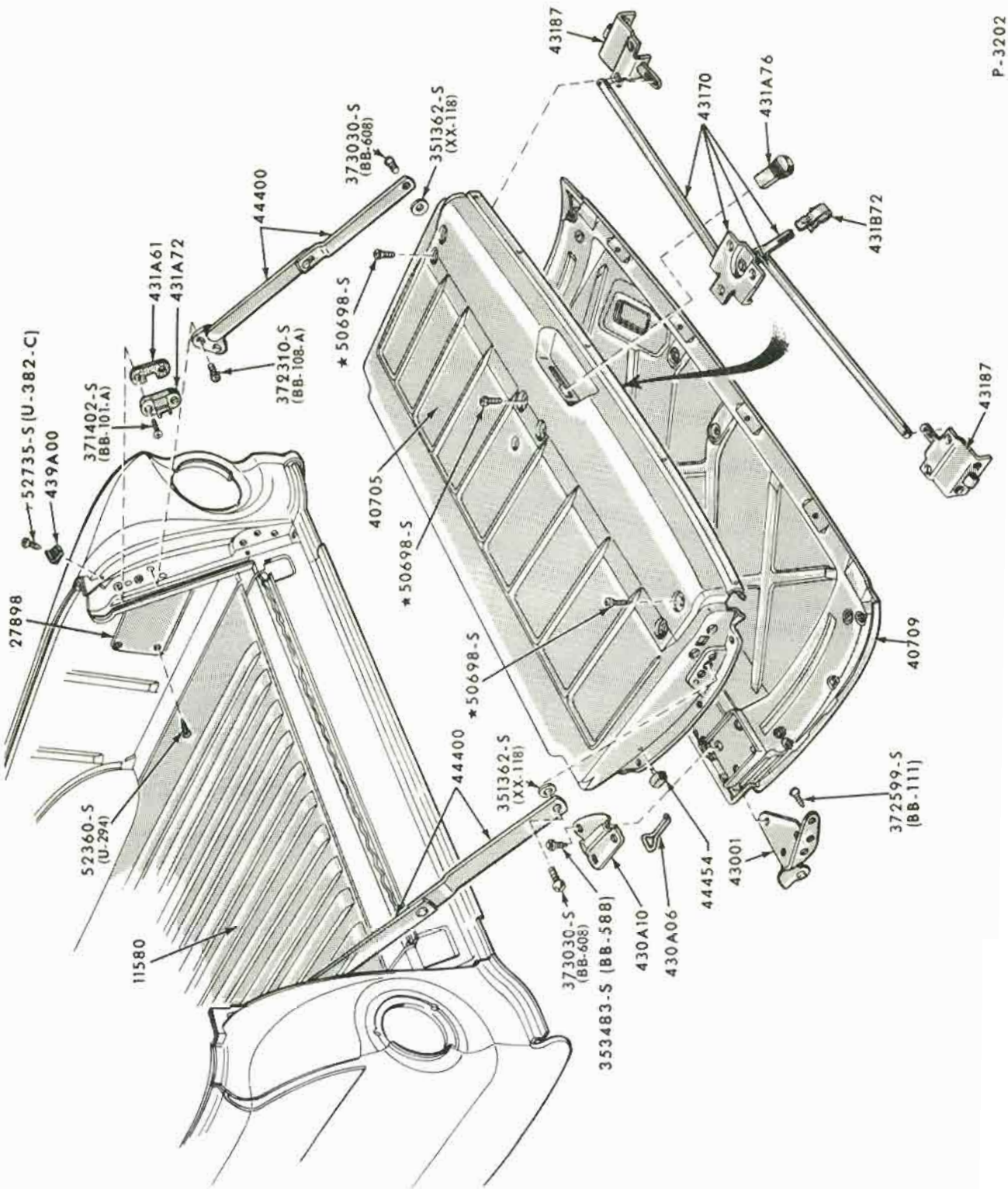

TAIL GATE and RELATED PARTS
1965 FALCON - BODY TYPE 66

COPYRIGHT © 1975— FORD MOTOR COMPANY —DEARBORN, MICHIGAN

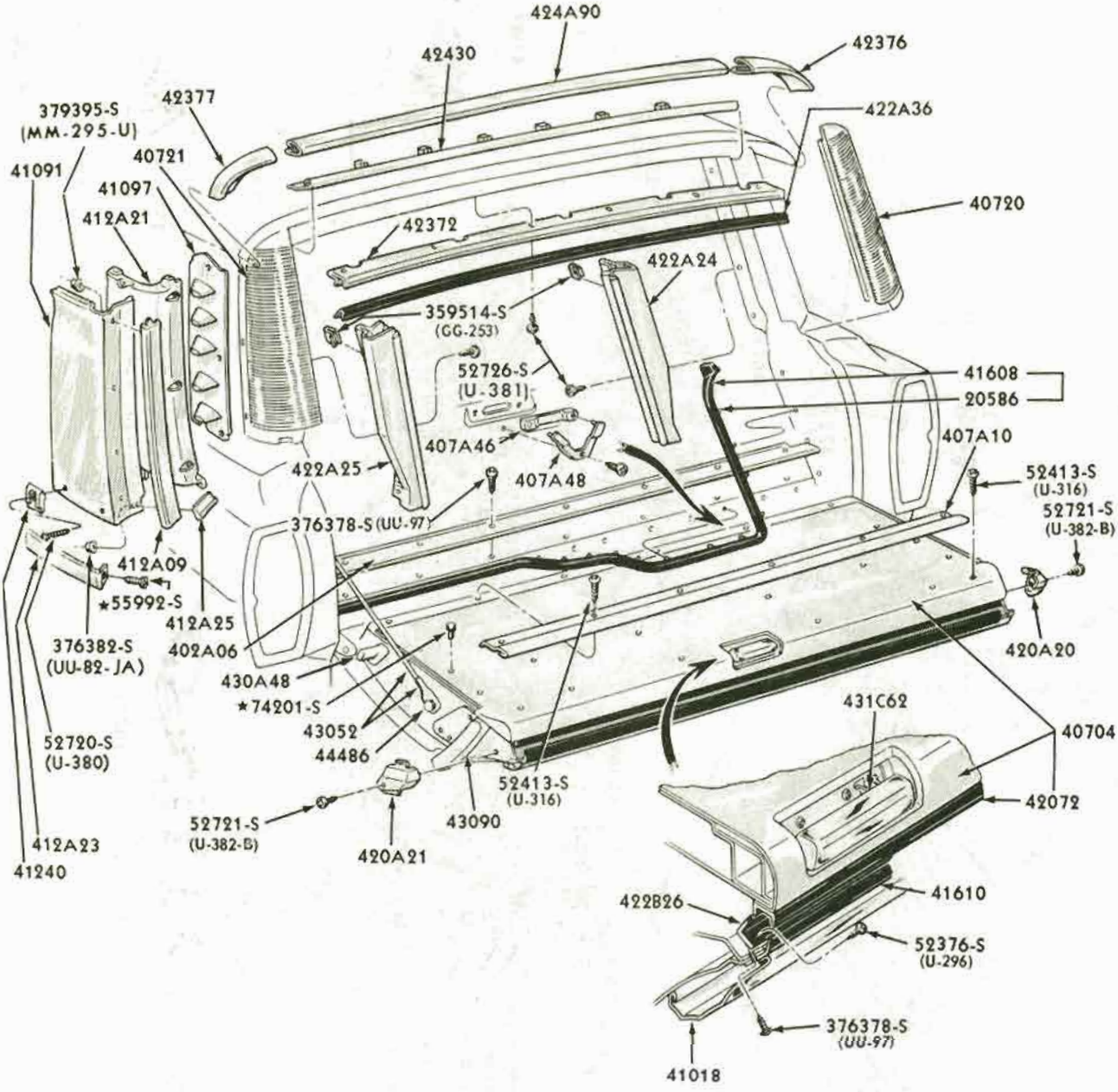
424A90
42430
42376
42377
379395-S
(MM-295-U)
422A36
41091
40721
41097
412A21
40720
42372
422A24
359514-S
(GG-253)
52726-S
(U-381)
41608
20586
407A46
407A10
422A25
407A48
52413-S
(U-316)
376378-S (UU-97)
52721-S
(U-382-B)
412A09
★55992-S
412A25
376382-S
(UU-82-JA)
402A06
420A20
430A48
★74201-S
431C62
43052
40704
44486
52720-S
(U-380)
52413-S
(U-316)
42072
52721-S
(U-382-B)
43090
412A23
41240
420A21
41610
422B26
52376-S
(U-296)
376378-S
(UU-97)
41018

P-5095

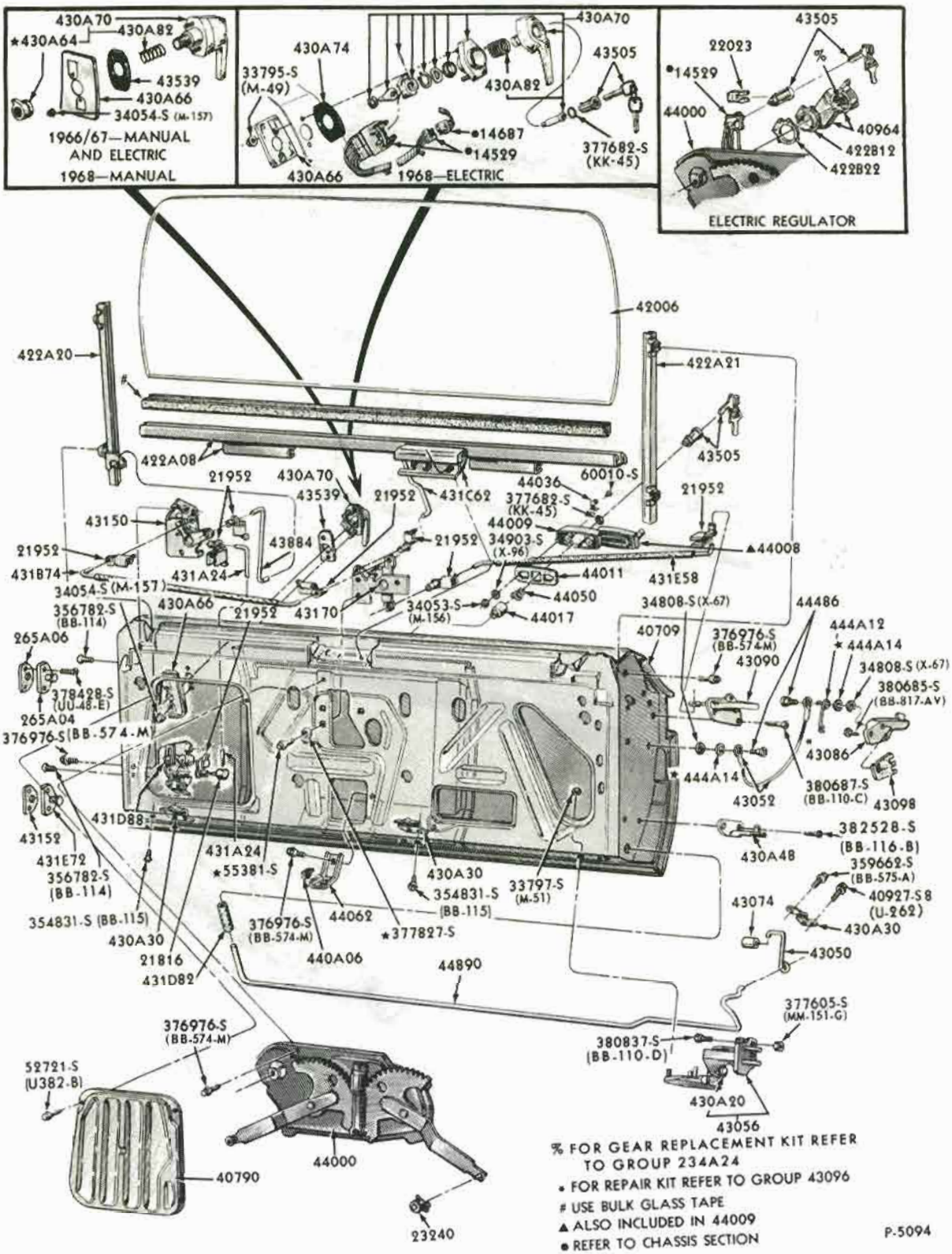

TAIL GATE WINDOW and RELATED PARTS - DUAL ACTION
1966/68 FORD - BODY TYPE 71

COPYRIGHT © 1975 — FORD MOTOR COMPANY — DEARBORN, MICHIGAN

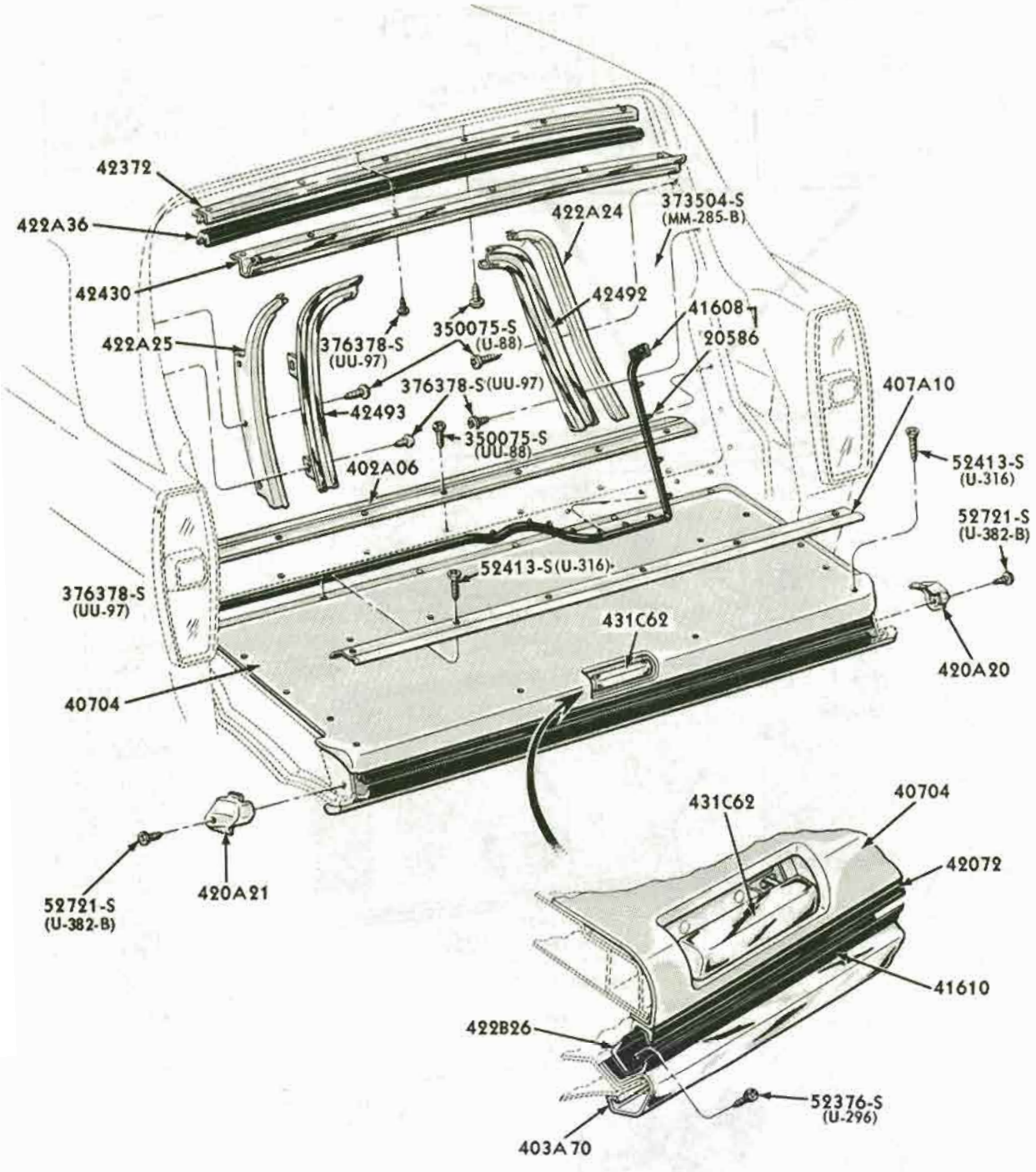

P-5085

TAIL GATE WEATHERSTRIPS and RELATED PARTS
1966/71 FAIRLANE/TORINO and FALCON - BODY TYPE 71

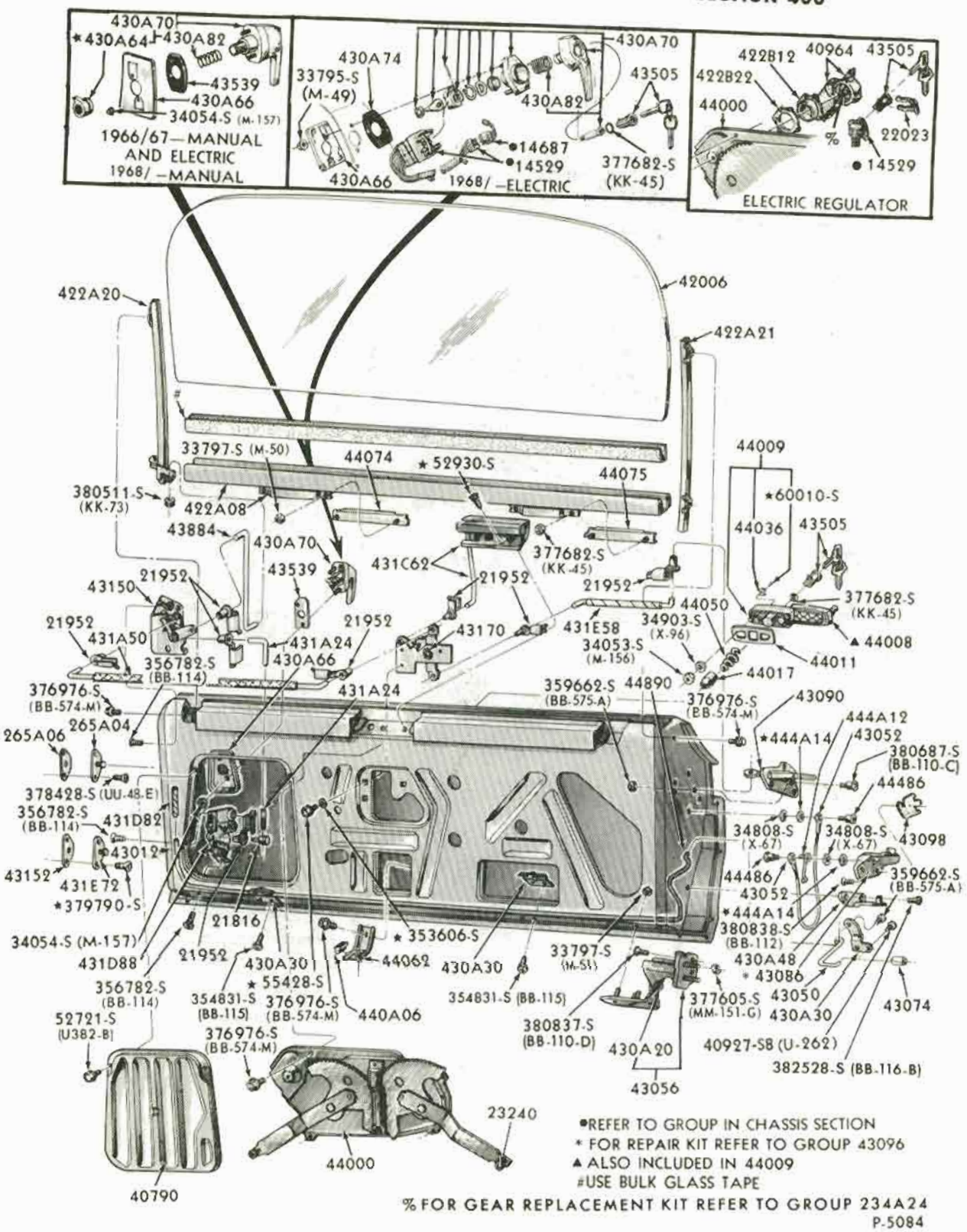

TAIL GATE WINDOW and RELATED PARTS - DUAL ACTION
1966/71 FAIRLANE and FALCON - BODY TYPE 71

COPYRIGHT © 1975 — FORD MOTOR COMPANY — DEARBORN, MICHIGAN

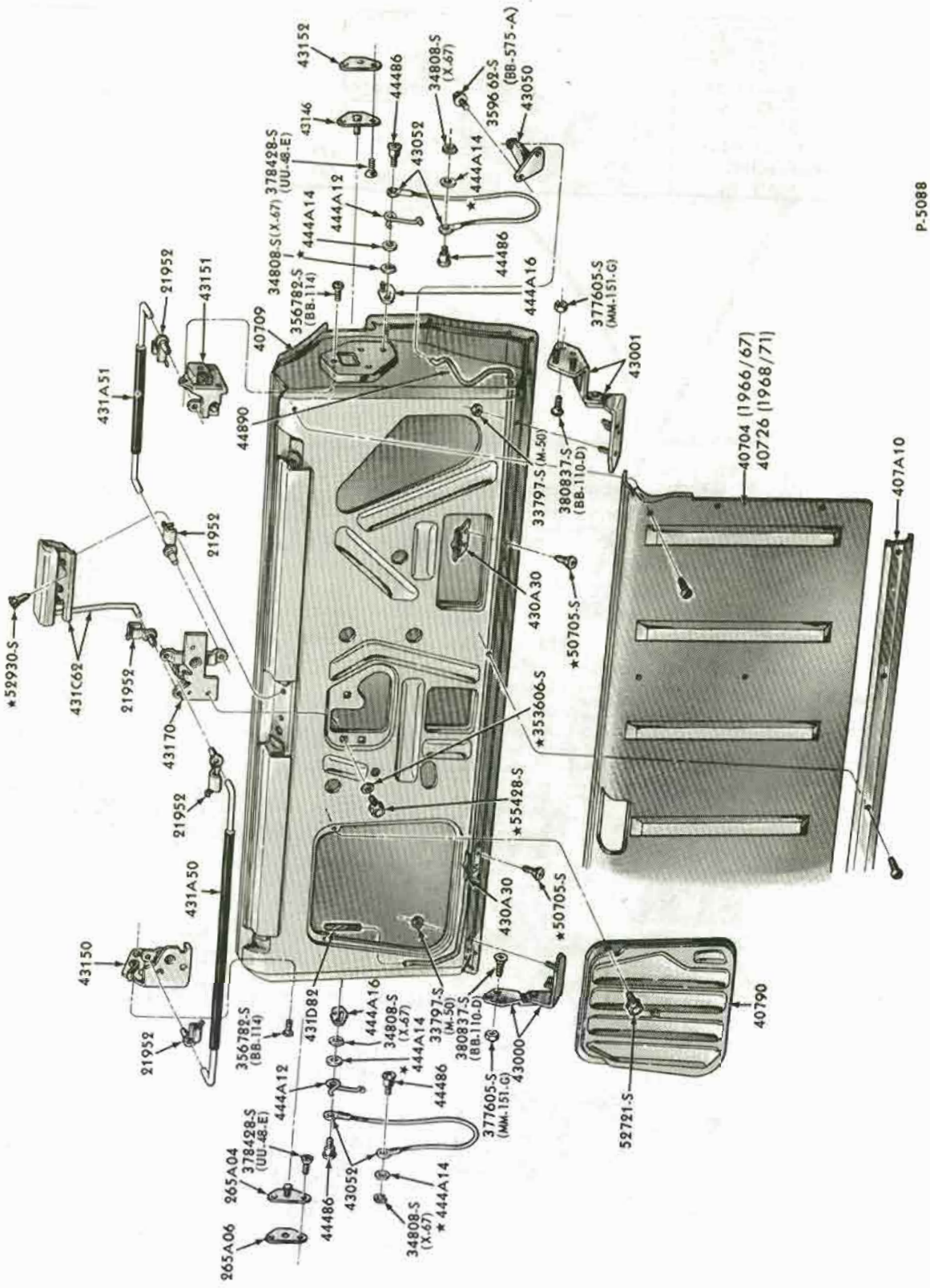

TAILGATE and RELATED PARTS
1966/71 FAIRLANE and FALCON - BODY TYPE 66

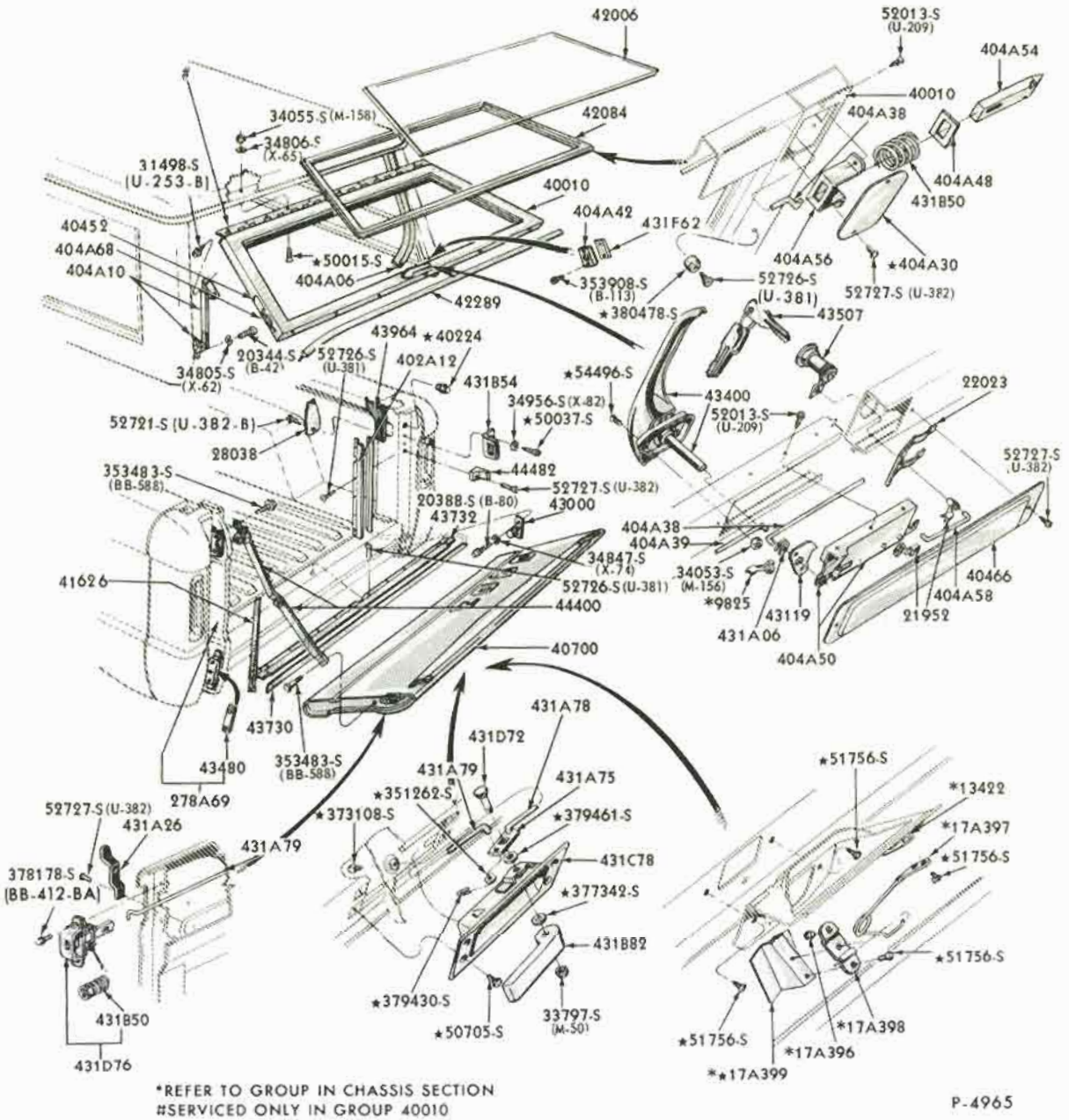

*REFER TO GROUP IN CHASSIS SECTION
#SERVICED ONLY IN GROUP 40010

P-4965

TAIL GATE, LIFT GATE, and RELATED PARTS
1966/68 BRONCO

COPYRIGHT © 1975 — FORD MOTOR COMPANY — DEARBORN, MICHIGAN

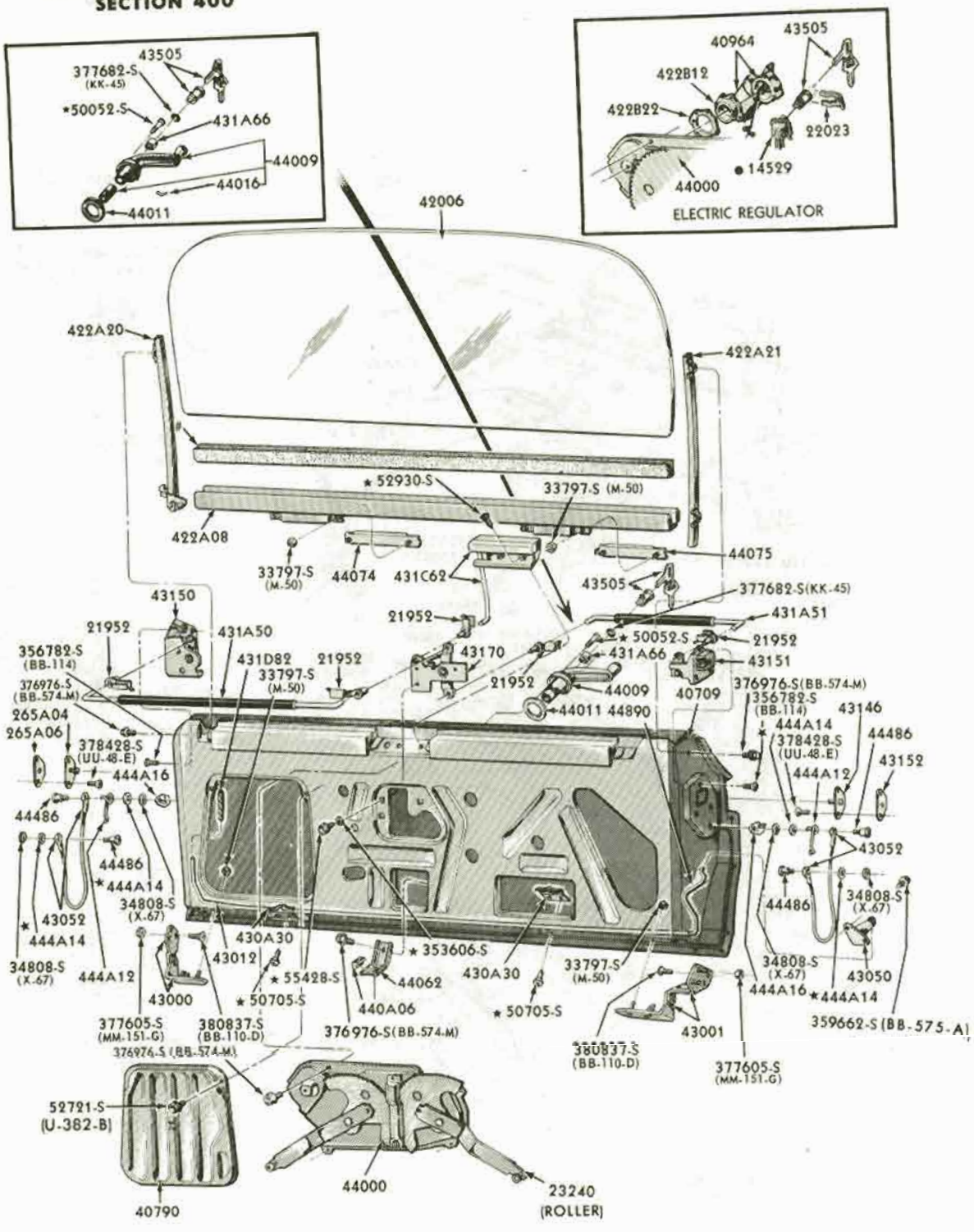

#USE BULK GLASS TAPE
● REFER TO GROUP IN CHASSIS SECTION
% FOR GEAR REPLACEMENT KIT REFER TO GROUP 234A24

P-5083

TAILGATE WINDOW and RELATED PARTS - SINGLE ACTION
1966/70 FALCON - BODY TYPE 71

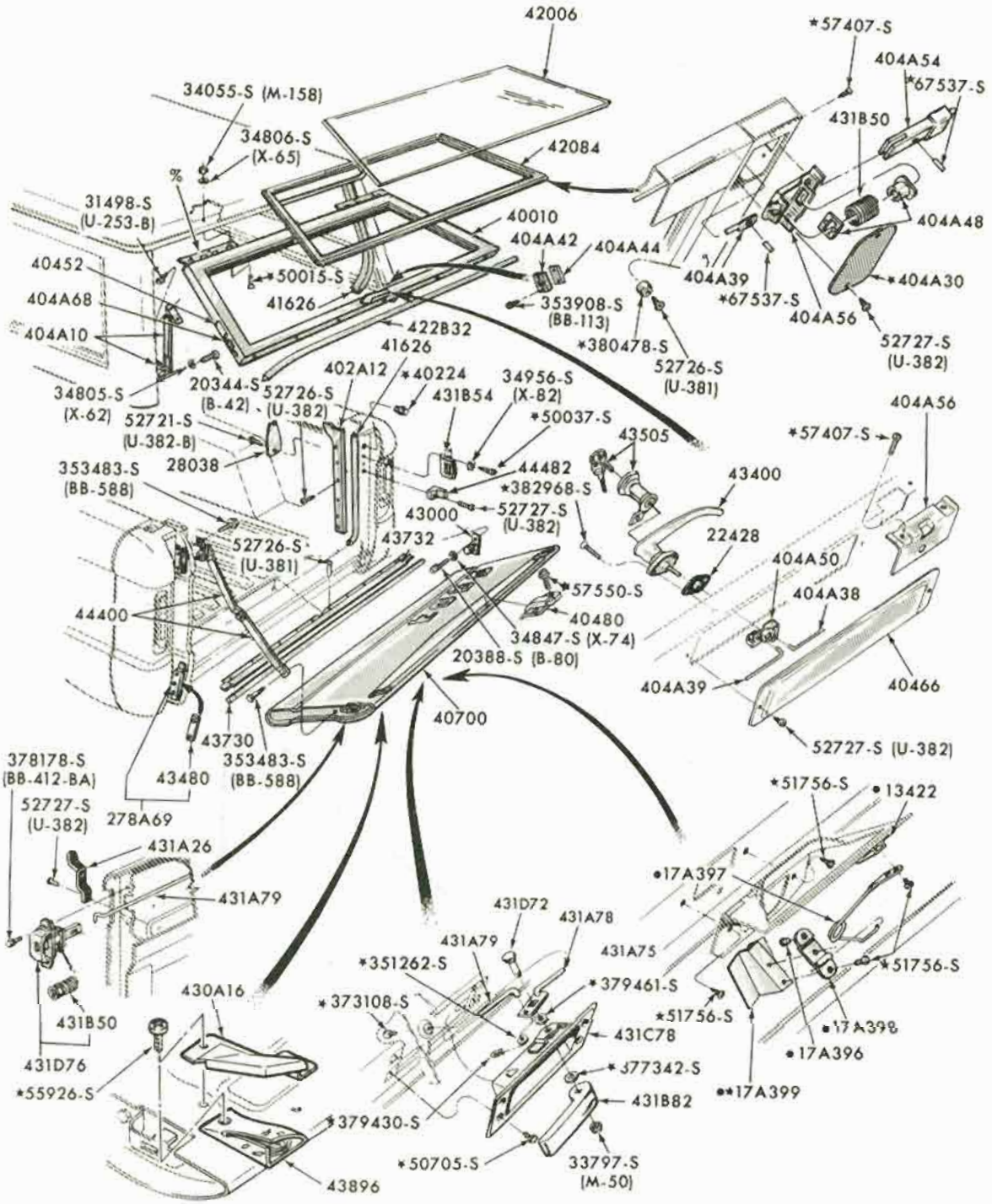

• REFER TO CHASSIS SECTION
% SERVICED ONLY IN GROUP 40010

P-6858

TAILGATE, LIFTGATE and RELATED PARTS
1969/72 BRONCO

COPYRIGHT © 1975 — FORD MOTOR COMPANY — DEARBORN, MICHIGAN

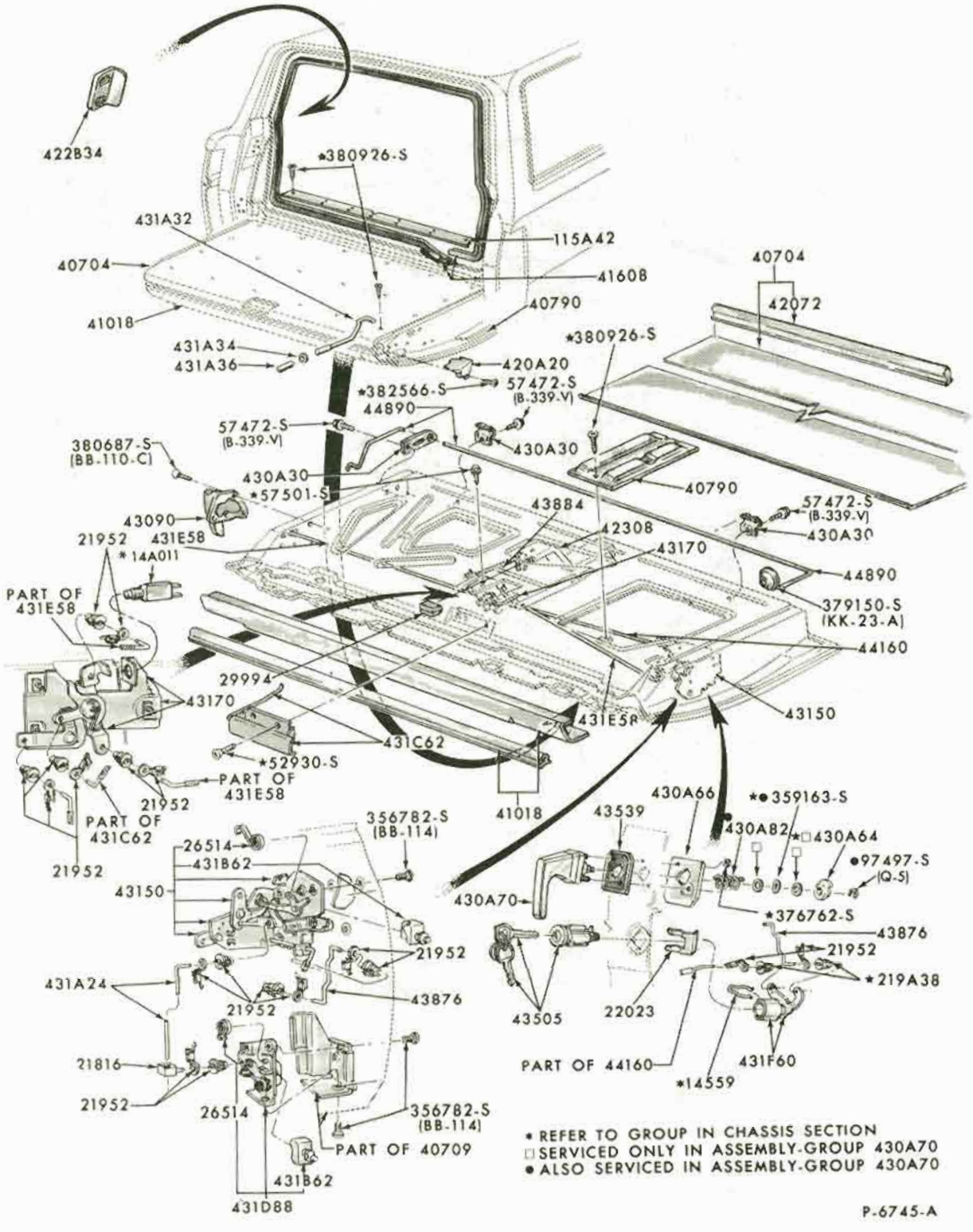

* REFER TO GROUP IN CHASSIS SECTION
□ SERVICED ONLY IN ASSEMBLY-GROUP 430A70
● ALSO SERVICED IN ASSEMBLY-GROUP 430A70

P-6745-A

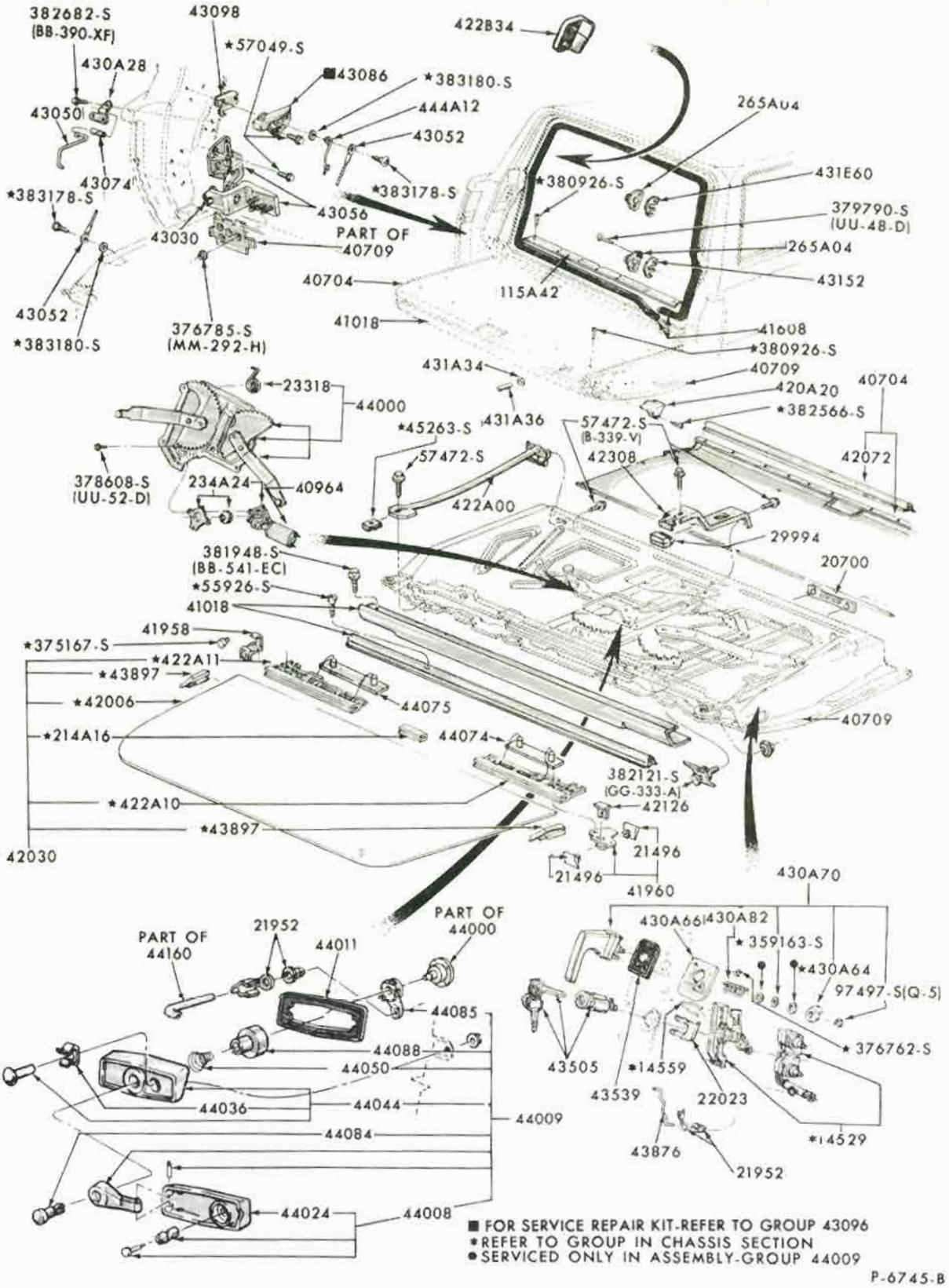

■ FOR SERVICE REPAIR KIT-REFER TO GROUP 43096
*REFER TO GROUP IN CHASSIS SECTION
● SERVICED ONLY IN ASSEMBLY-GROUP 44009

P-6745-B

May, 1975 COPYRIGHT © 1975— FORD MOTOR COMPANY —DEARBORN, MICHIGAN

FINAL ISSUE

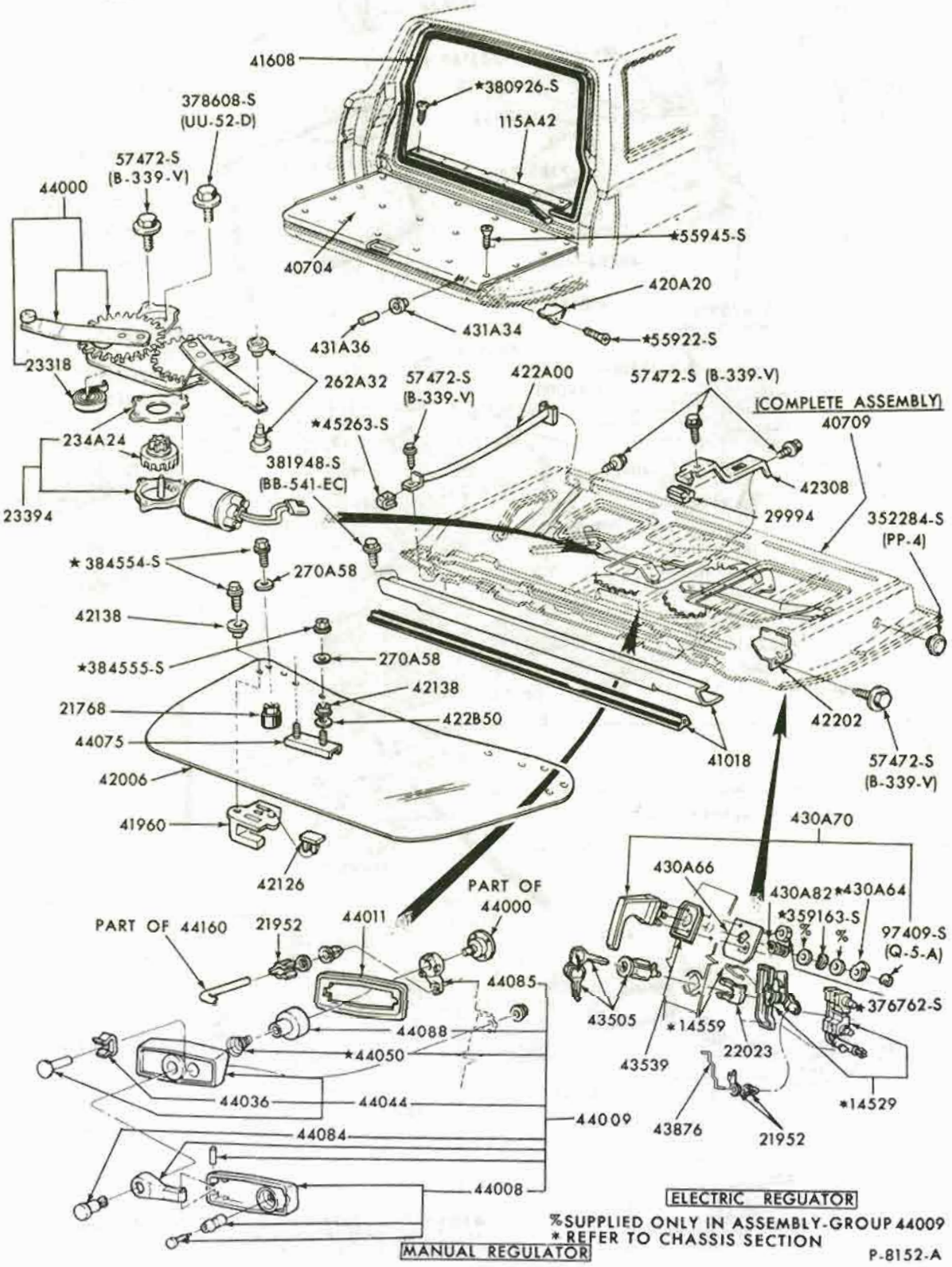

'TAILGATE PARTS - WINDOW MECHANISM
1971/72 FORD - BODY TYPE 71

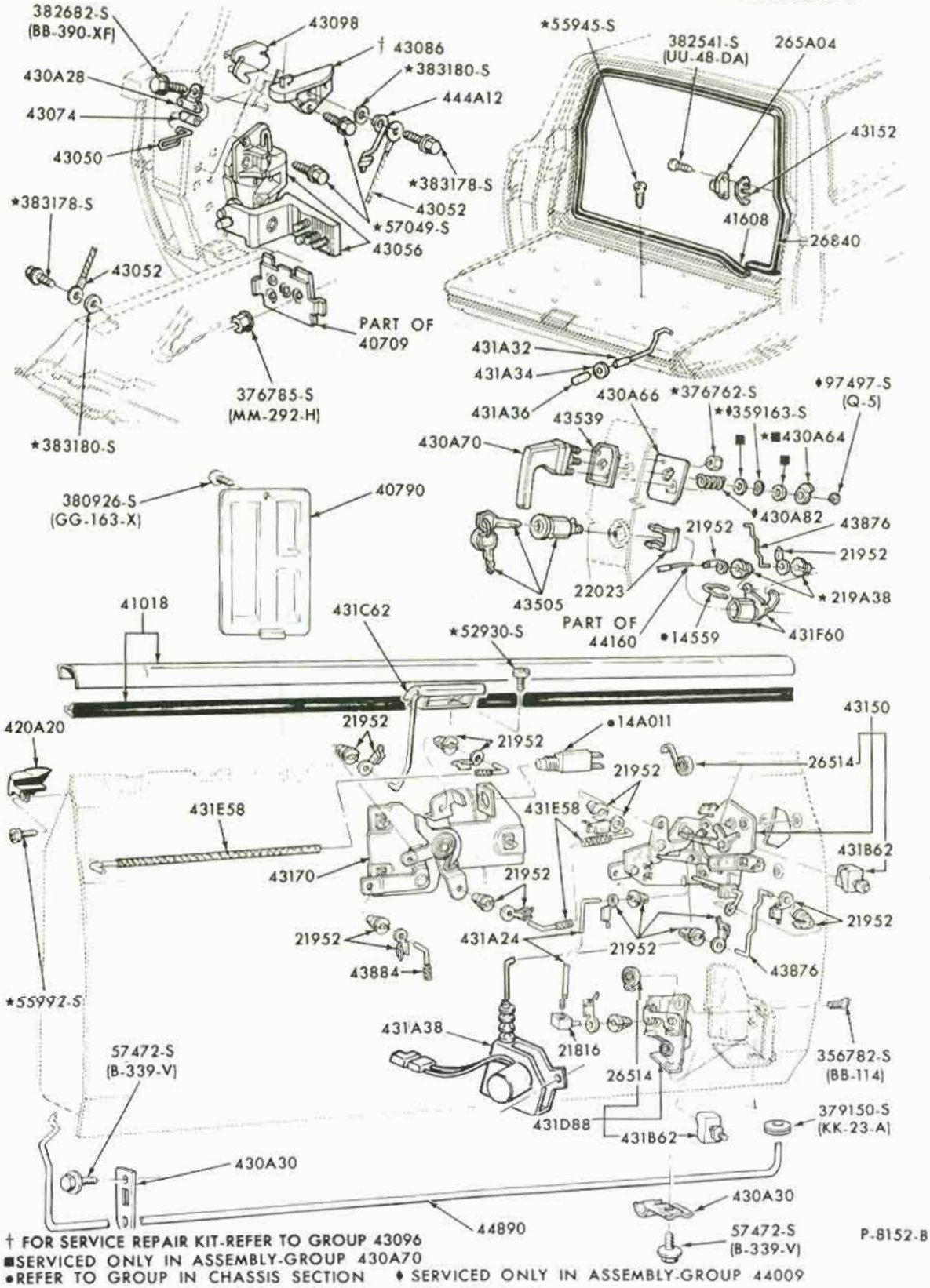

† FOR SERVICE REPAIR KIT-REFER TO GROUP 43096
■SERVICED ONLY IN ASSEMBLY-GROUP 430A70
•REFER TO GROUP IN CHASSIS SECTION ♦ SERVICED ONLY IN ASSEMBLY-GROUP 44009

TAILGATE PARTS - HINGE and LATCH
1971/72 FORD - BODY TYPE 71

COPYRIGHT © 1975 — FORD MOTOR COMPANY — DEARBORN, MICHIGAN

FORD CAR PARTS

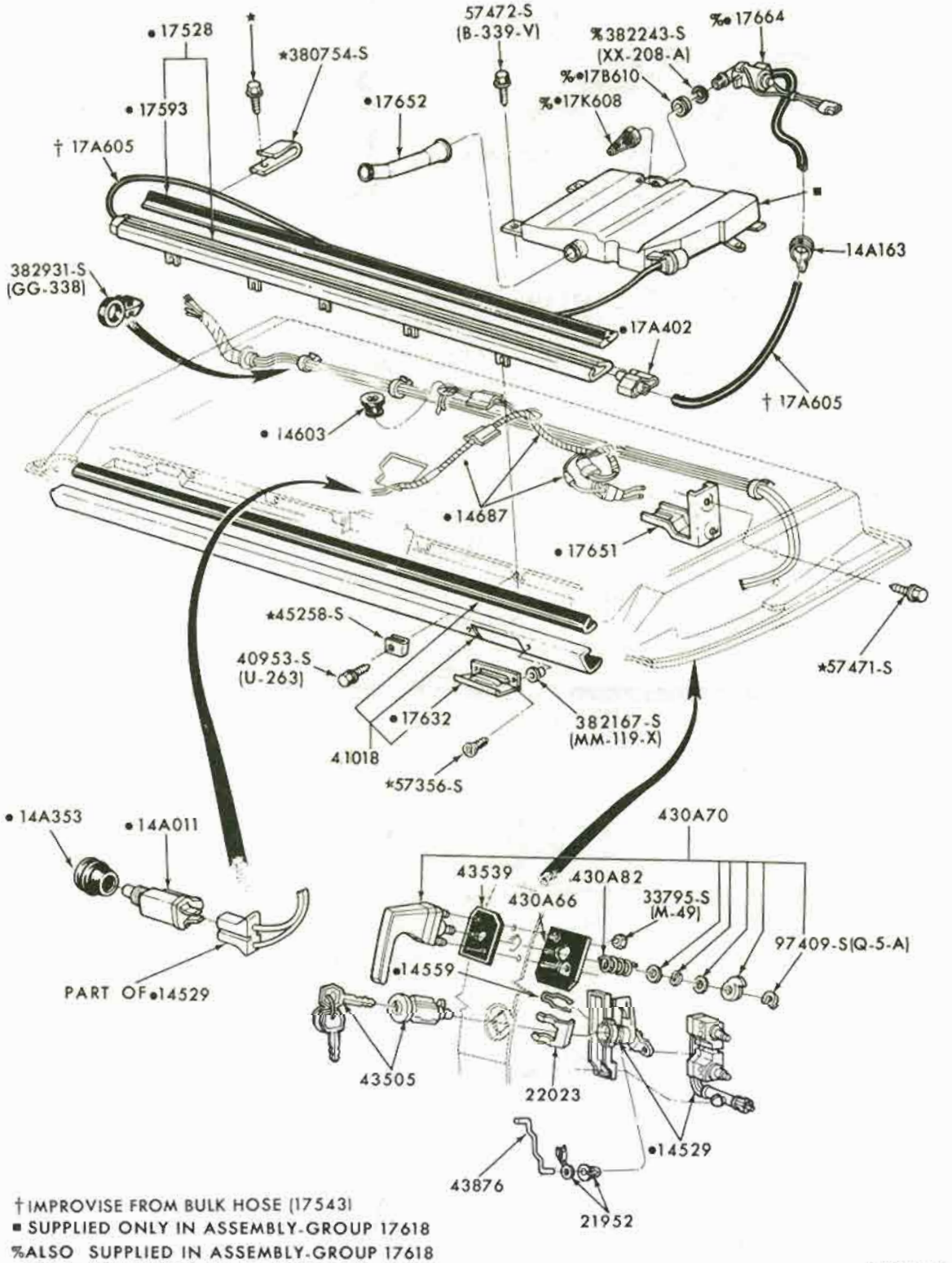

†IMPROVISE FROM BULK HOSE (17543)
■ SUPPLIED ONLY IN ASSEMBLY-GROUP 17618
%ALSO SUPPLIED IN ASSEMBLY-GROUP 17618
• REFER TO GROUP IN CHASSIS SECTION

P-8152-C

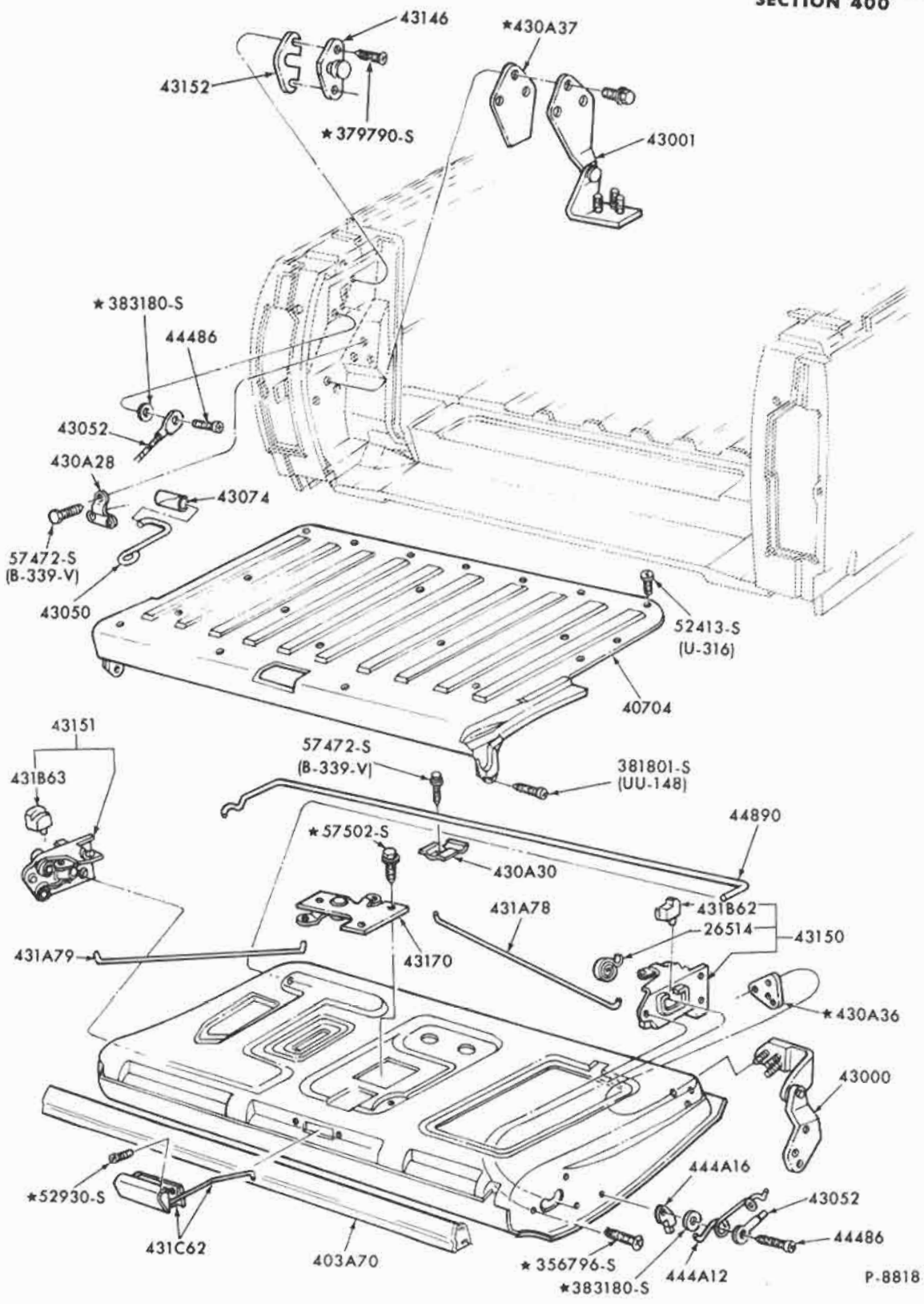

TAILGATE PARTS - HINGE and LATCH
1972 TORINO - BODY TYPE 97

COPYRIGHT © 1975 — FORD MOTOR COMPANY — DEARBORN, MICHIGAN

FORD CAR PARTS

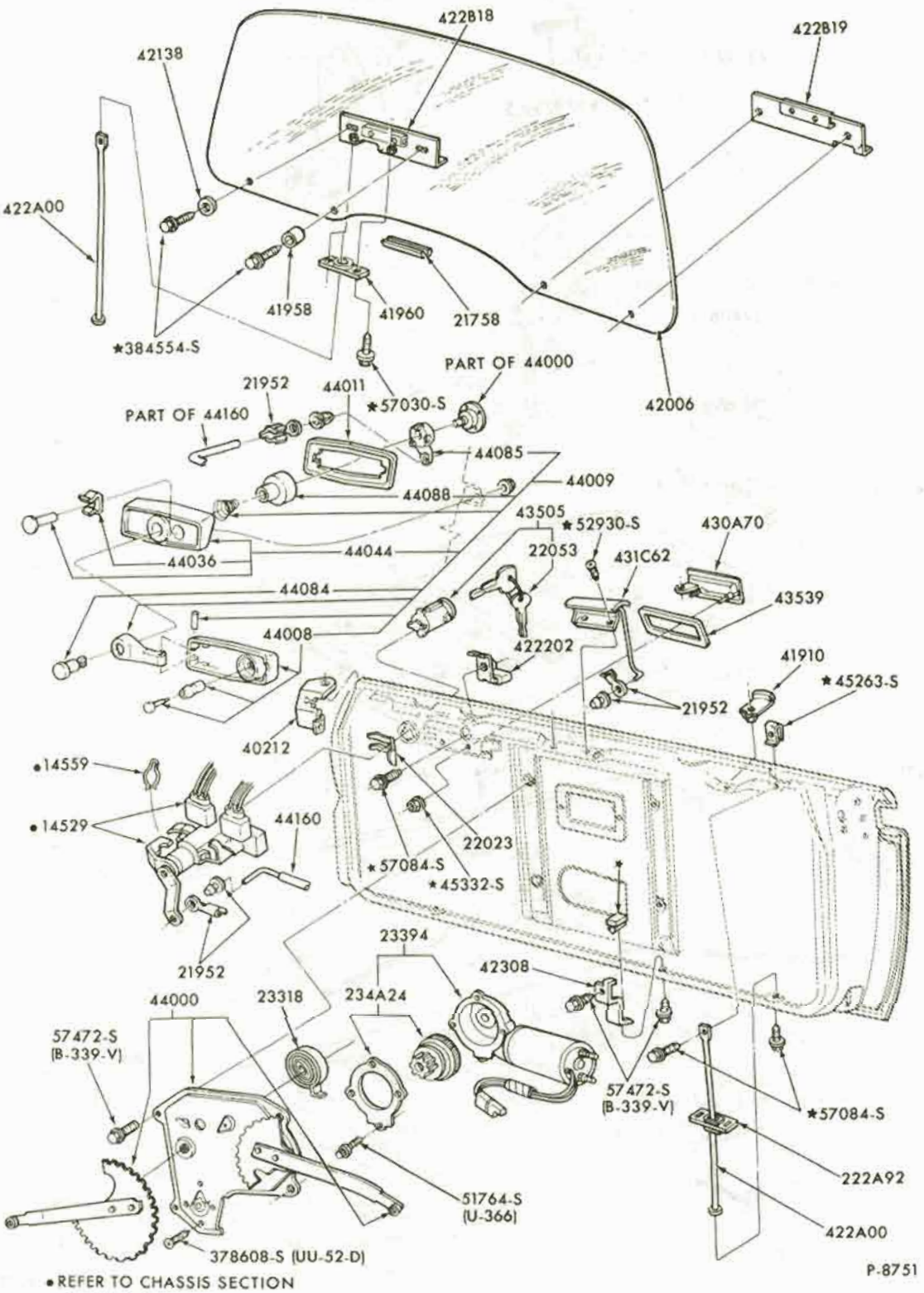

TAILGATE PARTS - WINDOW MECHANISM
1972 TORINO - BODY TYPE 71

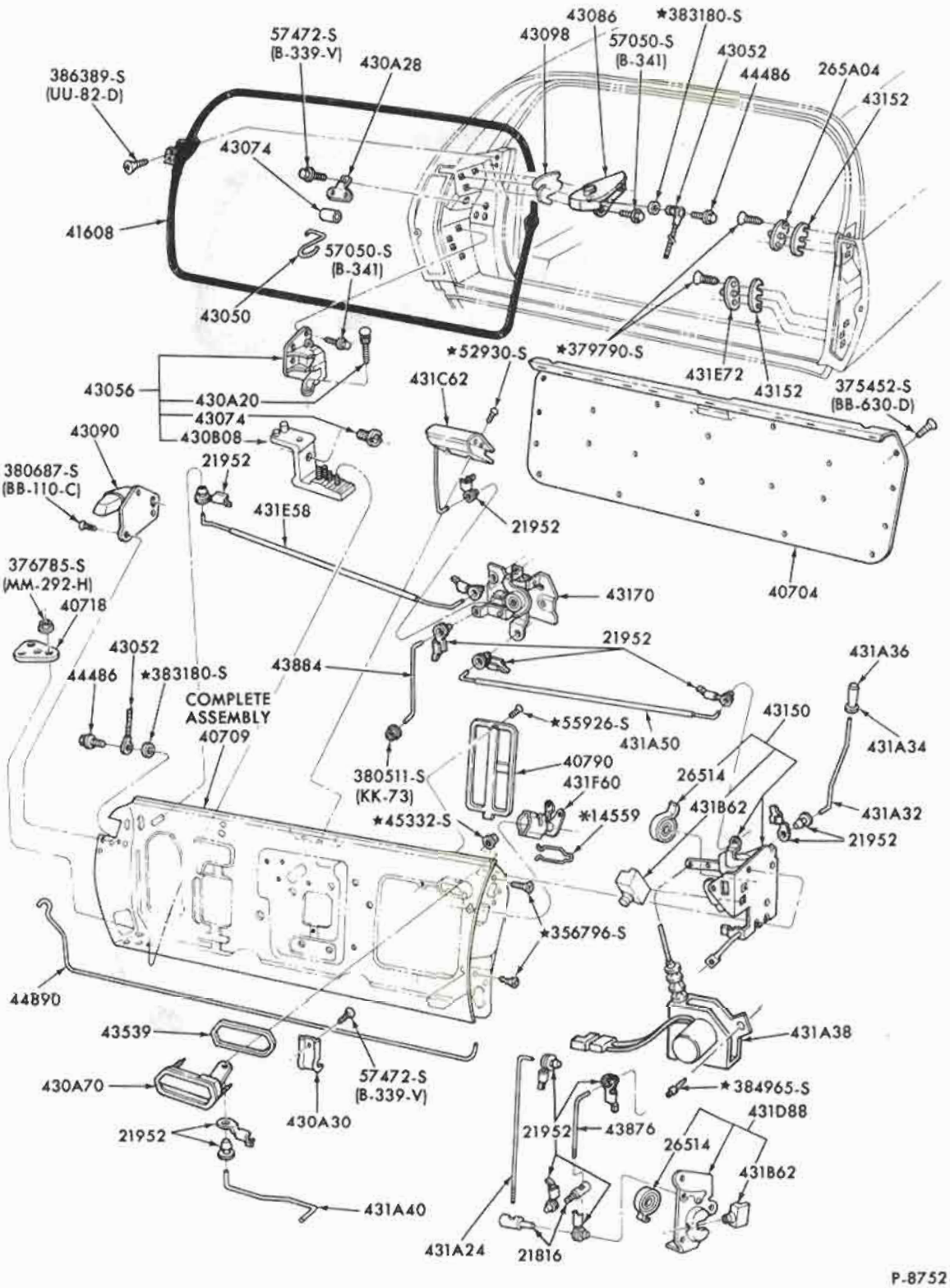

TAILGATE PARTS - HINGE and LATCH
1972 TORINO - BODY TYPE 71

COPYRIGHT © 1975 — FORD MOTOR COMPANY — DEARBORN, MICHIGAN

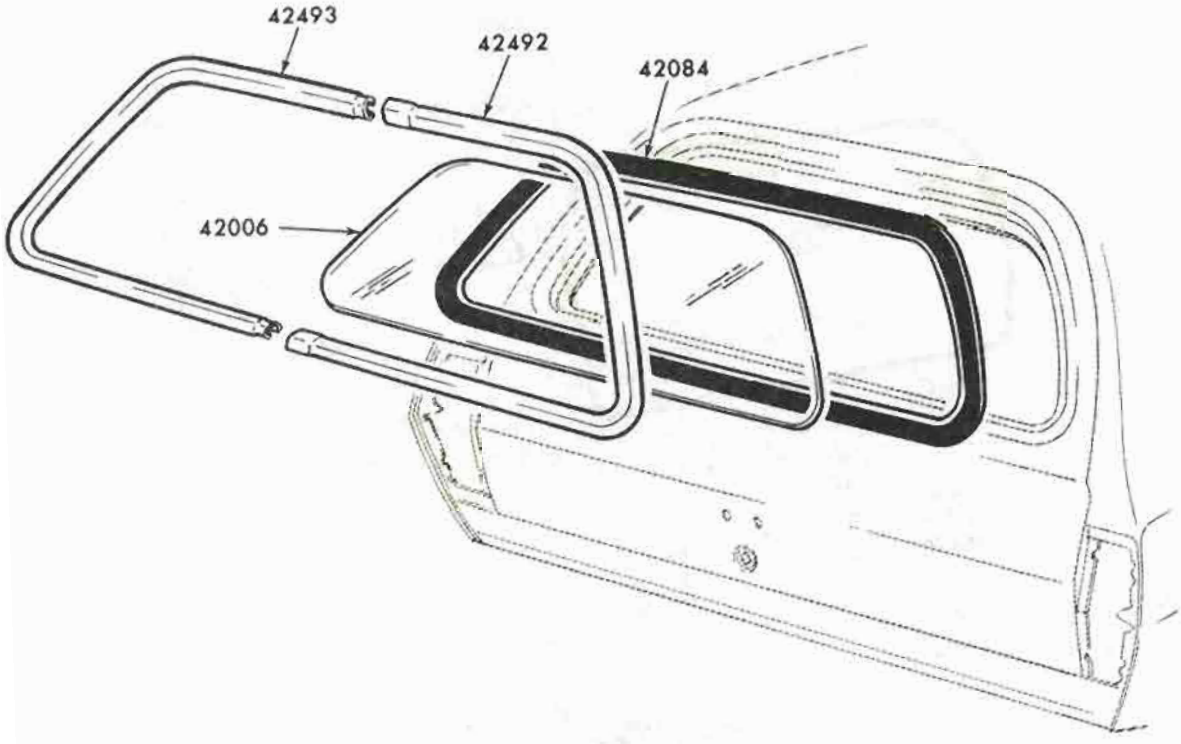

P-8913

TAILGATE PARTS - WINDOW
1972 PINTO - BODY TYPE 73

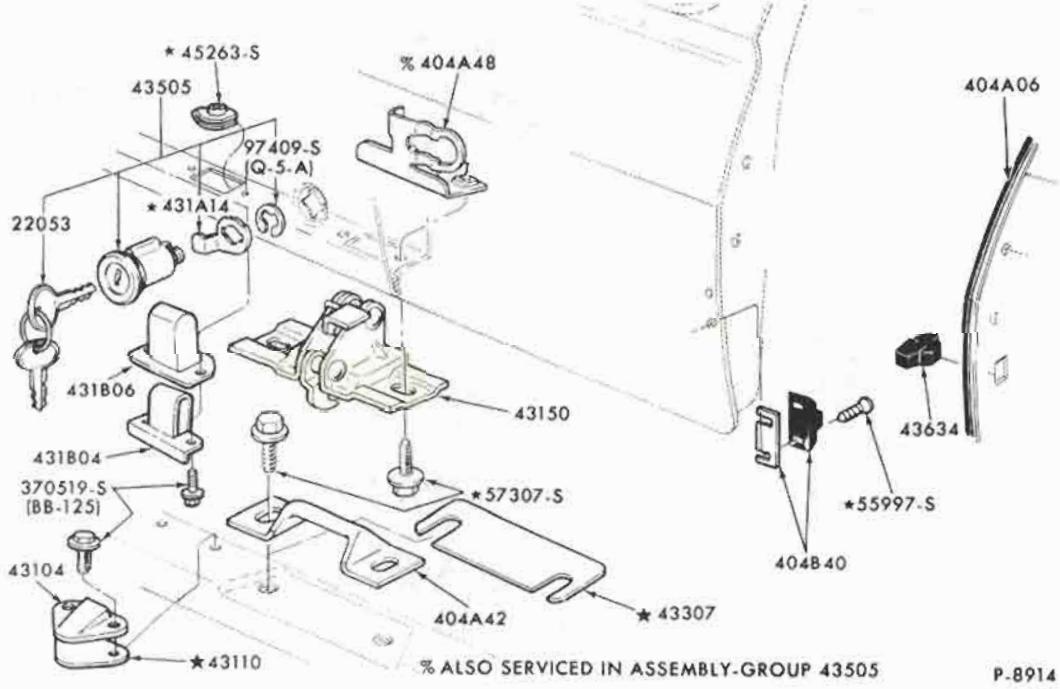

% ALSO SERVICED IN ASSEMBLY-GROUP 43505

P-8914

TAILGATE PARTS - LATCH
1972 PINTO - BODY TYPE 73

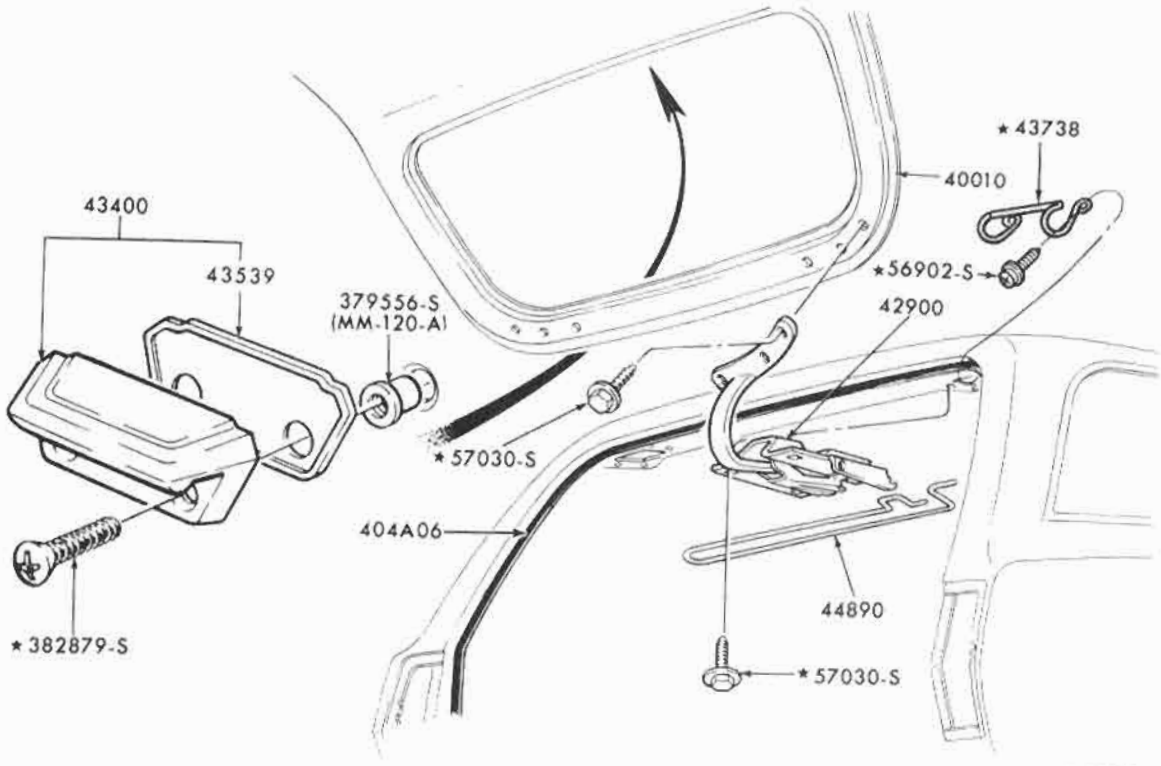

TAILGATE PARTS - HINGES
1972 PINTO - BODY TYPE 73

COPYRIGHT © 1975 — FORD MOTOR COMPANY — DEARBORN, MICHIGAN

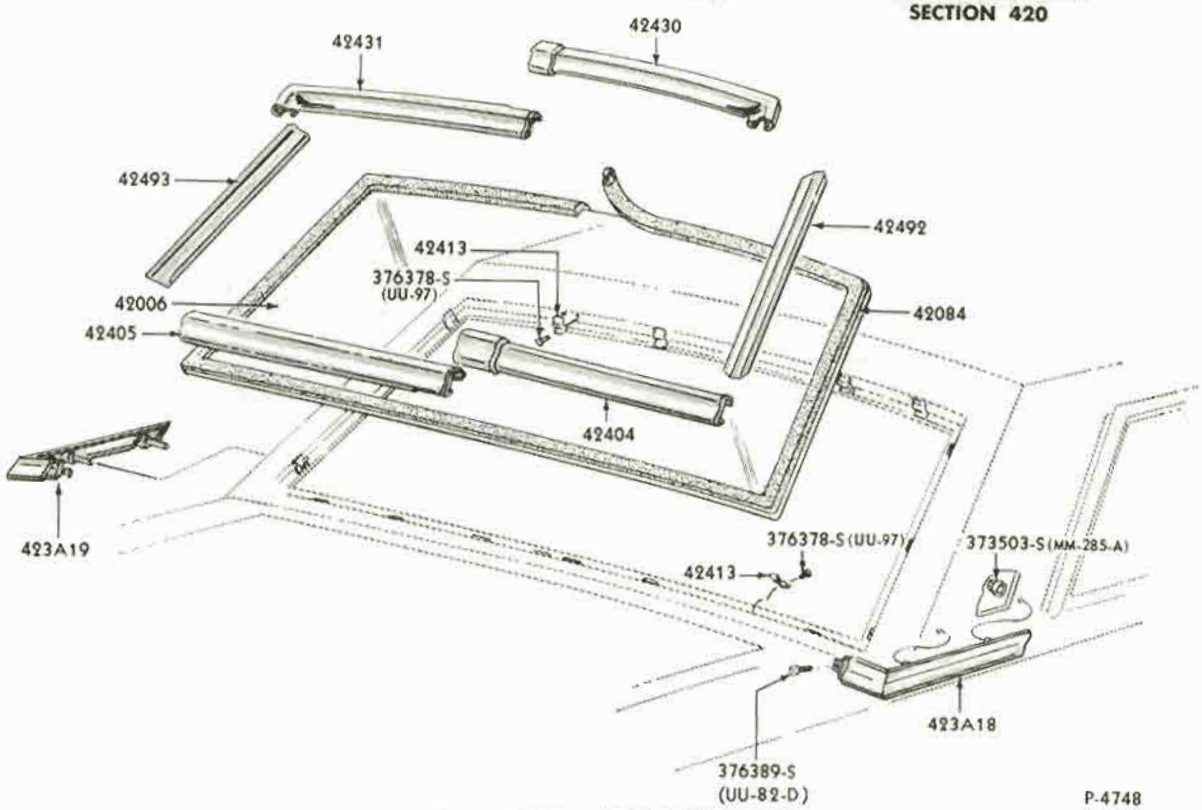

BACK WINDOW and RELATED PARTS
1965/66 FORD - BODY TYPE 54, 62

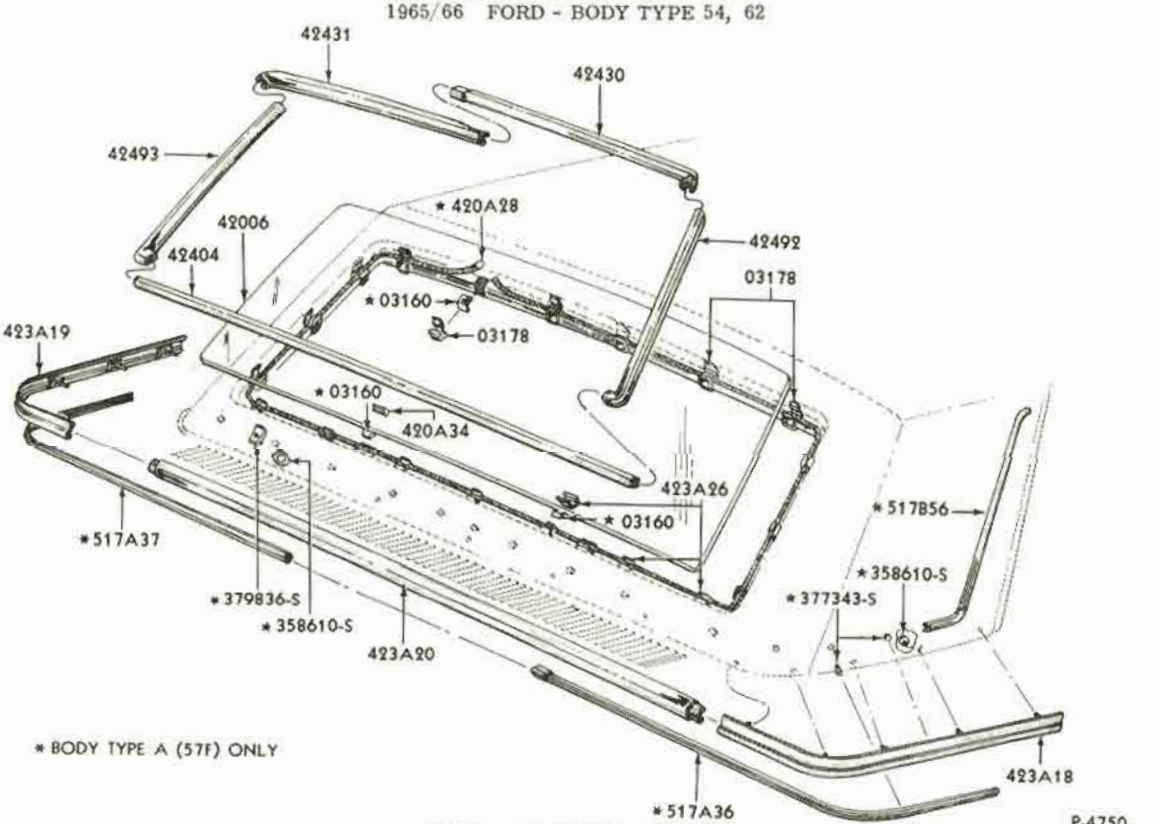

BACK WINDOW and RELATED PARTS - OUTSIDE
1965/66 FORD - BODY TYPE 57

COPYRIGHT © 1975 — FORD MOTOR COMPANY — DEARBORN, MICHIGAN

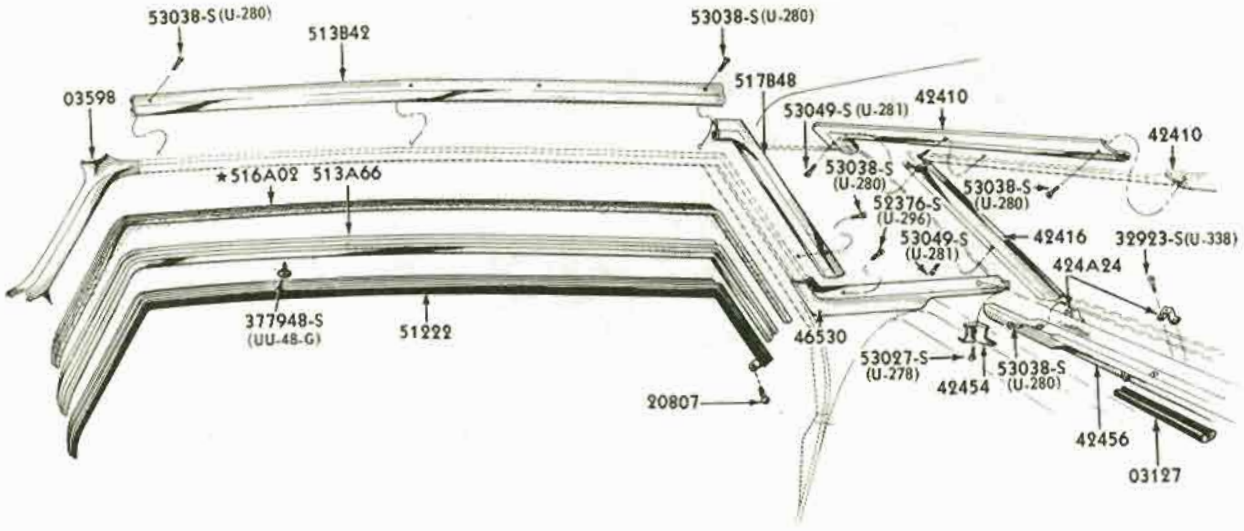

P-4751

BACK WINDOW and ROOF SIDE MOULDING - INSIDE
1965/66 FORD - BODY TYPE 57

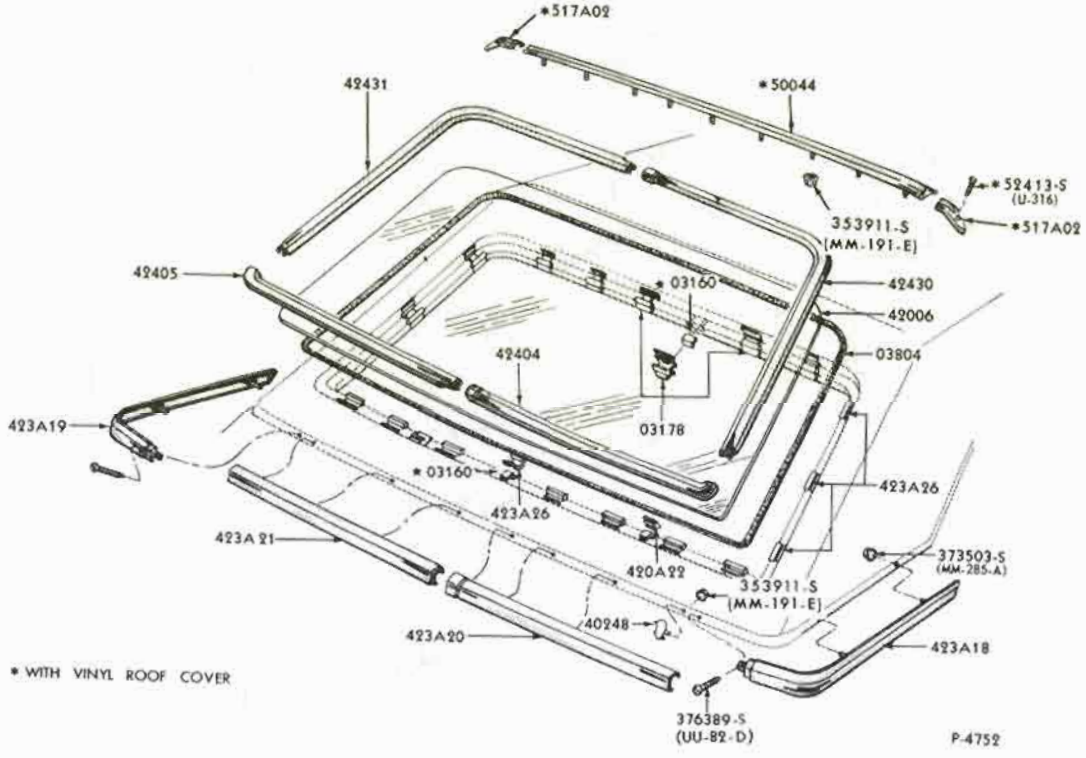

P-4752

BACK WINDOW and RELATED PARTS - OUTSIDE
1965 FORD - BODY TYPE 63

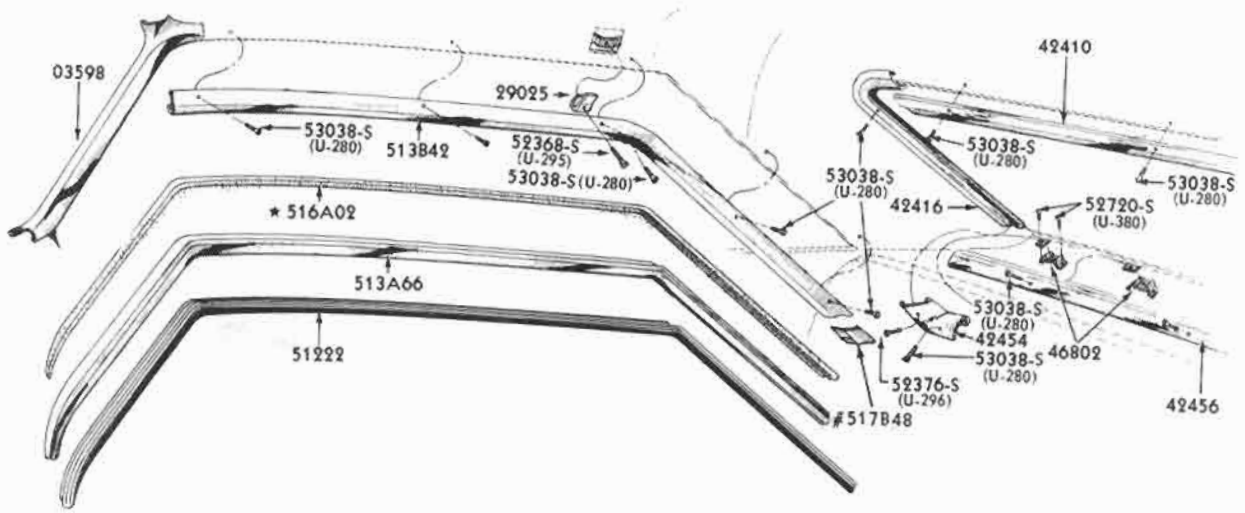

BEFORE 11-9-64

P-4753

BACK WINDOW and ROOF SIDE MOULDINGS - INSIDE
1965 FORD - BODY TYPE 63

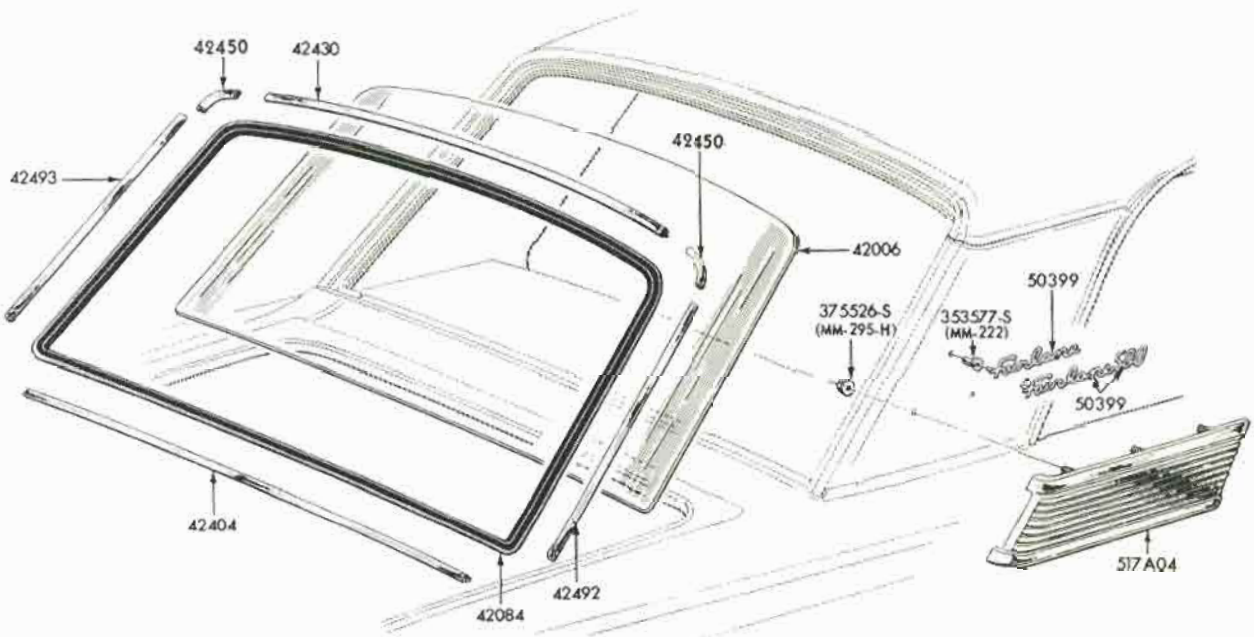

P-3760

BACK WINDOW and RELATED PARTS
1965 FAIRLANE - BODY TYPES 54, 62

COPYRIGHT © 1975 — FORD MOTOR COMPANY — DEARBORN, MICHIGAN

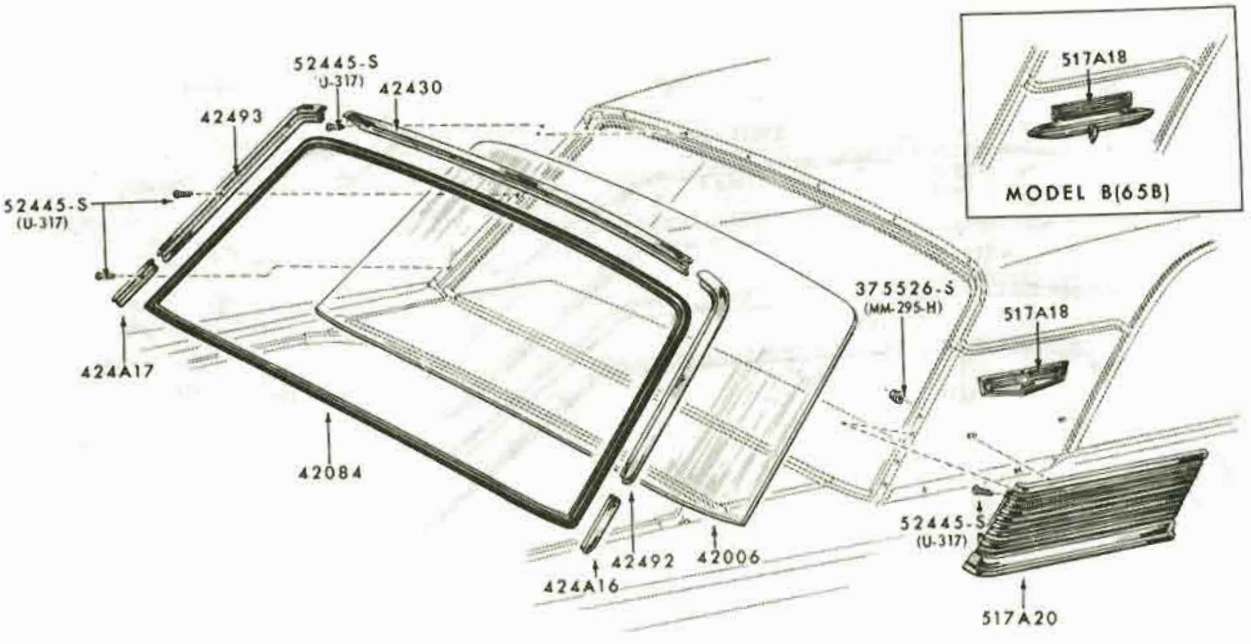

P-4037

BACK WINDOW and RELATED PARTS
1965 FAIRLANE - BODY TYPE 65

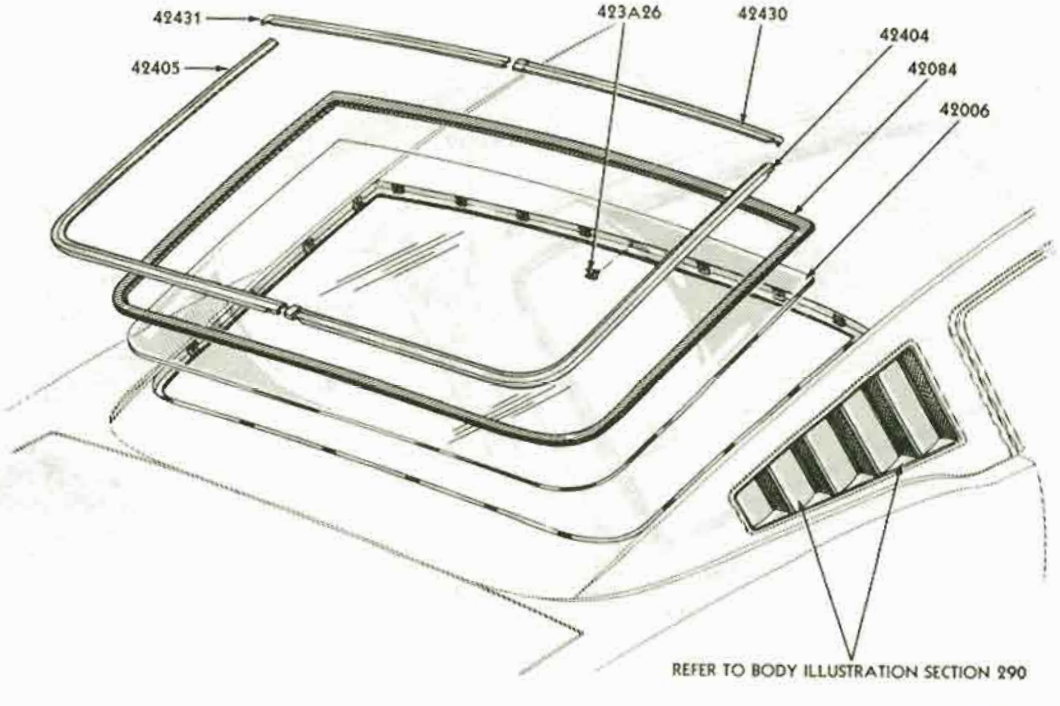

P-4839

BACK WINDOW and RELATED PARTS
1965/66 MUSTANG - BODY TYPE 63

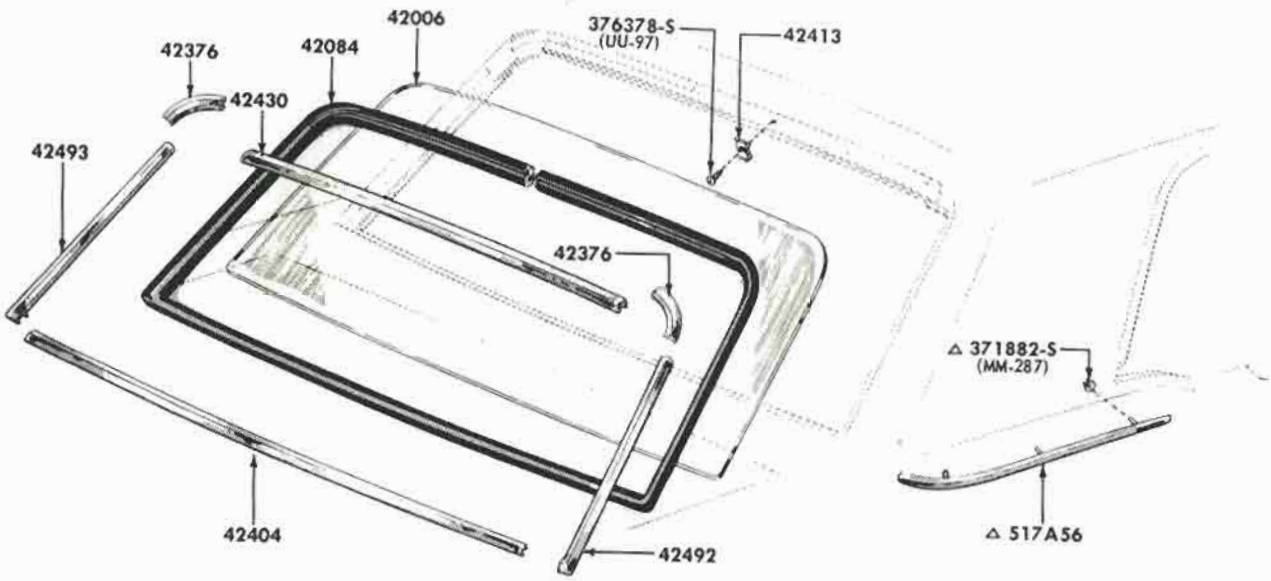

△ USED WITH VINYL ROOF COVER OR TUTONE PAINT P-4476

BACK WINDOW and RELATED PARTS
1965/66 MUSTANG - BODY TYPE 65

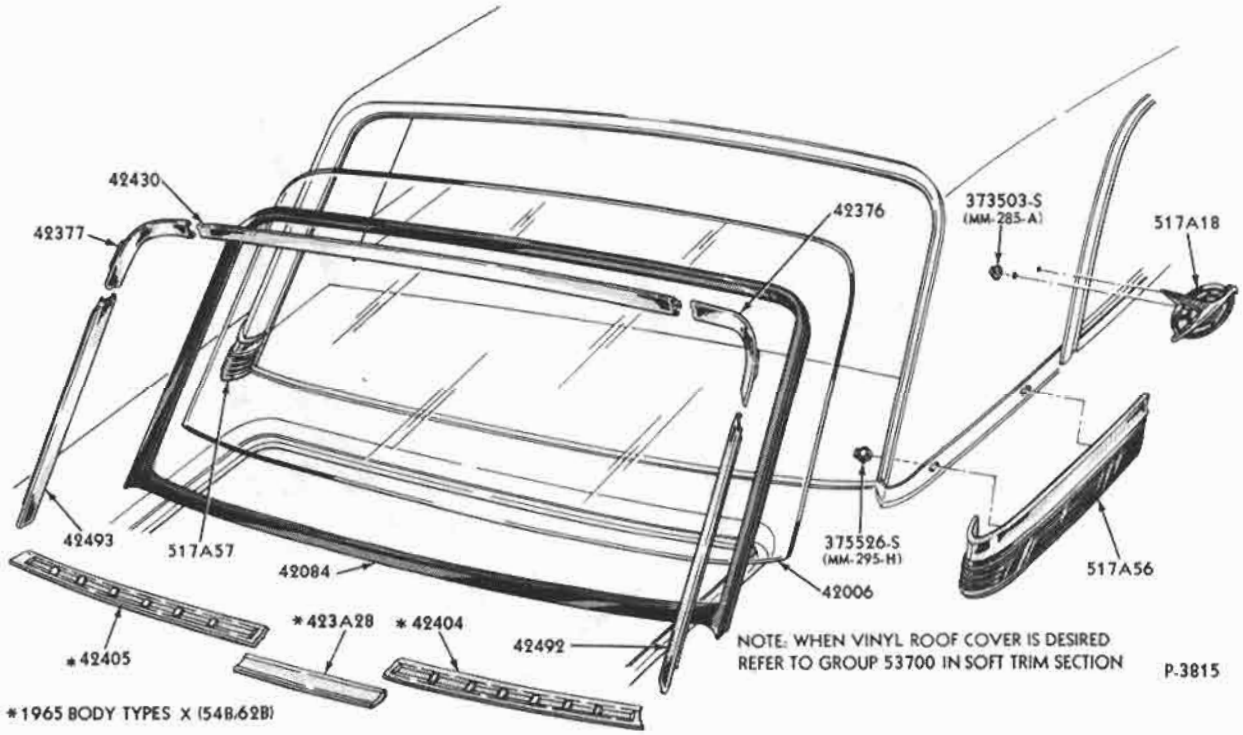

BACK WINDOW and RELATED PARTS
1965 FALCON - BODY TYPES 54, 62

COPYRIGHT © 1975 — FORD MOTOR COMPANY — DEARBORN, MICHIGAN

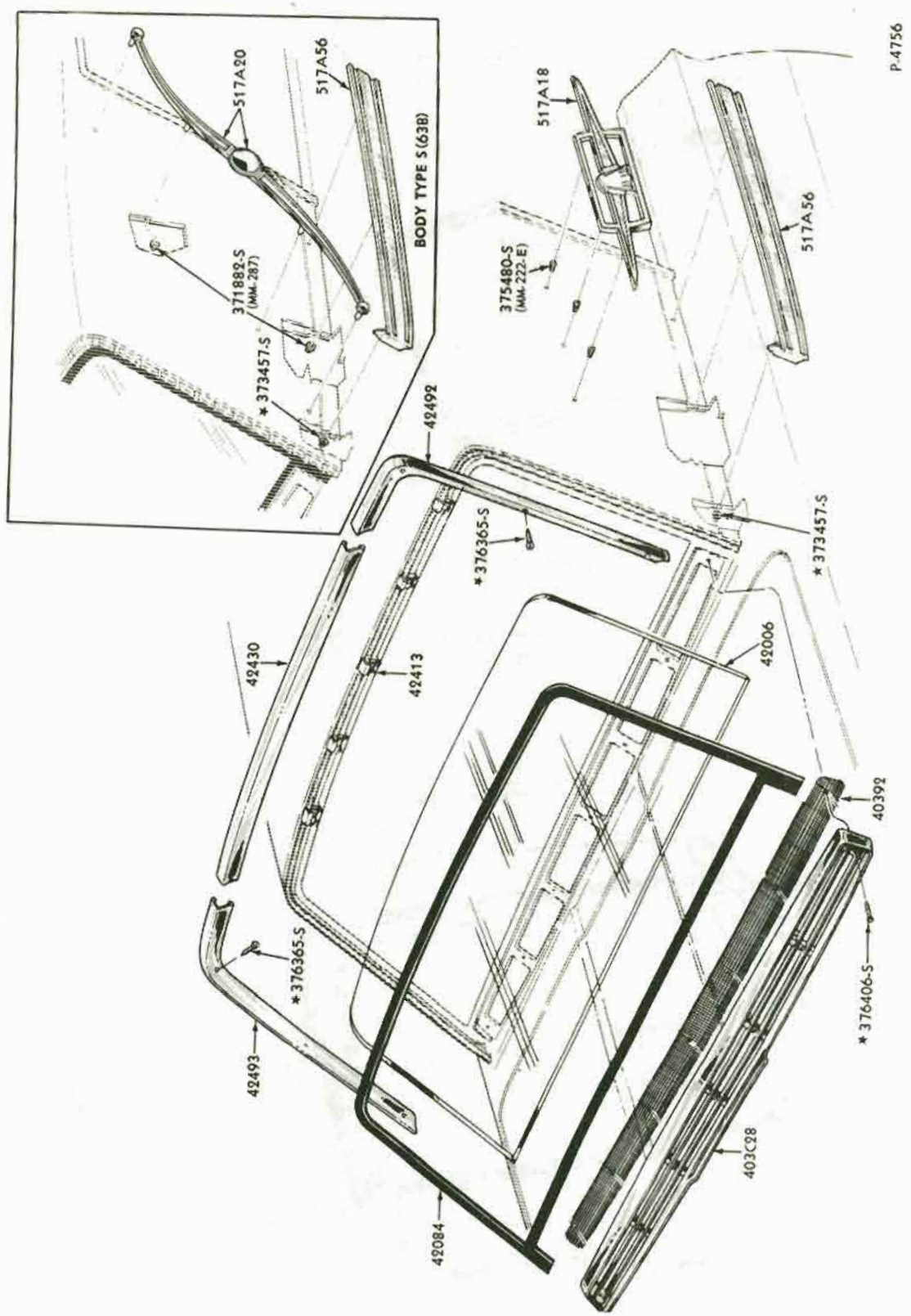

BACK WINDOW and RELATED PARTS
1965 THUNDERBIRD - BODY TYPE 63

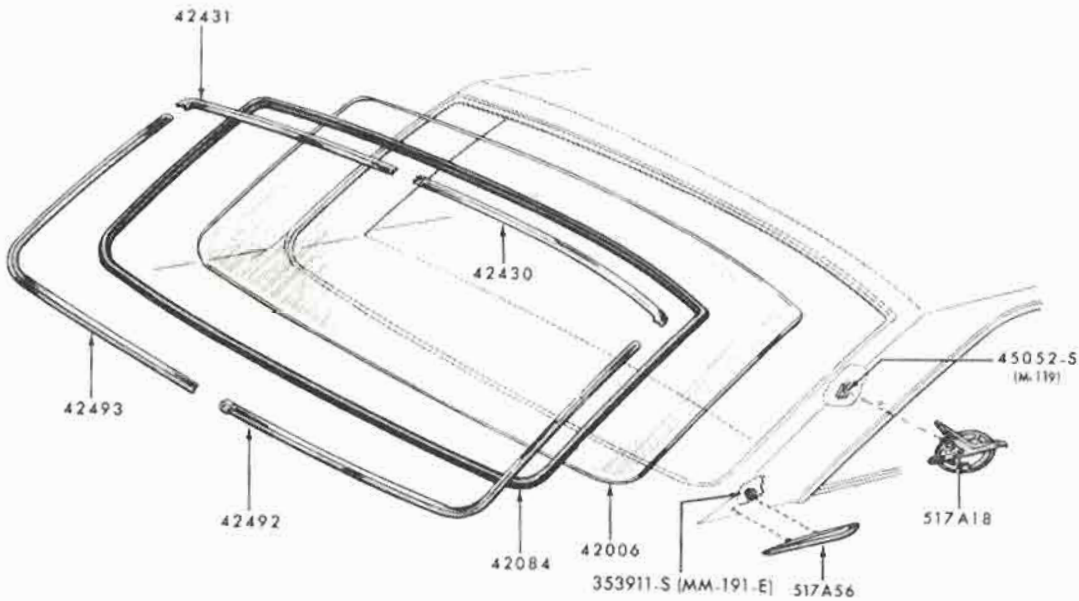

P-3982

BACK WINDOW and RELATED PARTS
1965 FALCON - BODY TYPE 63

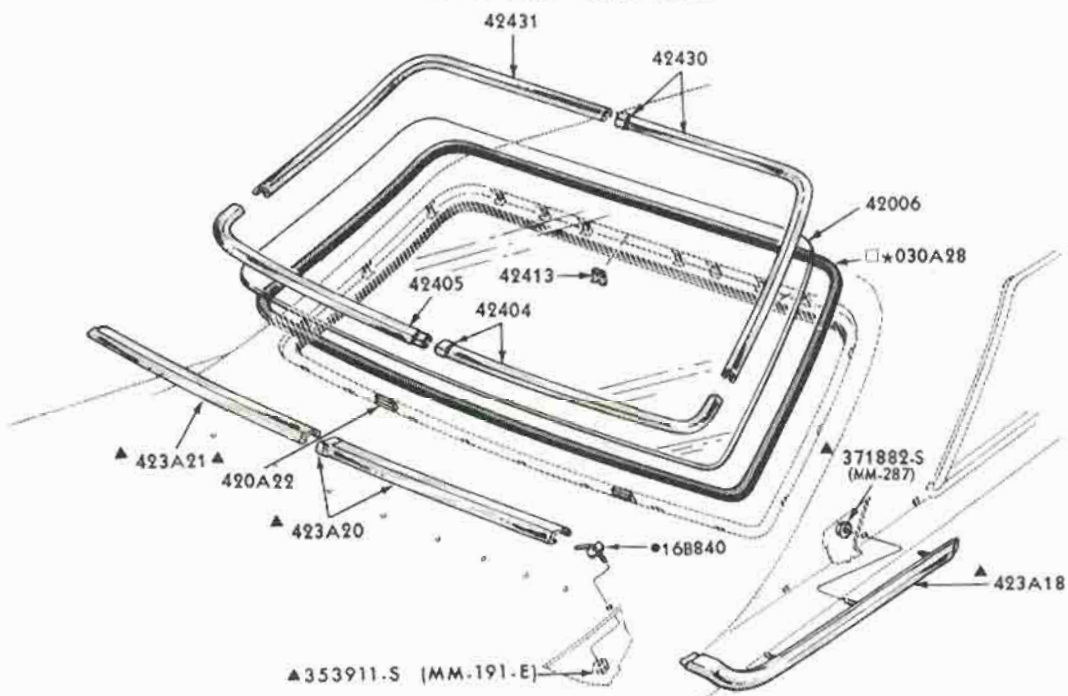

●REFER TO GROUP IN CHASSIS SECTION
□REFER TO PAINT GROUP 19562 FOR SEALER REPAIR KIT
▲USE WITH VINYL ROOF OR TUTONE PAINT

P-5233

BACK WINDOW and RELATED PARTS - OUTSIDE
1966 FORD - BODY TYPE 63

COPYRIGHT © 1975 — FORD MOTOR COMPANY — DEARBORN, MICHIGAN

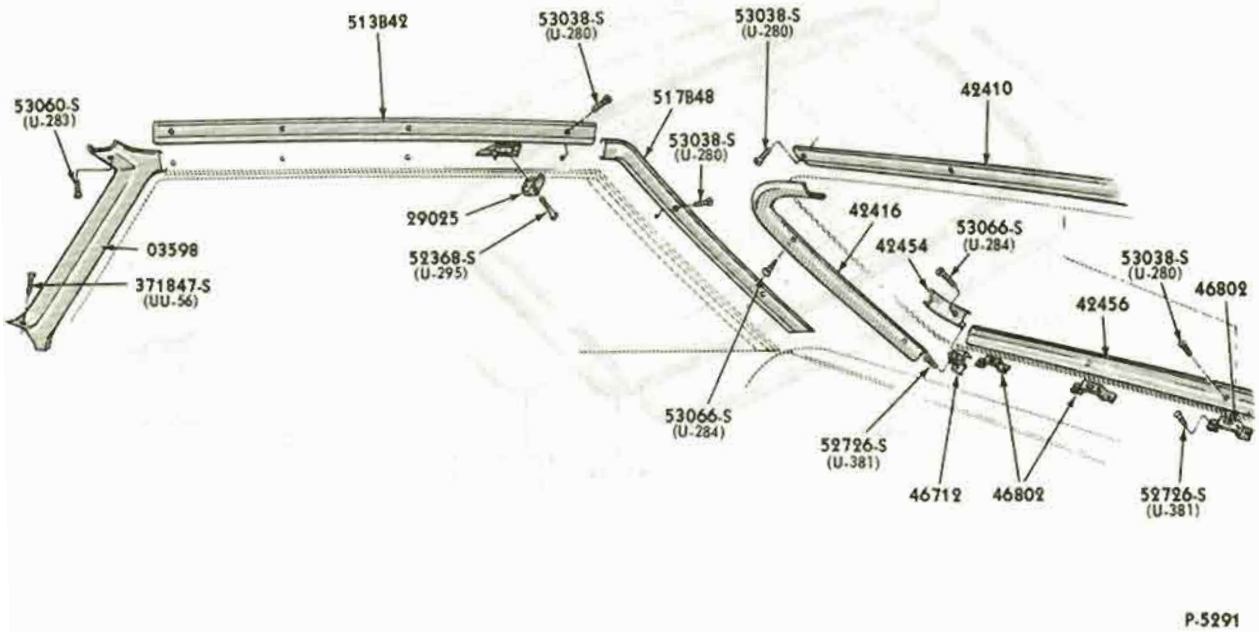

BACK WINDOW and ROOF SIDE MOULDINGS - INSIDE
1966 FORD - BODY TYPE 63

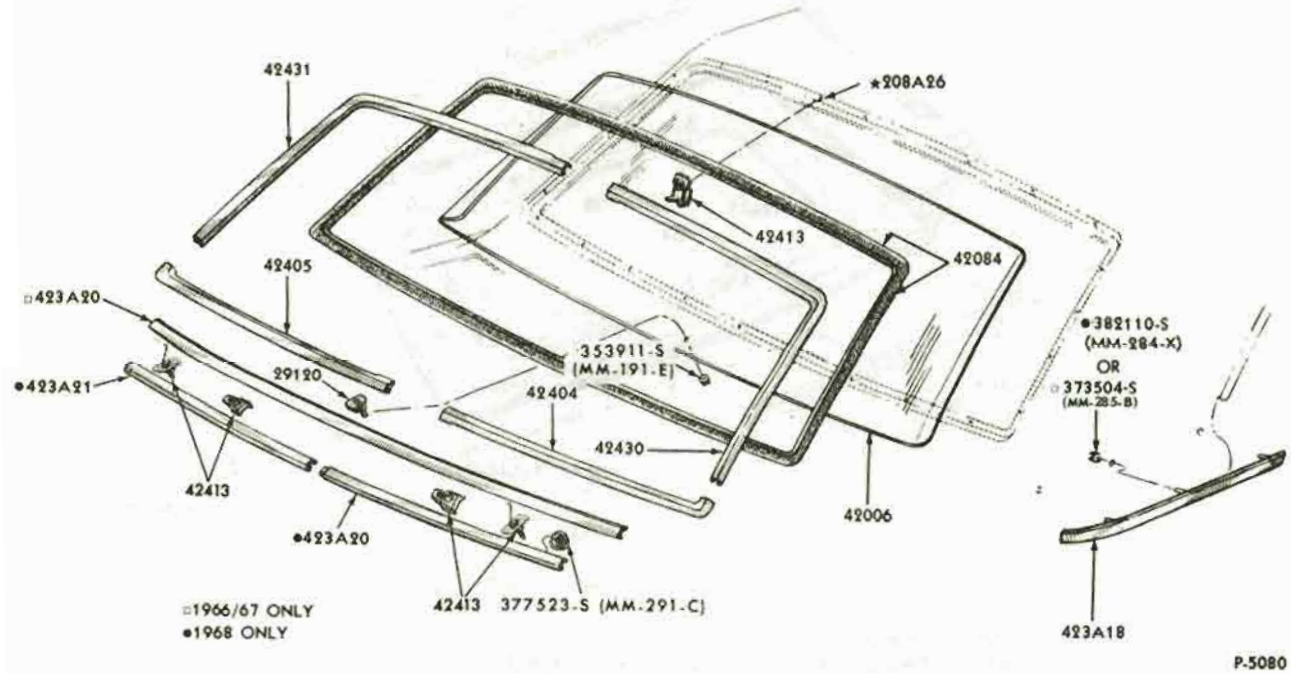

BACK WINDOW and RELATED PARTS
1966/69 FAIRLANE/TORINO and 1966/70 FALCON - BODY TYPE 54

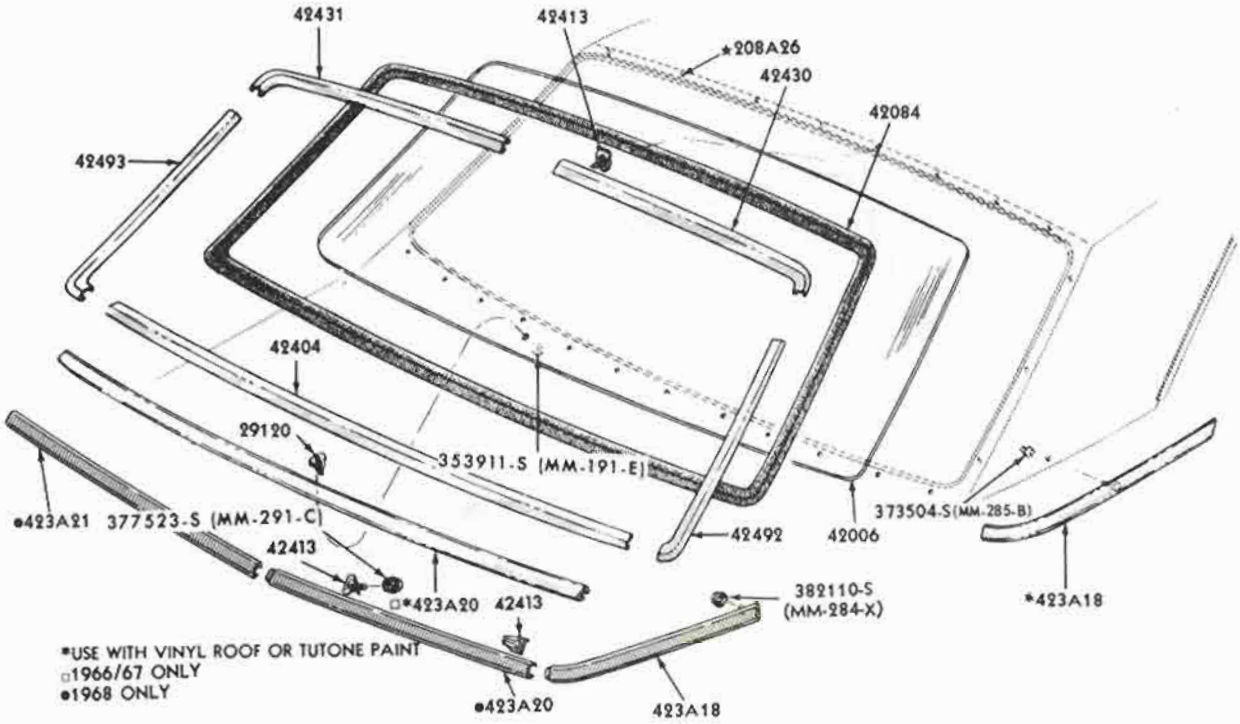

P-5081

BACK WINDOW and RELATED PARTS
1966/67 FAIRLANE - BODY TYPE 62
1968/70 FALCON - BODY TYPE 62

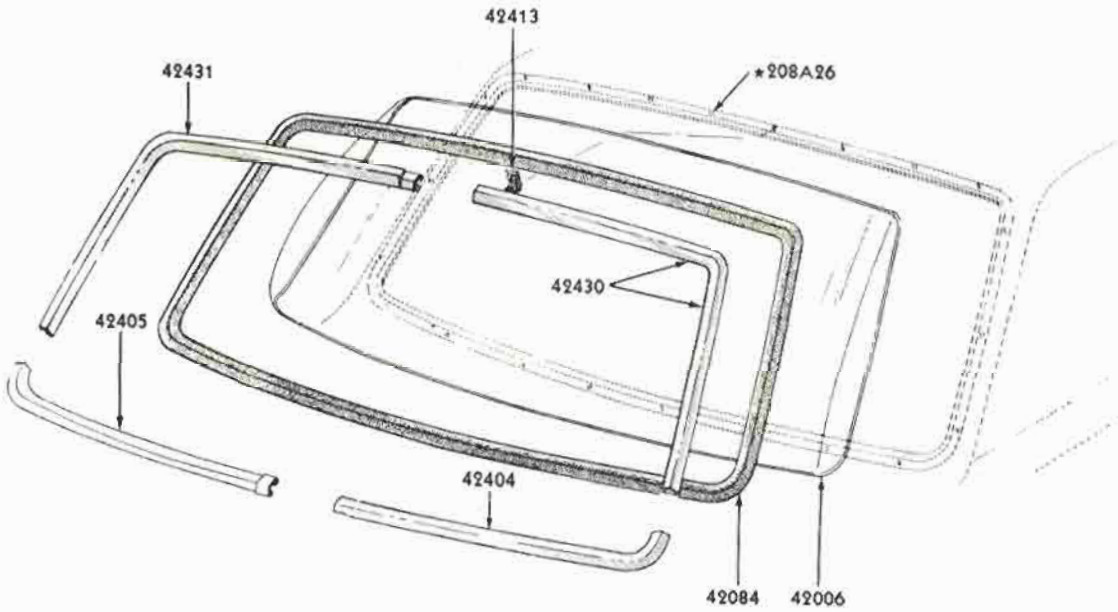

P-5082

BACK WINDOW and RELATED PARTS
1966/67 FAIRLANE - BODY TYPE 63

COPYRIGHT © 1975 — FORD MOTOR COMPANY — DEARBORN, MICHIGAN

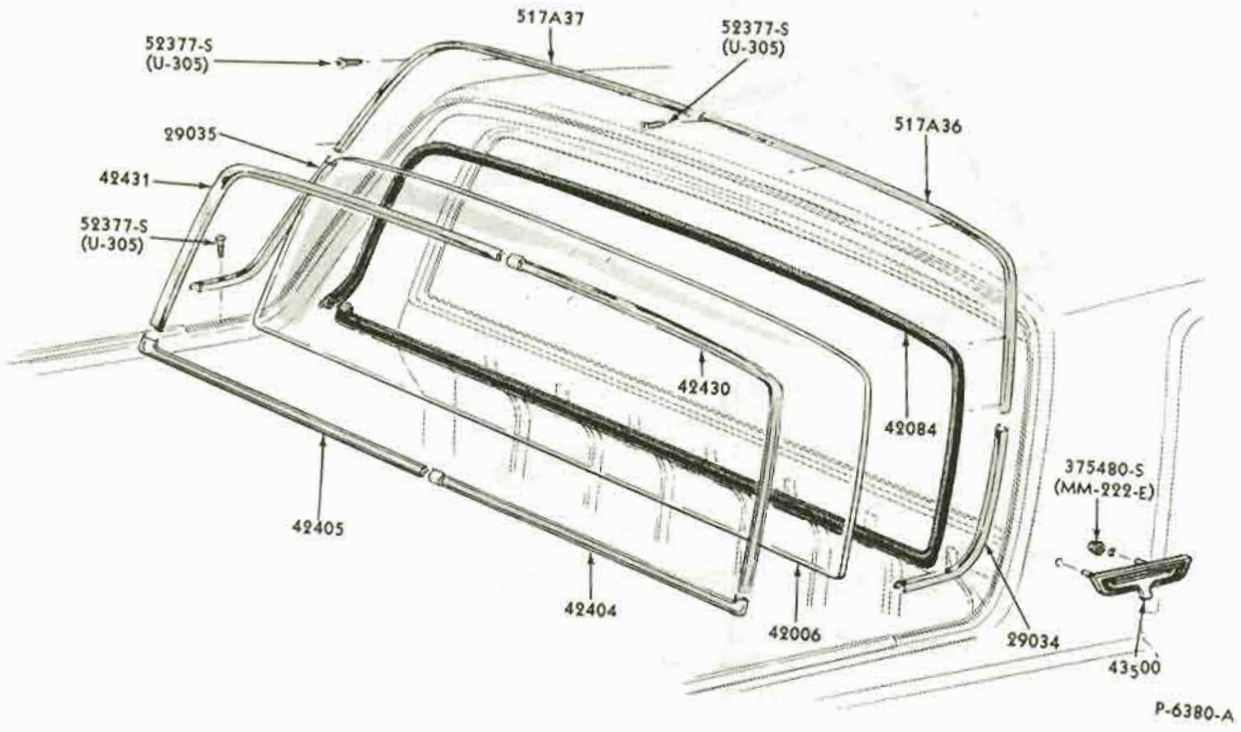

BACK WINDOW and RELATED PARTS
1966/67 FAIRLANE and FALCON - BODY TYPE 66

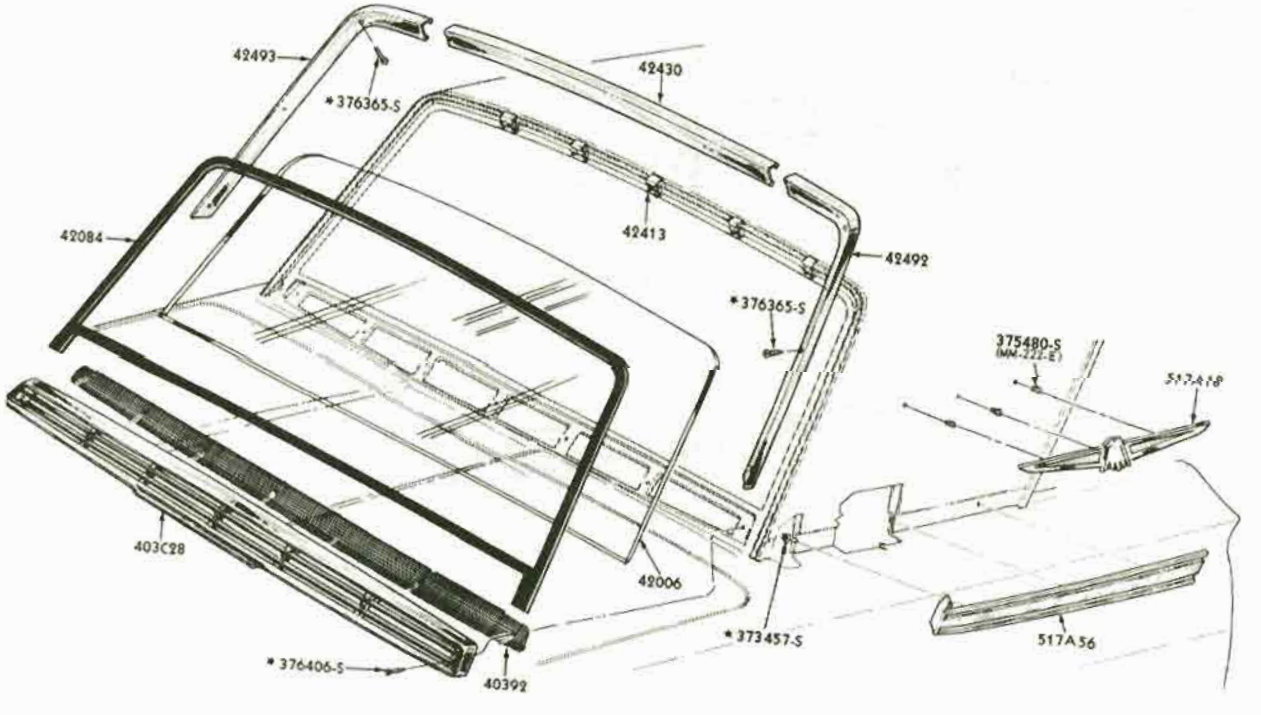

BACK WINDOW and RELATED PARTS
1966 THUNDERBIRD - BODY TYPE 63A

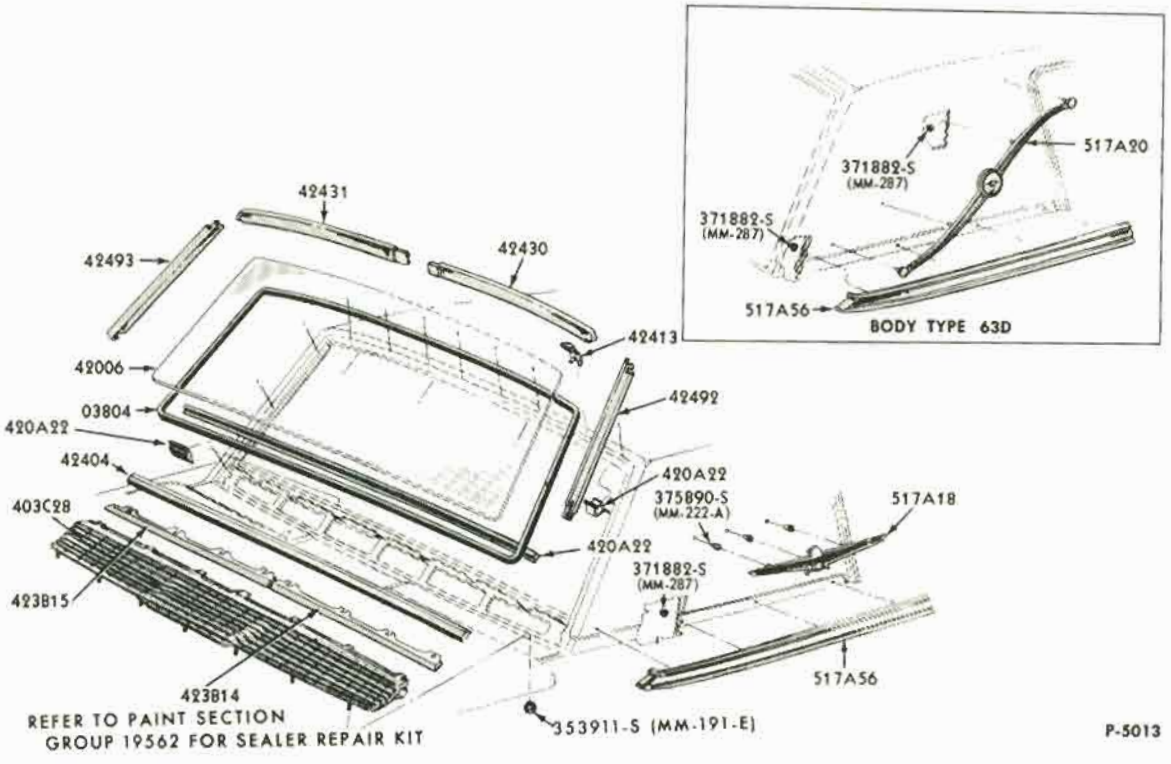

BACK WINDOW and RELATED PARTS-OUTSIDE
1966 THUNDERBIRD-BODY TYPES 63C, D

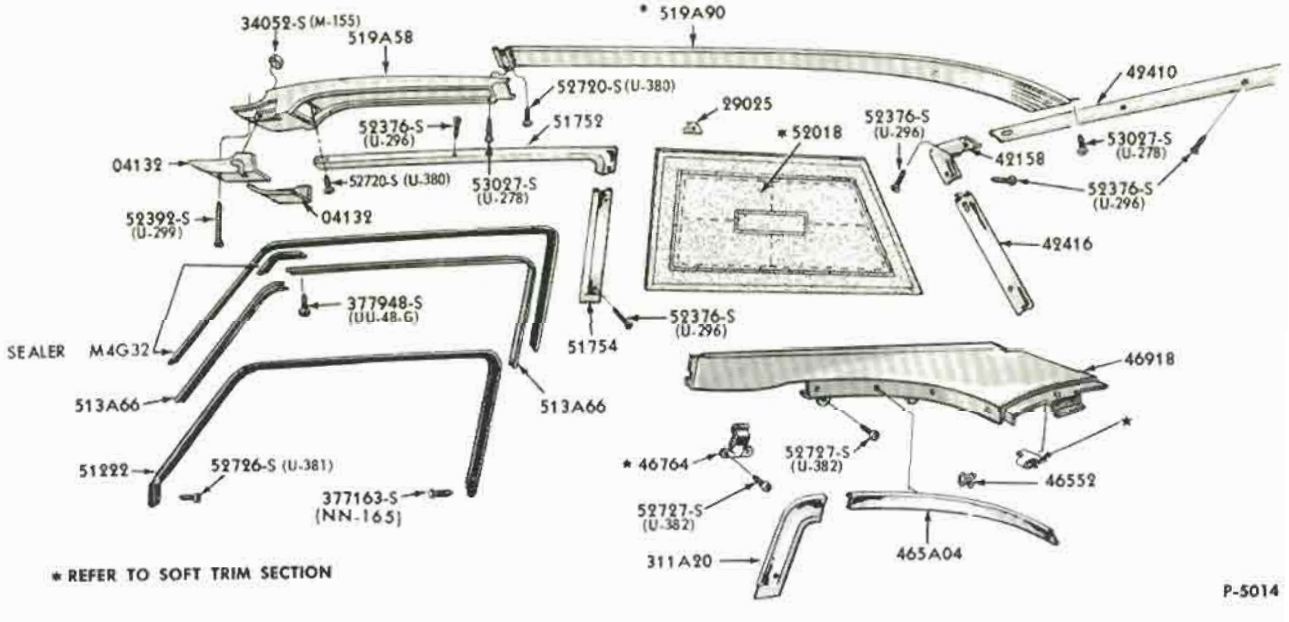

BACK WINDOW, ROOF SIDE MOULDINGS and CONSOLE - INSIDE
1966 THUNDERBIRD-BODY TYPE 63C, D

COPYRIGHT © 1975 — FORD MOTOR COMPANY — DEARBORN, MICHIGAN

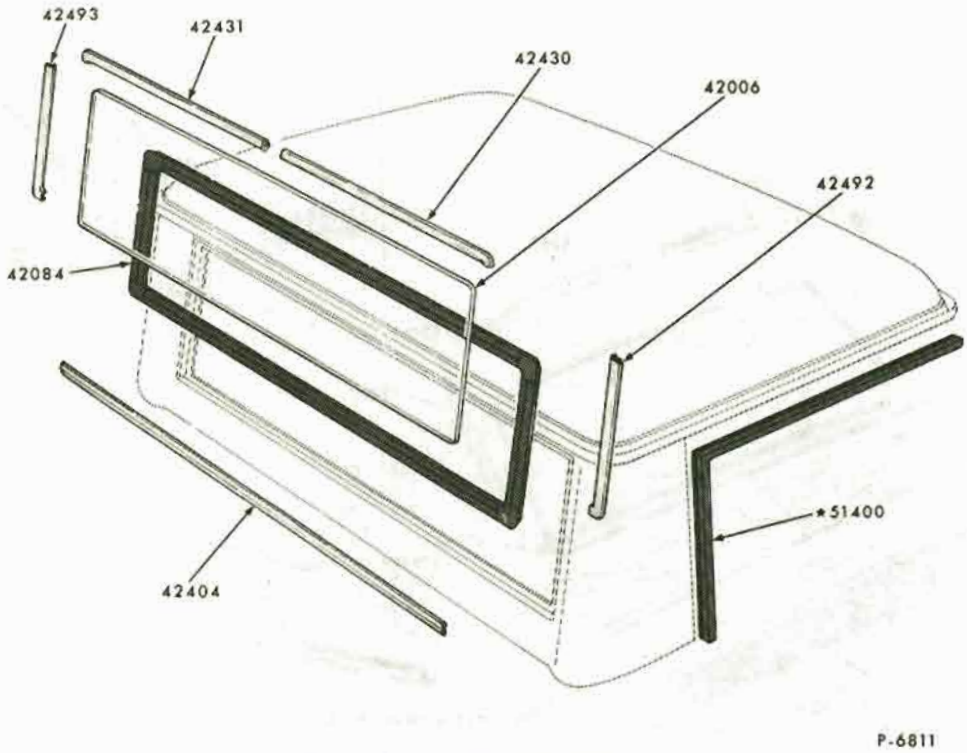

BACK WINDOW and RELATED PARTS
1966/72 BRONCO - BODY TYPE 97

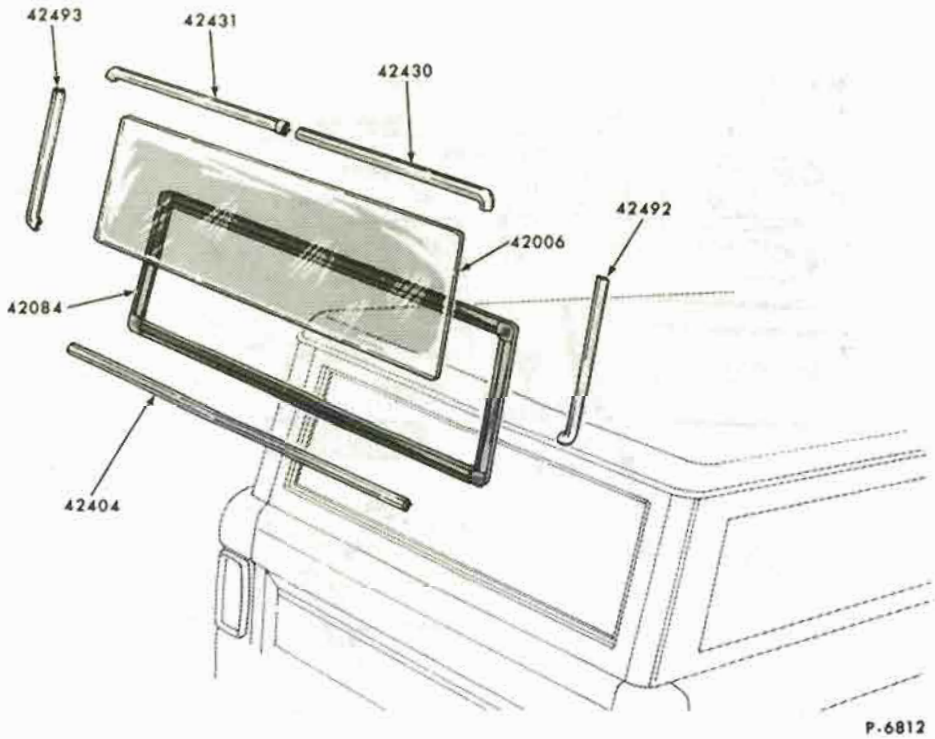

BACK WINDOW and RELATED PARTS
1966/72 BRONCO - BODY TYPE 98

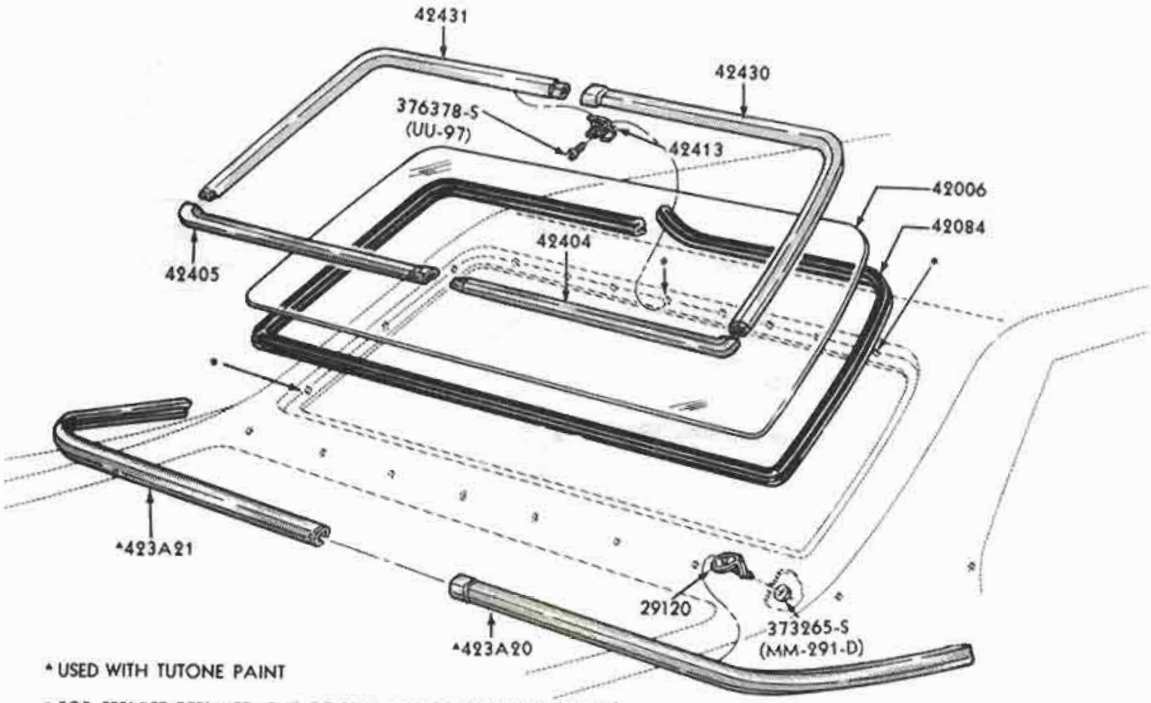

* USED WITH TUTONE PAINT

* FOR SERVICE REPLACEMENT OF STUD USE 376378-S101 (UU-97)

P-5532

BACK WINDOW and RELATED PARTS
1967/68 FORD - BODY TYPE 54, 62

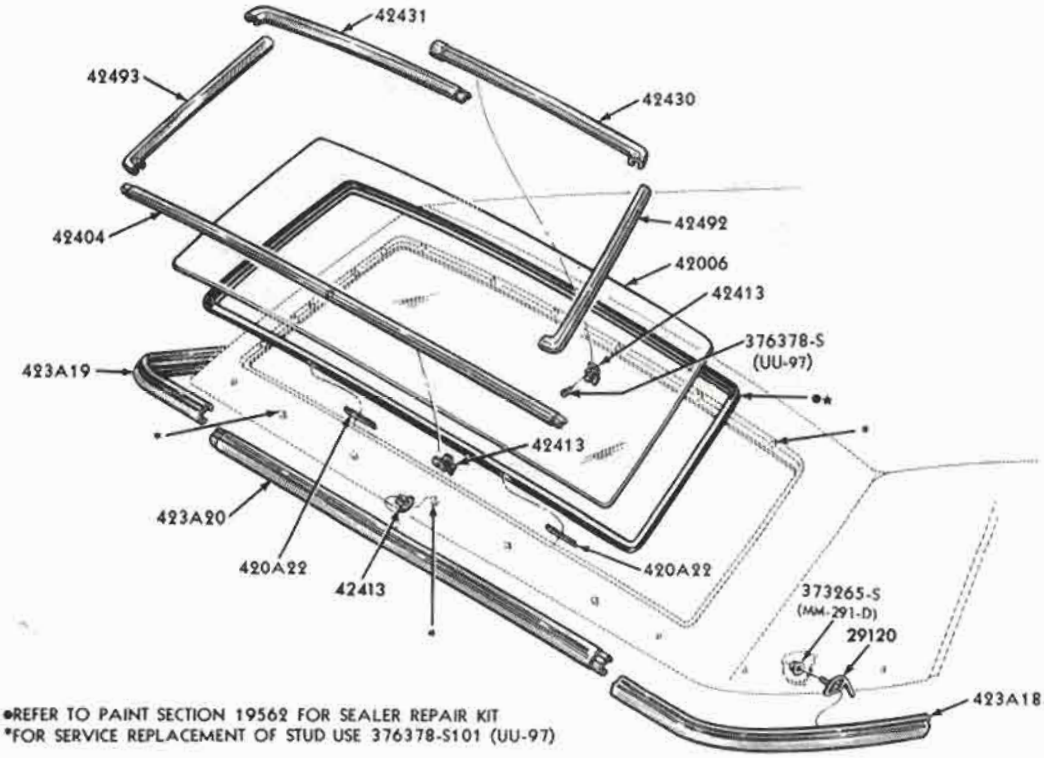

•REFER TO PAINT SECTION 19562 FOR SEALER REPAIR KIT
*FOR SERVICE REPLACEMENT OF STUD USE 376378-S101 (UU-97)

P-5533

BACK WINDOW and RELATED PARTS - OUTSIDE
1967 FORD - BODY TYPE 57

COPYRIGHT © 1975 — FORD MOTOR COMPANY — DEARBORN, MICHIGAN

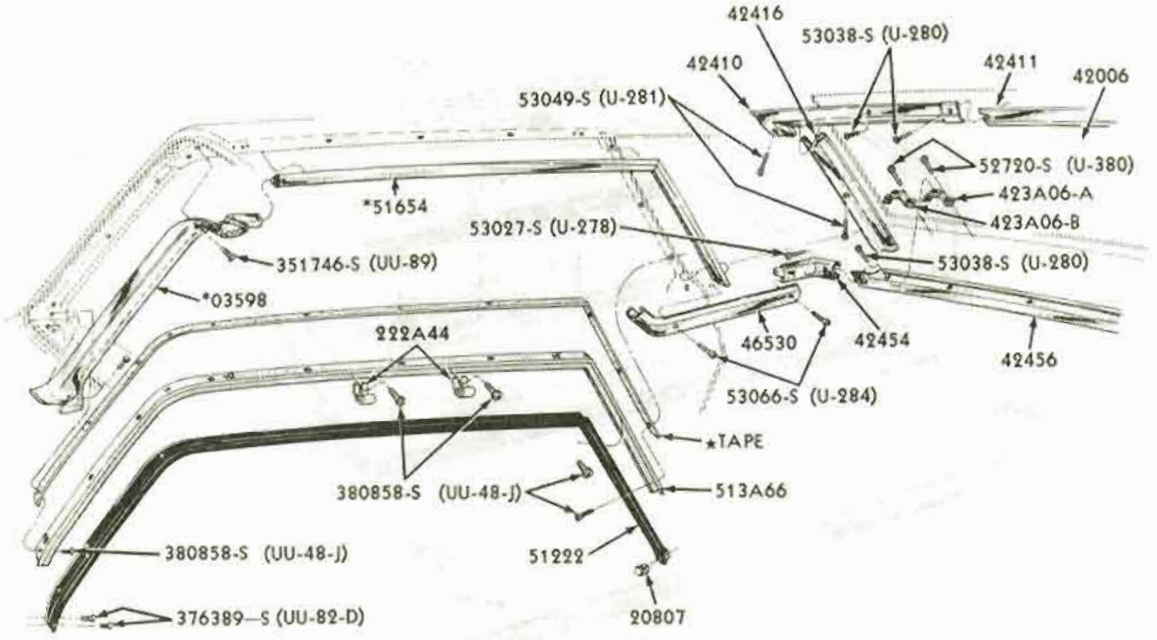

*REFER TO SOFT TRIM SECTION

P-5534

BACK WINDOW and ROOF SIDE MOULDINGS
1967 FORD - BODY TYPE 57

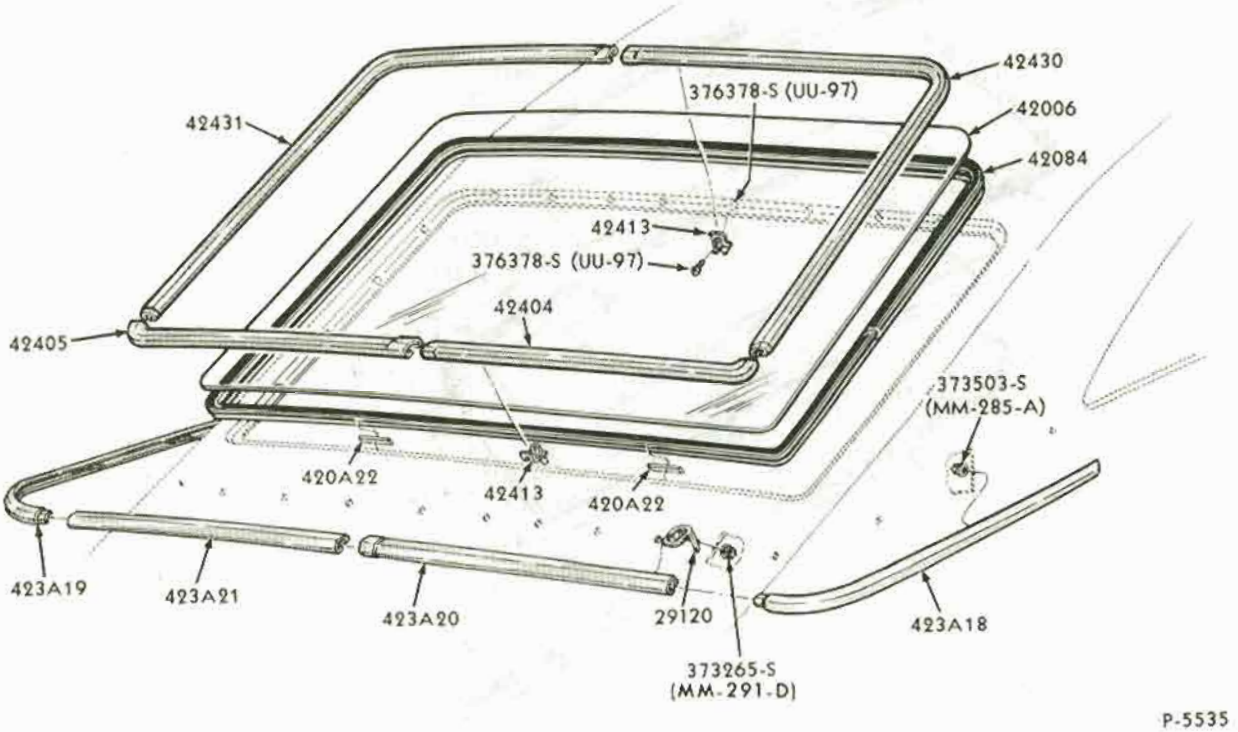

P-5535

BACK WINDOW and RELATED PARTS - OUTSIDE
1967 FORD - BODY TYPE 63

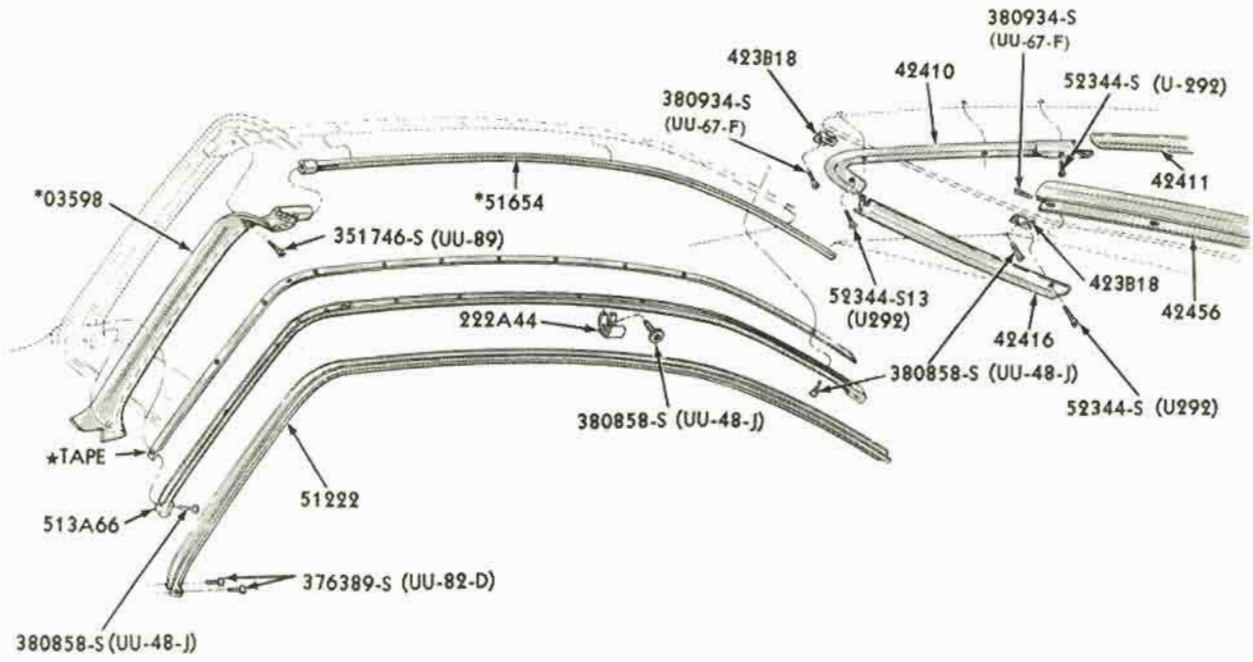

*REFER TO SOFT TRIM SECTION

P-5536

BACK WINDOW and ROOF SIDE MOULDINGS
1967 FORD - BODY TYPE 63

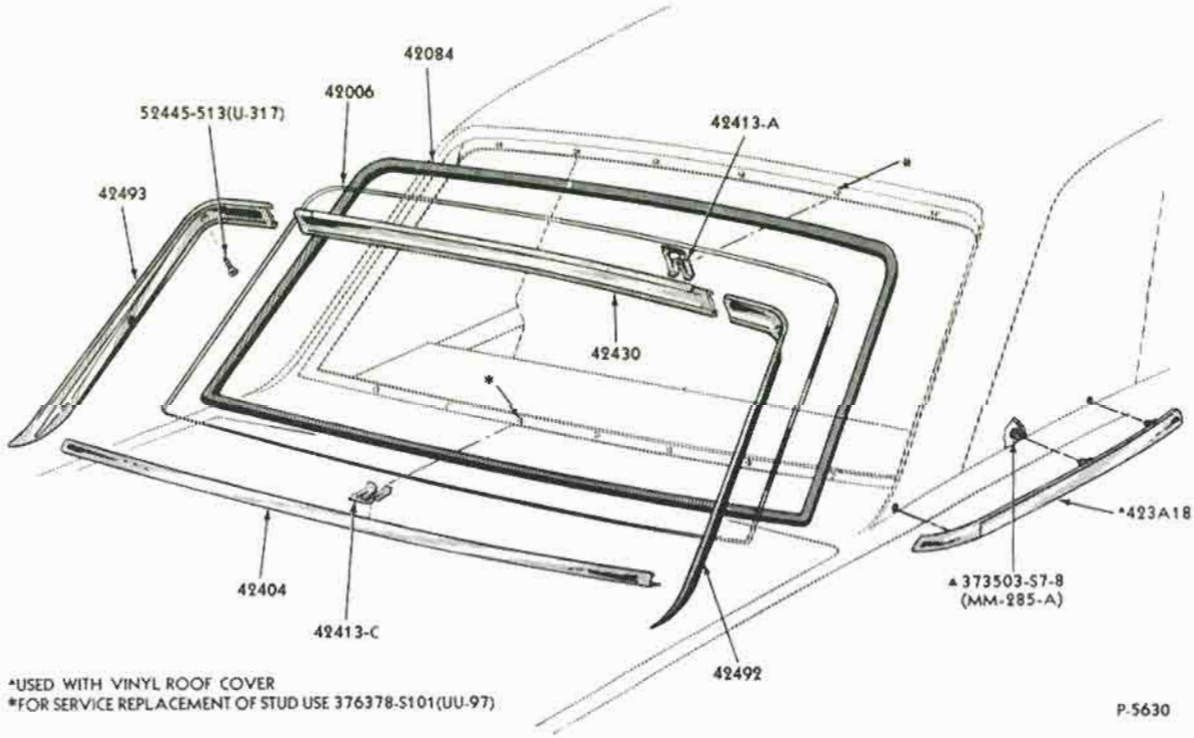

*USED WITH VINYL ROOF COVER
*FOR SERVICE REPLACEMENT OF STUD USE 376378-S101(UU-97)

P-5630

BACK WINDOW and RELATED PARTS
1967/68 MUSTANG - BODY TYPE 65

COPYRIGHT © 1975 — FORD MOTOR COMPANY — DEARBORN, MICHIGAN

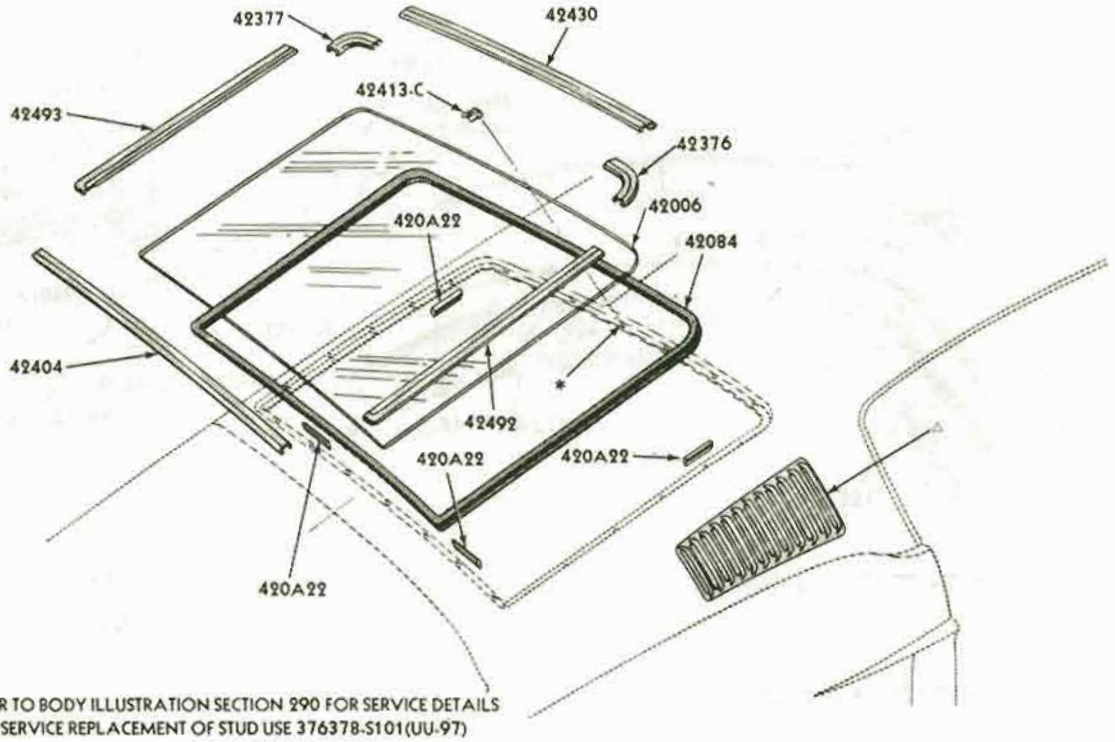

△REFER TO BODY ILLUSTRATION SECTION 290 FOR SERVICE DETAILS
*FOR SERVICE REPLACEMENT OF STUD USE 376378-S101(UU-97)

P-5629

BACK WINDOW and RELATED PARTS
1967/68 MUSTANG - BODY TYPE 63

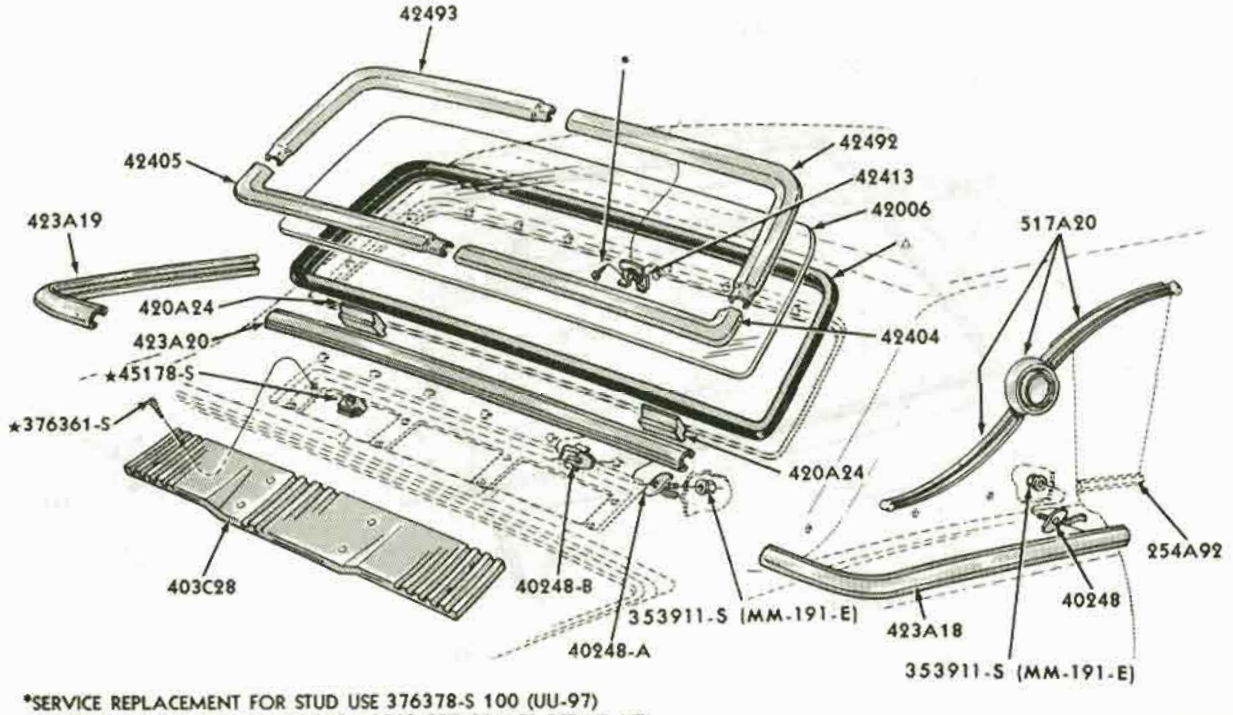

*SERVICE REPLACEMENT FOR STUD USE 376378-S 100 (UU-97)
△ REFER TO PAINT SECTION GROUP 19562 FOR SEALER REPAIR KIT

P-5355

BACK WINDOW and RELATED PARTS - OUTSIDE
1967/71 THUNDERBIRD - BODY TYPE 57

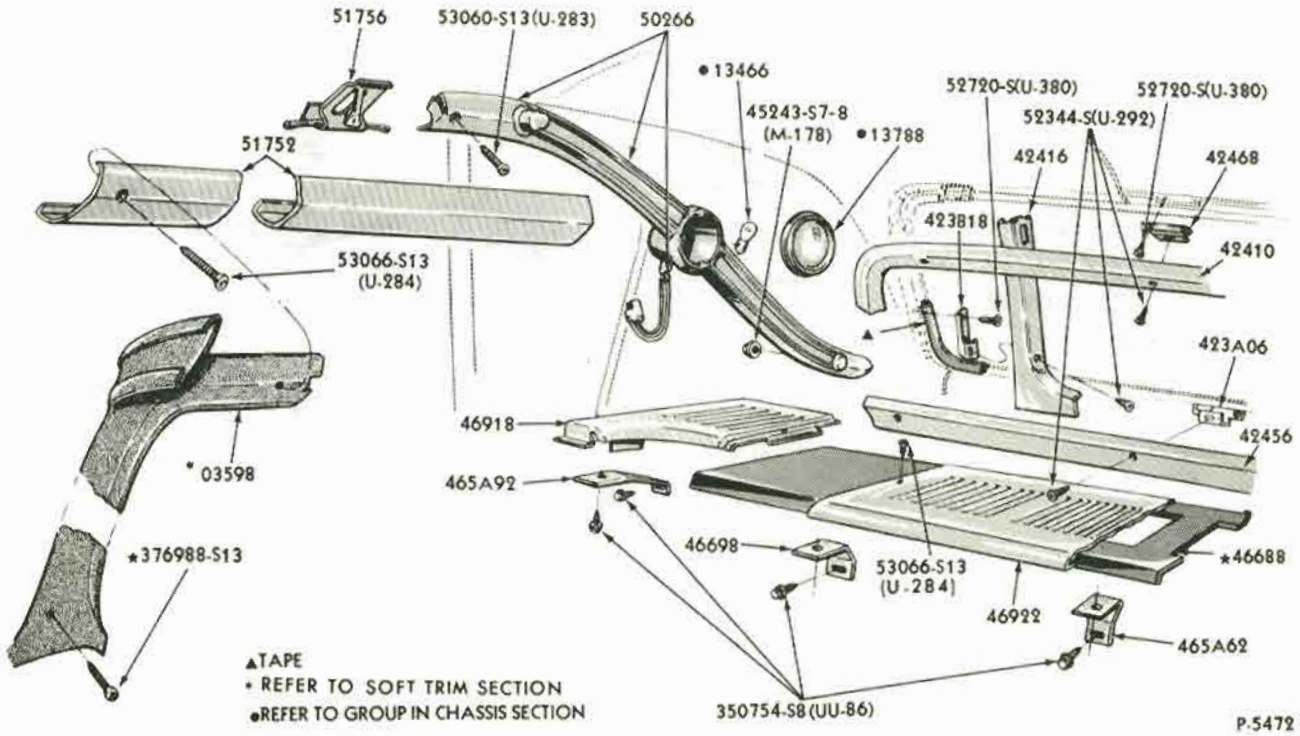

BACK WINDOW and ROOF SIDE MOULDINGS
1967/70 THUNDERBIRD - BODY TYPE 57

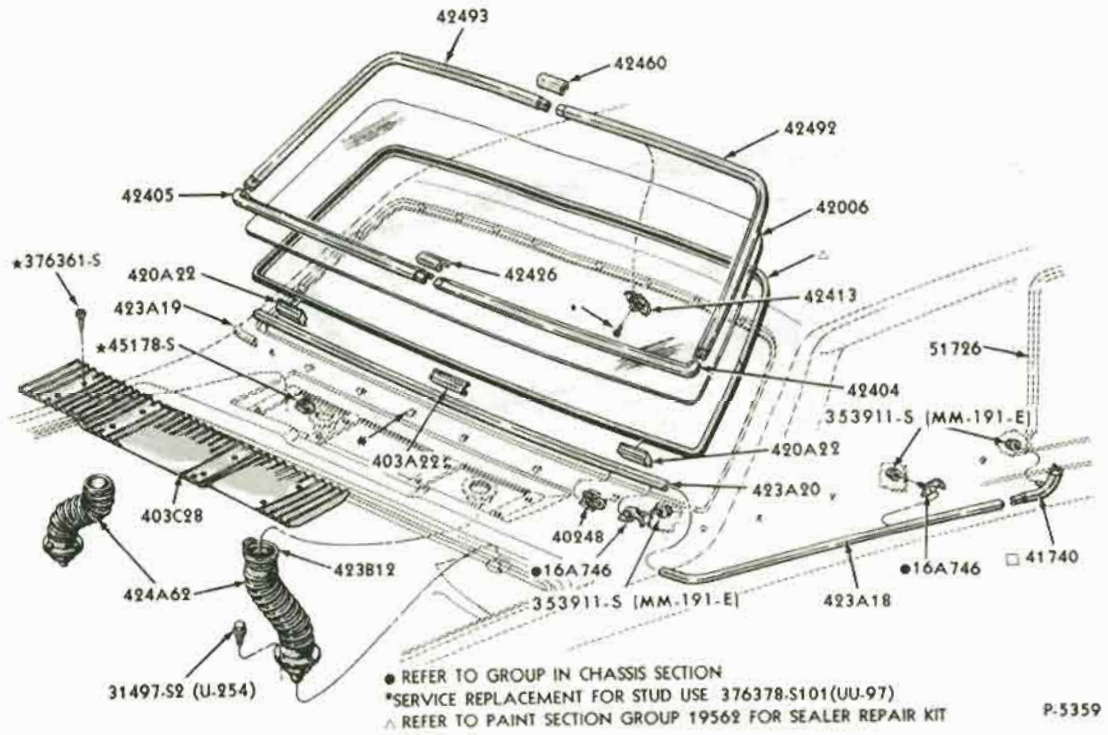

BACK WINDOW and RELATED PARTS - OUTSIDE
1967/71 THUNDERBIRD - BODY TYPE 65 B,D

COPYRIGHT © 1975 — FORD MOTOR COMPANY — DEARBORN, MICHIGAN

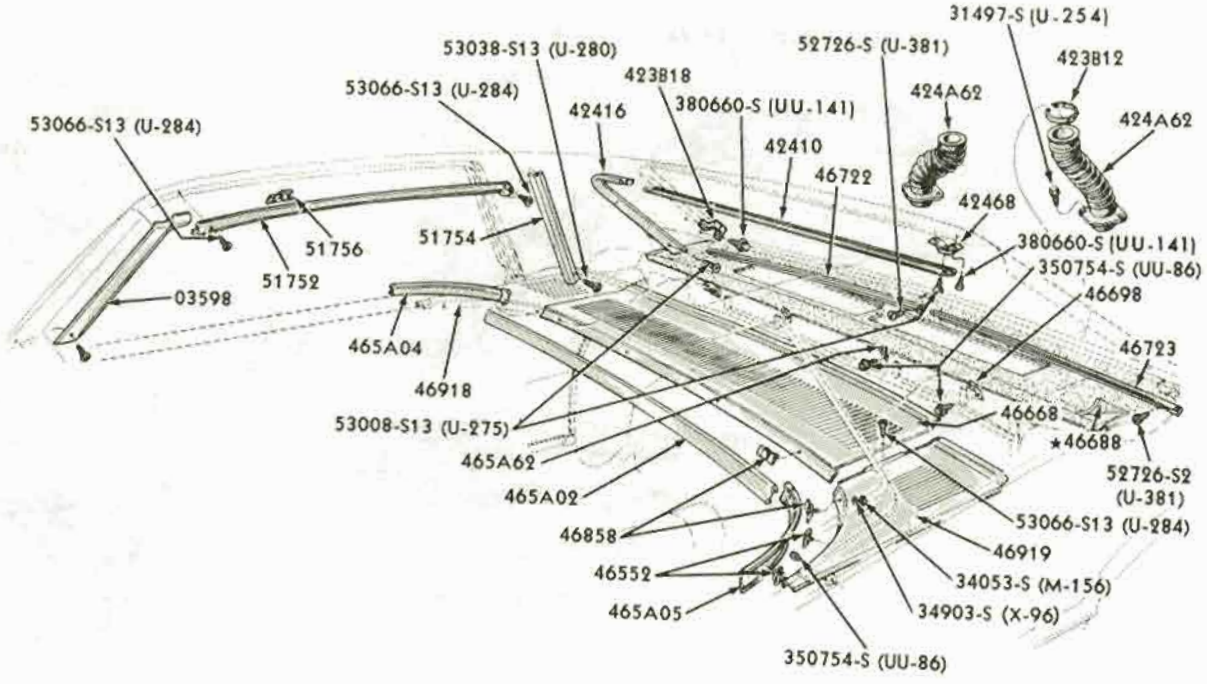

BACK WINDOW and ROOF SIDE MOULDINGS - INSIDE
1967/70 THUNDERBIRD - BODY TYPE 65

P-5473

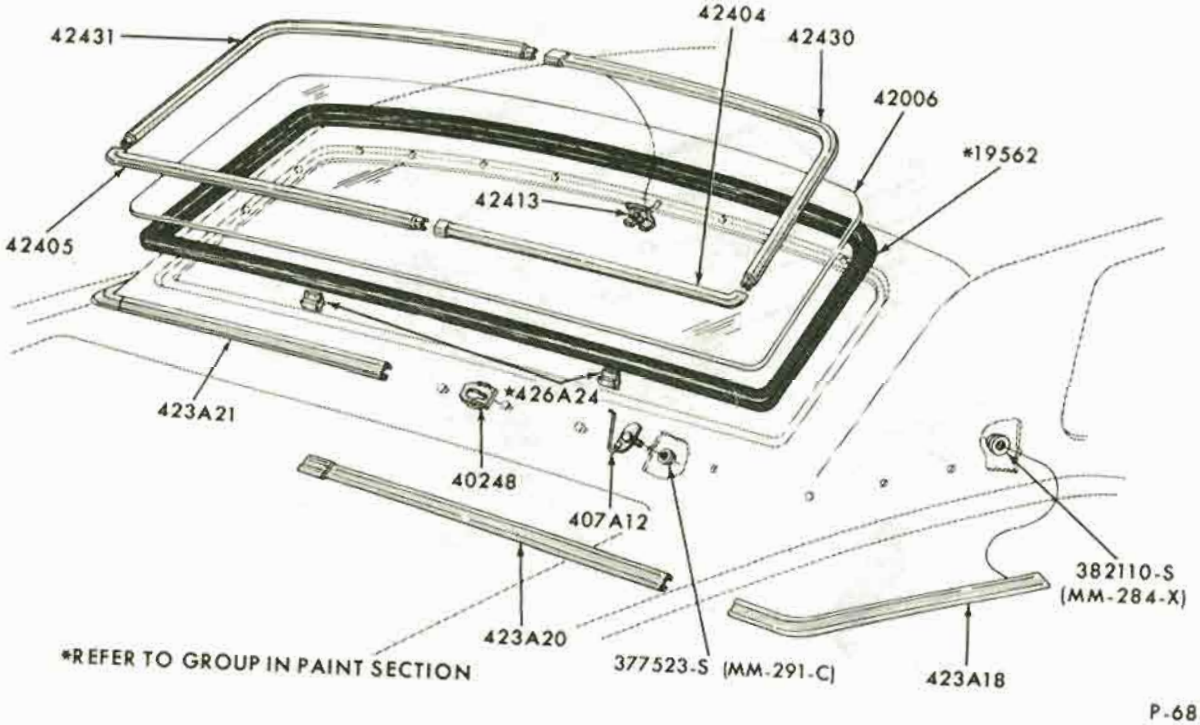

P-6851

BACK WINDOW and RELATED PARTS - OUTSIDE
1968 FORD - BODY TYPES 57, 65

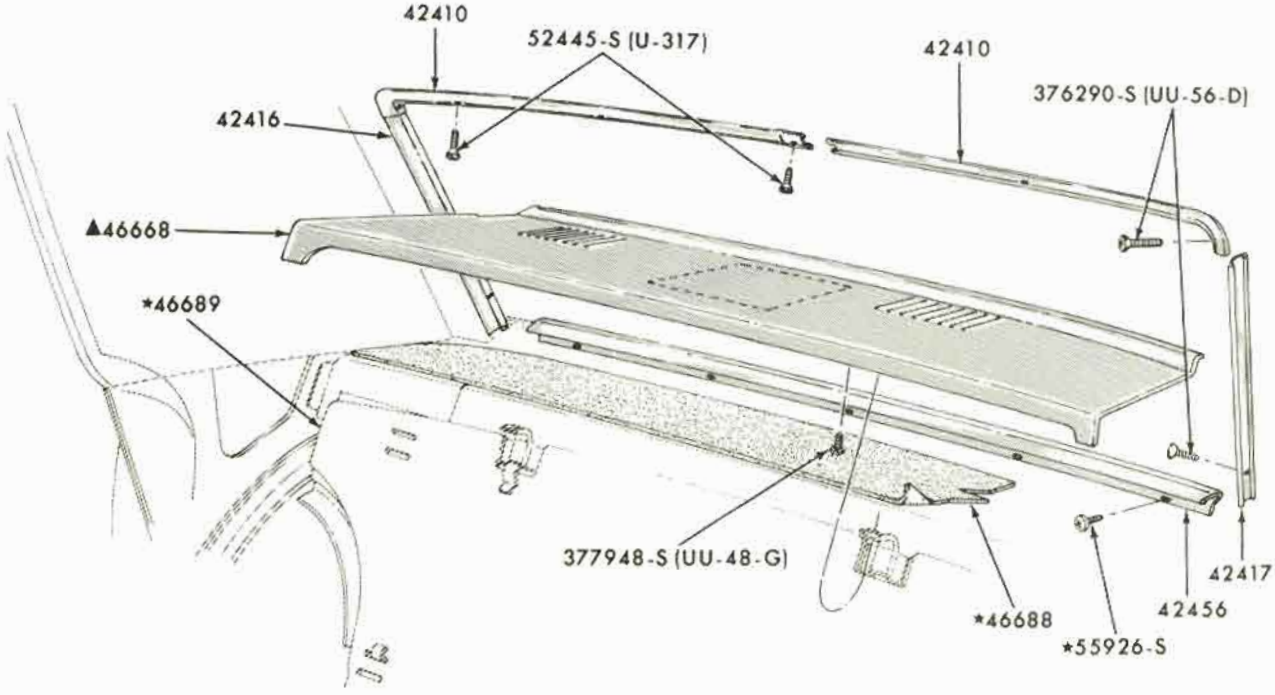

▲REFER TO GROUP IN SOFT TRIM SECTION

P-6853

BACK WINDOW and RELATED PARTS - INSIDE
1968 FORD - BODY TYPES 57, 65

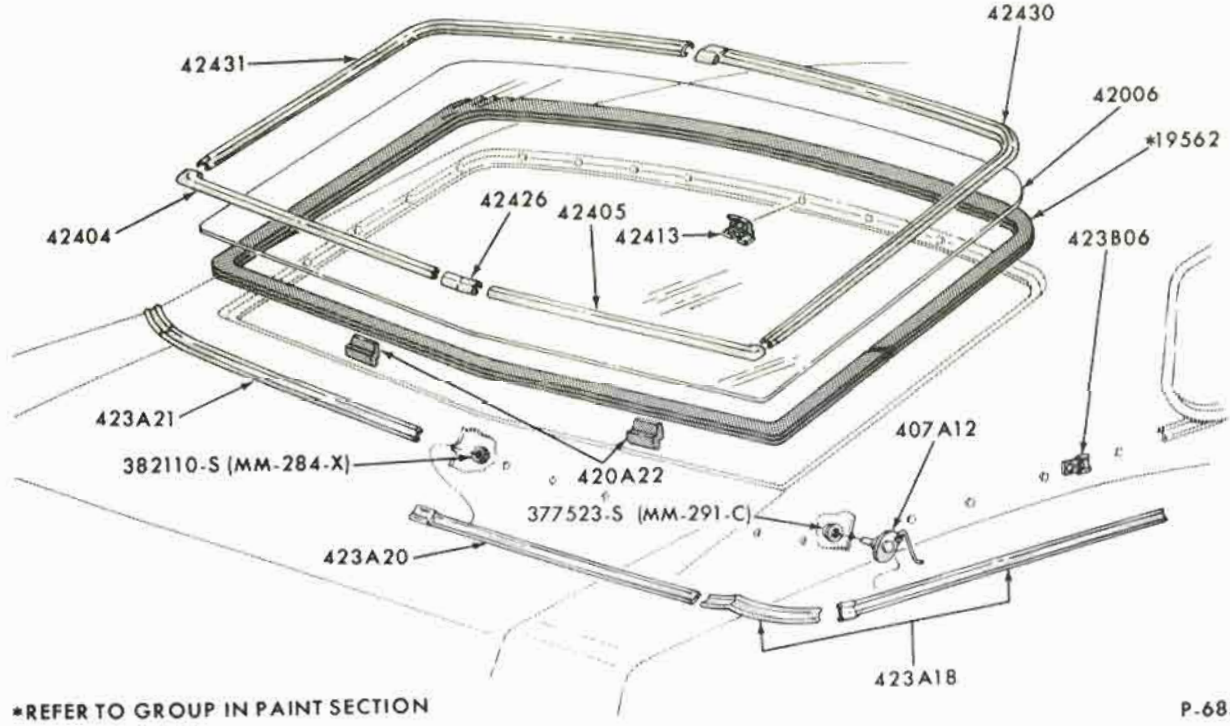

*REFER TO GROUP IN PAINT SECTION

P-6852

BACK WINDOW and RELATED PARTS
1968 FORD - BODY TYPE 63

COPYRIGHT © 1975 — FORD MOTOR COMPANY — DEARBORN, MICHIGAN

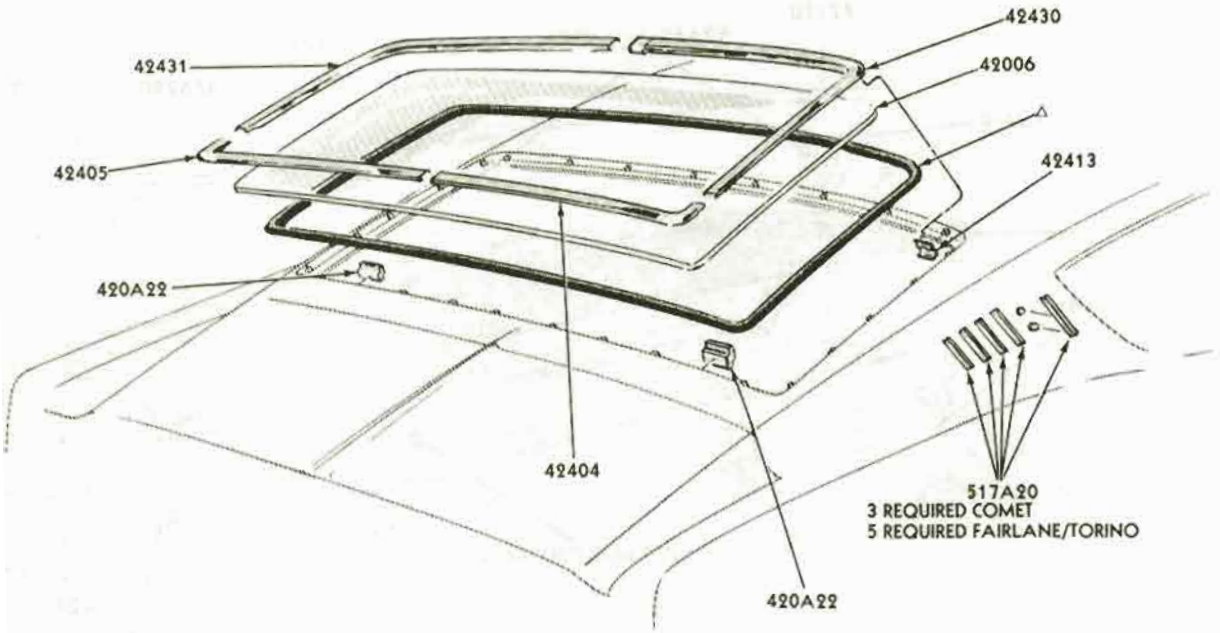

*FOR SERVICE REPLACEMENT OF STUD USE 376378-S100 (UU-97)
△REFER TO PAINT SECTION GROUP 19562 FOR SEALER REPAIR KIT

P-6379

BACK WINDOW and RELATED PARTS
1968/71 FAIRLANE/TORINO - BODY TYPE 63

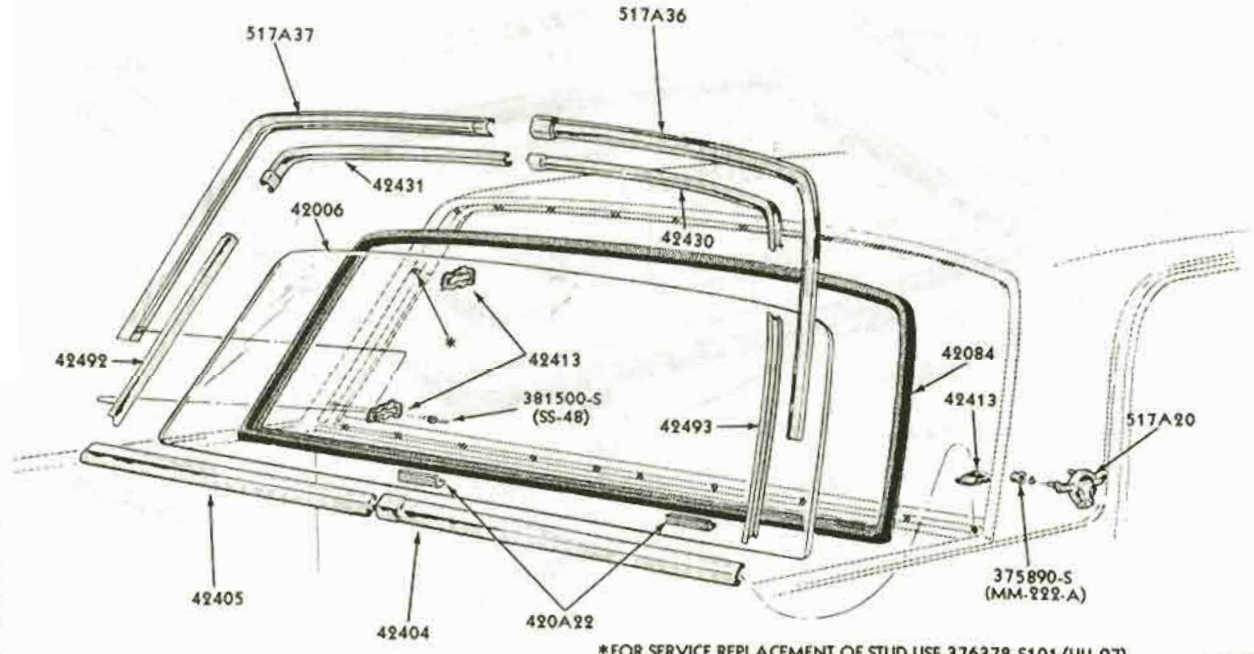

*FOR SERVICE REPLACEMENT OF STUD USE 376378-S101 (UU-97)

P-6380-B

BACK WINDOW and RELATED PARTS
1968/69 FAIRLANE - BODY TYPE 66

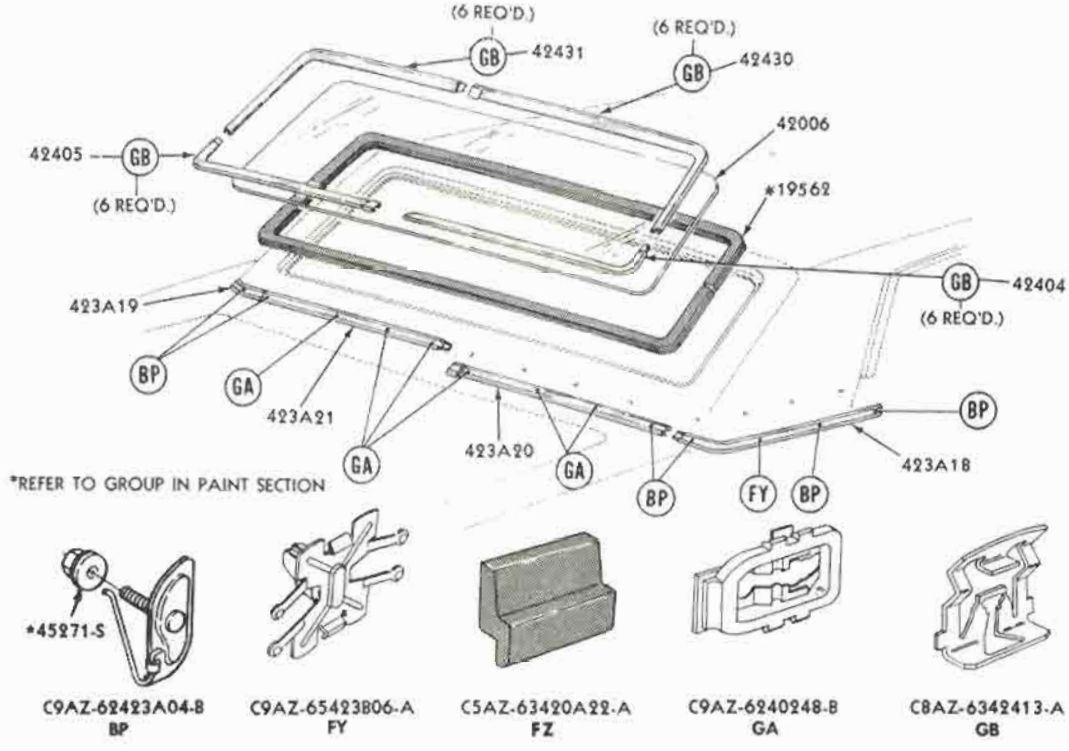

BACK WINDOW and RELATED PARTS - OUTSIDE
1969/70 FORD - BODY TYPES 54, 62

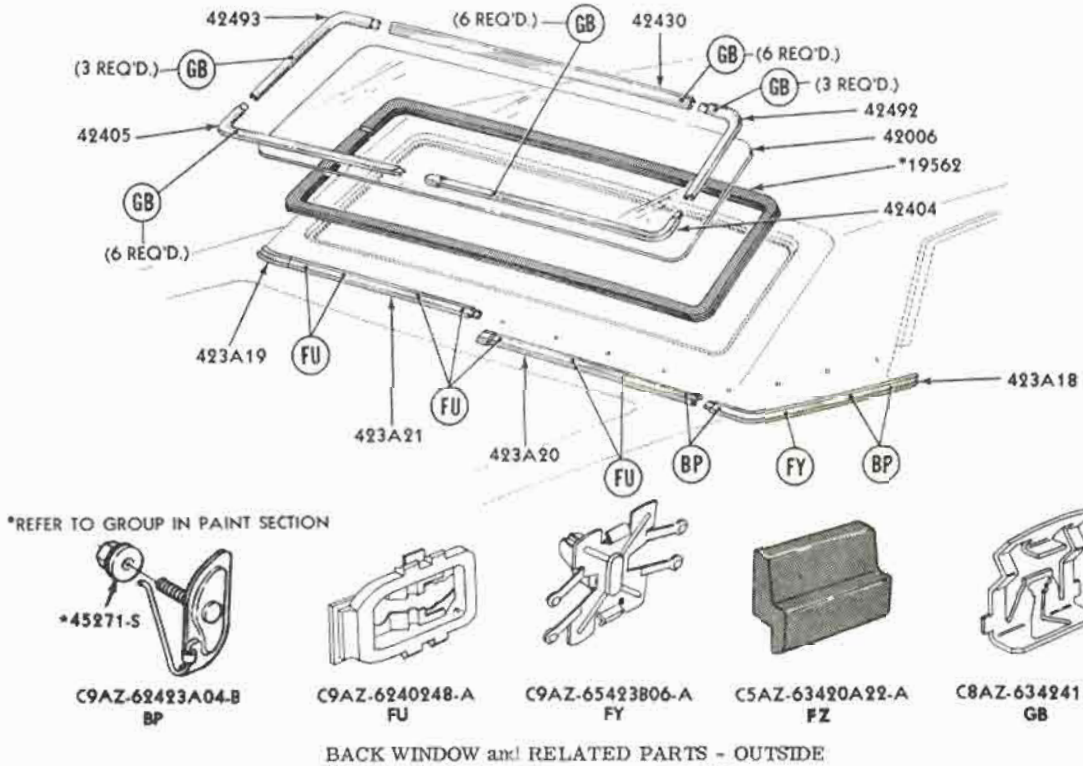

BACK WINDOW and RELATED PARTS - OUTSIDE
1969/70 FORD - BODY TYPE 57

COPYRIGHT © 1975 — FORD MOTOR COMPANY — DEARBORN, MICHIGAN

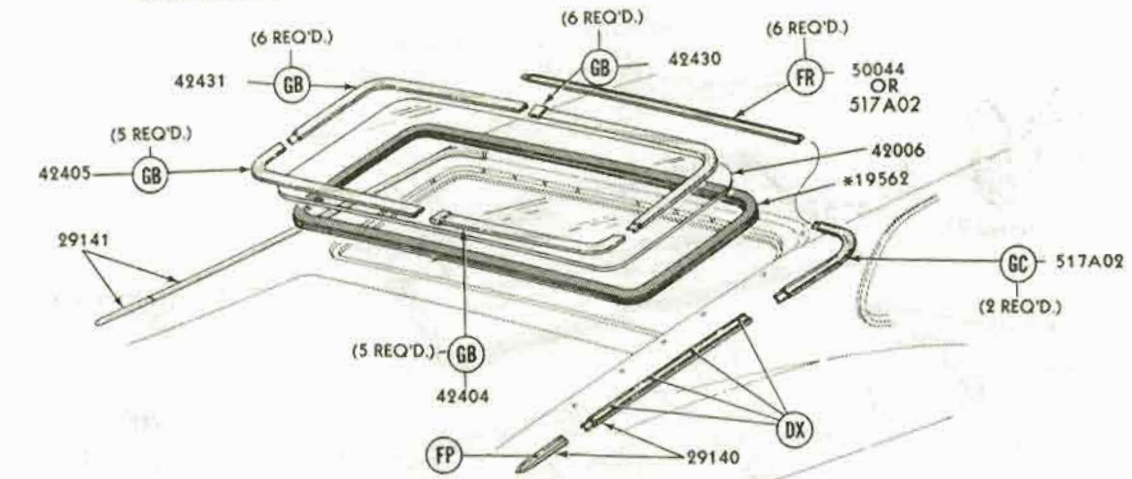

*REFER TO GROUP IN PAINT SECTION

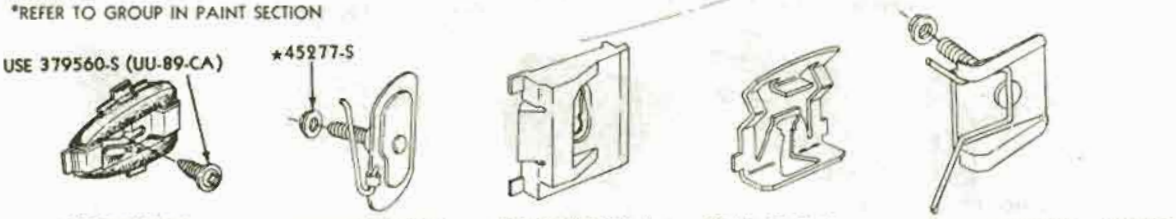

C6VY-16234-C DX | C9AZ-6329108-A FP | C9AZ-6350034-A FR | C8AZ-6342413-A GB | C9AZ-6350030-A GC | P-6749

BACK WINDOW and RELATED PARTS - OUTSIDE
1969/70 FORD - BODY TYPE 63 - WITHOUT VINYL ROOF COVER

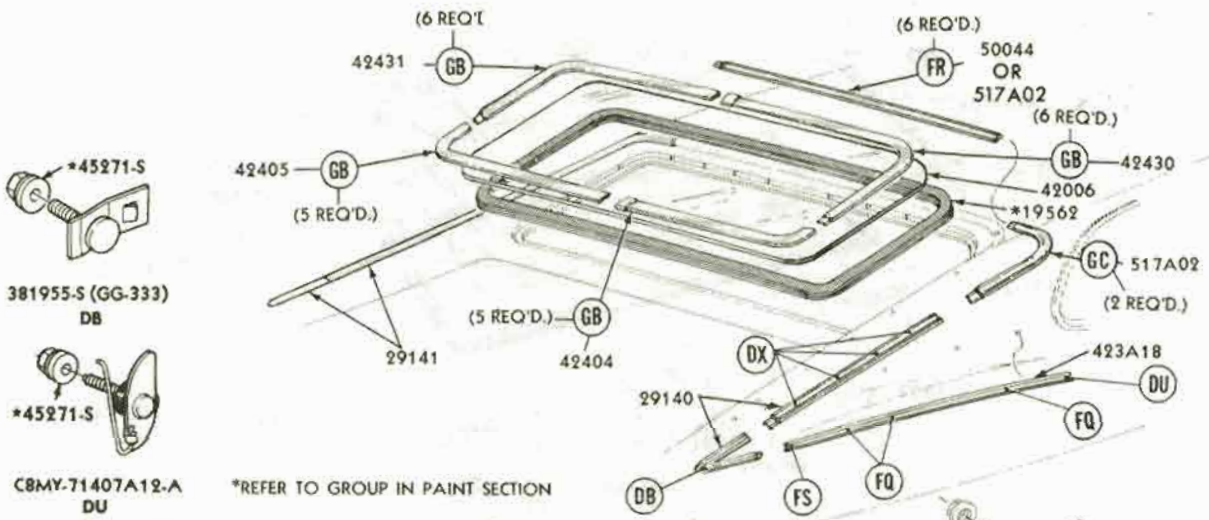

*REFER TO GROUP IN PAINT SECTION

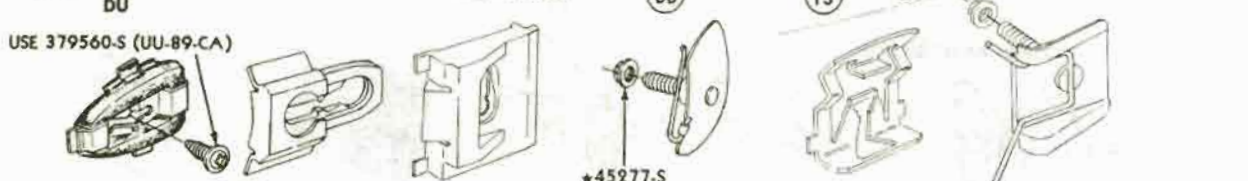

C6VY-16234-C DX | C7SZ-6540248-B FQ | C9AZ-6350034-A FR | C9AZ-63423B06-A FS | C8AZ-6342413-A GB | C9AZ-6350030-A GC | P-6750

BACK WINDOW and RELATED PARTS - OUTSIDE
1969/70 FORD - BODY TYPE 63 - WITH VINYL ROOF COVER

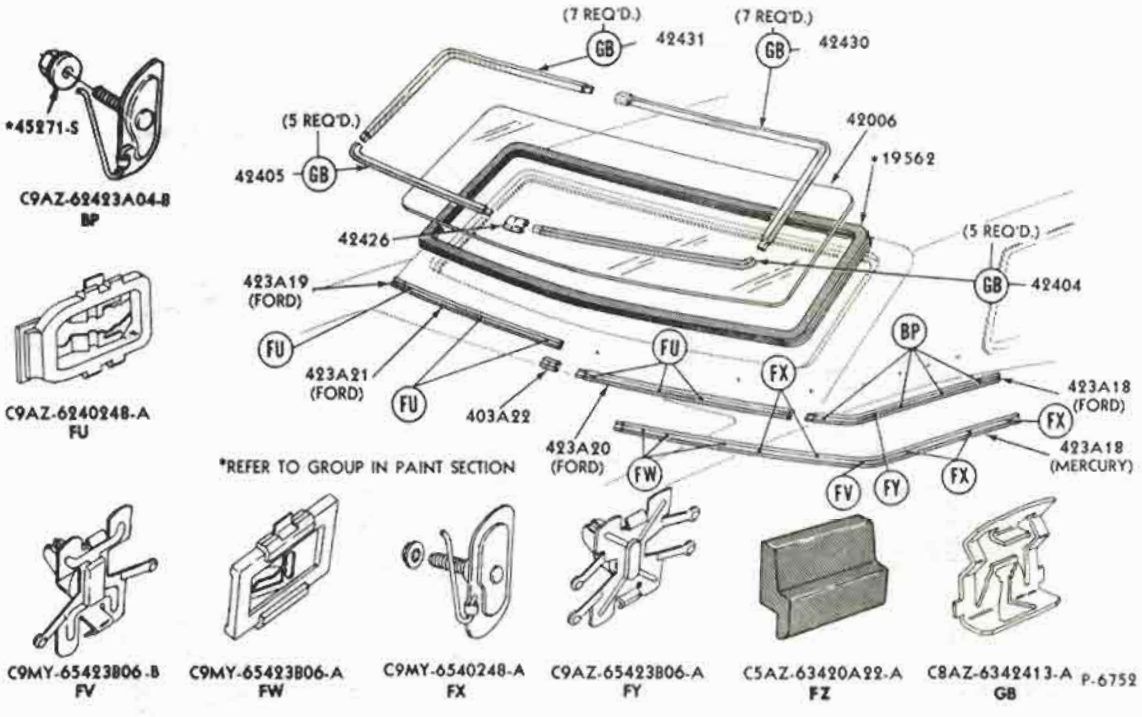

BACK WINDOW and RELATED PARTS - OUTSIDE
1969/70 FORD - BODY TYPE 65

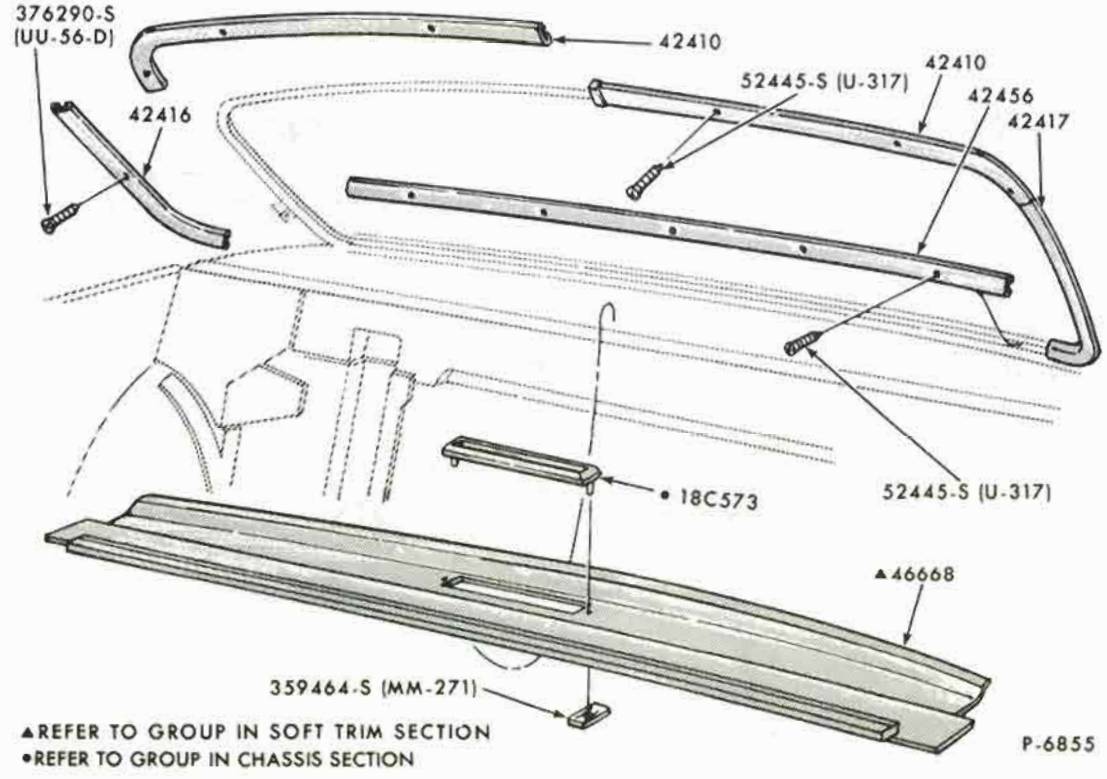

BACK WINDOW and RELATED PARTS - INSIDE
1969/72 FORD - BODY TYPES 53,54,57,62,63

COPYRIGHT © 1975 — FORD MOTOR COMPANY — DEARBORN, MICHIGAN

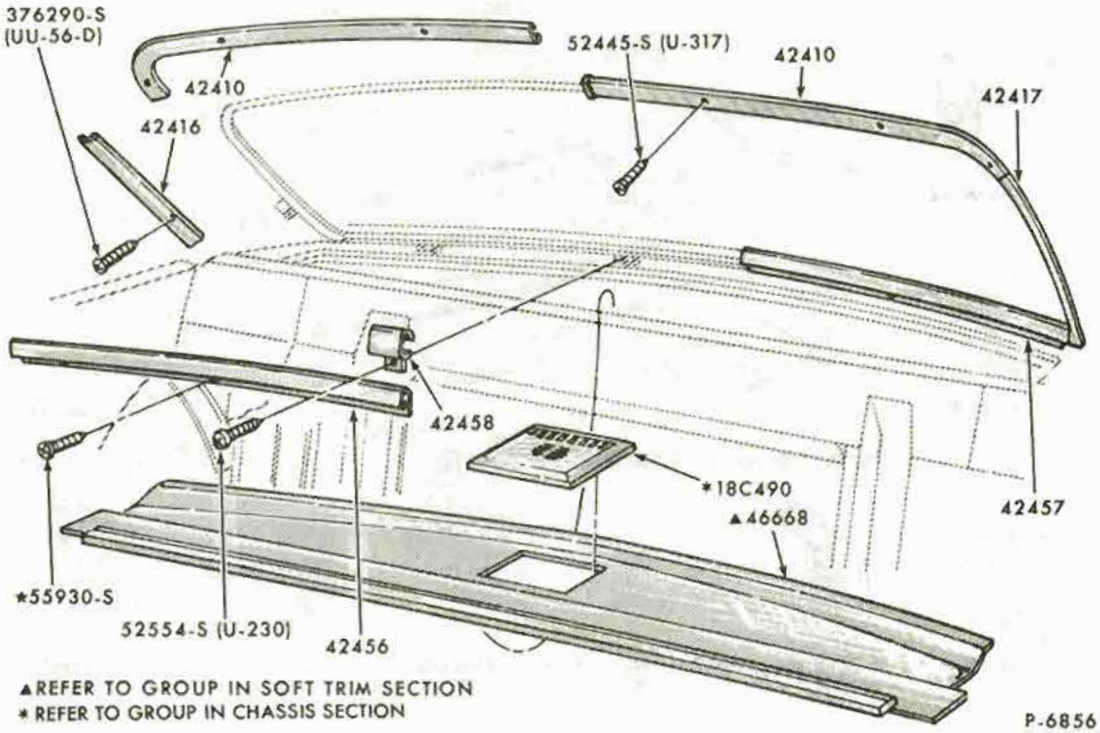

▲REFER TO GROUP IN SOFT TRIM SECTION
* REFER TO GROUP IN CHASSIS SECTION

P-6856

BACK WINDOW and RELATED PARTS - INSIDE
1969/72 FORD - BODY TYPE 65

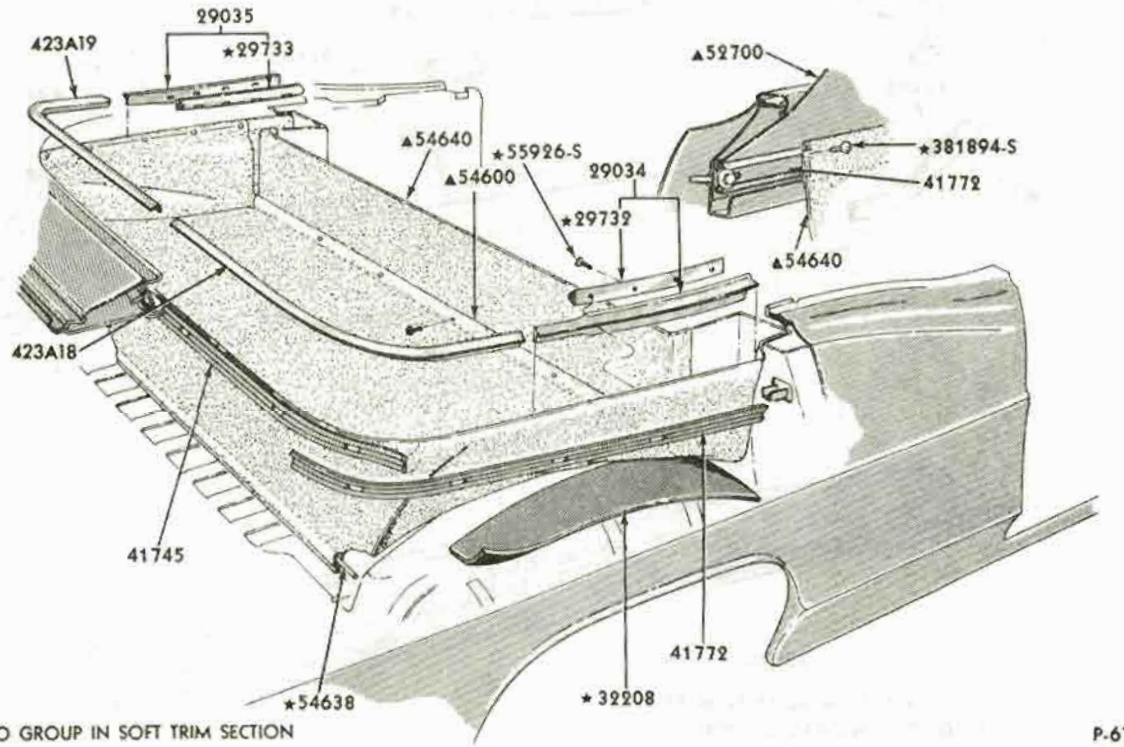

▲REFER TO GROUP IN SOFT TRIM SECTION

P-6753

BACK BELT MOULDINGS
1968/70 FORD - BODY TYPE 76

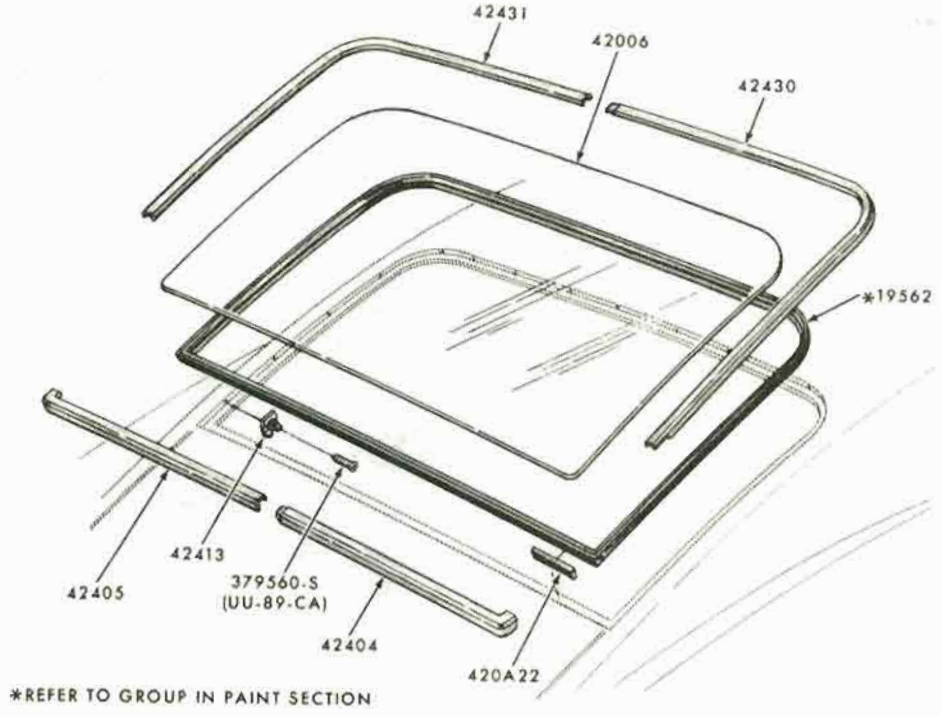

*REFER TO GROUP IN PAINT SECTION

P-6789

BACK WINDOW and RELATED PARTS
1969/70 MUSTANG - BODY TYPE 63

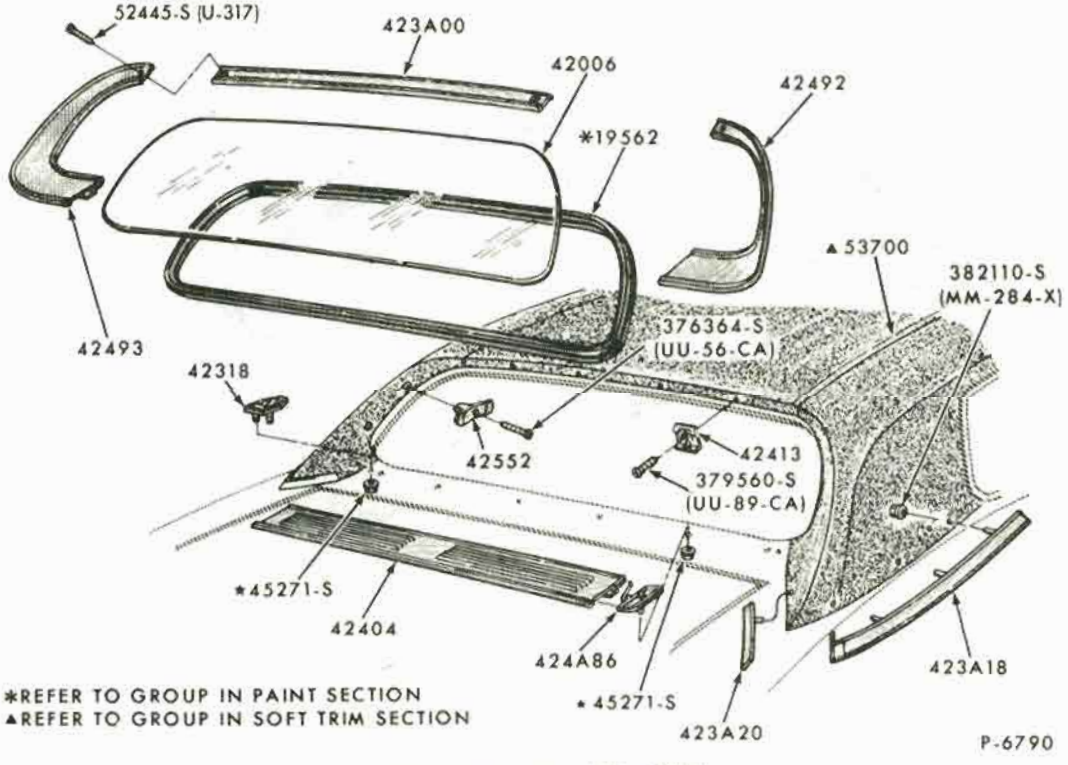

*REFER TO GROUP IN PAINT SECTION
▲REFER TO GROUP IN SOFT TRIM SECTION

P-6790

BACK WINDOW and RELATED PARTS
1969 MUSTANG - BODY TYPE 65

COPYRIGHT © 1975 — FORD MOTOR COMPANY — DEARBORN, MICHIGAN

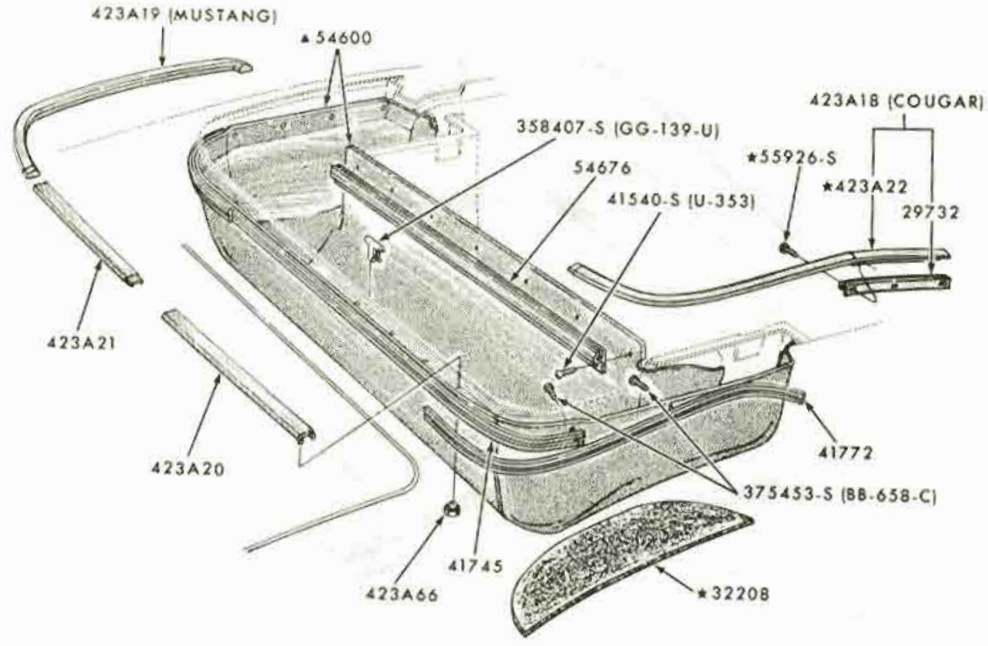

▲REFER TO GROUP IN SOFT TRIM SECTION

P-6788

BACK BELT MOULDINGS and RELATED PARTS
1969/70 MUSTANG - BODY TYPE 76

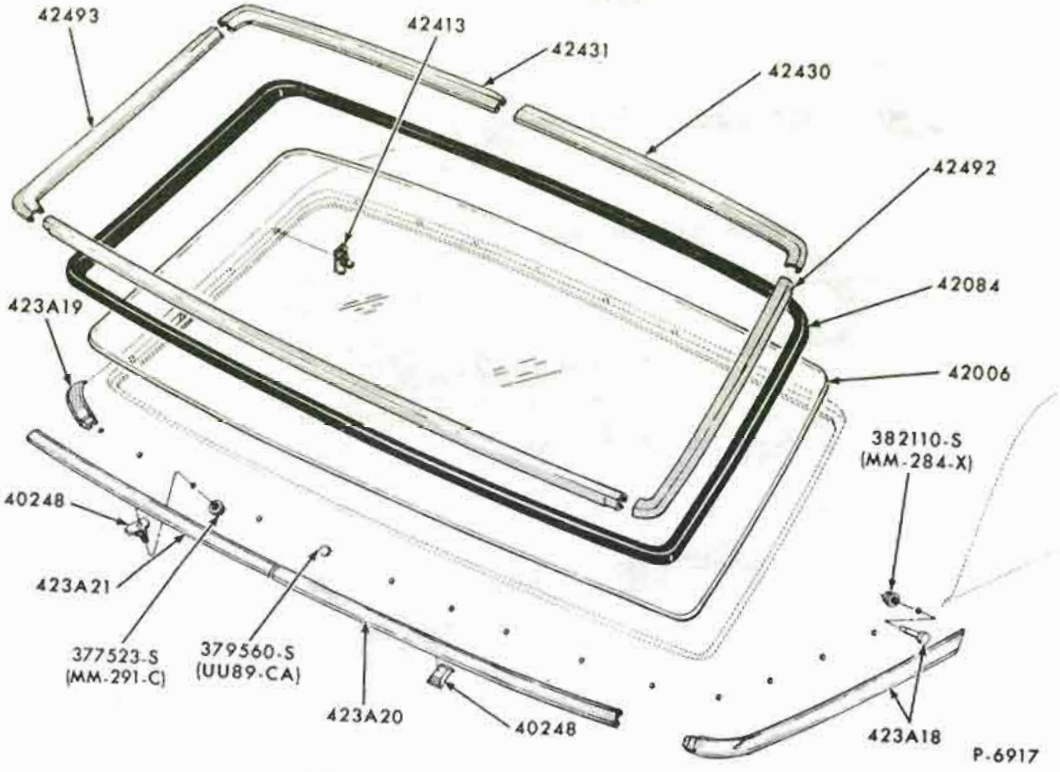

P-6917

BACK WINDOW and RELATED PARTS
1968/69 FAIRLANE/TORINO - BODY TYPE 65

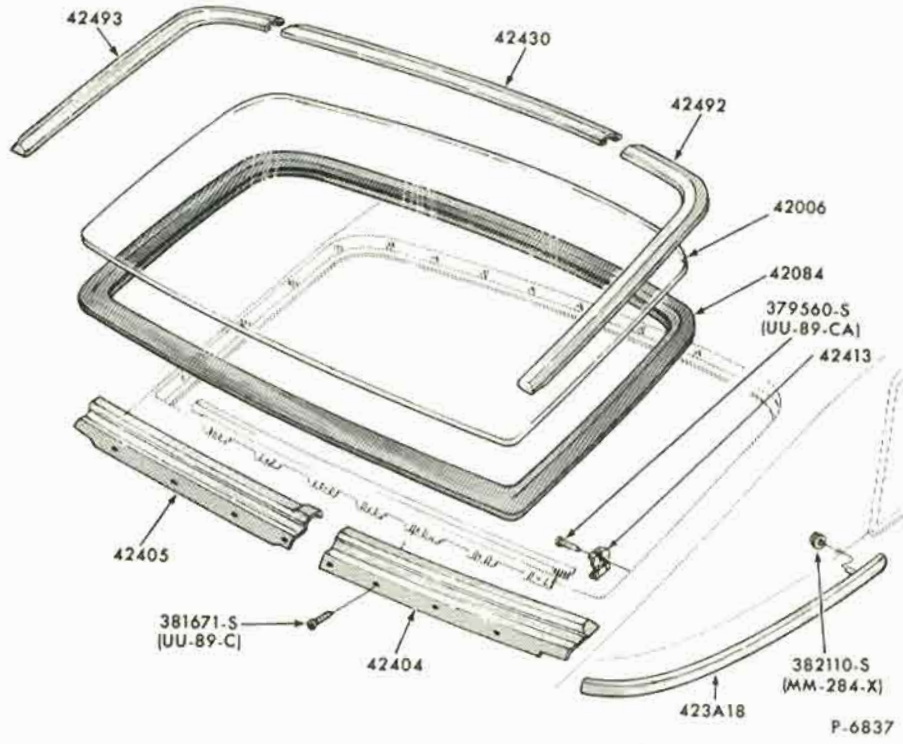

BACK WINDOW and RELATED PARTS
1970/72 MAVERICK - BODY TYPE 62

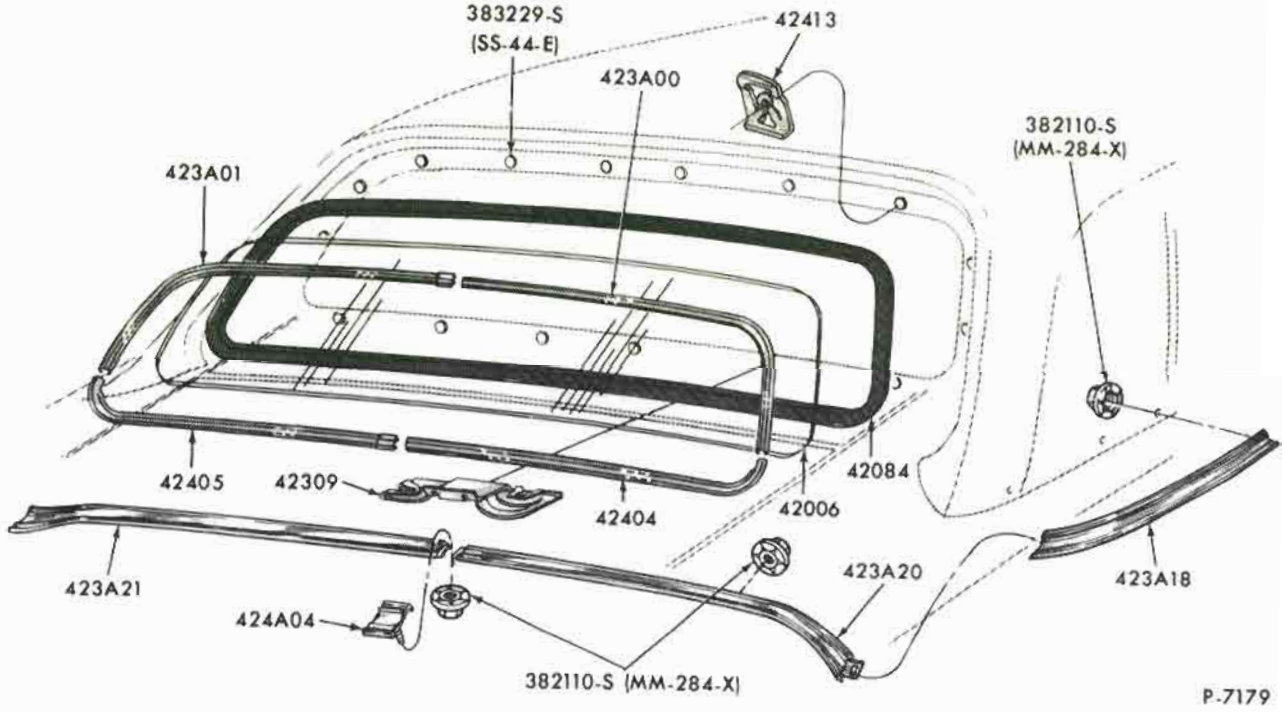

BACK WINDOW and RELATED PARTS - OUTSIDE
1970 MUSTANG - BODY TYPE 65

COPYRIGHT © 1975 — FORD MOTOR COMPANY — DEARBORN, MICHIGAN

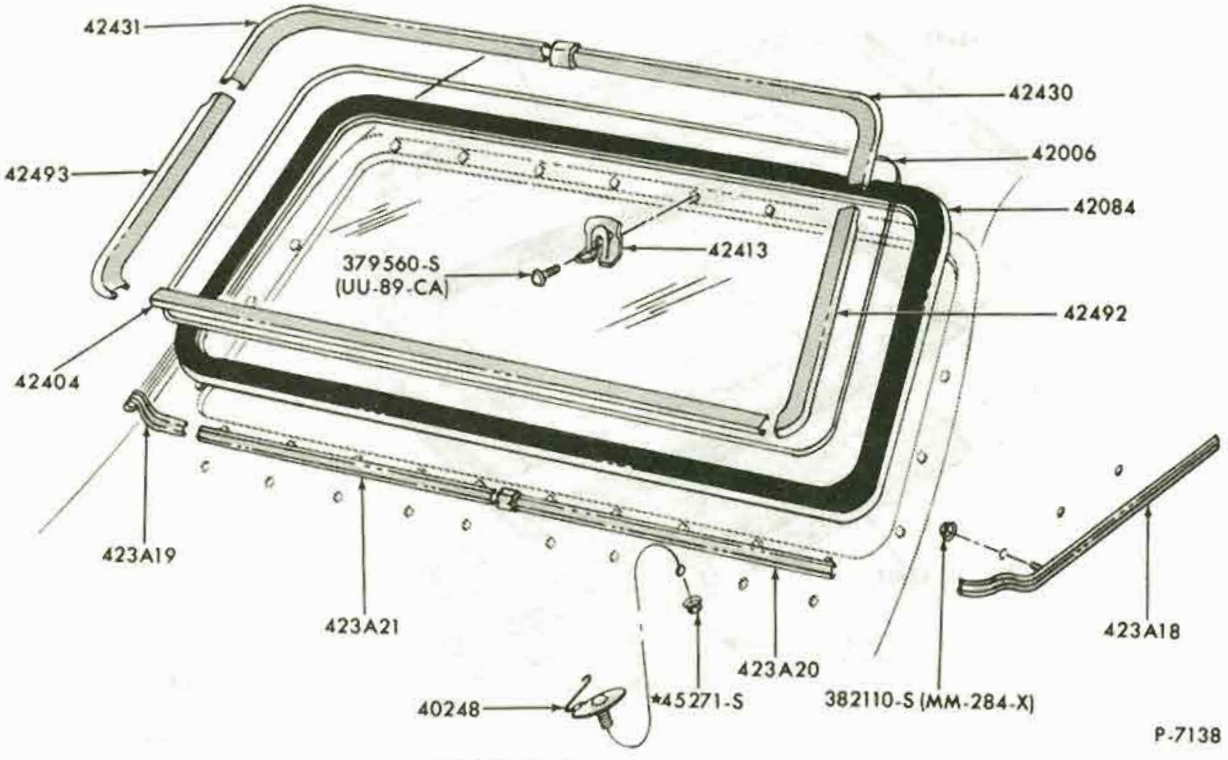

BACK WINDOW and RELATED PARTS
1970/71 FAIRLANE/TORINO - BODY TYPES 54,57,62,65

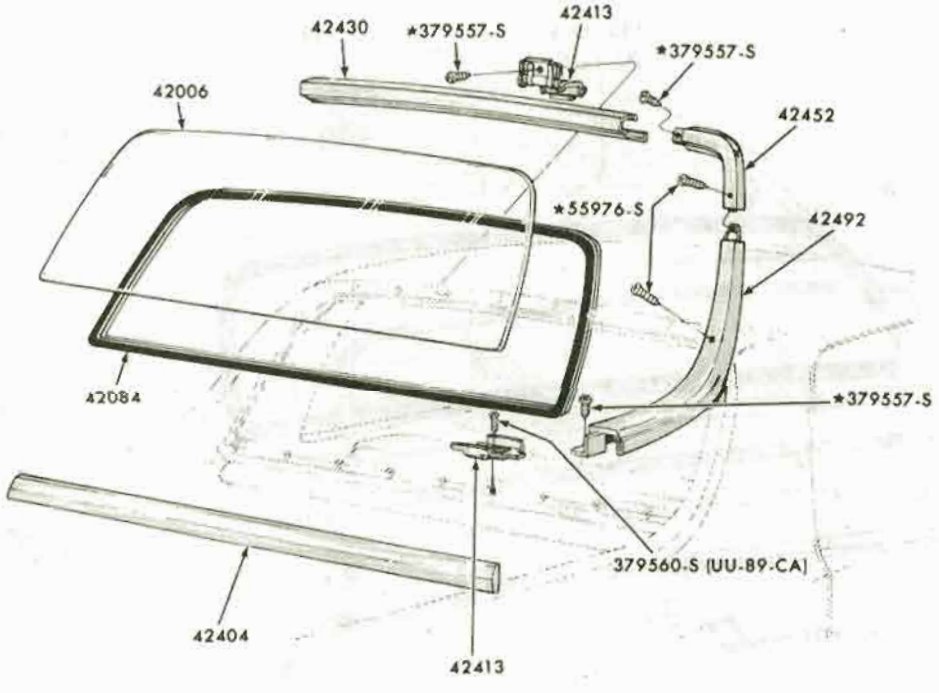

BACK WINDOW and RELATED PARTS
1970/71 FAIRLANE/TORINO - BODY TYPE 66

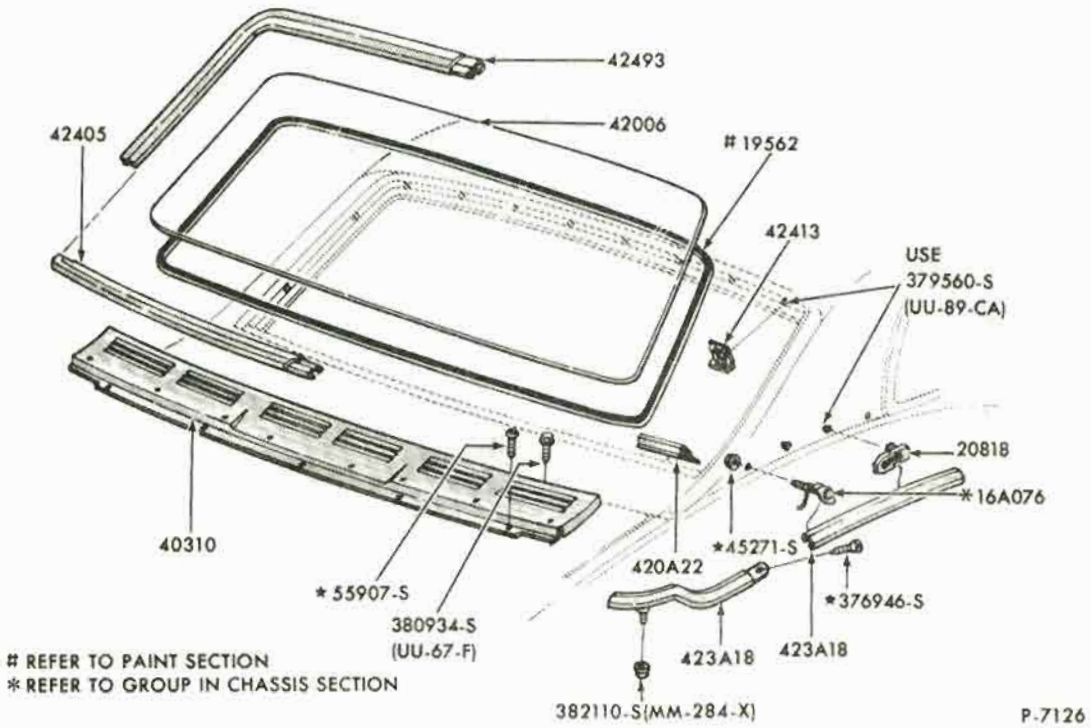

BACK WINDOW and RELATED PARTS
1970/71 THUNDERBIRD - BODY TYPE 65 A, C

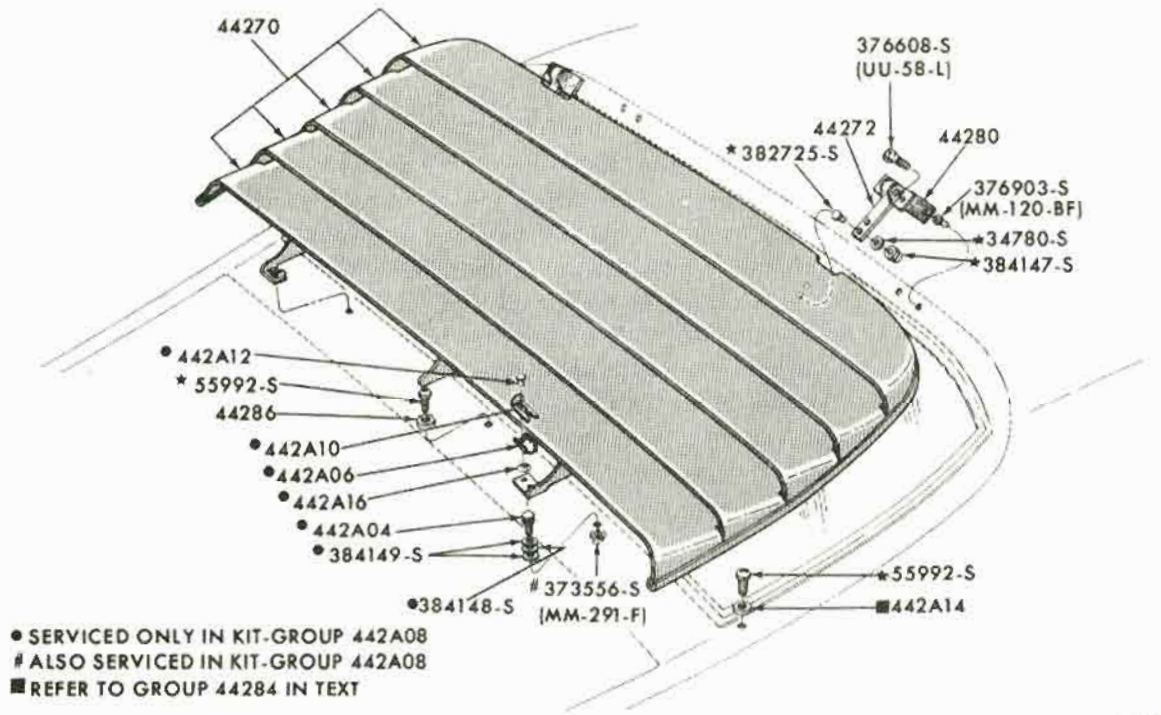

LOUVERS - BACK WINDOW
1970/71 FAIRLANE/TORINO - BODY TYPE 63

COPYRIGHT © 1975 — FORD MOTOR COMPANY — DEARBORN, MICHIGAN

BODY ILLUSTRATION
SECTION 420

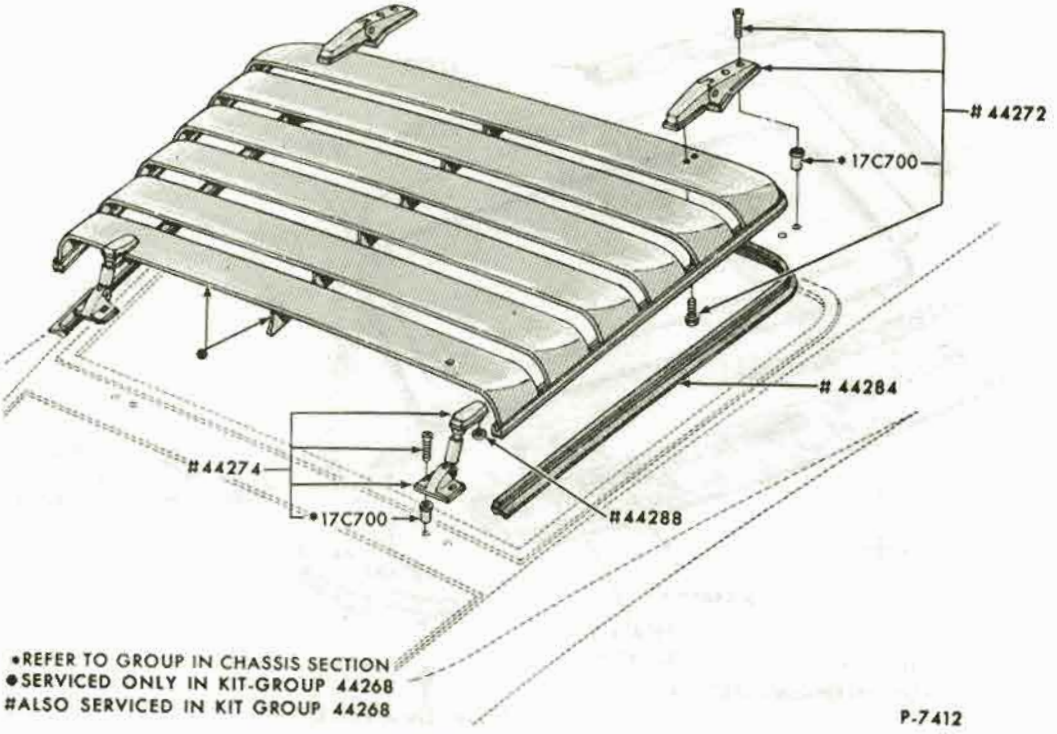

•REFER TO GROUP IN CHASSIS SECTION
●SERVICED ONLY IN KIT-GROUP 44268
#ALSO SERVICED IN KIT GROUP 44268

P-7412

LOUVERS - BACK WINDOW
1969/70 MUSTANG - BODY TYPE 63

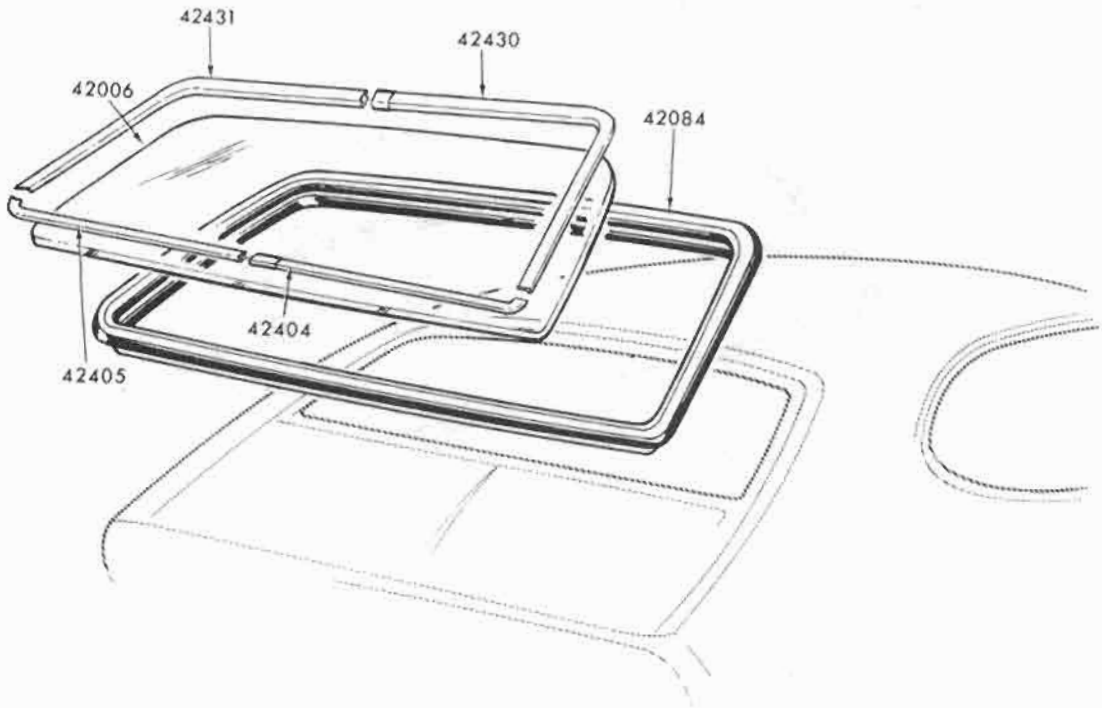

P-7783

BACK WINDOW and RELATED PARTS - OUTSIDE
1971/72 PINTO - BODY TYPE 62
1971 PINTO - BODY TYPE 64

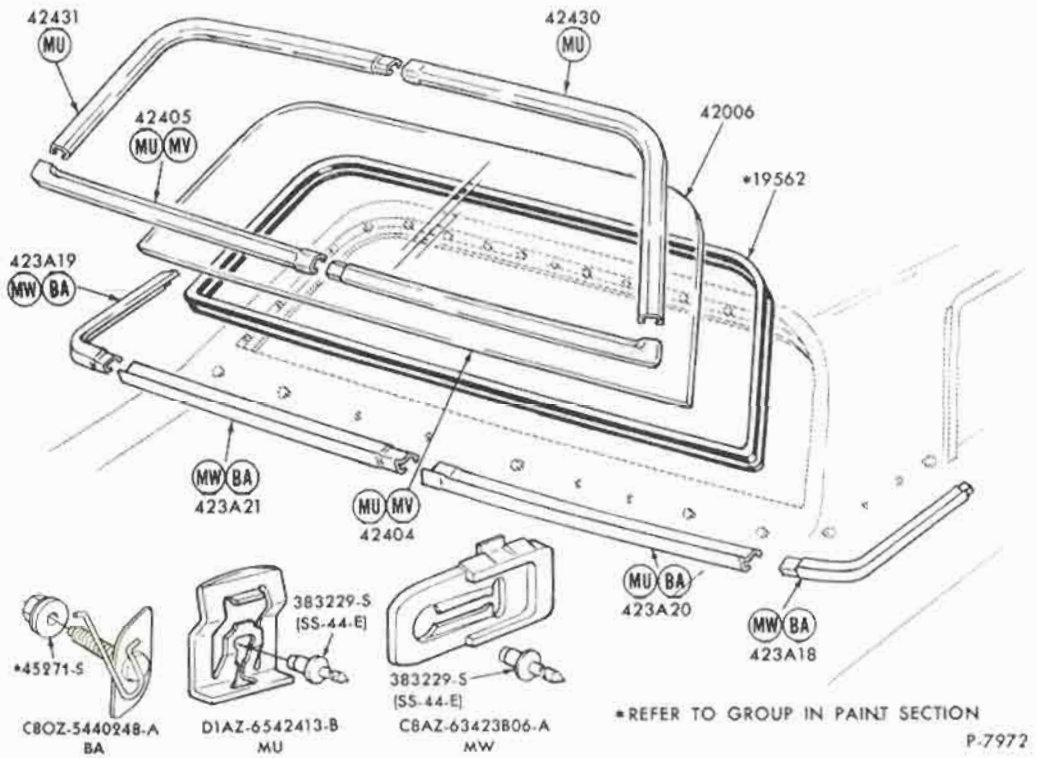

*REFER TO GROUP IN PAINT SECTION

P-7972

BACK WINDOW and RELATED PARTS - OUTSIDE
1971/72 FORD - BODY TYPE 54

COPYRIGHT © 1975 — FORD MOTOR COMPANY — DEARBORN, MICHIGAN

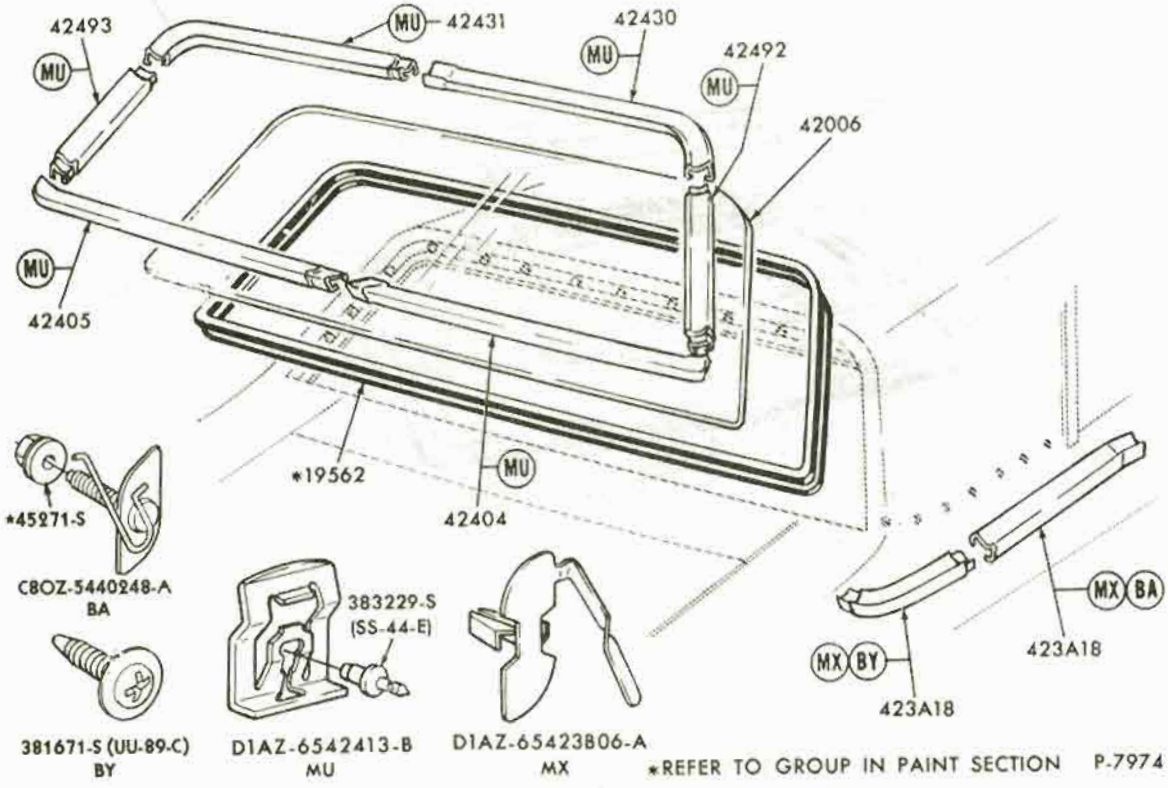

BACK WINDOW and RELATED PARTS - OUTSIDE
1971/72 FORD - BODY TYPE 65

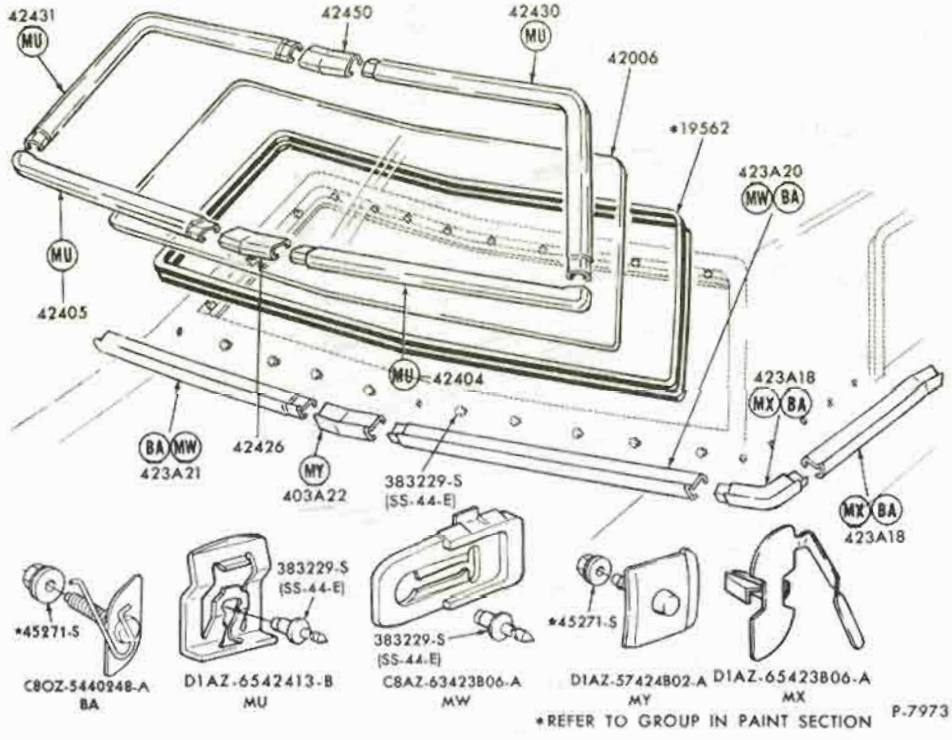

BACK WINDOW and RELATED PARTS - OUTSIDE
1971/72 FORD - BODY TYPE 53, 57

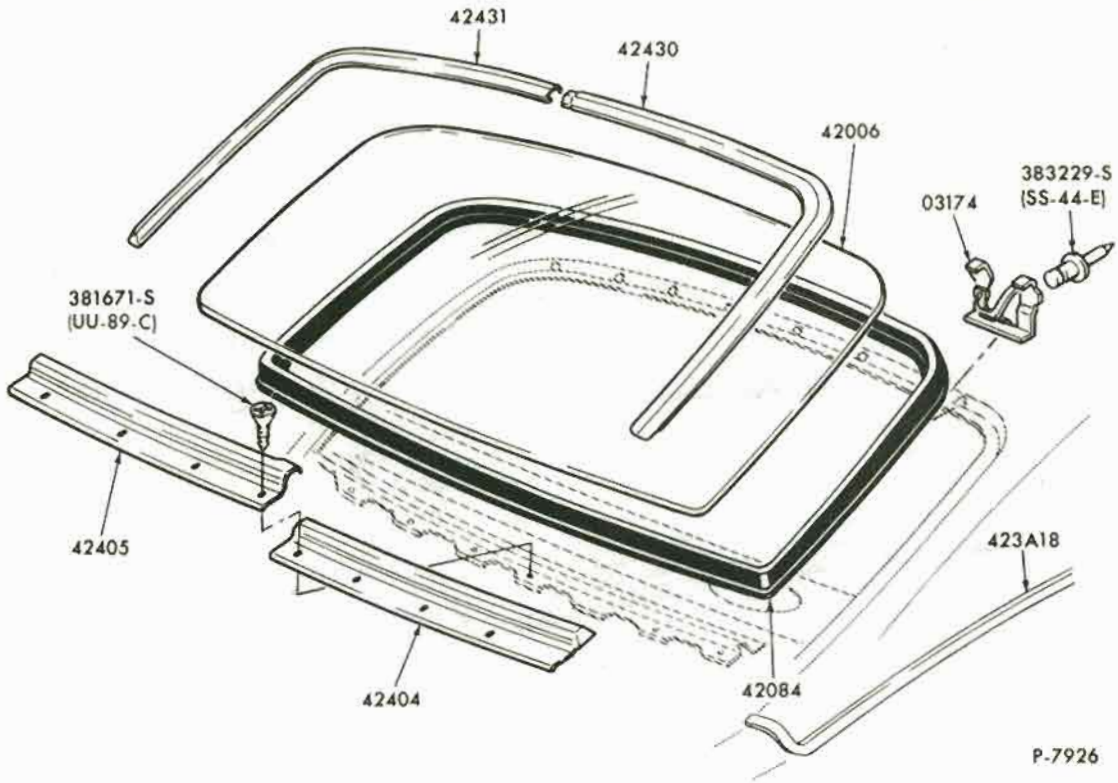

BACK WINDOW and RELATED PARTS - OUTSIDE
1971/72 MAVERICK - BODY TYPE 54

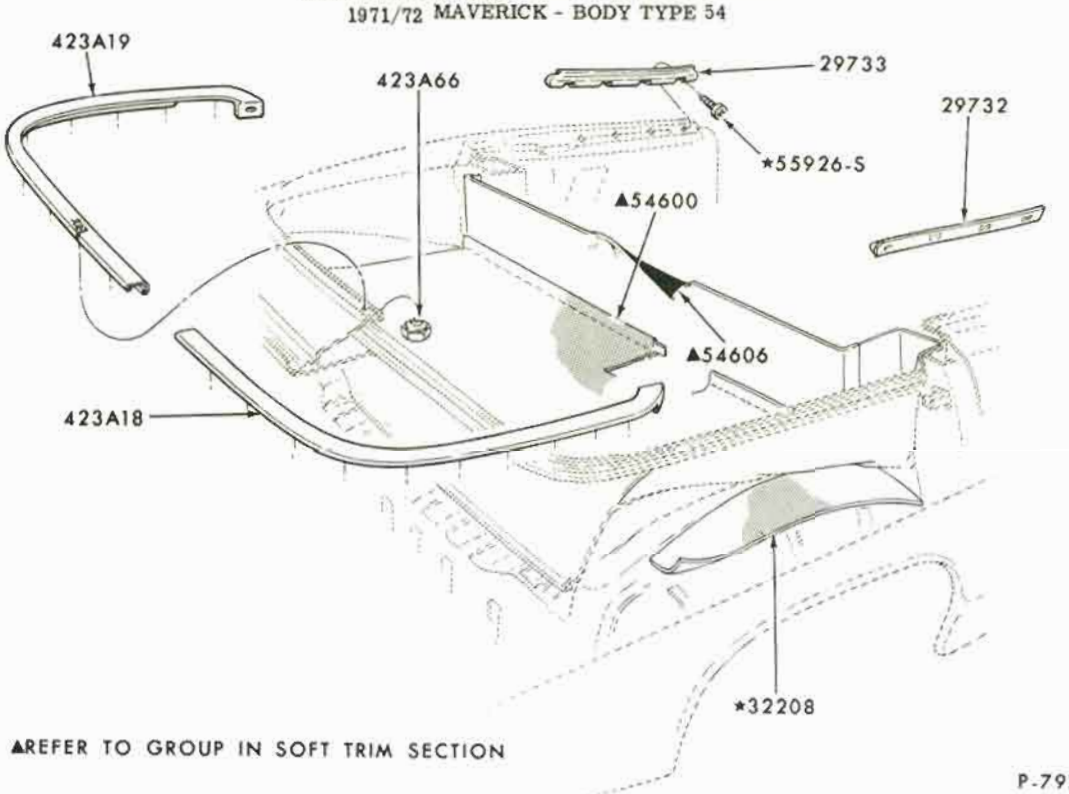

BACK BELT MOULDINGS and RELATED PARTS
1971/72 FORD - BODY TYPE 76

COPYRIGHT © 1975 — FORD MOTOR COMPANY — DEARBORN, MICHIGAN

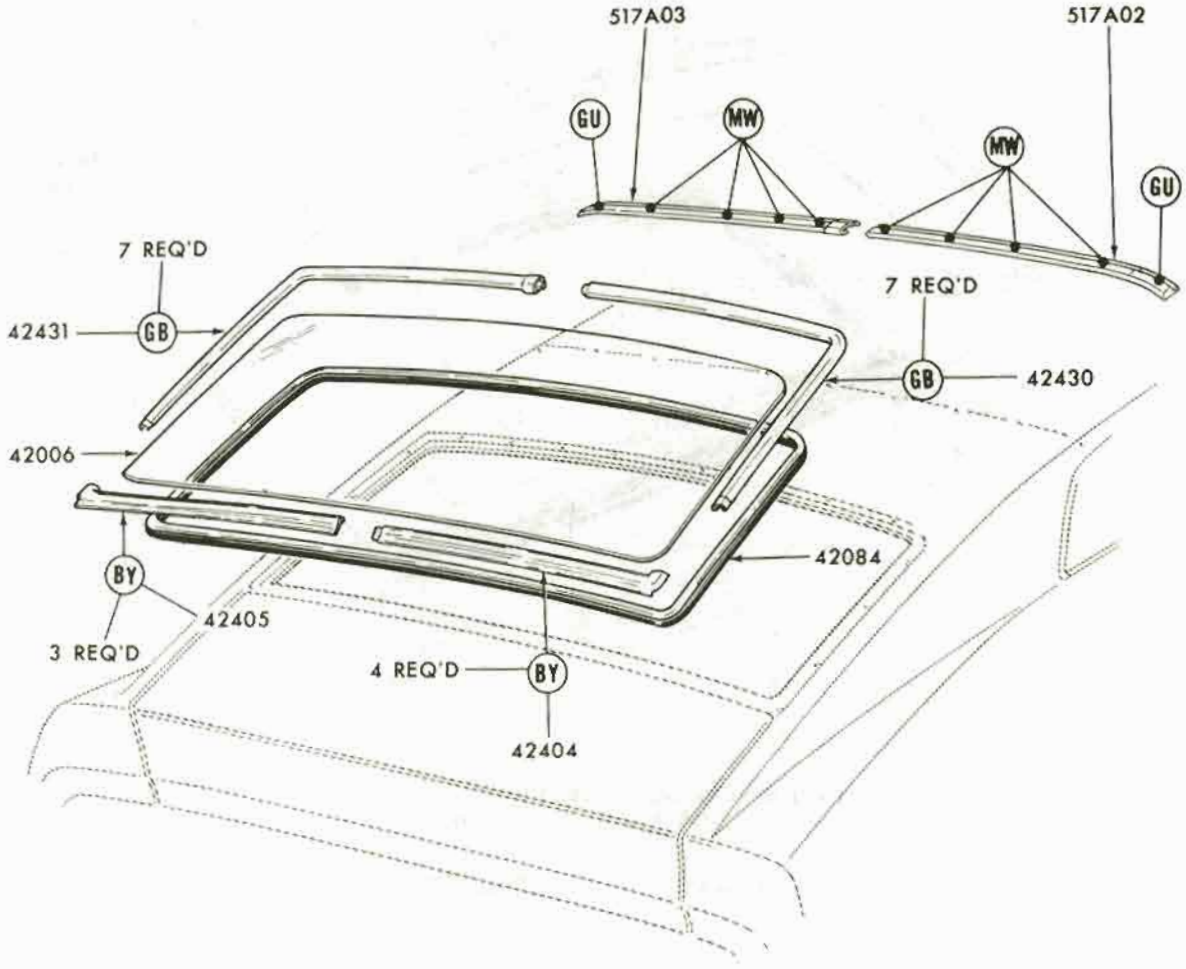

381671-S (UU-89-C)
BY

C8AZ-6342413-A
GB

383229-S (SS-44-E)
GU

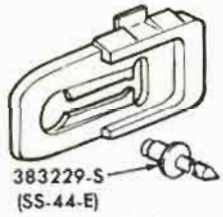

383229-S
(SS-44-E)
C8AZ-63423B06-A
MW

P-7857

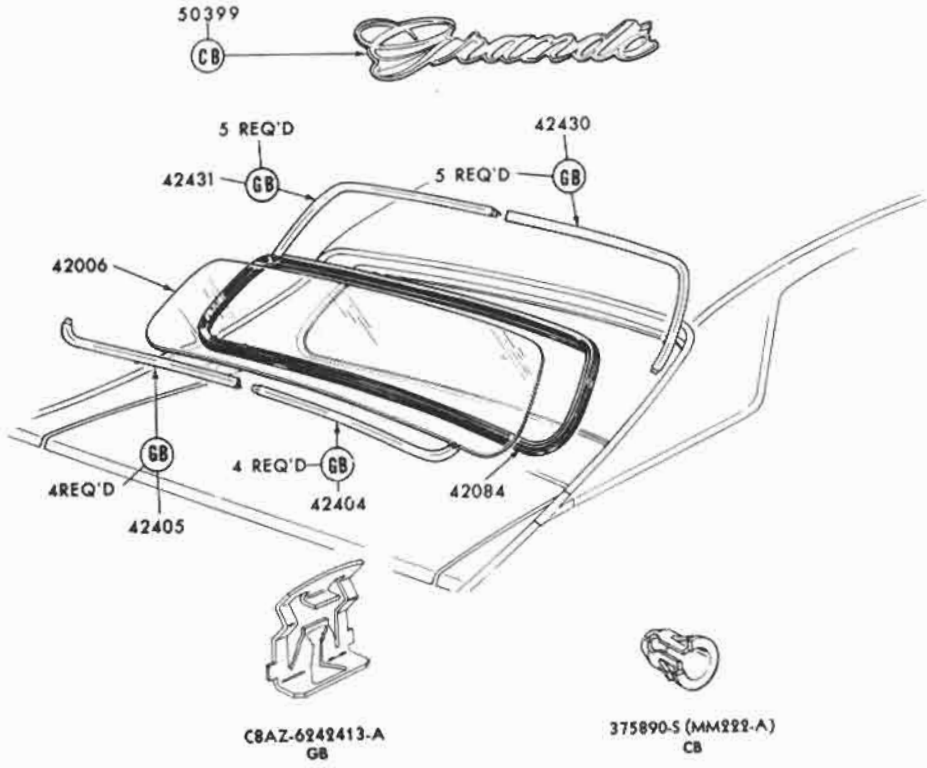

P-7856

BACK WINDOW and RELATED PARTS - OUTSIDE
1971/72 MUSTANG - BODY TYPE 65

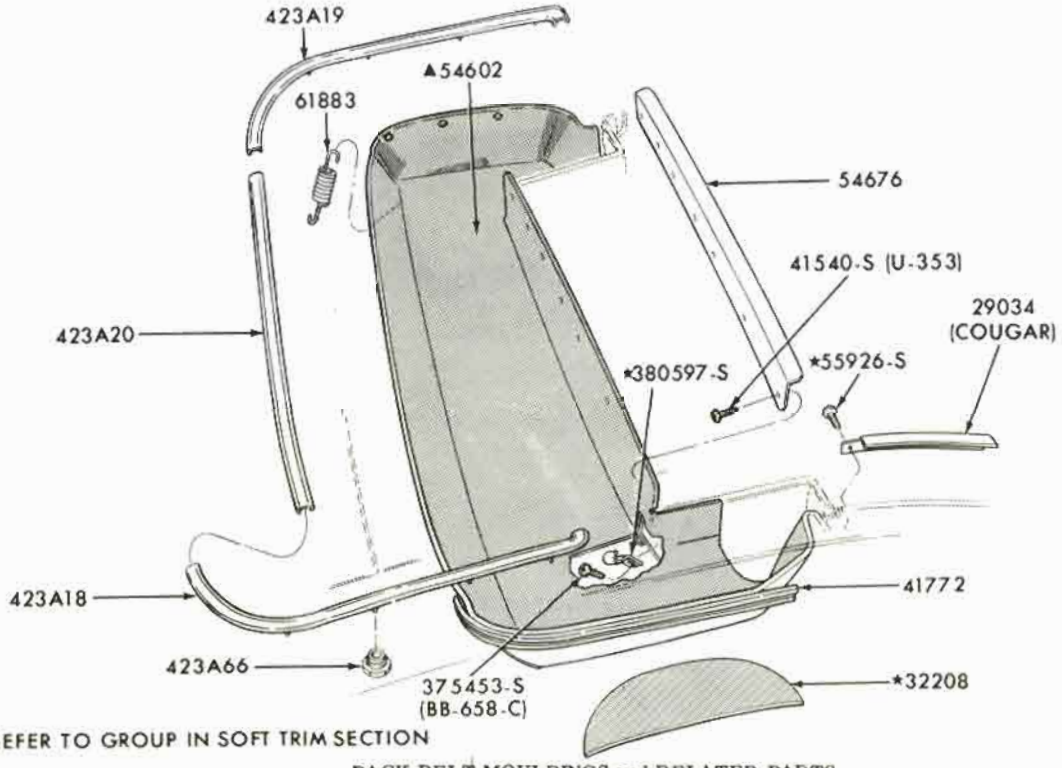

▲REFER TO GROUP IN SOFT TRIM SECTION

P-8277

BACK BELT MOULDINGS and RELATED PARTS
1971/72 MUSTANG - BODY TYPE 76

COPYRIGHT © 1975 — FORD MOTOR COMPANY — DEARBORN, MICHIGAN

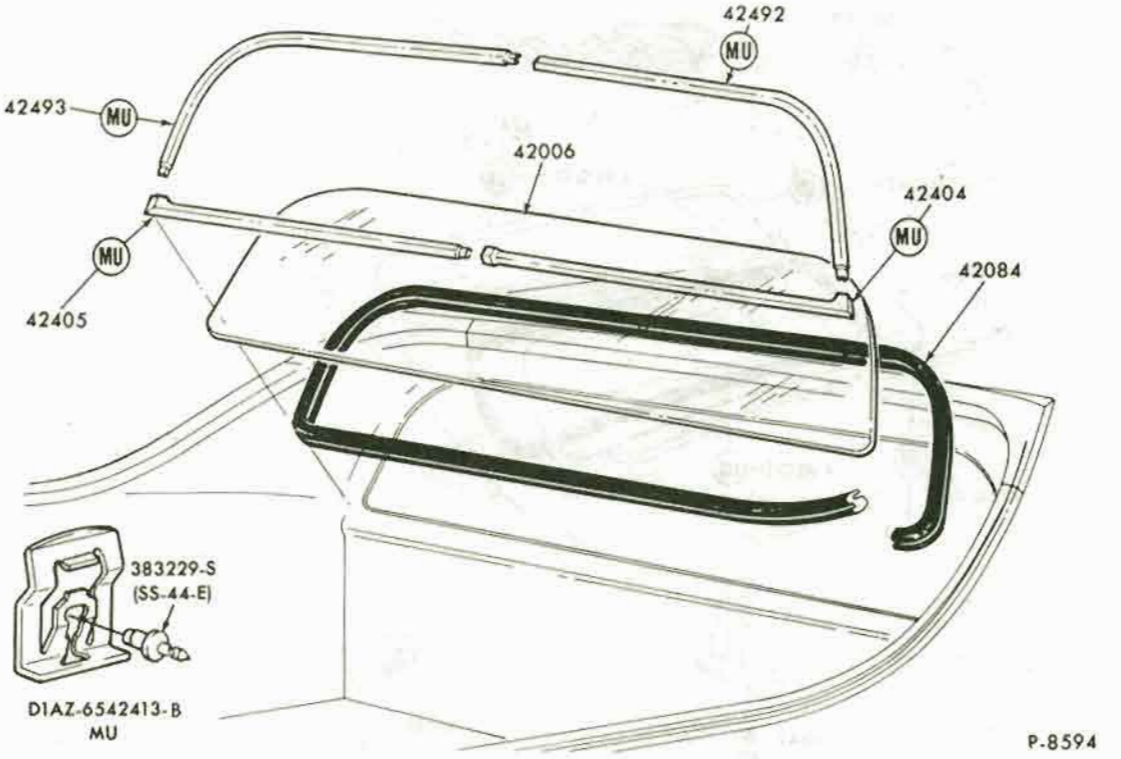

BACK WINDOW and RELATED PARTS
1972 TORINO - BODY TYPE 97

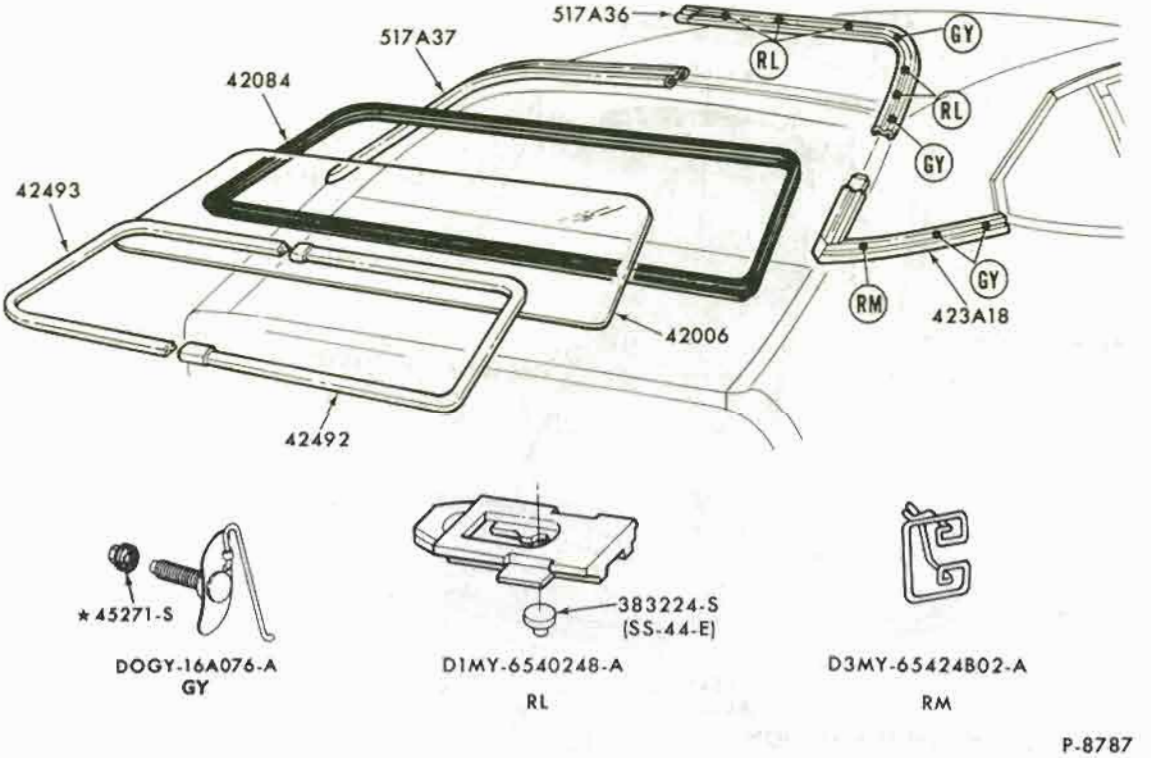

BACK WINDOW and RELATED PARTS
1972 PINTO - BODY TYPE 64

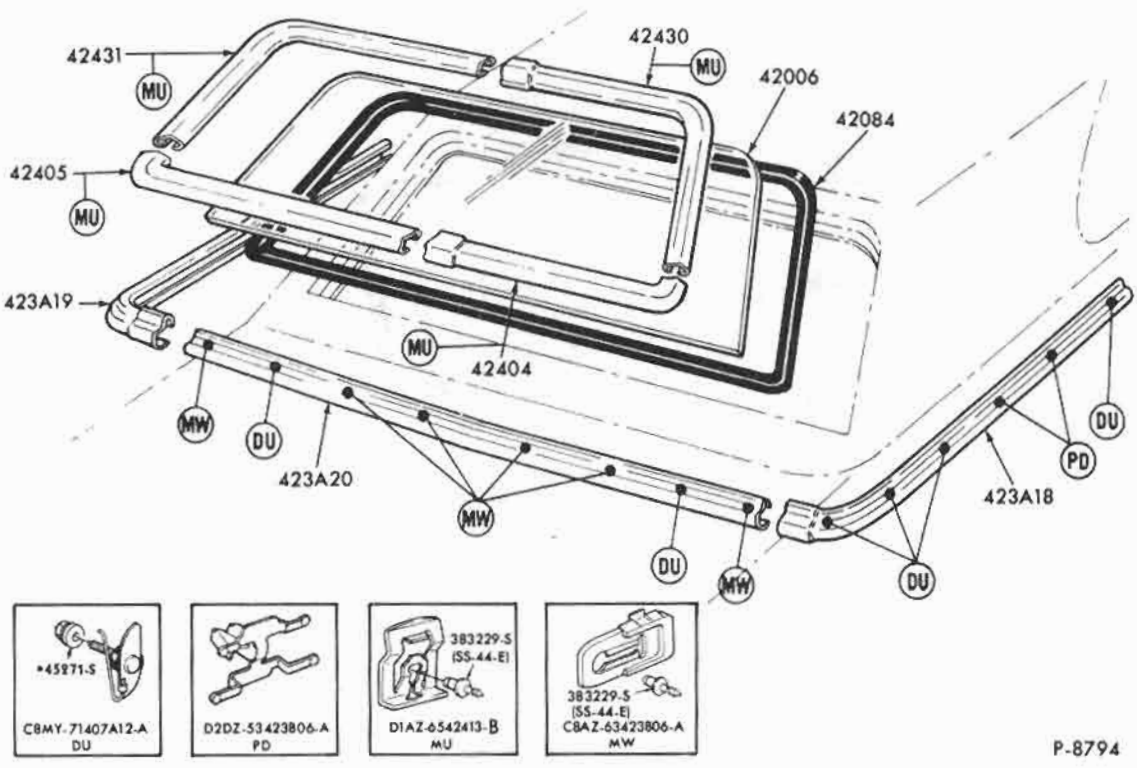

P-8794

BACK WINDOW and RELATED PARTS
1972 TORINO - BODY TYPE 53

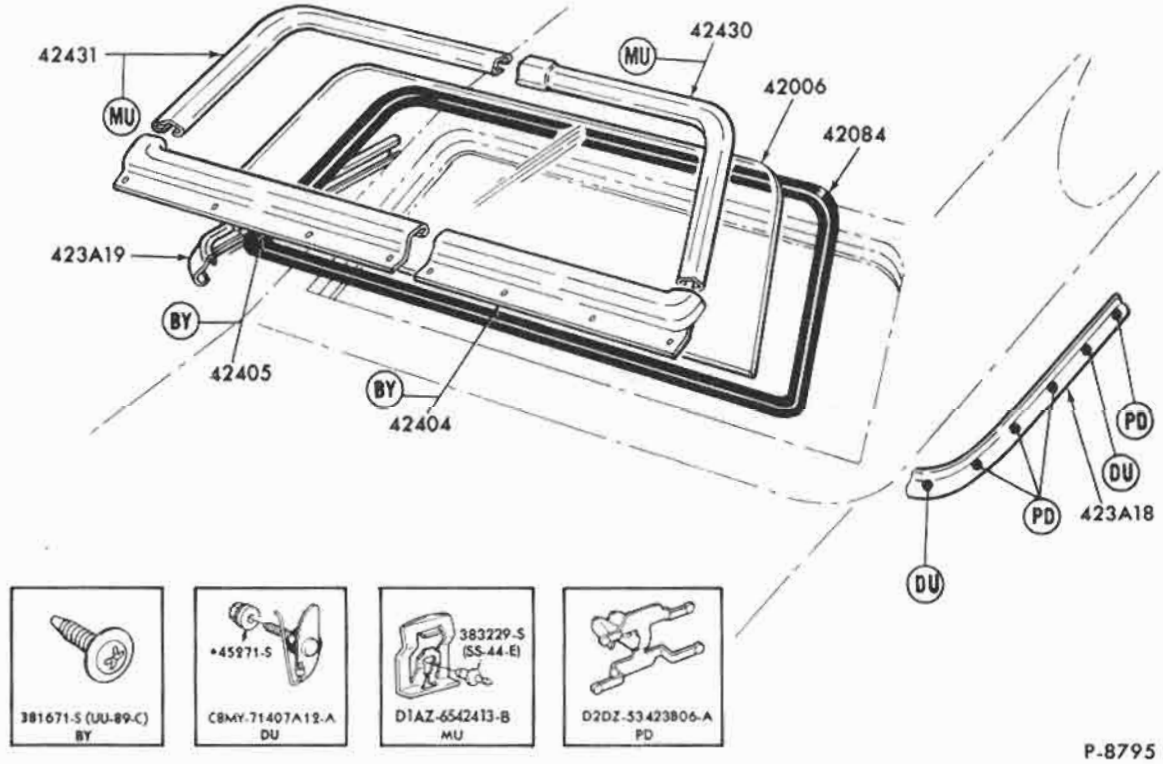

P-8795

BACK WINDOW and RELATED PARTS
1972 TORINO - BODY TYPE 63

COPYRIGHT © 1975 — FORD MOTOR COMPANY — DEARBORN, MICHIGAN

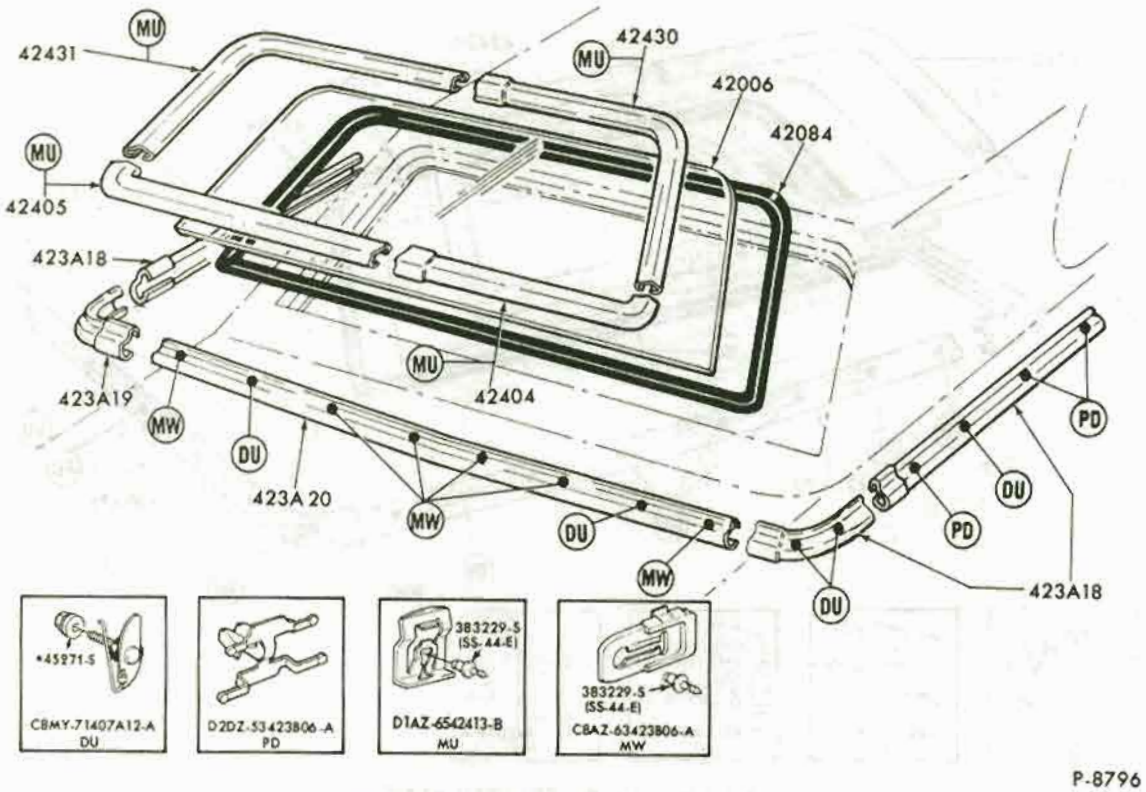

BACK WINDOW and RELATED PARTS - OUTSIDE
1972 TORINO - BODY TYPE 65

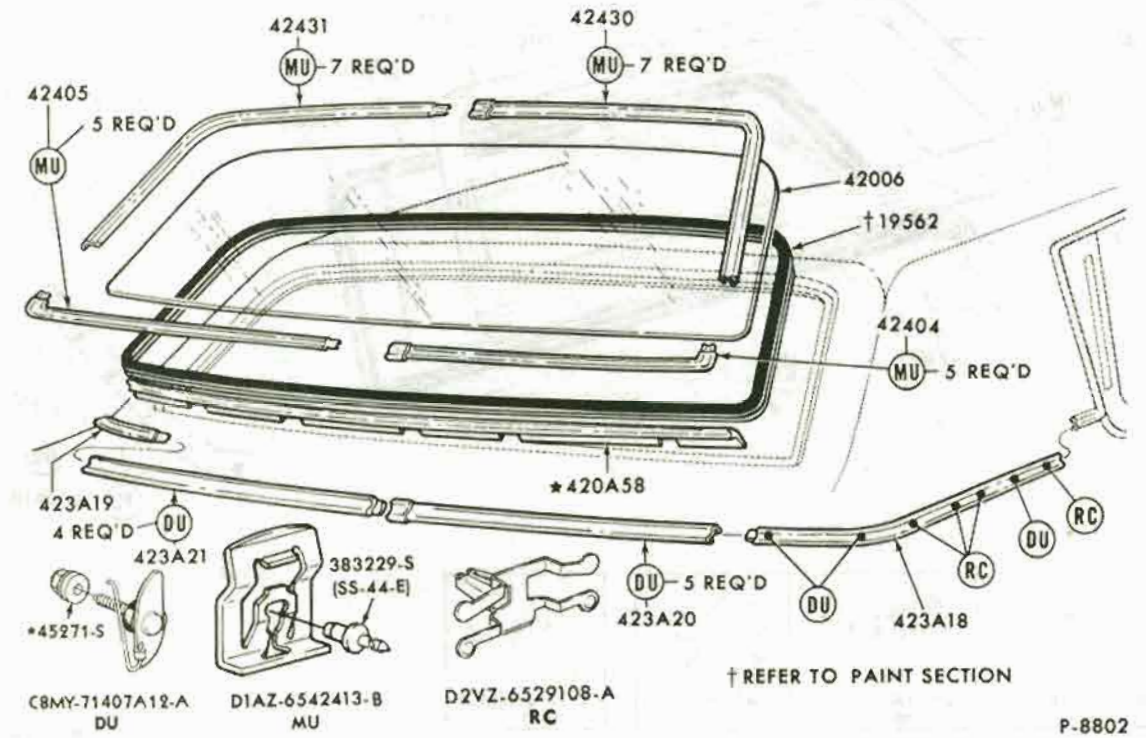

BACK WINDOW and RELATED PARTS - OUTSIDE
1972 THUNDERBIRD

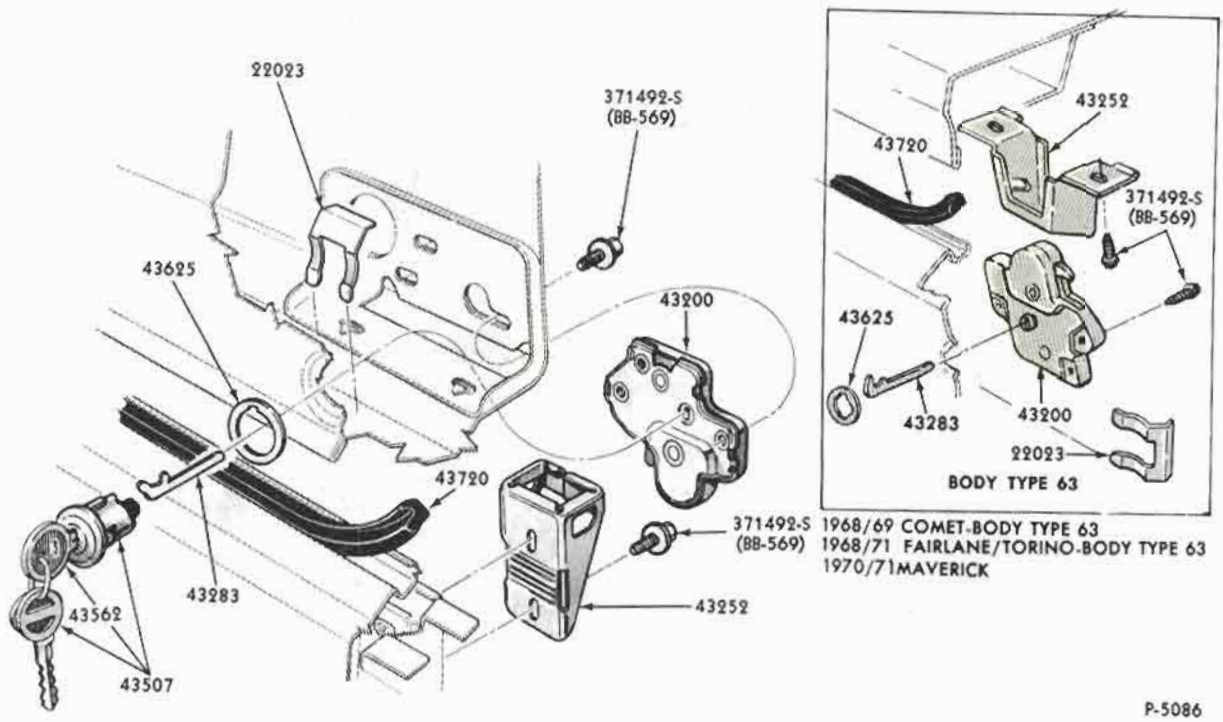

LUGGAGE COMPARTMENT DOOR LATCH and RELATED PARTS
1965/71 FORD (exc. BODY TYPE 71) 1966/71 FAIRLANE/TORINO (exc. BODY TYPE 71) 1970/71 MAVERICK

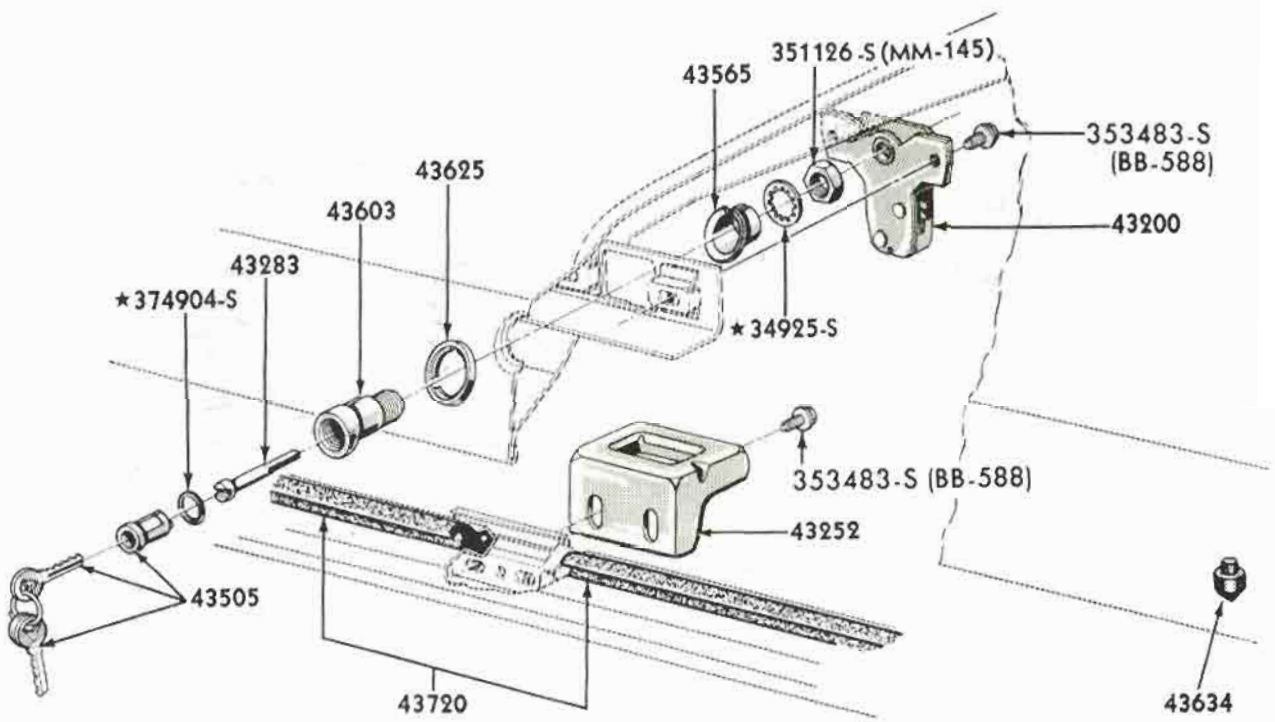

LUGGAGE COMPARTMENT DOOR LATCH and RELATED PARTS
1965 FAIRLANE - BODY TYPES 54,62,65

COPYRIGHT © 1975 — FORD MOTOR COMPANY — DEARBORN, MICHIGAN

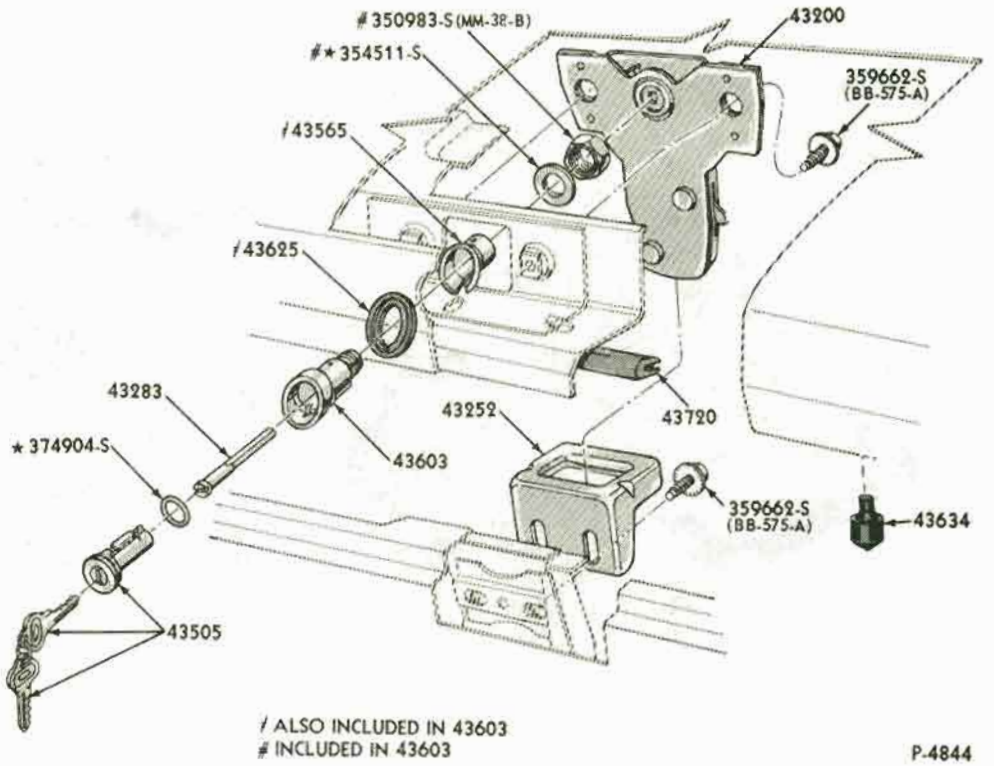

/ ALSO INCLUDED IN 43603
INCLUDED IN 43603

P-4844

LUGGAGE COMPARTMENT DOOR LATCH and RELATED PARTS
1965/66 MUSTANG - BODY TYPE 63

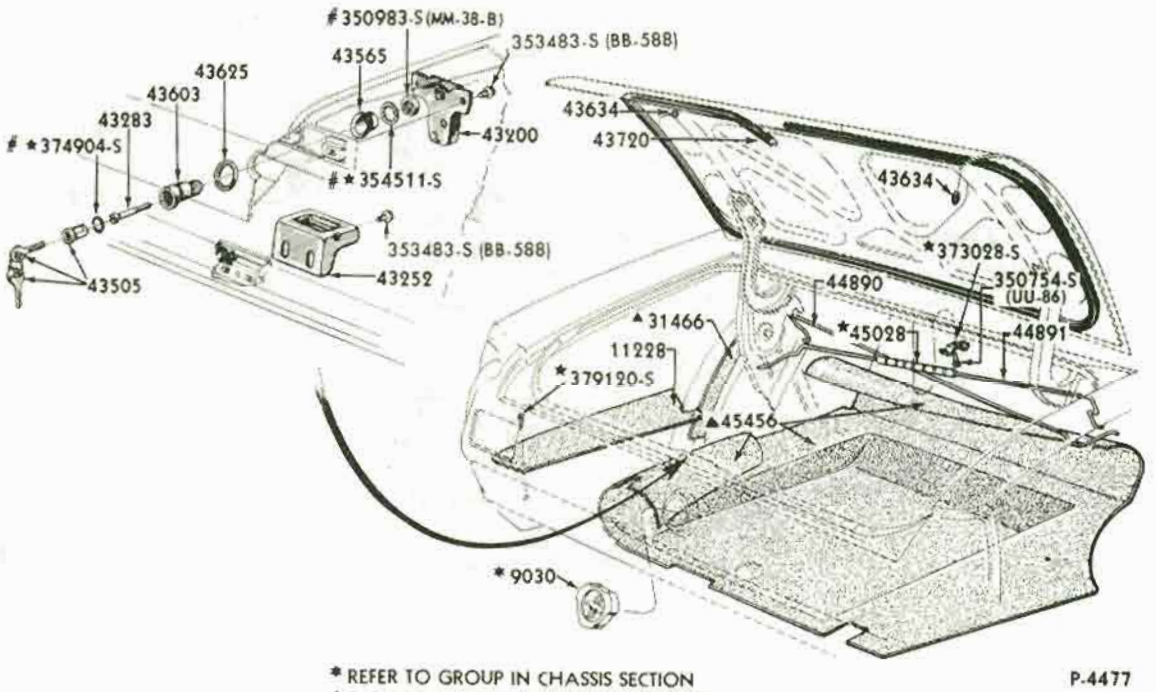

★ REFER TO GROUP IN CHASSIS SECTION
▲ REFER TO GROUP IN SOFT TRIM SECTION
ALSO SERVICED IN ASSEMBLY—GROUP 43603

P-4477

LUGGAGE COMPARTMENT DOOR LATCH and RELATED PARTS
1965/66 MUSTANG - BODY TYPES 65, 76

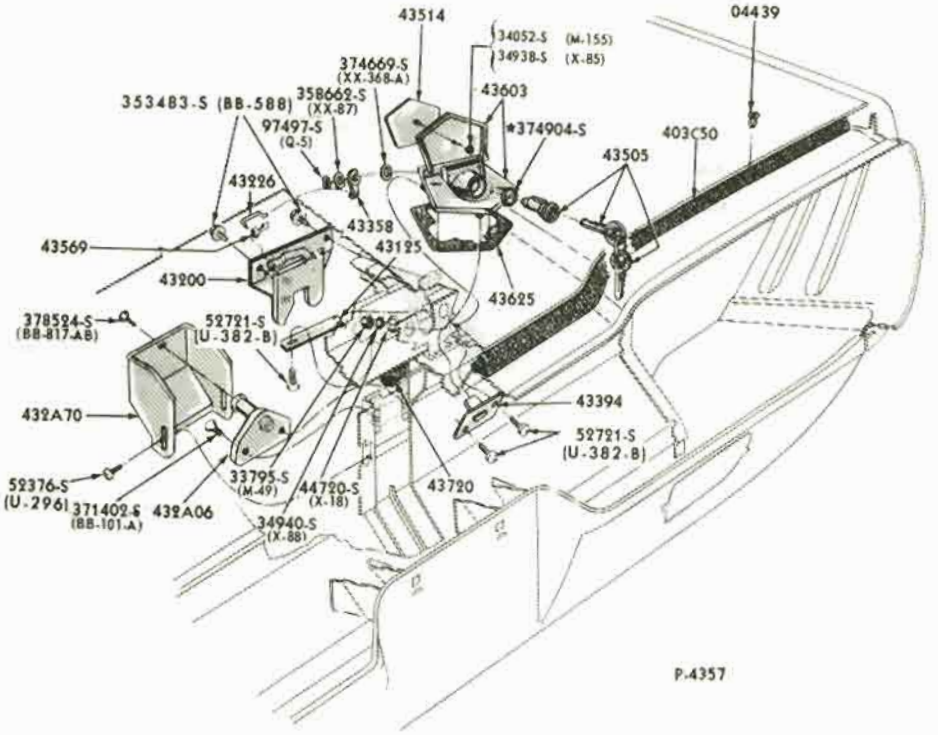

LUGGAGE COMPARTMENT DOOR LATCH and RELATED PARTS
1965/66 THUNDERBIRD - BODY TYPE 63

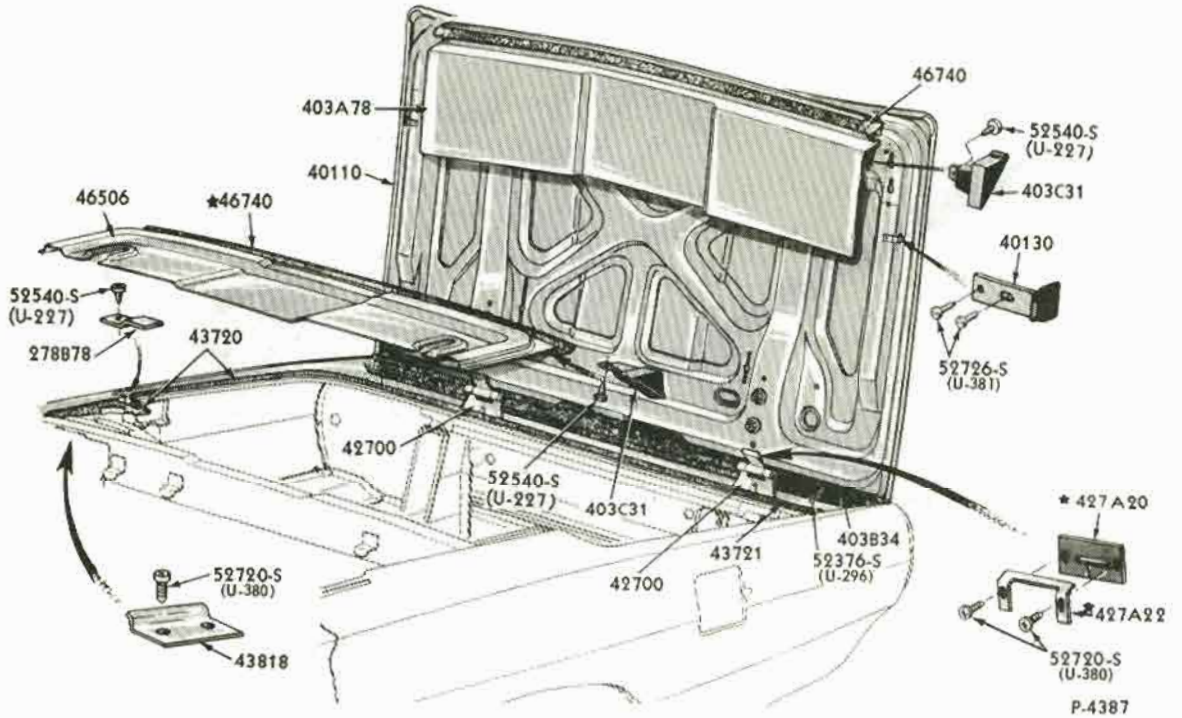

LUGGAGE COMPARTMENT DOOR WEATHERSTRIPS and RELATED PARTS
1965/66 THUNDERBIRD - BODY TYPE 76

COPYRIGHT © 1975 — FORD MOTOR COMPANY — DEARBORN, MICHIGAN

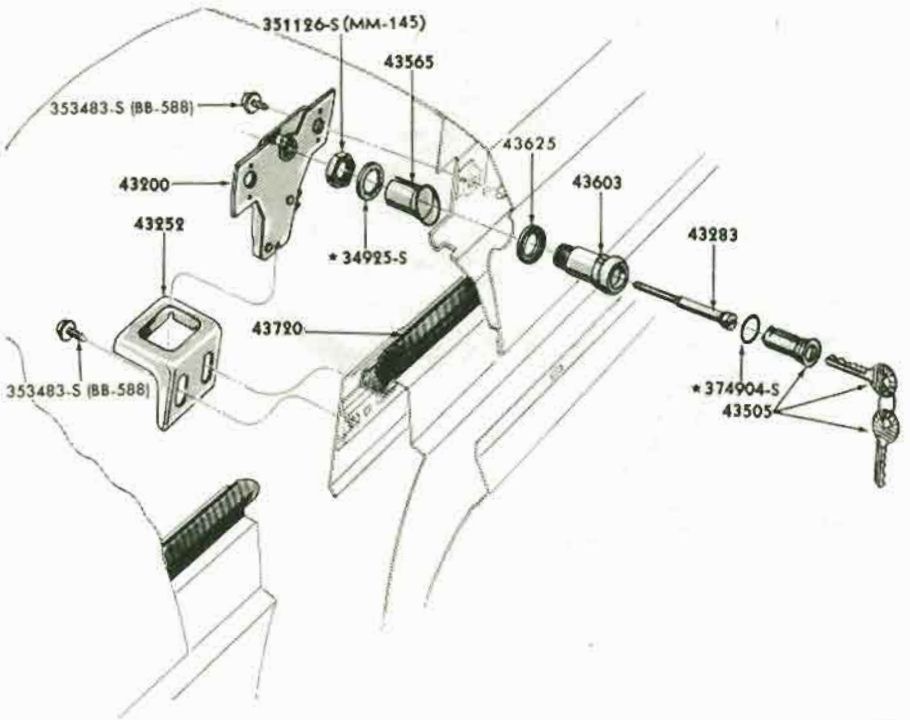

LUGGAGE COMPARTMENT DOOR LATCH and RELATED PARTS
1965 FALCON - BODY TYPES 54,62,63,76

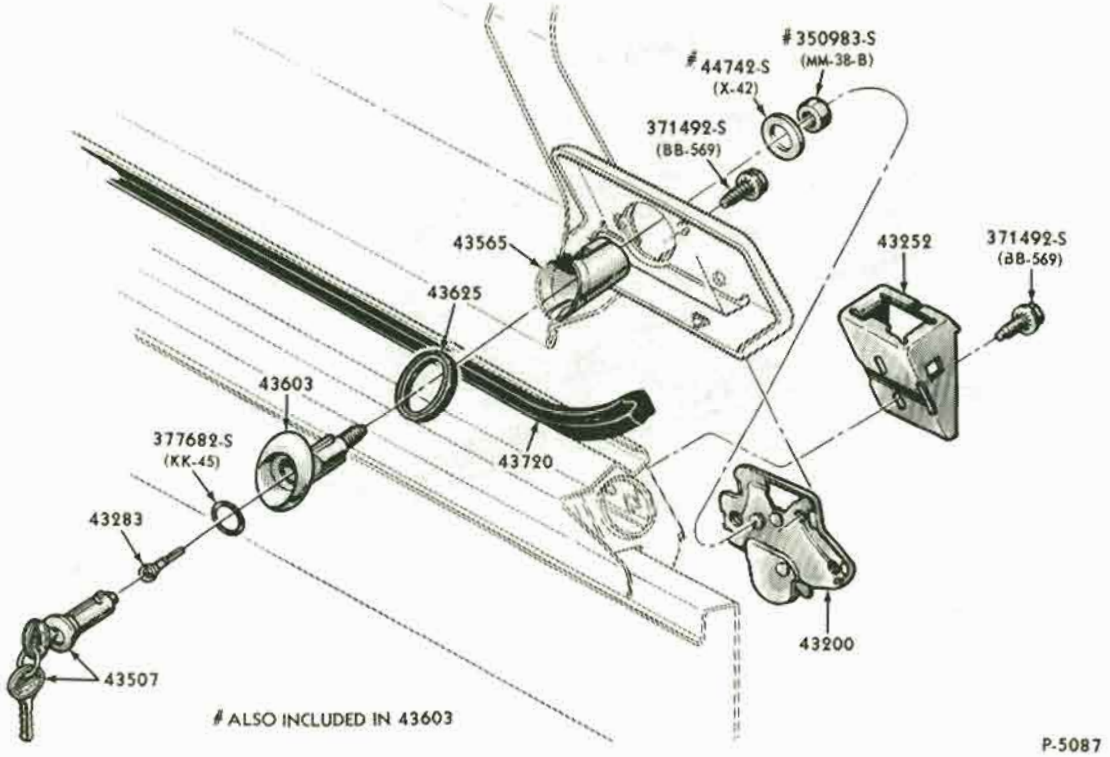

LUGGAGE COMPARTMENT DOOR LATCH and RELATED PARTS
1966/70 FALCON - BODY TYPE 54, 62

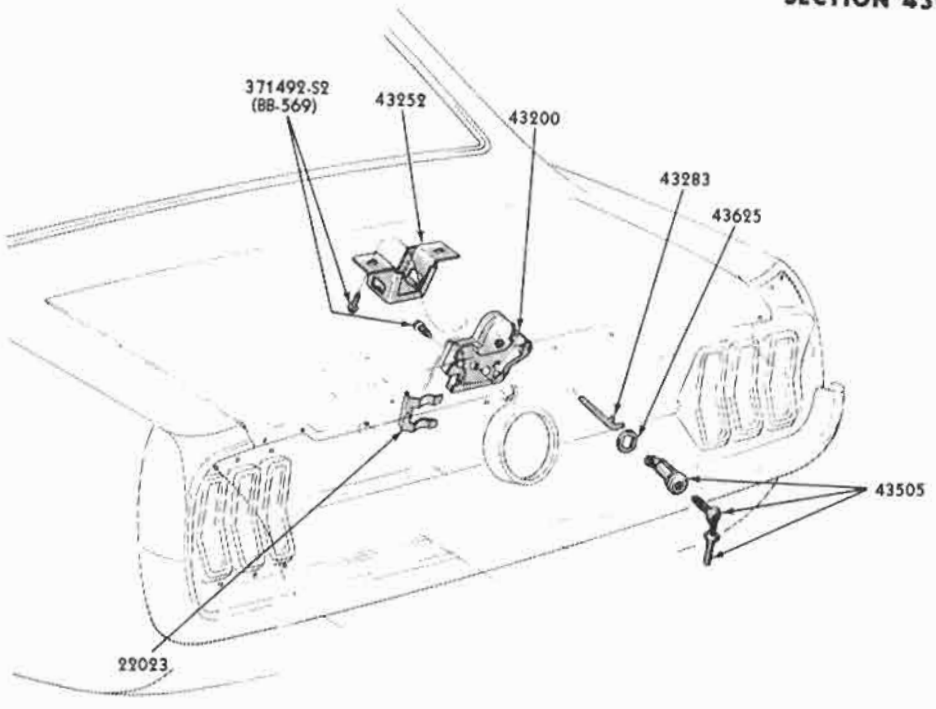

P-5634

LUGGAGE COMPARTMENT DOOR LATCH and RELATED PARTS
1967/70 MUSTANG

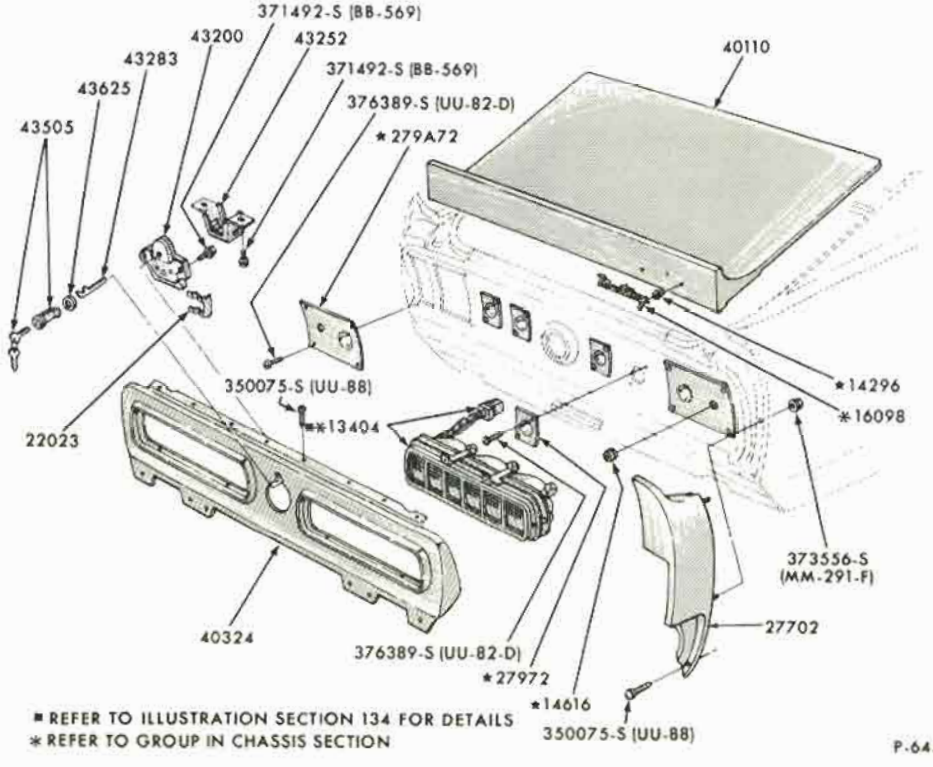

■ REFER TO ILLUSTRATION SECTION 134 FOR DETAILS
* REFER TO GROUP IN CHASSIS SECTION

P-6456

LUGGAGE COMPARTMENT DOOR LATCH and RELATED PARTS
1968 MUSTANG - BODY TYPE 65 GT/CS

COPYRIGHT © 1975 — FORD MOTOR COMPANY — DEARBORN, MICHIGAN

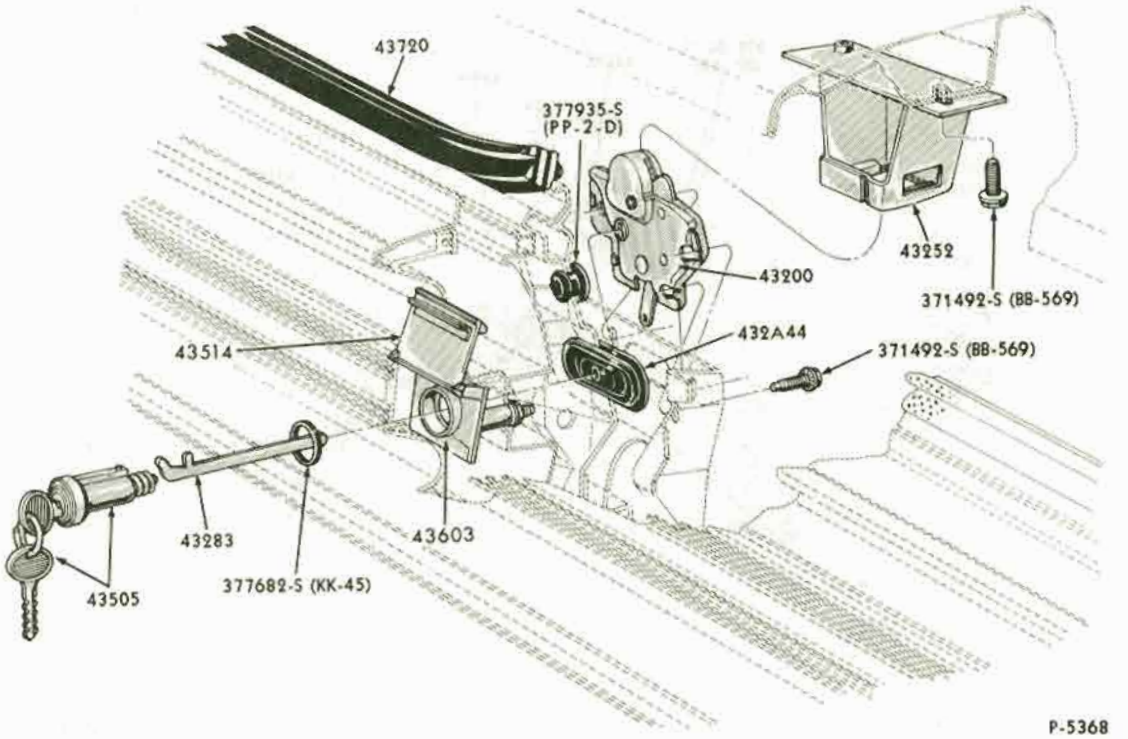

LUGGAGE COMPARTMENT DOOR LATCH and RELATED PARTS
1967/71 THUNDERBIRD

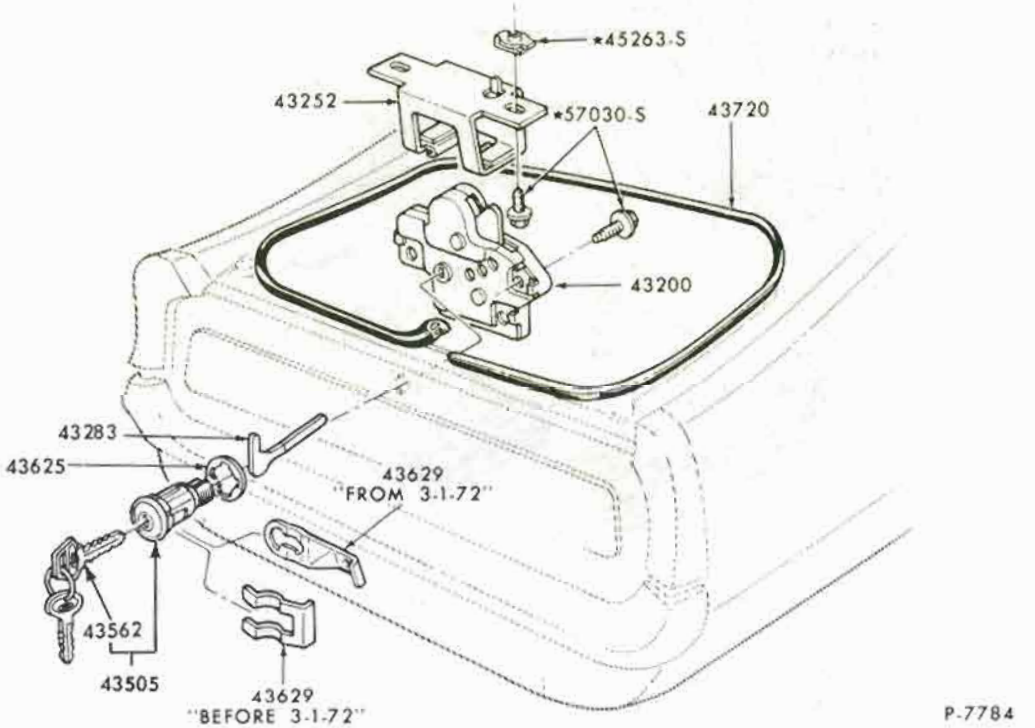

LUGGAGE COMPARTMENT DOOR LATCH and RELATED PARTS
1971/72 PINTO - BODY TYPES 62,64

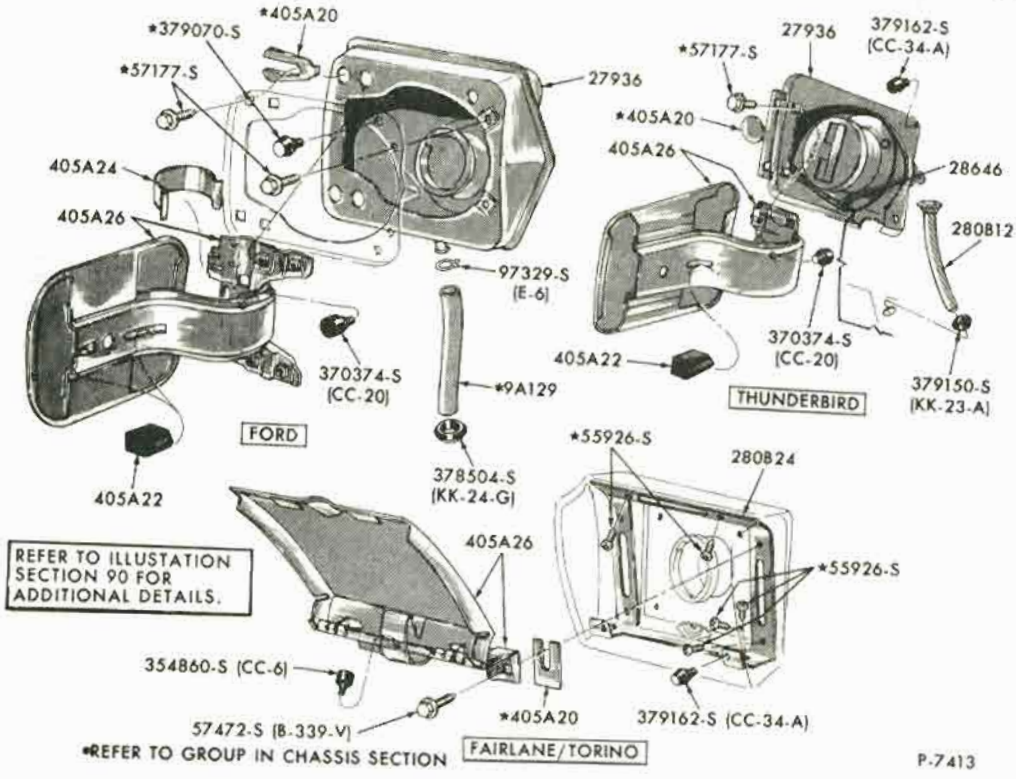

FUEL FILLER DOORS
1970/71 ALL

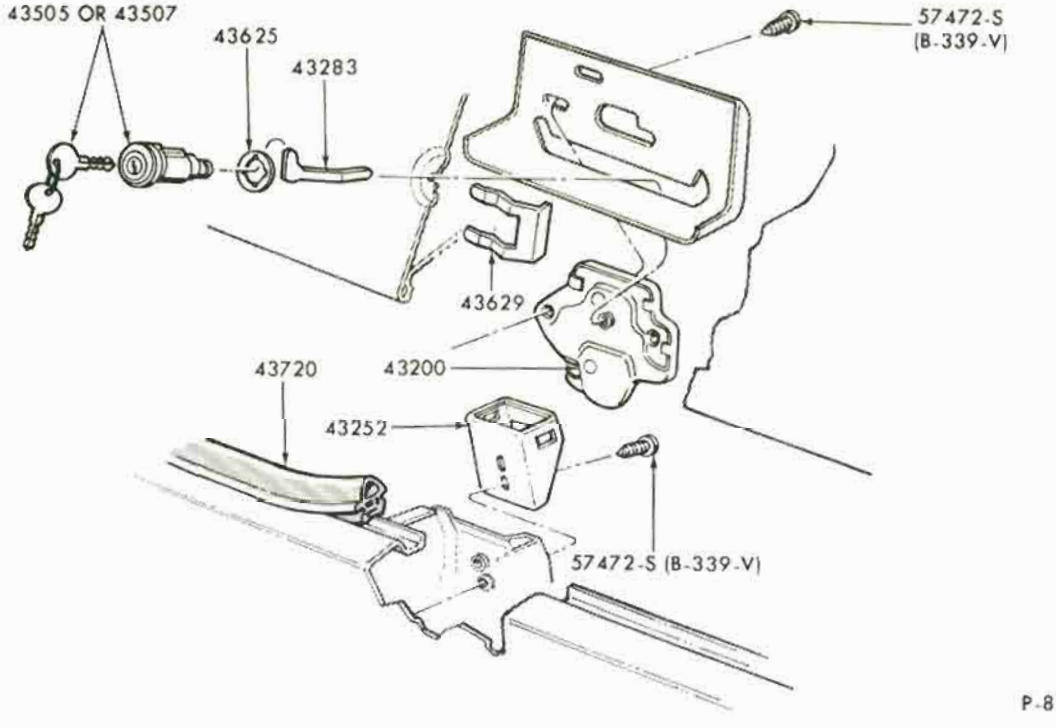

LUGGAGE COMPARTMENT DOOR LATCH and RELATED PARTS
1971 MUSTANG

COPYRIGHT © 1975 — FORD MOTOR COMPANY — DEARBORN, MICHIGAN

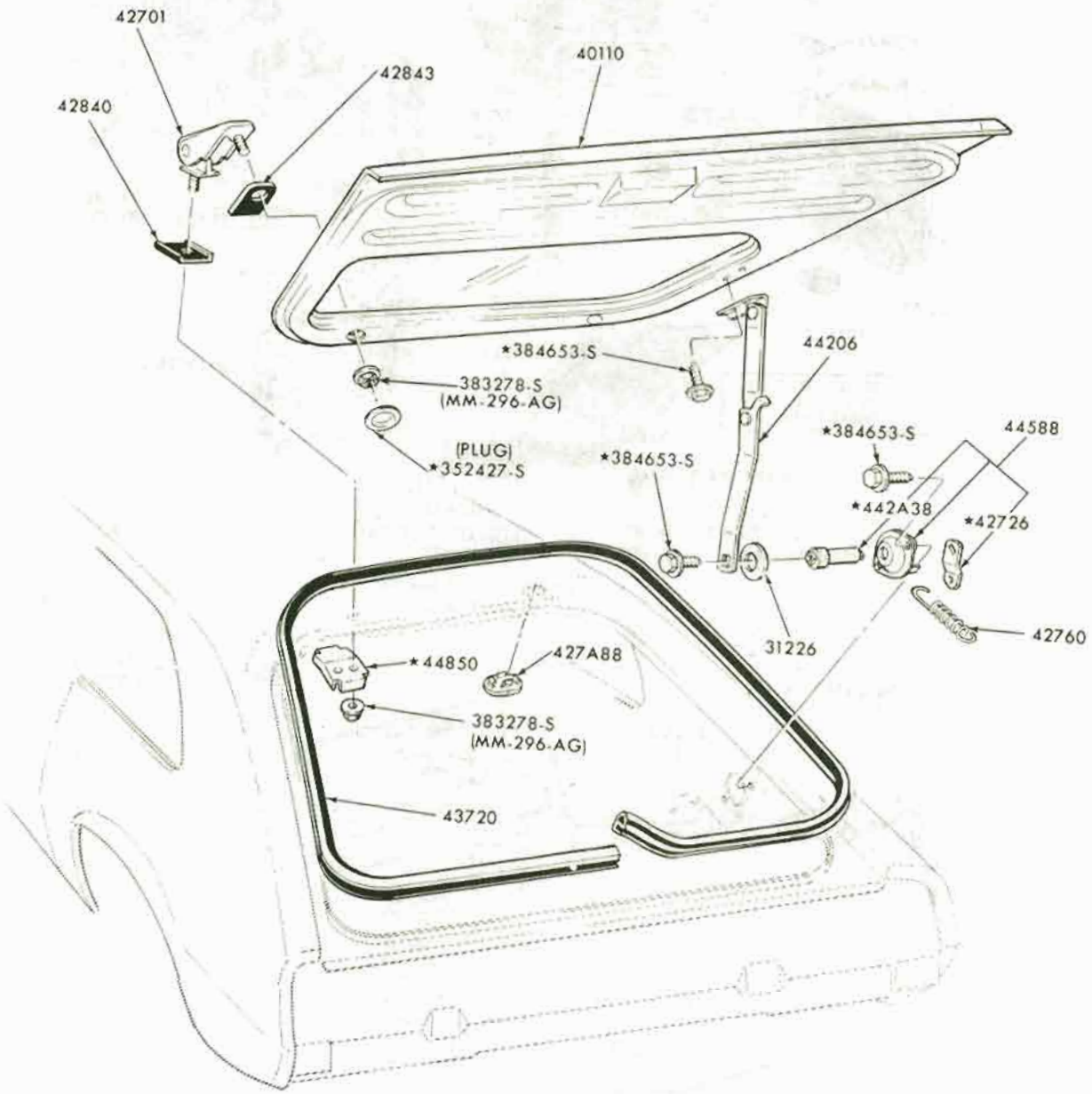

P-8272

LUGGAGE COMPARTMENT DOOR and RELATED PARTS
1971/72 PINTO - BODY TYPE 64 - "BEFORE 12/1/71"

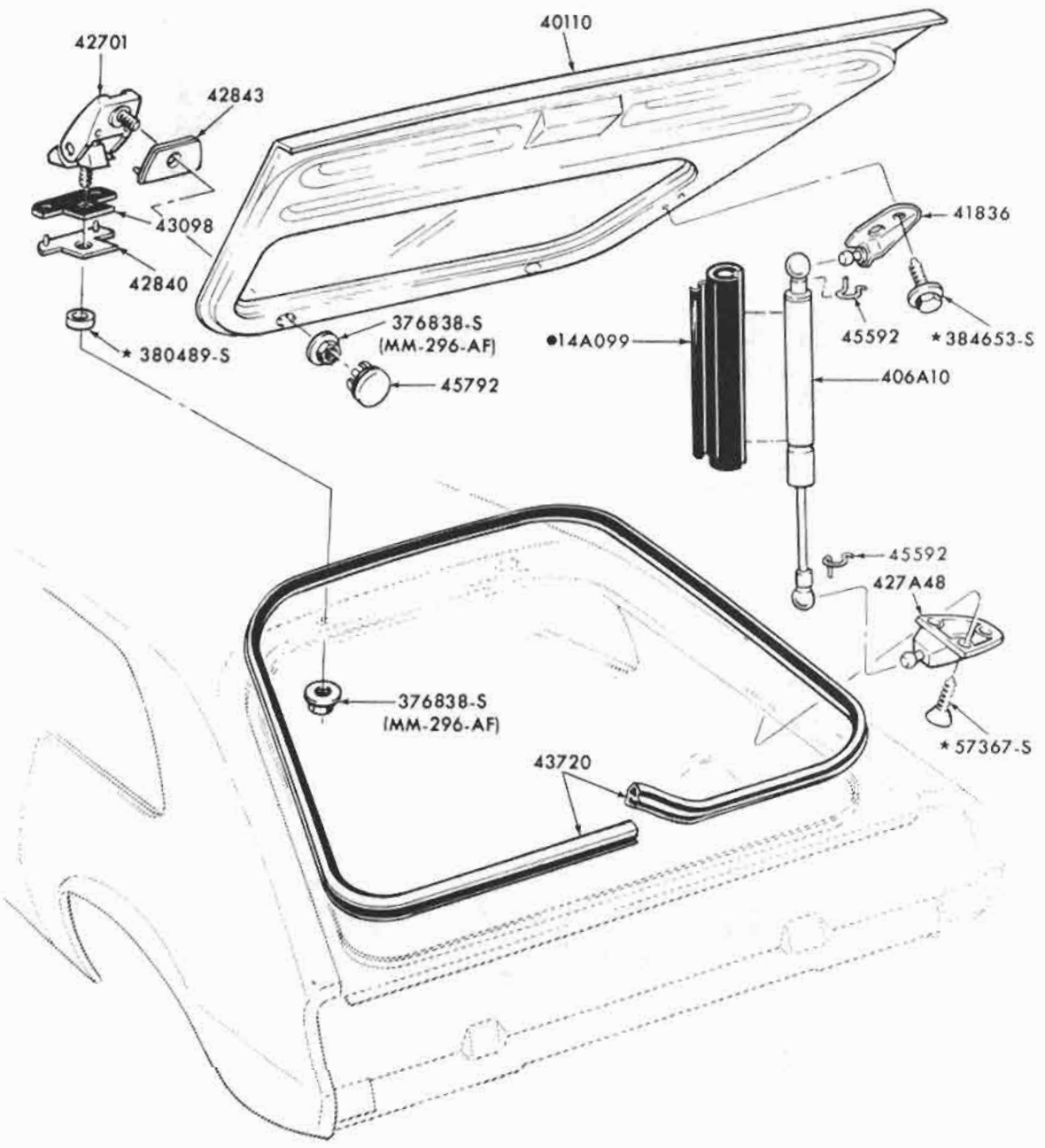

•REFER TO CHASSIS SECTION

P-8938

LUGGAGE COMPARTMENT DOOR and RELATED PARTS
1972 PINTO - BODY TYPE 64 - "FROM 12/1/71"

COPYRIGHT © 1975 — FORD MOTOR COMPANY — DEARBORN, MICHIGAN

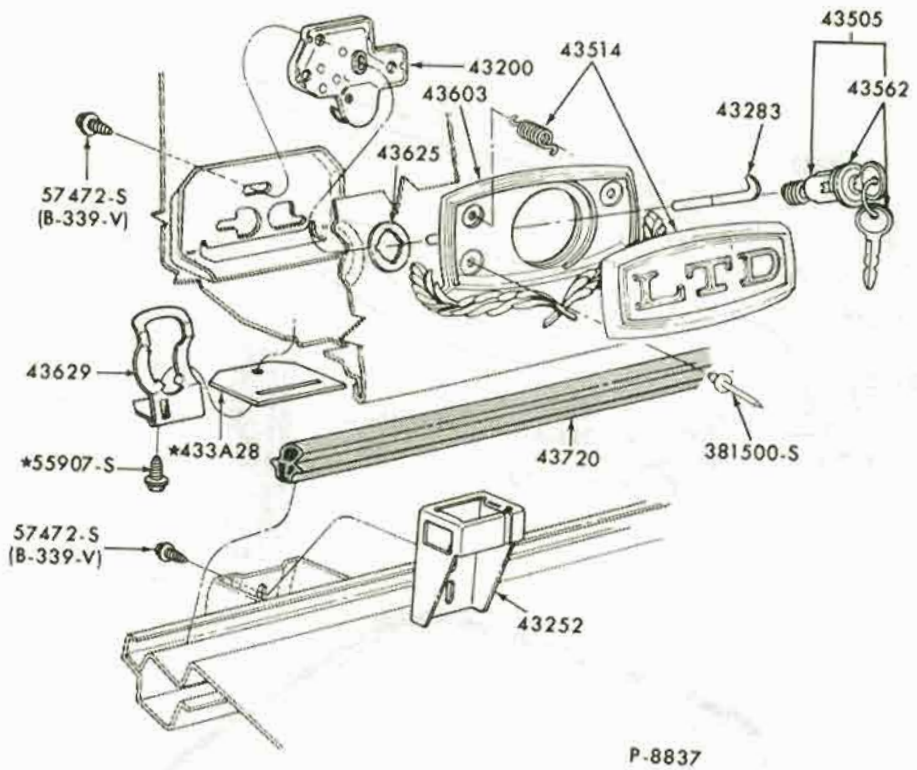

LUGGAGE COMPARTMENT DOOR LATCH and RELATED PARTS
1972 FORD - exc. BODY TYPE 71

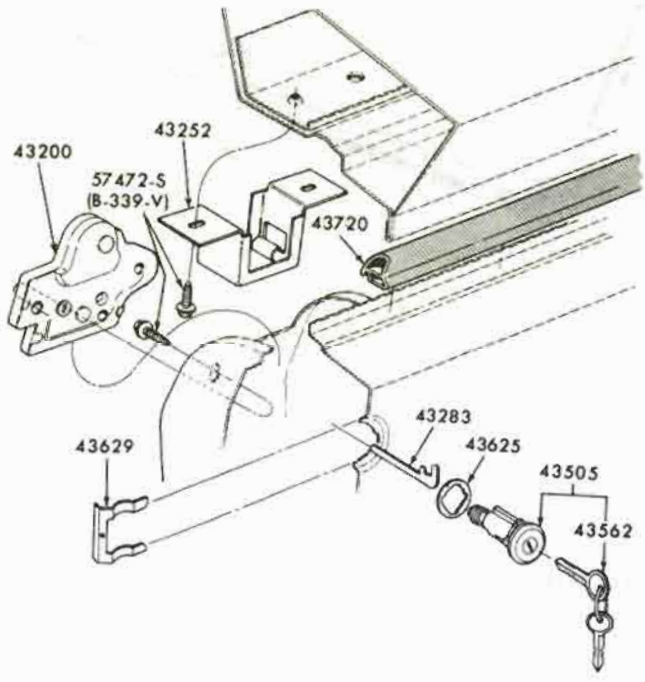

LUGGAGE COMPARTMENT DOOR LATCH and RELATED PARTS
1972 MAVERICK

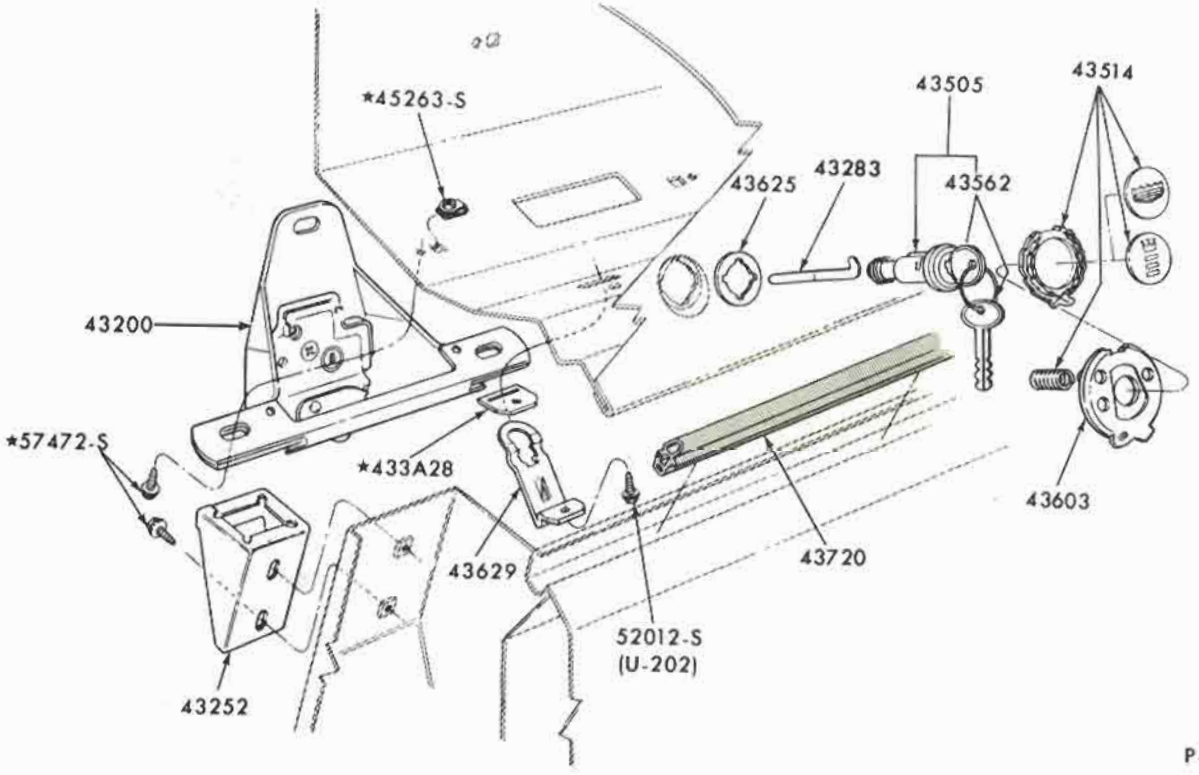

P-8595

LUGGAGE COMPARTMENT DOOR LATCH and RELATED PARTS
1972 TORINO

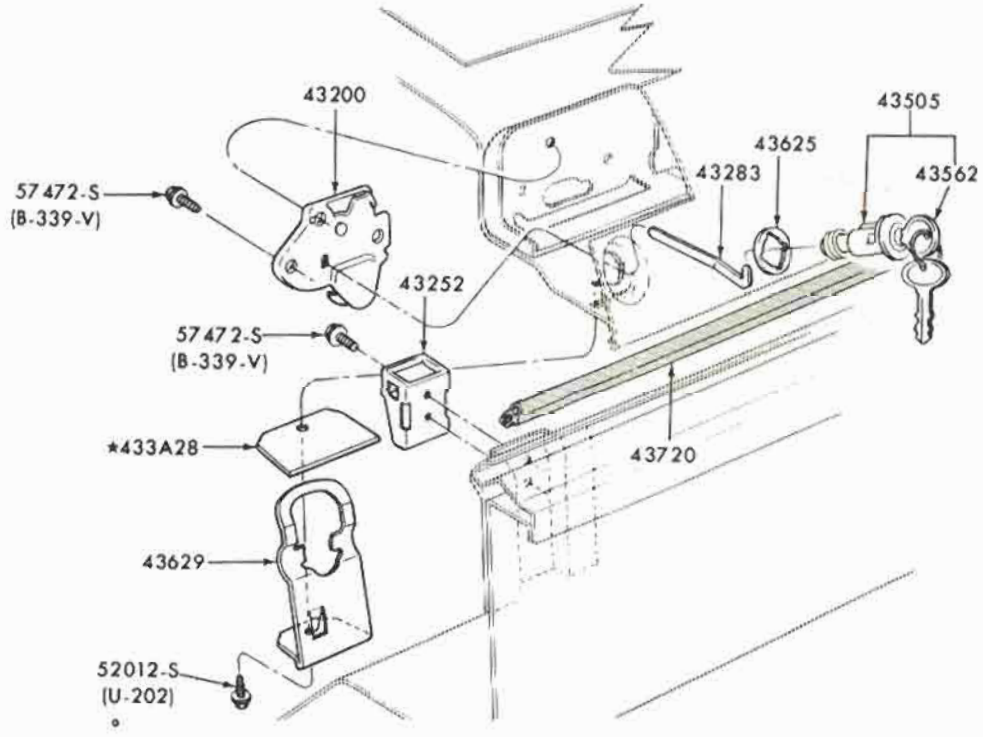

P-8592

LUGGAGE COMPARTMENT DOOR LATCH and RELATED PARTS
1972 THUNDERBIRD

COPYRIGHT © 1975 — FORD MOTOR COMPANY — DEARBORN, MICHIGAN

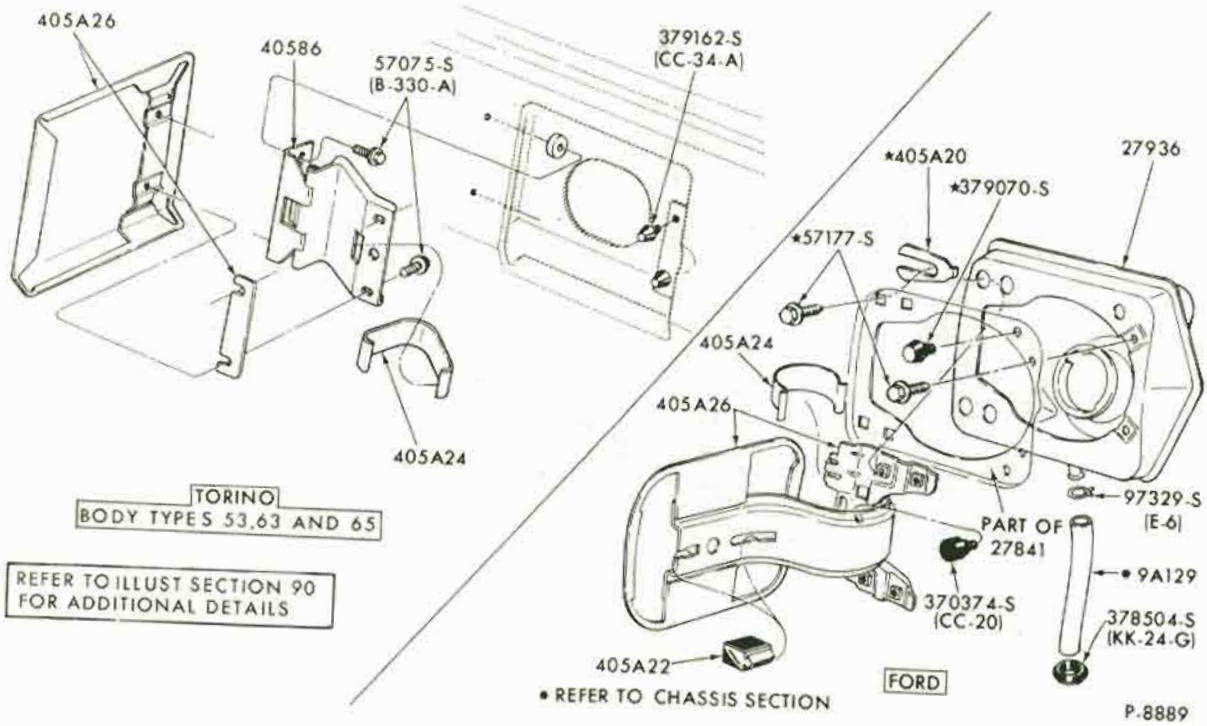

FUEL FILLER DOORS
1972 FORD and TORINO

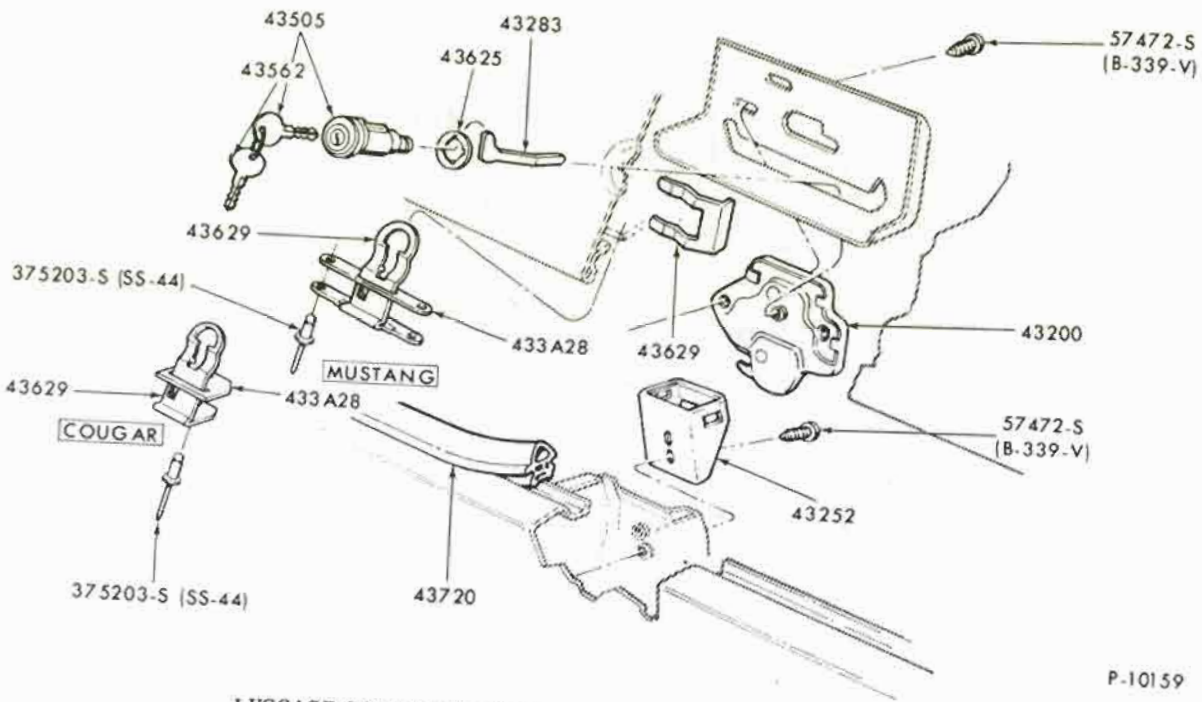

LUGGAGE COMPARTMENT DOOR LATCH and RELATED PARTS
1972 MUSTANG

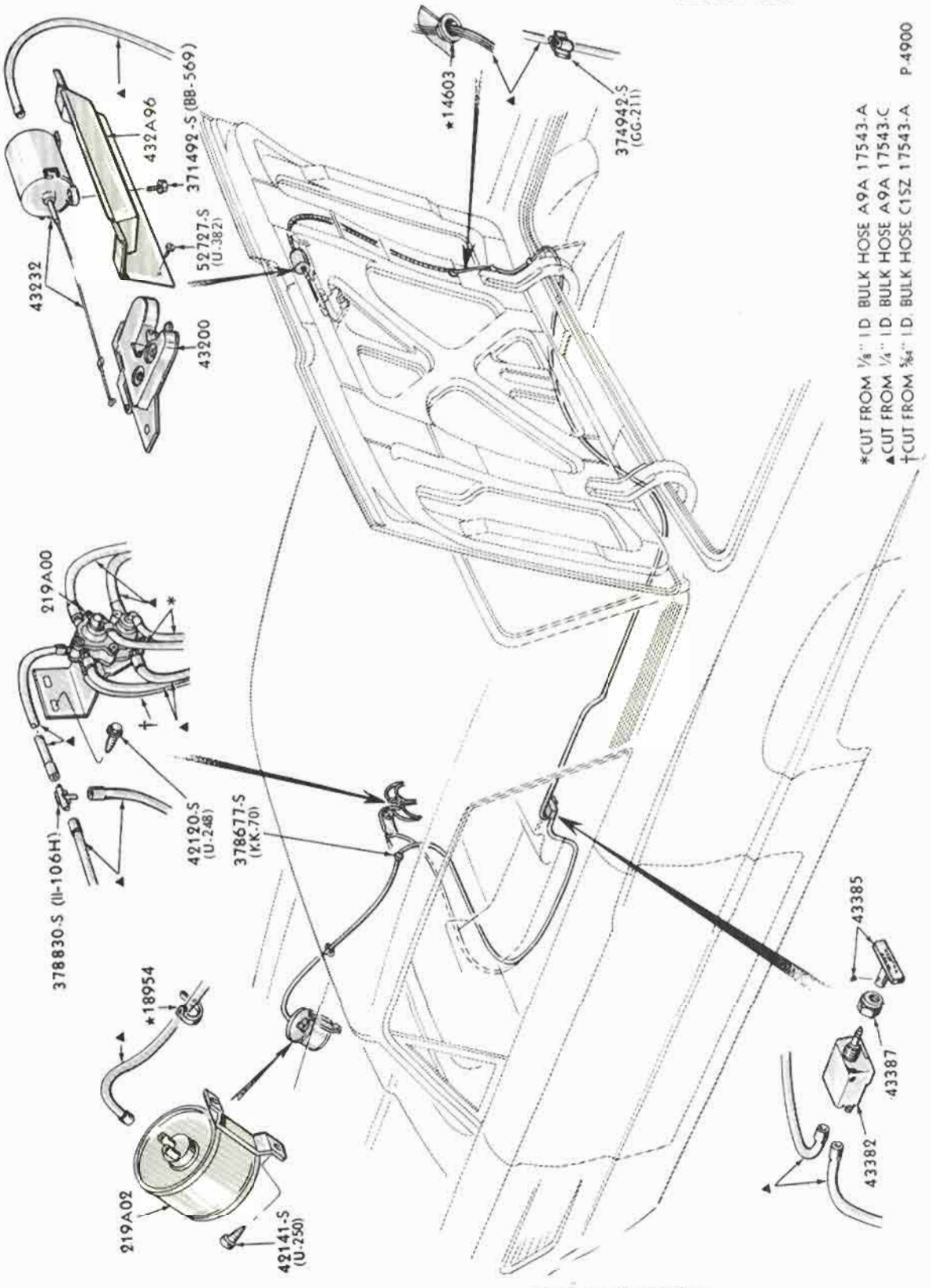

LUGGAGE COMPARTMENT VACUUM DOOR LATCH SYSTEM
1965/66 THUNDERBIRD - BODY TYPE 63

COPYRIGHT © 1975 — FORD MOTOR COMPANY — DEARBORN, MICHIGAN

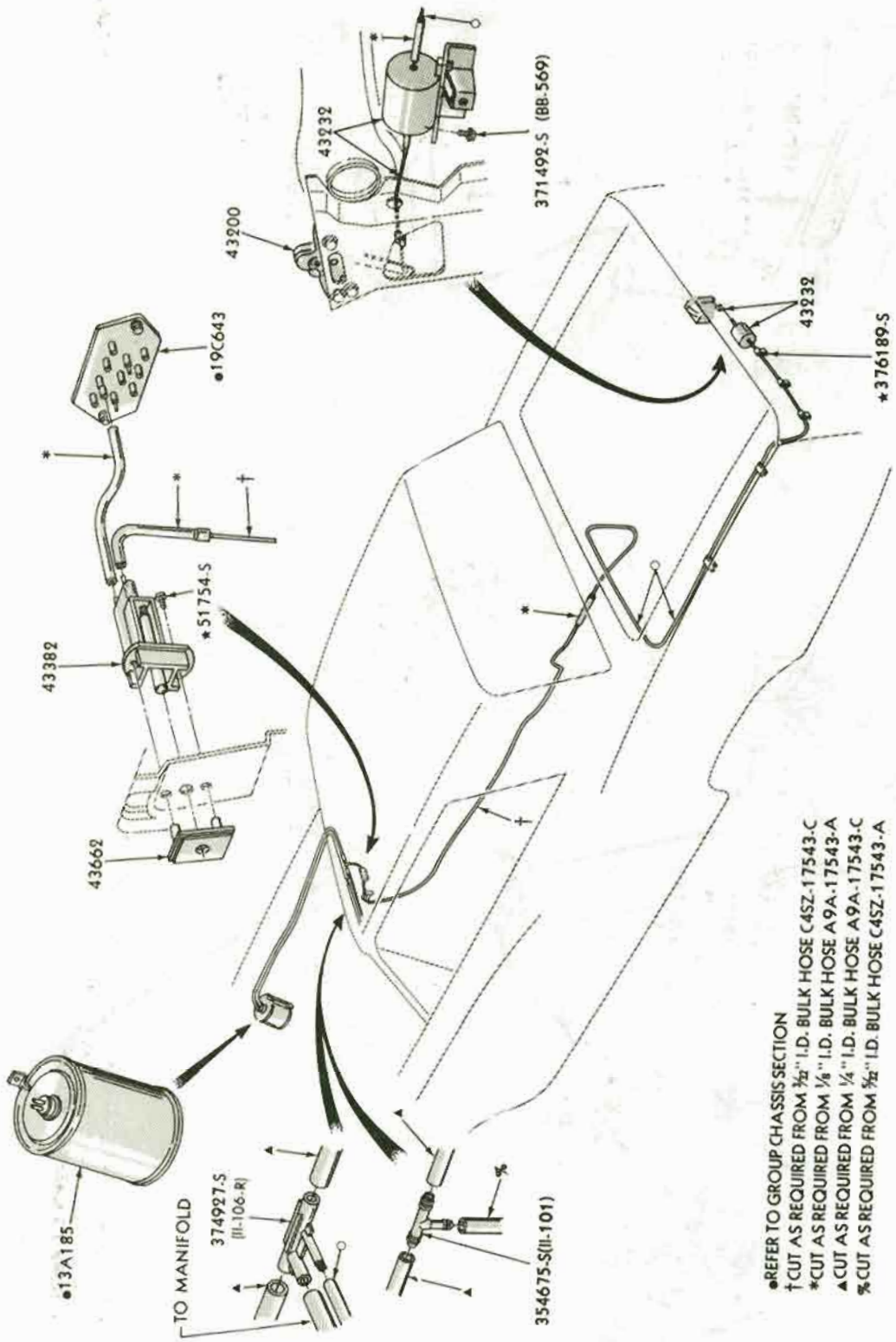

LUGGAGE COMPARTMENT VACUUM DOOR LATCH SYSTEM
1967/70 THUNDERBIRD

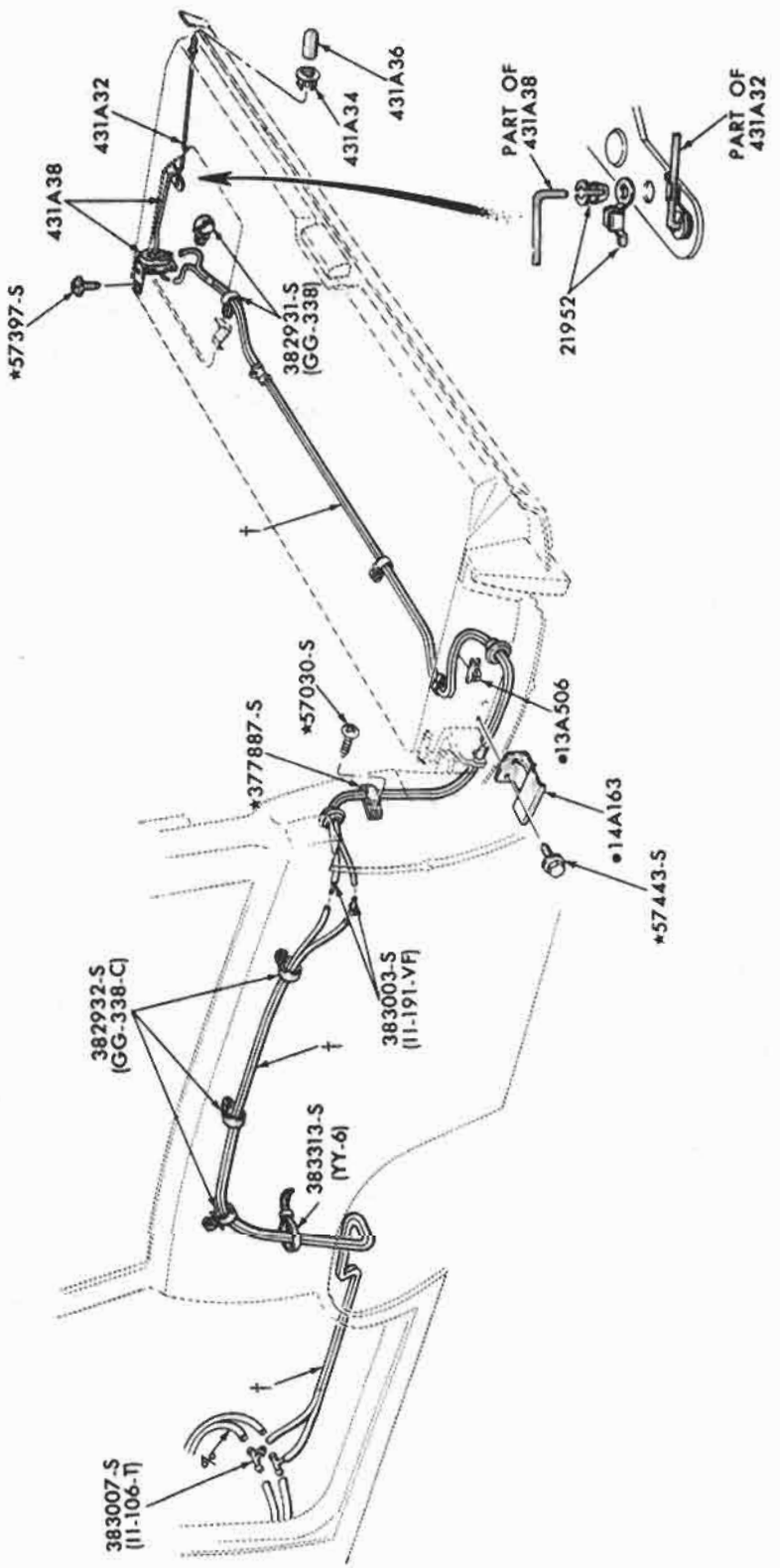

% FOR CONTINUATION OF SYSTEM SEE VACUUM DOOR LATCH
† IMPROVISE FROM BULK HOSE (17543)
• REFER TO CHASSIS SECTION

TAIL GATE - VACUUM LATCH SYSTEM
1970/72 FORD - BODY TYPE 71
1970/71 FAIRLANE/TORINO - BODY TYPE 71

COPYRIGHT © 1975 — FORD MOTOR COMPANY — DEARBORN, MICHIGAN

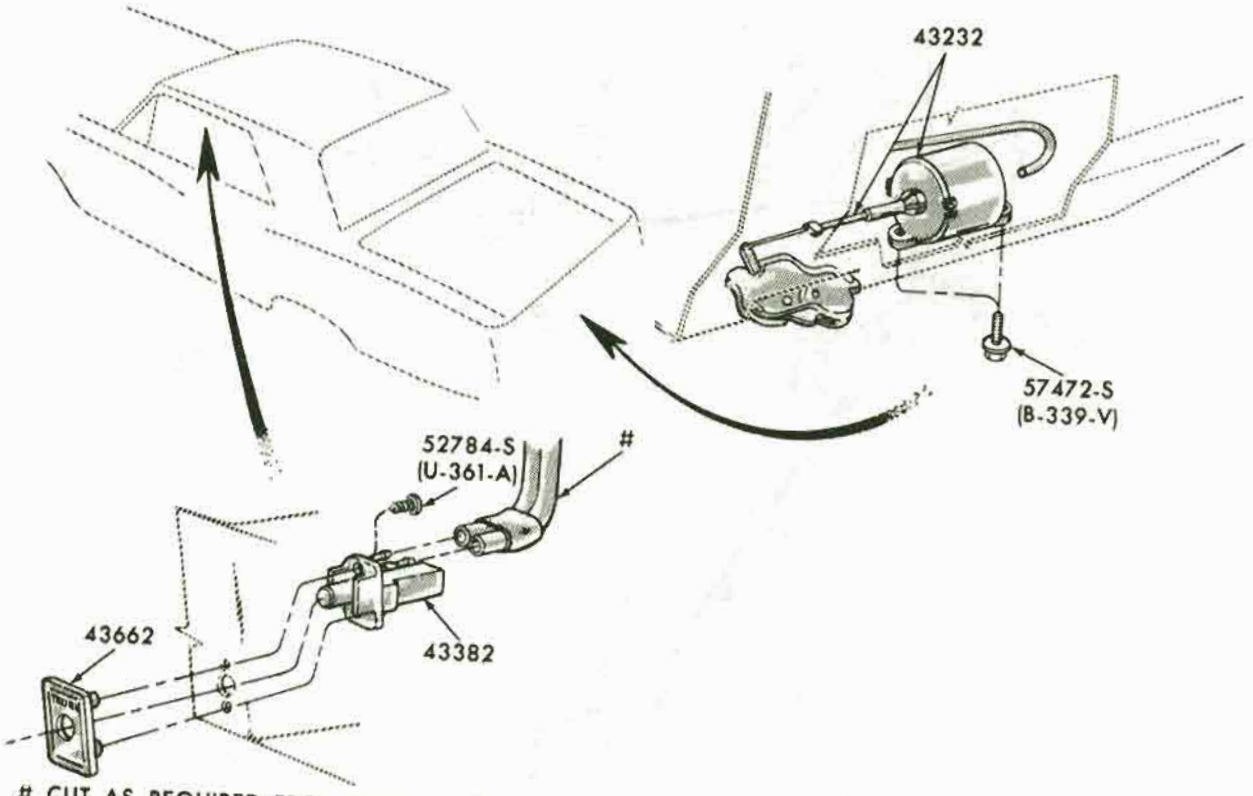

CUT AS REQUIRED FROM BULK HOSE - GROUP 17543 IN CHASSIS SECTION

P-7471

LUGGAGE COMPARTMENT VACUUM DOOR LATCH SYSTEM
1970/71 ALL

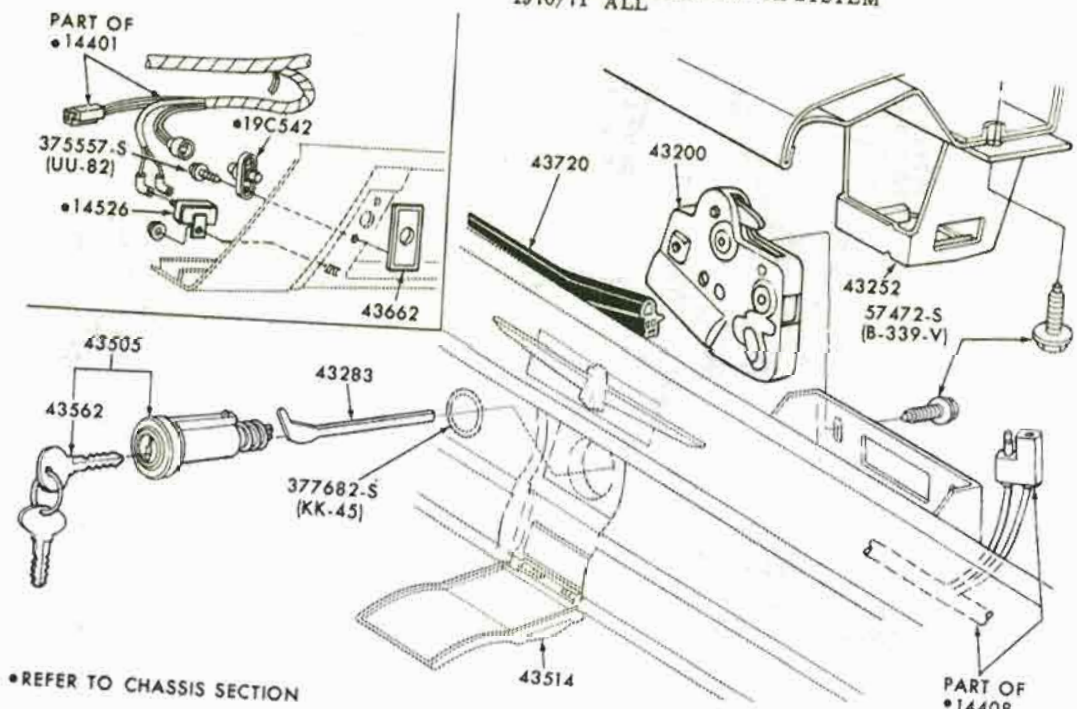

•REFER TO CHASSIS SECTION

LUGGAGE COMPARTMENT ELECTRIC DOOR LATCH SYSTEM
1971/72 THUNDERBIRD

P-8932

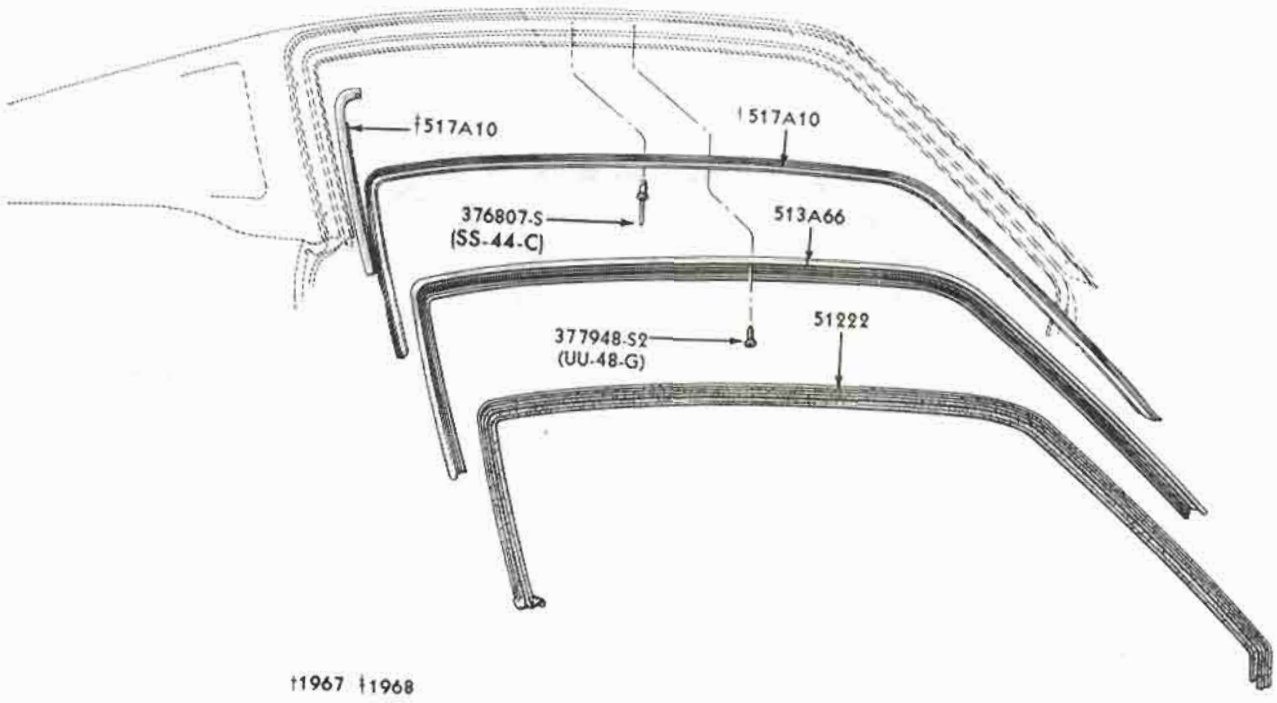

†1967 †1968

P-4838

ROOF SIDE MOULDINGS and WEATHERSTRIPS
1965/69 MUSTANG - BODY TYPE 63 - TYPICAL

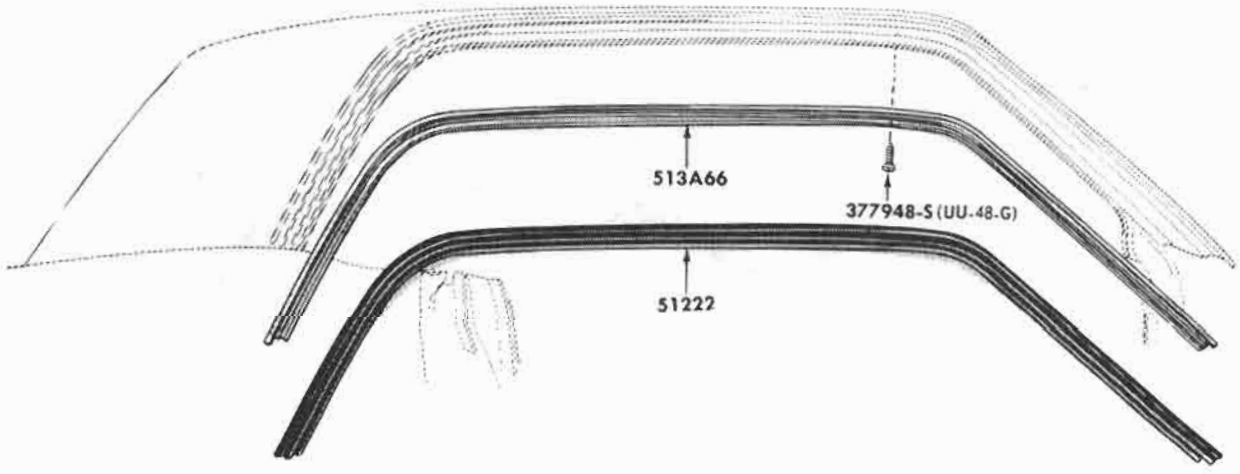

P-4478

ROOF SIDE MOULDINGS and WEATHERSTRIPS
1965/68 MUSTANG - BODY TYPE 65

COPYRIGHT © 1975 — FORD MOTOR COMPANY — DEARBORN, MICHIGAN

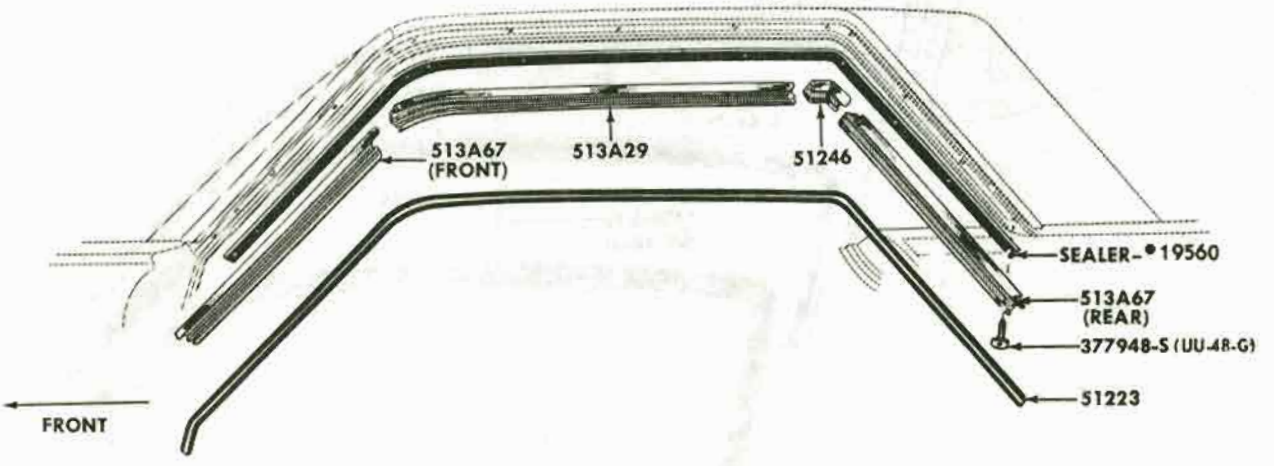

• REFER TO CHASSIS SECTION

P-4354

ROOF SIDE WEATHERSTRIPS and RELATED PARTS
1965/66 THUNDERBIRD - BODY TYPES 63A, B

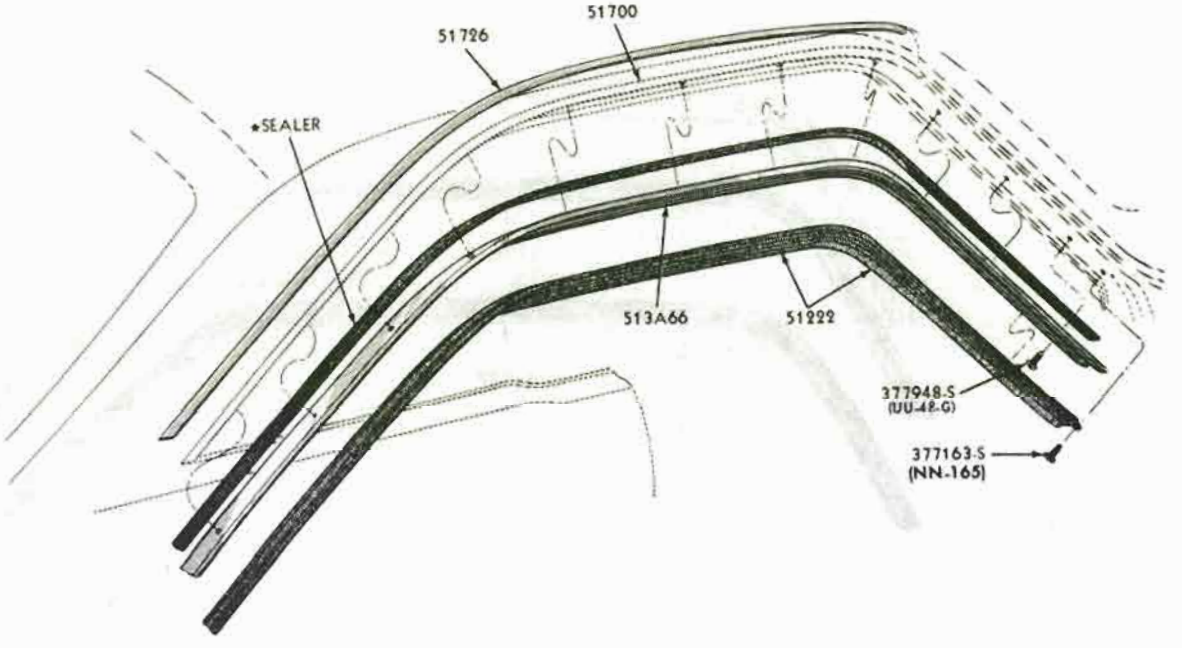

P-5089

ROOF SIDE WEATHERSTRIPS and RELATED PARTS
1966/69 FAIRLANE/TORINO - BODY TYPE 63 - TYPICAL

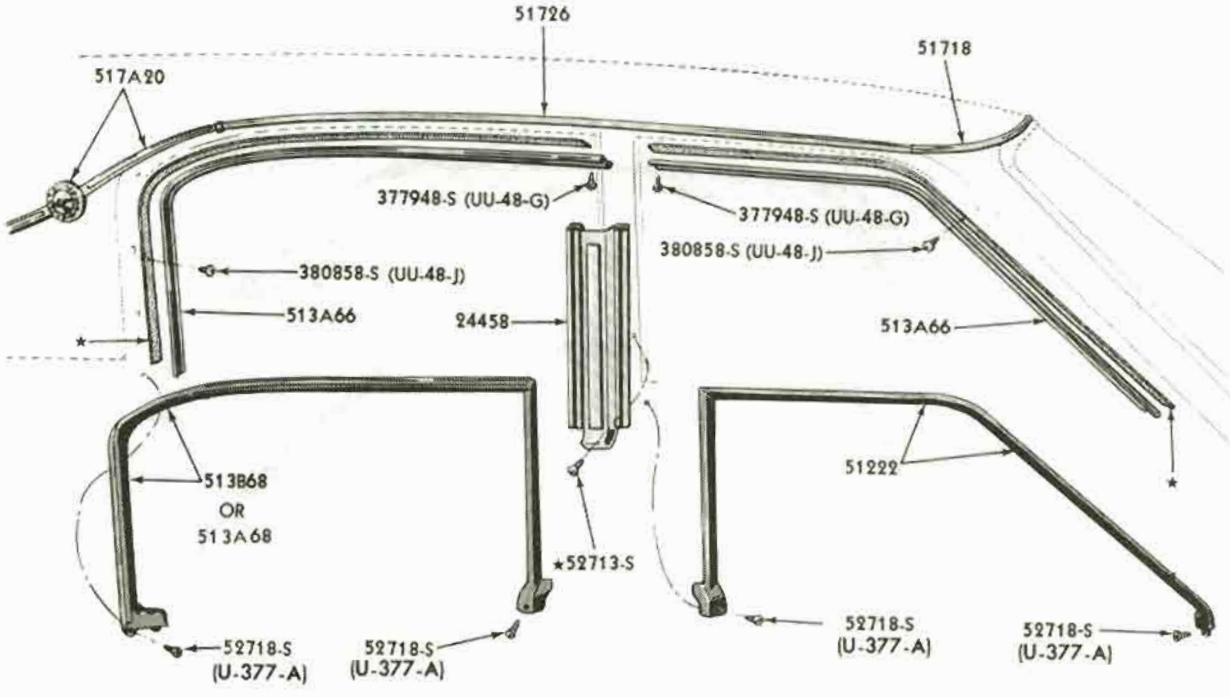

ROOF SIDE WEATHERSTRIPS and RELATED PARTS
1967/71 THUNDERBIRD - BODY TYPE 57

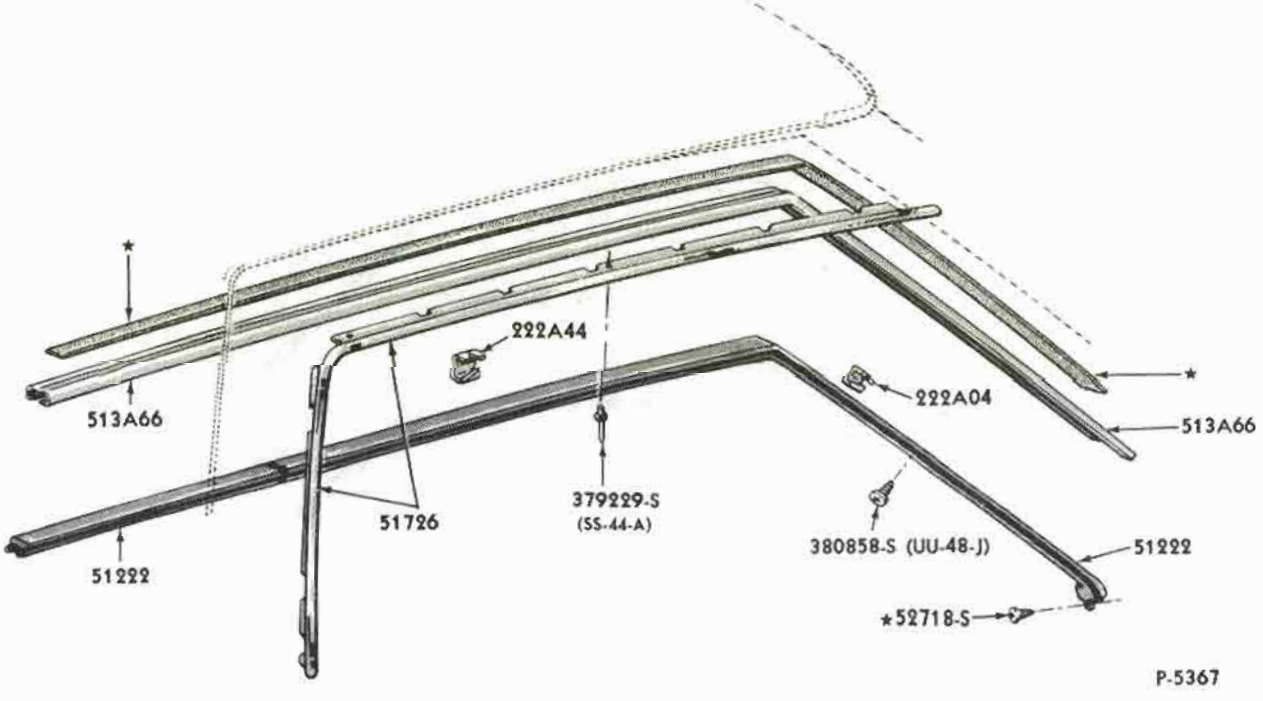

ROOF SIDE WEATHERSTRIPS and RELATED PARTS
1967/68 THUNDERBIRD - BODY TYPE 65 1969 THUNDERBIRD - BODY TYPES 65A, C

COPYRIGHT © 1975 — FORD MOTOR COMPANY — DEARBORN, MICHIGAN

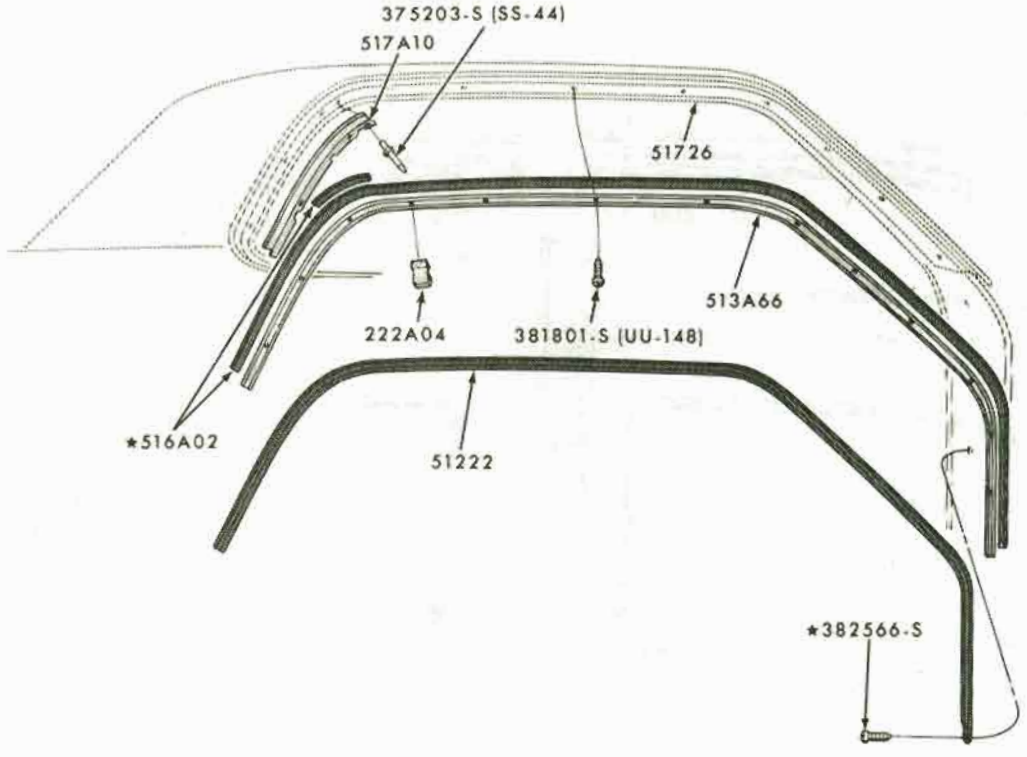

ROOF SIDE MOULDINGS and WEATHERSTRIPS
1969/70 MUSTANG - BODY TYPE 65

P-6808

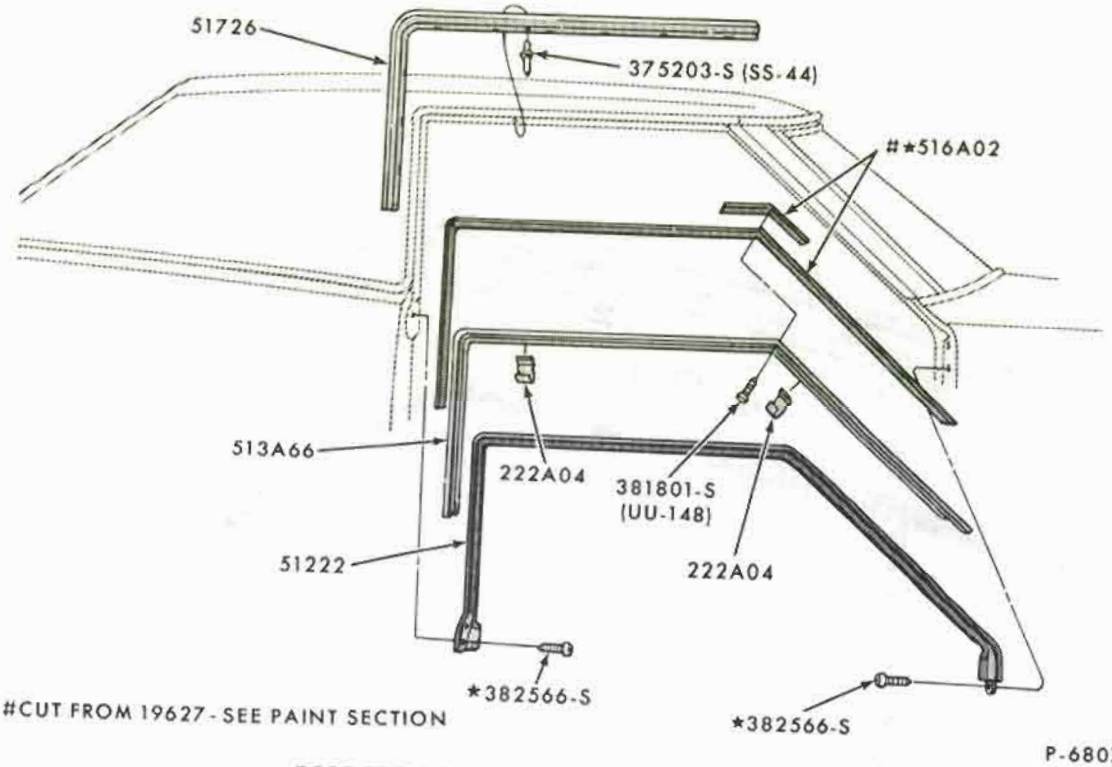

#CUT FROM 19627 - SEE PAINT SECTION

P-6807

ROOF SIDE WEATHERSTRIPS and RELATED PARTS
1969 THUNDERBIRD - BODY TYPE 65B, D

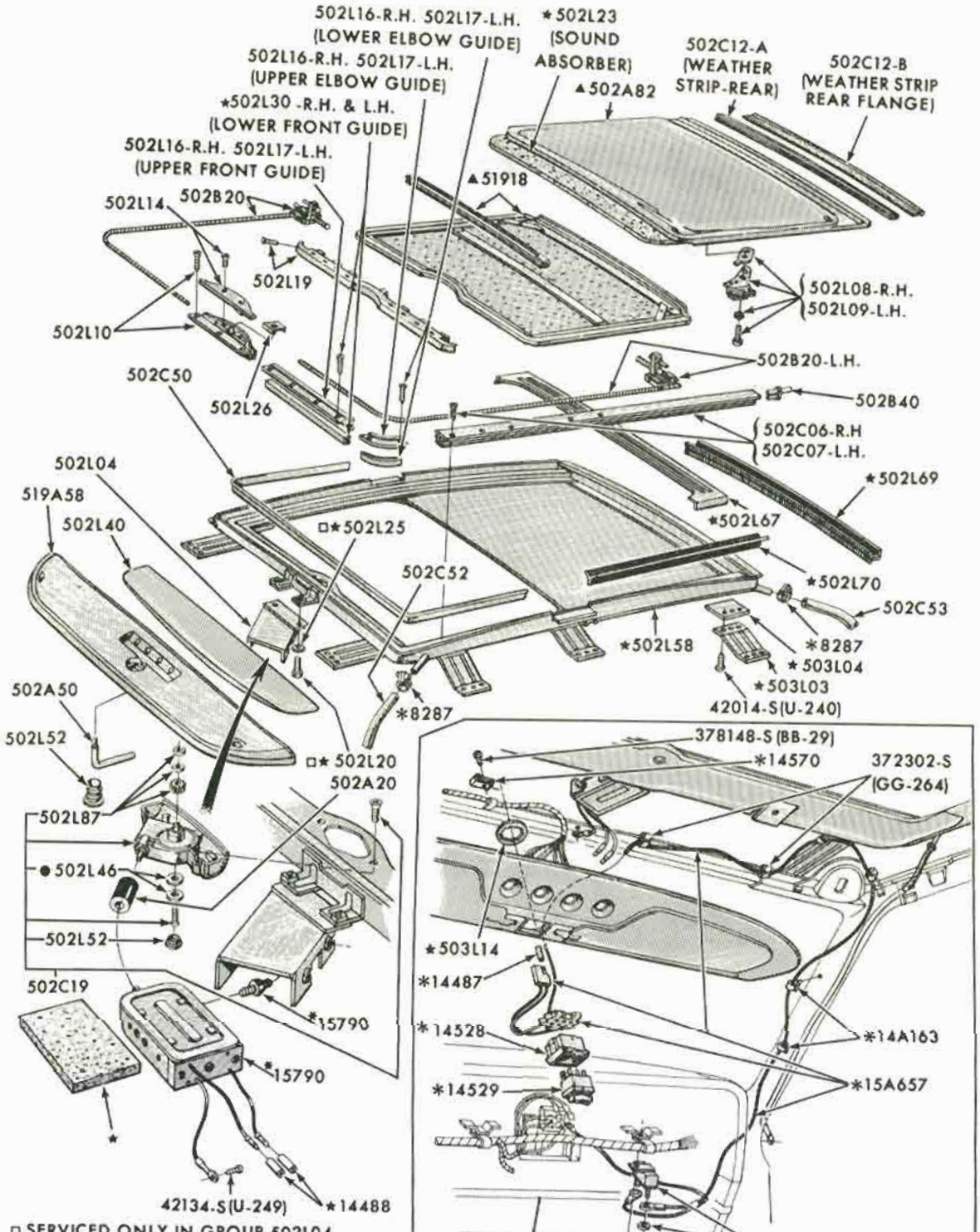

□ SERVICED ONLY IN GROUP 502L04
● FRICTION CLUTCH SPACERS TO BE USED AS REQUIRED
* REFER TO GROUP IN CHASSIS SECTION
▲ REFER TO GROUP IN SOFT TRIM SECTION

P-6954

SLIDING ROOF and RELATED PARTS
1969/70 THUNDERBIRD

COPYRIGHT © 1975 — FORD MOTOR COMPANY — DEARBORN, MICHIGAN

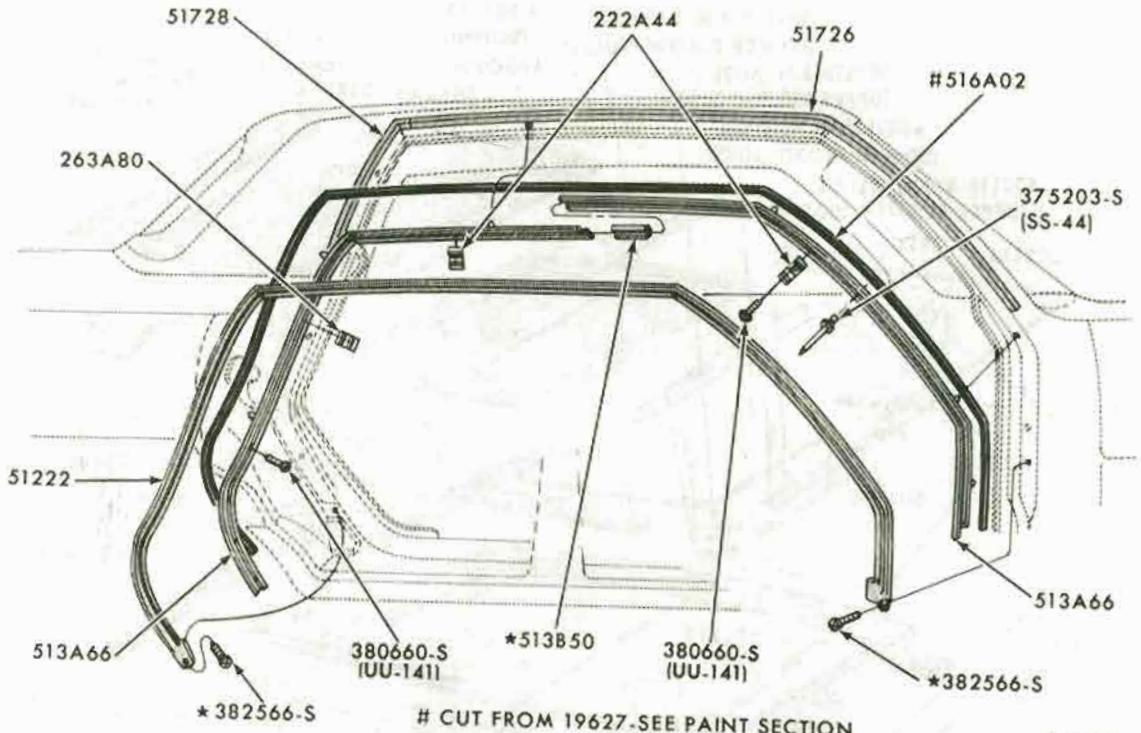

CUT FROM 19627-SEE PAINT SECTION

P-6914

ROOF SIDE MOULDINGS and WEATHERSTRIPS
1969 FORD - BODY TYPE 57

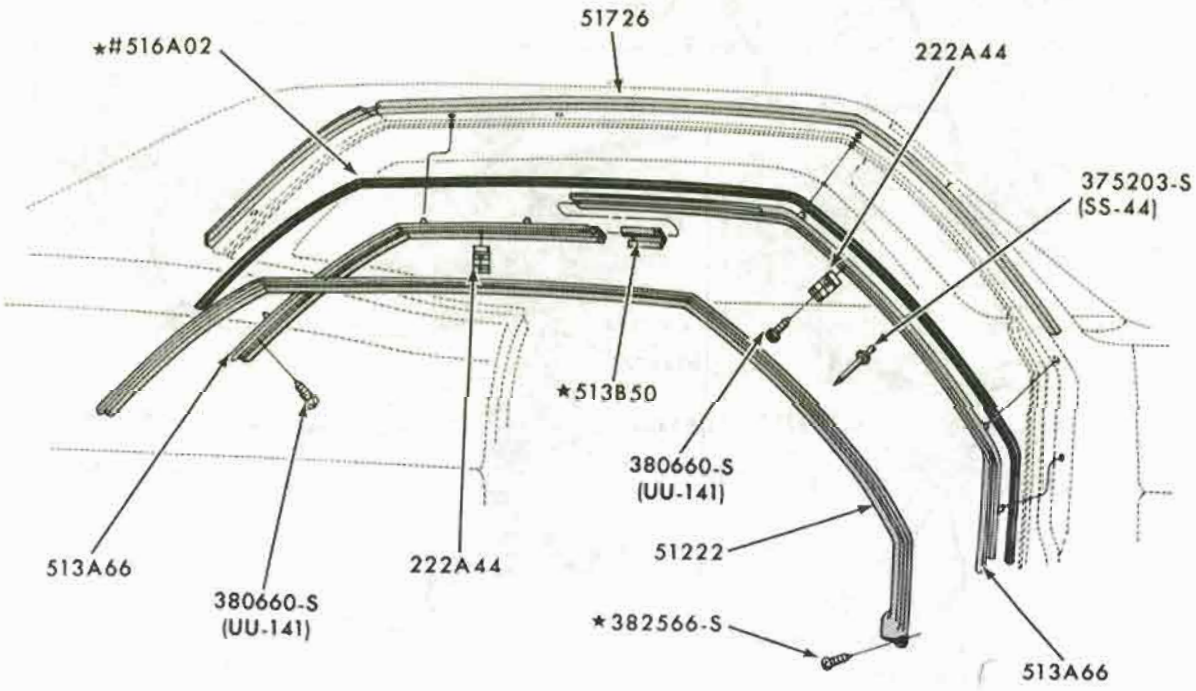

CUT FROM 19627-SEE PAINT SECTION

P-6915

ROOF SIDE MOULDINGS and WEATHERSTRIP
1969 FORD - BODY TYPES 63,65

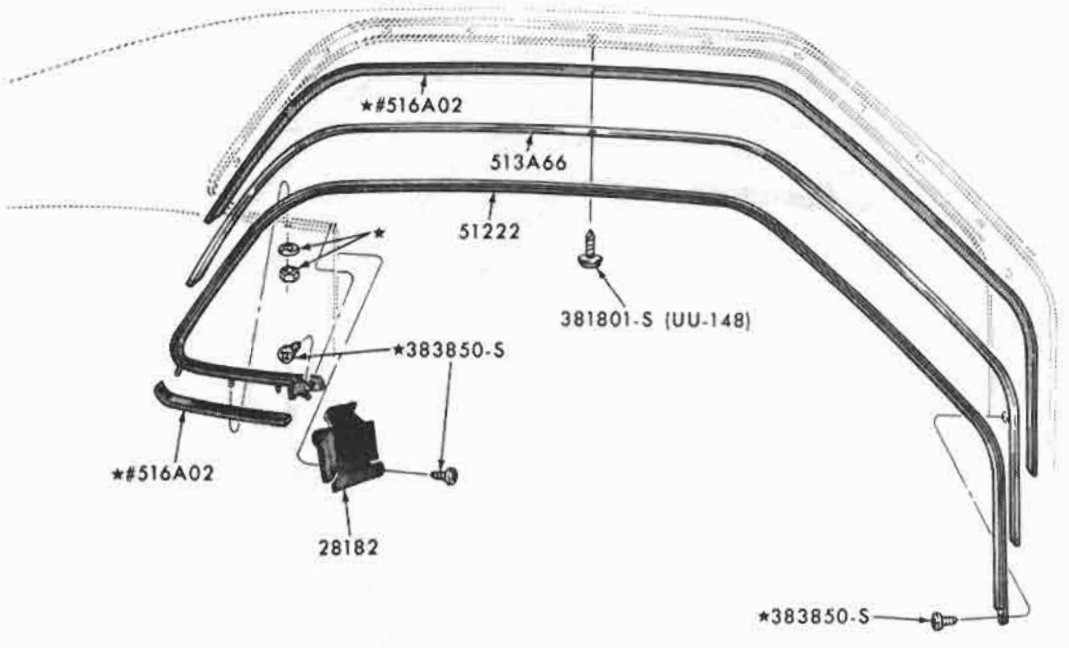

#CUT FROM 19627-SEE PAINT SECTION

P-7104

ROOF SIDE MOULDINGS and WEATHERSTRIPS
1969/70 MUSTANG - BODY TYPE 63

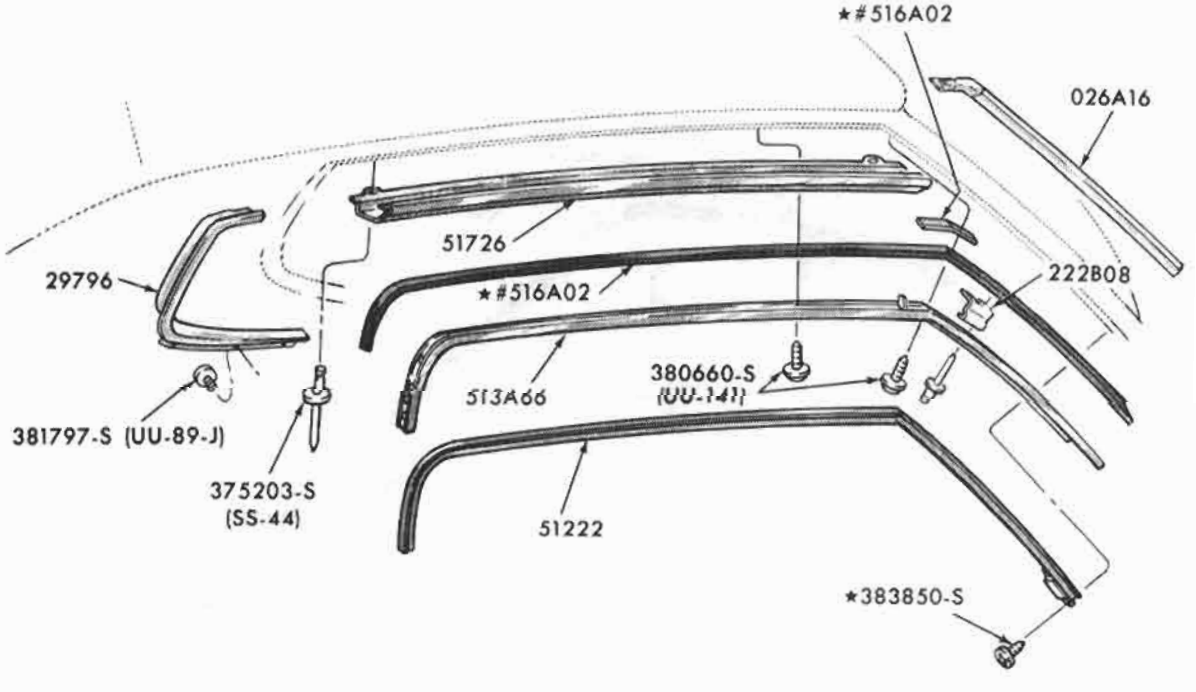

CUT FROM 19627 - SEE PAINT SECTION

P-7101

ROOF SIDE MOULDING and WEATHER STRIPS
1970/71 THUNDERBIRD - BODY TYPE 65 A, C

COPYRIGHT © 1975 — FORD MOTOR COMPANY — DEARBORN, MICHIGAN

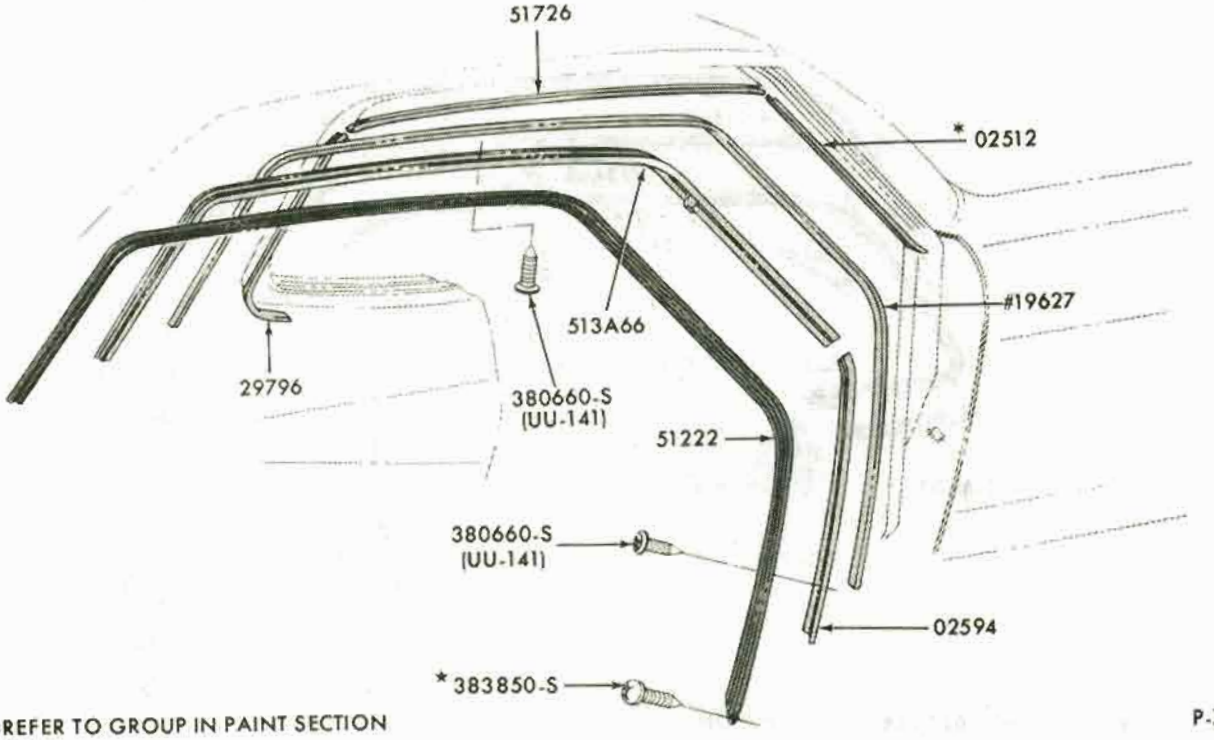

#REFER TO GROUP IN PAINT SECTION

P-7181

ROOF SIDE MOULDINGS and WEATHERSTRIPS
1970/71 FAIRLANE/TORINO - BODY TYPE 65

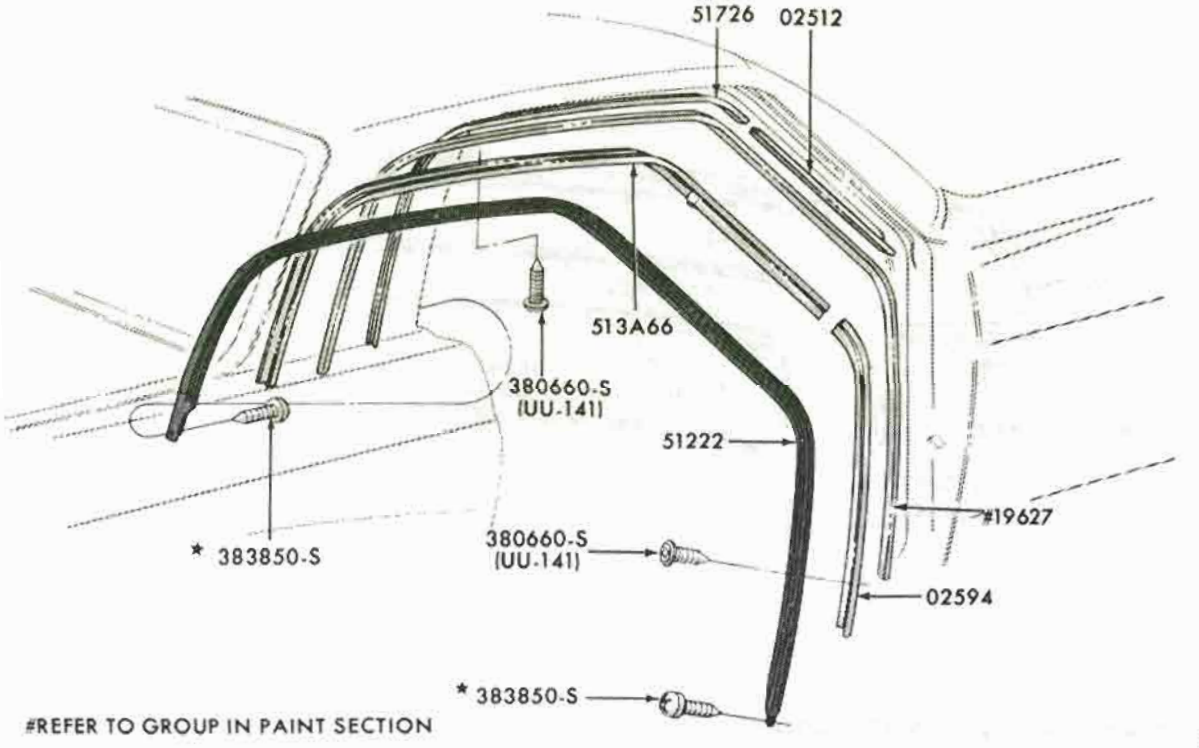

#REFER TO GROUP IN PAINT SECTION

P-7182

ROOF SIDE MOULDINGS and WEATHERSTRIPS
1970/71 FAIRLANE/TORINO - BODY TYPE 66

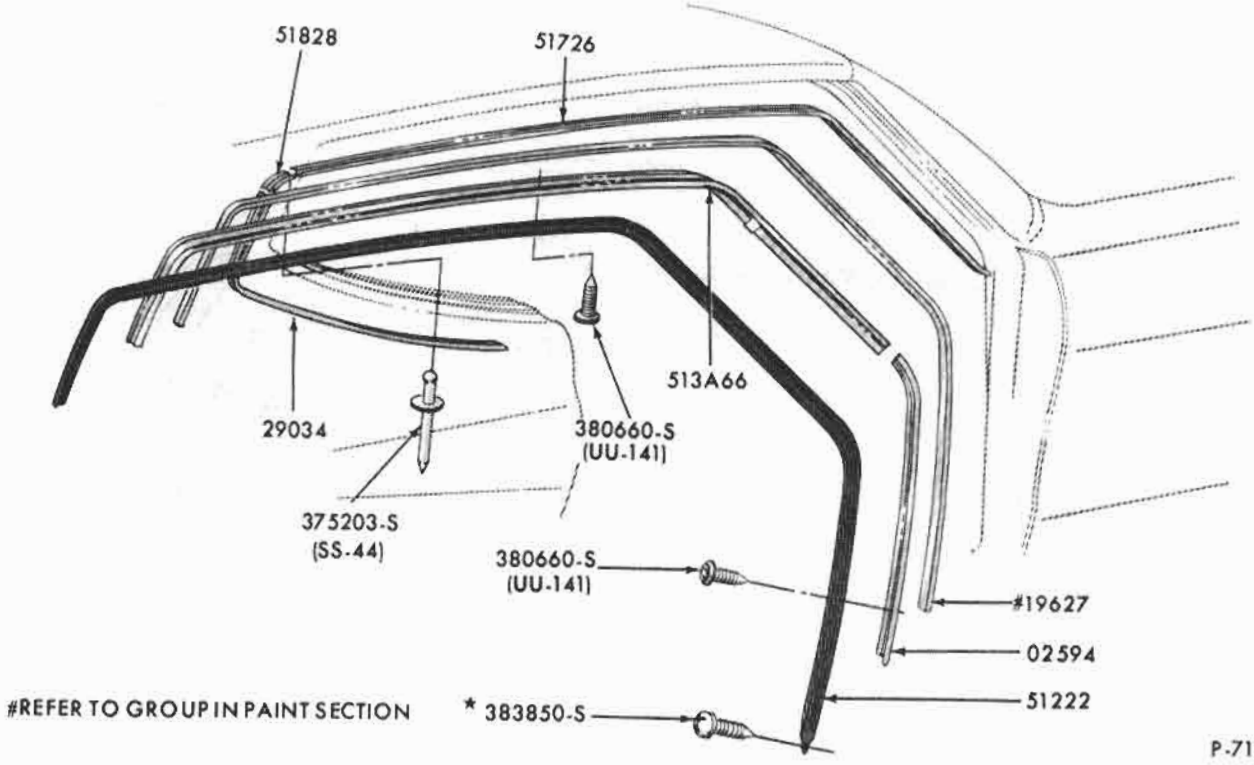

ROOF SIDE MOULDINGS and WEATHERSTRIPS
1970/71 FAIRLANE/TORINO - BODY TYPE 63

COPYRIGHT © 1975 — FORD MOTOR COMPANY — DEARBORN, MICHIGAN

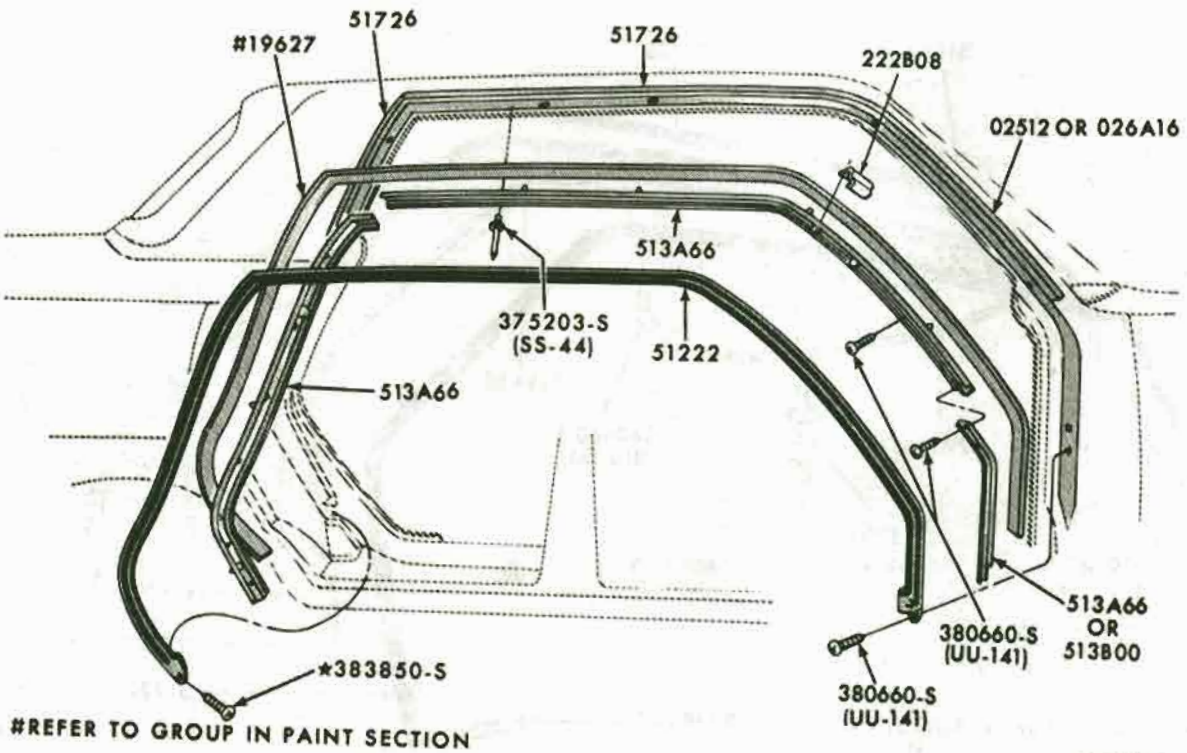

#REFER TO GROUP IN PAINT SECTION

P-7458

ROOF SIDE MOULDING and WEATHERSTRIPS
1970/72 FORD - BODY TYPES 54,57

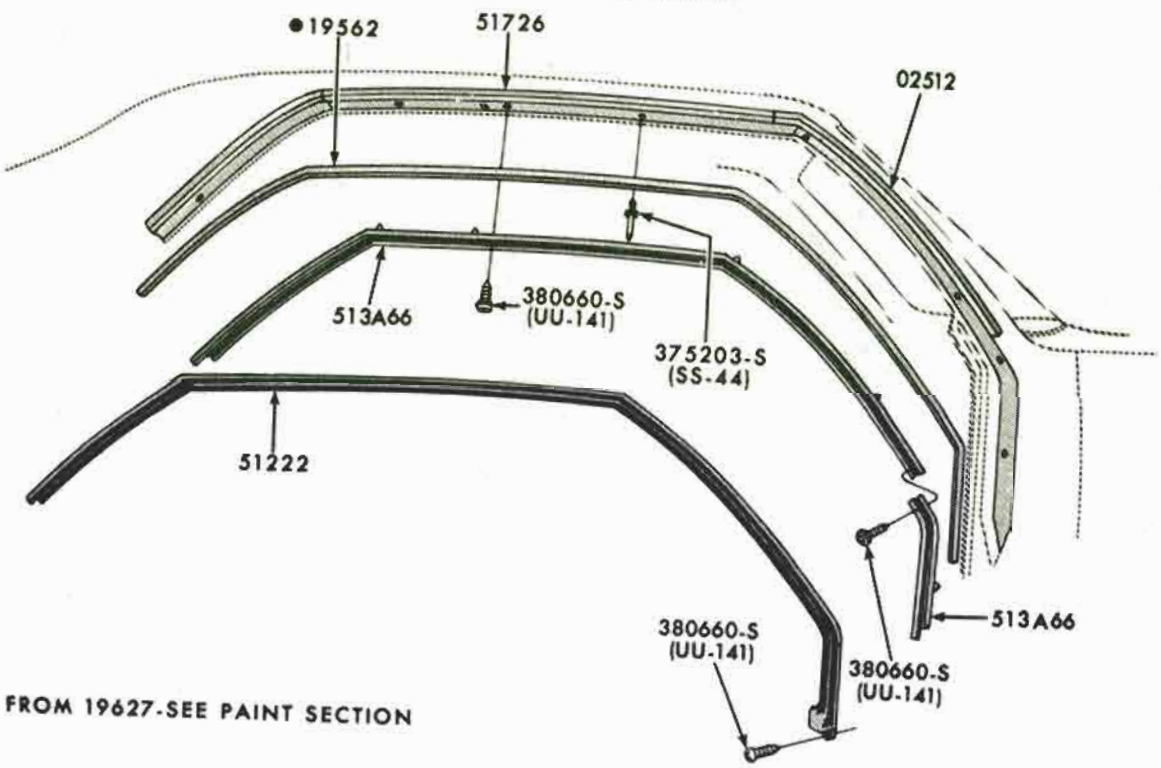

●CUT FROM 19627-SEE PAINT SECTION

ROOF SIDE MOULDING and WEATHERSTRIPS
1970 FORD - BODY TYPE 63,65

P-7459

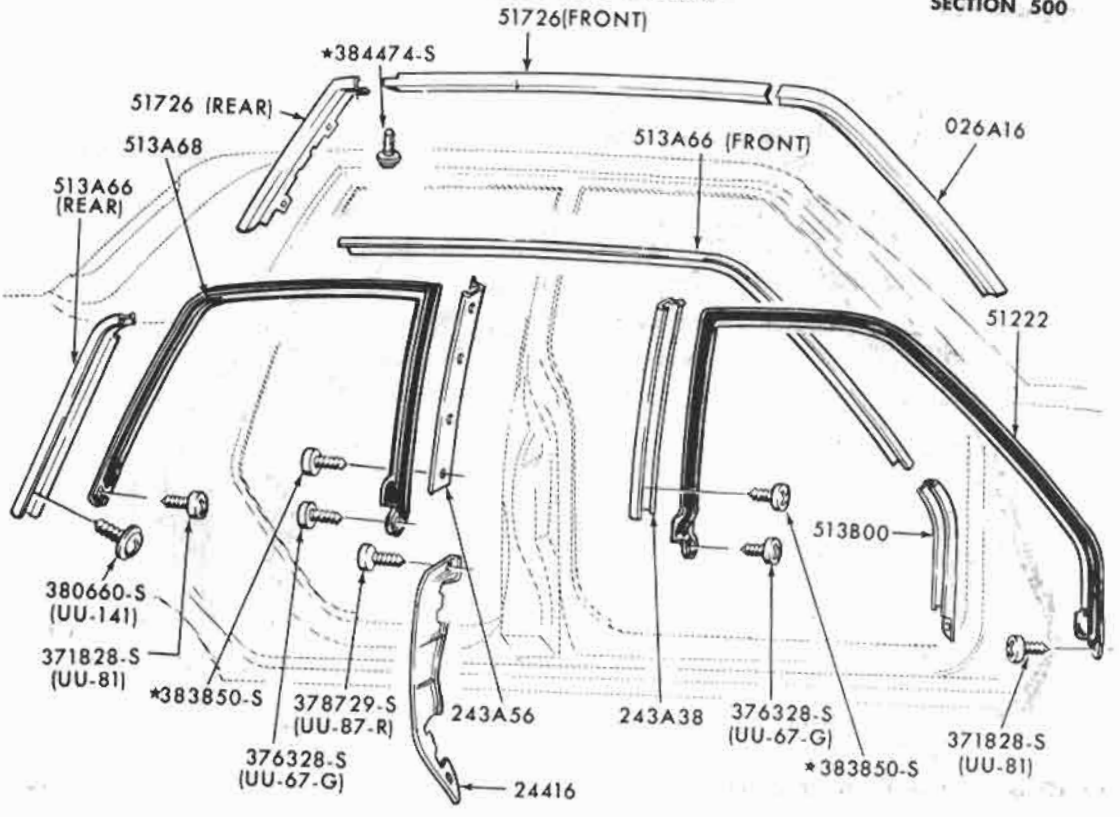

ROOF SIDE MOULDINGS and WEATHERSTRIPS
1971/72 FORD - BODY TYPE 53

P-7839

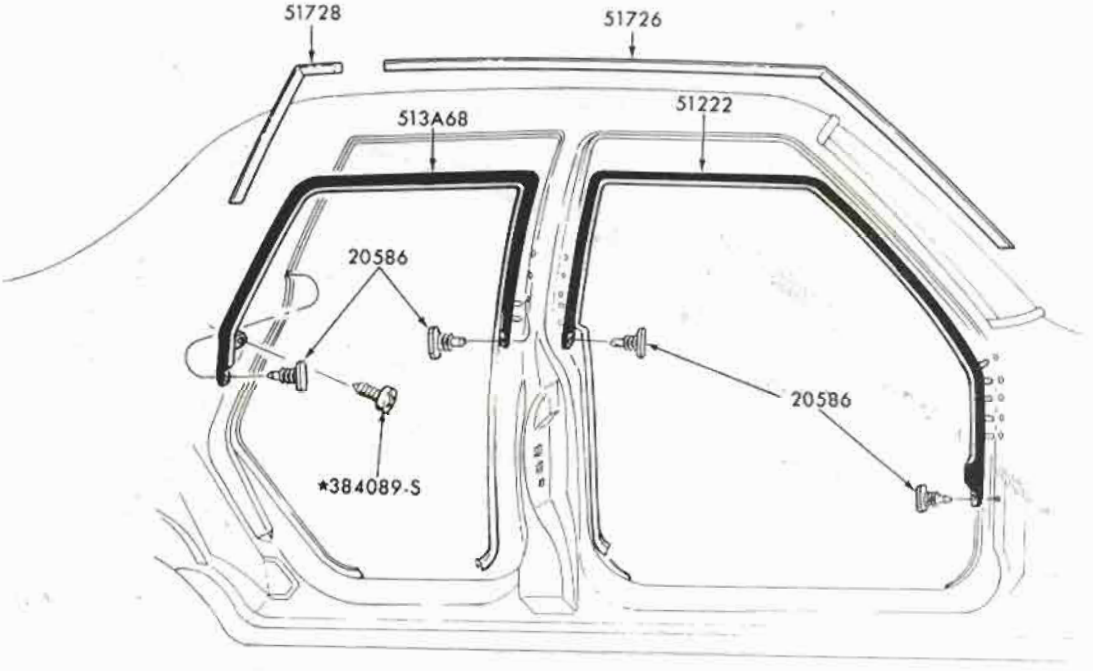

P-7925

ROOF SIDE MOULDINGS and WEATHERSTRIPS
1971/72 MAVERICK - BODY TYPE 54

COPYRIGHT © 1975 — FORD MOTOR COMPANY — DEARBORN, MICHIGAN

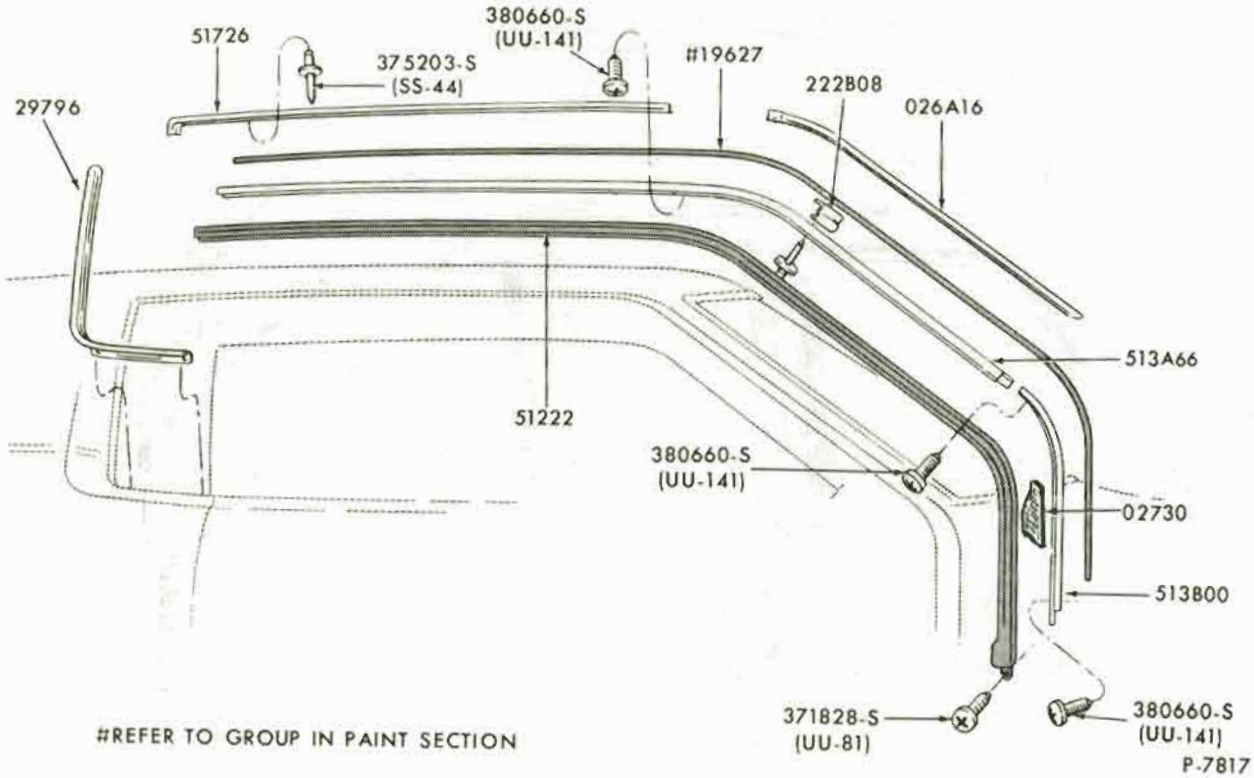

#REFER TO GROUP IN PAINT SECTION

P-7817

ROOF SIDE MOULDINGS and WEATHERSTRIPS
1970/72 FORD - BODY TYPE 65

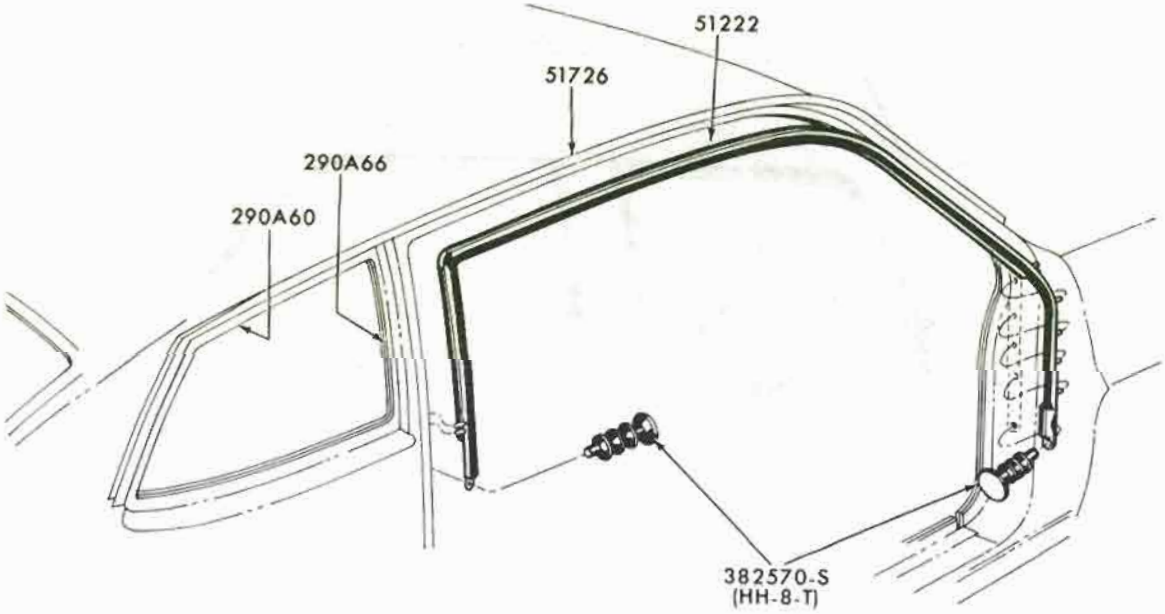

P-7876

ROOF SIDE MOULDINGS and WEATHERSTRIPS
1970/72 MAVERICK - BODY TYPE 62

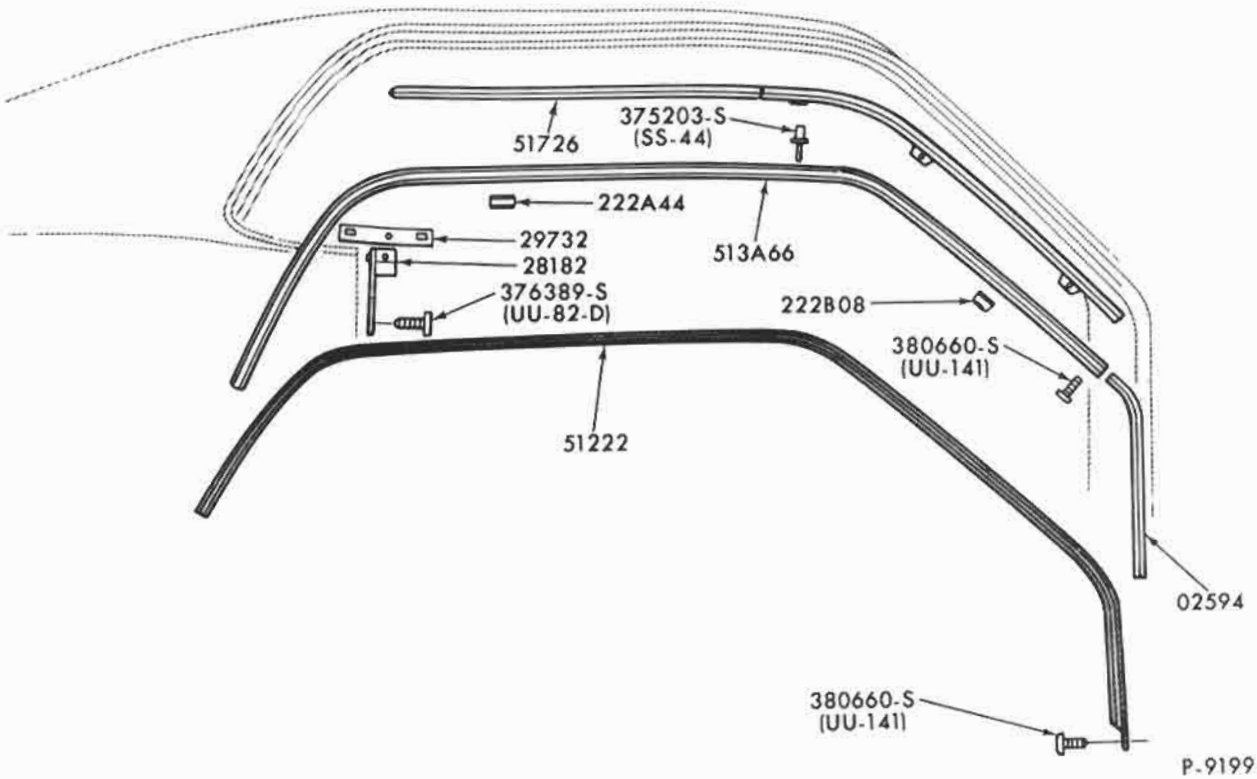

ROOF SIDE MOULDINGS and WEATHERSTRIPS
1971/72 MUSTANG - BODY TYPE 65

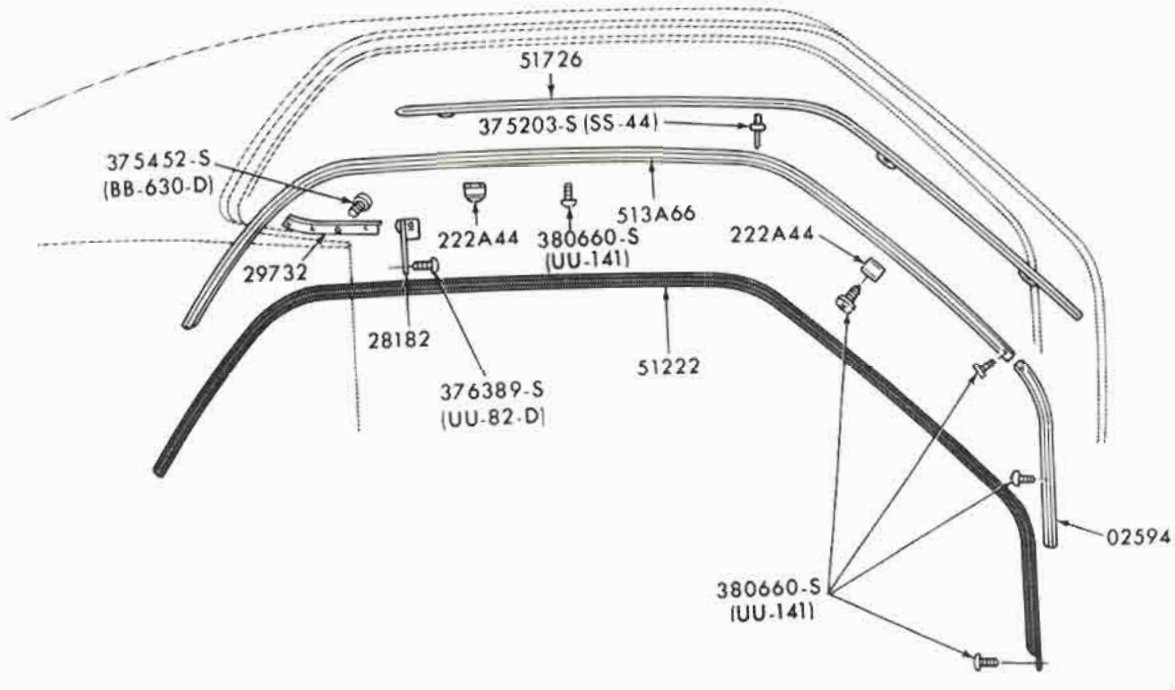

ROOF SIDE MOULDINGS and WEATHERSTRIPS
1971/72 MUSTANG - BODY TYPE 63

COPYRIGHT © 1975 — FORD MOTOR COMPANY — DEARBORN, MICHIGAN

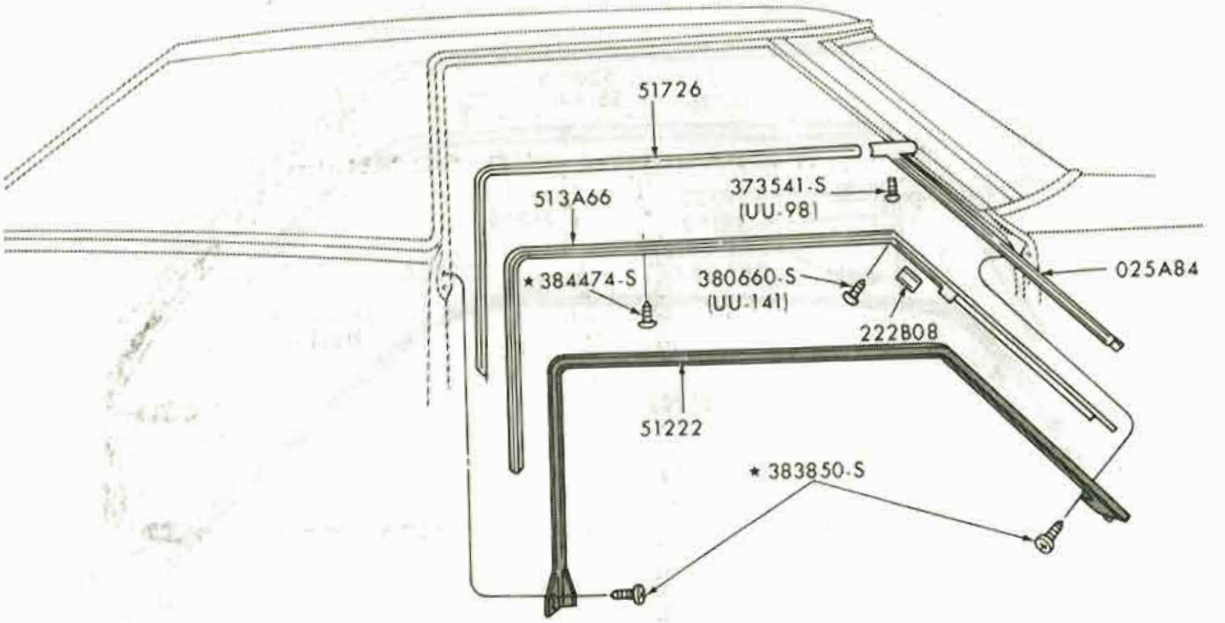

P-8177

ROOF RAIL MOULDINGS and WEATHERSTRIPS
1970/71 THUNDERBIRD - BODY TYPE 65B,D

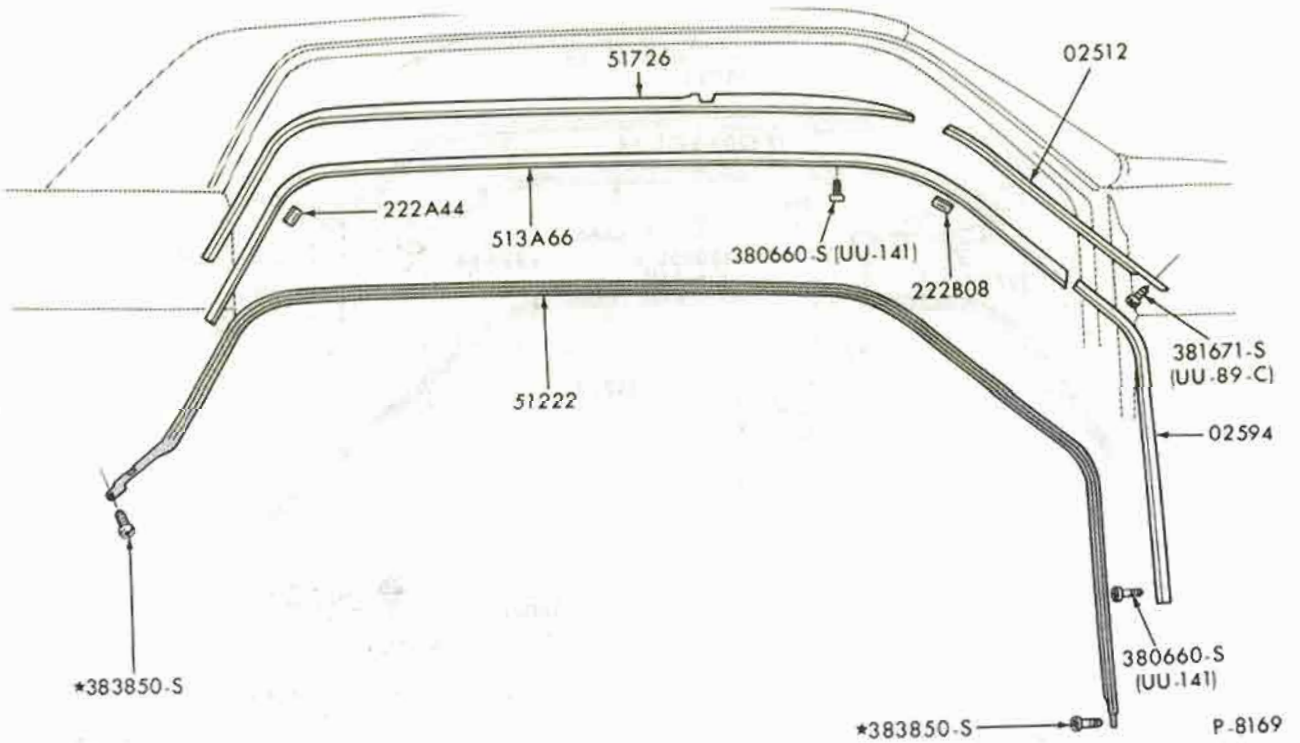

P-8169

ROOF SIDE MOULDINGS and WEATHERSTRIPS
1970/71 FAIRLANE/TORINO - BODY TYPE 57

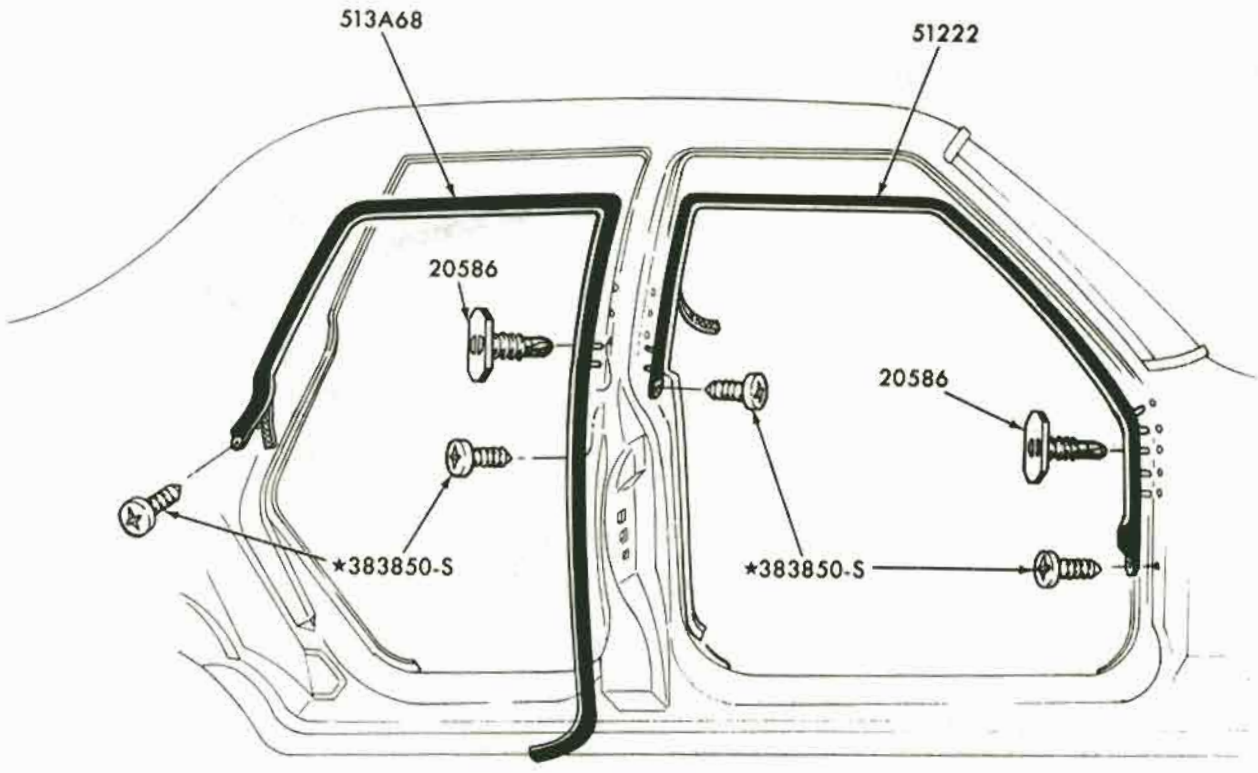

P-8294

ROOF SIDE MOULDINGS and WEATHERSTRIPS
1970/71 FAIRLANE/TORINO - BODY TYPE 54

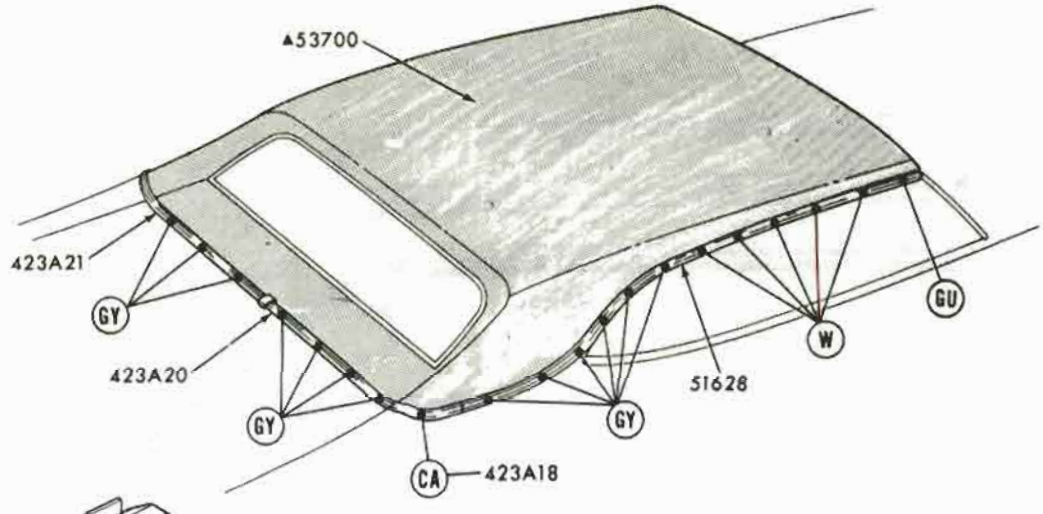

C9AZ-6220818-A
W

373888-S (MM-290)
CA

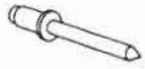

383229-S (SS-44-E)
GU

DOGY-16A076-A
GY

▲REFER TO GROUP IN SOFT TRIM SECTION

P-8529

ROOF COVER, MOULDINGS AND RELATED PARTS
1971 TORINO - BODY TYPE 65C

COPYRIGHT © 1975 — FORD MOTOR COMPANY — DEARBORN, MICHIGAN

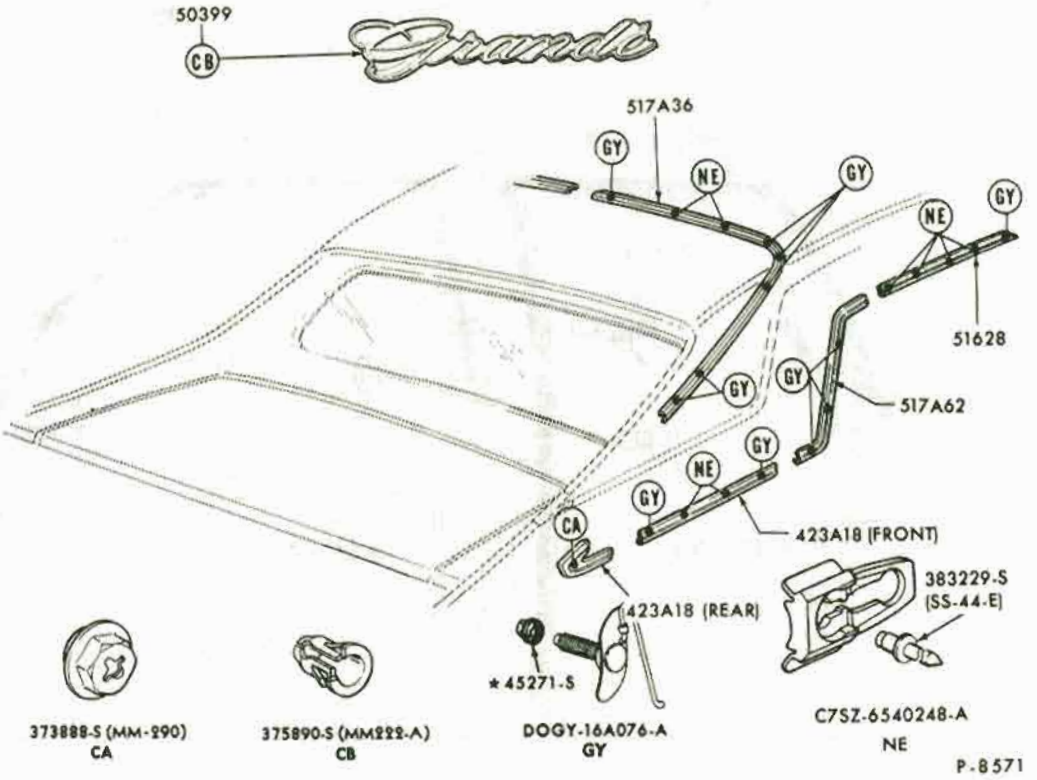

ROOF COVER, MOULDINGS and RELATED PARTS
1971/72 MUSTANG - BODY TYPE 65

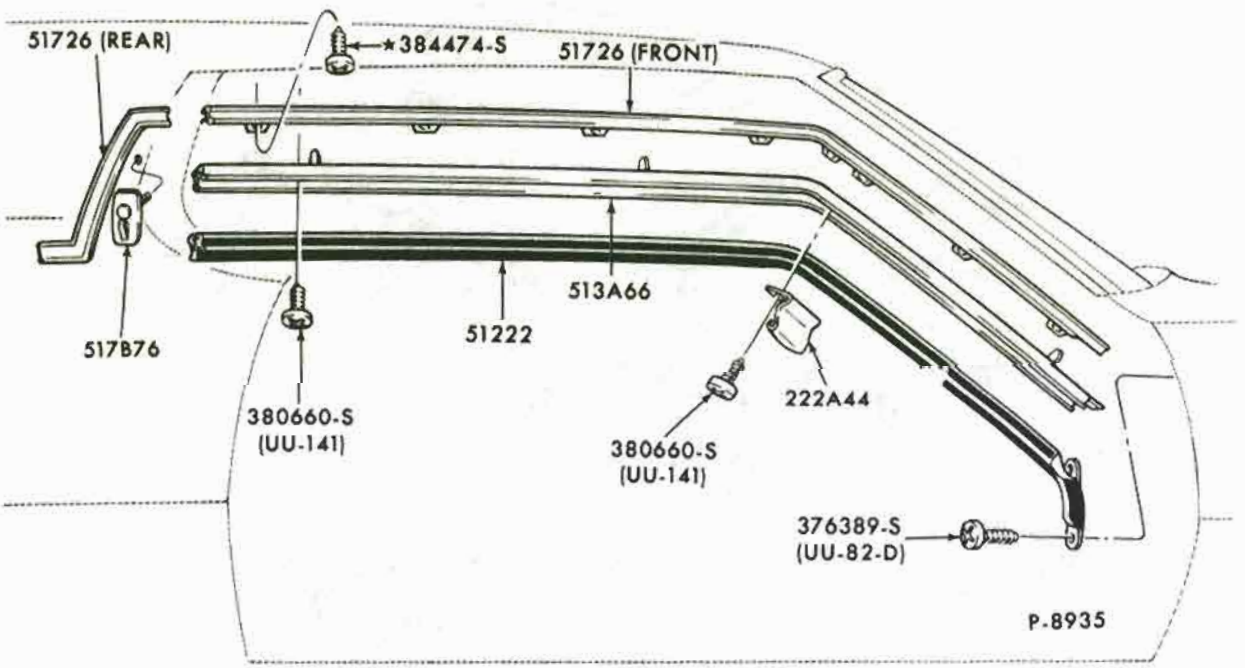

ROOF SIDE MOULDINGS and WEATHERSTRIPS
1972 THUNDERBIRD

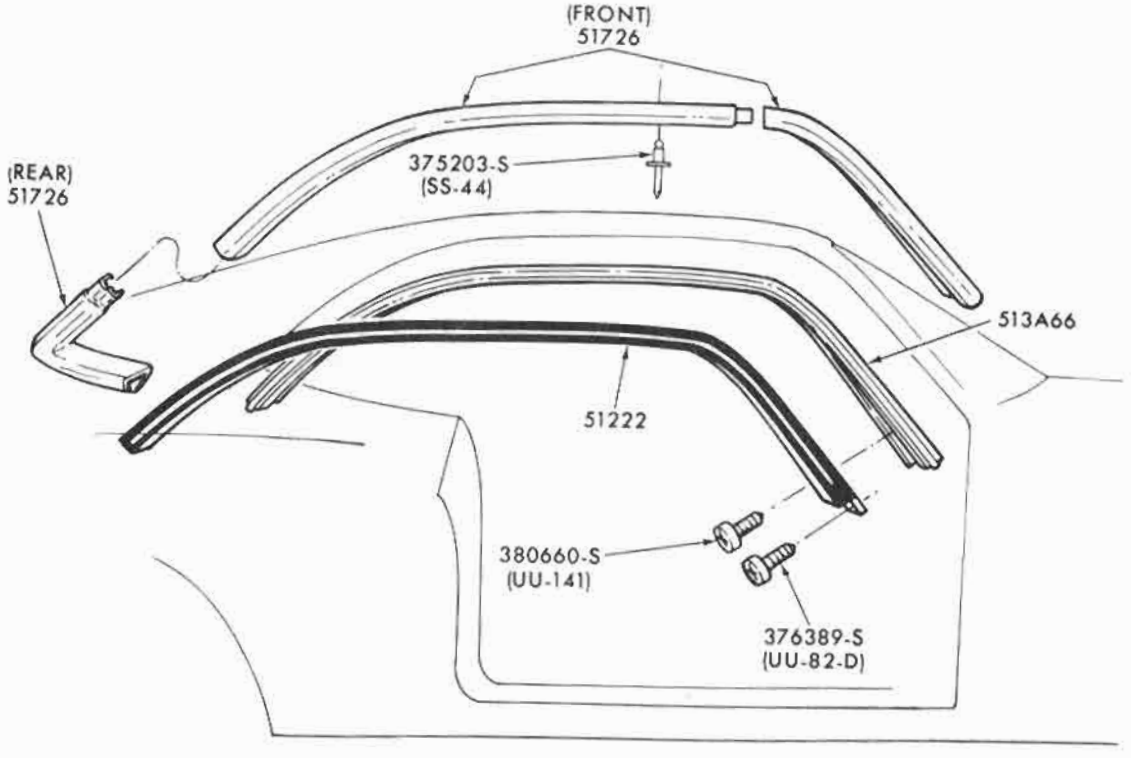

P-8598

ROOF SIDE MOULDINGS and WEATHERSTRIPS
1972 TORINO - BODY TYPE 63

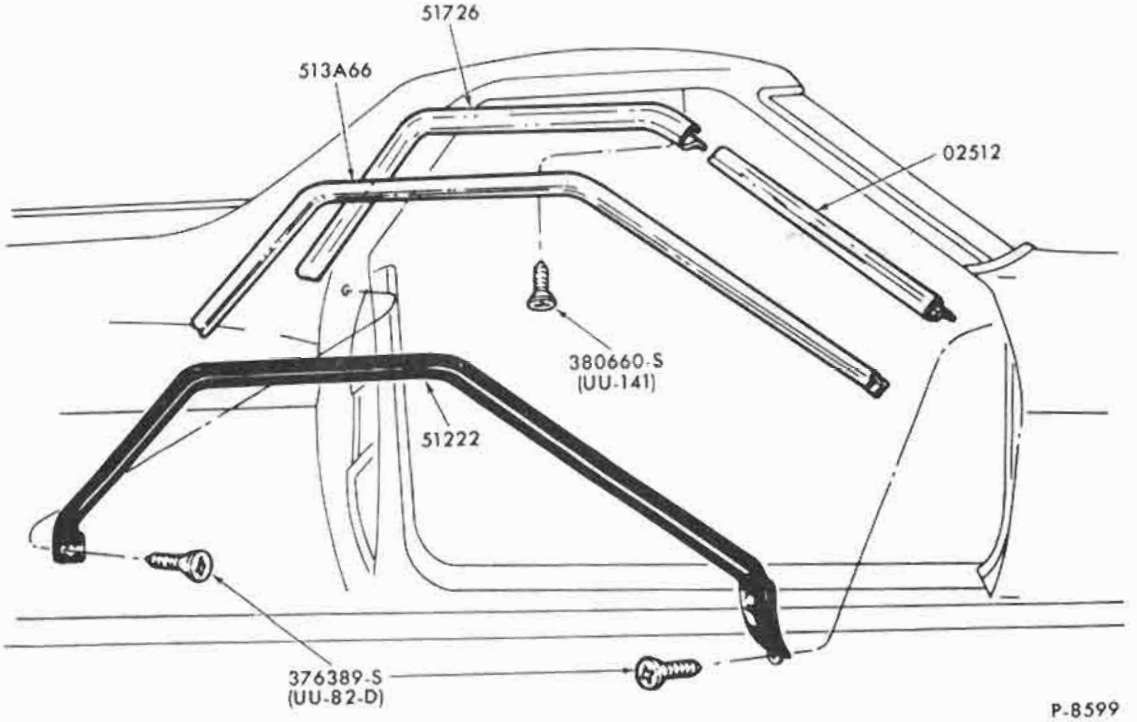

P-8599

ROOF SIDE MOULDINGS and WEATHERSTRIPS
1972 TORINO - BODY TYPE 97

COPYRIGHT © 1975— FORD MOTOR COMPANY —DEARBORN, MICHIGAN

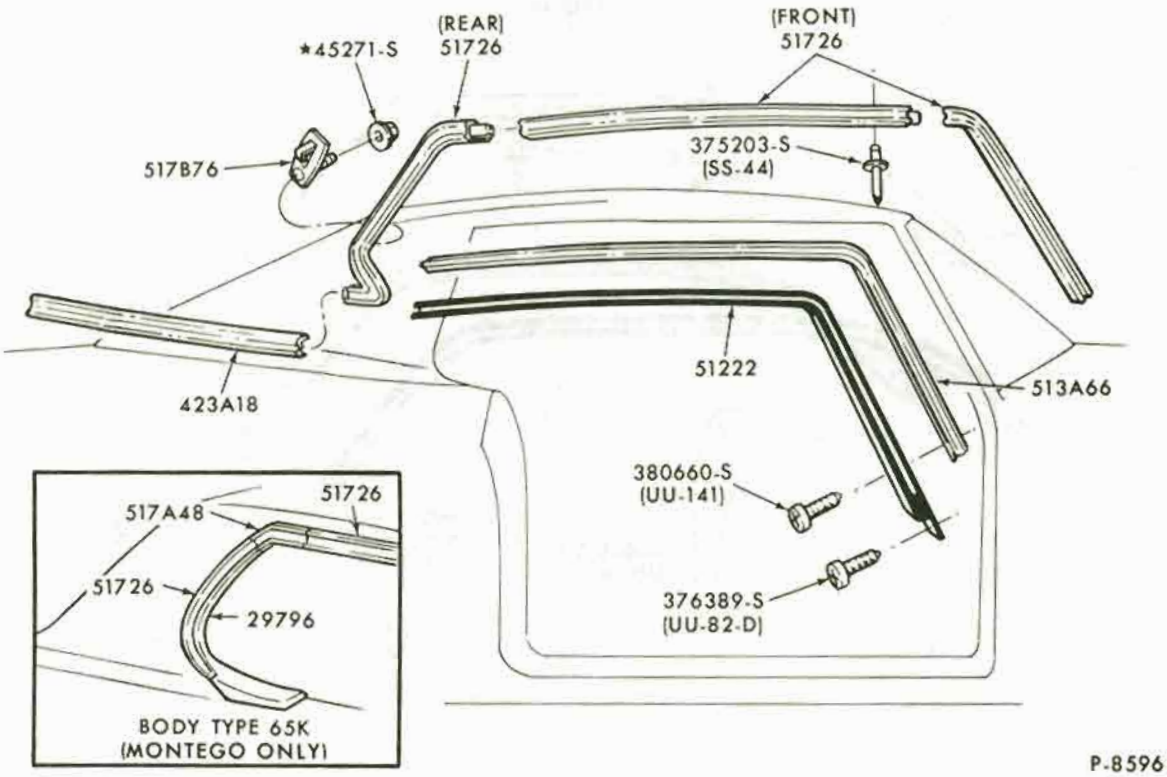

ROOF SIDE MOULDINGS and WEATHERSTRIPS
1972 TORINO - BODY TYPE 65

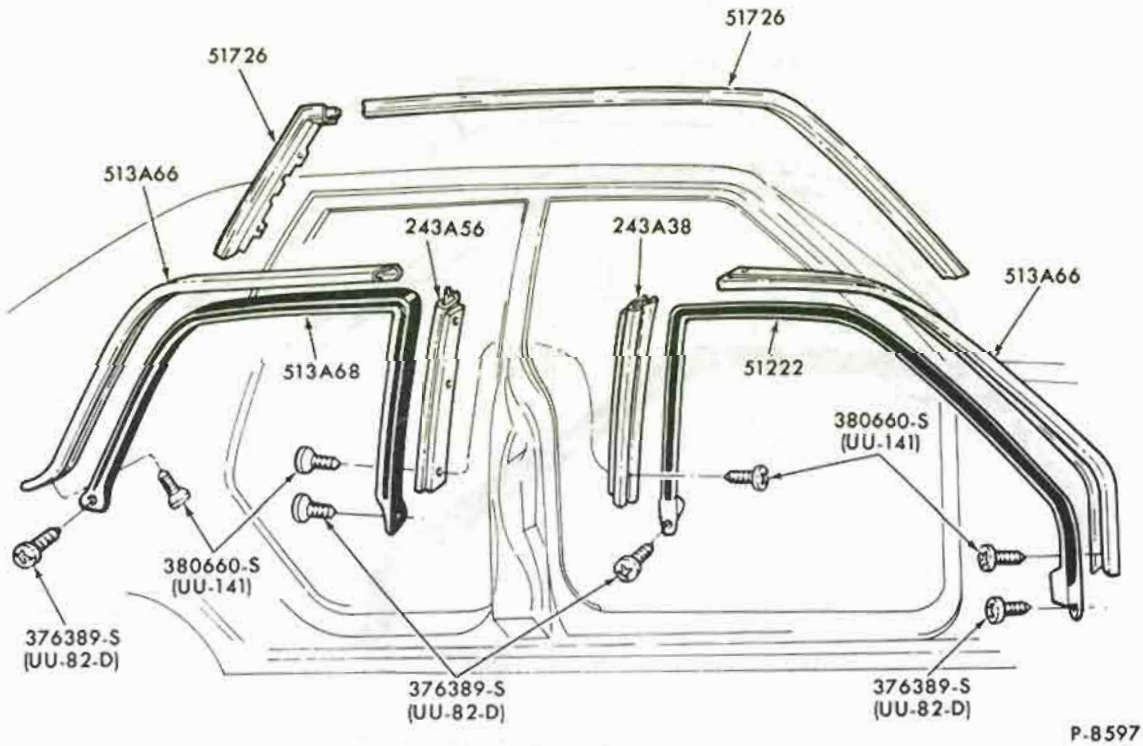

ROOF SIDE MOULDINGS and WEATHERSTRIPS
1972 TORINO - BODY TYPES 53, 71

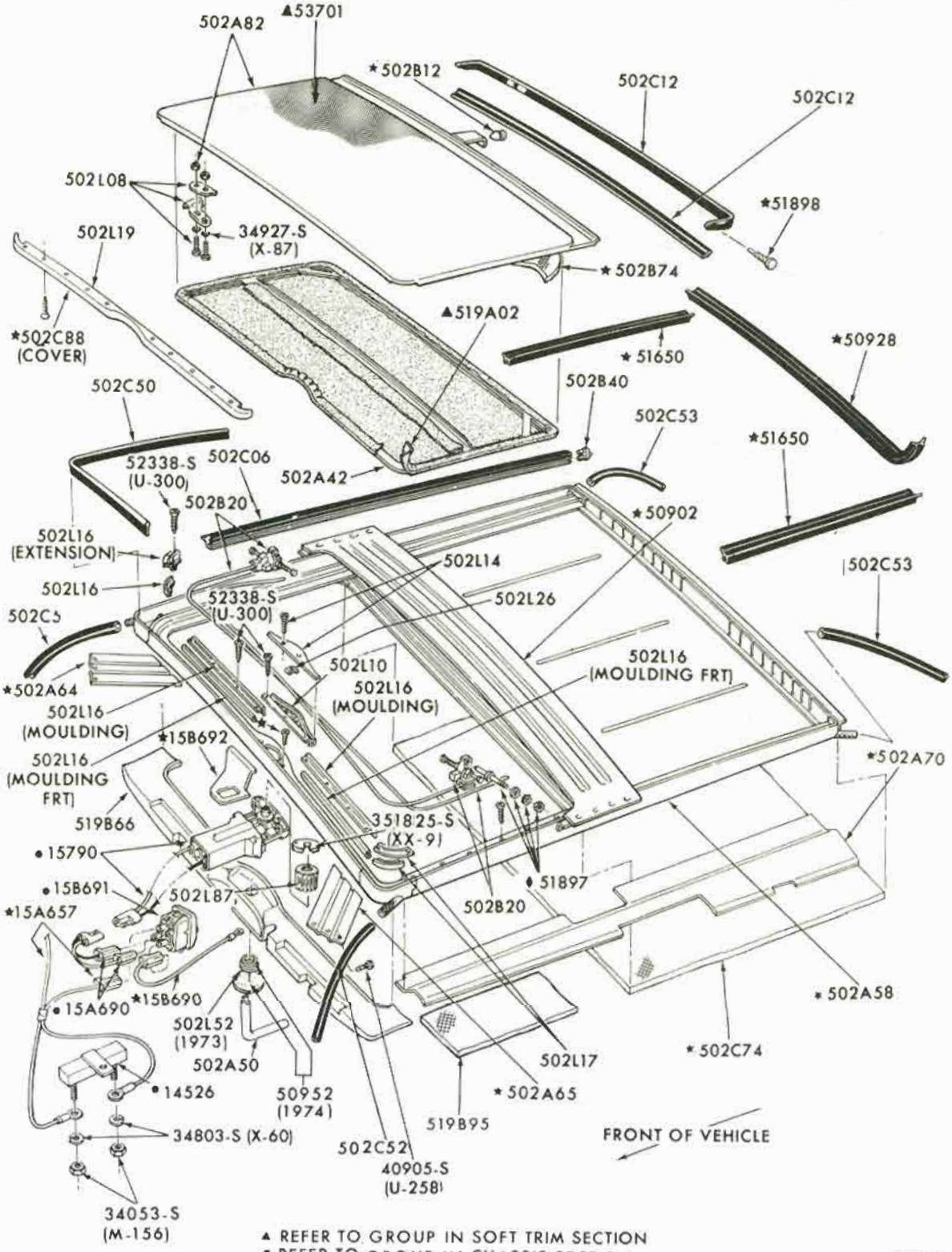

▲ REFER TO GROUP IN SOFT TRIM SECTION
• REFER TO GROUP IN CHASSIS SECTION
♦ SERVICED ONLY IN ASSY-GROUP 502B20

P-8891

SLIDING ROOF and RELATED PARTS
1971/72 THUNDERBIRD and 1972 FORD

COPYRIGHT © 1975 — FORD MOTOR COMPANY — DEARBORN, MICHIGAN

FORD CAR PARTS

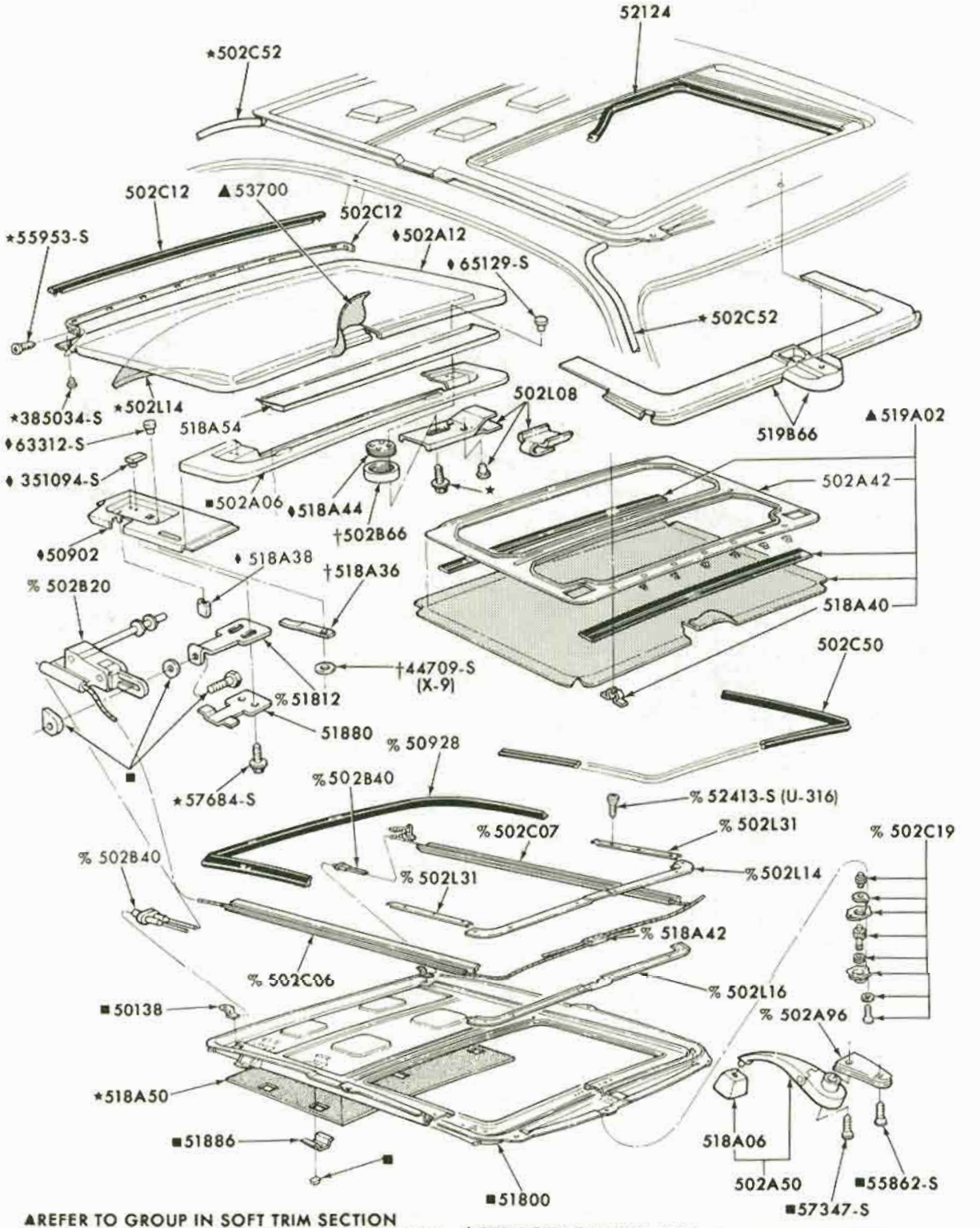

▲REFER TO GROUP IN SOFT TRIM SECTION
■ SERVICED ONLY IN ASSEMBLY-GROUP 502C22
% ALSO SERVICED IN ASSEMBLY-GROUP 502C22
♦ SERVICED ONLY IN ASSEMBLY-GROUP 502B98
†ALSO SERVICED IN ASSEMBLY-GROUP 502B98
P-9240

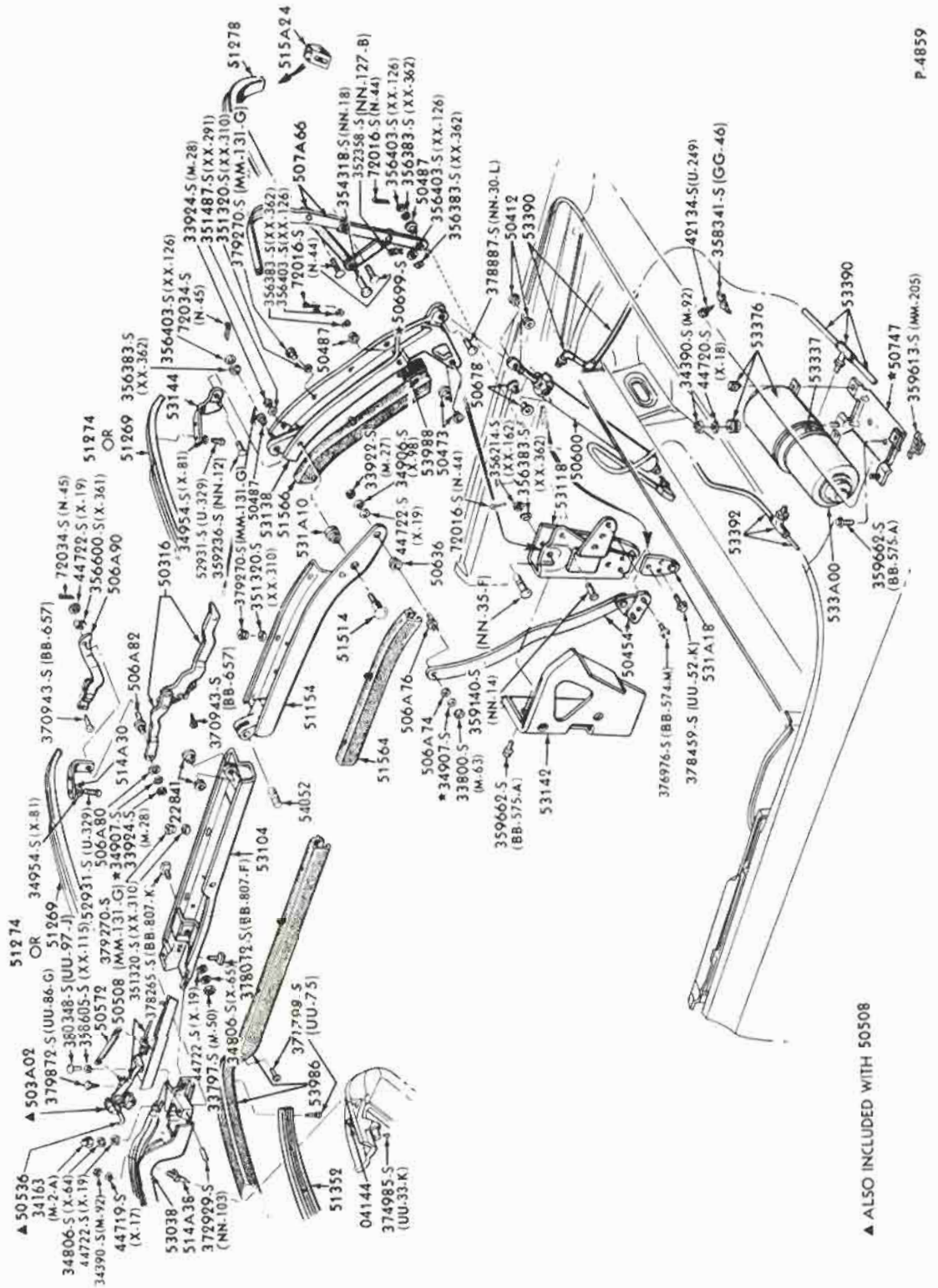

FOLDING TOP PARTS - LESS TRIM
1965/68 FORD - BODY TYPE 76

COPYRIGHT © 1975 — FORD MOTOR COMPANY — DEARBORN, MICHIGAN

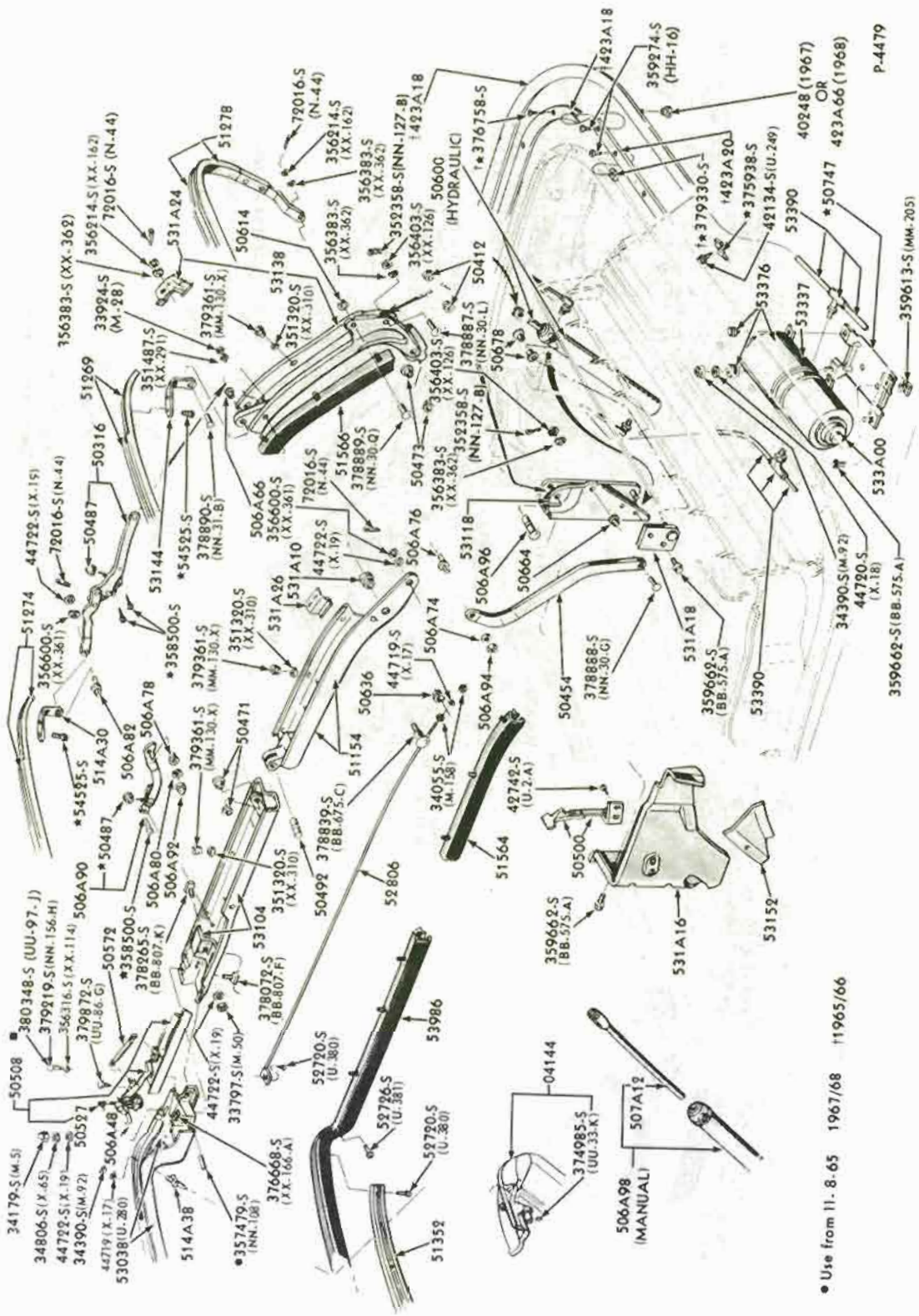

FOLDING TOP PARTS - LESS TRIM
1965/68 MUSTANG - BODY TYPE 76 - TYPICAL

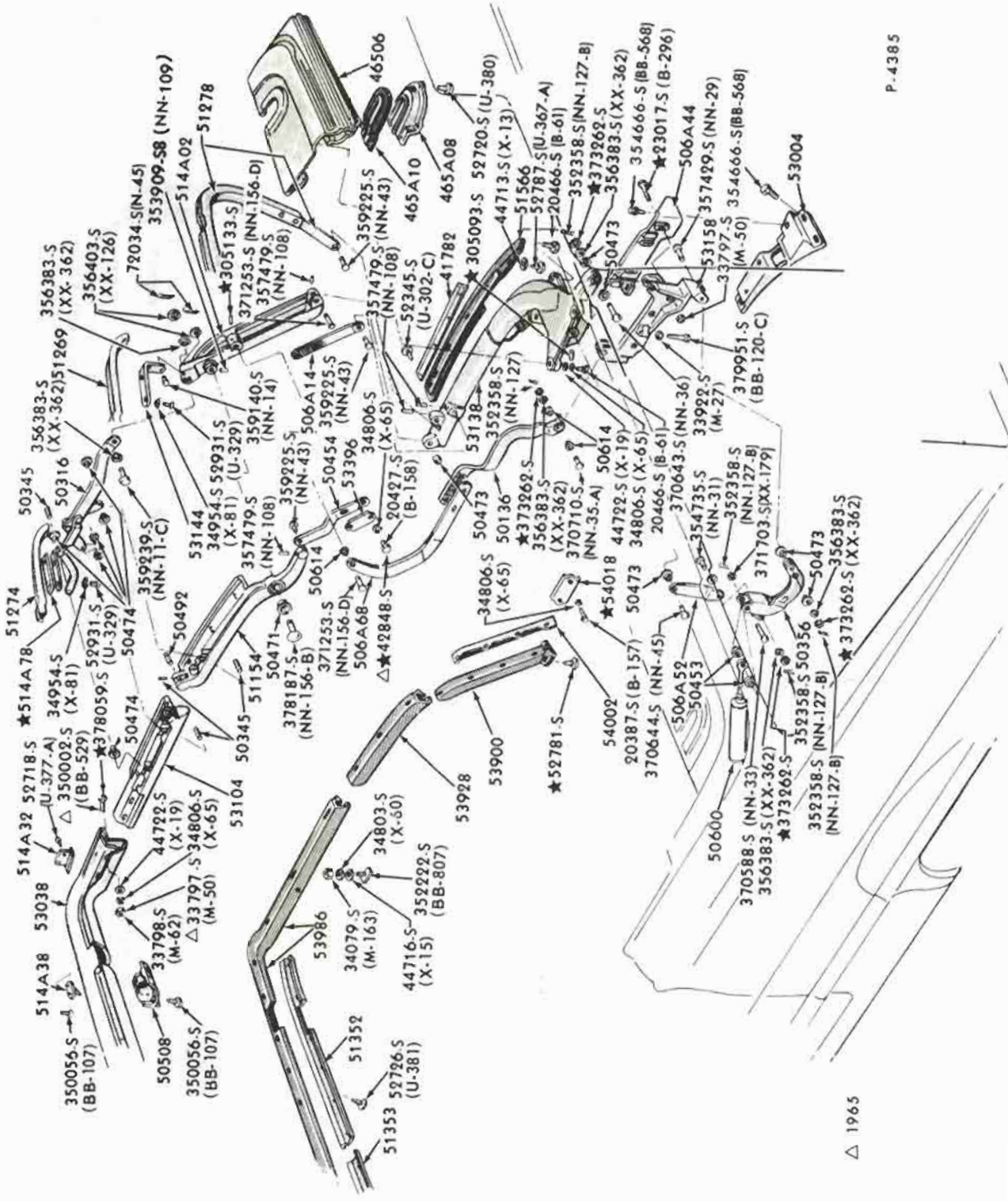

FOLDING TOP PARTS - LESS TRIM
1965/66 THUNDERBIRD - BODY TYPE 76

COPYRIGHT © 1975 — FORD MOTOR COMPANY — DEARBORN, MICHIGAN

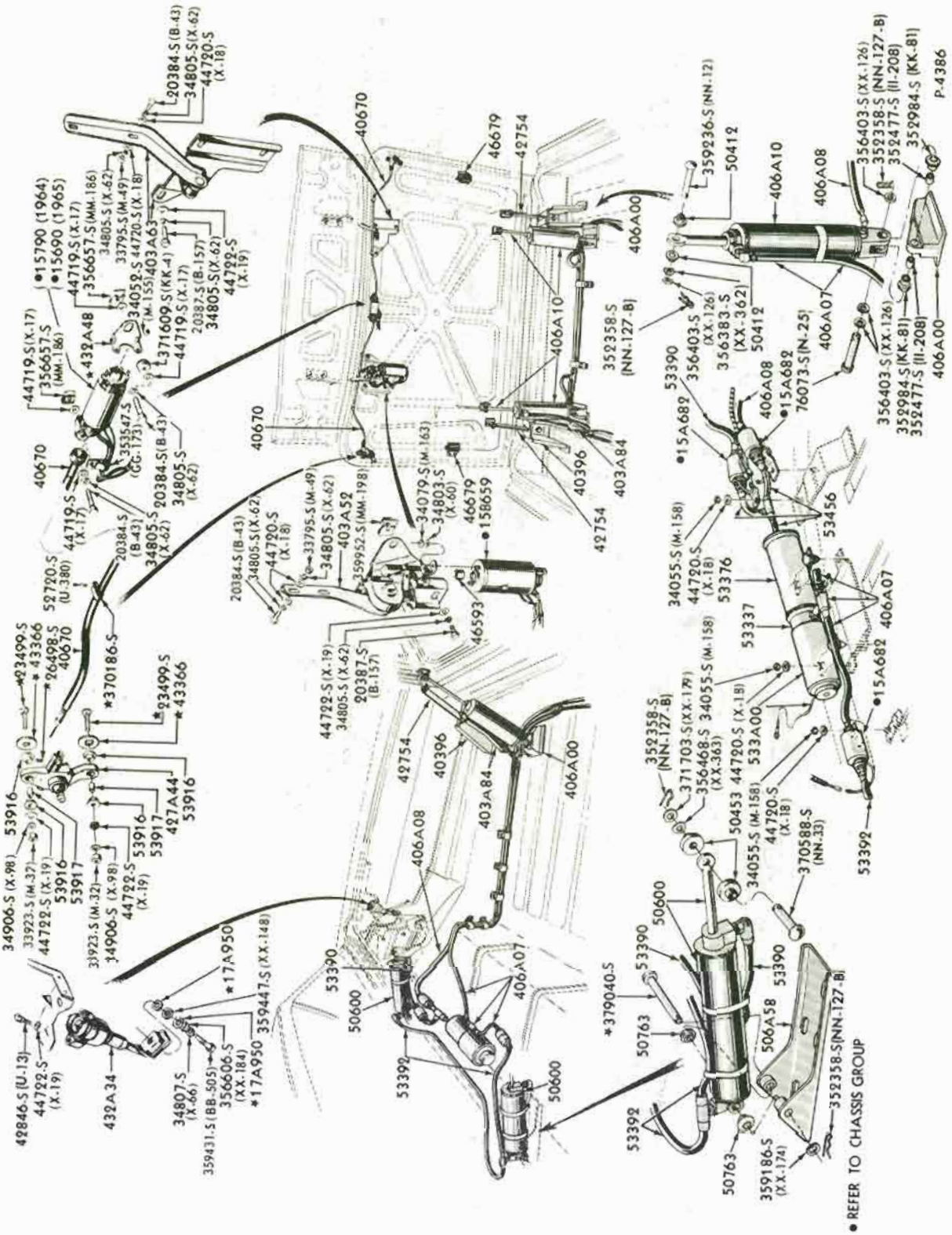

FOLDING TOP and LUGGAGE COMPARTMENT HYDRAULIC LIFT and RELATED PARTS
1965/66 THUNDERBIRD - BODY TYPE 76

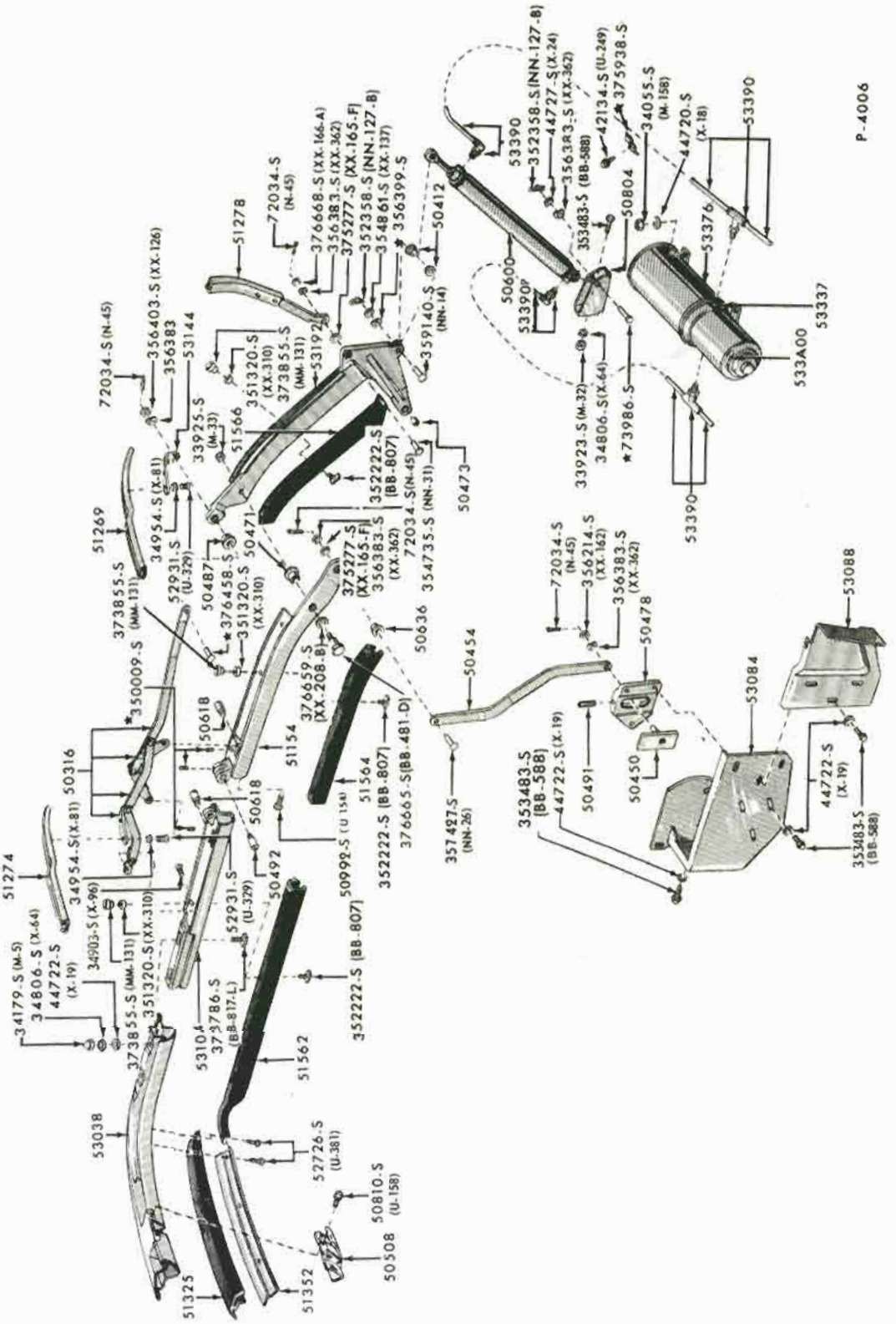

FOLDING TOP PARTS - LESS TRIM
1965 FALCON - BODY TYPE 76

COPYRIGHT © 1975 — FORD MOTOR COMPANY — DEARBORN, MICHIGAN

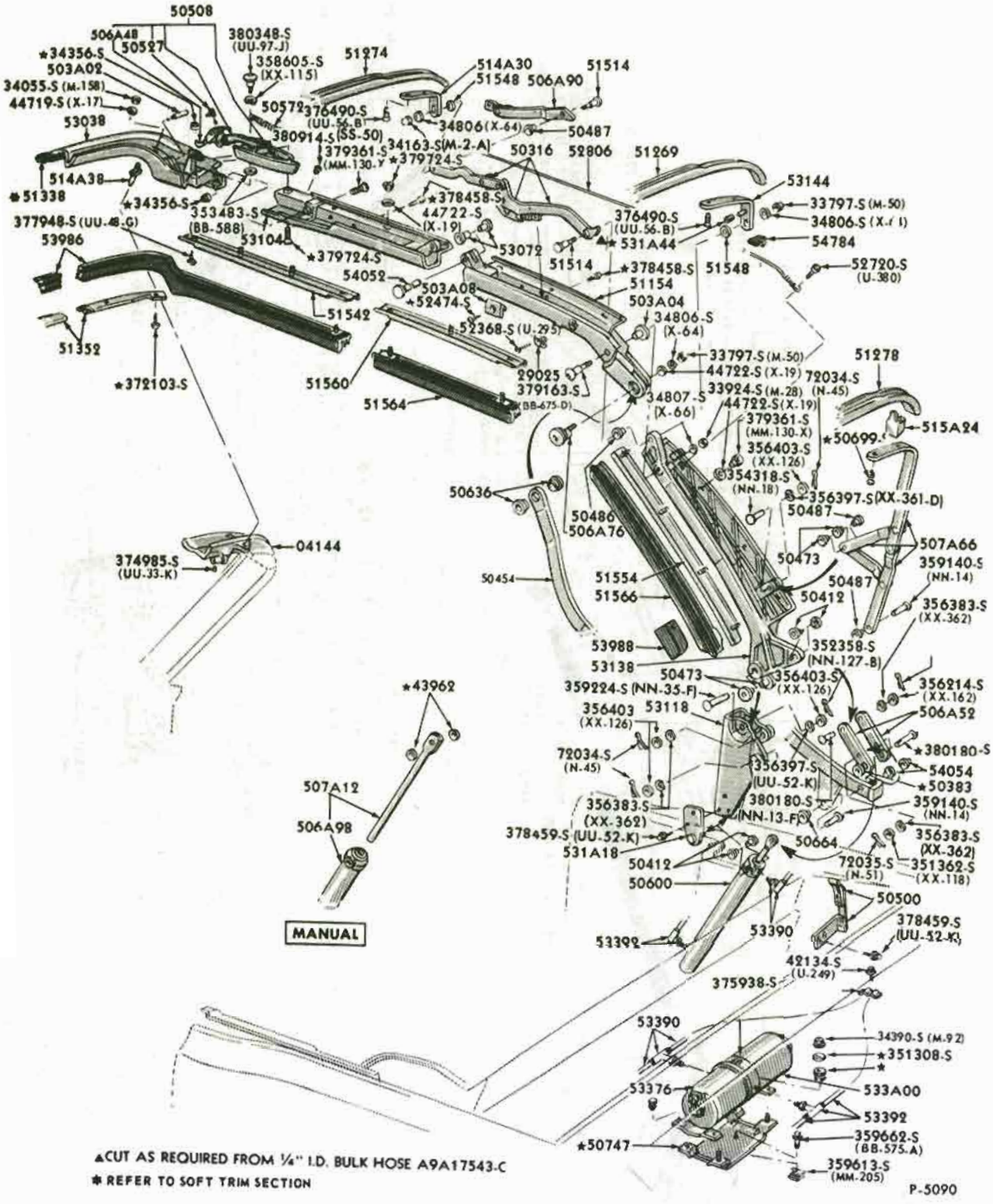

▲CUT AS REQUIRED FROM ¼" I.D. BULK HOSE A9A17543-C

✱ REFER TO SOFT TRIM SECTION

FOLDING TOP PARTS - LESS TRIM
1966 FAIRLANE - BODY TYPE 76

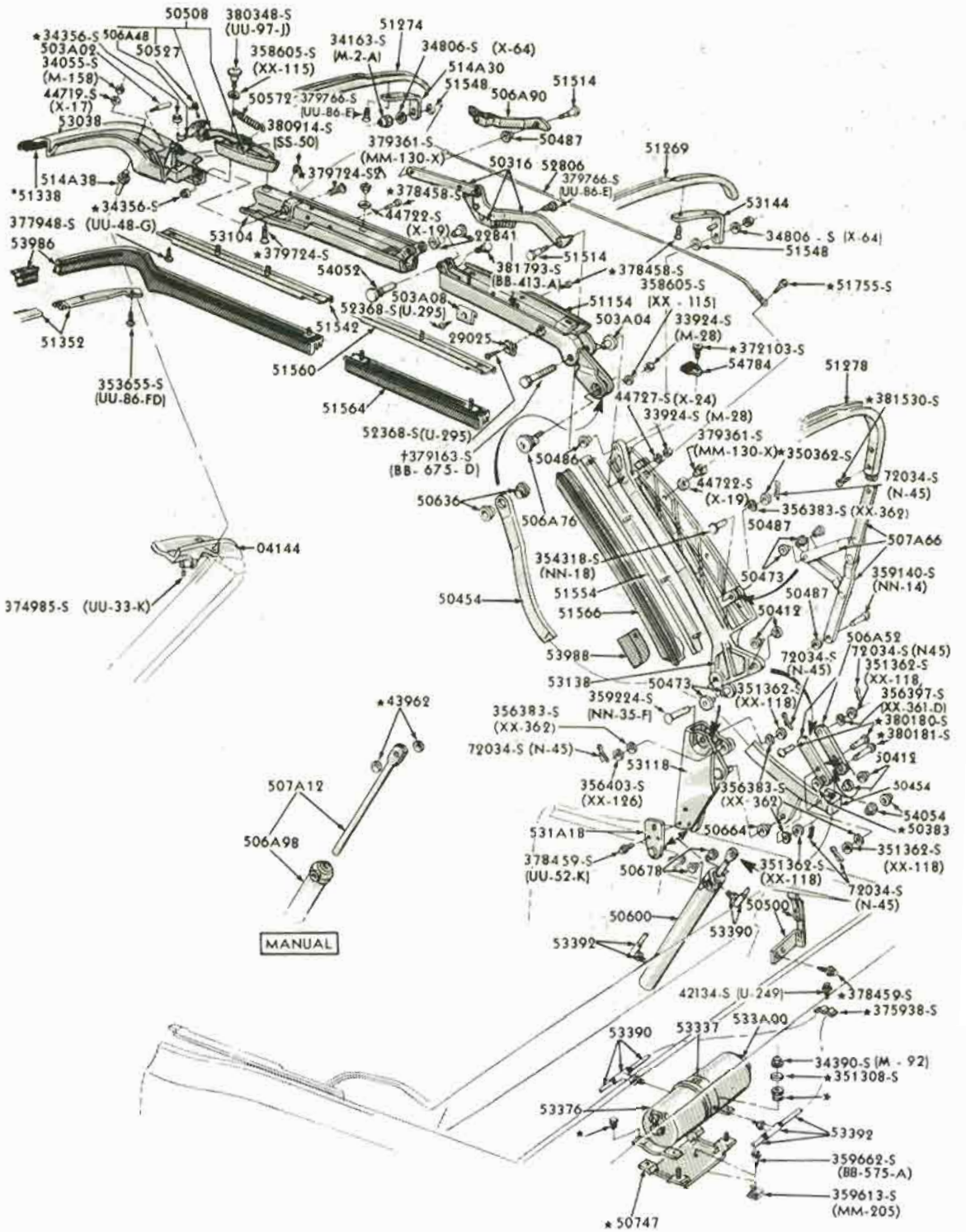

*REFER TO SOFT TRIM SECTION

▪ 1967/68

P-5531

FOLDING TOP PARTS - LESS TRIM
1967/69 FAIRLANE/TORINO - BODY TYPE 76

COPYRIGHT © 1975 — FORD MOTOR COMPANY — DEARBORN, MICHIGAN

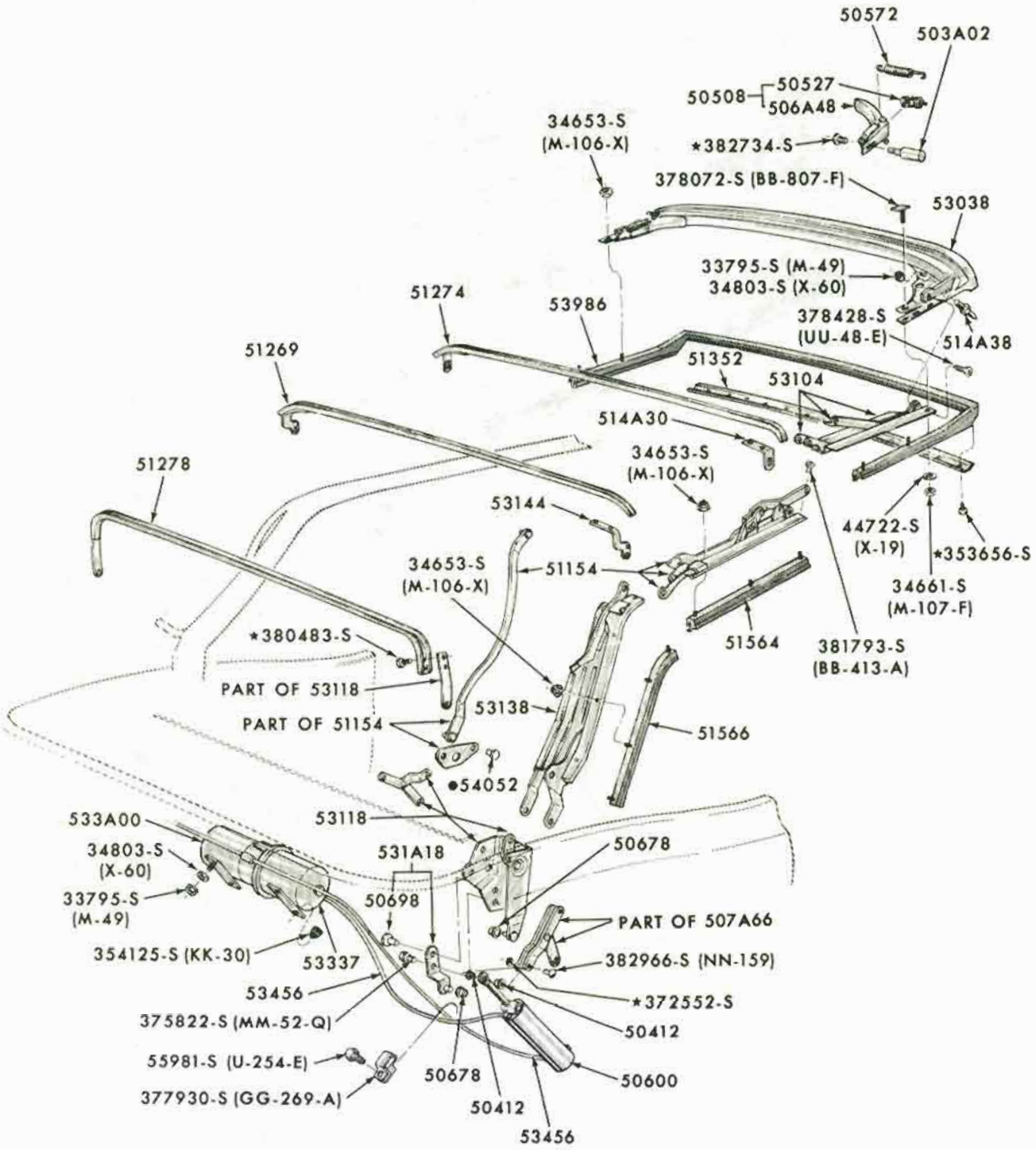

•ALSO SERVICED IN ASSEMBLY-GROUP 51154-5

P-6776-A

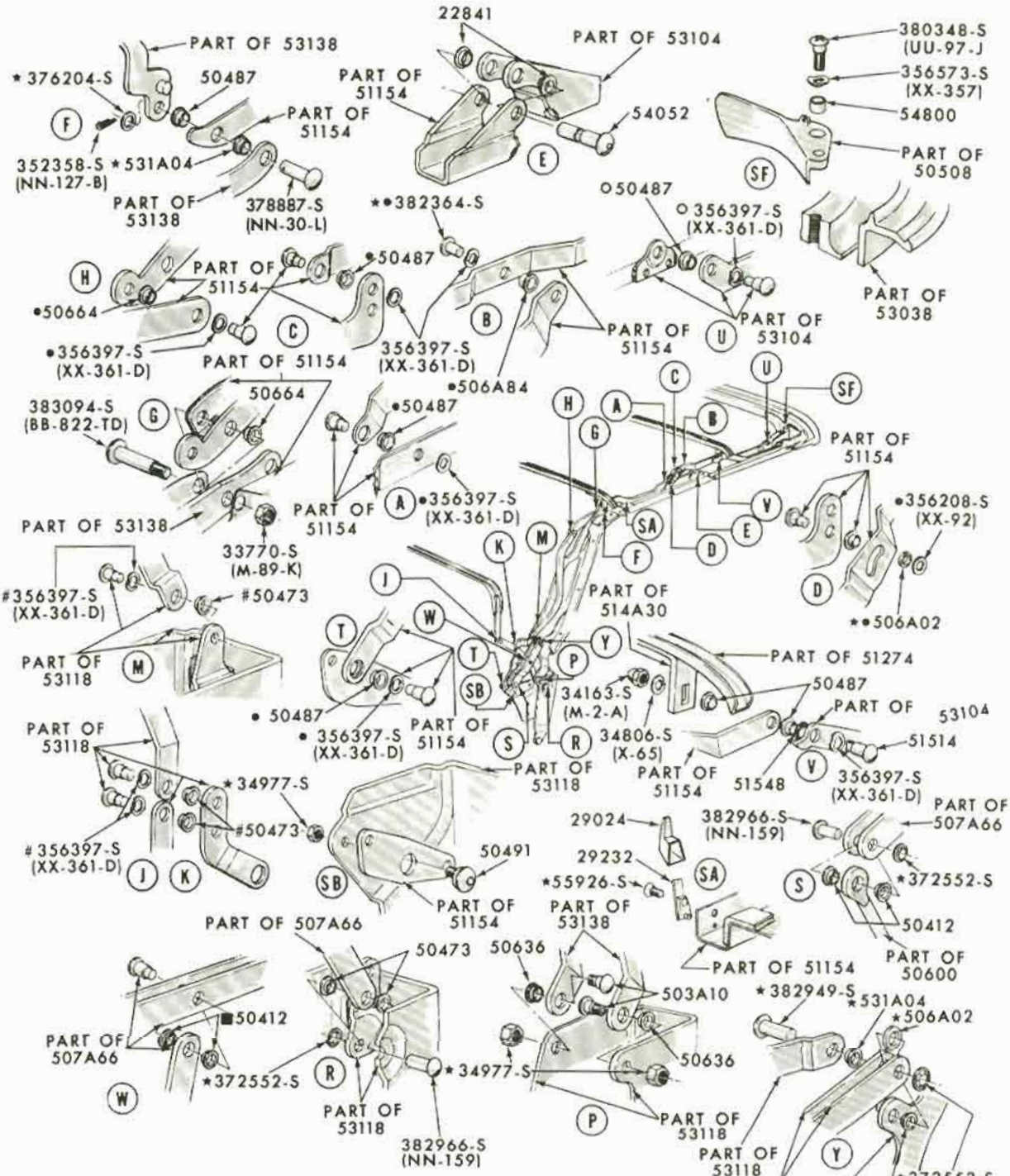

• ALSO SERVICED IN ASSEMBLY-GROUP 51154-5
■ ALSO SERVICED IN ASSEMBLY-GROUP 507A66-7
○ ALSO SERVICED IN ASSEMBLY-GROUP 53104-5
ALSO SERVICED IN ASSEMBLY-GROUP 53118-9

P-6776-B

May, 1975 COPYRIGHT © 1975 — FORD MOTOR COMPANY — DEARBORN, MICHIGAN FINAL ISSUE

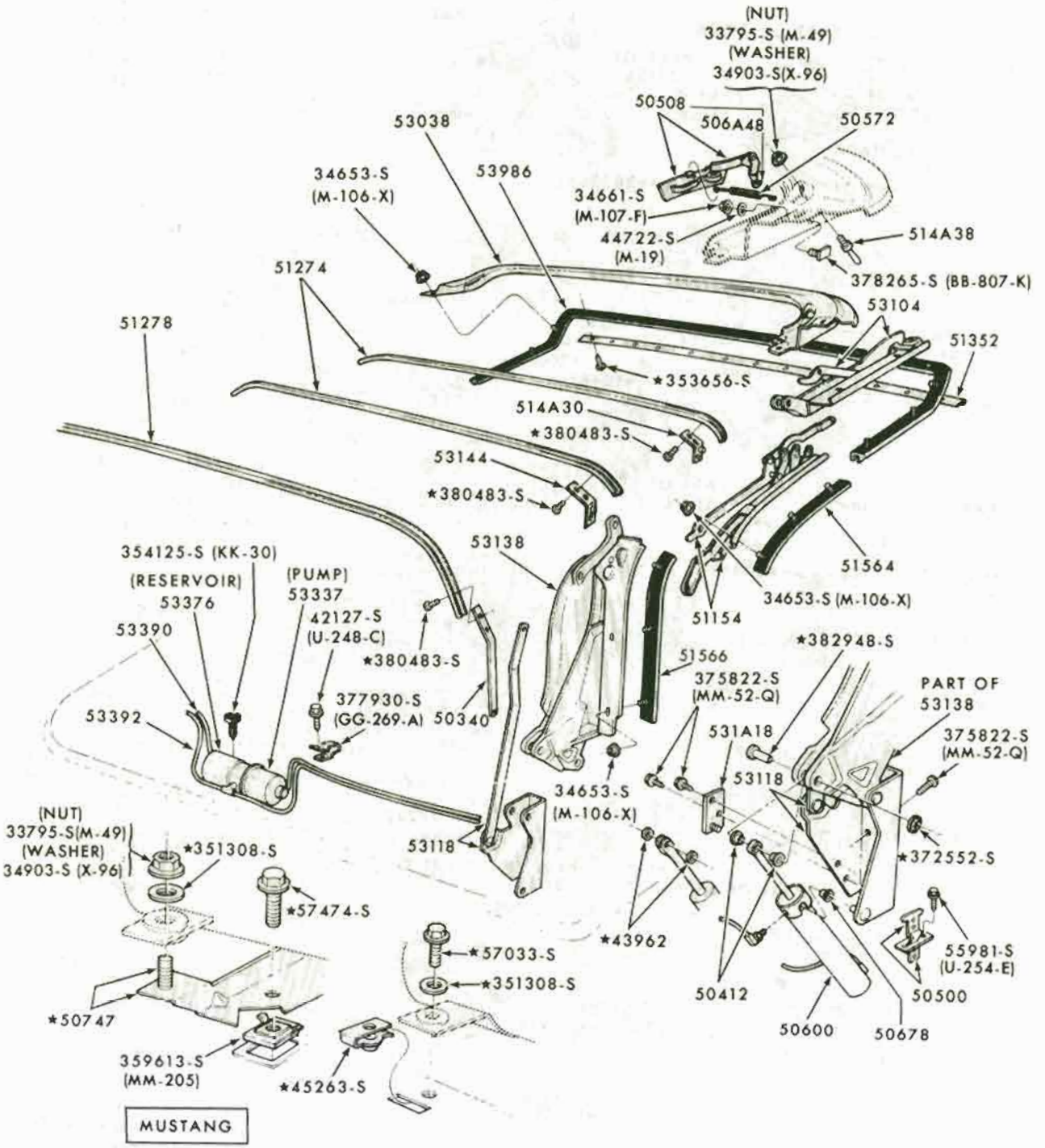

P-6987-A

FOLDING TOP PARTS -LESS TRIM
1969/70 MUSTANG

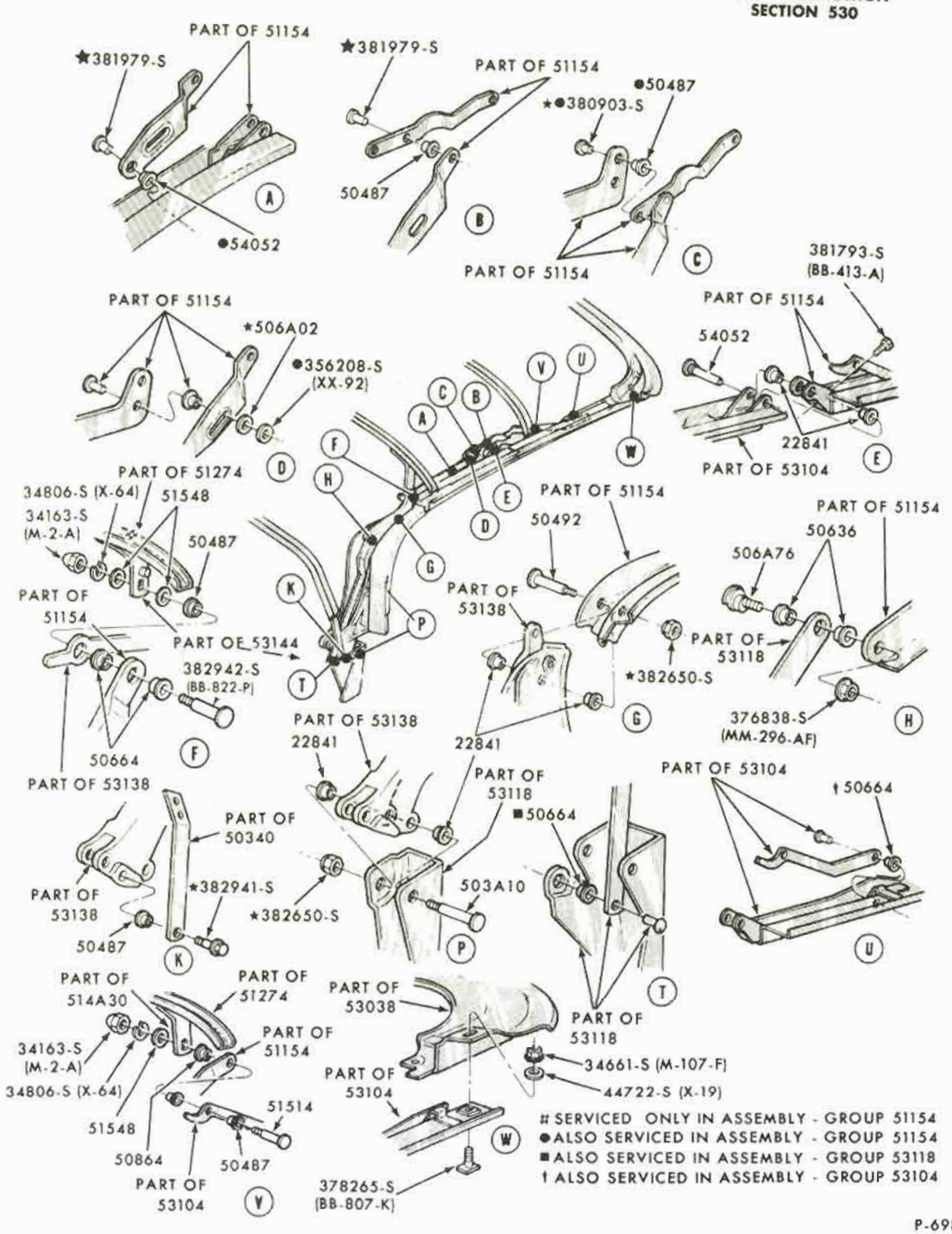

SERVICED ONLY IN ASSEMBLY - GROUP 51154
● ALSO SERVICED IN ASSEMBLY - GROUP 51154
■ ALSO SERVICED IN ASSEMBLY - GROUP 53118
† ALSO SERVICED IN ASSEMBLY - GROUP 53104

P-6987-B

COPYRIGHT © 1975 — FORD MOTOR COMPANY — DEARBORN, MICHIGAN

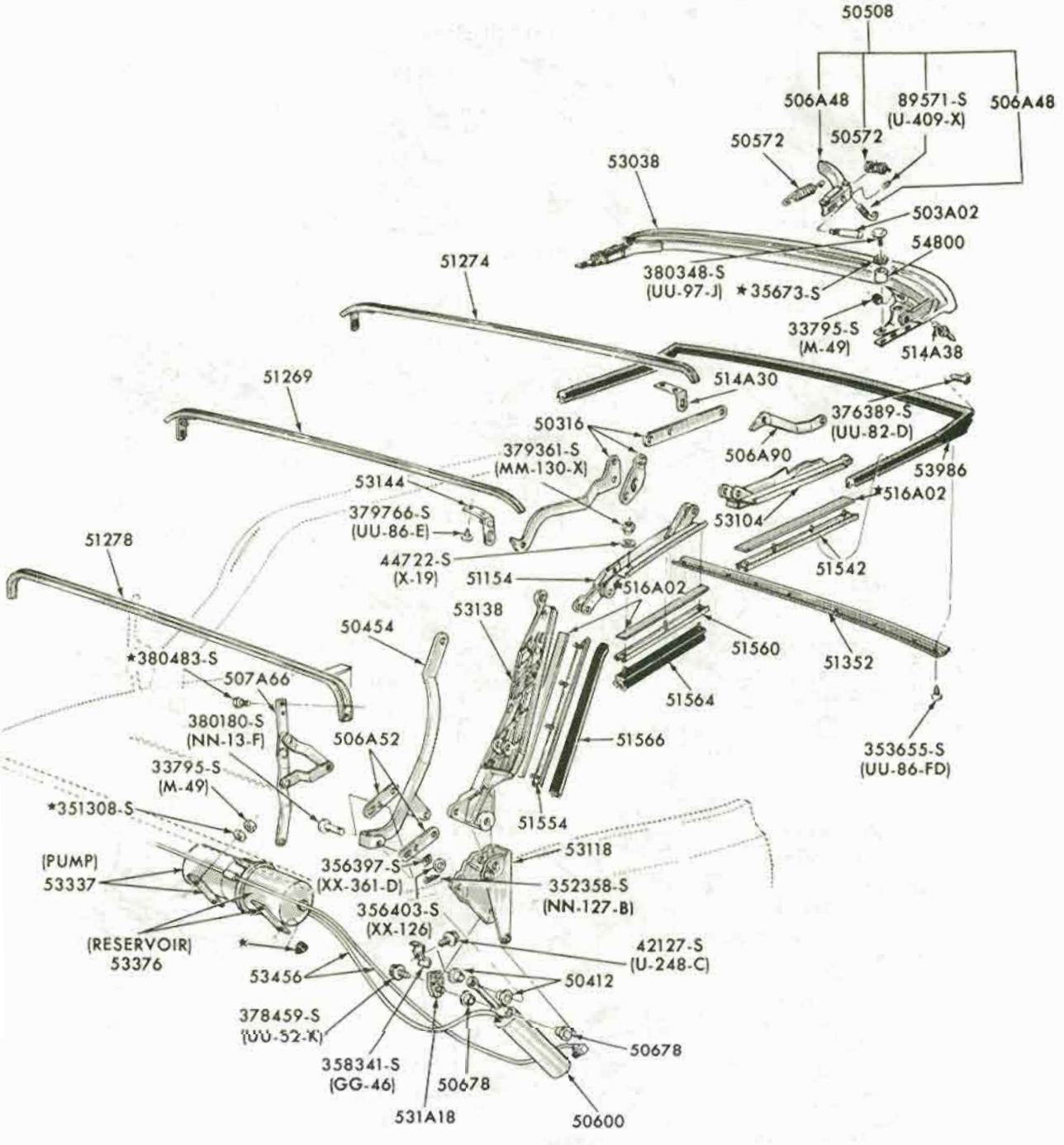

P-7435-A

FOLDING TOP PARTS - LESS TRIM
1970/72 FAIRLANE/TORINO - BODY TYPE 76

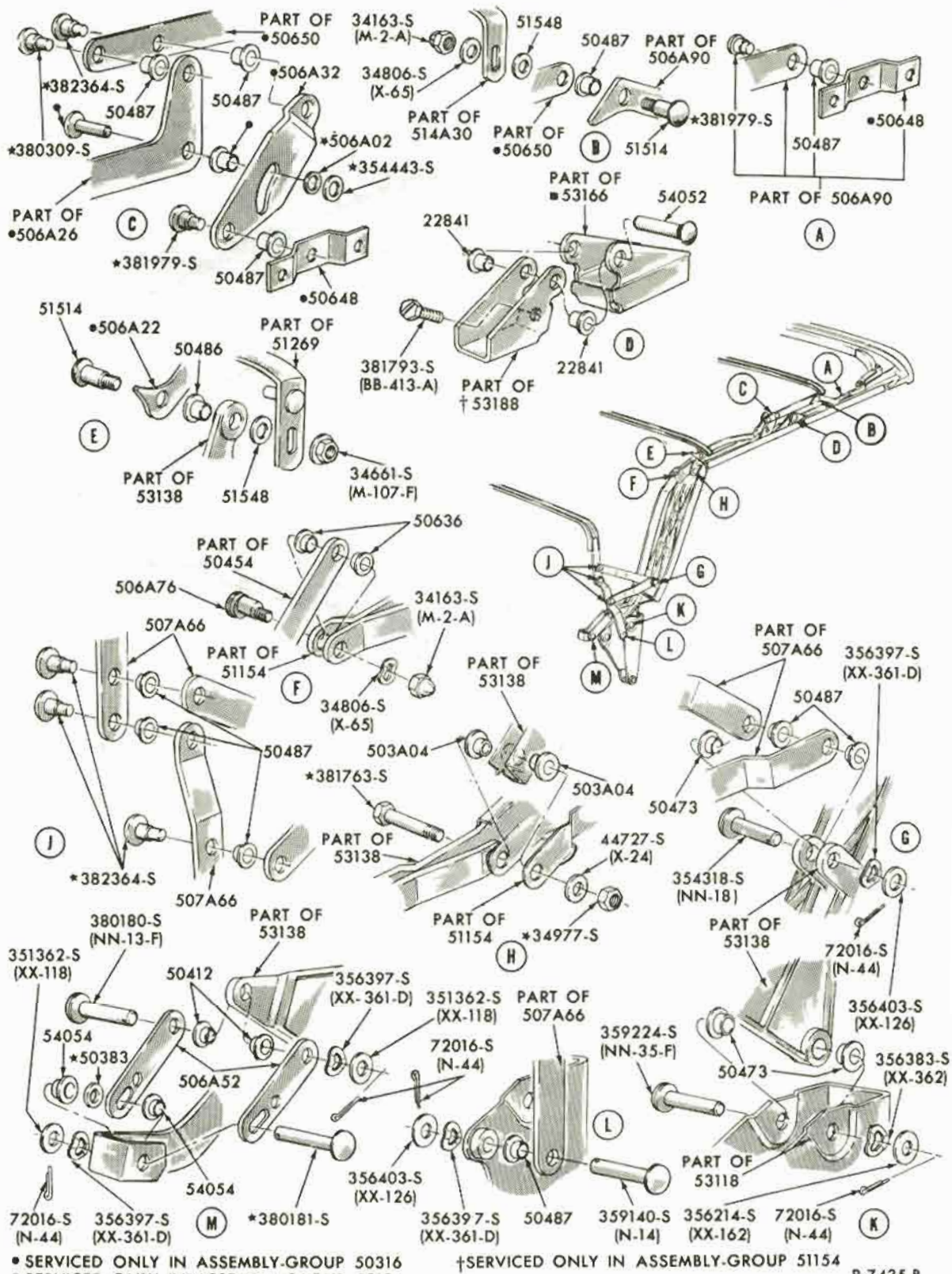

• SERVICED ONLY IN ASSEMBLY-GROUP 50316
■ SERVICED ONLY IN ASSEMBLY-GROUP 53104
†SERVICED ONLY IN ASSEMBLY-GROUP 51154

P-7435-B

FOLDING TOP PARTS LESS TRIM - continued
1970/72 FAIRLANE/TORINO-BODY TYPE 76

COPYRIGHT © 1975 — FORD MOTOR COMPANY — DEARBORN, MICHIGAN

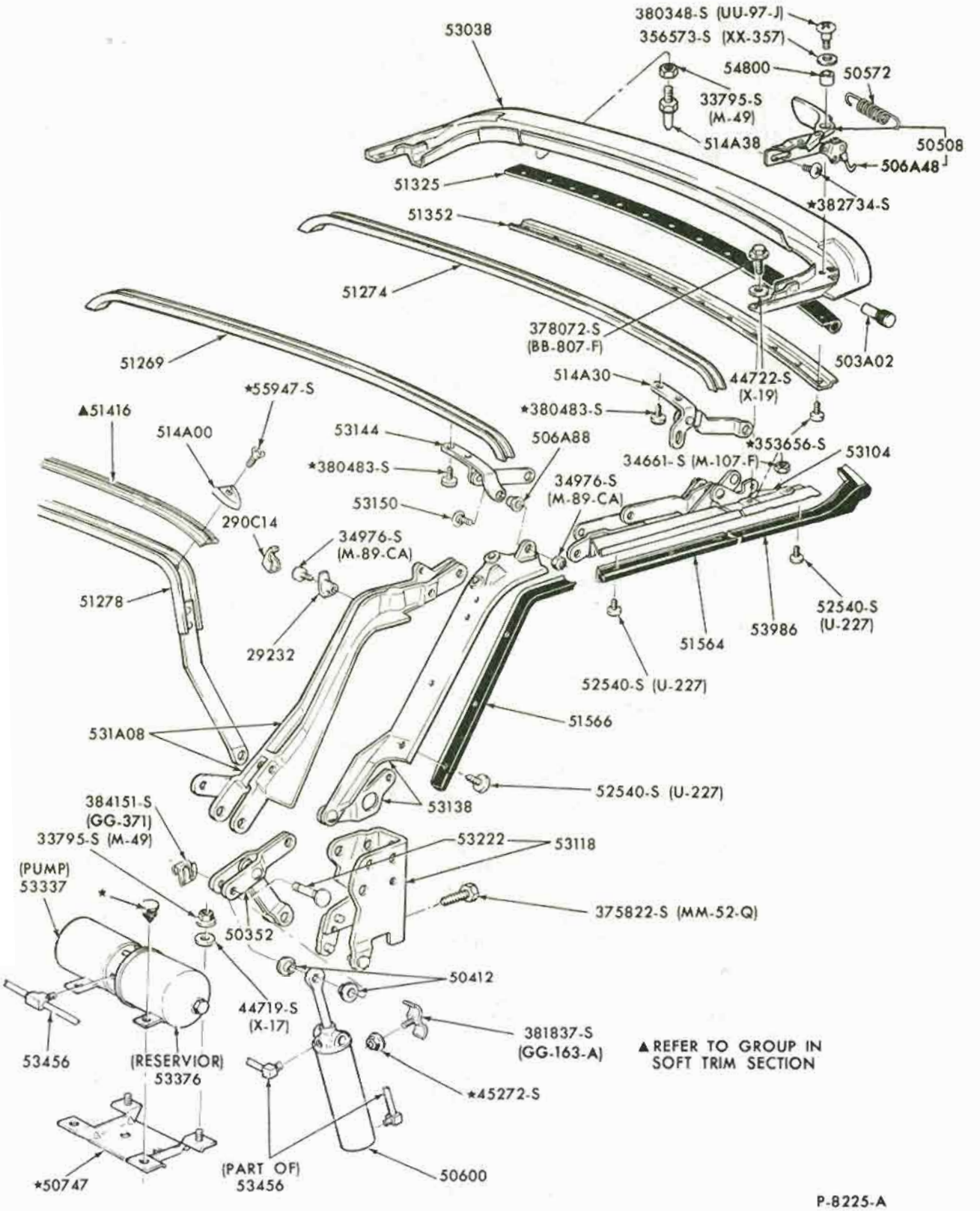

FOLDING TOP PARTS - LESS TRIM
1971/72 MUSTANG - BODY TYPE 76

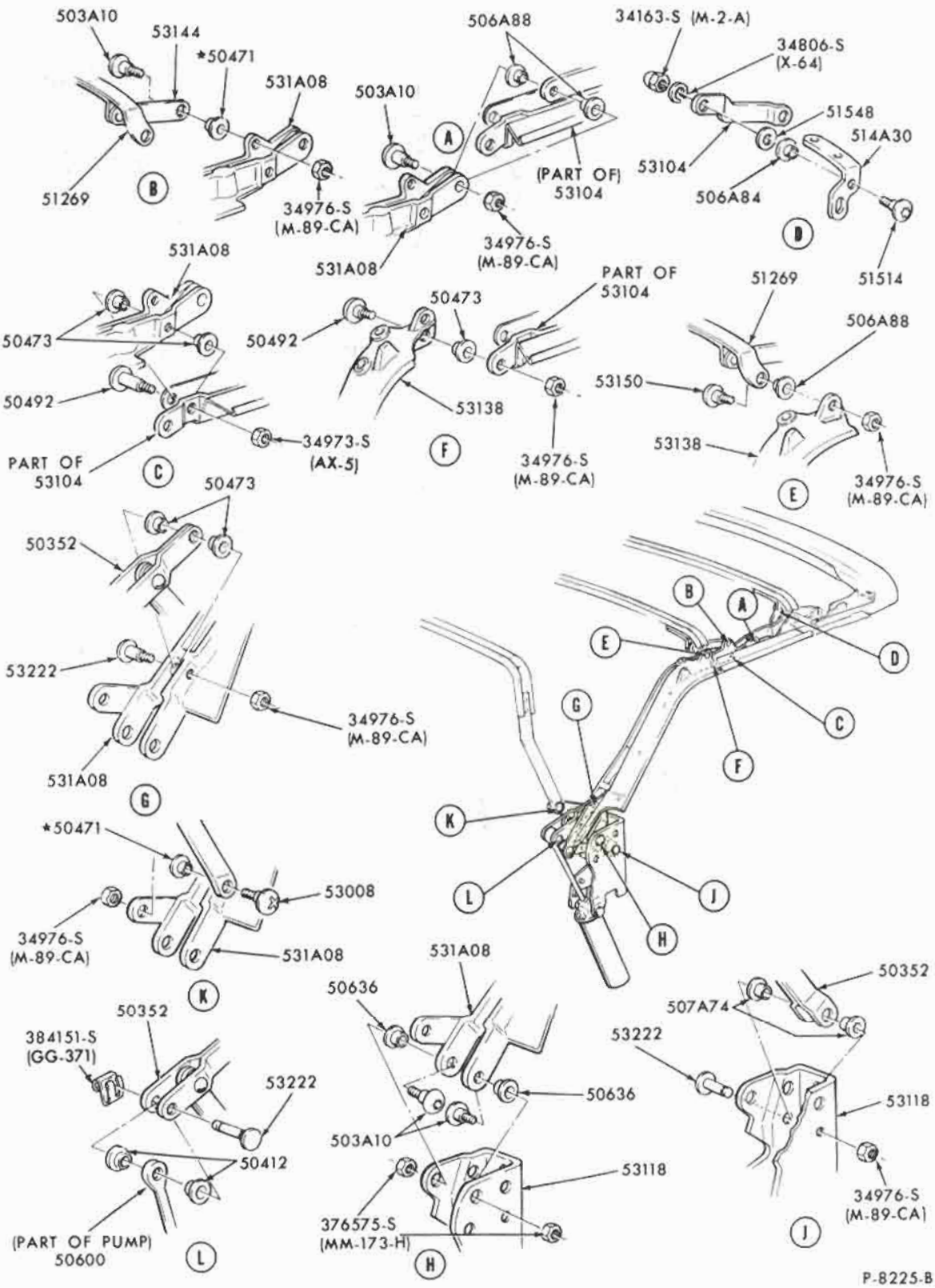

FOLDING TOP PARTS - LESS TRIM - continued

1971/72 MUSTANG - BODY TYPE 76

COPYRIGHT © 1975 — FORD MOTOR COMPANY — DEARBORN, MICHIGAN

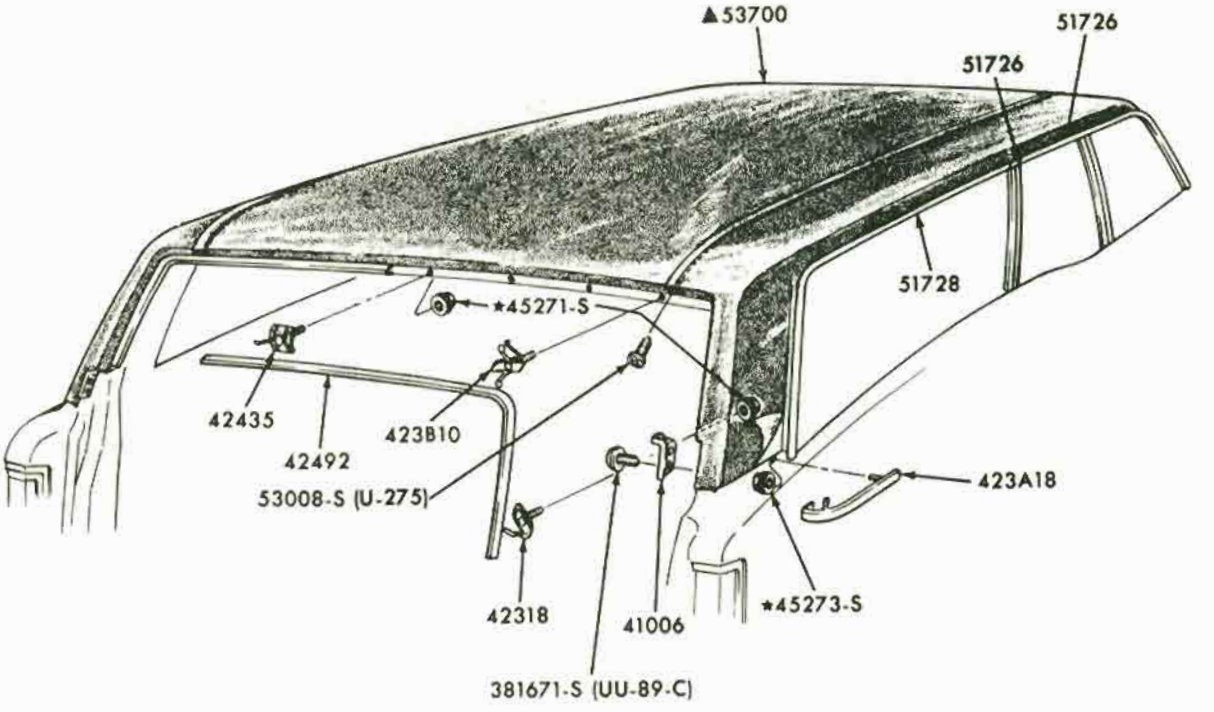

▲REFER TO GROUP IN SOFT TRIM SECTION P-6963

ROOF COVER and RELATED PARTS
1969/72 FORD - BODY TYPE 71

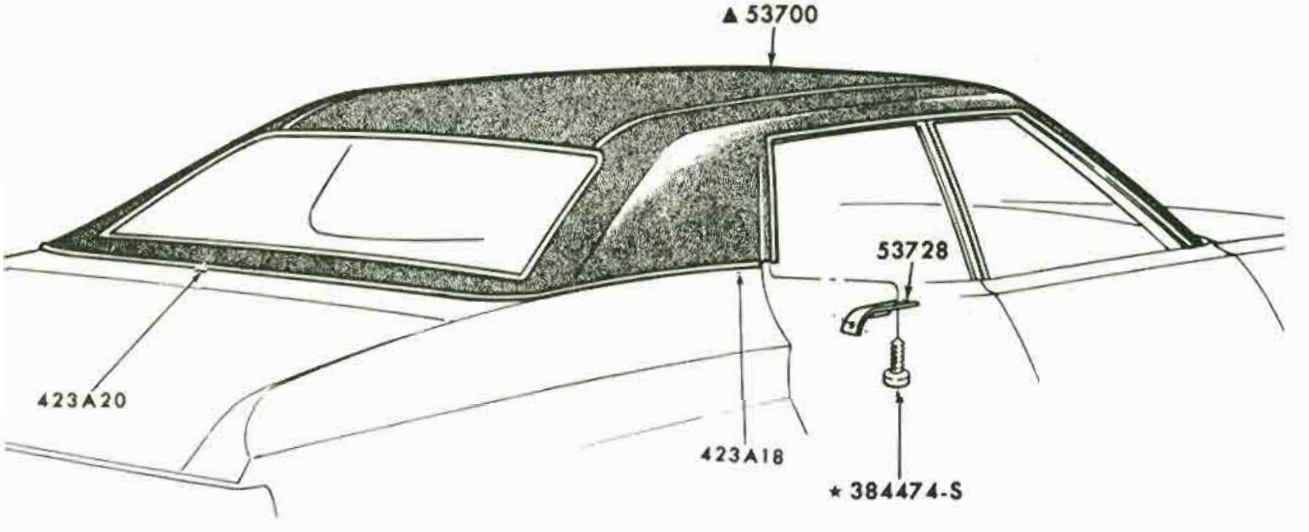

▲REFER TO GROUP IN SOFT TRIM SECTION P-9241

ROOF COVER and RELATED PARTS
1972 TORINO - BODY TYPE 53

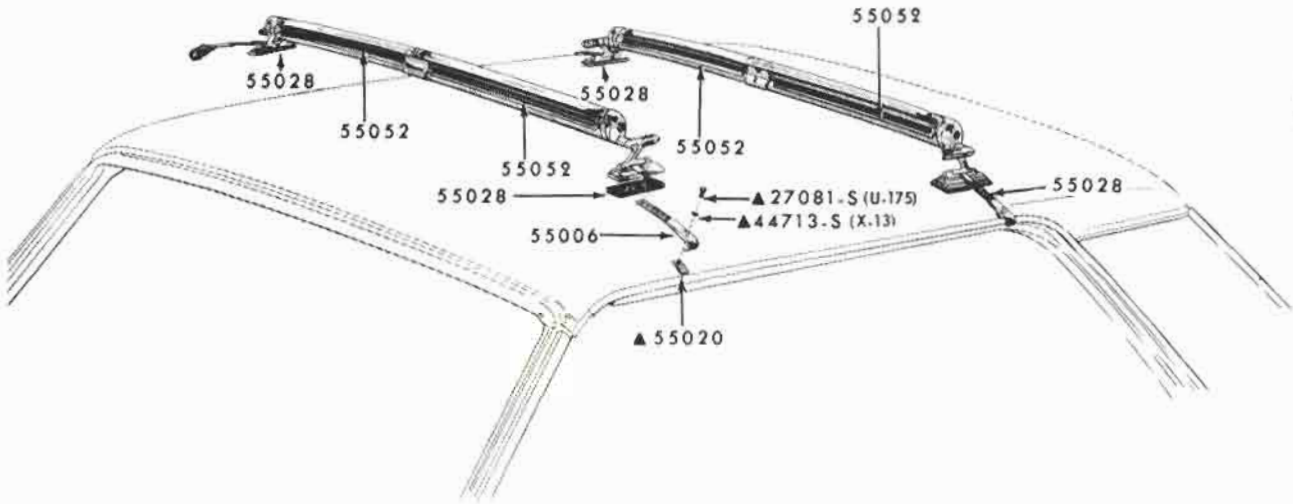

▲ALSO INCLUDED IN 55006

P-4050

SKI CARRIER - ROOF MOUNTED
1965 FORD, FAIRLANE, FALCON, and THUNDERBIRD

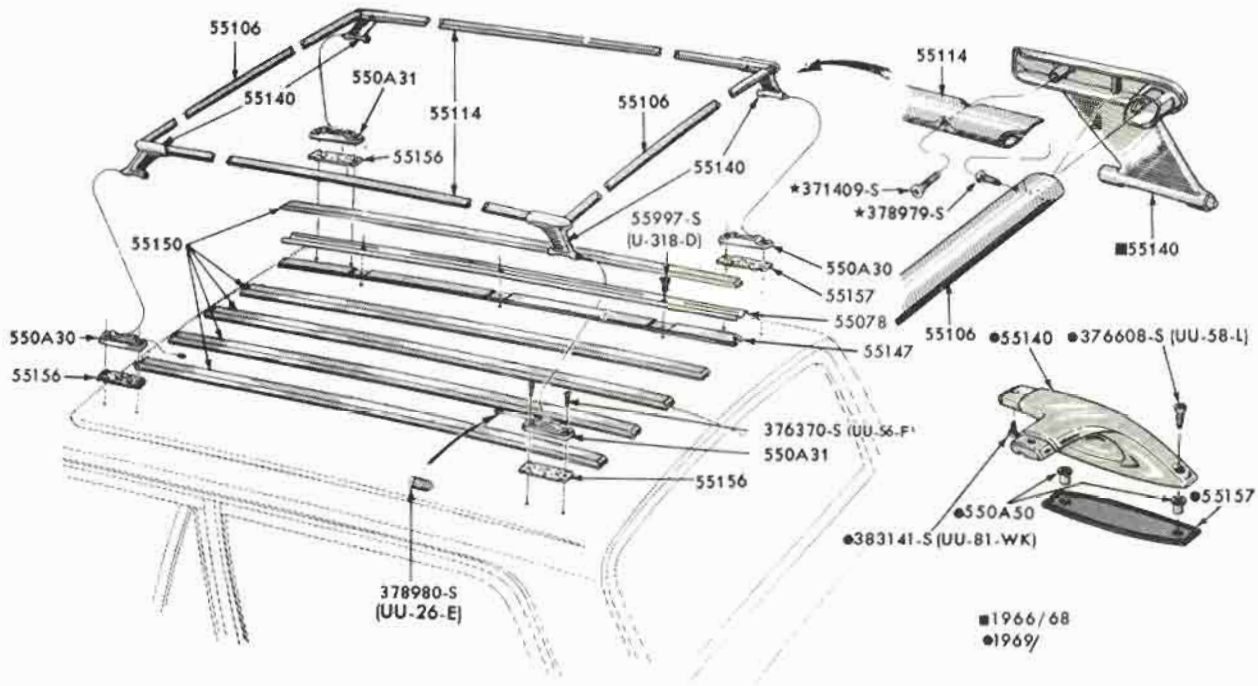

P-5091

LUGGAGE CARRIER - NON-ADJUSTABLE - ROOF MOUNTED
1966/69 FORD, FAIRLANE/TORINO and FALCON - BODY TYPE 71 - TYPICAL

COPYRIGHT © 1975 — FORD MOTOR COMPANY — DEARBORN, MICHIGAN

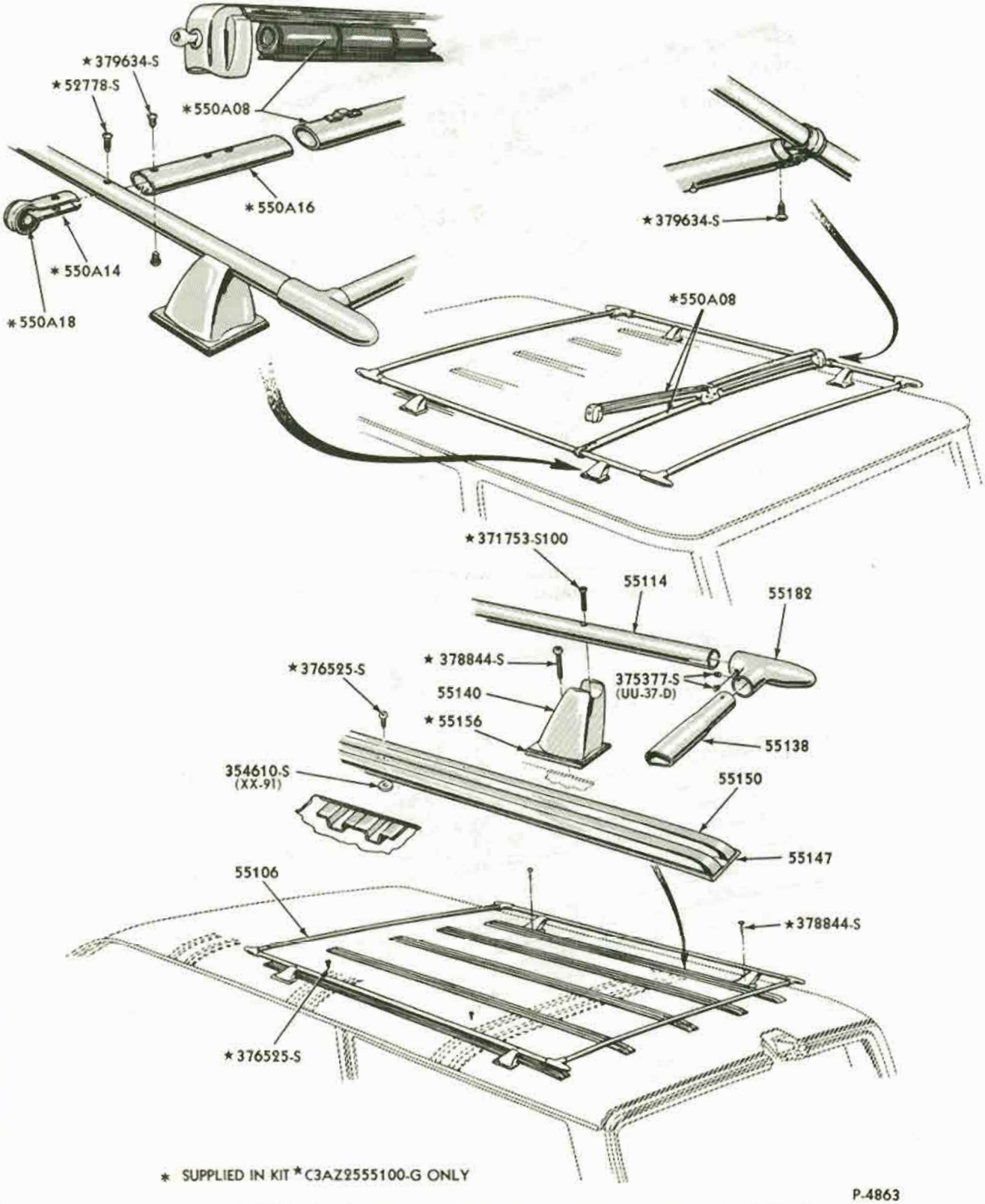

★ SUPPLIED IN KIT ★C3AZ2555100-G ONLY

P-4863

LUGGAGE and CARRIER and RELATED PARTS - NON-ADJUSTABLE ROOF MOUNTED (5 SLATS)
1965/66 FORD, FAIRLANE, FALCON, MUSTANG, and THUNDERBIRD - TYPICAL

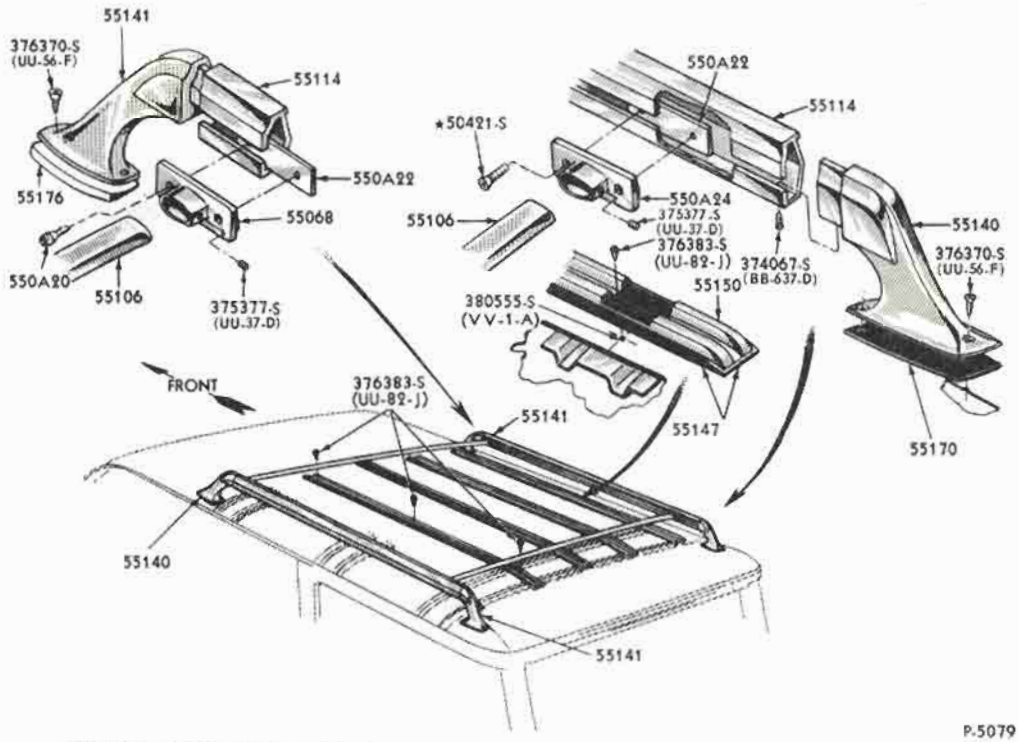

P-5079

LUGGAGE CARRIER and RELATED PARTS - ADJUSTABLE (5 SLATS) - ROOF MOUNTED
1966/68 FORD - BODY TYPE 71
1966/69 FAIRLANE/TORINO and FALCON - BODY TYPE 71

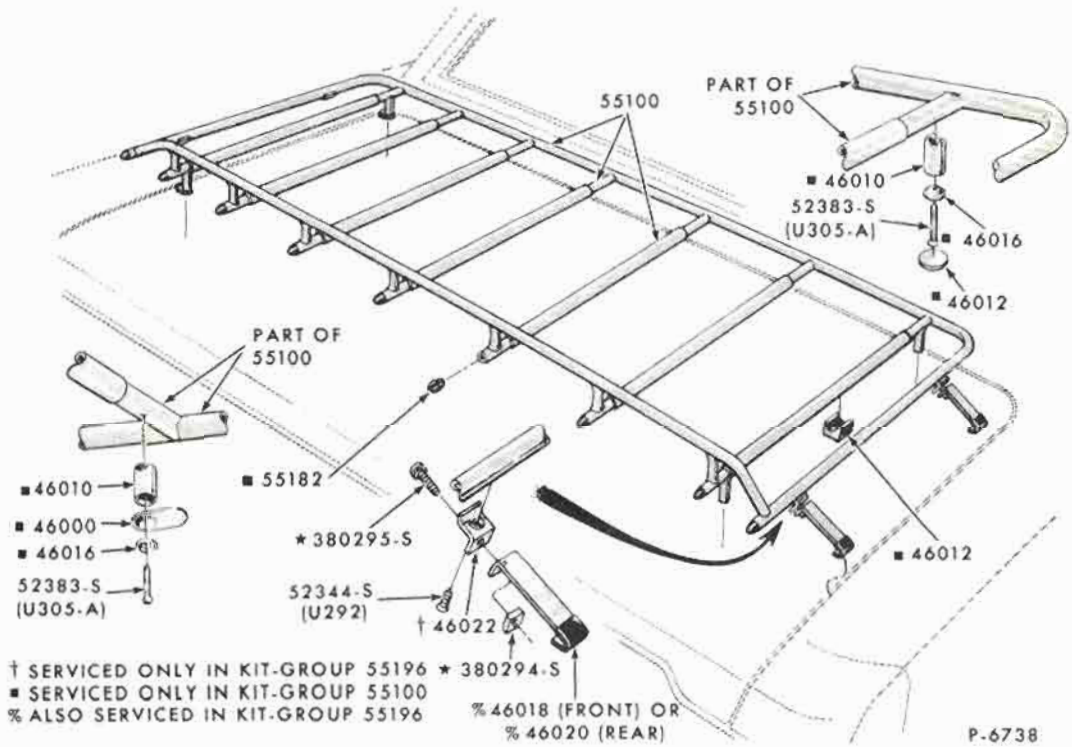

P-6738

LUGGAGE CARRIER - LUGGAGE COMPARTMENT MOUNTED-REMOVABLE
1969/72 FORD, FAIRLANE/TORINO, FALCON, MUSTANG, MAVERICK

COPYRIGHT © 1975 — FORD MOTOR COMPANY — DEARBORN, MICHIGAN

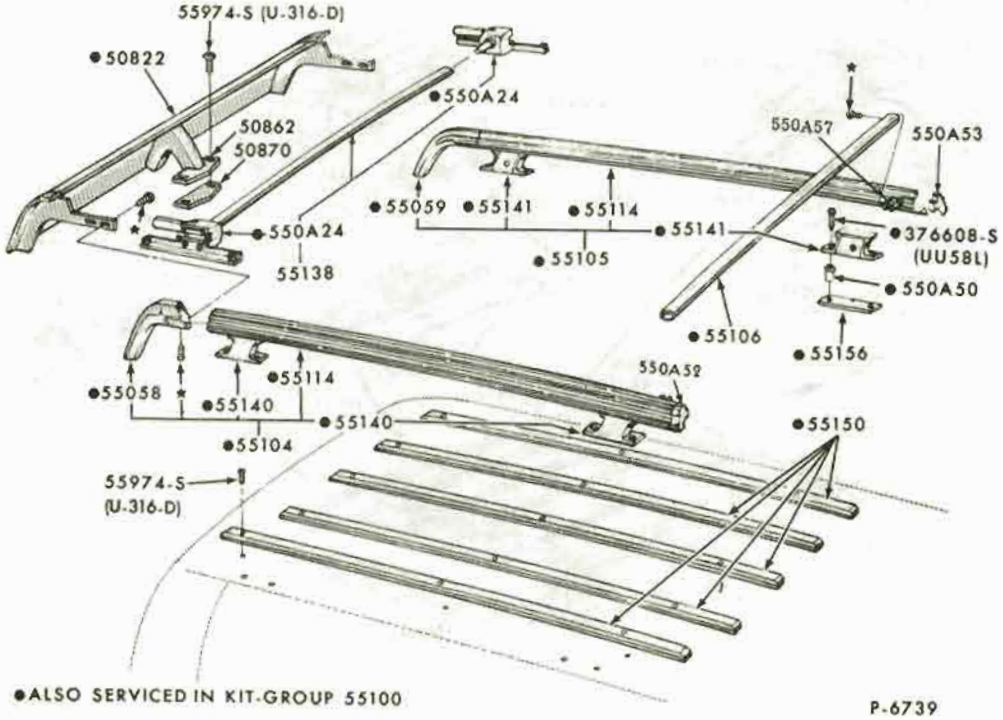

LUGGAGE CARRIER - ROOF MOUNTED - ADJUSTABLE
1969 FORD - BODY TYPE 71

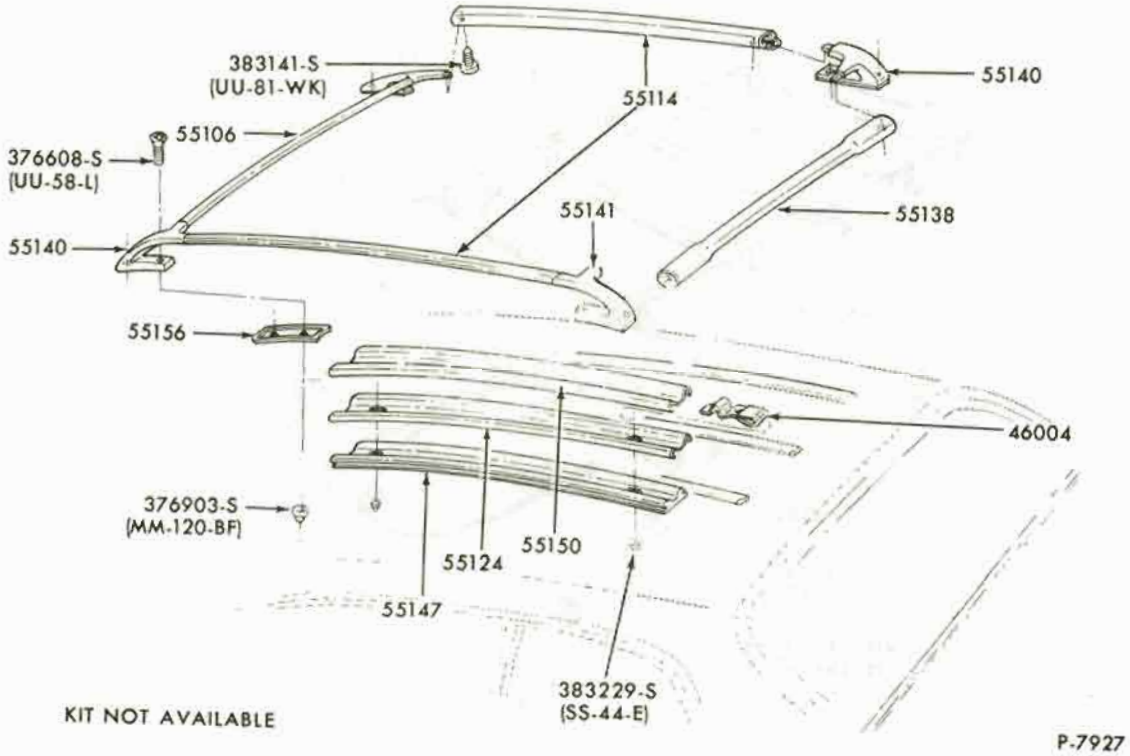

LUGGAGE CARRIER and RELATED PARTS - ROOF MOUNTED
1971/72 PINTO

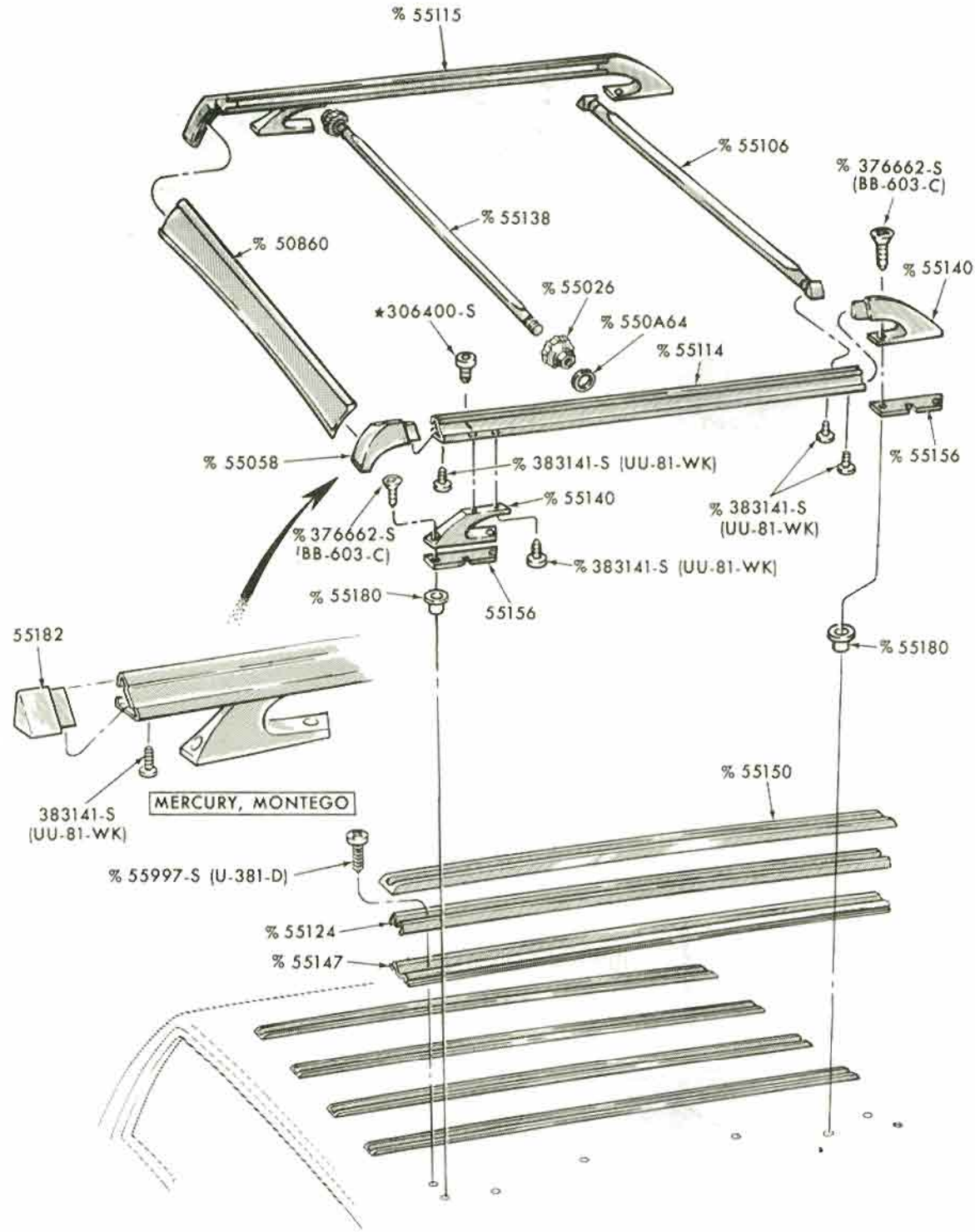

% ALSO SERVICED IN KIT—GROUP 55100

P-7403

LUGGAGE CARRIER and RELATED PARTS - ADJUSTABLE - (ALUMINUM)
1970/72 FORD, FAIRLANE/TORINO - BODY TYPE 71

COPYRIGHT © 1975 — FORD MOTOR COMPANY — DEARBORN, MICHIGAN

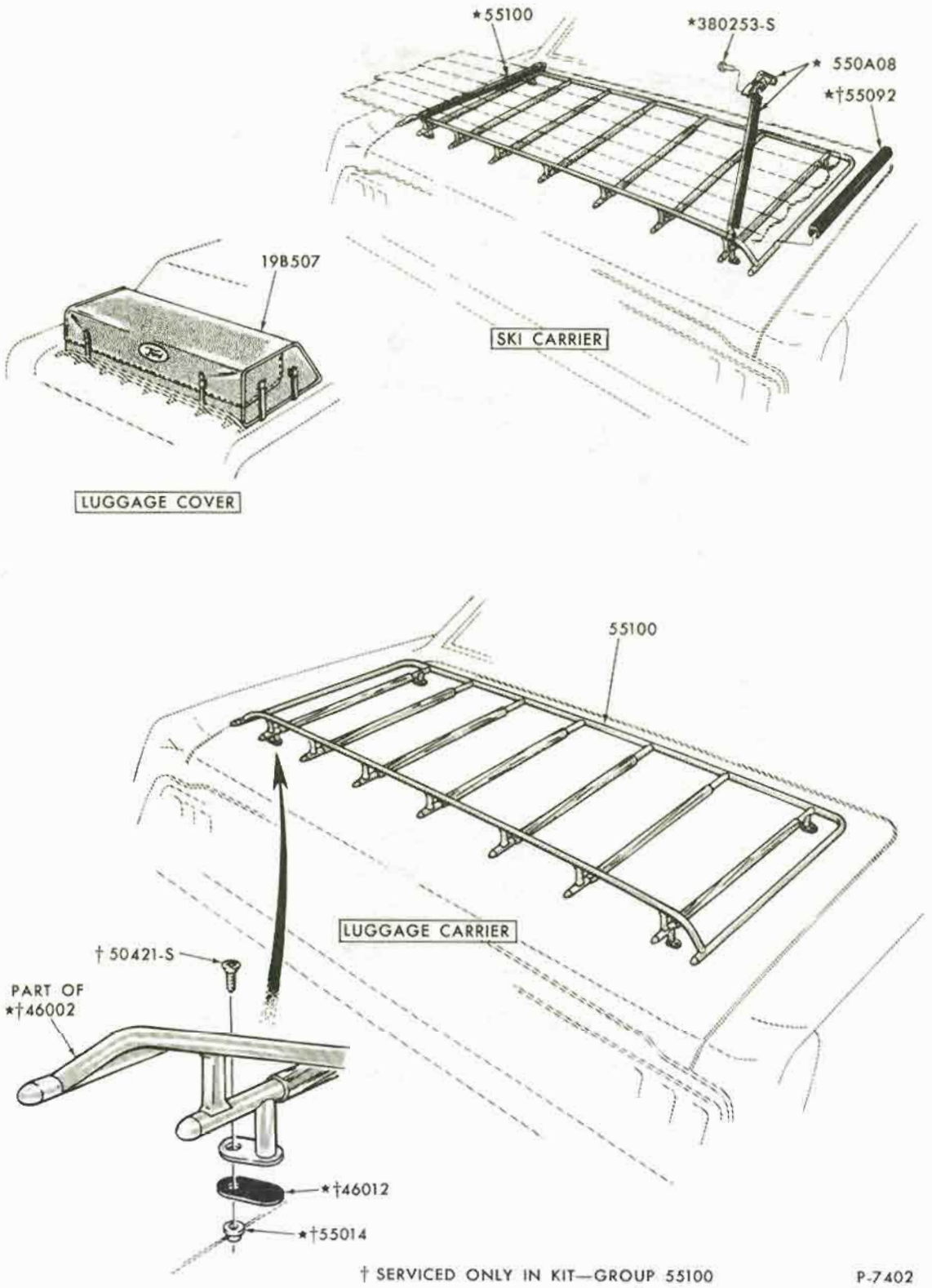

† SERVICED ONLY IN KIT—GROUP 55100

P-7402

LUGGAGE CARRIER, SKI RACK and LUGGAGE COVER
LUGGAGE COMPARTMENT MOUNTED - NON REMOVABLE
1970/72 ALL

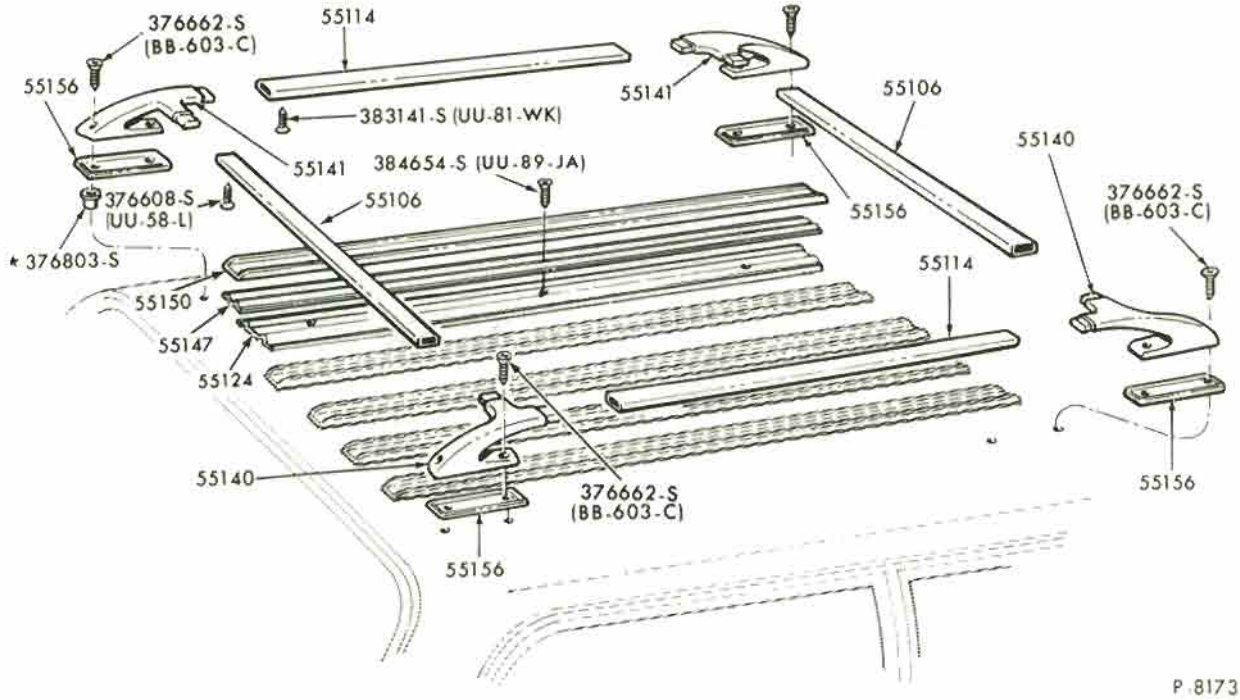

LUGGAGE CARRIER - ROOF MOUNTED - NON-ADJUSTABLE
1970/72 FORD, FAIRLANE/TORINO - BODY TYPE 71

COPYRIGHT © 1975 — FORD MOTOR COMPANY — DEARBORN, MICHIGAN

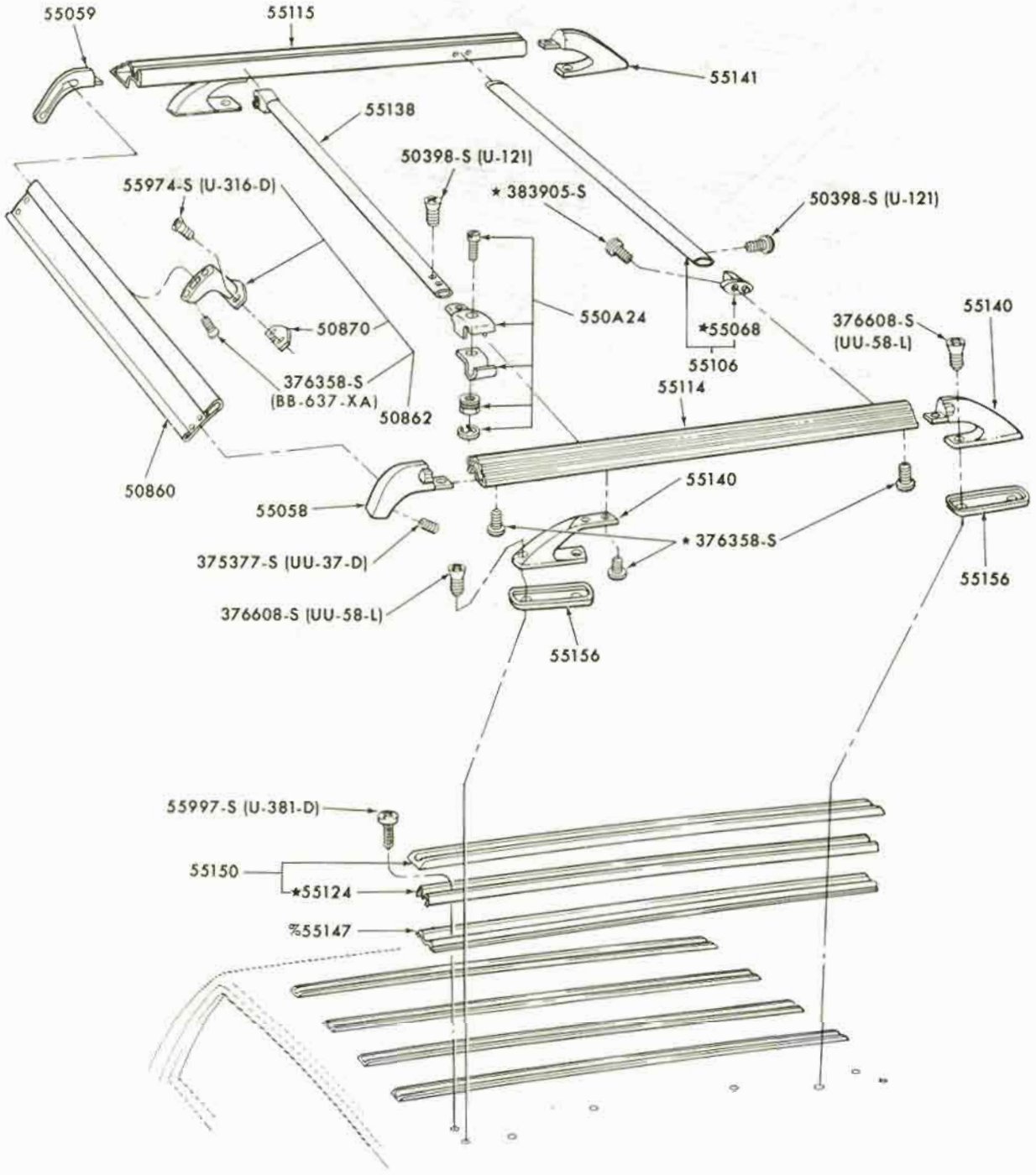

%ALSO SERVICED IN ASSY-GROUP 55150,55100

P-8224

INDEX

THIS INDEX SECTION INCLUDES SEATS and RELATED PARTS, SUCH AS:

AUXILIARY SEATS and STORAGE COMPARTMENT
HEADREST
POWER SEAT PARTS
REAR SEAT and AUXILIARY FLOOR
SEATS - FRONT and REAR
SEAT BELTS
SHOULDER HARNESS

TITLE	SECTION	PAGE	ILLUS. NO.
1965			
A (FORD)			
Auxiliary seats and storage compartment - body type 71A, C	610	3	P-4762
Child safety seat	620	2	P-11536
Front seats - bucket	600	3	P-4322
Front seat - manual full width	600	1	P-4768
Front seat - power full width	600	2	P-4765
Rear seat and storage compartment - body type 71	610	2	P-4761
Rear seat - folding - body type 54	610	1	P-4766
Reclining seat and head rest parts	600	4	P-4323
Seat belts - bucket seats	620	1	P-4397
Seat belts - full width seat	620	1	P-4398
B (FAIRLANE)			
Auxiliary seat and storage compartment - body type 71	610	5	P-4045
Child safety seat	620	2	P-11536
Front seats - bucket - body type 65B	600	6	P-4048
Front seat - full width	600	5	P-3765
Rear seat and auxiliary floor - body type 71	610	4	P-4044
Seat belts - bucket seats	620	1	P-4397
Seat belts - full width seat	620	1	P-4398
F (MUSTANG)			
Child safety seat	620	2	P-11536
Front seats - bucket	600	8	P-4455
Front seat - full width	600	8	P-4885
Rear seat - folding - body type 63	610	6	P-4764
S (THUNDERBIRD)			
Child safety seat	620	2	P-11536
Front seats - bucket	600	3	P-4322
Reclining seat and head rest parts	600	4	P-4323
Seat belts	620	2	P-4396
X (FALCON)			
Child safety seat	620	2	P-11536
Front seats - bucket - body types 62C, 63C, D, 66G, H	600	6	P-4048
Front seats - bucket - body type 76B, D	600	7	P-3859
Front seat - full width	600	5	P-3166
Rear seat - body types 59, 71	610	7	P-3201
Seat belts - bucket seats	620	1	P-4397
Seat belts - full width seat	620	1	P-4398

COPYRIGHT © 1975 — FORD MOTOR COMPANY — DEARBORN, MICHIGAN

INDEX

TITLE	SECTION	PAGE	ILLUS. NO.
1966			
A (FORD)			
Auxiliary seats and storage compartment - body type 71A, C	610	3	P-4762
Child safety seat	620	2	P-11536
Front seats - bucket	600	10	P-5159
Front seat - manual full width	600	1	P-4768
Front seat - power full width	600	2	P-4765
Headrest	600	9	P-5392
Rear seat and storage compartment - body type 71	610	2	P-4761
Rear seat - folding - body type 54	610	1	P-4766
Reclining seat and head rest parts	600	4	P-4323
Seat belts - front and rear seats	620	3	P-5155
B (FAIRLANE)			
Auxiliary seat and storage compartment - body type 71	610	9	P-5153
Child safety seat	620	2	P-11536
Headrest	600	9	P-5392
Front seats - bucket	600	9	P-5157
Front seat - full width	600	5	P-3765
Rear seat and auxiliary floor - body type 71	610	8	P-5152
Seat belts - front and rear seats	620	3	P-5155
F (MUSTANG)			
Child safety seat	620	2	P-11536
Front seats - bucket	600	8	P-4455
Front seat - full width	600	8	P-4885
Headrest	600	9	P-5392
Rear seat - folding - body type 63	610	6	P-4764
Seat belts - front and rear seats	620	3	P-5155
S (THUNDERBIRD)			
Child safety seat	620	2	P-11536
Front seats - bucket	600	10	P-5159
Reclining seat and head rest parts	600	4	P-4323
Seat belts - front and rear seats	620	4	P-5154
U (BRONCO)			
Child safety seat	620	2	P-11536
Front seats - bucket	600	11	P-4967
Front seat - full width	600	11	P-4966
Rear seat	610	15	P-4971
Seat belts - front and rear seats	620	3	P-5155
X (FALCON)			
Child safety seat	620	2	P-11536
Front seats - bucket	600	9	P-5157
Front seat - full width	600	5	P-3166
Headrest	600	9	P-5392
Rear seat and auxiliary floor - body type 71	610	8	P-5152
Seat belts - front and rear seats	620	3	P-5155

INDEX

1967

A (FORD)

TITLE	SECTION	PAGE	ILLUS. NO.
Auxiliary seats and storage compartment - body type 71A, C, J	610	11	P-5805
Child safety seat	620	2	P-11536
Front seats - driver power bucket	600	18	P-5703
Front seat - driver power split	600	14	P-5709
Front seats - manual bucket	600	17	P-5701
Front seat - manual full width	600	1	P-4768
Front seat - manual split	600	16	P-5704
Front seat - passenger power split	600	15	P-5705
Front seat - power full width - lower half	600	13	P-5843
Front seat - power full width - upper half	600	12	P-5707
Headrest	600	9	P-5392
Horizontal transmission parts - power seat	600	19	P-6966
Rear seat and storage compartment - body type 71	610	10	P-5804
Rear seat - folding - body type 54	610	1	P-4766
Seat belts - front and rear seats	620	3	P-5155
Shoulder harness - front seat	620	5	P-5600
Vertical transmission parts - power seat	600	19	P-6965

B (FAIRLANE)

TITLE	SECTION	PAGE	ILLUS. NO.
Auxiliary seat and storage compartment - body type 71	610	12	P-5808
Child safety seat	620	2	P-11536
Front seats - bucket	600	9	P-5157
Front seat - full width	600	5	P-3765
Headrest	600	9	P-5392
Rear seat and auxiliary floor - body type 71	610	8	P-5152
Seat belts - front and rear seats	620	3	P-5155
Shoulder harness - front seat	620	5	P-5600

F (MUSTANG)

TITLE	SECTION	PAGE	ILLUS. NO.
Child safety seat	620	2	P-11536
Front seats - bucket - body types 63A, 65, 76A	600	8	P-4455
Front seats - bucket - body types 63B, 65B, 76B	600	20	P-5767
Front seat - full width	600	8	P-4885
Headrest	600	9	P-5392
Rear seat - fixed - body type 63	610	14	P-5788
Rear seat - folding - body type 63	610	13	P-5787
Seat belts - front and rear seats	620	3	P-5155
Shoulder harness - front seat	620	5	P-5600

S (THUNDERBIRD)

TITLE	SECTION	PAGE	ILLUS. NO.
Child safety seat	620	2	P-11536
Front seats - driver power bucket	600	22	P-5702
Front seats - manual bucket	600	21	P-5700
Horizontal transmission parts - power seat	600	19	P-6966
Reclining seat and head rest parts	600	4	P-4323
Seat belts - front and rear seats	620	4	P-5154
Shoulder harness - front seat	620	5	P-5600
Vertical transmission parts - power seat	600	19	P-6965

COPYRIGHT © 1975 — FORD MOTOR COMPANY — DEARBORN, MICHIGAN

INDEX

TITLE	SECTION	PAGE	ILLUS. NO.
1969			
A (FORD)			
Auxiliary seat and storage compartment - body type 71	610	16	P-6843
Child safety seat	620	2	P-11536
Front seat back latch	600	39	P-7296
Front seat - driver power split	600	14	P-5709
Front seats - manual bucket	600	25	P-6167
Front seat - manual split	600	16	P-5704
Front seat - passenger power split	600	15	P-5705
Front seat - power full width - lower half	600	13	P-5843
Front seat - manual full width - body types 62, 63, 65, 76	600	34	P-7290
Front seat - manual full width - body types 54, 57, 71	600	35	P-7289
Front seat reclining mechanism and related parts	600	33	P-6959
Game and utility table - body type 71	610	23	P-10407
Headrest	600	33	P-6809
Horizontal transmission parts - power seat	600	19	P-6966
Vertical transmission parts - power seat	600	19	P-6965
Rear seat and storage compartment - body type 71	610	17	P-6844
Seat belts - front and rear seats	620	3	P-5155
Shoulder harness - front seat	620	5	P-5600
B (FAIRLANE/TORINO)			
Auxiliary seat and storage compartment - body type 71	610	12	P-5808
Child safety seat	620	2	P-11536
Front seat back latch	600	39	P-7296
Front seats - bucket	600	9	P-5157
Front seat - manual full width	600	27	P-6243
Front seat - power full width	600	27	P-10486
Headrest	600	33	P-6809
Rear seat and auxiliary floor - body type 71	610	8	P-5152
Seat belts - front and rear seats	620	3	P-5155
Shoulder harness - front seat	620	5	P-5600
F (MUSTANG)			
Child safety seat	620	2	P-11536
Front seat back latch	600	39	P-7296
Front seats - bucket	600	8	P-4455
Front seat - full width	600	8	P-4885
Headrest	600	33	P-6809
Rear seat - fixed - body type 63	610	14	P-5788
Rear seat - folding - body type 63	610	13	P-5787
Seat belts - front and rear seats	620	3	P-5155
Shoulder harness - front seat	620	5	P-5600
S (THUNDERBIRD)			
Child safety seat	620	2	P-11536
Front seat back latch	600	39	P-7296
Front seats - manual bucket	600	21	P-5700
Front seats - driver power bucket	600	31	P-6169
Front seat - manual full width	600	30	P-6155
Front seat - power full width - lower half	600	29	P-6157
Front seat - power full width - upper half	600	28	P-6156
Headrest	600	33	P-6809
Horizontal transmission parts - power seat	600	19	P-6966
Vertical transmission parts - power seat	600	19	P-6965
Reclining seat parts	600	32	P-6233
Shoulder harness - front seat	620	5	P-5600

INDEX

TITLE	SECTION	PAGE	ILLUS. NO.
1969			
U (BRONCO)			
Child safety seat	620	2	P-11536
Front seat back latch	600	39	P-7296
Front seats - bucket	600	20	P-5768
Front seat - full width	600	11	P-4966
Headrest	600	33	P-6809
Rear seat	610	15	P-4971
Seat belts - front and rear seats	620	3	P-5155
Shoulder harness - front seat	620	5	P-5600
X (FALCON)			
Child safety seat	620	2	P-11536
Front seat back latch	600	39	P-7296
Front seats - bucket	600	9	P-5157
Front seat - manual full width	600	27	P-6243
Headrest	600	33	P-6809
Rear seat and auxiliary floor - body type 71	610	8	P-5152
Seat belts - front and rear seats	620	3	P-5155
Shoulder harness - front seat	620	5	P-5600
1970			
A (FORD)			
Auxiliary seat and storage compartment - body type 71	610	16	P-6843
Child safety seat	620	2	P-11536
Front seat back latch mechanism - automatic	600	40	P-7297
Front seat back latch mechanism - manual	600	39	P-7296
Front seat head rest and related parts	600	33	P-6809
Front seat mechanism and related parts - bucket	600	37	P-7292
Front seat mechanism and related parts - driver power split bench - lower half	600	14	P-5709
Front seat mechanism and related parts-full width-body type 63, 65, 76	600	34	P-7290
- body type 54, 57, 71	600	35	P-7289
Front seat mechanism and related parts - passenger power split bench	600	15	P-5705
Front seat mechanism and related parts-power full width-lower half	600	13	P-5843
Front seat mechanism and related parts-split bench	600	36	P-7291
Front seat reclining mechanism and related parts	600	33	P-6959
Game and utility table - body type 71	610	23	P-10407
Horizontal transmission parts - power seat	600	19	P-6966
Rear seat and storage compartment - body type 71	610	17	P-6844
Seat belt and shoulder harness installation - front seat	620	6	P-7450
Seat belt installation - auxiliary seat	620	8	P-7452
Seat belt installation - rear seat	620	7	P-7451
Vertical transmission parts - power seat	600	19	P-6965
B (FAIRLANE/TORINO)			
B (FALCON) - FROM 1/2/70			
Auxiliary seat and storage compartment - body type 71	610	12	P-5808
Child safety seat	620	2	P-11536
Front seat back latch mechanism - manual	600	39	P-7296
Front seat head rest and related parts	600	33	P-6809
Front seat mechanism and related parts - full width	600	27	P-6243
Front seat mechanism and related parts - manual bucket	600	9	P-5157
Front seat mechanism and related parts-power full width-lower half	600	27	P-10486
Rear seat and auxiliary floor - body type 71	610	8	P-5152
Seat belt and shoulder harness installation - front seat	620	6	P-7450
Seat belt installation - rear seat	620	7	P-7451
Seat belt installation	620	8	P-7452

COPYRIGHT © 1975 — FORD MOTOR COMPANY — DEARBORN, MICHIGAN

INDEX

TITLE	SECTION	PAGE	ILLUS. NO.
1970			
F (MUSTANG)			
Child safety seat	620	2	P-11536
Front seat back latch mechanism - manual	600	39	P-7296
Front seat head rest and related parts	600	33	P-6809
Front seat mechanism and related parts - bucket seat	600	38	P-7293
Rear seat - fixed - body type 63	610	14	P-5788
Rear seat - folding - body type 63	610	13	P-5787
Seat belt and shoulder harness installation - front seat	620	6	P-7450
Seat belt installation - rear seat	620	7	P-7451
P (MAVERICK)			
Child safety seat	620	2	P-11536
Front seat back latch mechanism - manual	600	39	P-7296
Front seat head rest and related parts	600	33	P-6809
Front seat - manual full width	600	50	P-8079
Seat belt and shoulder harness installation - front seat	620	6	P-7450
Seat belt installation - rear seat	620	7	P-7451
S (THUNDERBIRD)			
Child safety seat	620	2	P-11536
Front seat back latch - automatic	600	40	P-7297
Front seat back latch mechanism - manual	600	39	P-7296
Front seat head rest and related parts	600	33	P-6809
Front seat mechanism and related parts-driver power bucket lower half	600	31	P-6169
Front seat mechanism and related parts - manual bucket	600	21	P-5700
Front seat mechanism and related parts - manual full width	600	30	P-6155
Front seat mechanism and related parts-manual split bench-lower half	600	44	P-7446
Front seat mechanism and related parts-power full width-lower half	600	29	P-6157
Front seat mechanism and related parts-power full width-upper half	600	28	P-6156
Front seat mechanism and related parts-power split bench-lower half	600	43	P-7445
Front seat mechanism and related parts - split bench - upper half	600	42	P-7444
Horizontal transmission parts - power seat	600	19	P-6966
Reclining seat mechanism and related parts	600	41	P-7300
Seat belt and shoulder harness installation - front seat	620	6	P-7450
Seat belt installation - rear seat	620	7	P-7451
Vertical transmission parts - power seat	600	19	P-6965
U (BRONCO)			
Child safety seat	620	2	P-11536
Front seat back latch mechanism - manual	600	39	P-7296
Front seat head rest and related parts	600	33	P-6809
Front seat mechanism and related parts - bucket	600	20	P-5768
Front seat mechanism and related parts - full width	600	11	P-4966
Rear seat	610	15	P-4971
Seat belt and shoulder harness installation - front seat	620	6	P-7450
Seat belt installation - rear seat	620	7	P-7451
X (FALCON) - BEFORE 1/2/70			
FOR UNITS BUILT FROM 1/2/70 REFER TO B (FALCON)			
Child safety seat	620	2	P-11536
Front seat back latch	600	24	P-6240
Front seats - bucket	600	9	P-5157
Front seat - manual full width	600	27	P-6243
Headrest	600	33	P-6809
Rear seat and auxiliary floor - body type 71	610	8	P-5152
Seat belt and shoulder harness installation - front seat	620	6	P-7450
Seat belt installation - rear seat	620	7	P-7451

INDEX

1971

TITLE	SECTION	PAGE	ILLUS. NO.
A (FORD)			
Auxiliary seat and storage compartment - body type 71	610	16	P-6843
Child safety seat	620	2	P-11536
Front seat back latch mechanism - automatic	600	40	P-7297
Front seat back latch mechanism - manual	600	39	P-7296
Front seat head rest and related parts	600	33	P-6809
Front seat mechanism - manual - full width - body types 65,76	600	34	P-7290
- body types 53,54,57,71	600	35	P-7289
- hi-back full width	600	53	P-8284
Front seat mechanism and related parts - manual - bucket	600	37	P-7292
Front seat mechanism and related parts - manual - split bench	600	36	P-7291
- hi-back split bench	600	52	P-8283
Front seat mechanism and related parts - power full width - lower half	600	47	P-7233-A
Front seat mechanism and related parts - power split bench - lower half	600	46	P-7232-A
Front seat reclining mechanism and related parts	600	61	P-8845
Game and utility table - body type 71	610	23	P-10407
Horizontal transmission parts - power seat	600	19	P-6966
Rear seat and storage compartment - body type 71	610	17	P-6844
Seat belt and shoulder harness installation - front seat	620	6	P-7450
Seat belt installation - auxiliary seat	620	8	P-7452
Seat belt installation-rear seat	620	7	P-7451
Vertical transmission parts - power seat	600	19	P-6965
B (TORINO)			
Auxiliary seat and storage compartment - body type 71	610	12	P-5808
Child safety seat	620	2	P-11536
Front seat back latch mechanism - manual	600	39	P-7296
Front seat head rest and related parts	600	33	P-6809
Front seat mechanism and related parts - full width	600	27	P-6243
Front seat mechanism and related parts -power full width-lower half	600	27	P-10486
Front seat mechanism and related parts - manual bucket	600	51	P-8276
Rear seat and auxiliary floor - body type 71	610	8	P-5152
Seat belt and shoulder harness installation - front seat	620	6	P-7450
Seat belt installation - auxiliary seat	620	8	P-7452
Seat belt installation - rear seat	620	7	P-7451
F (MUSTANG)			
Child safety seat	620	2	P-11536
Front seat back latch mechanism - automatic	600	41	P-8047
Front seat back latch mechanism - manual	600	39	P-7296
Front seat head rest and related parts	600	33	P-6809
Front seat mechanism and related parts - lower half	600	49	P-8075
Front seat mechanism and related parts - upper half	600	48	P-8076
Rear seat - folding - body type 63	610	18	P-7848
Seat belt and shoulder harness installation - front seat	620	6	P-7450
Seat belt installation - auxiliary seat	620	7	P-7451
L (PINTO)			
Child safety seat	620	2	P-11536
Front seat mechanism and related parts	600	45	P-7945
Rear seat - folding - body type 62	610	15	P-7929
Rear seat - folding - body type 64	610	19	P-8273
Seat belt and shoulder harness installation - front seat	620	6	P-7450
Seat belt installation - rear seat	620	7	P-7451

COPYRIGHT © 1975 — FORD MOTOR COMPANY — DEARBORN, MICHIGAN

INDEX

1971

TITLE	SECTION	PAGE	ILLUS. NO.
P (MAVERICK)			
Child safety seat	620	2	P-11536
Front seat back latch mechanism - manual	600	39	P-7296
Front seat head rest and related parts	600	33	P-6809
Front seat - manual full width	600	50	P-8079
Front seat mechanism and related parts - bucket - lower half	600	49	P-8050
Front seat mechanism and related parts - bucket - upper half	600	48	P-8076
Seat belt and shoulder harness installation - front seat	620	6	P-7450
Seat belt installation - rear seat	620	7	P-7451
S (THUNDERBIRD)			
Child safety seat	620	2	P-11536
Front seat mechanism and related parts - manual bucket	600	21	P-5700
Front seat mechanism and related parts - power full width - lower half	600	29	P-6157
Front seat mechanism and related parts - power full width - upper half	600	28	P-6156
Front seat mechanism and related parts-driver power bucket lower half	600	31	P-6169
Front seat mechanism and related parts - manual full width	600	30	P-6155
Front seat mechanism and related parts-manual split bench-lower half	600	44	P-7446
Front seat mechanism and related parts - passenger - split bench - power	600	15	P-5704
Front seat mechanism and related parts-power split bench-lower half	600	43	P-7445
Front seat mechanism and related parts - split bench - upper half	600	42	P-7444
Front seat back latch - automatic	600	40	P-7297
Front seat back latch mechanism - manual	600	39	P-7296
Front seat head rest and related parts	600	33	P-6809
Horizontal transmission parts - power seat	600	19	P-6966
Reclining seat mechanism and related parts	600	41	P-7300
Seat belt and shoulder harness installation - front seat	620	6	P-7450
Seat belt installation - rear seat	620	7	P-7451
Vertical transmission parts - power seat	600	19	P-6965
U (BRONCO)			
Child safety seat	620	2	P-11536
Front seat back latch mechanism - manual	600	39	P-7296
Front seat head rest and related parts	600	33	P-6809
Front seat mechanism and related parts - bucket	600	20	P-5768
Front seat mechanism and related parts - full width	600	11	P-4966
Rear seat	610	15	P-4971
Seat belt and shoulder harness installation - front seat	620	6	P-7450
Seat belt installation - rear seat	620	7	P-7451

INDEX

TITLE	SECTION	PAGE	ILLUS. NO.
1972			
A (FORD)			
Auxiliary seat and storage compartment - body type 71	610	16	P-6843
Child safety seat	620	2	P-11536
Front seat back latch mechanism - manual	600	39	P-7296
- automatic	600	40	P-7997
Front seat head rest and related parts	600	33	P-6809
Front seat parts - split bench - manual	300	36	P-7291
- split bench - hi-back - upper half	600	52	P-8283
- split bench - power - lower half - "Before 12/1/71"	600	46	P-7232-A
- split bench - power - lower half - "From 12/1/71"	600	64	P-8861
- full width - hi-back - upper half	600	53	P-8284
- full width - 6-way power - lower half - "Before 12/1/71"	600	47	P-7233-A
- full width - 6-way power - lower half - "From 12/1/71"	600	56	P-8673
- full width - manual - body types 65,76	600	34	P-7290
- full width - manual - body types 53,54,57,71	600	35	P-7289
- reclining	600	61	P-8846
Game and utility table - body type 71	610	23	P-10407
Rear seat and storage compartment - body type 71	610	17	P-6844
Seat belt and shoulder harness installation - front seat	620	8	P-8877
Seat belt installation - auxiliary seat	620	10	P-8879
Seat belt installation - rear seat	620	9	P-8878
Seat belt warning system	620	14	P-9260
B (TORINO)			
Auxiliary seat and storage compartment - body type 71	610	21	P-8627
Child safety seat	620	2	P-11536
Front seat head rest and related parts	600	33	P-6809
Front seat back latch mechanism - manual	600	57	P-8734
- automatic	600	60	P-8733
Front seat parts - full width - manual-lower half	600	54	P-8674
- full width - power - lower half	600	56	P-8673
- full width - hi-back-w/o center arm rest-upper half	600	57	P-8734
- full width - w/hi back center arm rest-upper half	600	58	P-8735
- full width - lo-back w/center arm rest-upper half	600	67	P-10760
- bucket - upper half	600	59	P-8732
- bucket - lower half	600	55	P-8675
Rear seat and auxiliary floor - body type 71	610	20	P-8626
Seat belt and shoulder harness installation - front seat	620	8	P-8877
Seat belt installation - auxiliary seat	620	10	P-8879
Seat belt installation - rear seat	620	9	P-8878
Seat belt warning system	620	12	P-9259
F (MUSTANG)			
Child safety seat	620	2	P-11536
Front seat back latch mechanism - automatic - outboard	600	54	P-8534
Front seat back latch mechanism - automatic - center	600	41	P-8047
Front seat back latch mechanism - manual	600	48	P-8076
Front seat head rest and related parts	600	33	P-6809
Front seat parts - lower half	600	49	P-8075
- upper half	600	48	P-8076
Rear seat - folding - body type 63	610	18	P-7848
Seat belt and shoulder harness installation - front seat	620	8	P-8877
Seat belt installation - rear seat	620	9	P-8878
Seat belt warning system	620	11	P-9266

COPYRIGHT © 1975 — FORD MOTOR COMPANY — DEARBORN, MICHIGAN

INDEX

1972

TITLE	SECTION	PAGE	ILLUS. NO.
L (PINTO)			
Child safety seat	620	2	P-11536
Front seat parts	600	45	P-7945
Rear seat - folding - body type 62	610	15	P-7929
- body type 64	610	19	P-8273
- body type 73	610	22	P-8939
Seat belt and shoulder harness installation - front seat	620	8	P-8877
Seat belt installation - rear seat	620	9	P-8878
Seat belt warning system	620	13	P-9262
P (MAVERICK)			
Child safety seat	620	2	P-11536
Front seat back latch mechanism - manual	600	48	P-8076
Front seat head rest and related parts	600	33	P-6809
Front seat - manual full width	600	50	P-8079
Front seat parts - bucket - lower half	600	49	P-8050
- bucket - upper half	600	48	P-8076
- bucket - reclining	600	65	P-10001
Seat belt and shoulder harness installation - front seat	620	8	P-8877
Seat belt installation - rear seat	620	9	P-8878
Seat belt warning system	620	15	P-9261
S (THUNDERBIRD)			
Child safety seat	620	2	P-11536
Front seat head rest and related parts	600	33	P-6809
Front seat parts - bucket - power - lower half	600	64	P-8861
- bucket - manual - lower half	600	55	P-8675
- bucket - upper half	600	63	P-8862
- split bench - power - lower half	600	64	P-8861
- split bench - upper half	600	62	P-8863
- reclining	600	61	P-8845
Seat back latch - automatic	600	60	P-8733
Seat belt and should harness installation - front seat	620	8	P-8877
Seat belt installation - rear seat	620	9	P-8878
Seat belt warning system	620	16	P-9264
U (BRONCO)			
Child safety seat	620	2	P-11536
Front seat back latch mechanism - manual	600	39	P-7296
Front seat head rest and related parts	600	33	P-6809
Front seat parts - bucket	600	66	P-10388
Rear seat	610	15	P-4971
Seat belt and shoulder harness installation - front seat	620	8	P-8877
Seat belt installation - rear seat	620	9	P-8878

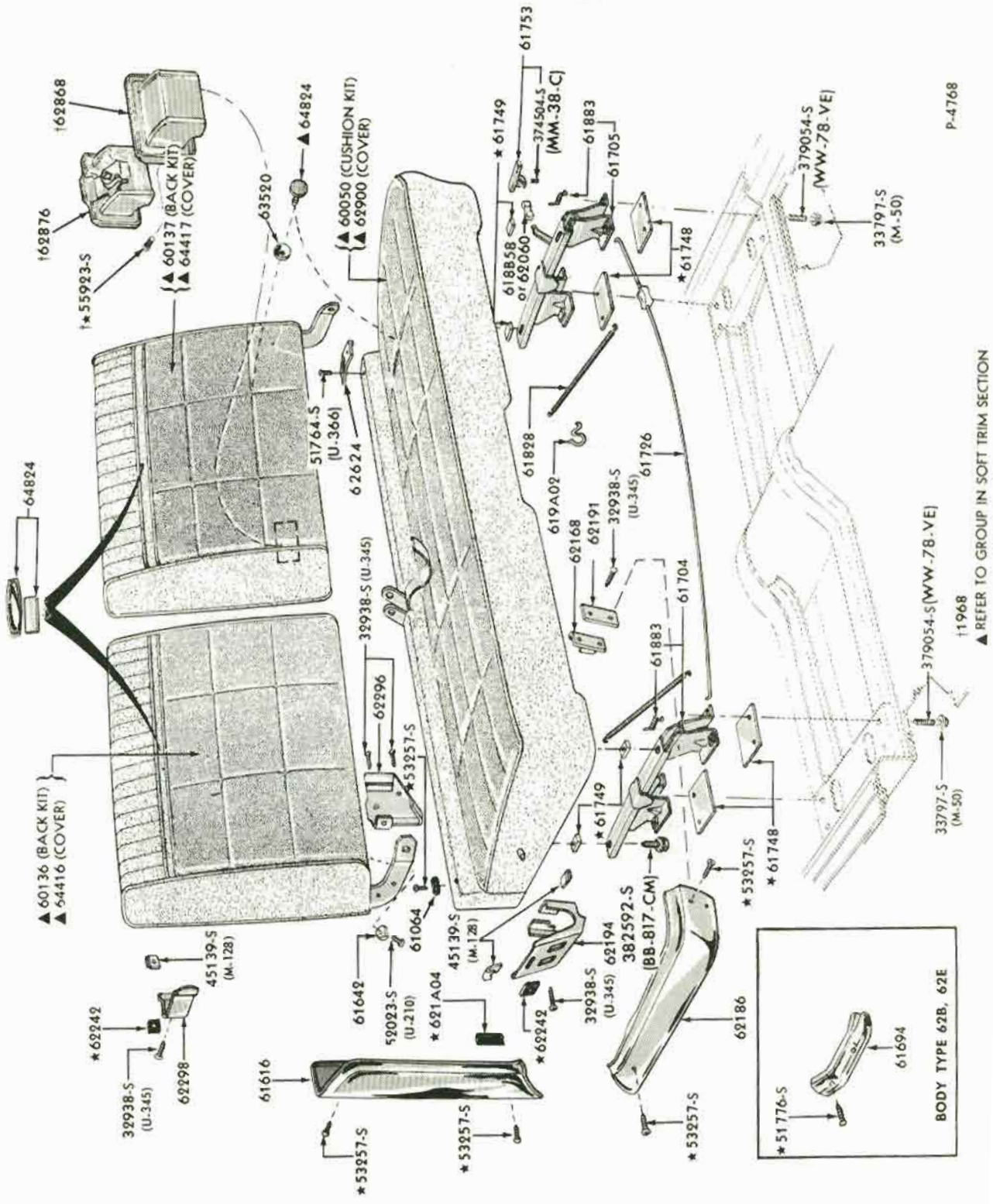

FRONT SEAT MECHANISM and RELATED PARTS-MANUAL FULL WIDTH

1965/68 FORD

COPYRIGHT © 1975 — FORD MOTOR COMPANY — DEARBORN, MICHIGAN

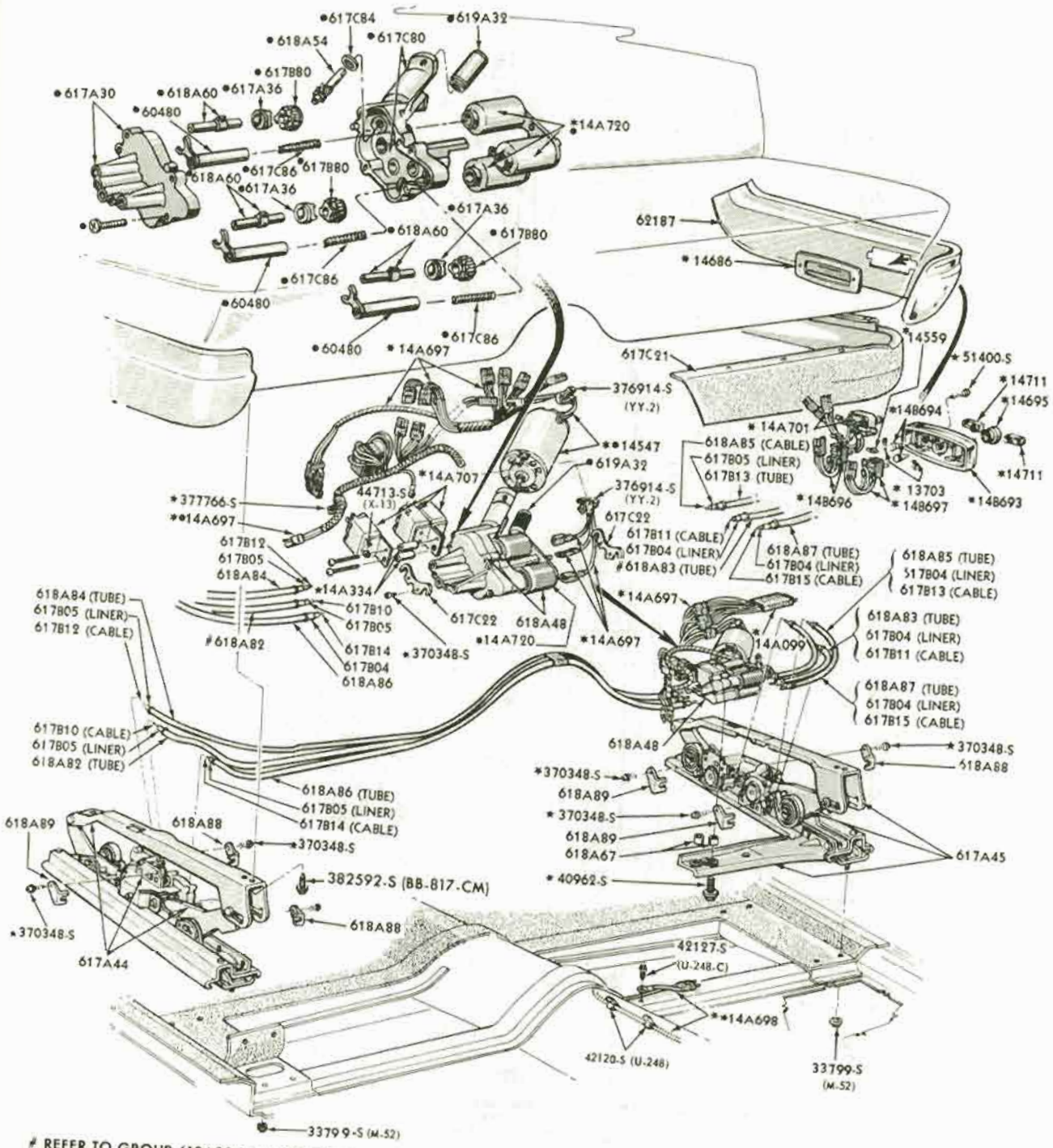

REFER TO GROUP 618A90-1 IN TEXT PAGES
* REFER TO GROUP IN CHASSIS SECTION
• ALSO INCLUDED IN TRANSMISSION ASSY-GROUP 618A48

P-4765

FRONT SEAT MECHANISM and RELATED PARTS - POWER FULL WIDTH

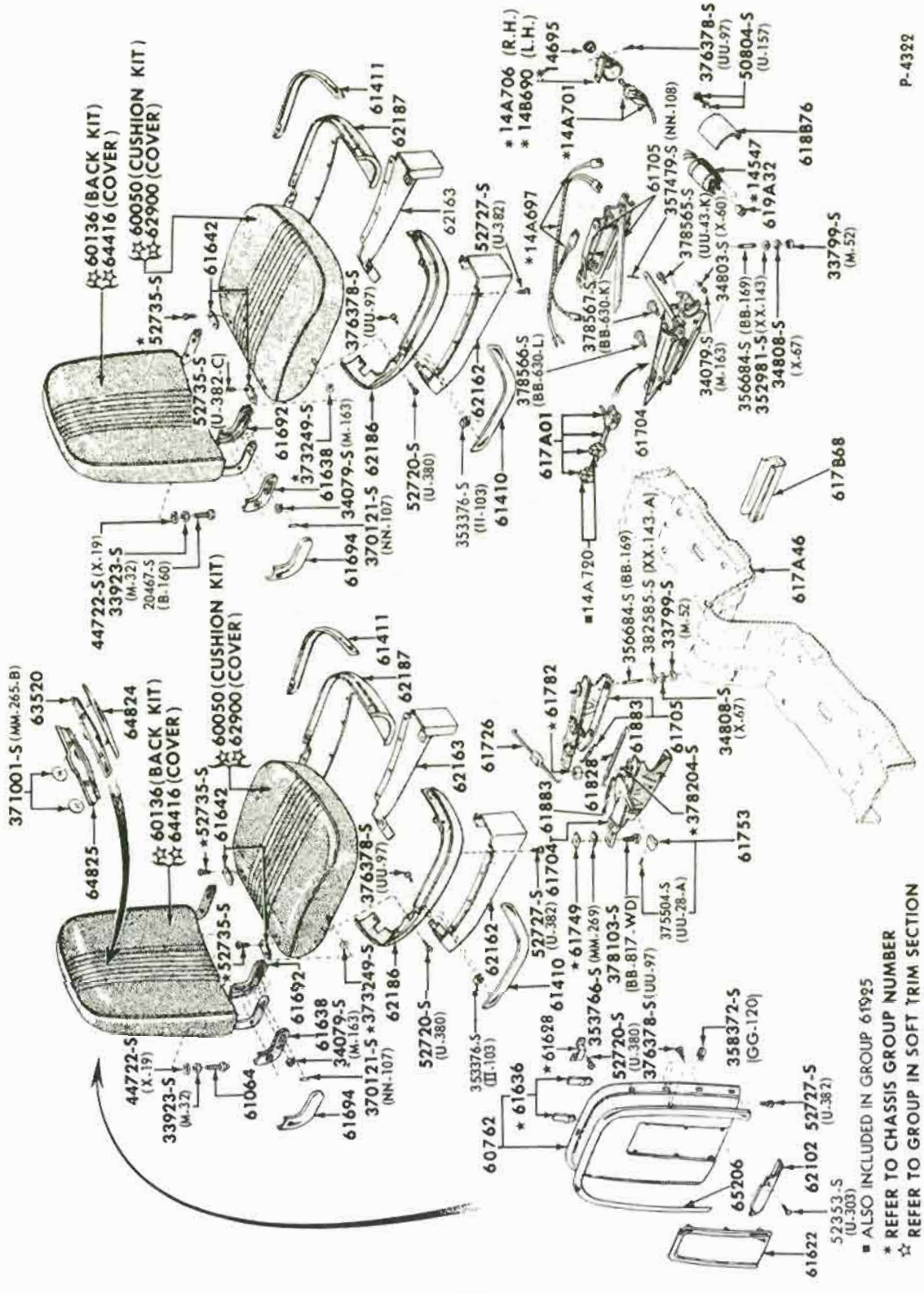

FRONT SEAT MECHANISM and RELATED PARTS - BUCKET
1965 FORD and THUNDERBIRD

COPYRIGHT © 1975 — FORD MOTOR COMPANY — DEARBORN, MICHIGAN

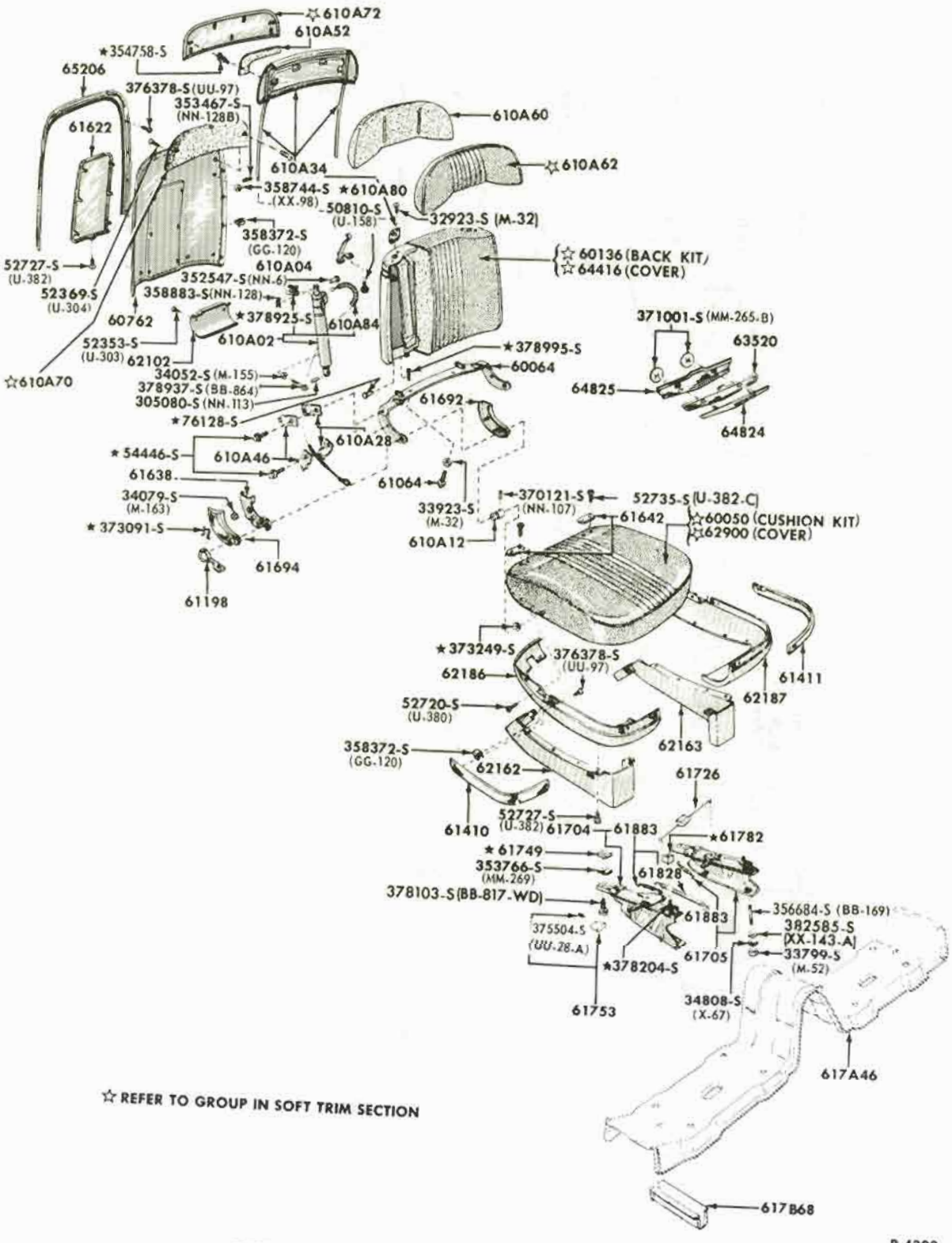
☆610A72
610A52
★354758-S
65206
376378-S (UU-97)
353467-S (NN-128B)
61622
610A60
☆610A62
610A34
358744-S
★610A80
(XX-98)
50810-S (U-158)
32923-S (M-32)
358372-S (GG-120)
☆60136 (BACK KIT)
☆64416 (COVER)
52727-S (U-382)
52369-S (U-304)
610A04
352547-S (NN-6)
358883-S (NN-128)
60762
★378925-S
610A84
52353-S (U-303)
610A02
62102
☆610A70
34052-S (M-155)
378937-S (BB-864)
305080-S (NN-113)
★76128-S
★378995-S
60064
61692
610A28
★54446-S
610A46
61638
61064
34079-S (M-163)
★373091-S
61694
61198
33923-S (M-32)
610A12
370121-S (NN-107)
52735-S (U-382-C)
61642
☆60050 (CUSHION KIT)
☆62900 (COVER)
371001-S (MM-265-B)
63520
64825
64824
★373249-S
376378-S (UU-97)
62186
61411
62187
52720-S (U-380)
62163
358372-S (GG-120)
62162
61726
61410
52727-S (U-382)
61704
61883
★61782
★61749
353766-S (MM-269)
61828
378103-S (BB-817-WD)
61883
356684-S (BB-169)
382585-S (XX-143-A)
375504-S (UU-28-A)
61705
33799-S (M-52)
★378204-S
61753
34808-S (X-67)
617A46
617B68
☆ REFER TO GROUP IN SOFT TRIM SECTION
P-4323

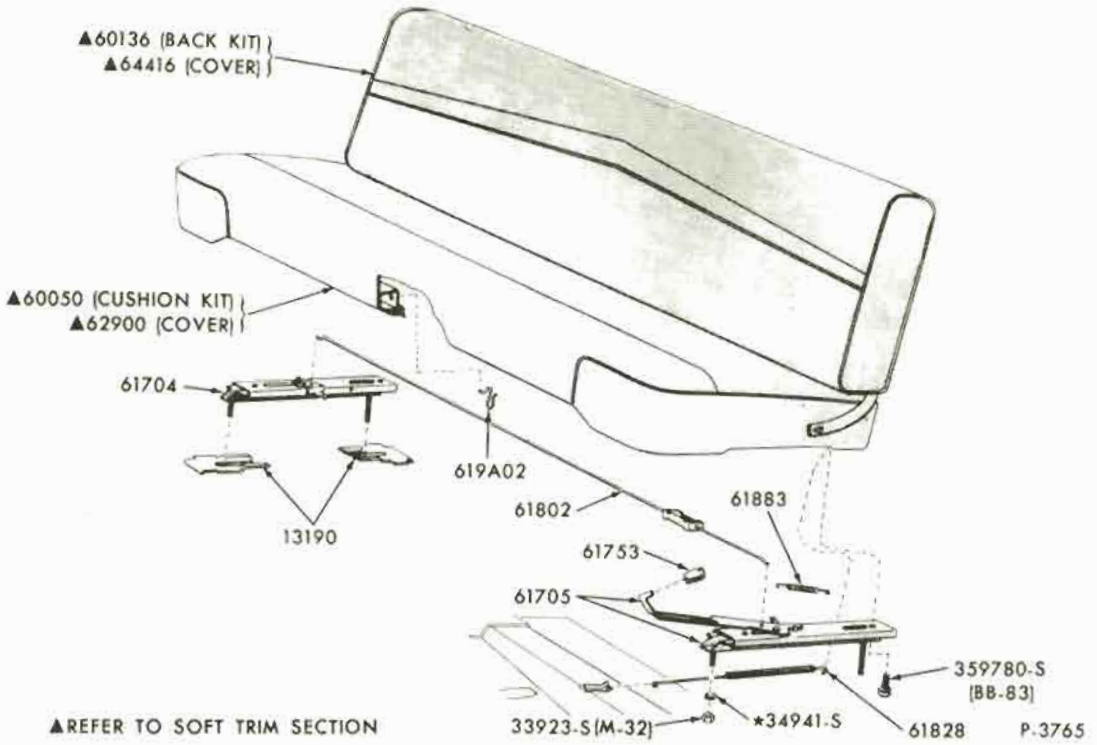

FRONT SEAT MECHANISM and RELATED PARTS - FULL WIDTH
1965/67 FAIRLANE

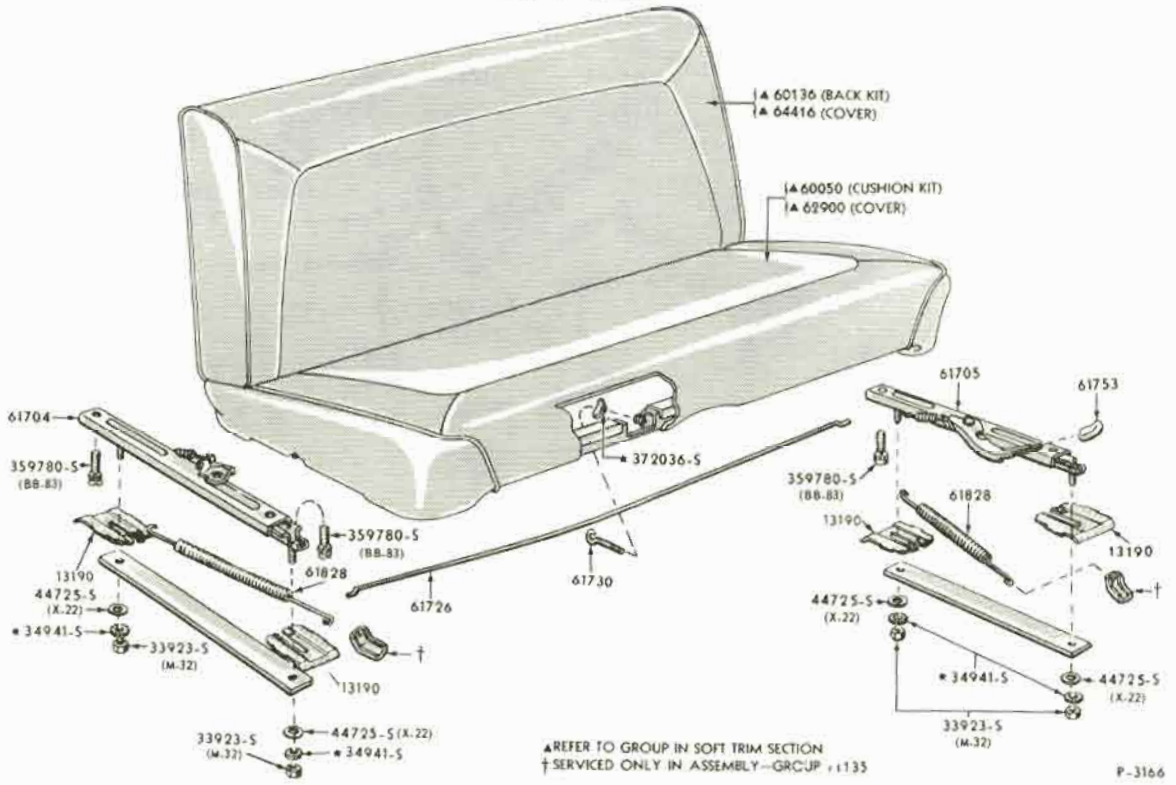

FRONT SEAT MECHANISM and RELATED PARTS - MANUAL FULL WIDTH
1965/67 FALCON

COPYRIGHT © 1975 — FORD MOTOR COMPANY — DEARBORN, MICHIGAN

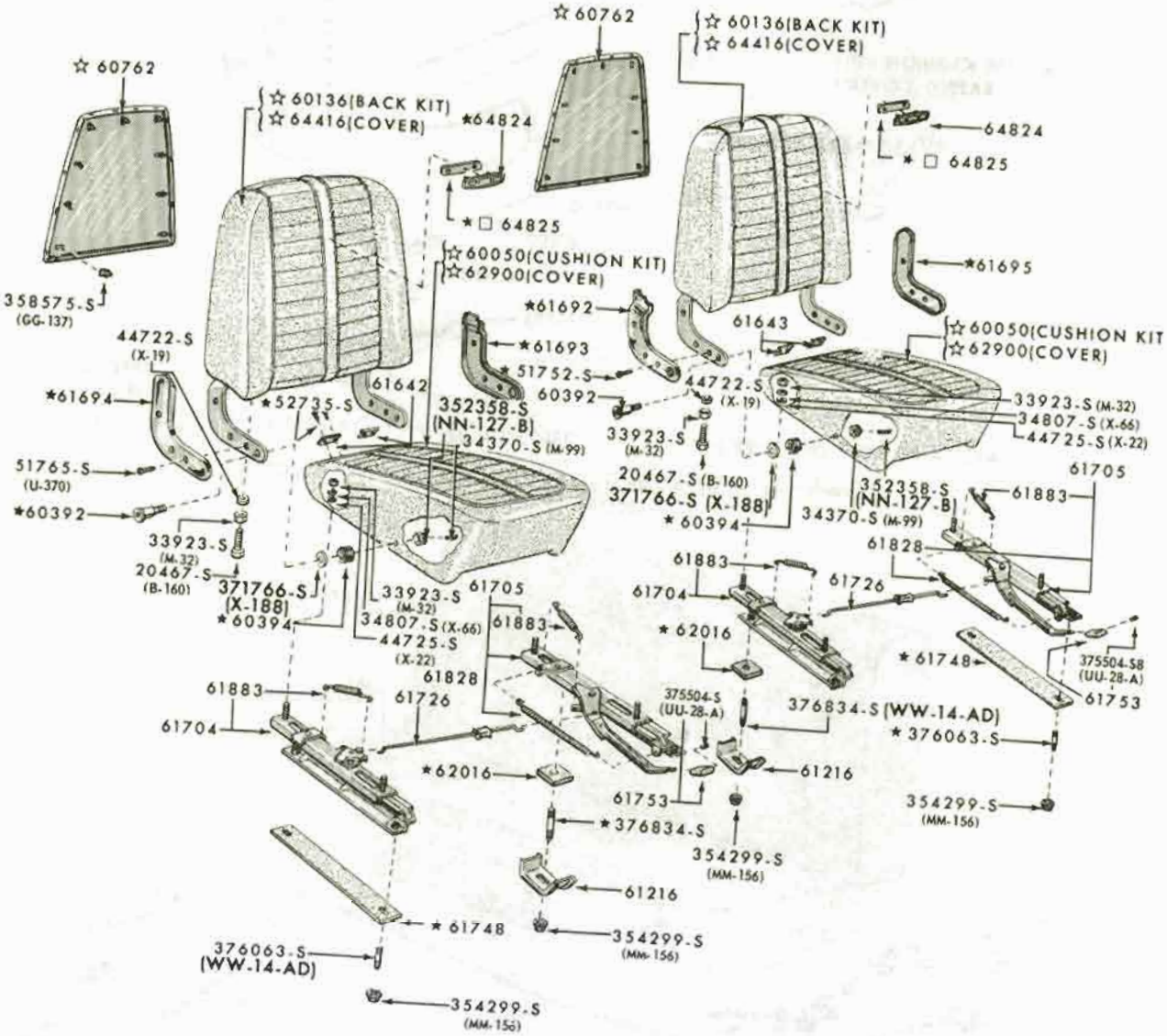

☆ REFER TO GROUP IN SOFT TRIM SECTION
□ SUPPLIED WITH GROUP 64824

P-4048

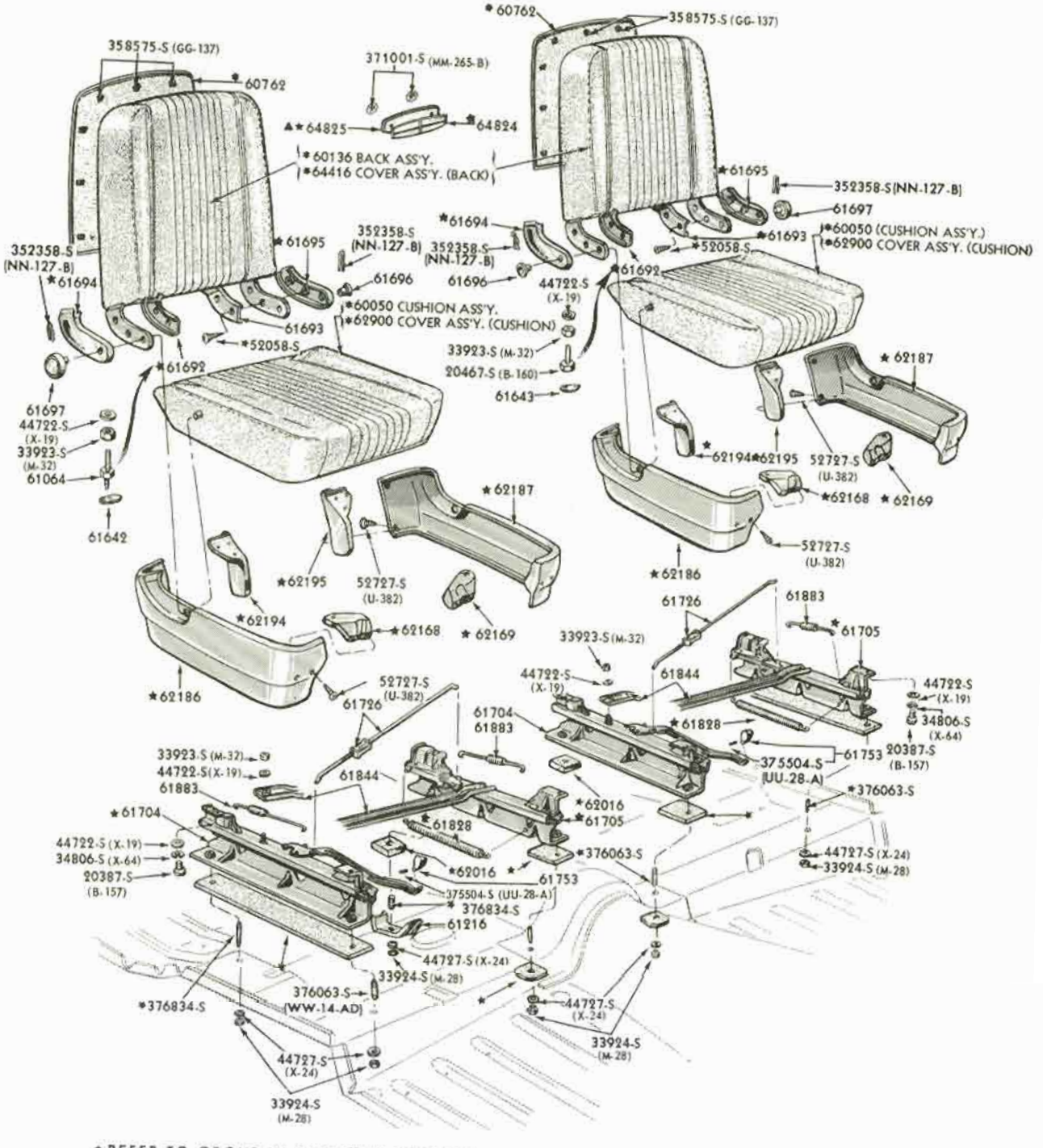

* REFER TO GROUP IN SOFT TRIM SECTION
▲ SUPPLIED WITH GROUP 64824

P-3859

FRONT SEAT MECHANISM and RELATED PARTS - BUCKET
1965 FALCON - BODY TYPES 76B, D

COPYRIGHT © 1975 — FORD MOTOR COMPANY — DEARBORN, MICHIGAN

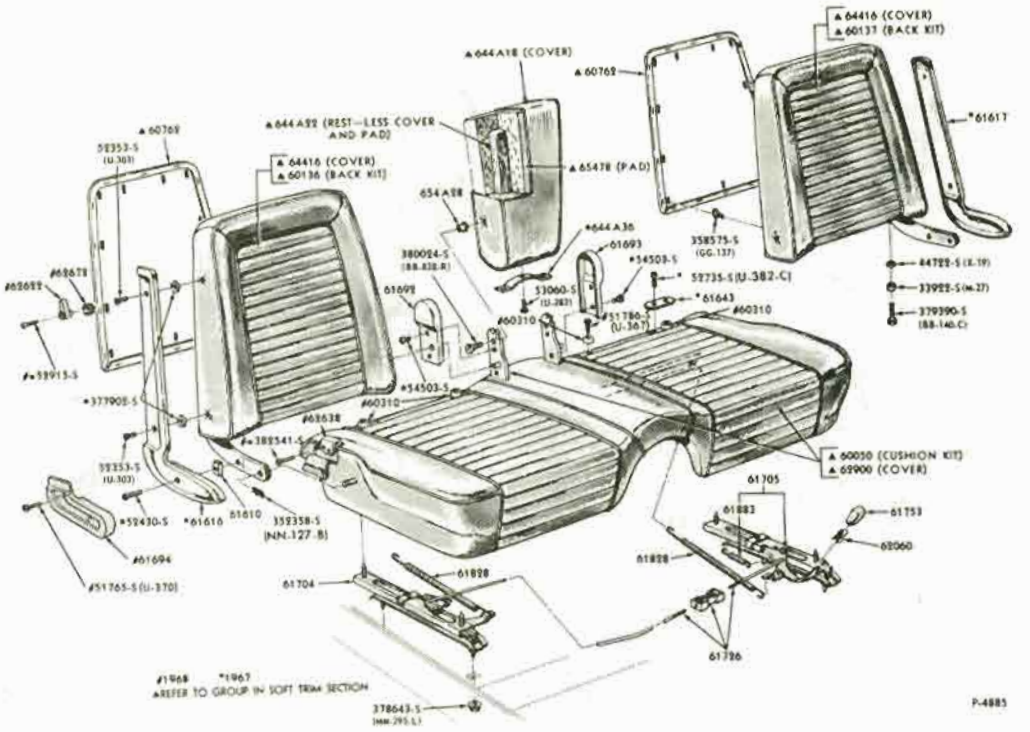

FRONT SEAT MECHANISM and RELATED PARTS - FULL WIDTH
1965/69 MUSTANG

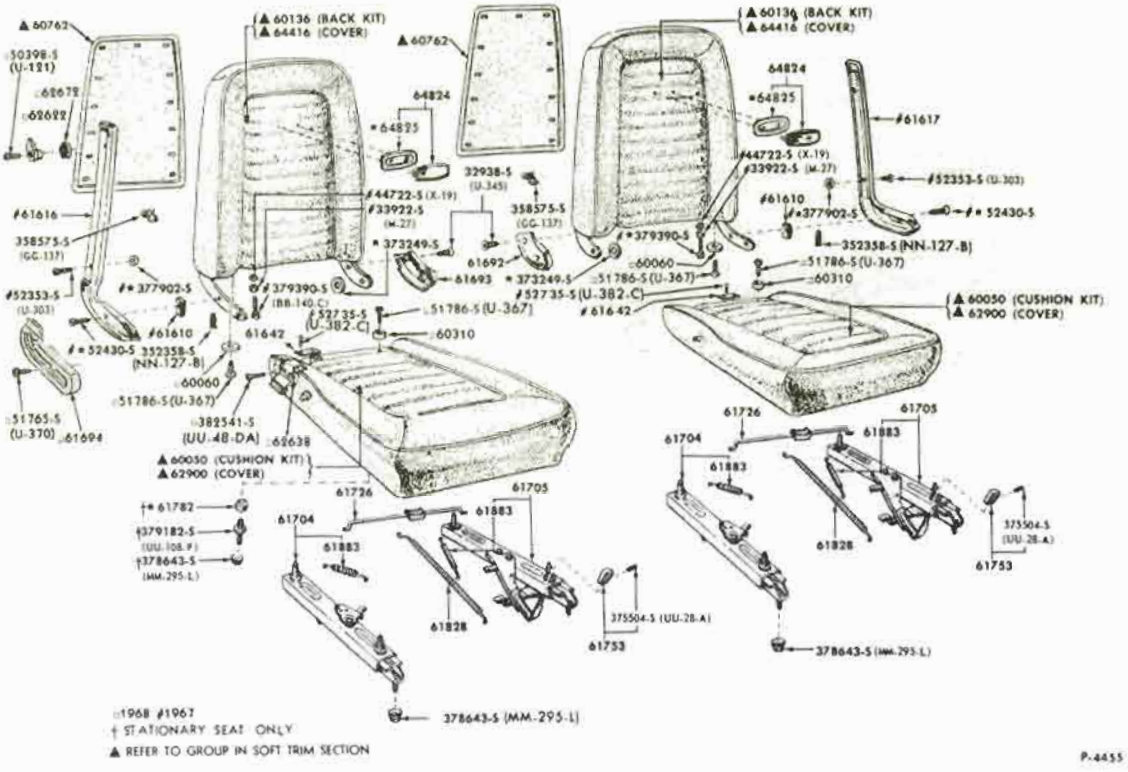

FRONT SEAT MECHANISM and RELATED PARTS - BUCKET
1965/66 MUSTANG, 1967 MUSTANG - BODY TYPE 63A, 65A, 76A and 1968/69 MUSTANG

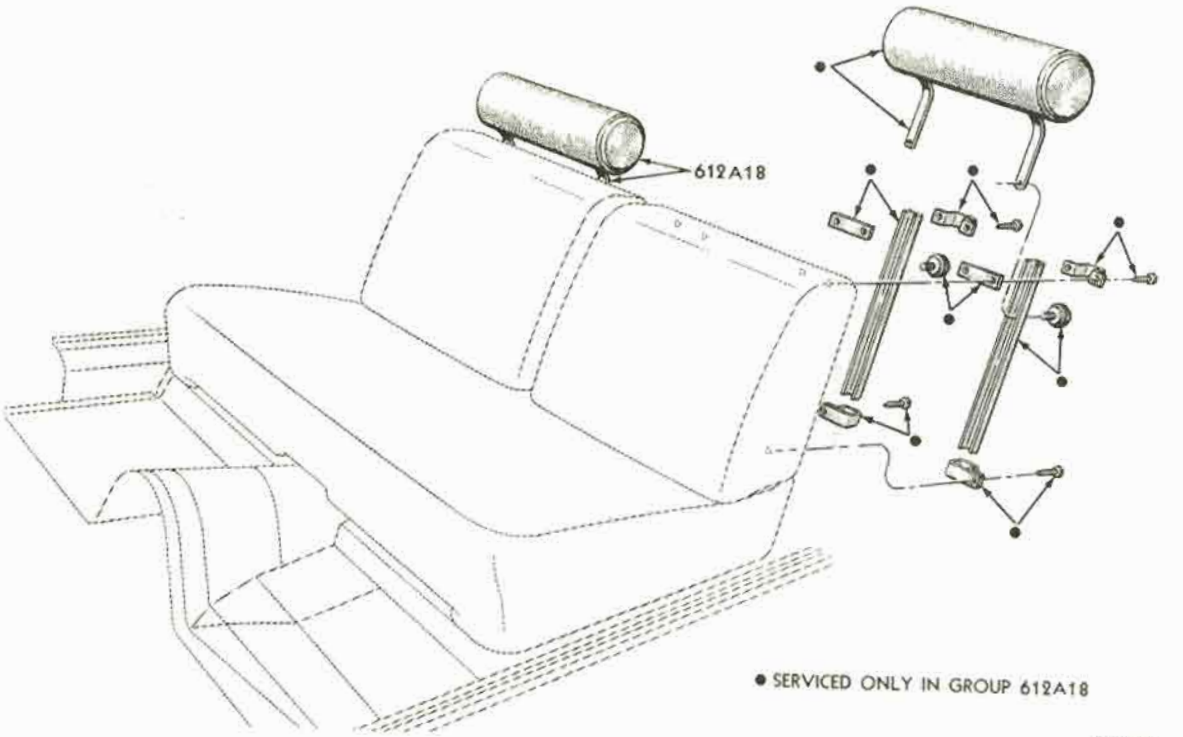

FRONT SEAT HEADREST and RELATED PARTS
1966/67 FORD, FAIRLANE, MUSTANG and FALCON

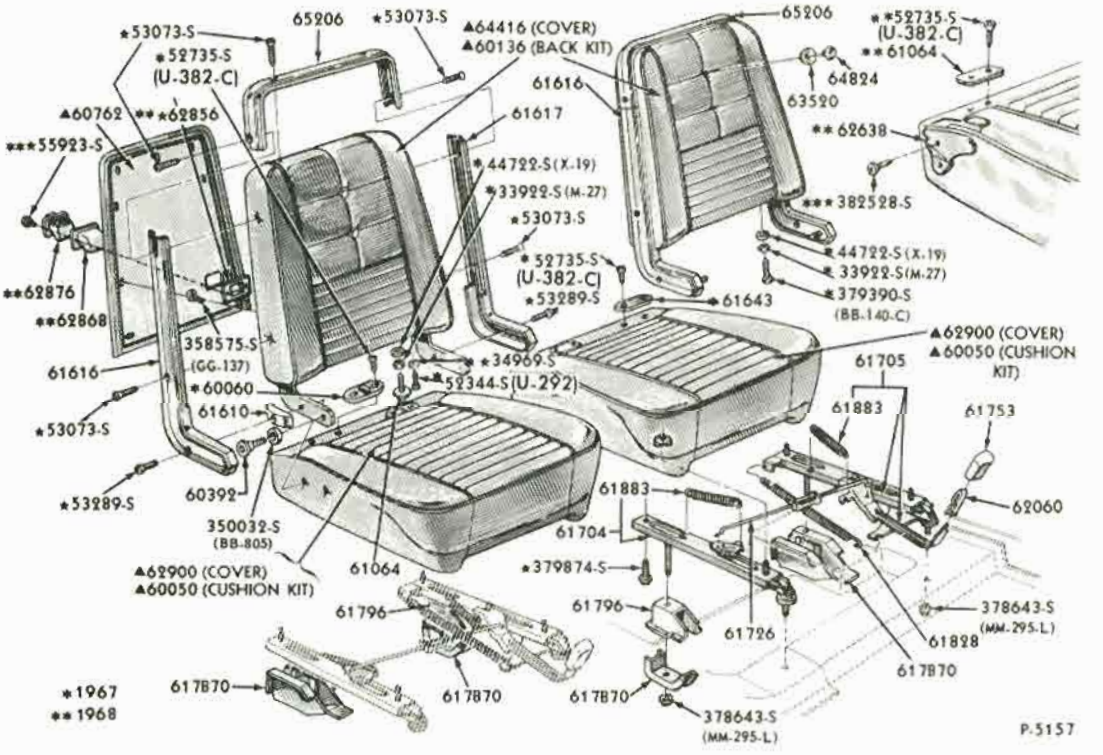

FRONT SEAT MECHANISM and RELATED PARTS - MANUAL BUCKET
1966/70 FAIRLANE/TORINO and 1966/70 FALCON

COPYRIGHT © 1975 — FORD MOTOR COMPANY — DEARBORN, MICHIGAN

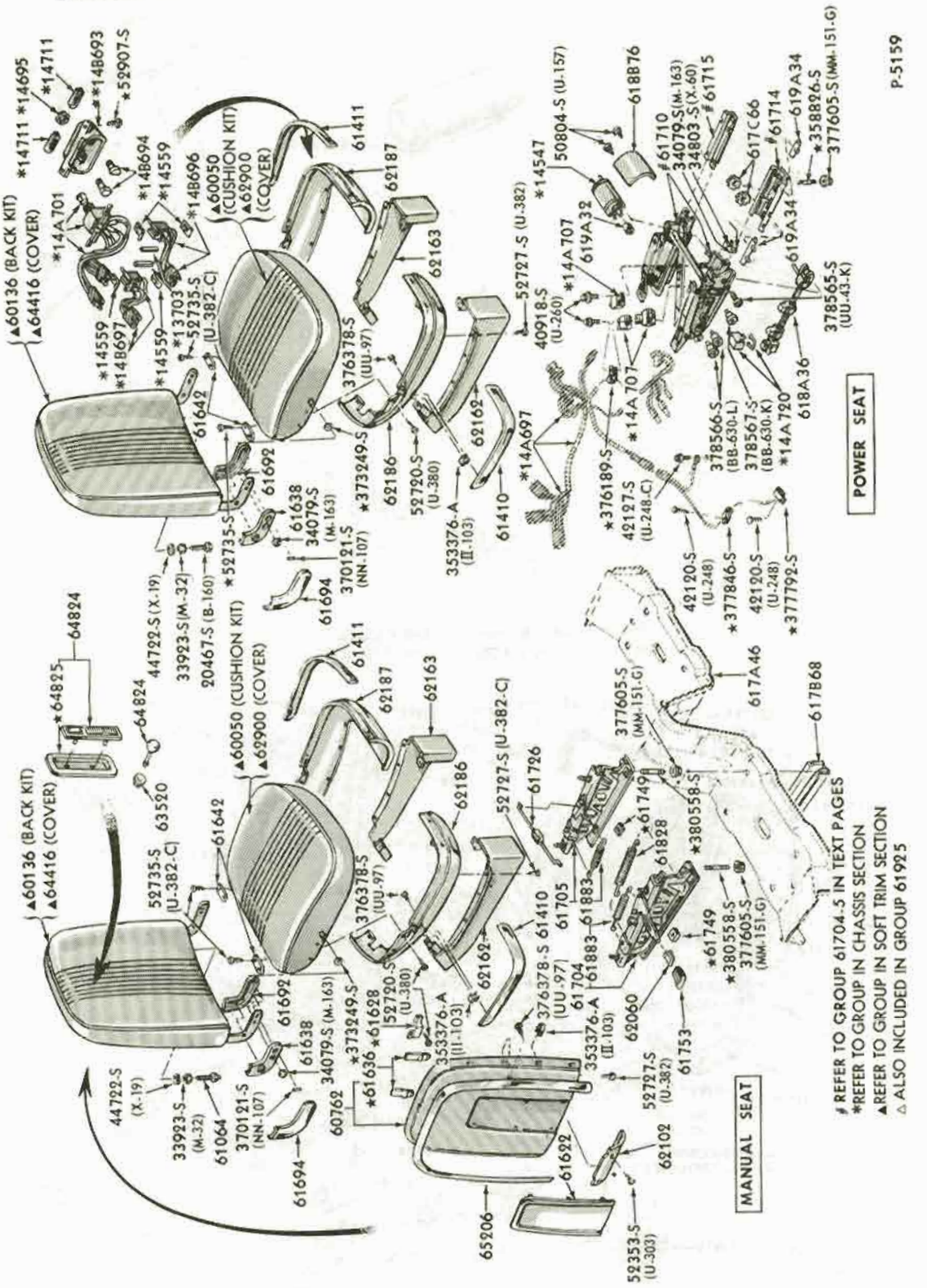

FRONT SEAT MECHANISM and RELATED PARTS - BUCKET

1966 FORD and THUNDERBIRD

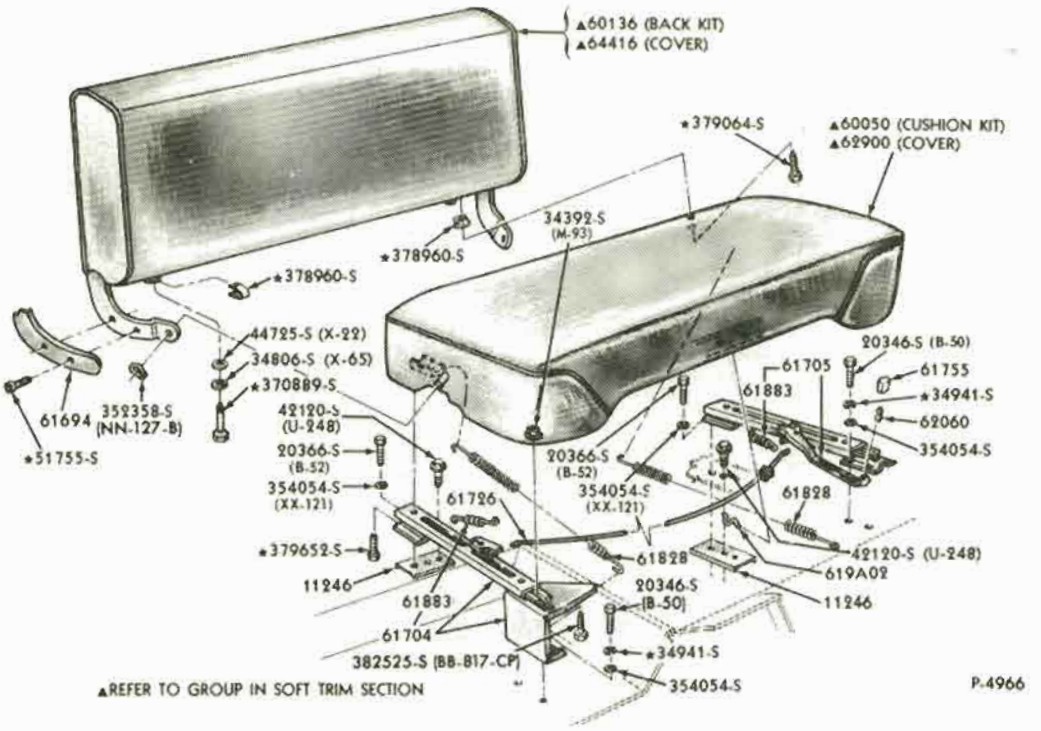

FRONT SEAT MECHANISM and RELATED PARTS - FULL WIDTH
1966/72 BRONCO

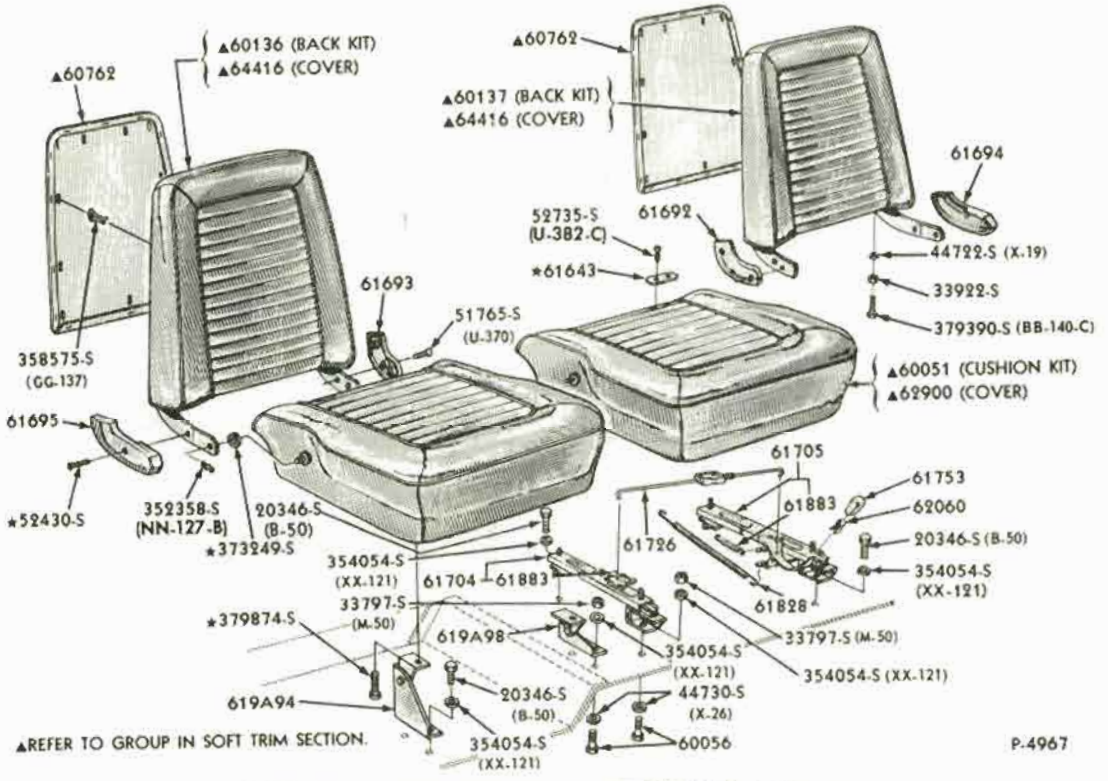

FRONT SEAT MECHANISM and RELATED PARTS - BUCKET
1966 BRONCO

COPYRIGHT © 1975 — FORD MOTOR COMPANY — DEARBORN, MICHIGAN

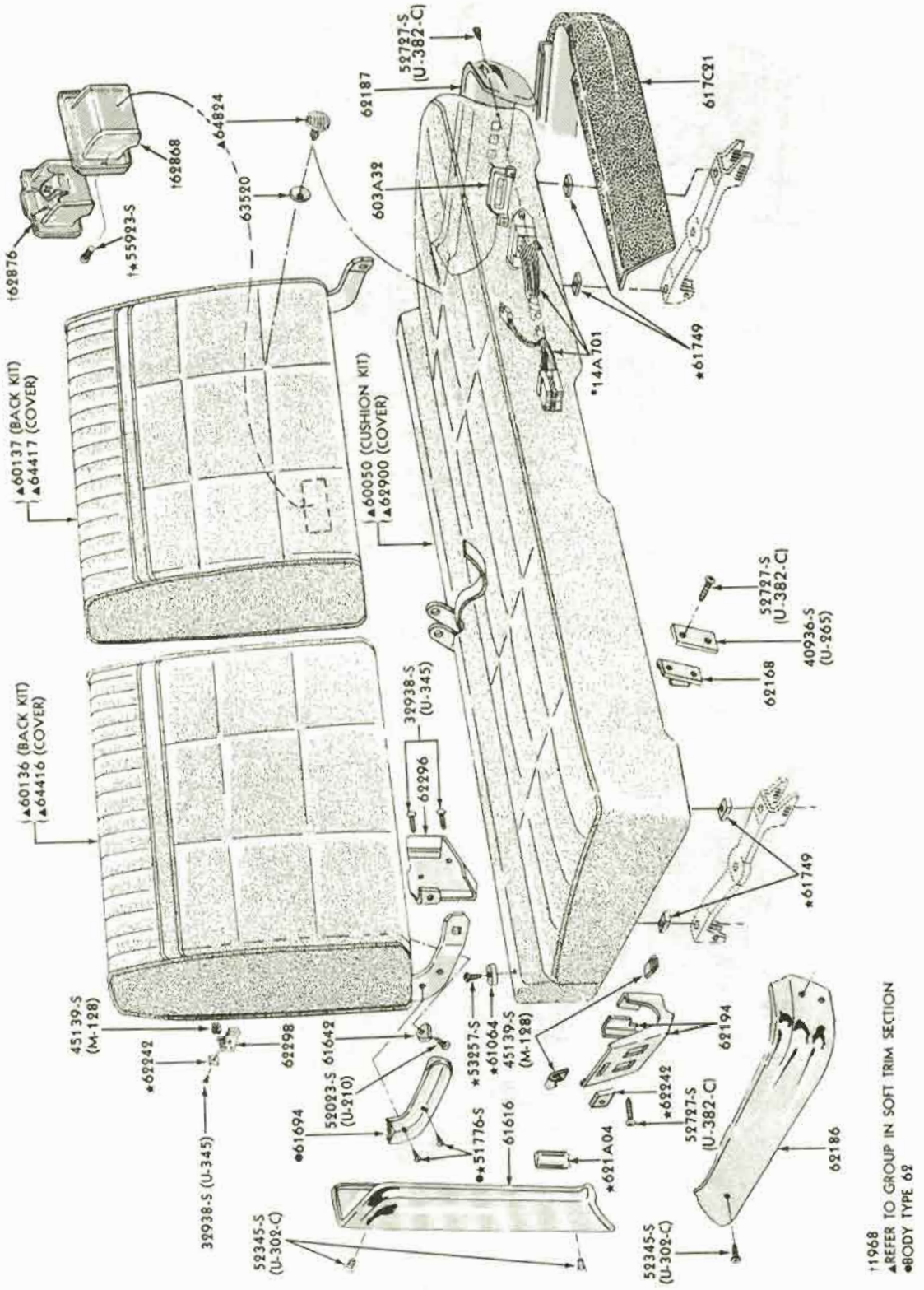

FRONT SEAT MECHANISM and RELATED PARTS-POWER FULL WIDTH-UPPER HALF

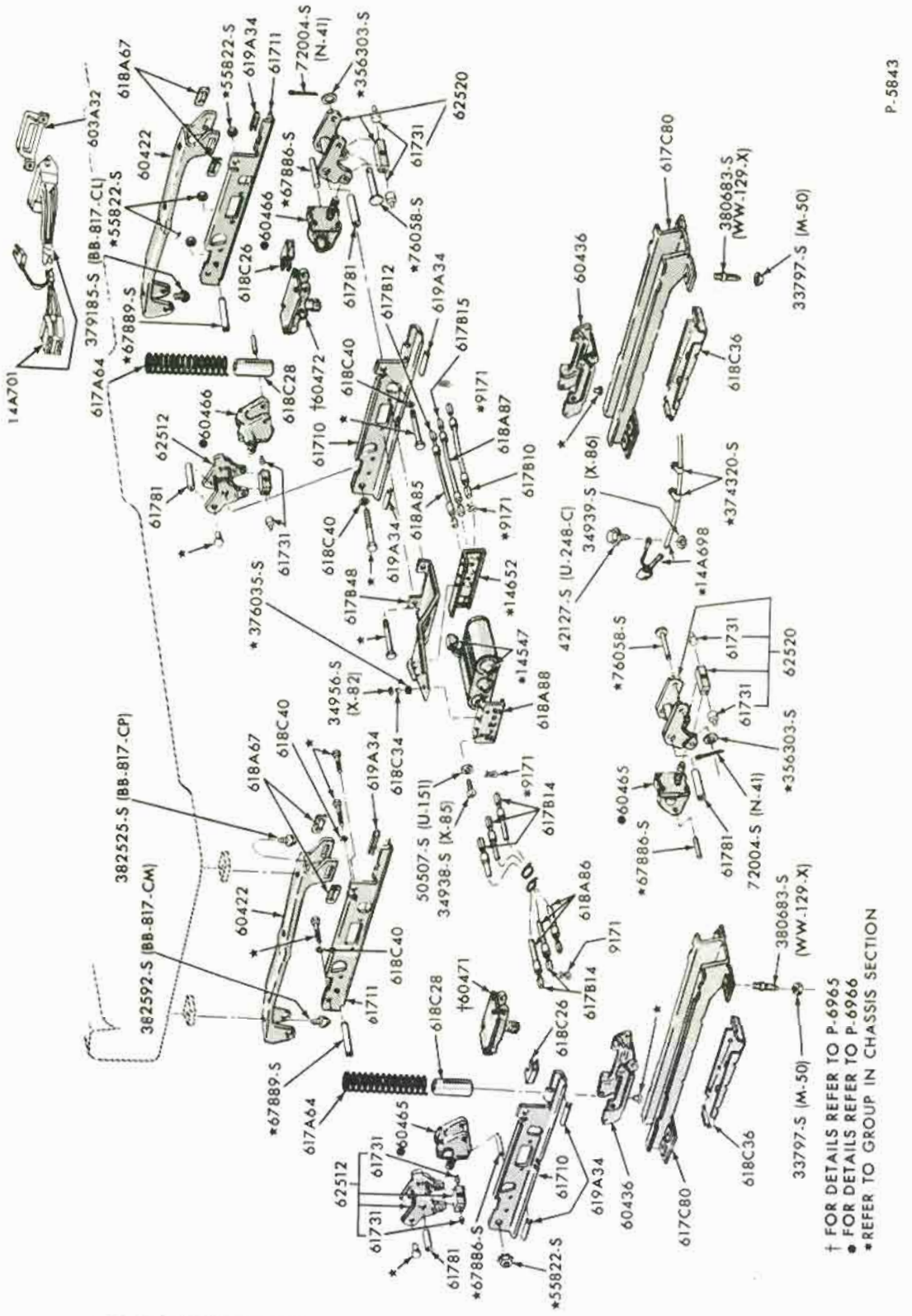

FRONT SEAT MECHANISM and RELATED PARTS-POWER FULL WIDTH-LOWER HALF

1967/70 FORD

COPYRIGHT © 1975 — FORD MOTOR COMPANY — DEARBORN, MICHIGAN

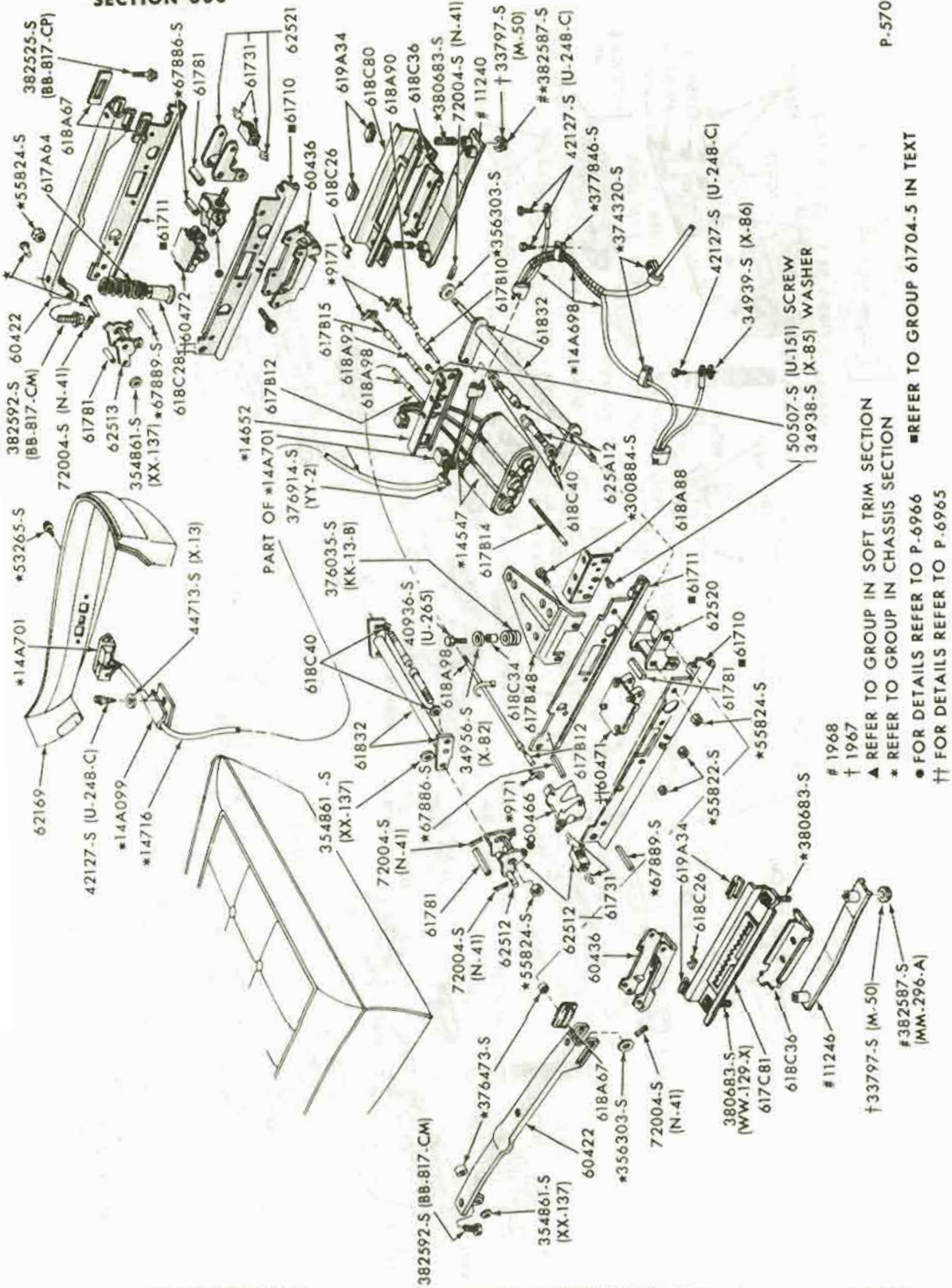

FRONT SEAT MECHANISM and RELATED PARTS - DRIVER POWER SPLIT SEAT - LOWER HALF

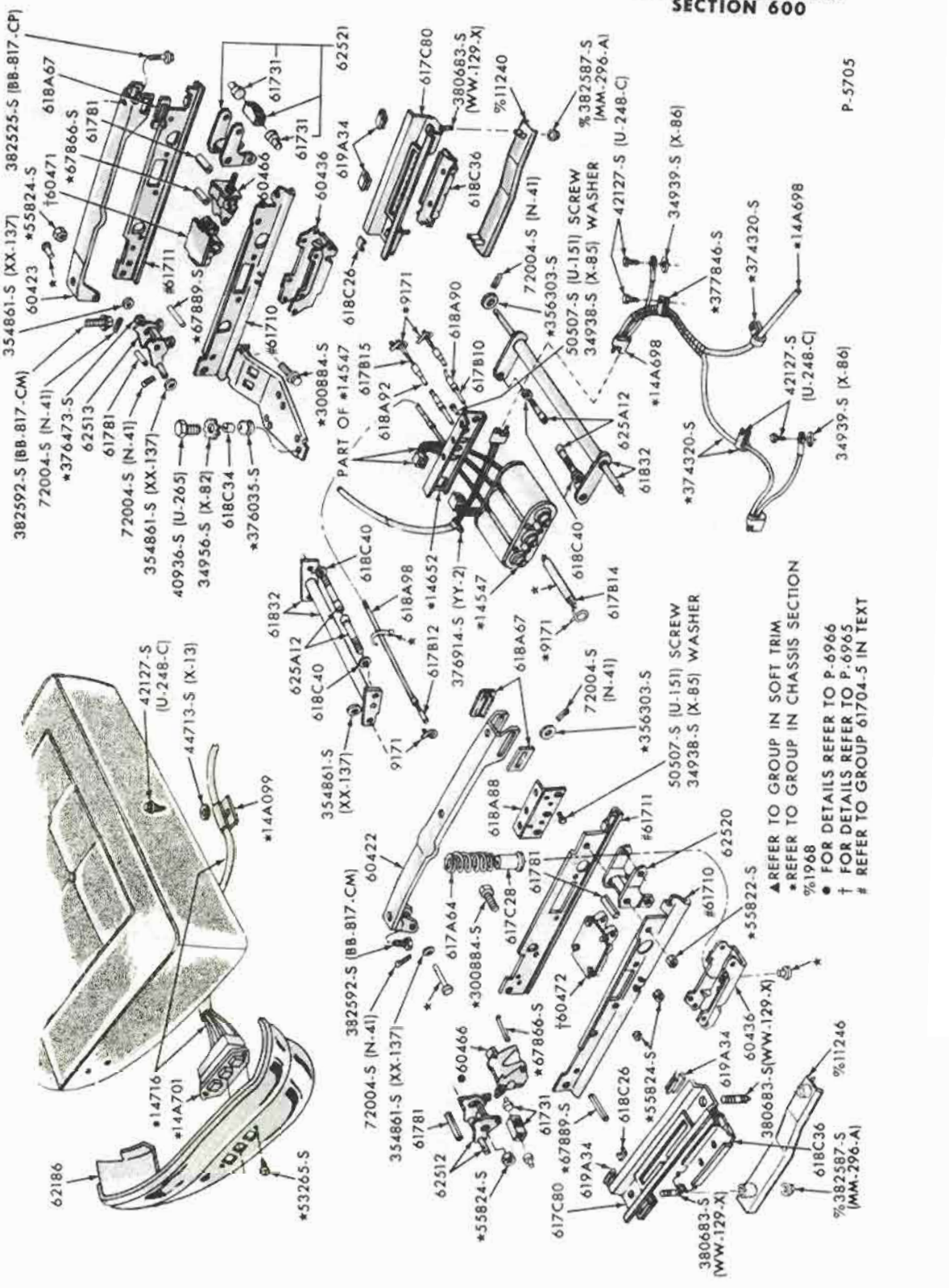

FRONT SEAT MECHANISM and RELATED PARTS - PASSENGER SPLIT BENCH - LOWER HALF
1967/70 FORD
1967/71 THUNDERBIRD

COPYRIGHT © 1975 — FORD MOTOR COMPANY — DEARBORN, MICHIGAN

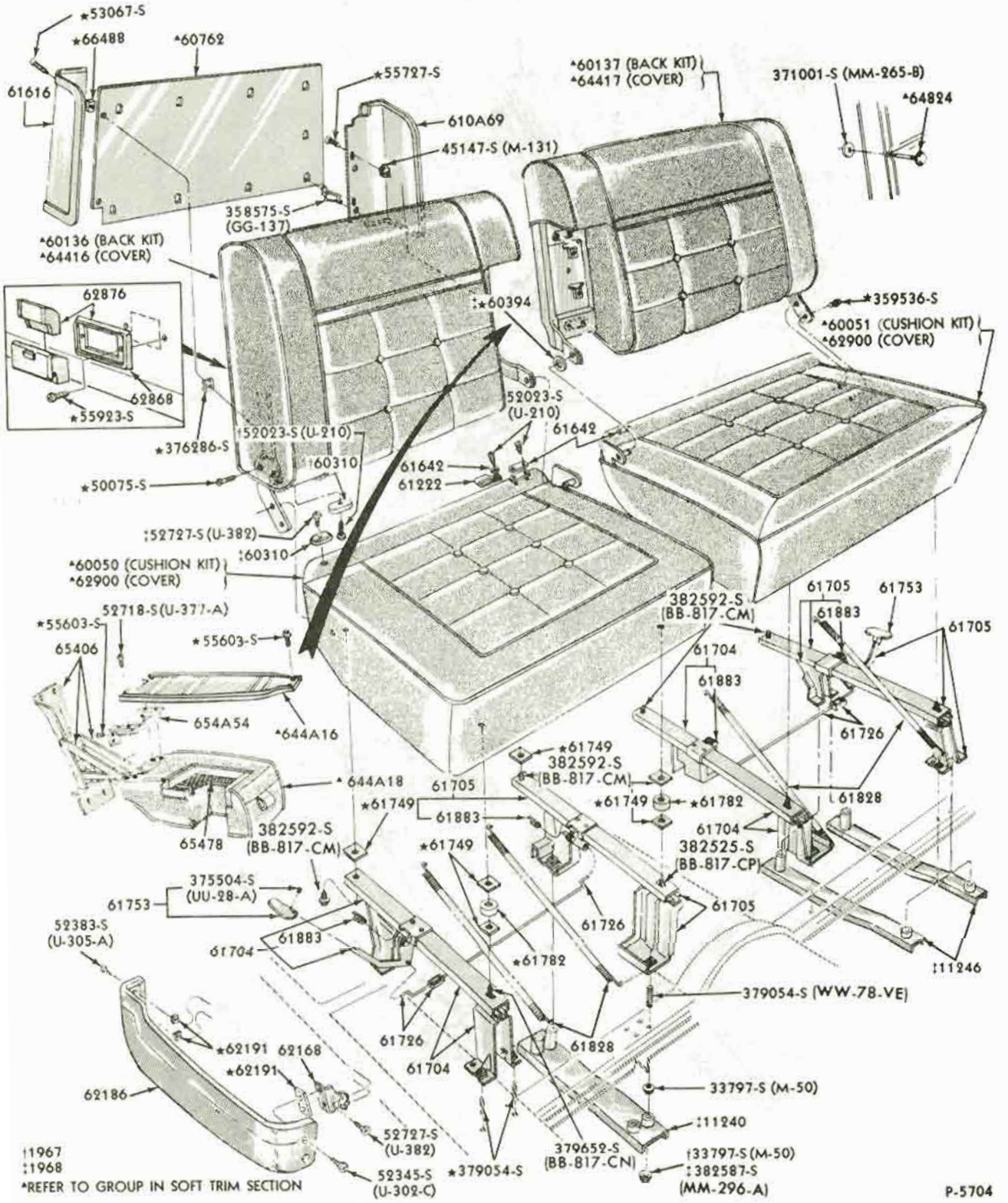

FRONT SEAT MECHANISM and RELATED PARTS - SPLIT BENCH
1967/69 FORD

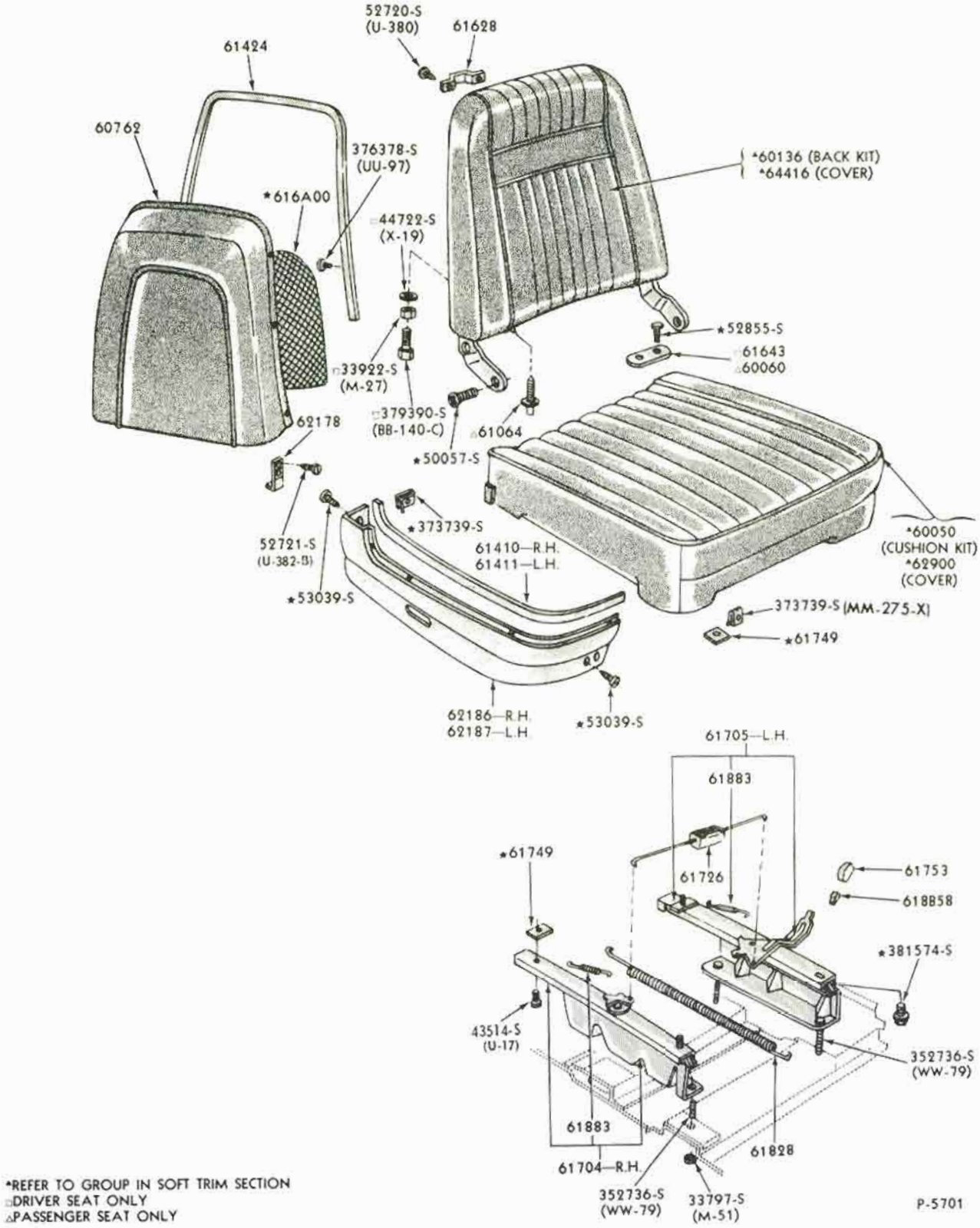

*REFER TO GROUP IN SOFT TRIM SECTION
□DRIVER SEAT ONLY
△PASSENGER SEAT ONLY

P-5701

FRONT SEAT MECHANISM and RELATED PARTS-MANUAL BUCKET
1967 FORD

COPYRIGHT © 1975 — FORD MOTOR COMPANY — DEARBORN, MICHIGAN

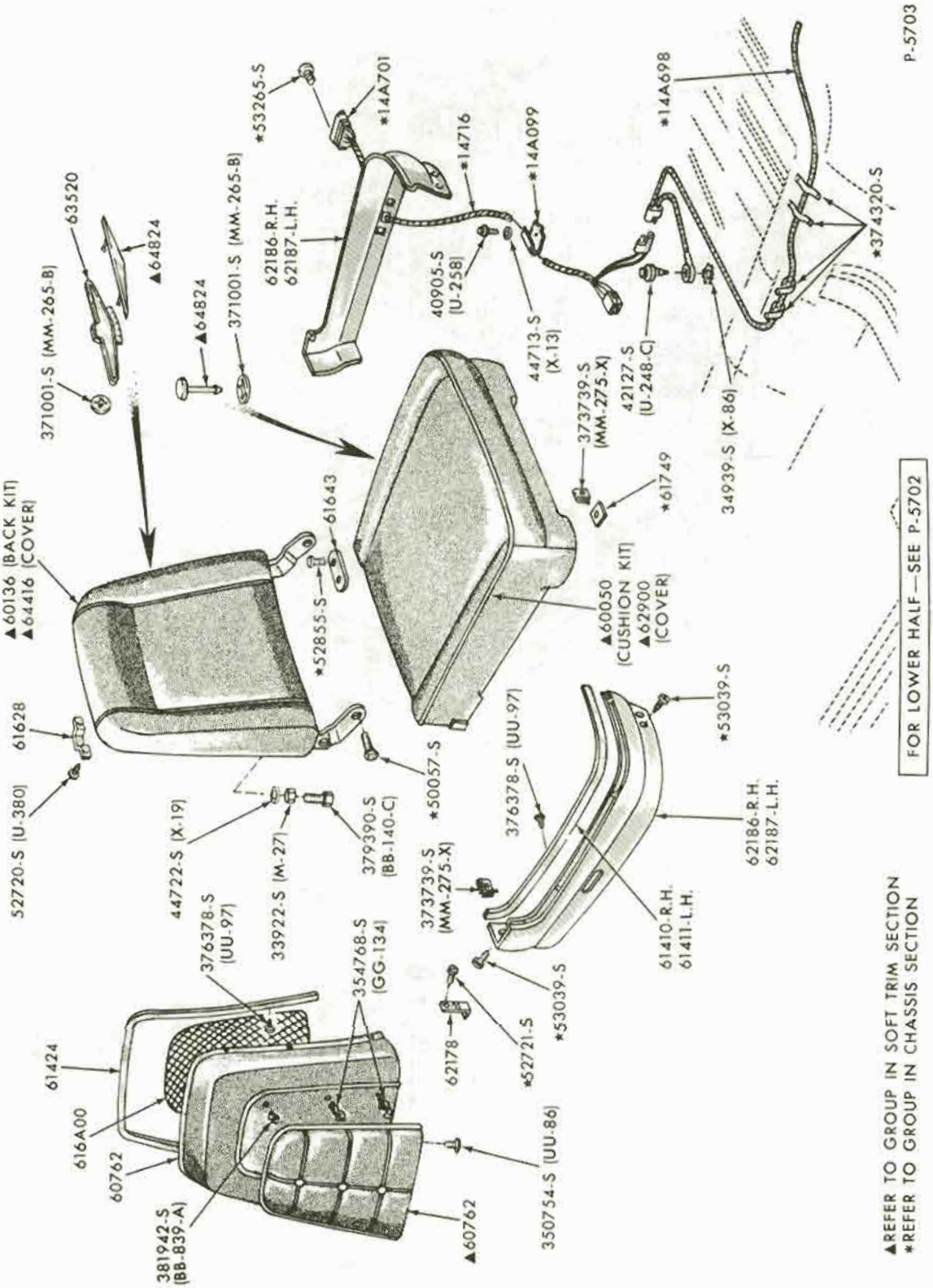

FRONT SEAT MECHANISM and RELATED PARTS - DRIVER POWER BUCKET - UPPER HALF
1967 FORD and THUNDERBIRD

COPYRIGHT © 1975 — FORD MOTOR COMPANY — DEARBORN, MICHIGAN

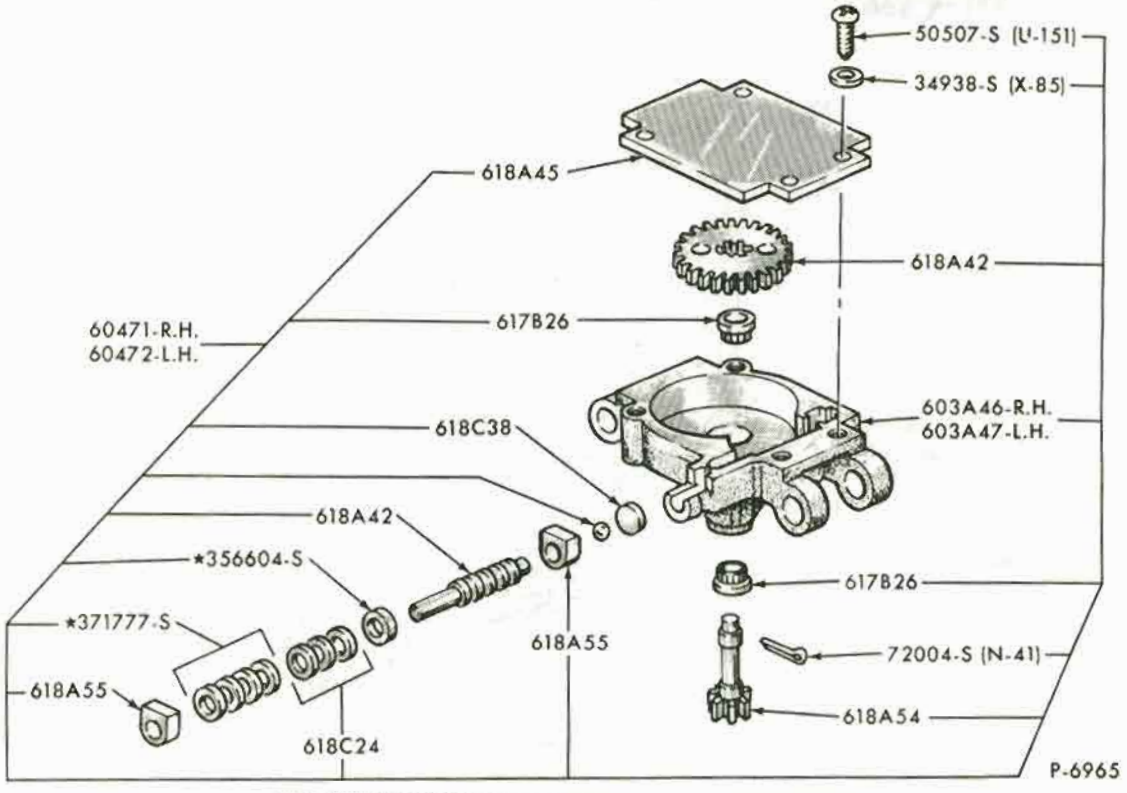

TRANSMISSION DETAILS - POWER SEAT - HORIZONTAL
1967/71 FORD and THUNDERBIRD

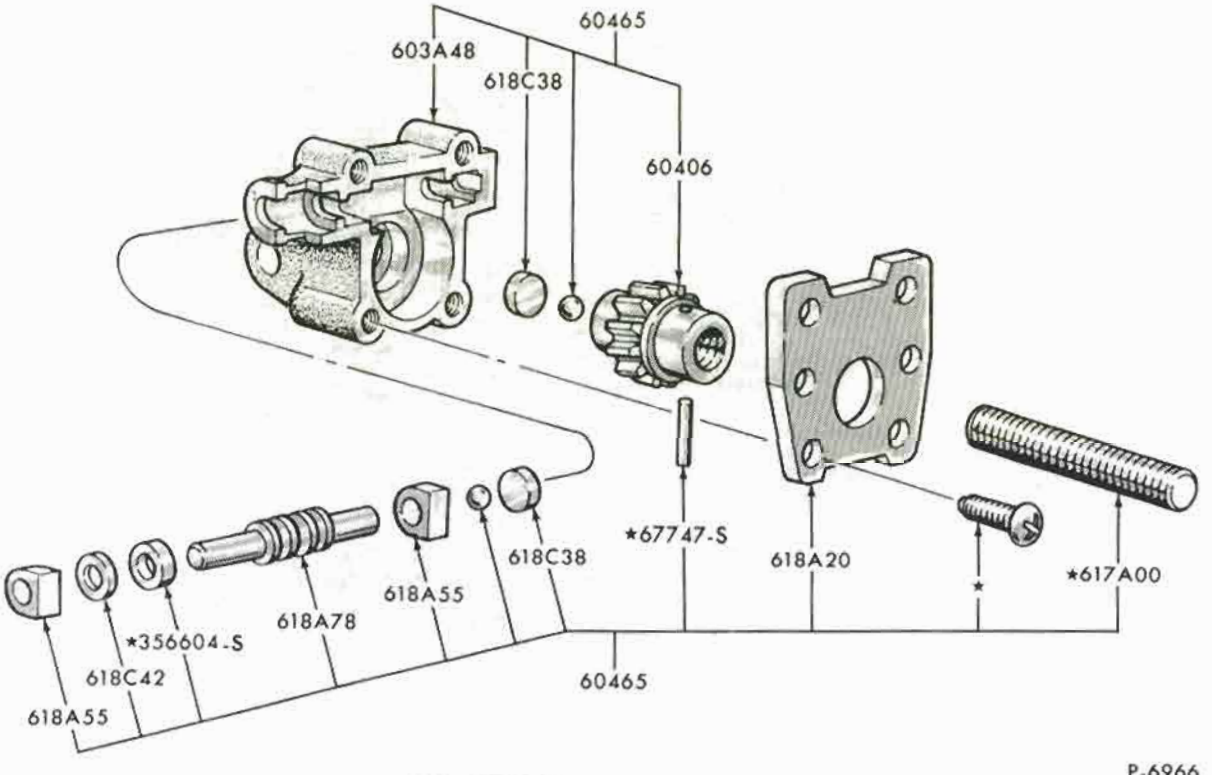

TRANSMISSION DETAILS - POWER SEAT - VERTICAL
1967/71 FORD and THUNDERBIRD

COPYRIGHT © 1975 — FORD MOTOR COMPANY —DEARBORN, MICHIGAN

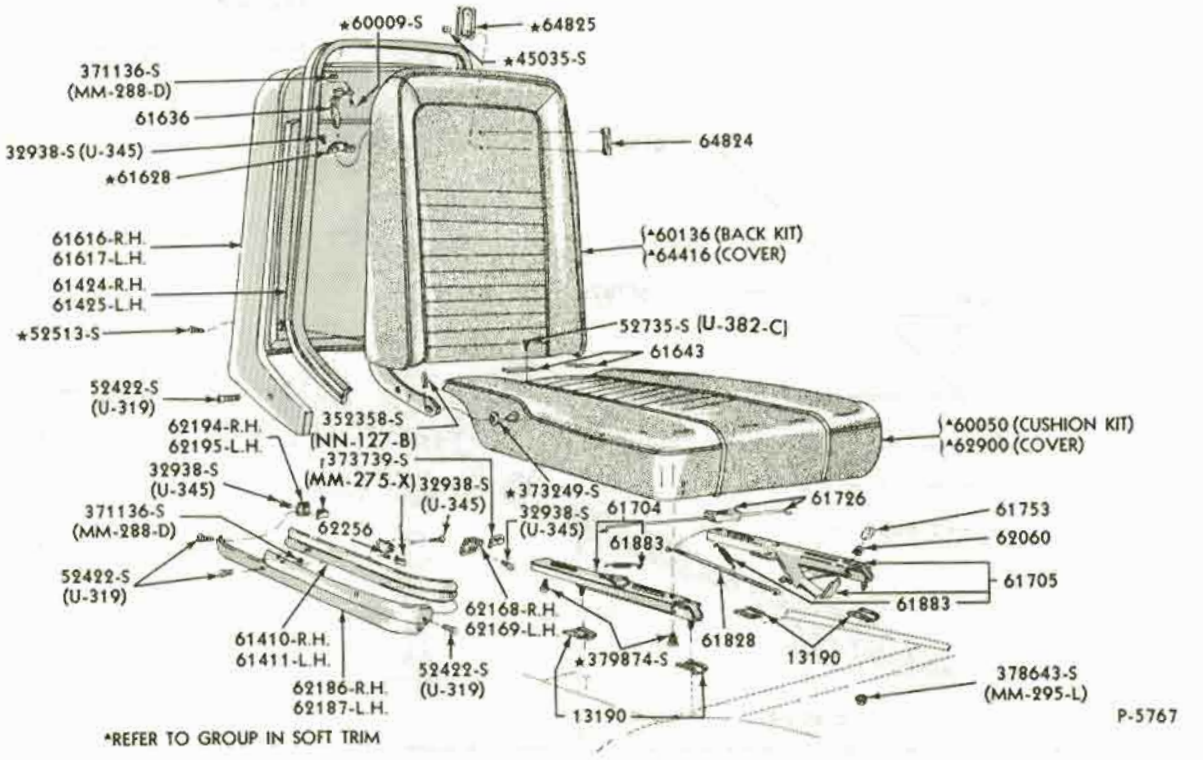

FRONT SEAT MECHANISM and RELATED PARTS - BUCKET
1967 MUSTANG - BODY TYPE 63B, 65B, 76B

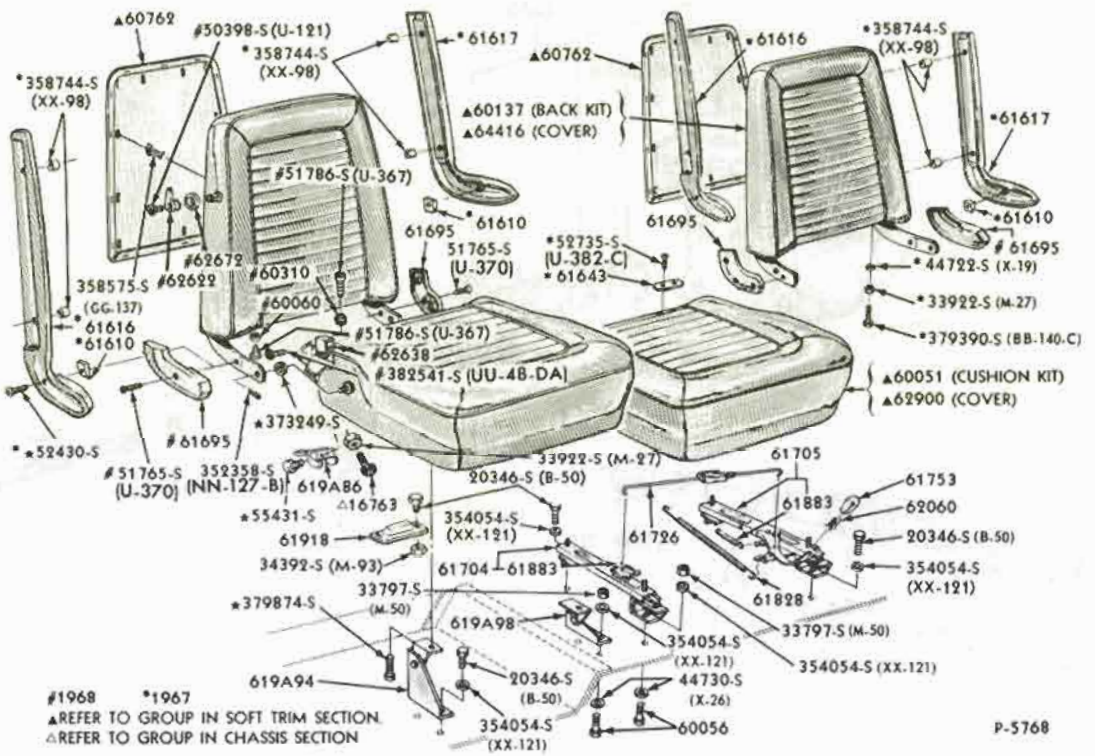

FRONT SEAT MECHANISM and RELATED PARTS - BUCKET
1967/71 BRONCO

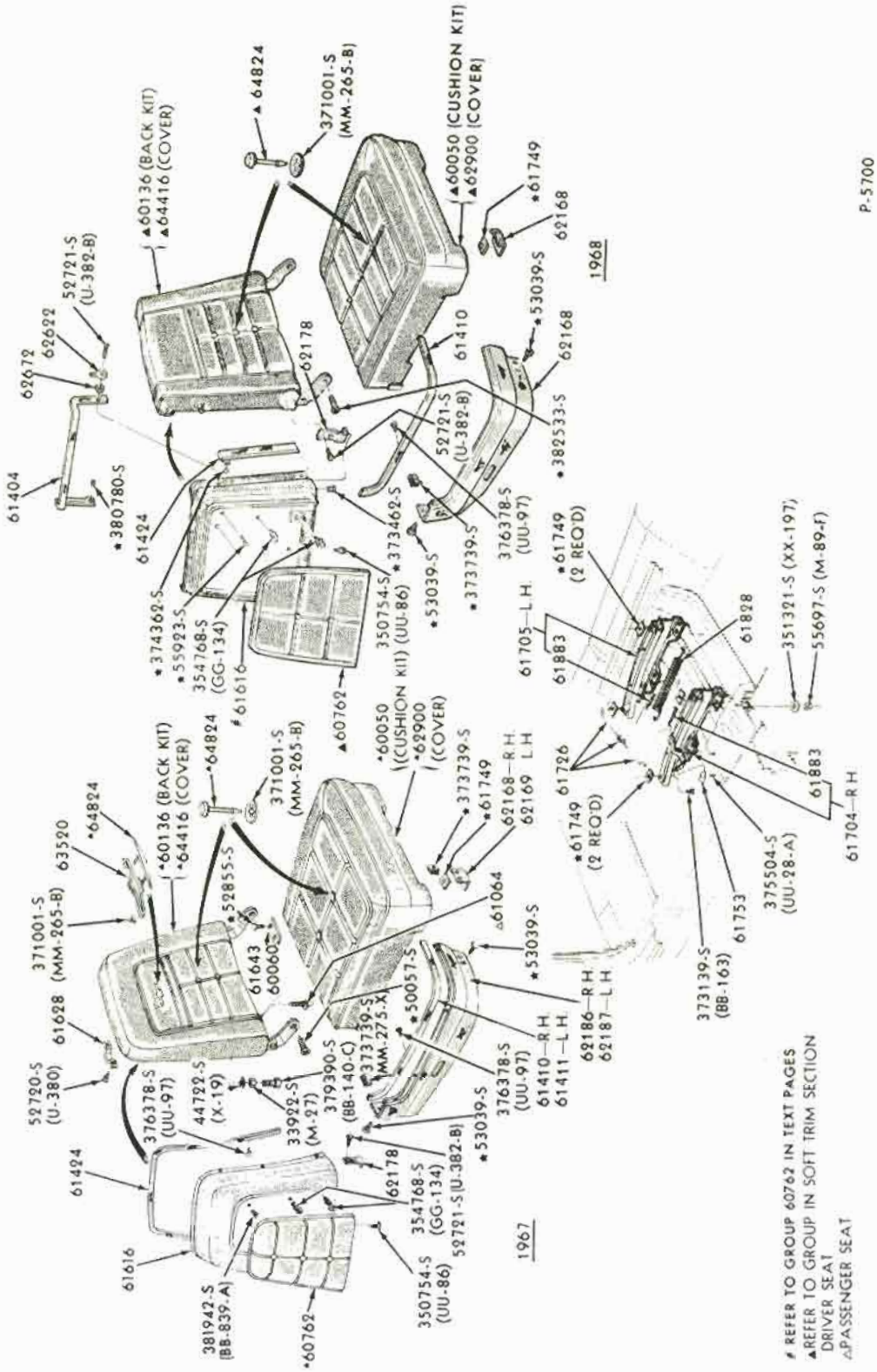

FRONT SEAT MECHANISM and RELATED PARTS-MANUAL BUCKET
1967/71 THUNDERBIRD

COPYRIGHT © 1975 — FORD MOTOR COMPANY — DEARBORN, MICHIGAN

FORD CAR PARTS

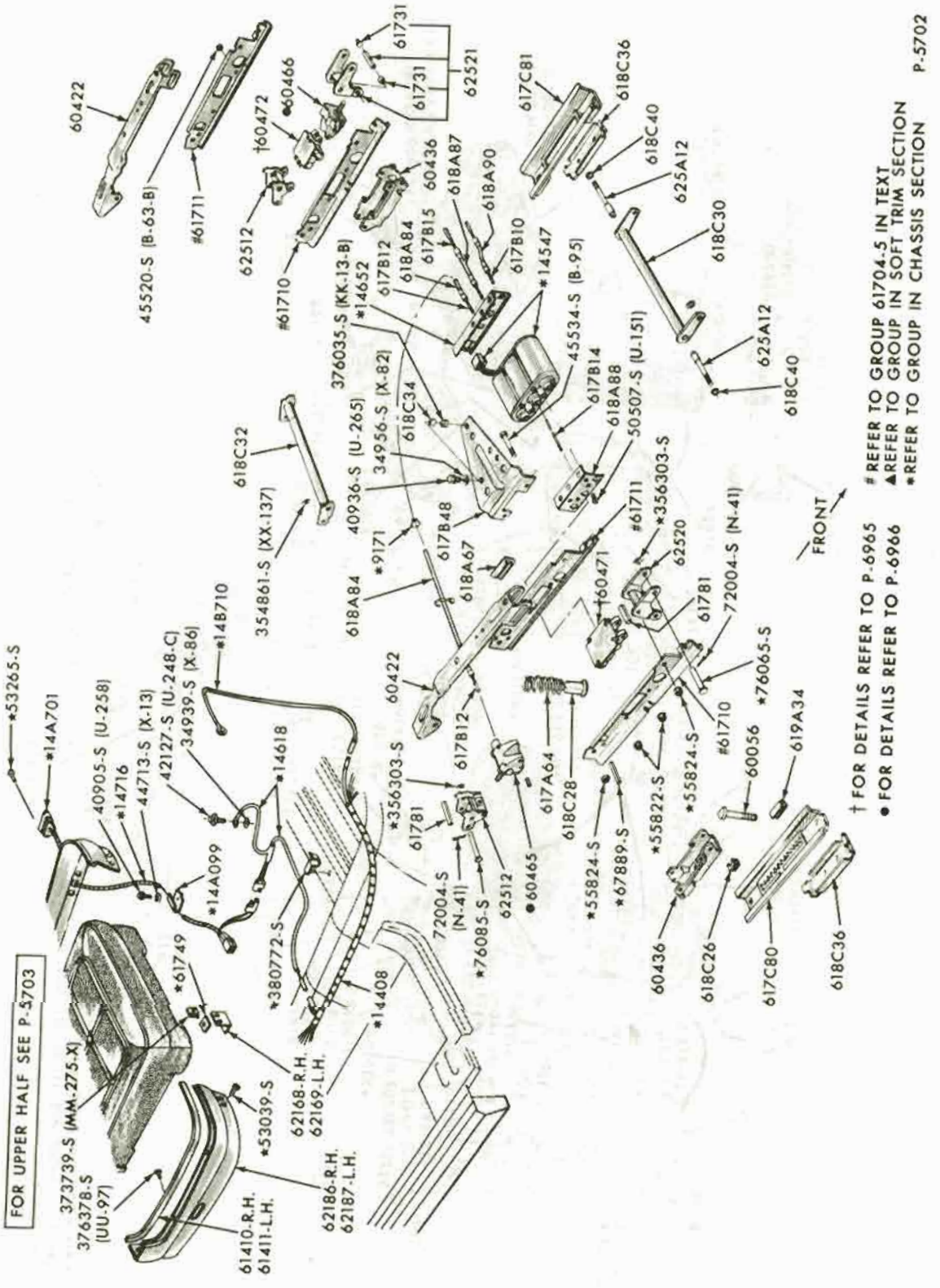

FRONT SEAT MECHANISM and RELATED PARTS - DRIVER POWER BUCKET - LOWER HALF
1967 FORD and THUNDERBIRD

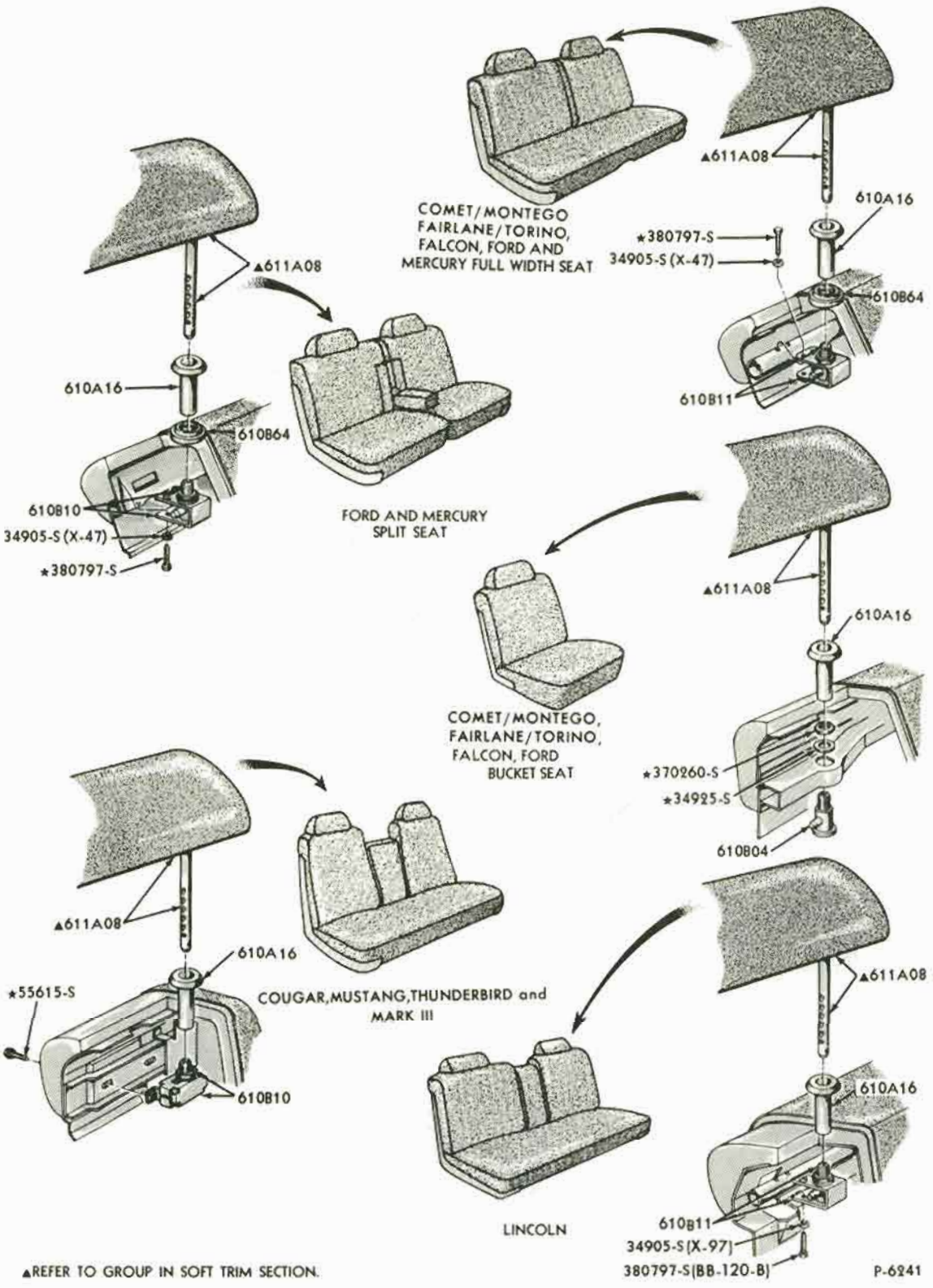

▲REFER TO GROUP IN SOFT TRIM SECTION.

FRONT SEAT HEAD REST and RELATED PARTS
1968 ALL

COPYRIGHT © 1975 — FORD MOTOR COMPANY — DEARBORN, MICHIGAN

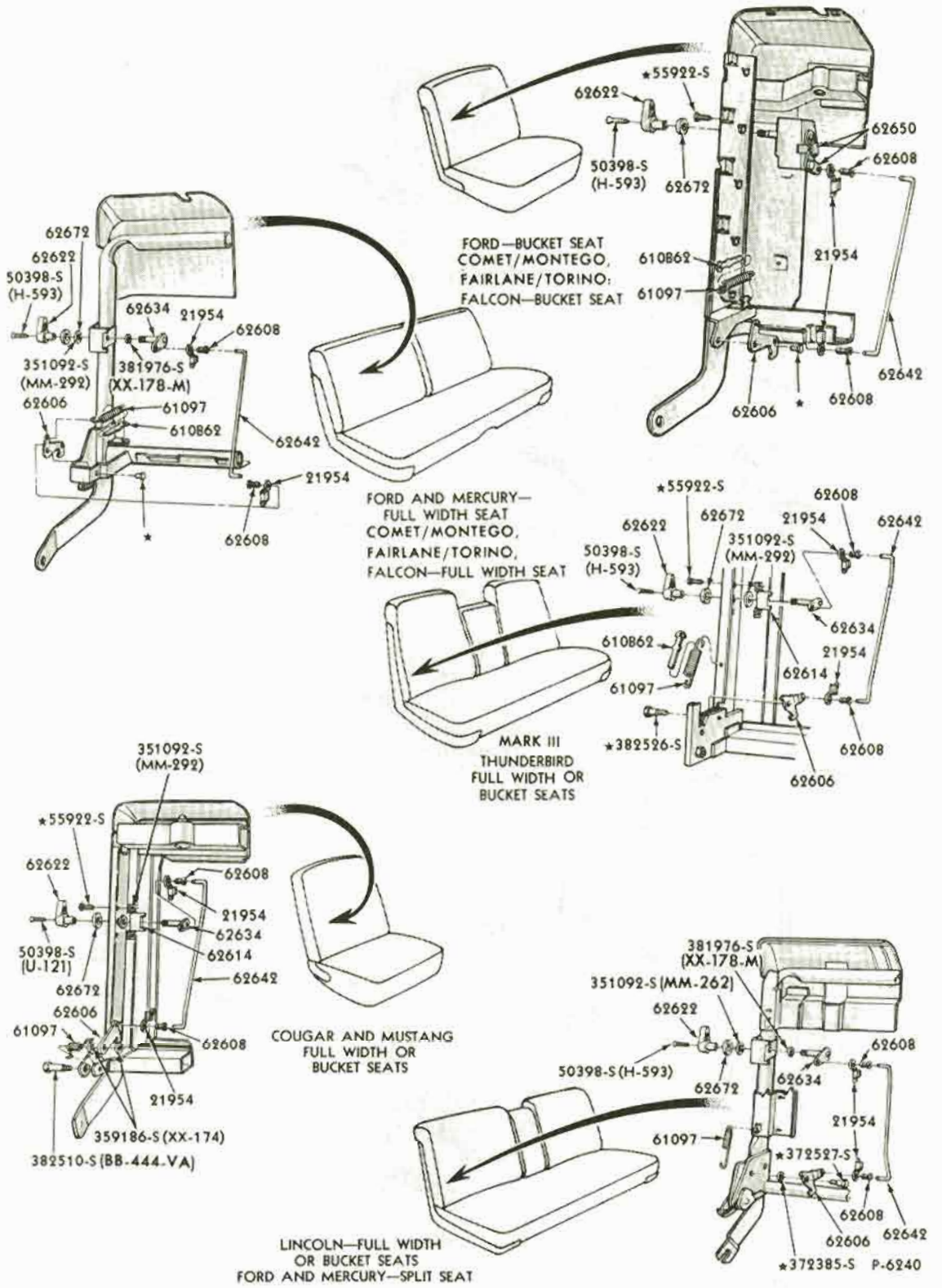

FRONT SEAT BACK LATCH and RELATED PARTS

1968 ALL TWO DOORS

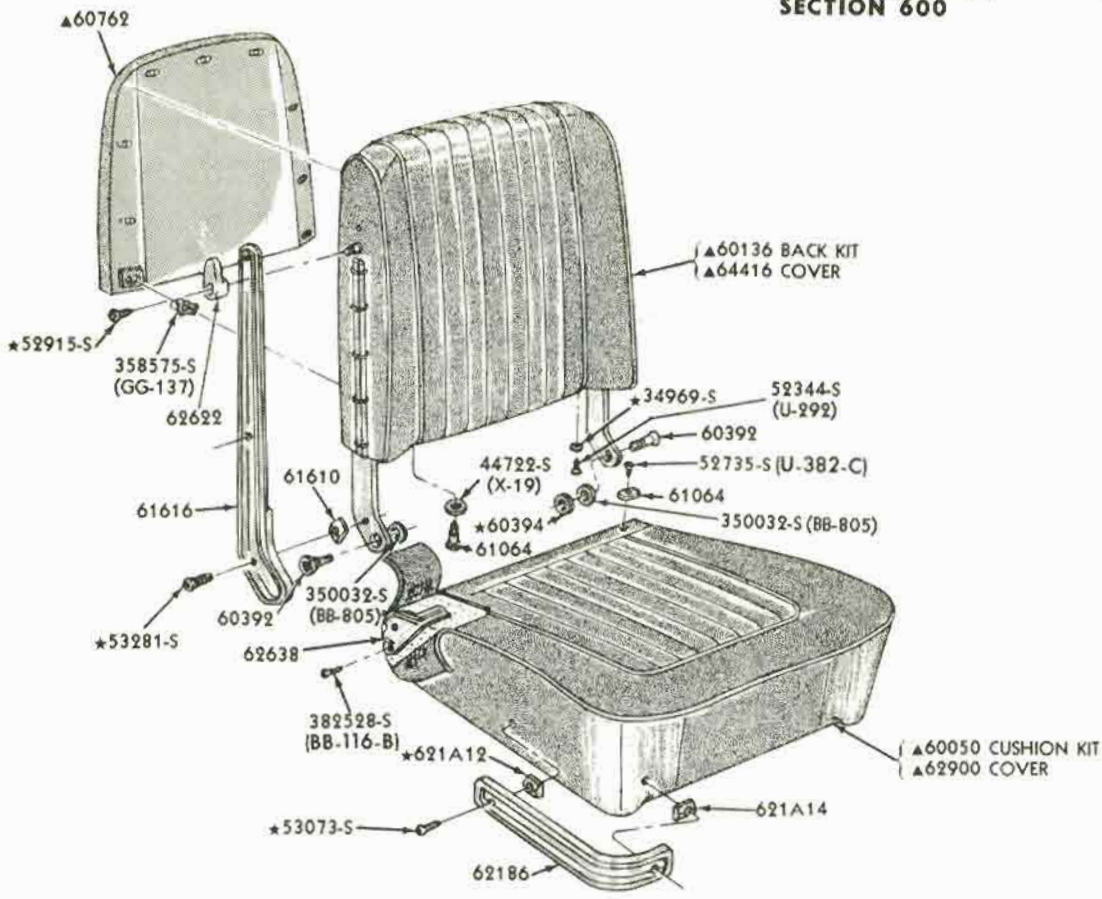

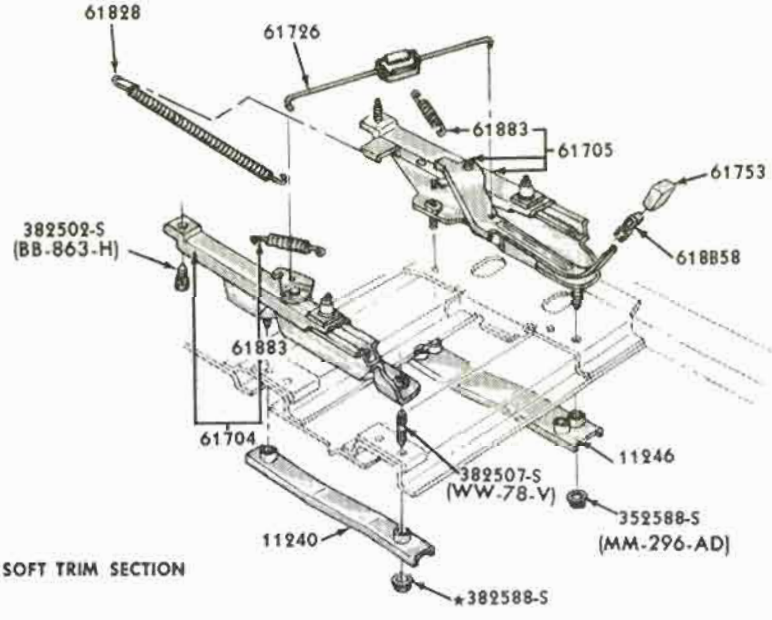

▲REFER TO GROUP IN SOFT TRIM SECTION

P-6167

FRONT SEAT MECHANISM and RELATED PARTS - MANUAL BUCKET
1968/69 FORD

COPYRIGHT © 1975 — FORD MOTOR COMPANY — DEARBORN, MICHIGAN

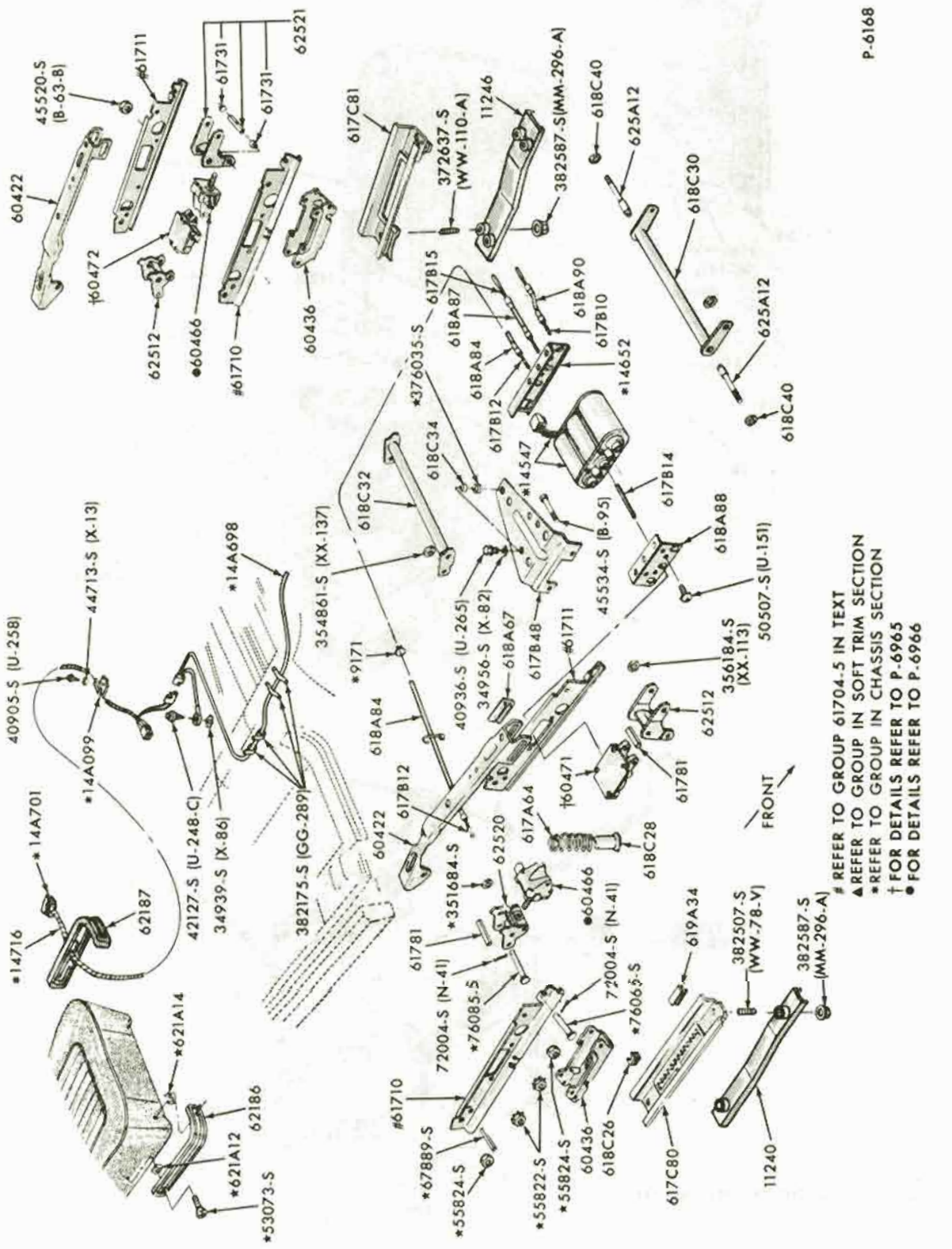

FRONT SEAT MECHANISM and RELATED PARTS - DRIVER POWER BUCKET - LOWER HALF

1968 FORD

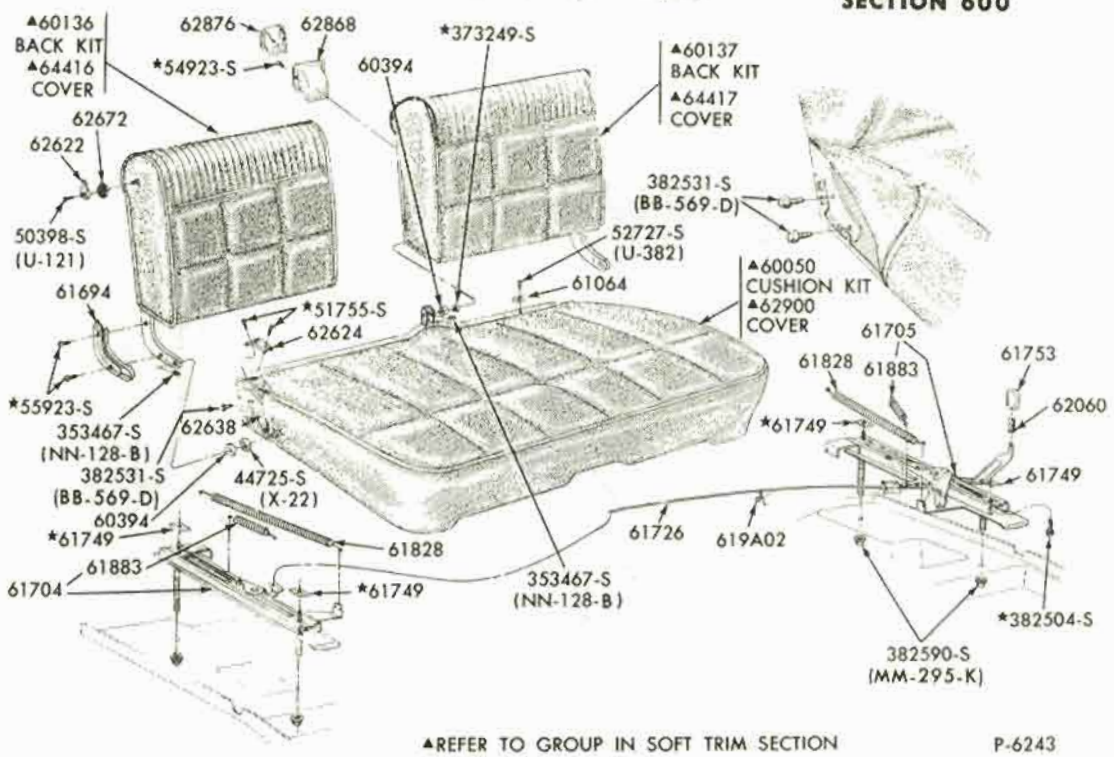

▲REFER TO GROUP IN SOFT TRIM SECTION P-6243

FRONT SEAT MECHANISM and RELATED PARTS - MANUAL FULL WIDTH
1968/71 FAIRLANE/TORINO and FALCON

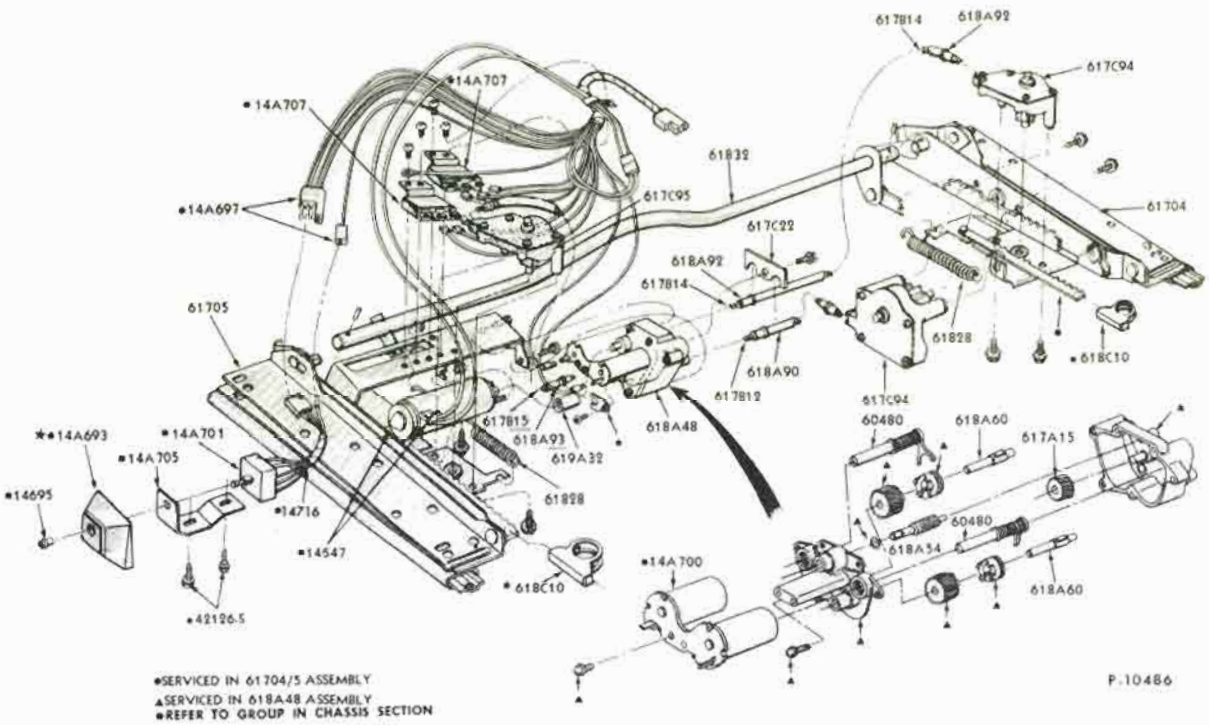

•SERVICED IN 61704/5 ASSEMBLY
▲SERVICED IN 618A48 ASSEMBLY
•REFER TO GROUP IN CHASSIS SECTION P-10486

FRONT SEAT MECHANISM and RELATED PARTS - POWER FULL WIDTH - LOWER HALF
1969/71 FAIRLANE/TORINO

COPYRIGHT © 1975 — FORD MOTOR COMPANY — DEARBORN, MICHIGAN

FORD CAR PARTS

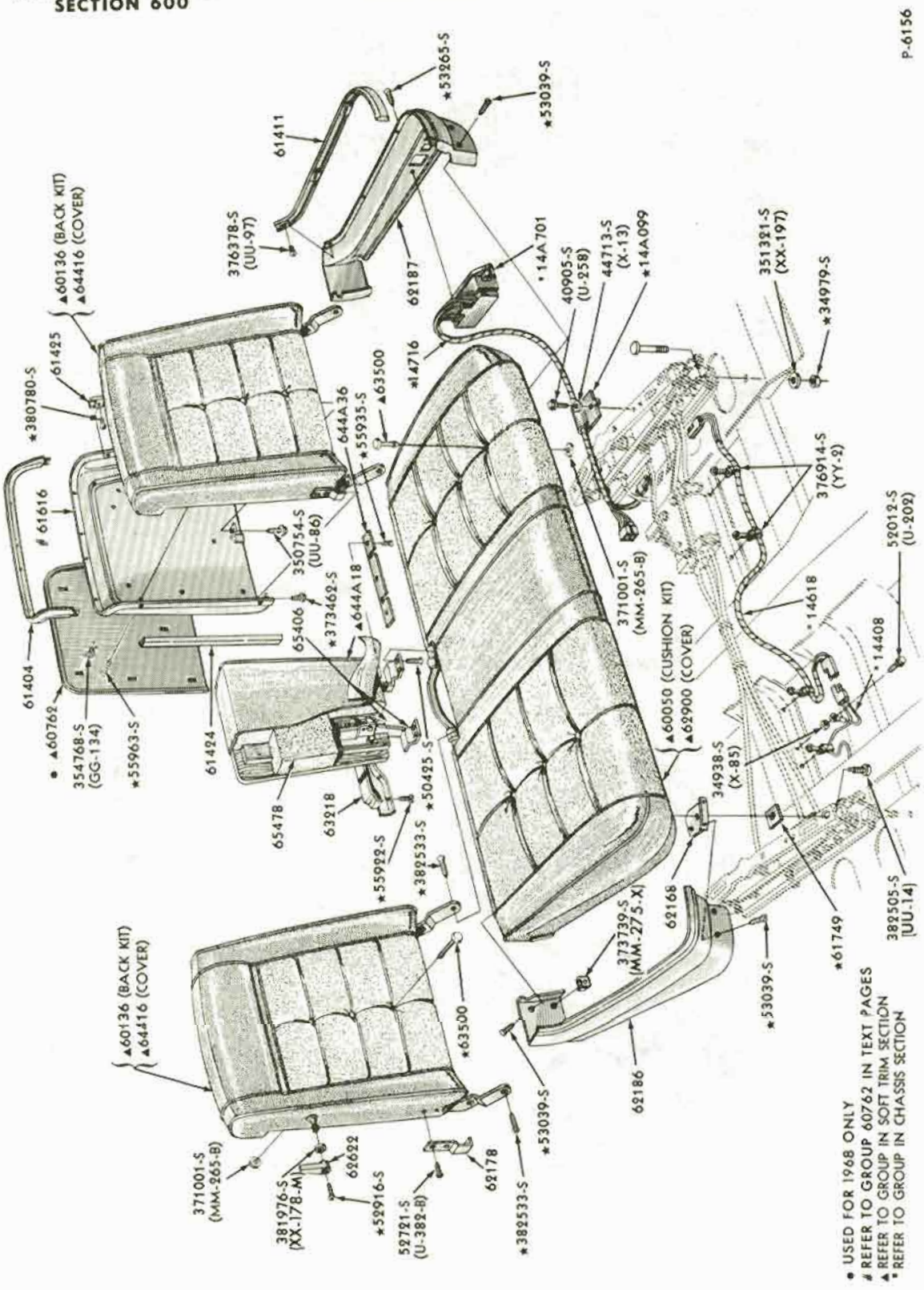

FRONT SEAT MECHANISM and RELATED PARTS-POWER FULL WIDTH-UPPER HALF
1968/71 THUNDERBIRD

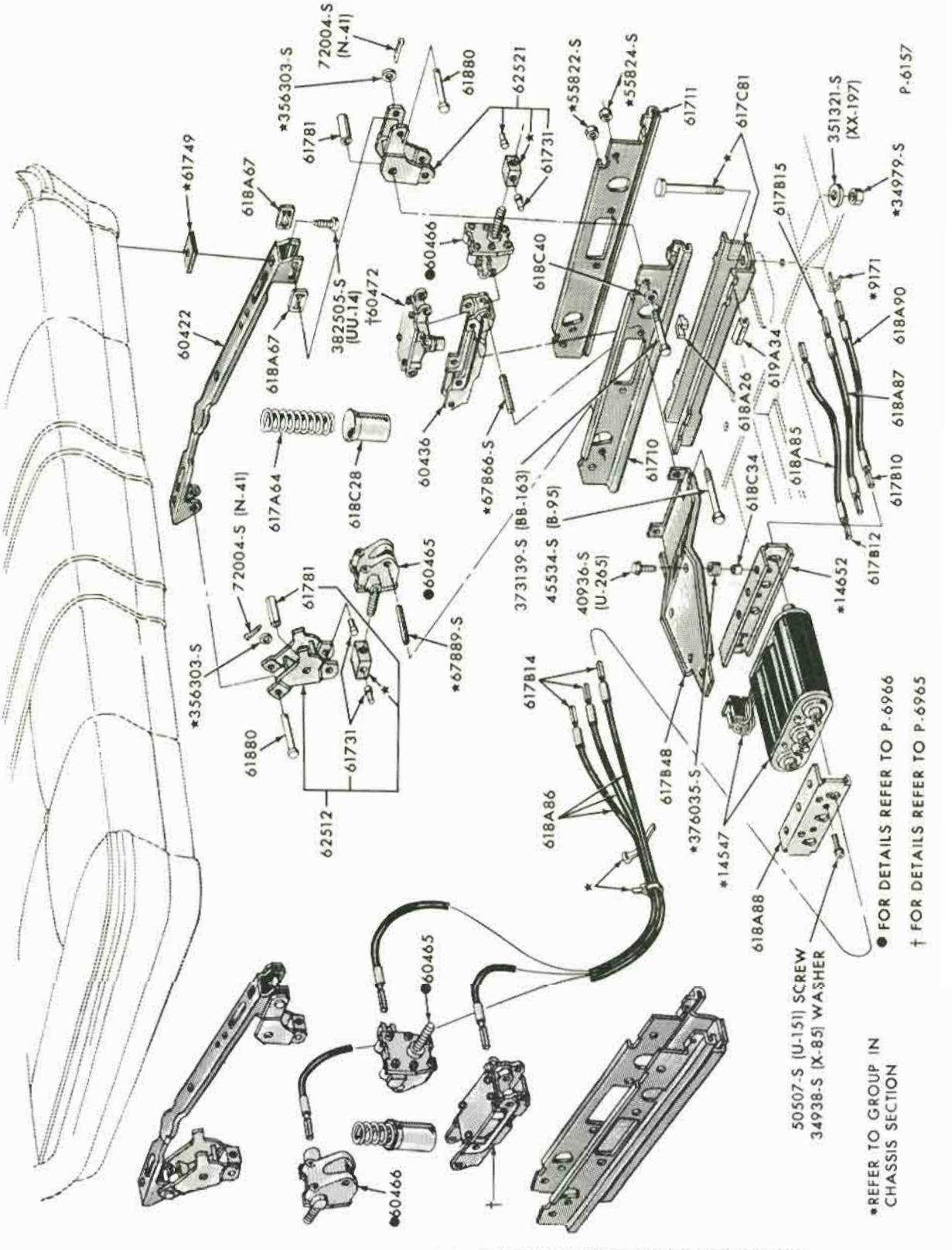

FRONT SEAT MECHANISM and RELATED PARTS-POWER FULL WIDTH-LOWER HALF
1968/71 THUNDERBIRD

COPYRIGHT © 1975 — FORD MOTOR COMPANY — DEARBORN, MICHIGAN

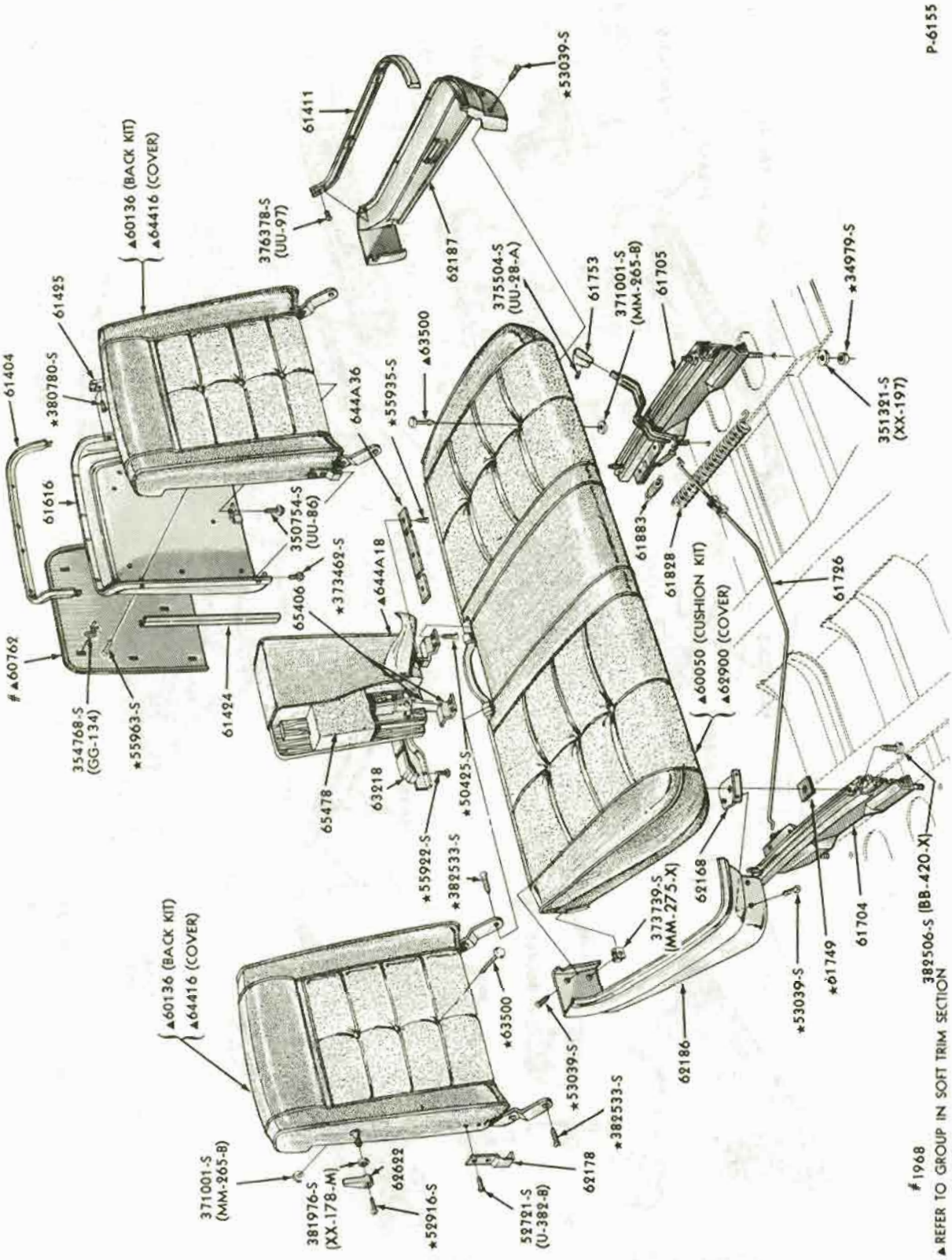

FRONT SEAT MECHANISM and RELATED PARTS-MANUAL FULL WIDTH
1968/71 THUNDERBIRD

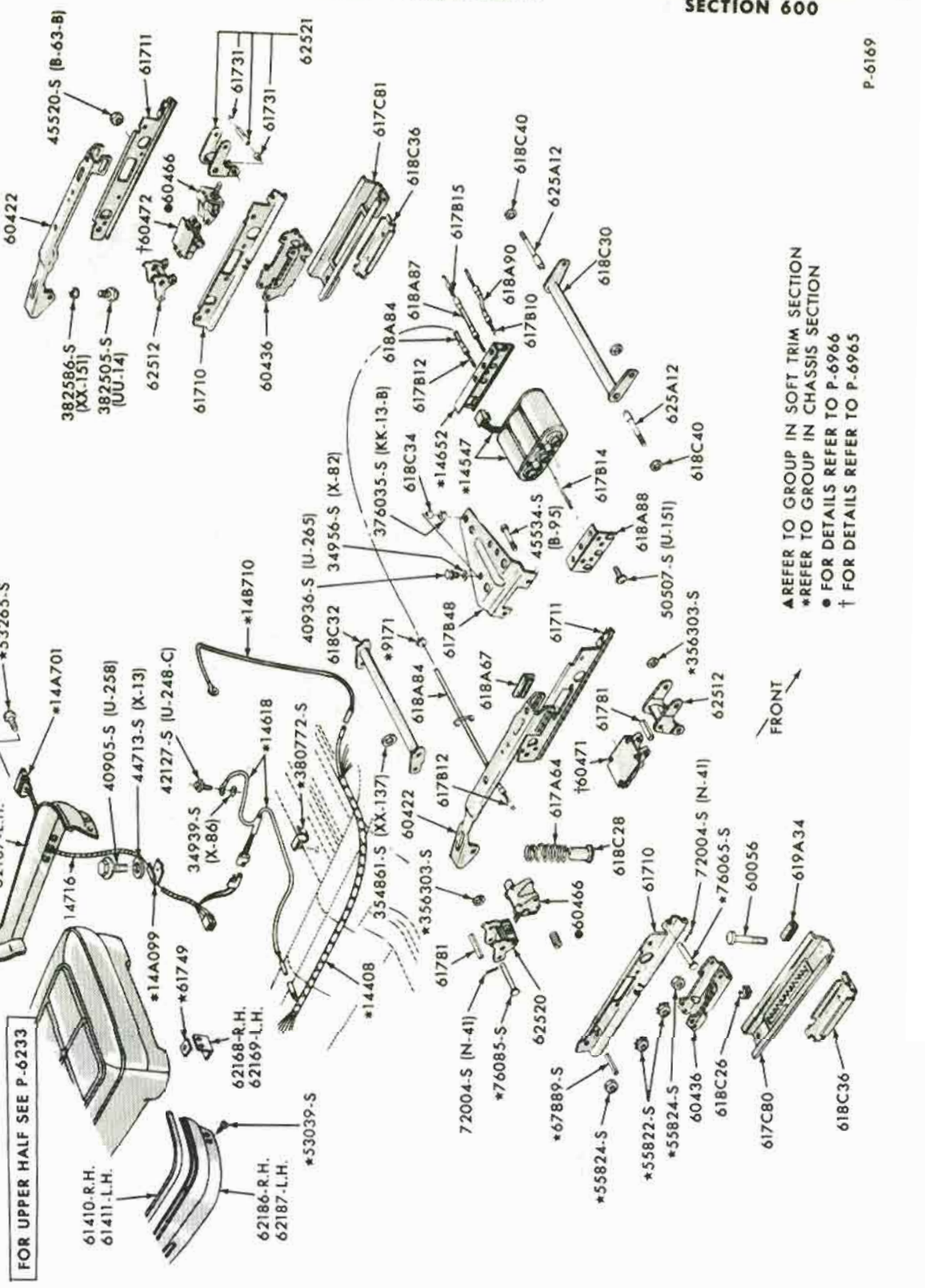

FRONT SEAT MECHANISM and RELATED PARTS - DRIVER POWER BUCKET - LOWER HALF

1968/71 THUNDERBIRD

COPYRIGHT © 1975 — FORD MOTOR COMPANY — DEARBORN, MICHIGAN

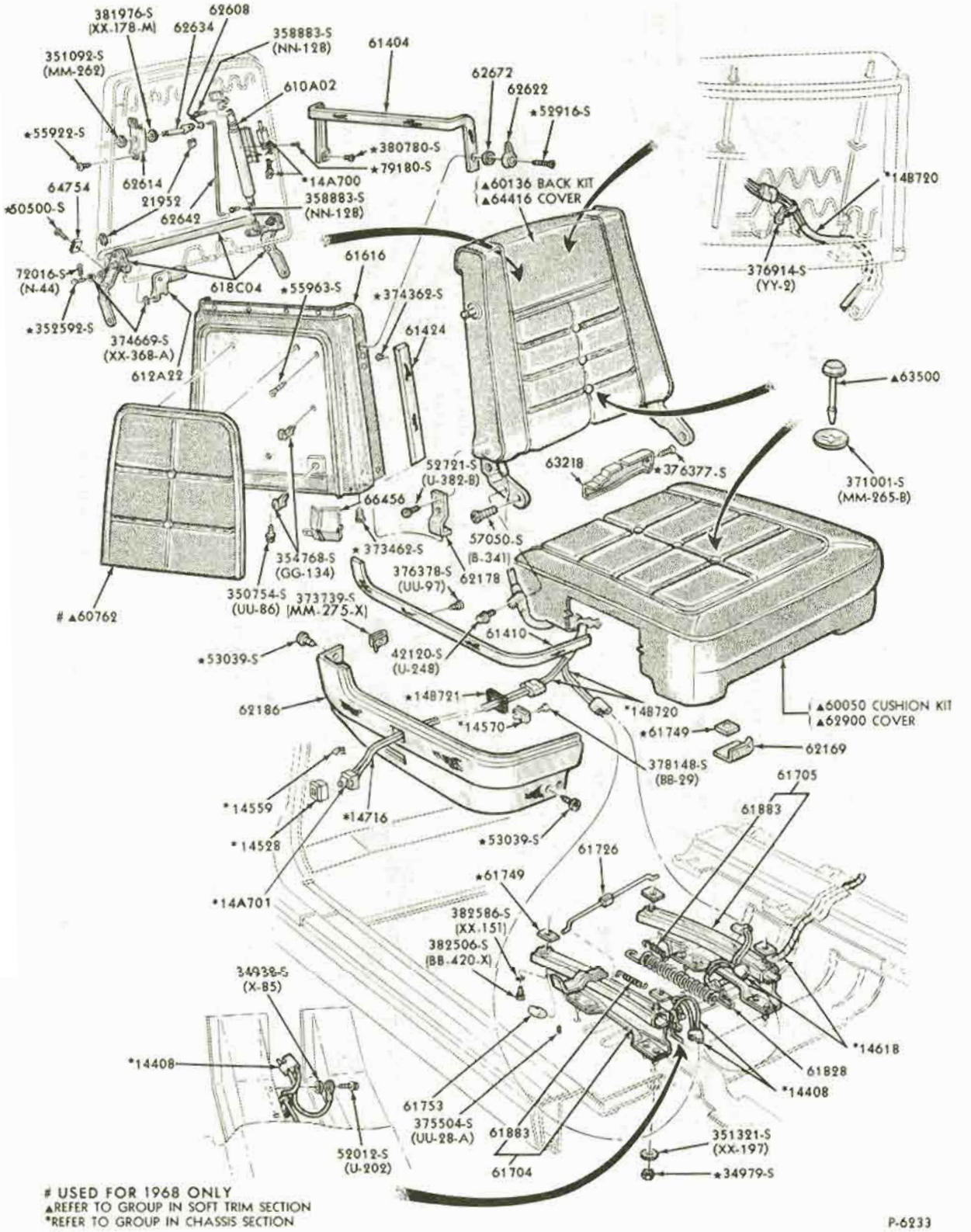

USED FOR 1968 ONLY
▲REFER TO GROUP IN SOFT TRIM SECTION
*REFER TO GROUP IN CHASSIS SECTION

P-6233

FRONT SEAT MECHANISM and RELATED PARTS - PASSENGER RECLINING

1968/69 THUNDERBIRD

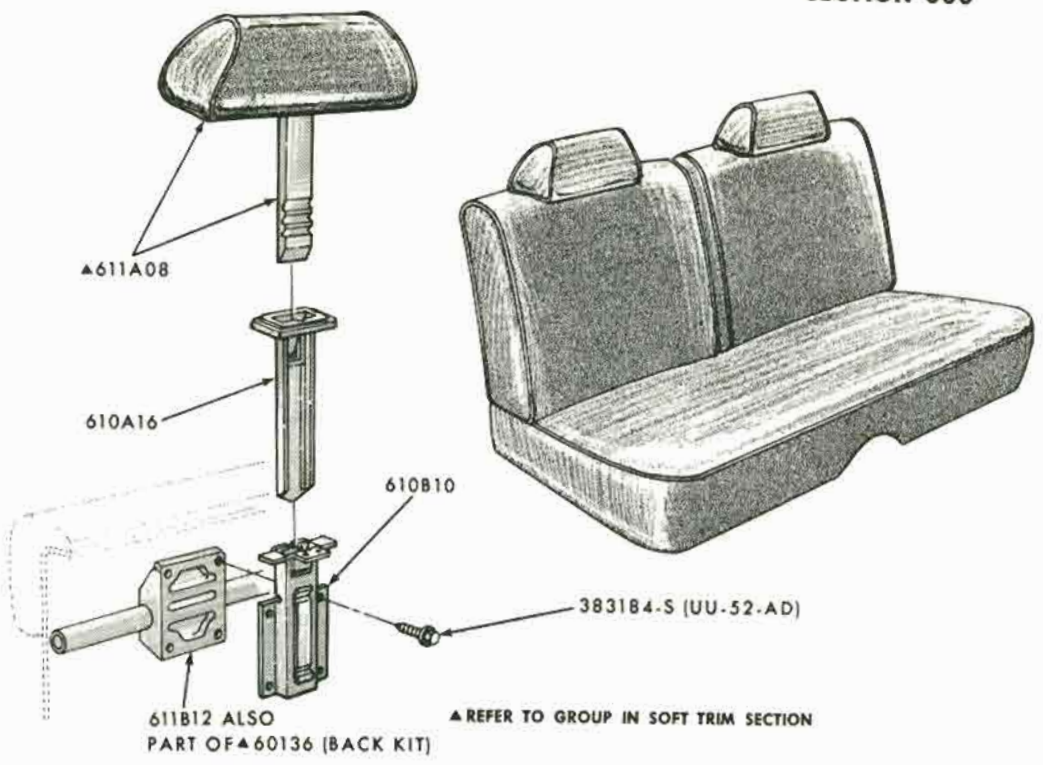

P-6809

FRONT SEAT HEAD REST and RELATED PARTS
1969/72 ALL

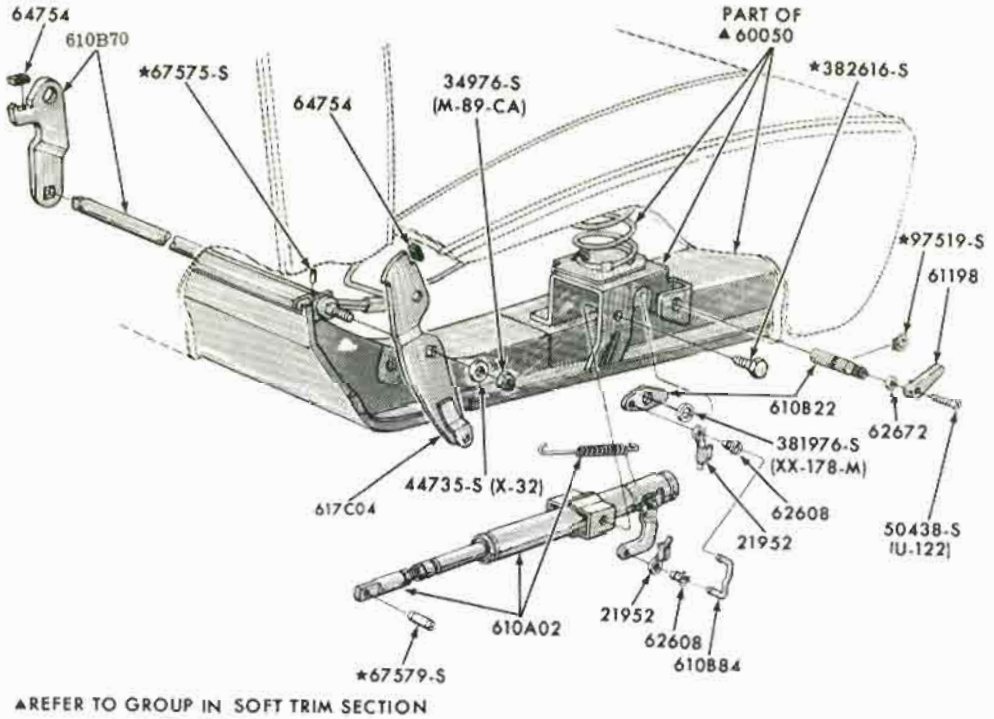

P-6959

FRONT SEAT RECLINING MECHANISM and RELATED PARTS
1969/70 FORD

COPYRIGHT © 1975— FORD MOTOR COMPANY —DEARBORN, MICHIGAN

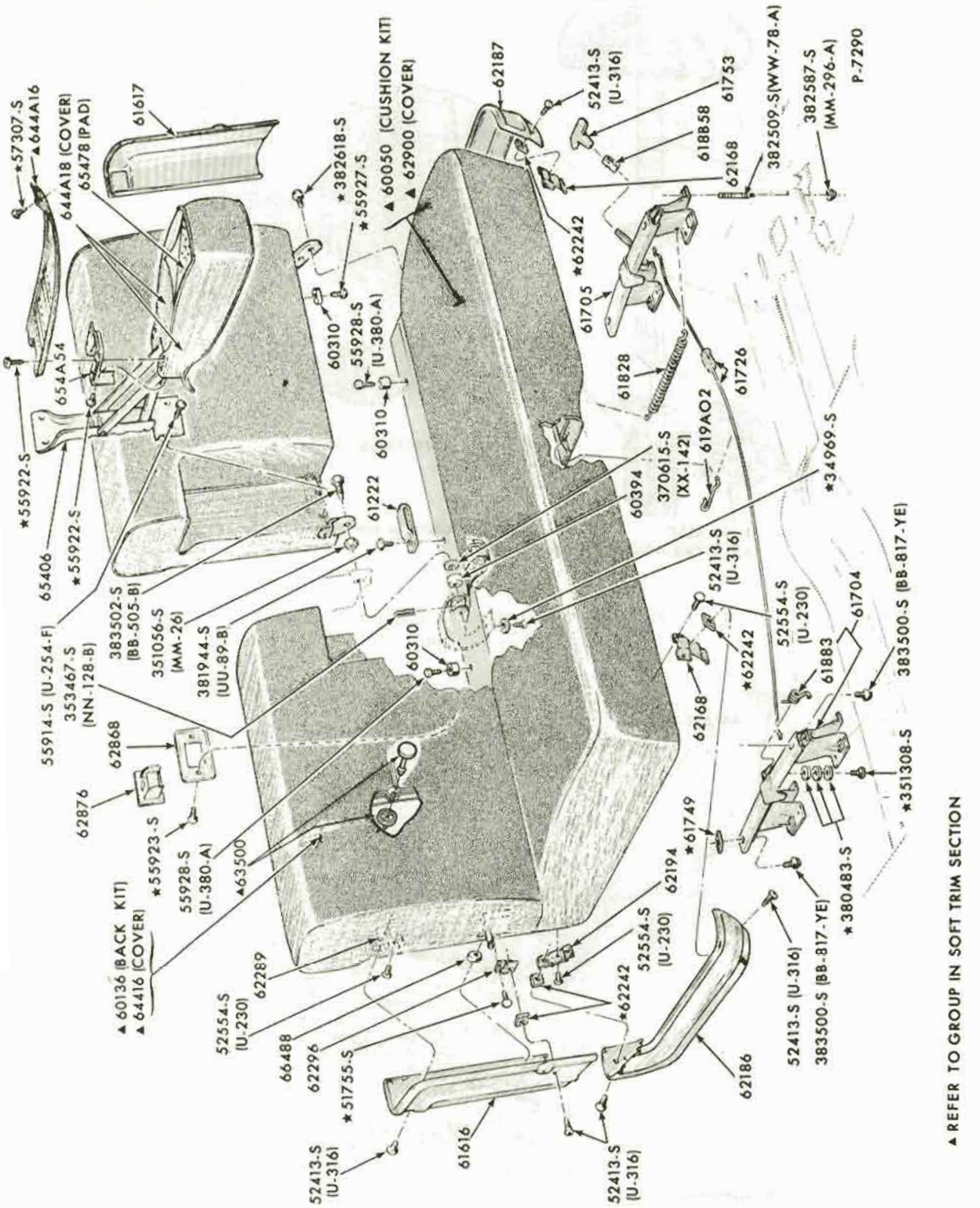

FRONT SEAT MECHANISM and RELATED PARTS - FULL WIDTH

1969/72 FORD-BODY TYPES 62,63,65,76

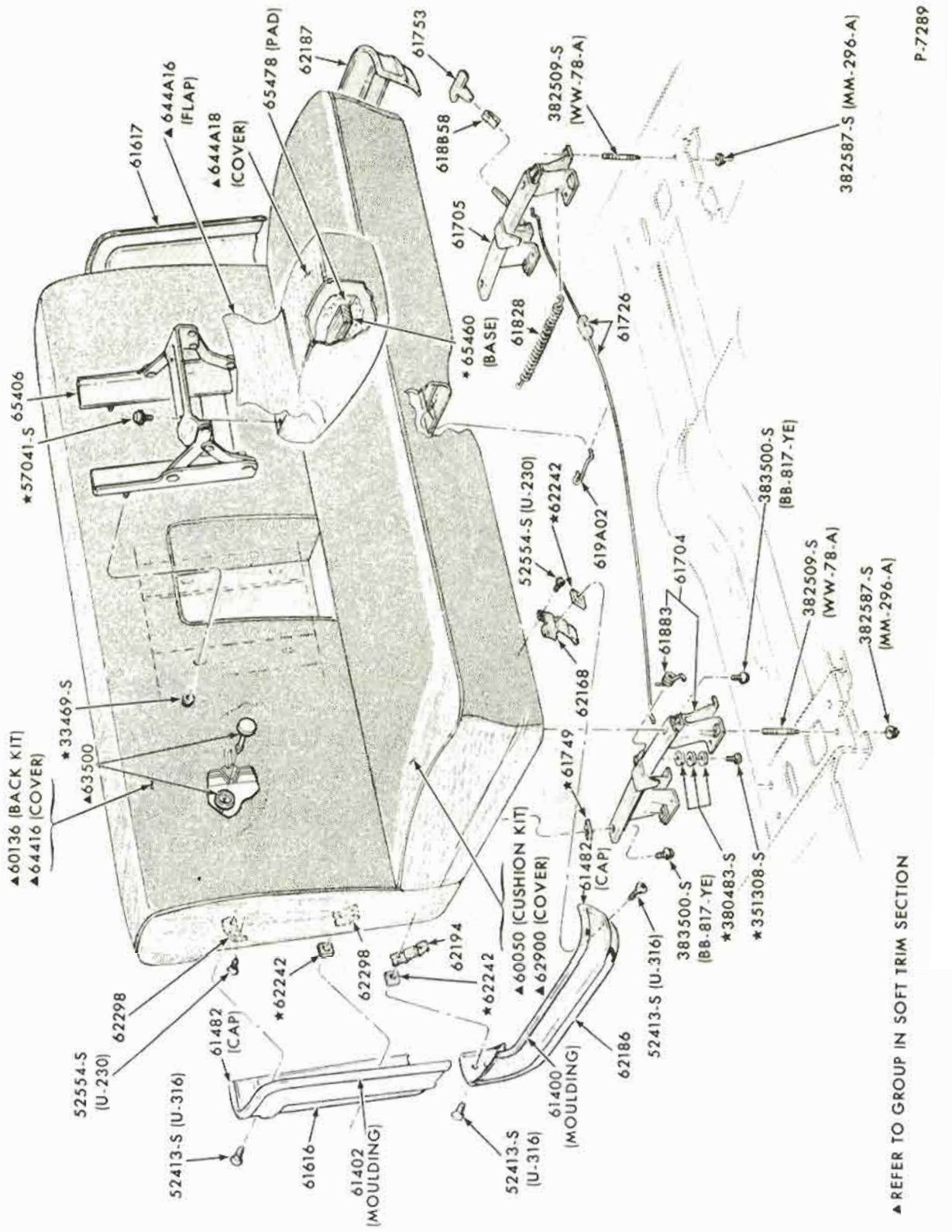

FRONT SEAT MECHANISM and RELATED PARTS - FULL WIDTH
1969/72 FORD - BODY TYPES 53,54,57,71

COPYRIGHT © 1975 — FORD MOTOR COMPANY — DEARBORN, MICHIGAN

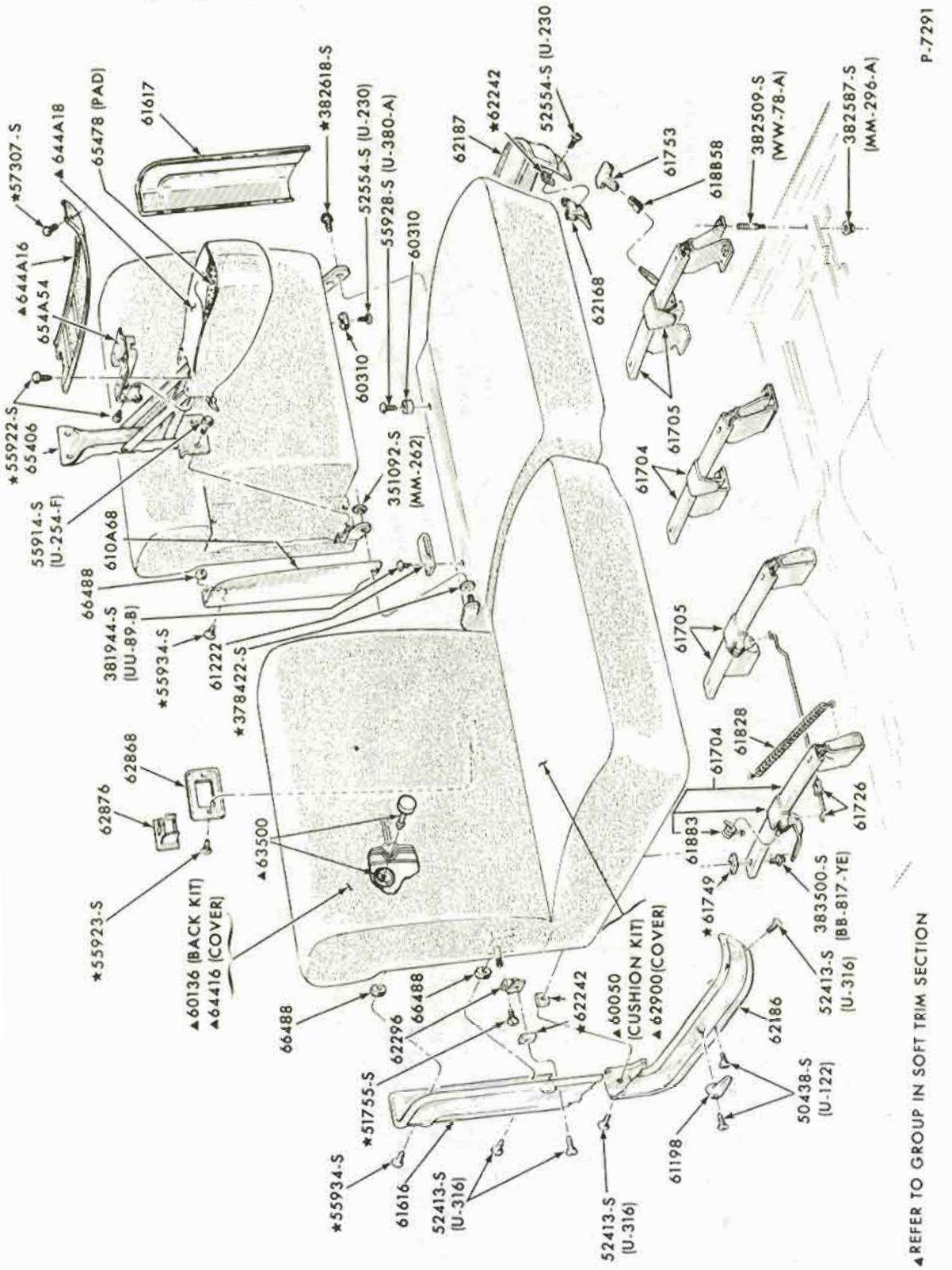

FRONT SEAT MECHANISM and RELATED PARTS - SPLIT BENCH
1970/72 FORD

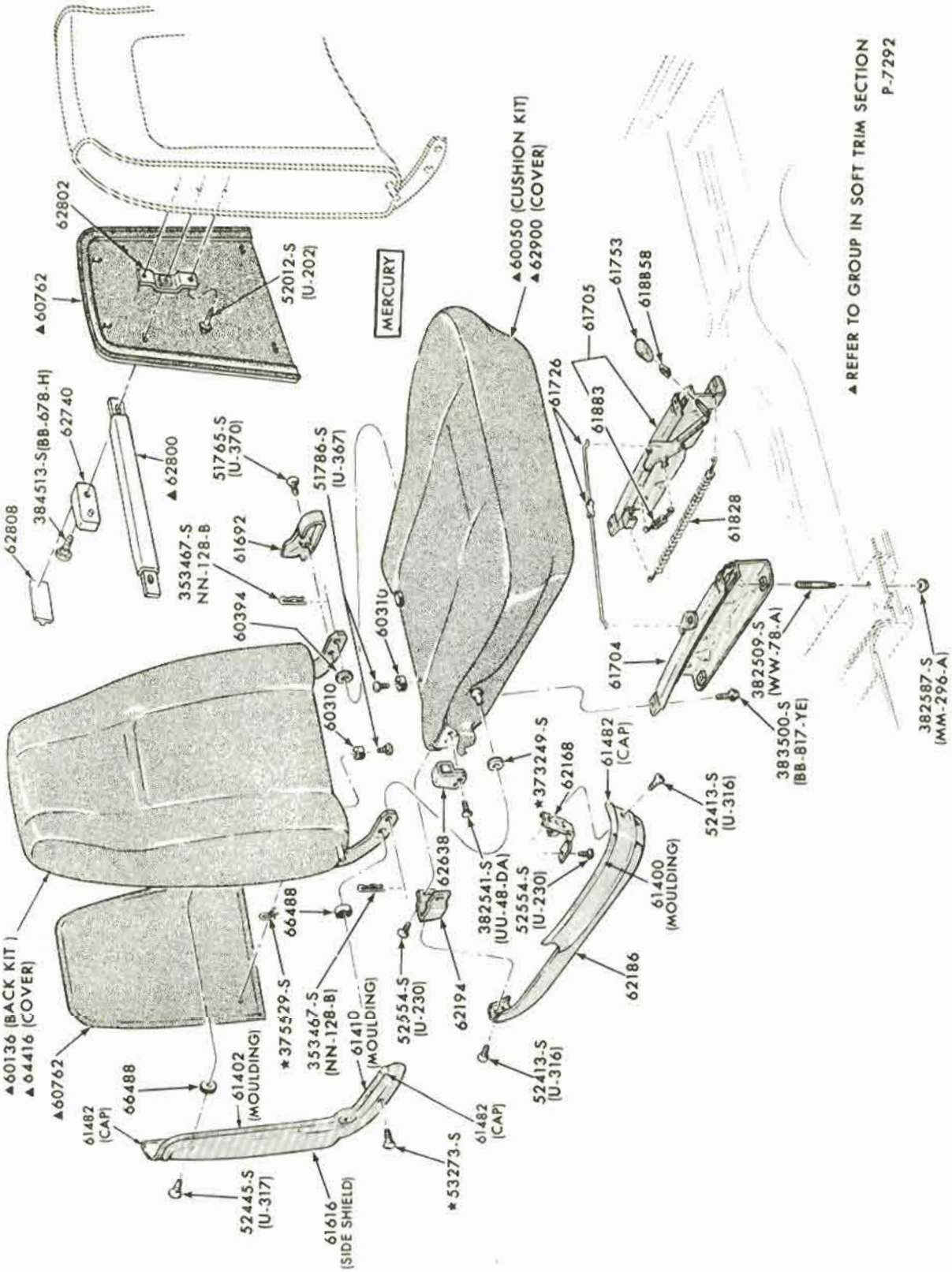

FRONT SEAT MECHANISM and RELATED PARTS - BUCKET
1970/71 FORD

COPYRIGHT © 1975 — FORD MOTOR COMPANY — DEARBORN, MICHIGAN

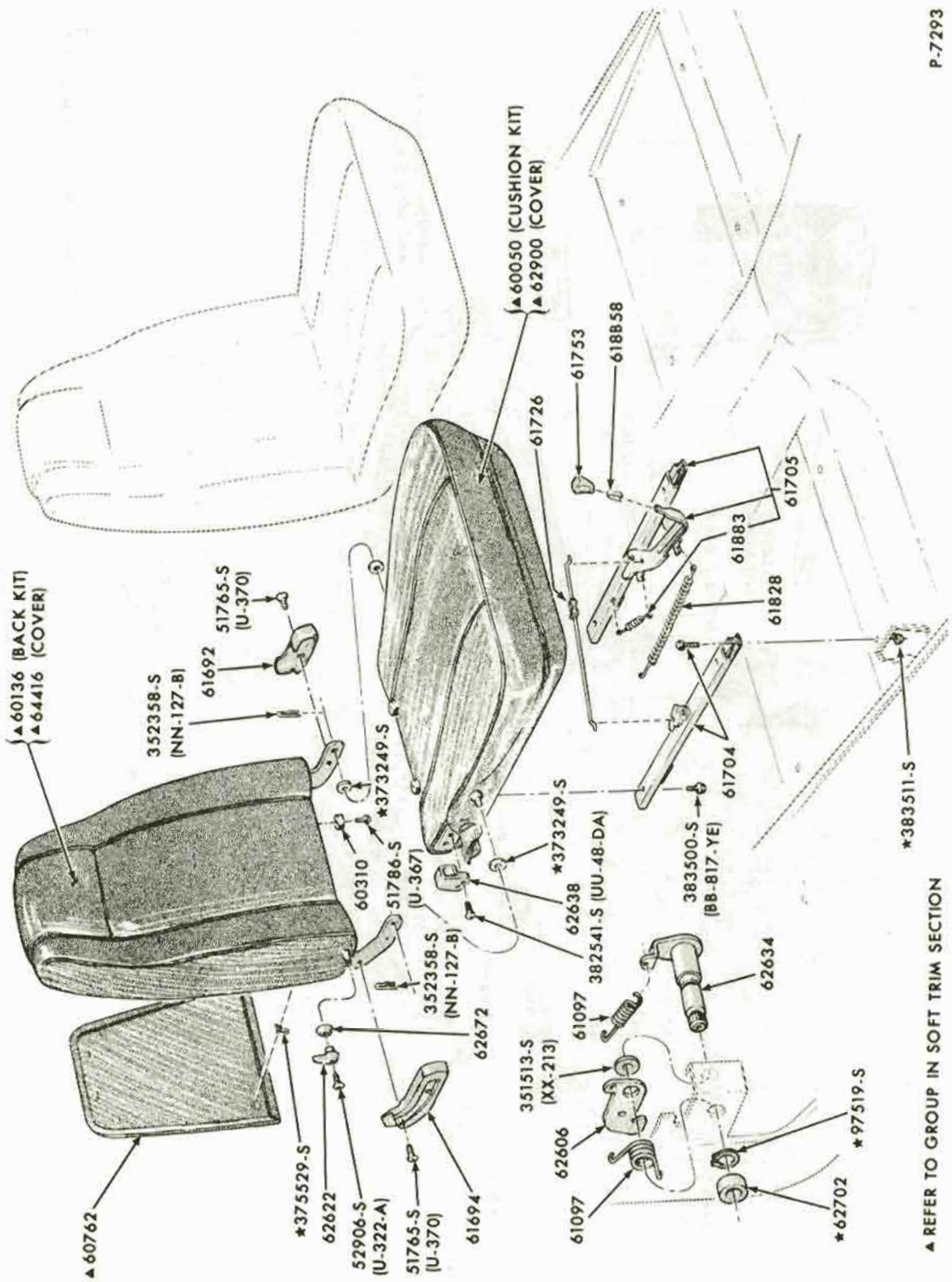

FRONT SEAT MECHANISM and RELATED PARTS - BUCKET

1970 MUSTANG

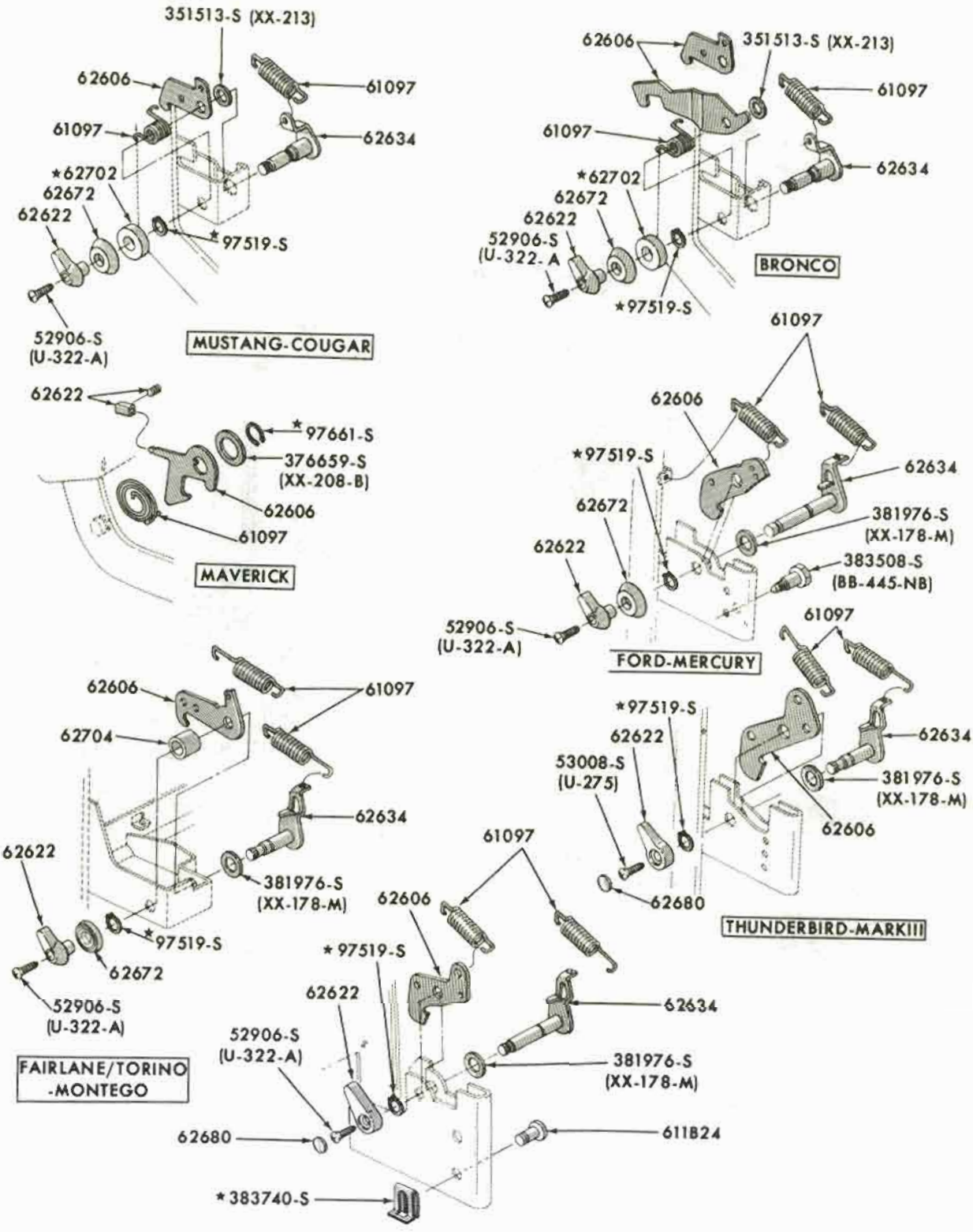

P-7296

FRONT SEAT BACK LATCH MECHANISM - MANUAL
1969/71 ALL
1972 FORD

COPYRIGHT © 1975 — FORD MOTOR COMPANY — DEARBORN, MICHIGAN

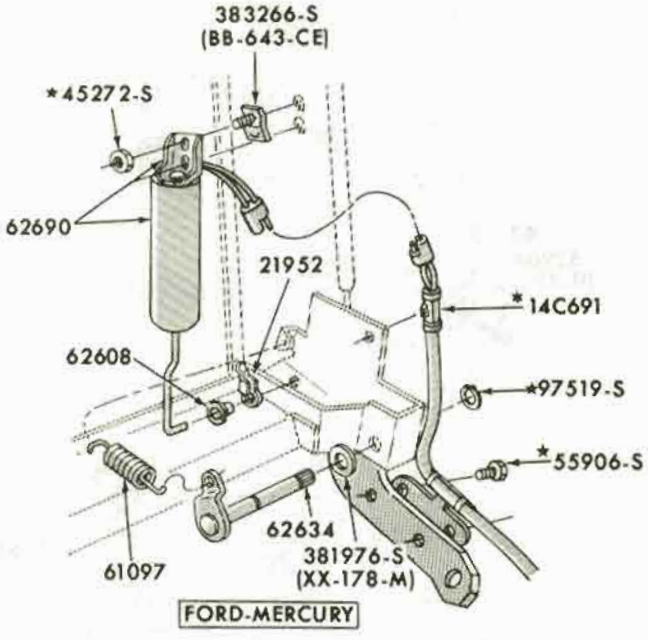

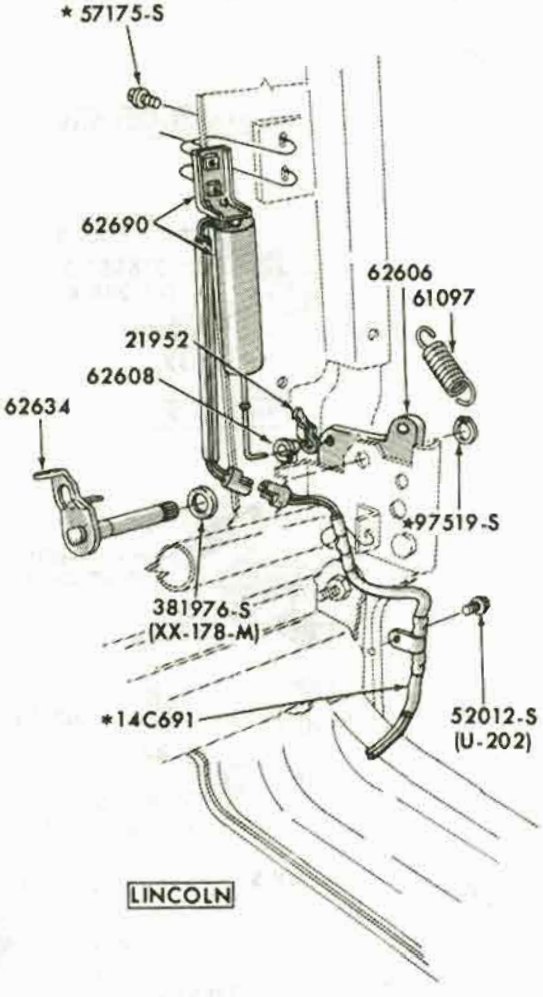

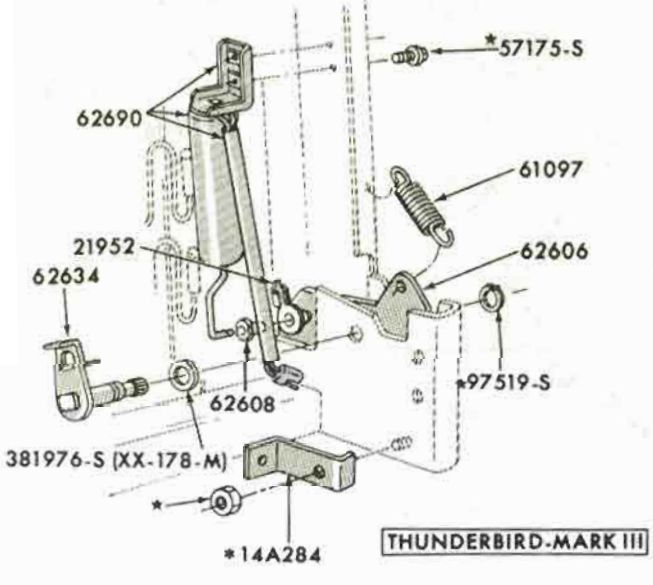

*REFER TO CHASSIS SECTION

P-7297

FRONT SEAT BACK LATCH MECHANISM - AUTOMATIC
1970/71 FORD, THUNDERBIRD
1972 FORD

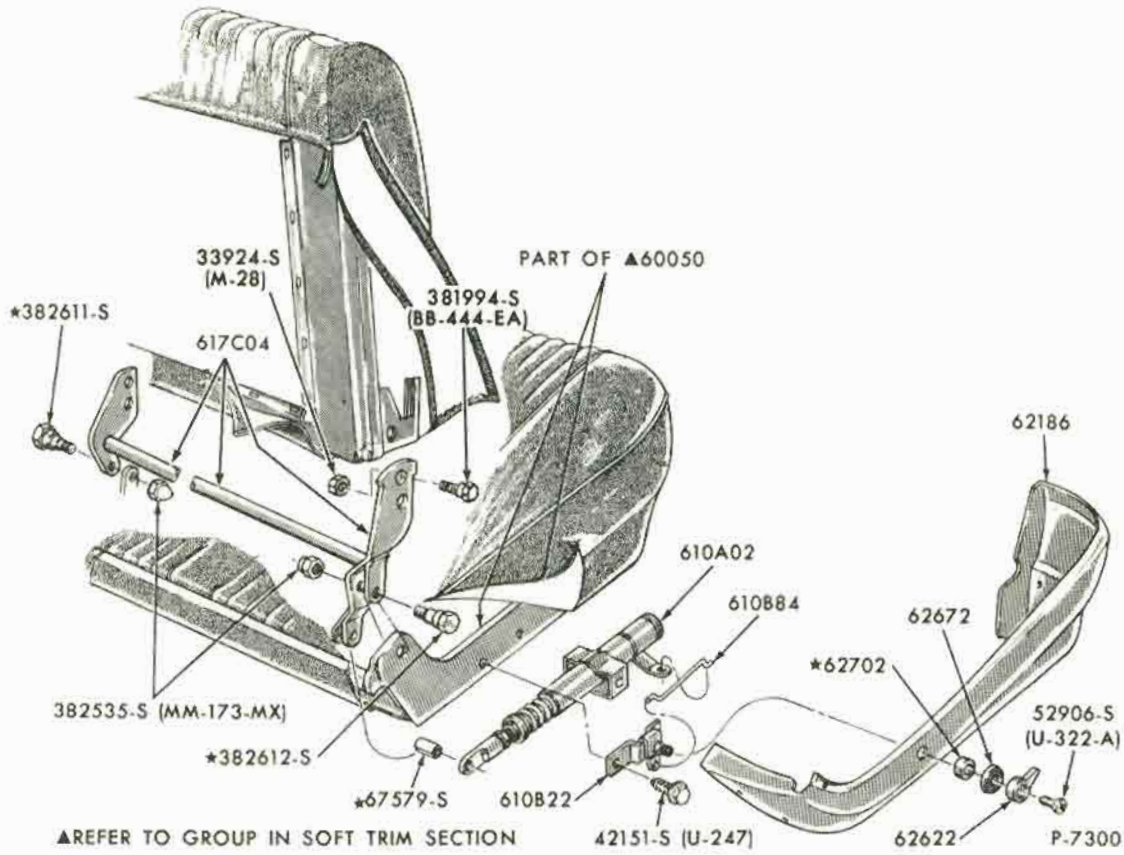

RECLINING SEAT MECHANISM and RELATED PARTS
1970/71 THUNDERBIRD

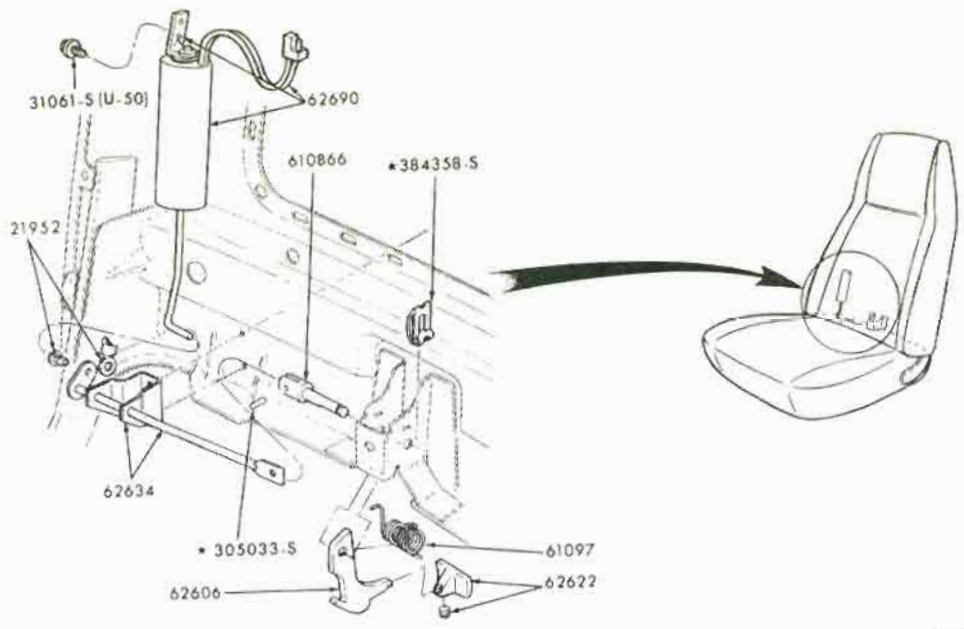

FRONT SEAT BACK LATCH MECHANISM - AUTOMATIC - CENTER
1971/72 MUSTANG

COPYRIGHT © 1975 — FORD MOTOR COMPANY — DEARBORN, MICHIGAN

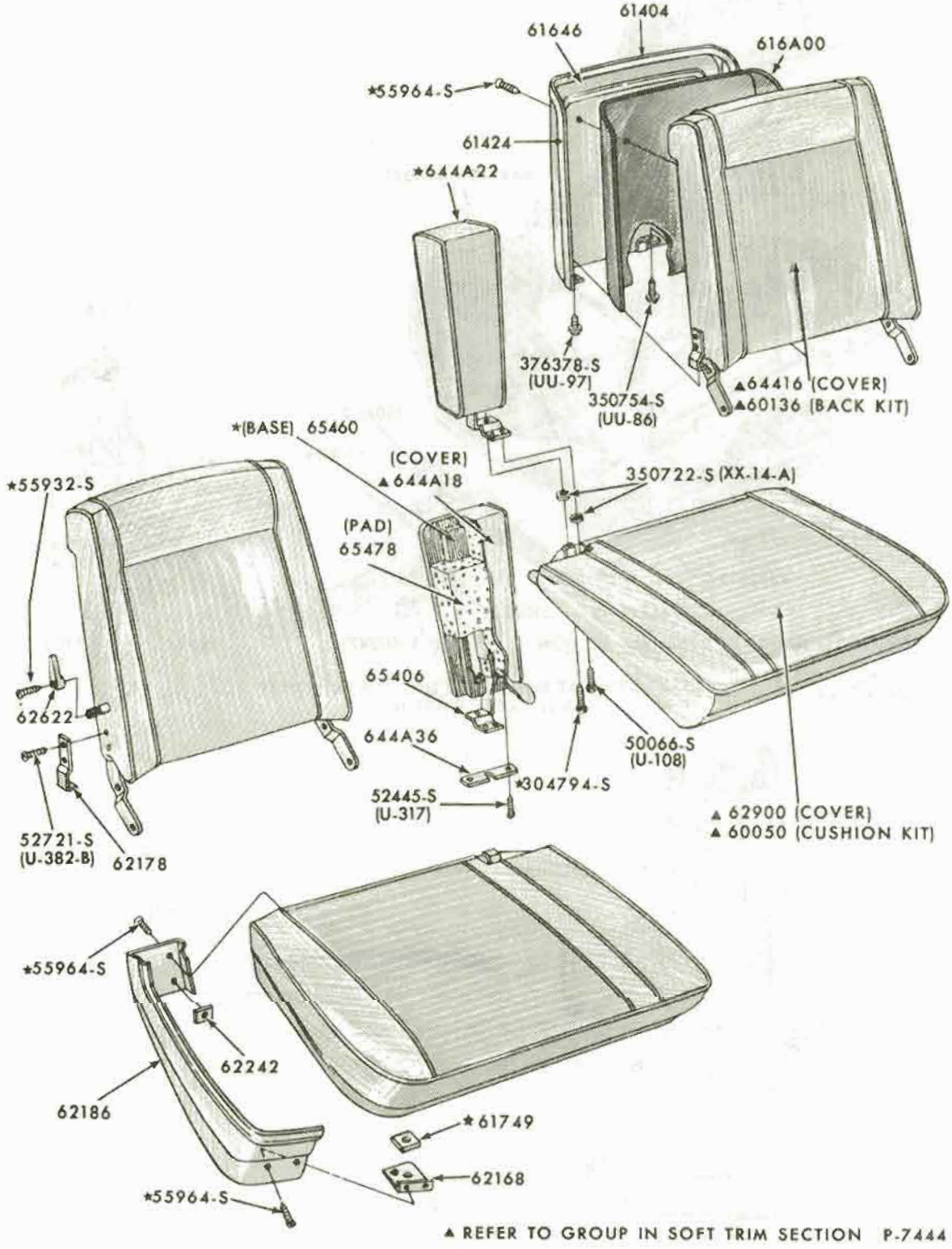

▲ REFER TO GROUP IN SOFT TRIM SECTION P-7444

FRONT SEAT MECHANISM and RELATED PARTS-SPLIT BENCH-UPPER HALF
1970/71 THUNDERBIRD

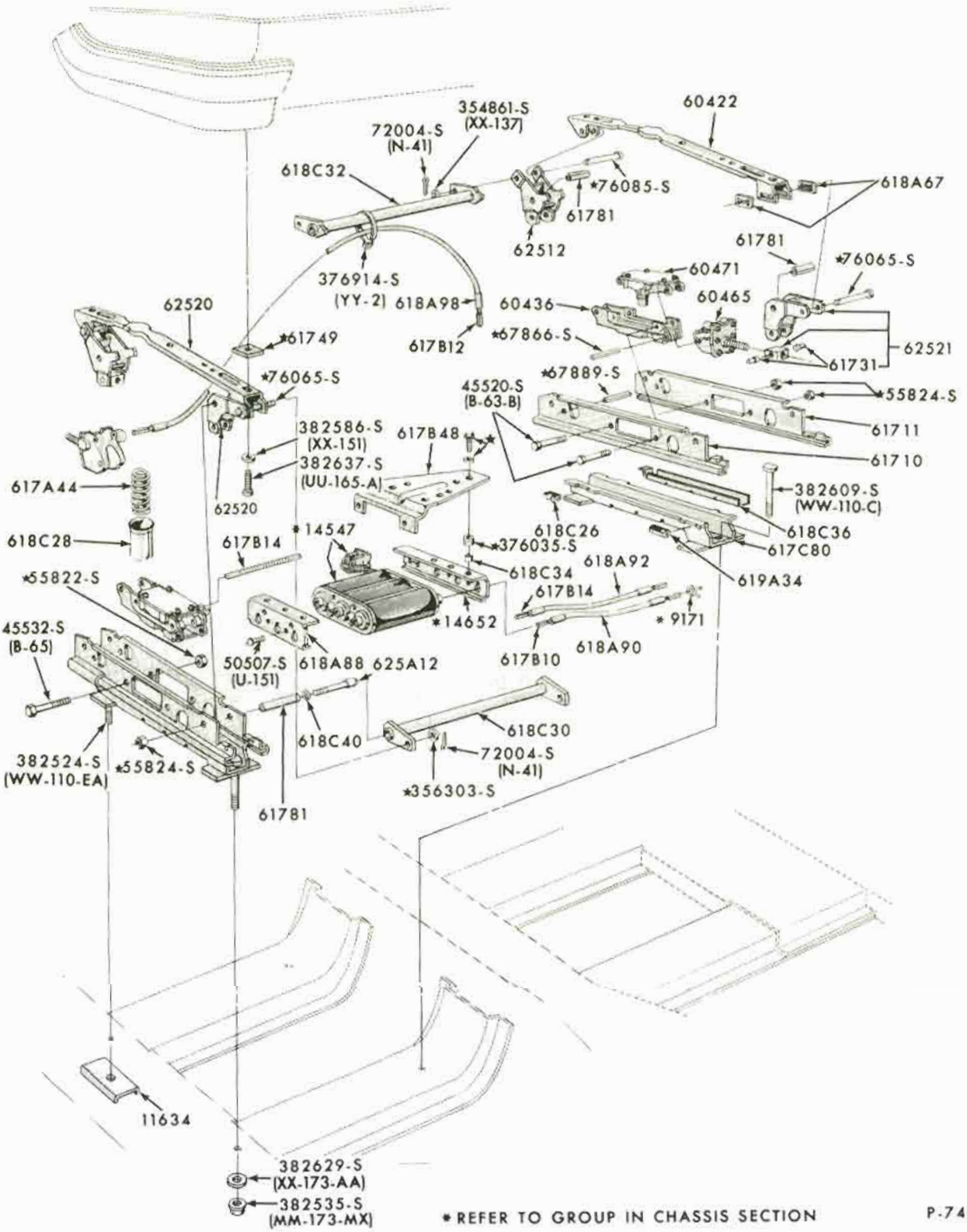

* REFER TO GROUP IN CHASSIS SECTION

P-7445

FRONT SEAT MECHANISM and RELATED PARTS - POWER SPLIT BENCH - LOWER HALF

1970/71 THUNDERBIRD

COPYRIGHT © 1975 — FORD MOTOR COMPANY — DEARBORN, MICHIGAN

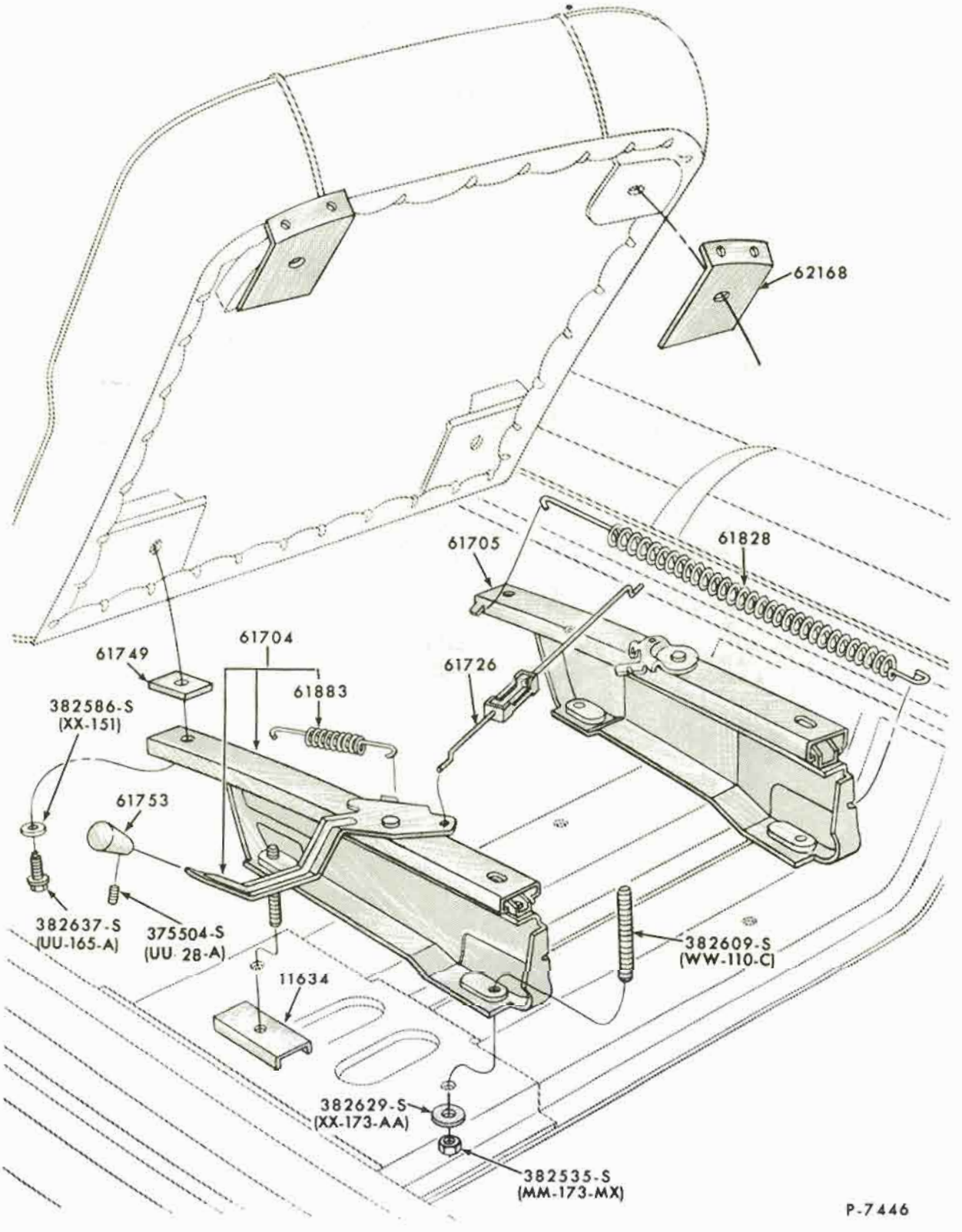

FRONT SEAT MECHANISM and RELATED PARTS - MANUAL SPLIT BENCH - LOWER HALF
1970/71 THUNDERBIRD

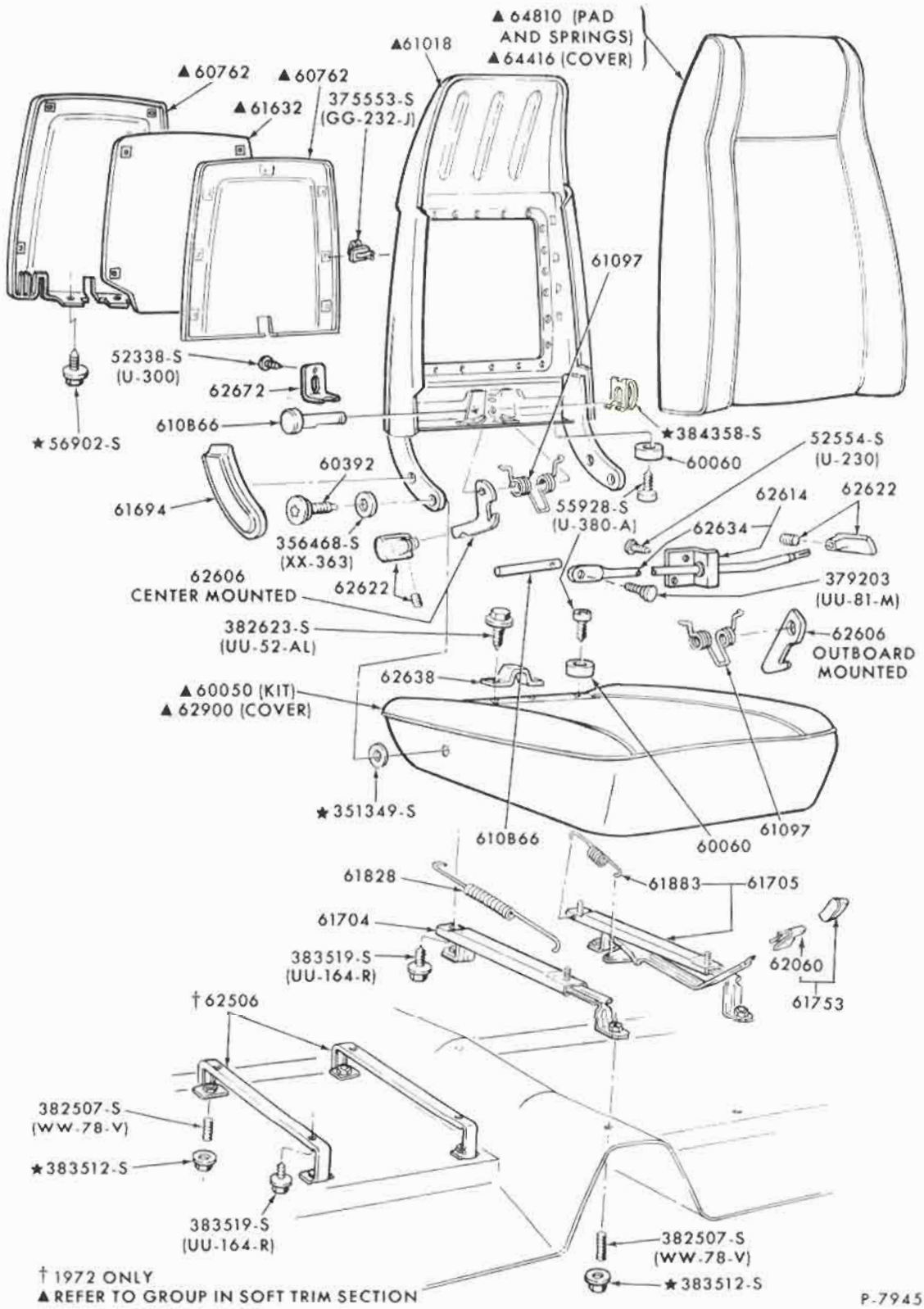

FRONT SEAT MECHANISM and RELATED PARTS
1971/72 PINTO

COPYRIGHT © 1975 — FORD MOTOR COMPANY — DEARBORN, MICHIGAN

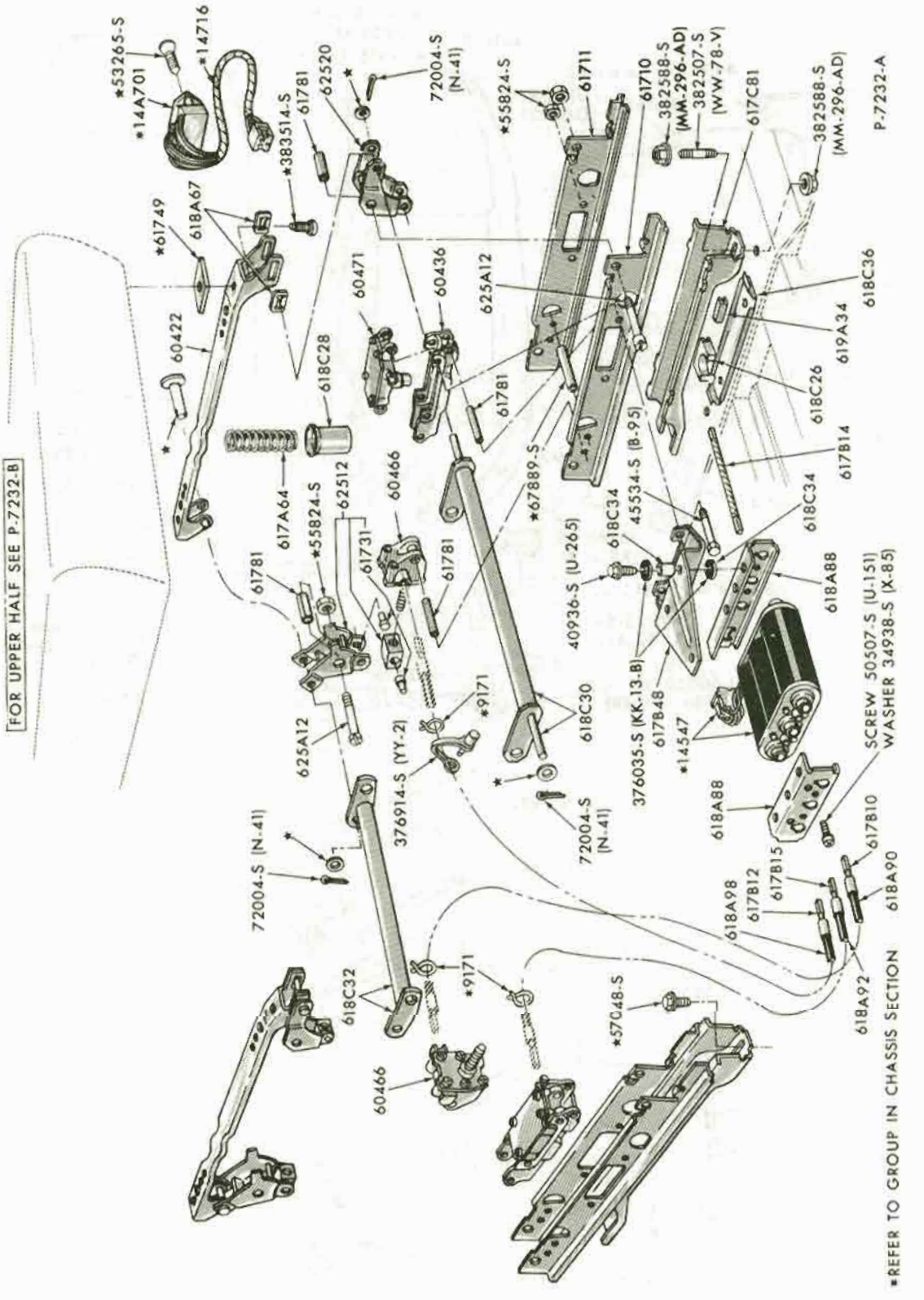

FRONT SEAT MECHANISM and RELATED PARTS - POWER SPLIT SEAT - LOWER HALF
1971/72 FORD - "Before 12/1/71"

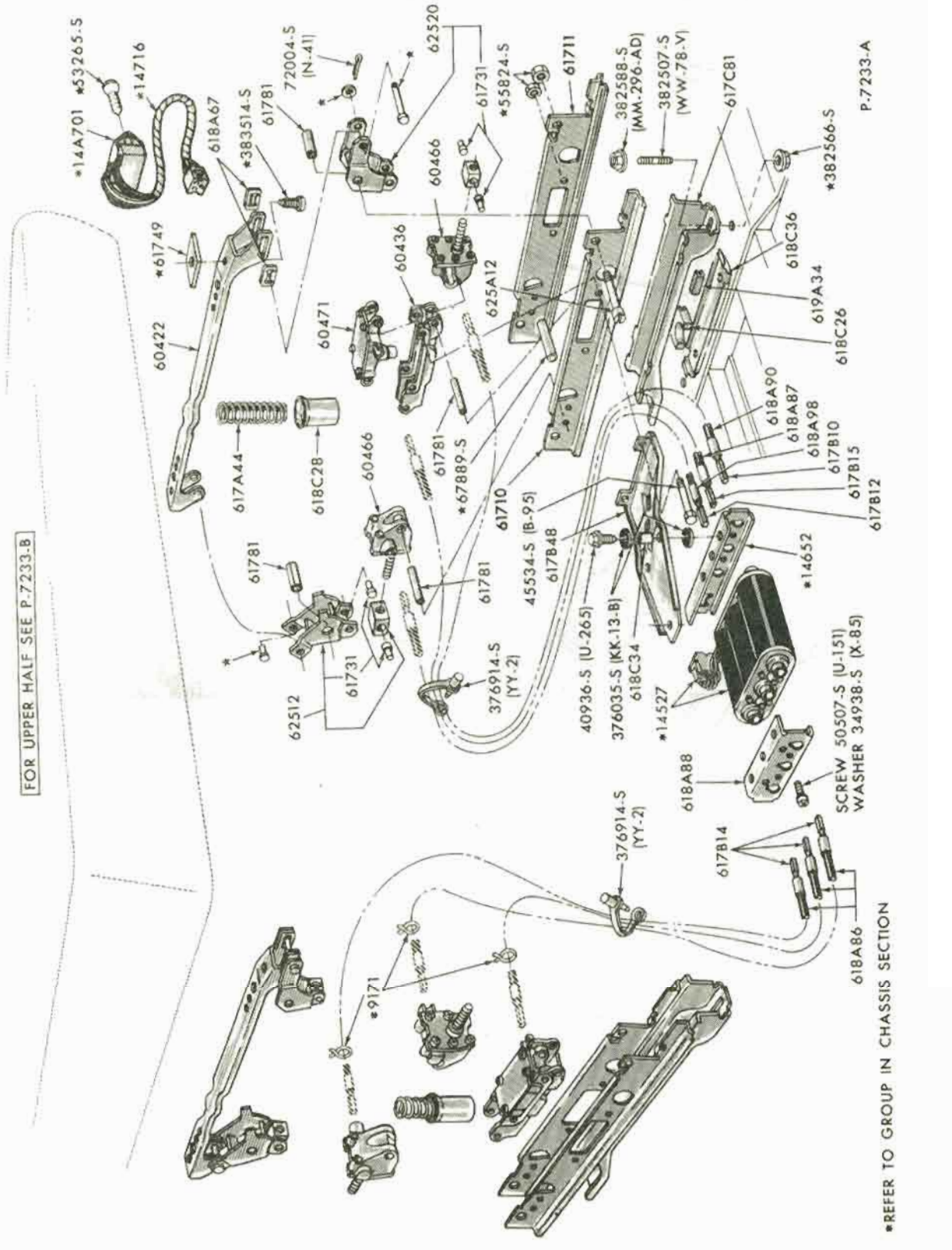

FRONT SEAT MECHANISM and RELATED PARTS - POWER FULL WIDTH - LOWER HALF

1971/72 FORD - "Before 12/1/71"

COPYRIGHT © 1975 — FORD MOTOR COMPANY — DEARBORN, MICHIGAN

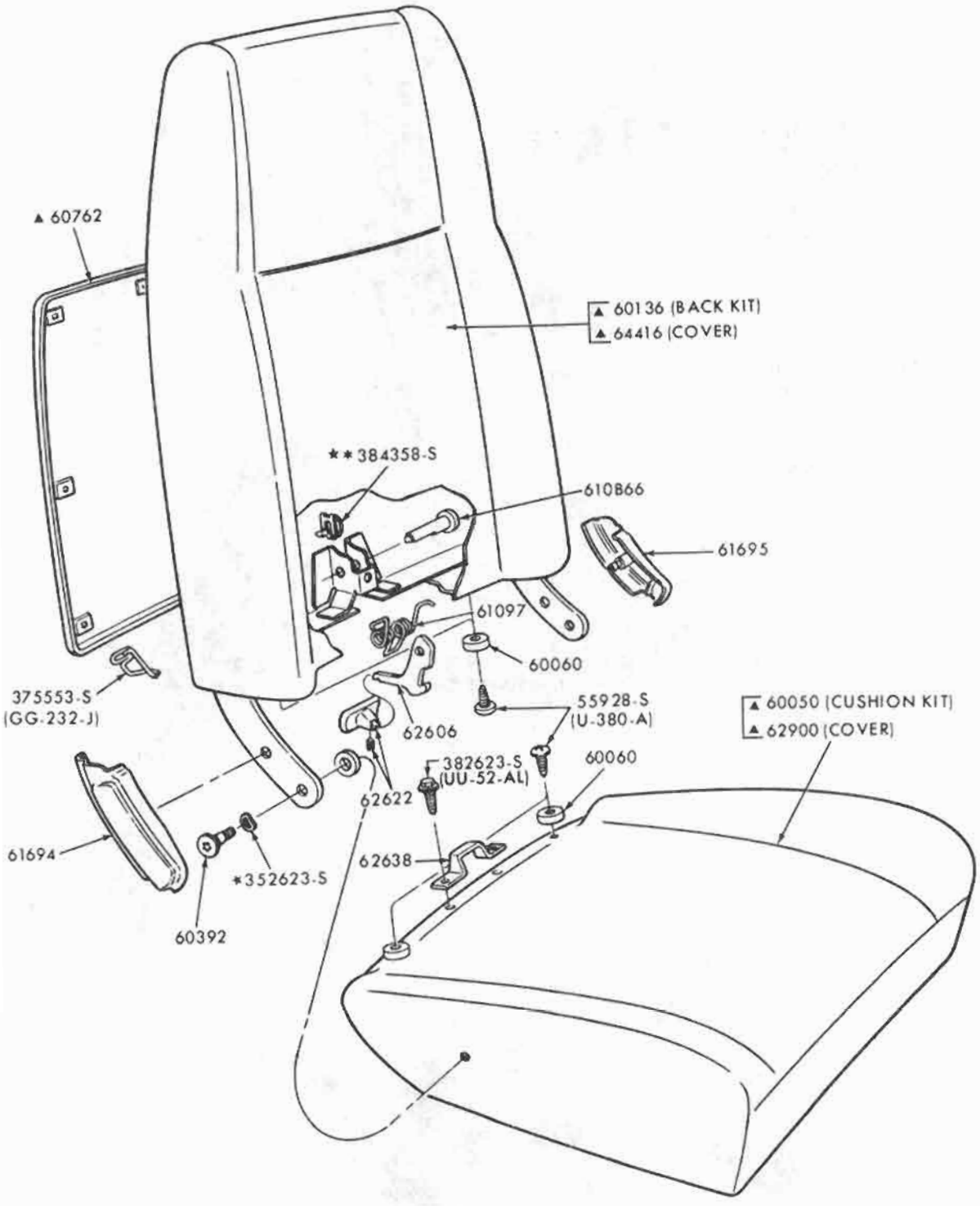

▲REFER TO GROUP IN SOFT TRIM SECTION

P-8076

FRONT SEAT MECHANISM and RELATED PARTS - UPPER HALF
1971/72 MUSTANG and MAVERICK

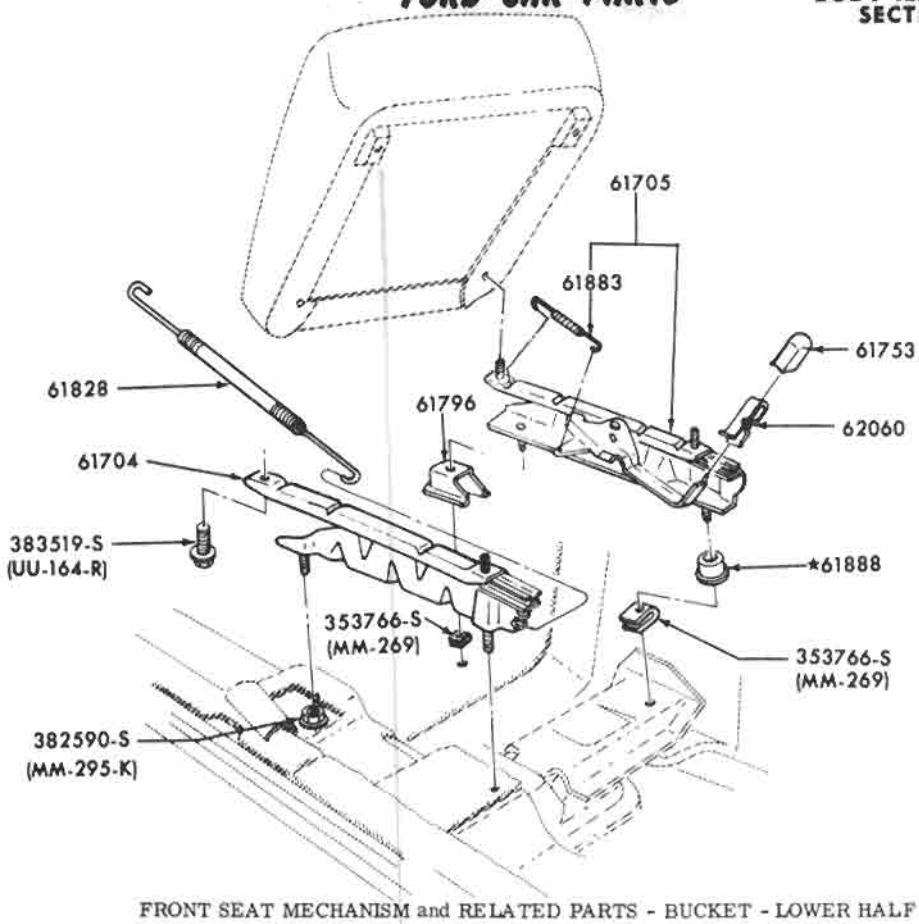

FRONT SEAT MECHANISM and RELATED PARTS - BUCKET - LOWER HALF
1971/72 MAVERICK

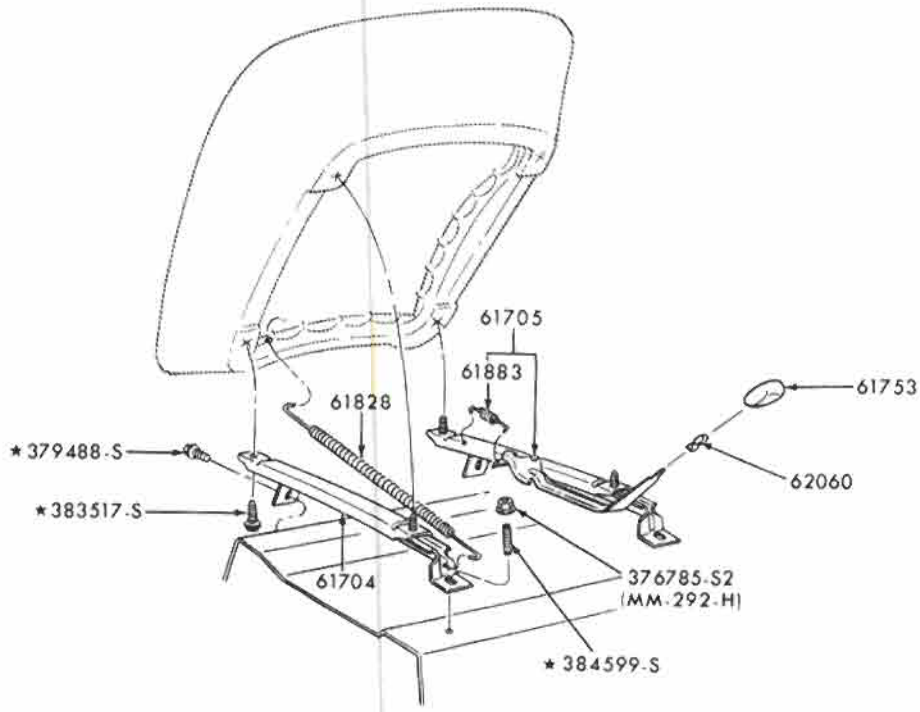

FRONT MECHANISM and RELATED PARTS - MANUAL - LOWER HALF
1971/72 MUSTANG

COPYRIGHT © 1975 — FORD MOTOR COMPANY — DEARBORN, MICHIGAN

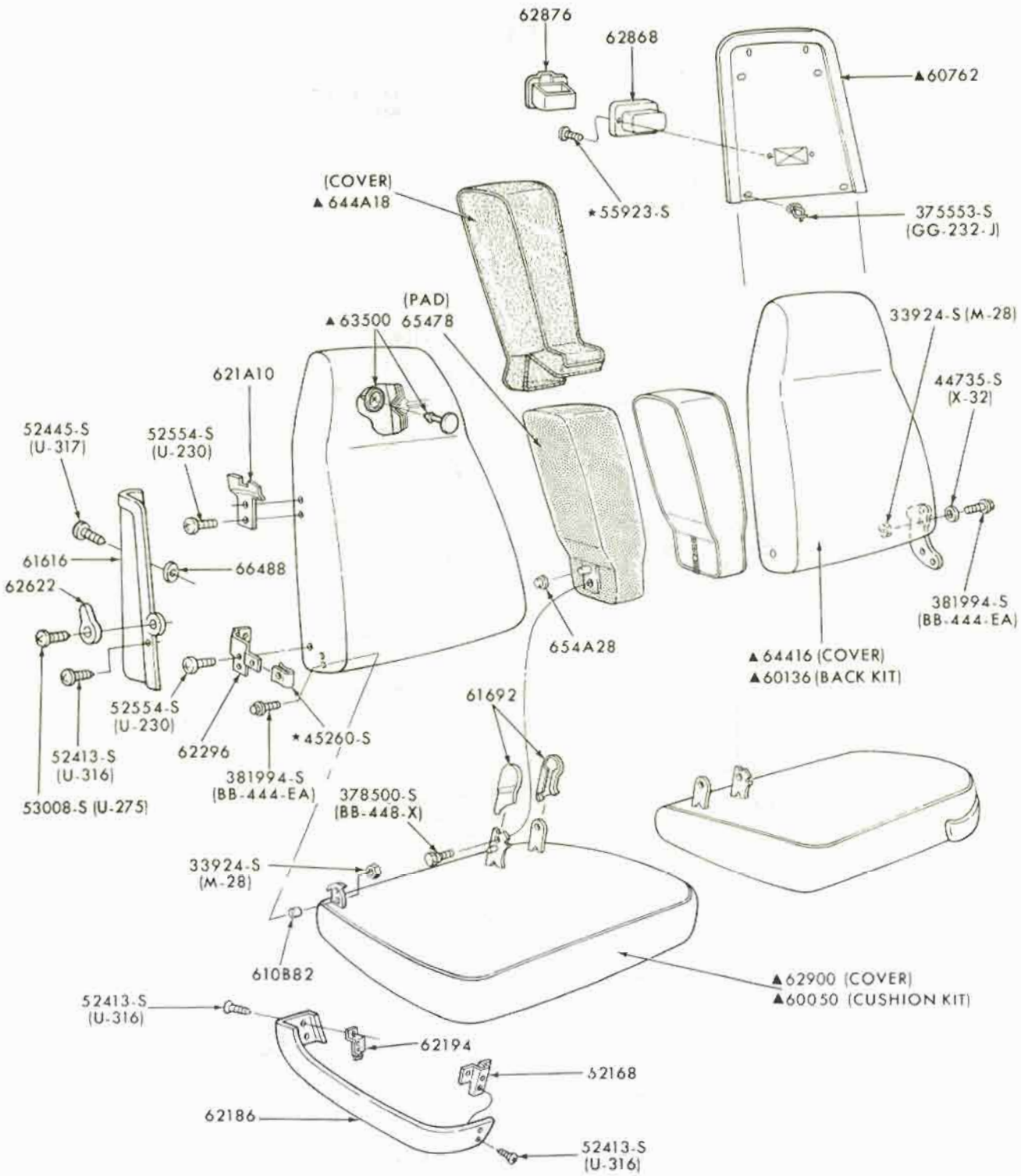

▲ REFER TO GROUP IN SOFT TRIM SECTION

P-8283

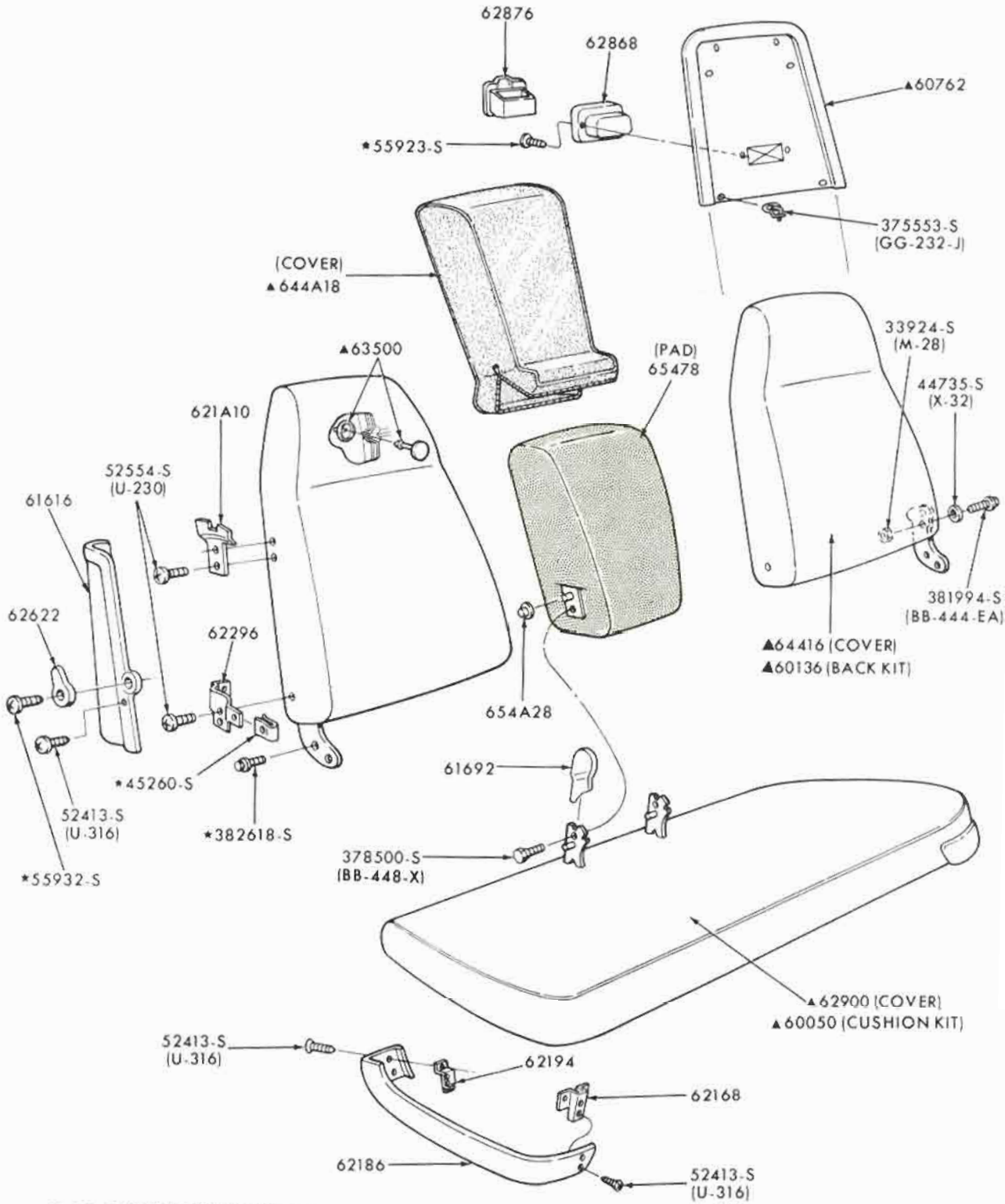

▲ REFER TO GROUP IN SOFT TRIM SECTION

P-8284

FRONT SEAT MECHANISM and RELATED PARTS - HI-BACK FULL WIDTH
1971/72 FORD

COPYRIGHT © 1975 — FORD MOTOR COMPANY — DEARBORN, MICHIGAN

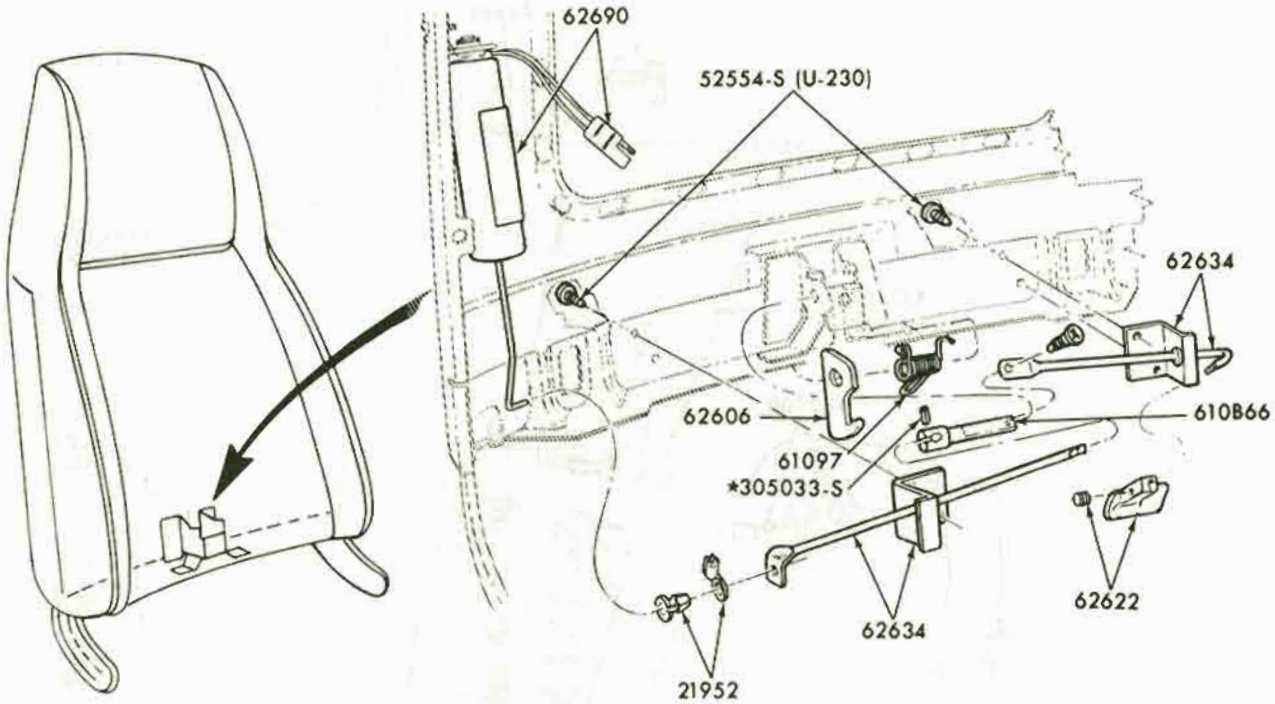

FRONT SEAT BACK LATCH MECHANISM - AUTOMATIC - OUTBOARD
1971/72 MUSTANG

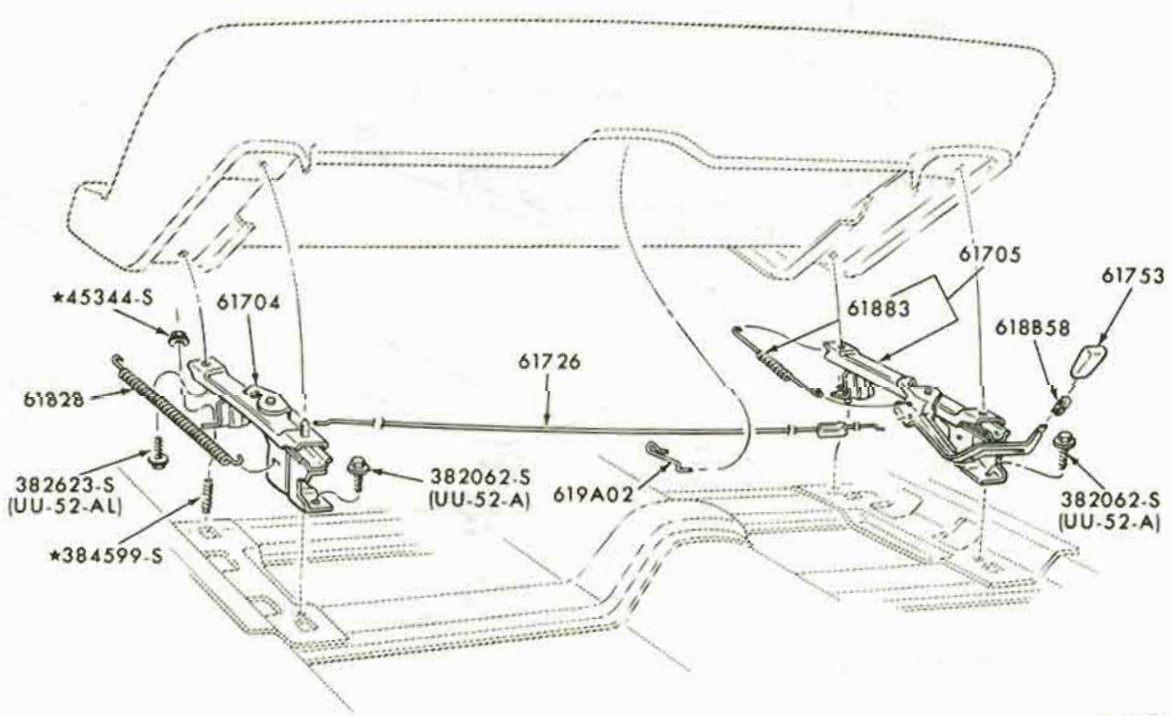

FRONT SEAT MECHANISM and RELATED PARTS - MANUAL FULL WIDTH - LOWER HALF
1972 TORINO

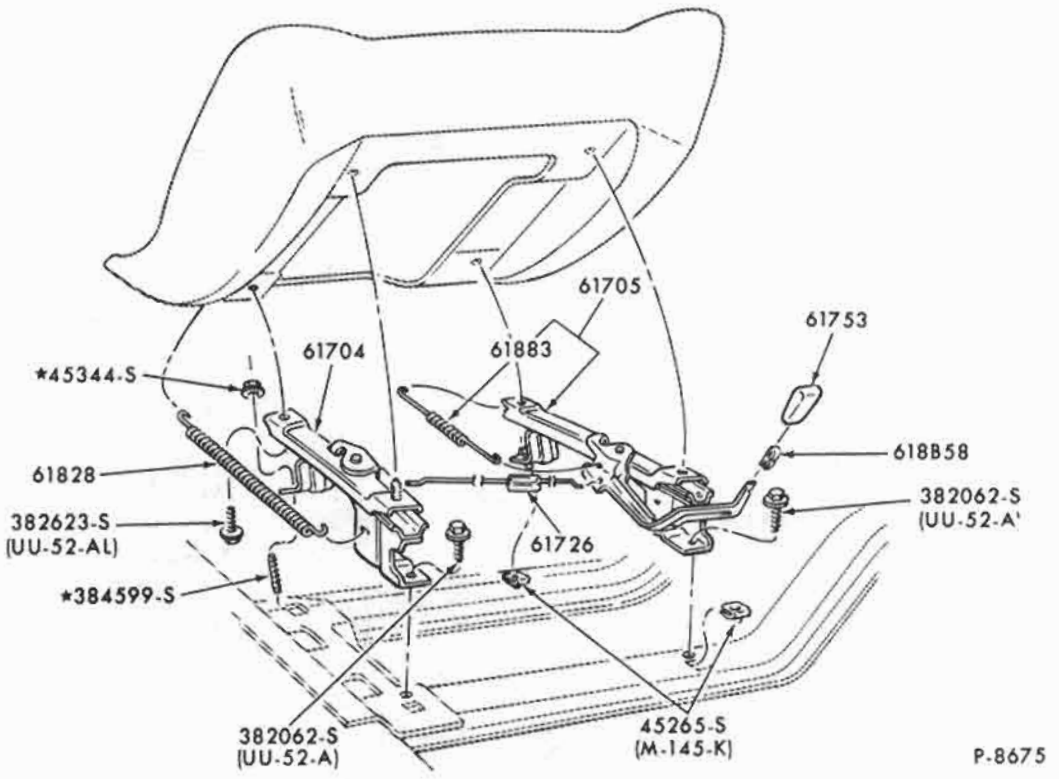

FRONT SEAT MECHANISM and RELATED PARTS - MANUAL BUCKET - LOWER HALF
1972 TORINO and THUNDERBIRD

COPYRIGHT © 1975 — FORD MOTOR COMPANY — DEARBORN, MICHIGAN

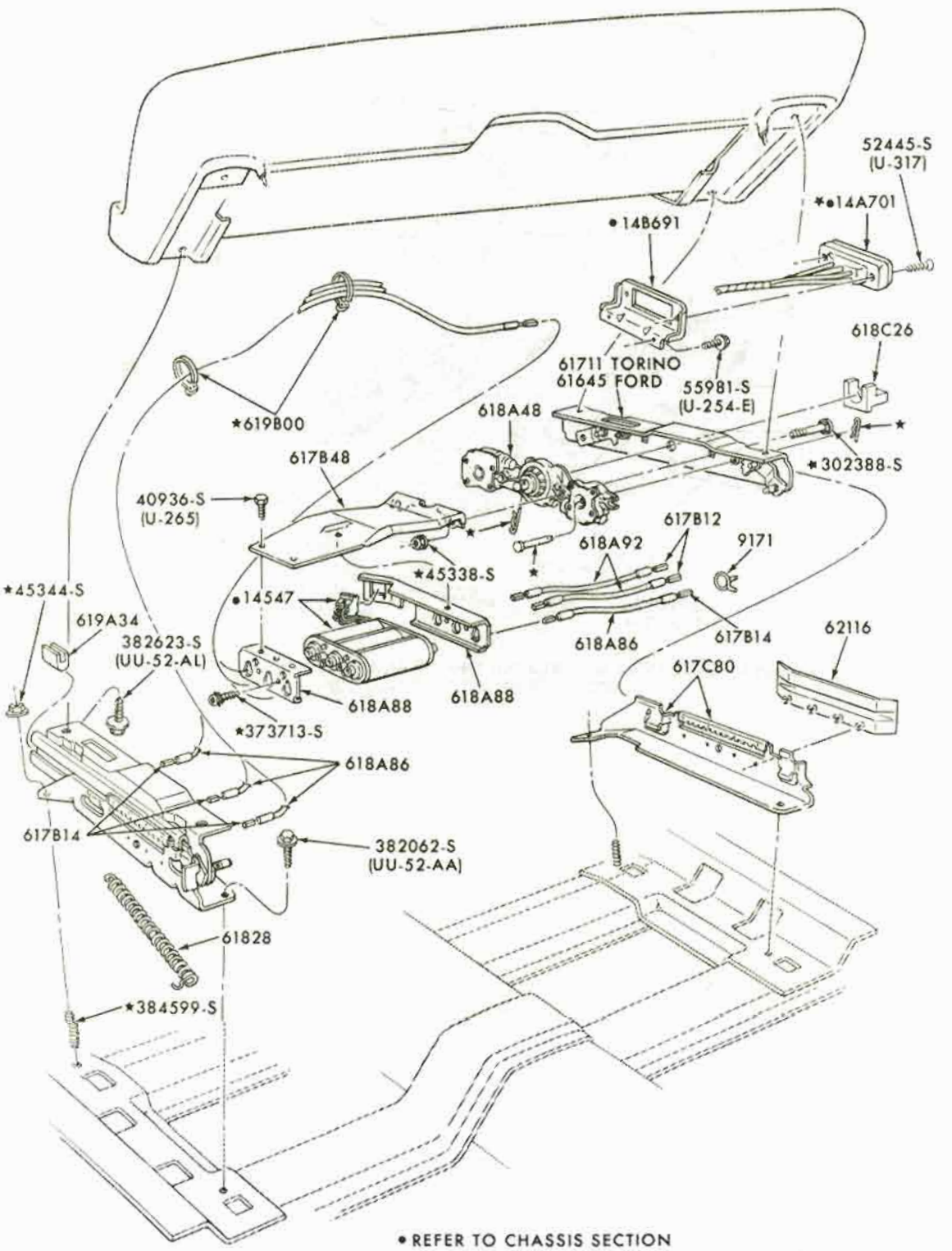

• REFER TO CHASSIS SECTION

P-8673

FRONT SEAT MECHANISM and RELATED PARTS - POWER FULL WIDTH - LOWER HALF
1972 TORINO
1972 FORD - "From 12/1/71"

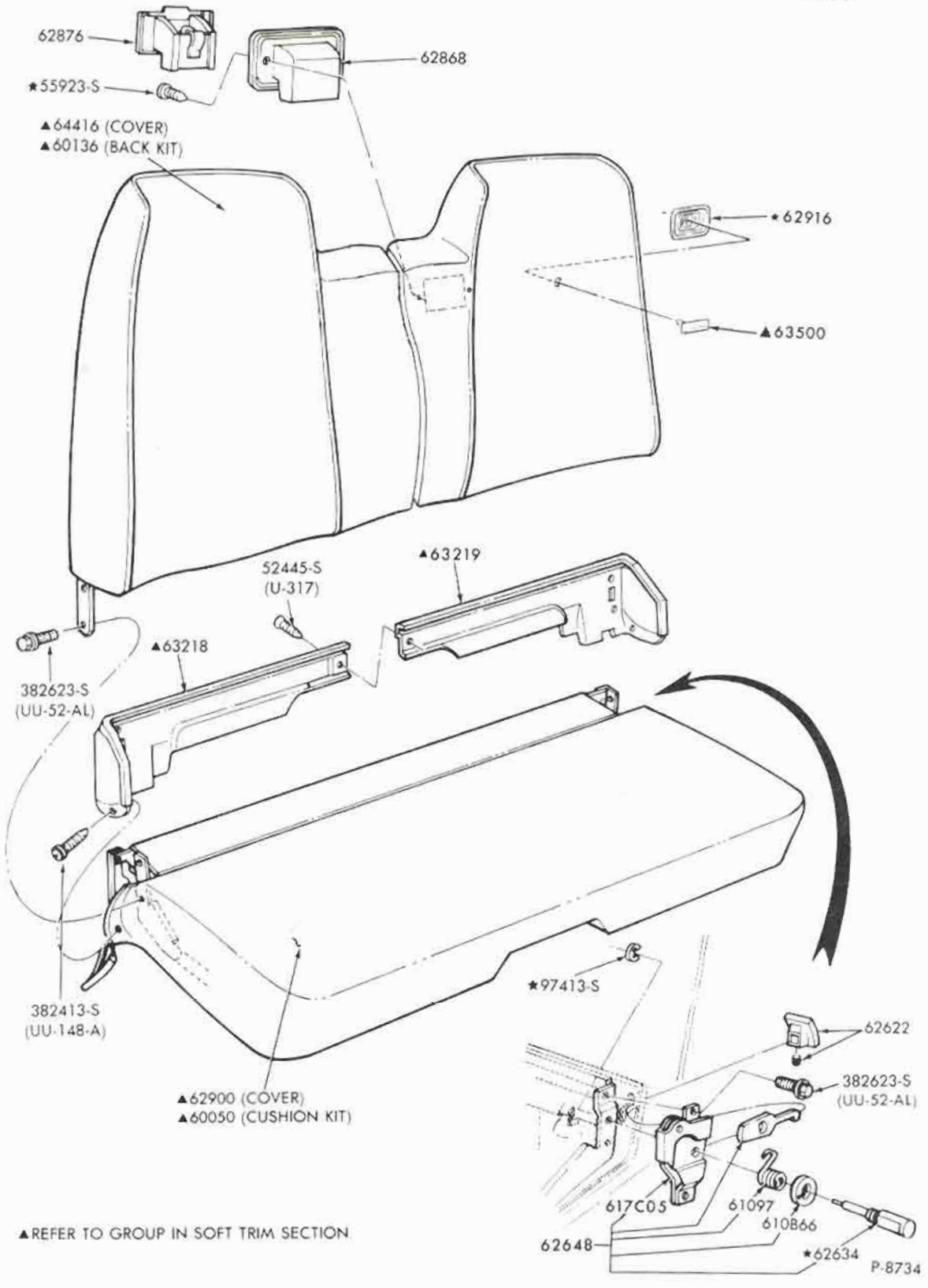

▲REFER TO GROUP IN SOFT TRIM SECTION

FRONT SEAT PARTS-HI-BACK FULL WIDTH-w/o CENTER ARM REST-UPPER HALF
1972 TORINO

COPYRIGHT © 1975 — FORD MOTOR COMPANY — DEARBORN, MICHIGAN

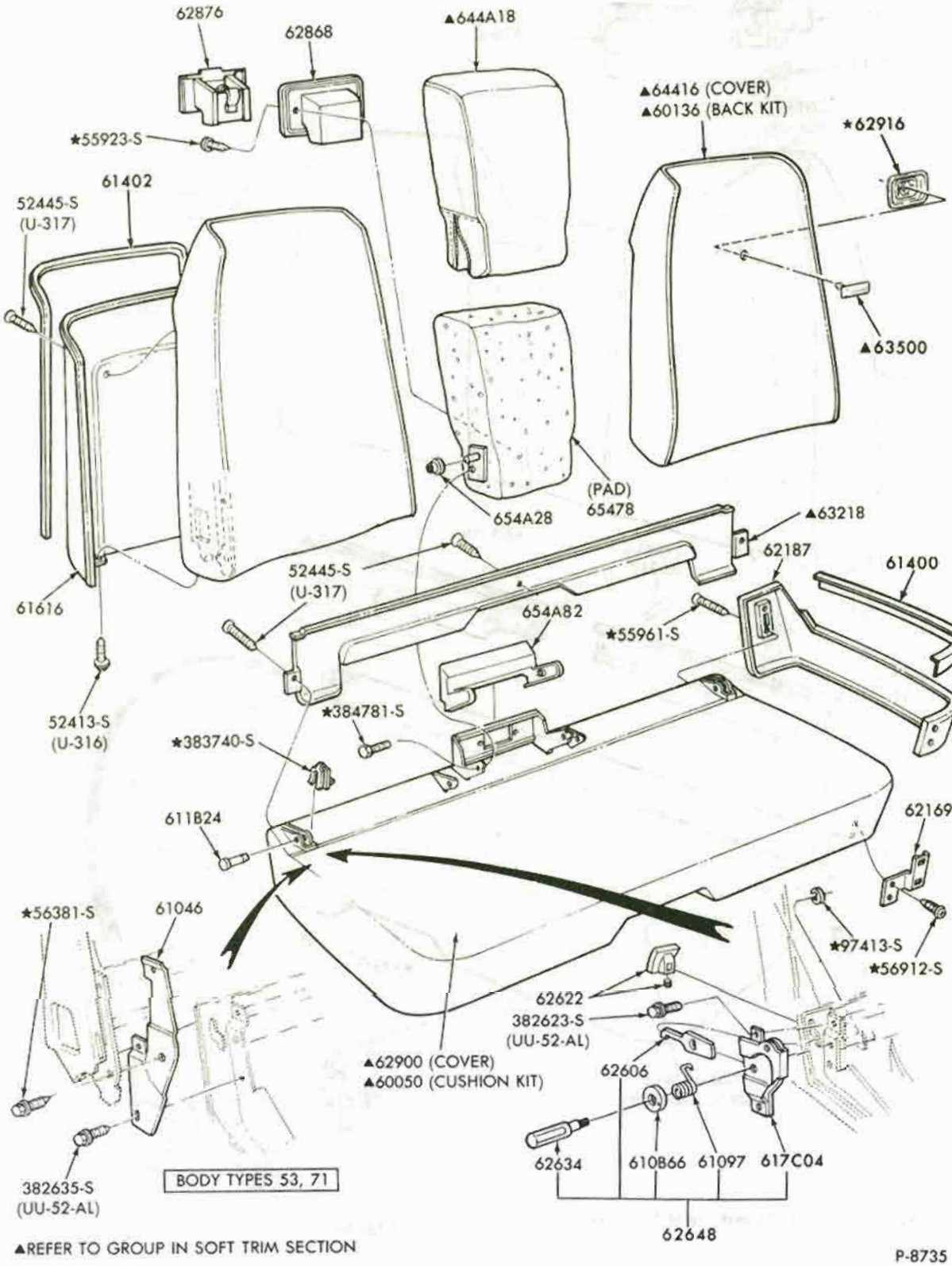

▲REFER TO GROUP IN SOFT TRIM SECTION

P-8735

FRONT SEAT PARTS-HI-BACK FULL WIDTH w/CENTER ARM REST-UPPER HALF
1972 TORINO

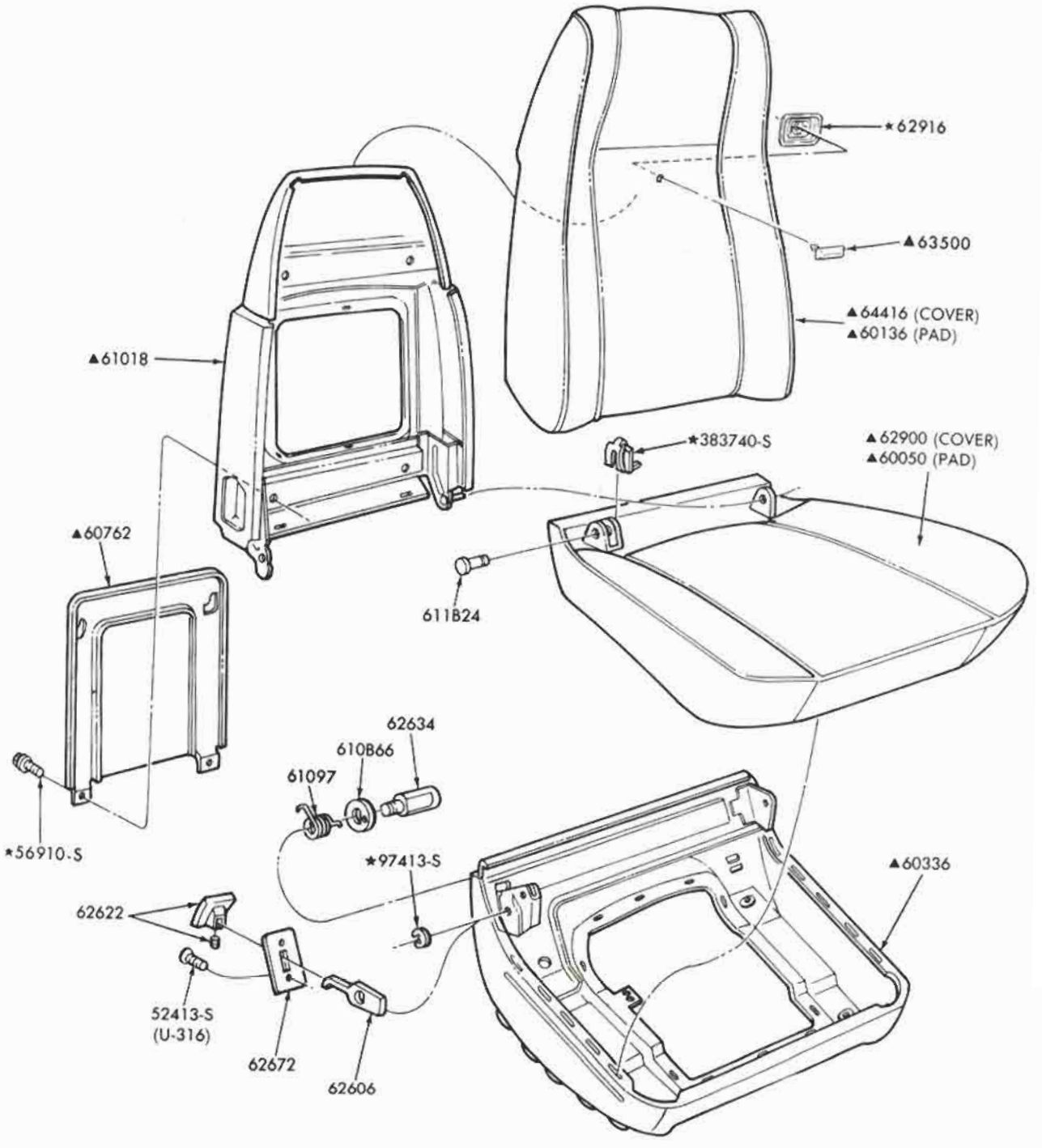

▲REFER TO GROUP IN SOFT TRIM SECTION

P-8732

FRONT SEAT MECHANISM and RELATED PARTS - BUCKET - UPPER HALF
1972 TORINO

COPYRIGHT © 1975 — FORD MOTOR COMPANY — DEARBORN, MICHIGAN

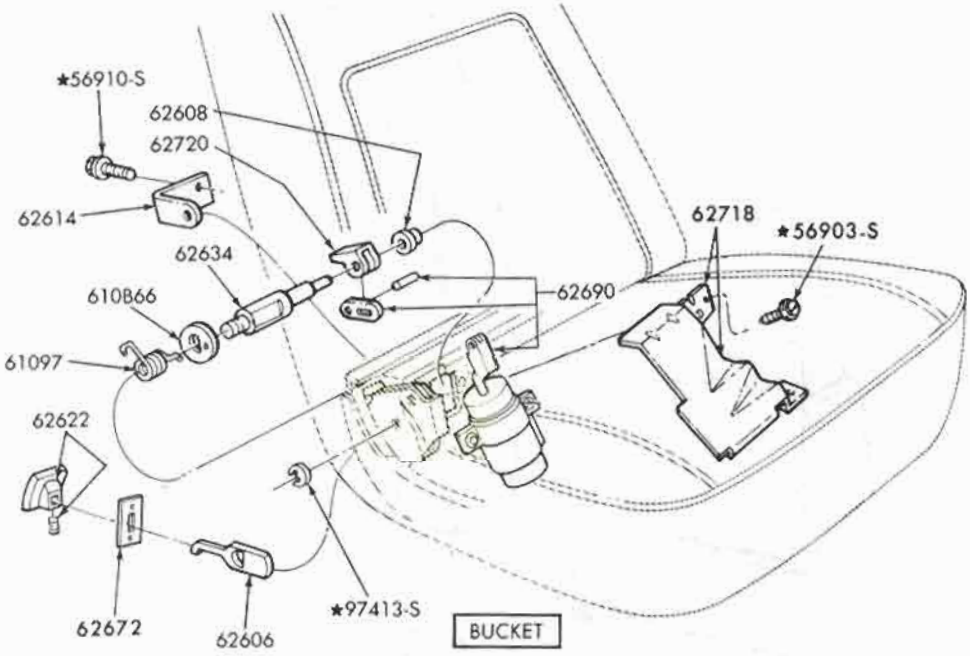

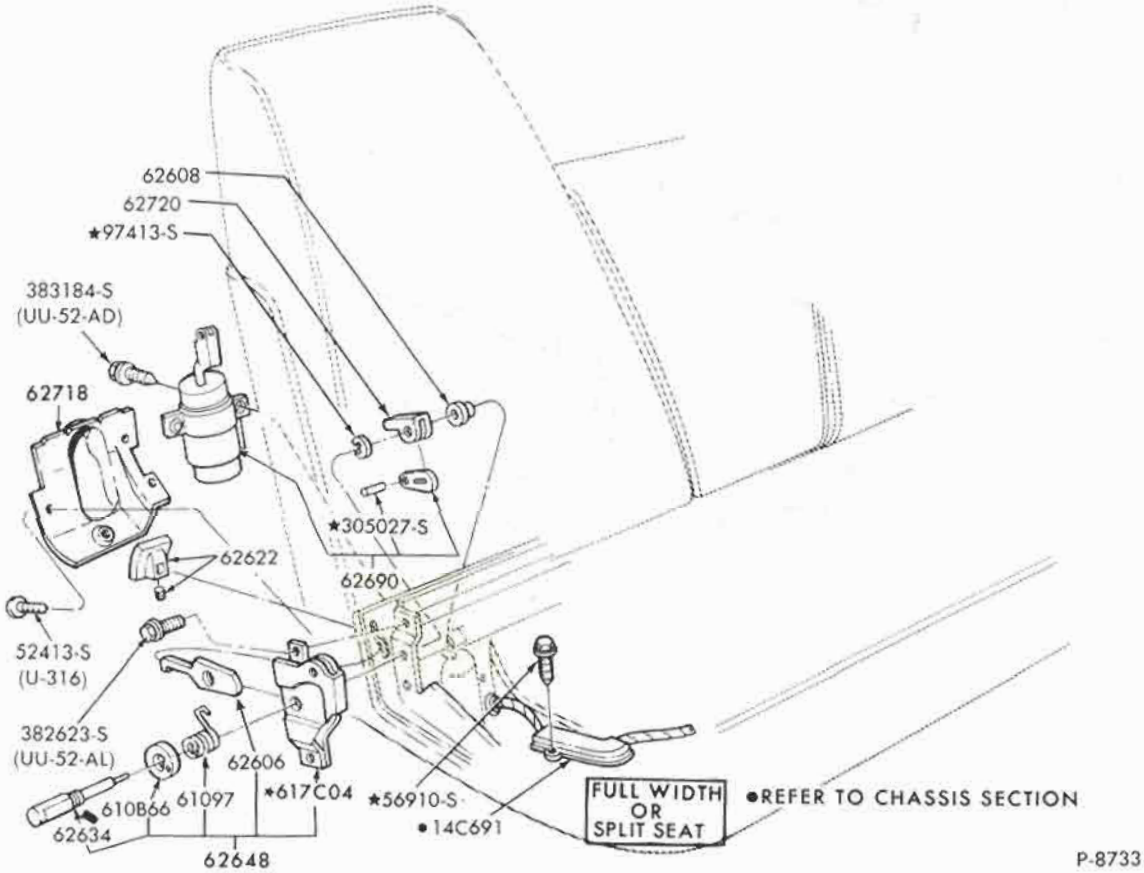

FRONT SEAT BACK LATCH MECHANISM - AUTOMATIC
1972 TORINO and THUNDERBIRD

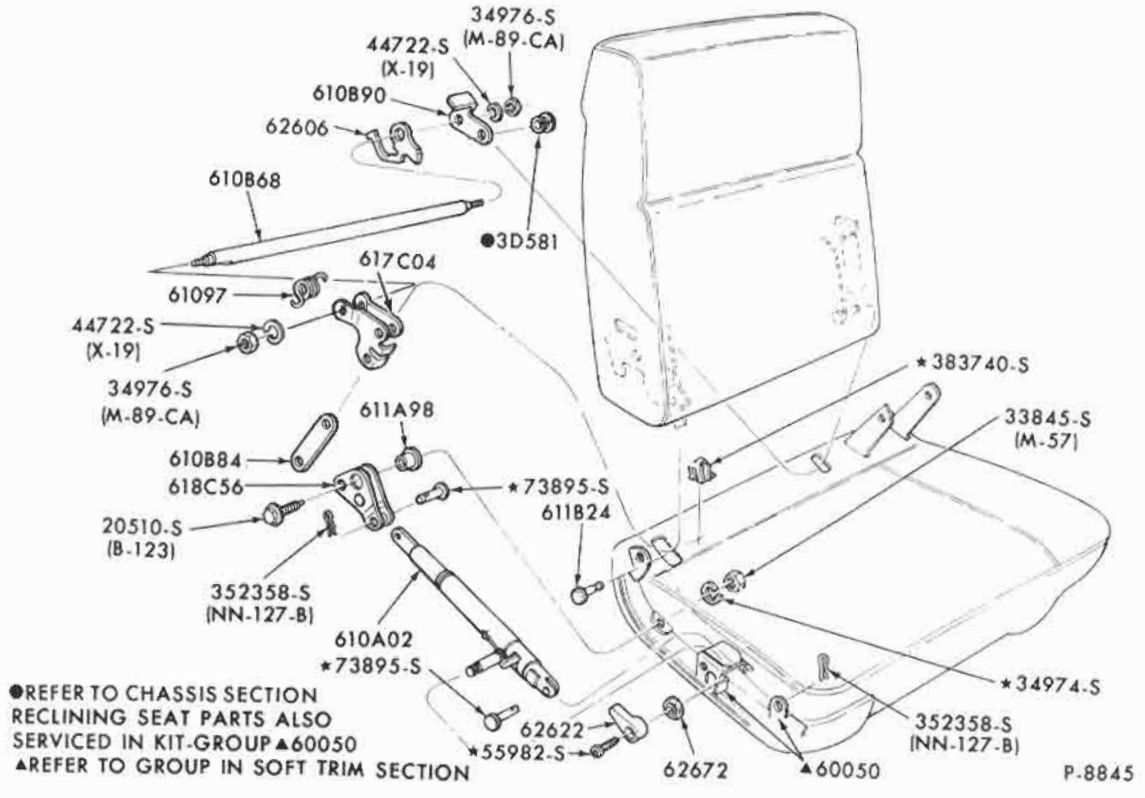

RECLINING SEAT MECHANISM and RELATED PARTS
1972 THUNDERBIRD

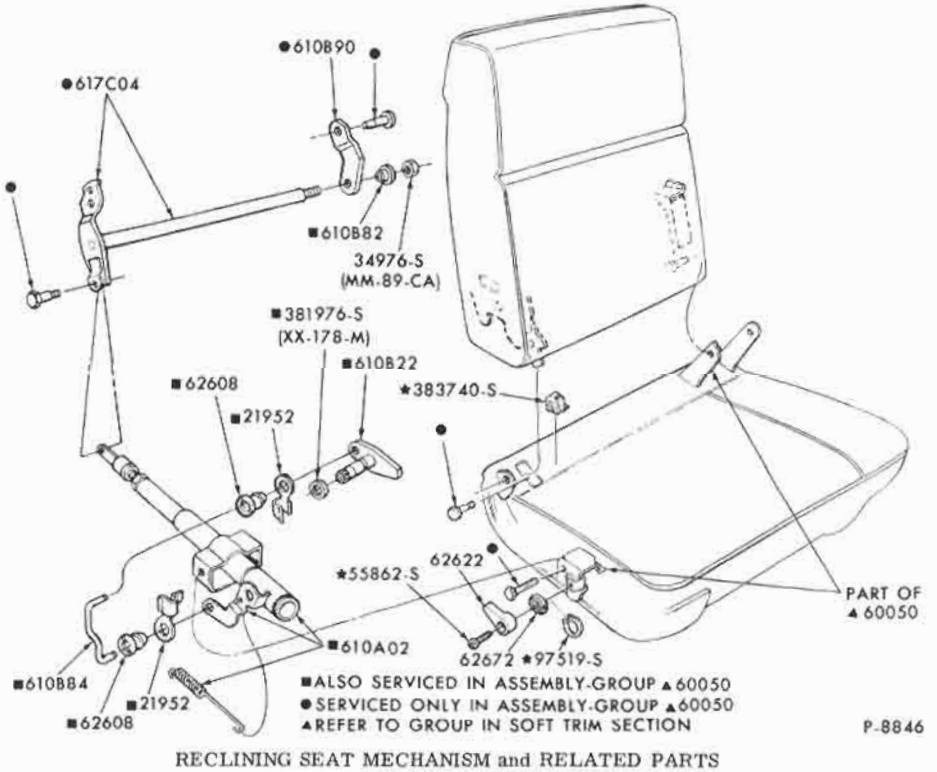

RECLINING SEAT MECHANISM and RELATED PARTS
1971/72 FORD

COPYRIGHT © 1975 — FORD MOTOR COMPANY — DEARBORN, MICHIGAN

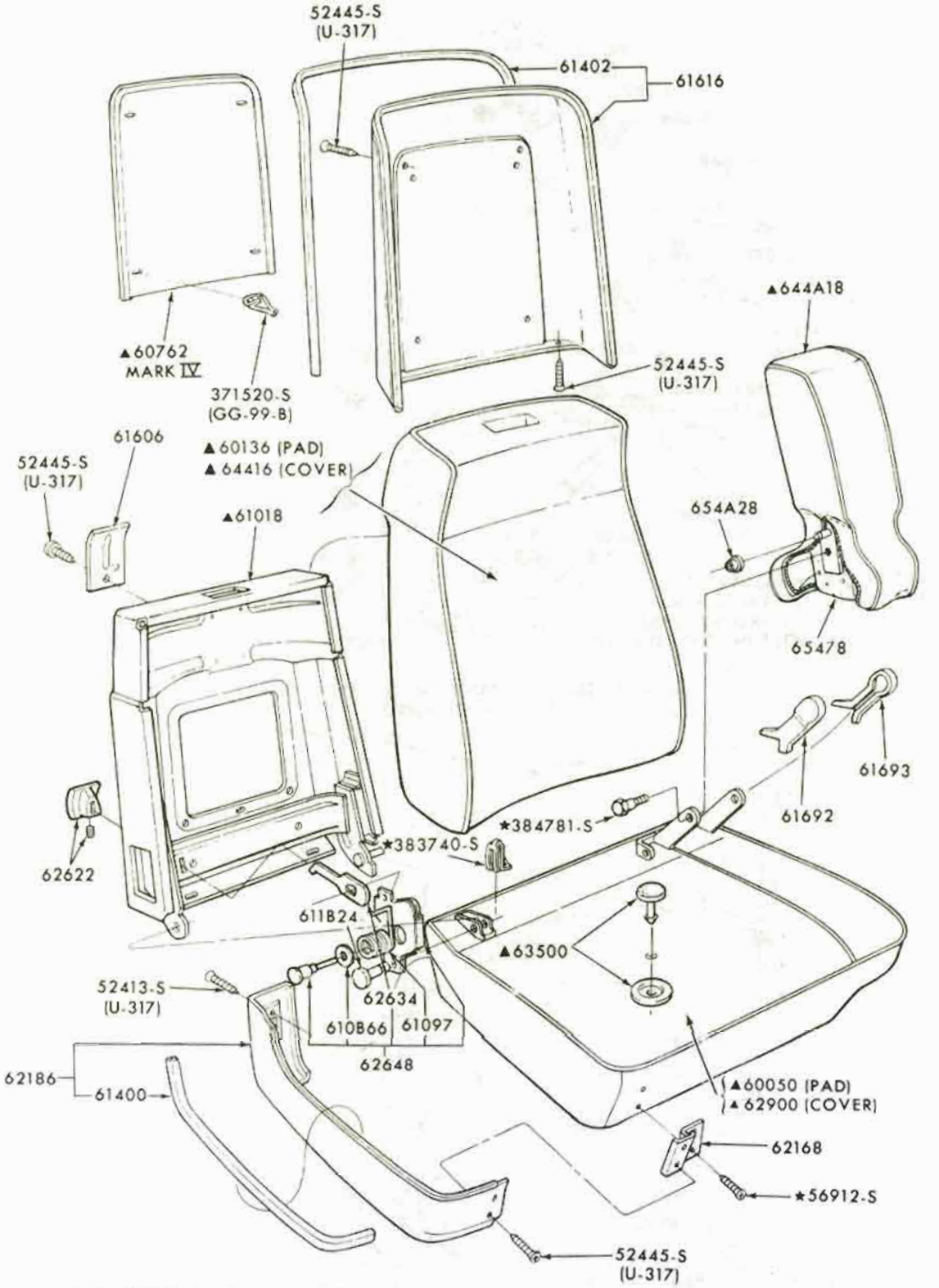

▲REFER TO GROUP IN SOFT TRIM SECTION

P-8863

FRONT SEAT MECHANISM and RELATED PARTS - SPLIT BENCH - UPPER HALF
1972 THUNDERBIRD

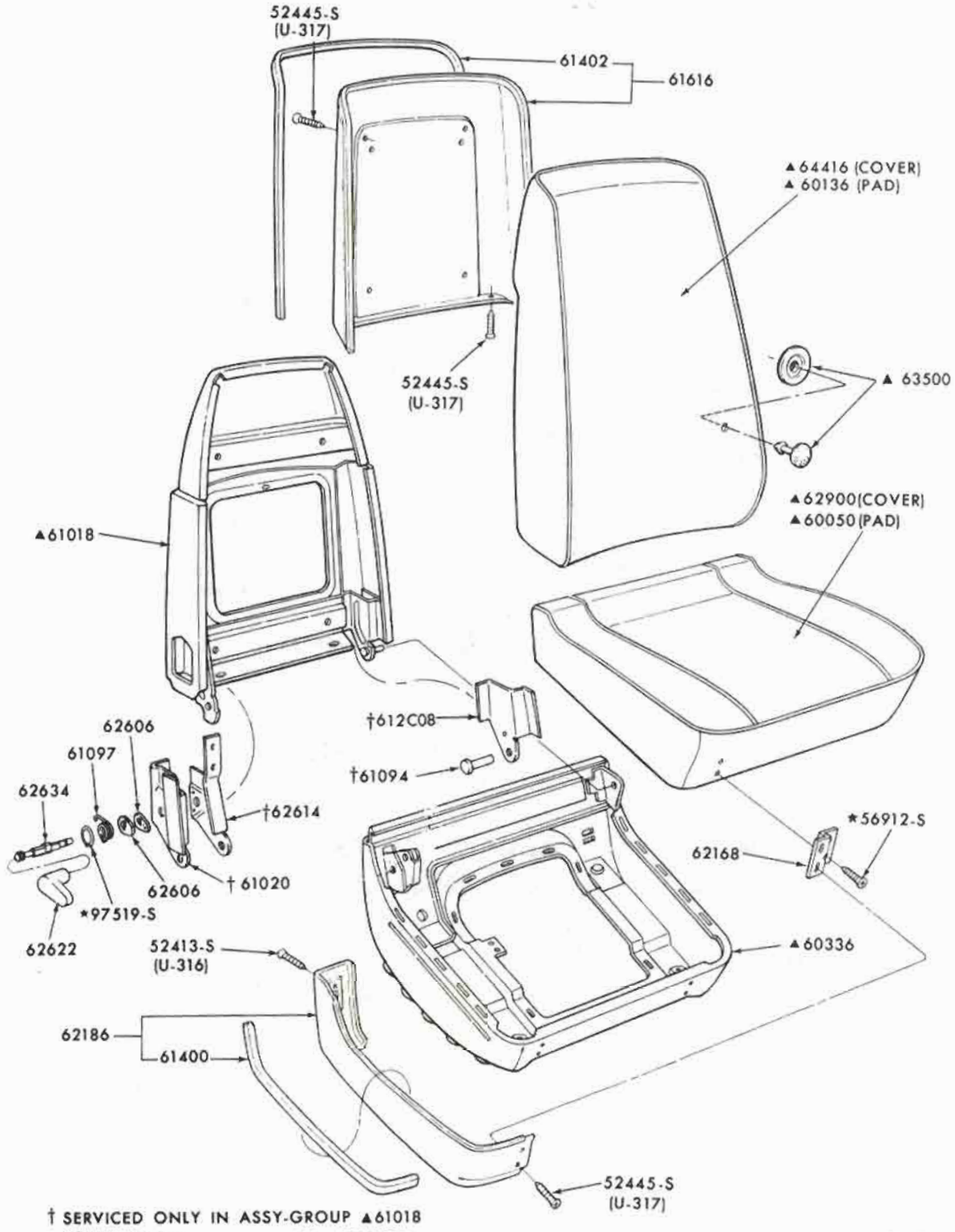

† SERVICED ONLY IN ASSY-GROUP ▲61018
▲ REFER TO GROUP IN SOFT TRIM SECTION

P-8862

FRONT SEAT MECHANISM and RELATED PARTS - BUCKET - UPPER HALF
1972 THUNDERBIRD

COPYRIGHT © 1975 — FORD MOTOR COMPANY — DEARBORN, MICHIGAN

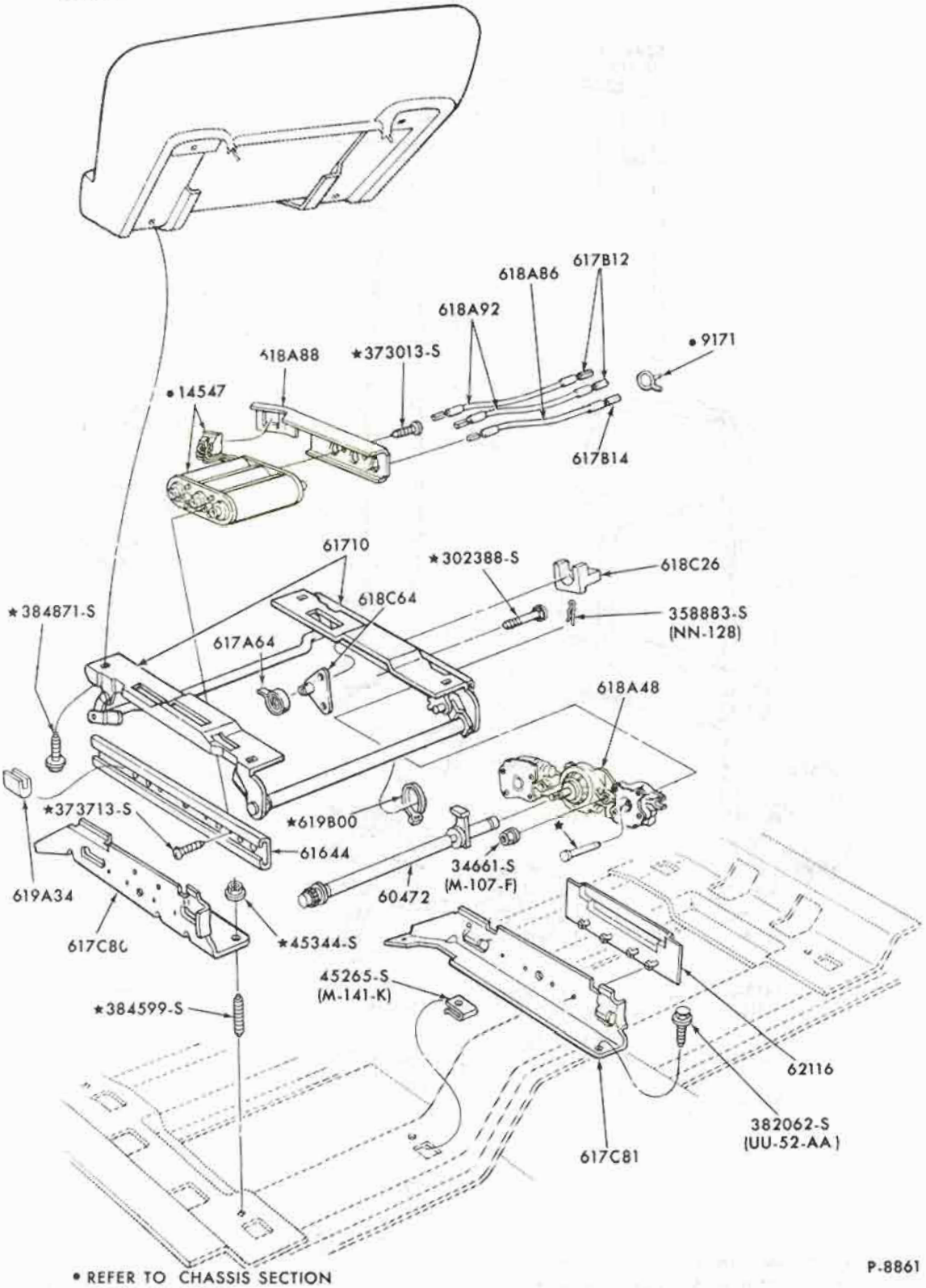

FRONT SEAT MECHANISM and RELATED PARTS - POWER SPLIT BENCH LOWER HALF

1972 THUNDERBIRD
1972 FORD - "From 12/1/71"

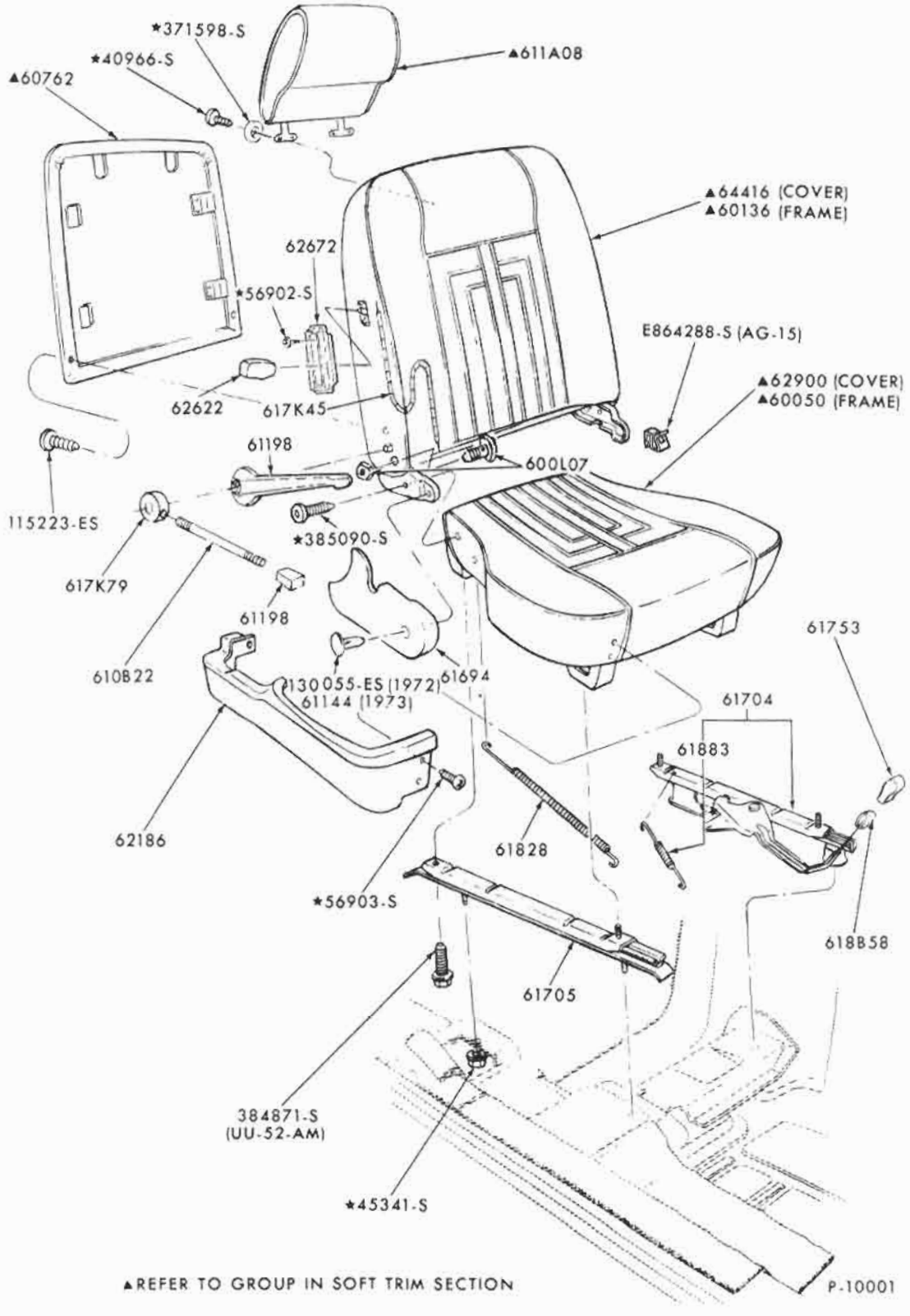

FRONT SEAT MECHANISM and RELATED PARTS - BUCKET - RECLINING

1972 MAVERICK

COPYRIGHT © 1975 — FORD MOTOR COMPANY — DEARBORN, MICHIGAN

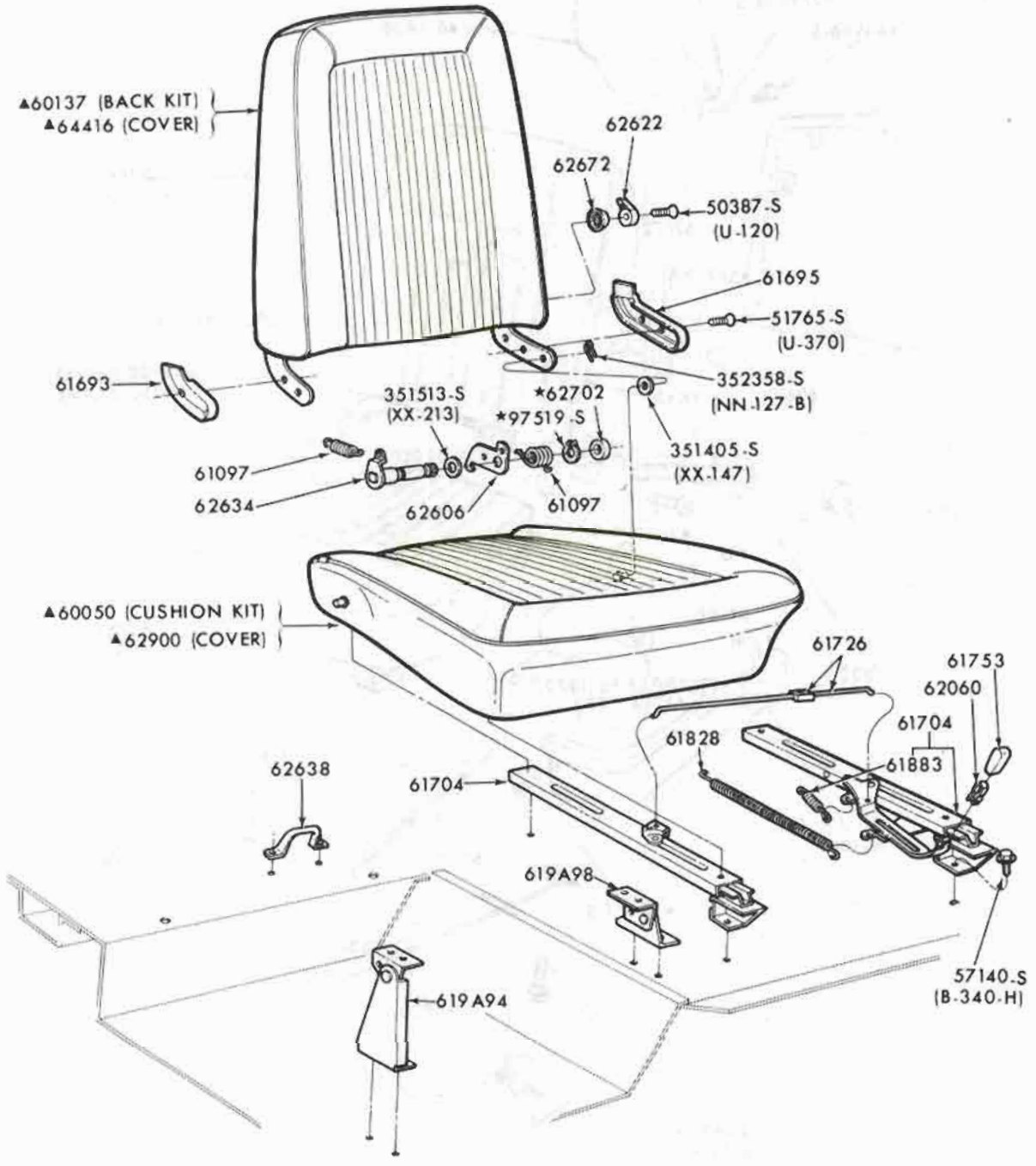

▲ REFER TO SOFT TRIM SECTION

P-10388

FRONT SEAT MECHANISM and RELATED PARTS - BUCKET
1972 BRONCO

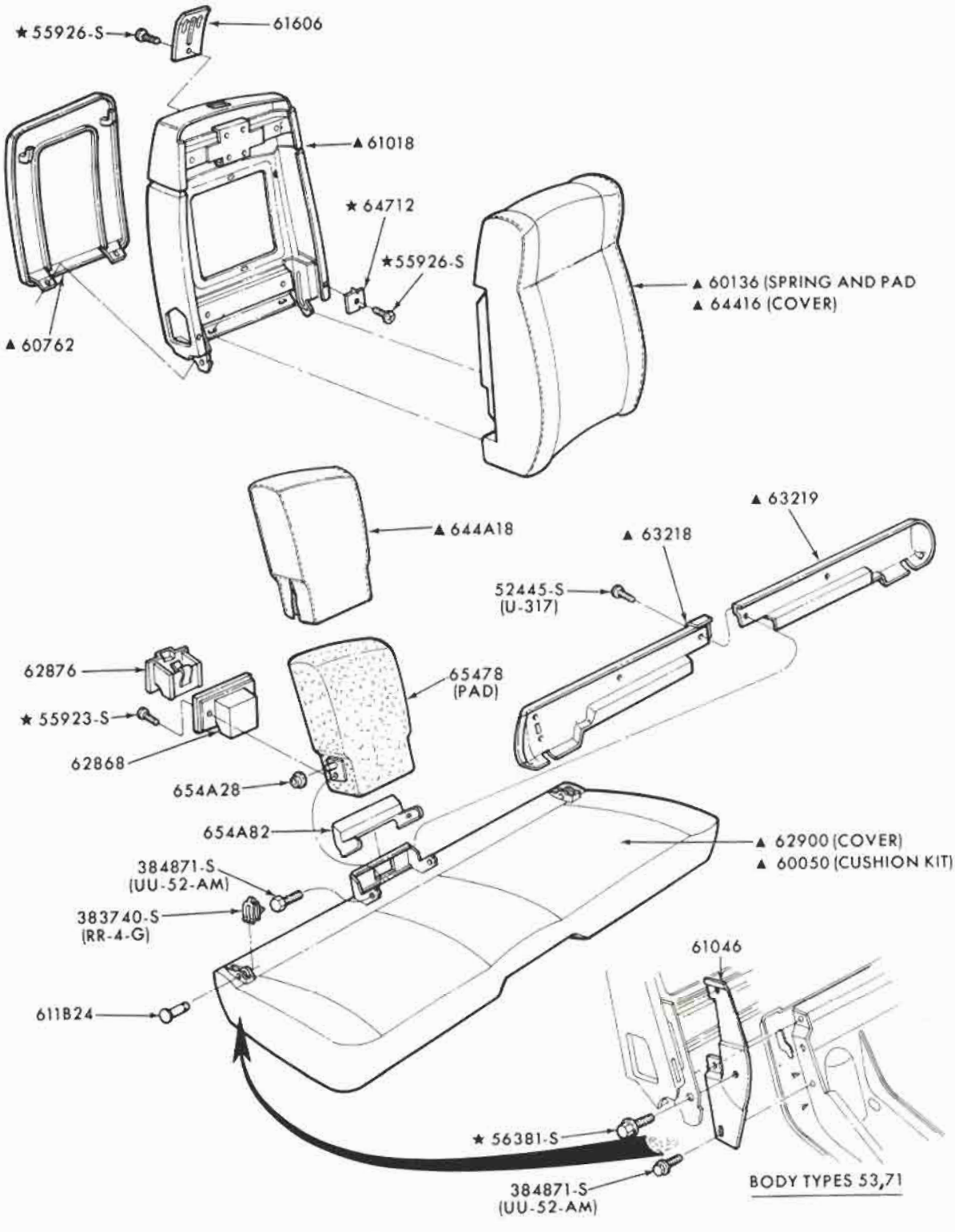

▲ REFER TO SOFT TRIM SECTION

P-10760

FRONT SEAT PARTS-LO-BACK FULL WIDTH-w/CENTER ARM REST-UPPER HALF
1972 TORINO

COPYRIGHT © 1975 — FORD MOTOR COMPANY — DEARBORN, MICHIGAN

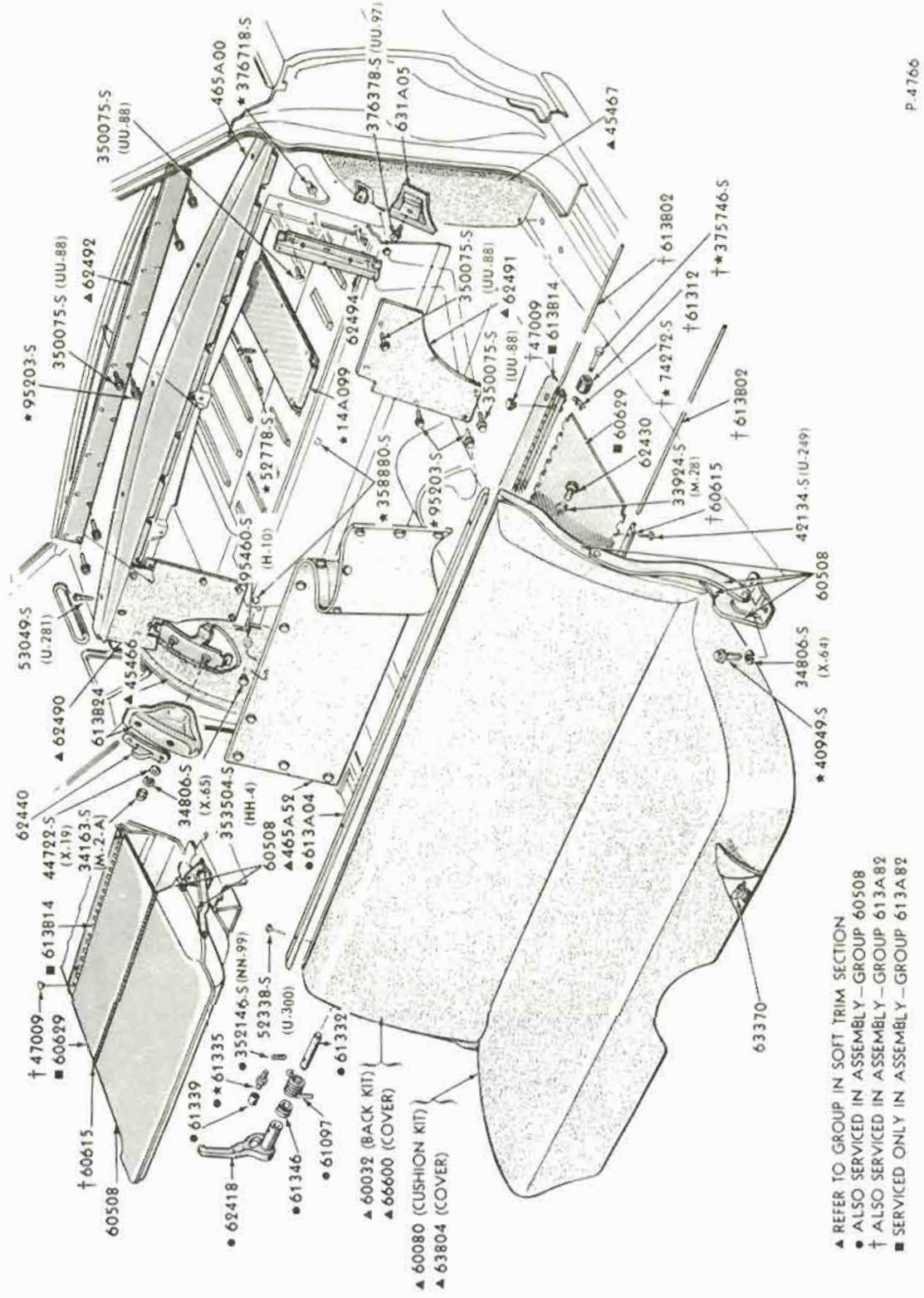

REAR SEAT and RELATED PARTS-FOLDING
1965/67 FORD - BODY TYPE 54

COPYRIGHT © 1975 — FORD MOTOR COMPANY — DEARBORN, MICHIGAN

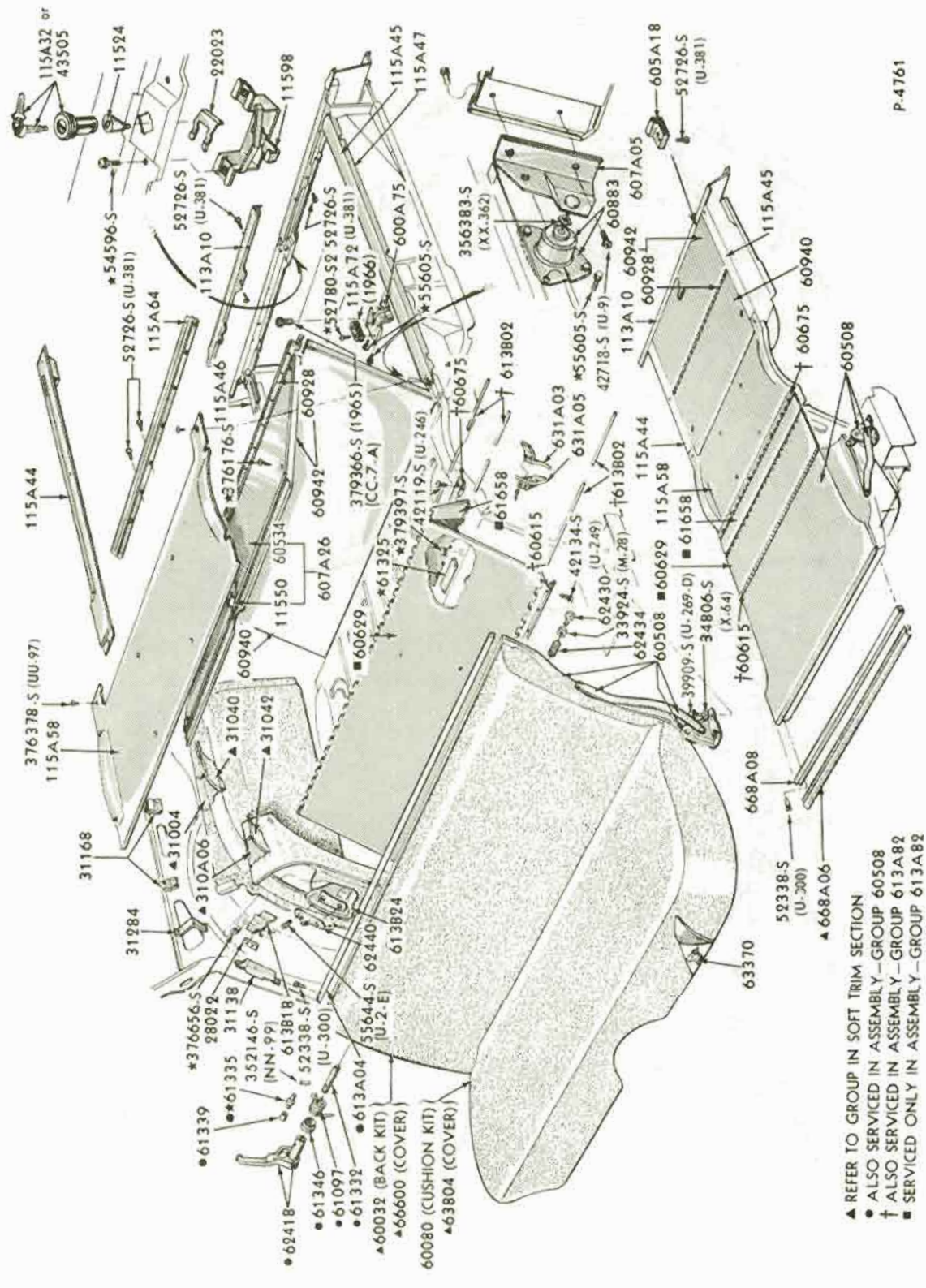

REAR SEAT, STORAGE COMPARTMENT and RELATED PARTS
1965/66 FORD - BODY TYPE 71

P-4762

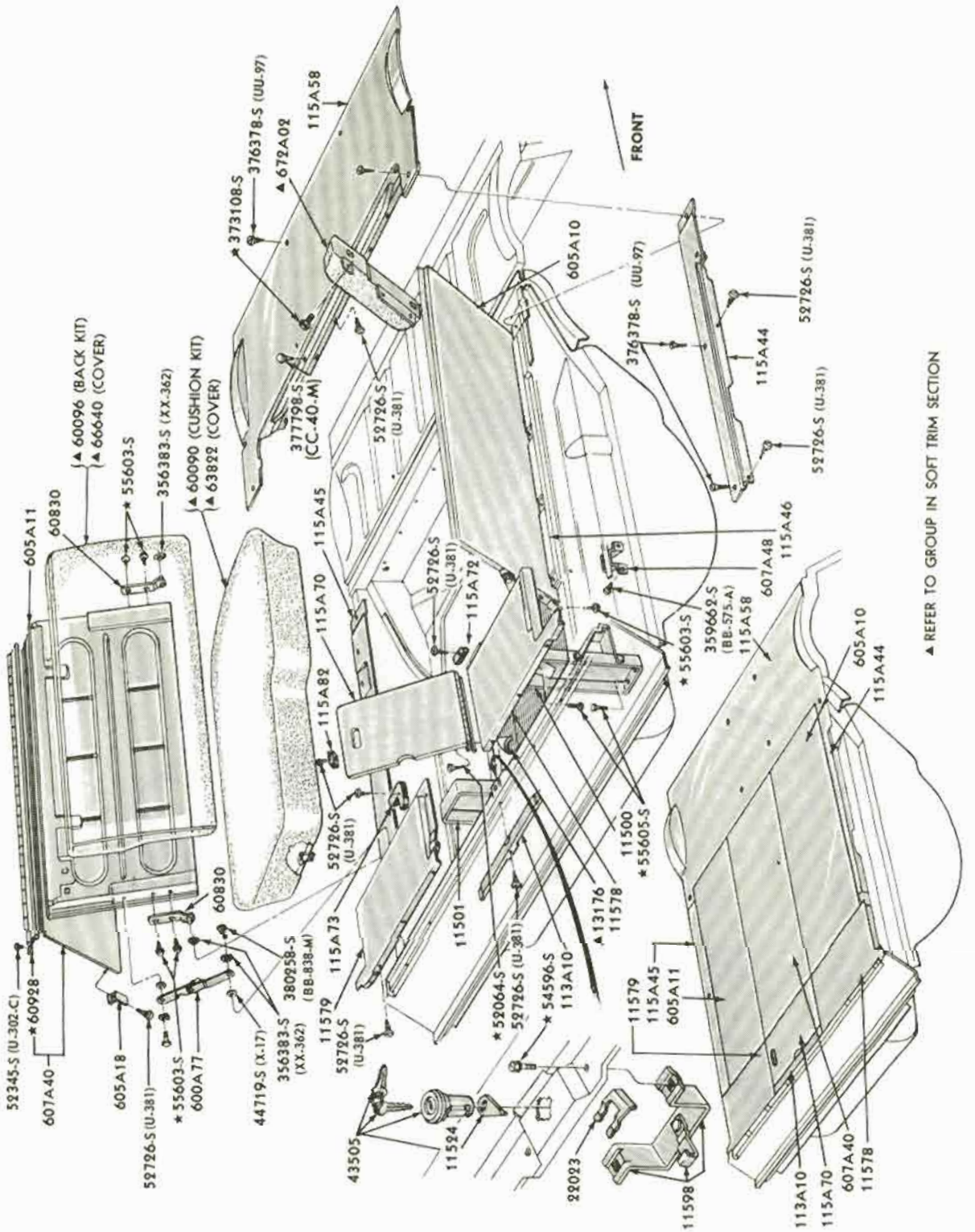

AUXILIARY SEATS, STORAGE COMPARTMENT and RELATED PARTS
1965/66 FORD - BODY TYPE 71A, C

COPYRIGHT © 1975 — FORD MOTOR COMPANY — DEARBORN, MICHIGAN

FORD CAR PARTS

BODY ILLUSTRATION SECTION 610

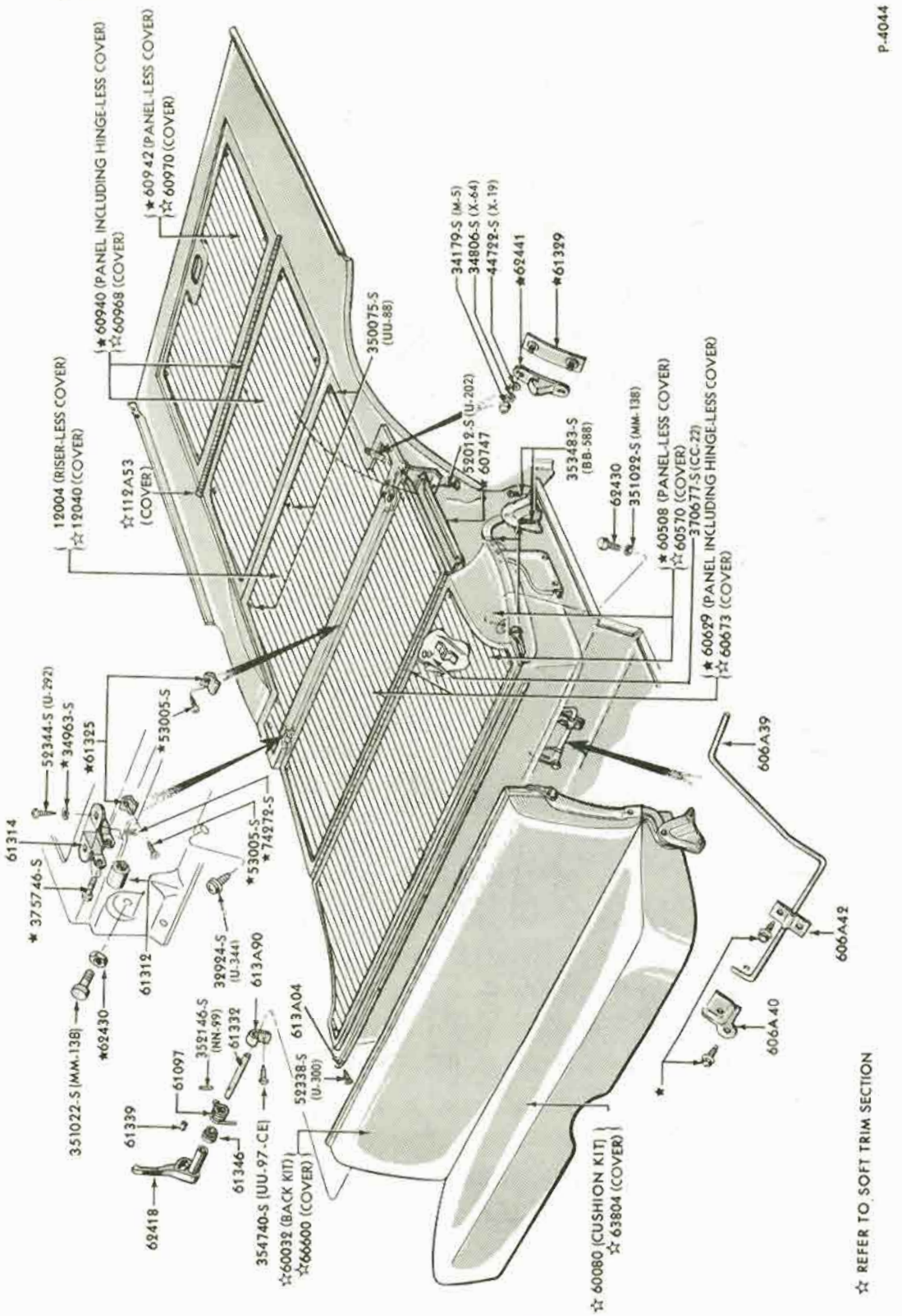

REAR SEAT, AUXILIARY FLOOR and RELATED PARTS
1965 FAIRLANE - BODY TYPE 71

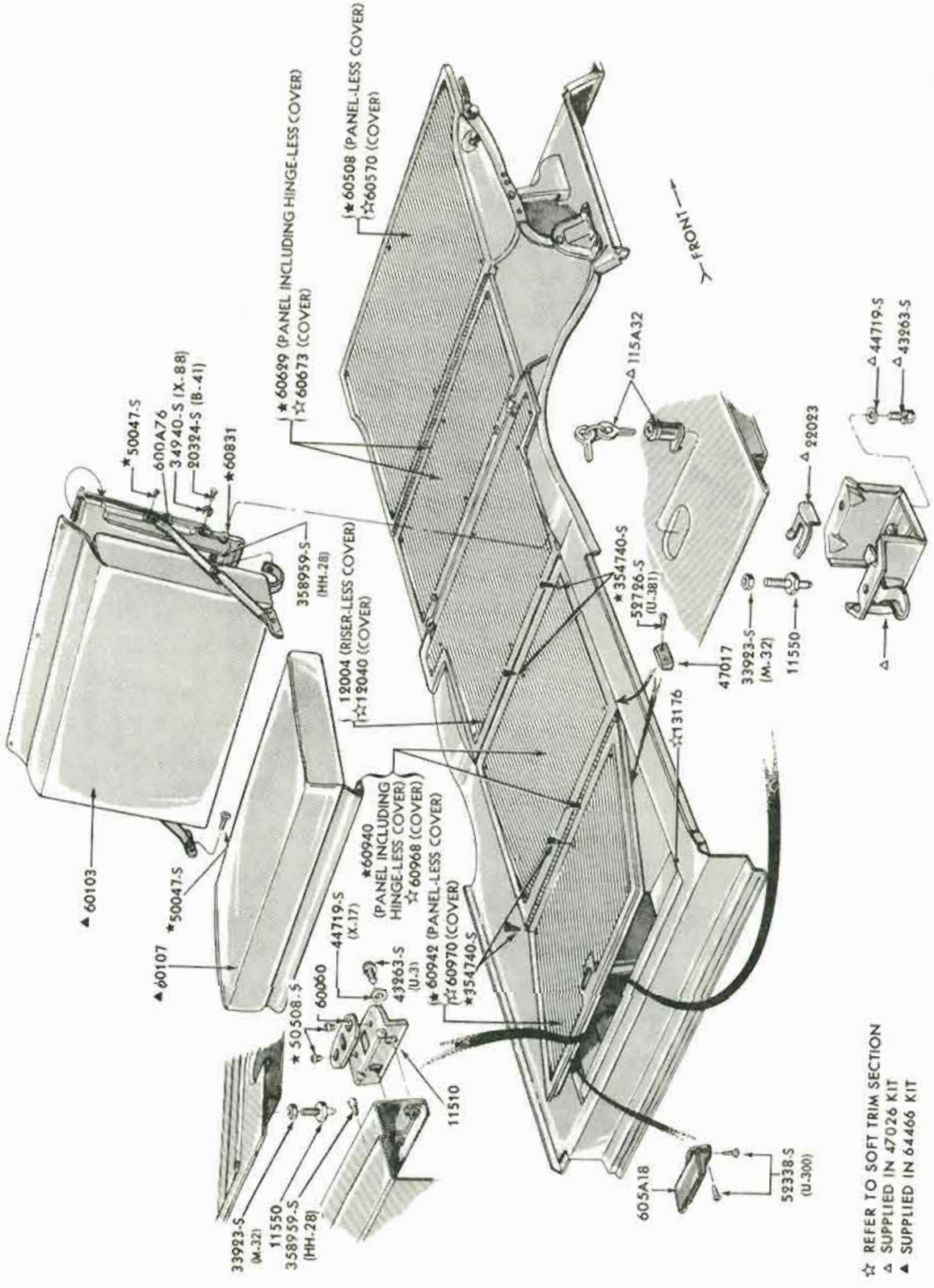

AUXILIARY SEAT, STORAGE COMPARTMENT and RELATED PARTS
1965 FAIRLANE - BODY TYPE 71

COPYRIGHT © 1975 — FORD MOTOR COMPANY — DEARBORN, MICHIGAN

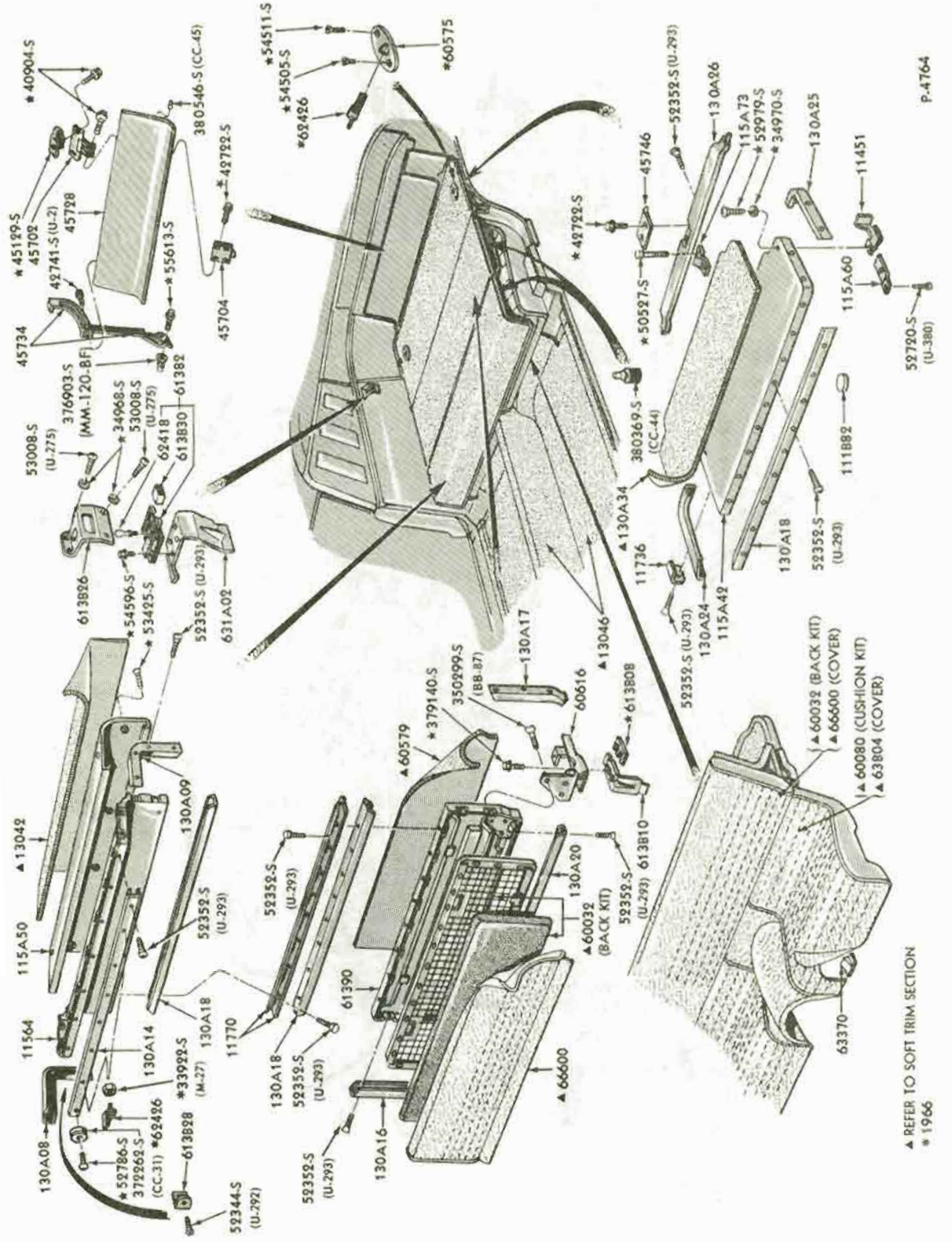

REAR SEAT and RELATED PARTS-FOLDING
1965/66 MUSTANG - BODY TYPE 63

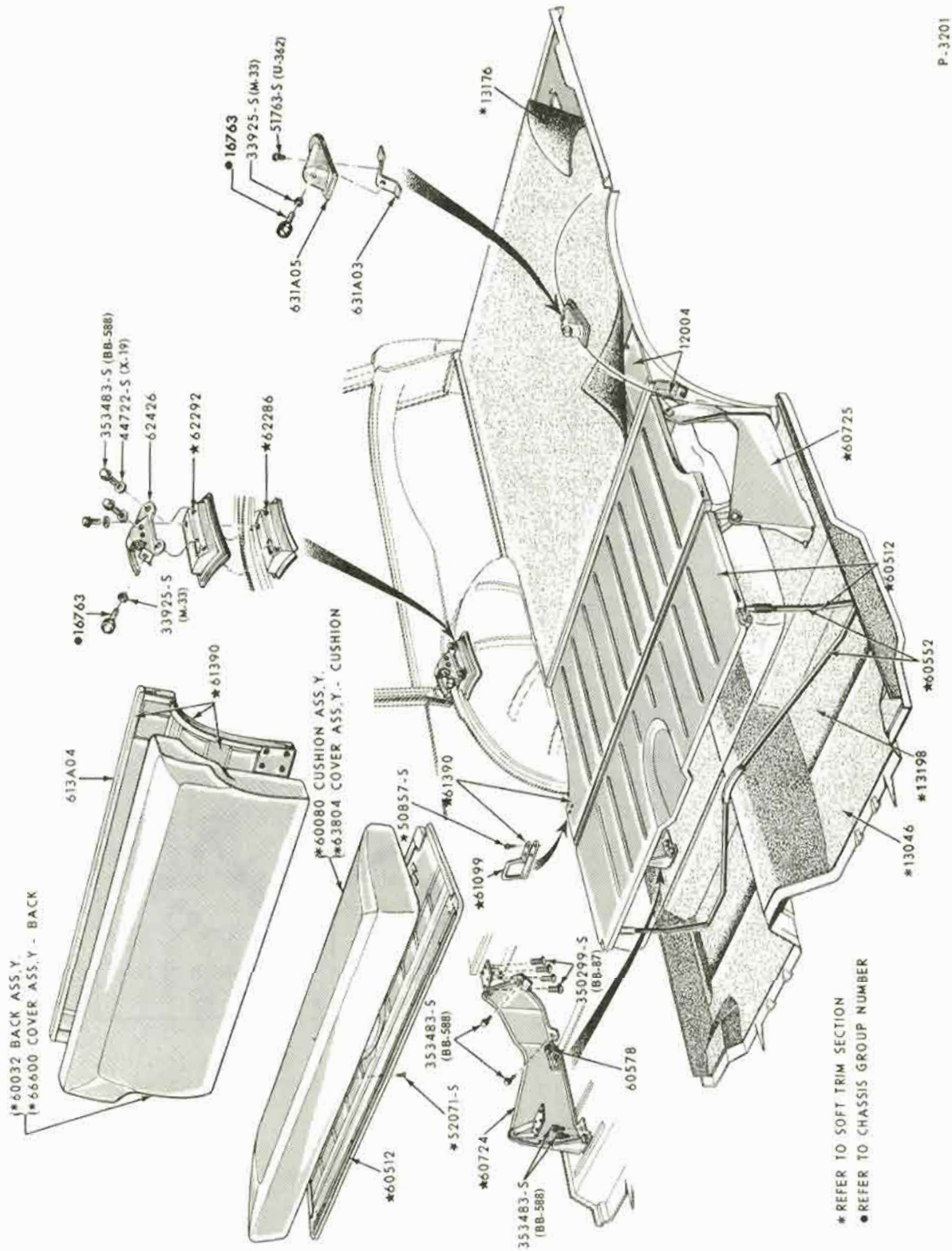

REAR SEAT and RELATED PARTS
1965 FALCON - BODY TYPES 59, 71

COPYRIGHT © 1975 — FORD MOTOR COMPANY — DEARBORN, MICHIGAN

FORD CAR PARTS

BODY ILLUSTRATION SECTION 610

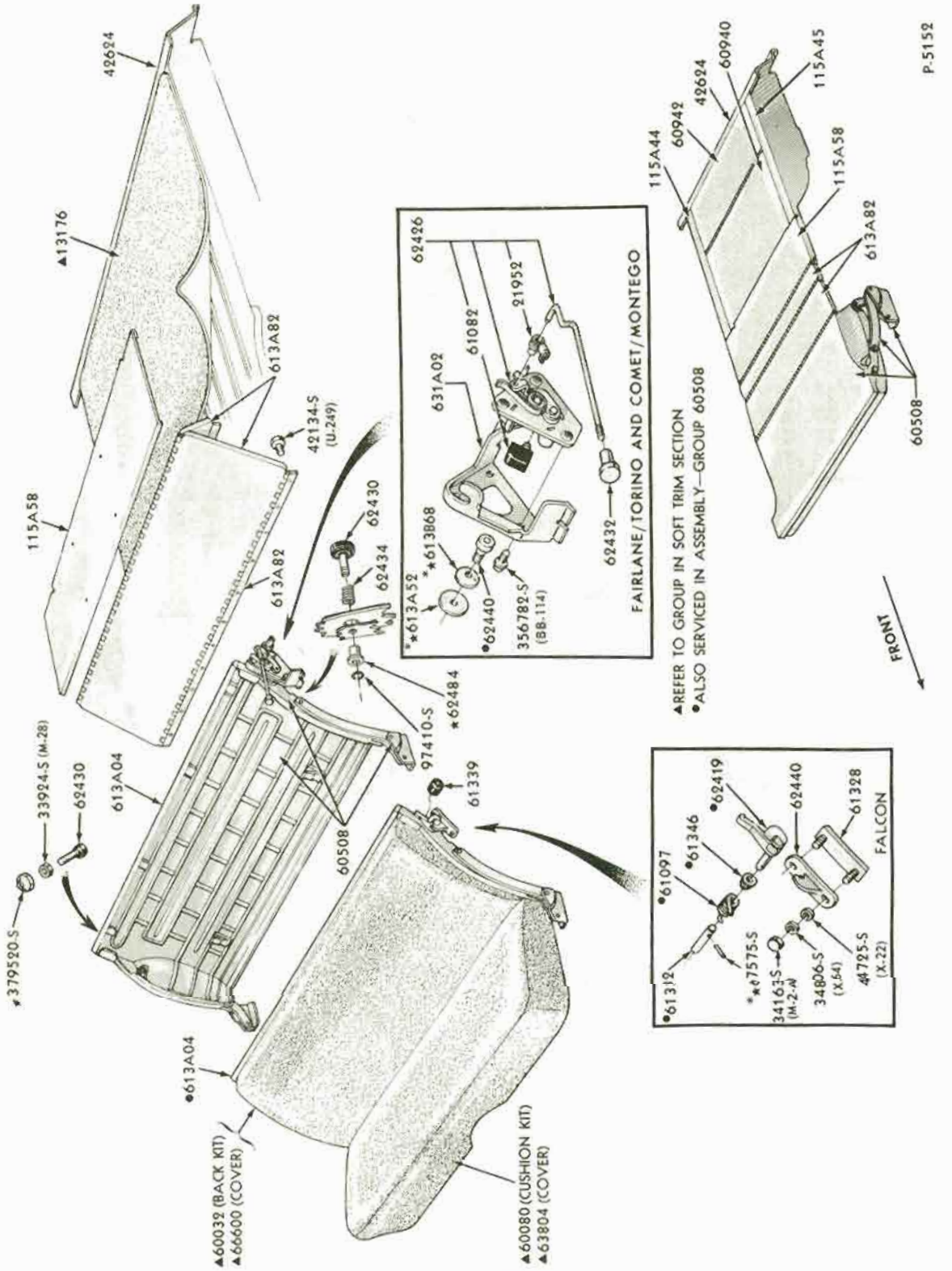

REAR SEAT, AUXILIARY FLOOR and RELATED PARTS

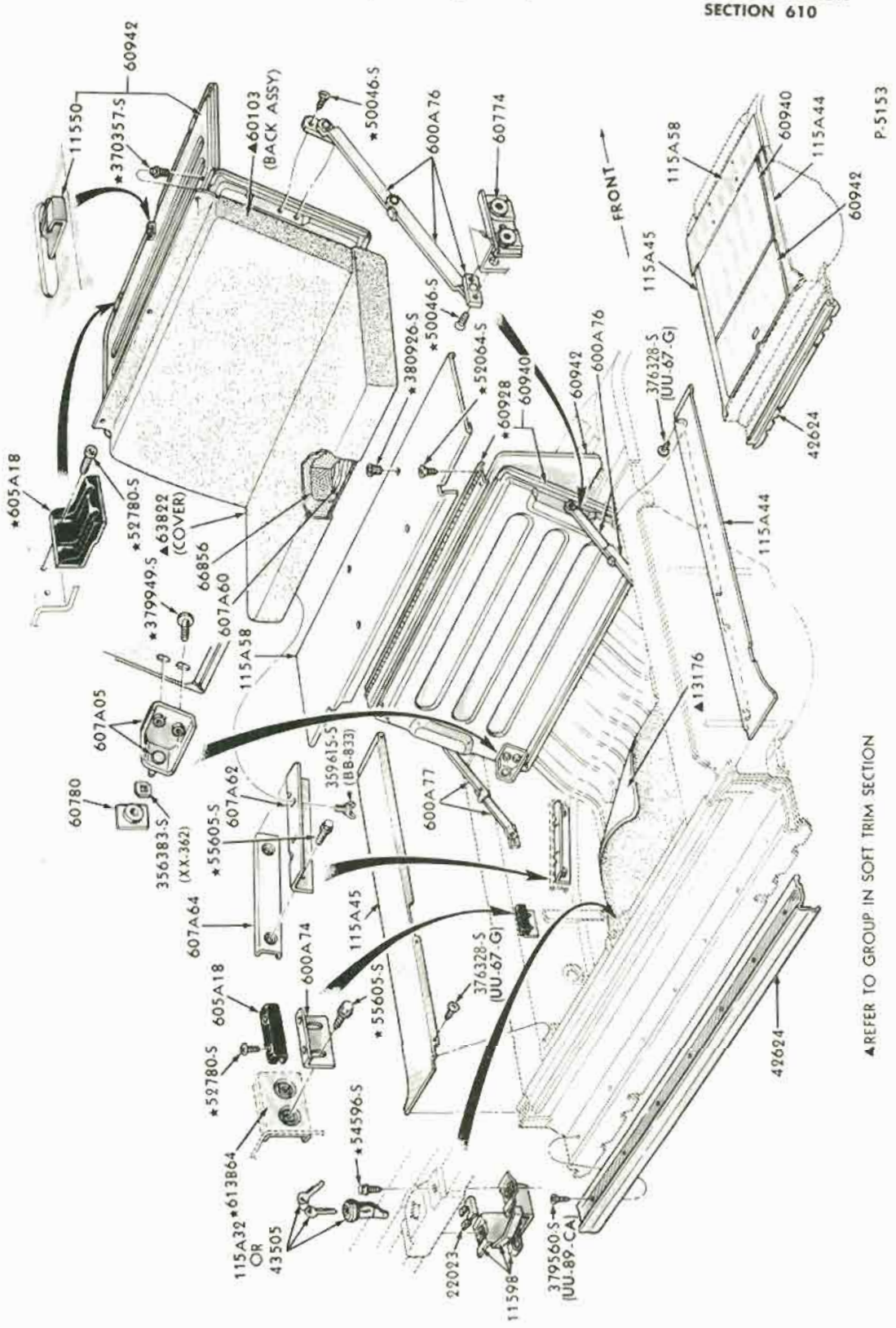

AUXILIARY SEAT, STORAGE COMPARTMENT and RELATED PARTS

1966 FAIRLANE - BODY TYPE 71

COPYRIGHT © 1975 — FORD MOTOR COMPANY — DEARBORN, MICHIGAN

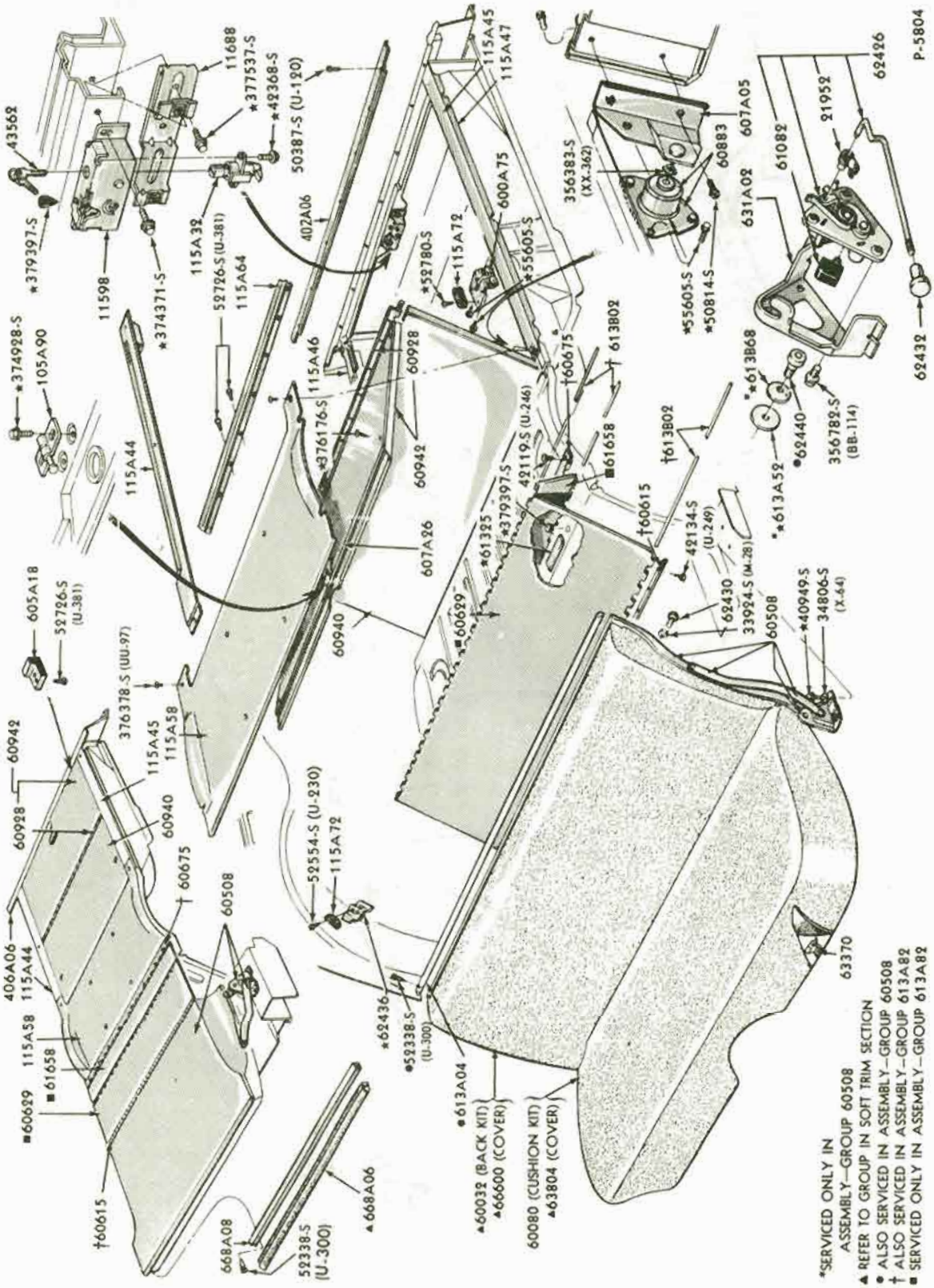

REAR SEAT, STORAGE COMPARTMENT and RELATED PARTS
1967/68 FORD-BODY TYPE 71

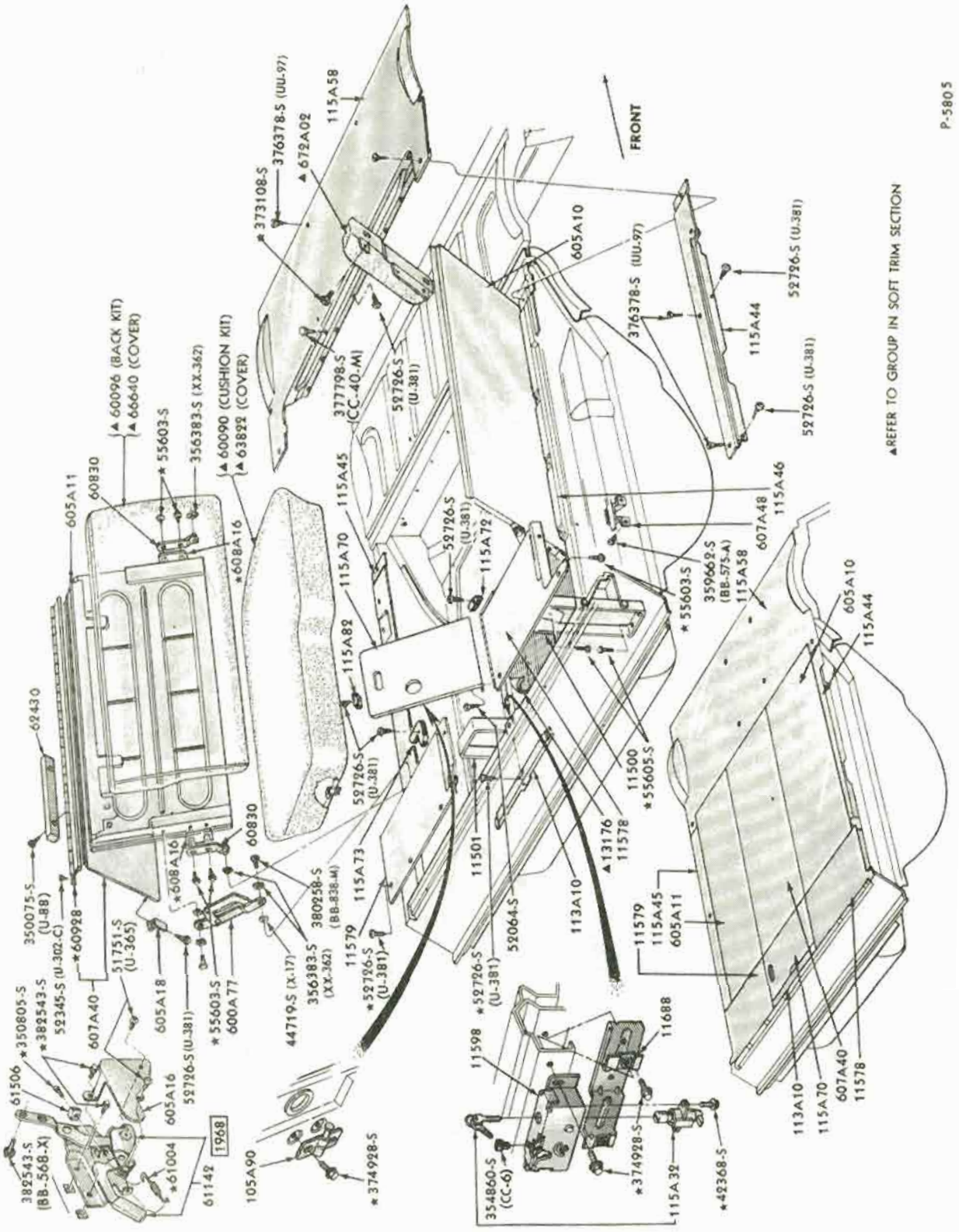

AUXILIARY SEATS, STORAGE COMPARTMENT and RELATED PARTS
1967/68 FORD - BODY TYPES 71A,C,J

COPYRIGHT © 1975 — FORD MOTOR COMPANY — DEARBORN, MICHIGAN

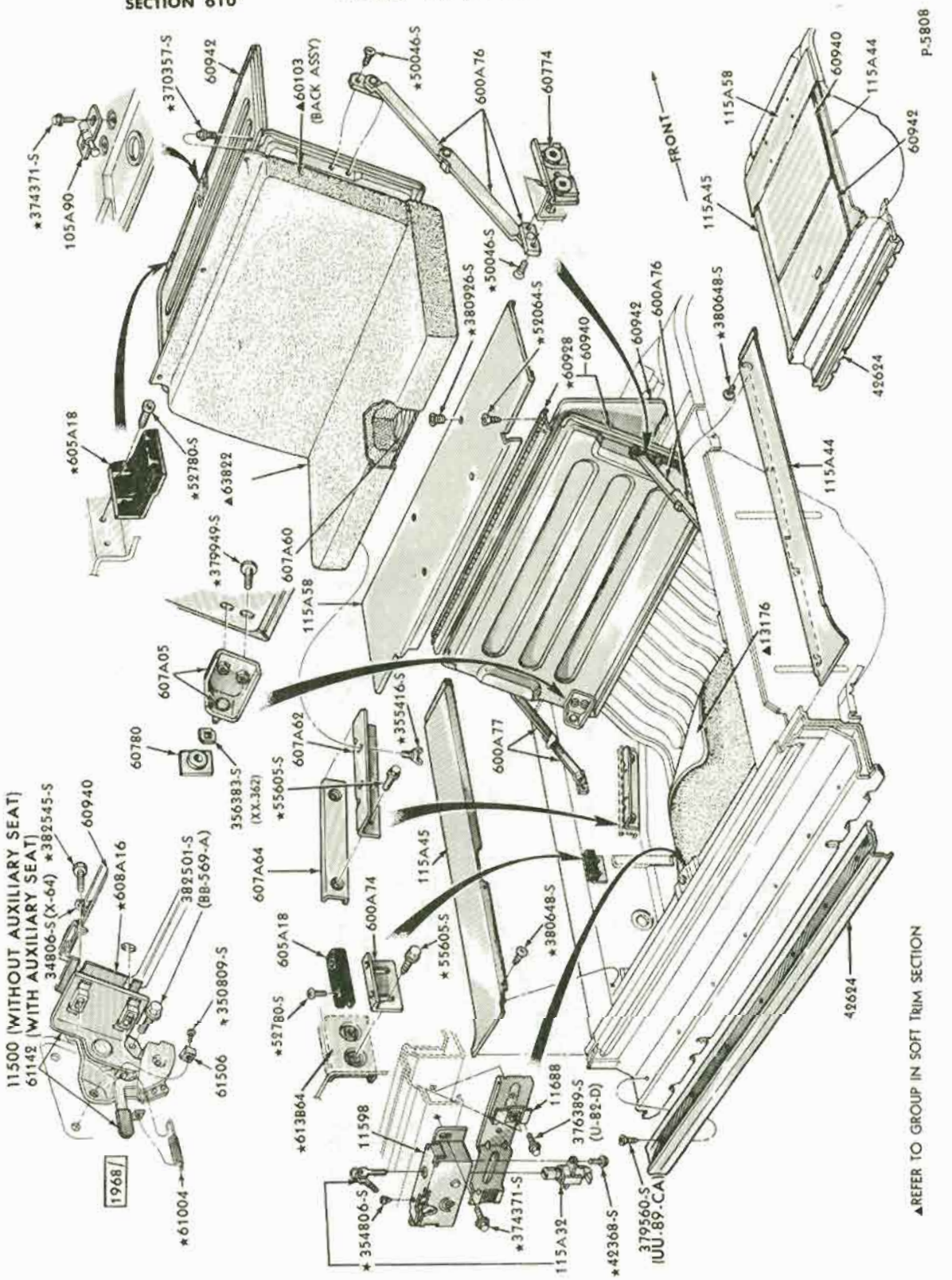

AUXILIARY SEAT, STORAGE COMPARTMENT and RELATED PARTS
1967/71 FAIRLANE/TORINO - BODY TYPE 71

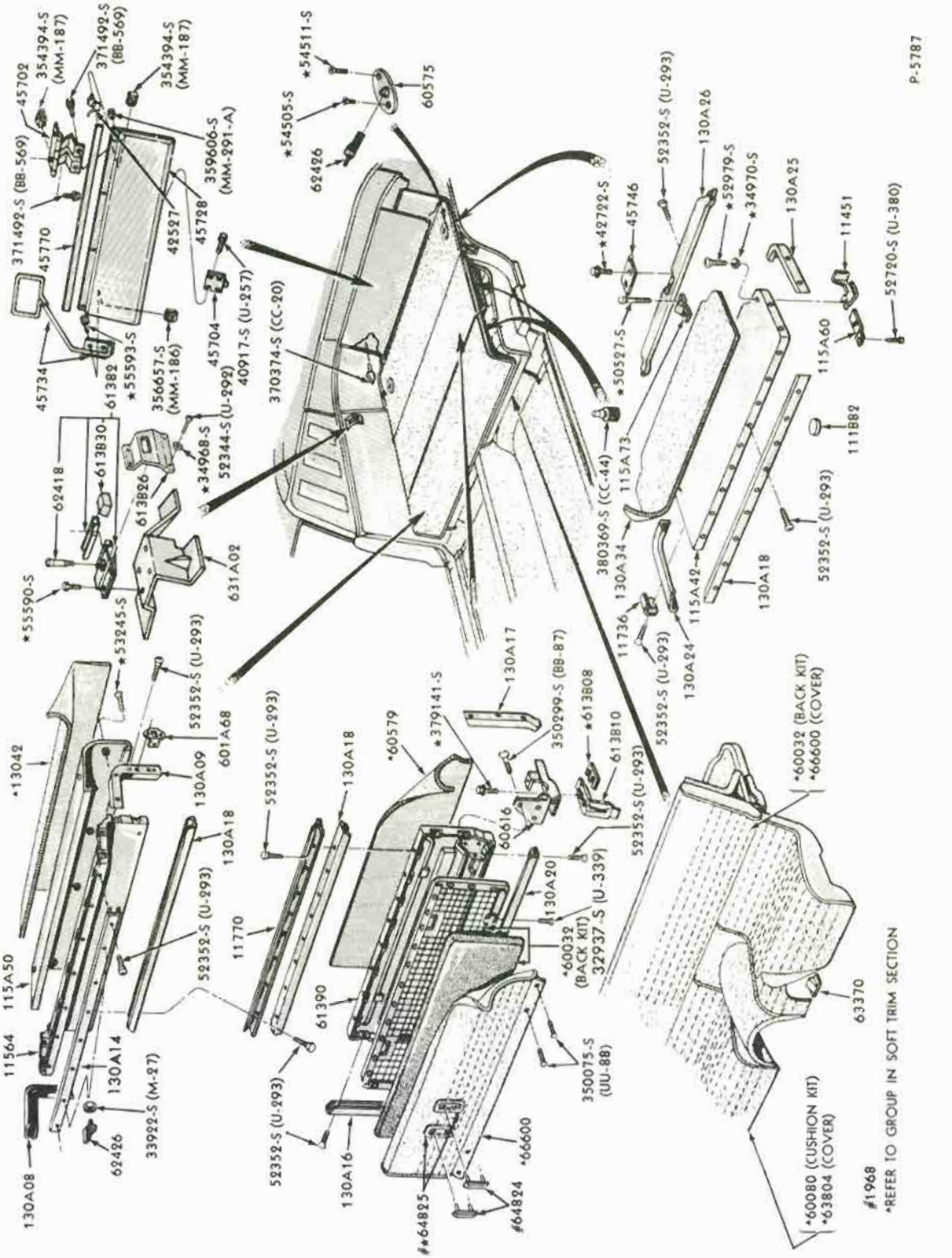

REAR SEAT and RELATED PARTS - FOLDING
1967/70 MUSTANG - BODY TYPE 63

COPYRIGHT © 1975 — FORD MOTOR COMPANY — DEARBORN, MICHIGAN

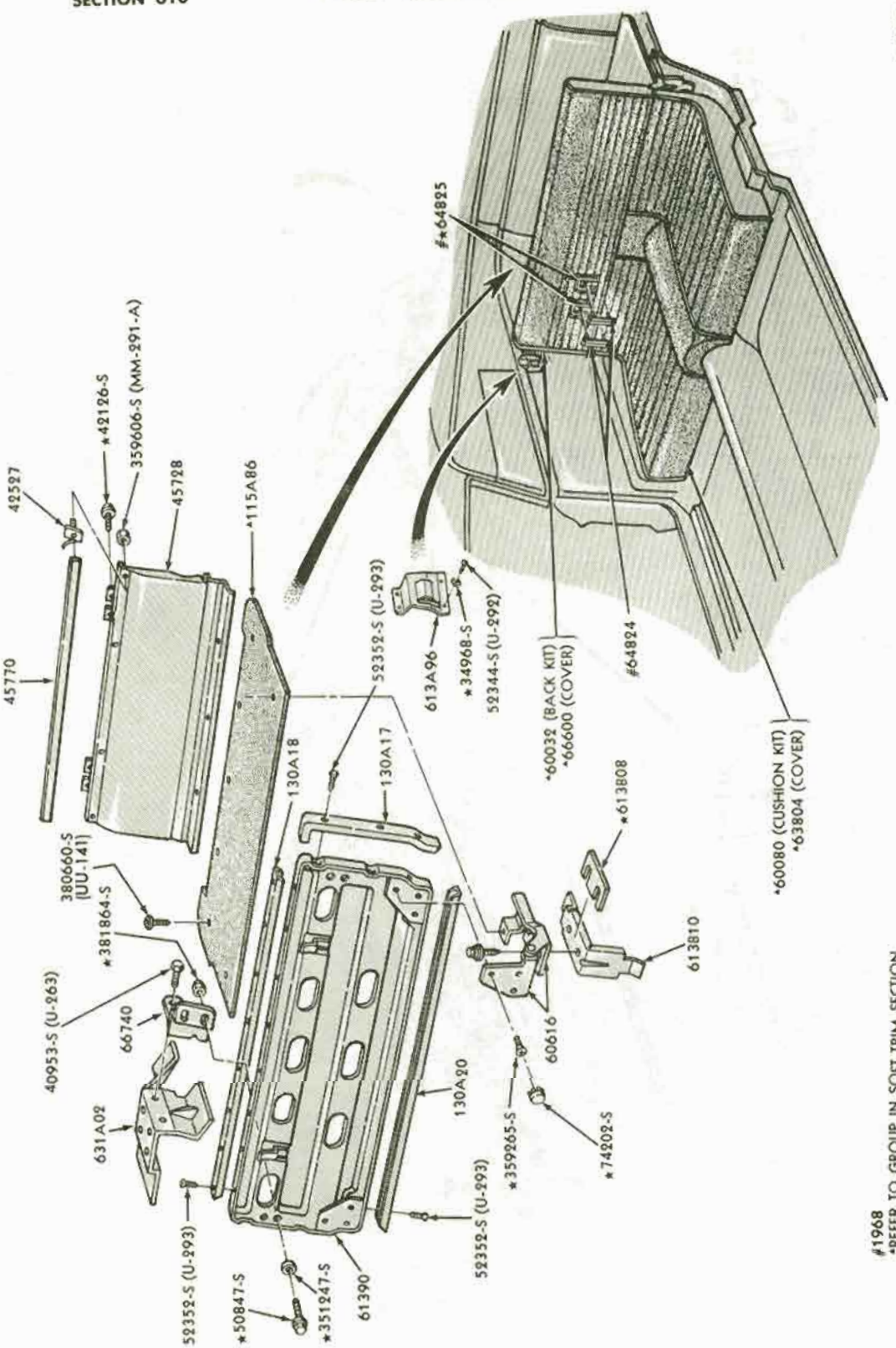

REAR SEAT and RELATED PARTS - FIXED
1967/70 MUSTANG - BODY TYPE 63

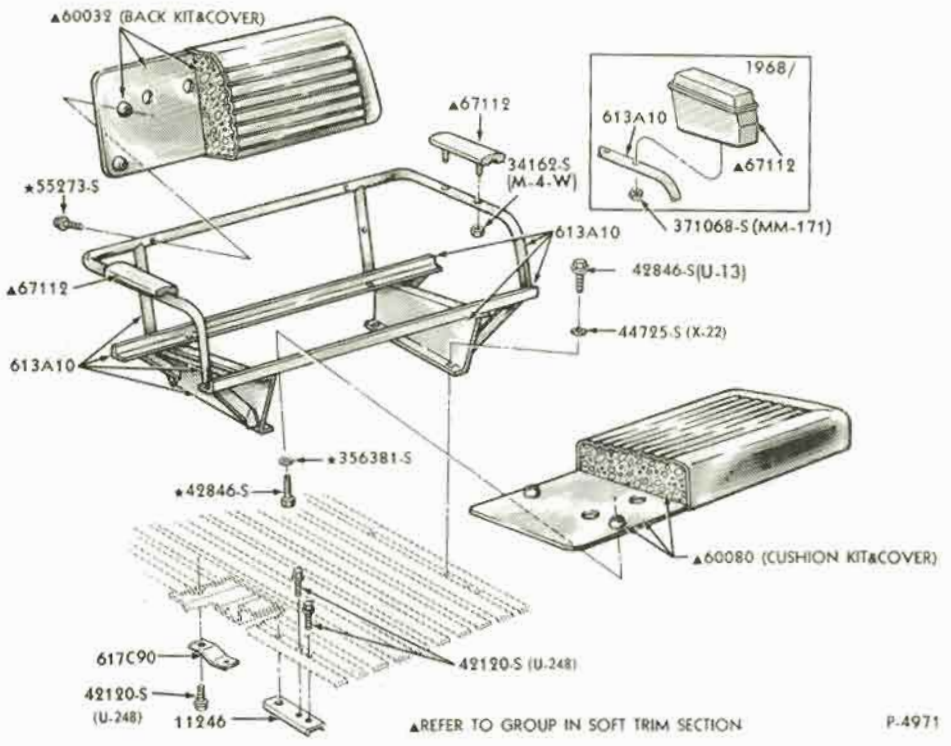

REAR SEAT and RELATED PARTS
1966/72 BRONCO

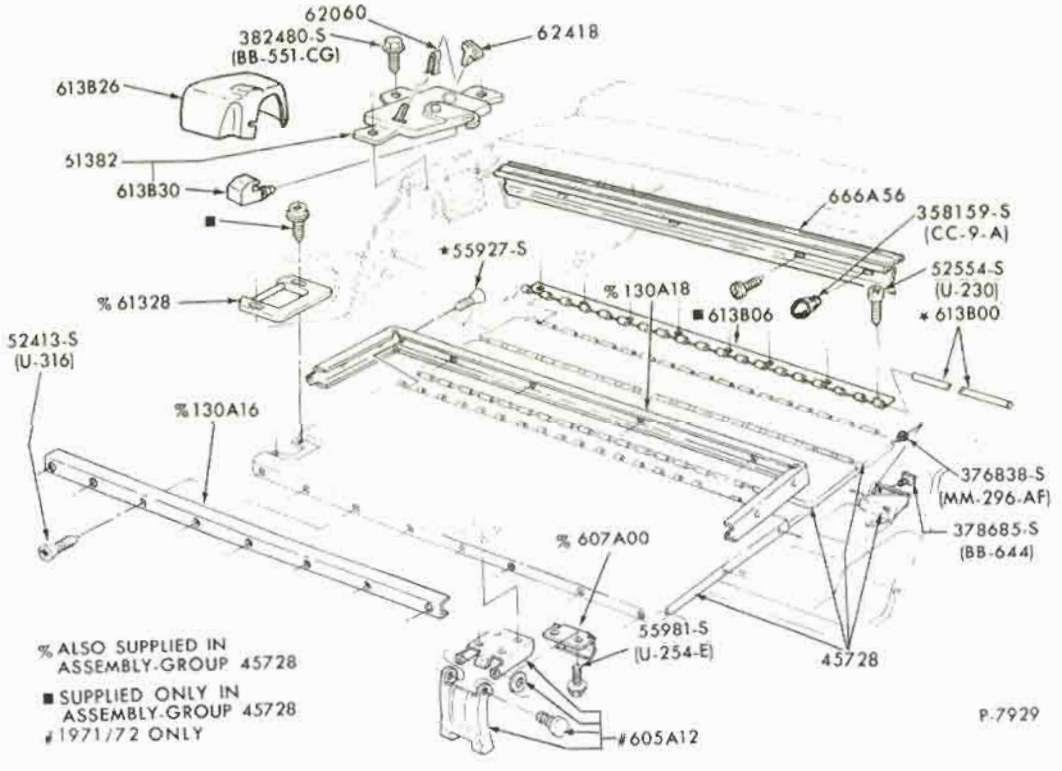

REAR SEAT and RELATED PARTS - FOLDING
1971/72 PINTO - BODY TYPE 62

COPYRIGHT © 1975 — FORD MOTOR COMPANY — DEARBORN, MICHIGAN

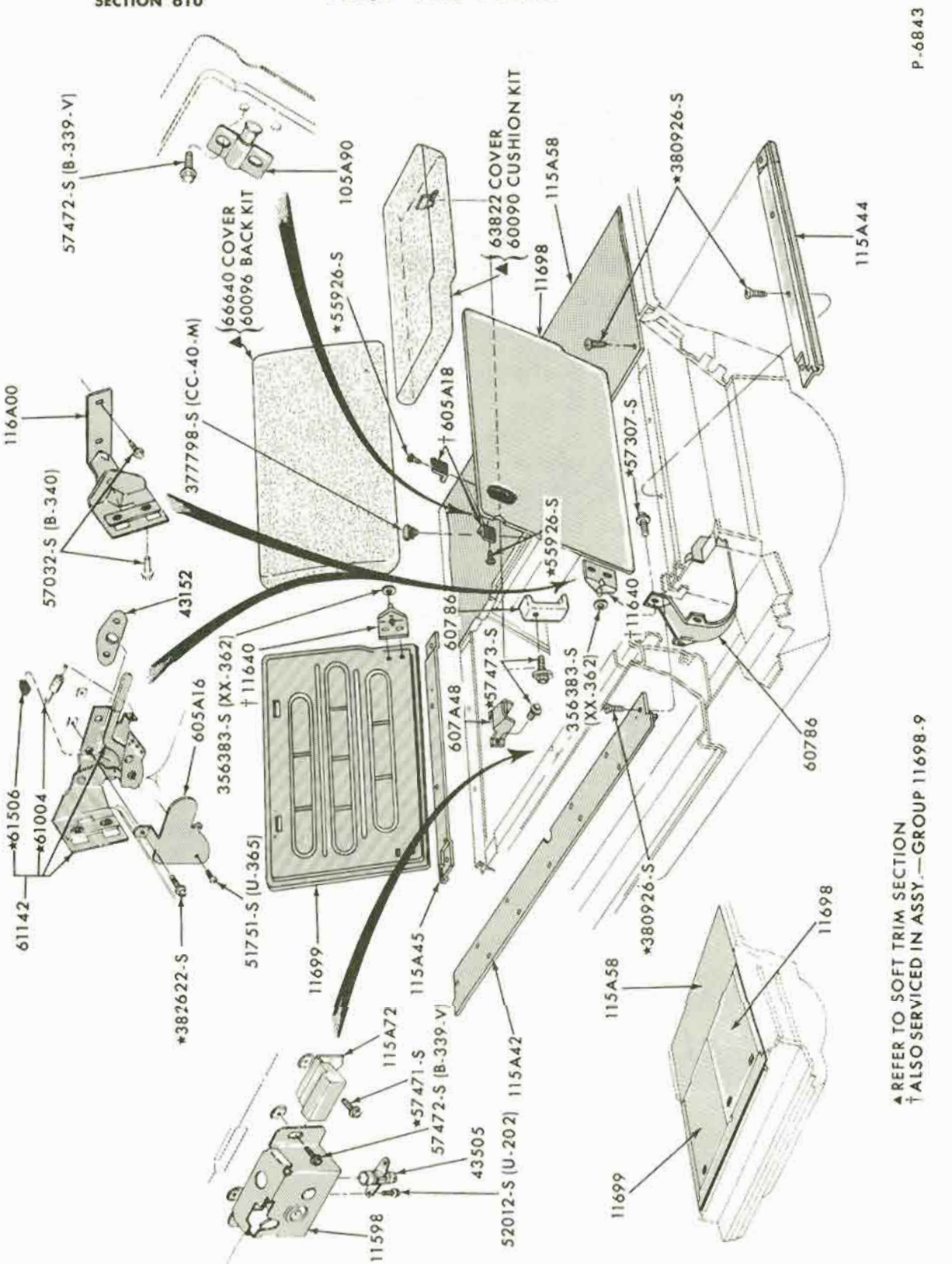

AUXILIARY SEAT, STORAGE COMPARTMENT and RELATED PARTS
1969/72 FORD - BODY TYPE 71

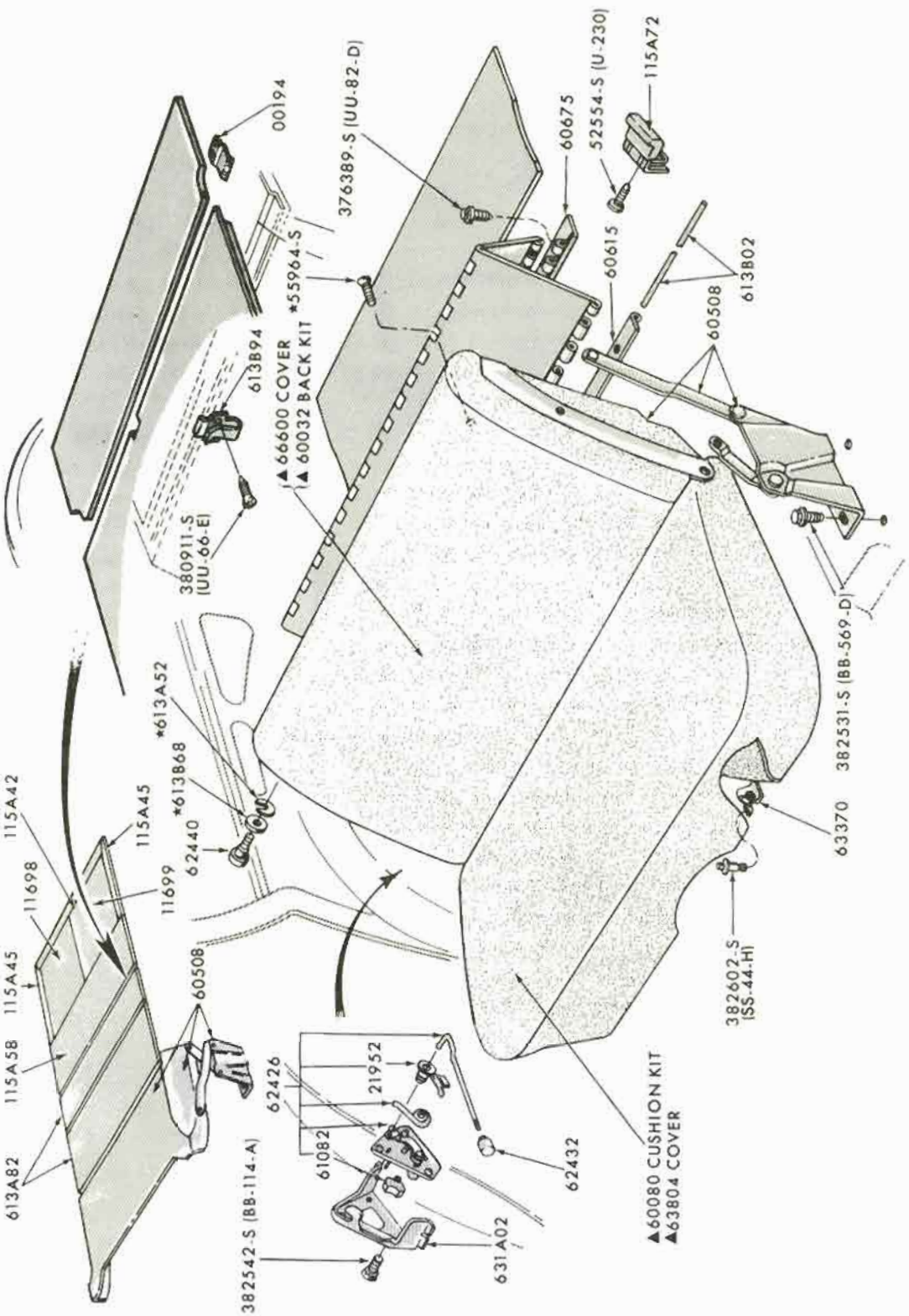

REAR SEAT, STORAGE COMPARTMENT and RELATED PARTS
1969/72 FORD - BODY TYPE 71

COPYRIGHT © 1975 — FORD MOTOR COMPANY — DEARBORN, MICHIGAN

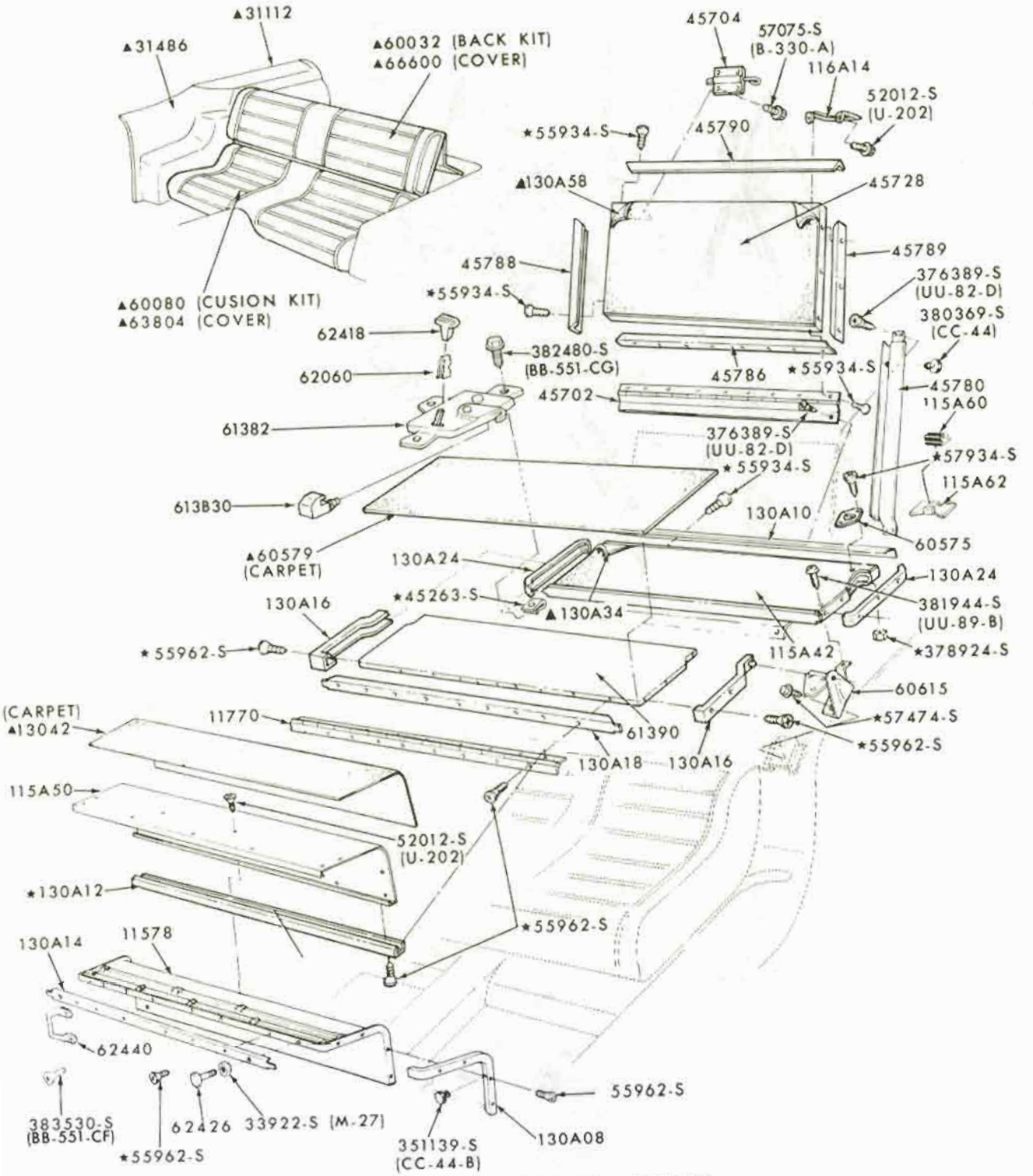

▲REFER TO GROUP IN SOFT TRIM SECTION

P-7848

REAR SEAT and RELATED PARTS - FOLDING
1971/72 MUSTANG - BODY TYPE 63

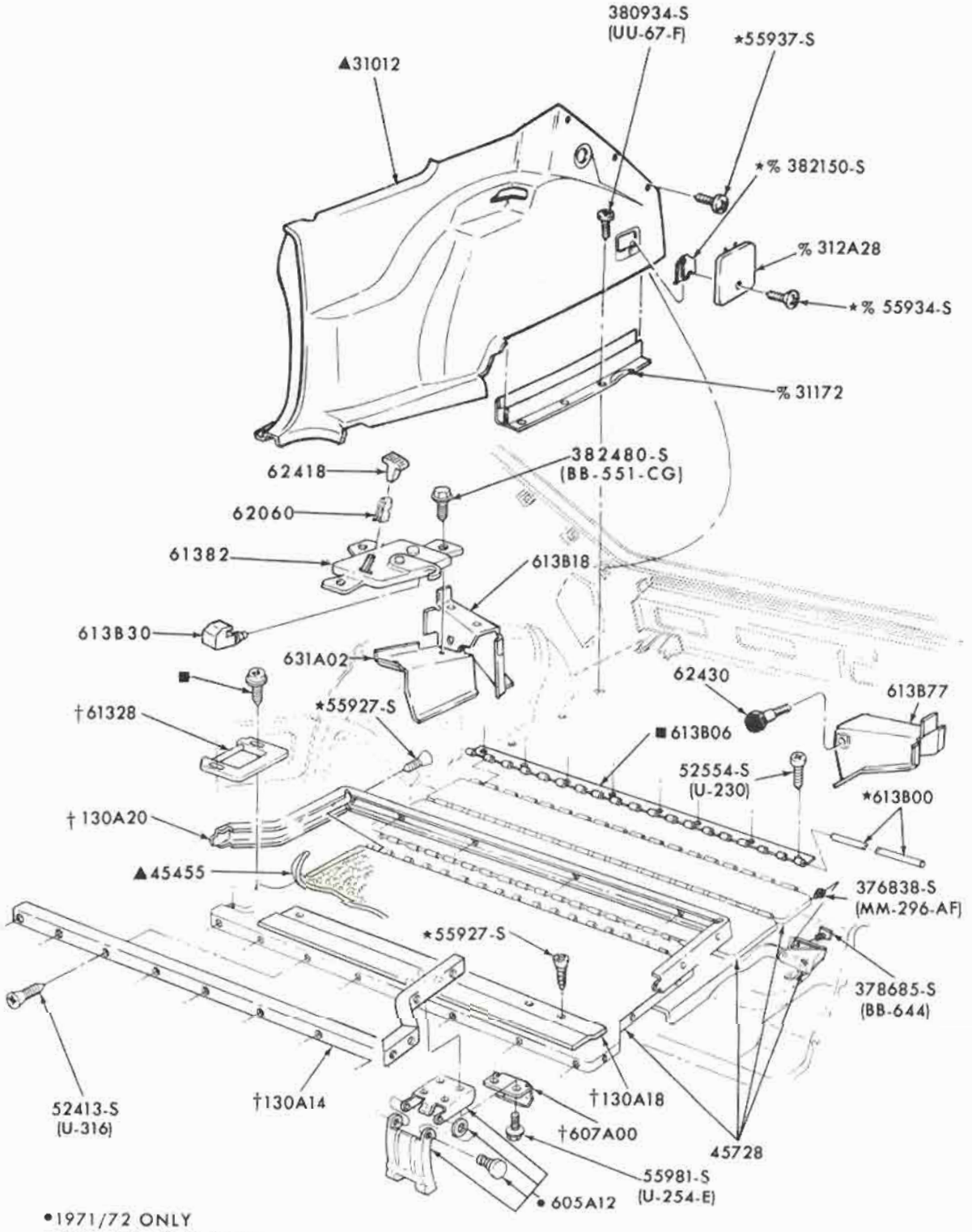

•1971/72 ONLY
■SERVICED ONLY IN ASSY. - GROUP 45728
† ALSO SERVICED IN ASSY.- GROUP 45728
▲REFER TO SOFT TRIM SECTION
% ALSO SERVICED IN ASSY.– GROUP 31012

P-8273

REAR SEAT and RELATED PARTS - FOLDING
1971/72 PINTO - BODY TYPE 64

COPYRIGHT © 1975 — FORD MOTOR COMPANY — DEARBORN, MICHIGAN

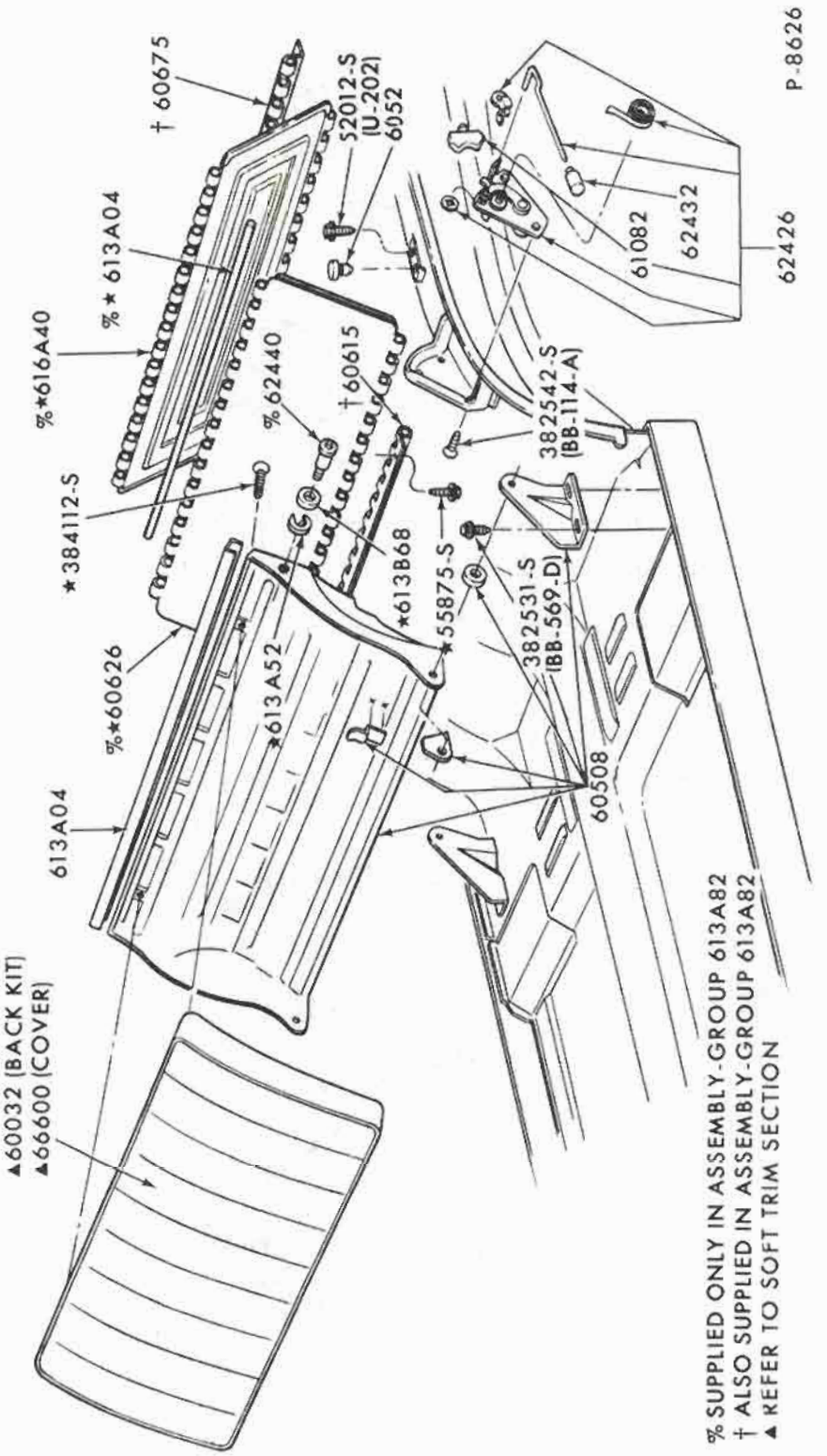

REAR SEAT and RELATED PARTS
1972 TORINO - BODY TYPE 71

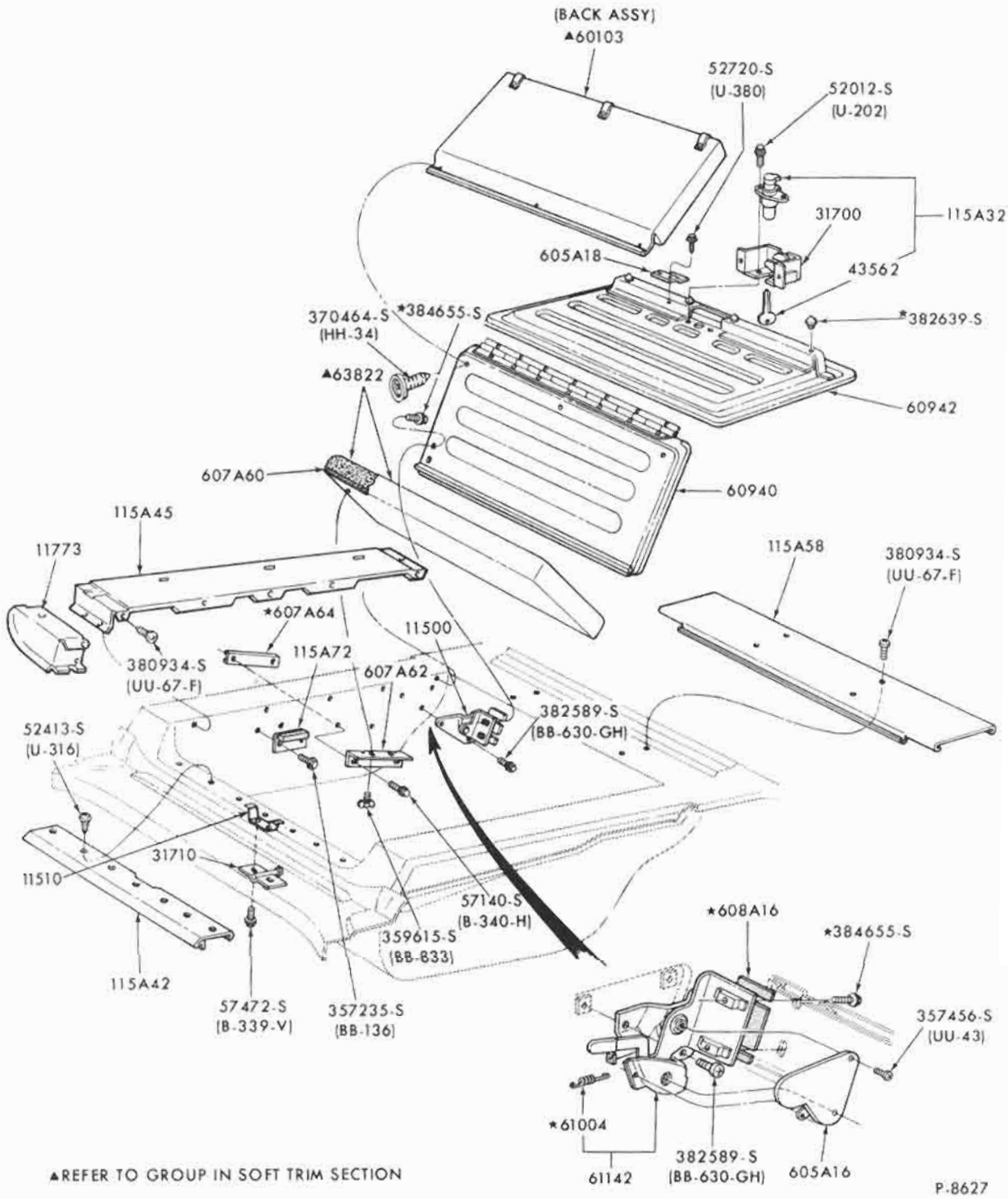

AUXILIARY SEAT, STORAGE COMPARTMENT and RELATED PARTS
1972 TORINO - BODY TYPE 71

COPYRIGHT © 1975 — FORD MOTOR COMPANY — DEARBORN, MICHIGAN

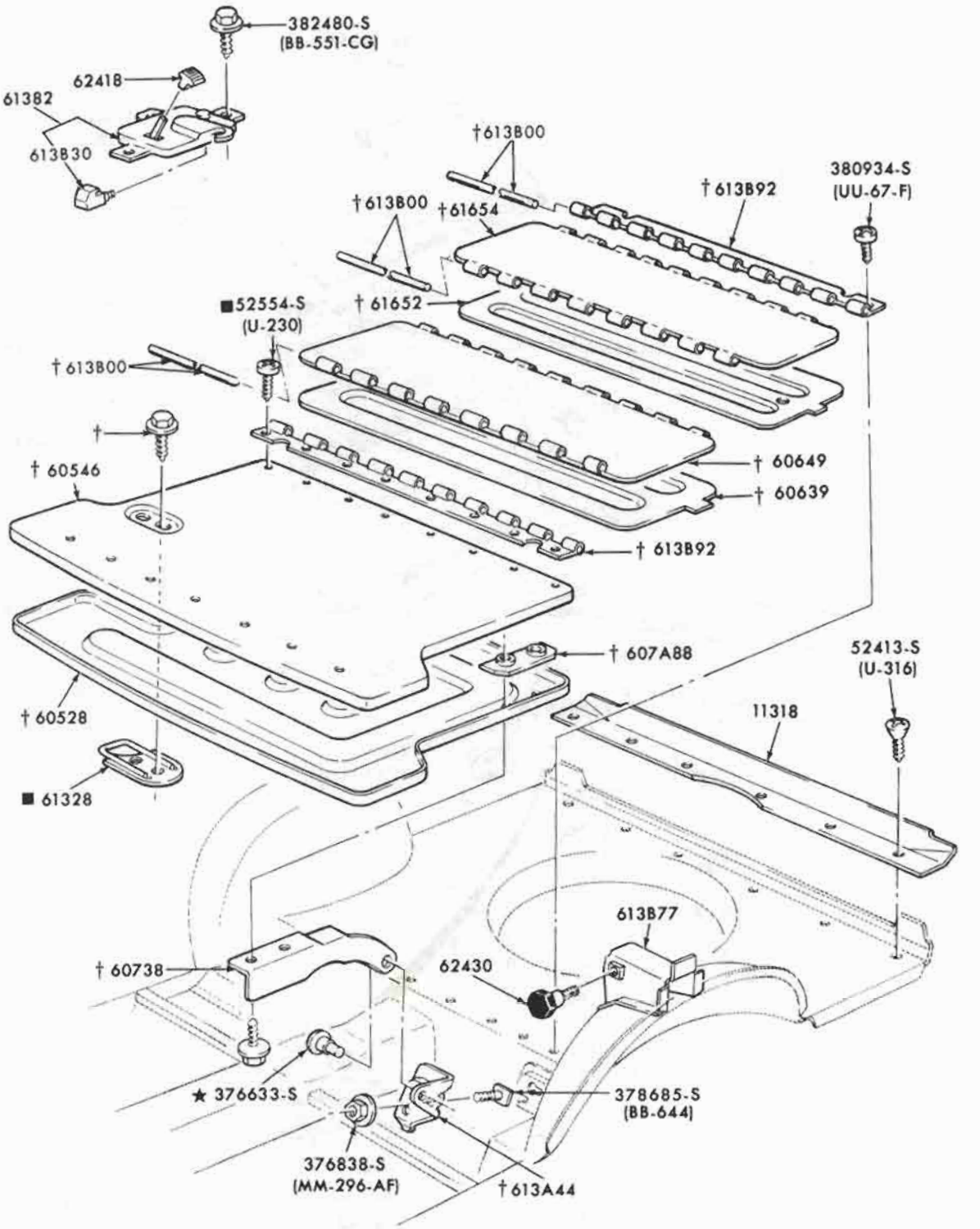

■ ALSO SERVICED IN ASSY-GROUP 60508
† SERVICED ONLY IN ASSY-GROUP 60508

P-8939

REAR SEAT and RELATED PARTS - FOLDING
1972 PINTO - BODY TYPE 73

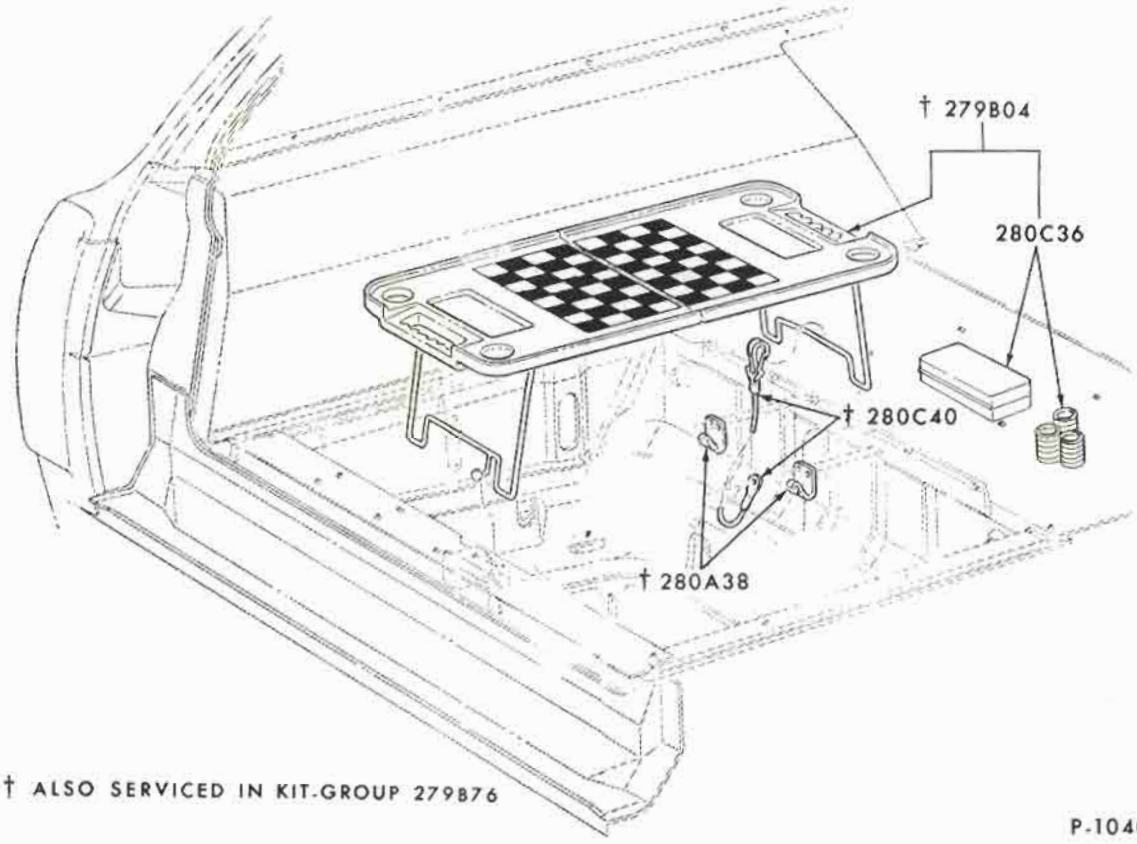

† ALSO SERVICED IN KIT-GROUP 279B76

P-10407

GAME and UTILITY TABLE
1969/ FORD BODY TYPE 71

COPYRIGHT © 1975 — FORD MOTOR COMPANY — DEARBORN, MICHIGAN

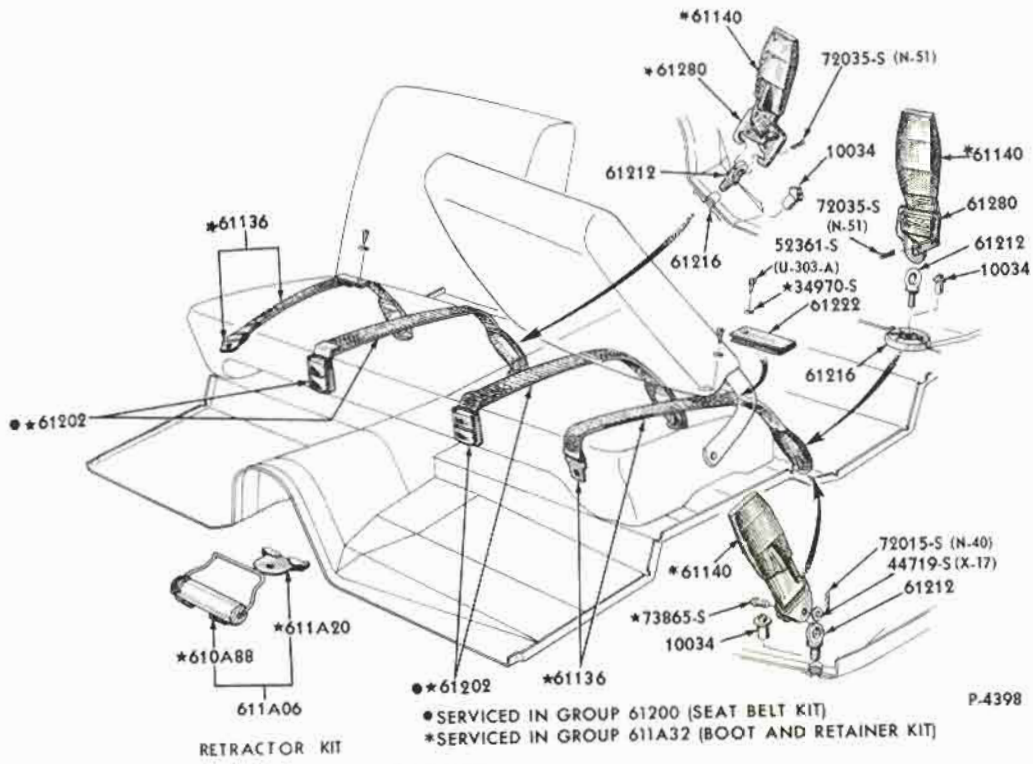

● SERVICED IN GROUP 61200 (SEAT BELT KIT)
*SERVICED IN GROUP 611A32 (BOOT AND RETAINER KIT)

SEAT BELT INSTALLATION
1965 FORD, FAIRLANE and FALCON - w/ FULL WIDTH SEAT

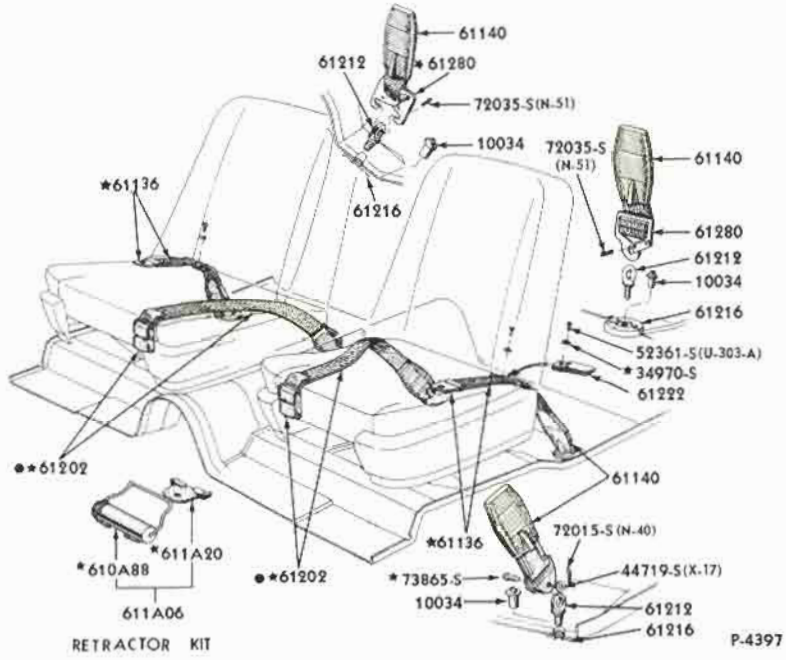

● SERVICED IN GROUP 61200 (SEAT BELT KIT)

SEAT BELT INSTALLATION
1965 FORD, FAIRLANE and FALCON - w/ BUCKET SEATS

COPYRIGHT © 1975 — FORD MOTOR COMPANY — DEARBORN, MICHIGAN

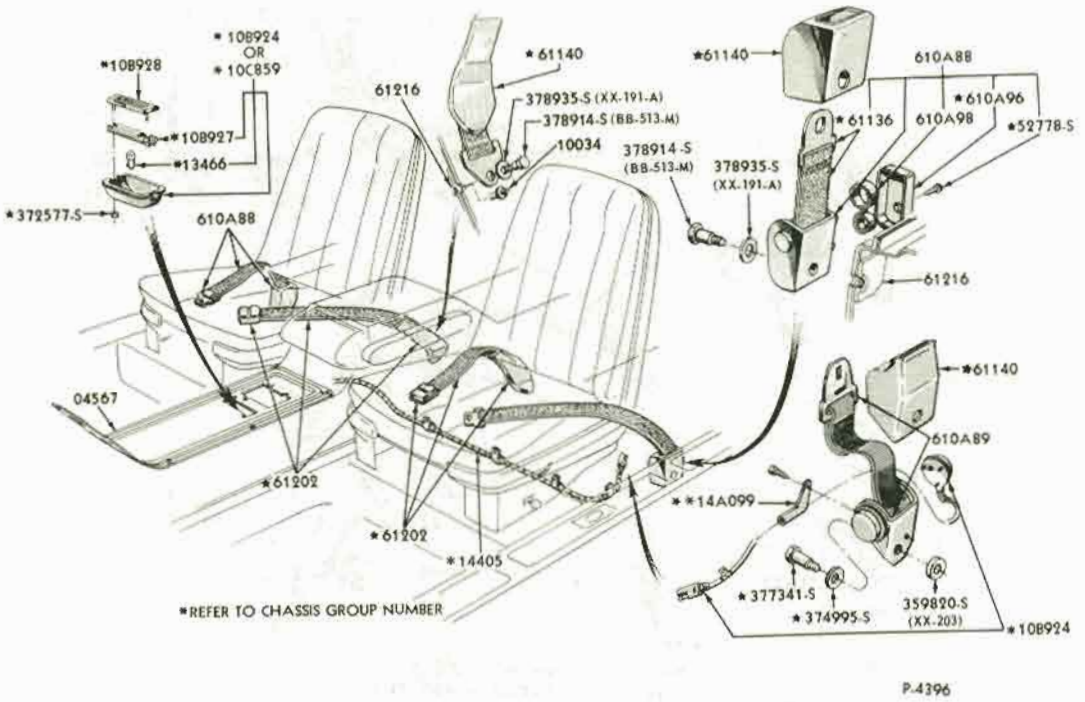

SEAT BELT INSTALLATION
1965 THUNDERBIRD

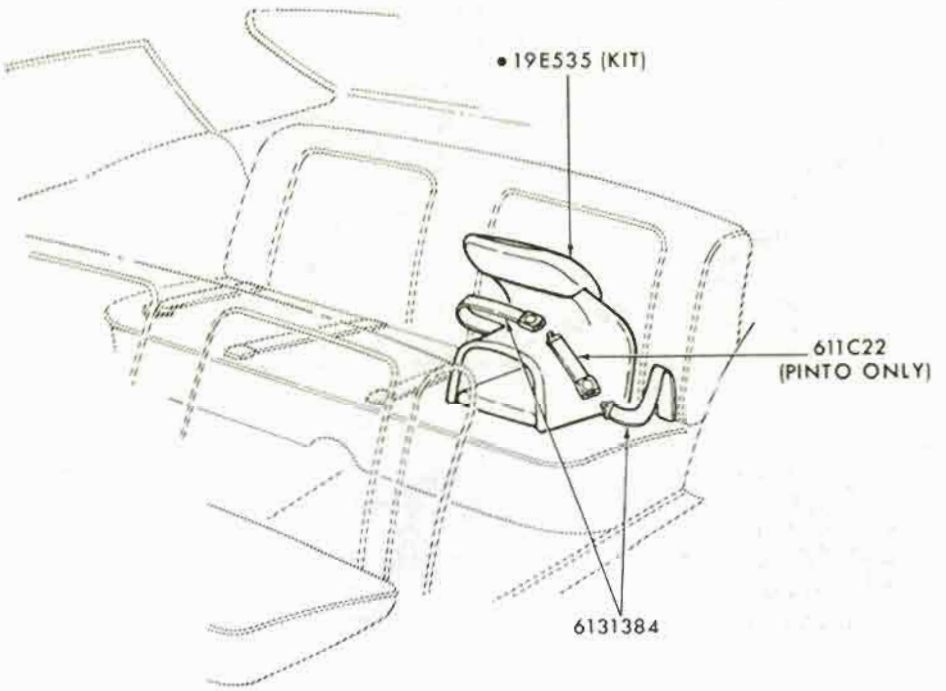

CHILD SAFETY SEAT
1965/72 ALL

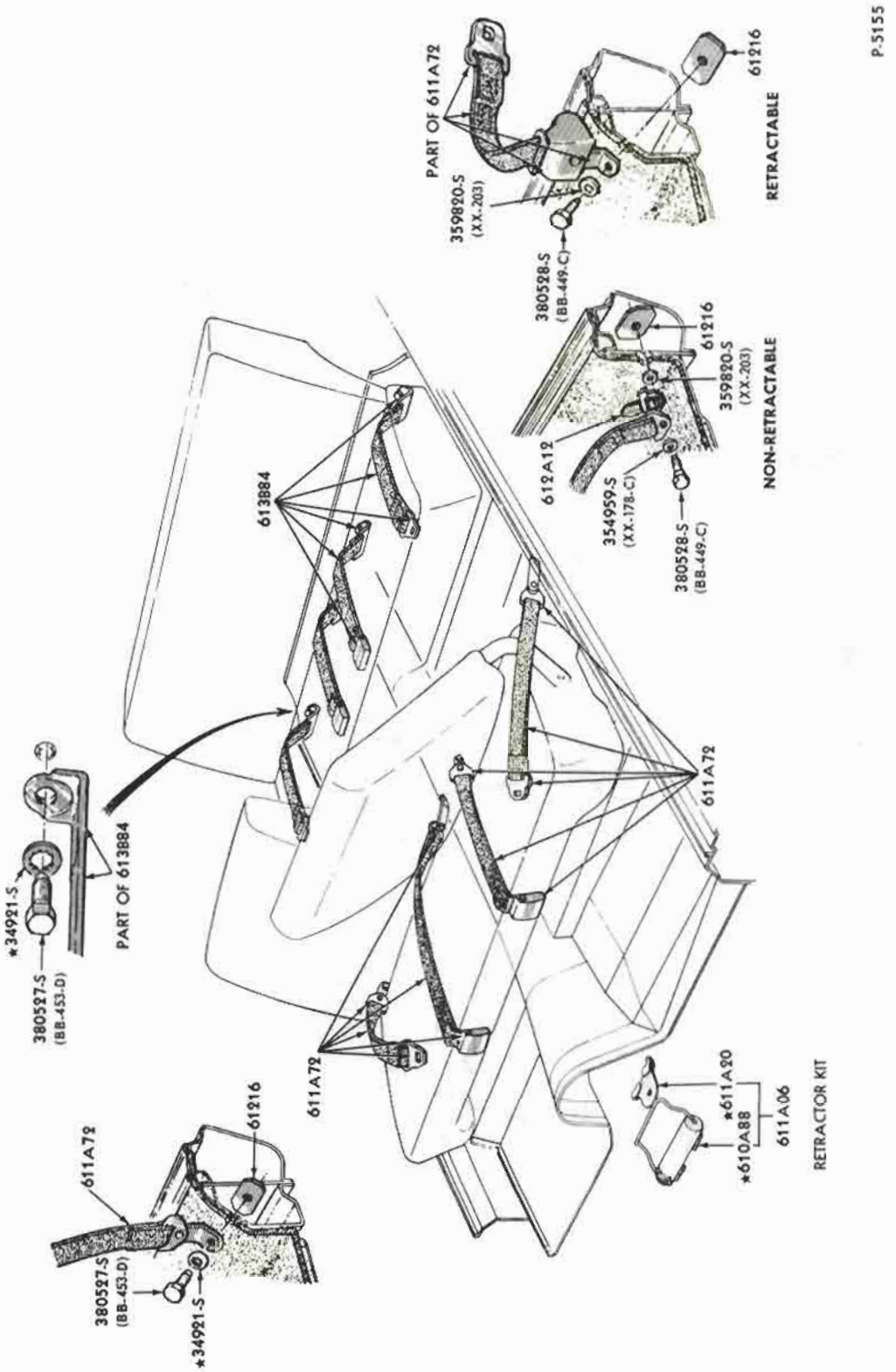

SEAT BELT INSTALLATION - FRONT and REAR

1966/69 FORD, FAIRLANE/TORINO, MUSTANG, BRONCO and FALCON - TYPICAL

COPYRIGHT © 1975 — FORD MOTOR COMPANY — DEARBORN, MICHIGAN

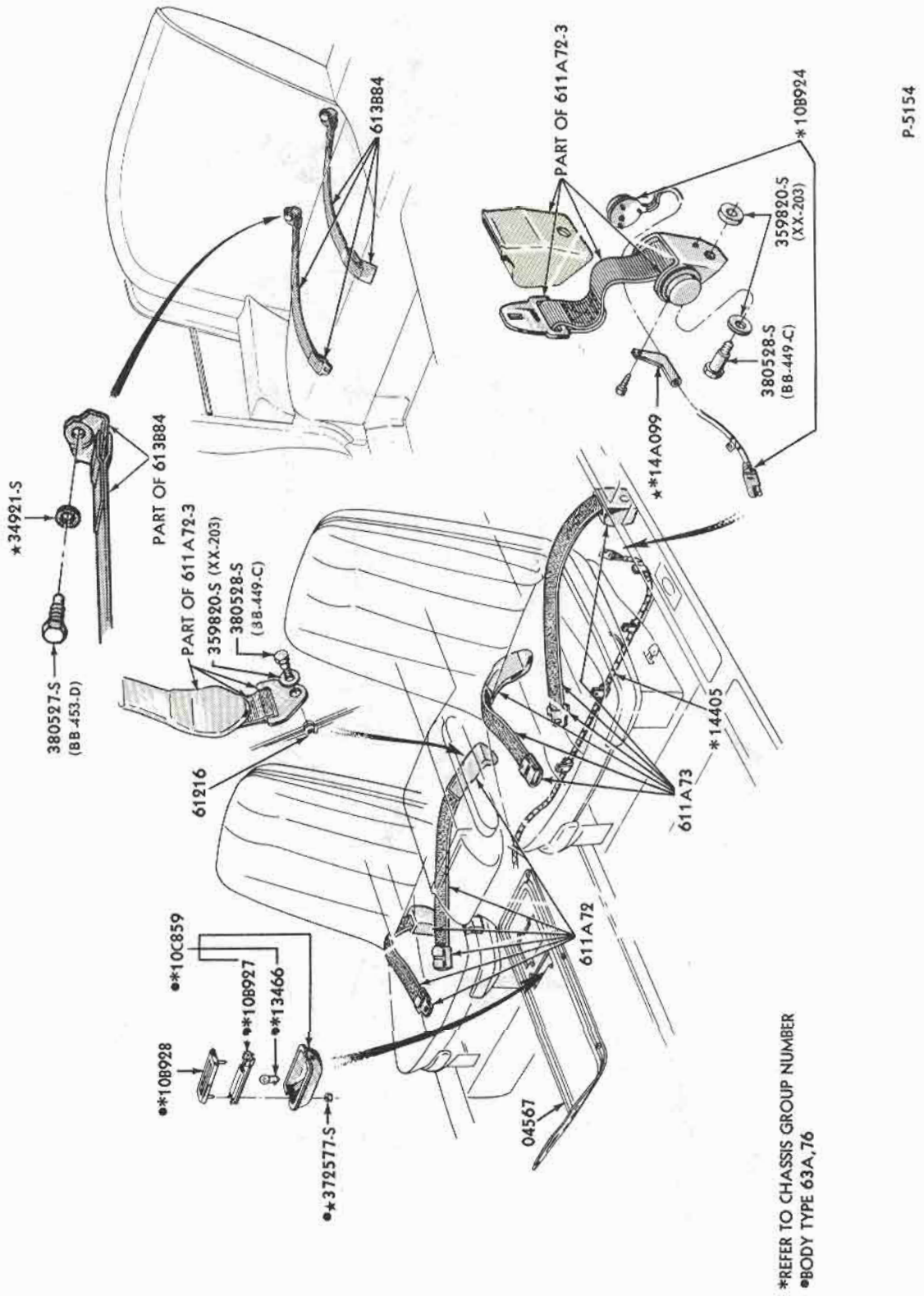

*REFER TO CHASSIS GROUP NUMBER
●BODY TYPE 63A,76

SEAT BELT INSTALLATION - FRONT and REAR
1966/67 THUNDERBIRD

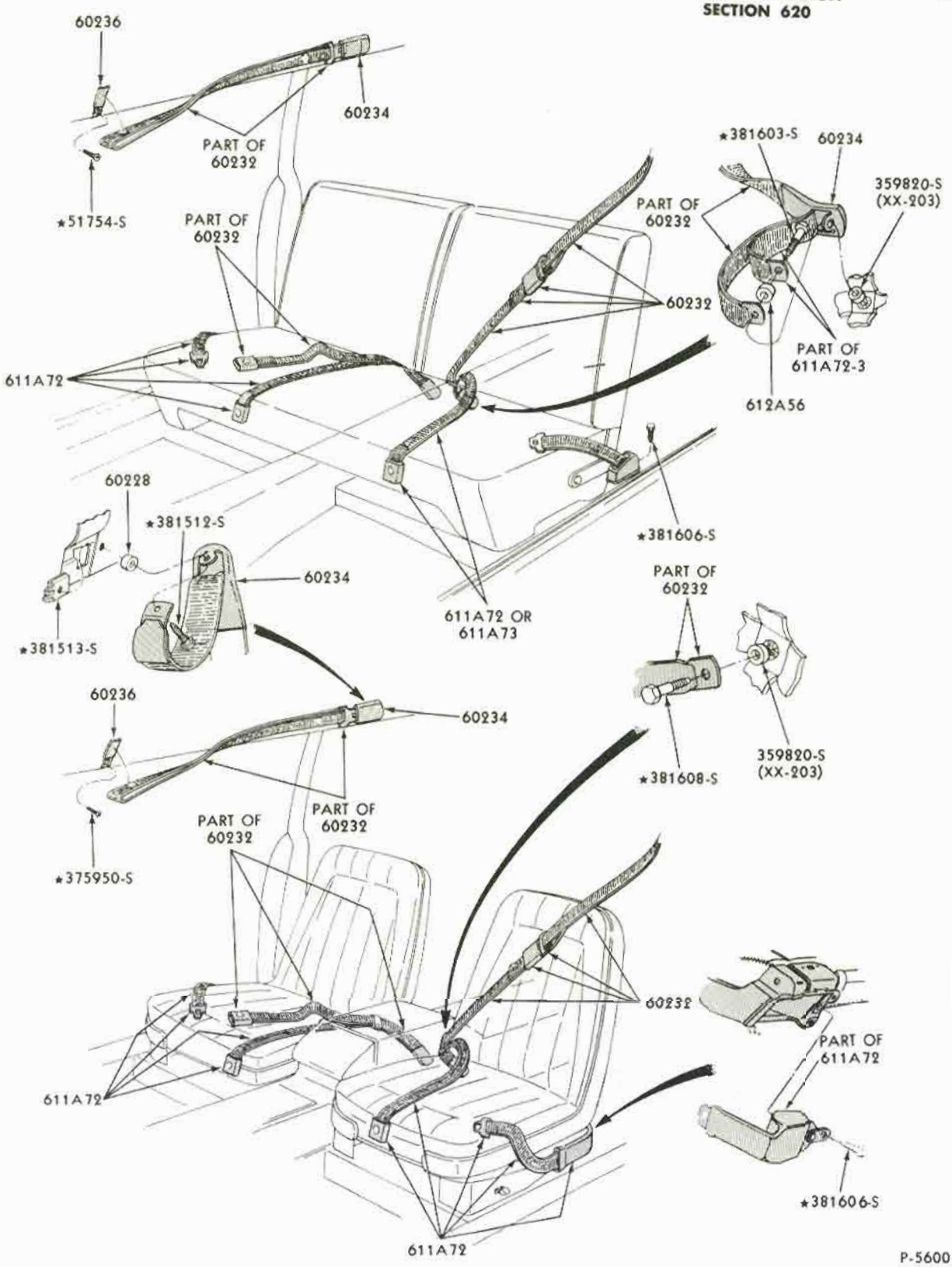

SHOULDER HARNESS INSTALLATION-FRONT SEAT
1967/69 ALL

COPYRIGHT © 1975 — FORD MOTOR COMPANY — DEARBORN, MICHIGAN

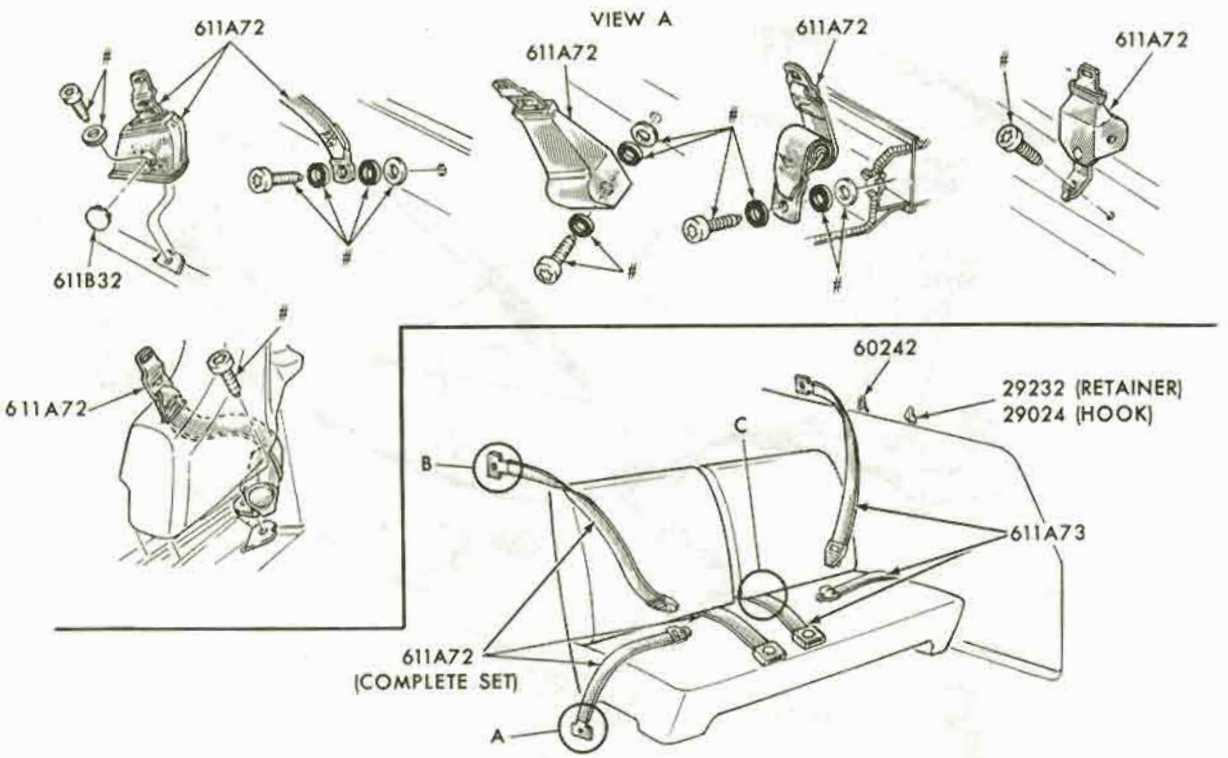

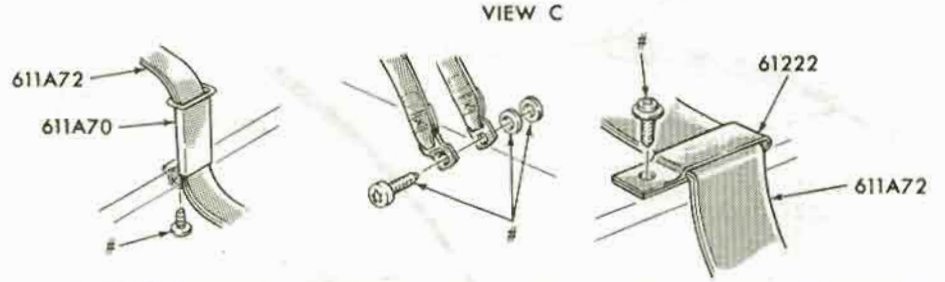

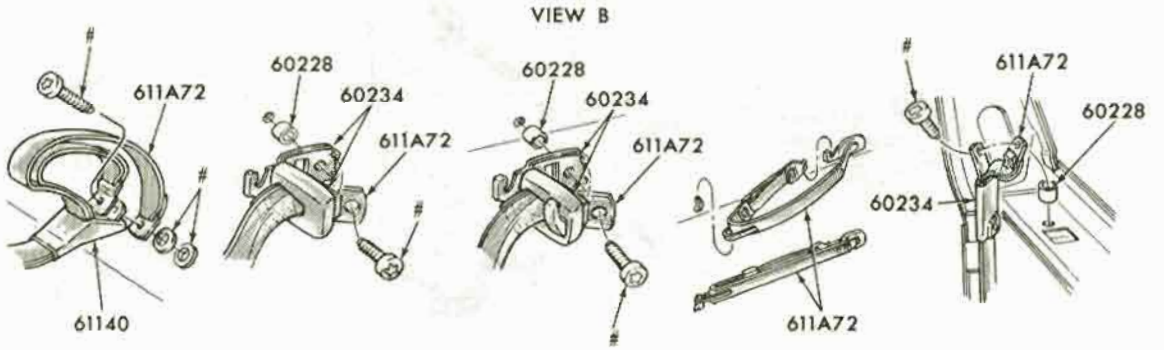

REFER TO SEAT BELT GROUP IN TEXT 611A72

P-7450

SEAT BELT and SHOULDER HARNESS INSTALLATION - FRONT SEAT
1970/71 ALL

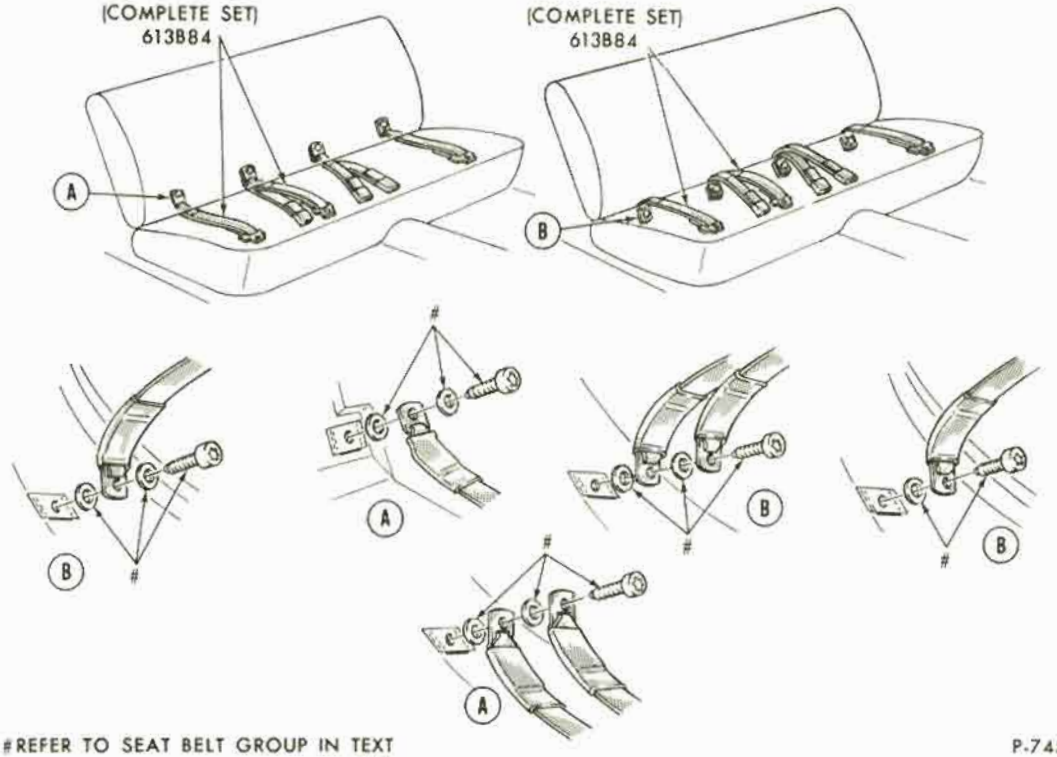

#REFER TO SEAT BELT GROUP IN TEXT

P-7451

SEAT BELT INSTALLATION - REAR SEAT
1970/71 ALL

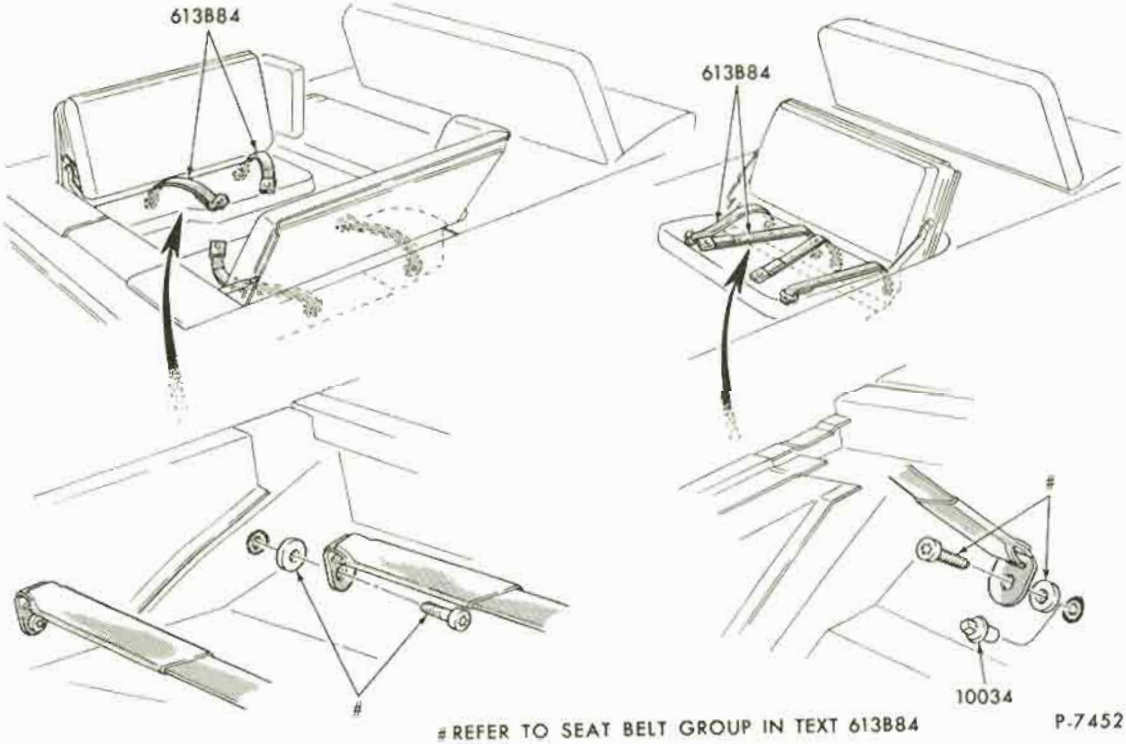

#REFER TO SEAT BELT GROUP IN TEXT 613B84

P-7452

SEAT BELT INSTALLATION - AUXILIARY SEAT
1970/71 FORD and FAIRLANE/TORINO - BODY TYPE 71

COPYRIGHT © 1975 — FORD MOTOR COMPANY — DEARBORN, MICHIGAN

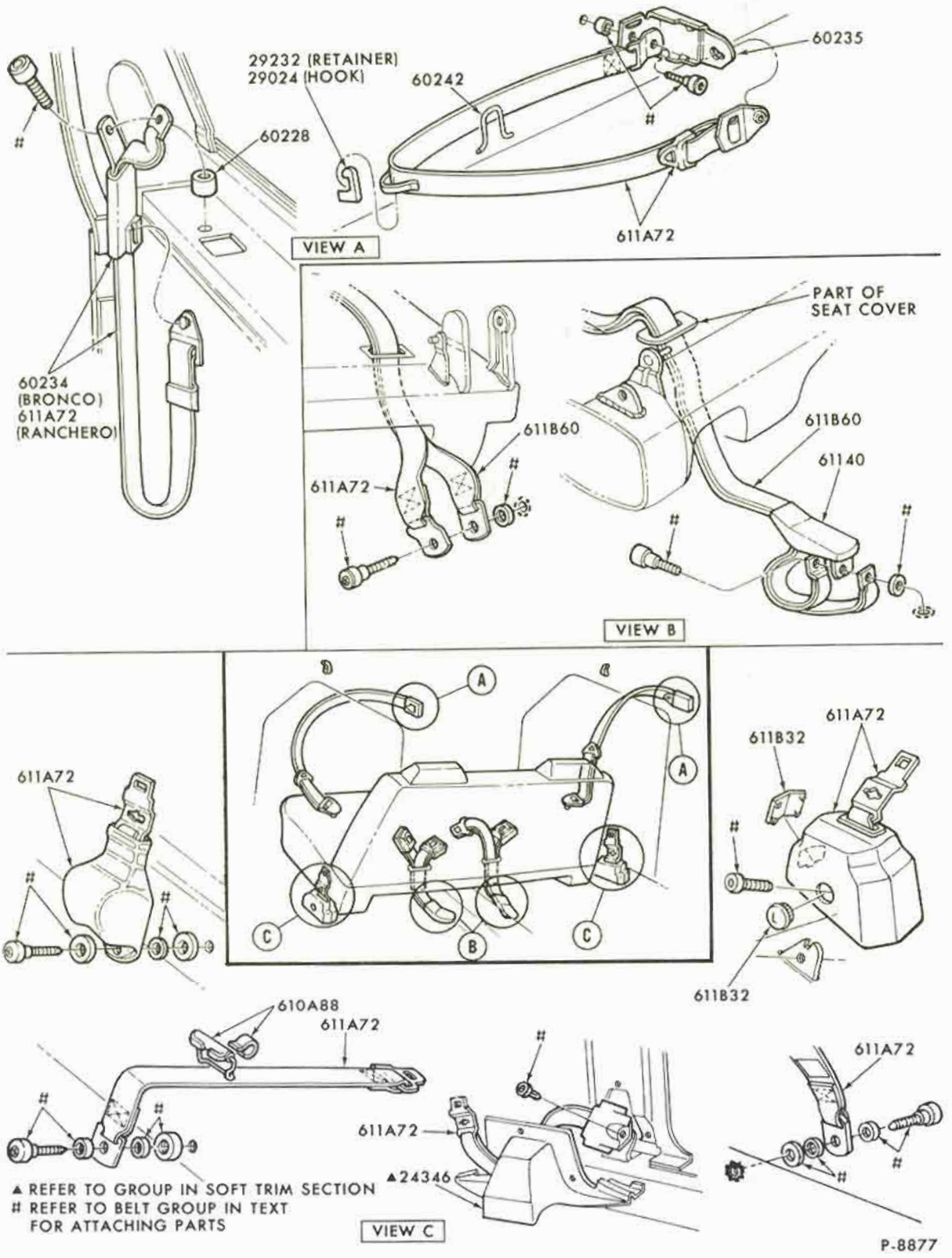

SEAT BELT and SHOULDER HARNESS INSTALLATION - FRONT SEAT
1972 ALL

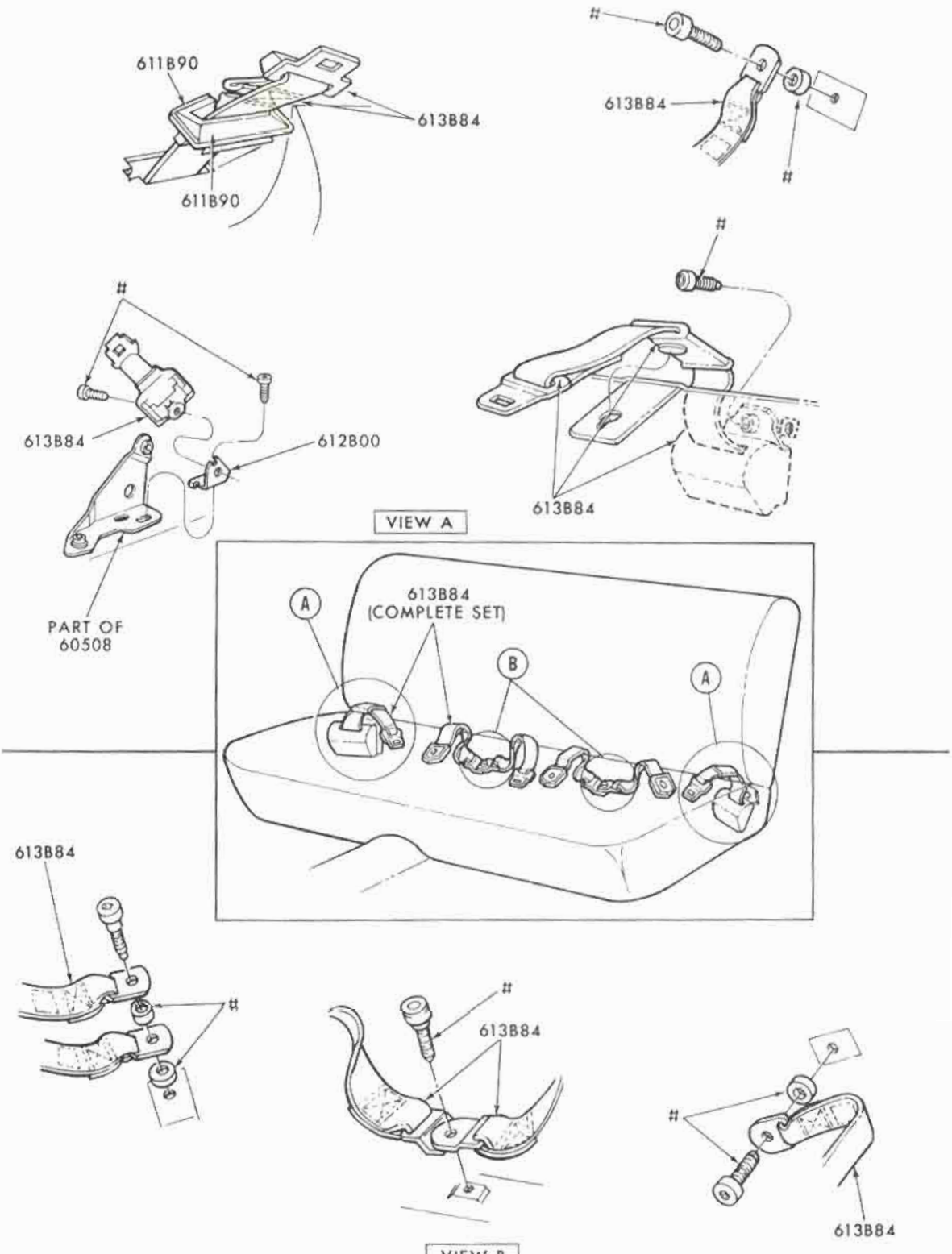

REFER TO SEAT BELT GROUP IN TEXT FOR ATTACHING PARTS

P-8878

SEAT BELT INSTALLATION - REAR SEAT
1972 ALL

COPYRIGHT © 1975 — FORD MOTOR COMPANY — DEARBORN, MICHIGAN

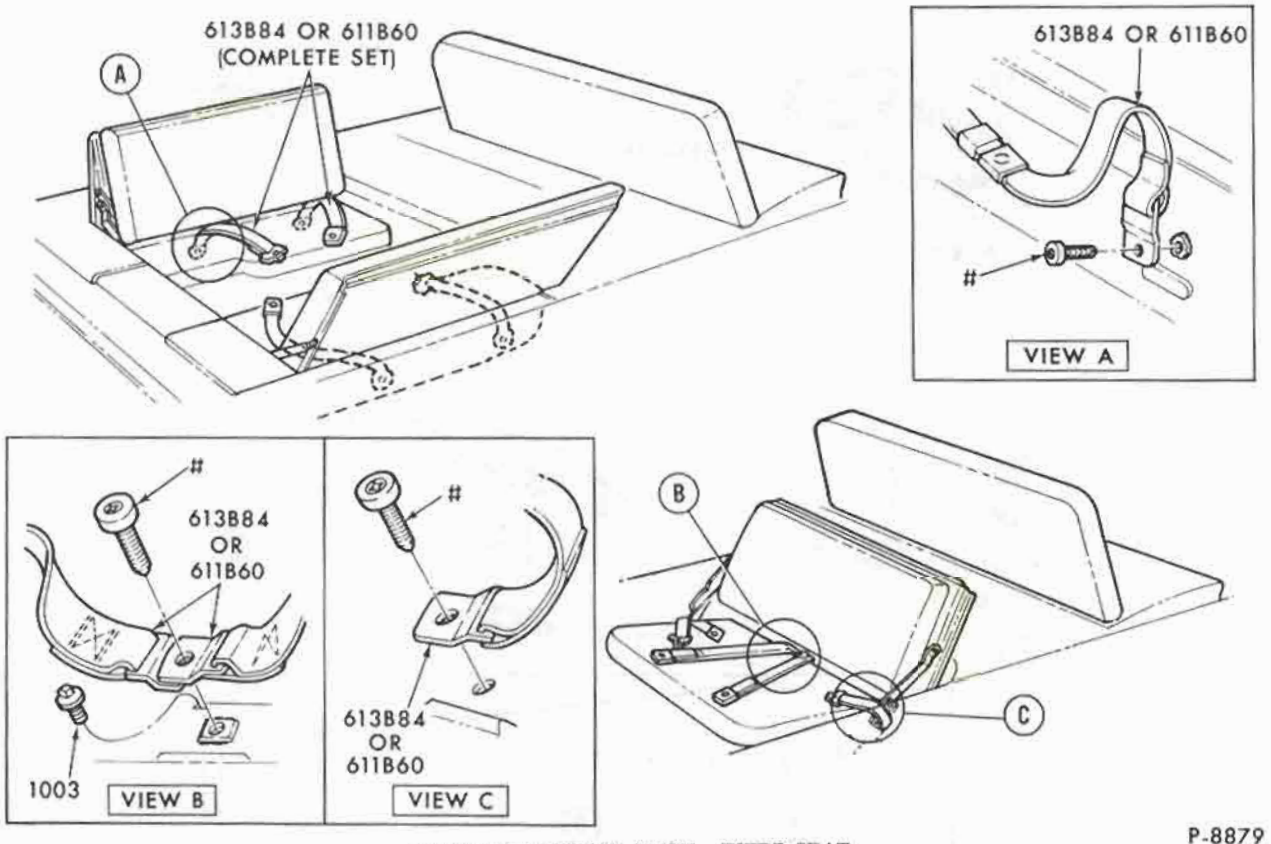

P-8879

SEAT BELT INSTALLATION - THIRD SEAT
1972 FORD and TORINO - BODY TYPE 71

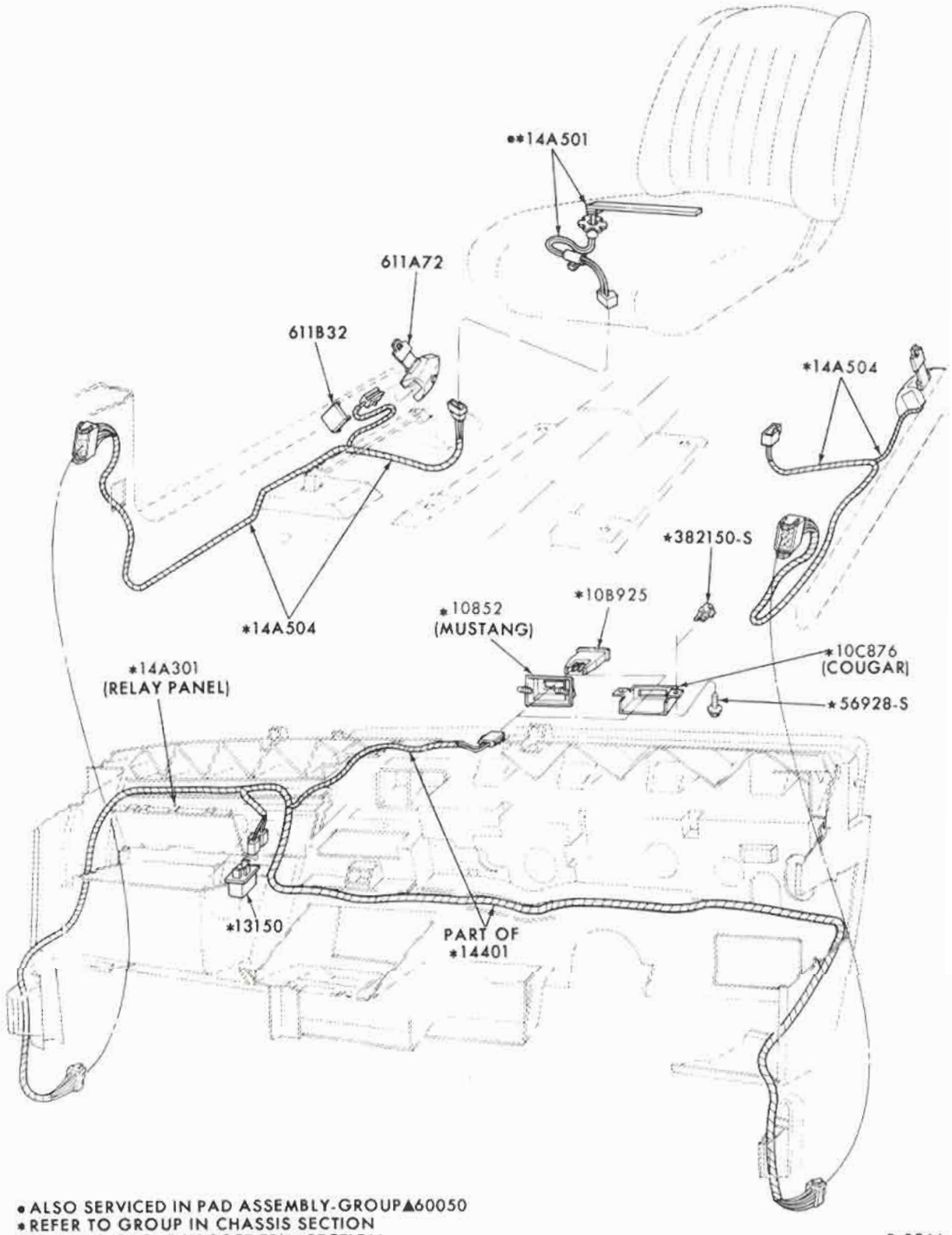

• ALSO SERVICED IN PAD ASSEMBLY-GROUP▲60050
* REFER TO GROUP IN CHASSIS SECTION
▲REFER TO GROUP IN SOFT TRIM SECTION

P-9266

SEAT BELT WARNING SYSTEM

1972 MUSTANG

COPYRIGHT © 1975 — FORD MOTOR COMPANY — DEARBORN, MICHIGAN

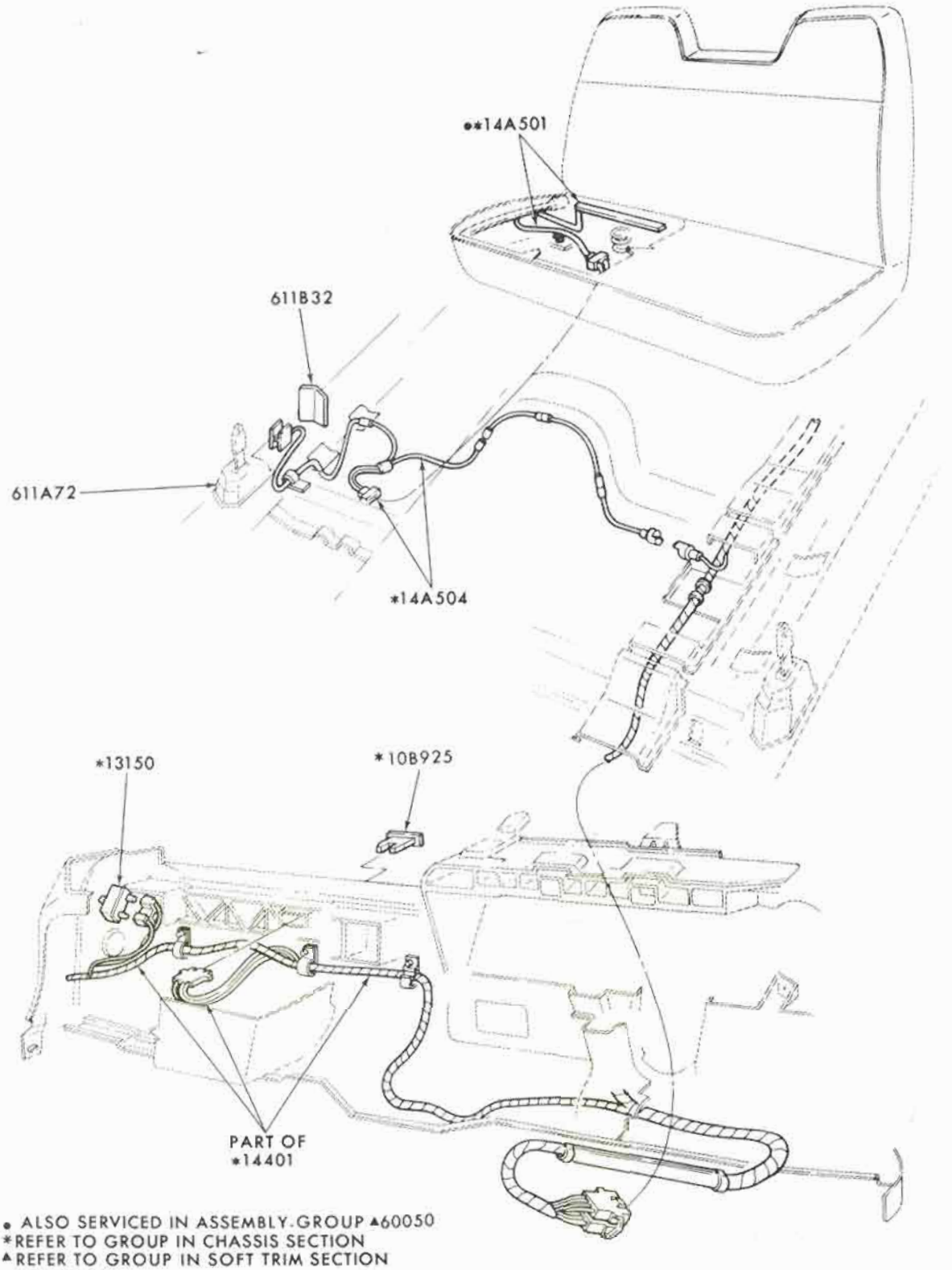

● ALSO SERVICED IN ASSEMBLY-GROUP ▲60050
*REFER TO GROUP IN CHASSIS SECTION
▲REFER TO GROUP IN SOFT TRIM SECTION

P-9259

SEAT BELT WARNING SYSTEM
1972 TORINO

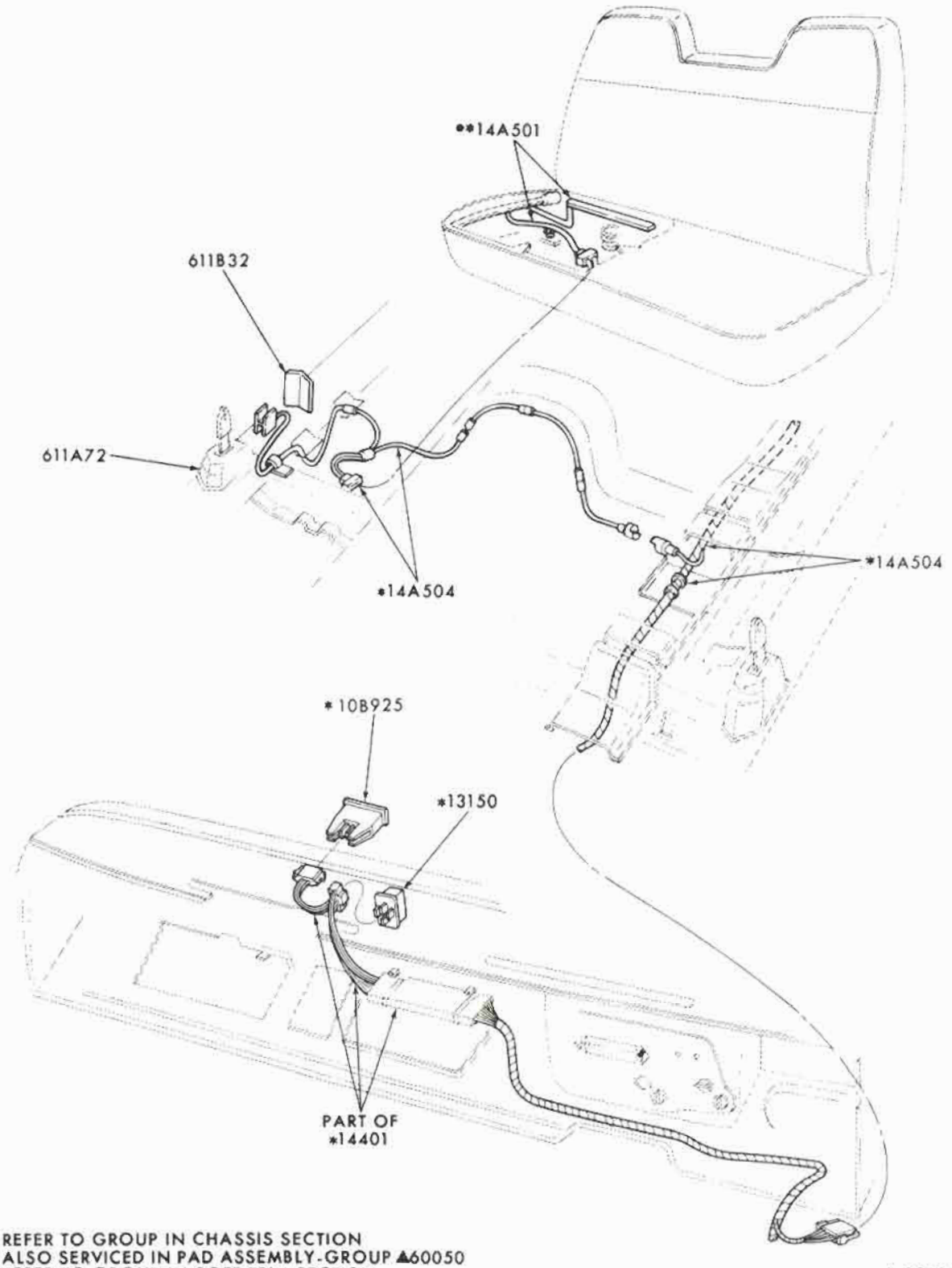

* REFER TO GROUP IN CHASSIS SECTION
• ALSO SERVICED IN PAD ASSEMBLY-GROUP ▲60050
▲ REFER TO GROUP IN SOFT TRIM SECTION

P-9262

SEAT BELT WARNING SYSTEM

1972 PINTO

COPYRIGHT © 1975 — FORD MOTOR COMPANY — DEARBORN, MICHIGAN

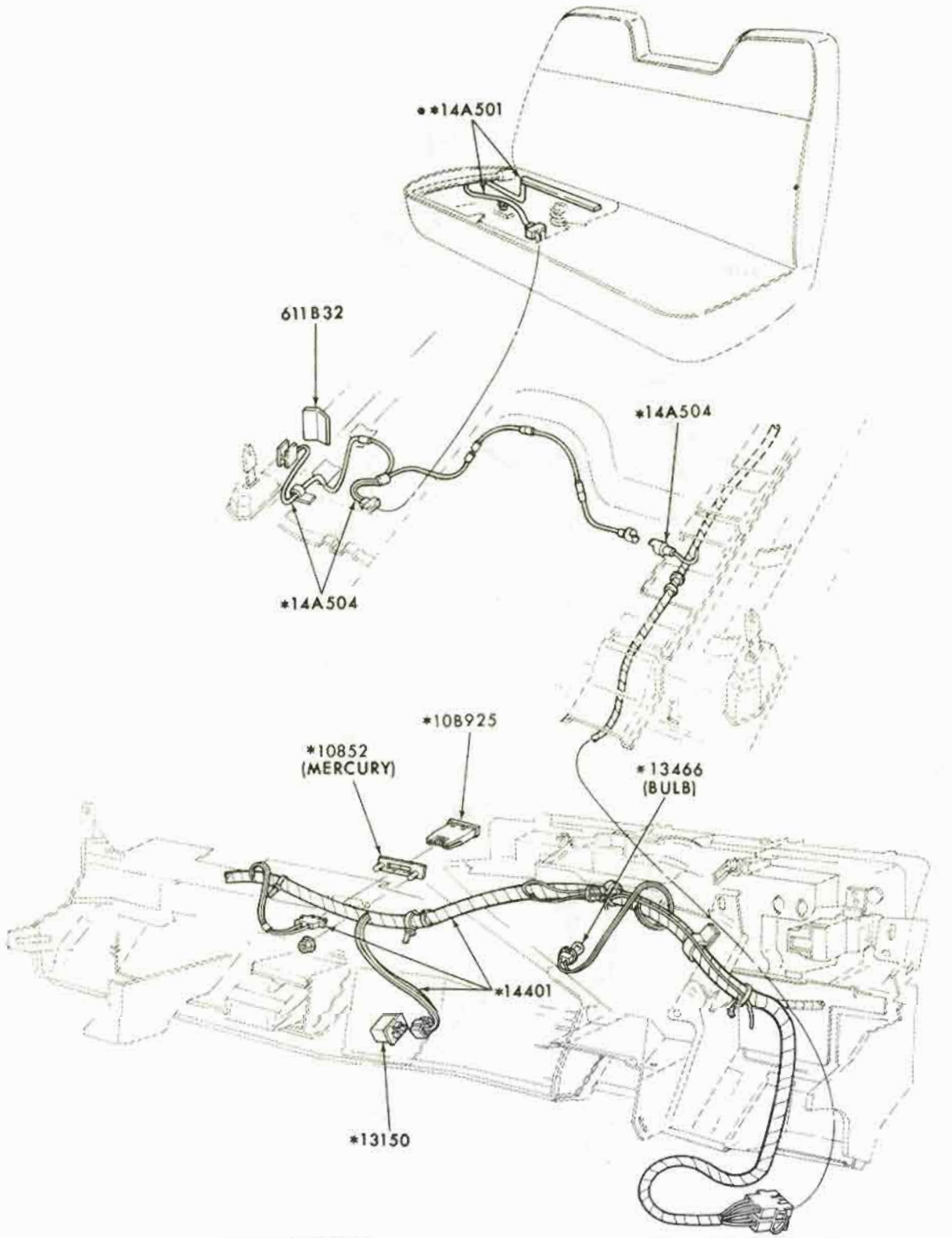

• ALSO SERVICED IN PAD-GROUP▲60050
* REFER TO GROUP IN CHASSIS SECTION
▲REFER TO GROUP IN SOFT TRIM SECTION

P-9260

SEAT BELT WARNING SYSTEM
1972 FORD

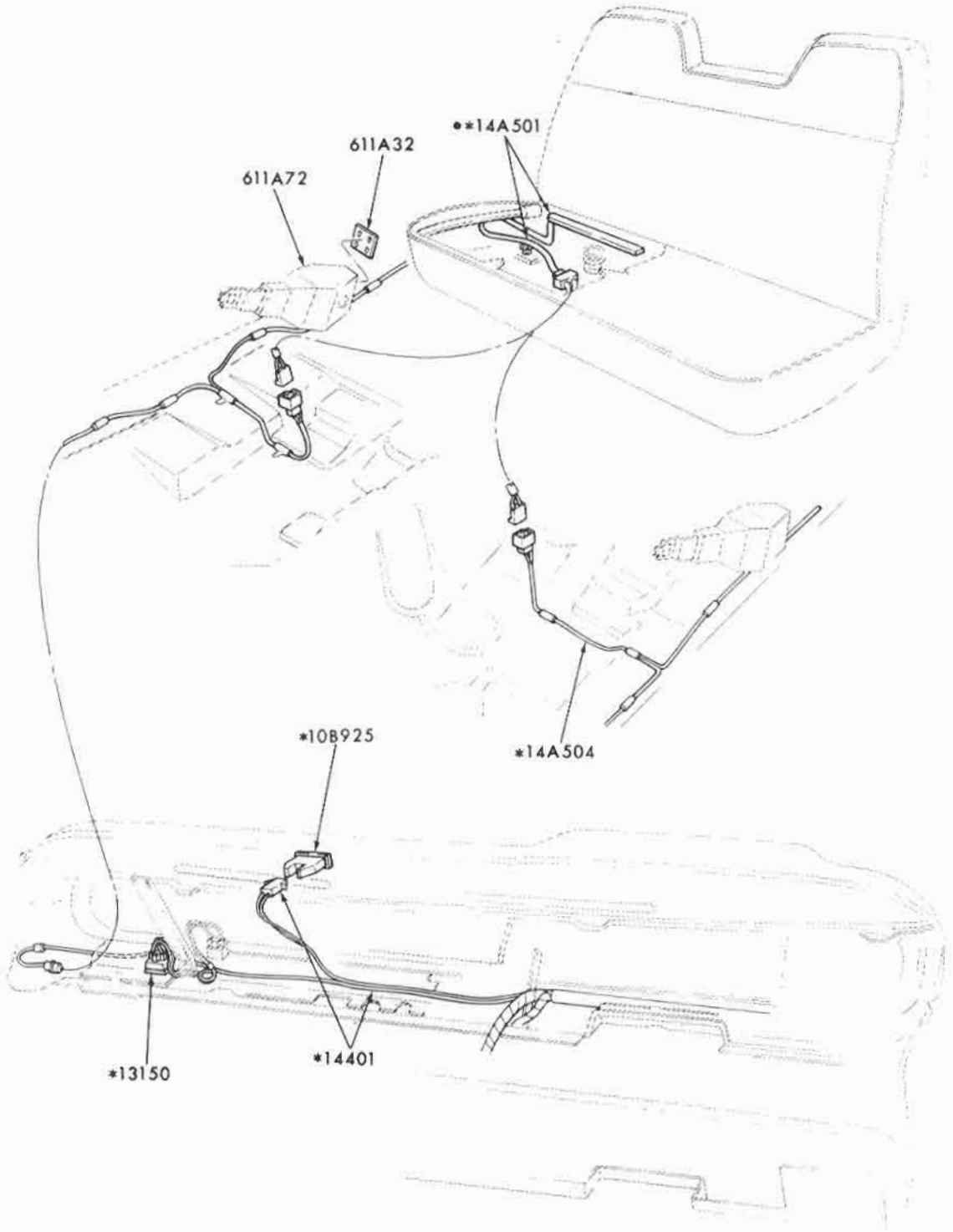

•ALSO SERVICED IN PAD-GROUP 60050
*REFER TO GROUP IN CHASSIS SECTION
▲REFER TO GROUP IN SOFT TRIM SECTION

P-9261

SEAT BELT WARNING SYSTEM
1972 MAVERICK

COPYRIGHT © 1975 — FORD MOTOR COMPANY — DEARBORN, MICHIGAN

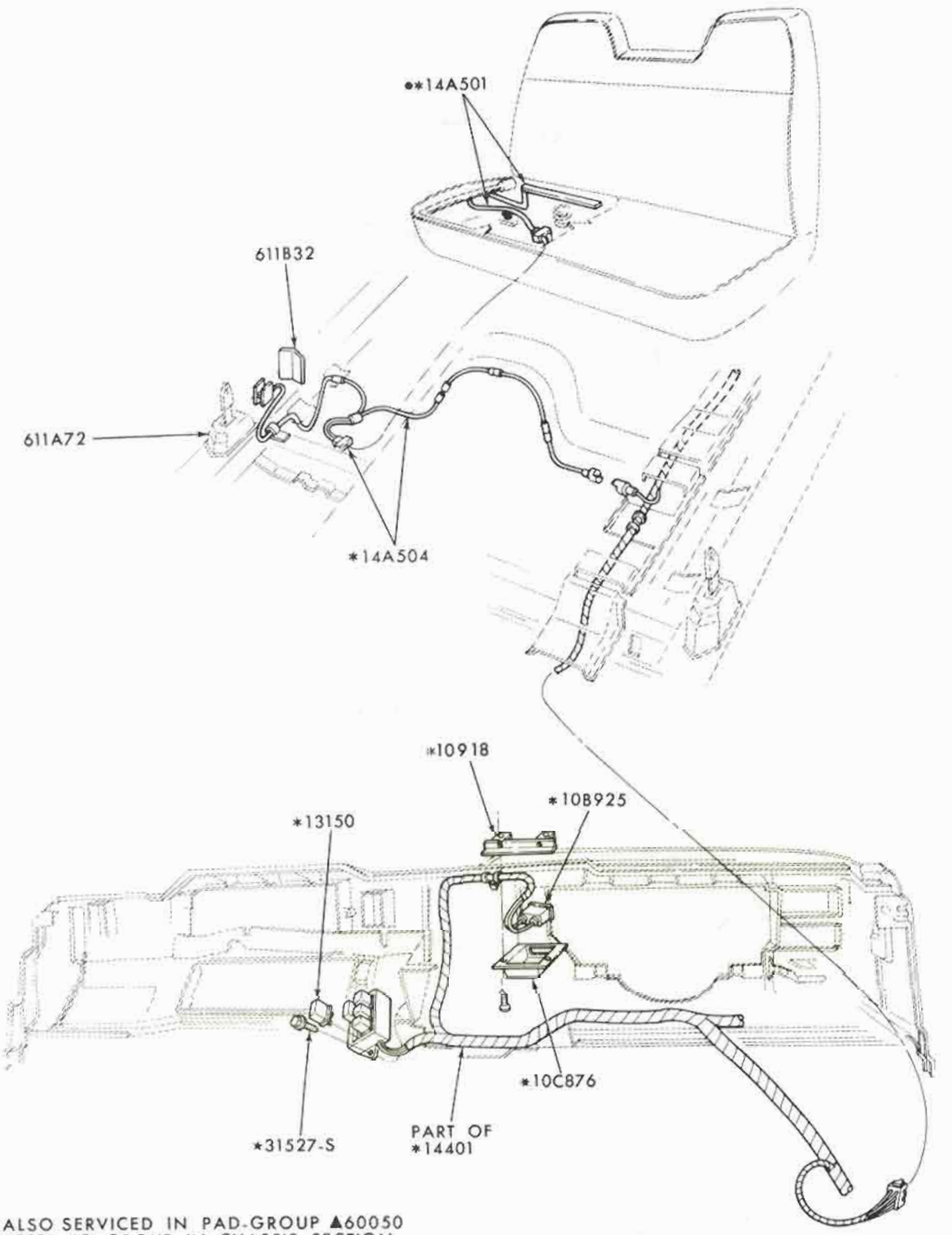

•ALSO SERVICED IN PAD-GROUP ▲60050
*REFER TO GROUP IN CHASSIS SECTION
▲REFER TO GROUP IN SOFT TRIM SECTION

P-9264

SEAT BELT WARNING SYSTEM
1972 THUNDERBIRD

INDEX

SHEET METAL

TITLE	SECTION	PAGE	ILLUS. NO.

1965

A (FORD)

54	A	1	P-4626
57	A	2	P-4627
62	A	3	P-4628
63	A	4	P-4629
71	A	5	P-4630
76	A	6	P-4631

B (FAIRLANE)

71 - under body	B	5	P-4639
54, 62, 65 - under body	B	1	P-4638
54 - upper body	B	2	P-4634
62 - upper body	B	3	P-4635
65 - upper body	B	4	P-4636
71 - upper body	B	6	P-4637

F (MUSTANG)

63, 65 - under body	F	1	P-4486
76 - under body	F	4	P-4487
65 - upper body	F	3	P-4488
76 - upper body	F	5	P-4489
63 - upper body	F	2	P-4640

S (THUNDERBIRD)

63 - under body	S	1	P-4642
76 - under body	S	4	P-4644
63 - upper body	S	2	P-4641
76 - upper body	S	5	P-4643

X (FALCON)

54, 59, 62, 63, 66, 71, 78 - under body	X	1	P-4653
76 - under body	X	9	P-4654
54 - upper body	X	2	P-4645
59 - upper body	X	3	P-4646
62 - upper body	X	4	P-4647
63 - upper body	X	5	P-4648
66 - upper body	X	6	P-4317
71 - upper body	X	7	P-4650
76 - upper body	X	10	P-4651
78 - upper body	X	8	P-4325

1966

A (FORD)

54	A	7	P-5032
57	A	8	P-5033
62	A	9	P-5034
63	A	10	P-5035
71	A	11	P-5036
76	A	12	P-5037

B (FAIRLANE)

54, 62, 63 - under body	B	7	P-5023
71 - under body	B	13	P-5024
76 - under body	B	15	P-5025
54 - upper body	B	8	P-5018
62 - upper body	B	9	P-5019
63 - upper body	B	10	P-5020
71 - upper body	B	14	P-5021
76 - upper body	B	16	P-5022

F (MUSTANG)

63, 65 - under body	F	1	P-4486
76 - under body	F	4	P-4487
65 - upper body	F	3	P-4488
76 - upper body	F	5	P-4489
63 - upper body	F	2	P-4640

S (THUNDERBIRD)

63 - under body	S	1	P-4642
76 - under body	S	4	P-4644
63A, B - upper body	S	2	P-4641
63C, D - upper body	S	3	P-5017
76 - upper body	S	5	P-4643

U (BRONCO)

96, 97, 98	U	1	P-4963
97 - roof	U	2	P-4969
98 - roof	U	2	P-4968

X (FALCON)

54, 62 - under body	X	11	P-5142
66 - under body	X	14	P-5031
71 - under body	X	16	P-5148
54 - upper body	X	12	P-5026
62 - upper body	X	13	P-5027
66 - upper body	X	15	P-5028
71 - upper body	X	17	P-5141

COPYRIGHT © 1975 — FORD MOTOR COMPANY — DEARBORN, MICHIGAN

INDEX

SHEET METAL - continued

1967

A (FORD)

TITLE	SECTION	PAGE	ILLUS. NO.
54	A	13	P-5486
57	A	14	P-5487
62	A	15	P-5488
63	A	16	P-5489
71	A	17	P-5490
76	A	18	P-5491

B (FAIRLANE)

TITLE	SECTION	PAGE	ILLUS. NO.
54, 62, 63 - under body	B	7	P-5023
66 - under body	B	11	P-5031
71 - under body	B	13	P-5024
76 - under body	B	15	P-5025
54 - upper body	B	8	P-5018
62 - upper body	B	9	P-5019
63 - upper body	B	10	P-5020
66 - upper body	B	12	P-5028
71 - upper body	B	14	P-5021
76 - upper body	B	16	P-5022

F (MUSTANG)

TITLE	SECTION	PAGE	ILLUS. NO.
63, 65 - under body	F	6	P-5466
76 - under body	F	9	P-5467
63 - upper body	F	7	P-5468
65 - upper body	F	8	P-5469
76 - upper body	F	10	P-5470

S (THUNDERBIRD)

TITLE	SECTION	PAGE	ILLUS. NO.
57, 65 - under body	S	6	P-5354
57 - upper body	S	9	P-5356
65 - upper body	S	8	P-5357

U (BRONCO)

TITLE	SECTION	PAGE	ILLUS. NO.
96, 97, 98	U	1	P-4963
97 - roof	U	2	P-4969
98 - roof	U	2	P-4968

X (FALCON)

TITLE	SECTION	PAGE	ILLUS. NO.
54, 62 - under body	X	11	P-5142
71 - under body	X	16	P-5148
54 - upper body	X	12	P-5026
62 - upper body	X	13	P-5027
71 - upper body	X	17	P-5141

1968

A (FORD)

TITLE	SECTION	PAGE	ILLUS. NO.
54	A	19	P-6050
57	A	20	P-6051
62	A	21	P-6052
63	A	22	P-6053
65	A	23	P-6054
71	A	24	P-6055
76	A	25	P-6056

B (FAIRLANE/TORINO)

TITLE	SECTION	PAGE	ILLUS. NO.
54, 63, 65 - under body	B	17	P-6063
66 - under body	B	21	P-6064
71 - under body	B	23	P-6065
76 - under body	B	25	P-6066
54 - upper body	B	18	P-6057
63 - upper body	B	19	P-6058
65 - upper body	B	20	P-6059
66 - upper body	B	22	P-6060
71 - upper body	B	24	P-6061
76 - upper body	B	26	P-6062

F (MUSTANG)

TITLE	SECTION	PAGE	ILLUS. NO.
63, 65 - under body	F	6	P-5466
76 - under body	F	9	P-5467
63 - upper body	F	7	P-5468
65 - upper body	F	8	P-5469
76 - upper body	F	10	P-5470

S (THUNDERBIRD)

TITLE	SECTION	PAGE	ILLUS. NO.
57, 65 - under body	S	9	P-6069
57 - upper body	S	10	P-6068
65 - upper body	S	11	P-6067

U (BRONCO)

TITLE	SECTION	PAGE	ILLUS. NO.
96, 97, 98	U	1	P-4963
97 - roof	U	2	P-4969
98 - roof	U	2	P-4968

X (FALCON)

TITLE	SECTION	PAGE	ILLUS. NO.
54, 62 - under body	X	18	P-6073
71 - under body	X	21	P-6074
54 - upper body	X	19	P-6070
62 - upper body	X	20	P-6071
71 - upper body	X	22	P-6072

INDEX

SHEET METAL - continued

TITLE	SECTION	PAGE	ILLUS. NO.

1969

A (FORD)

54	A	26	P-6697
57	A	27	P-6698
62	A	28	P-6702
63	A	29	P-6703
65	A	30	P-6704
71	A	31	P-6705
76	A	32	P-6706

B (FAIRLANE/TORINO)

54,63,65 - under body	B	17	P-6063
66 - under body	B	21	P-6064
71 - under body	B	23	P-6065
76 - under body	B	25	P-6066
54 - upper body	B	18	P-6057
63 - upper body	B	19	P-6058
65 - upper body	B	20	P-6059
66 - upper body	B	22	P-6060
71 - upper body	B	24	P-6061
76 - upper body	B	26	P-6062

F (MUSTANG)

63,65 - under body	F	6	P-5466
65 - under body	F	12	P-7271
76 - under body	F	13	P-7272
63 - upper body	F	11	P-6716
65 - upper body	F	14	P-7273
76 - upper body	F	15	P-7275

S (THUNDERBIRD)

57,65 - under body	S	9	P-6069
57 - upper body	S	10	P-6068
65 - upper body	S	11	P-6067

U (BRONCO)

97,98	U	1	P-4963
97 - roof	U	2	P-4969
98 - roof	U	2	P-4968

X (FALCON)

54,62 - under body	X	18	P-6073
71 - under body	X	21	P-6074
54 - upper body	X	19	P-6070
62 - upper body	X	20	P-6071
71 - upper body	X	22	P-6072

1970

A (FORD)

54	A	26	P-6697
57	A	27	P-6698
63	A	29	P-6703
65	A	30	P-6704
71	A	31	P-6705
76	A	32	P-6706

B (FAIRLANE/TORINO)

B (FALCON) - FROM 1/2/70

54,57,62,63,65 - under body	B	27	P-7072
66 - under body	B	28	P-7074
71 - under body	B	29	P-7073
76 - under body	B	30	P-7075
54 - upper body	B	31	P-7081
57 - upper body	B	32	P-7082
62 - upper body	B	38	P-7083
63 - upper body	B	33	P-7084
65 - upper body	B	34	P-7085
66 - upper body	B	35	P-7086
71 - upper body	B	36	P-7087
76 - upper body	B	37	P-7088

F (MUSTANG)

63 - under body	F	6	P-5466
65 - under body	F	12	P-7271
76 - under body	F	13	P-7272
63 - upper body	F	11	P-6716
65 - upper body	F	14	P-7273
76 - upper body	F	15	P-7275

P (MAVERICK)

62 - under body	P	1	P-6874
62 - upper body	P	2	P-6911

S (THUNDERBIRD)

57,65 - under body	S	12	P-7034
57 - upper body	S	13	P-7035
65 - upper body	S	14	P-7036

U (BRONCO)

97,98	U	1	P-4963
97 - roof	U	2	P-4969
98 - roof	U	2	P-4968

X (FALCON) - BEFORE 1/2/70

FOR UNITS BUILT FROM 1/2/70 REFER TO B (FALCON)

54,62 - under body	X	18	P-6073
71 - under body	X	21	P-6074
54 - upper body	X	19	P-6070
62 - upper body	X	20	P-6071
71 - upper body	X	22	P-6072

COPYRIGHT © 1975 — FORD MOTOR COMPANY — DEARBORN, MICHIGAN

FINAL ISSUE

INDEX

SHEET METAL - continued

TITLE	SECTION	PAGE	ILLUS. NO.

1971

A (FORD)

53,54,57,65,76 - under body	A	33	P-7989
71 - under body	A	34	P-7990
53 - upper body	A	35	P-7993
54 - upper body	A	36	P-7994
57 - upper body	A	37	P-7995
65 - upper body	A	38	P-7996
71 - upper body	A	39	P-7991
76 - upper body	A	40	P-7992

B (TORINO)

54,57,63,65 - under body	B	27	P-7072
66 - under body	B	28	P-7074
71 - under body	B	29	P-7073
76 - under body	B	30	P-7075
54 - upper body	B	31	P-7081
57 - upper body	B	32	P-7082
63 - upper body	B	33	P-7084
65 - upper body	B	34	P-7085
66 - upper body	B	35	P-7086
71 - upper body	B	36	P-7087
76 - upper body	B	37	P-7088

F (MUSTANG)

63,65 - under body	F	16	P-7877
76 - under body	F	17	P-7878
63 - upper body	F	18	P-7879
65 - upper body	F	19	P-7880
76 - upper body	F	20	P-7882

L (PINTO)

62 - under body	L	1	P-7955
62 - upper body	L	2	P-7956
64 - upper body	L	3	P-8274

P (MAVERICK)

54,62 - under body	P	1	P-6874
54 - upper body	P	3	P-7958
62 - upper body	P	2	P-6911

S (THUNDERBIRD)

57,65 - under body	S	12	P-7034
57 - upper body	S	13	P-7035
65 - upper body	S	14	P-7036

U (BRONCO)

97,98	U	1	P-4963
97 - roof	U	2	P-4969
98 - roof	U	2	P-4968

1972

A (FORD)

53,54,57,65,76 - under body	A	33	P-7989
71 - under body	A	34	P-7990
53 - upper body	A	35	P-7993
54 - upper body	A	36	P-7994
57 - upper body	A	37	P-7995
65 - upper body	A	38	P-7996
71 - upper body	A	39	P-7991
76 - upper body	A	40	P-7992

B (TORINO)

53,63,65 - under body	B	39	P-8642
71 - under body	B	40	P-8643
97 - under body	B	41	P-8644
53 - upper body	B	42	P-8645
63 - upper body	B	43	P-8646
65 - upper body	B	44	P-8647
71 - upper body	B	45	P-8648
97 - upper body	B	46	P-8649

F (MUSTANG)

63,65 - under body	F	16	P-7877
76 - under body	F	17	P-7878
63 - upper body	F	18	P-7879
65 - upper body	F	19	P-7880
76 - upper body	F	20	P-7882

L (PINTO)

62,64 - under body	L	1	P-7955
73 - underbody	L	5	P-10385
62 - upper body	L	2	P-7956
64 - upper body	L	3	P-8274
73 - upper body	L	4	P-8933

P (MAVERICK)

54,62 - under body	P	1	P-6874
54 - upper body	P	3	P-7958
62 - upper body	P	2	P-6911

S (THUNDERBIRD)

65 - under body	S	15	P-8828
65 - upper body	S	16	P-8830

U (BRONCO)

97,98	U	1	P-4963
97 - roof	U	2	P-4969
98 - roof	U	2	P-4968

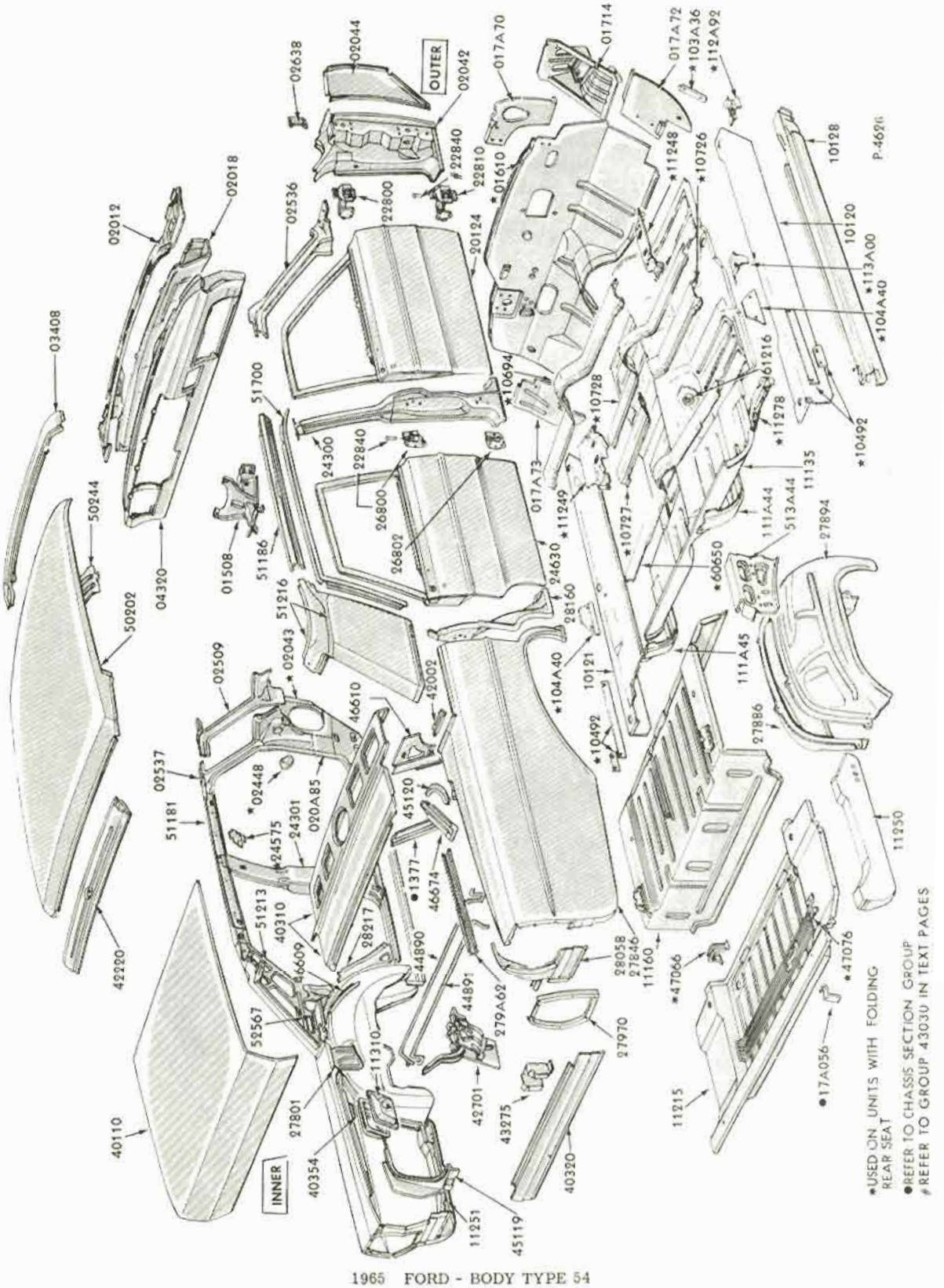

1965 FORD - BODY TYPE 54

COPYRIGHT © 1975 — FORD MOTOR COMPANY — DEARBORN, MICHIGAN

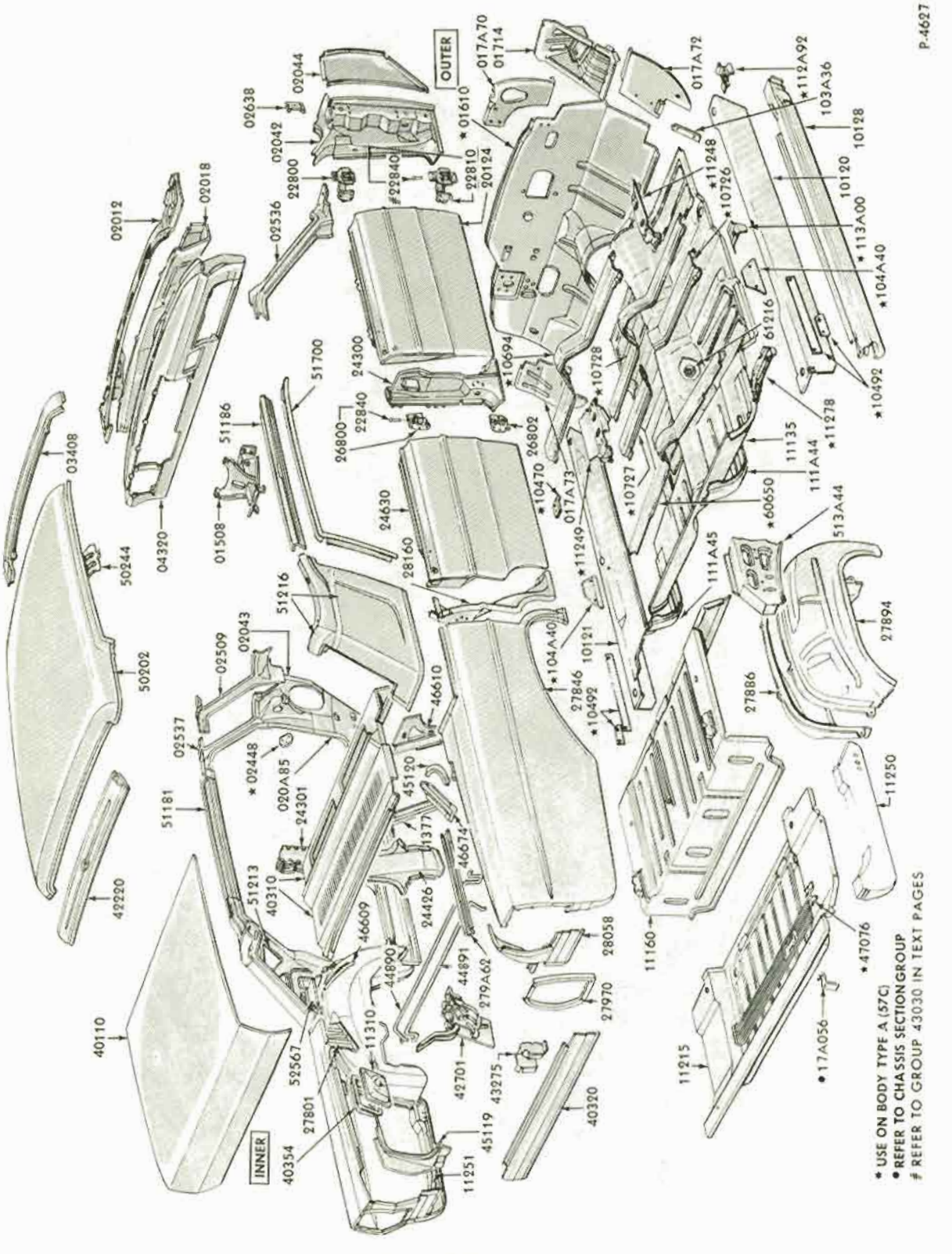
P.4627
OUTER
INNER
02012
02018
02536
02638
02044
02042
22800
#22840
22810
20124
01610
017A70
01714
017A72
*112A92
103A36
10128
10120
*113A00
*104A40
*10492
61216
*11278
11135
111A44
513A44
27894
*60650
111A45
*10726
*11248
*10728
*10694
24300
24630
28160
26800
22840
26802
*10470
017A73
*10727
*11249
51700
51186
01508
04320
03408
50244
50202
42220
51216
02043
02509
02537
*02448
020A85
24301
51181
51213
40310
46609
44890
24426
46674
1377
45120
46610
*104A40
10121
27846
*10499
27886
11250
11160
28058
27970
279A62
44891
42701
43275
40320
11215
*47076
*17A056
40110
40354
27801
52567
11310
45119
11251
* USE ON BODY TYPE A (57C)
• REFER TO CHASSIS SECTION GROUP
REFER TO GROUP 43030 IN TEXT PAGES

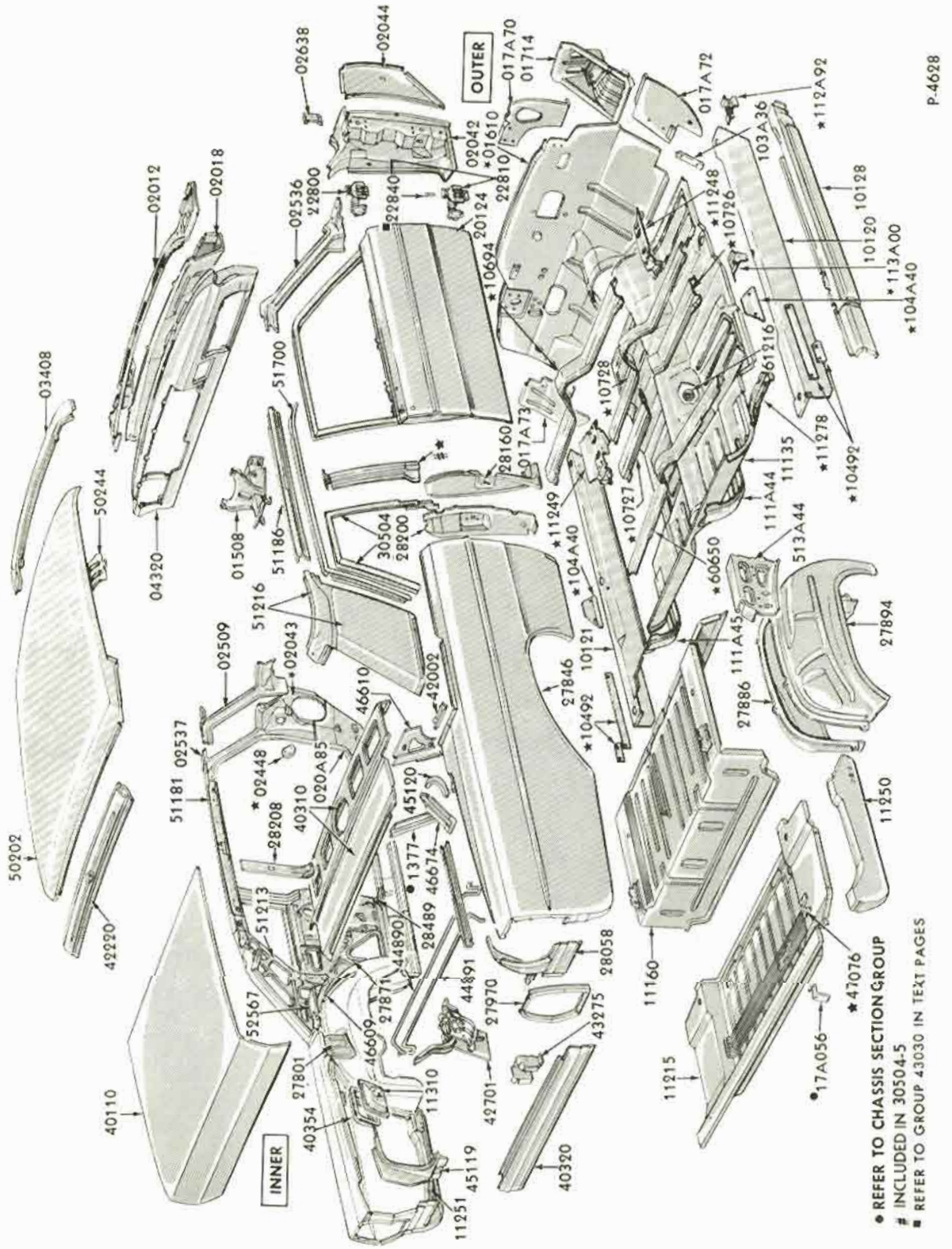

1965 FORD - BODY TYPE 62

COPYRIGHT © 1975 — FORD MOTOR COMPANY — DEARBORN, MICHIGAN

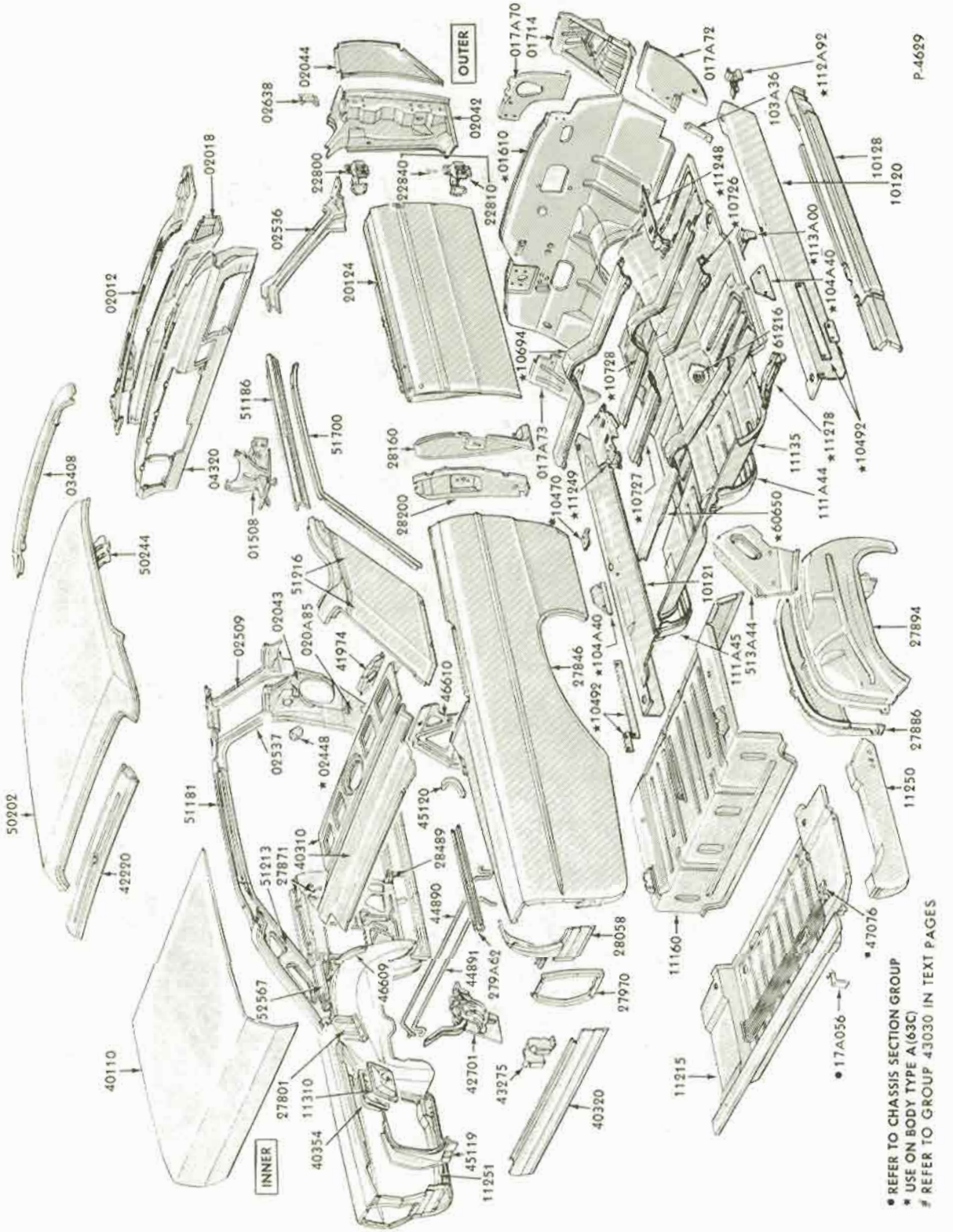
OUTER
INNER
P-4629
• REFER TO CHASSIS SECTION GROUP
* USE ON BODY TYPE A(63C)
# REFER TO GROUP 43030 IN TEXT PAGES

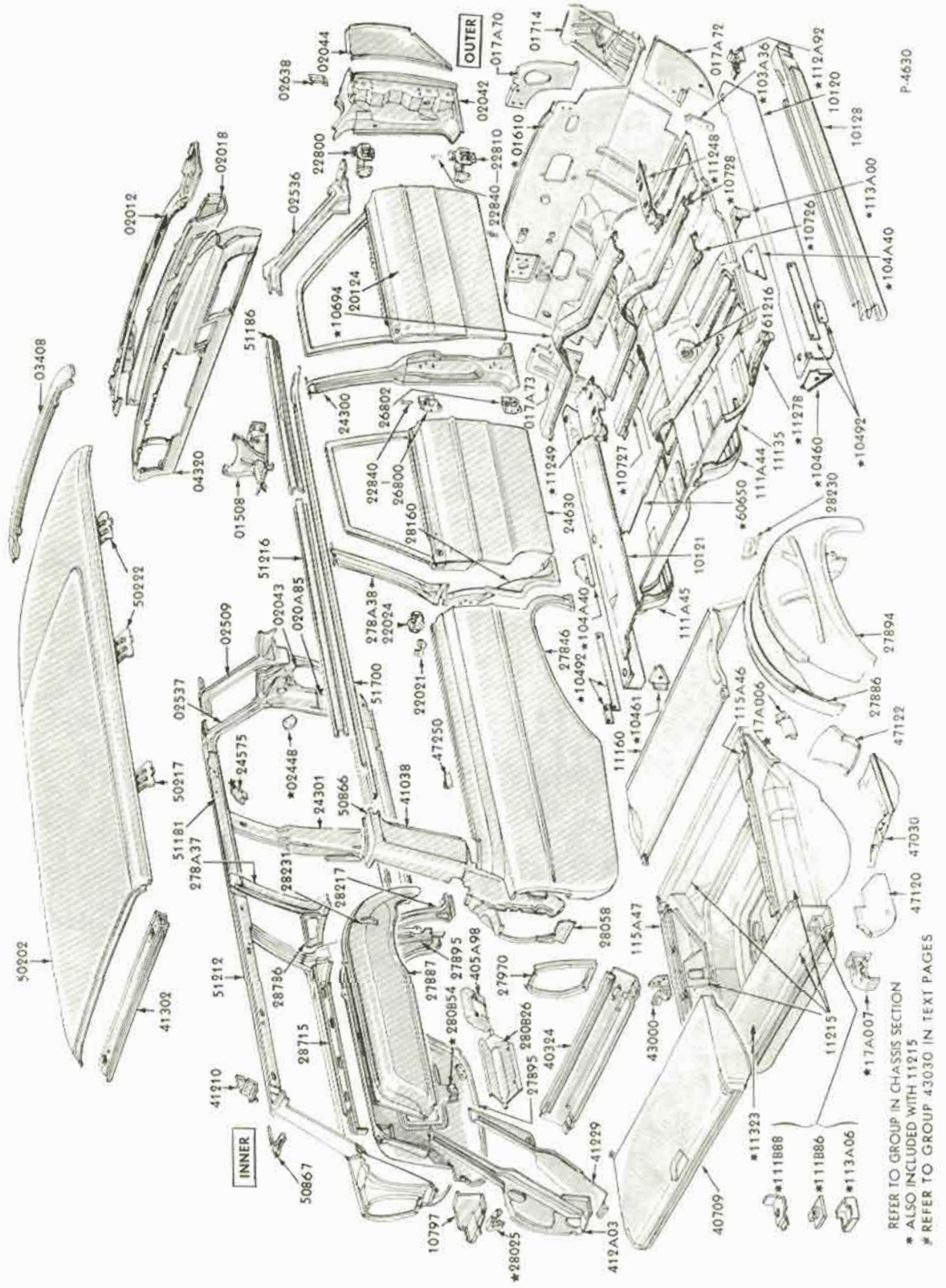

1965 FORD - BODY TYPE 71

COPYRIGHT © 1975 — FORD MOTOR COMPANY — DEARBORN, MICHIGAN

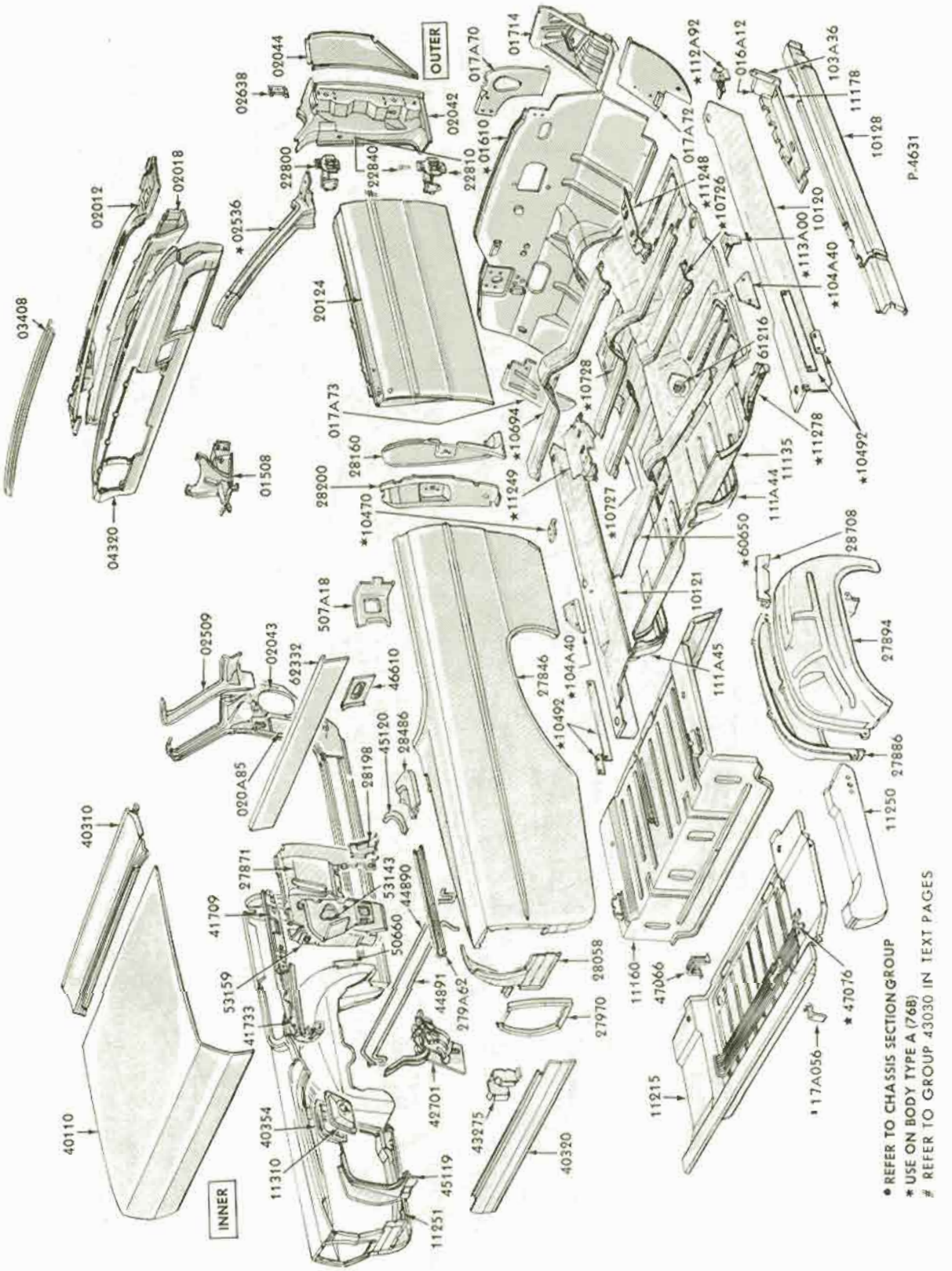
OUTER
INNER
02044
02638
02042
017A70
01714
02012
02018
03408
04320
22800
22840
22810
01610
017A72
112A92
016A12
103A36
11178
10128
P-4631
02536
20124
11248
10726
113A00
10120
104A40
61216
10728
017A73
28160
28200
01508
10694
11249
10470
10727
60650
111A44
11135
11278
10492
28708
507A18
02509
02043
62332
020A85
46610
45120
28486
28198
10121
111A45
27846
104A40
10492
27894
27886
11250
40310
27871
53143
44890
41709
50660
53159
41733
44891
279A62
28058
27970
11160
47066
47076
117A056
11215
40110
40354
11310
45119
11251
42701
43275
40320
* REFER TO CHASSIS SECTION GROUP
* USE ON BODY TYPE A (76B)
# REFER TO GROUP 43030 IN TEXT PAGES

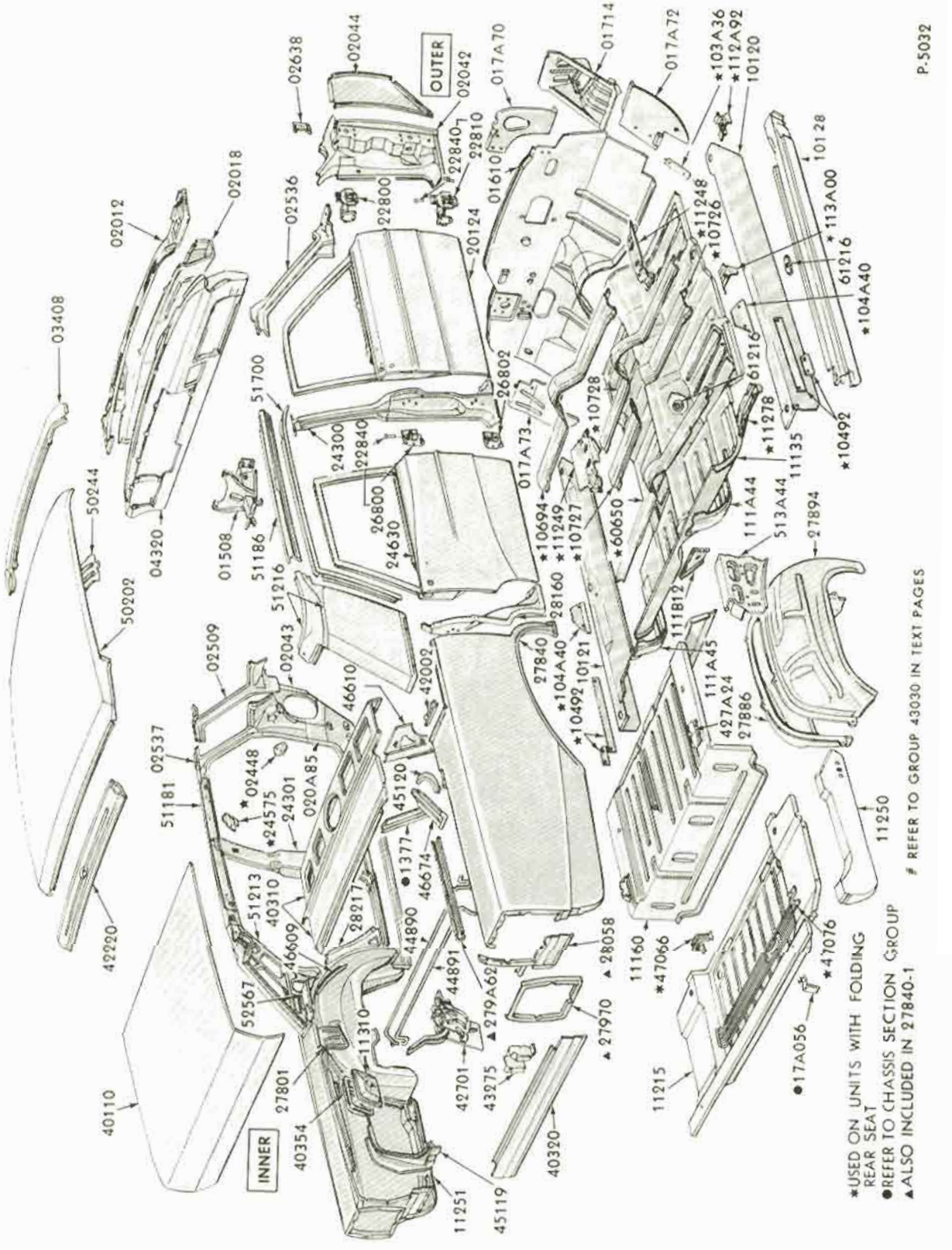

1966 FORD - BODY TYPE 54

COPYRIGHT © 1975 — FORD MOTOR COMPANY — DEARBORN, MICHIGAN

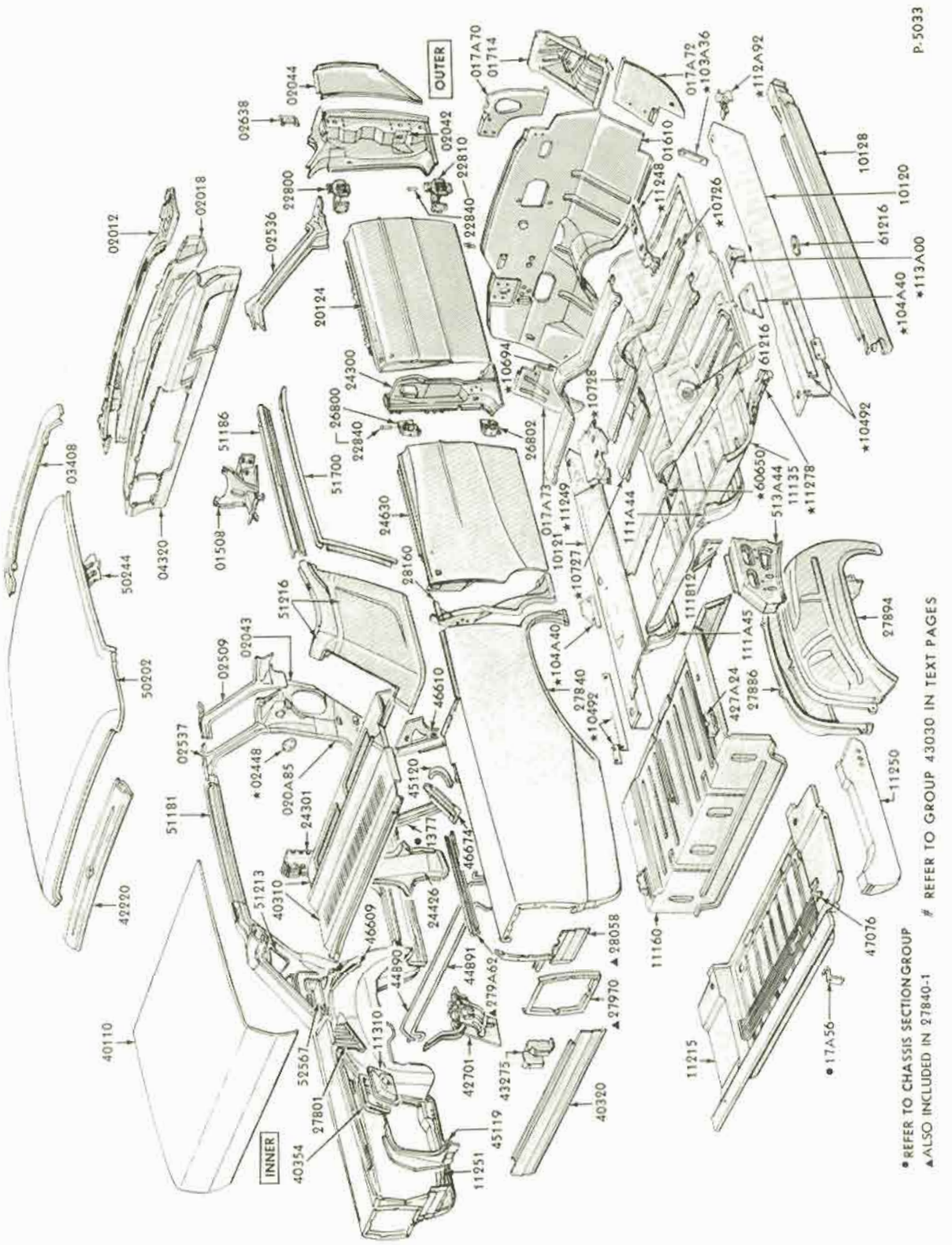
P.5033
OUTER
INNER
02012
02018
02536
22800
02638
02044
02042
22810
22840
20124
24300
26800
22840
51700
51186
01508
04320
03408
50244
50202
02509
02043
51916
02537
02448
020A85
24301
51181
42220
51213
40310
46609
24426
45120
1377
46674
46610
24630
28160
26802
10694
017A73
11249
10121
10727
104A40
27840
10492
111A44
111B12
111A45
427A24
27886
27894
11250
11160
47076
11215
17A56
40110
40354
52567
27801
11310
44890
44891
279A62
42701
43275
45119
11251
28058
27970
40320
017A70
01714
017A72
103A36
01610
11248
10726
112A92
10128
10120
61216
113A00
104A40
10728
60650
513A44
11135
11278
10492
61216
* REFER TO CHASSIS SECTION GROUP
▲ ALSO INCLUDED IN 27840-1
REFER TO GROUP 43030 IN TEXT PAGES

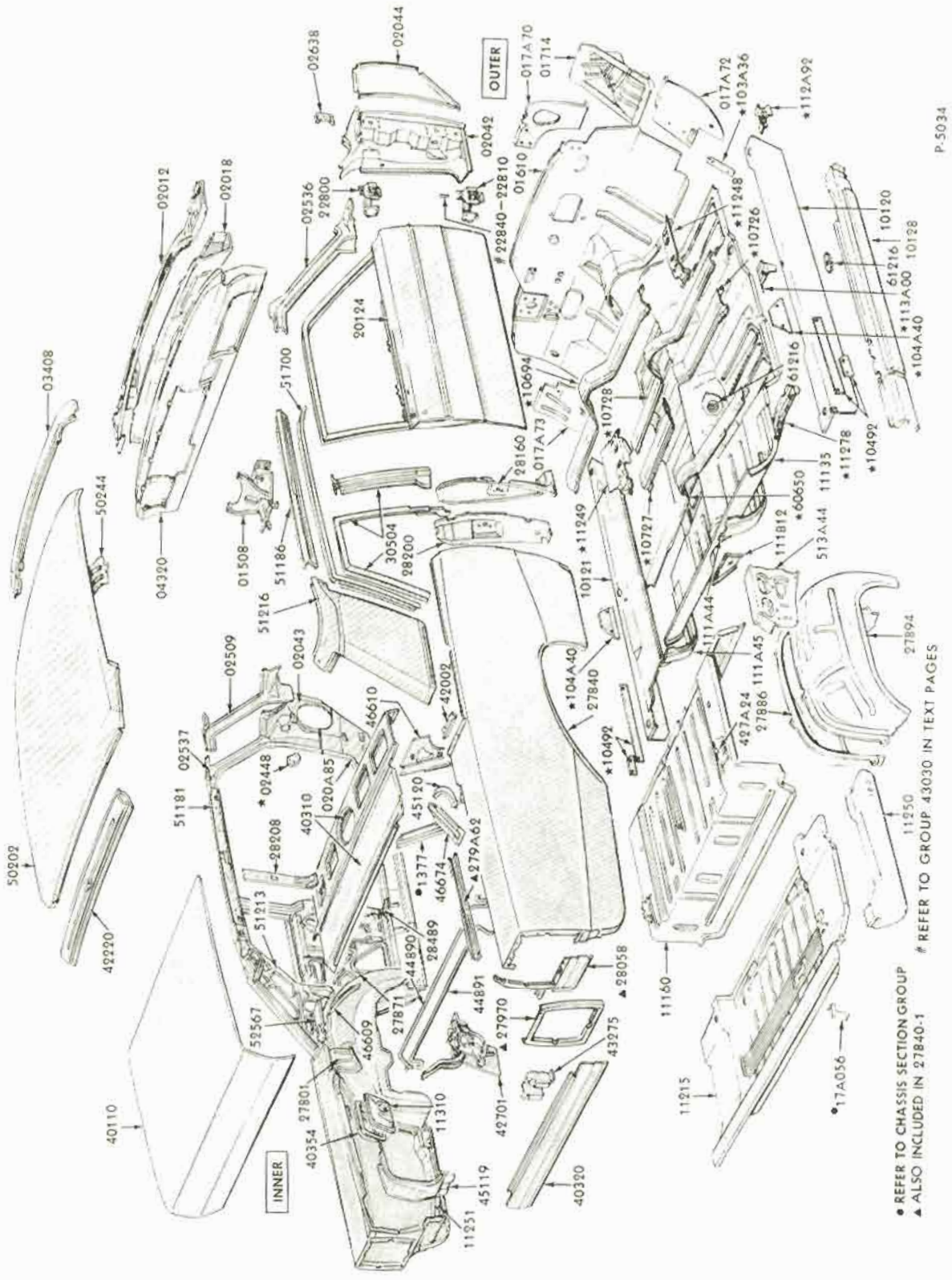

1966 FORD - BODY TYPE 62

COPYRIGHT © 1975 — FORD MOTOR COMPANY — DEARBORN, MICHIGAN

FORD CAR PARTS

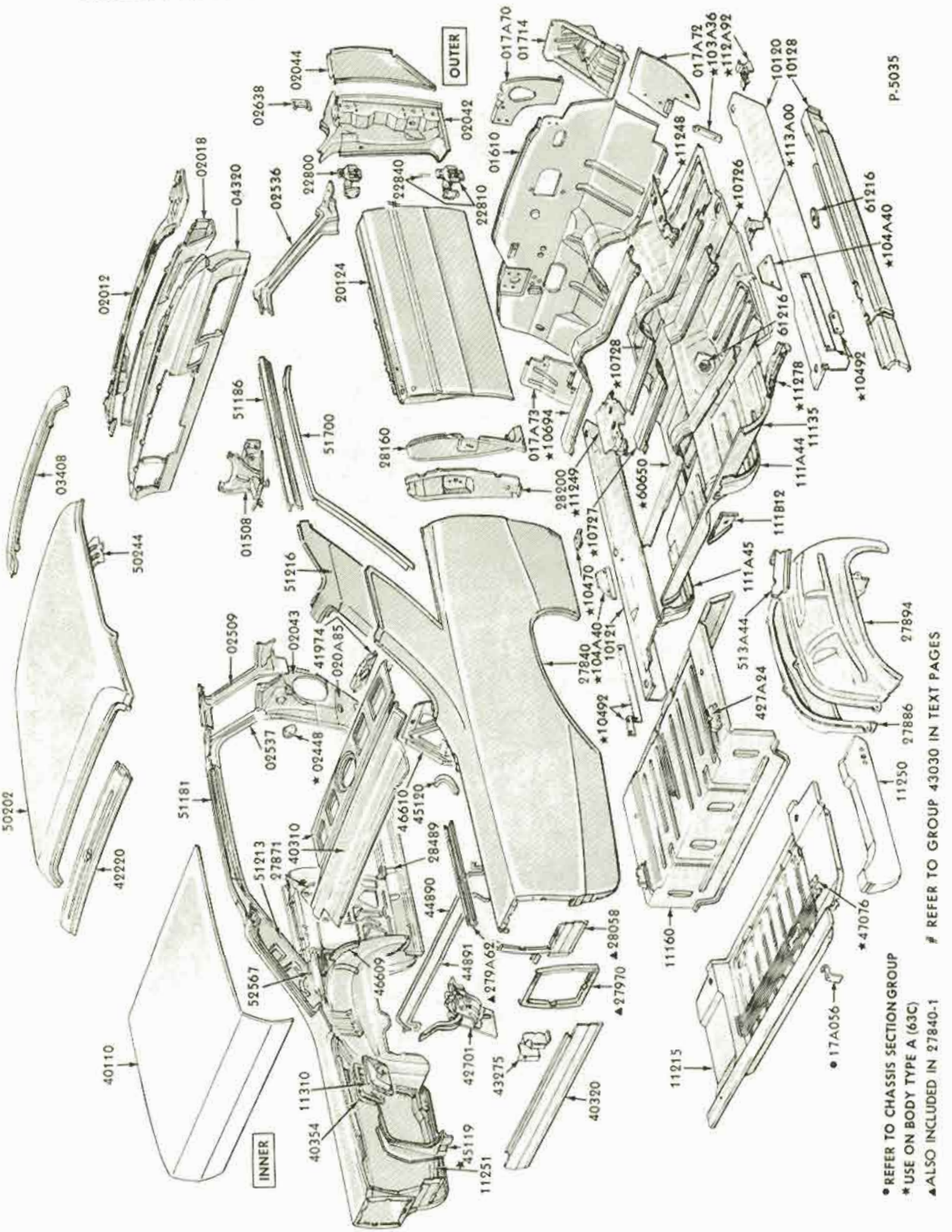

• REFER TO CHASSIS SECTION GROUP
* USE ON BODY TYPE A (63C)
▲ ALSO INCLUDED IN 27840-1
REFER TO GROUP 43030 IN TEXT PAGES

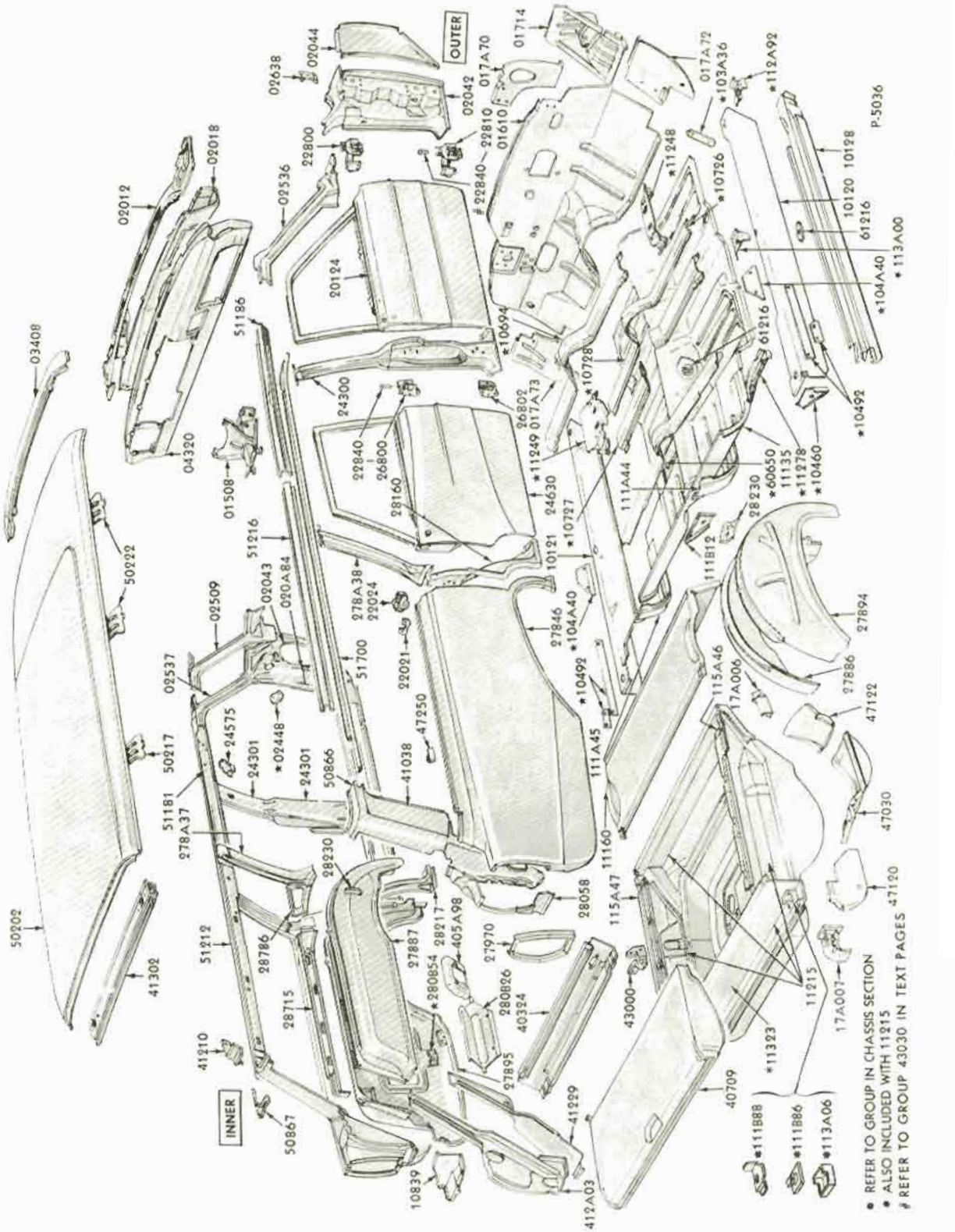

1966 FORD - BODY TYPE 71

COPYRIGHT © 1975 — FORD MOTOR COMPANY — DEARBORN, MICHIGAN

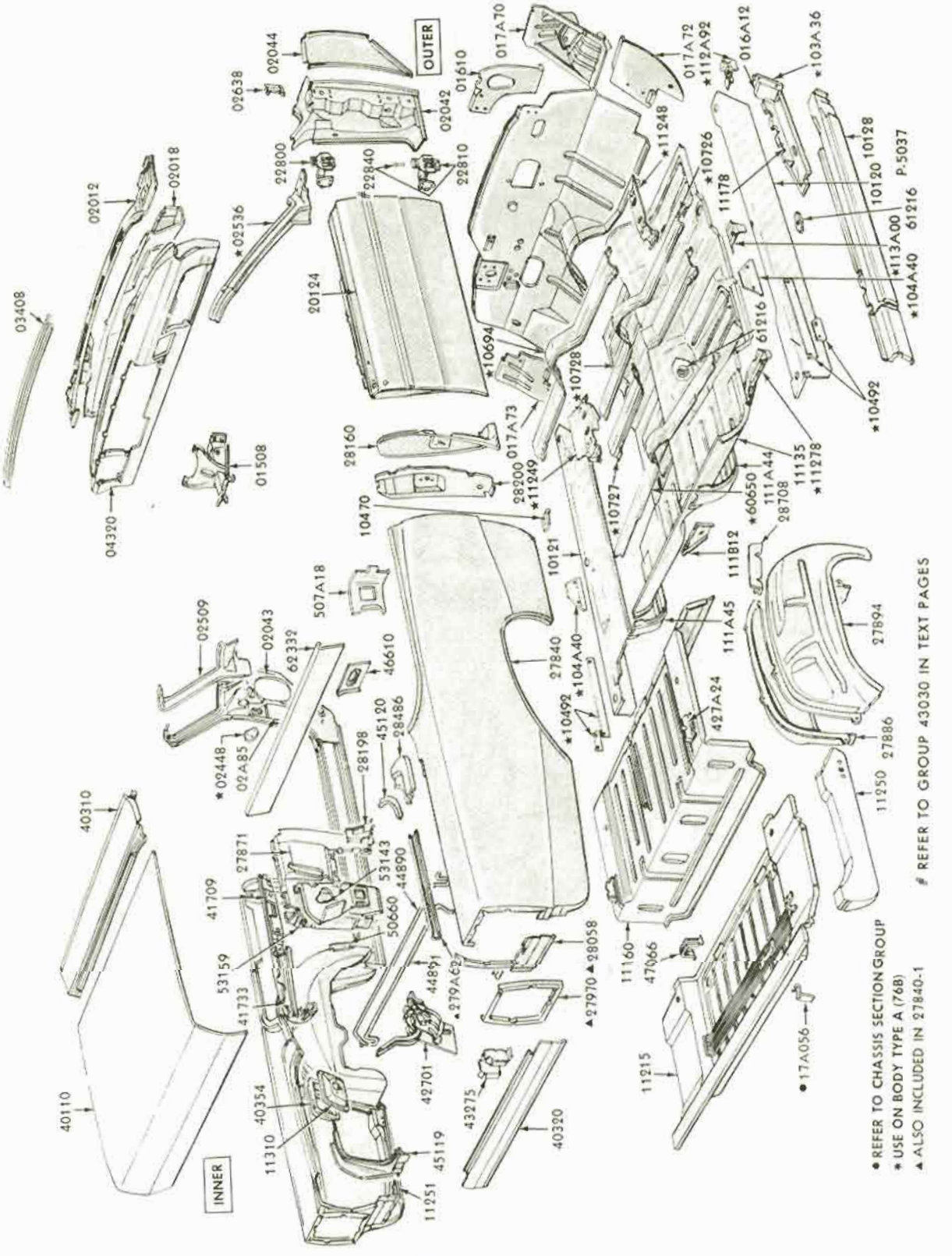
OUTER
INNER
03408
02012
02018
04320
01508
02638
02044
02042
01610
017A70
017A72
★112A92
016A12
★103A36
22800
★02536
#22840
22810
20124
★11248
★10786
11178
10120
10128
P.5037
★113A00
61216
★104A40
★10694
★10728
★10492
017A73
28160
28200
★11249
★10727
★60650
111A44
28708
11135
★11278
10470
10121
111B12
507A18
02509
02043
69332
46610
27840
★104A40
111A45
27894
★02448
02A85
28198
45120
28486
★10492
427A24
27886
11250
40310
27871
41709
53143
44890
50660
53159
41733
44891
▲279A62
▲27970
▲28058
11160
47066
40110
40354
11310
42701
43275
40320
11251
45119
11215
●17A056
● REFER TO CHASSIS SECTION GROUP
★ USE ON BODY TYPE A (76B)
▲ ALSO INCLUDED IN 27840-1
REFER TO GROUP 43030 IN TEXT PAGES

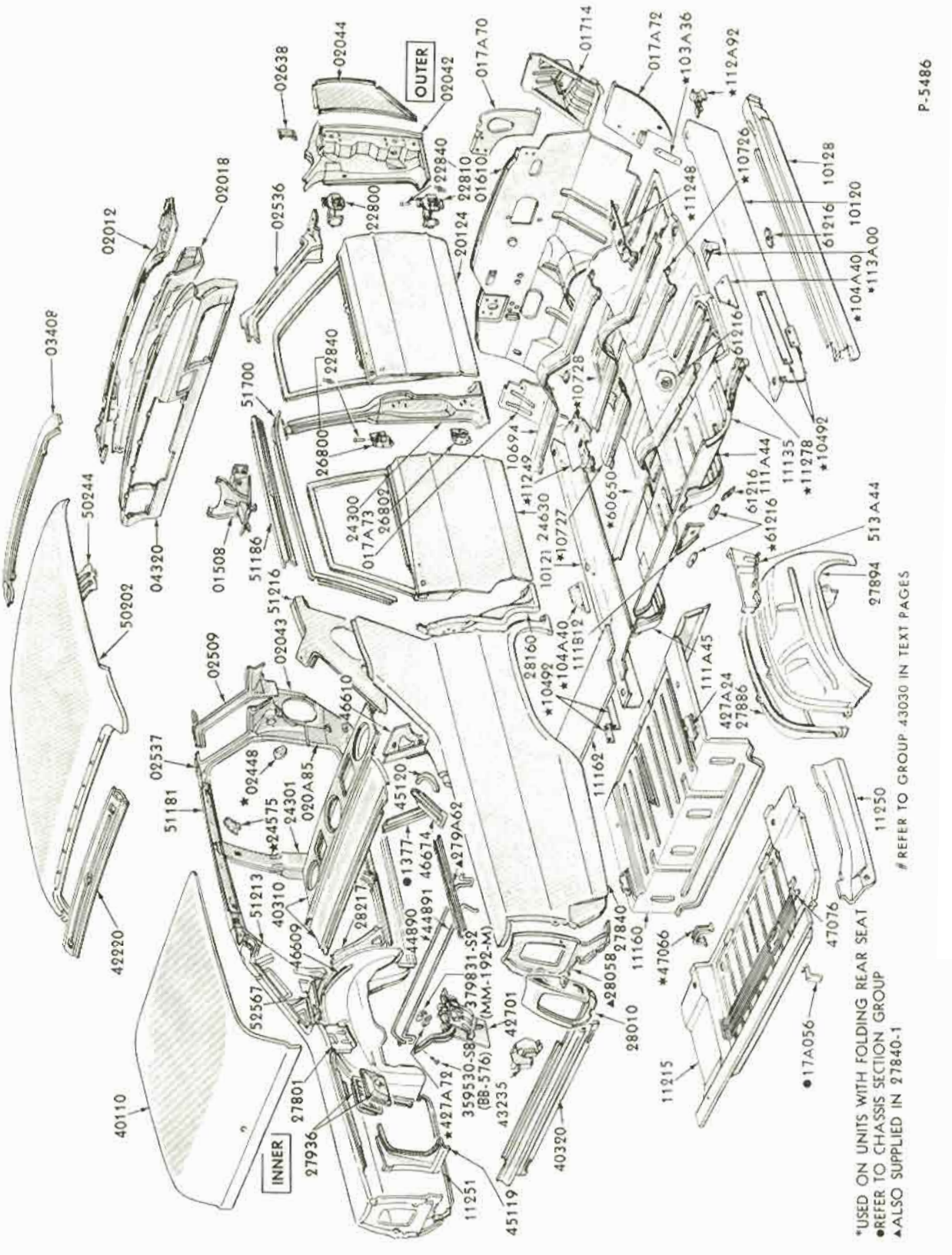

1967 FORD - BODY TYPE 54

COPYRIGHT © 1975 — FORD MOTOR COMPANY — DEARBORN, MICHIGAN

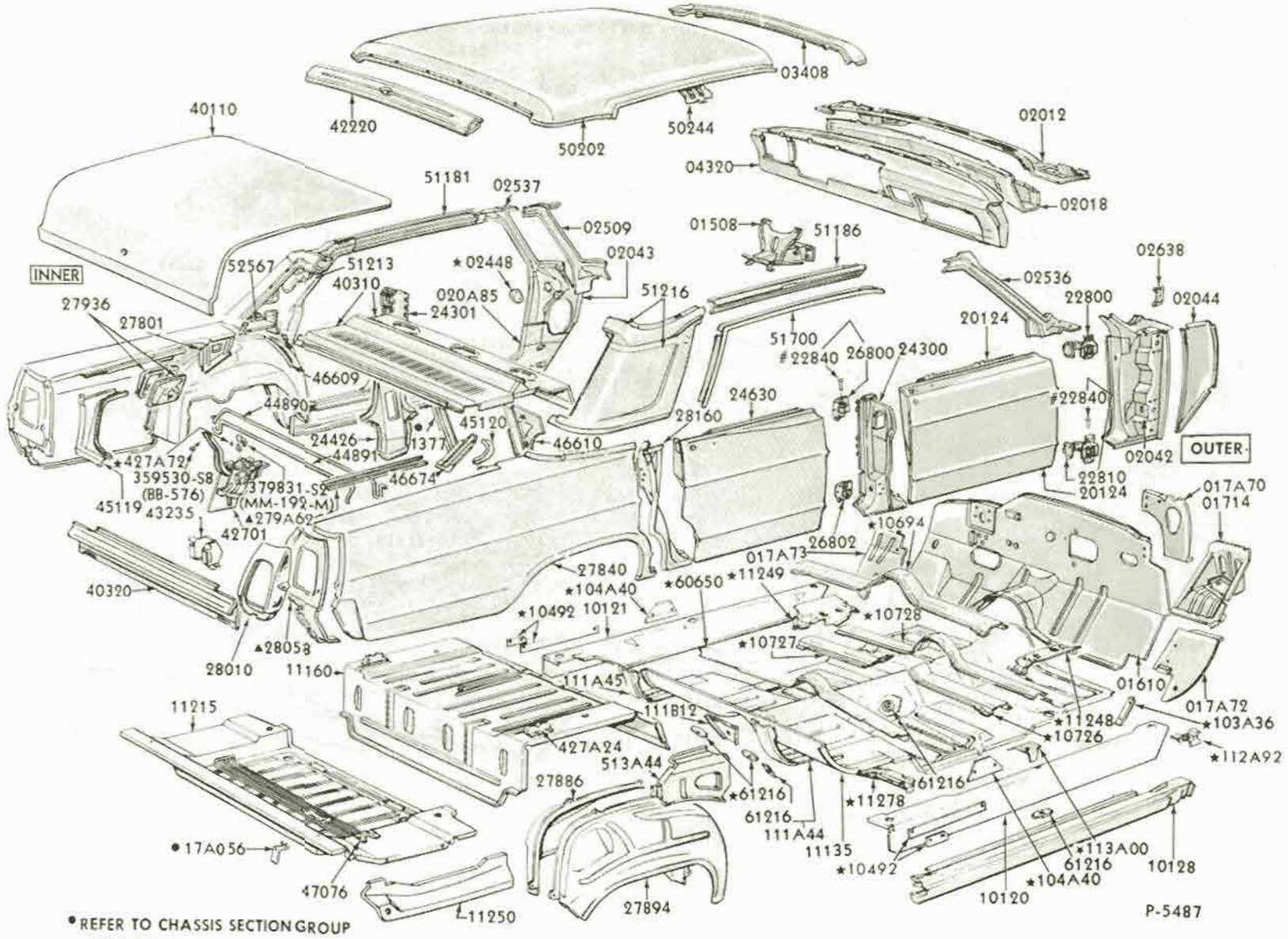

● REFER TO CHASSIS SECTION GROUP

▲ALSO SUPPLIED IN 27840-1

REFER TO GROUP 43030 IN TEXT PAGES

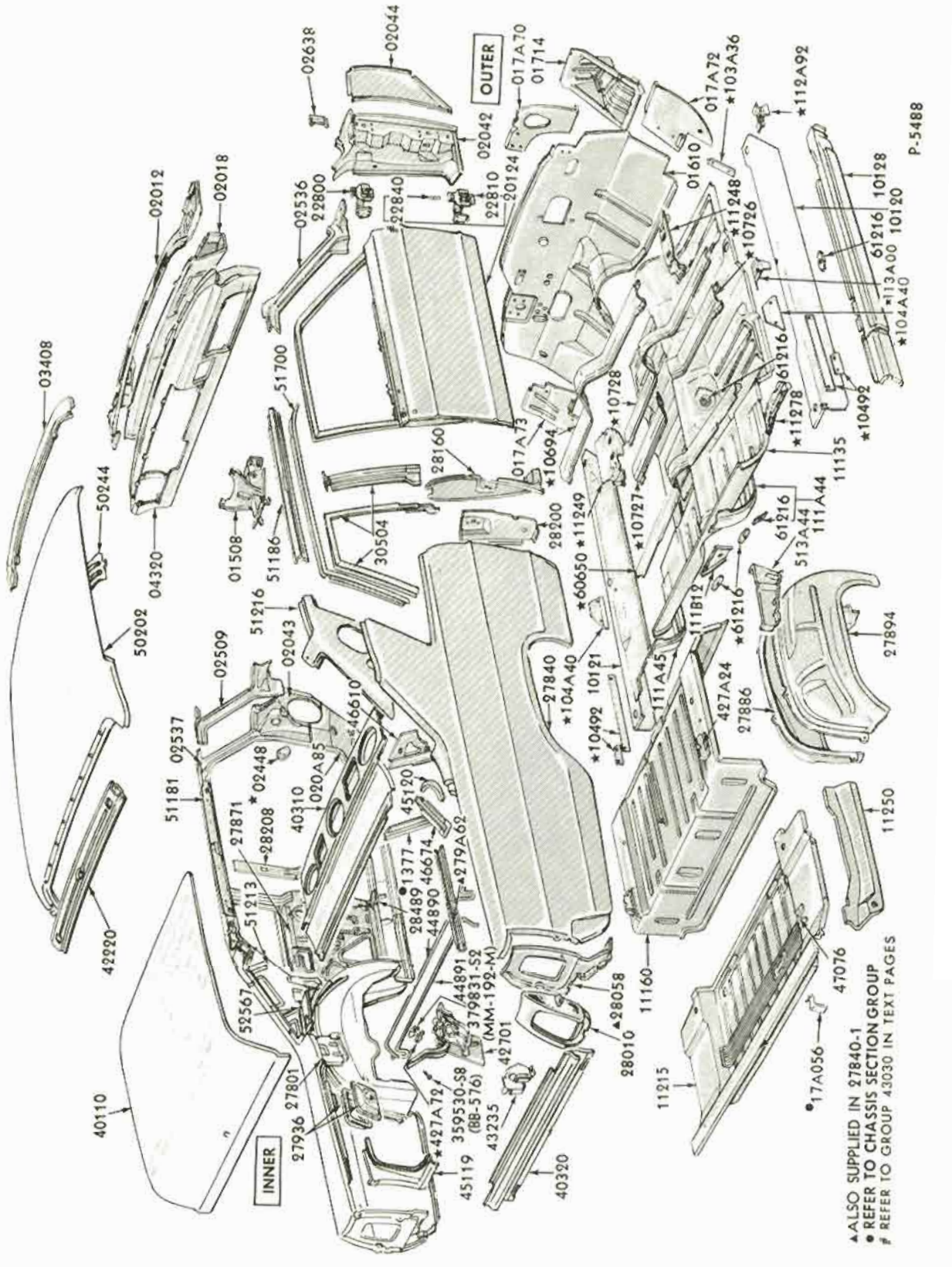

May, 1975 COPYRIGHT © 1975 — FORD MOTOR COMPANY — DEARBORN, MICHIGAN FINAL ISSUE

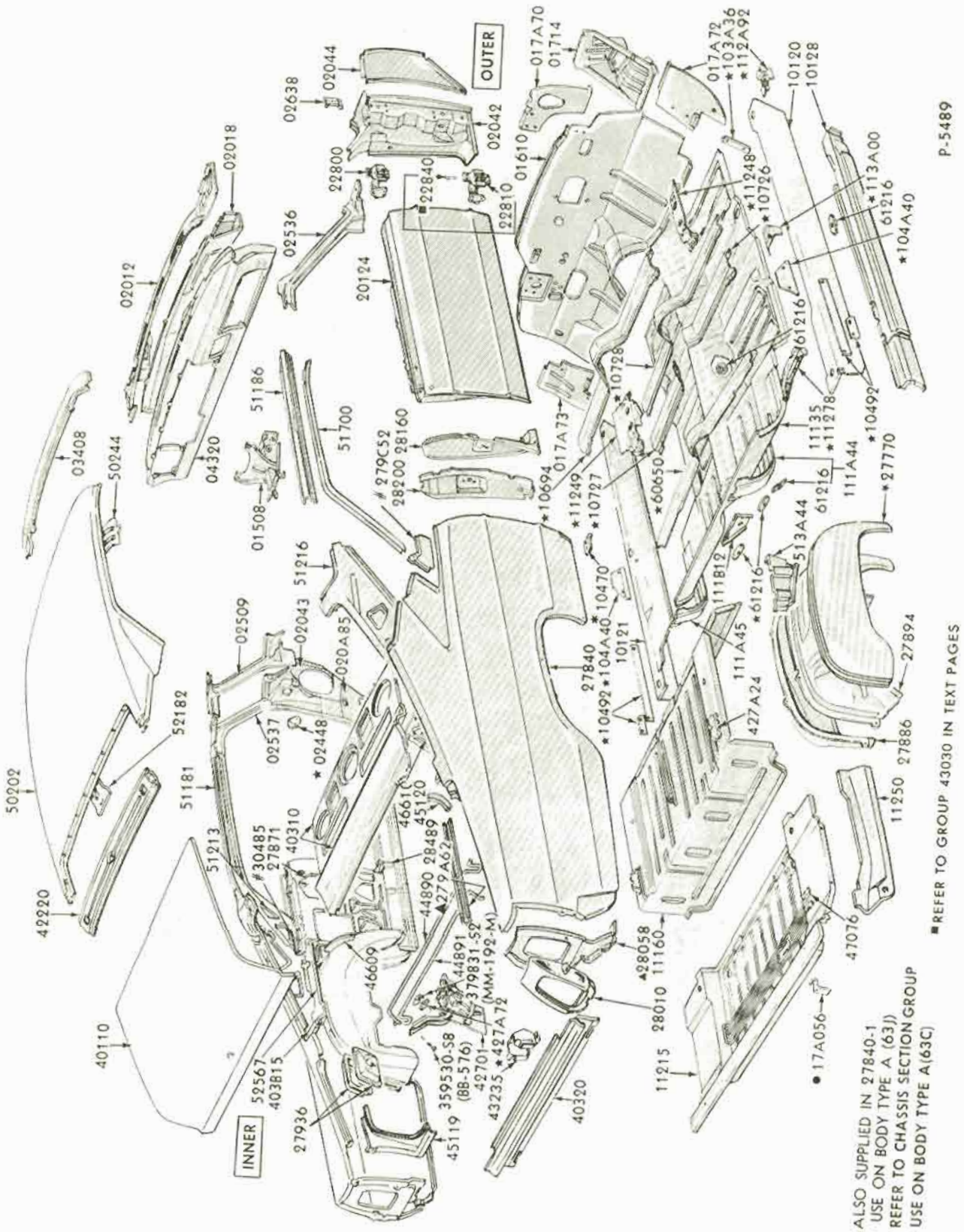

▲ALSO SUPPLIED IN 27840-1
USE ON BODY TYPE A (63J)
● REFER TO CHASSIS SECTION GROUP
★ USE ON BODY TYPE A(63C)

■REFER TO GROUP 43030 IN TEXT PAGES

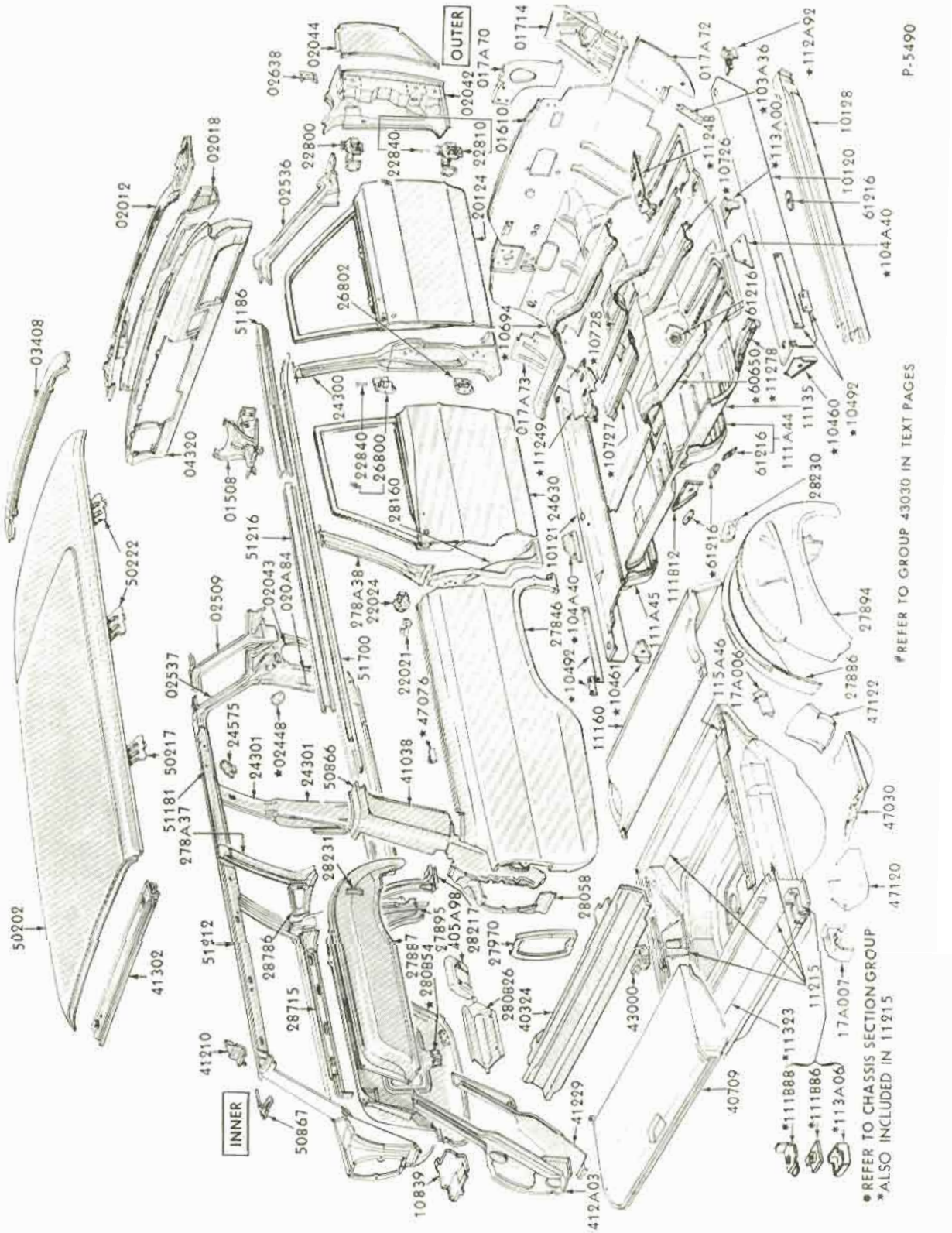

May, 1975 COPYRIGHT © 1975 — FORD MOTOR COMPANY — DEARBORN, MICHIGAN FINAL ISSUE

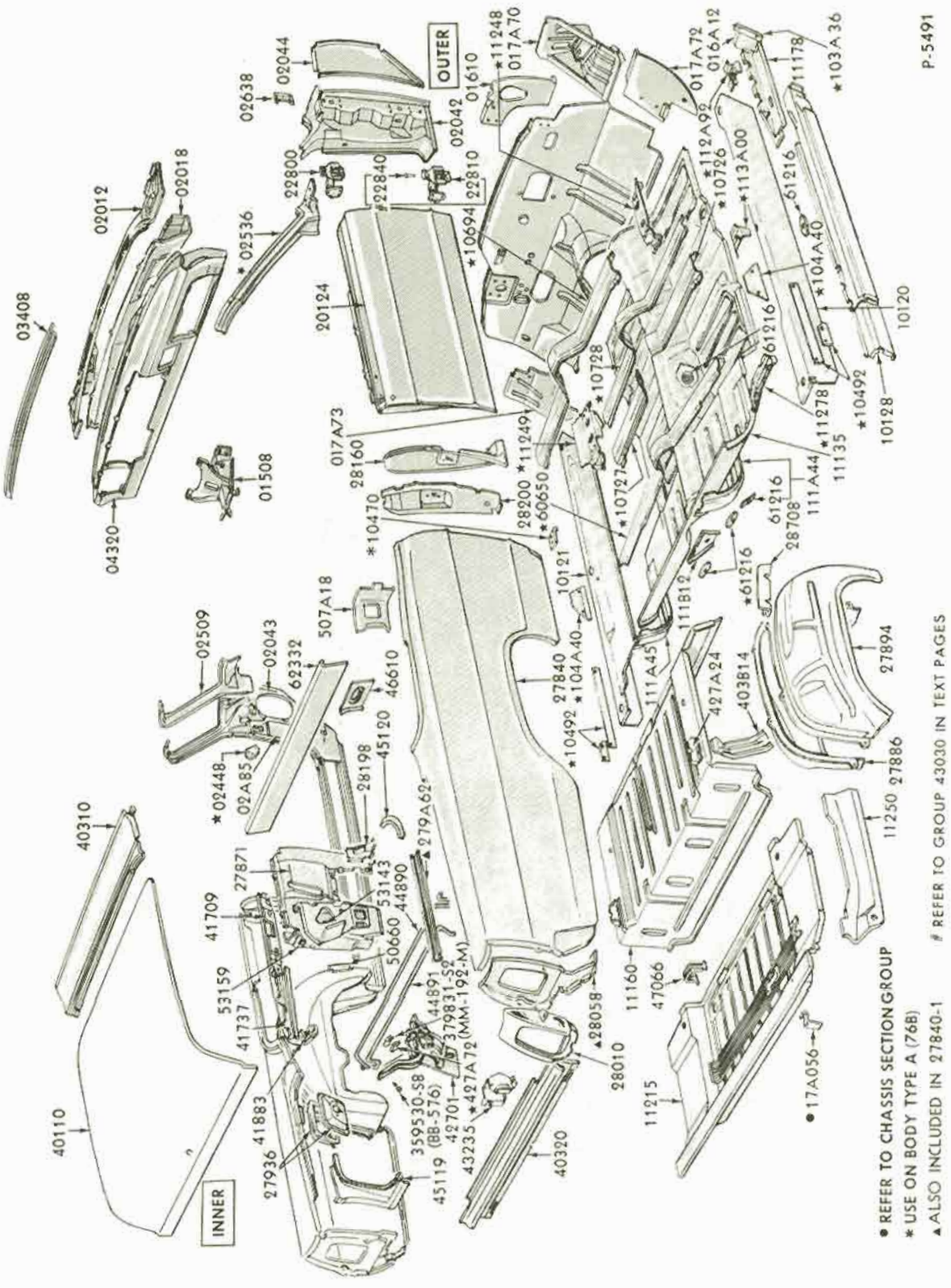
OUTER
INNER
P-5491
• REFER TO CHASSIS SECTION GROUP
* USE ON BODY TYPE A (76B)
▲ ALSO INCLUDED IN 27840-1
REFER TO GROUP 43030 IN TEXT PAGES

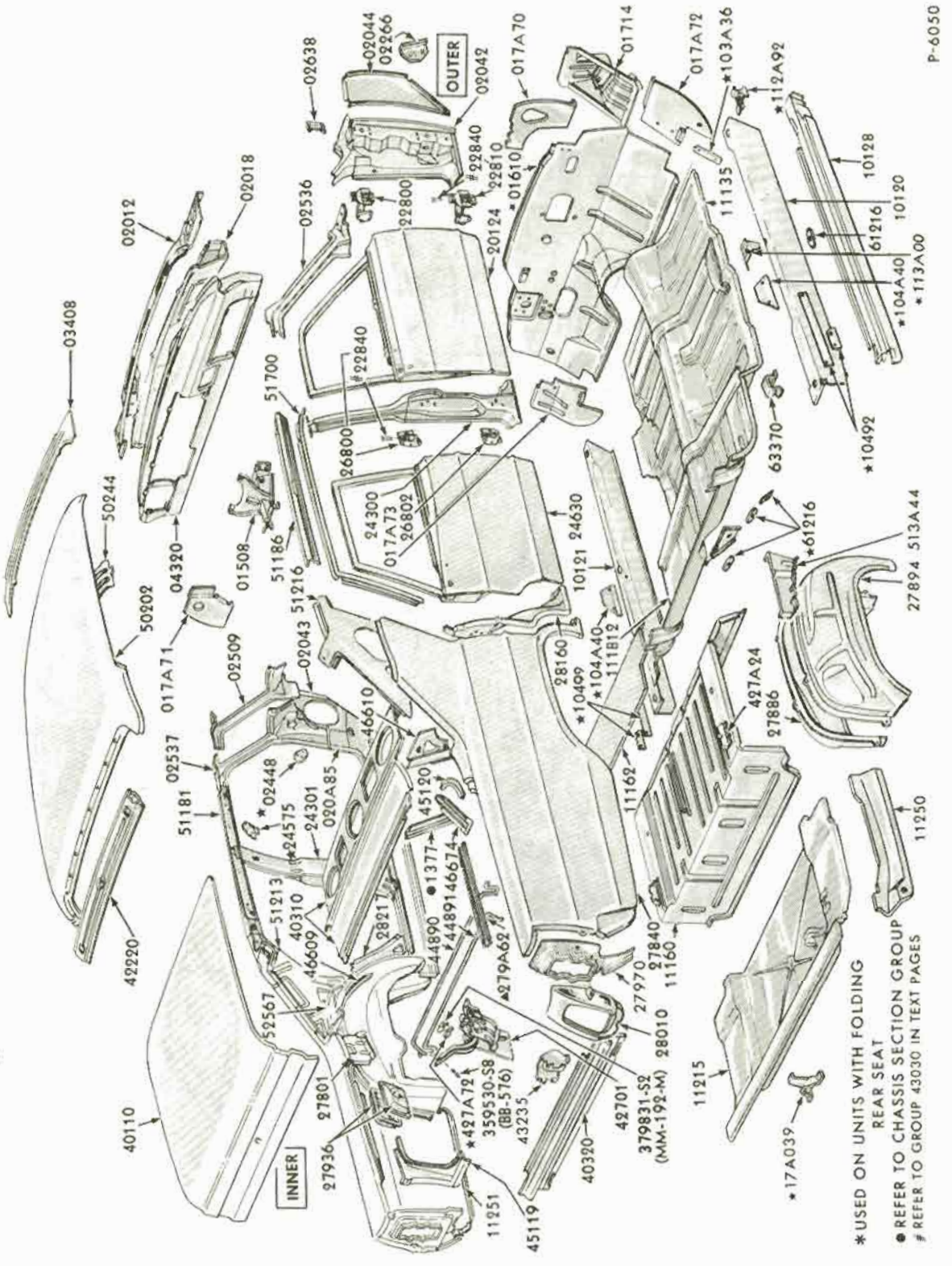

1968 FORD - BODY TYPE 54

COPYRIGHT © 1975— FORD MOTOR COMPANY —DEARBORN, MICHIGAN

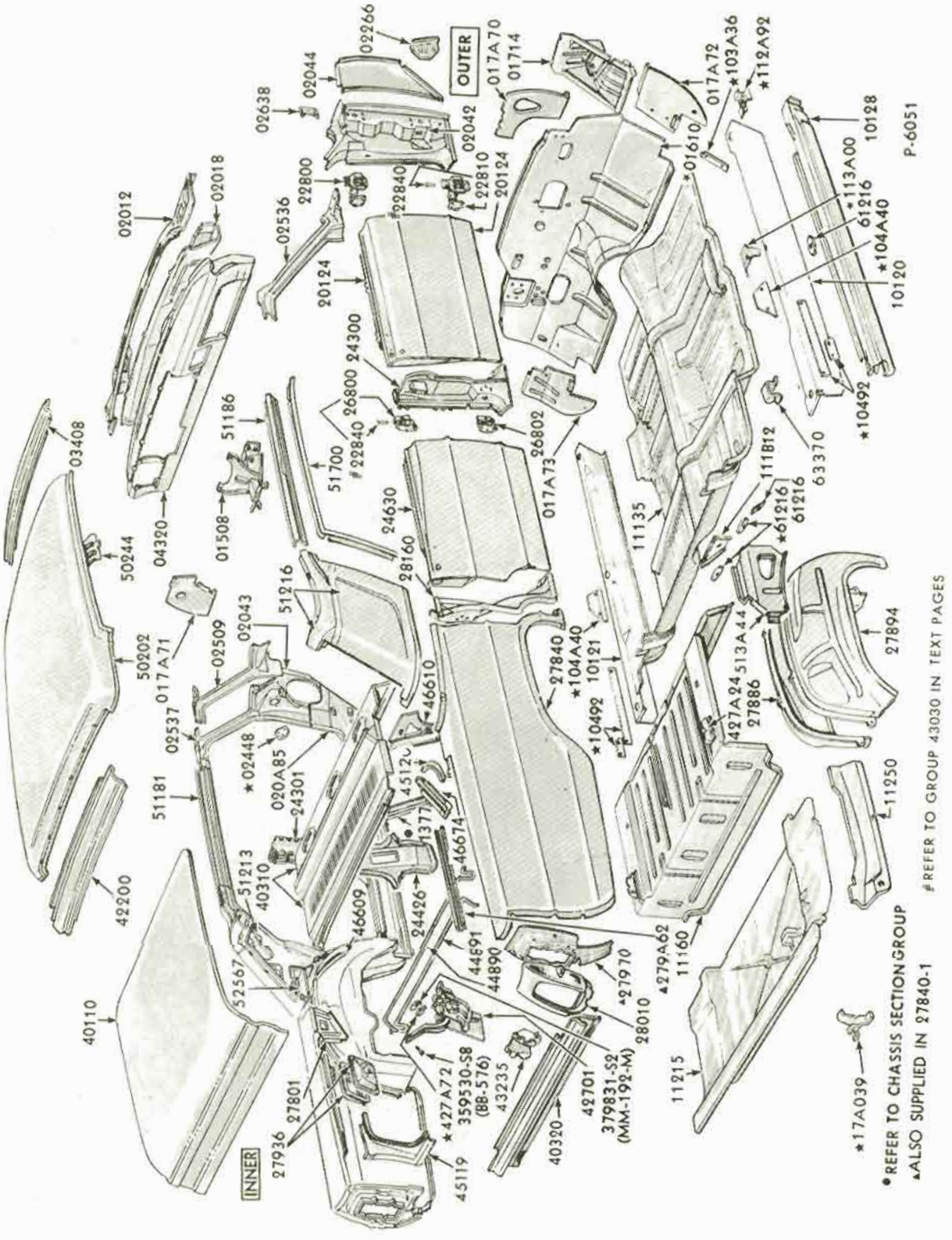
OUTER
INNER
P-6051
02266
02044
02638
02042
017A70
01714
017A72
*103A36
*112A92
10128
*113A00
61216
*104A40
10120
*10492
63370
*01610
22800
22840
22810
20124
02536
02012
02018
24300
26800
26802
017A73
51186
51700
#22840
03408
04320
01508
24630
28160
11135
111B12
*61216
61216
50244
51216
02043
02509
017A71
50202
27840
*104A40
10121
*10492
513A44
27894
427A24
27886
46610
02537
*02448
020A85
24301
51181
51213
40310
46674
1377
24426
46609
42200
52567
44891
44890
*27970
*279A62
11160
11250
40110
27801
27936
*427A72
359530-S8
(BB-576)
43235
42701
379831-S2
(MM-192-M)
28010
11215
40320
45119
*17A039
• REFER TO CHASSIS SECTION GROUP
▲ALSO SUPPLIED IN 27840-1
REFER TO GROUP 43030 IN TEXT PAGES

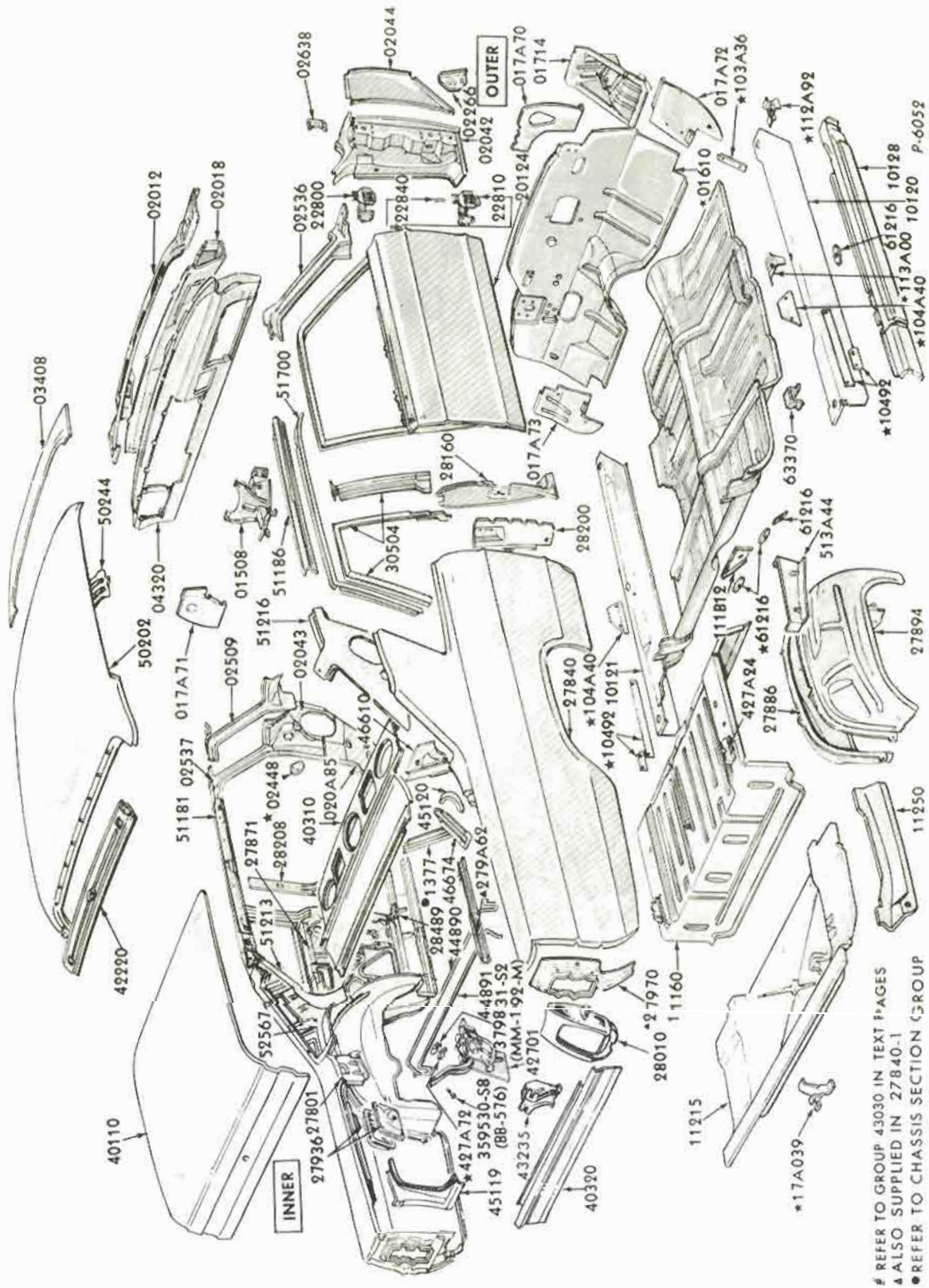

1968 FORD - BODY TYPE 62

COPYRIGHT © 1975 — FORD MOTOR COMPANY — DEARBORN, MICHIGAN

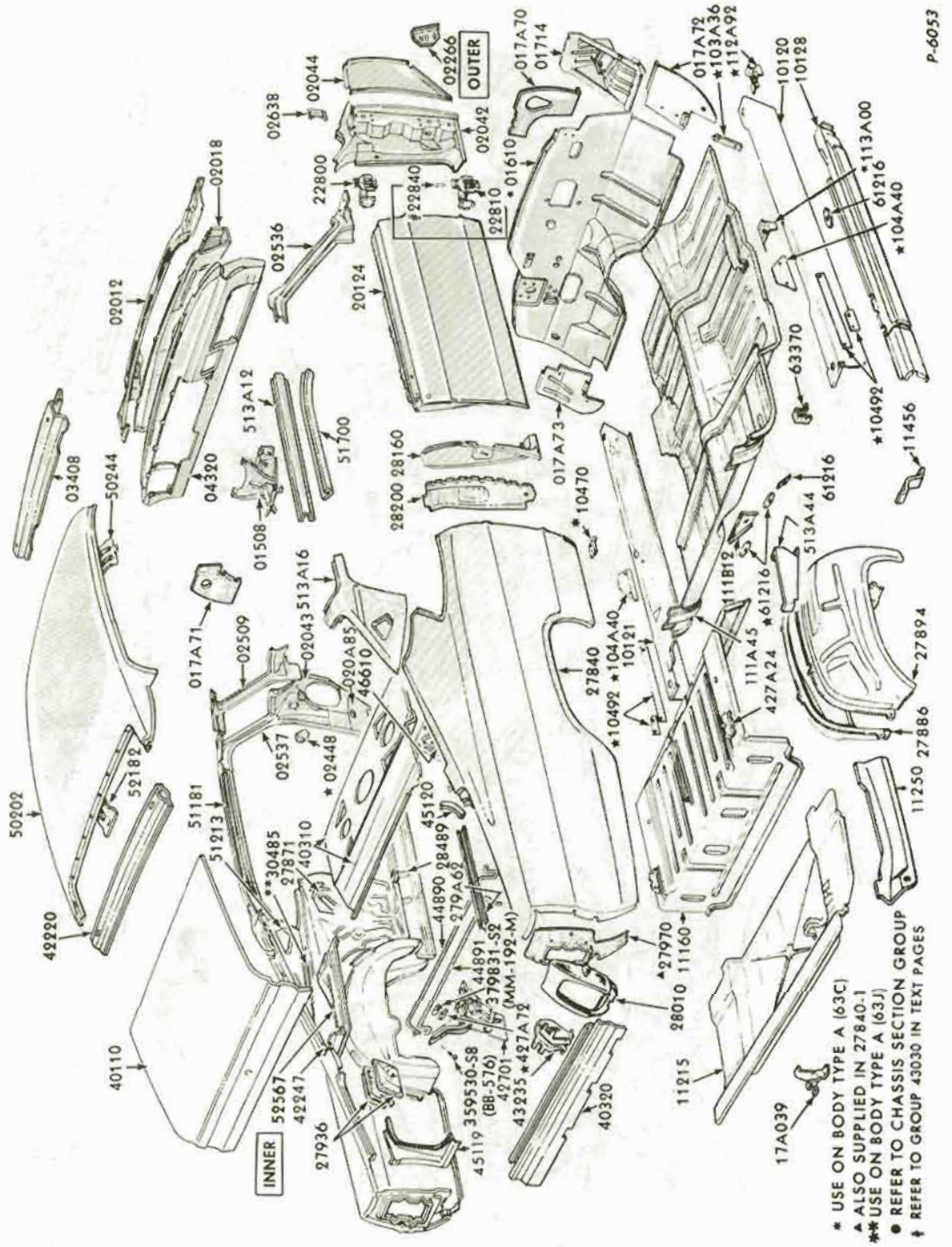
P-6053
INNER
OUTER
* USE ON BODY TYPE A (63C)
▲ ALSO SUPPLIED IN 27840-1
** USE ON BODY TYPE A (63J)
● REFER TO CHASSIS SECTION GROUP
† REFER TO GROUP 43030 IN TEXT PAGES

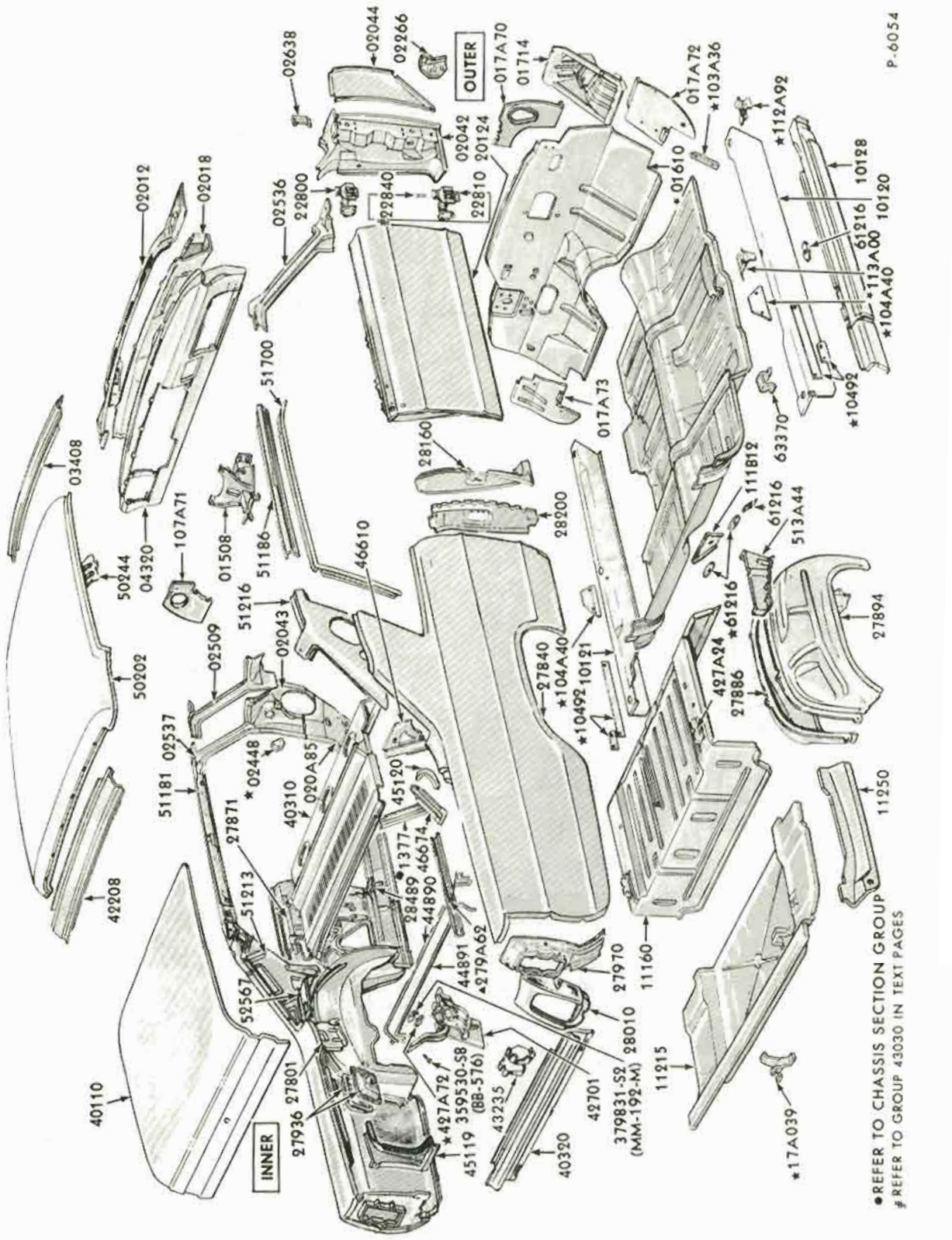

May, 1975 COPYRIGHT © 1975— FORD MOTOR COMPANY — DEARBORN, MICHIGAN FINAL ISSUE

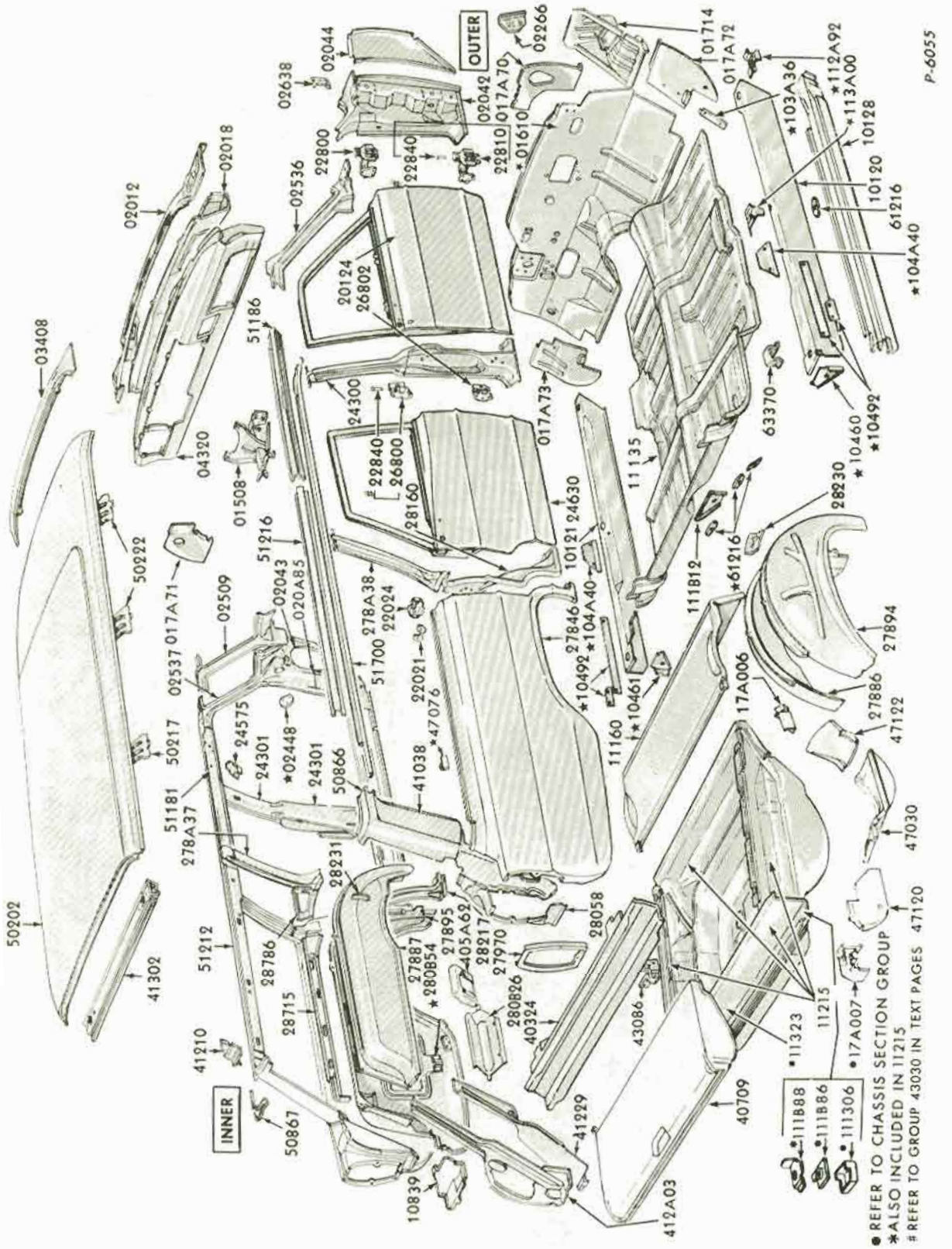
OUTER
INNER
P-6055
● REFER TO CHASSIS SECTION GROUP
*ALSO INCLUDED IN 11215
REFER TO GROUP 43030 IN TEXT PAGES

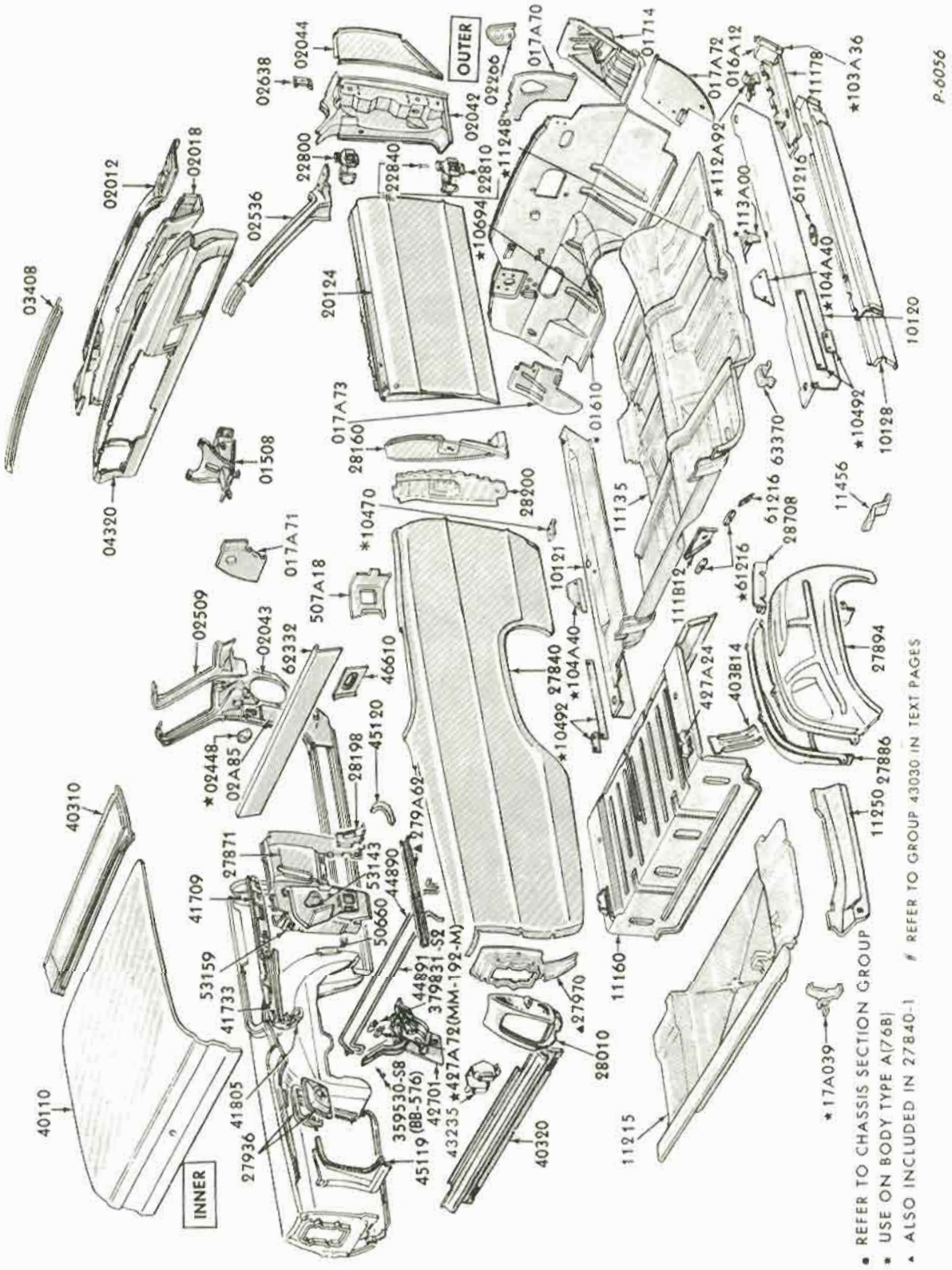

1968 FORD - BODY TYPE 76

COPYRIGHT © 1975 — FORD MOTOR COMPANY — DEARBORN, MICHIGAN

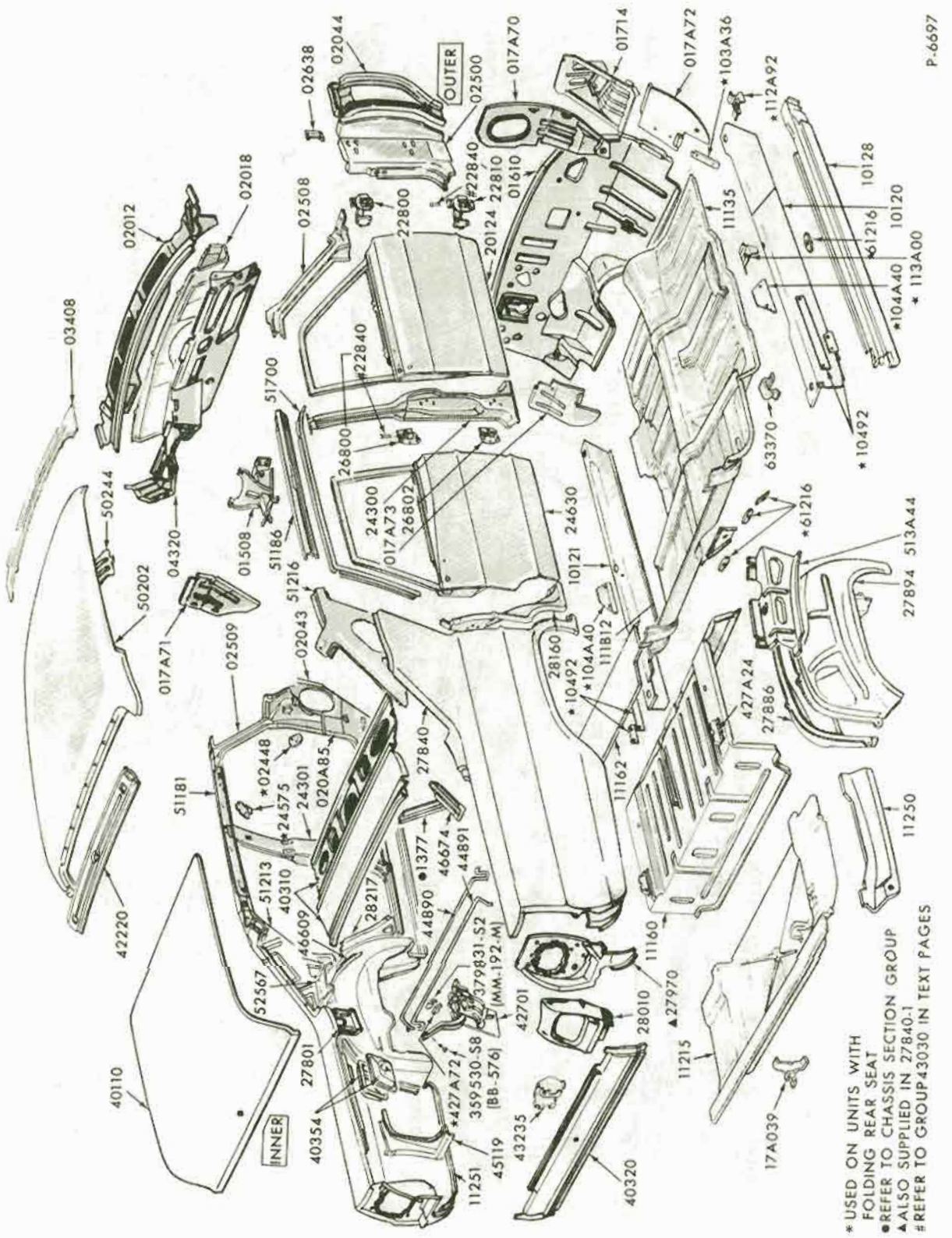

* USED ON UNITS WITH FOLDING REAR SEAT
● REFER TO CHASSIS SECTION GROUP
▲ ALSO SUPPLIED IN 27840-1
REFER TO GROUP 43030 IN TEXT PAGES

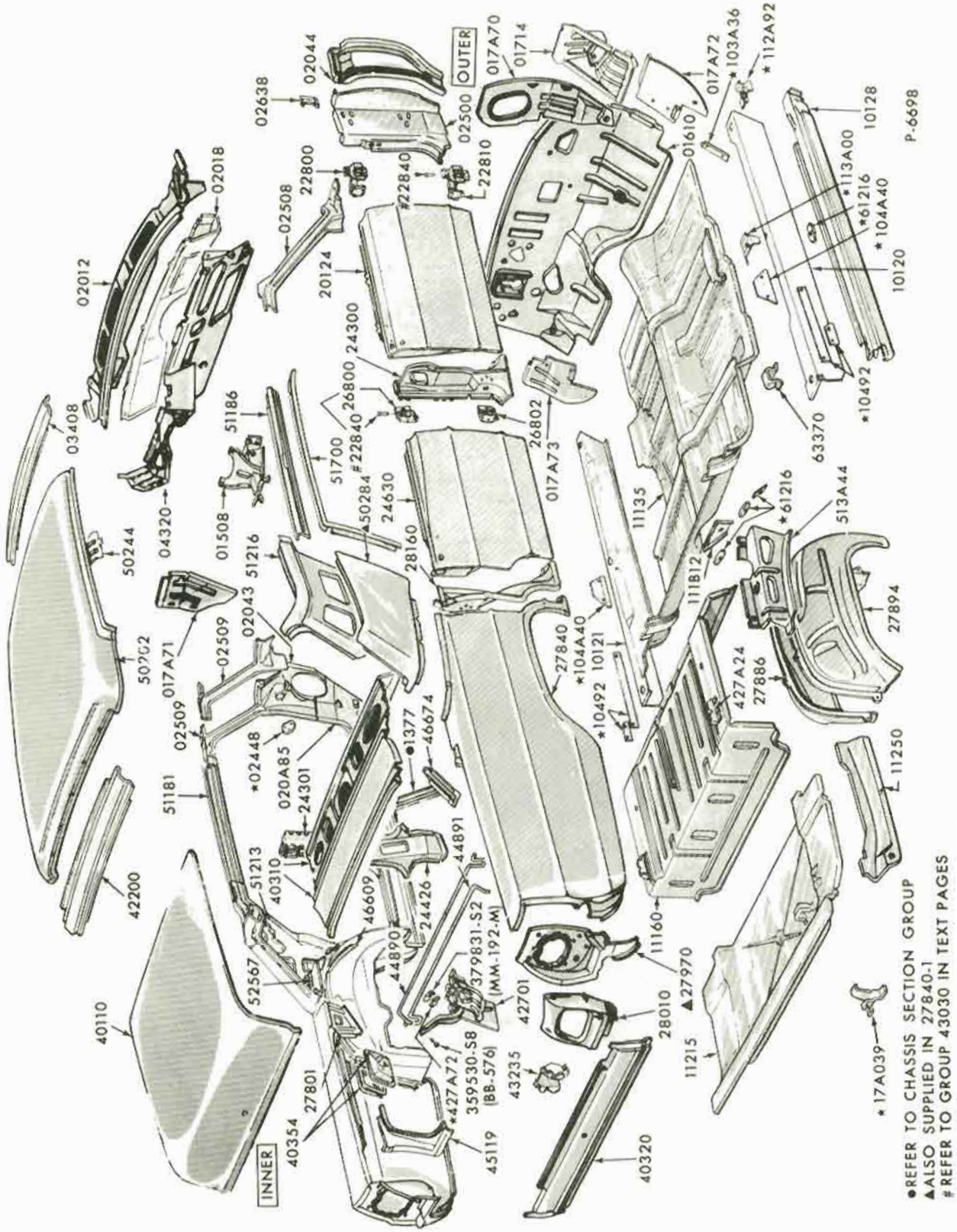

●REFER TO CHASSIS SECTION GROUP
▲ALSO SUPPLIED IN 27840-1
#REFER TO GROUP 43030 IN TEXT PAGES

May, 1975 COPYRIGHT © 1975 — FORD MOTOR COMPANY — DEARBORN, MICHIGAN FINAL ISSUE

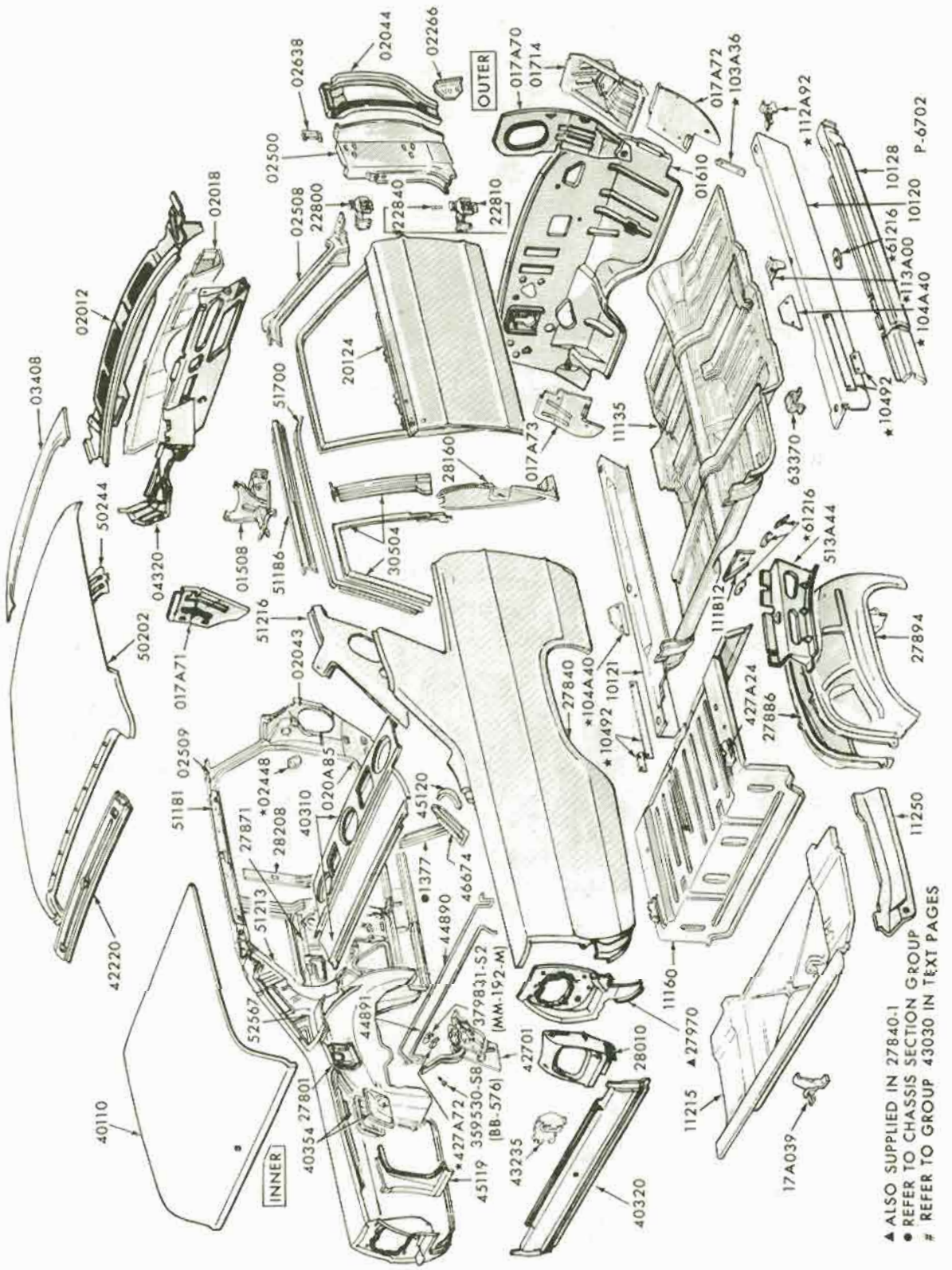

▲ ALSO SUPPLIED IN 27840-1
● REFER TO CHASSIS SECTION GROUP
REFER TO GROUP 43030 IN TEXT PAGES

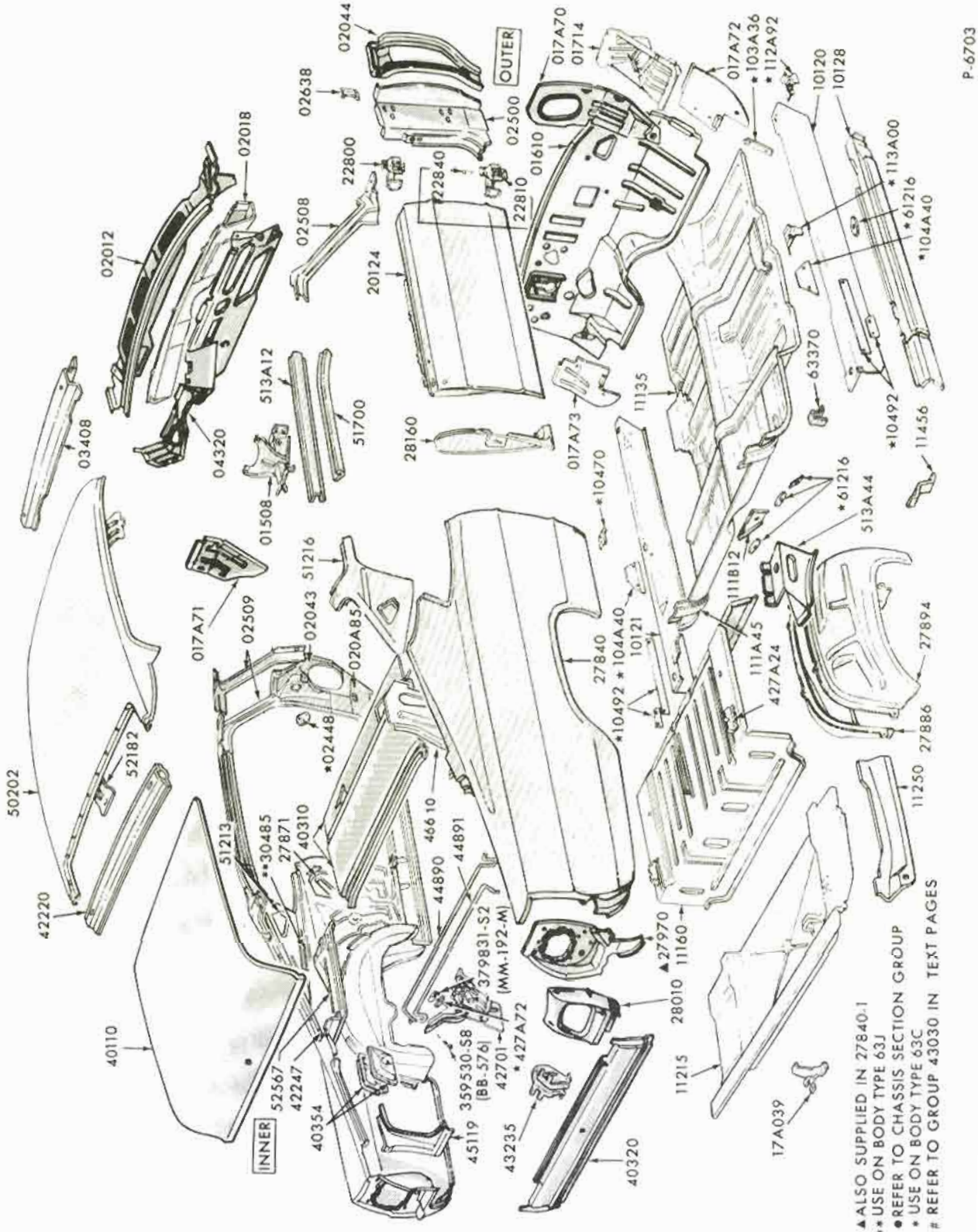

▲ALSO SUPPLIED IN 27840-1
**USE ON BODY TYPE 63J
●REFER TO CHASSIS SECTION GROUP
*USE ON BODY TYPE 63C
REFER TO GROUP 43030 IN TEXT PAGES

May, 1975 COPYRIGHT © 1975 — FORD MOTOR COMPANY — DEARBORN, MICHIGAN FINAL ISSUE

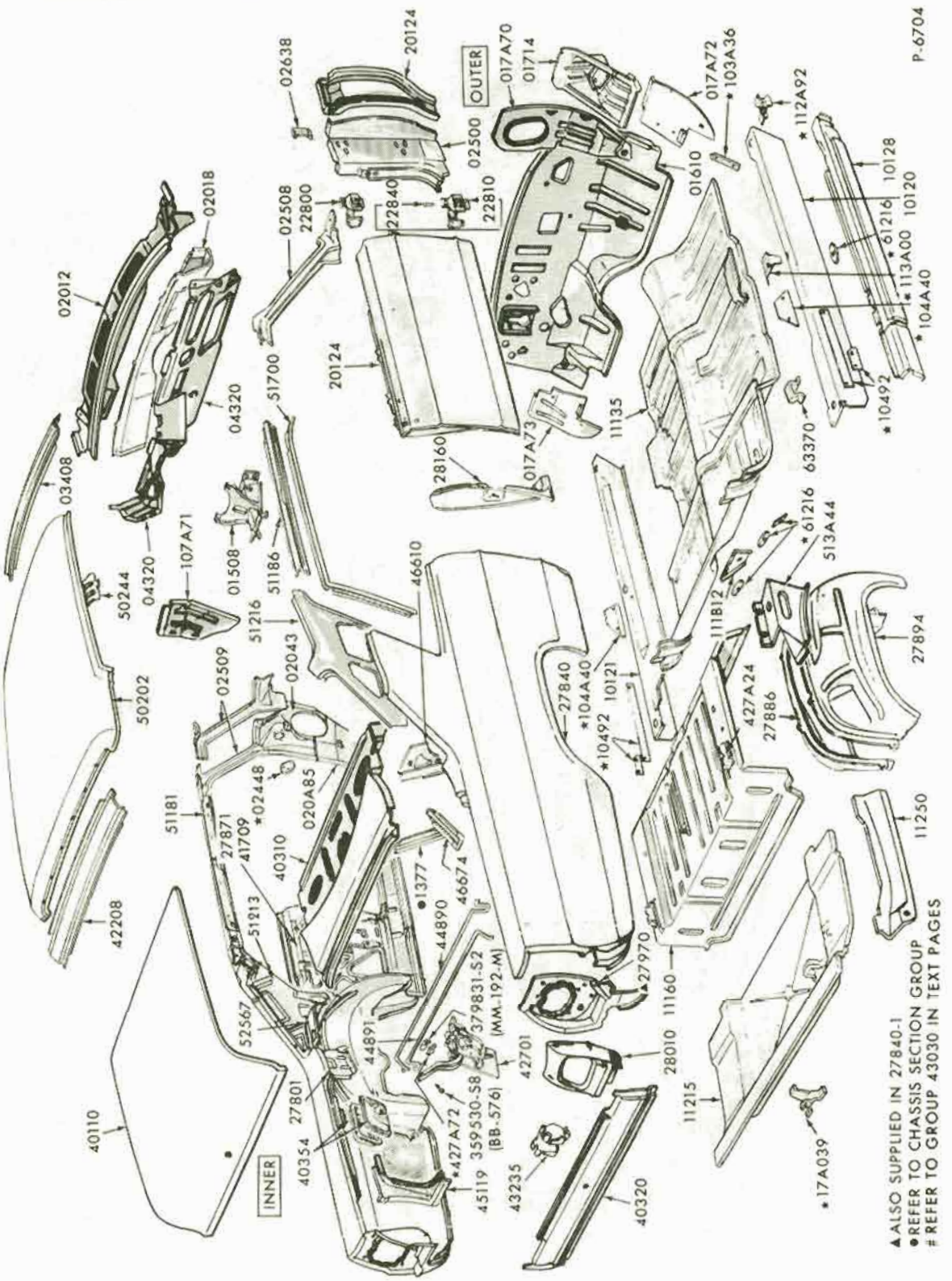
P-6704
INNER
OUTER
▲ALSO SUPPLIED IN 27840-1
●REFER TO CHASSIS SECTION GROUP
#REFER TO GROUP 43030 IN TEXT PAGES

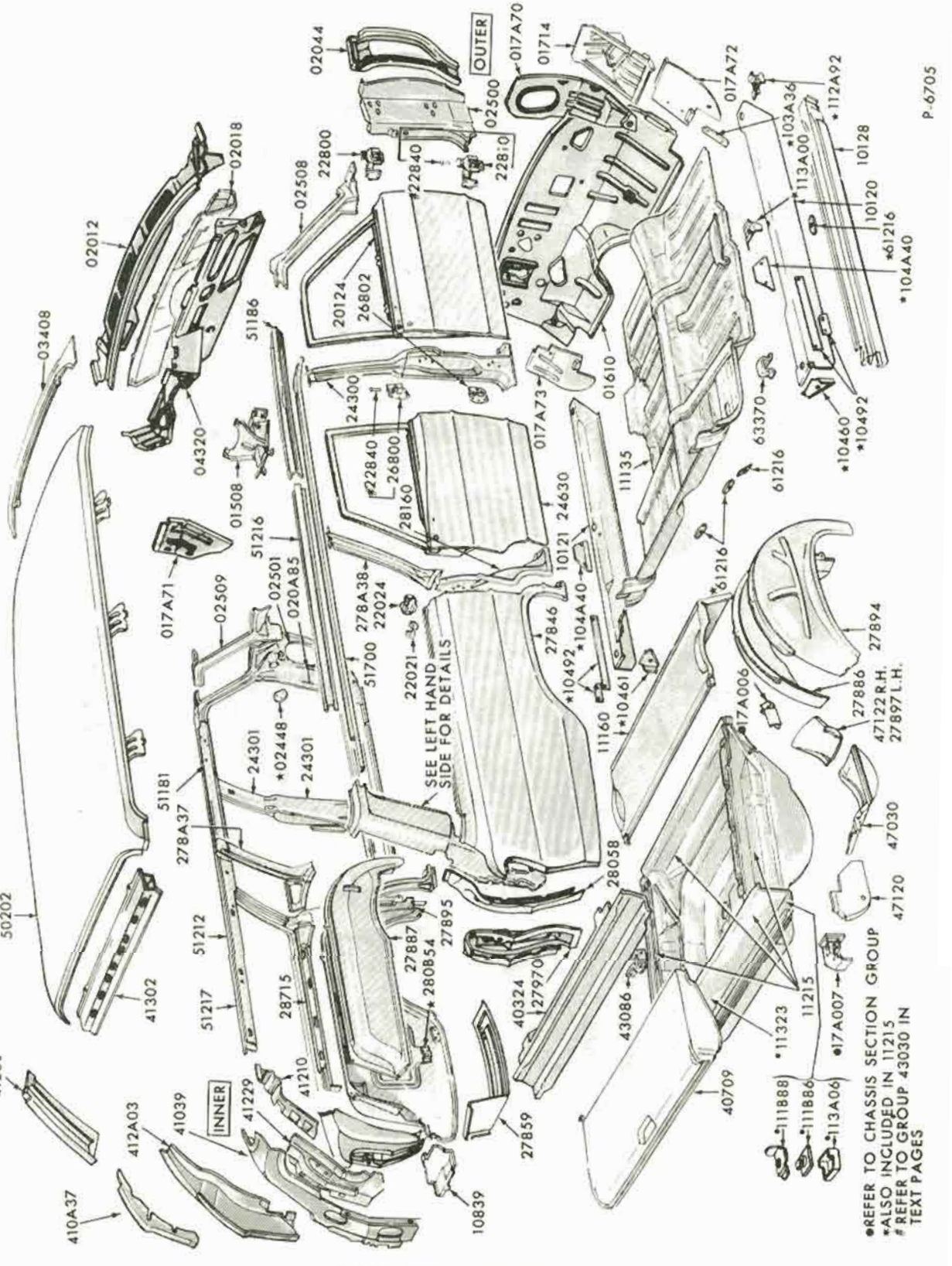

1969/70 FORD - BODY TYPE 71

COPYRIGHT © 1975 — FORD MOTOR COMPANY — DEARBORN, MICHIGAN

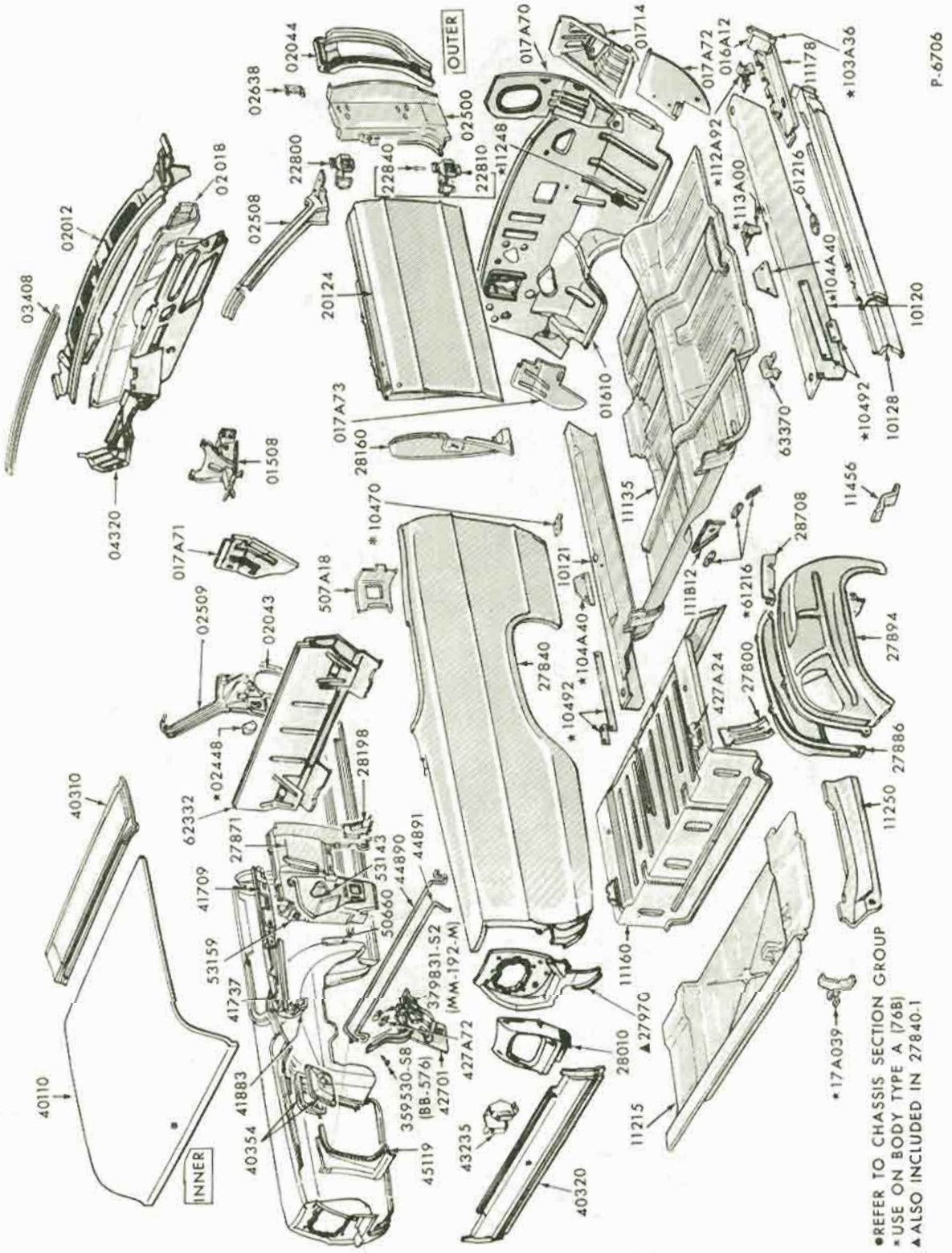
P-6706
OUTER
INNER
02044
02638
02500
017A70
01714
017A72
016A12
11178
*103A36
*112A92
*113A00
61216
02018
02012
03408
22800
22840
22810
*11248
02508
20124
*104A40
10120
01610
017A73
28160
63370
*10492
10128
01508
04320
*10470
11135
11456
017A71
507A18
10121
111B12
28708
02509
02043
27840
*10492
*104A40
427A24
27800
27894
*02448
28198
62332
27871
27886
40310
44891
44890
53143
50660
41709
53159
41737
379831-S2
(MM-192-M)
359530-S8
(BB-576)
42701
427A72
11160
▲27970
28010
11250
*17A039
40110
41883
40354
45119
43235
40320
11215
●REFER TO CHASSIS SECTION GROUP
*USE ON BODY TYPE A (76B)
▲ALSO INCLUDED IN 27840-1

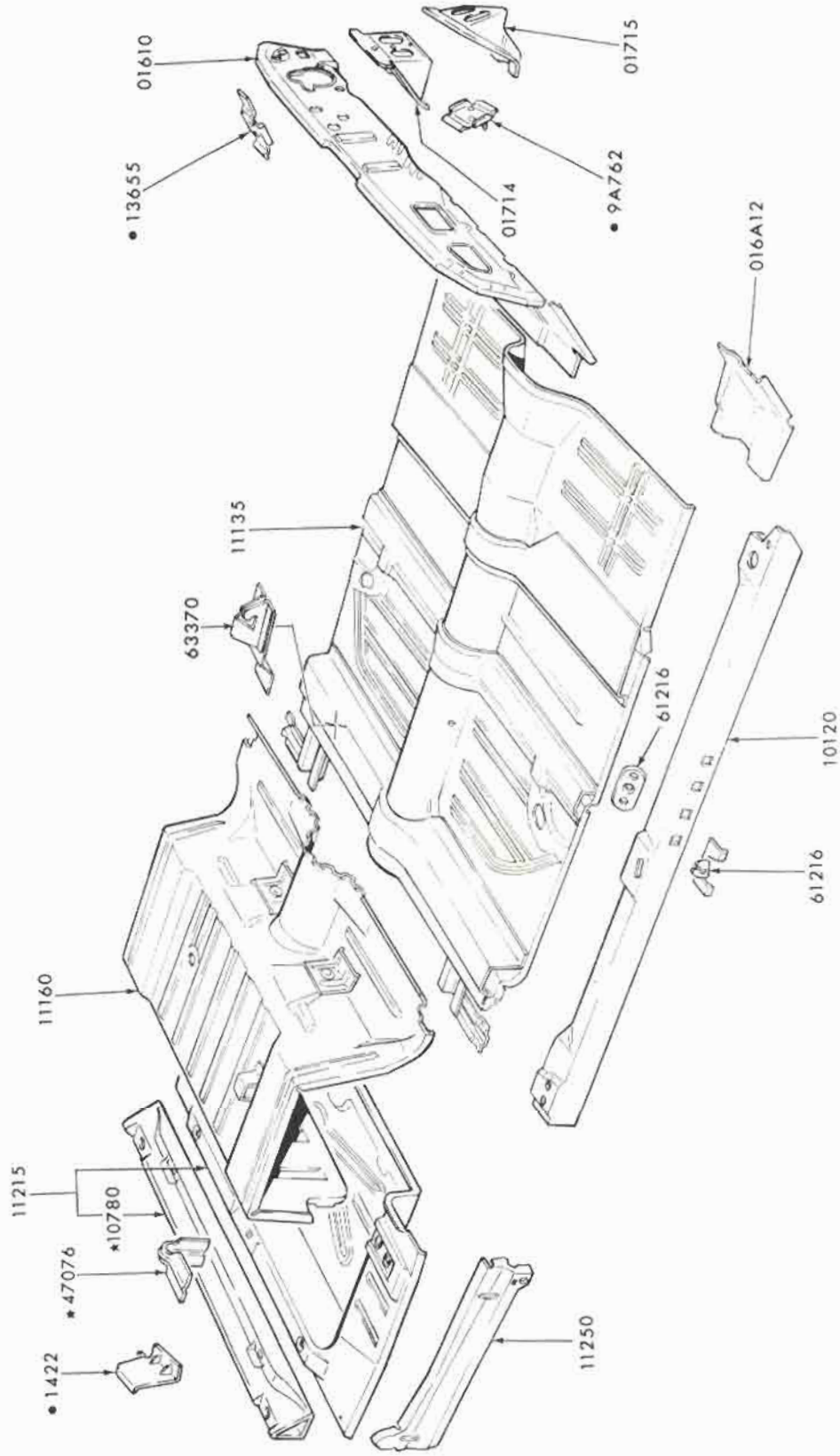

1971/72 FORD - BODY TYPES 53, 54, 57, 65, 76 - UNDERBODY

COPYRIGHT © 1975 — FORD MOTOR COMPANY — DEARBORN, MICHIGAN

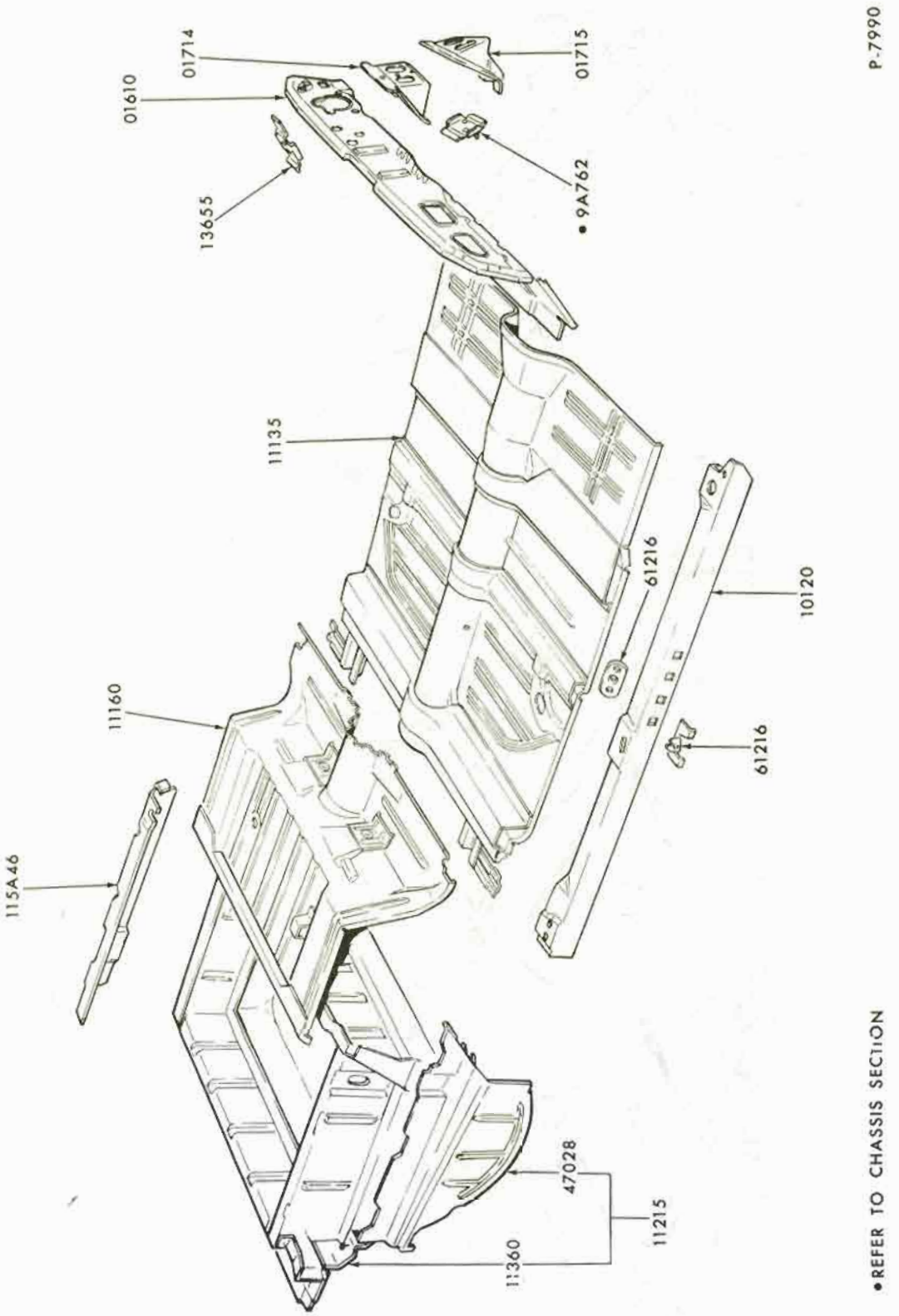

1971/72 FORD - BODY TYPE 71 - UNDERBODY

P-7993

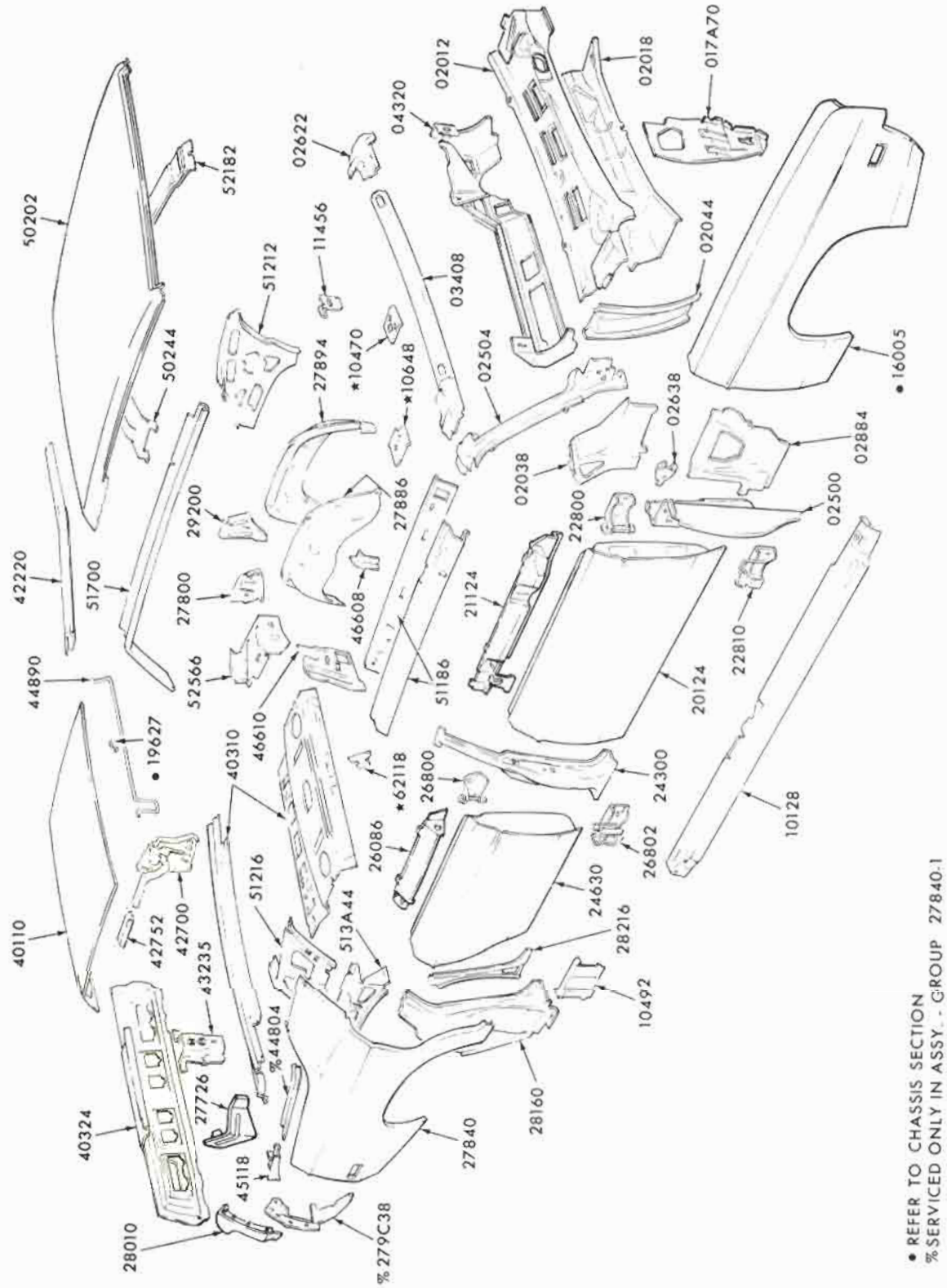

• REFER TO CHASSIS SECTION
% SERVICED ONLY IN ASSY. - GROUP 27840.1

COPYRIGHT © 1975 — FORD MOTOR COMPANY — DEARBORN, MICHIGAN

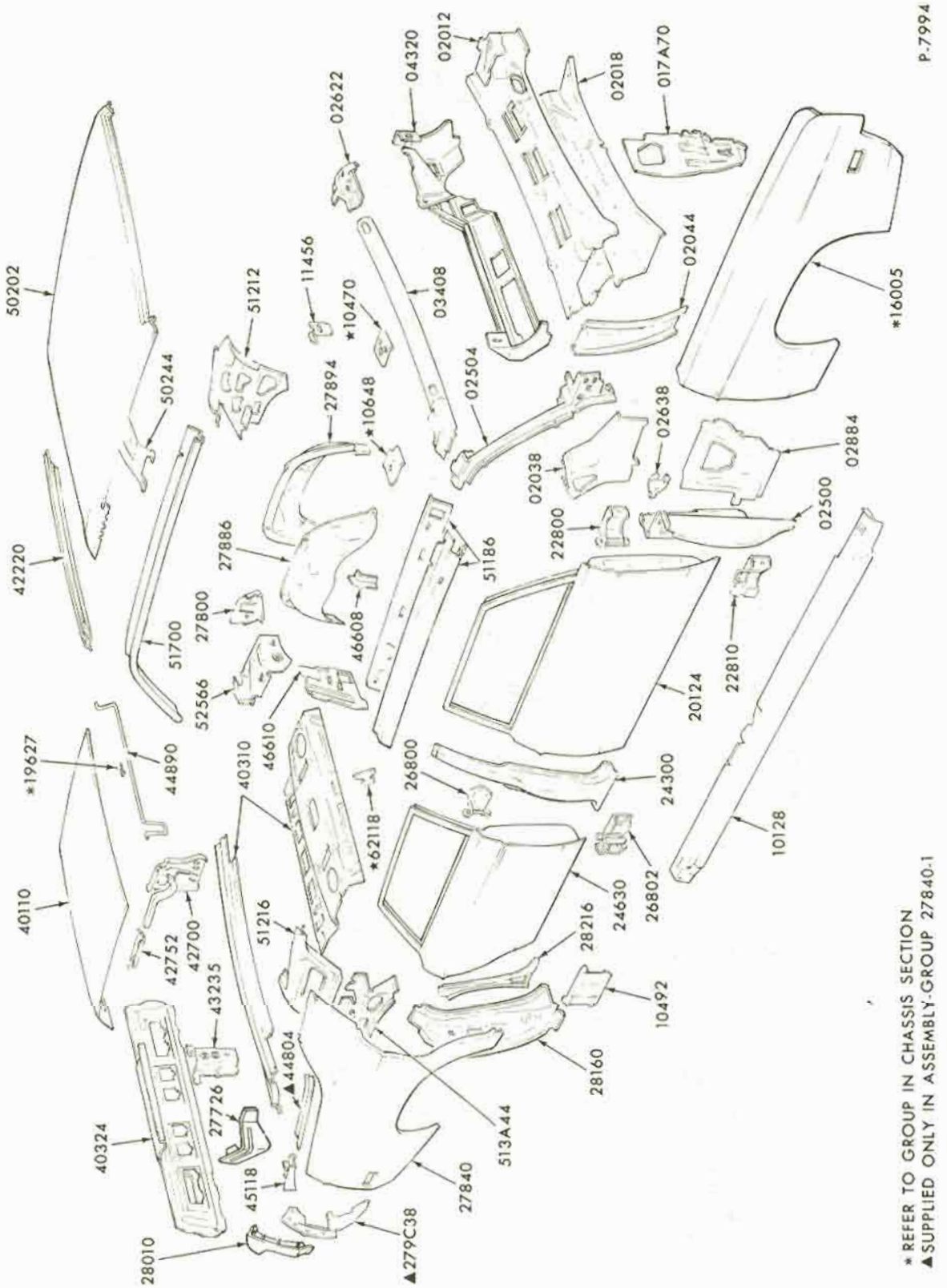

* REFER TO GROUP IN CHASSIS SECTION
▲SUPPLIED ONLY IN ASSEMBLY-GROUP 27840-1

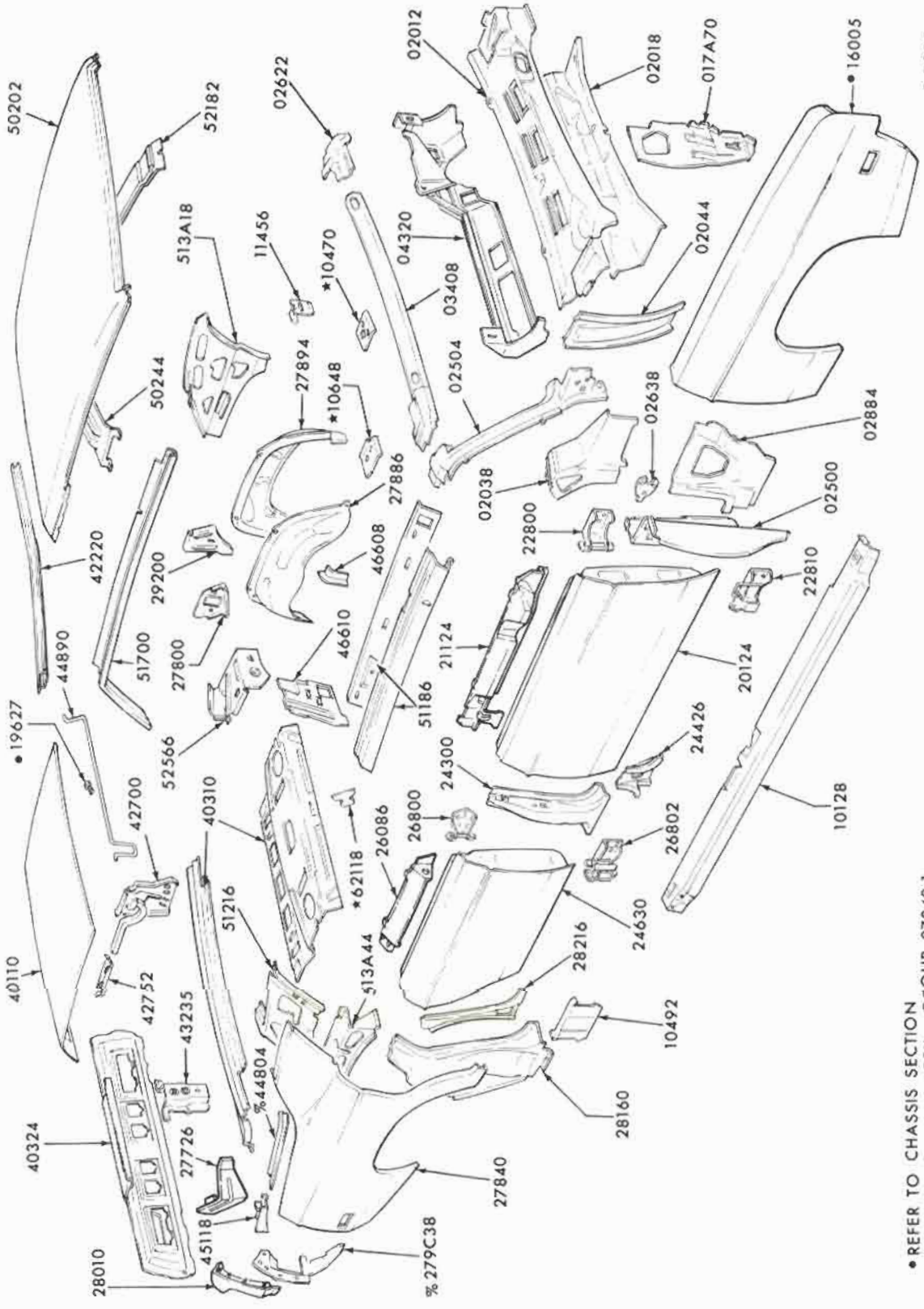

1971/72 FORD - BODY TYPE 57 - UPPER BODY

COPYRIGHT © 1975 — FORD MOTOR COMPANY — DEARBORN, MICHIGAN

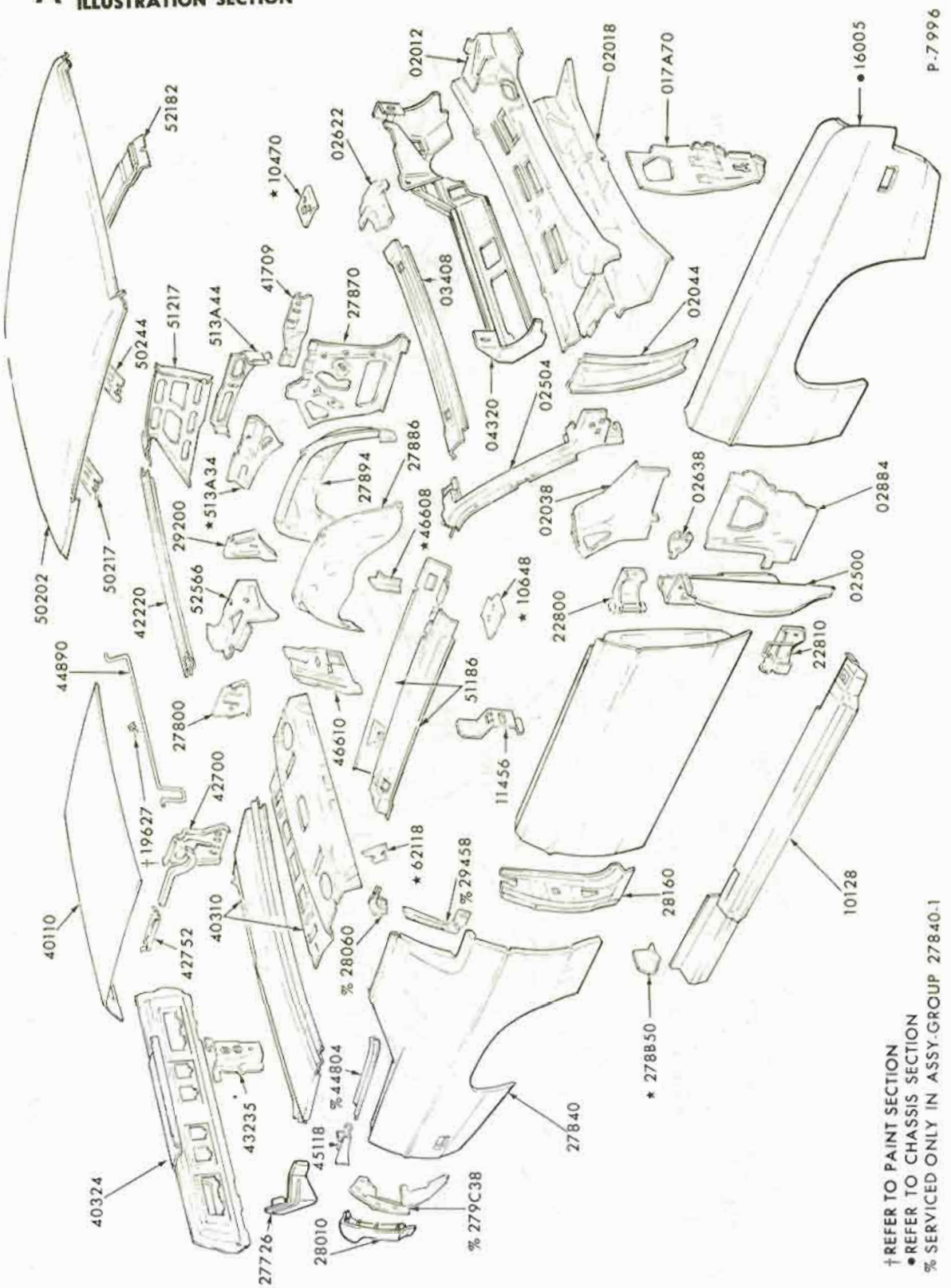

1971/72 FORD - BODY TYPE 65 - UPPER BODY

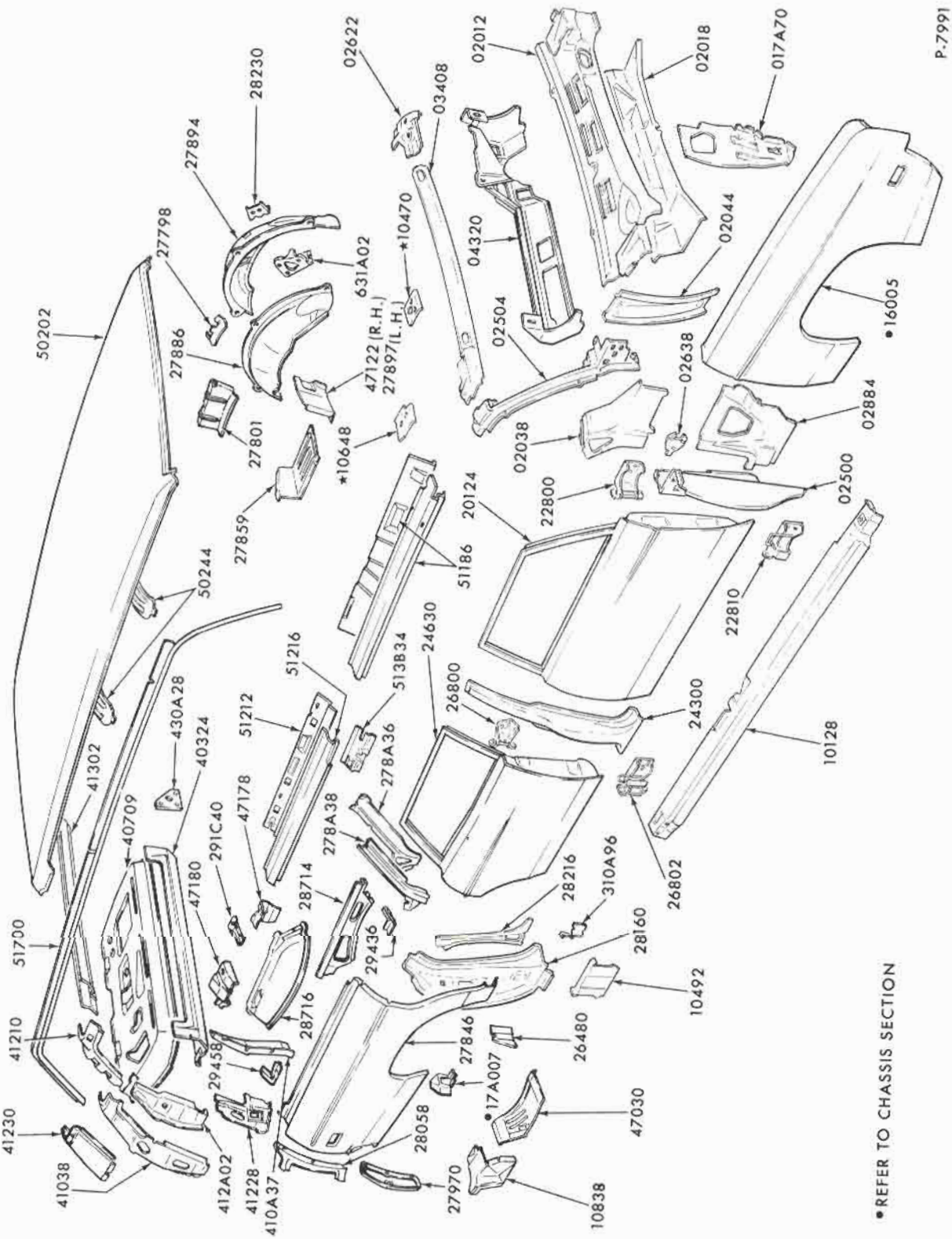

1971/72 FORD - BODY TYPE 71 - UPPER BODY

COPYRIGHT © 1975 — FORD MOTOR COMPANY — DEARBORN, MICHIGAN

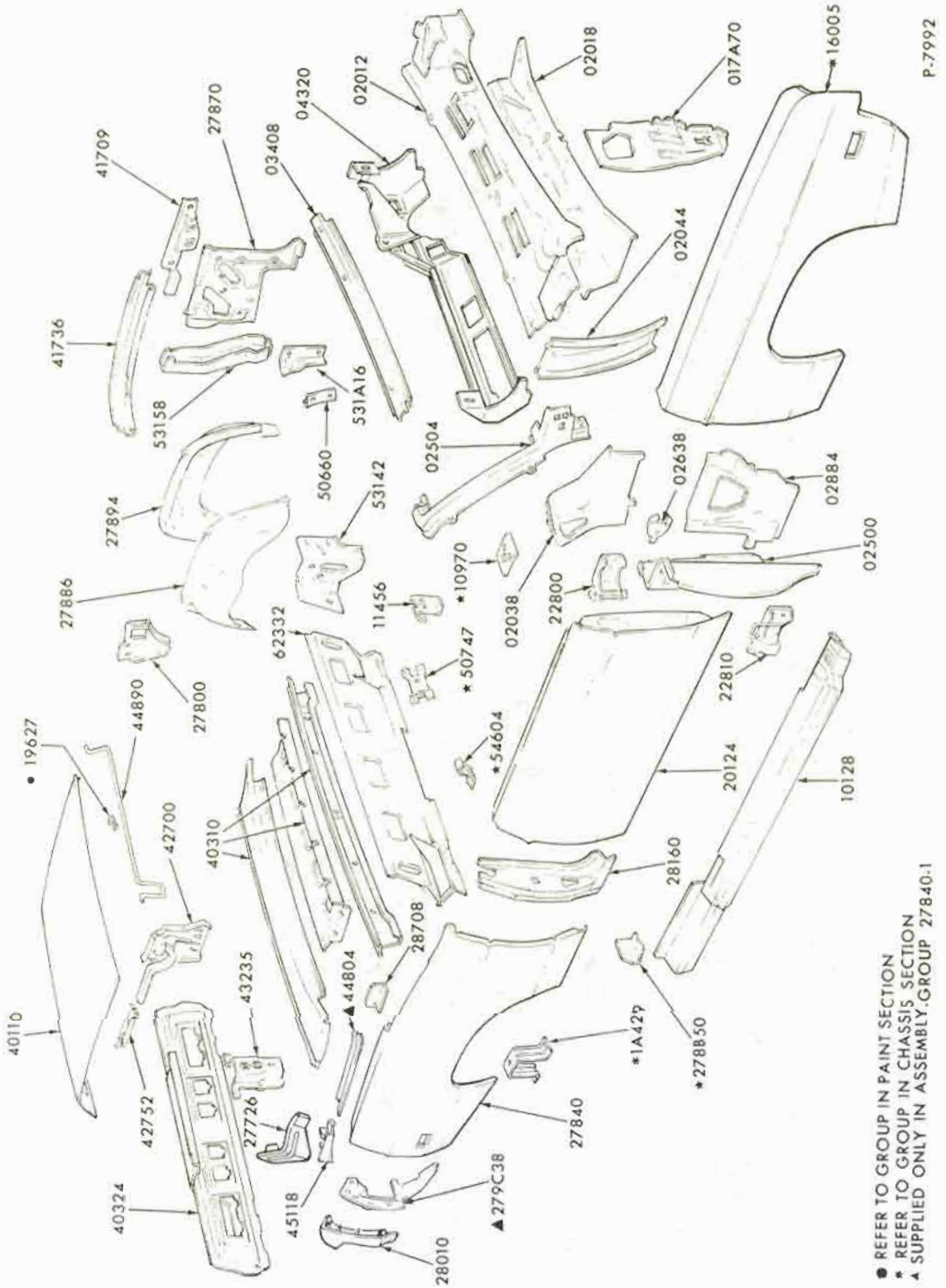
P-7992
41709
27870
03408
04320
02012
02018
017A70
16005
02044
41736
53158
531A16
50660
02504
02638
02884
27894
53142
10970
02500
27886
11456
02038
22800
62332
50747
22810
44890
27800
54604
20124
10128
19627
42700
40310
28160
28708
44804
43235
1A429
27880
40110
42752
27726
27840
40324
45118
279C38
28010
● REFER TO GROUP IN PAINT SECTION
* REFER TO GROUP IN CHASSIS SECTION
▲ SUPPLIED ONLY IN ASSEMBLY GROUP 27840-1

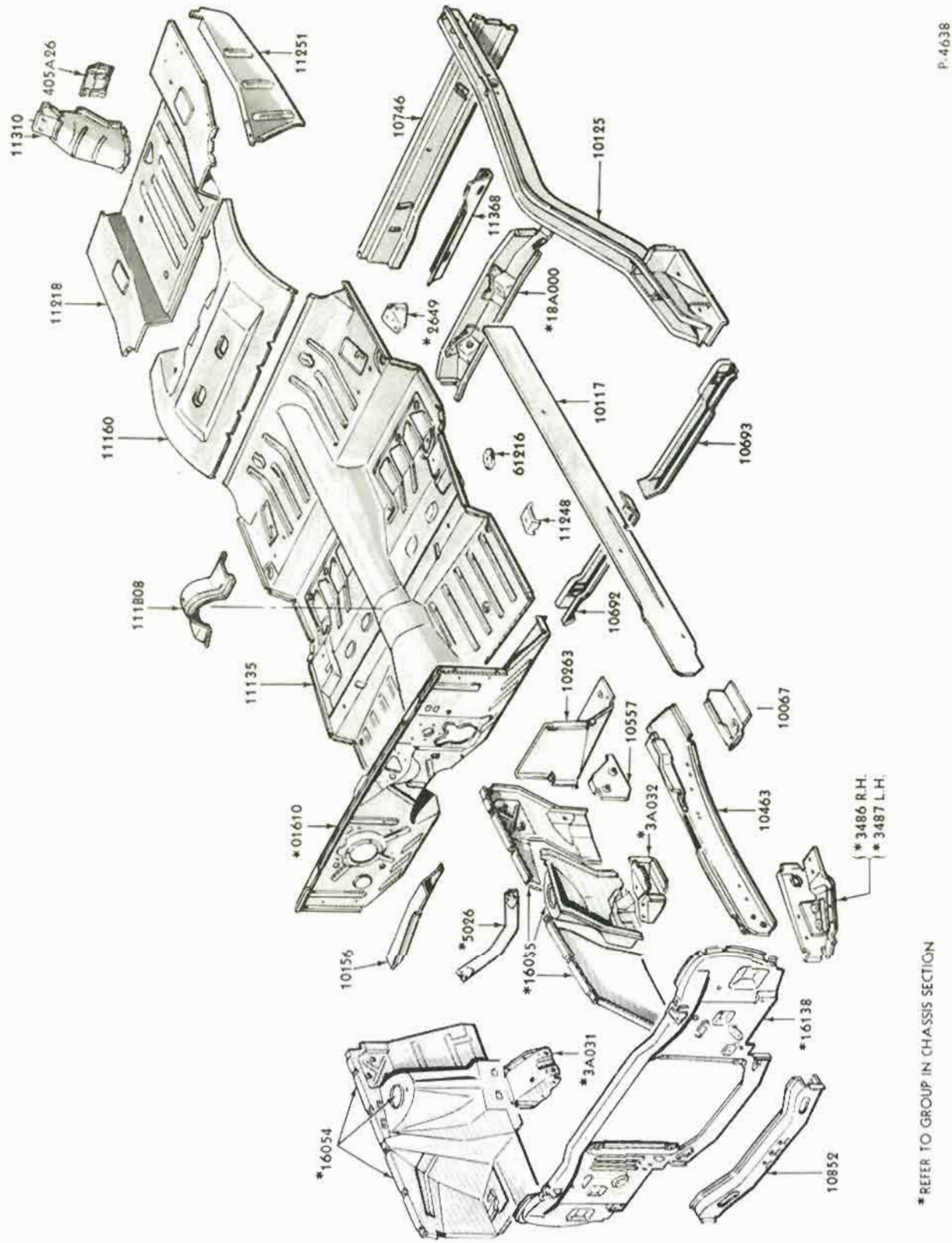

1965 FAIRLANE - BODY TYPES 54, 62, 65 - UNDER BODY

COPYRIGHT © 1975 — FORD MOTOR COMPANY — DEARBORN, MICHIGAN

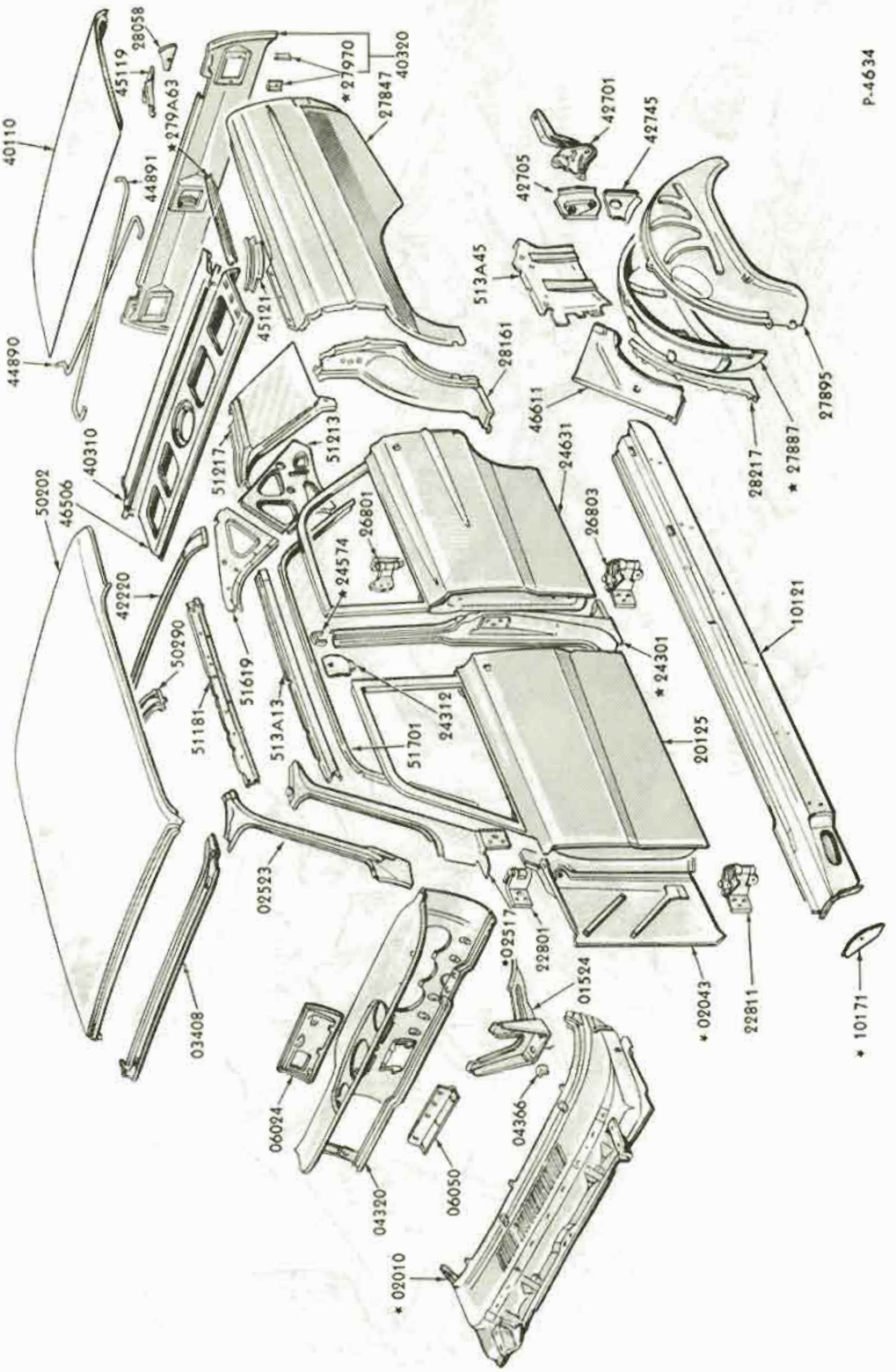

1965 FAIRLANE - BODY TYPE 54 - UPPER BODY

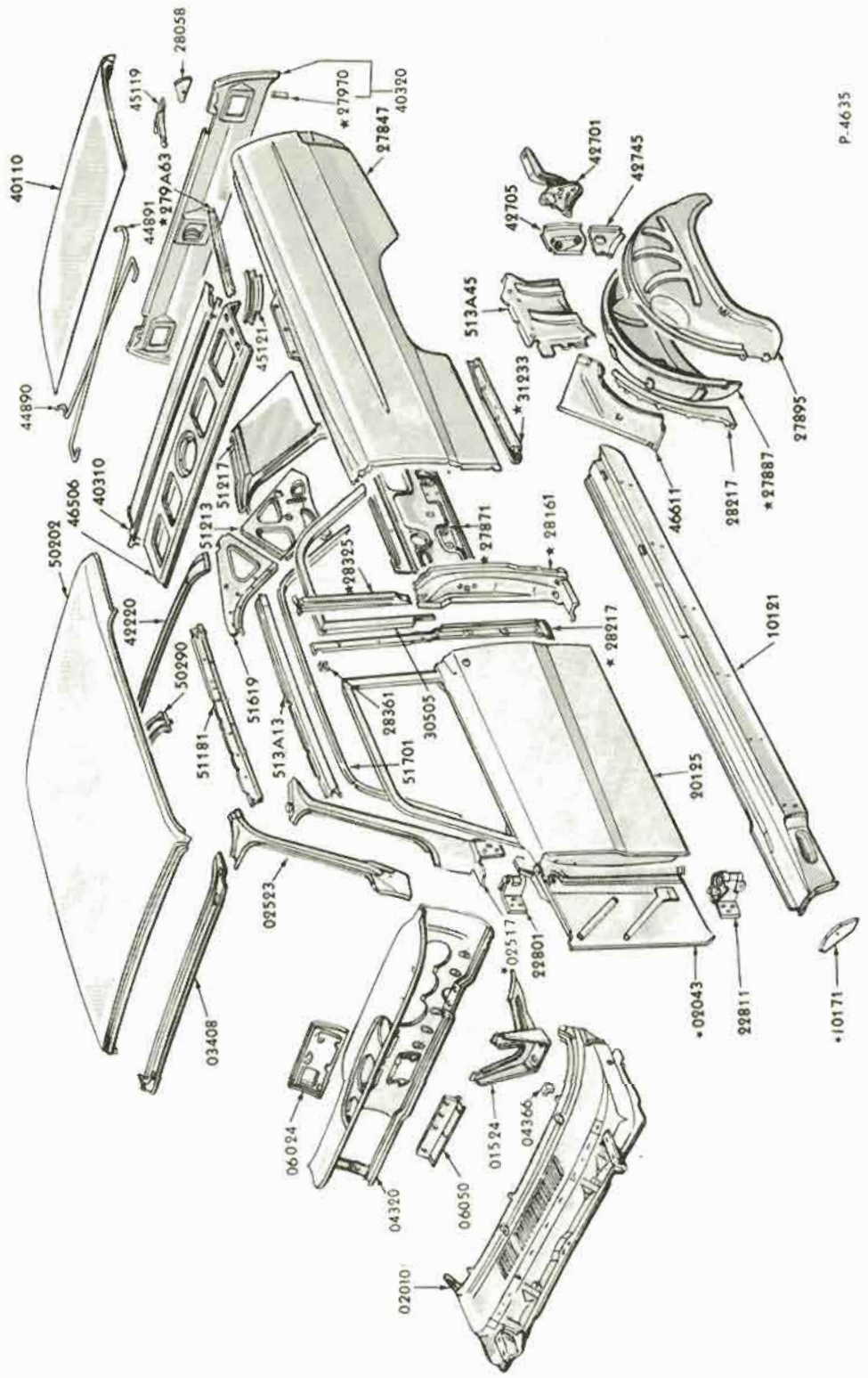

1965 FAIRLANE - BODY TYPE 62 - UPPER BODY

COPYRIGHT © 1975 — FORD MOTOR COMPANY — DEARBORN, MICHIGAN

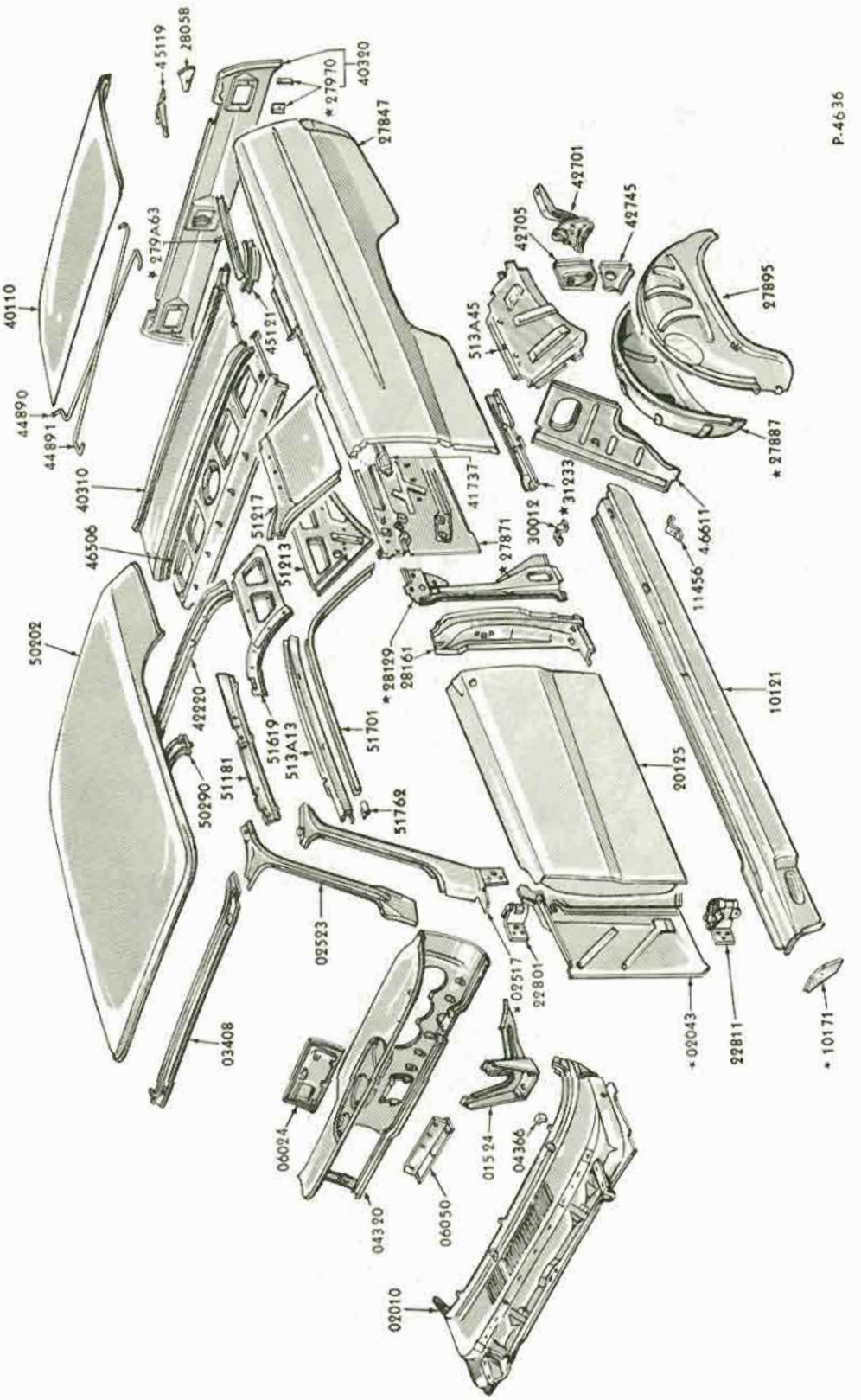

1965 FAIRLANE - BODY TYPE 65 - UPPER BODY

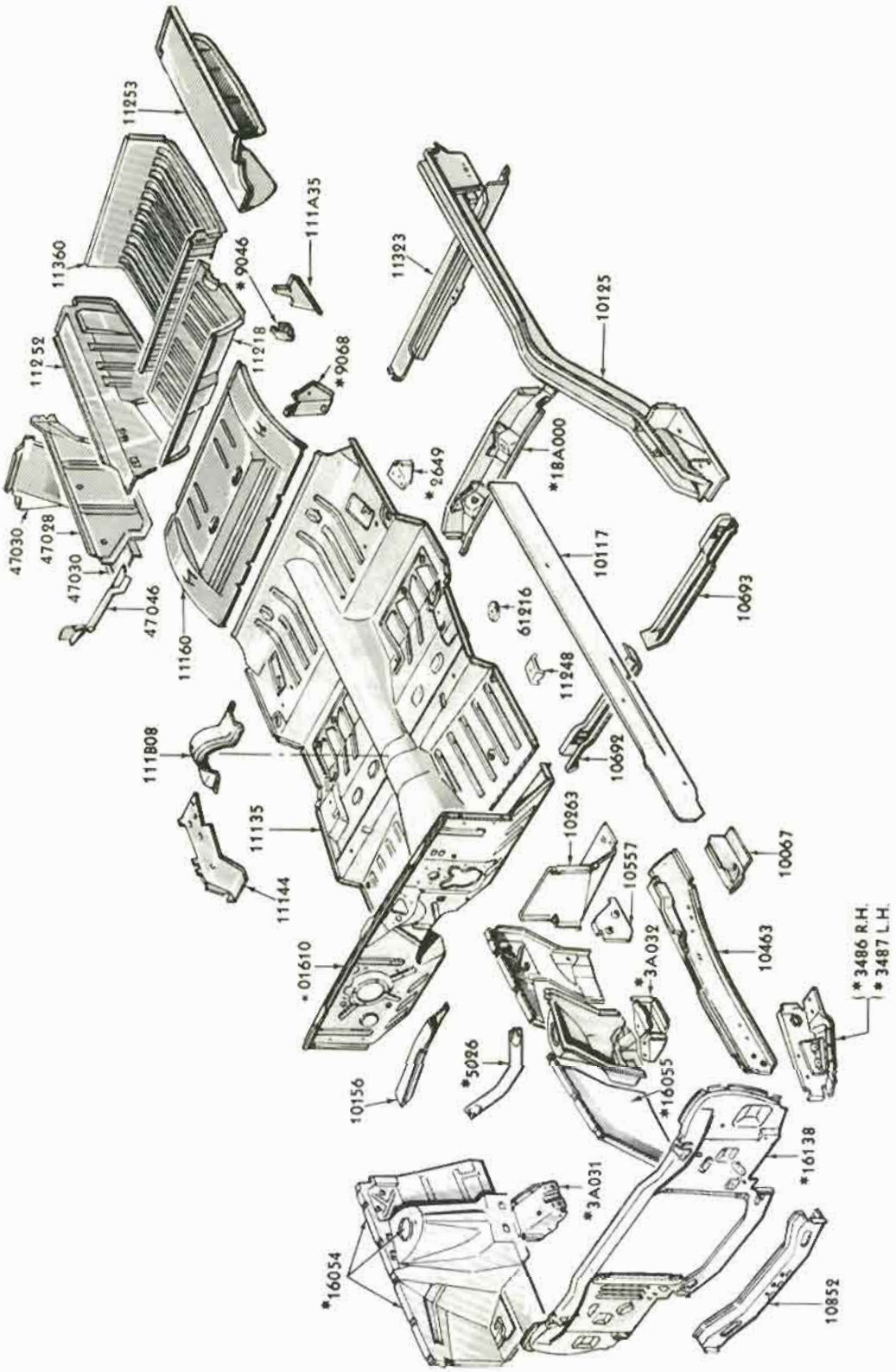

1965 FAIRLANE - BODY TYPE 71 - UNDER BODY

COPYRIGHT © 1975 — FORD MOTOR COMPANY — DEARBORN, MICHIGAN

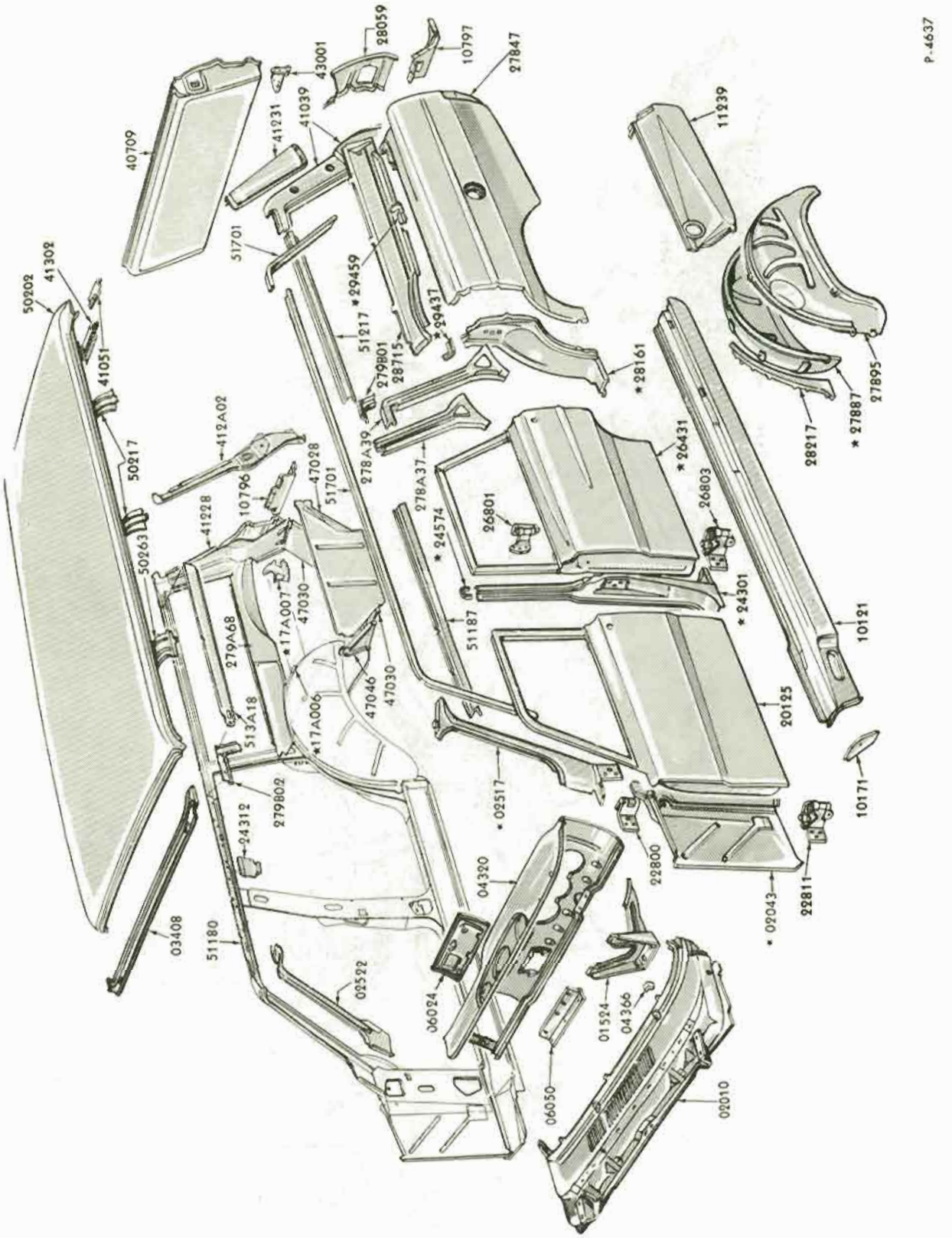

1965 FAIRLANE - BODY TYPE 71 - UPPER BODY

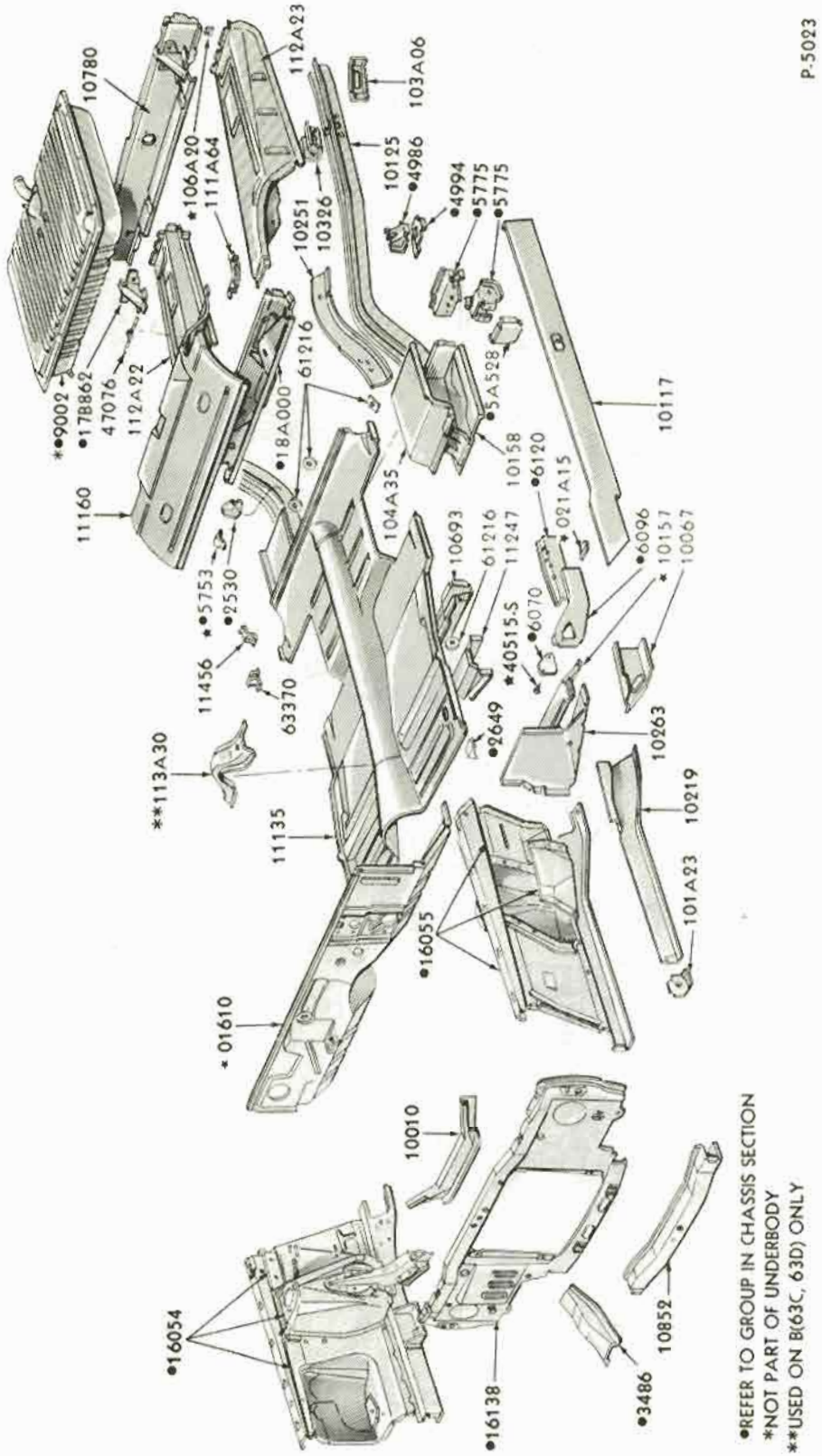

•REFER TO GROUP IN CHASSIS SECTION
*NOT PART OF UNDERBODY
**USED ON B(63C, 63D) ONLY

1966/67 FAIRLANE - BODY TYPES 54, 62, 63 - UNDERBODY

COPYRIGHT © 1975 — FORD MOTOR COMPANY — DEARBORN, MICHIGAN

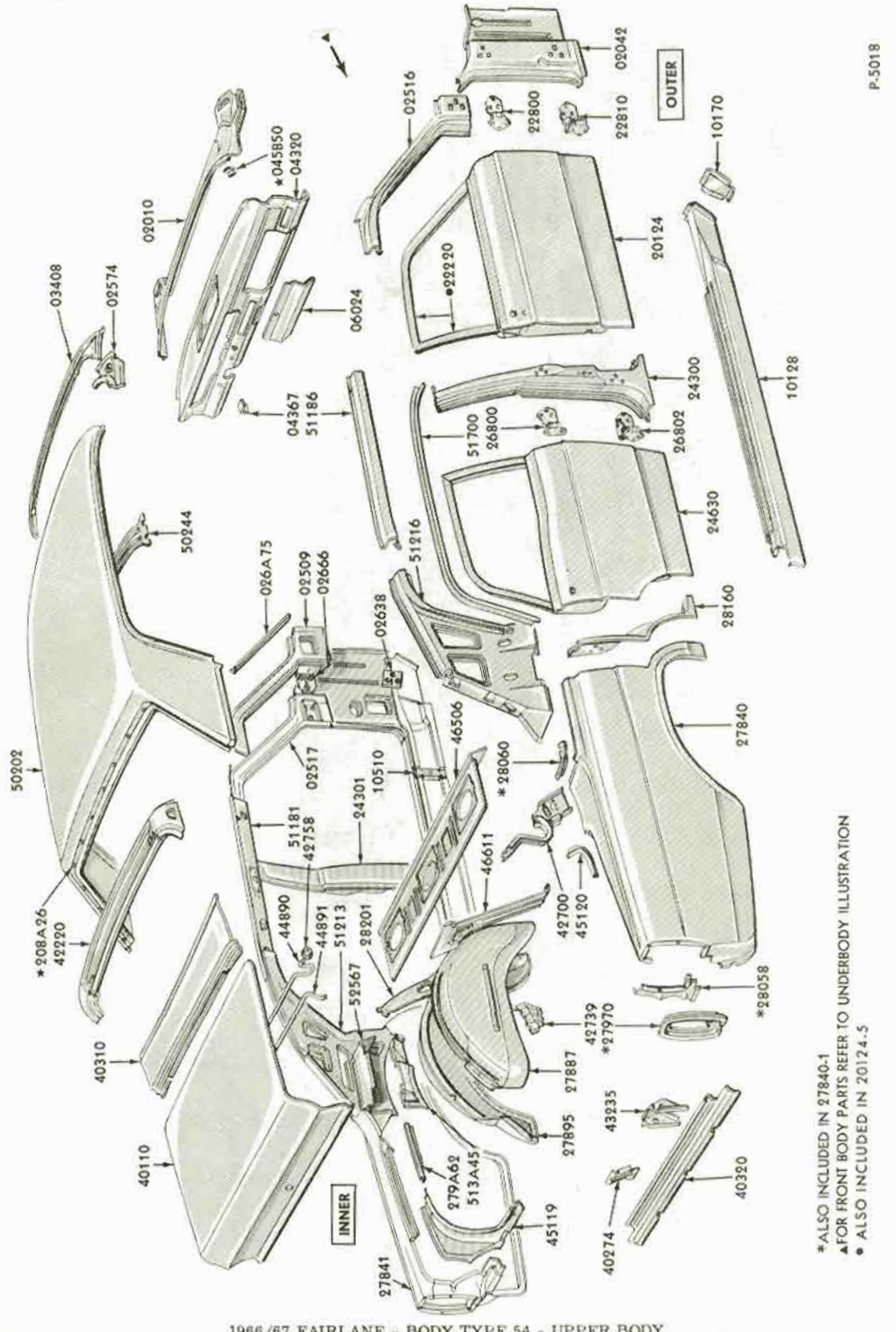

1966/67 FAIRLANE - BODY TYPE 54 - UPPER BODY

COPYRIGHT © 1975 — FORD MOTOR COMPANY —DEARBORN, MICHIGAN

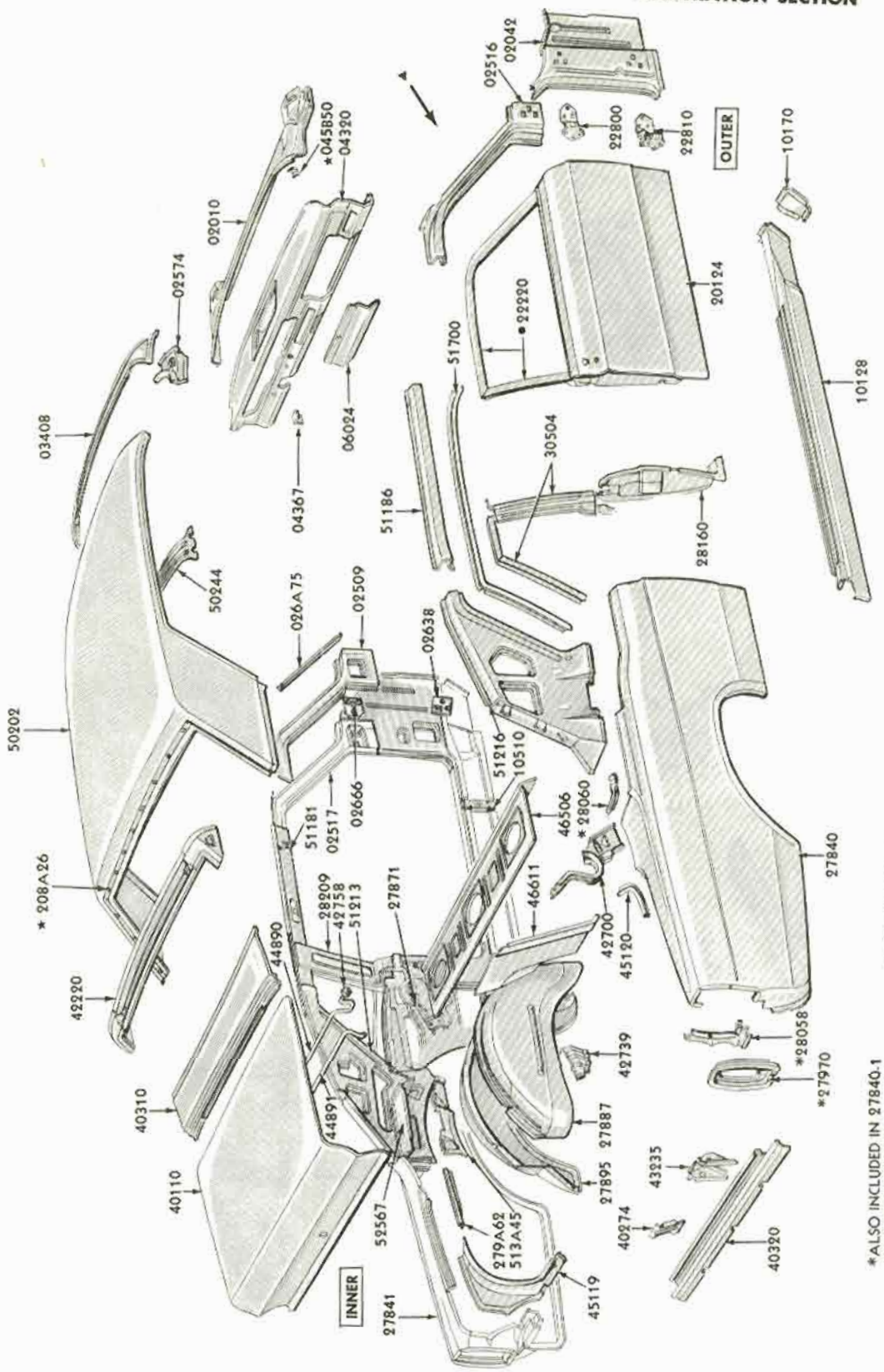

1966/67 FAIRLANE - BODY TYPE 62 - UPPER BODY

COPYRIGHT © 1975 — FORD MOTOR COMPANY — DEARBORN, MICHIGAN

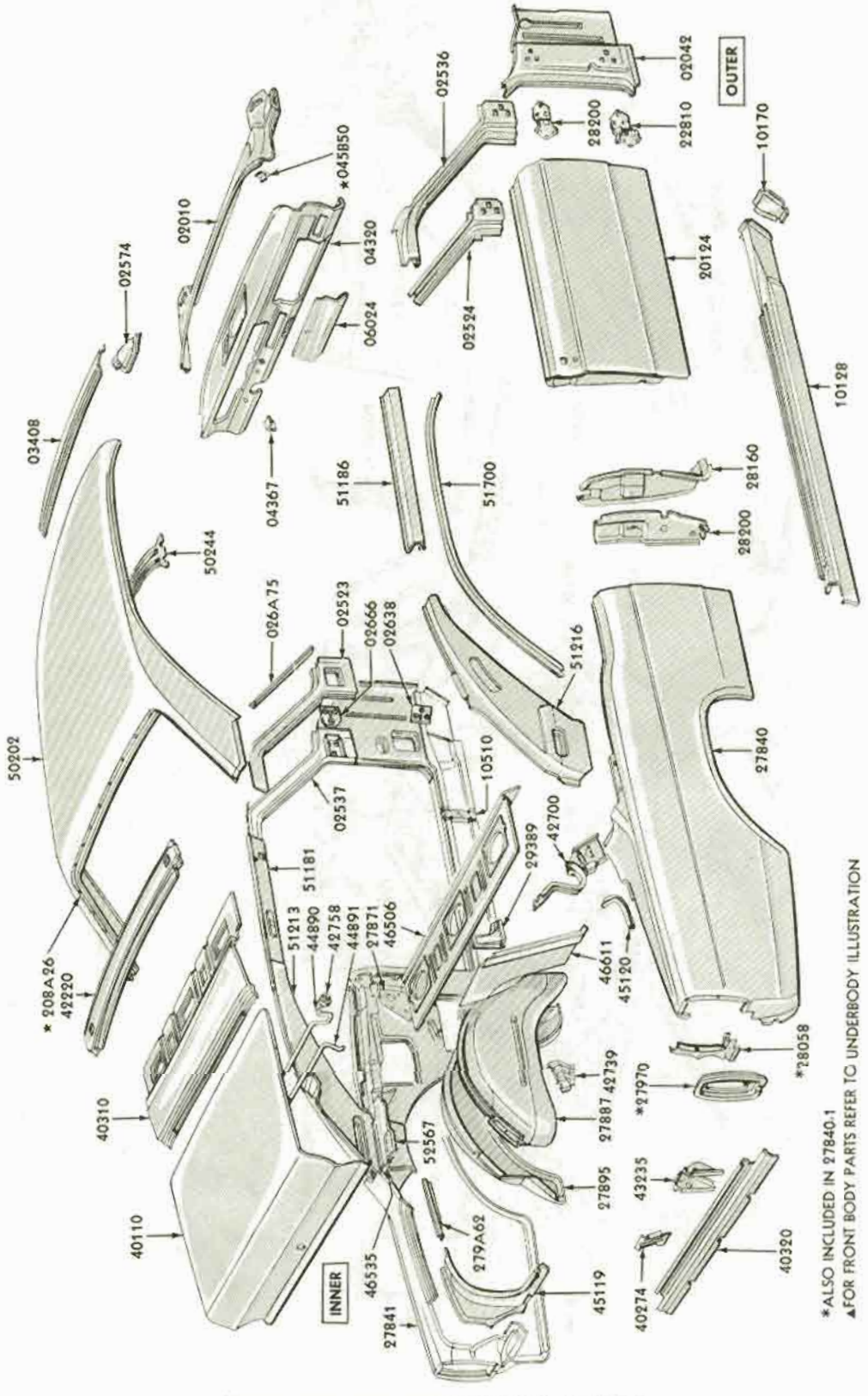

1966/67 FAIRLANE - BODY TYPE 63 - UPPER BODY

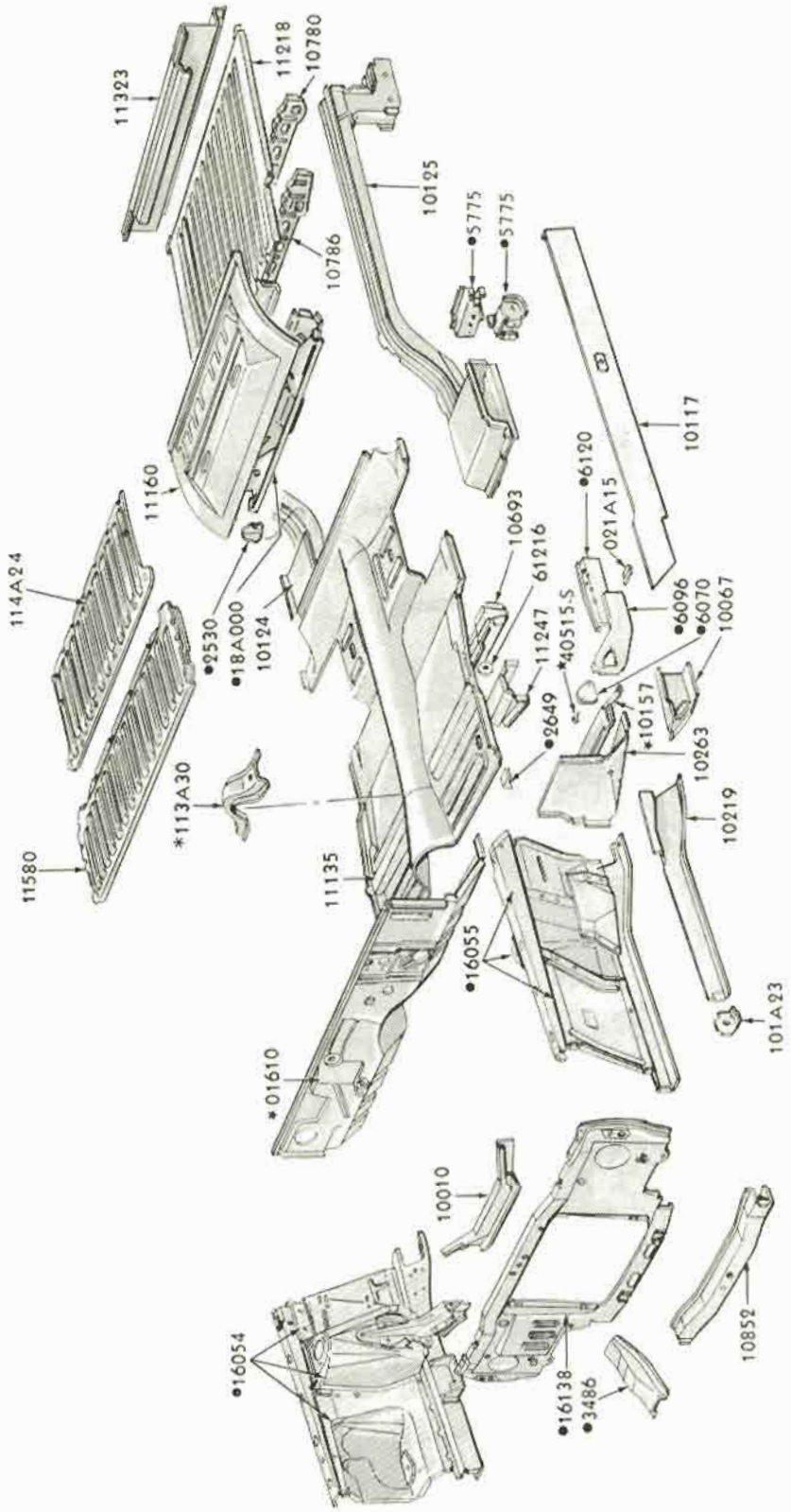

1967 FAIRLANE - BODY TYPE 66 - UNDERBODY

COPYRIGHT © 1975 — FORD MOTOR COMPANY — DEARBORN, MICHIGAN

FORD CAR PARTS

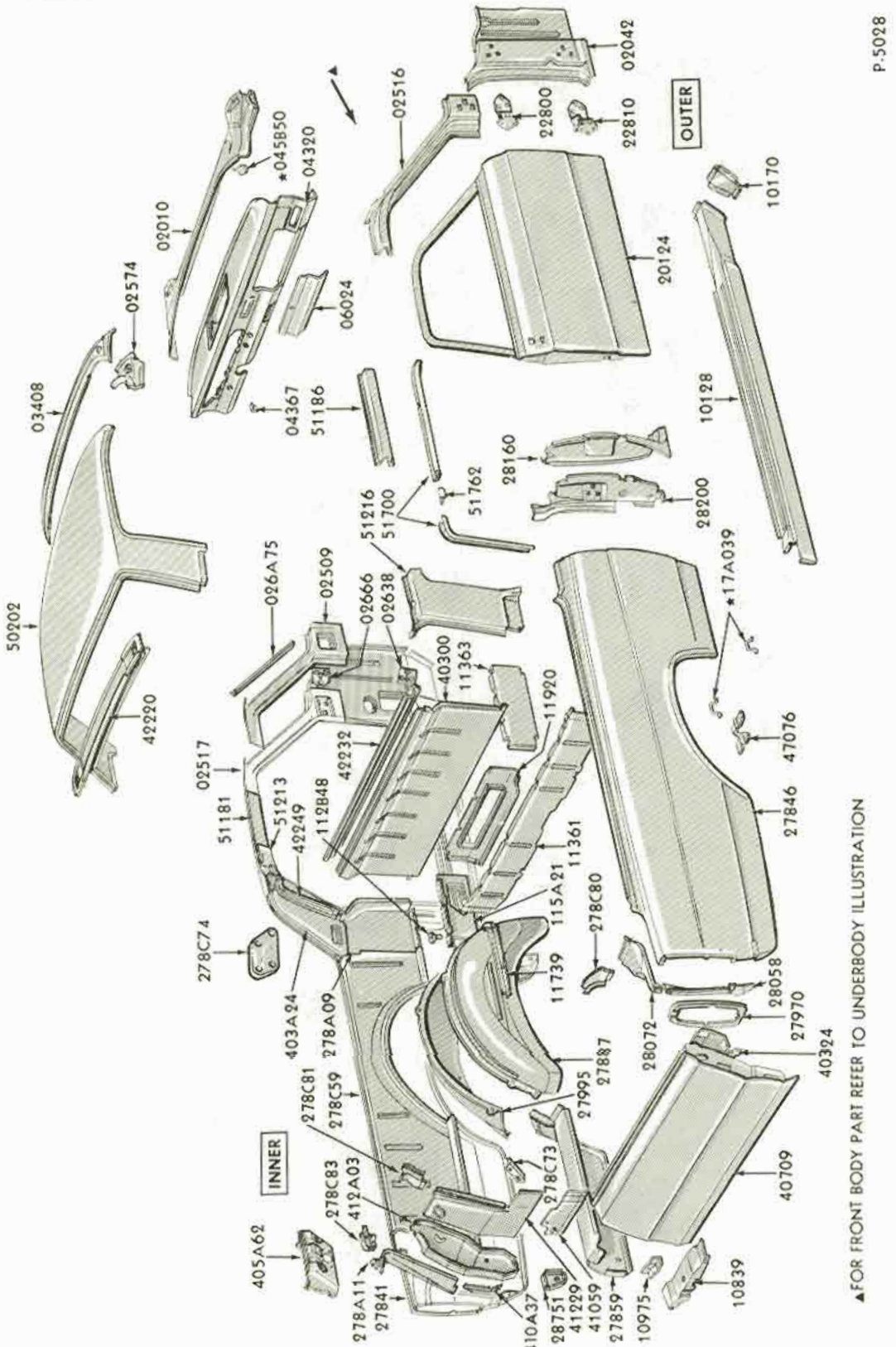

▲FOR FRONT BODY PART REFER TO UNDERBODY ILLUSTRATION

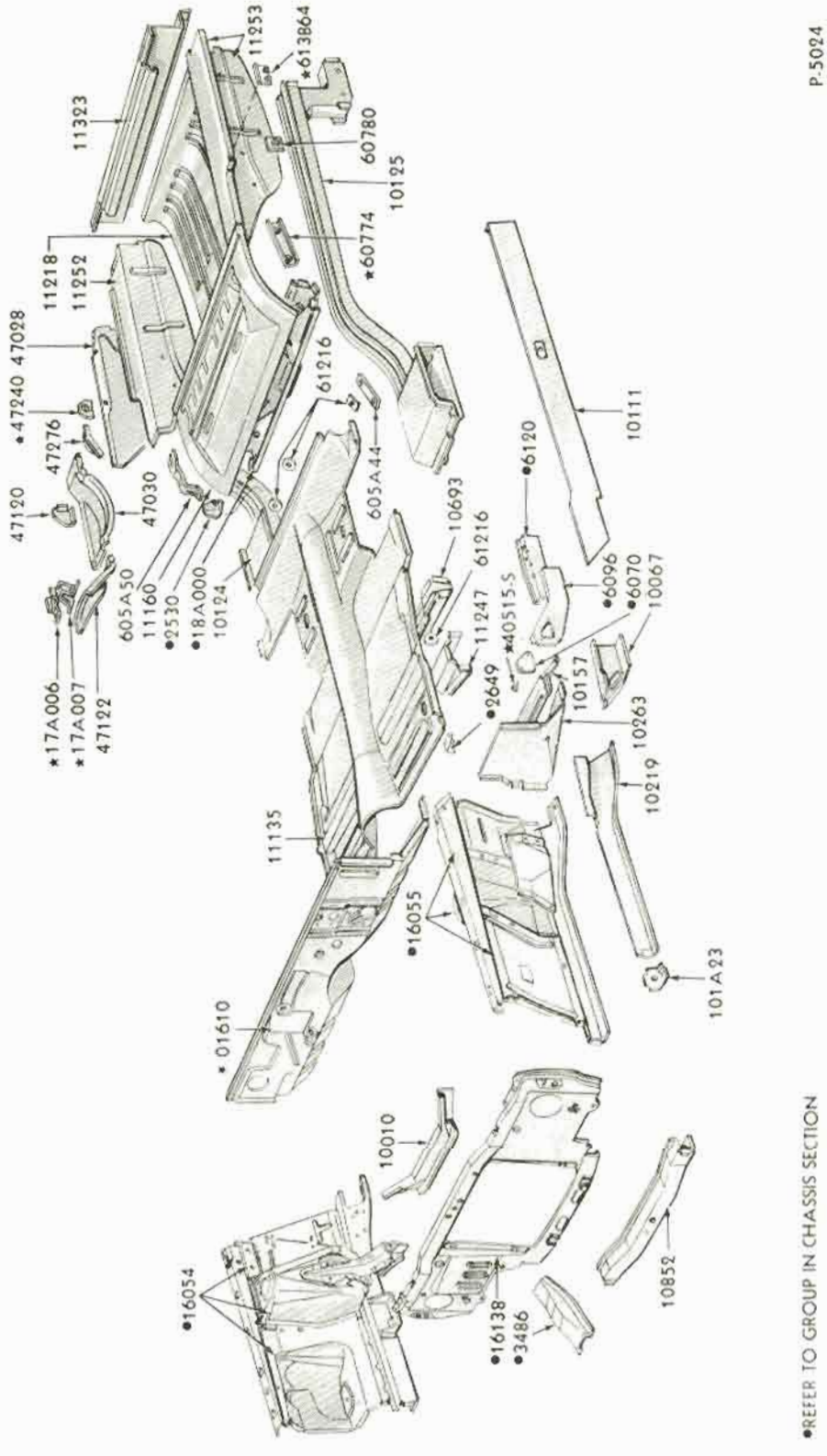

COPYRIGHT © 1975 — FORD MOTOR COMPANY — DEARBORN, MICHIGAN

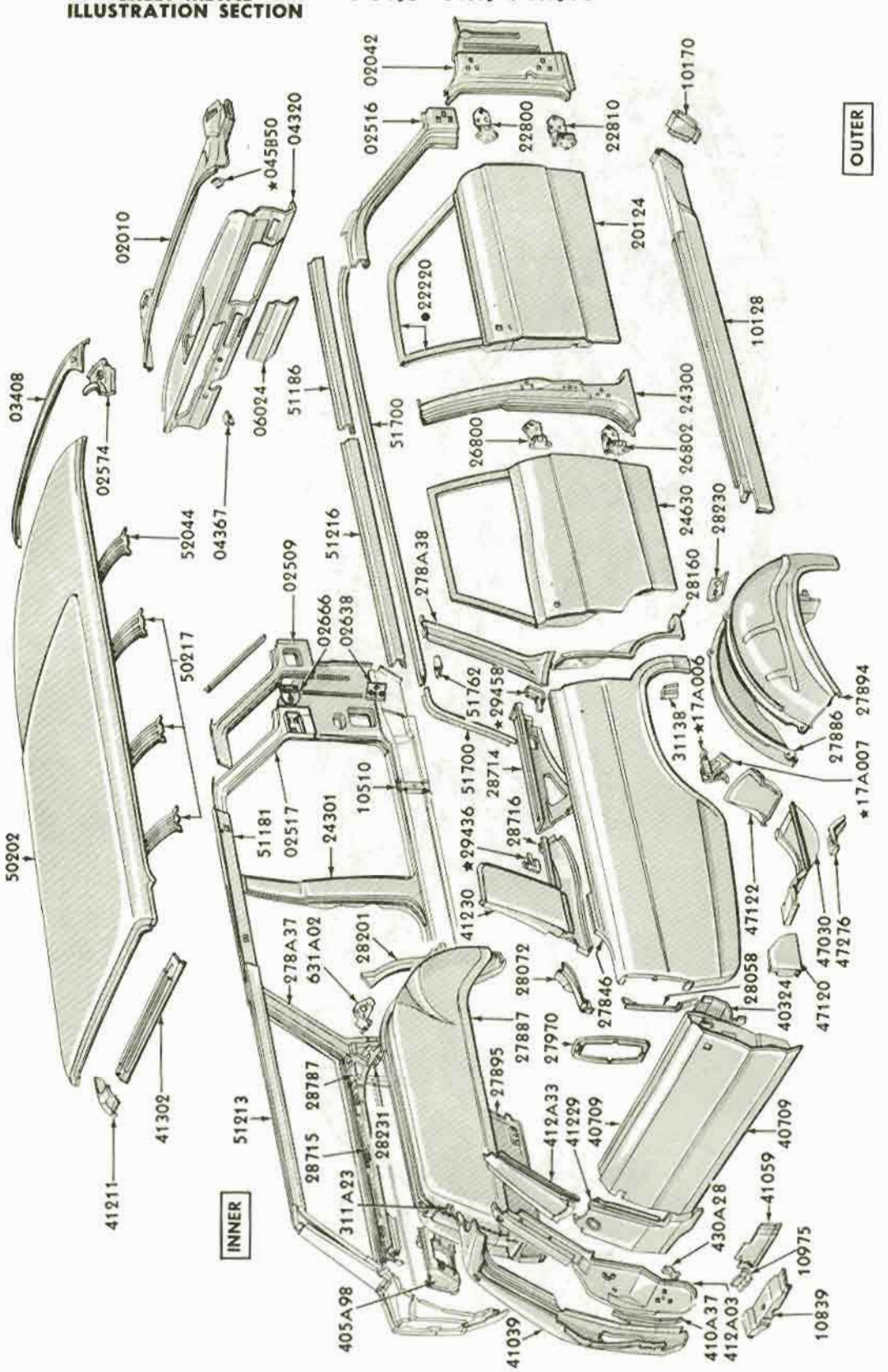

▲FOR FRONT BODY PARTS REFER TO UNDERBODY ILLUSTRATION
● ALSO INCLUDED IN 20124-5

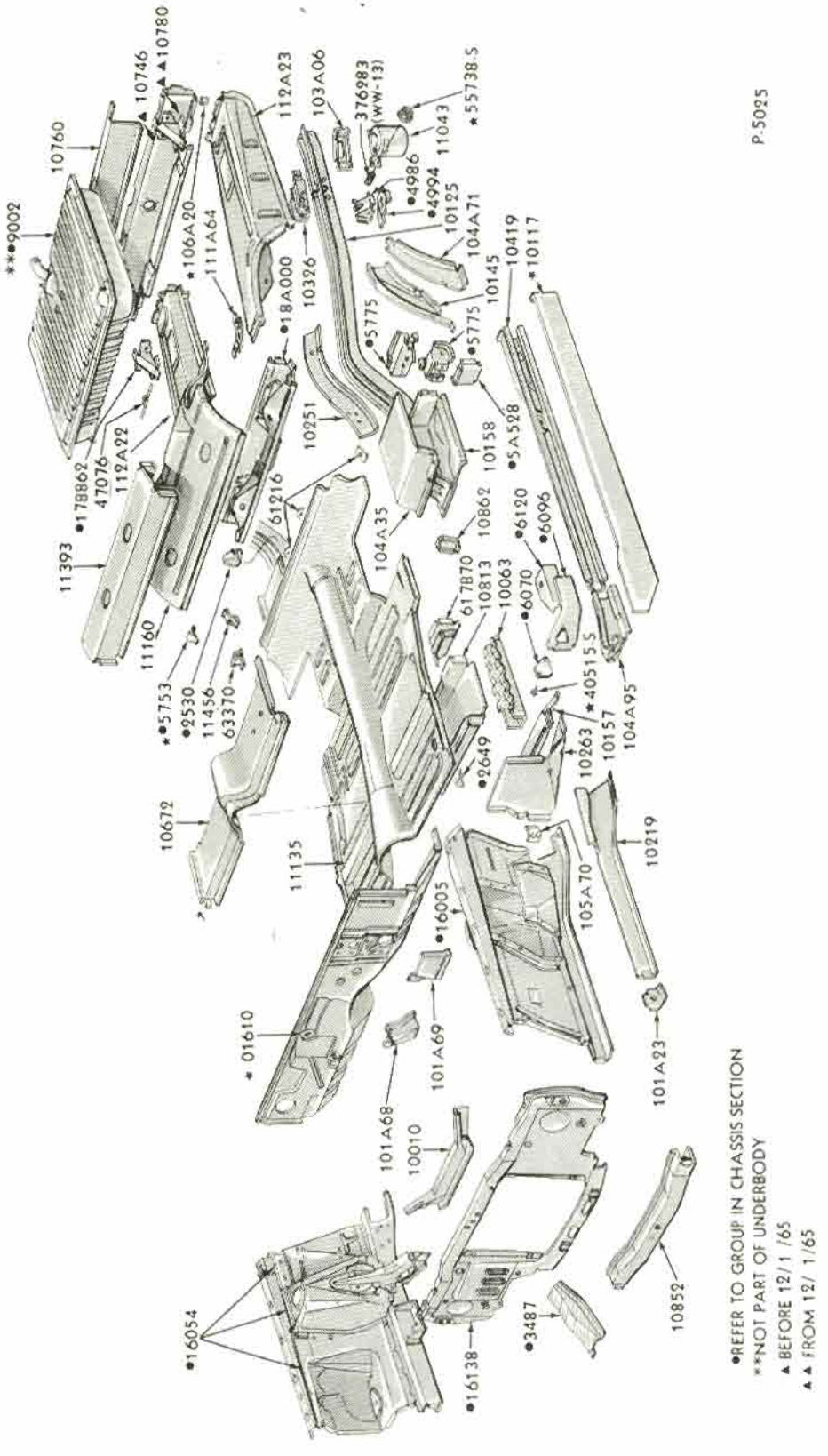

1966/67 FAIRLANE - BODY TYPE 76 - UNDERBODY

COPYRIGHT © 1975— FORD MOTOR COMPANY — DEARBORN, MICHIGAN

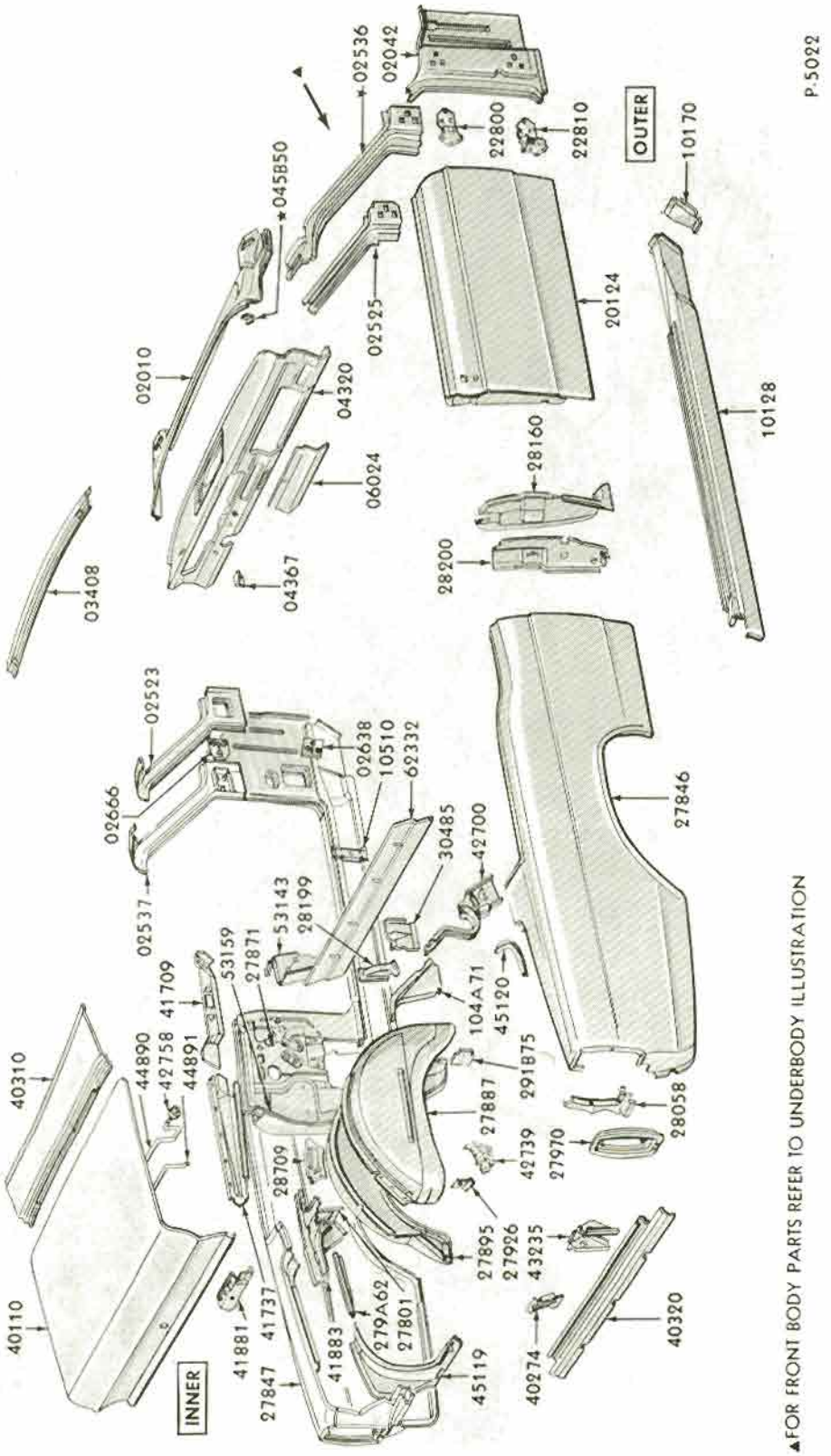

1966/67 FAIRLANE - BODY TYPE 76 - UPPER BODY

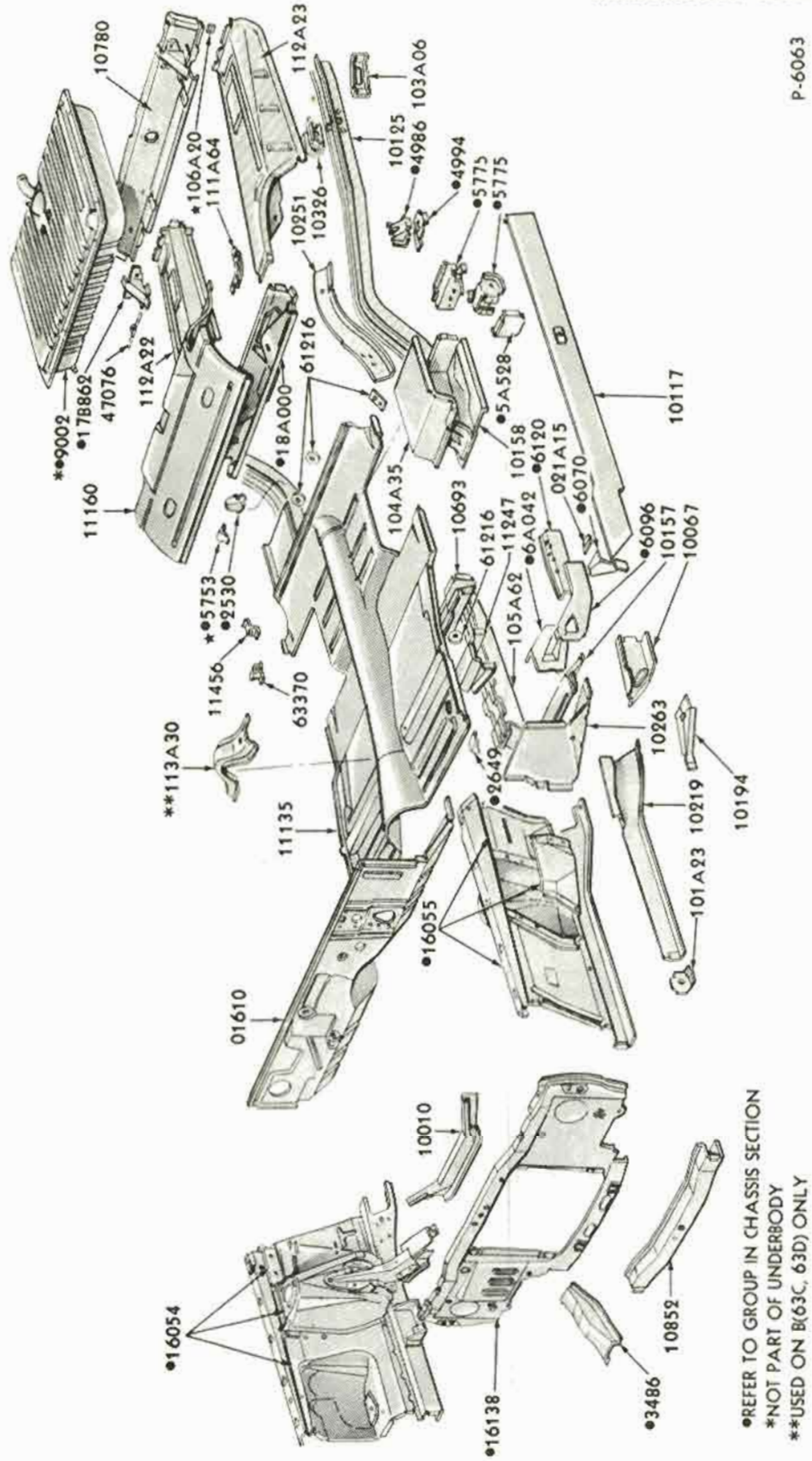

1968/69 FAIRLANE/TORINO - BODY TYPES 54,63,65 - UNDERBODY

COPYRIGHT © 1975 — FORD MOTOR COMPANY — DEARBORN, MICHIGAN

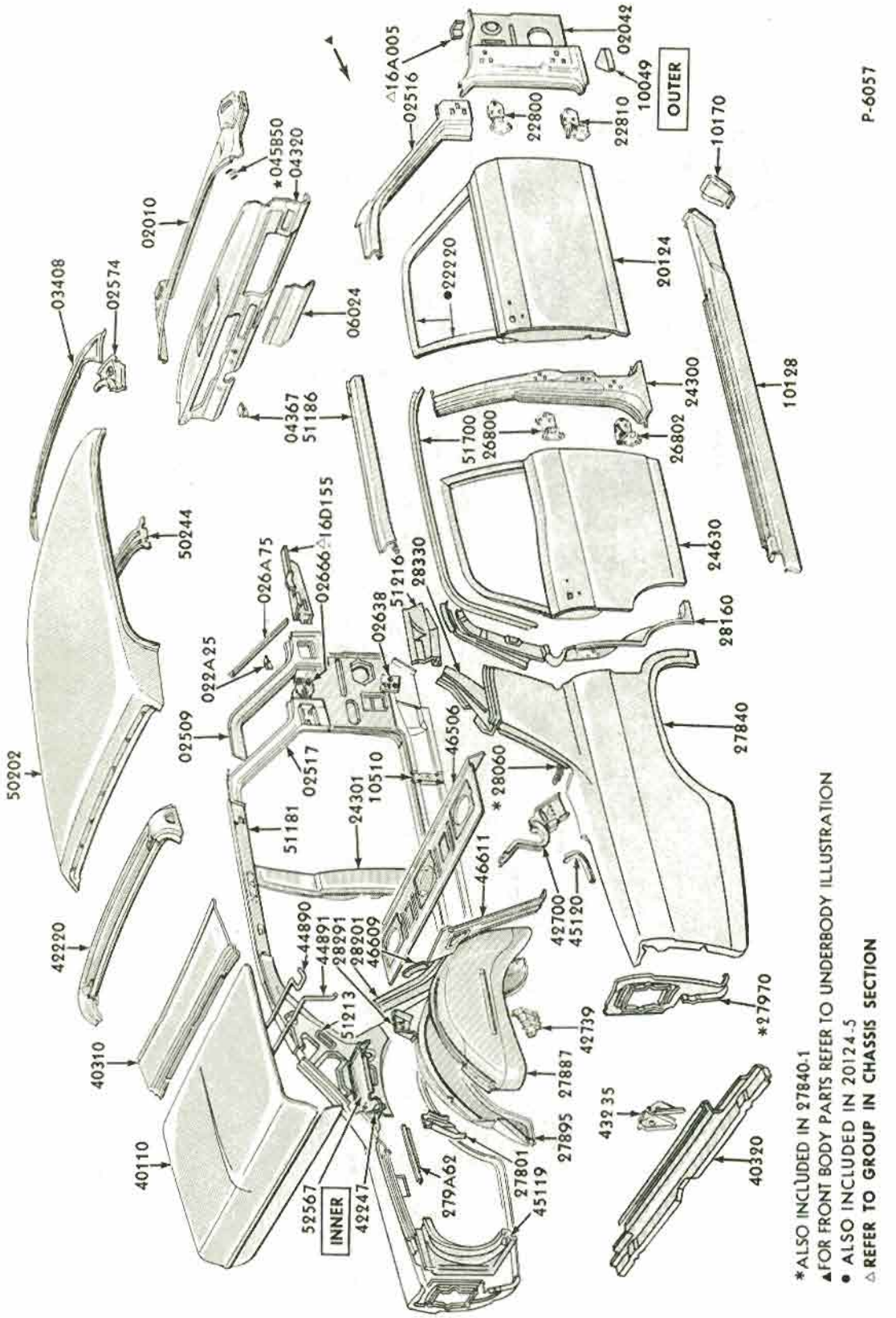

*ALSO INCLUDED IN 27840-1
▲FOR FRONT BODY PARTS REFER TO UNDERBODY ILLUSTRATION
● ALSO INCLUDED IN 20124-5
△REFER TO GROUP IN CHASSIS SECTION

P-6057

1968/69 FAIRLANE/TORINO - BODY TYPE 54 - UPPER BODY

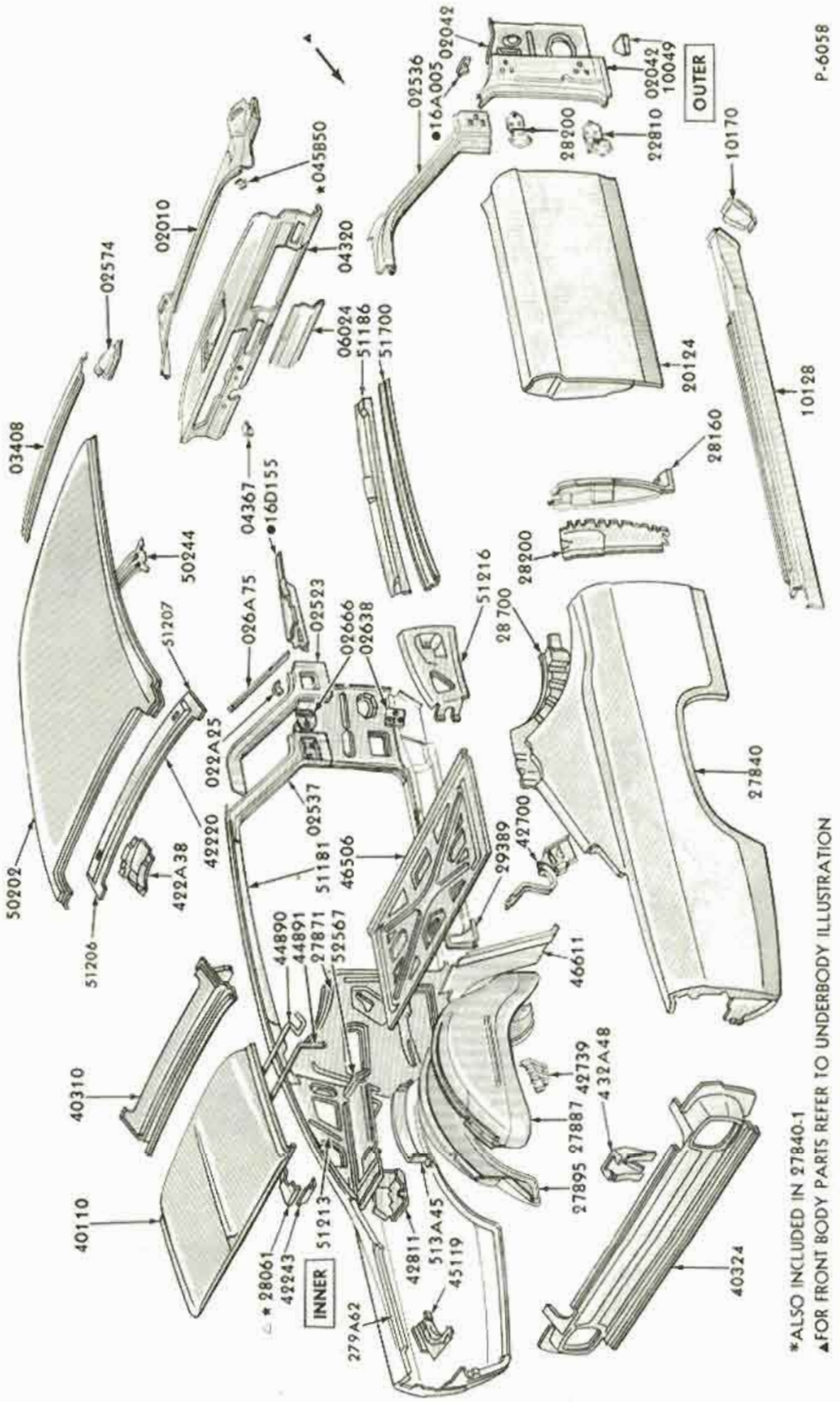

1968/69 FAIRLANE/TORINO - BODY TYPE 63 - UPPER BODY

COPYRIGHT © 1975 — FORD MOTOR COMPANY — DEARBORN, MICHIGAN

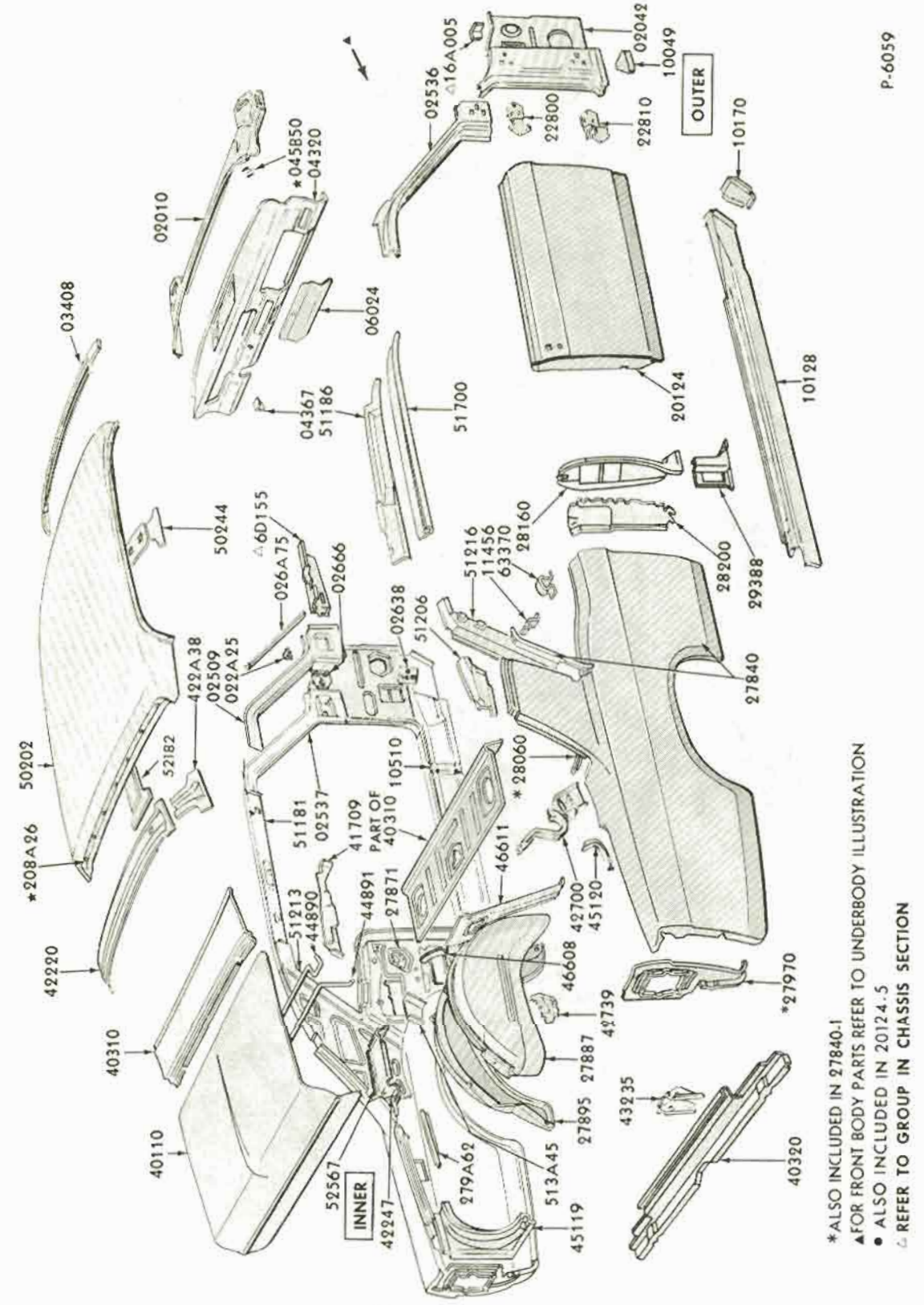

P-6059

*ALSO INCLUDED IN 27840.1
▲FOR FRONT BODY PARTS REFER TO UNDERBODY ILLUSTRATION
● ALSO INCLUDED IN 20124.5
△ REFER TO GROUP IN CHASSIS SECTION

1968/69 FAIRLANE/TORINO - BODY TYPE 65 - UPPER BODY

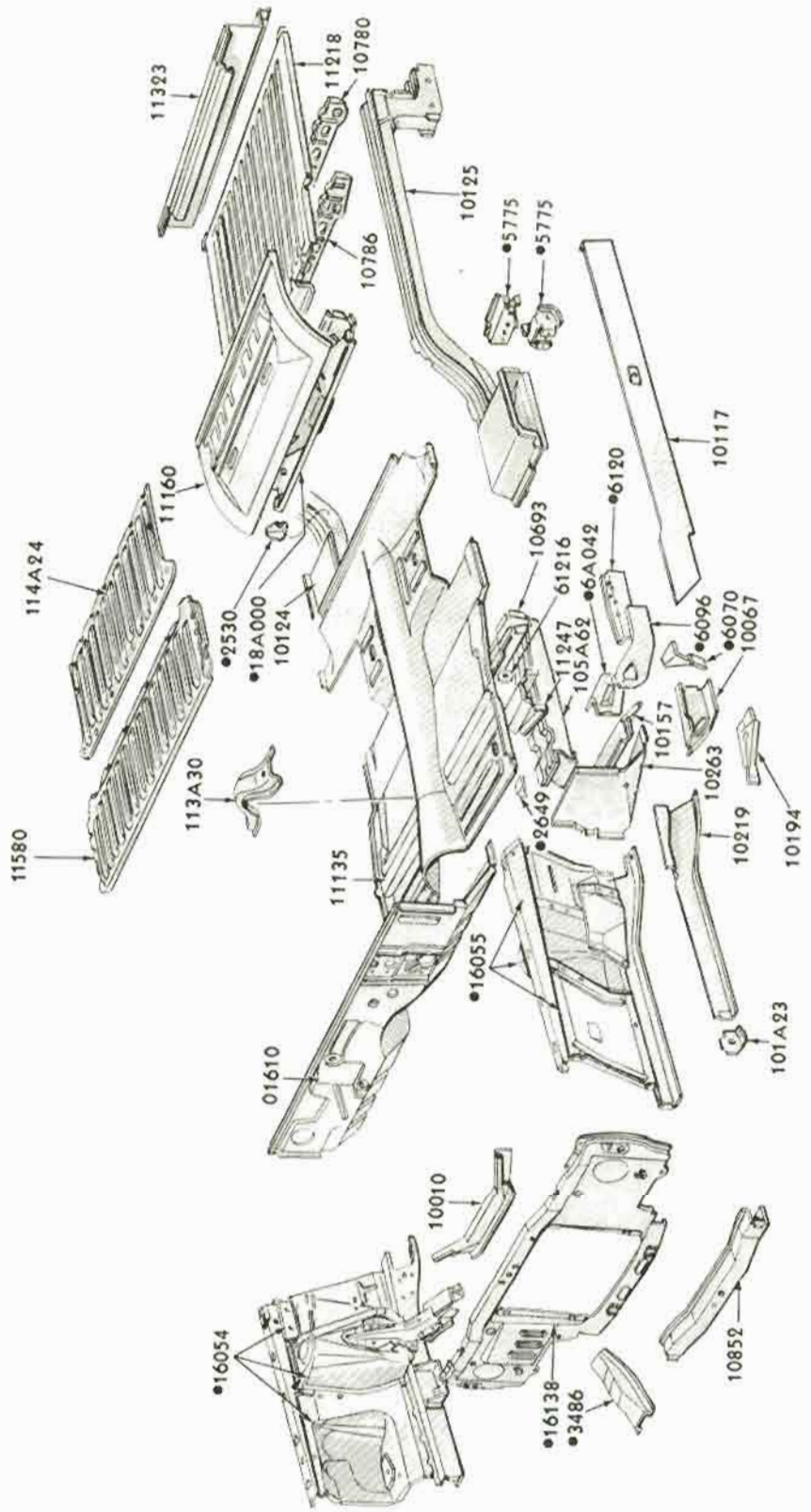

1968/69 FAIRLANE - BODY TYPE 66 - UNDERBODY

COPYRIGHT © 1975 — FORD MOTOR COMPANY — DEARBORN, MICHIGAN

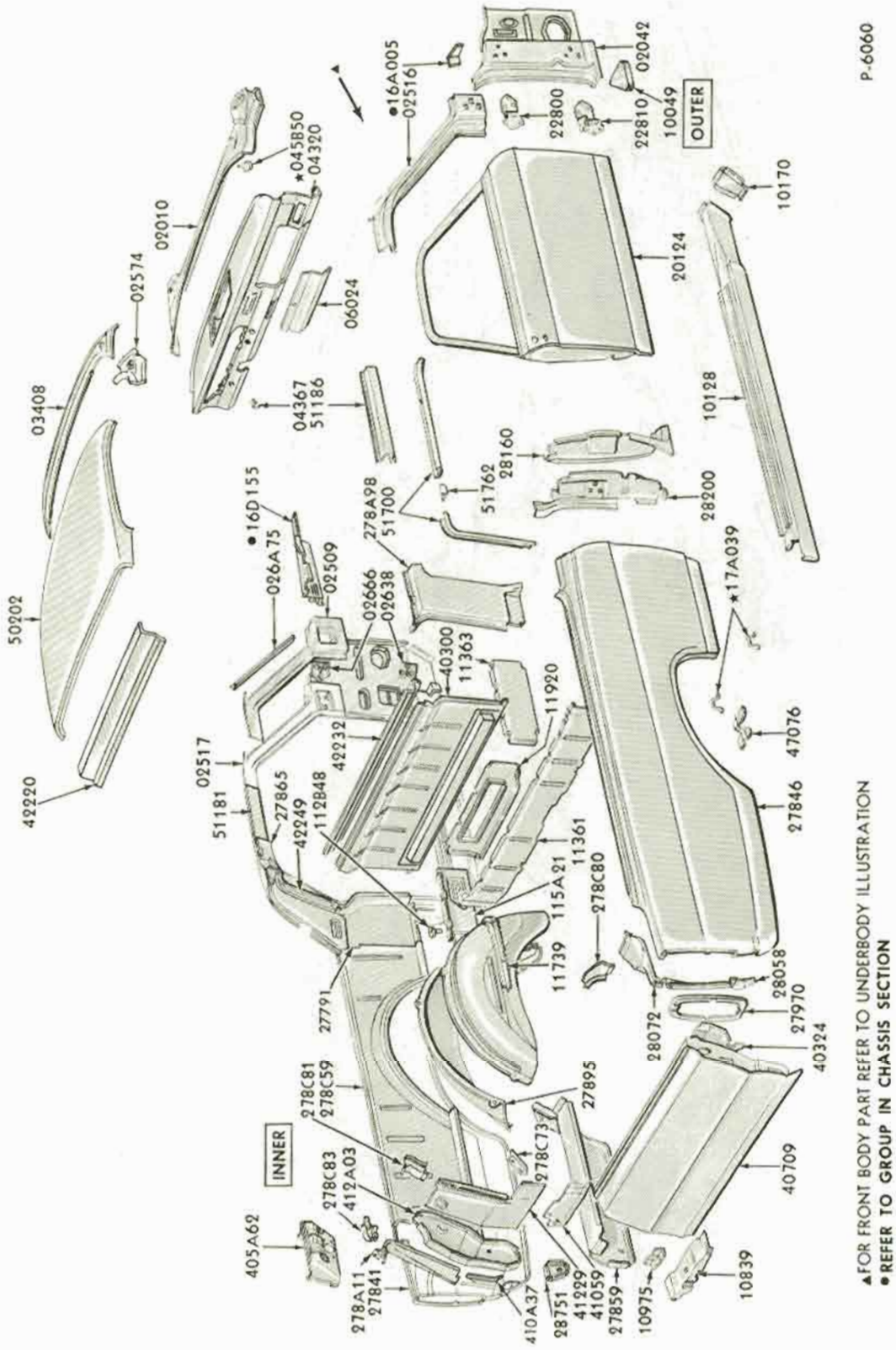

1968/69 FAIRLANE - BODY TYPE 66 - UPPER BODY

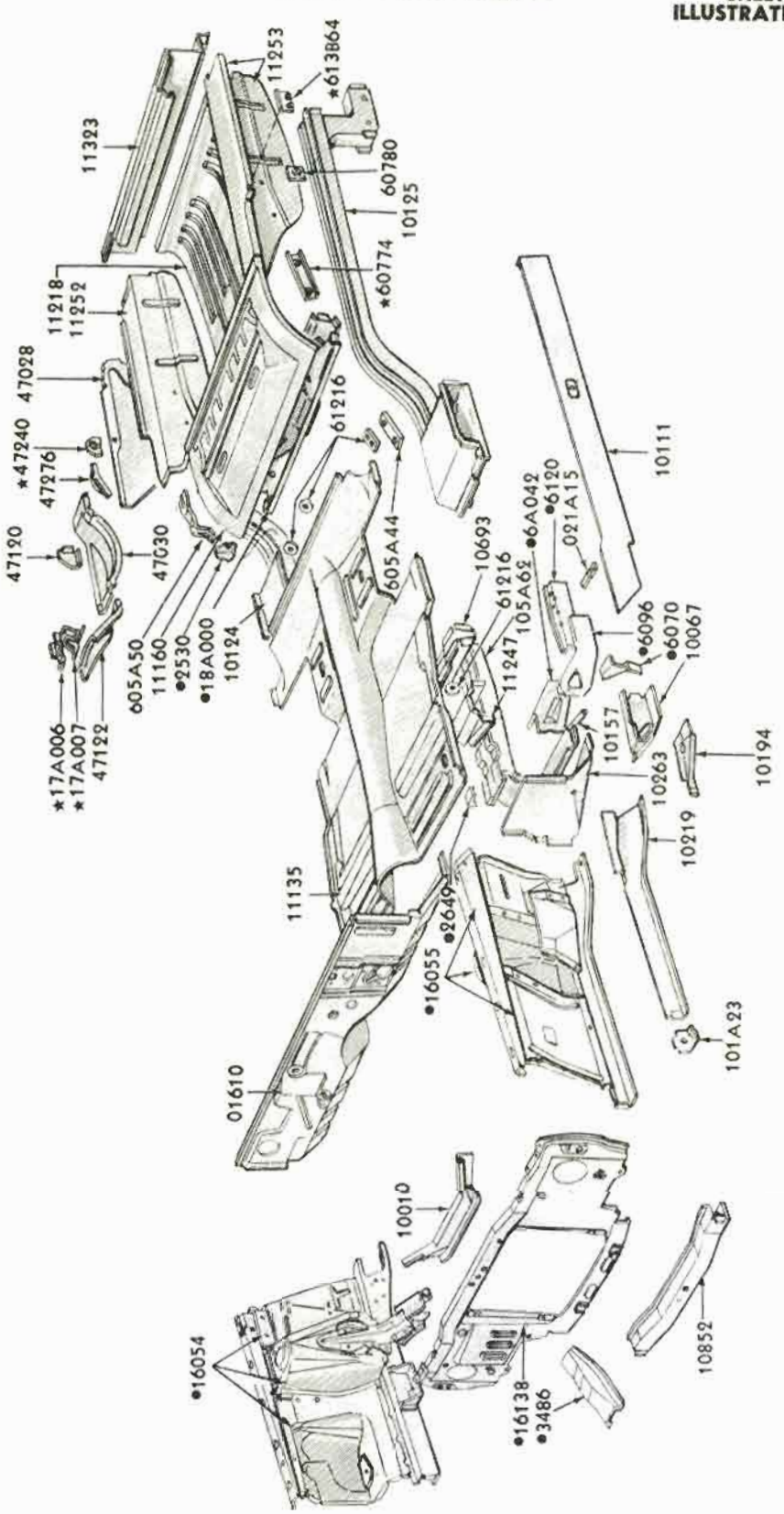

1968/69 FAIRLANE/TORINO -BODY TYPE 71 - UNDERBODY

COPYRIGHT © 1975 — FORD MOTOR COMPANY — DEARBORN, MICHIGAN

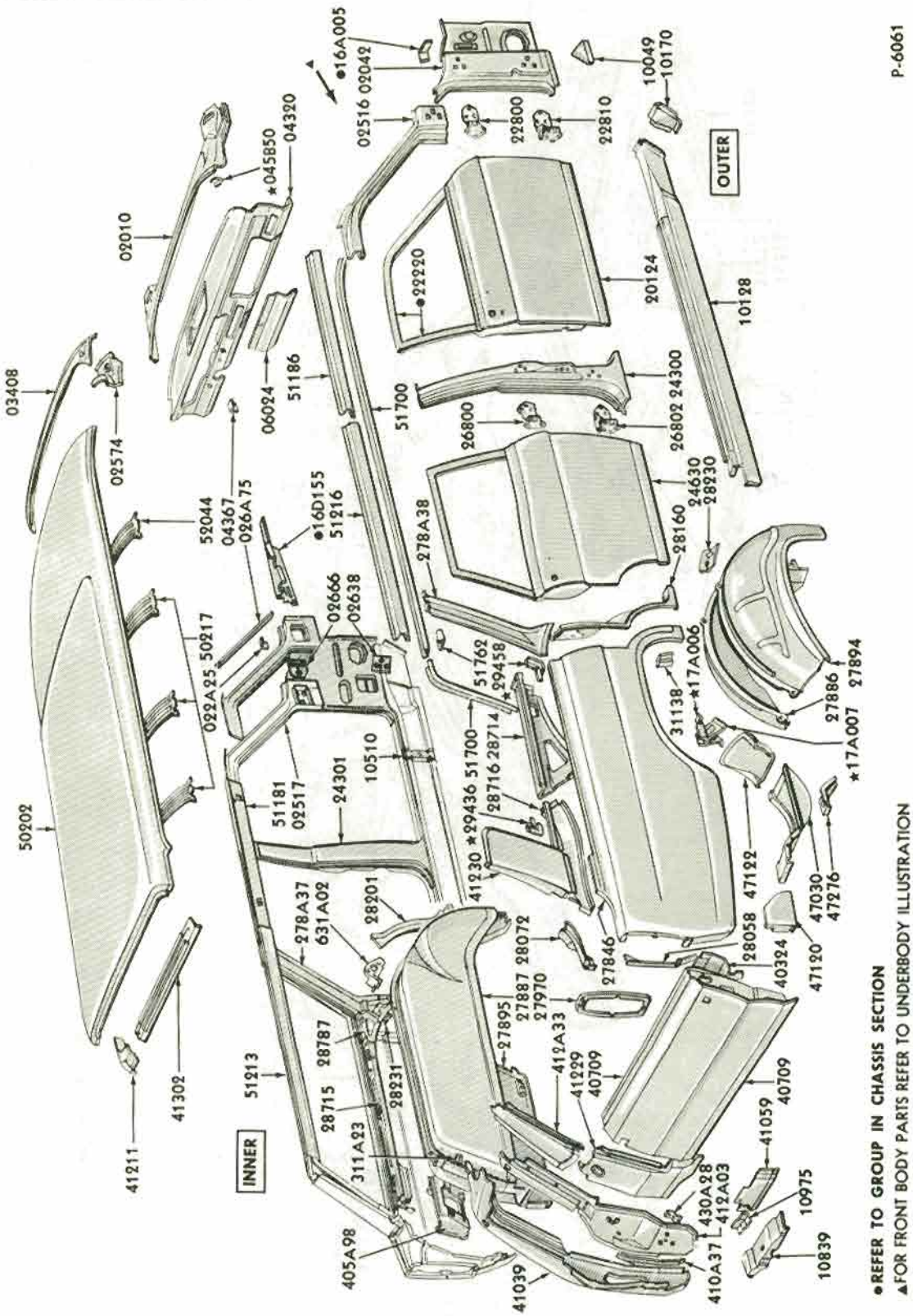

1968/69 FAIRLANE/TORINO - BODY TYPE 71 - UPPER BODY

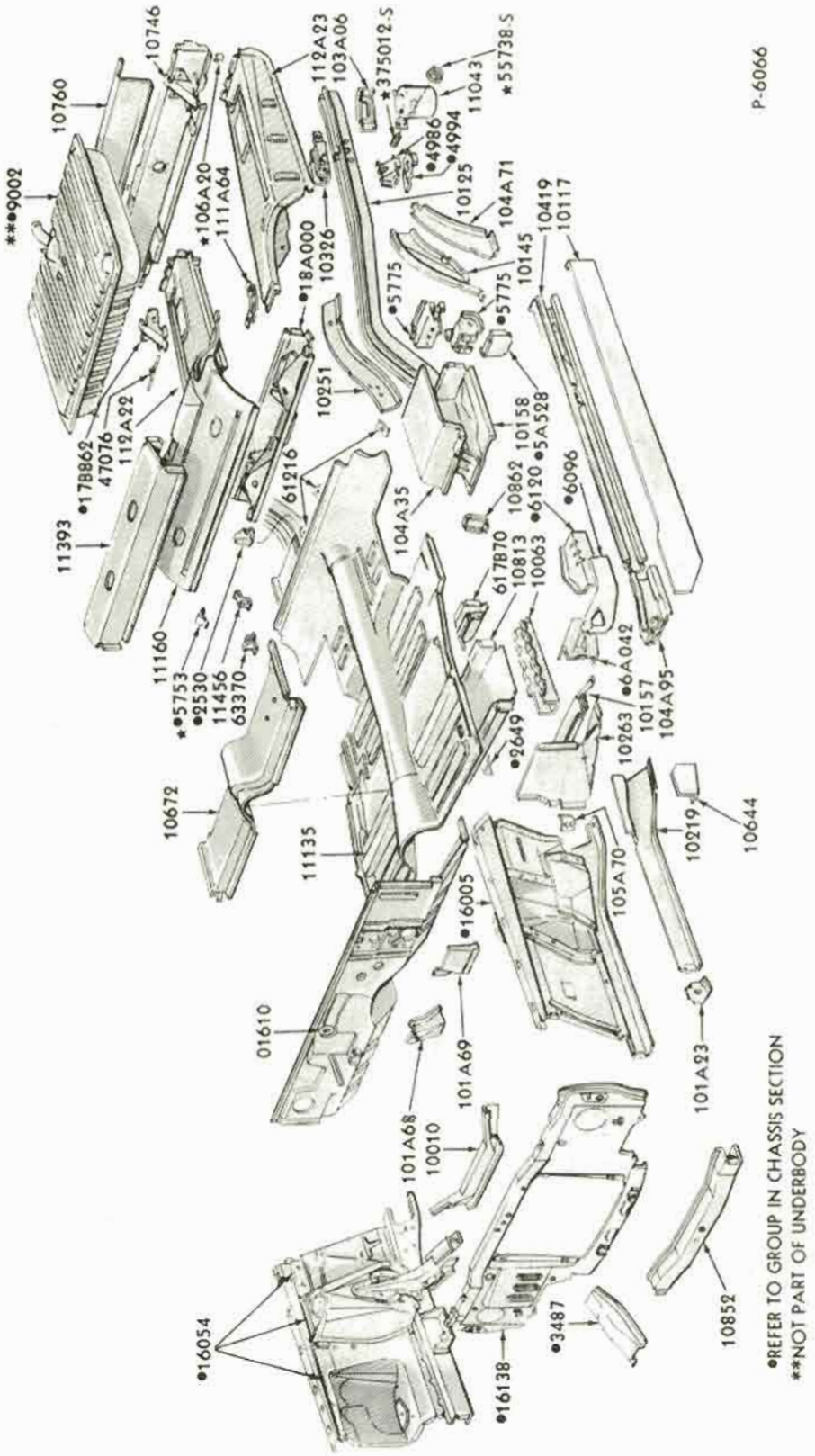

1968/69 FAIRLANE/TORINO - BODY TYPE 76 - UNDERBODY

COPYRIGHT © 1975 — FORD MOTOR COMPANY — DEARBORN, MICHIGAN

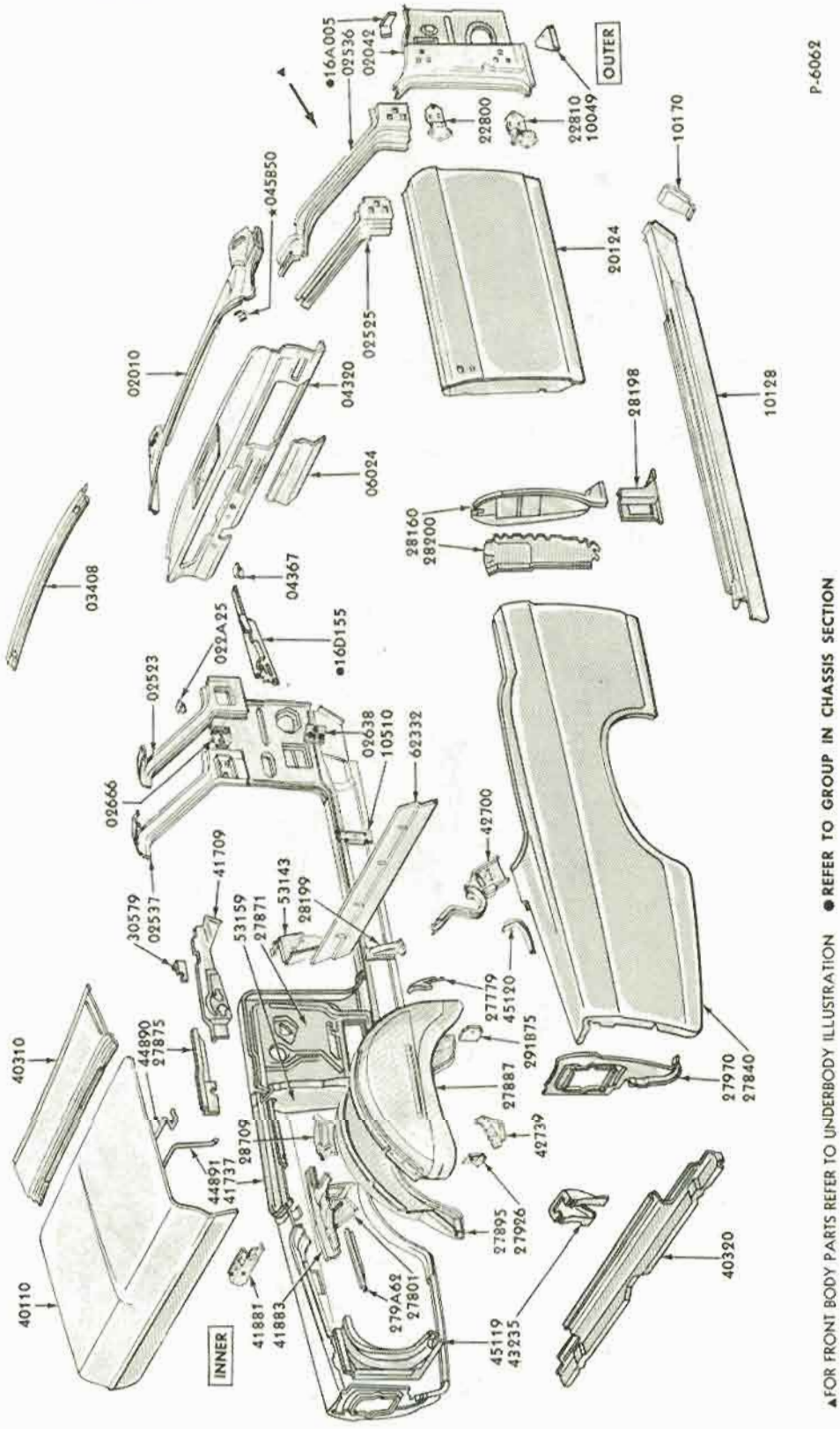

1968/69 FAIRLANE/TORINO - BODY TYPE 76 - UPPER BODY

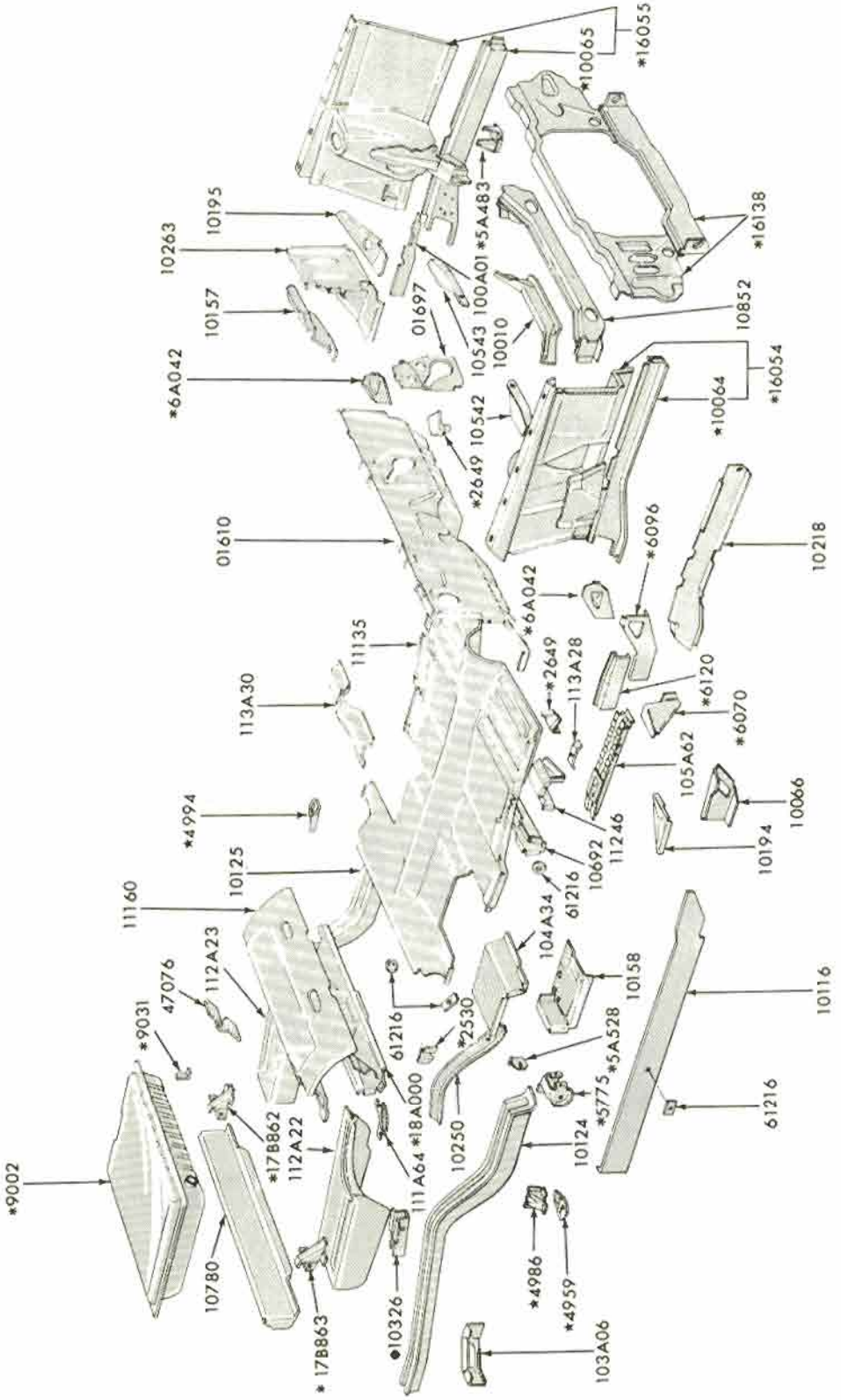

1970/71 FAIRLANE/TORINO-BODY TYPE 54, 57, 62, 63, 65-UNDER BODY

COPYRIGHT © 1975 — FORD MOTOR COMPANY — DEARBORN, MICHIGAN

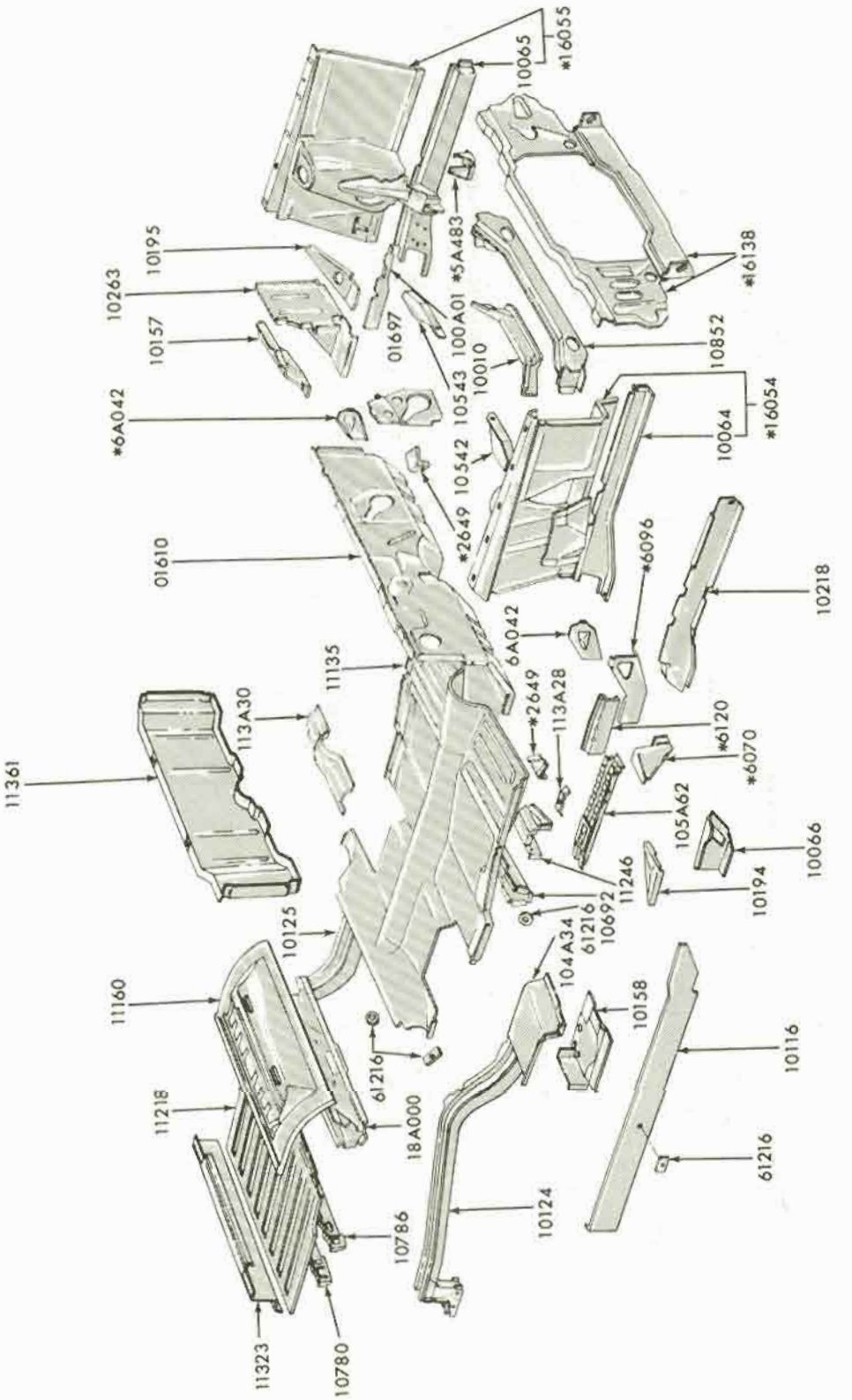

1970/71 FAIRLANE/TORINO - BODY TYPE 66 - UNDER BODY

P-7073

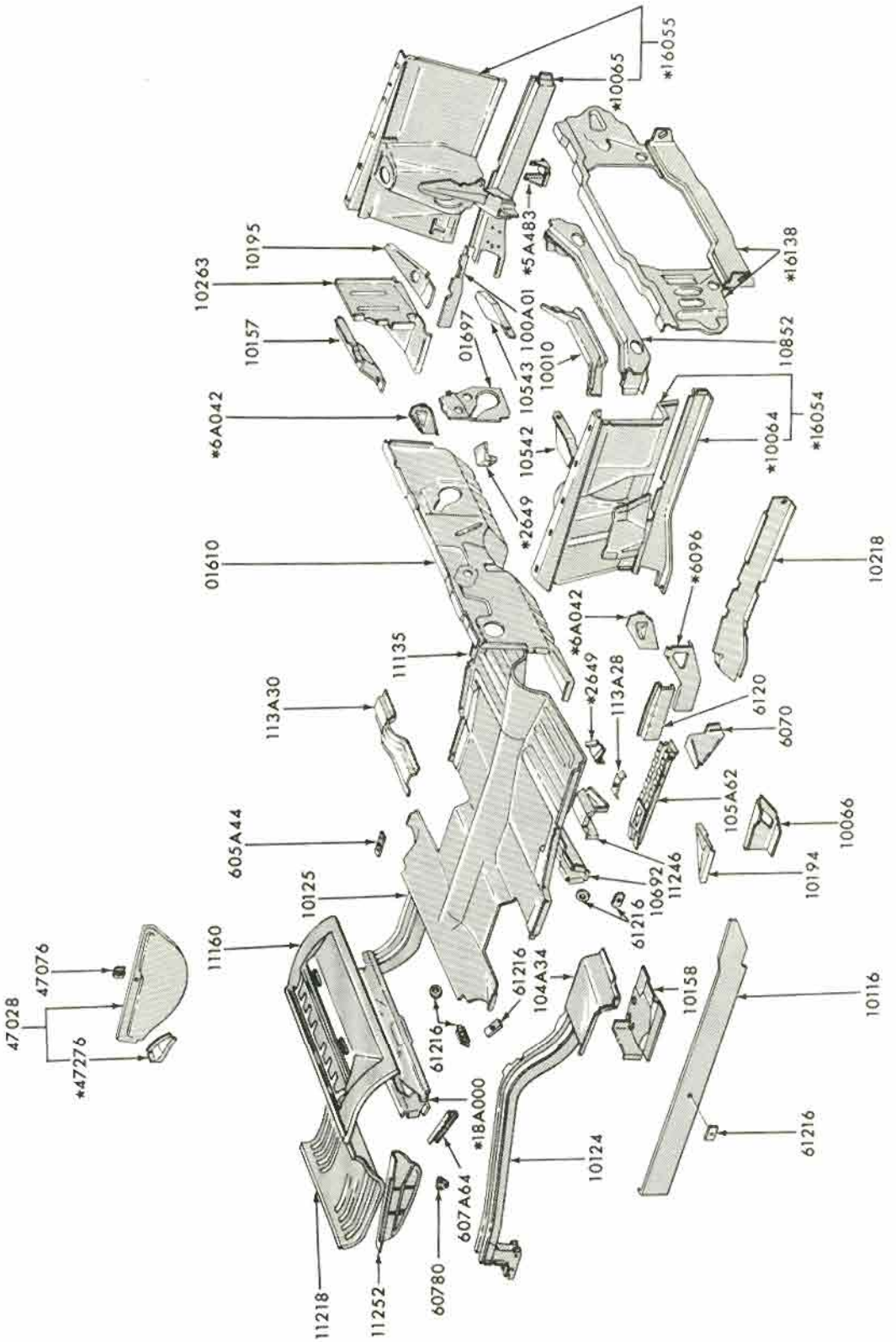

*REFER TO GROUP IN CHASSIS SECTION

1970/71 FAIRLANE/TORINO - BODY TYPE 71 - UNDER BODY

COPYRIGHT © 1975 — FORD MOTOR COMPANY — DEARBORN, MICHIGAN

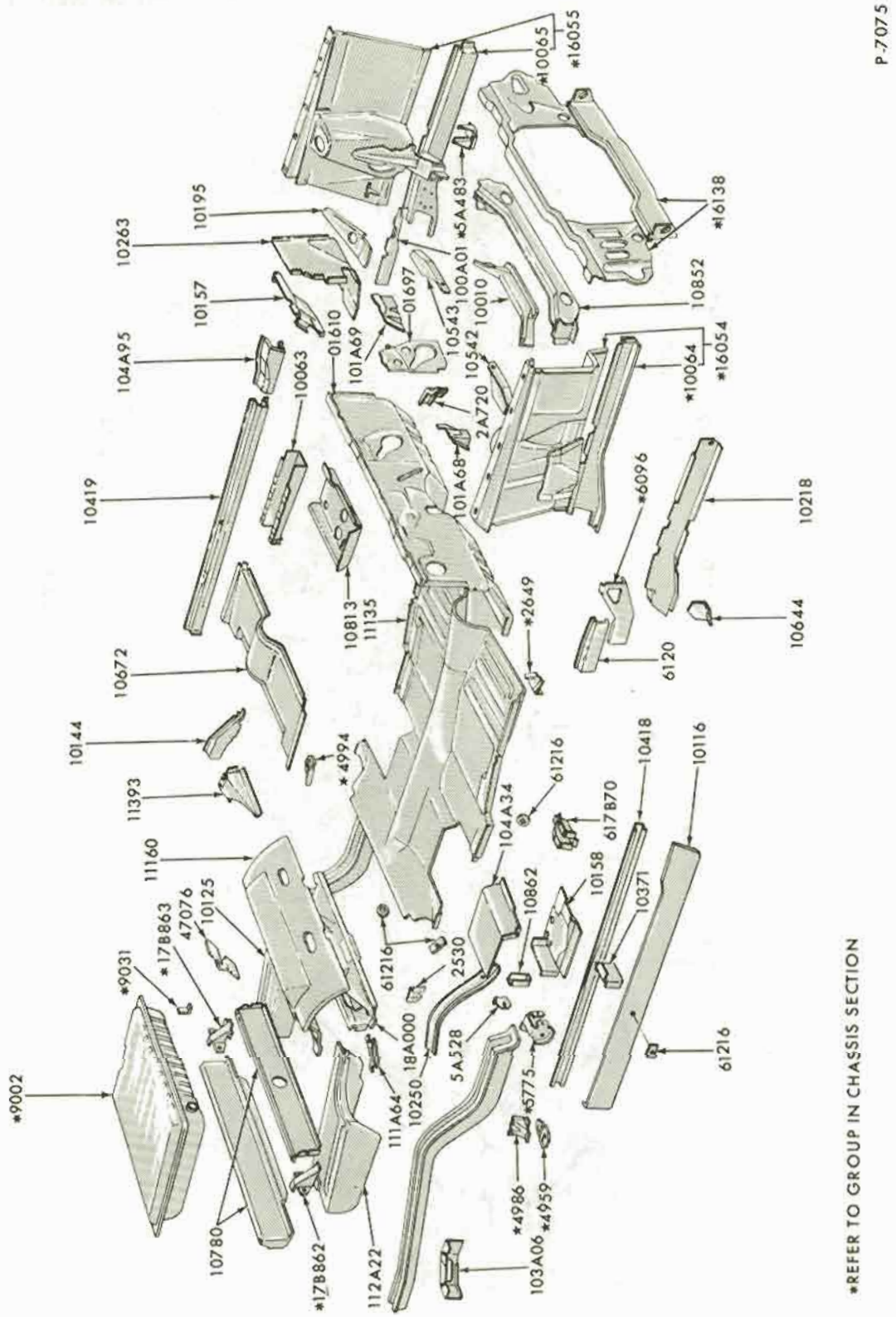

1970/71 FAIRLANE/TORINO - BODY TYPE 76 - UNDER BODY

P-7081

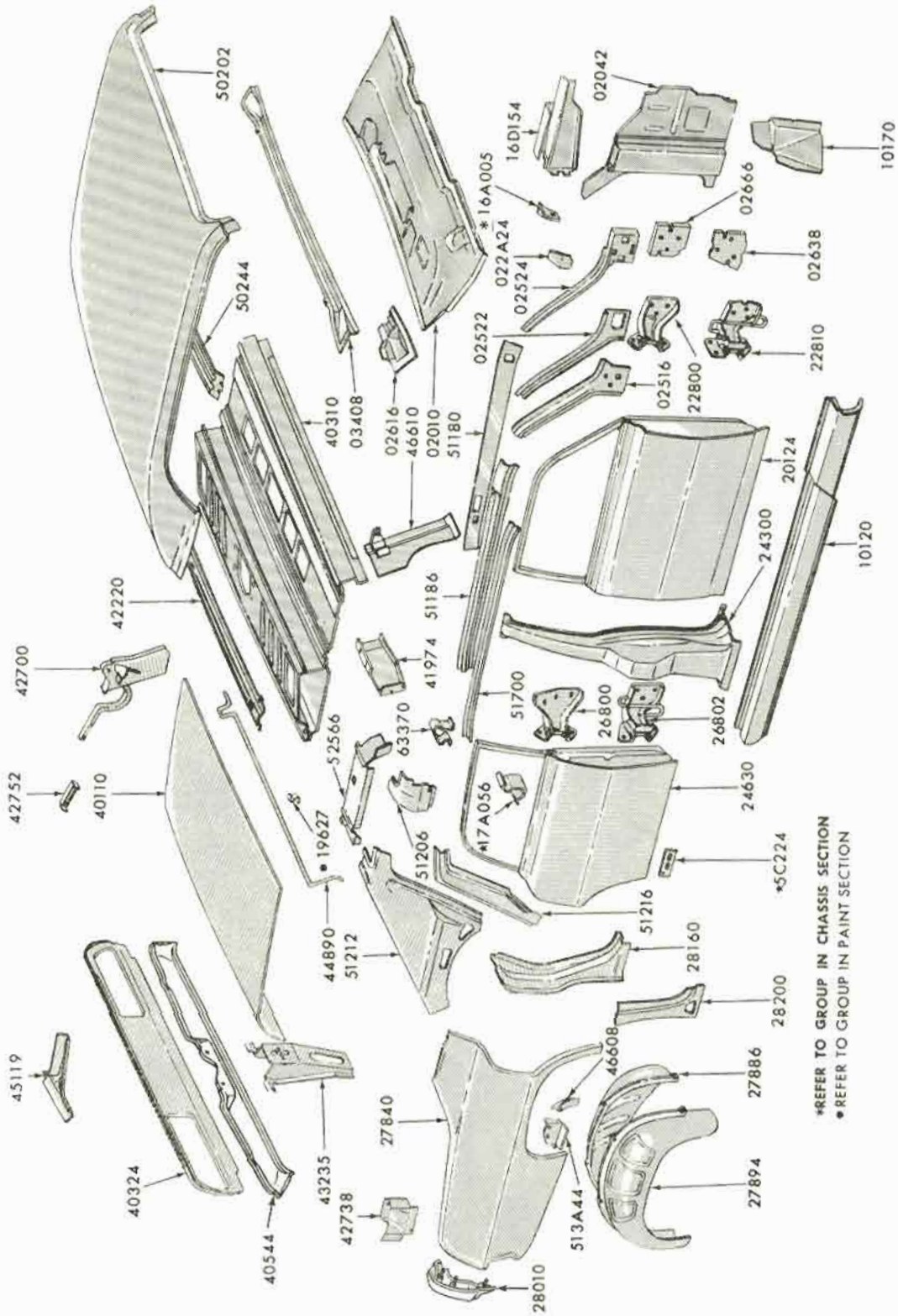

May, 1975 COPYRIGHT © 1975 — FORD MOTOR COMPANY — DEARBORN, MICHIGAN

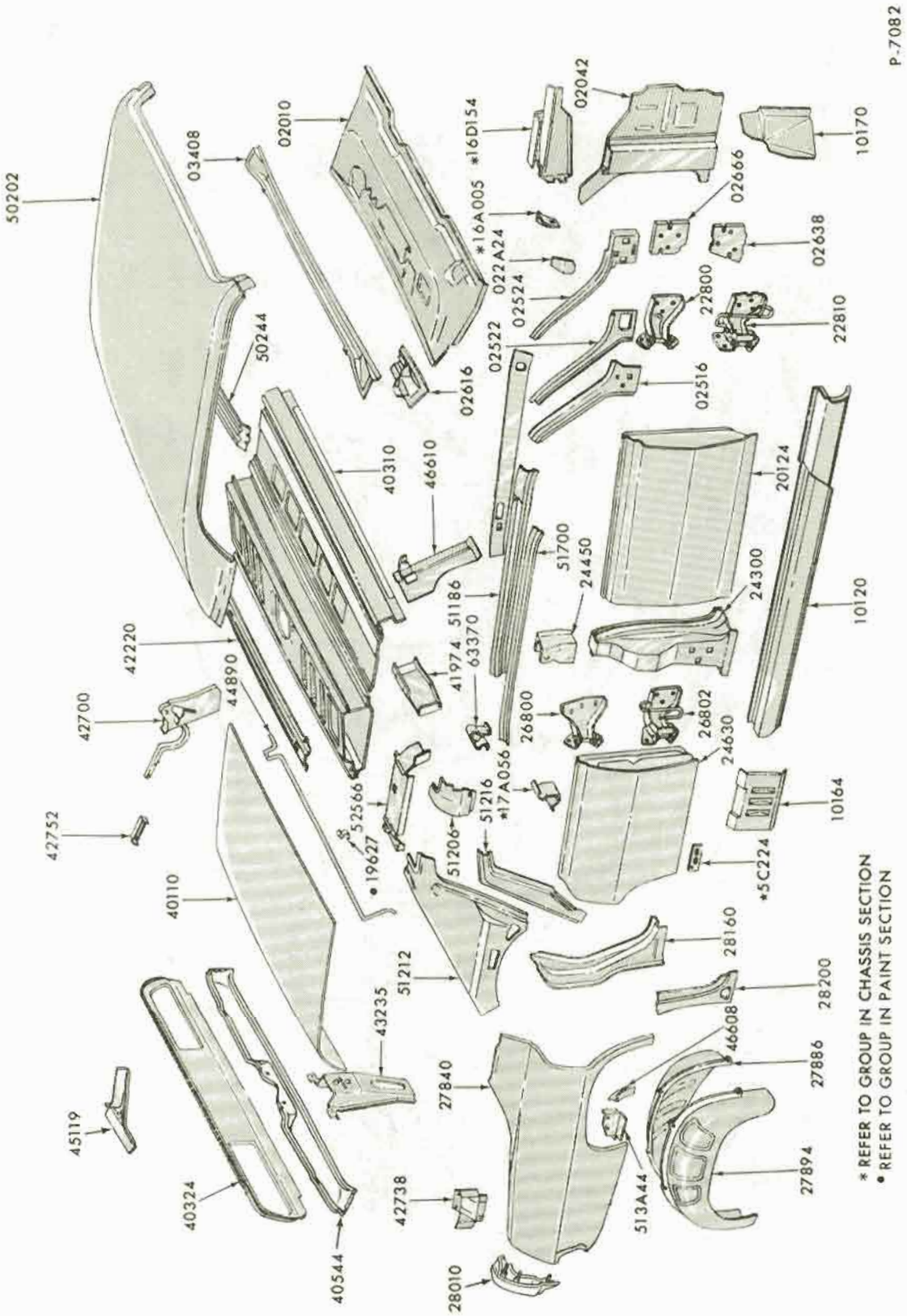
P-7082
50202
03408
02010
*16D154
02042
10170
*16A005
02666
022A24
02638
02524
22800
02522
22810
50244
02616
02516
40310
46610
20124
51700
24450
51186
24300
42220
41974
63370
10120
44890
42700
26800
26802
24630
52566
51216
*17A056
10164
42752
• 19627
51206
*5C224
40110
28160
51212
28200
43235
46608
27840
27886
45119
513A44
27894
40324
42738
40544
28010
* REFER TO GROUP IN CHASSIS SECTION
• REFER TO GROUP IN PAINT SECTION

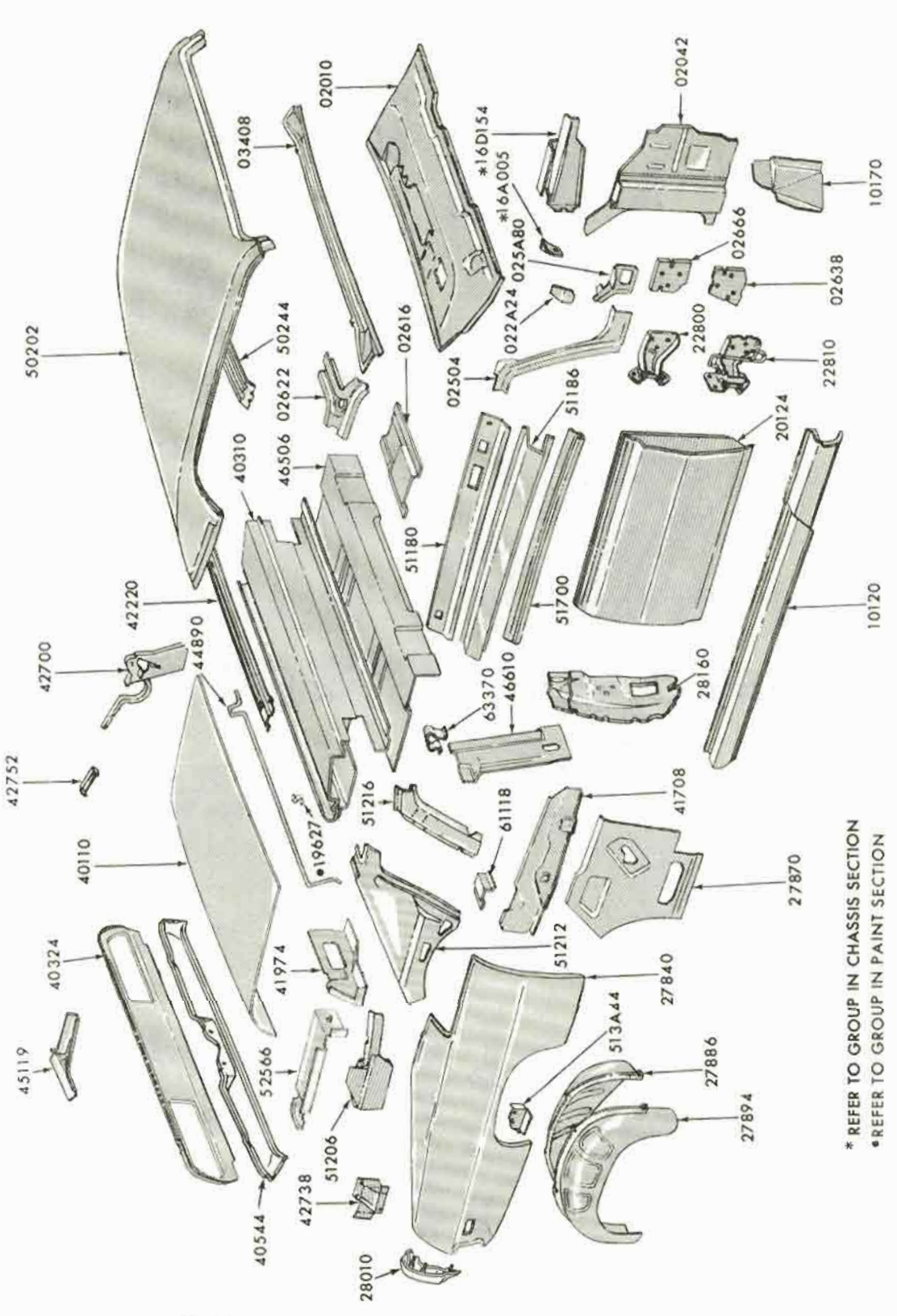

1970/71 FAIRLANE/TORINO - BODY TYPE 63 - UPPER BODY

COPYRIGHT © 1975— FORD MOTOR COMPANY —DEARBORN, MICHIGAN

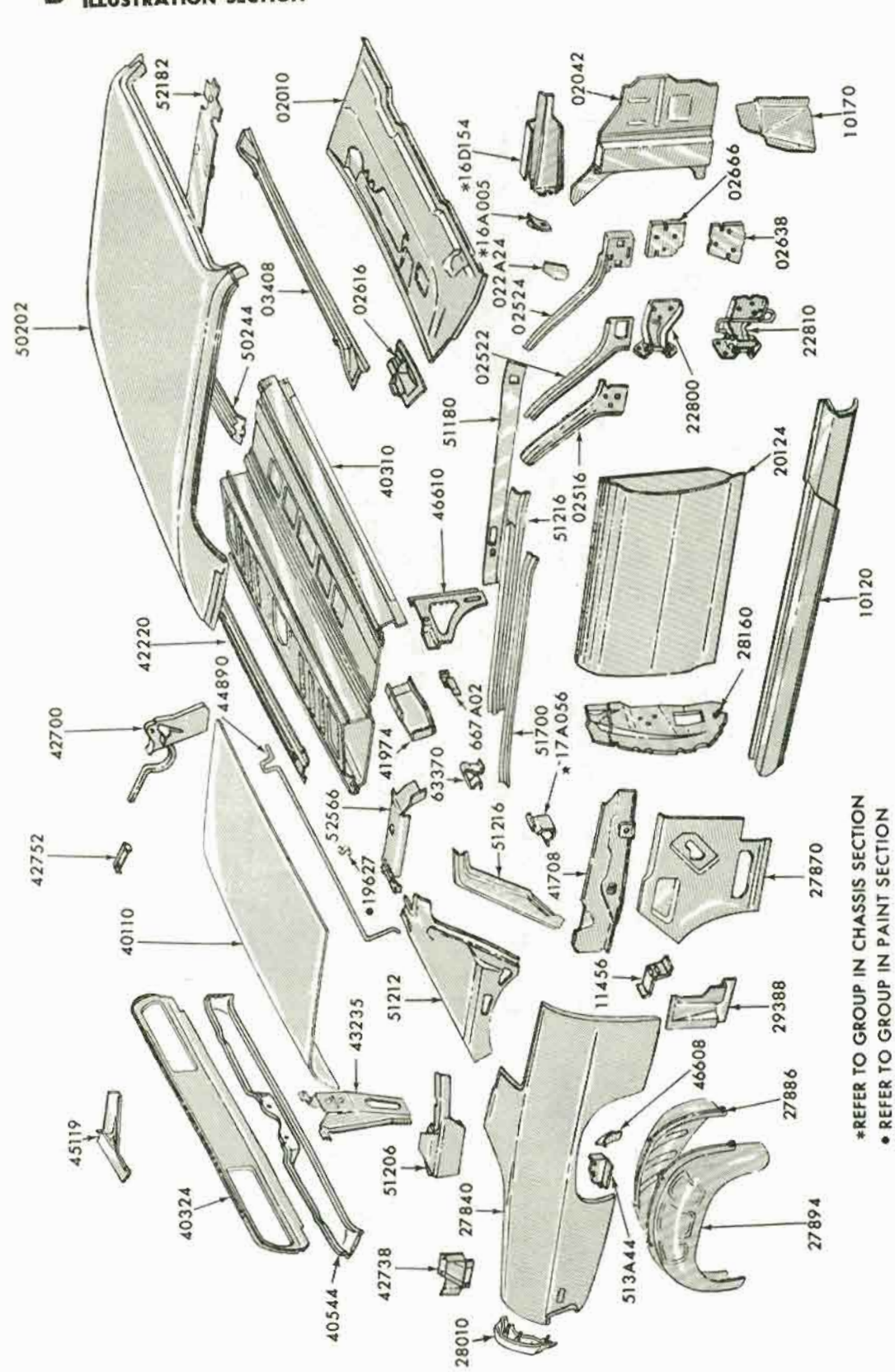
P-7085
52182
02010
02042
10170
*16D154
*16A005
*16A24
022A24
02524
02666
02638
50202
50244
03408
02616
02522
22810
22800
51180
40310
46610
51216
02516
20124
10120
28160
42220
44890
42700
41974
667A02
51700
*17A056
63370
52566
•19627
42752
40110
51216
41708
27870
11456
29388
51212
43235
45119
40324
51206
27840
46608
27886
513A44
27894
42738
40544
28010
*REFER TO GROUP IN CHASSIS SECTION
• REFER TO GROUP IN PAINT SECTION

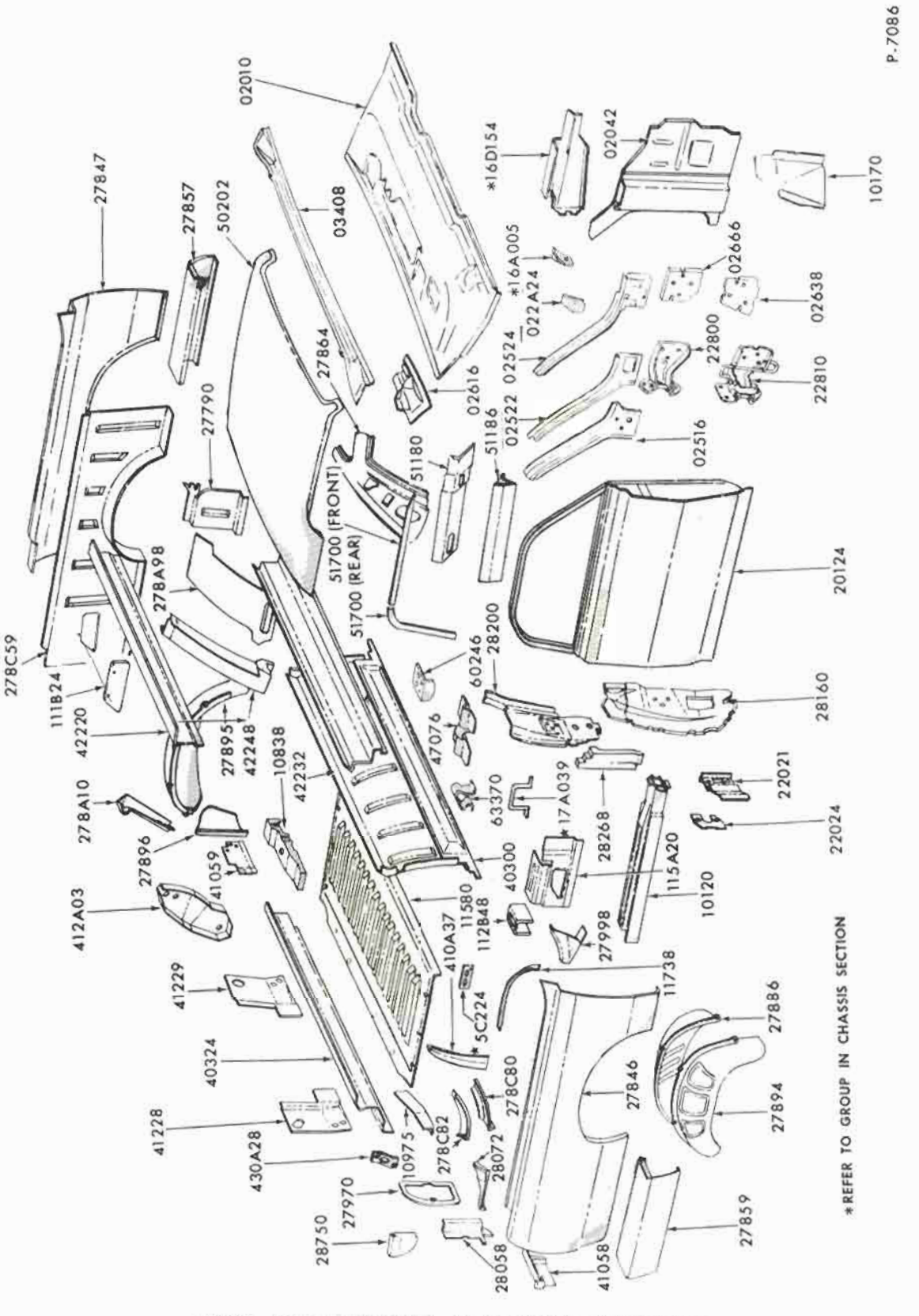

1970/71 FAIRLANE/TORINO - BODY TYPE 66 - UPPER BODY

COPYRIGHT © 1975 — FORD MOTOR COMPANY — DEARBORN, MICHIGAN

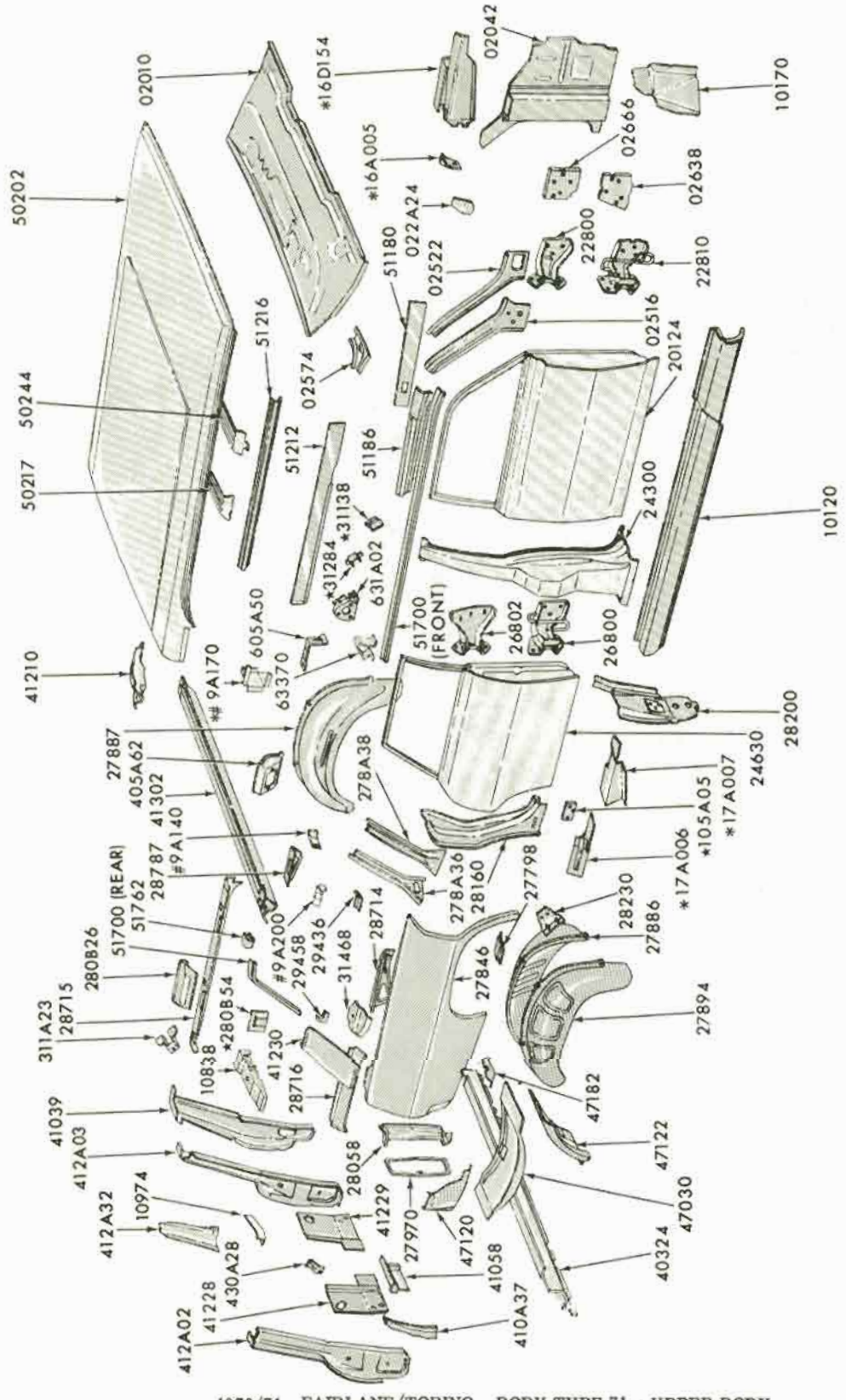

P-7087

*REFER TO GROUP IN CHASSIS SECTION
#SERVICED ONLY IN ASSEMBLY - GROUP 27846

1970/71 FAIRLANE/TORINO - BODY TYPE 71 - UPPER BODY

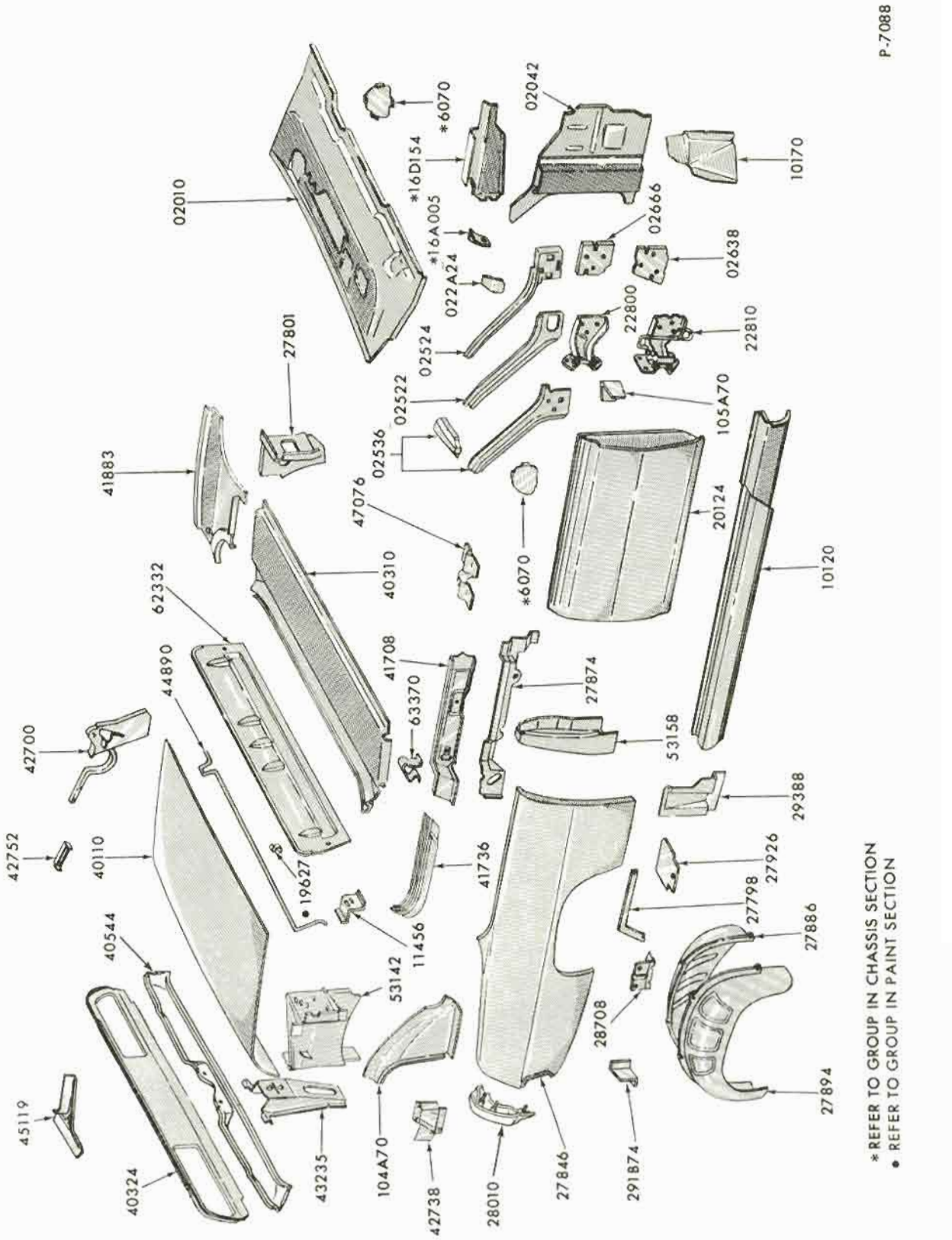

1970/71 FAIRLANE/TORINO - BODY TYPE 76 - UPPER BODY

COPYRIGHT © 1975— FORD MOTOR COMPANY —DEARBORN, MICHIGAN

FORD CAR PARTS

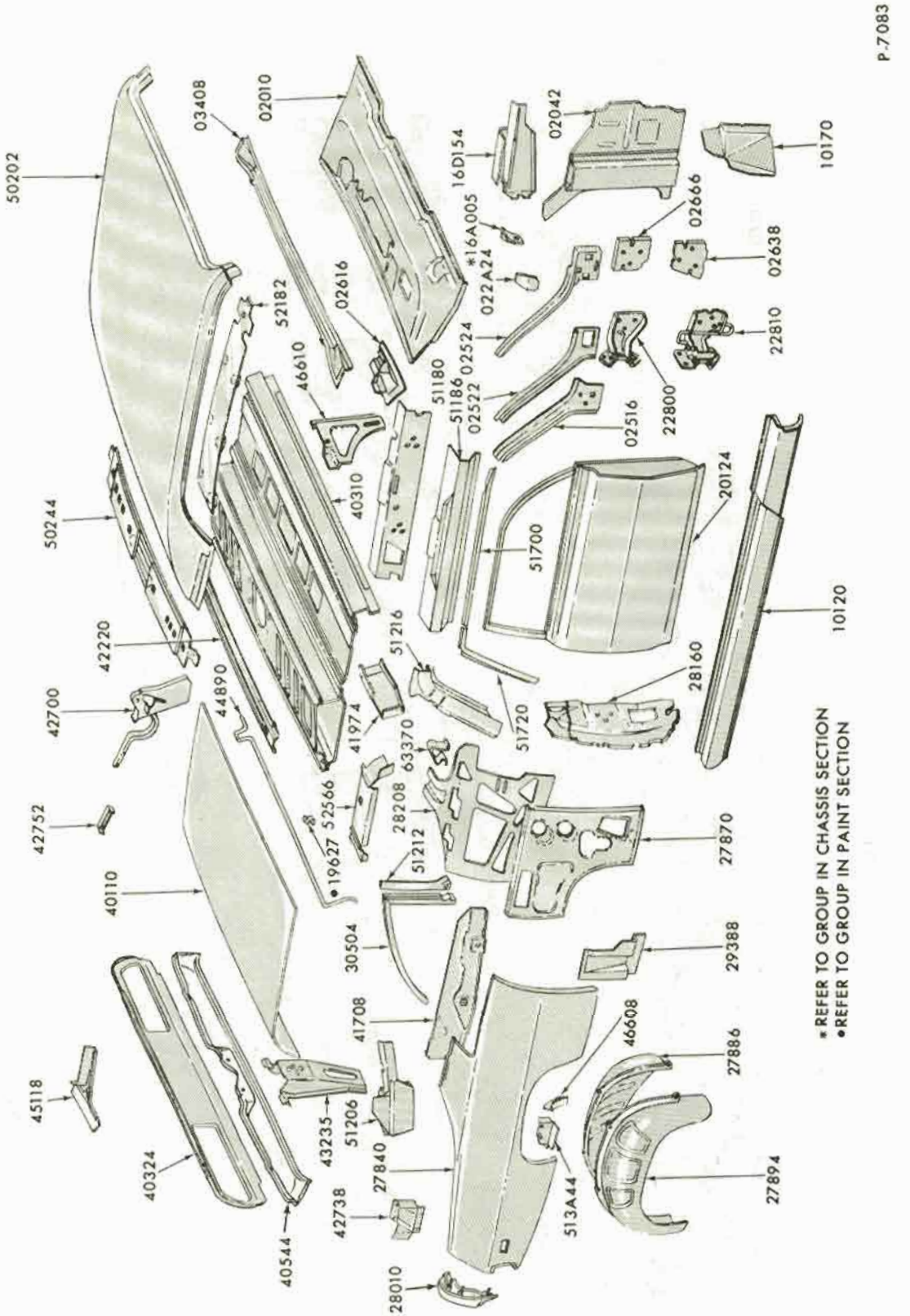

1970 FAIRLANE/TORINO - BODY TYPE 62 - UPPER BODY

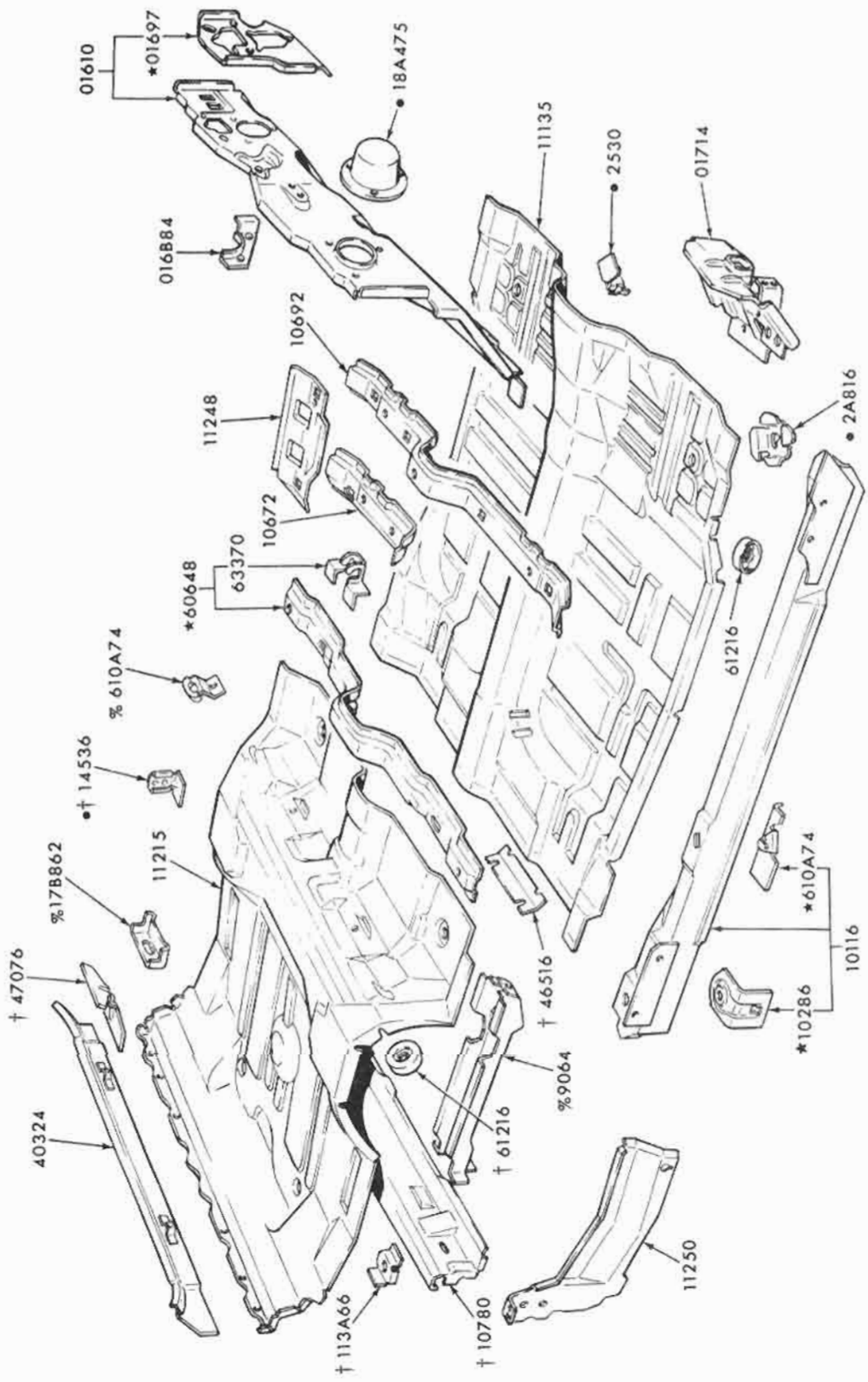

% SUPPLIED ONLY IN ASSEMBLY-GROUP 11215
† ALSO SUPPLIED IN ASSEMBLY-GROUP 11215
• REFER TO CHASSIS SECTION

P-8642

1972 TORINO - BODY TYPES 53,63,65 - UNDERBODY

COPYRIGHT © 1975 — FORD MOTOR COMPANY — DEARBORN, MICHIGAN

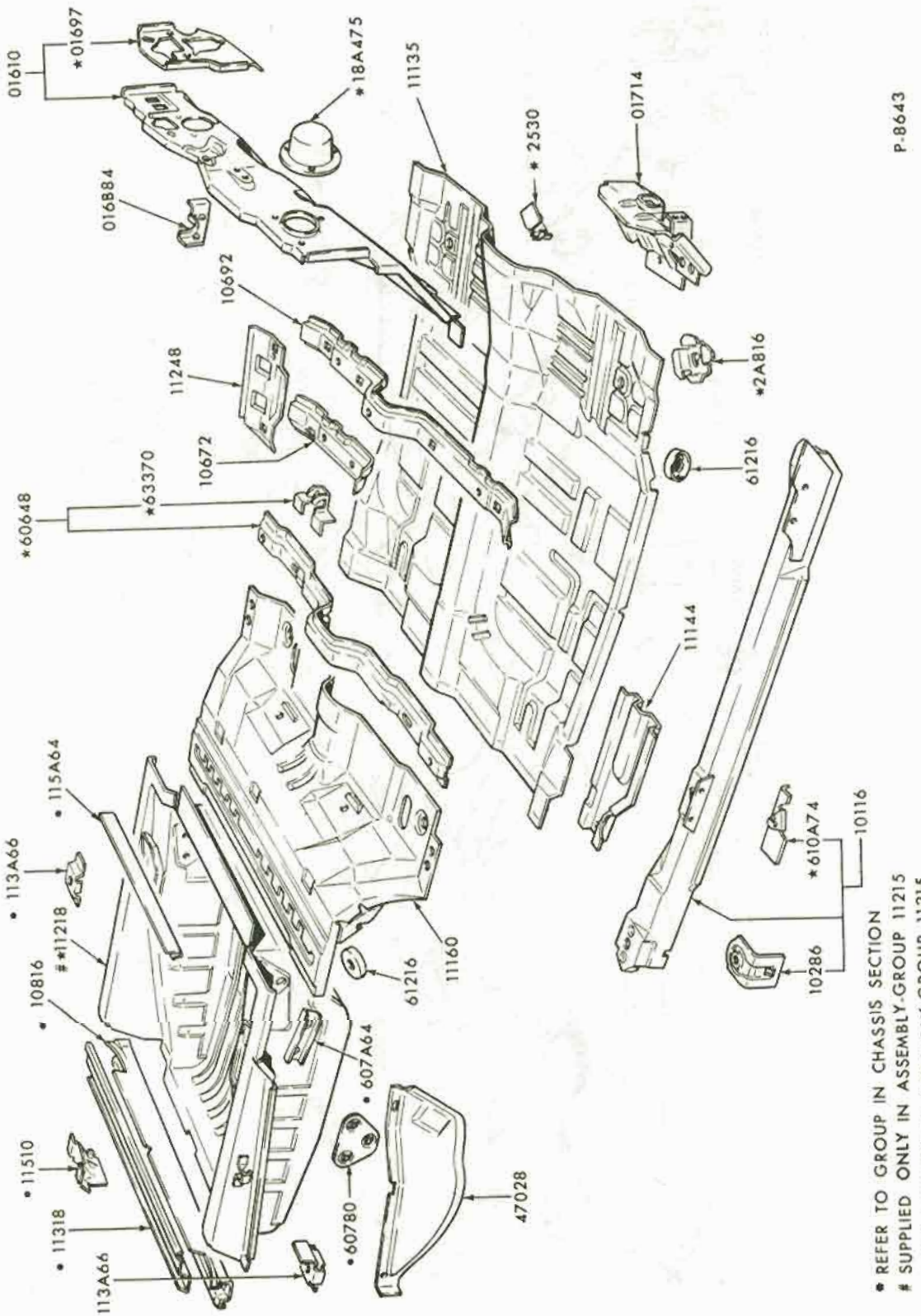
01610
*01697
*18A475
11135
01714
* 2530
016884
10692
11248
*2A816
10672
61216
*63370
*60648
11144
• 115A64
• 113A66
#*11218
• 10816
61216
11160
*610A74
10116
10286
• 607A64
• 11510
• 11318
113A66
•60780
47028
P-8643
* REFER TO GROUP IN CHASSIS SECTION
# SUPPLIED ONLY IN ASSEMBLY-GROUP 11215
• ALSO SUPPLIED IN ASSEMBLY-GROUP 11215

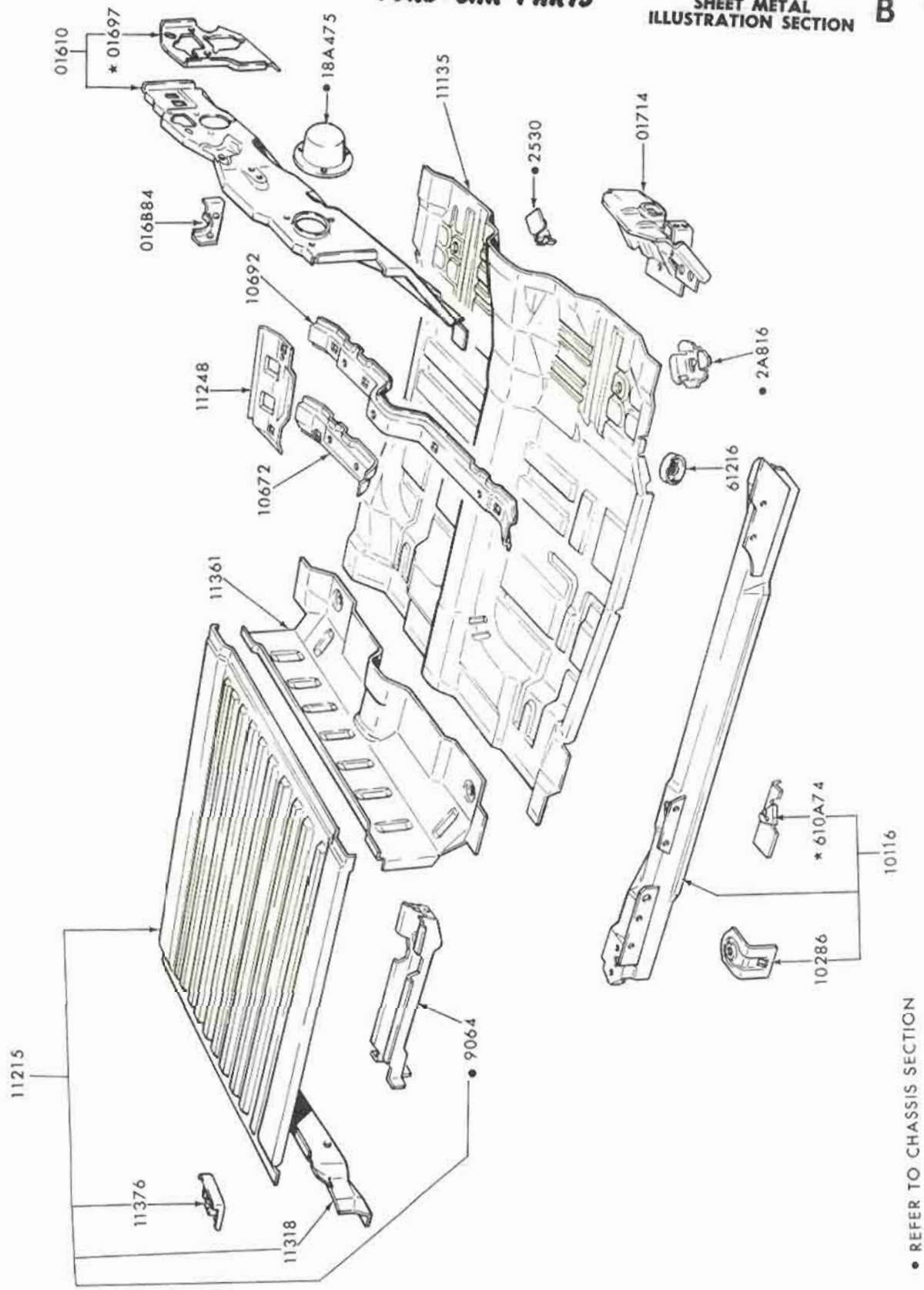

1972 TORINO - BODY TYPE 97 - UNDERBODY

COPYRIGHT © 1975 — FORD MOTOR COMPANY — DEARBORN, MICHIGAN

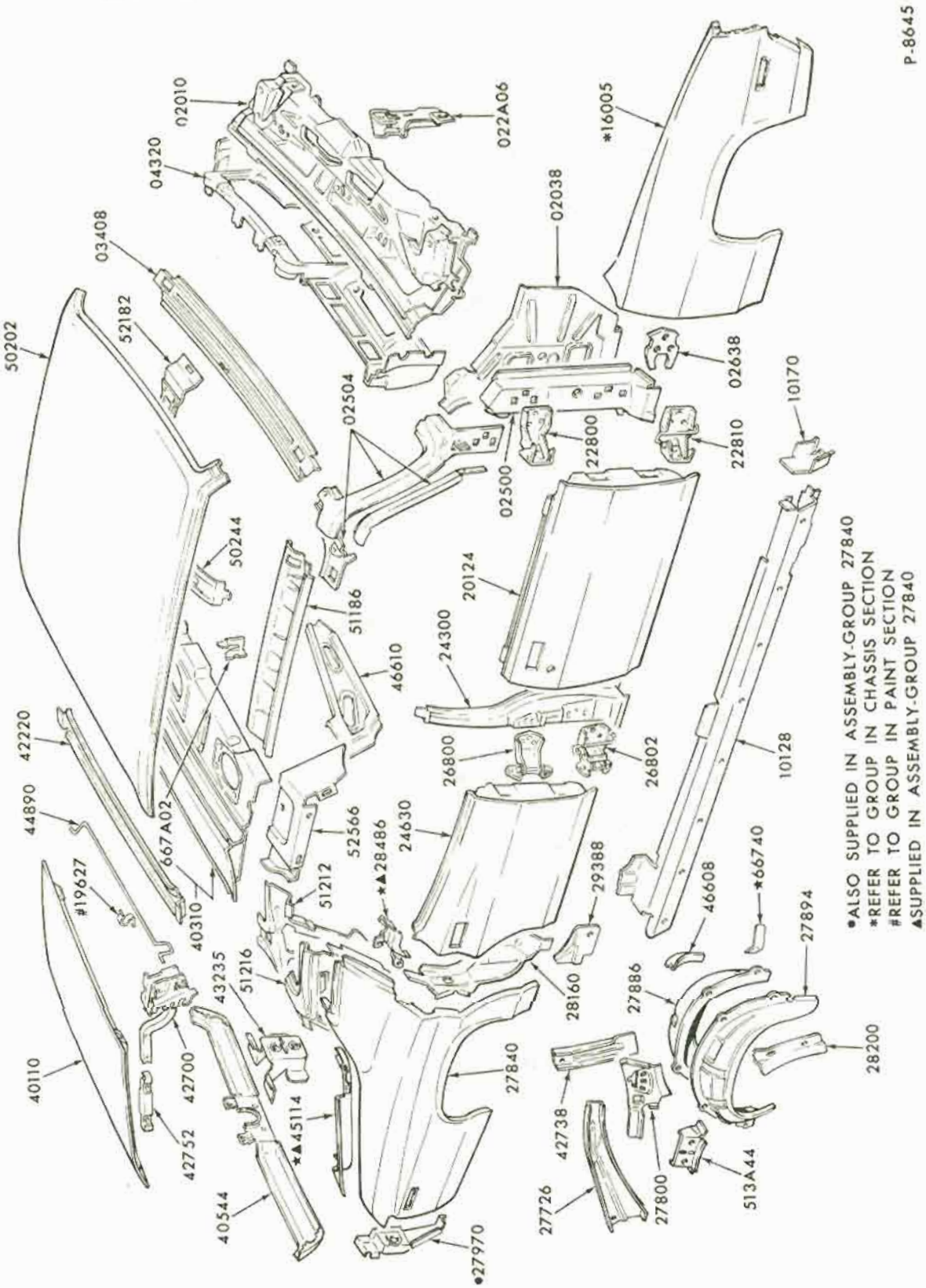

1972 TORINO - BODY TYPE 53 - UPPER BODY

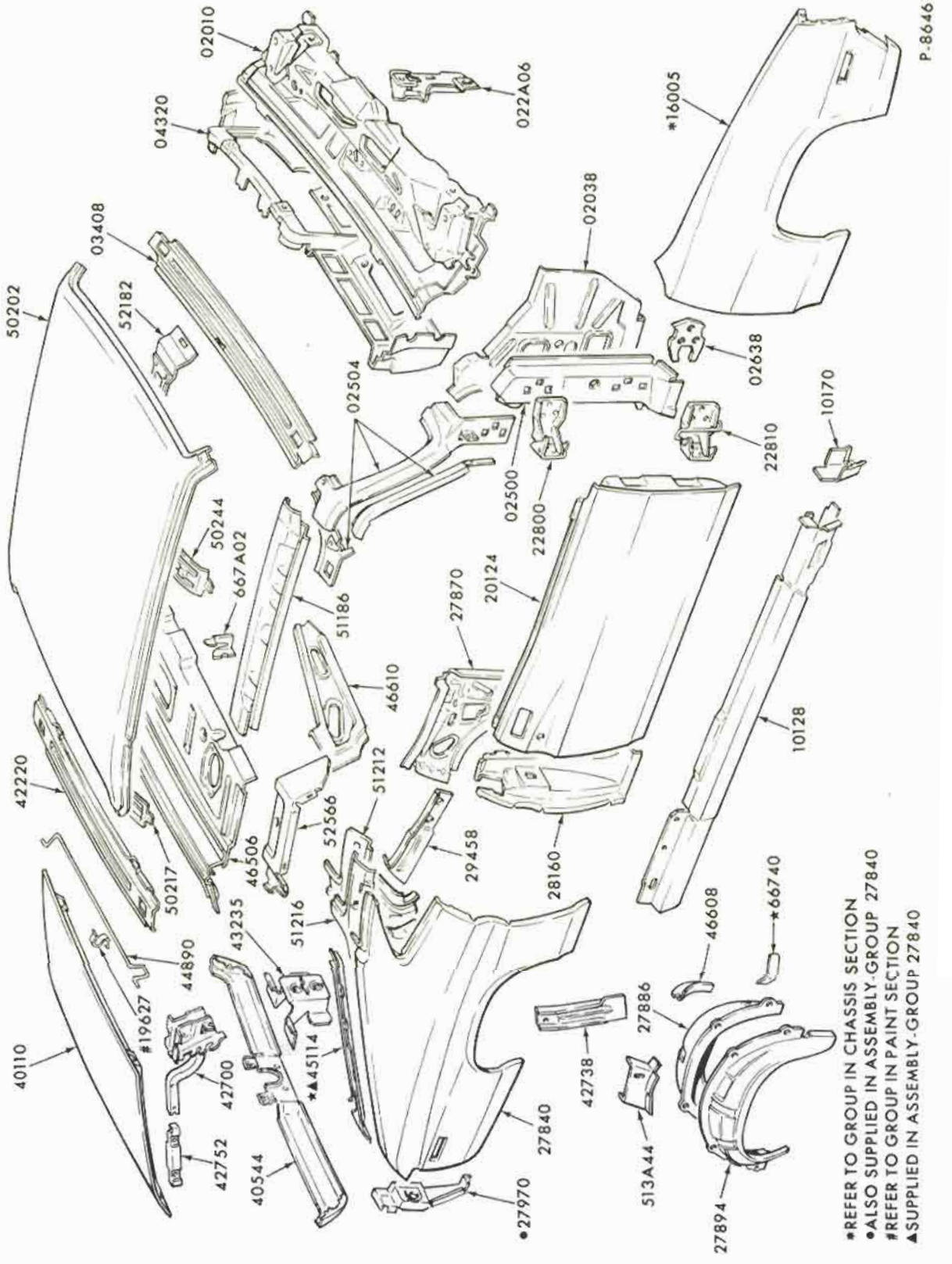

1972 TORINO - BODY TYPE 63 - UPPER BODY

COPYRIGHT © 1975 — FORD MOTOR COMPANY — DEARBORN, MICHIGAN

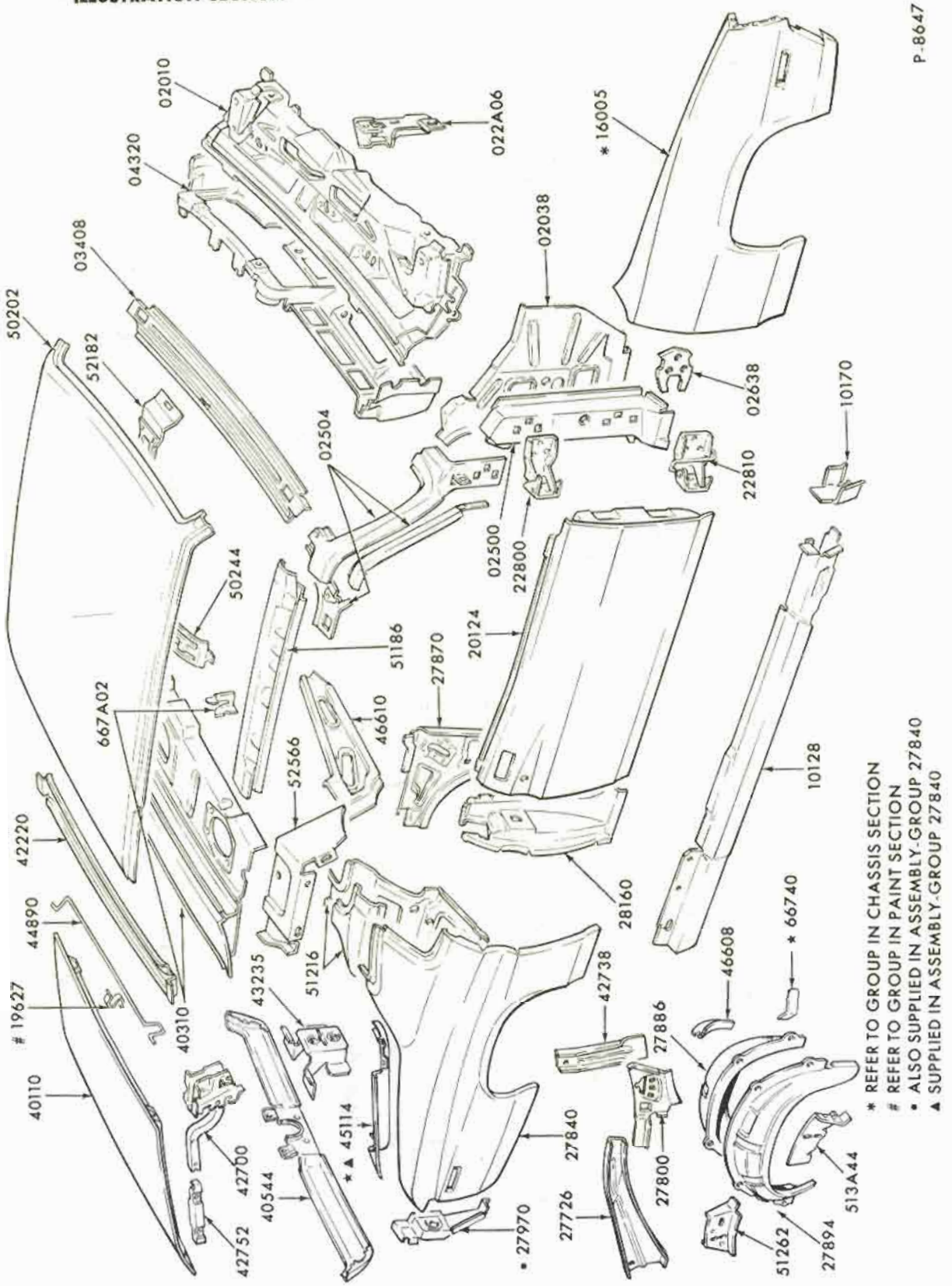

1972 TORINO - BODY TYPE 65 - UPPER BODY

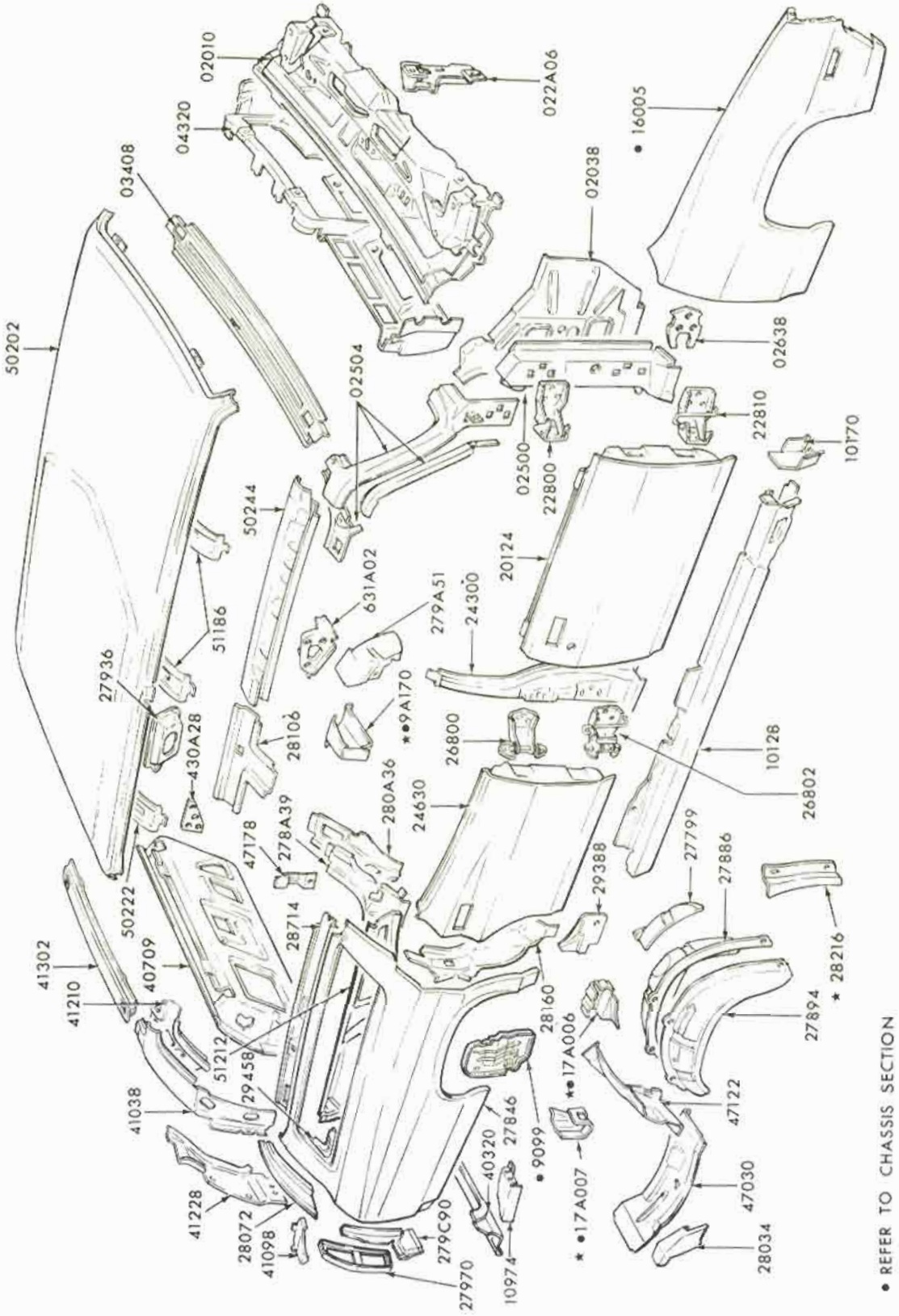

1972 TORINO - BODY TYPE 71 - UPPER BOD

COPYRIGHT © 1975 — FORD MOTOR COMPANY — DEARBORN, MICHIGAN

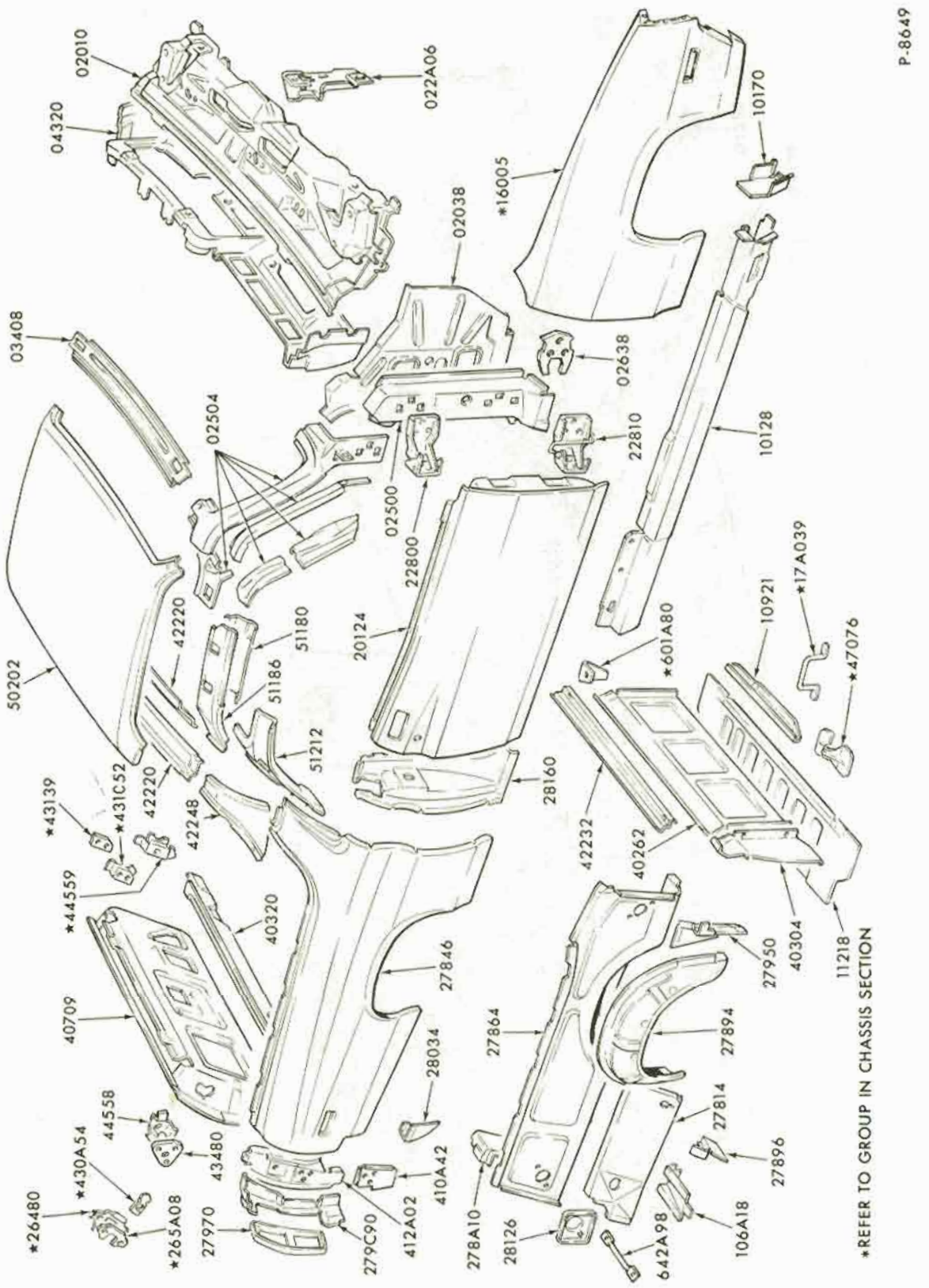

1972 TORINO - BODY TYPE 97 - UPPER BODY

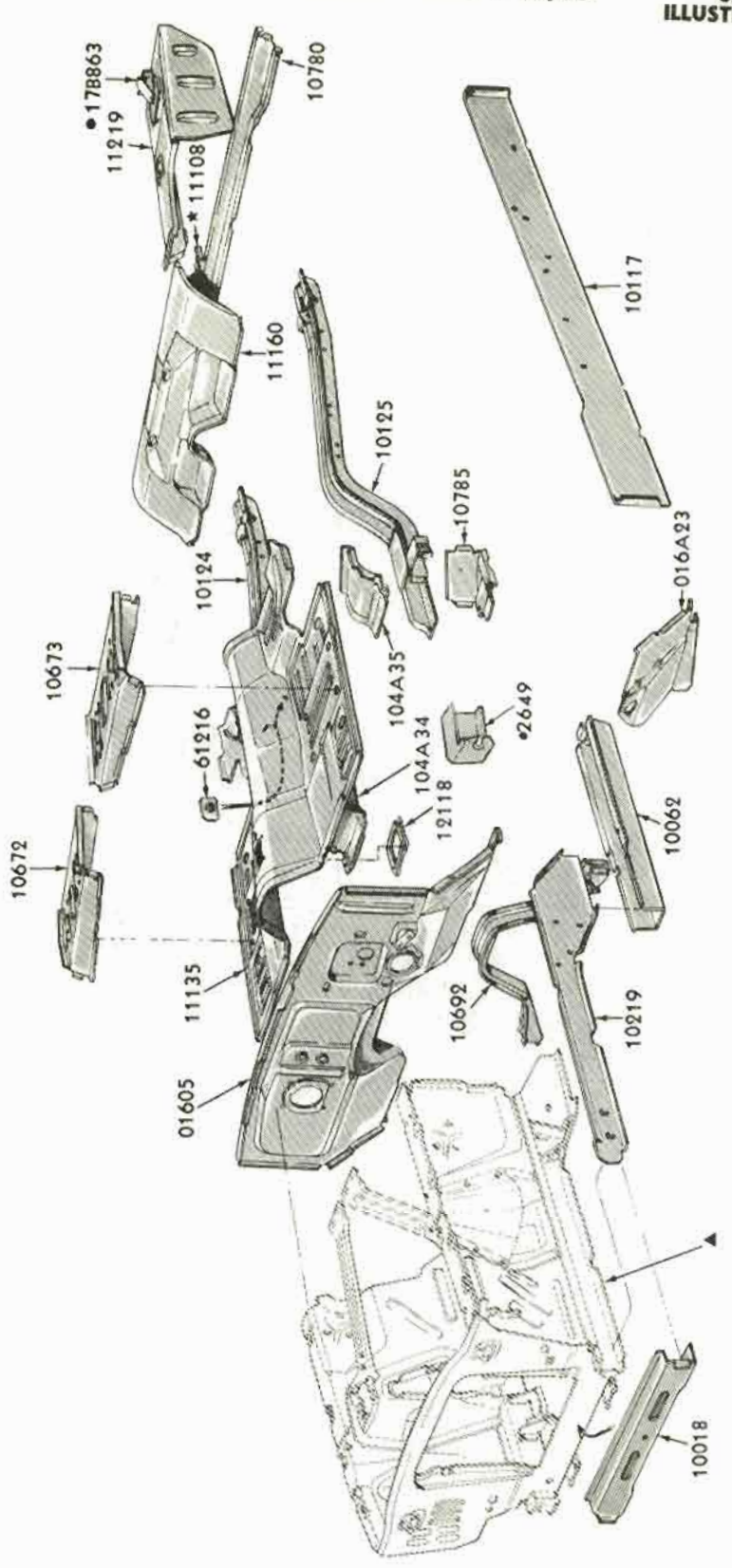

1965/66 MUSTANG - BODY TYPES 63, 65 - UNDER BODY

COPYRIGHT © 1975 — FORD MOTOR COMPANY — DEARBORN, MICHIGAN

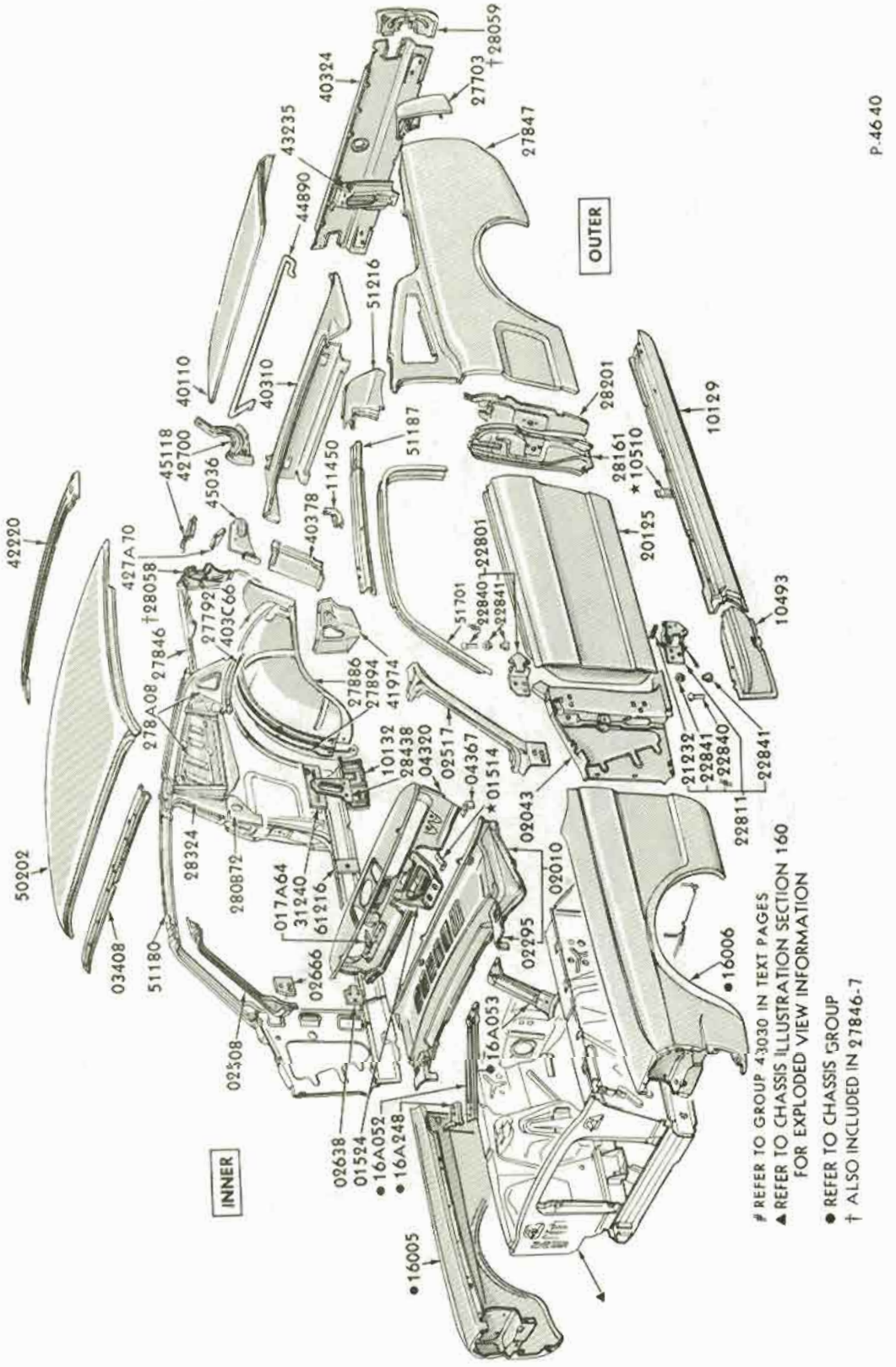

P.4640

REFER TO GROUP 43030 IN TEXT PAGES
▲ REFER TO CHASSIS ILLUSTRATION SECTION 160 FOR EXPLODED VIEW INFORMATION

• REFER TO CHASSIS GROUP
† ALSO INCLUDED IN 27846-7

1965/66 MUSTANG - BODY TYPE 63 - UPPER BODY

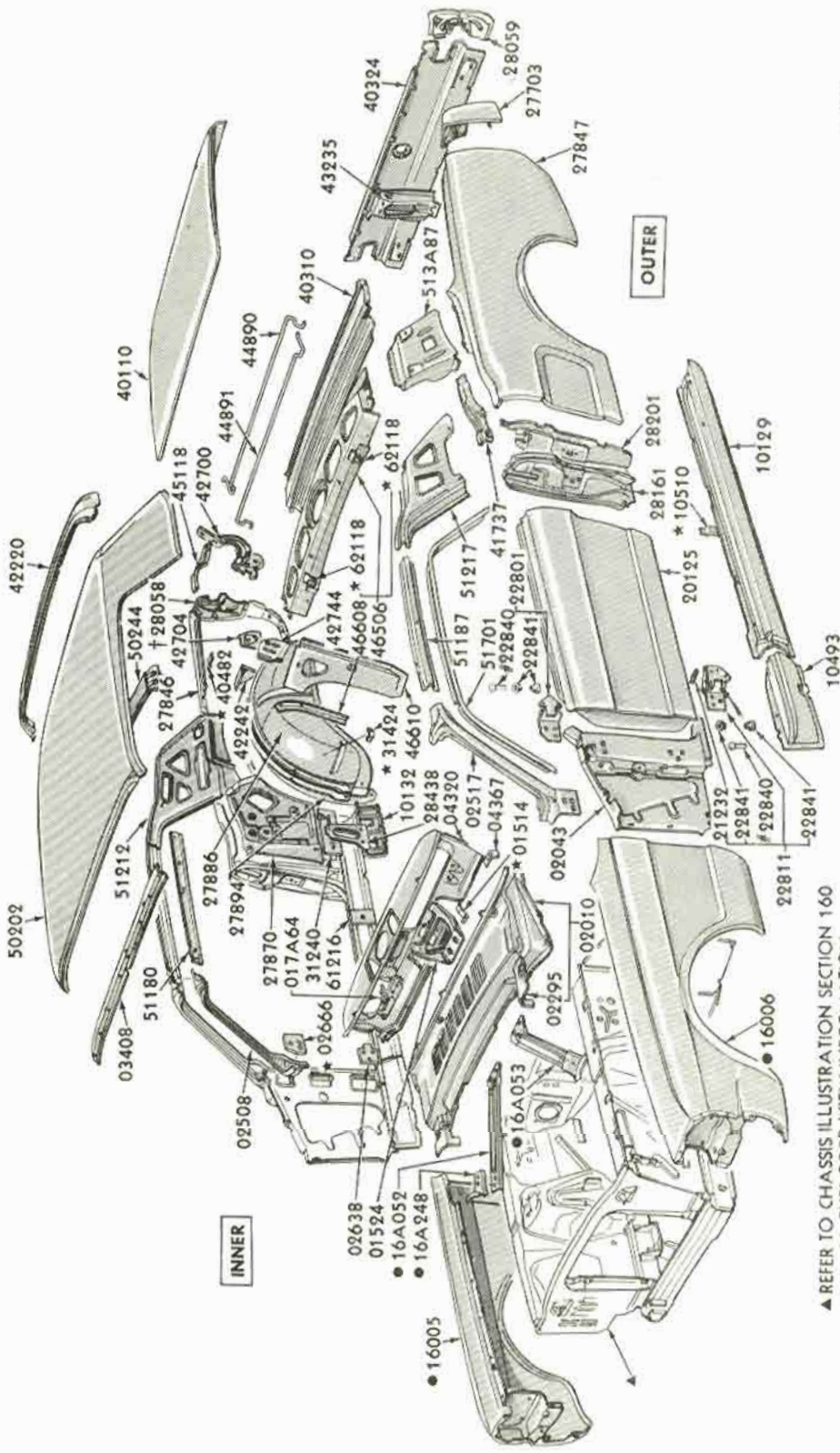

▲ REFER TO CHASSIS ILLUSTRATION SECTION 160 FOR EXPLODED VIEW INFORMATION

● REFER TO CHASSIS GROUP

† ALSO INCLUDED IN 27846-7

REFER TO GROUP 43030 IN TEXT PAGES

1965/66 MUSTANG - BODY TYPE 65 - UPPER BODY

COPYRIGHT © 1975 — FORD MOTOR COMPANY — DEARBORN, MICHIGAN

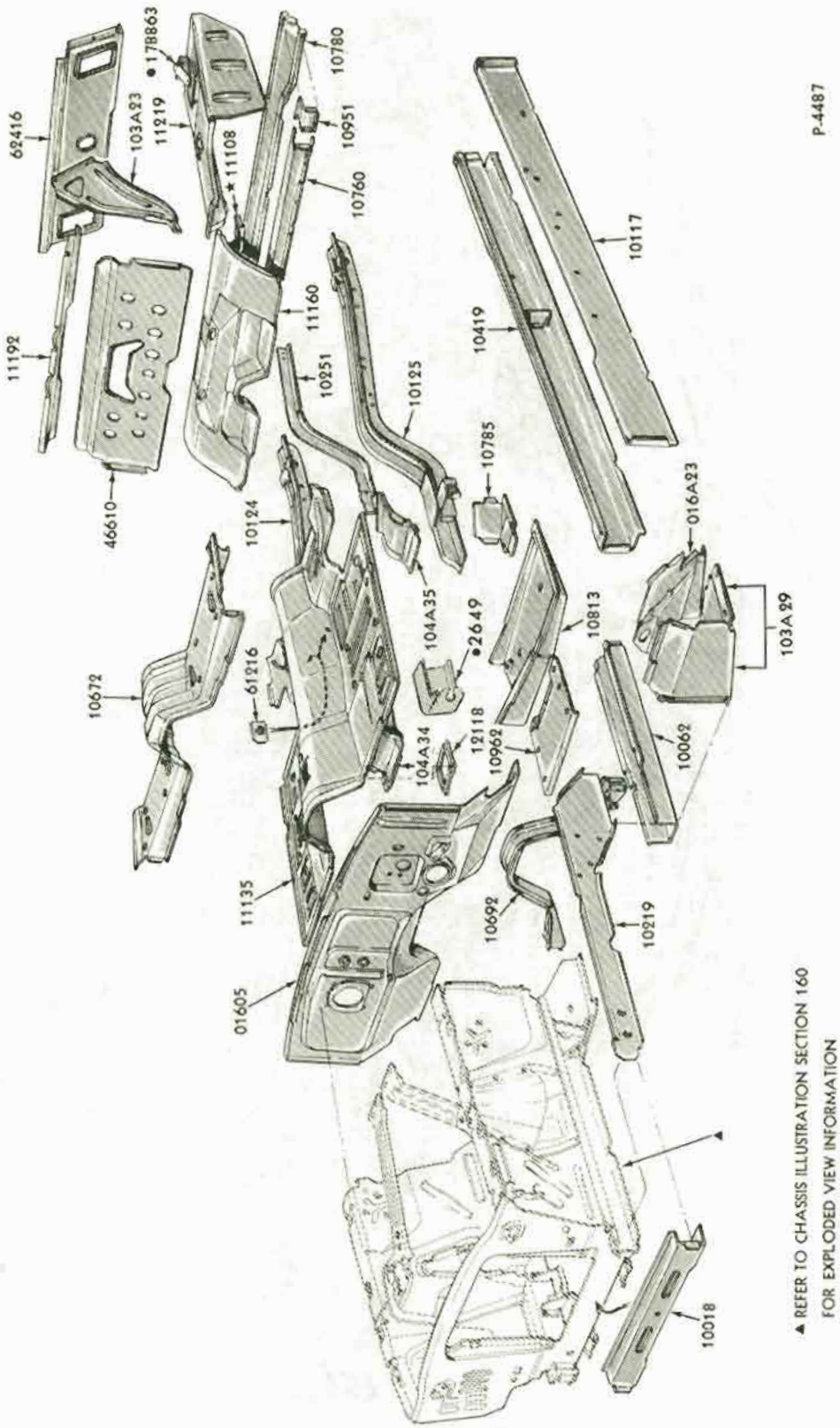

▲ REFER TO CHASSIS ILLUSTRATION SECTION 160 FOR EXPLODED VIEW INFORMATION
•REFER TO CHASSIS GROUP

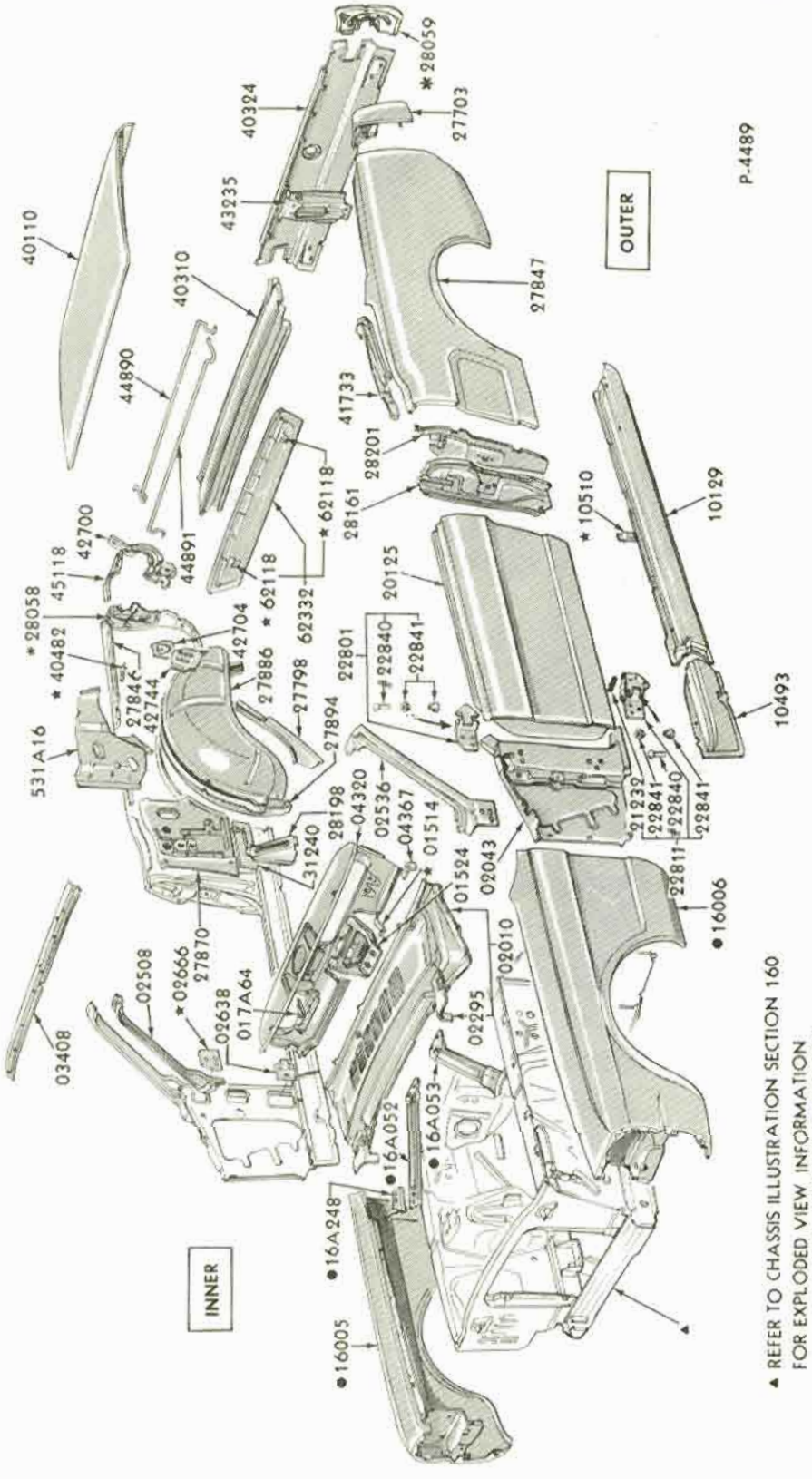

1965/66 MUSTANG - BODY TYPE 76 - UPPER BODY

COPYRIGHT © 1975 — FORD MOTOR COMPANY — DEARBORN, MICHIGAN

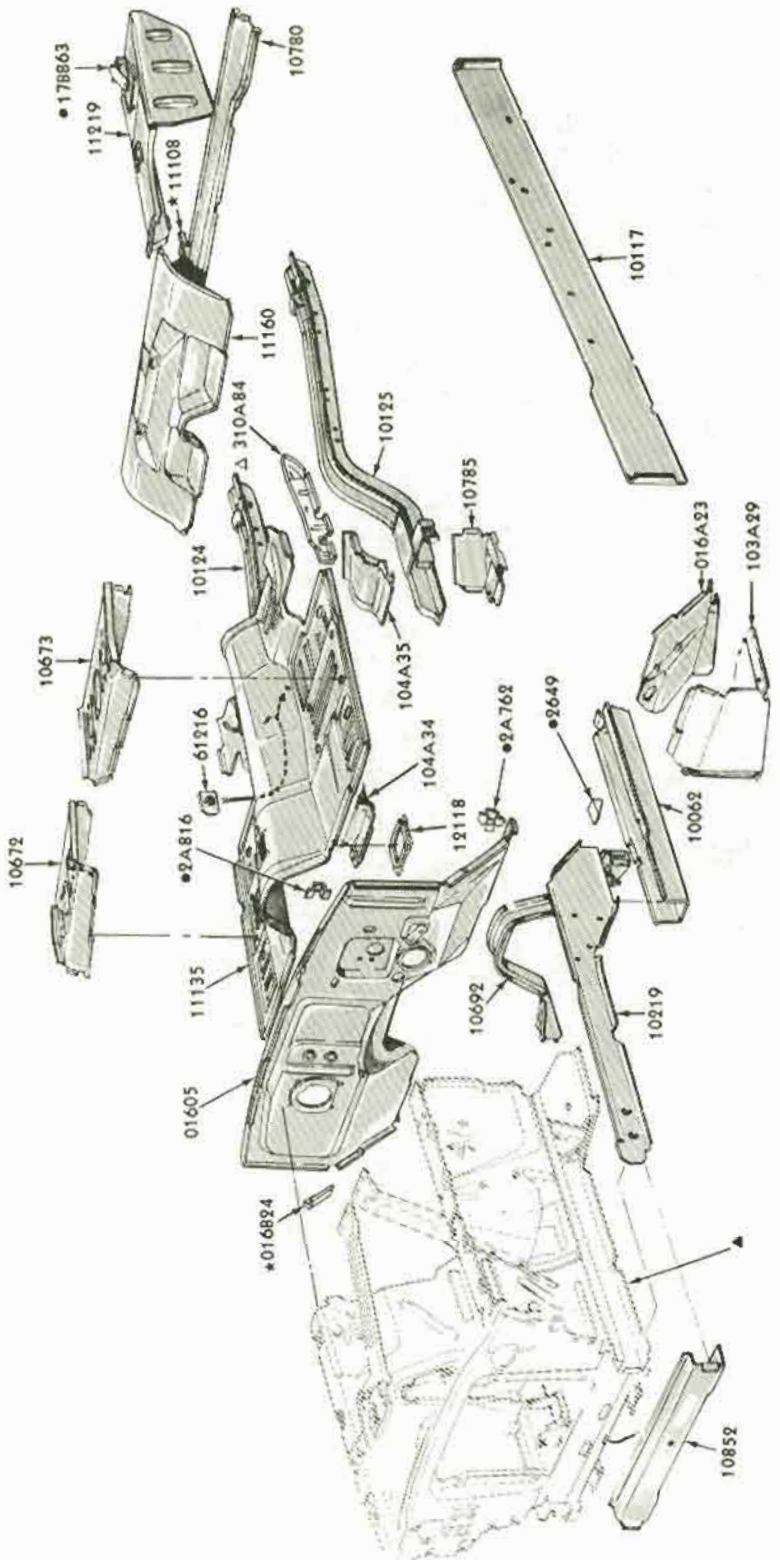

▲ REFER TO CHASSIS ILLUSTRATION SECTION 160 FOR EXPLODED VIEW INFORMATION
• REFER TO CHASSIS GROUP
△ USED ON BODY TYPE F (63) ONLY

1967/70 MUSTANG - BODY TYPE 63 - UNDERBODY
1967/69 MUSTANG - BODY TYPE 65 - UNDERBODY

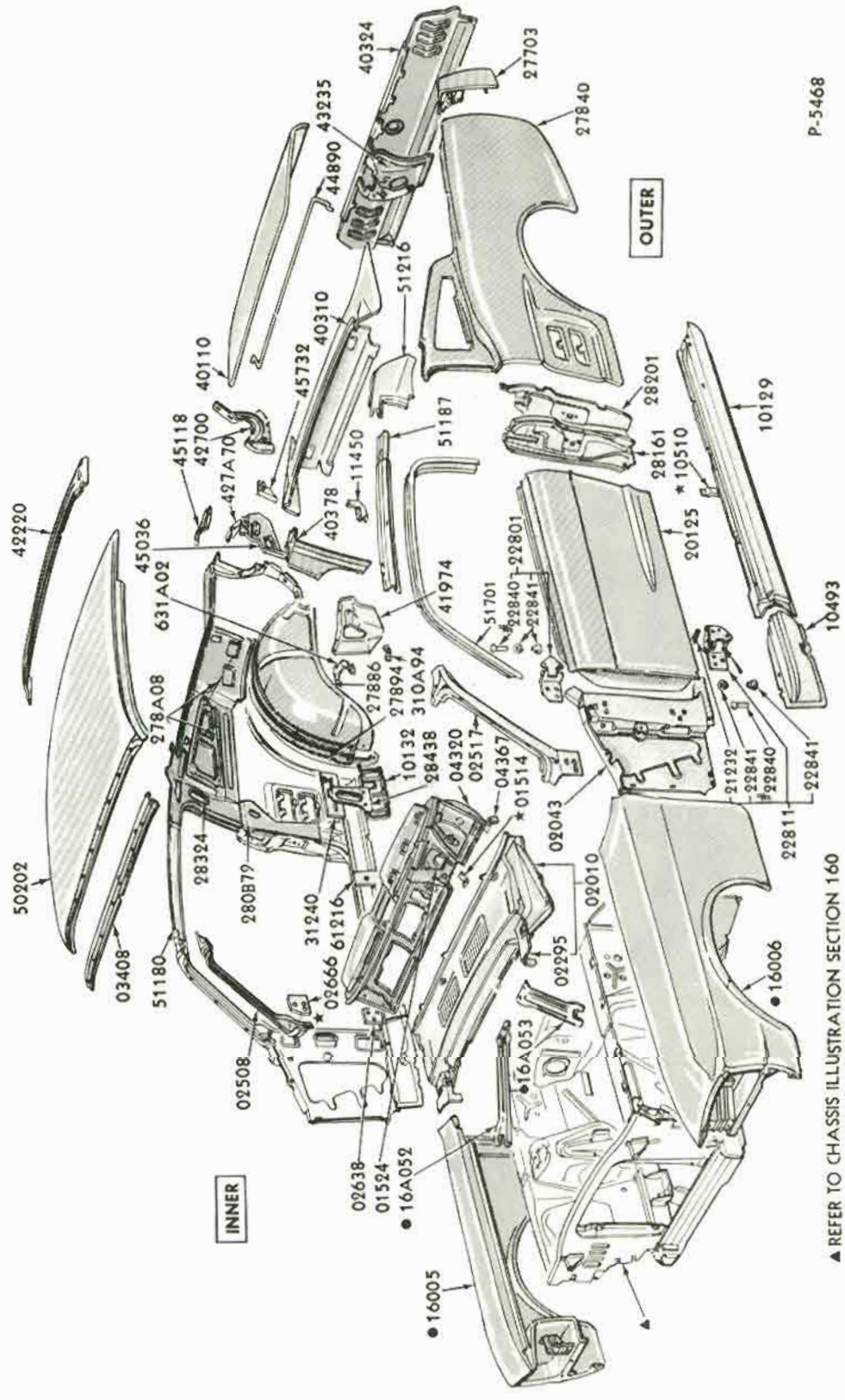

May, 1975 COPYRIGHT © 1975 — FORD MOTOR COMPANY — DEARBORN, MICHIGAN FINAL ISSUE

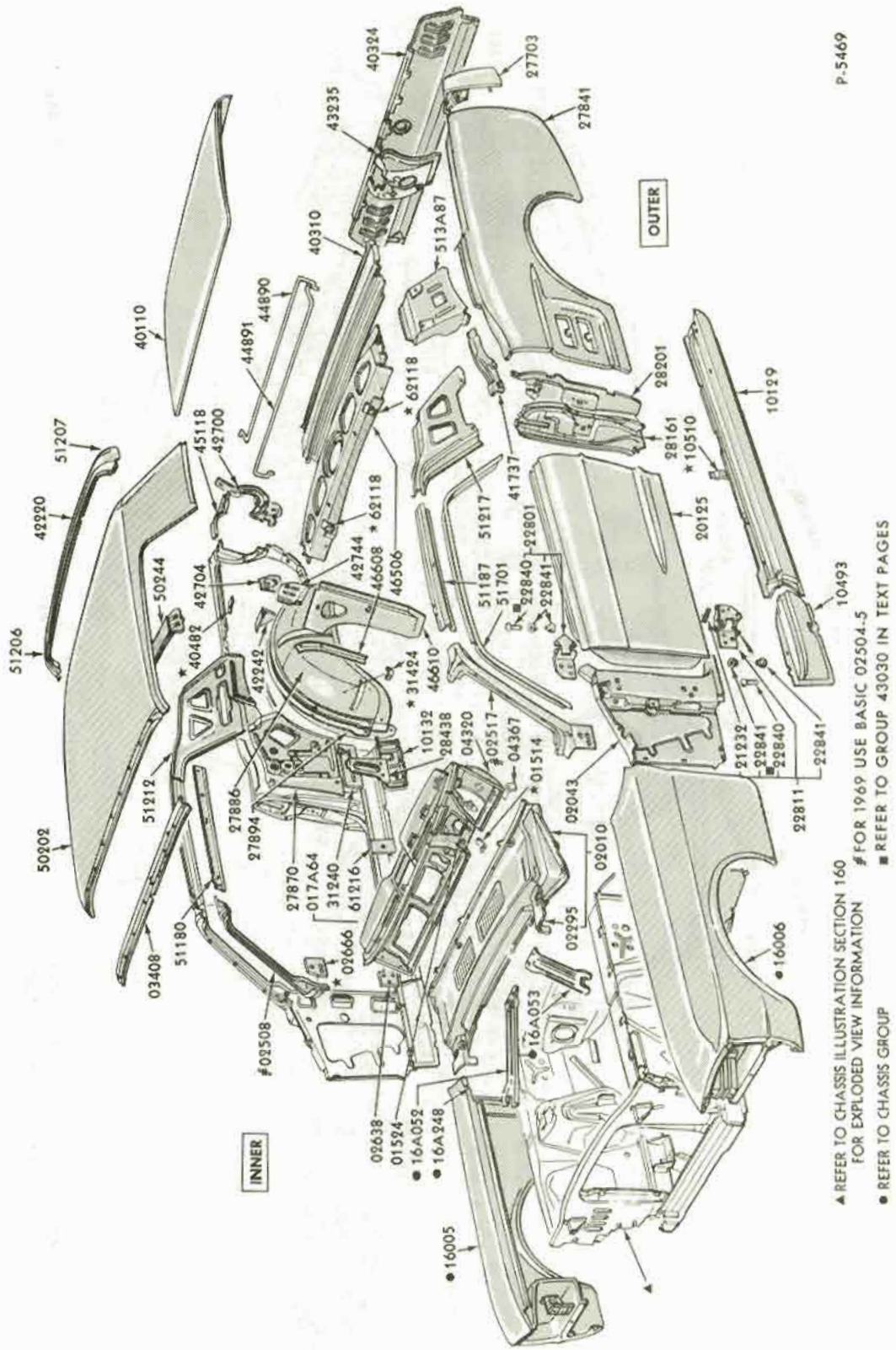

1967/68 MUSTANG - BODY TYPE 65 - UPPER BODY

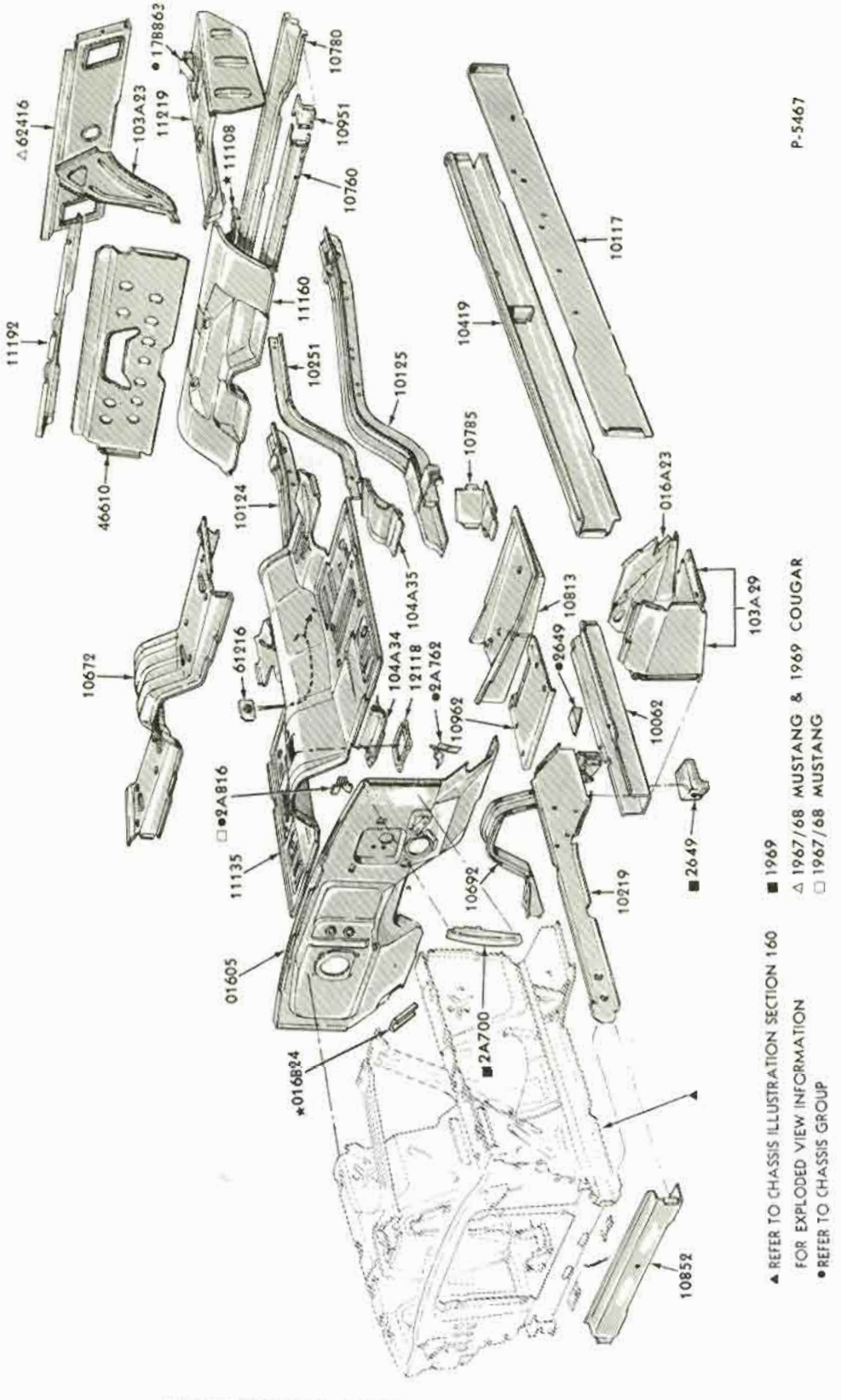

1967/68 MUSTANG - BODY TYPE 76 - UNDERBODY

COPYRIGHT © 1975 — FORD MOTOR COMPANY — DEARBORN, MICHIGAN

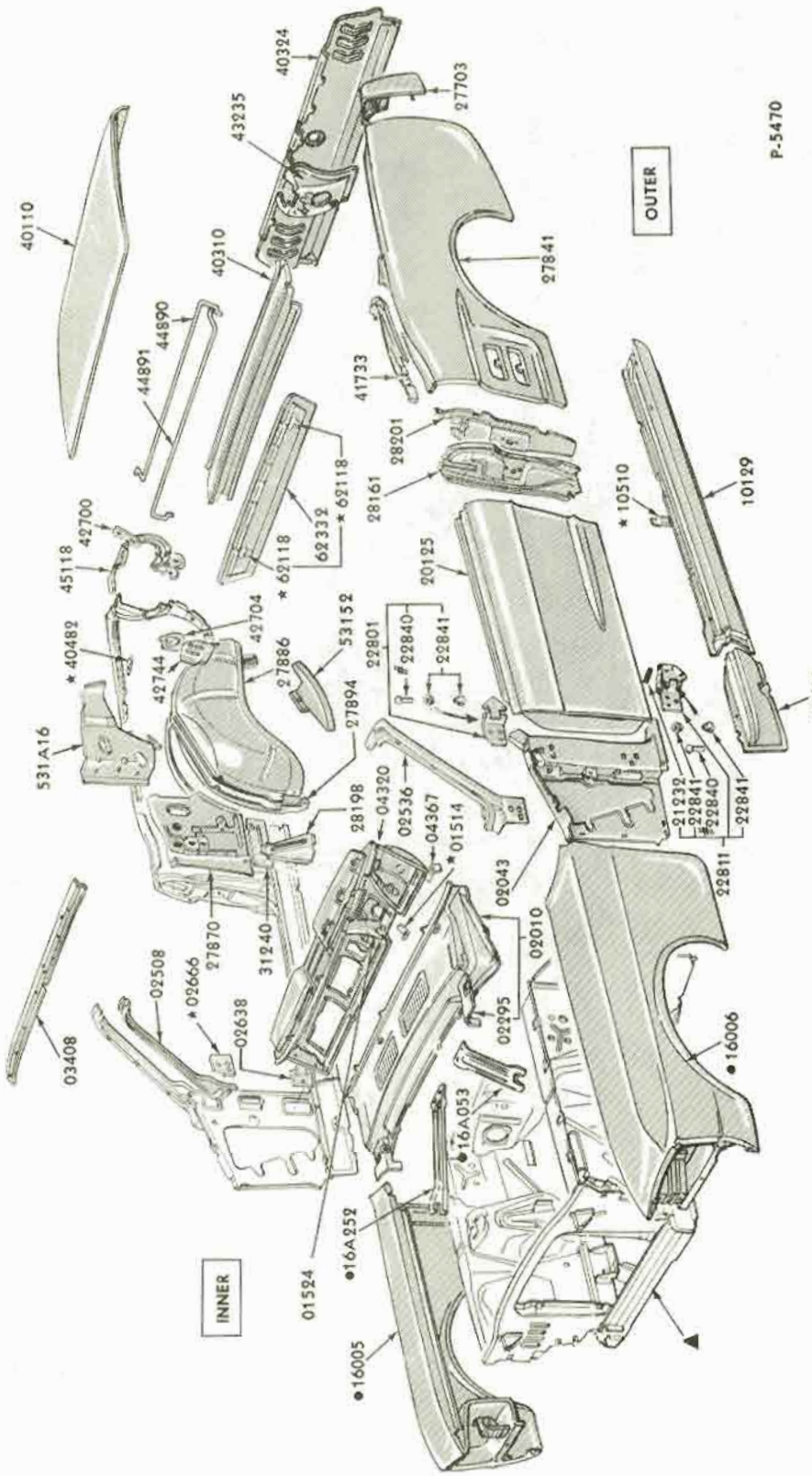

▲ REFER TO CHASSIS ILLUSTRATION SECTION 160 FOR EXPLODED VIEW INFORMATION
REFER TO GROUP 43030 IN TEXT PAGES
● REFER TO CHASSIS GROUP

1967/68 MUSTANG - BODY TYPE 76 - UPPER BODY

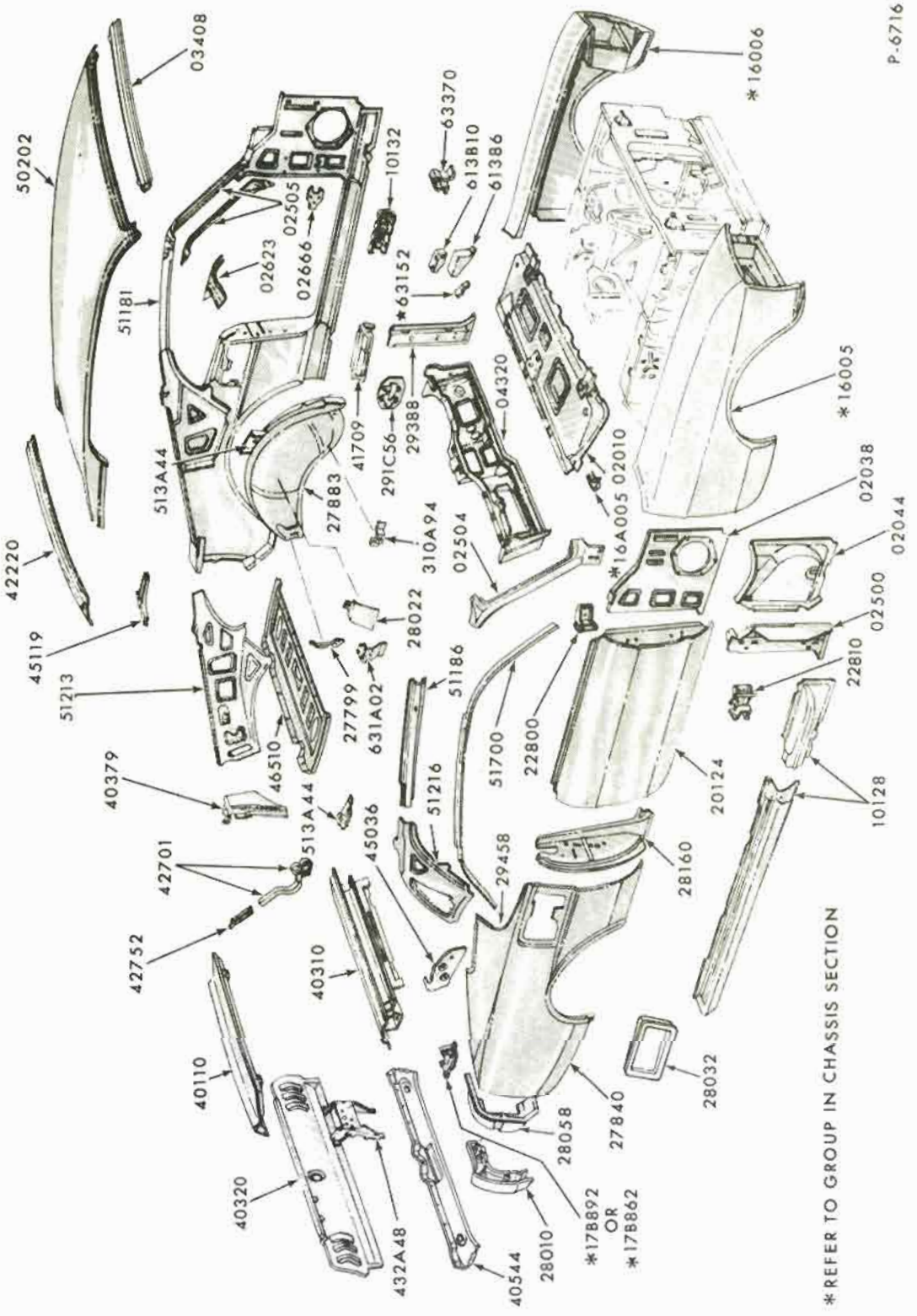

1969/70 MUSTANG - BODY TYPE 63 - UPPER BODY

COPYRIGHT © 1975 — FORD MOTOR COMPANY — DEARBORN, MICHIGAN

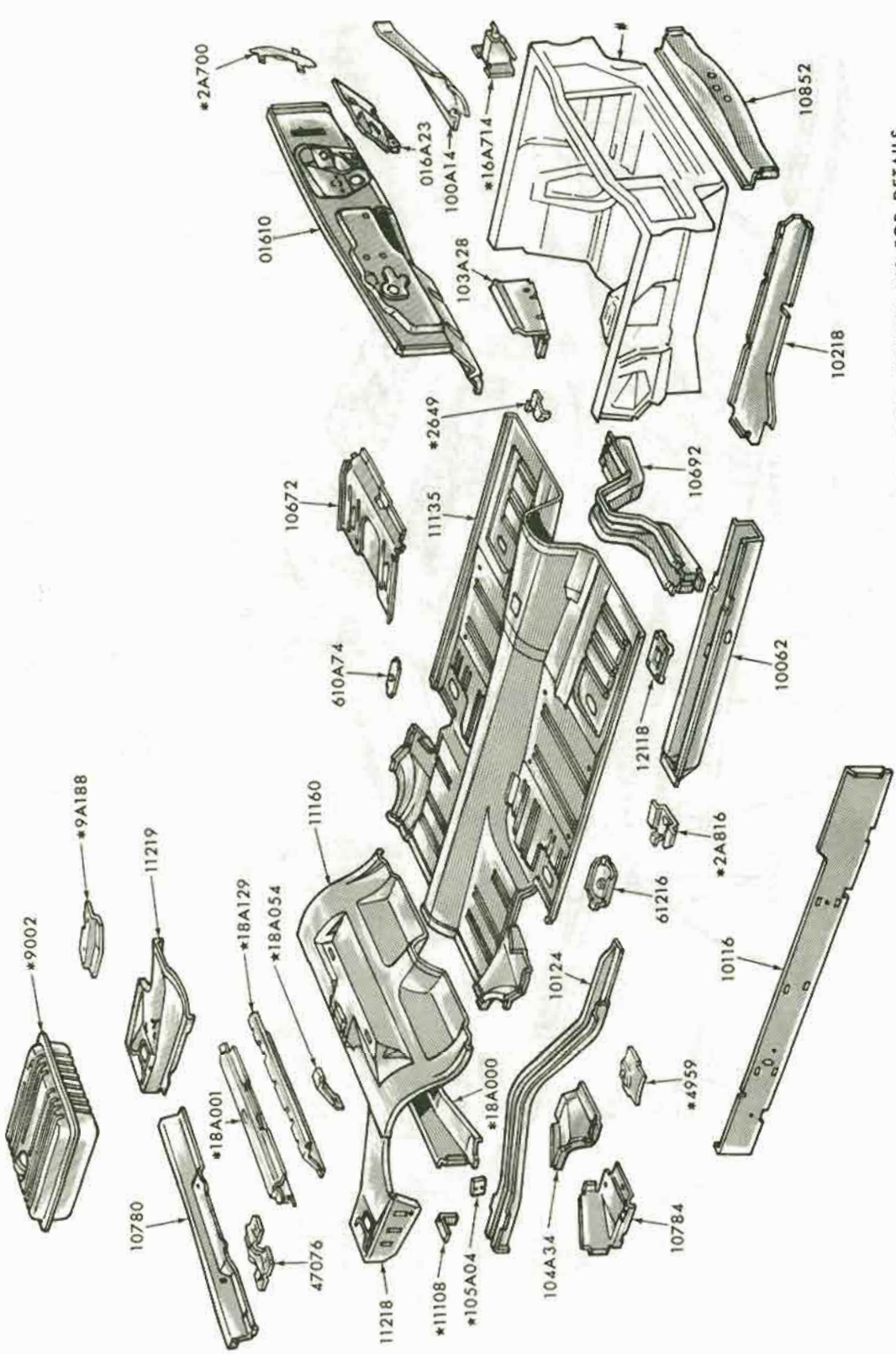

1969/70 MUSTANG - BODY TYPE 65 - UNDERBODY

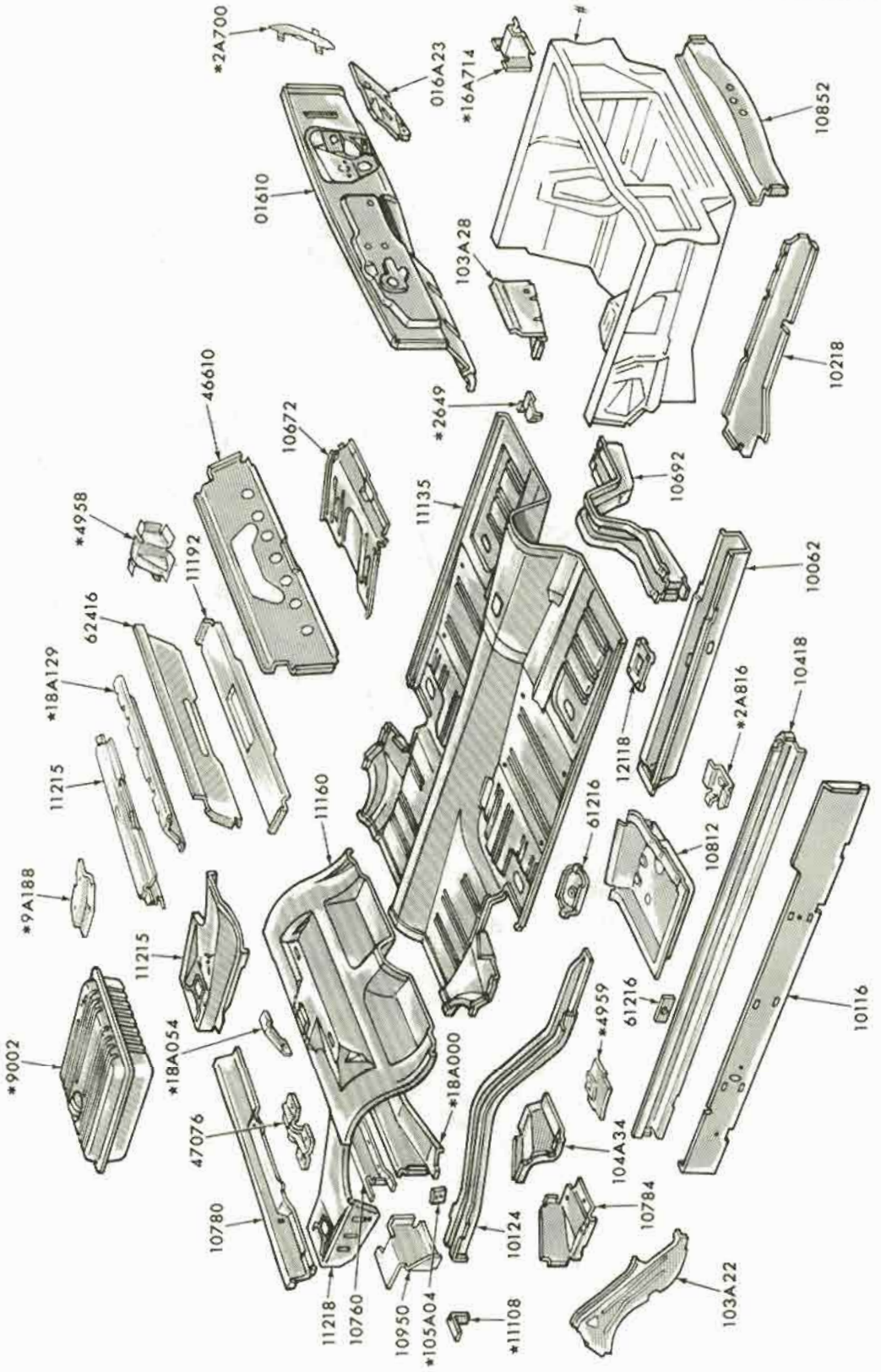

*REFER TO GROUP IN CHASSIS SECTION
#REFER TO ILLUSTRATION SECTION 160 FOR DETAILS

P-7272

1969/70 MUSTANG - BODY TYPE 76 - UNDERBODY

COPYRIGHT © 1975 — FORD MOTOR COMPANY — DEARBORN, MICHIGAN

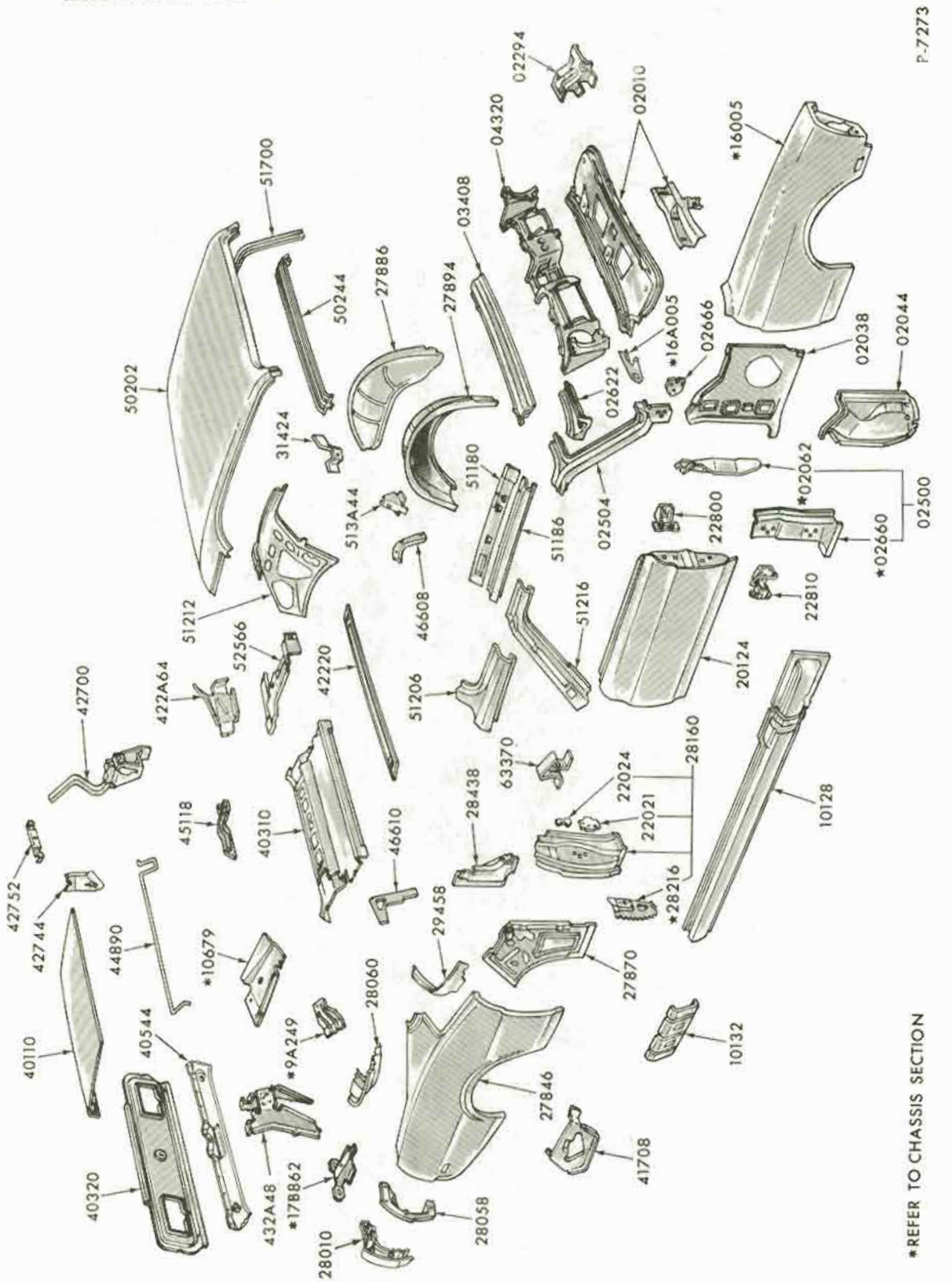

1969/70 MUSTANG - BODY TYPE 65 - UPPER BODY

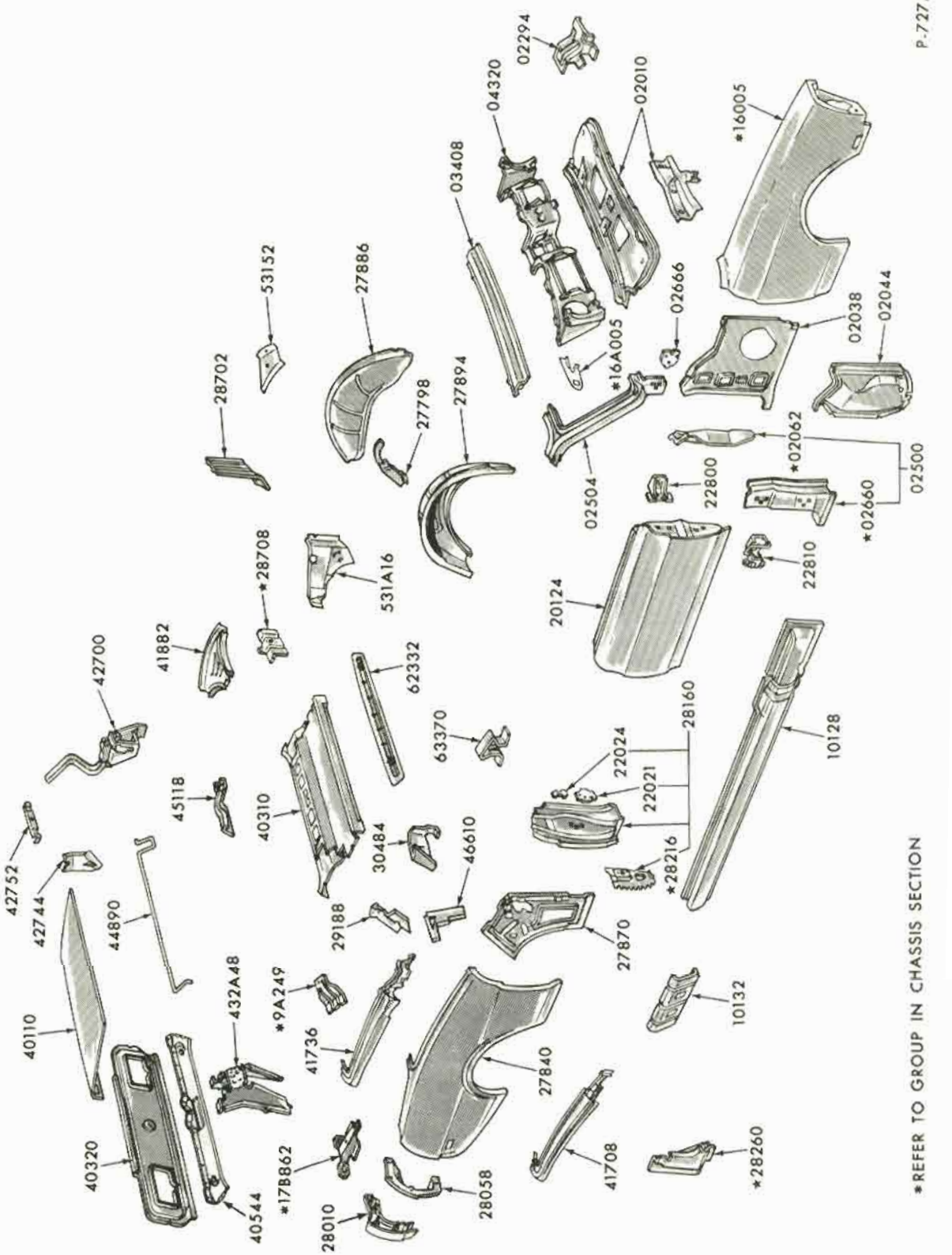

1969/70 MUSTANG - BODY TYPE 76 - UPPER BODY

COPYRIGHT © 1975 — FORD MOTOR COMPANY — DEARBORN, MICHIGAN

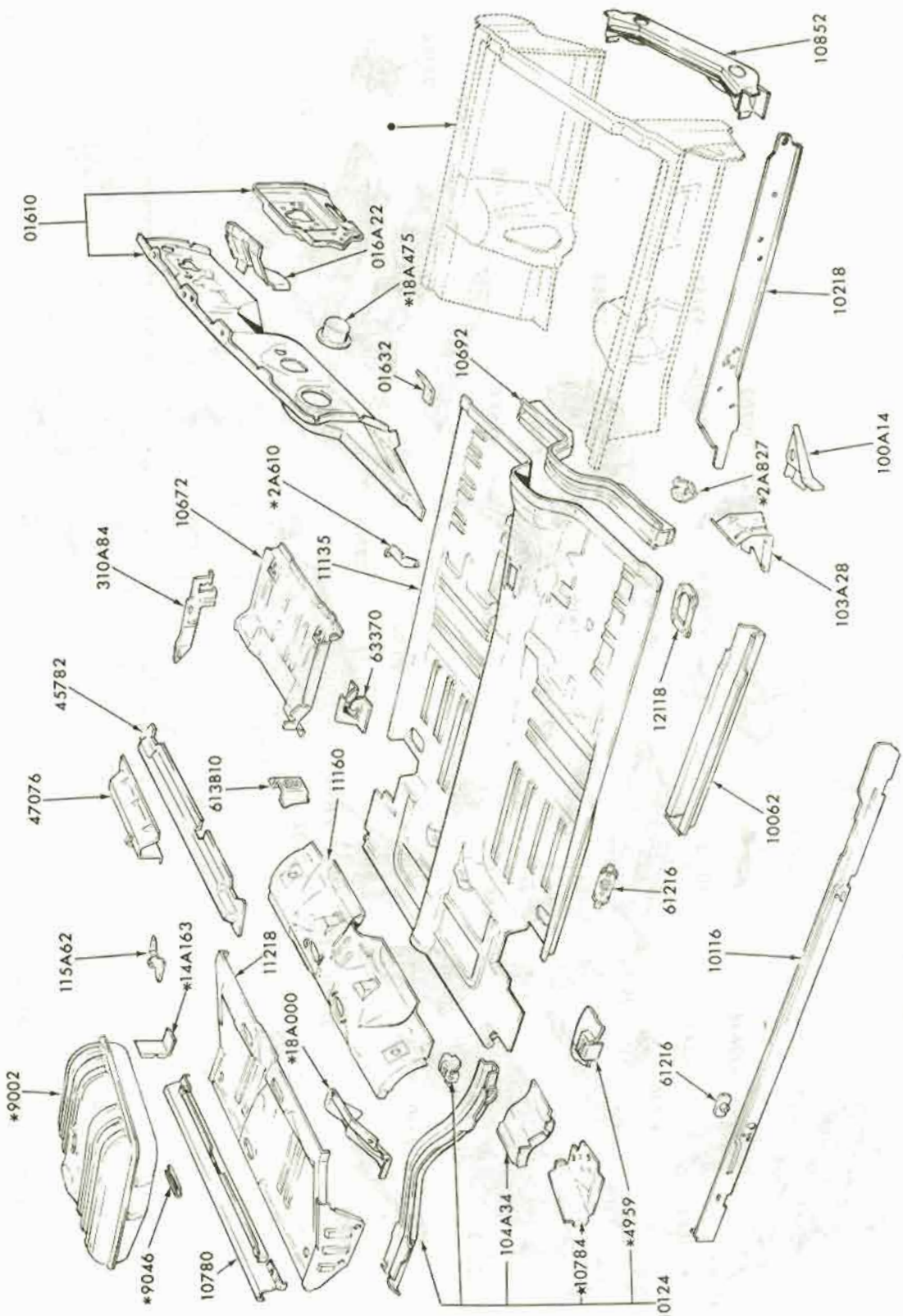
P-7877
10852
01610
016A22
*18A475
10218
01632
10692
100A14
*2A827
*2A610
10672
310A84
11135
103A28
63370
12118
45782
47076
613B10
11160
10062
61216
115A62
*14A163
11218
10116
*18A000
*9002
61216
104A34
*4959
*9046
10780
*10784
10124
*REFER TO GROUP IN CHASSIS SECTION
•REFER TO ILLUSTRATION SECTION 160 FOR DETAILS

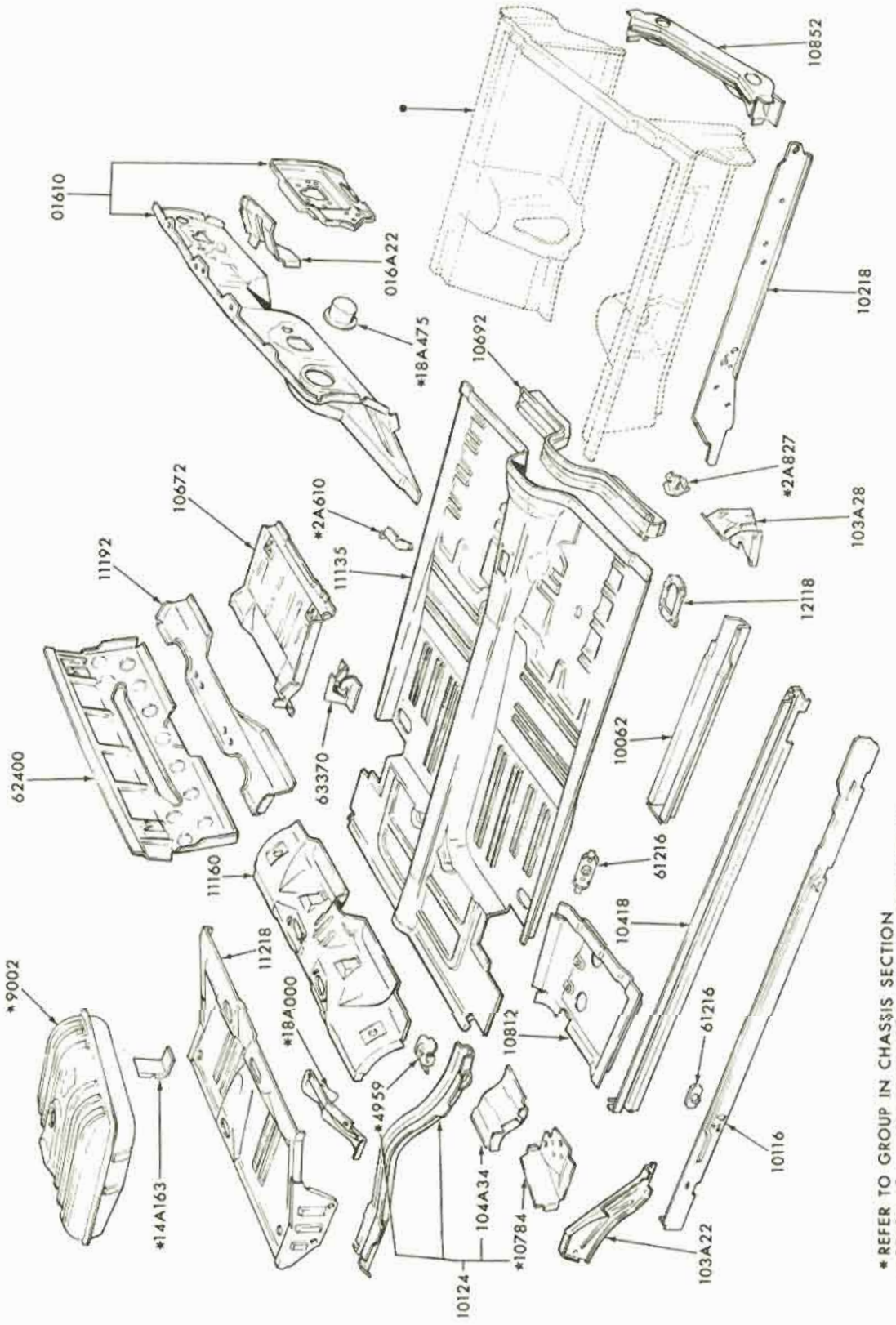

1971/72 MUSTANG - BODY TYPE 76 - UNDERBODY

COPYRIGHT © 1975 — FORD MOTOR COMPANY — DEARBORN, MICHIGAN

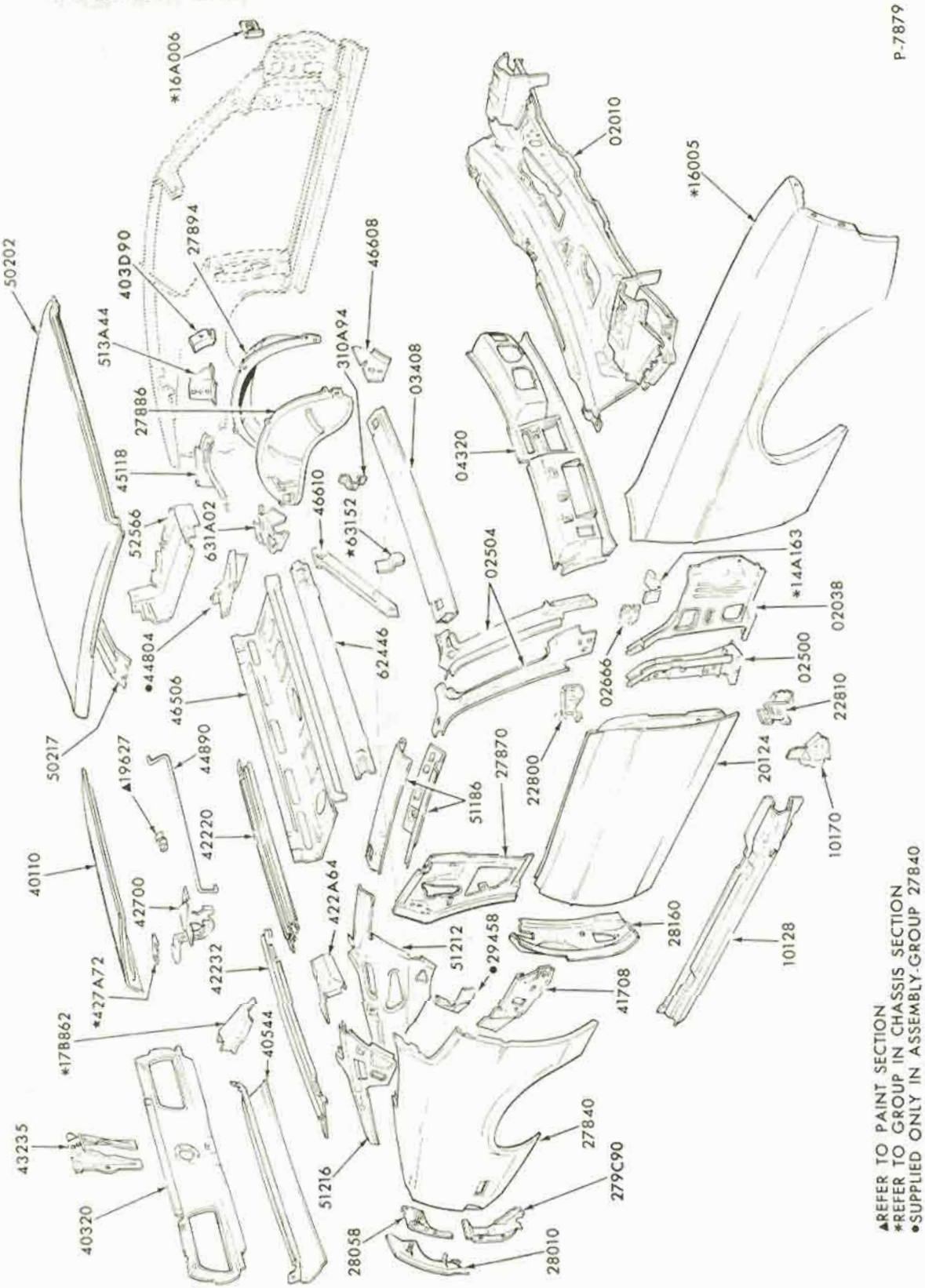

1971/72 MUSTANG - BODY TYPE 63 - UPPER BODY

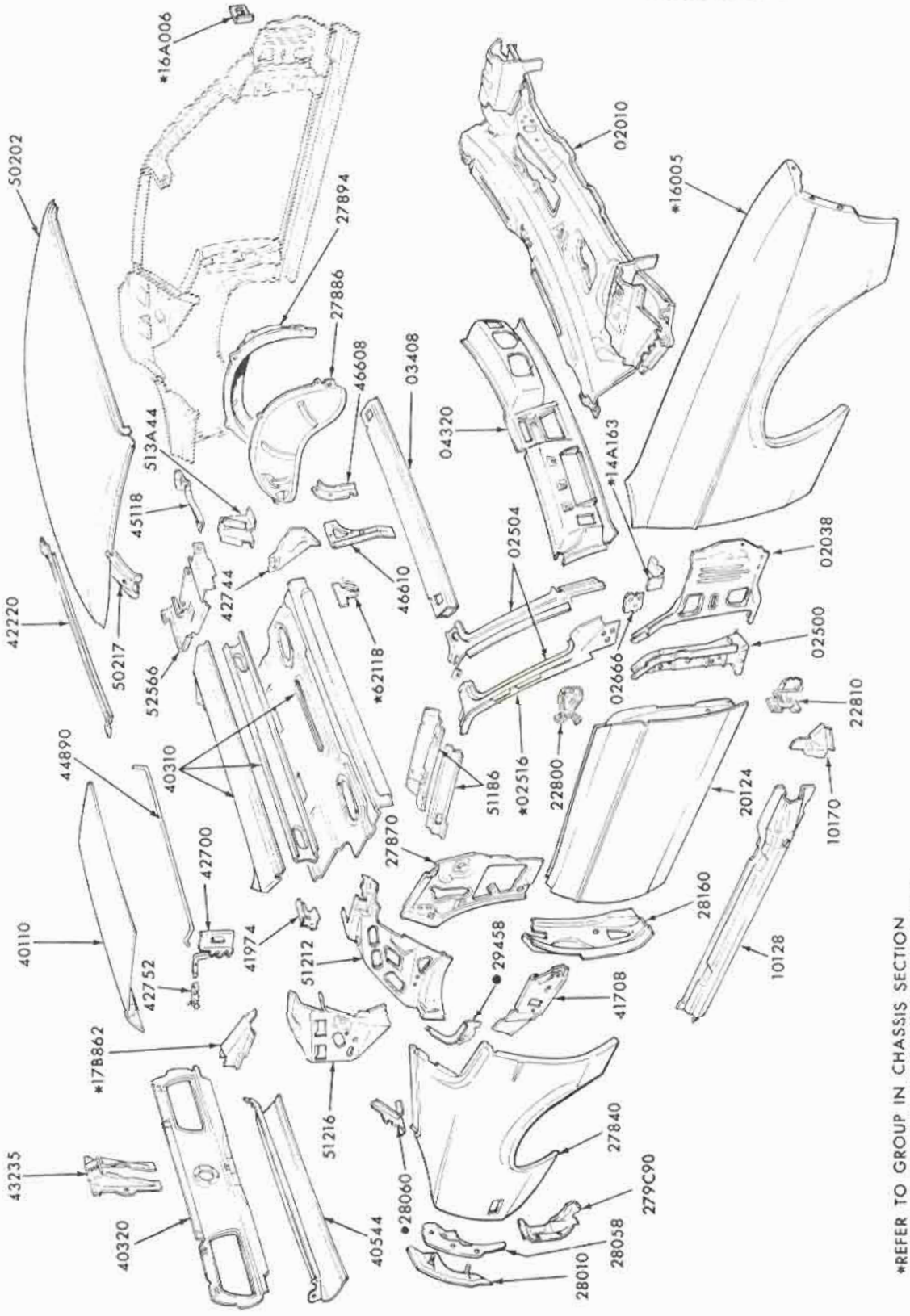

1971/72 MUSTANG - BODY TYPE 65 - UPPER BODY

COPYRIGHT © 1975 — FORD MOTOR COMPANY — DEARBORN, MICHIGAN

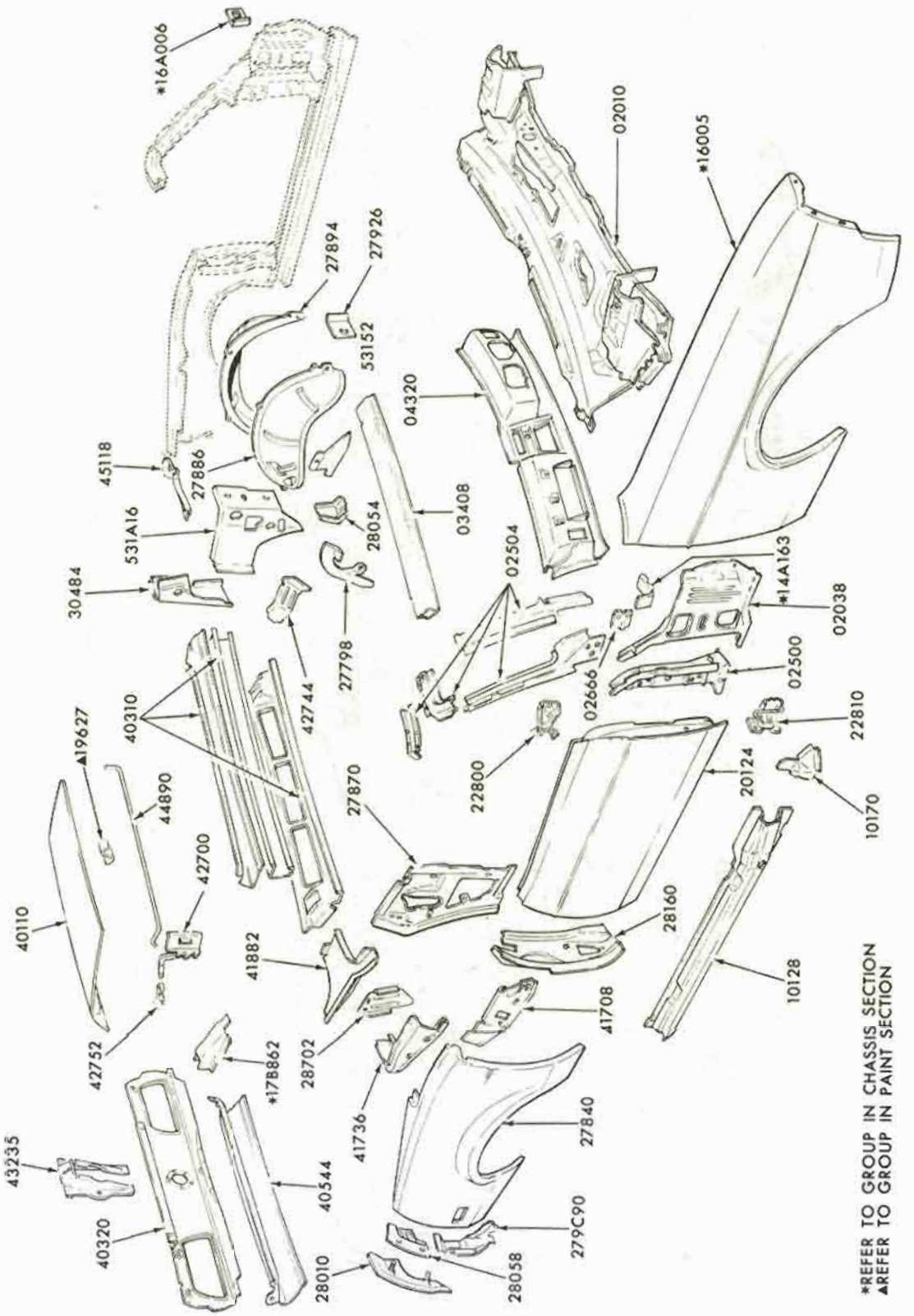

1971/72 MUSTANG - BODY TYPE 76 - UPPER BODY

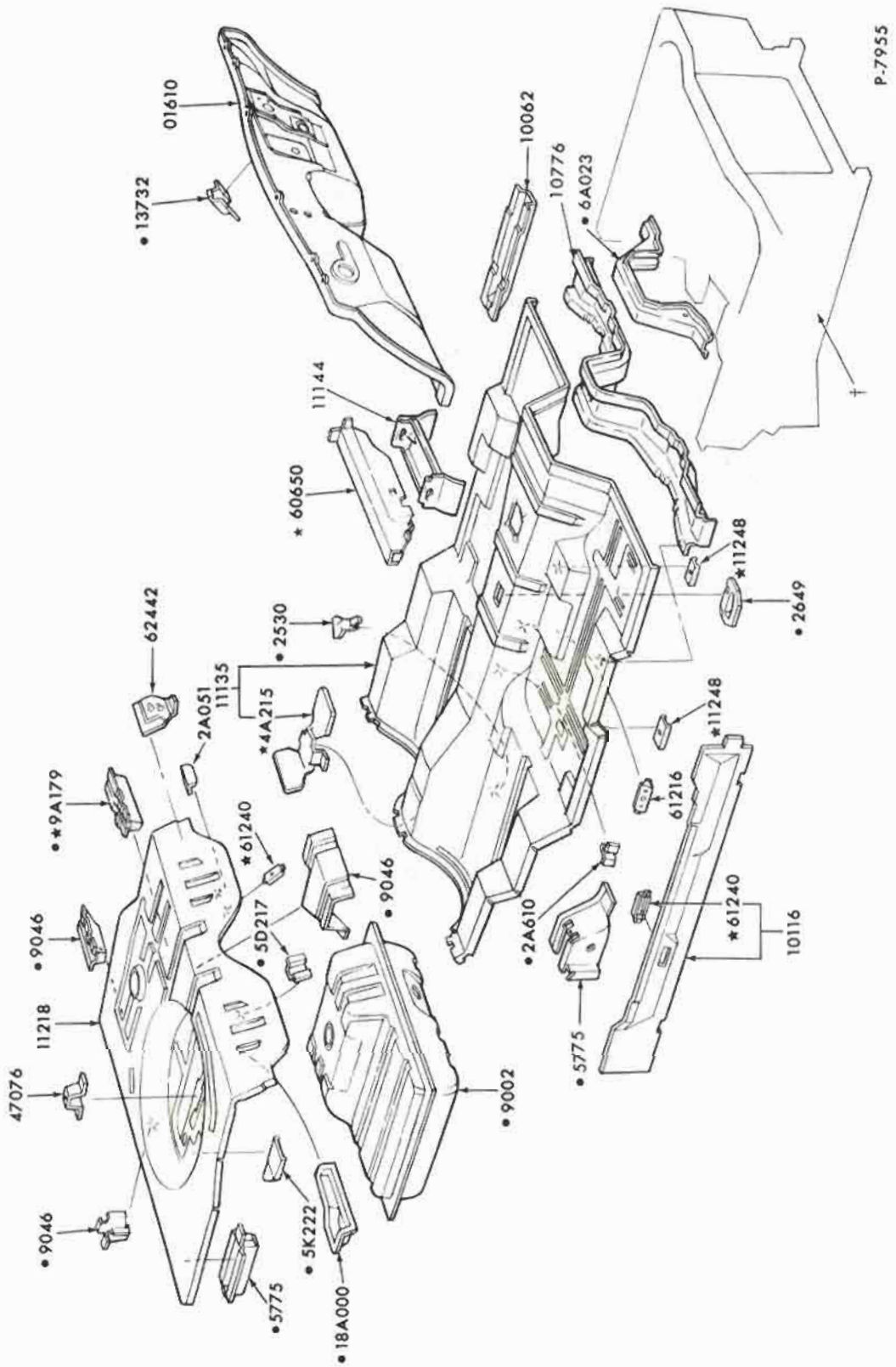

• REFER TO CHASSIS SECTION
† REFER TO ILLUST. SECTION 160 FOR DETAILS

May, 1975 COPYRIGHT © 1975 — FORD MOTOR COMPANY — DEARBORN, MICHIGAN

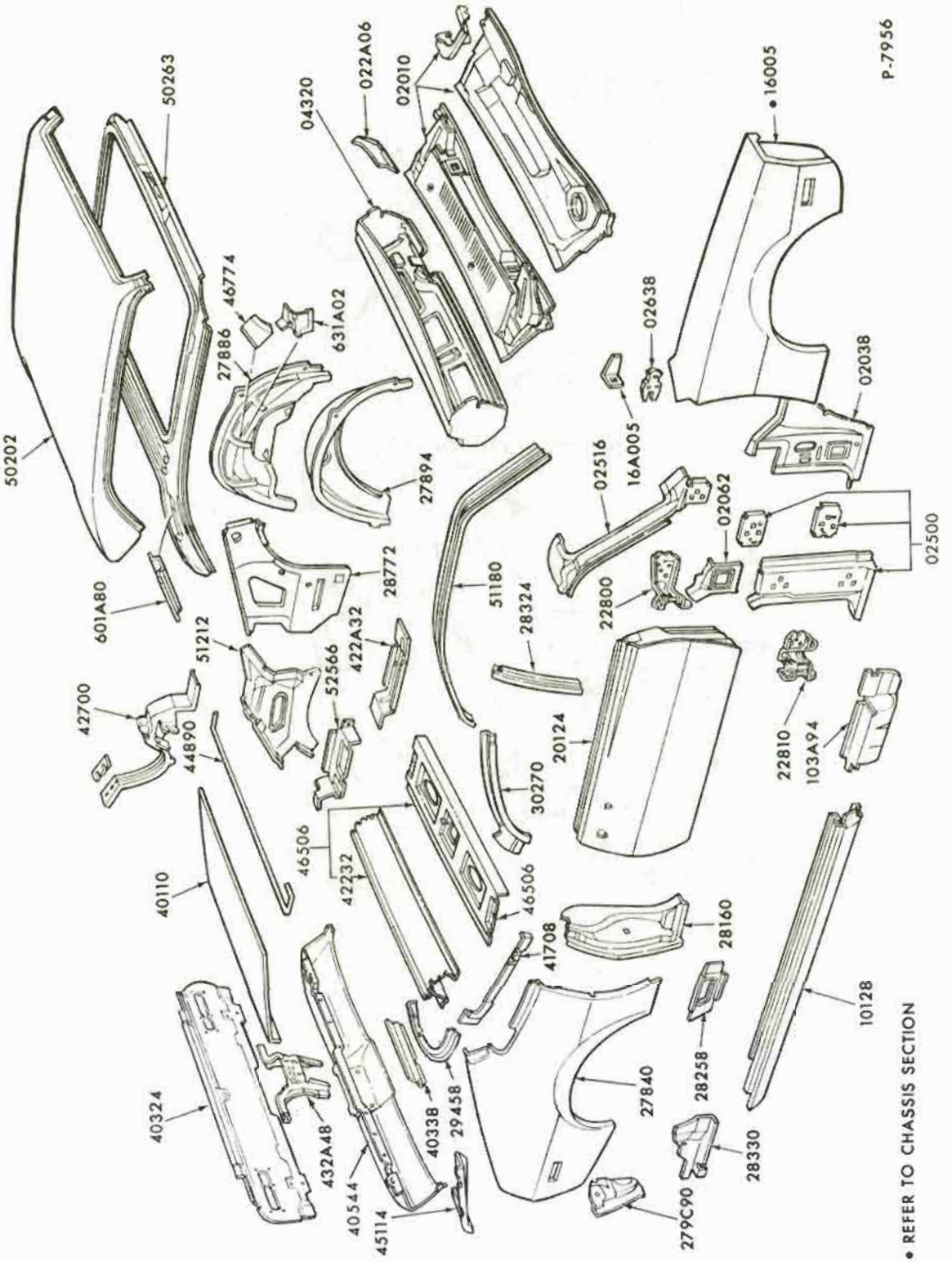
50263
50202
601A80
46774
27886
631A02
04320
022A06
02010
27894
28772
51212
52566
422A32
42700
44890
40110
46506
42232
46506
40324
432A48
40544
45114
40338
29458
51180
28324
30270
20124
41708
27840
279C90
28160
28258
28330
10128
16005
02638
16A005
02038
02516
02062
22800
02500
22810
103A94
P-7956
• REFER TO CHASSIS SECTION

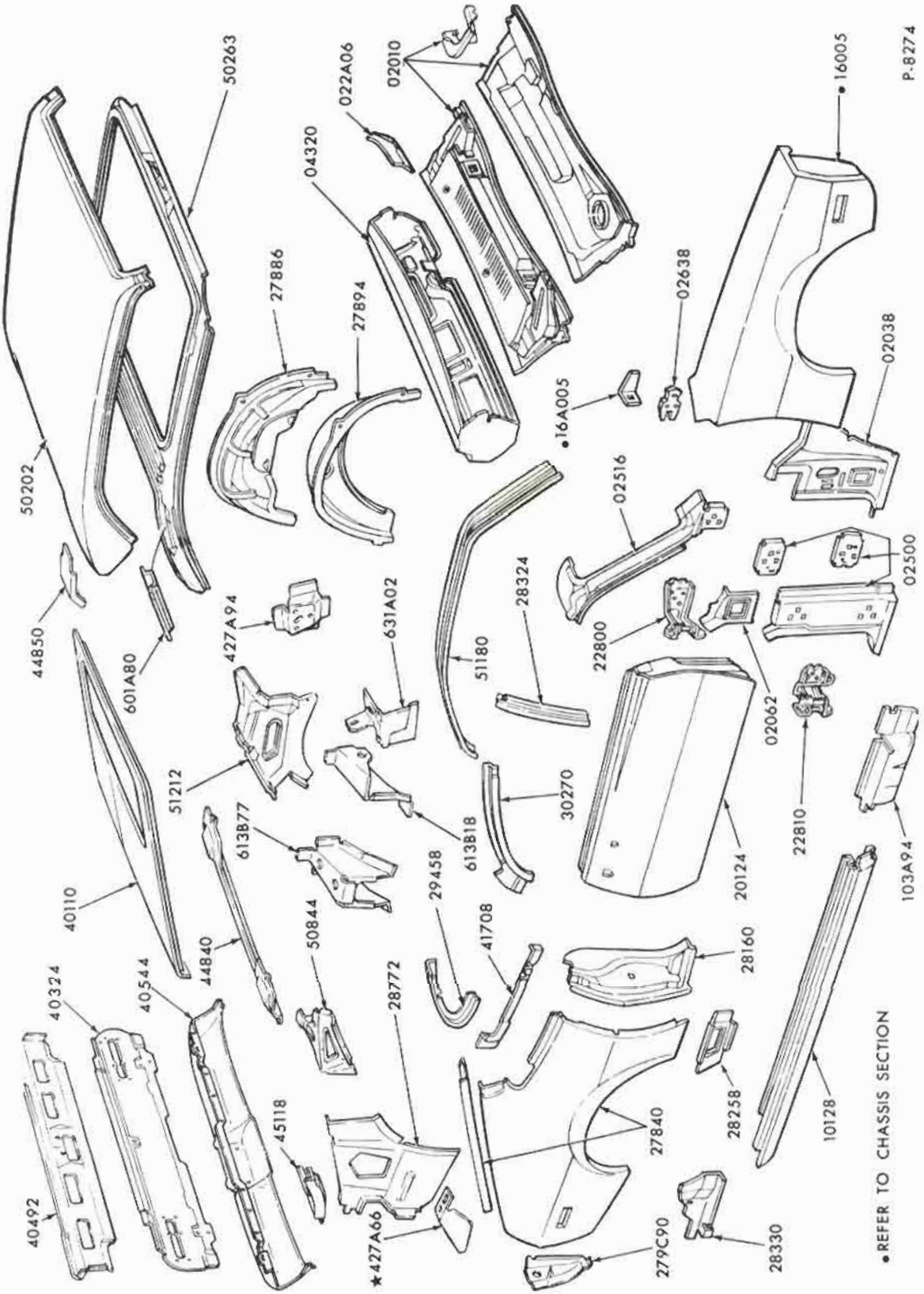

1971/72 PINTO - UPPER BODY - BODY TYPE 64

COPYRIGHT © 1975 — FORD MOTOR COMPANY — DEARBORN, MICHIGAN

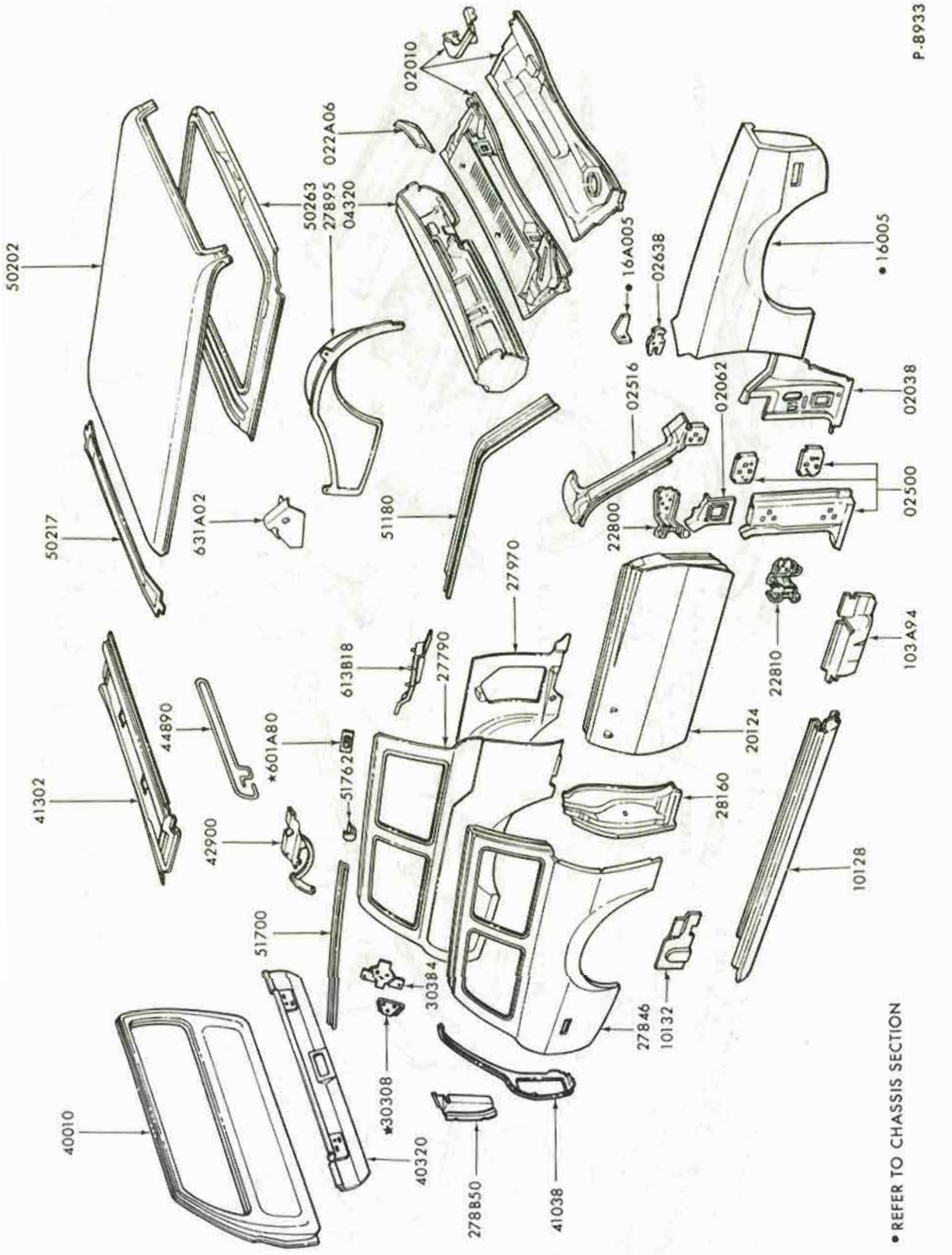
P-8933
02010
022A06
50263
27895
04320
50202
50217
631A02
51180
16A005
02638
16005
02516
02062
02038
02500
22800
27970
613B18
27790
44890
*601A80
51762
41302
42900
51700
30384
*30308
40320
40010
278850
41038
20124
22810
103A94
28160
10128
27846
10132
• REFER TO CHASSIS SECTION

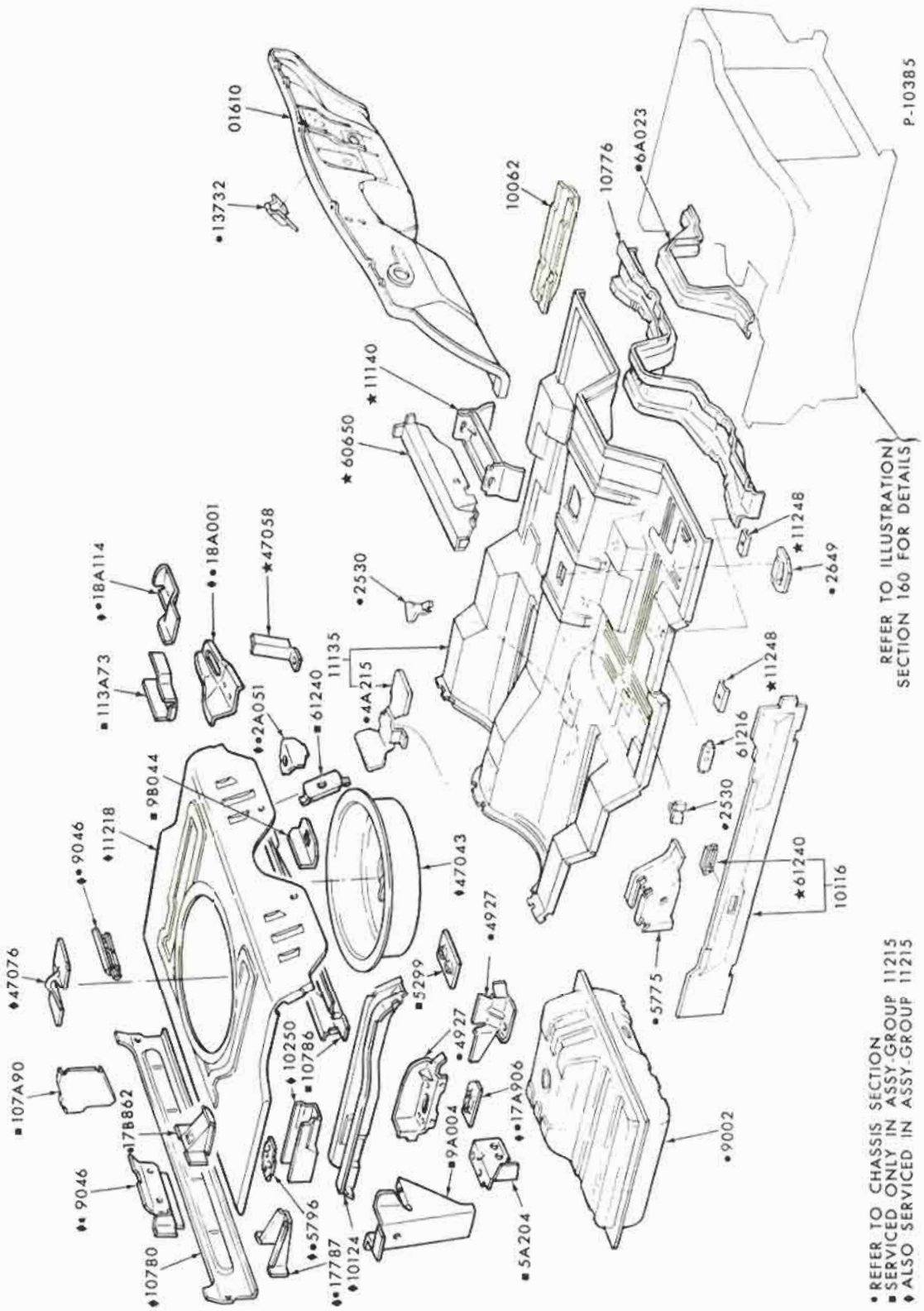

1972 PINTO - UNDERBODY - BODY TYPE 73

COPYRIGHT © 1975 — FORD MOTOR COMPANY — DEARBORN, MICHIGAN

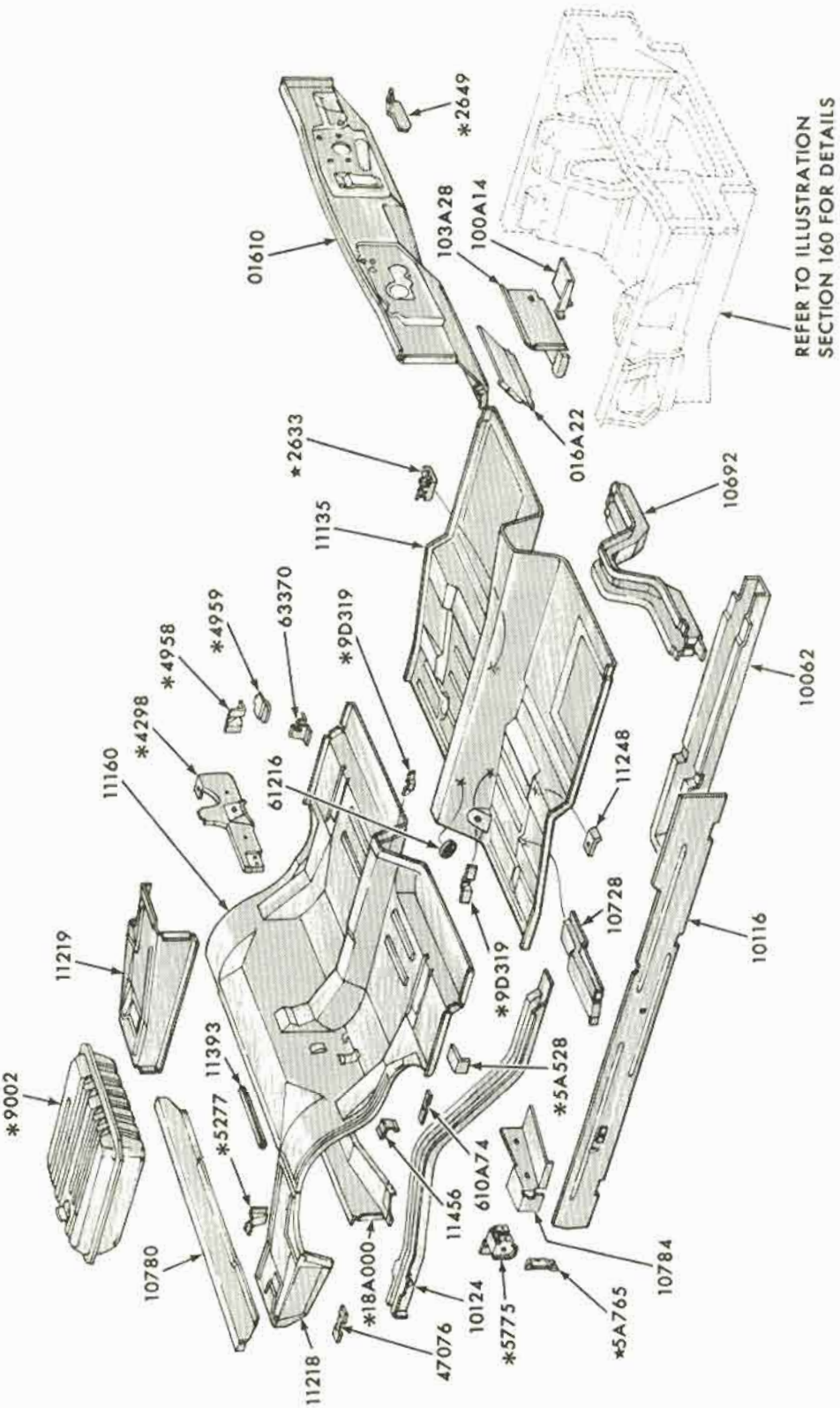

May, 1975 COPYRIGHT © 1975 — FORD MOTOR COMPANY — DEARBORN, MICHIGAN

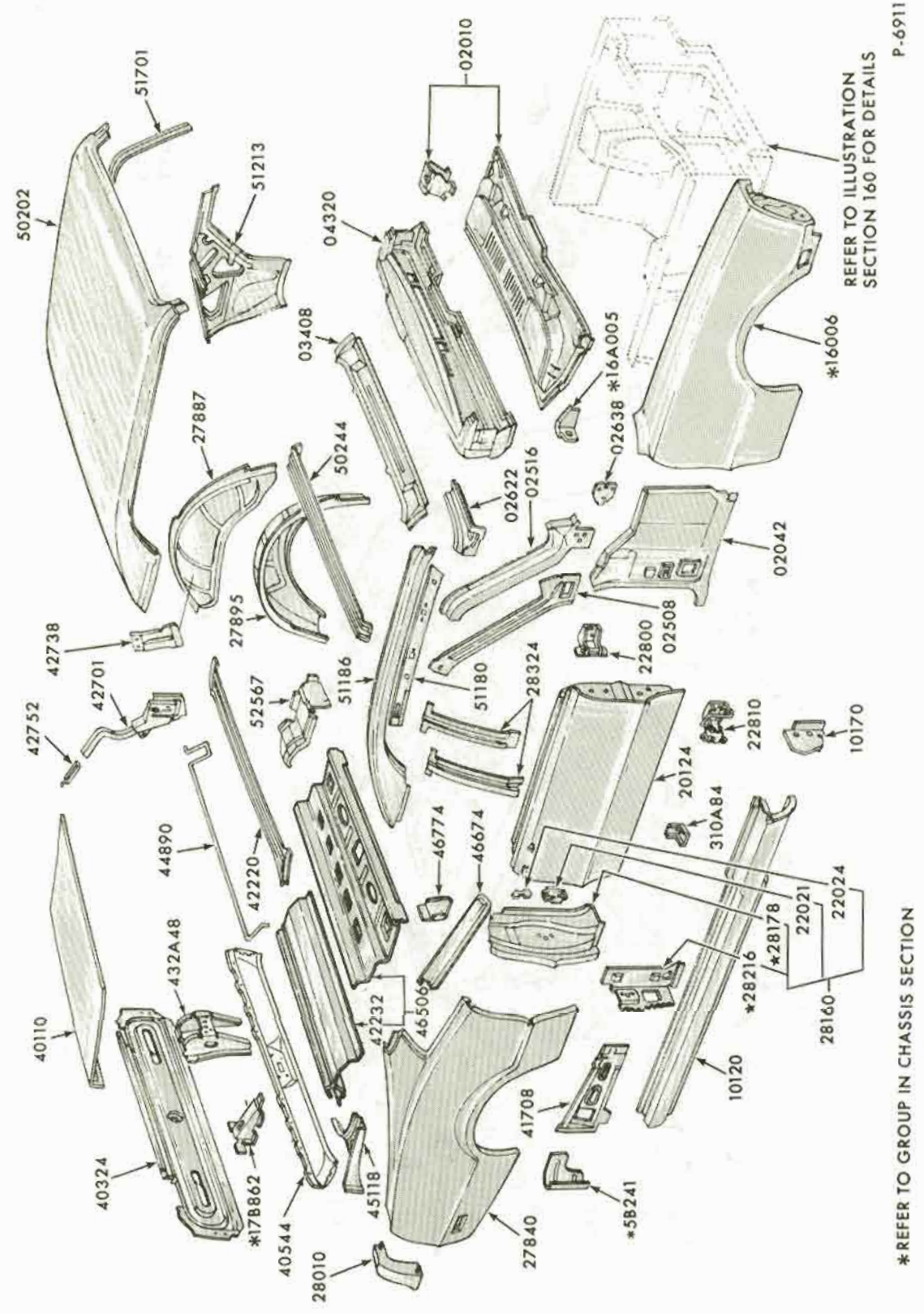
50202
51701
51213
02010
04320
03408
50244
27887
27895
42738
42701
42752
52567
51186
51180
28324
02622
02516
02638
*16A005
02508
22800
02042
*16006
REFER TO ILLUSTRATION SECTION 160 FOR DETAILS
P-6911
20124
310A84
22810
10170
44890
42220
46774
46674
40110
432A48
42232
46506
*28178
22021
22024
*28216
28160
10120
40324
*178862
40544
45118
41708
*5B241
27840
28010
*REFER TO GROUP IN CHASSIS SECTION

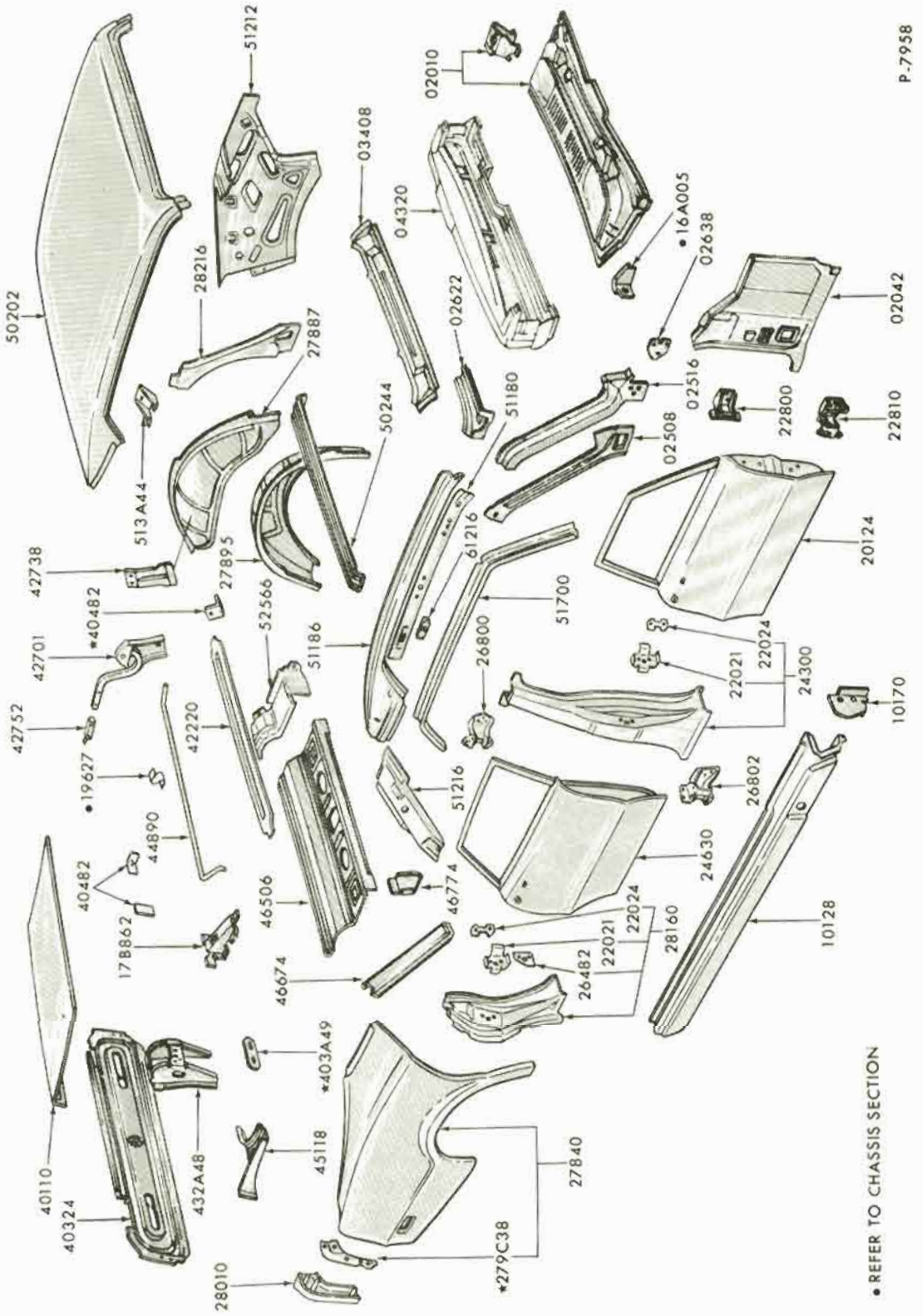

1971/72 MAVERICK - BODY TYPE 54 - UPPER BODY

COPYRIGHT © 1975 — FORD MOTOR COMPANY — DEARBORN, MICHIGAN

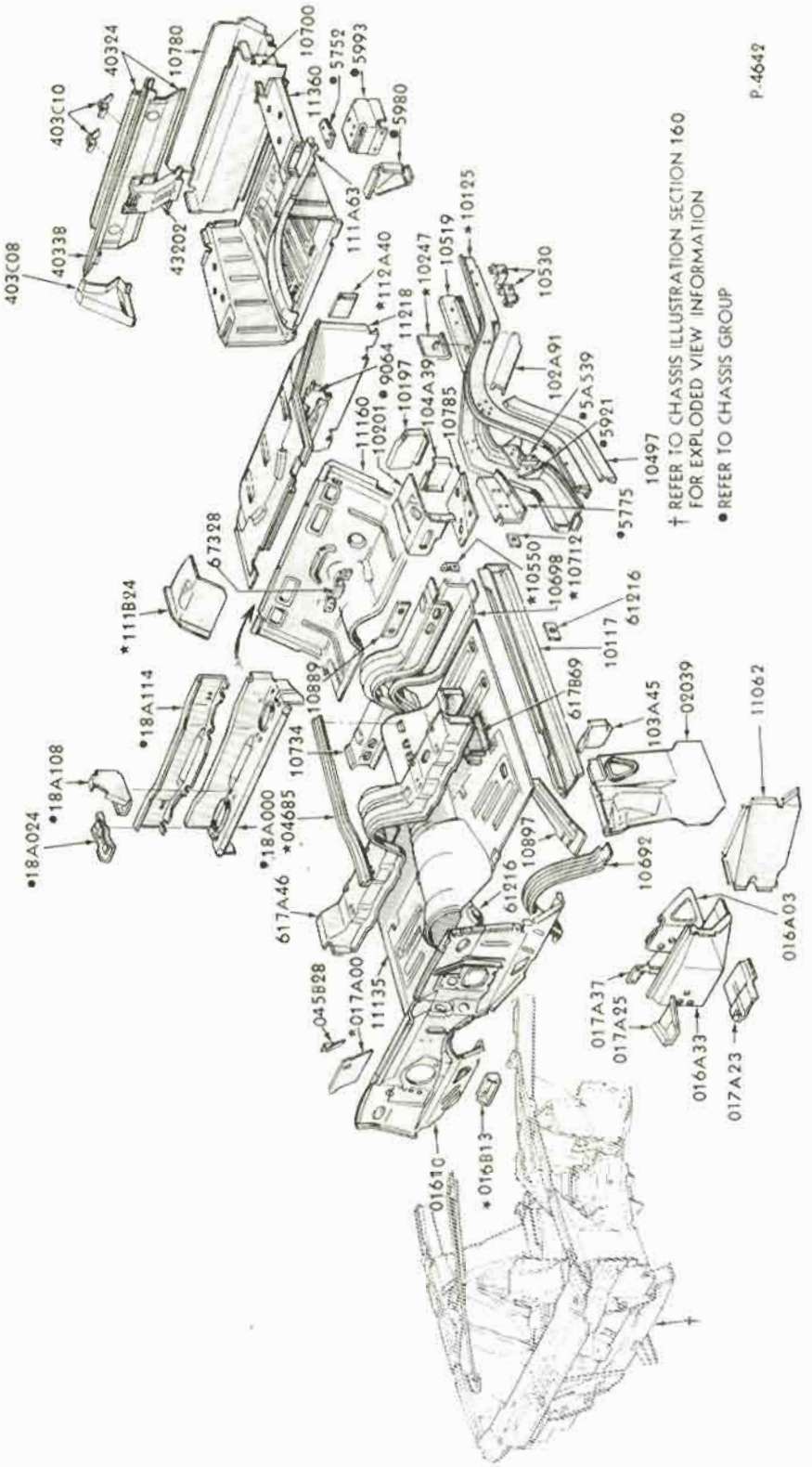

1965/66 THUNDERBIRD - BODY TYPE 63 - UNDER BODY

COPYRIGHT © 1975 — FORD MOTOR COMPANY — DEARBORN, MICHIGAN

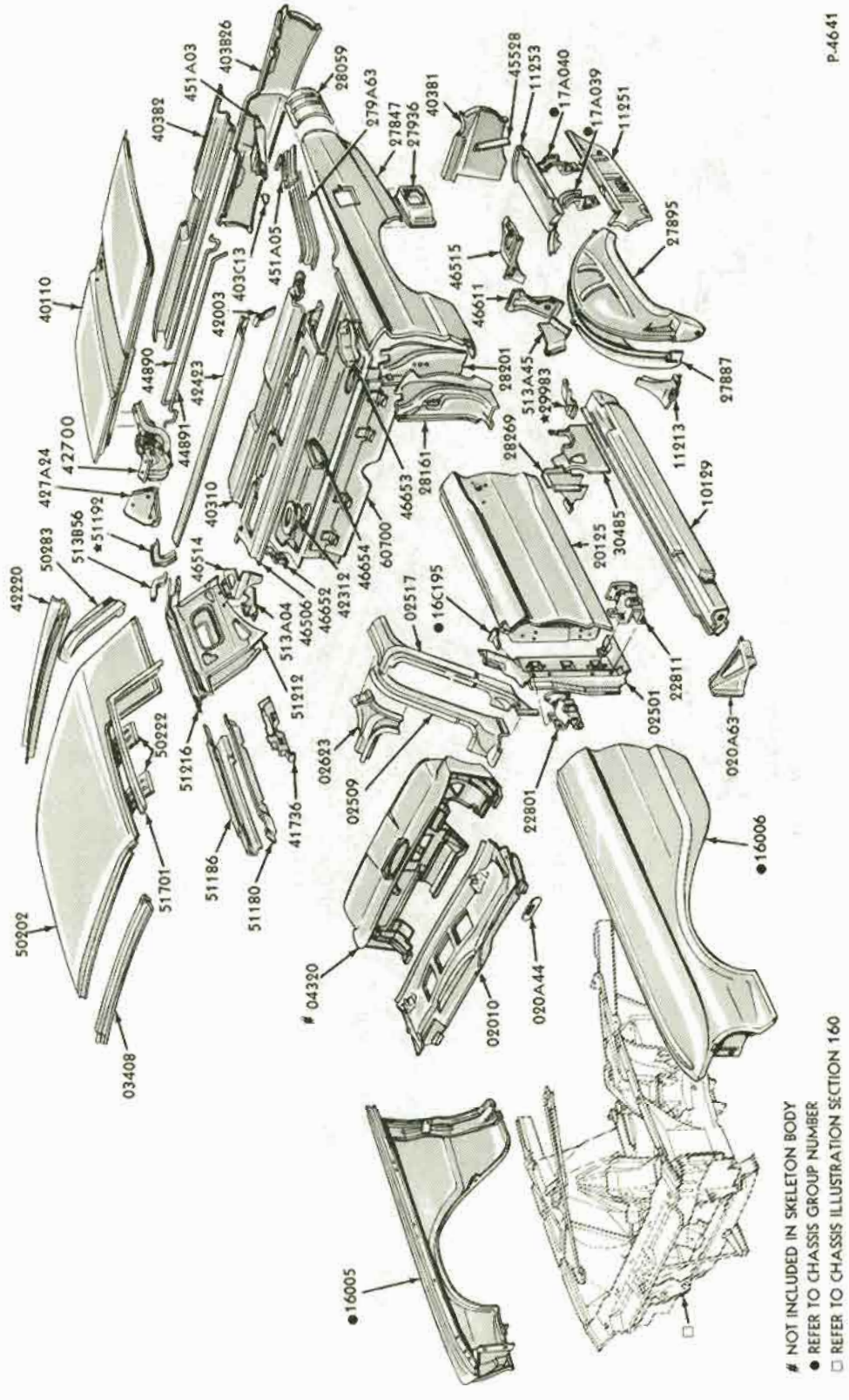

1965/66 THUNDERBIRD - BODY TYPE 63A, B - UPPER BODY

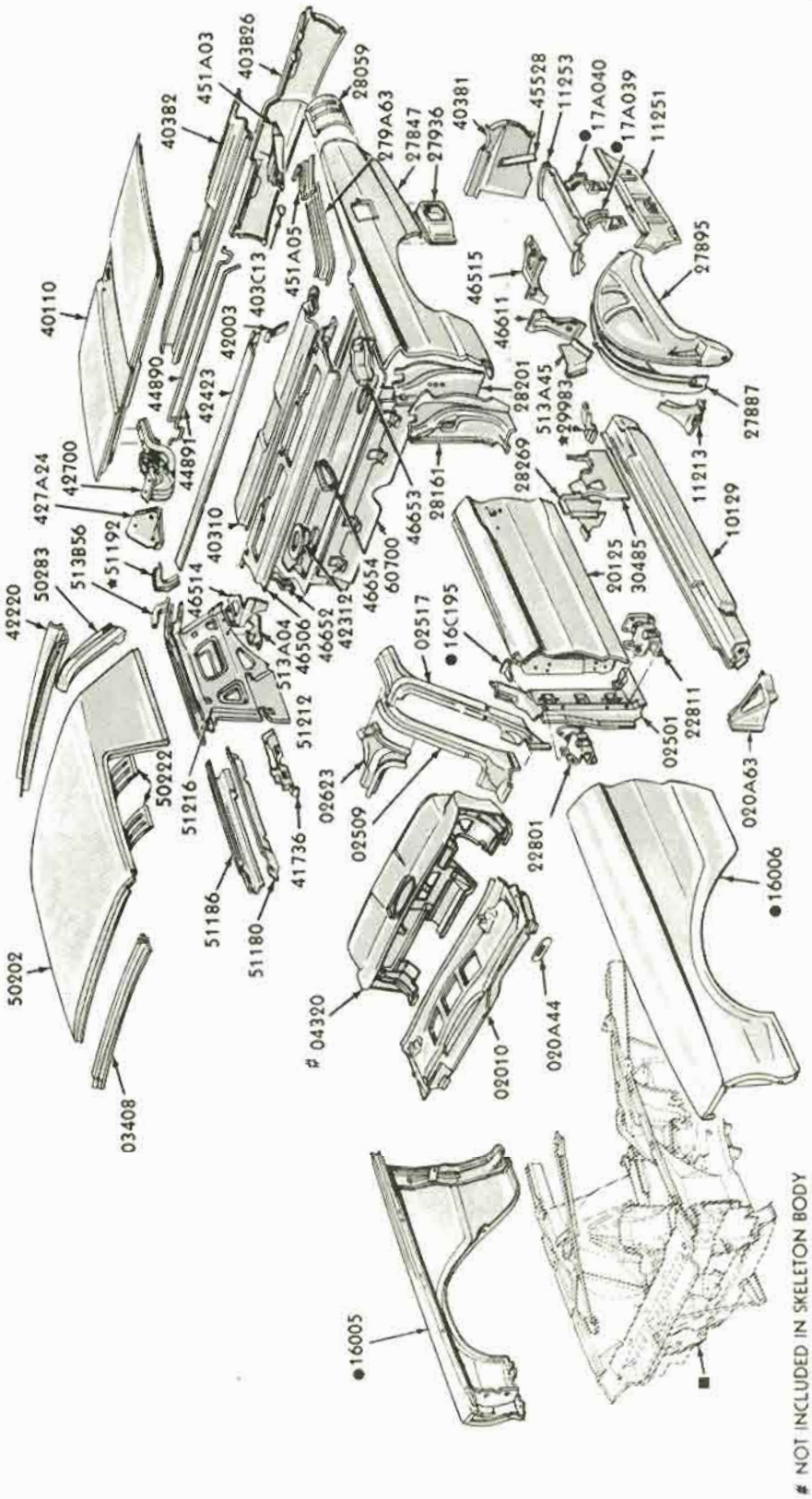

1966 THUNDERBIRD - BODY TYPES 63C, D - UPPER BODY

COPYRIGHT © 1975 — FORD MOTOR COMPANY — DEARBORN, MICHIGAN

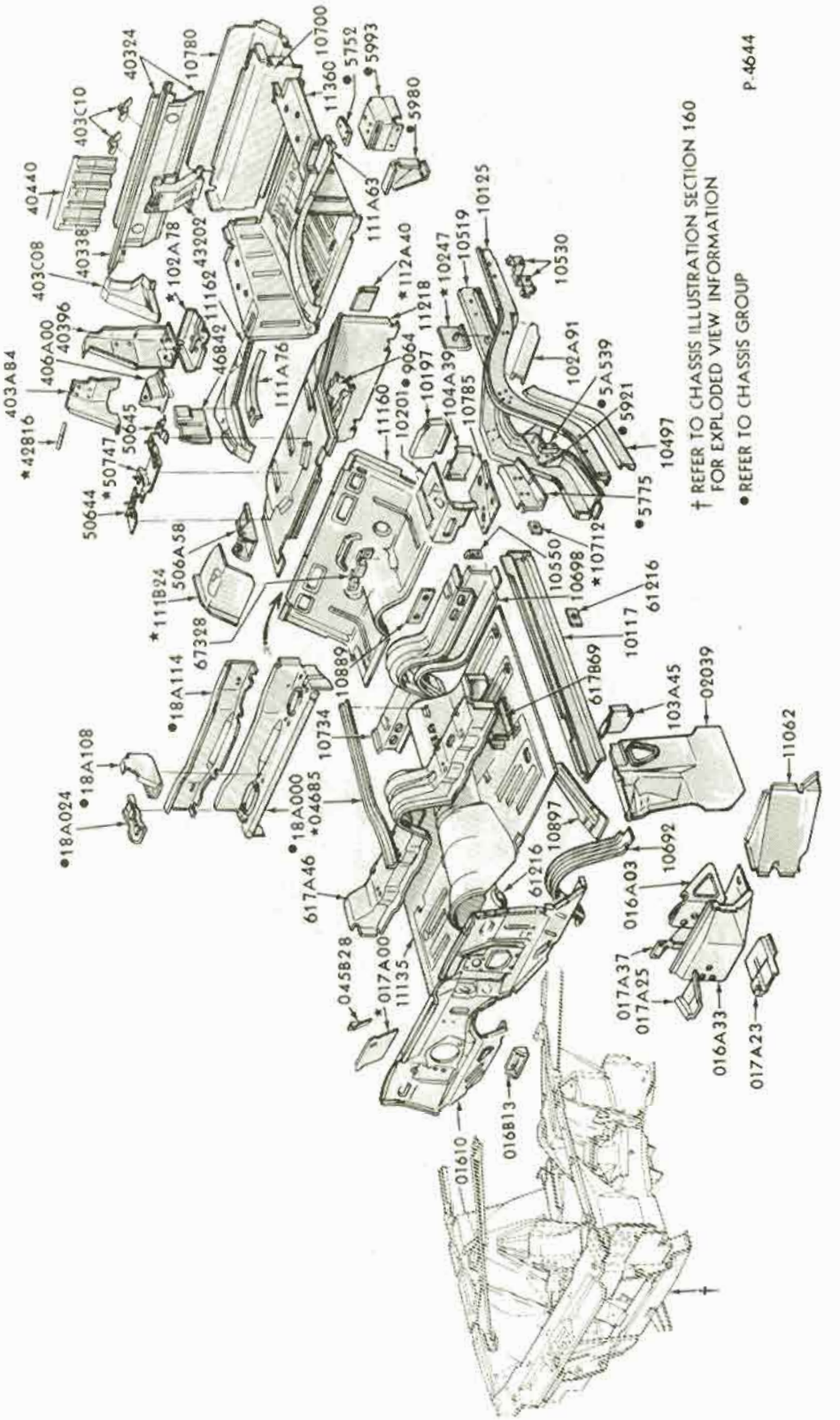

1965/66 THUNDERBIRD - BODY TYPE 76 - UNDER BODY

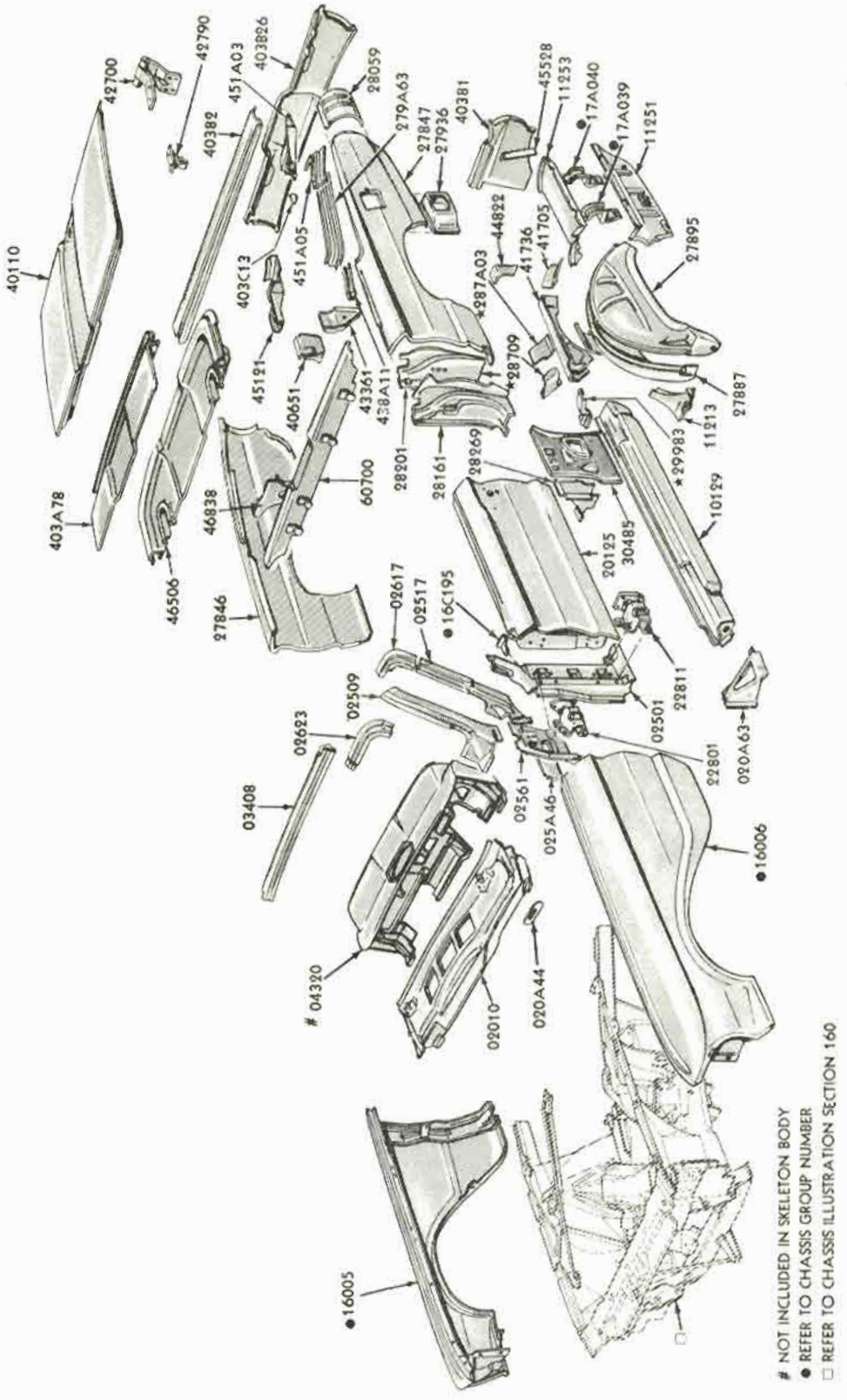

1965/66 THUNDERBIRD - BODY TYPE 76 - UPPER BODY

COPYRIGHT © 1975 — FORD MOTOR COMPANY —DEARBORN, MICHIGAN

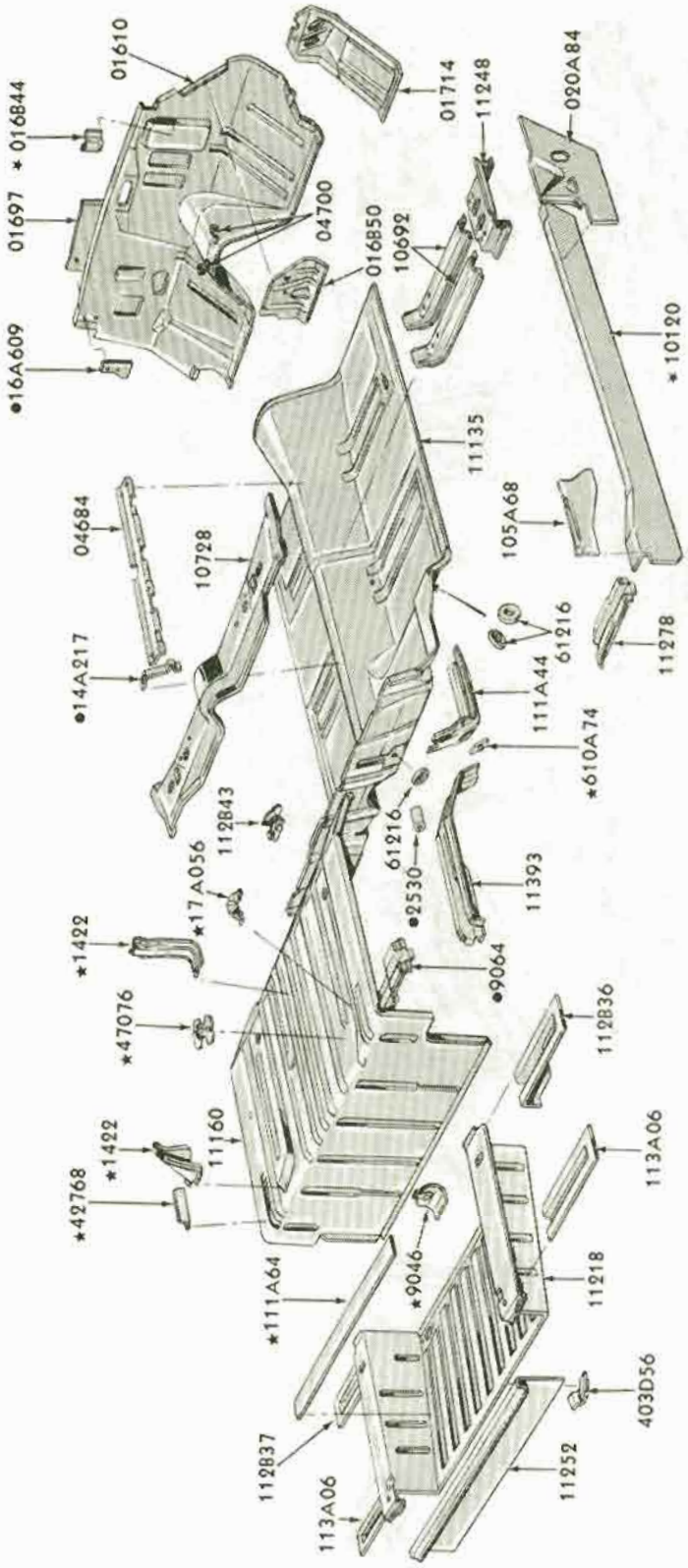

P-5354

•REFER TO GROUP IN CHASSIS SECTION

P-5356

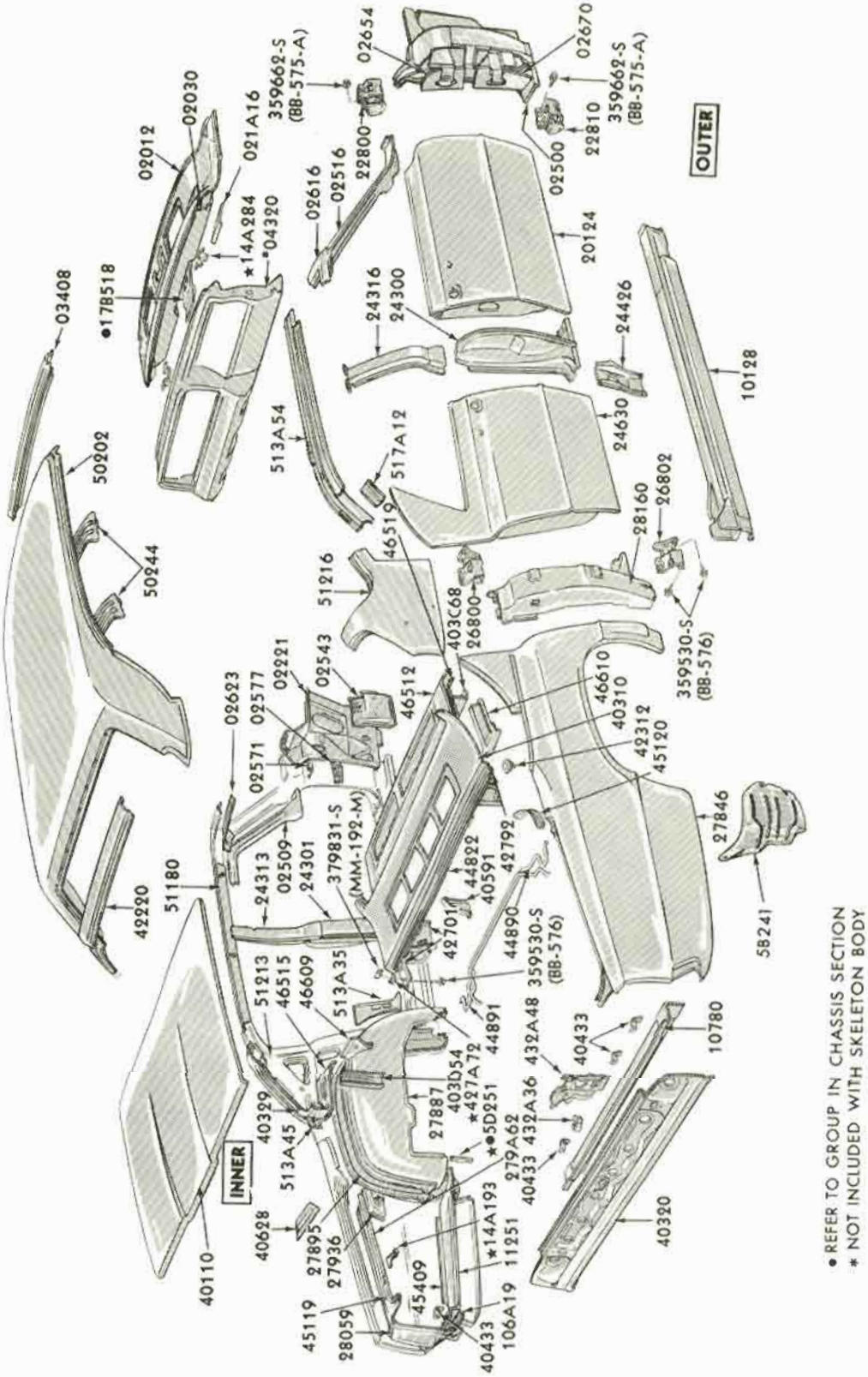

• REFER TO GROUP IN CHASSIS SECTION
* NOT INCLUDED WITH SKELETON BODY

May, 1975 COPYRIGHT © 1975 — FORD MOTOR COMPANY — DEARBORN, MICHIGAN

FINAL ISSUE

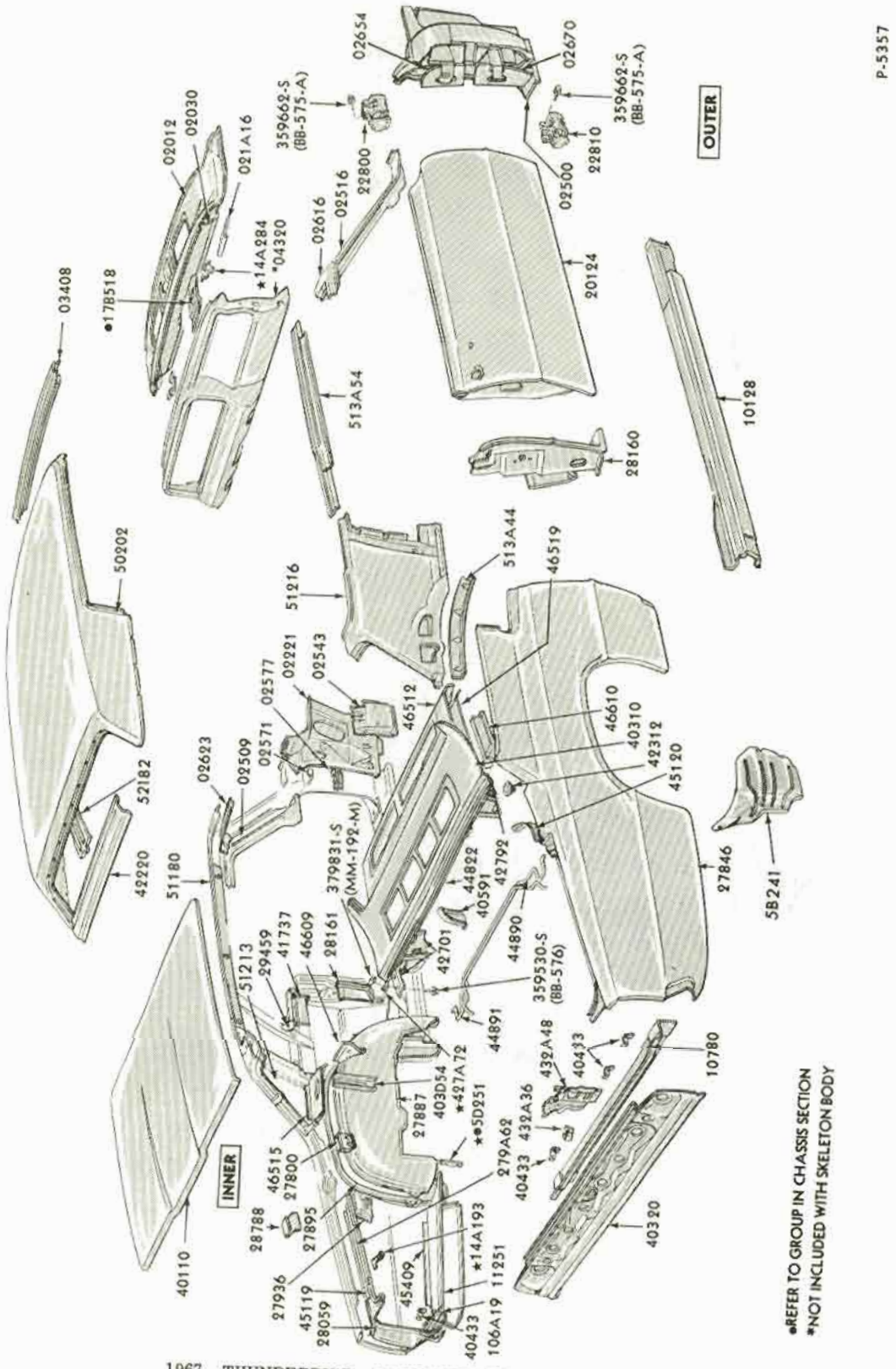

P-5357

•REFER TO GROUP IN CHASSIS SECTION
*NOT INCLUDED WITH SKELETON BODY

1967 THUNDERBIRD - BODY TYPE 65 - UPPER BODY

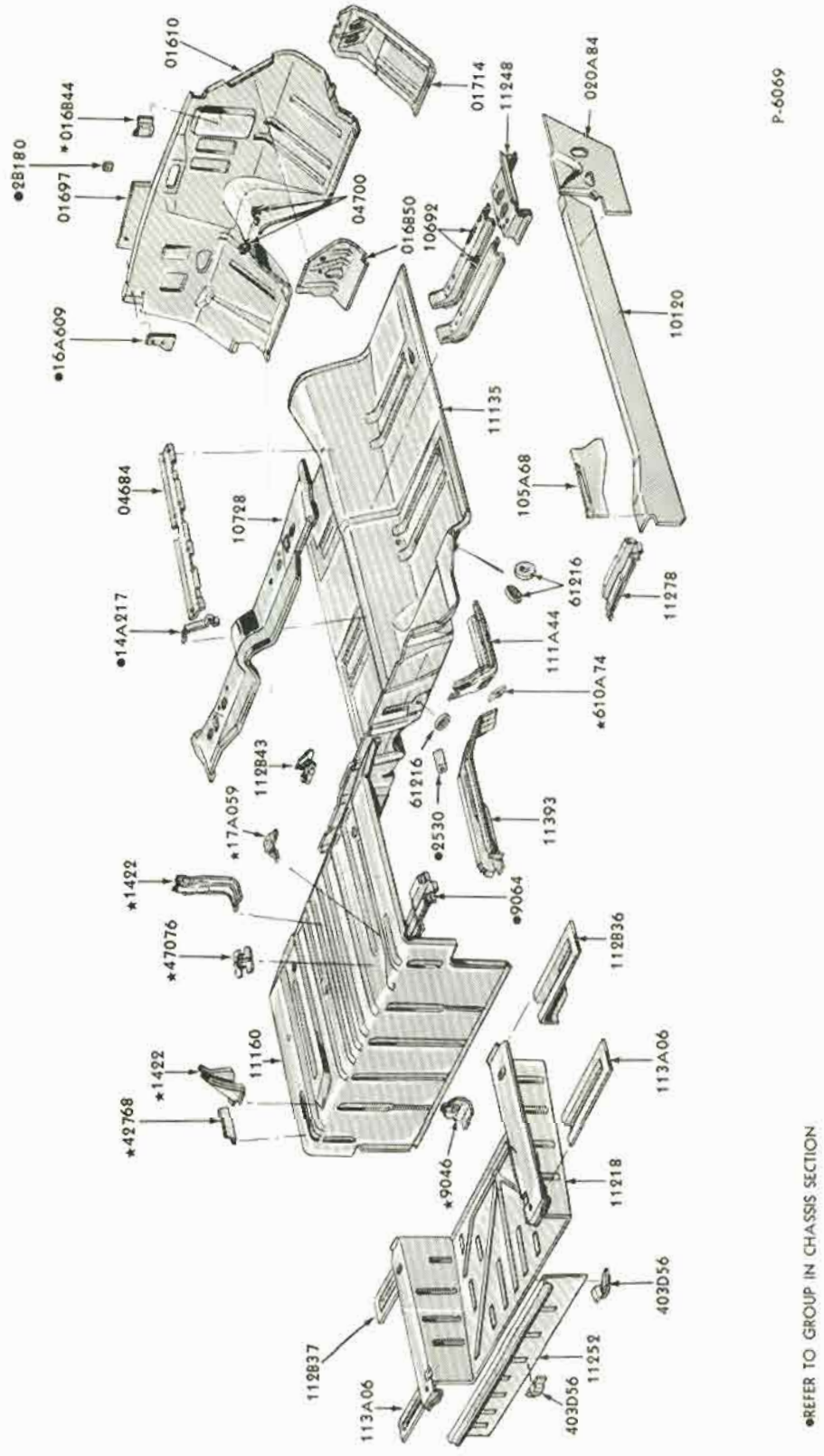

1968/69 THUNDERBIRD - UNDERBODY

COPYRIGHT © 1975 — FORD MOTOR COMPANY — DEARBORN, MICHIGAN

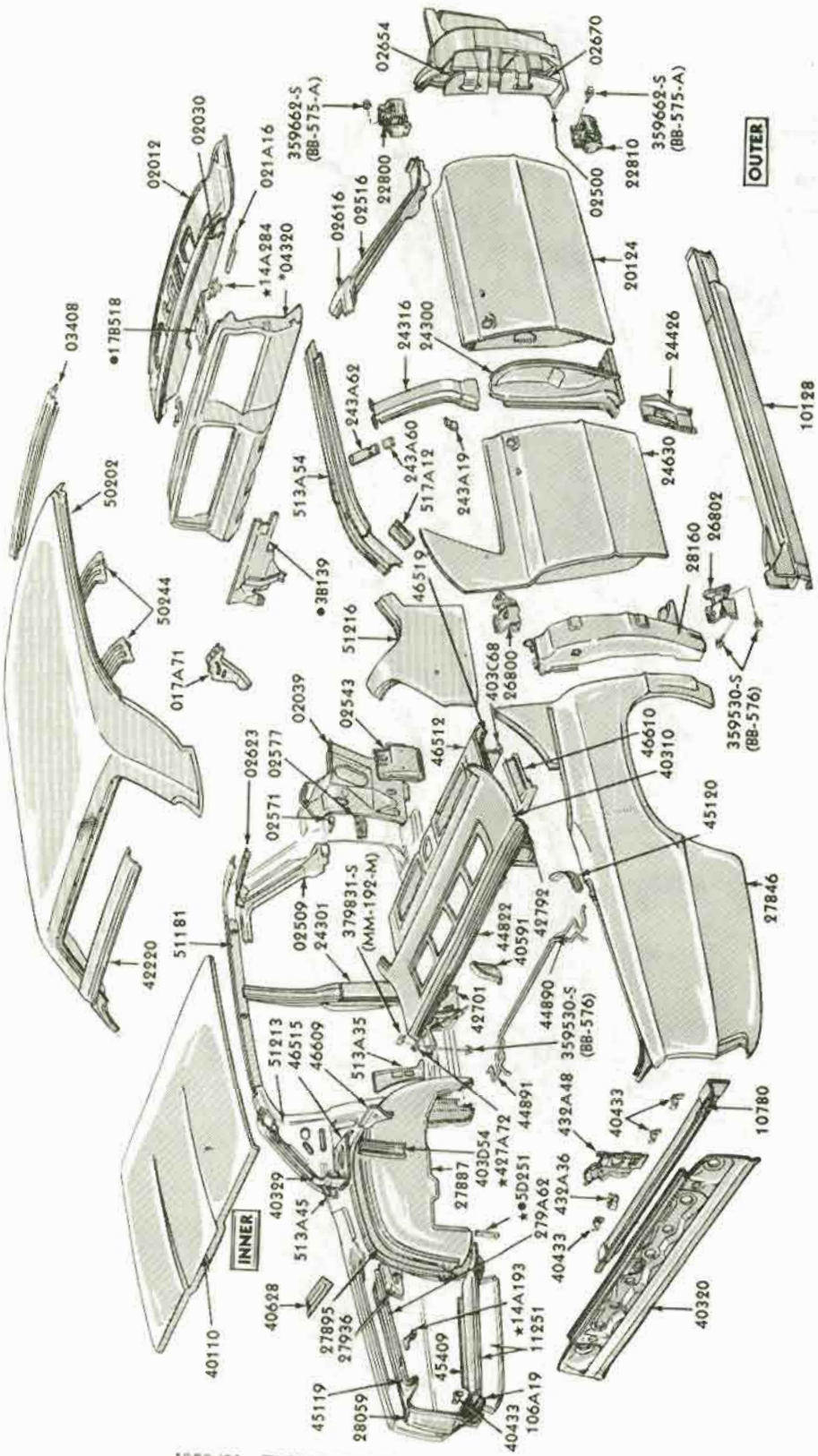

P-6068

•REFER TO GROUP IN CHASSIS SECTION
*NOT INCLUDED WITH SKELETON BODY

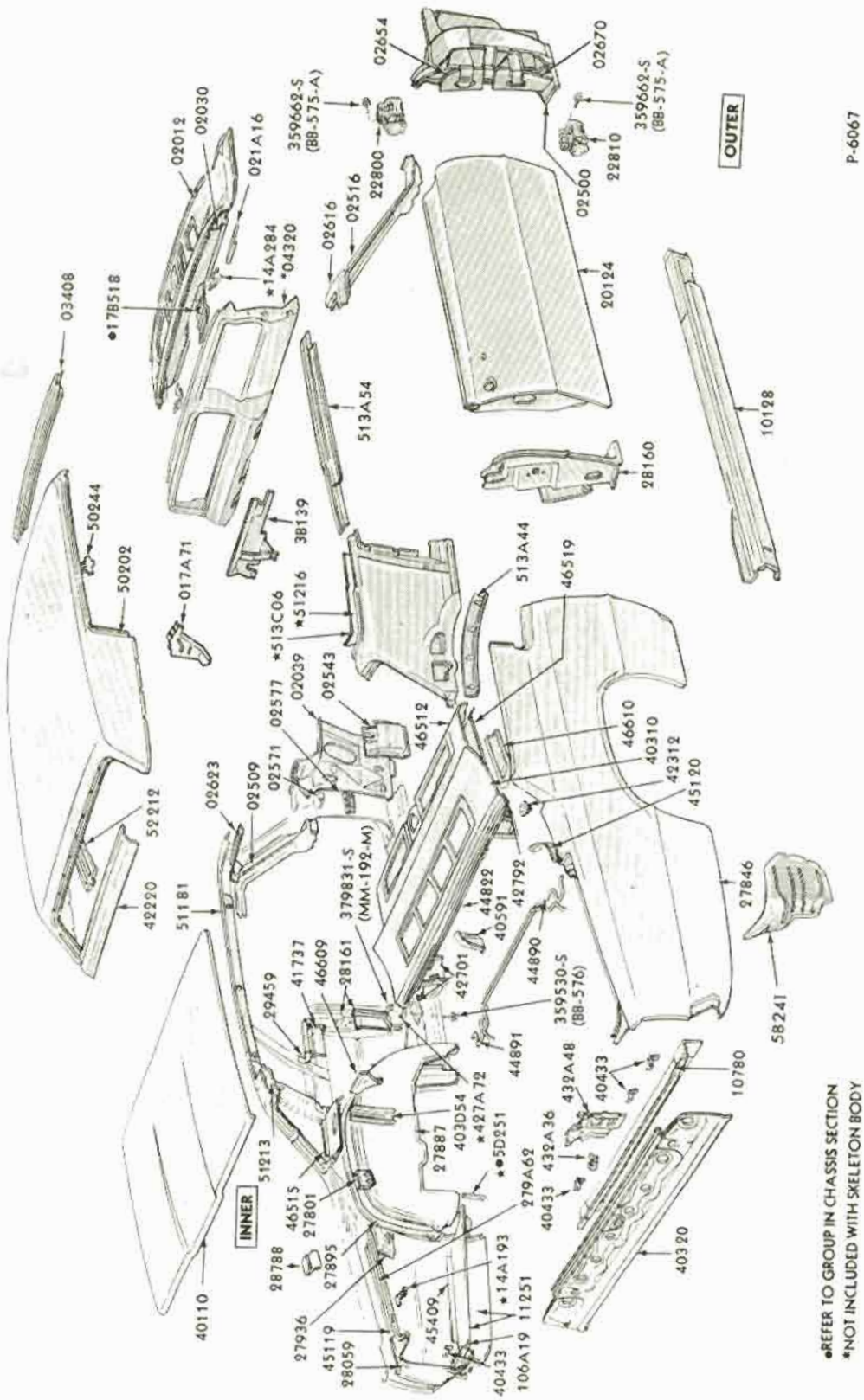

1968/69 THUNDERBIRD-BODY TYPE 65-UPPER BODY

COPYRIGHT © 1975 — FORD MOTOR COMPANY — DEARBORN, MICHIGAN

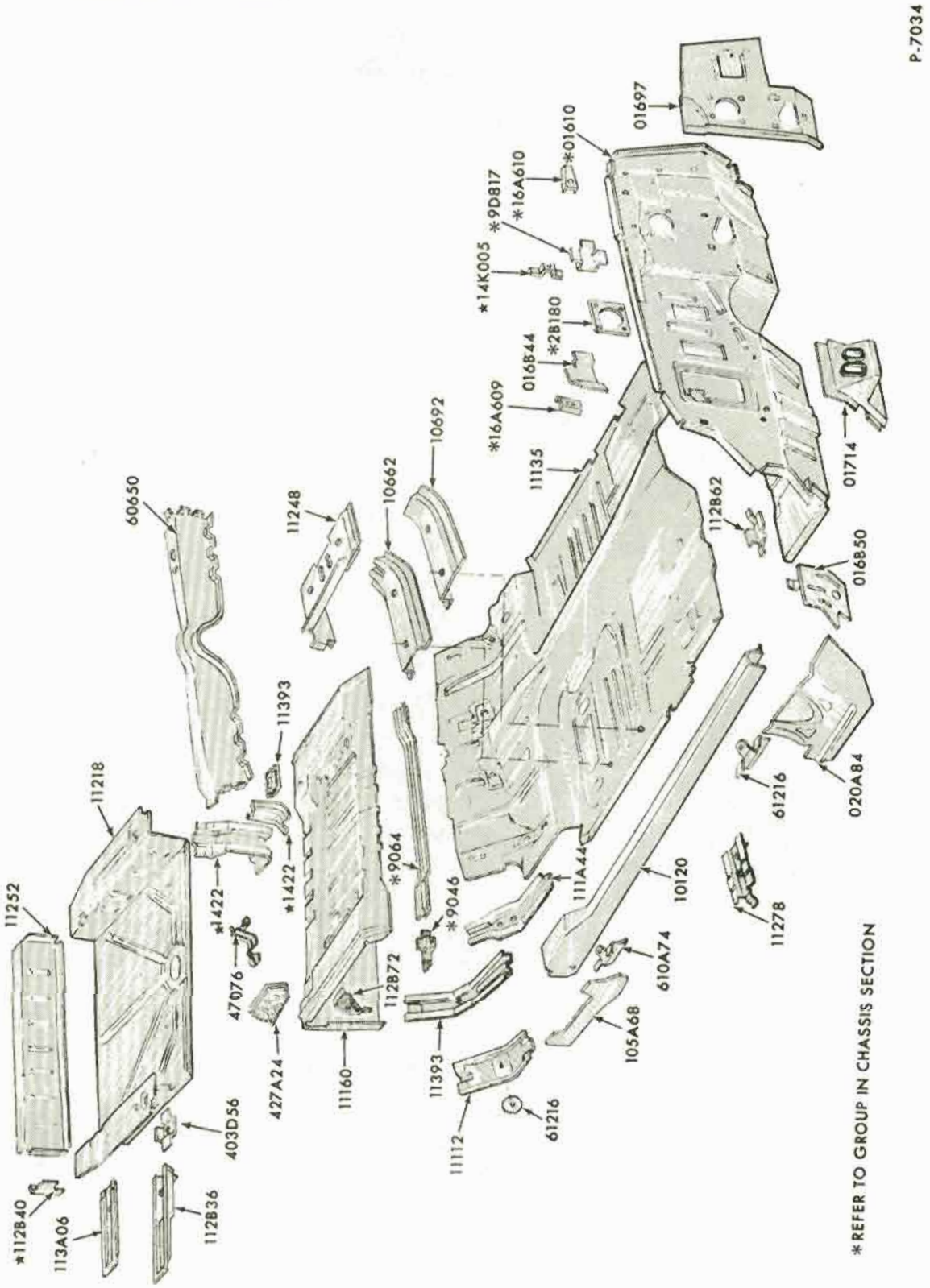
P-7034
01697
*01610
*16A610
*9D817
*14K005
*2B180
016B44
*16A609
10692
11135
01714
112B62
016B50
60650
11248
10662
11393
11218
11252
*1422
*1422
*9064
*9046
111A44
10120
61216
020A84
11278
47076
427A24
11160
112B72
11393
610A74
105A68
11112
61216
403D56
*112B40
113A06
112B36
*REFER TO GROUP IN CHASSIS SECTION

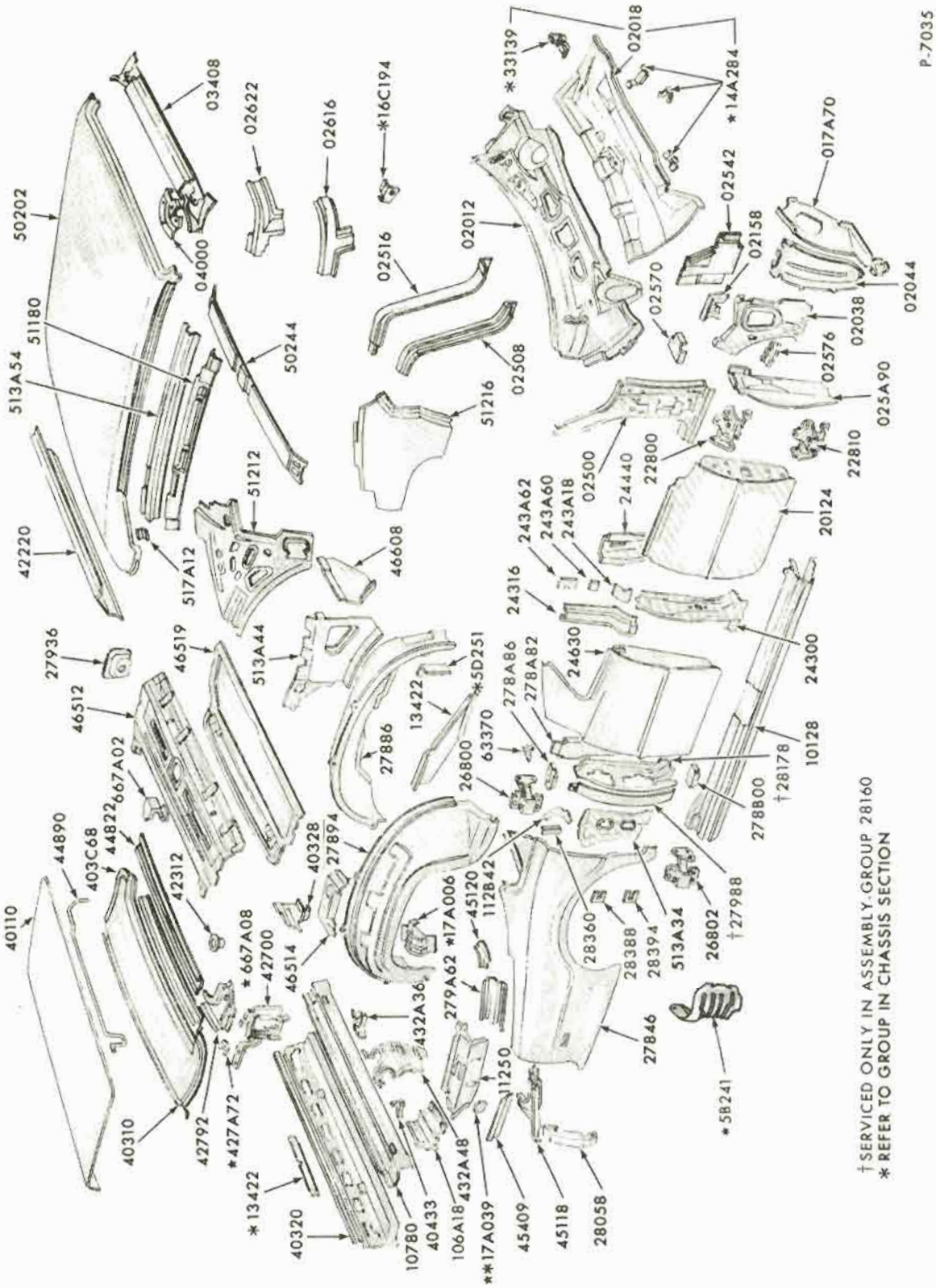

1970/71 THUNDERBIRD - BODY TYPE 57 - UPPER BODY

COPYRIGHT © 1975 — FORD MOTOR COMPANY — DEARBORN, MICHIGAN

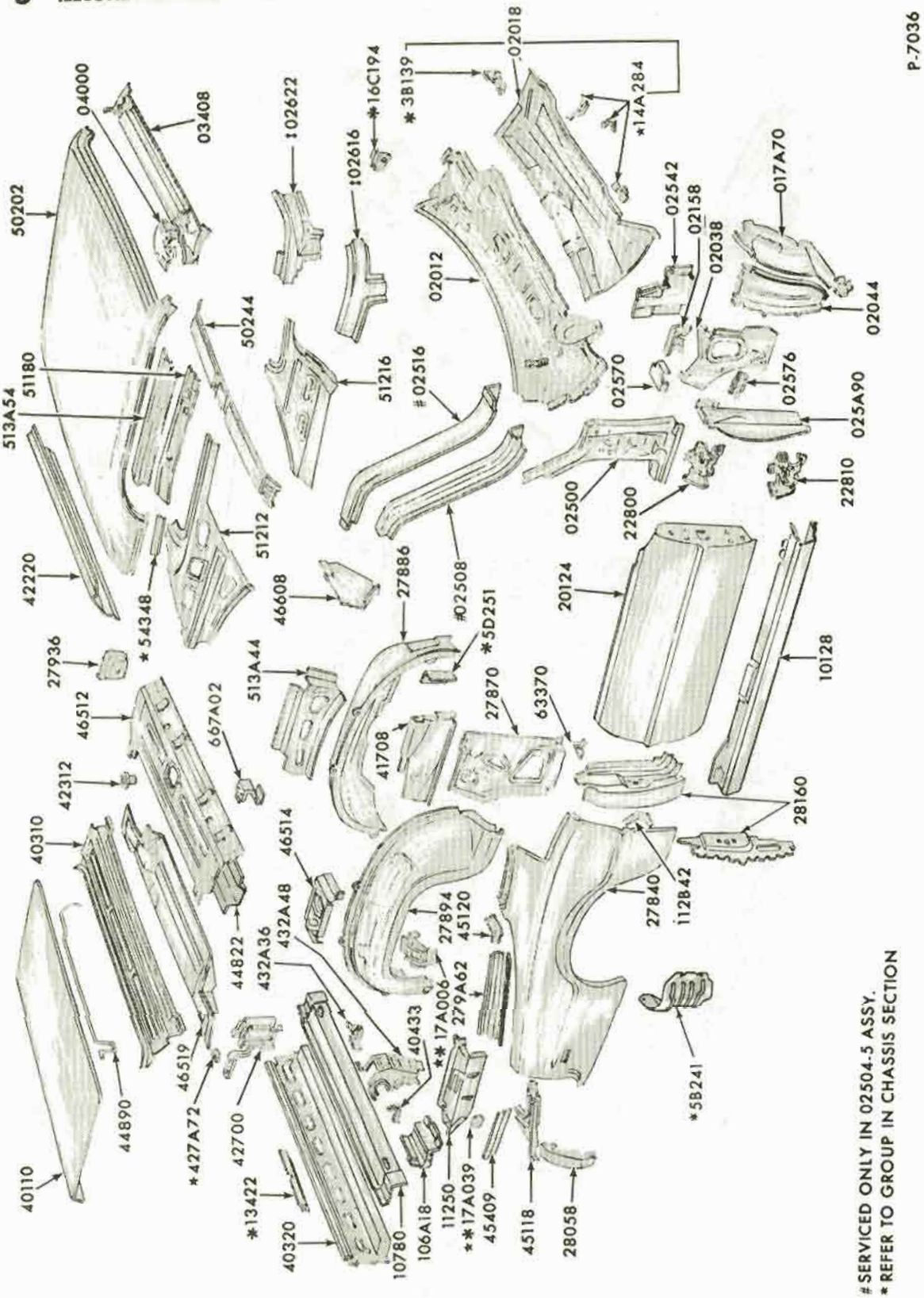
P-7036
50202
04000
03408
#02622
#02616
*16C194
*3B139
02018
*14A284
02542
02158
02038
017A70
02044
02012
50244
51216
#02516
02570
02576
025A90
513A54
51180
51212
42220
*54348
46608
27886
#02508
*5D251
02500
22800
22810
20124
10128
27936
46512
513A44
667A02
42312
41708
27870
63370
28160
40310
46514
432A48
44822
432A36
27894
45120
279A62
*17A006
40433
**17A039
11250
45409
45118
28058
106A18
10780
40320
*13422
42700
*427A72
46519
44890
40110
27840
112B42
*5B241
SERVICED ONLY IN 02504.5 ASSY.
* REFER TO GROUP IN CHASSIS SECTION

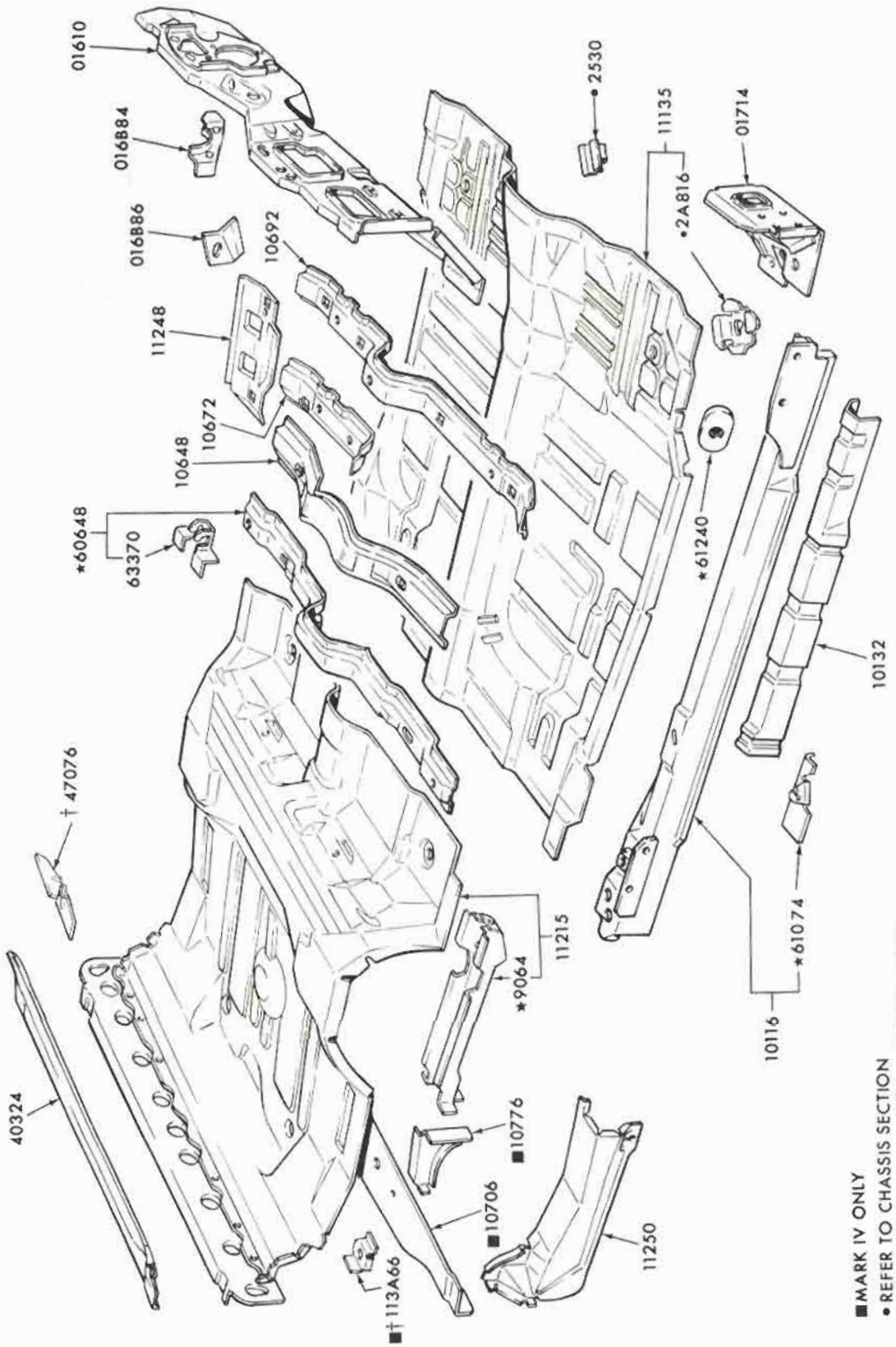

1972 THUNDERBIRD - UNDERBODY

COPYRIGHT © 1975 — FORD MOTOR COMPANY — DEARBORN, MICHIGAN

FORD CAR PARTS

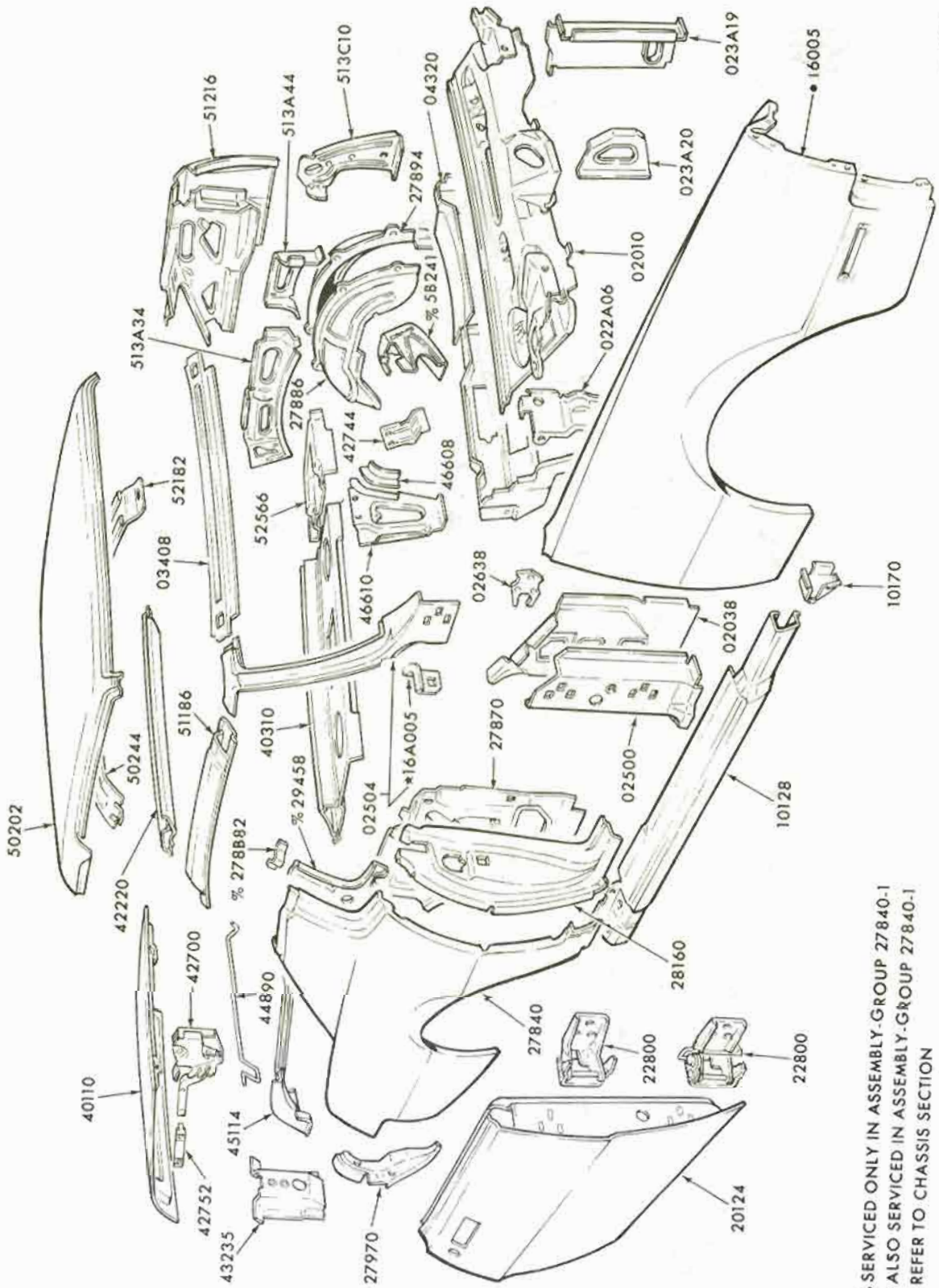

% SERVICED ONLY IN ASSEMBLY-GROUP 27840-1
† ALSO SERVICED IN ASSEMBLY-GROUP 27840-1
• REFER TO CHASSIS SECTION

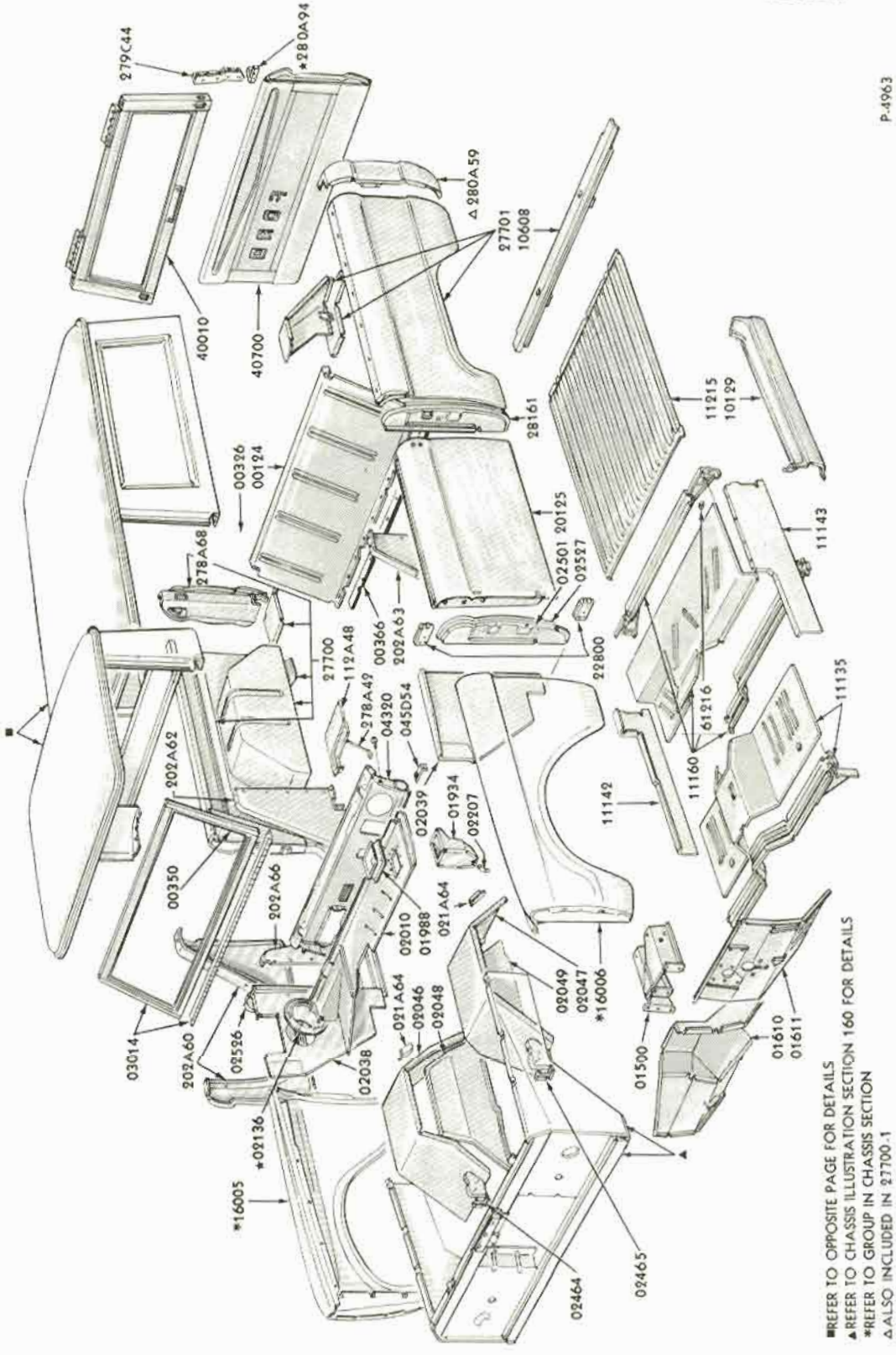

■REFER TO OPPOSITE PAGE FOR DETAILS
▲REFER TO CHASSIS ILLUSTRATION SECTION 160 FOR DETAILS
*REFER TO GROUP IN CHASSIS SECTION
△ALSO INCLUDED IN 27700.1

May, 1975 COPYRIGHT © 1975 — FORD MOTOR COMPANY — DEARBORN, MICHIGAN FINAL ISSUE

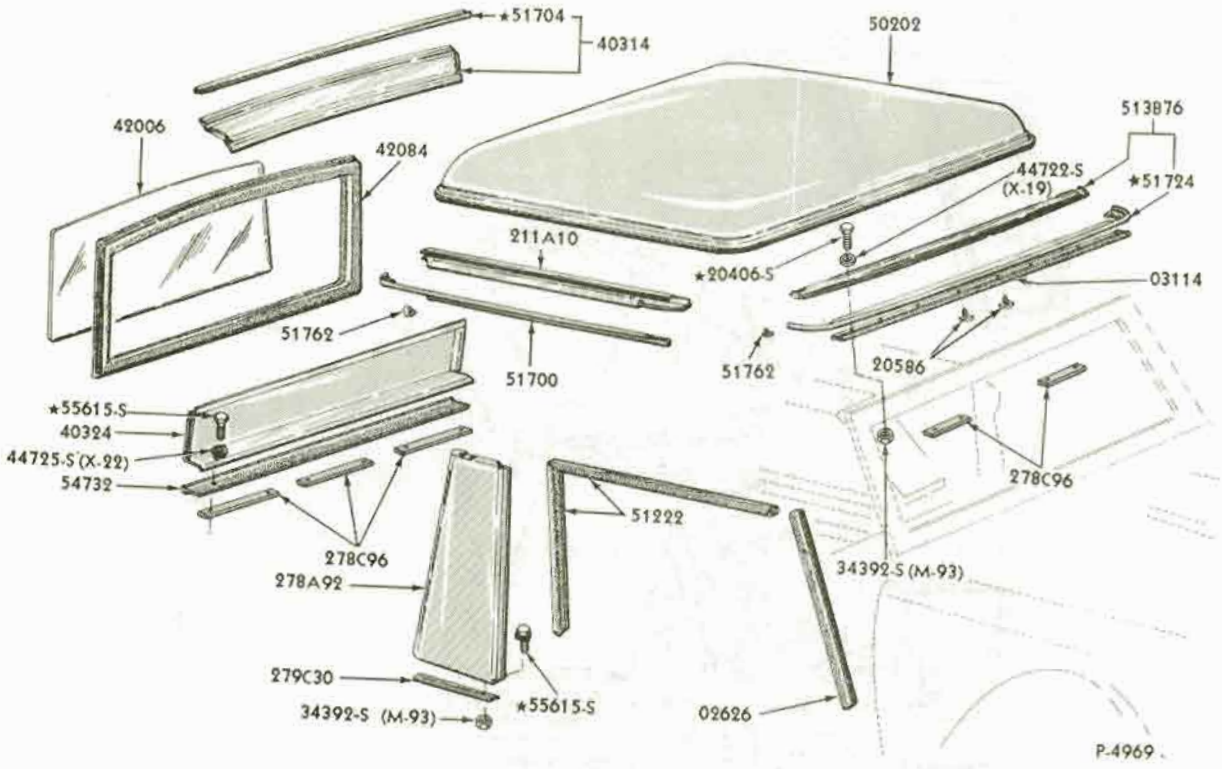

1966/72 BRONCO - ROOF - BODY TYPE 97

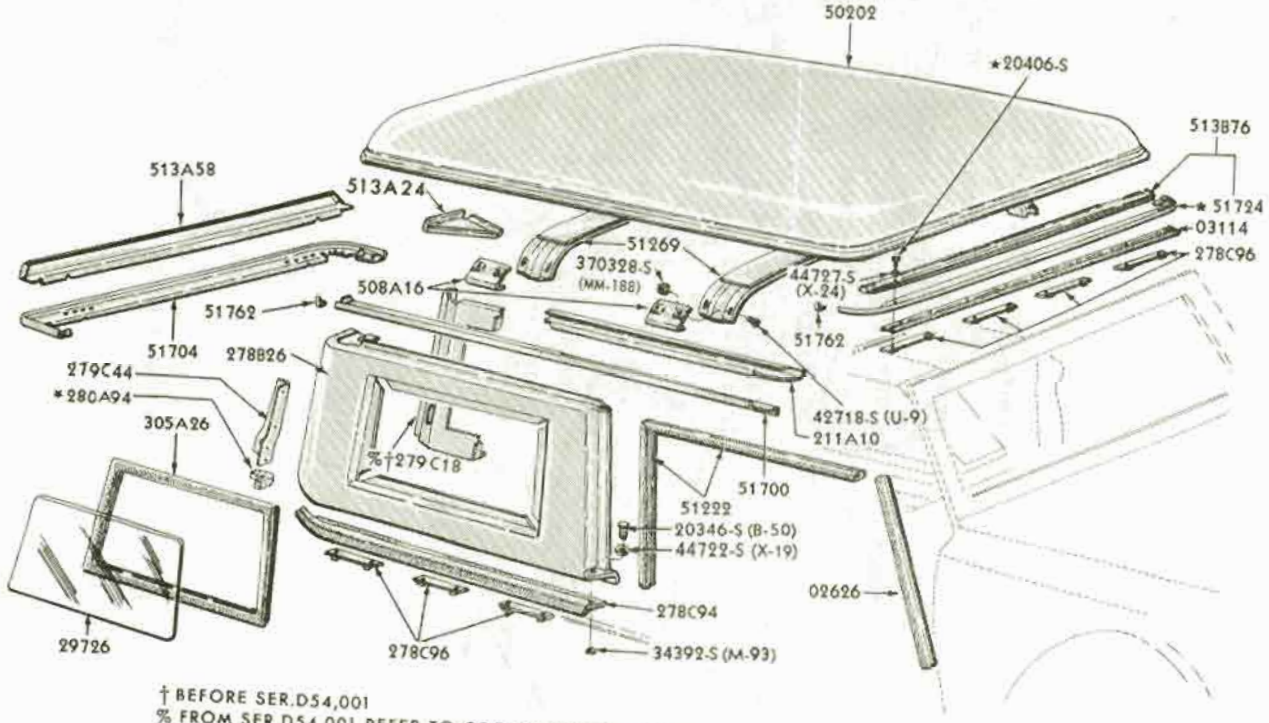

† BEFORE SER.D54,001
% FROM SER.D54,001 REFER TO GROUPS 279C20-1,279C44-5 & 279C72-3

1966/72 BRONCO - ROOF - BODY TYPE 98

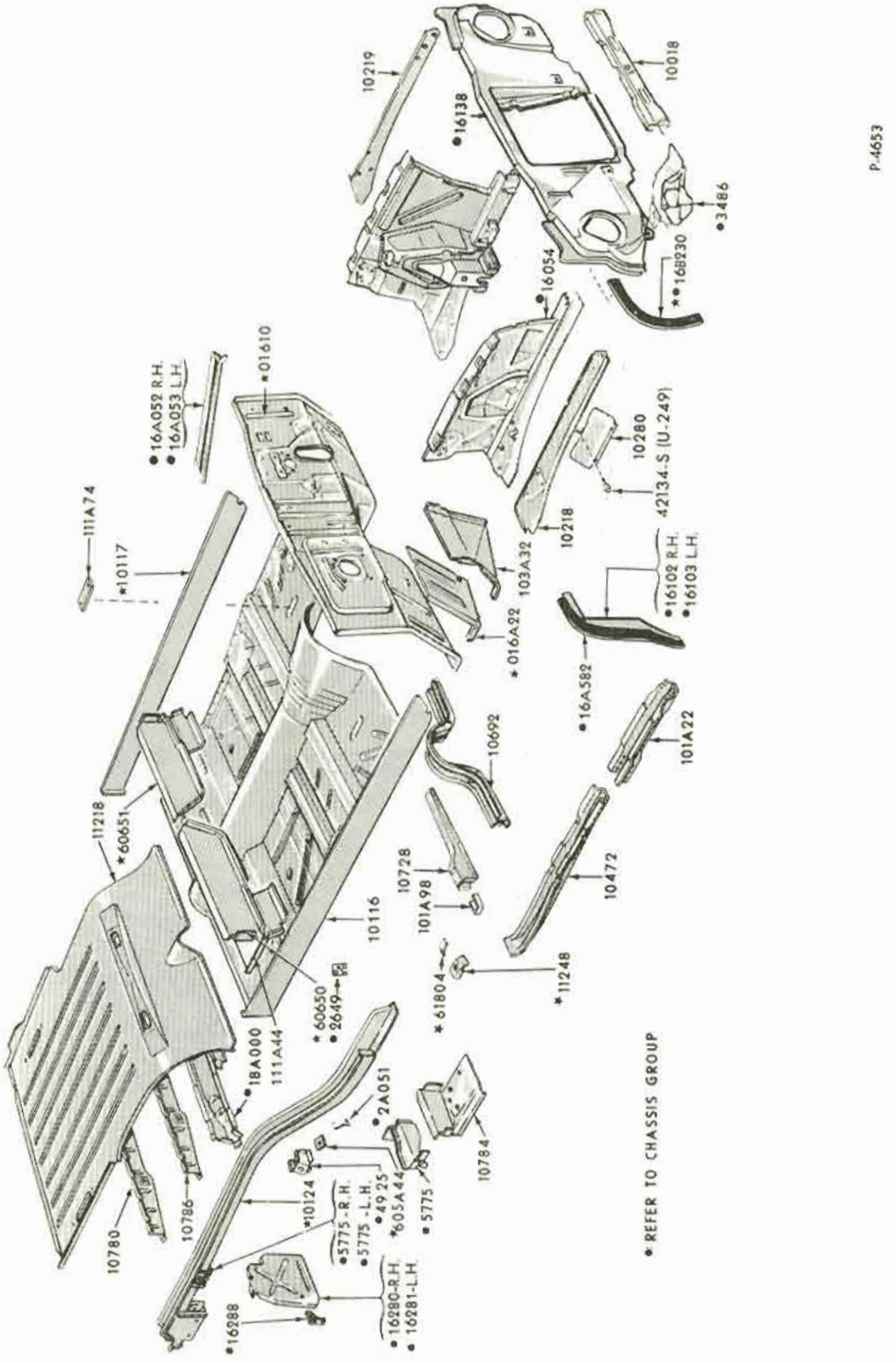

1965 FALCON - BODY TYPES 54,59,62,63,66,71

COPYRIGHT © 1975 — FORD MOTOR COMPANY — DEARBORN, MICHIGAN

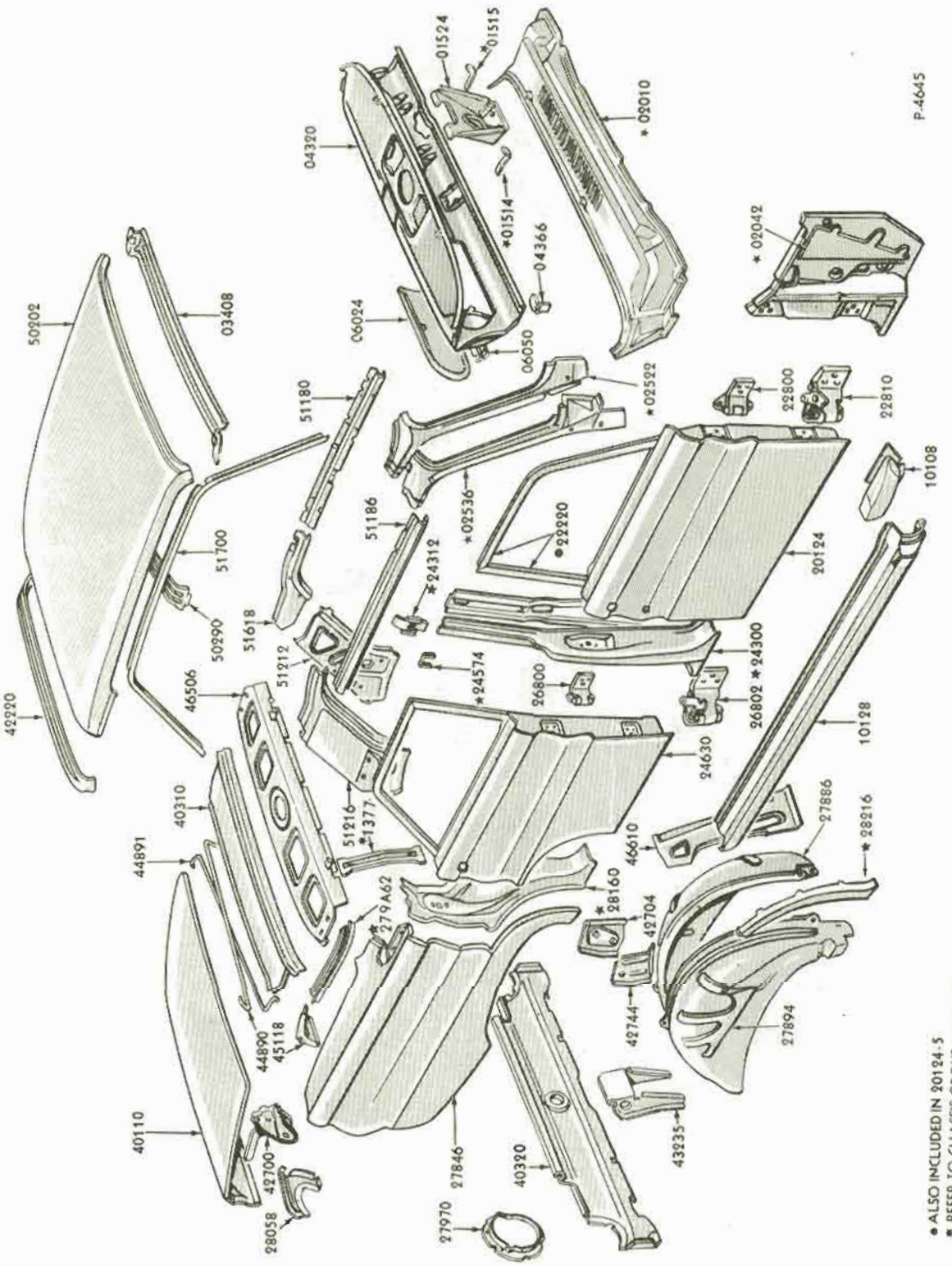

1965 FALCON - BODY TYPE 54 - UPPER BODY

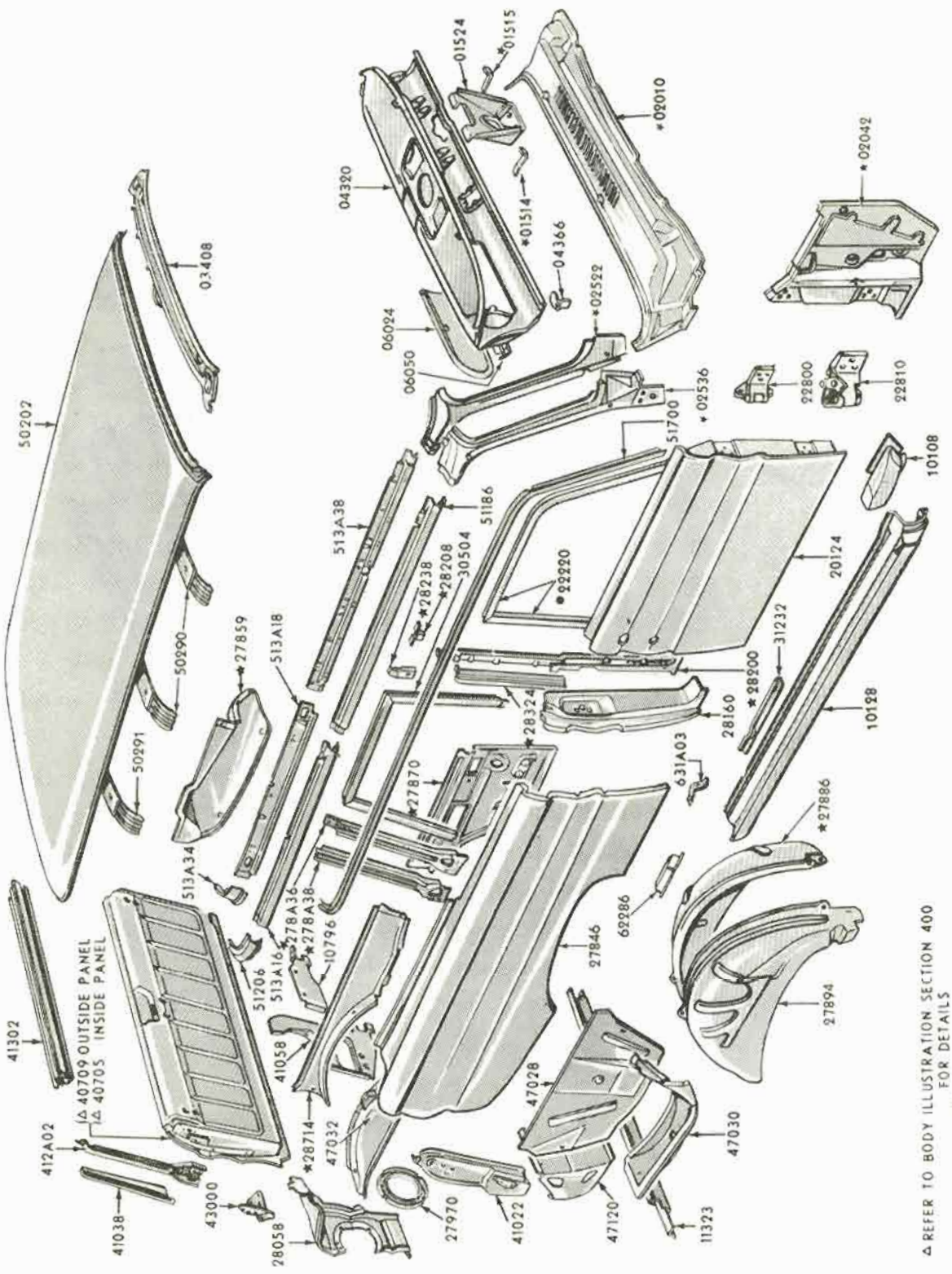

1965 FALCON - BODY TYPE 59 - UPPER BODY

COPYRIGHT © 1975 — FORD MOTOR COMPANY — DEARBORN, MICHIGAN

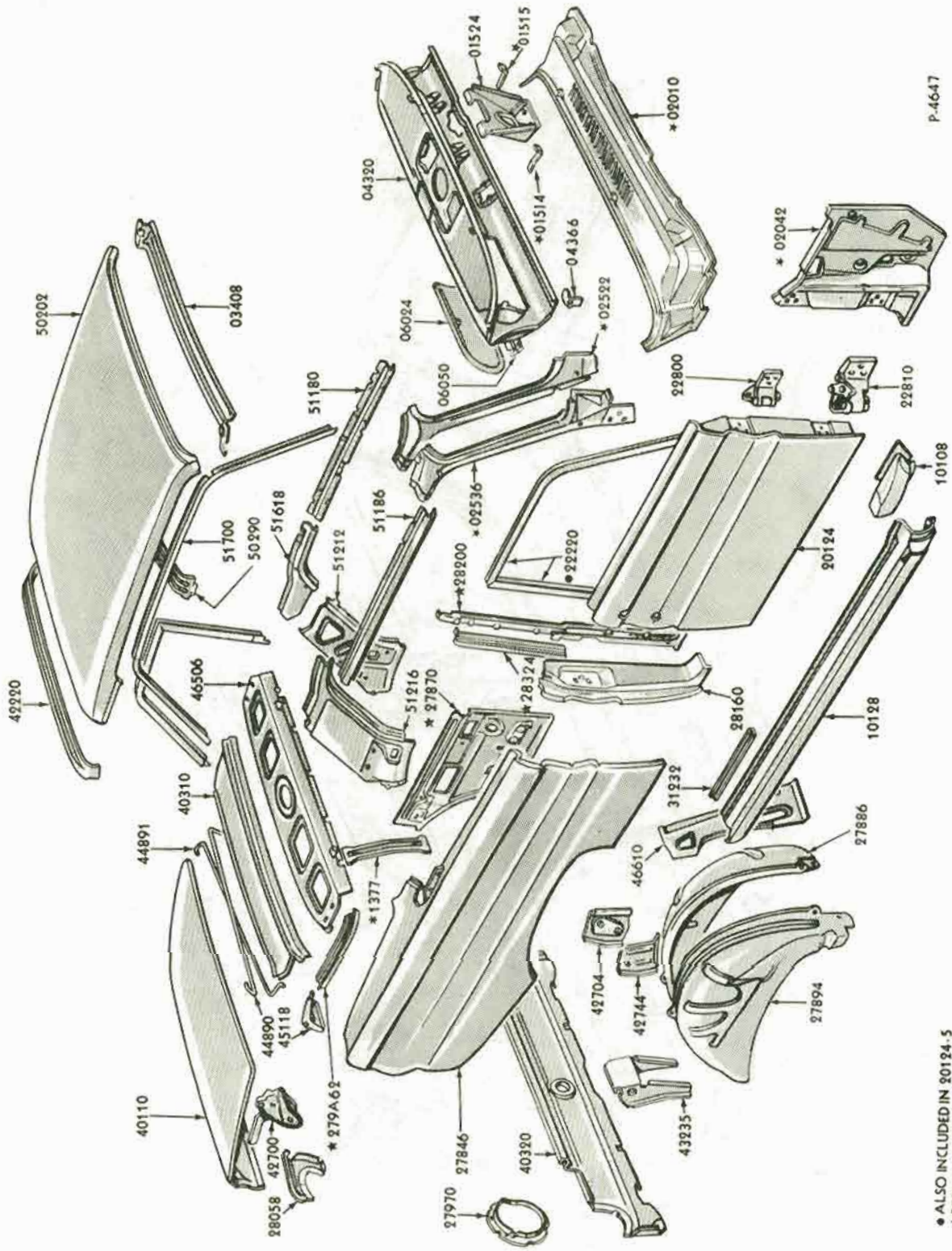

1965 FALCON - BODY TYPE 62 - UPPER BODY

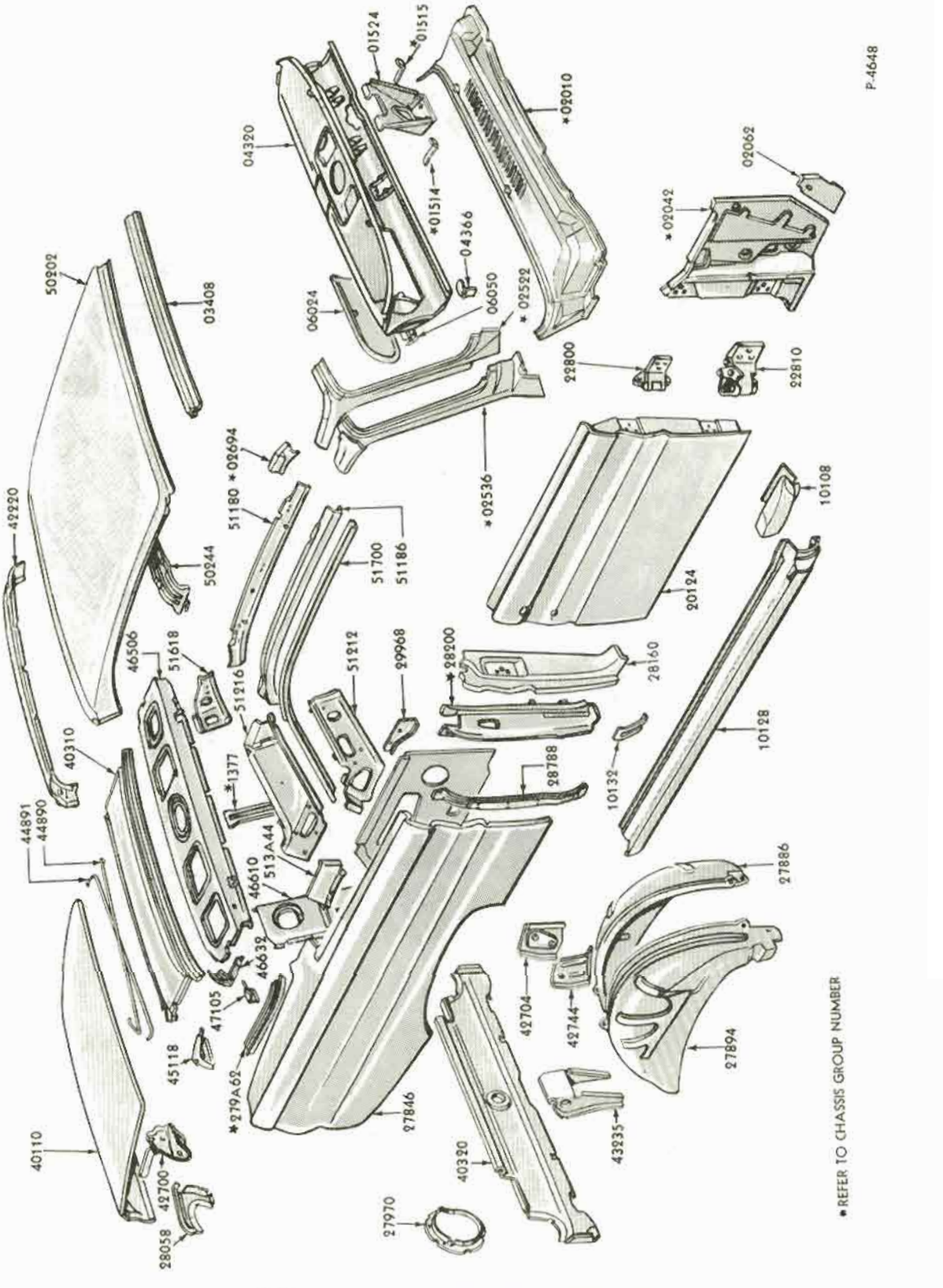

1965 FALCON - BODY TYPE 63 - UPPER BODY

COPYRIGHT © 1975 — FORD MOTOR COMPANY — DEARBORN, MICHIGAN

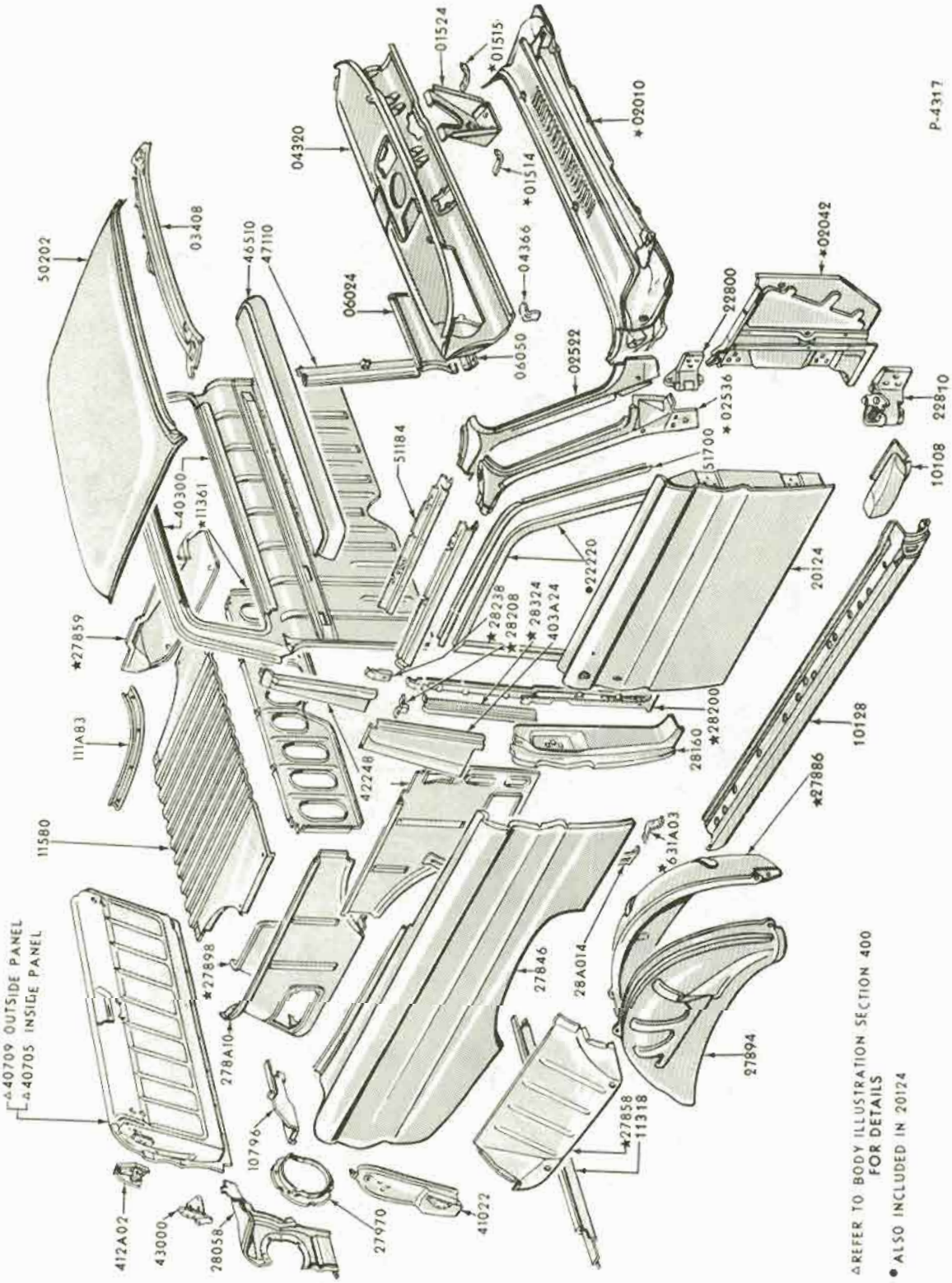
P-4317
50202
03408
46510
47110
04320
01524
*01515
*02010
*01514
04366
06024
06050
02592
*02042
22800
22810
*02536
51184
51700
10108
40300
*11361
*22220
20124
*28238
28208
*28324
403A24
*27859
111A83
42248
28160
*28200
10128
*27886
*631A03
11580
*27898
278A10
27846
28A014
27894
27858
11318
10796
27970
41022
412A02
43000
28058
△40709 OUTSIDE PANEL
△40705 INSIDE PANEL
△REFER TO BODY ILLUSTRATION SECTION 400 FOR DETAILS
• ALSO INCLUDED IN 20124

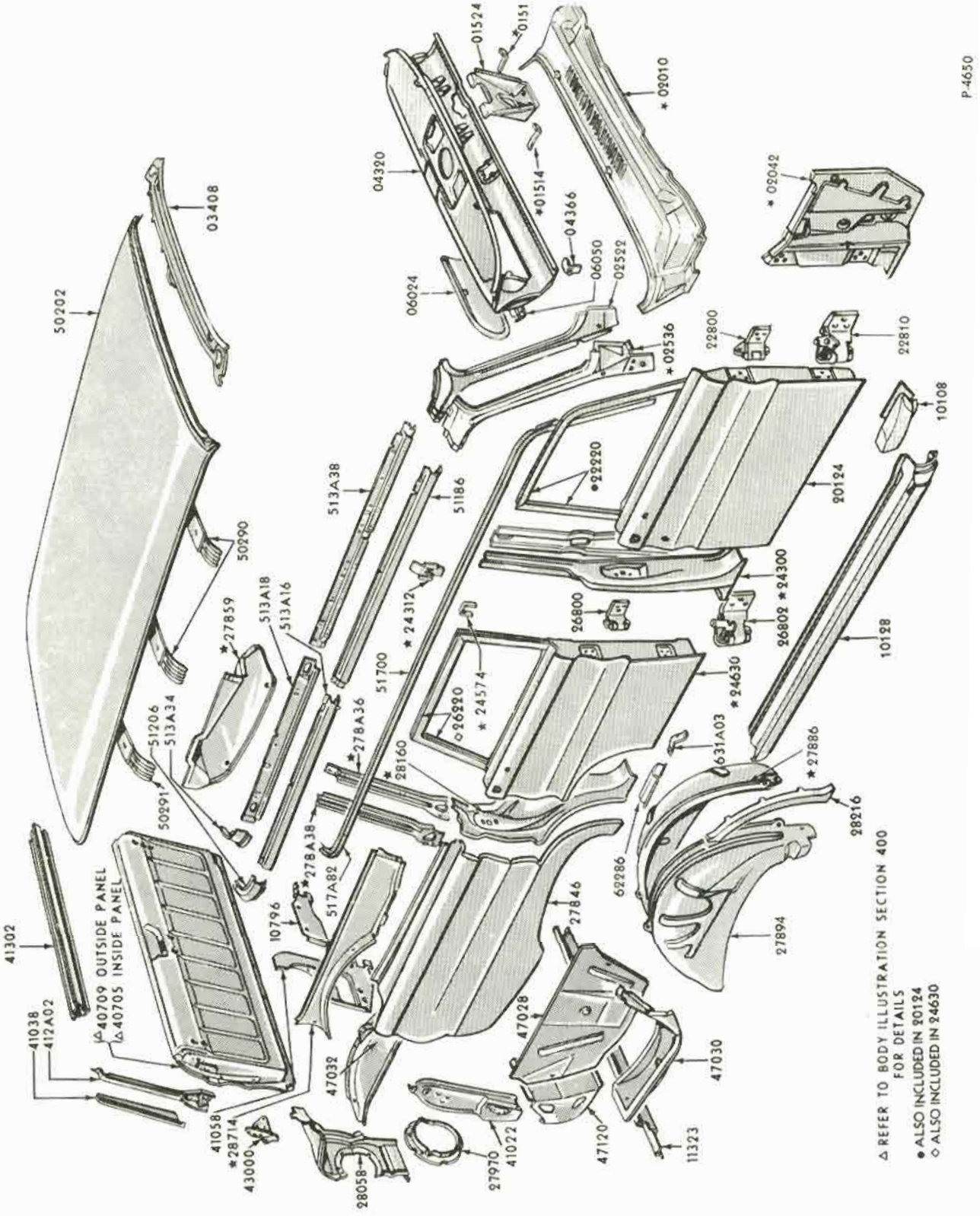

1965 FALCON - BODY TYPE 71 - UPPER BODY

COPYRIGHT © 1975 — FORD MOTOR COMPANY — DEARBORN, MICHIGAN

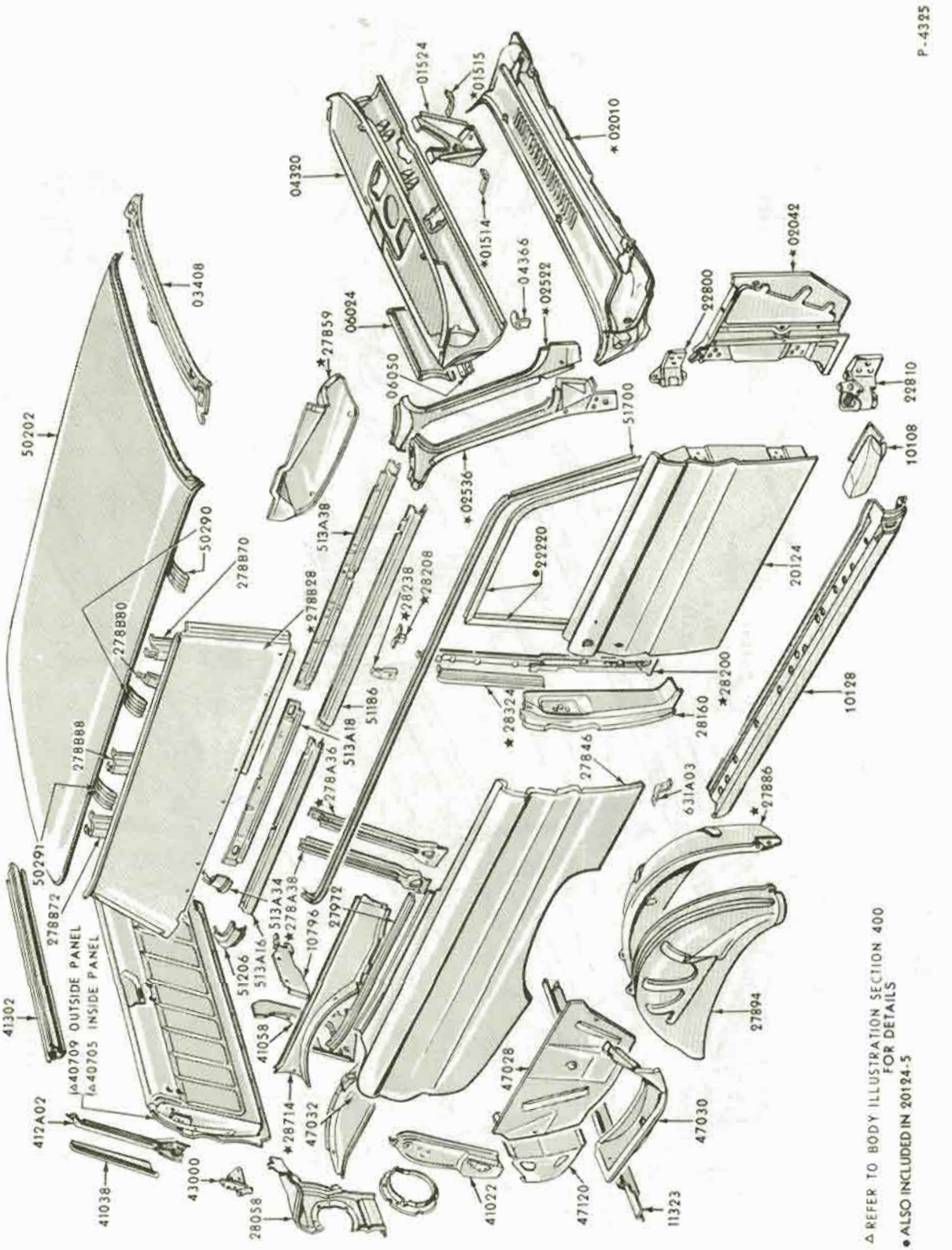

1965 FALCON - BODY TYPE 78 - UPPER BODY

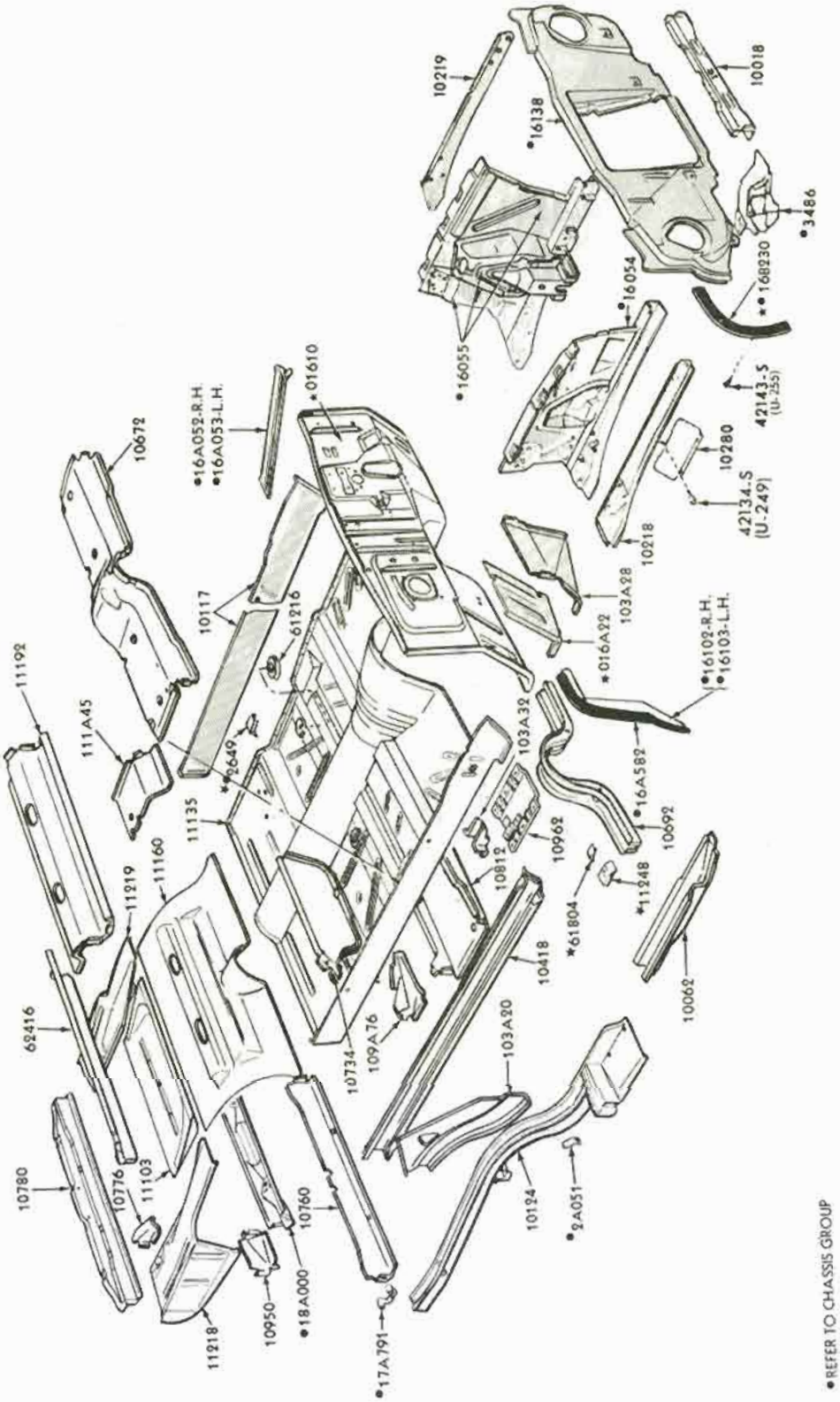

1965 FALCON - BODY TYPE 76 - UNDER BODY

COPYRIGHT © 1975 — FORD MOTOR COMPANY — DEARBORN, MICHIGAN

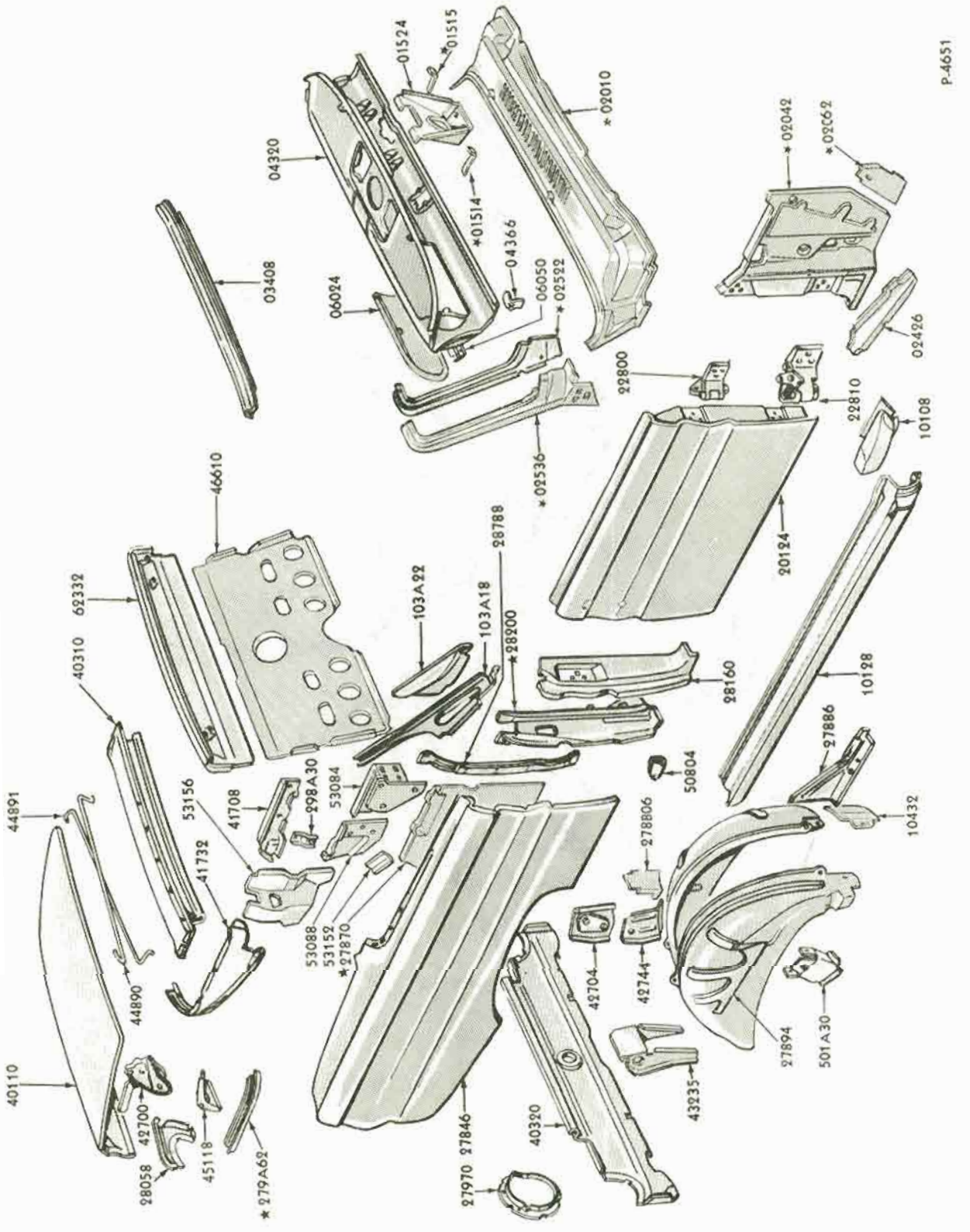

1965 FALCON - BODY TYPE 76 - UPPER BODY

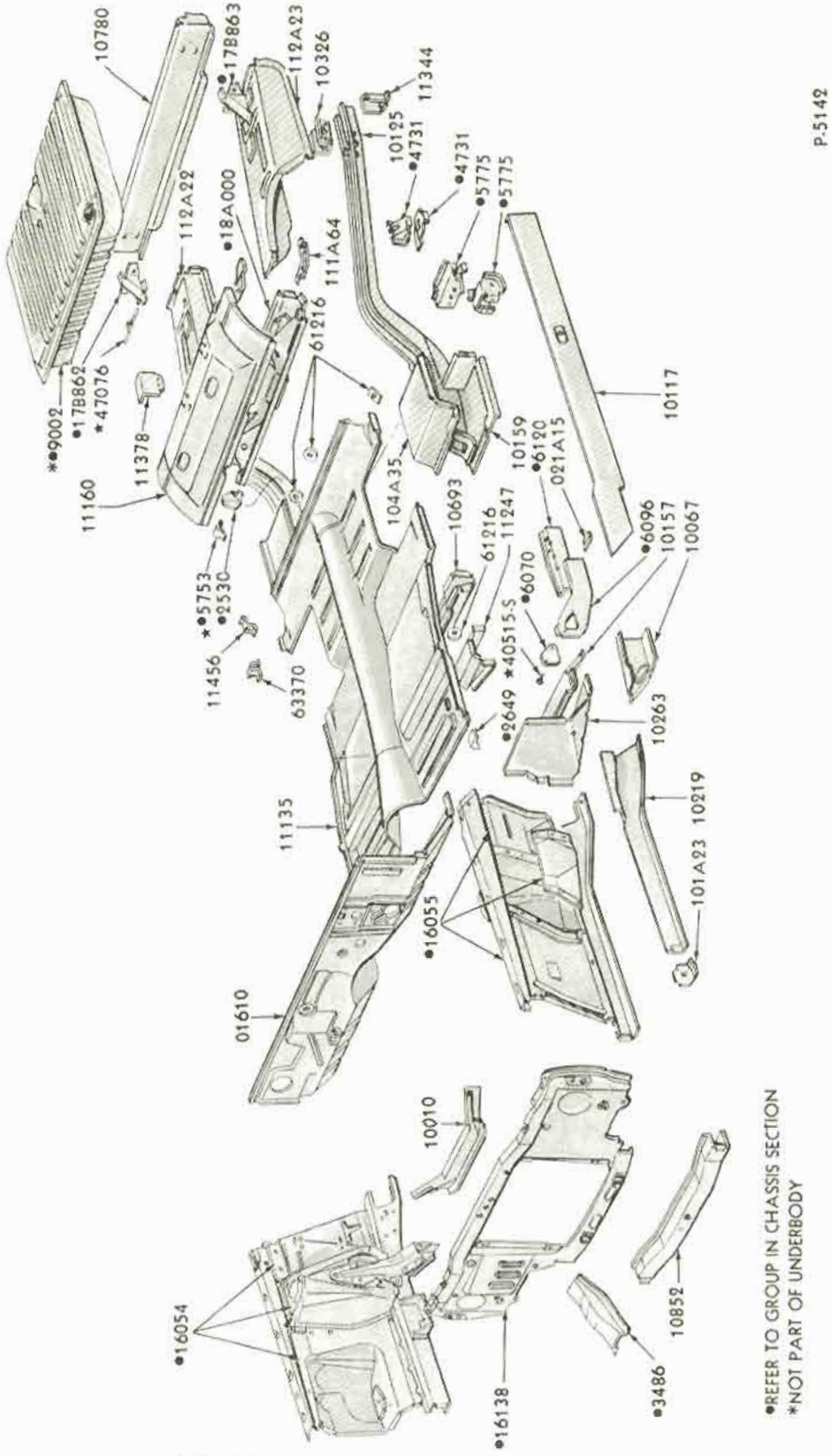

1966/67 FALCON - BODY TYPES 54, 62 - UNDERBODY

COPYRIGHT © 1975 — FORD MOTOR COMPANY — DEARBORN, MICHIGAN

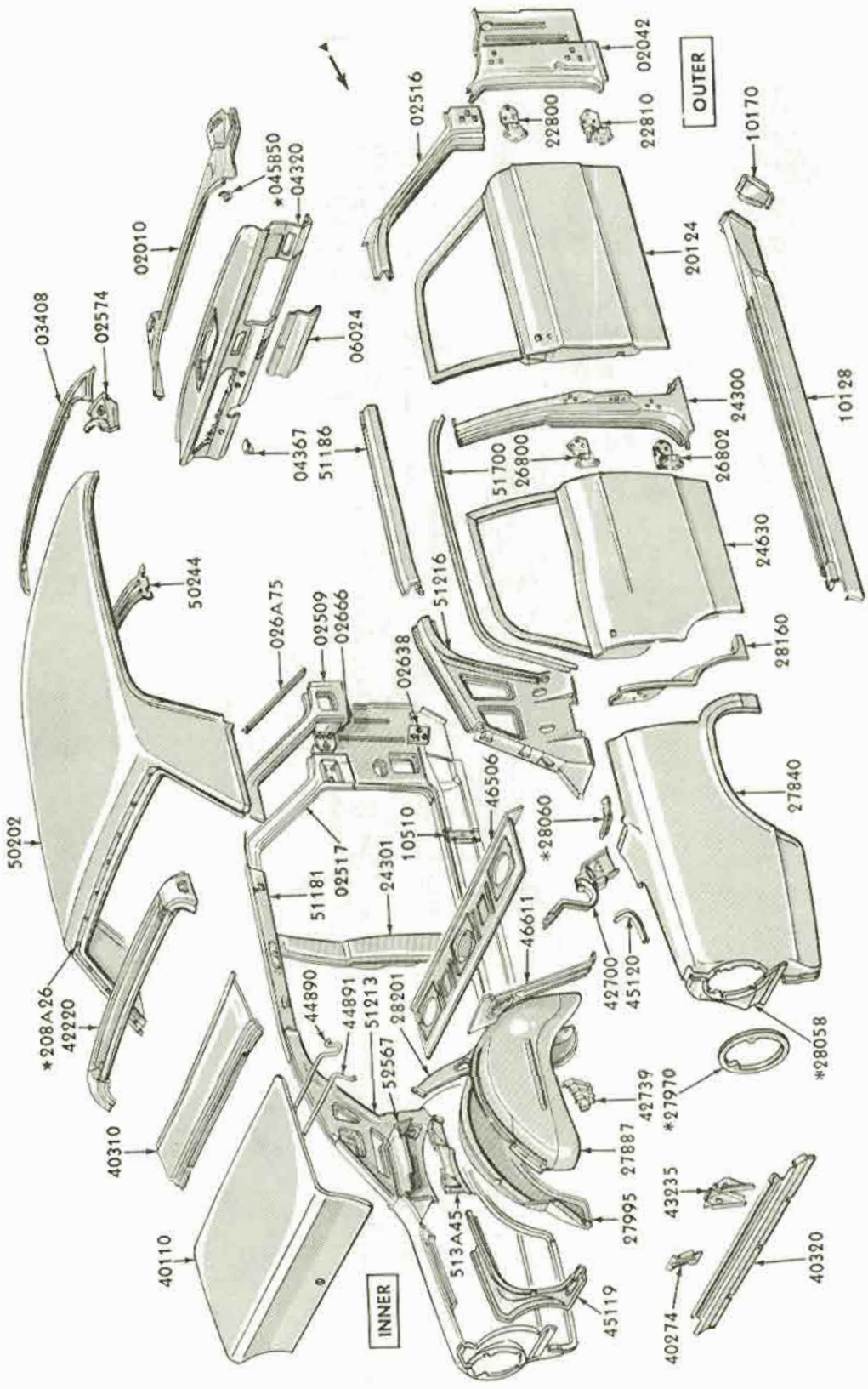

P-5026

*ALSO INCLUDED IN 27840-1
▲FOR FRONT BODY PARTS REFER TO UNDERBODY ILLUSTRATION

1966/67 FALCON - BODY TYPE 54 - UPPER BODY

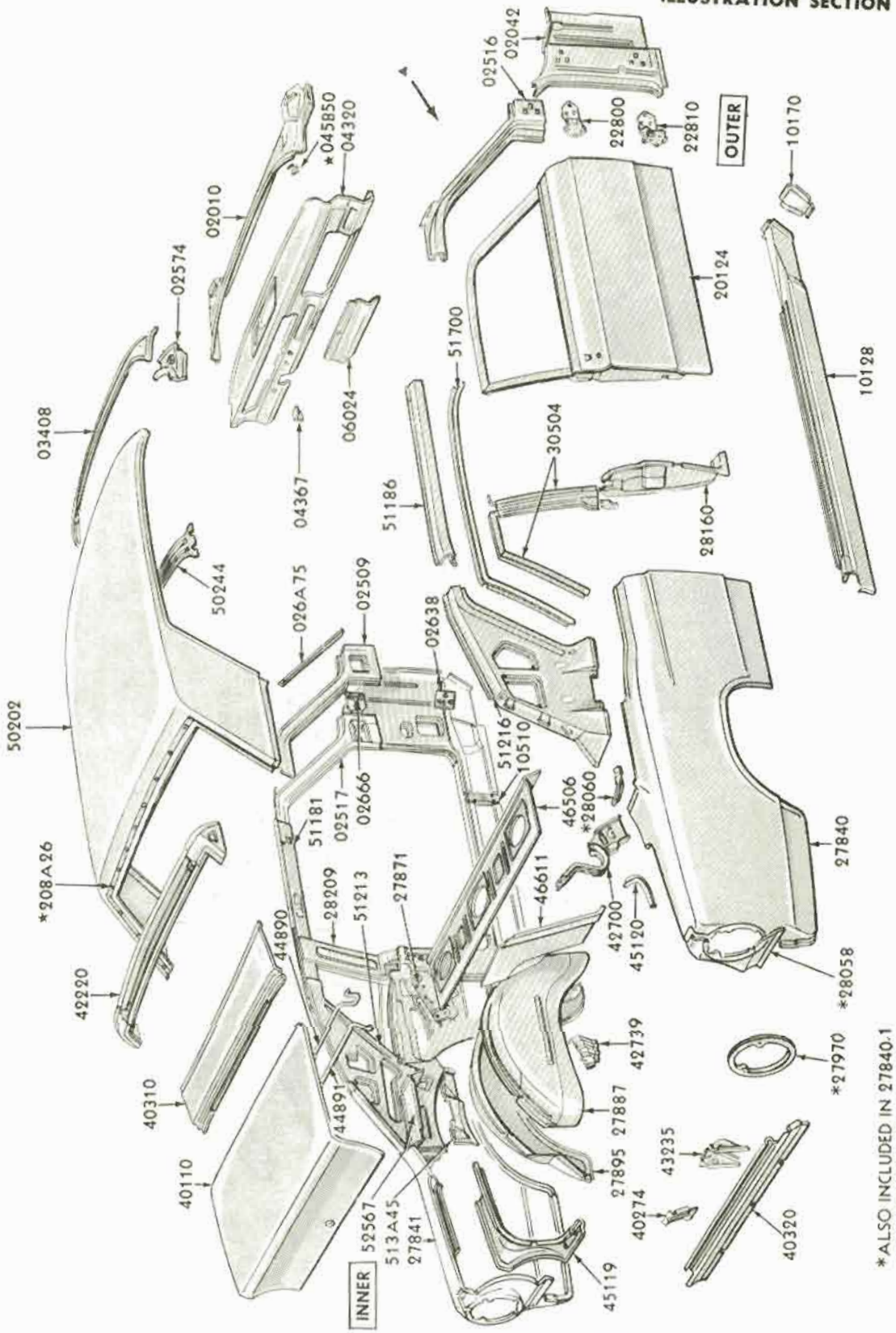

*ALSO INCLUDED IN 27840.1
▲FOR FRONT BODY PARTS REFER TO UNDERBODY ILLUSTRATION

1966/67 FALCON - BODY TYPE 62 - UPPER BODY

COPYRIGHT © 1975 — FORD MOTOR COMPANY — DEARBORN, MICHIGAN

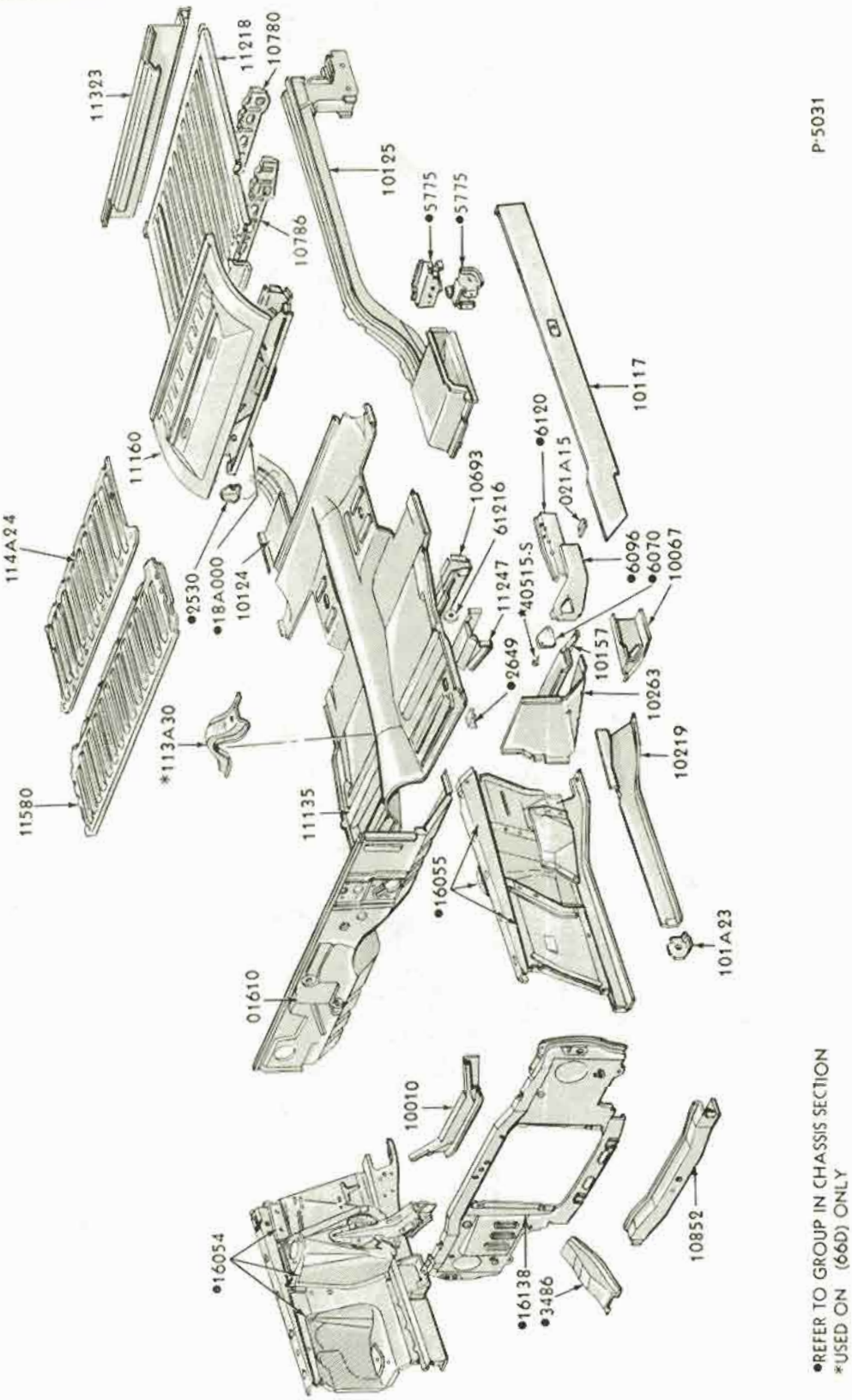

•REFER TO GROUP IN CHASSIS SECTION
*USED ON (66D) ONLY

1966 FALCON - BODY TYPE 66 - UNDER BODY

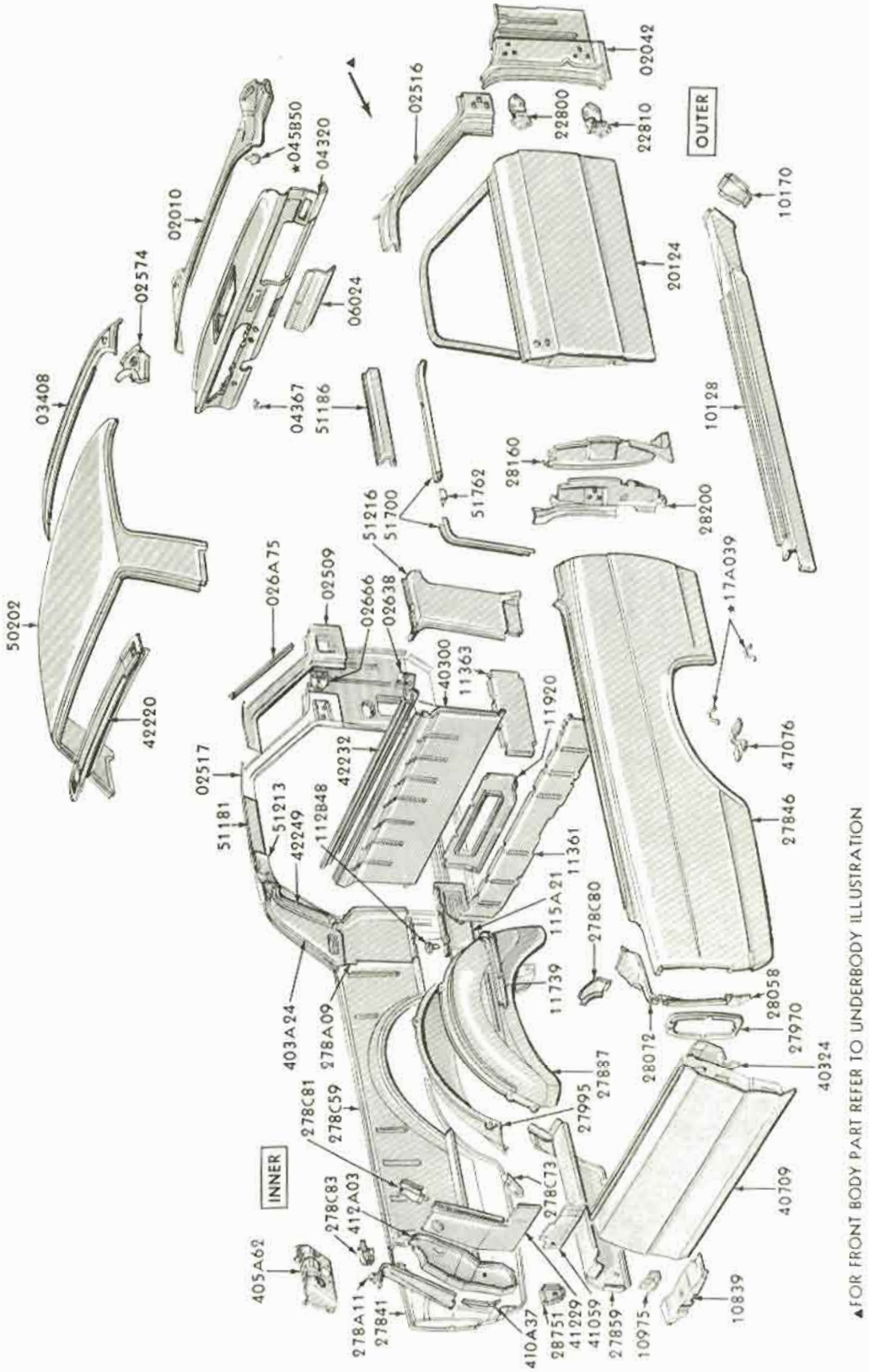

1966 FALCON - BODY TYPE 66 - UPPER BODY

COPYRIGHT © 1975 — FORD MOTOR COMPANY — DEARBORN, MICHIGAN

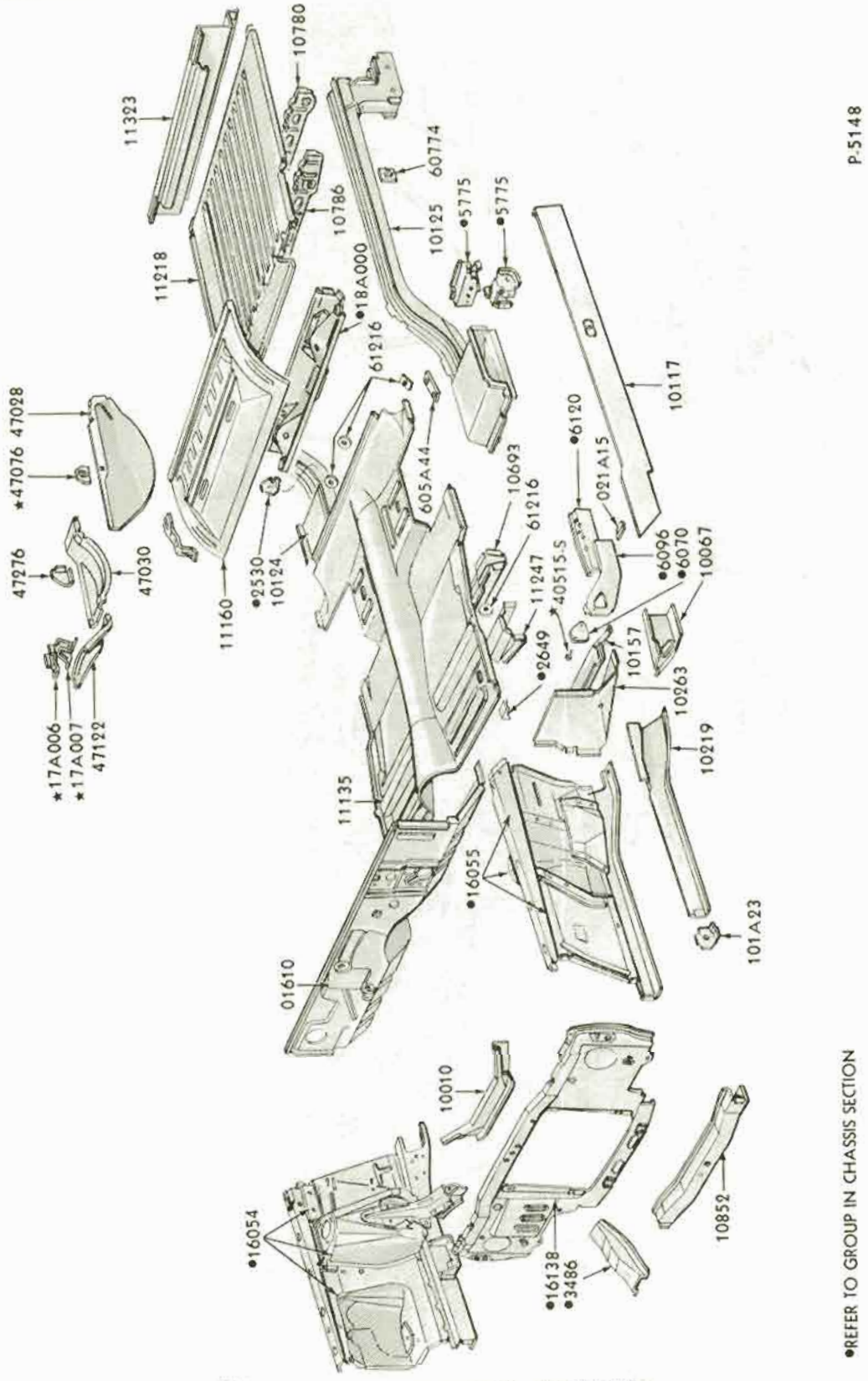

1966/67 FALCON - BODY TYPE 71 - UNDERBODY

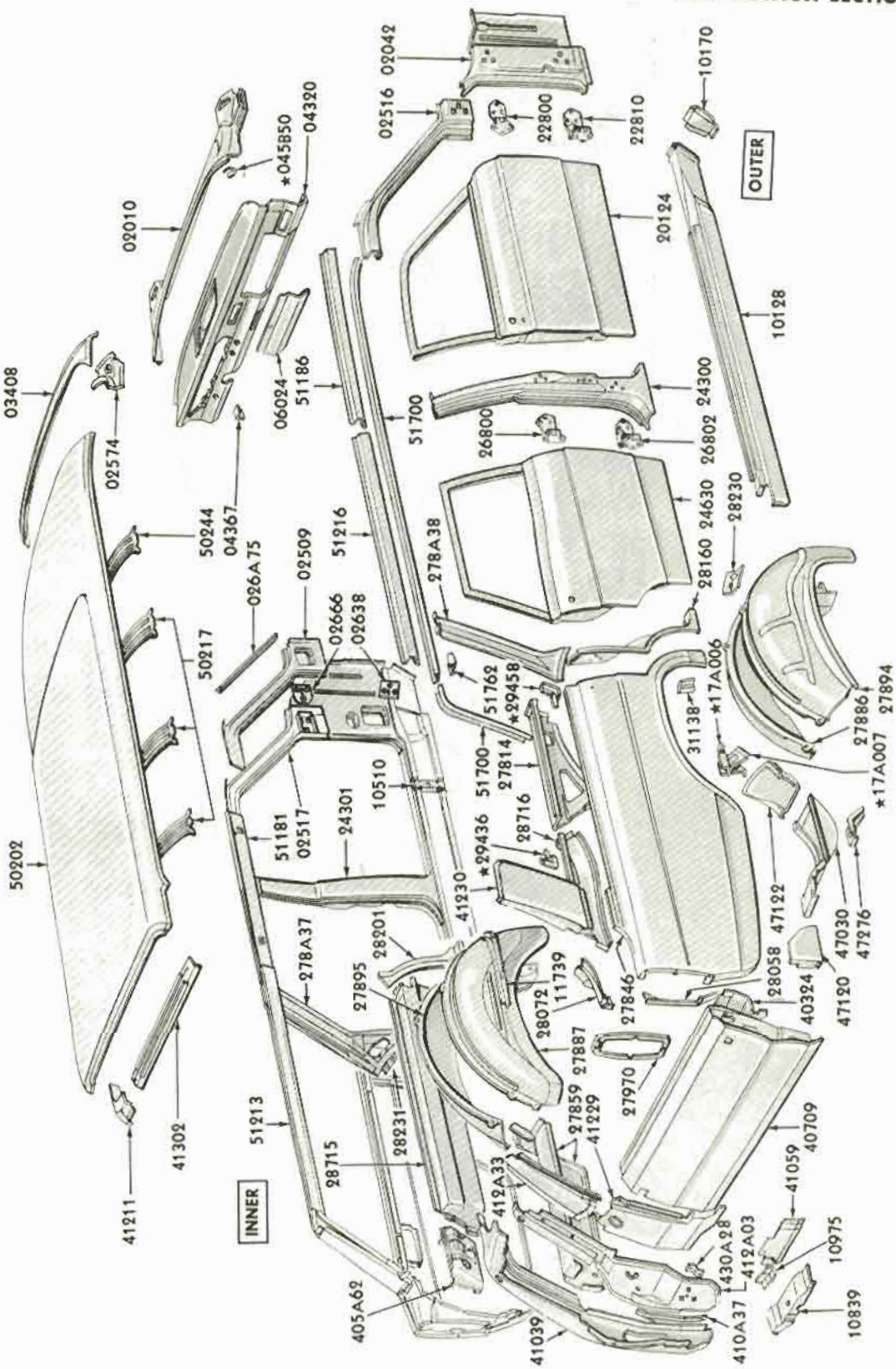

May, 1975 COPYRIGHT © 1975 — FORD MOTOR COMPANY — DEARBORN, MICHIGAN

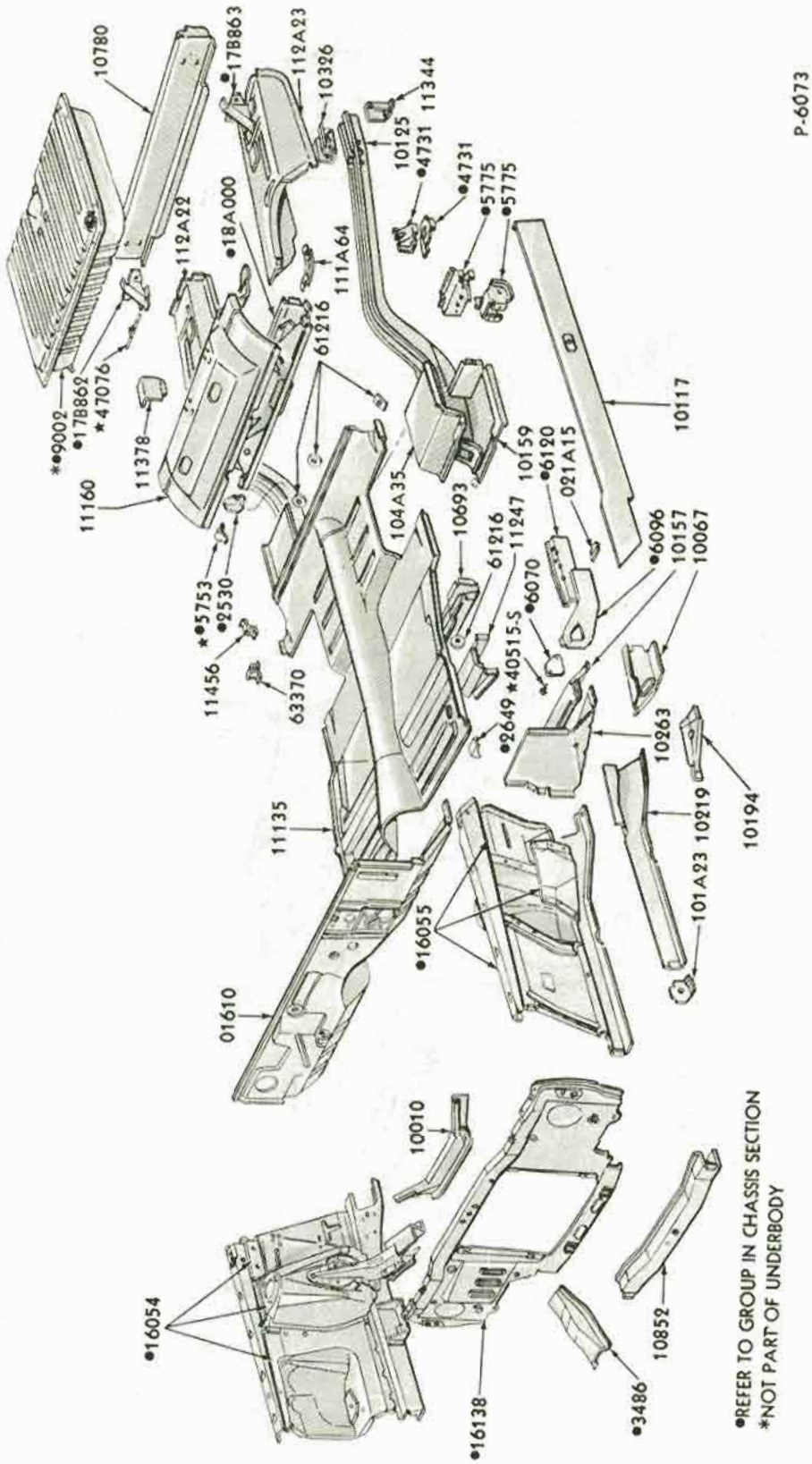
10780
•17B863
112A23
10326
10125
•4731 11344
•4731
•5775
•5775
112A22
•18A000
111A64
61216
*•9002
•17B862
*47076
11378
11160
104A35
10693
61216
11247
10159
•6120
021A15
10117
•6096
10157
10067
*•5753
•2530
11456
63370
•6070
*40515-S
•2649
10263
11135
•16055
01610
101A23
10219
10194
10010
•16054
•16138
•3486
10852
P-6073
•REFER TO GROUP IN CHASSIS SECTION
*NOT PART OF UNDERBODY

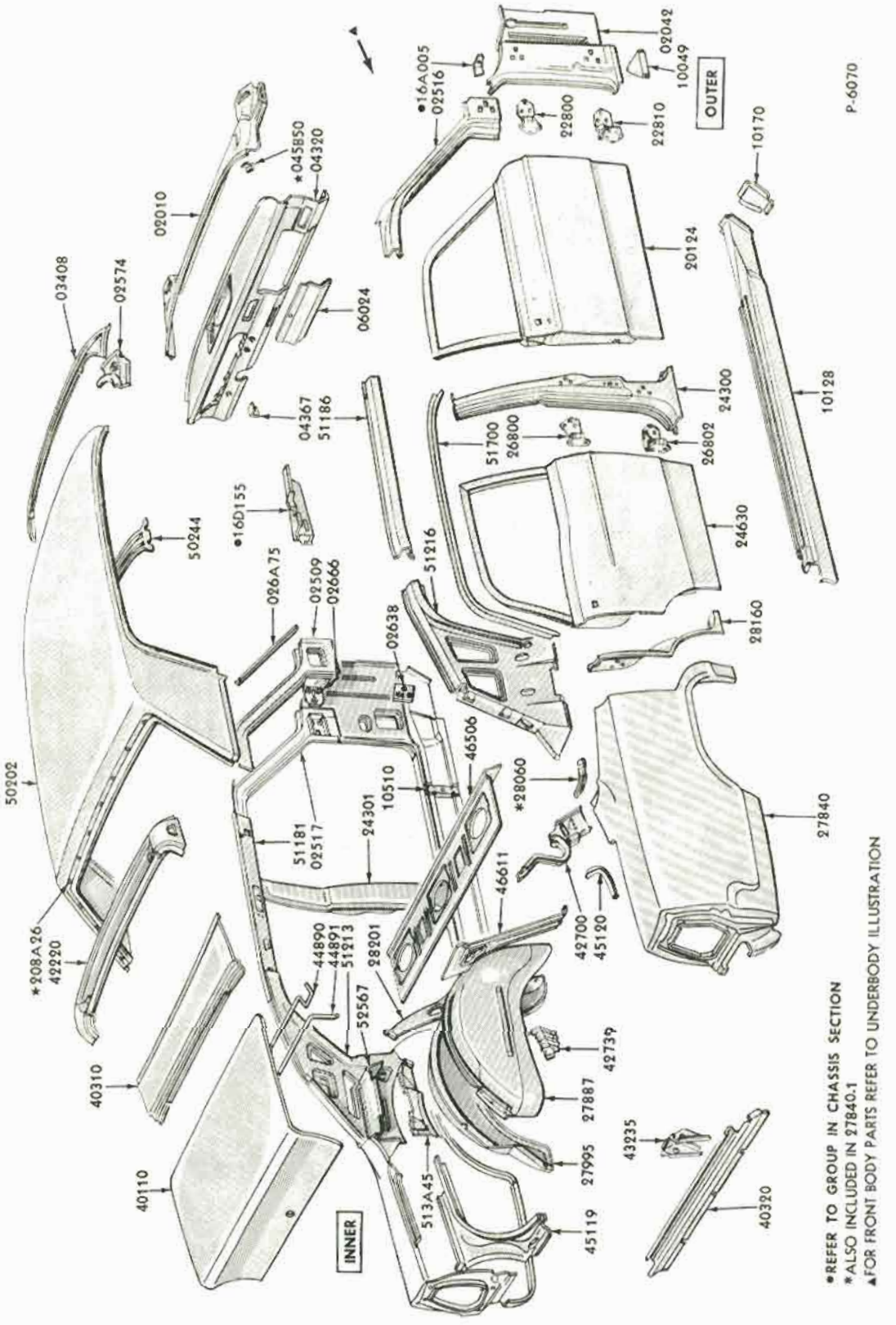

1968/70 FALCON-BODY TYPE 54-UPPER BODY

COPYRIGHT © 1975 — FORD MOTOR COMPANY — DEARBORN, MICHIGAN

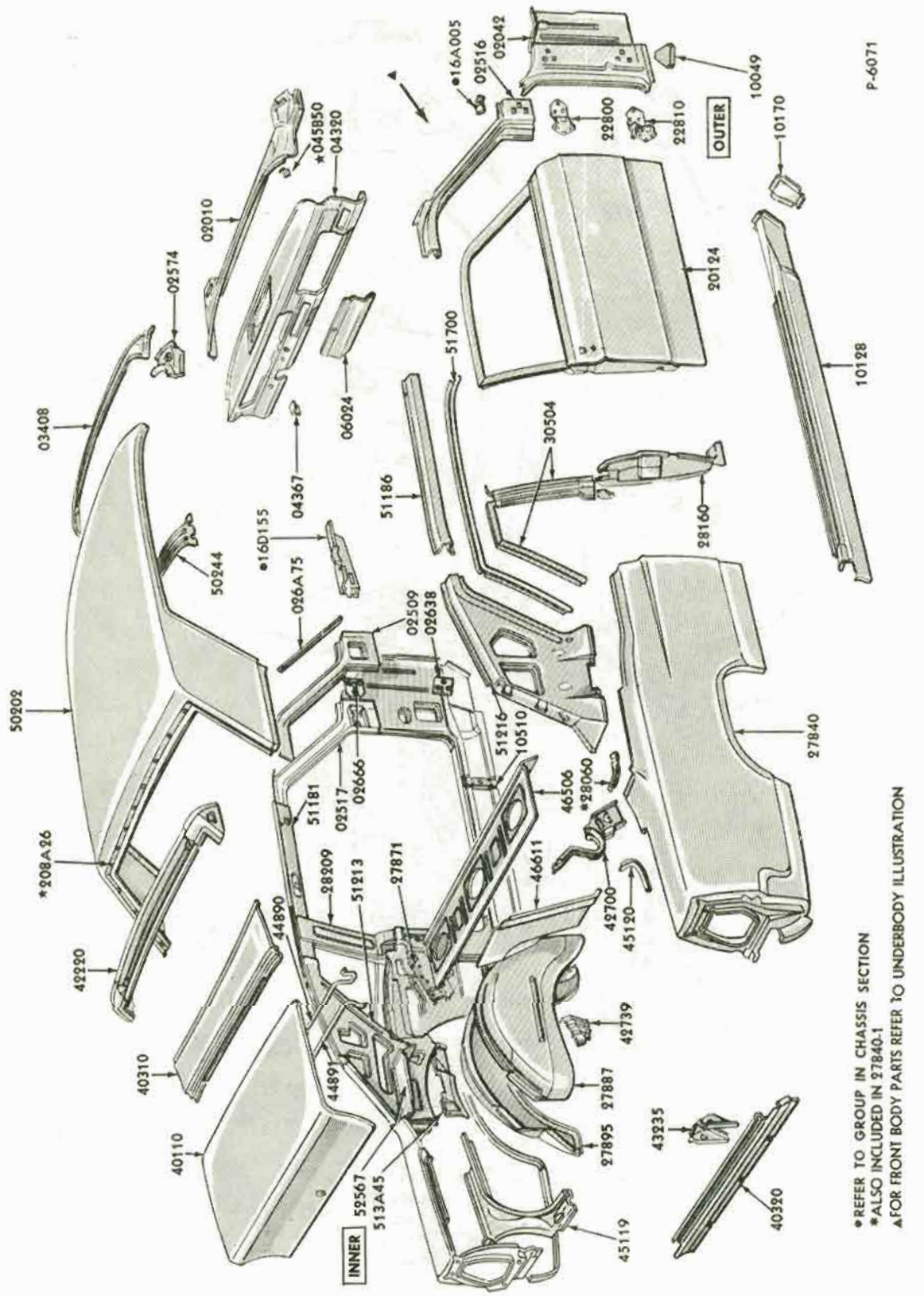

•REFER TO GROUP IN CHASSIS SECTION
*ALSO INCLUDED IN 27840-1
▲FOR FRONT BODY PARTS REFER TO UNDERBODY ILLUSTRATION

1968/70 FALCON - BODY TYPE 62 - UPPER BODY

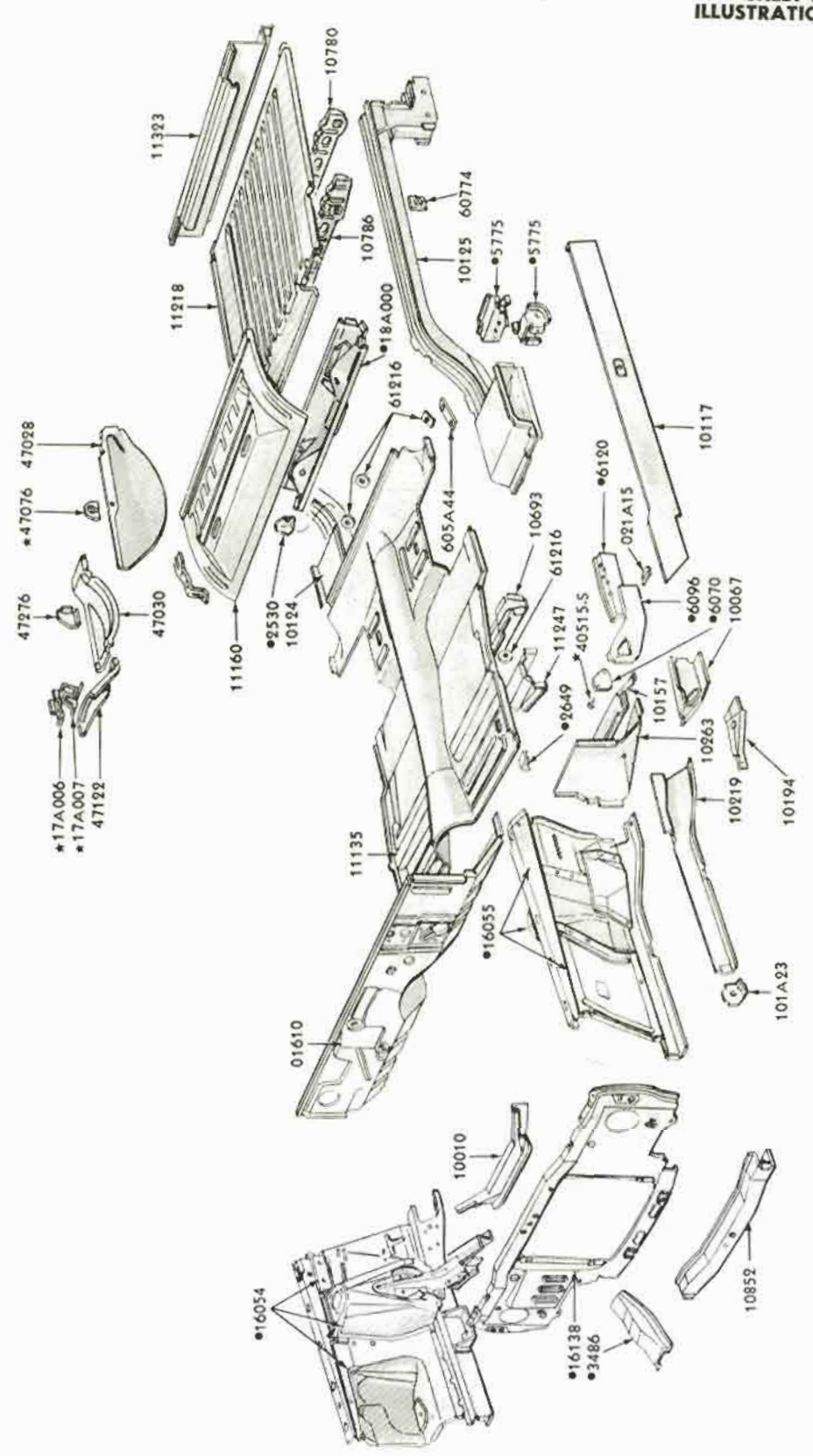

1968/70 FALCON - BODY TYPE 71 - UNDERBODY

COPYRIGHT © 1975 — FORD MOTOR COMPANY — DEARBORN, MICHIGAN

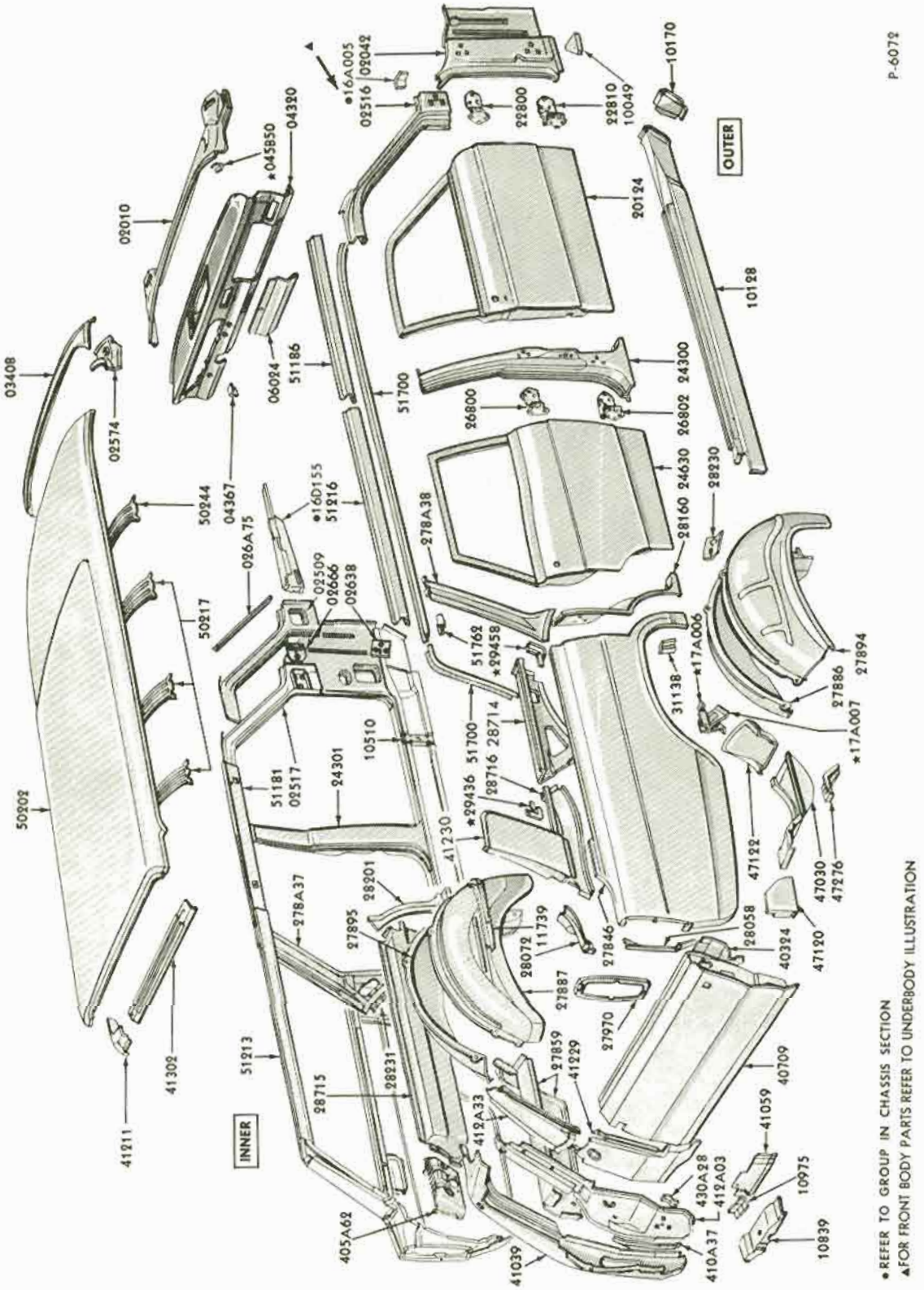

1968/70 FALCON - BODY TYPE 71 - UPPER BODY

INDEX

EXTERIOR MOULDINGS - BACK and SIDE

TITLE	SECTION	PAGE	ILLUS. NO.

1965

A (FORD)

54A, 57B - side	A	1	P-4656
54B - side	A	2	P-4657
54E, 62E - side	A	4	P-4660
57F - side	A	5	P-4663
62B - side	A	3	P-4658
63B, 76A - side	A	6	P-4669
63C, F, 76B - side	A	7	P-4670
54, 57, 62, 63, 76 - back end	A	8	P-6953
71 - back end	A	8	P-8356
71A, E - side	A	9	P-4757
71B, C, D - side	A	10	P-4749

B (FAIRLANE)

54, 62 - side	B	1	P-4678
65 - side	B	2	P-4681
71 - side	B	3	P-4683
54, 62, 65 - back end	B	4	P-8360
71 - back end	B	4	P-8361

F (MUSTANG)

All	F	1	P-4490

S (THUNDERBIRD)

63	S	1	P-4301
76	S	2	P-4302

X (FALCON)

54A, D, 62A, D - side	X	1	P-4689
54B, 62B - side	X	2	P-4688
71A, B - before 10/6/64 - side	X	3	P-4696
66A, B - side	X	5	P-4296
66G, H	X	6	P-4760
63, 76 - side	X	4	P-4694
71B - from 10/6/64	X	7	P-4837
71C - side	X	8	P-4695
78 - side	X	9	P-4295
59, 71, 78 - back end	X	10	P-8353
66 - back end	X	11	P-8351
54, 62, 63, 76 - back end	X	11	P-8352

1966

A (FORD)

54A, 57B - side	A	11	P-5038
54B, E, 62B, E - side	A	12	P-5039
57F - side	A	13	P-5042
63B, 76A - side	A	14	P-5045
63C, D, F, 76B, D - side	A	15	P-5046
54, 57, 62, 63, 76 - back end	A	16	P-5092
71A, E	A	17	P-5047
71B, C, D	A	18	P-5048
71 - back end	A	19	P-8355

B (FAIRLANE)

54, 62 - side	B	5	P-5051
63 - side	B	6	P-5055
71B, D	B	7	P-5057
71E	B	8	P-5059
76	B	10	P-5102
54, 62, 63, 76 - back end	B	9	P-8367

F (MUSTANG)

All	F	1	P-4490

S (THUNDERBIRD)

All	S	3	P-5015

U (BRONCO)

97, 98	U	1	P-5548

X (FALCON)

54, 62 - side	X	12	P-5061
66 - side	X	13	P-5065
71	X	14	P-5067
54, 62 - back end	X	15	P-8357
66 - back end	X	15	P-8358

1967

A (FORD)

54A, 57B	A	20	P-5559
54B, E	A	21	P-5560
54C, 57F, 63J	A	22	P-5563
62	A	23	P-5564
63B, C, 76	A	24	P-5567
71A, E	A	26	P-5571
71 - back end	A	28	P-8354
54, 57, 62, 63, 76 - back end	A	25	P-5636
71B, C, D	A	27	P-5569

B (FAIRLANE)

54A, 62A - side	B	11	P-5543
54B, 62B - side	B	12	P-5546
63B, C, 76B, C - side	B	13	P-5547
63D, 76D - side	B	14	P-5549
66A - side	B	15	P-5604
66B, D - side	B	16	P-5578
54, 62, 63, 76 - back end	B	17	P-8363
66 - back end	B	17	P-8359

B (FAIRLANE)

71B	B	18	P-5550
71D	B	19	P-5551
71E	B	20	P-5552

F (MUSTANG)

All	F	2	P-5541

S (THUNDERBIRD)

All	S	4	P-5364

U (BRONCO)

97, 98	U	1	P-5548

X (FALCON)

54, 62 - side	X	16	P-5554
71	X	17	P-5558
54, 62 - back end	X	15	P-8357

COPYRIGHT © 1975 — FORD MOTOR COMPANY — DEARBORN, MICHIGAN

INDEX

EXTERIOR MOULDINGS - BACK and SIDE - continued

TITLE	SECTION	PAGE	ILLUS. NO.

1968

A (FORD)

54A, C - side	A	29	P-6137
54B, E - side	A	30	P-6140
57 - side	A	31	P-6142
62 - side	A	32	P-6143
63, 76 - side	A	33	P-6146
65 - side	A	34	P-6148
71A, E	A	36	P-6149
54, 57, 62, 63, 65, 76 - back end	A	35	P-6950
71B, C, D, H, J	A	37	P-6150

B (FAIRLANE/TORINO)

54A, B, 65A, B, E, 76B, E	B	21	P-6114
54C, 65C	B	22	P-6111
63	B	23	P-6112
65D, 76D	B	24	P-6116
66A, B	B	25	P-6117
66D	B	26	P-6118
71B, D	B	27	P-6134
71E	B	28	P-6136

F (MUSTANG)

65 (GT/CS)	F	3	P-6455
All except 65 (GT/CS)	F	4	P-6089

S (THUNDERBIRD)

All	S	5	P-6092

U (BRONCO)

97, 98	U	1	P-5548

X (FALCON)

54, 62	X	18	P-6109
71	X	19	P-6098

1969

A (FORD)

54A, 57B, 63B, 65C, 76A - side	A	38	P-6563
54B, E, 62 - side	A	39	P-6562
54C, 57F, 65A - side	A	40	P-6564
54, 57, 62, 63, 65, 76 - back end	A	41	P-6626
63C, 76B - side	A	42	P-6565
71A, E - side	A	43	P-6567
71B, C, D, H, J - side	A	44	P-6566
71 - back end	A	45	P-6679

B (FAIRLANE/TORINO)

54A, B, 63B, E, 65A, B, E, 76B, E - side	B	29	P-6578
54C, 65C - side	B	30	P-6579
54, 65, 76 - back end	B	31	P-6627
63 - back end	B	32	P-6683
63D, F, 65D, F, 76D, F - side	B	33	P-6580
66 - side	B	34	P-6581
66 - Rio Grande rails	B	41	P-7469
71 - back end	B	35	P-6680
71B, D - side	B	36	P-6582
71E - side	B	37	P-6583

F (MUSTANG)

All except Shelby GT350/500 - side	F	5	P-6612
All exc. Shelby GT350/500 - back end	F	6	P-6613
Shelby GT350/500 - side	F	7	P-6923
Shelby GT350/500 - back end	F	6	P-6922-B

S (THUNDERBIRD)

All - side	S	6	P-6561
All - back end	S	7	P-6633

U (BRONCO)

97, 98	U	1	P-5548

X (FALCON)

54, 62 - side	X	20	P-6559
71 - side	X	21	P-6560
54, 62 - back end	X	21	P-6682
71 - back end	X	22	P-6680

INDEX

EXTERIOR MOULDINGS - BACK and SIDE - continued

TITLE	SECTION	PAGE	ILLUS. NO.

1970

A (FORD)

54, 57 - side	A	46	P-7105
63B, 65A, C, 76A - side	A	47	P-7106
63C, 76B - side	A	48	P-7109
All except 71 - back end	A	49	P-7100
71 - Back end	A	45	P-6679
71A, E - side	A	43	P-6567
71B, C, D, H, J - side - with vinyl insert	A	50	P-7107
71D, H, J - side - without vinyl insert	A	51	P-7108

B (FAIRLANE/TORINO)
B (FALCON) - FROM 1/2/70

54B, C, 57C, E - side	B	38	P-7048
63C, H, 65B, C, E, H, 76C - side	B	39	P-7047
63F, 65F, 66F, 76F - side	B	40	P-7049
All except 63, 71 - back end	B	40	P-7132
63 - back end	B	41	P-7131
66A, B - side	B	42	P-7050
66E, 71E - side	B	43	P-7052
66 - back end	B	44	P-7129
71B, C, D - side	B	45	P-7051
71 - back end	B	35	P-6680

F (MUSTANG)

Side - except Shelby	F	8	P-7103
Back end - except Shelby	F	9	P-7102
Side - Shelby GT350/500	F	7	P-6923
Back end - Shelby GT350/500	F	6	P-6922-B
65E - vinyl roof moulding	F	10	P-7383

P (MAVERICK)

62 - side	P	1	P-6839
62 - back end	P	2	P-6838

S (THUNDERBIRD)

Side	S	8	P-7069
Back end	S	9	P-7070
Side - body protection	S	10	P-7655

U (BRONCO)

97, 98	U	1	P-5548

X (FALCON) - BEFORE 1/2/70
FOR UNITS BUILT FROM 1/2/70 REFER TO B (FALCON)

54, 62 - side	X	20	P-6559
71 - side	X	21	P-6560
54, 62 - back end	X	21	P-6682
71 - back end	X	22	P-6680

1971

A (FORD)

54D, 71D - side	A	52	P-7825
53H, K, 57H, K - side	A	53	P-7821
54F, 57F, 65F - side	A	54	P-7823
65H, F, 76H - side	A	55	P-7822
71B, F - side	A	56	P-7826
71H - side	A	57	P-7829
Side - body protection	A	58	P-7827
53, 54, 57, 65, 76 - back end	A	59	P-8170
71B, D, F - back end	A	60	P-7828
71H - back end	A	60	P-7830

B (TORINO)

54A, C, 57C - side	B	46	P-7791
57E, 65E - side	B	47	P-7792
63C, 65A, C - side	B	48	P-7790
63F, H, 76F - side	B	49	P-7789
66A, B - side	B	50	P-7797
66C - side	B	51	P-7798
71C, D - side	B	52	P-7795
Side - body protection	B	53	P-7794
63F, H, 76F - back end	B	54	P-8313
54, 57, 63C, 65 - back end	B	54	P-8312
66 - back end	B	44	P-7129
66E, 71E - side	B	43	P-7052
71 - back end	B	35	P-6680
66-Tonneau cover	B	55	P-8335
65C - roof cover mouldings	500	15	P-8529

F (MUSTANG)

63D, 65, 76 - side	F	11	P-7859
63R - side	F	12	P-7860
63D - back end	F	14	P-7895
63R - back end	F	13	P-7862
65F, 76D - back end	F	13	P-7861
Spoiler - rear deck	F	10	P-8112

L (PINTO)

62 - side	L	1	P-7844
62 - back end	L	2	P-7845

P (MAVERICK)

54 - side	P	3	P-7840
62 - side	P	1	P-6839
62 - back end	P	2	P-6838

S (THUNDERBIRD)

Side	S	8	P-7069
Back end	S	9	P-7070
Side - body protection	S	10	P-7655

U (BRONCO)

97, 98	U	1	P-5548

COPYRIGHT © 1975 — FORD MOTOR COMPANY — DEARBORN, MICHIGAN

INDEX

EXTERIOR MOULDINGS - BACK and SIDE - continued

TITLE	SECTION	PAGE	ILLUS. NO.

1972

A (FORD)

54D,71D - side	A	52	P-7825
53H,K,57H,K - side	A	53	P-7821
54F,57F,65F,71F - side	A	63	P-8730
65H,K,76H - side	A	55	P-7822
71B - side	A	56	P-7826
71H - side	A	64	P-8726
Side - body protection	A	62	P-8729
53,54,57,65,76 - back end	A	61	P-8728
71B,D,F - back end	A	60	P-7828
71H - back end	A	65	P-8727

B (TORINO)

53 - side	B	56	P-8706
65 - side	B	58	P-8707
63 - side	B	57	P-8708
97D,R - side	B	61	P-8704
97K - side	B	62	P-8705
71B,D - side	B	59	P-8702
71K - side	B	60	P-8701
53,63,65 - back end	B	63	P-8703
97 - back end	B	64	P-8700
71 - back end	B	63	P-8692
97 - Tonneau cover	B	55	P-8335

F (MUSTANG)

63D,65,76 - side	F	11	P-7859
63R - side	F	12	P-7860
63D - back end	F	14	P-7895
63R - back end	F	13	P-7862
65F,76D - back end	F	13	P-7861
Spoiler - rear deck	F	10	P-8112

L (PINTO)

62,64 - side	L	1	P-7844
62,64 - back end	L	2	P-7845
73 - side (exc. Squire)	L	3	P-8910
73 - side (Squire)	L	4	P-8909
73 - back end	L	2	P-8911

P (MAVERICK)

54 - side (w/o luxury decor)	P	3	P-7840
62 - side (w/o luxury decor)	P	1	P-6839
62 - back end	P	2	P-6838
54 - side (w/luxury decor)	P	5	P-10011
62 - side (w/luxury decor)	P	4	P-10012

S (THUNDERBIRD)

Side	S	10	P-8721
Back end	S	11	P-8720

U (BRONCO)

97,98	U	1	P-5548

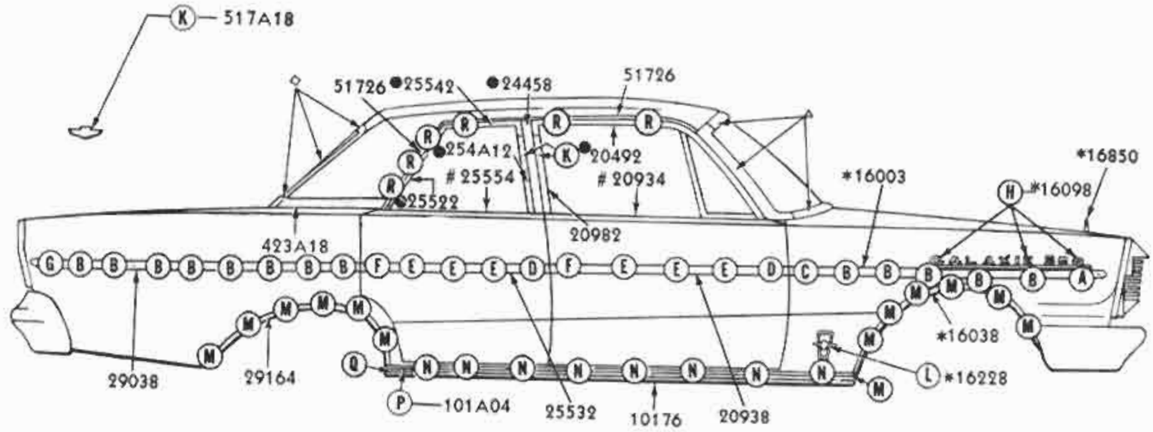

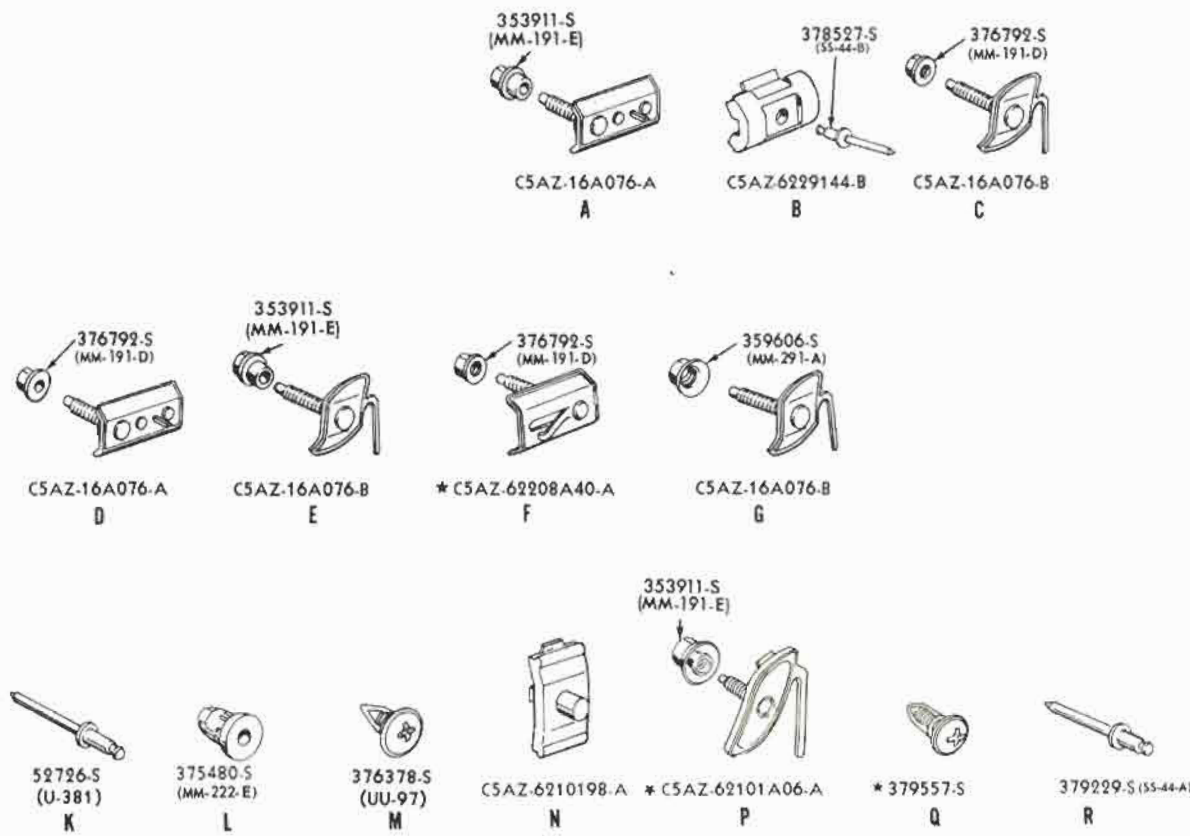

BODY TYPE 57B
● BODY TYPE 54A
▵ REFER TO BODY ILLUSTRATION SECTION 030
◇ REFER TO BODY ILLUSTRATION SECTION 400
* REFER TO GROUP IN CHASSIS SECTION

P-4656

COPYRIGHT © 1975 — FORD MOTOR COMPANY — DEARBORN, MICHIGAN

A EXTERIOR MOULDING ILLUSTRATION SECTION

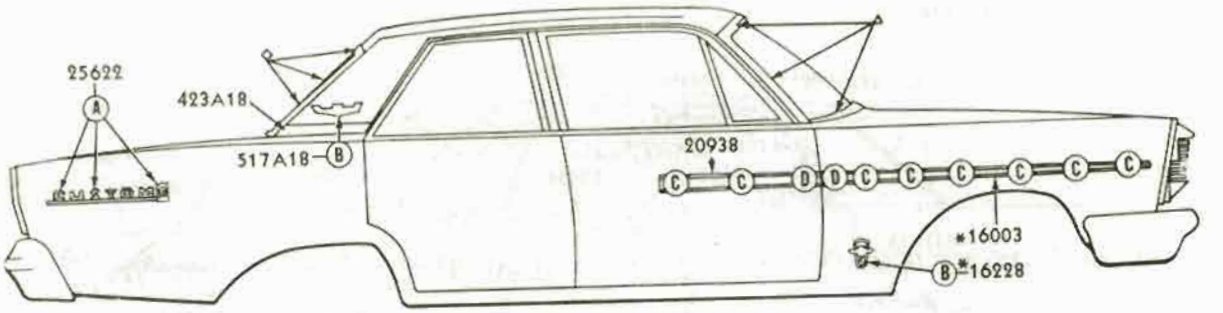

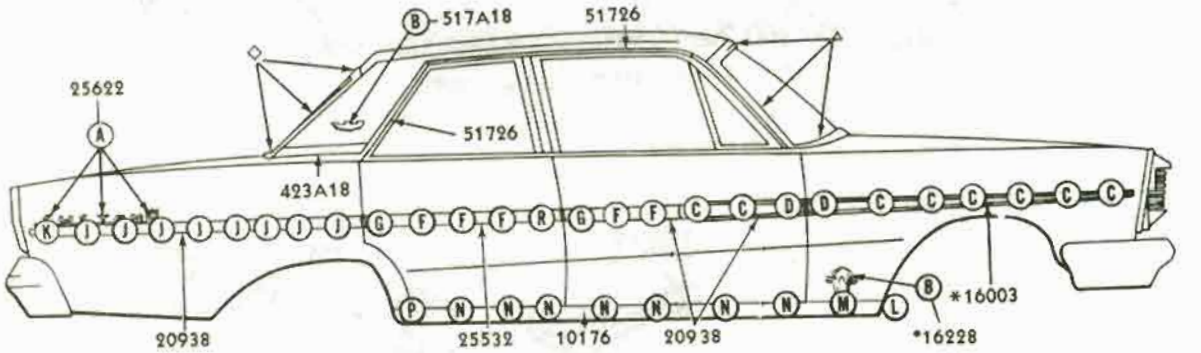

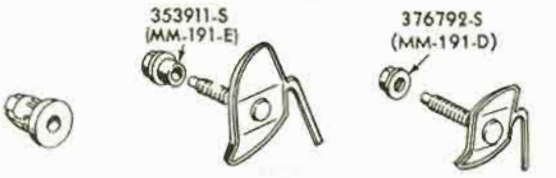

375480-S (MM-222-E) — B

*C5AZ-16A076-D — C

*C5AZ-16A076-B — D

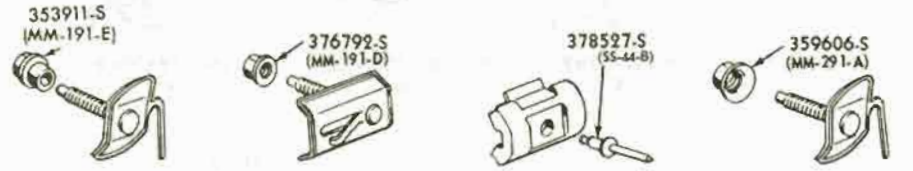

*C5AZ-16A076-B — F

*C5AZ-62208A40-A — G

C5AZ-6229144-B — J

*C5AZ-16A076-B — K

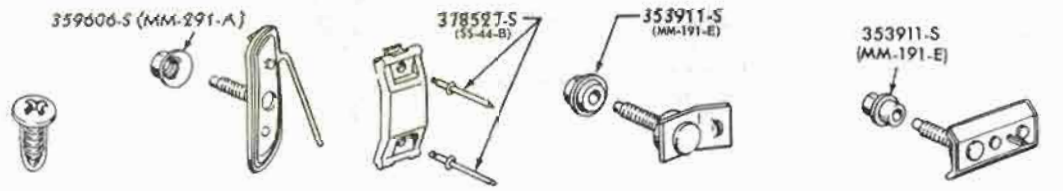

376378-S (UU-97) — L

C5AZ-6310198-A — M

C5AZ-6310182-A — N

*379405-S — P

*C5AZ-16A076-A — R

△ REFER TO BODY ILLUSTRATION SECTION 030
◇ REFER TO BODY ILLUSTRATION SECTION 400
• REFER TO GROUP IN CHASSIS SECTION

P-4657

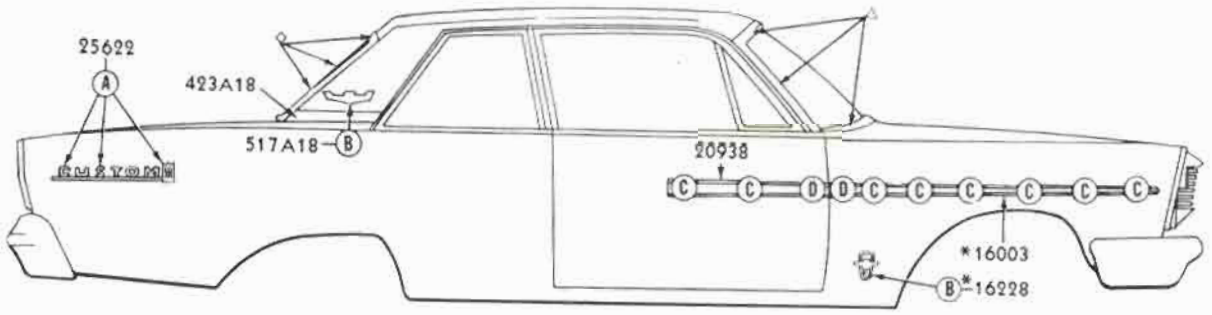

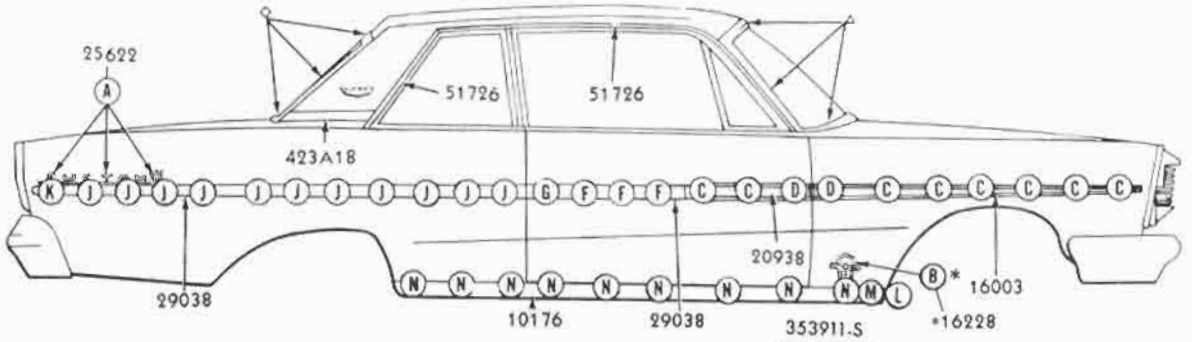

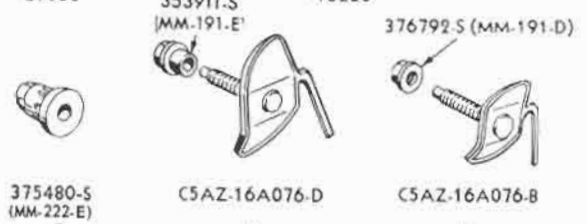

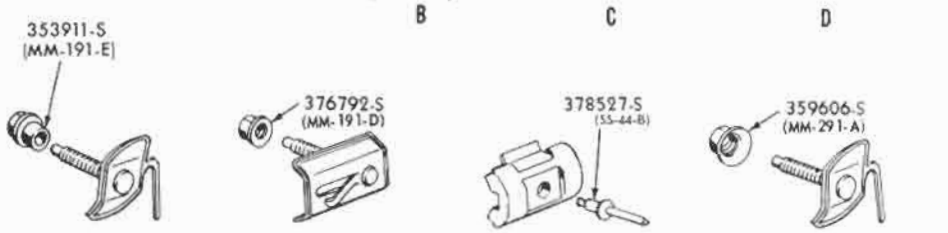

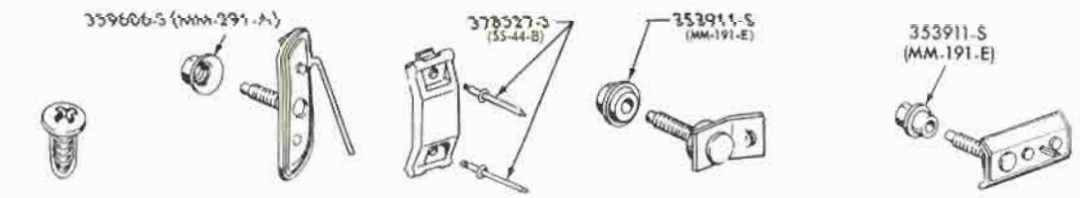

△ REFER TO BODY ILLUSTRATION SECTION 030
◇ REFER TO BODY ILLUSTRATION SECTION 400
* REFER TO GROUP IN CHASSIS SECTION

P-4658

COPYRIGHT © 1975 — FORD MOTOR COMPANY — DEARBORN, MICHIGAN

A EXTERIOR MOULDING ILLUSTRATION SECTION

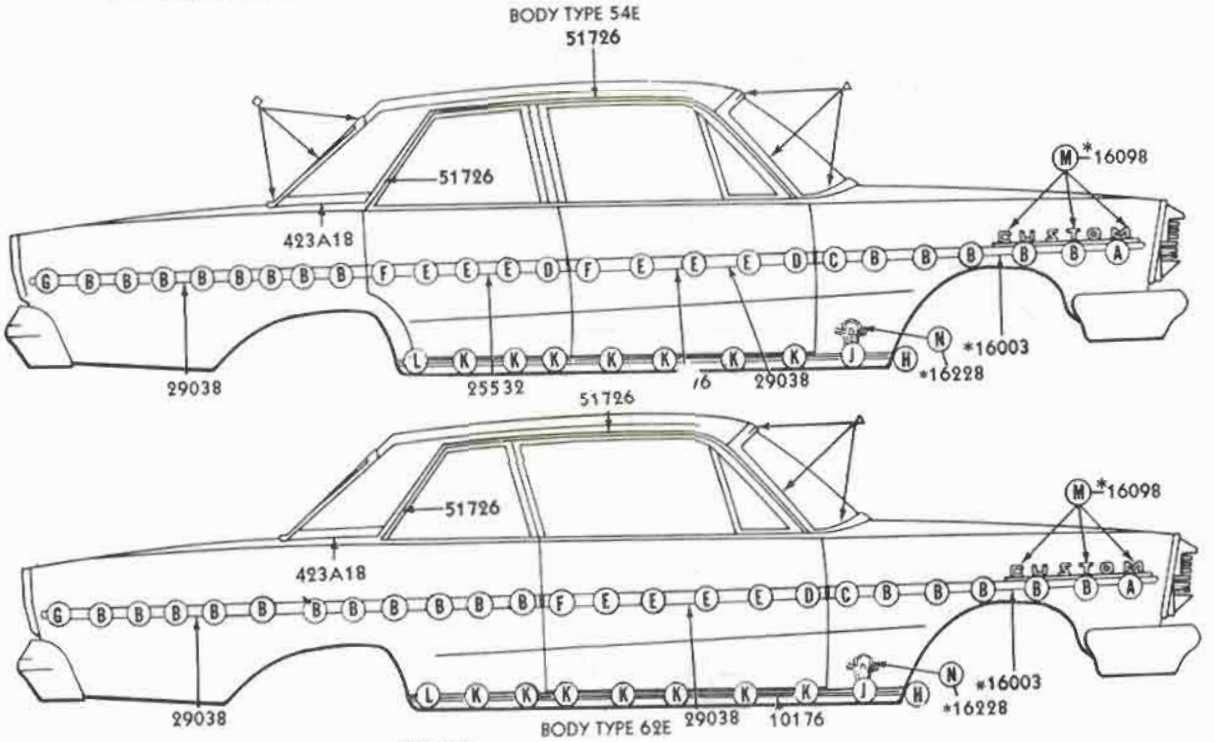

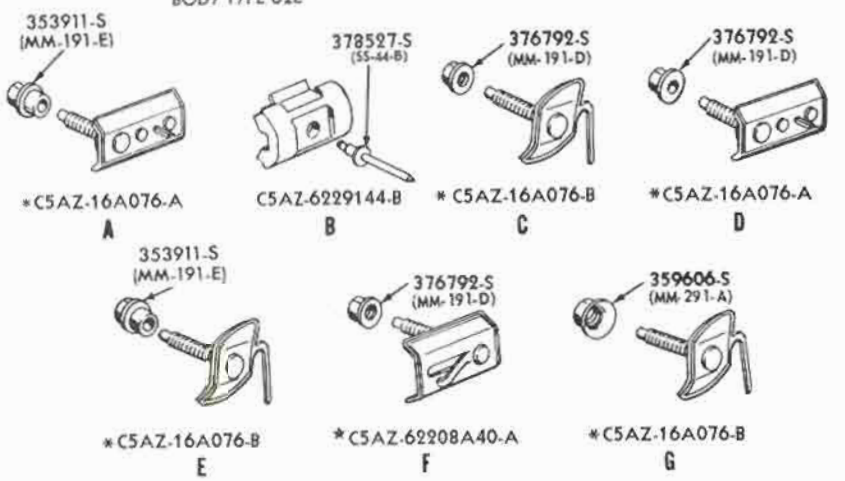

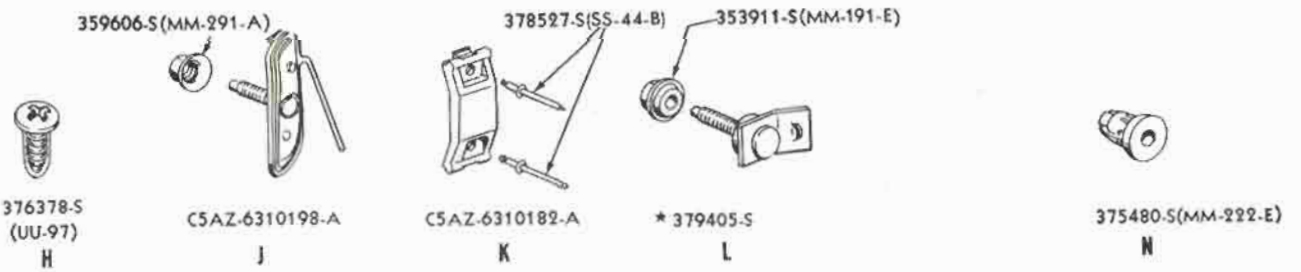

△ REFER TO BODY ILLUSTRATION SECTION 030
◇ REFER TO BODY ILLUSTRATION SECTION 400
* REFER TO GROUP IN CHASSIS SECTION

P-4660

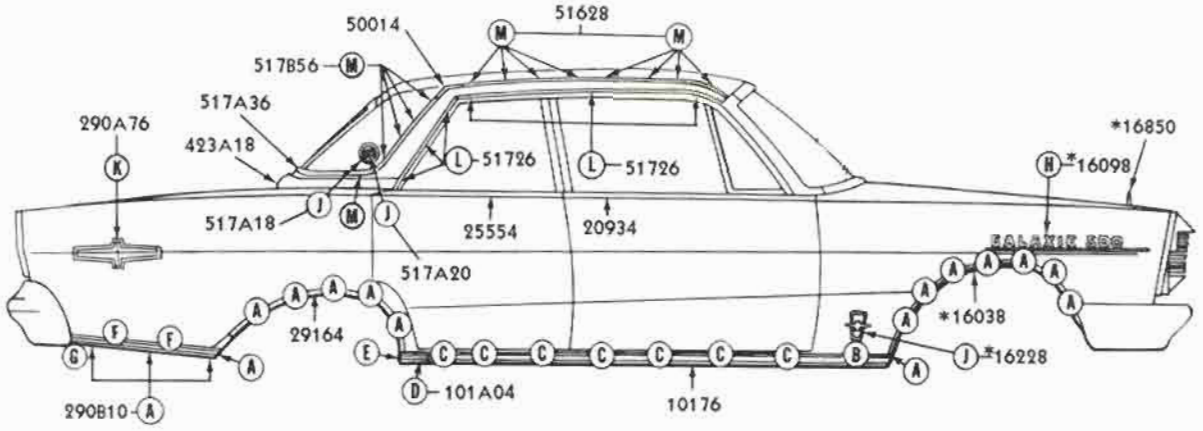

376378-S (UU-97) — A

C5AZ-6310198-A — B

C5AZ-6310182-A — C

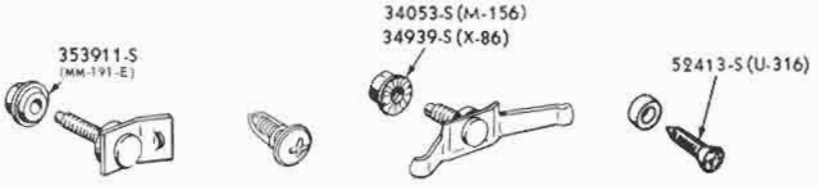

372708-S (BB-643-A) — D

* 379557-S — E

C5AZ-63291C10-A — F

C1VB-57102A78-A — G

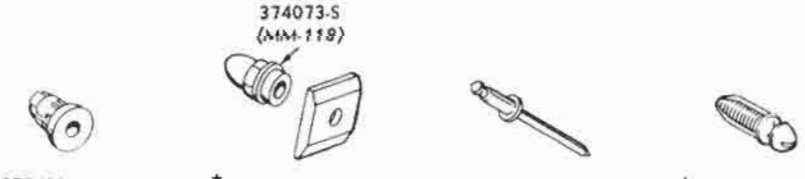

375480-S (MM-222-E) — J

* C4DB-16675-A — K

379229-S (SS-44-A) — L

* 377343-S — M

* REFER TO GROUP IN CHASSIS SECTION

P-4663

COPYRIGHT © 1975 — FORD MOTOR COMPANY — DEARBORN, MICHIGAN

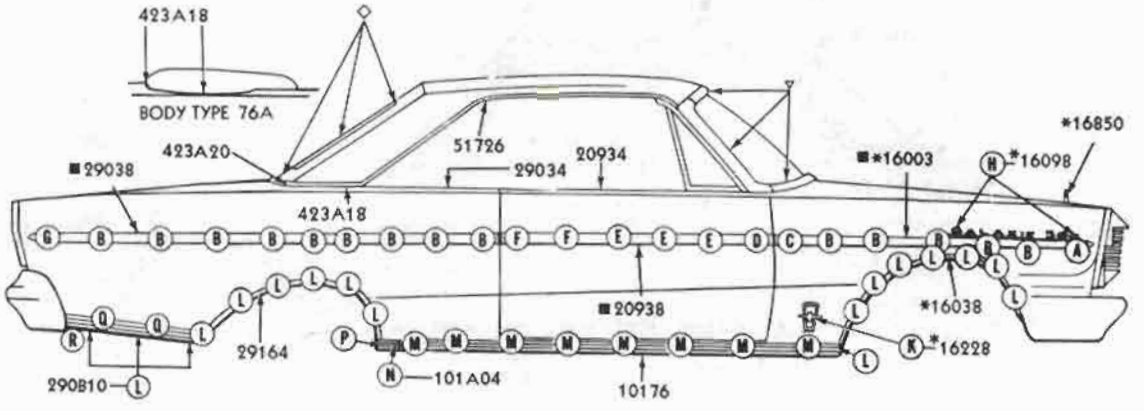

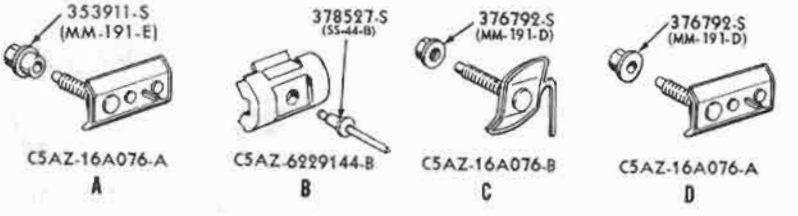

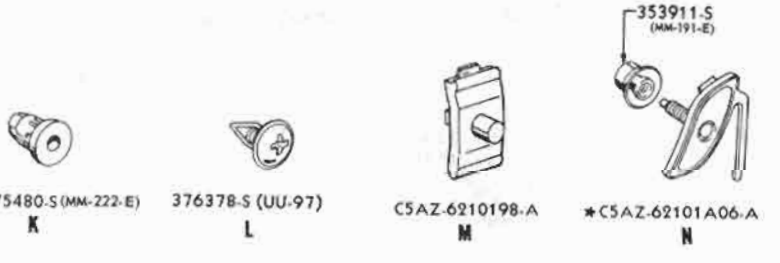

△ REFER TO BODY ILLUSTRATION SECTION 030
◇ REFER TO BODY ILLUSTRATION SECTION 400
*REFER TO GROUP IN CHASSIS SECTION
■BODY TYPE 63B

P-4669

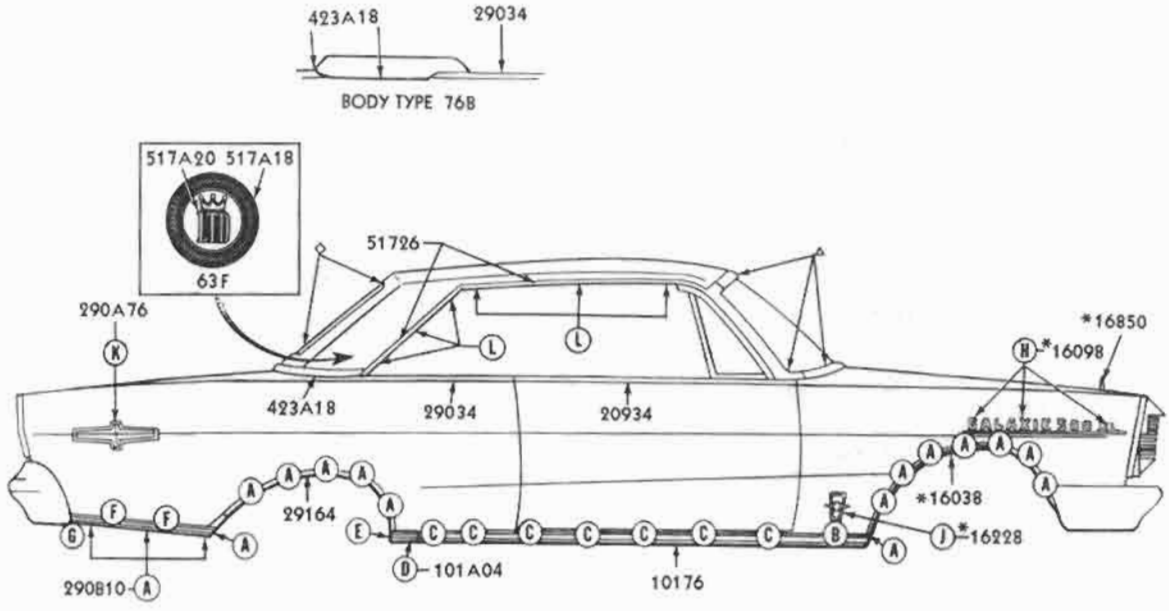

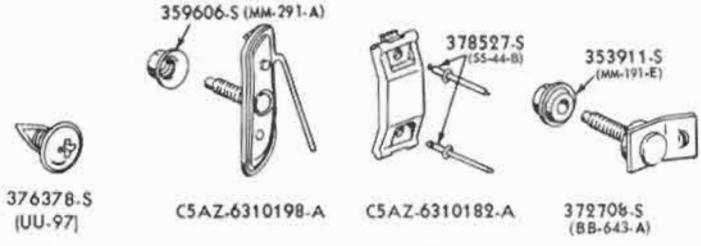

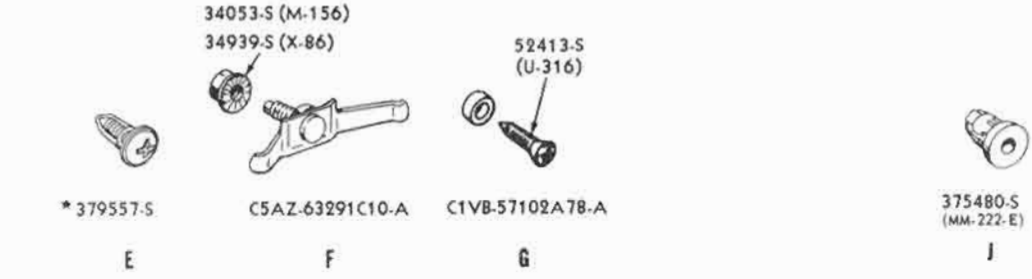

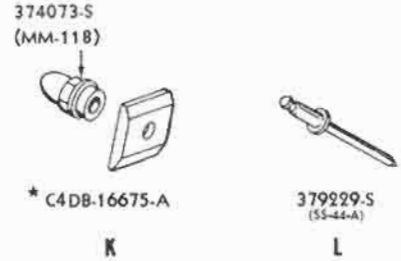

△ REFER TO BODY ILLUSTRATION SECTION 030
◇ REFER TO BODY ILLUSTRATION SECTION 400
* REFER TO GROUP IN CHASSIS SECTION

P-4670

1965 FORD - BODY TYPE 63C, F, 76B - TYPICAL

COPYRIGHT © 1975— FORD MOTOR COMPANY — DEARBORN, MICHIGAN

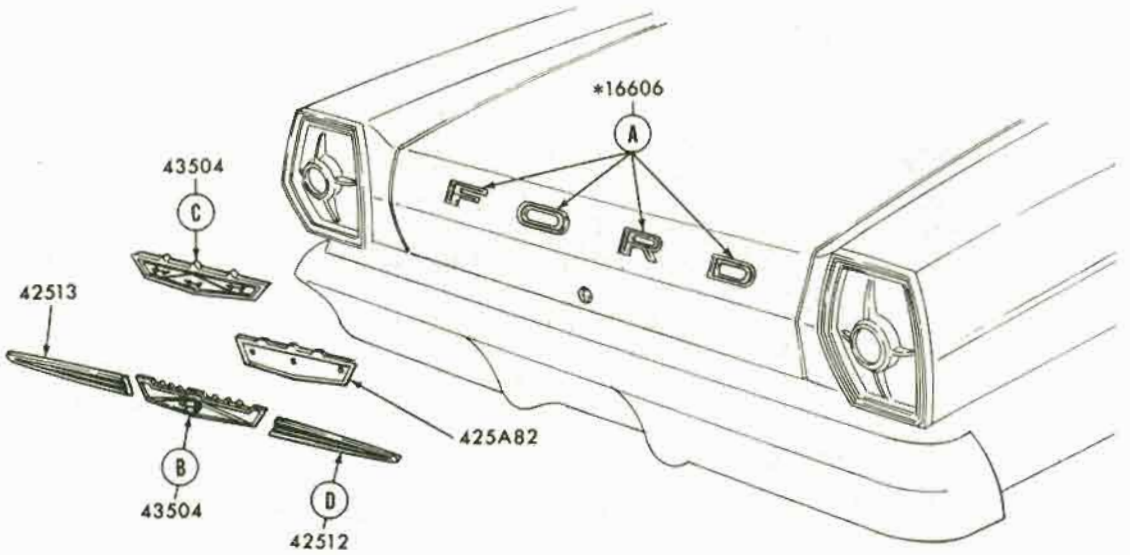

*REFER TO GROUP IN CHASSIS SECTION

P-6953

1965 FORD - BODY TYPES 54,57,62,63,76 - BACK END

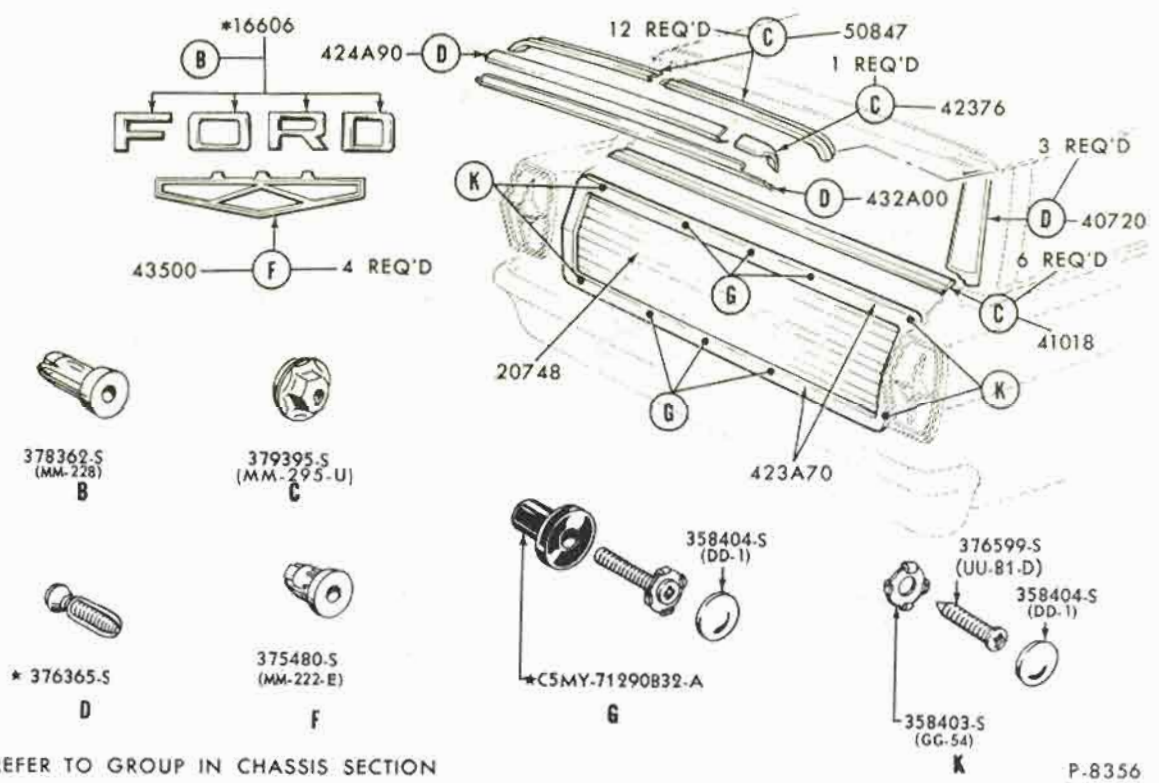

*REFER TO GROUP IN CHASSIS SECTION

P-8356

1965 FORD - BODY TYPE 71 - BACK END

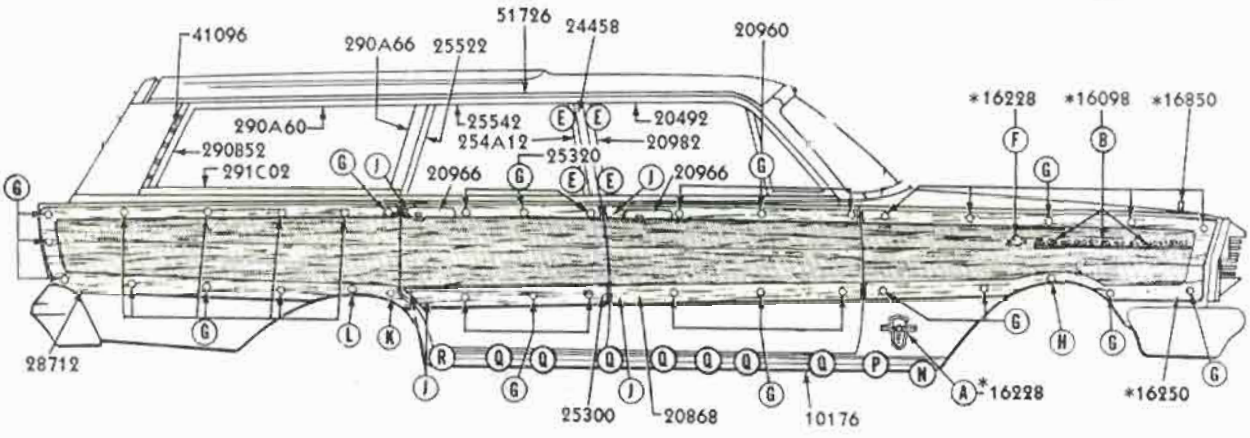

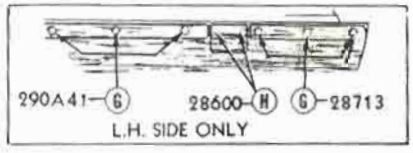

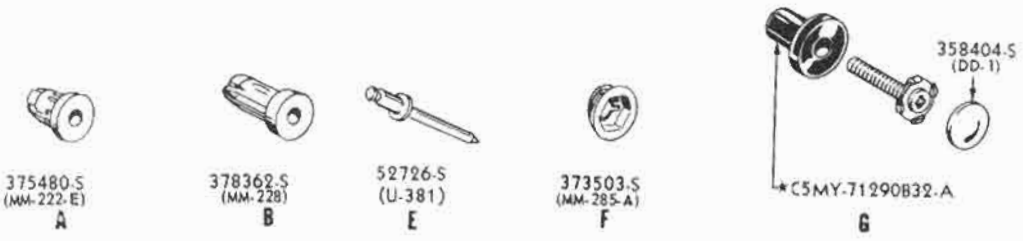

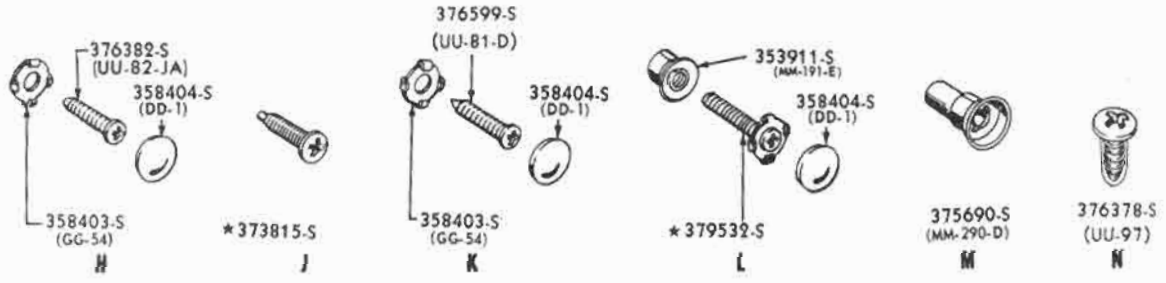

* REFER TO GROUP IN CHASSIS SECTION

WALNUT GRAIN TRANSFER C4AZ-7120748-B

COPYRIGHT © 1975 — FORD MOTOR COMPANY — DEARBORN, MICHIGAN

A EXTERIOR MOULDING ILLUSTRATION SECTION

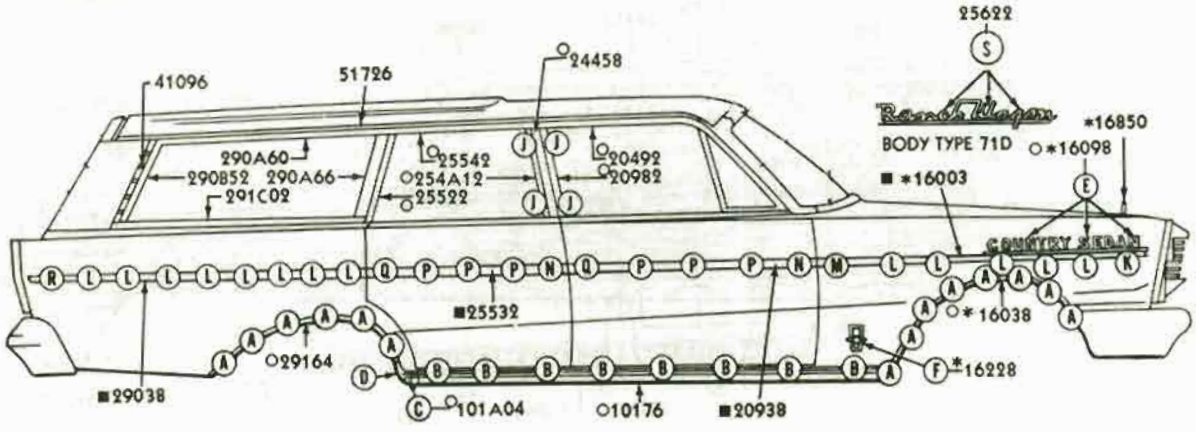

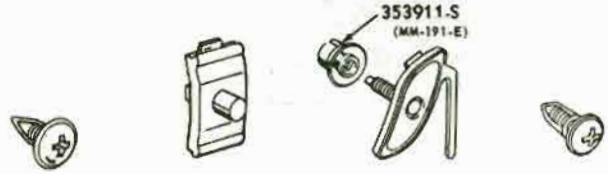

376378-S (UU-97) — A

C5AZ-6210198-A — B

*C5AZ-62101A06-A — C

*379557-S — D

378362-S (MM-228) — E

375480-S (MM-222-E) — F

379395-S (MM-295-U) — G

*376365-S — H

52726-S (U-381) — J

C5AZ-16A076-A — K

C5AZ-6229144-B — L

C5AZ-16A076-B — M

C5AZ-16A076-A — N

C5AZ-16A076-B — P

*C5AZ-62208A40-A — Q

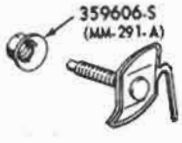

C5AZ-16A076-B — R

375890-S (MM-222-A) — S

* REFER TO CHASSIS SECTION

■ BODY TYPE 71B,C
○ BODY TYPE 71B,C

P-4749

EXTERIOR MOULDING ILLUSTRATION SECTION A

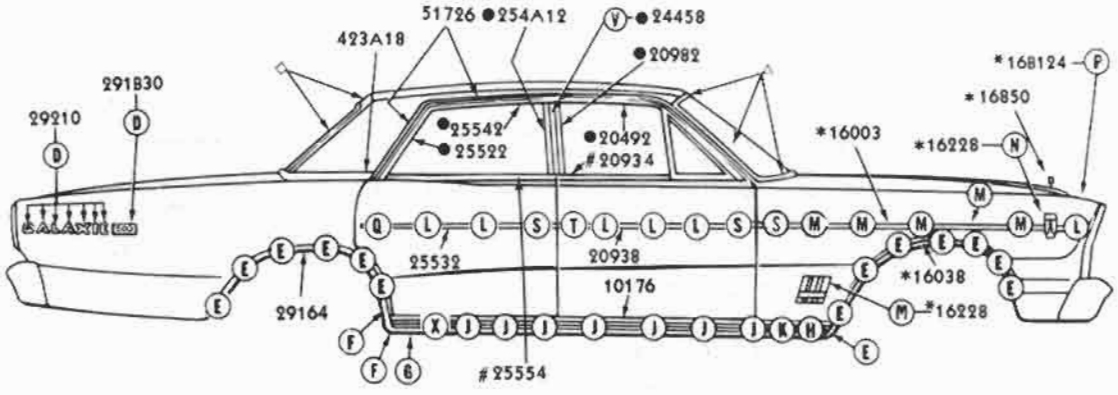

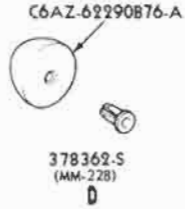

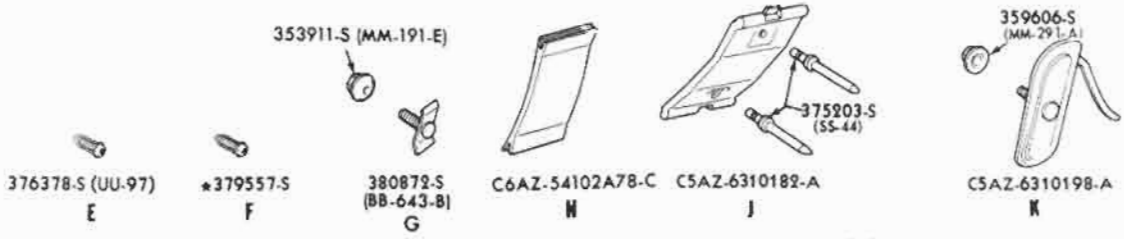

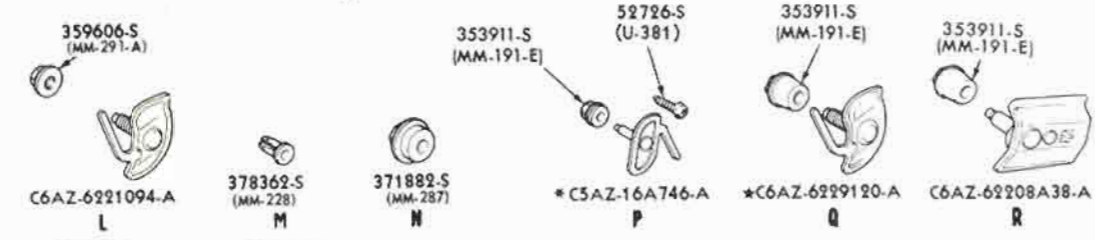

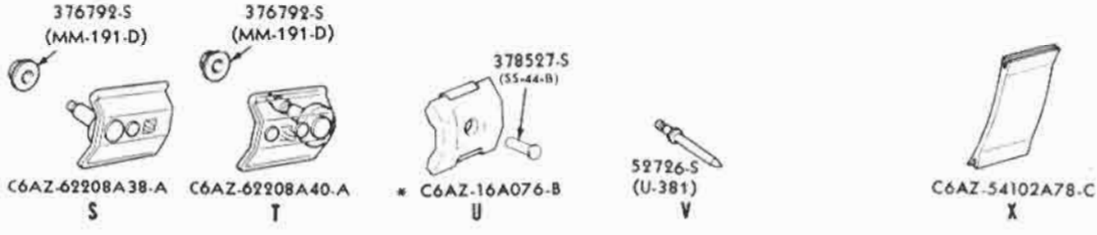

*REFER TO GROUP IN CHASSIS SECTION
△REFER TO BODY ILLUSTRATION SECTION 030
◊REFER TO BODY ILLUSTRATION SECTION 400
●BODY TYPE 54A
#BODY TYPE 57B

P-5038

May, 1975 COPYRIGHT © 1975 — FORD MOTOR COMPANY — DEARBORN, MICHIGAN FINAL ISSUE

A EXTERIOR MOULDING ILLUSTRATION SECTION

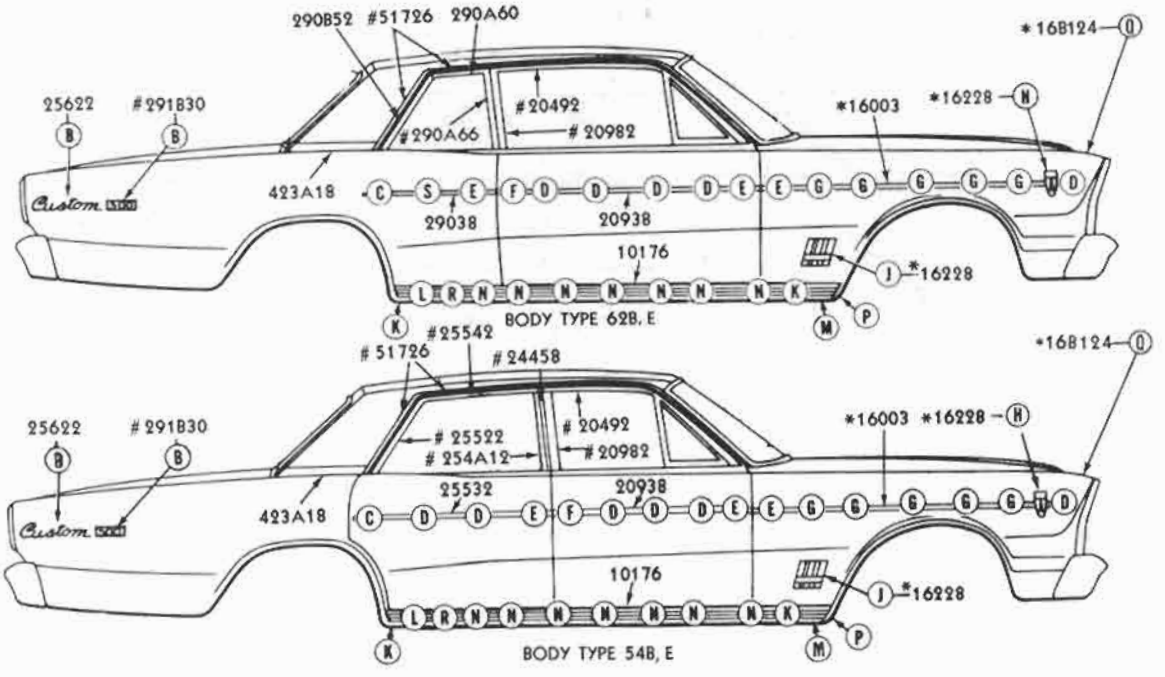

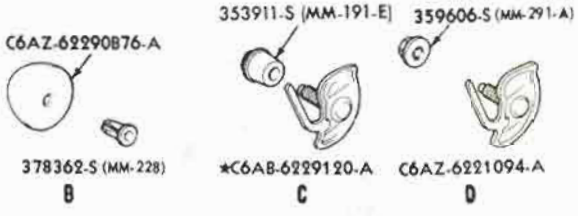

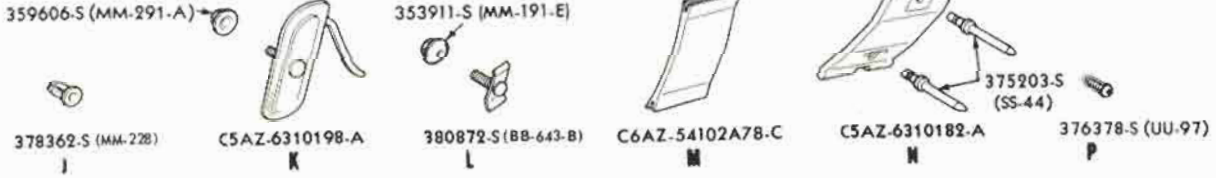

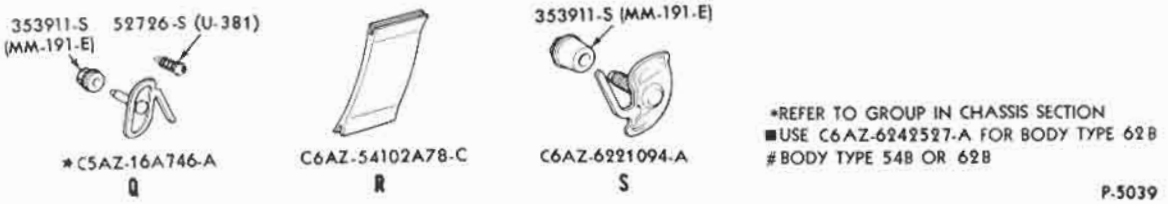

*REFER TO GROUP IN CHASSIS SECTION
■USE C6AZ-6242527-A FOR BODY TYPE 62B
BODY TYPE 54B OR 62B

P-5039

EXTERIOR MOULDING ILLUSTRATION SECTION A

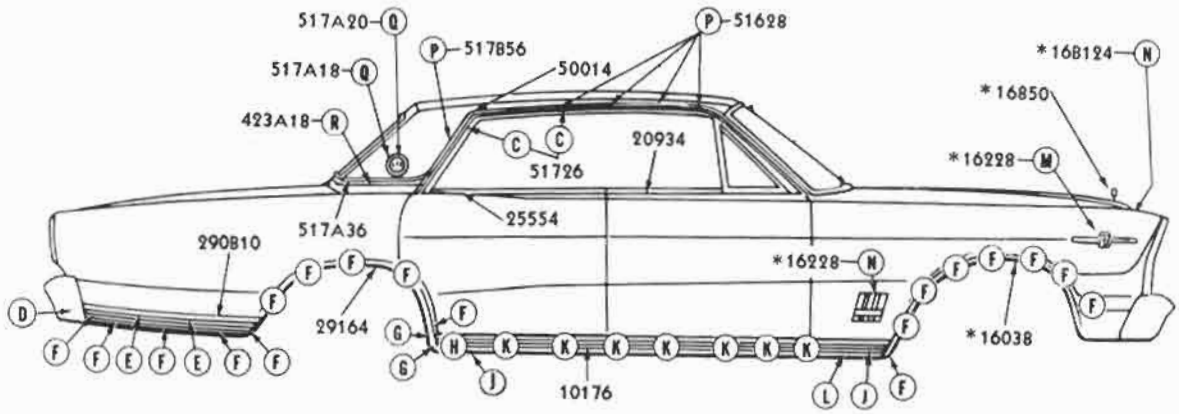

379229-S (SS-44-A)
C

C1VB57102A78-A

52413-S (U-316)
D

353911-S (MM-191-E)

C6AZ-63291C10-A
E

376378-S (UU-97)
F

*379557-S
G

353911-S (MM-191-E)

380872-S (BB-643-B)
H

C6AZ-54102A78-C
J

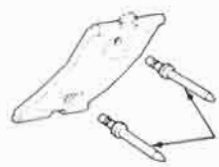

375203-S (SS-44)

C5AZ-6310182-A
K

359606-S (MM-291-A)

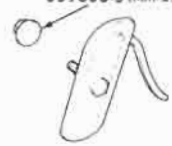

C5AZ-6310198-A
L

353911-S (MM-191-E)

52726-S (U-381)

371882-S (MM-287)
M

C5AZ-16A746-A
N

380356-S (HH-17-H)
P

375480-S (MM-222-E)
Q

*358610-S
R

*REFER TO GROUP IN CHASSIS SECTION

P-5042

May, 1975 COPYRIGHT © 1975 — FORD MOTOR COMPANY — DEARBORN, MICHIGAN FINAL ISSUE

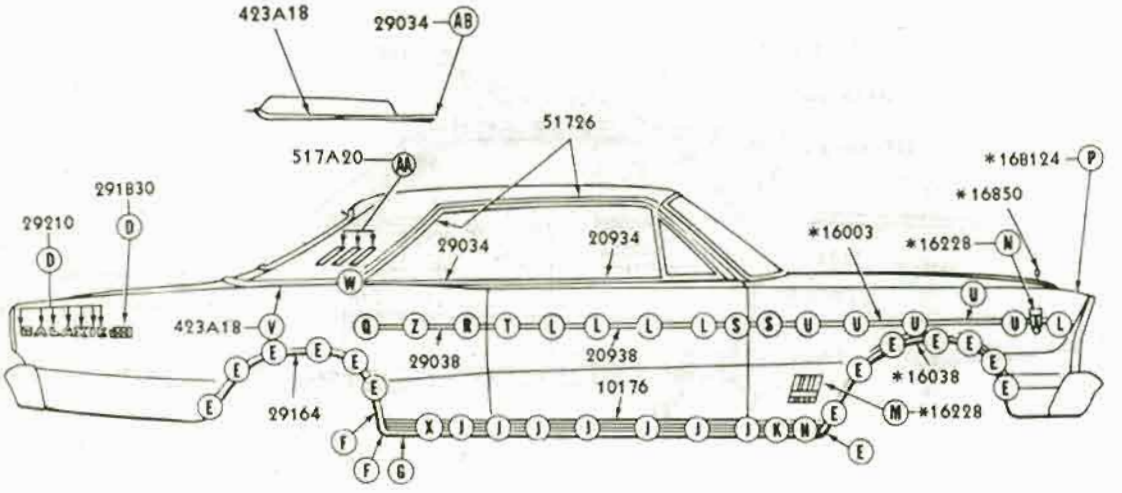
423A18
29034 AB
51726
517A20 AA
291B30
29210 D
29034
20934
*16003
*16228 N
*16850
*168124 P
423A18 V
29038
20938
10176
29164
*16038
*16228 M

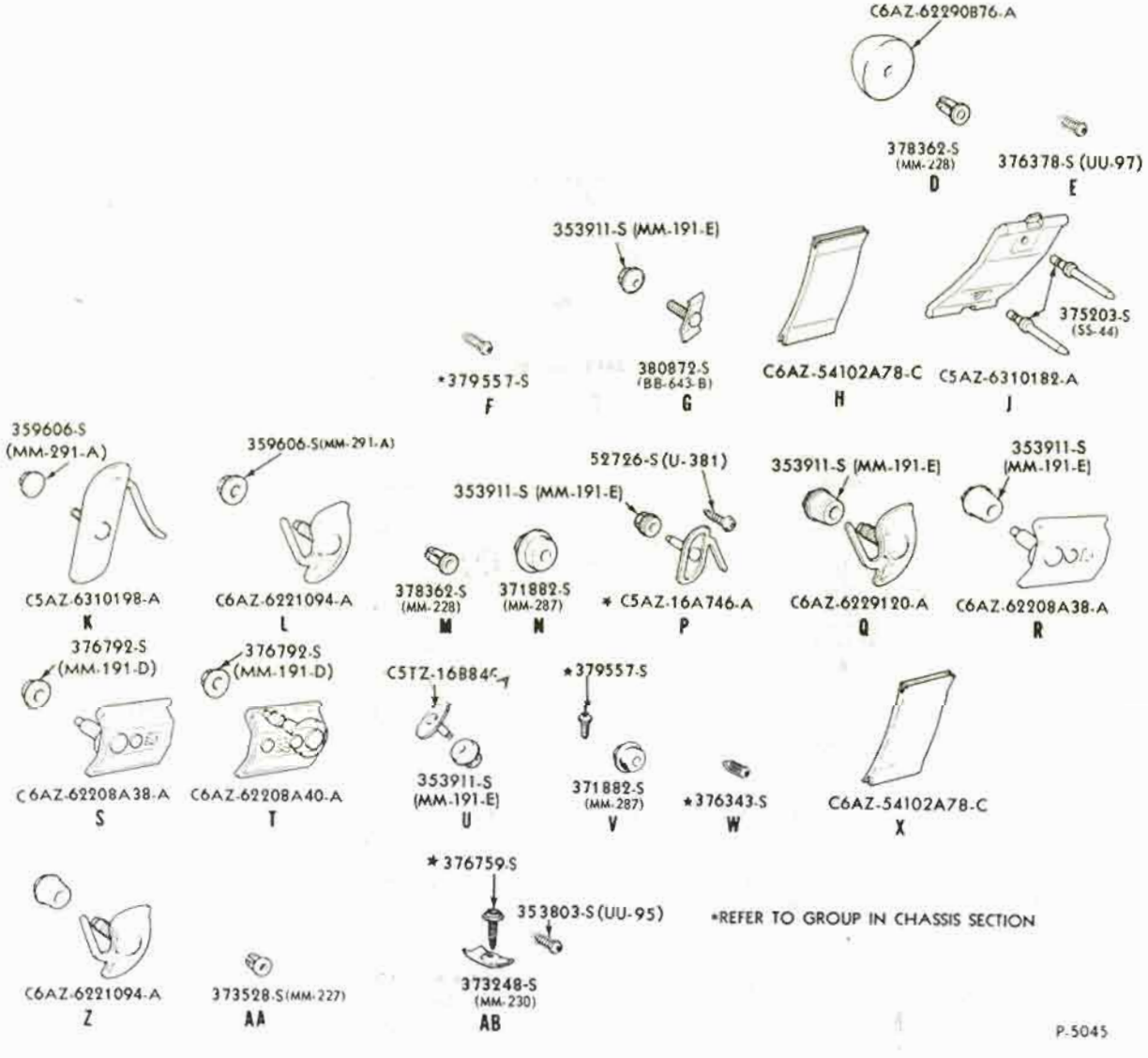
C6AZ-62290876-A
378362-S (MM-228) D
376378-S (UU-97) E
353911-S (MM-191-E)
375203-S (SS-44)
*379557-S F
380872-S (BB-643-B) G
C6AZ-54102A78-C H
C5AZ-6310182-A J
359606-S (MM-291-A)
359606-S (MM-291-A)
52726-S (U-381)
353911-S (MM-191-E)
353911-S (MM-191-E)
353911-S (MM-191-E)
C5AZ-6310198-A K
C6AZ-6221094-A L
378362-S (MM-228) M
371882-S (MM-287) N
* C5AZ-16A746-A P
C6AZ-6229120-A Q
C6AZ-62208A38-A R
376792-S (MM-191-D)
376792-S (MM-191-D)
C5TZ-16884C
*379557-S
C6AZ-62208A38-A S
C6AZ-62208A40-A T
353911-S (MM-191-E) U
371882-S (MM-287) V
*376343-S W
C6AZ-54102A78-C X
C6AZ-6221094-A Z
373528-S (MM-227) AA
*376759-S
353803-S (UU-95)
373248-S (MM-230) AB
*REFER TO GROUP IN CHASSIS SECTION
P-5045

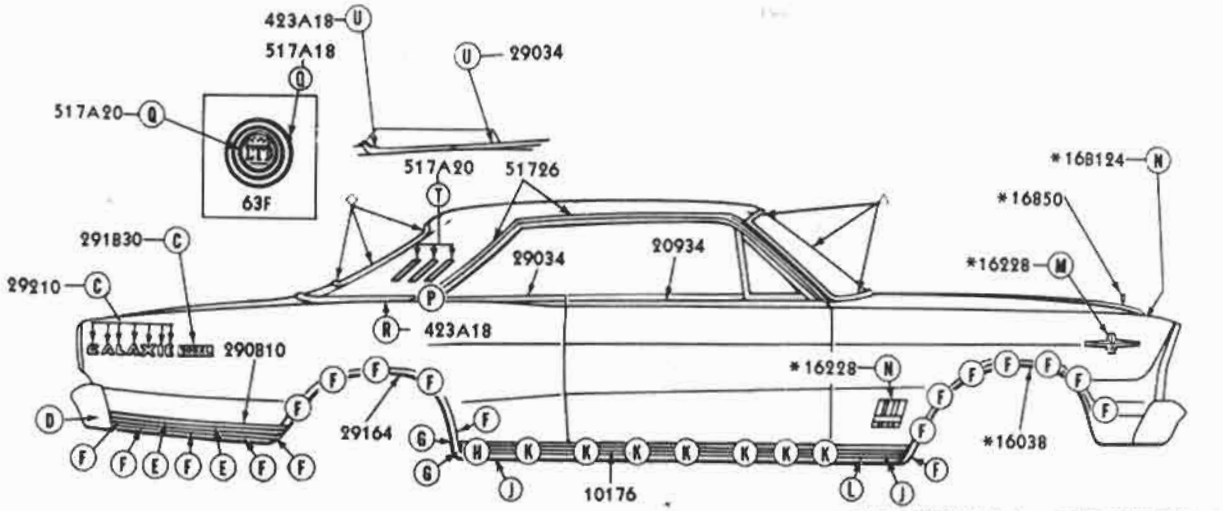

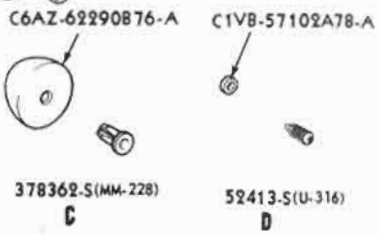

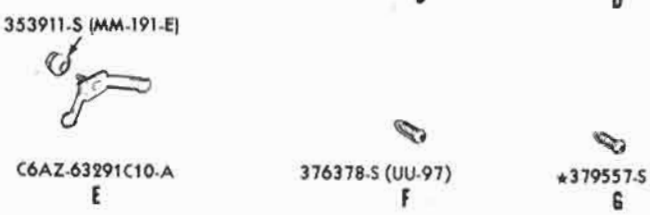

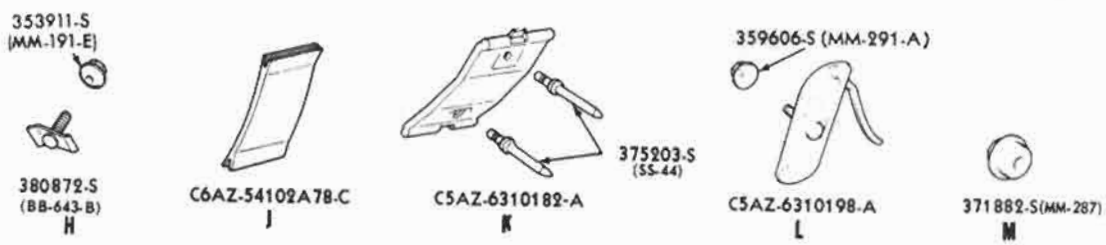

△REFER TO BODY ILLUSTRATION SECTION 030
◇REFER TO BODY ILLUSTRATION SECTION 400
*REFER TO GROUP IN CHASSIS SECTION

P.5046

May, 1975 COPYRIGHT © 1975 — FORD MOTOR COMPANY — DEARBORN, MICHIGAN FINAL ISSUE

A EXTERIOR MOULDING ILLUSTRATION SECTION

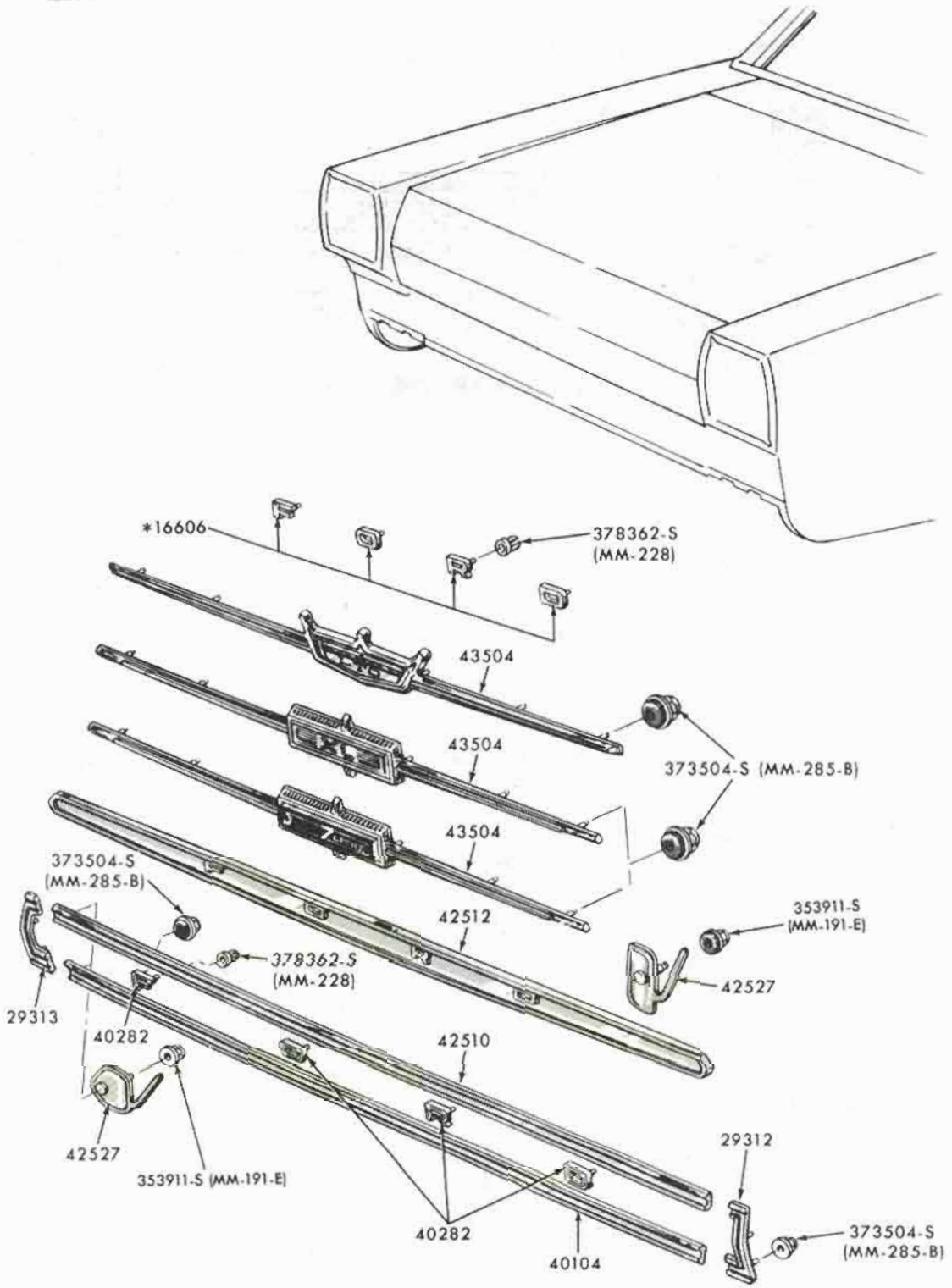

*REFER TO GROUP IN CHASSIS SECTION

P-5092

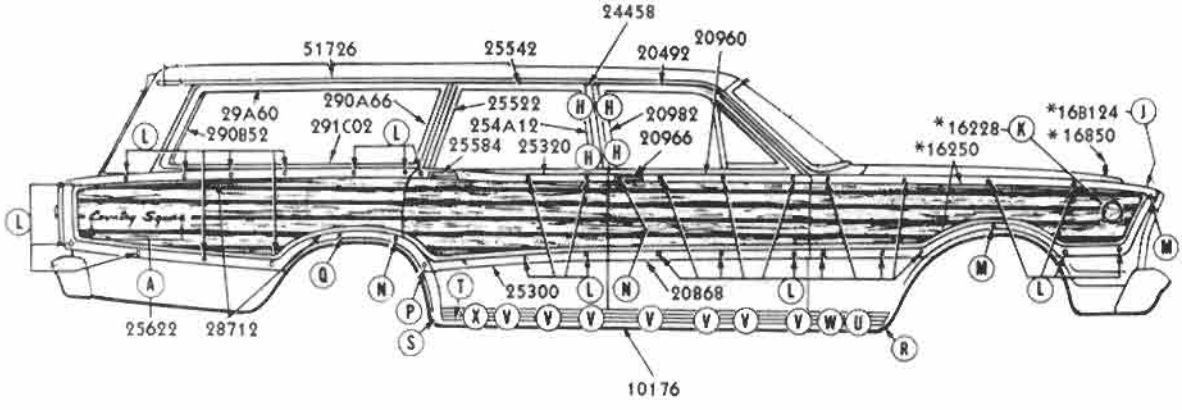

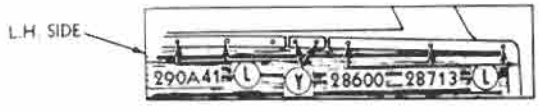

378362-S (MM-228)
A

52726-S (U-381)
H

353911-S (MM-191-E)
52726-S (U-381)
* C6AZ-16A746-A
J

371882-S (MM-287)
K

* C5MY-71290B32-A
*379755-S
358404-S (DD-1)
L

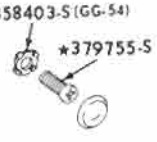

358403-S (GG-54)
*379755-S
358404-S (DD-1)
M

375964-S (MM-115-E)
N

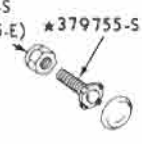

*379755-S
358404-S (DD-1)
P

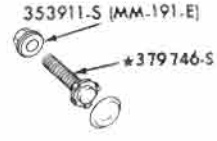

353911-S (MM-191-E)
*379746-S
358404-S (DD-1)
Q

353911-S (MM-191-E)
380872-S (BB-643-B)
T

376378-S (UU-97)
R

*379557-S
S

C6AZ-54102A78-C
U

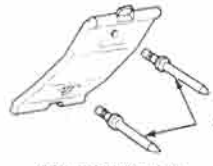

C5AZ-6310182-A
V

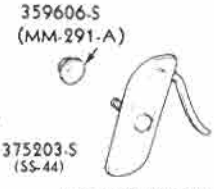

359606-S (MM-291-A)
375203-S (SS-44)
C5AZ-6310198-A
W

C6AZ-54102A78-C
X

375690-S (MM-290-D)
Y

*REFER TO GROUP IN CHASSIS SECTION

DARK WALNUT GRAIN TRANSFER WITH BLACK PLANKING LINES C6AZ-7120748-A

P-5047

COPYRIGHT © 1975 — FORD MOTOR COMPANY — DEARBORN, MICHIGAN

A EXTERIOR MOULDING ILLUSTRATION SECTION

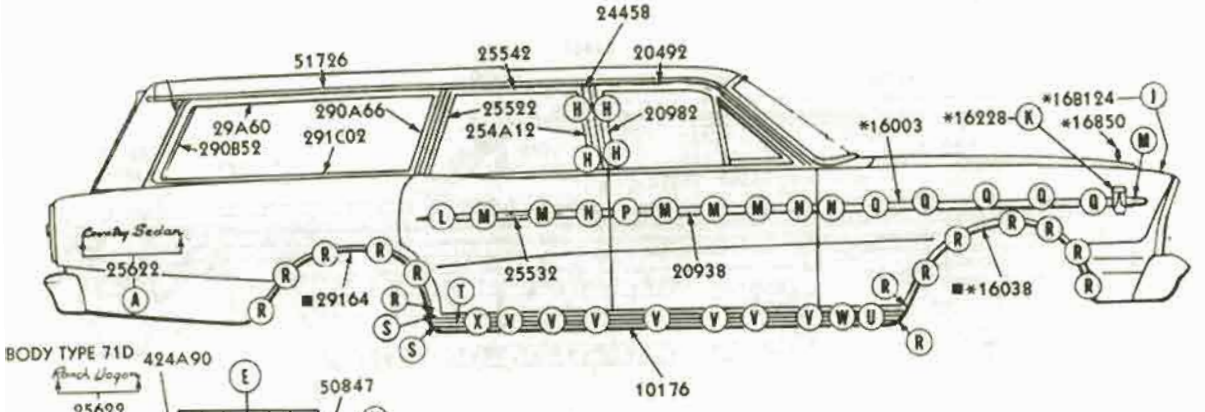

BODY TYPE 71D

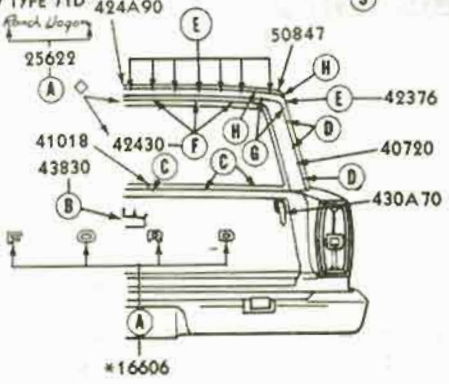

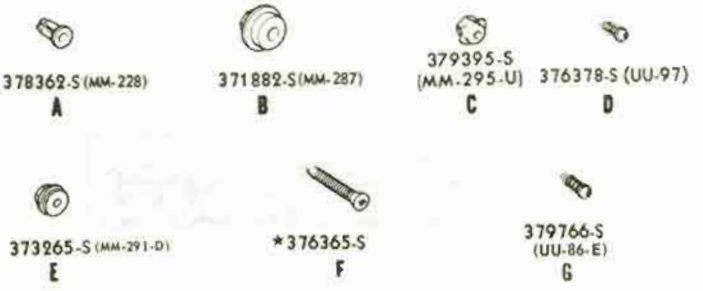

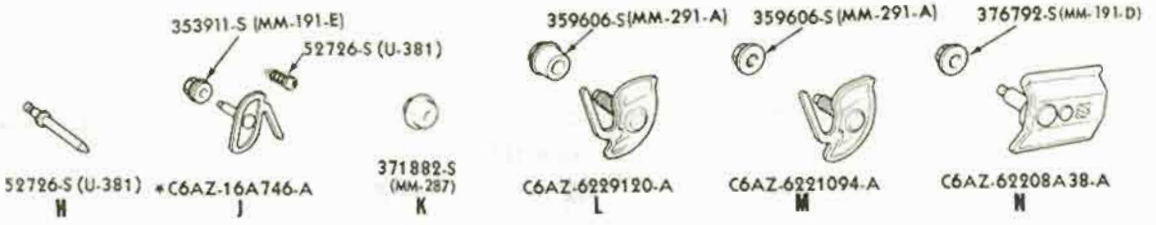

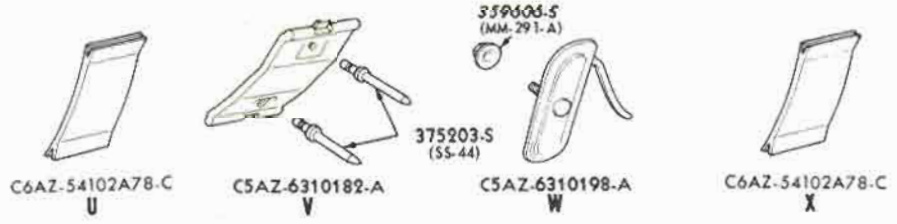

*REFER TO GROUP IN CHASSIS SECTION
■BODY TYPE 71B, C ONLY

P-5048

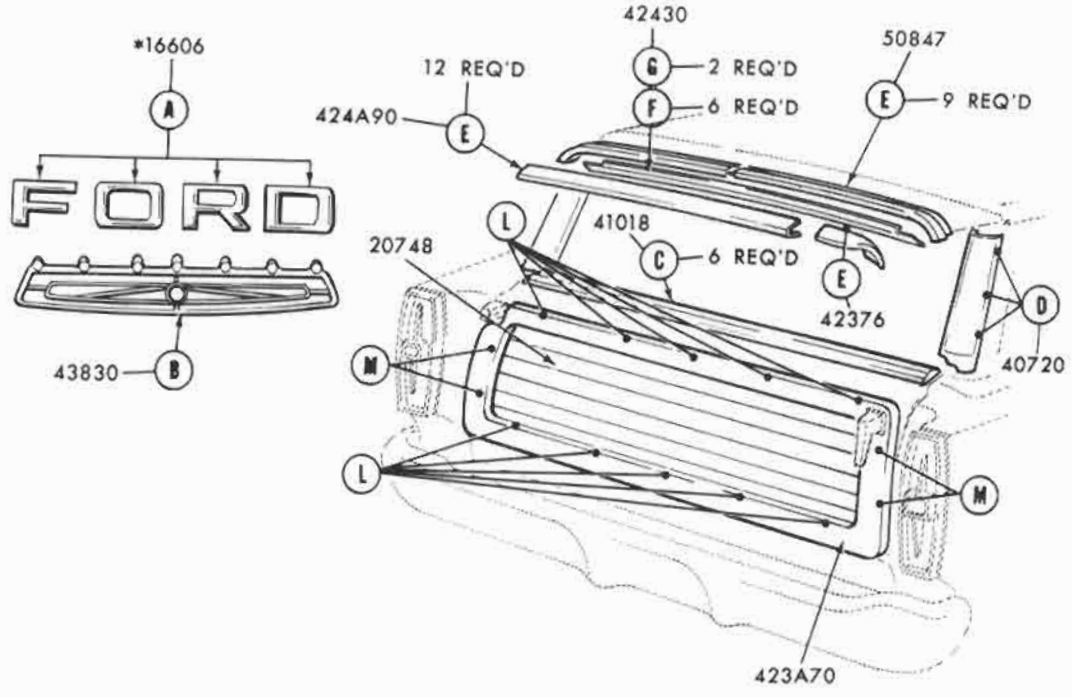

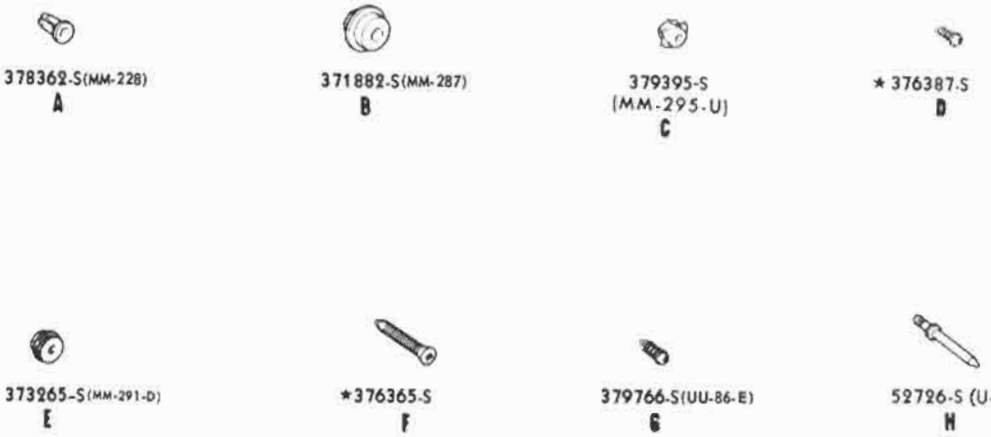

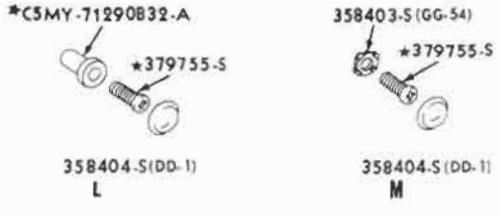

P-8355

May, 1975 COPYRIGHT © 1975 — FORD MOTOR COMPANY — DEARBORN, MICHIGAN FINAL ISSUE

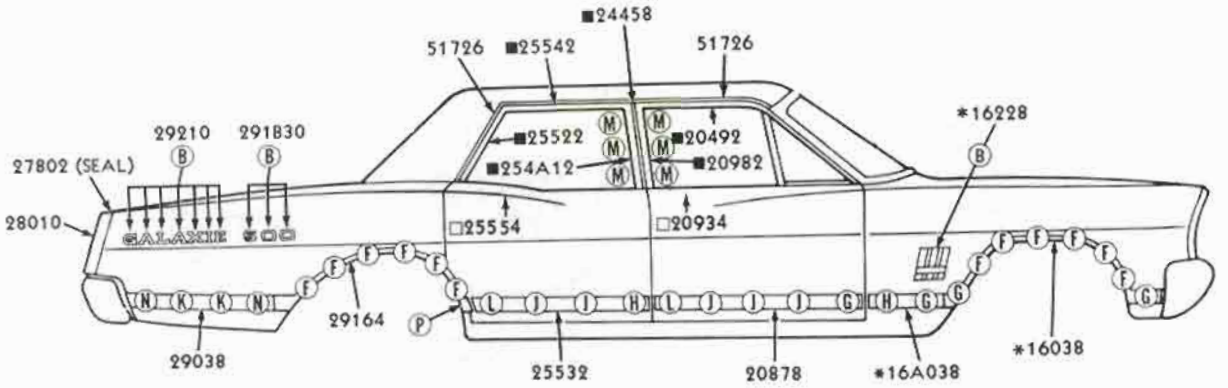

378362-S (MM-228)

B

381671-S (UU-89-C)

F

*C7AZ-16A076-E

G

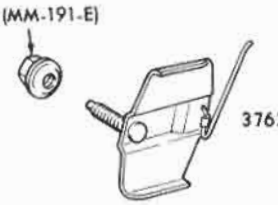

*C7AZ-16A076-B

H

C7AZ-6220818-A

J

C7AZ-5429074-A

K

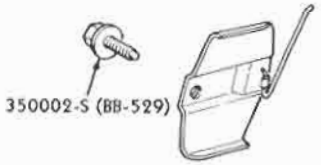

C7AZ-5421094-A

L

52726-S (U-381)

M

□BODY TYPE 57B

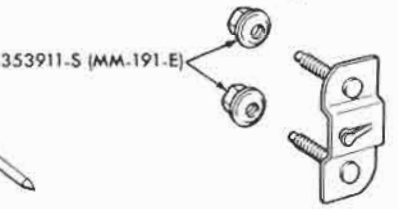

C7AZ-54290D00-A

N

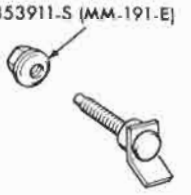

*353272-S

P

*REFER TO GROUP IN CHASSIS SECTION
■BODY TYPE 54A

P-5559

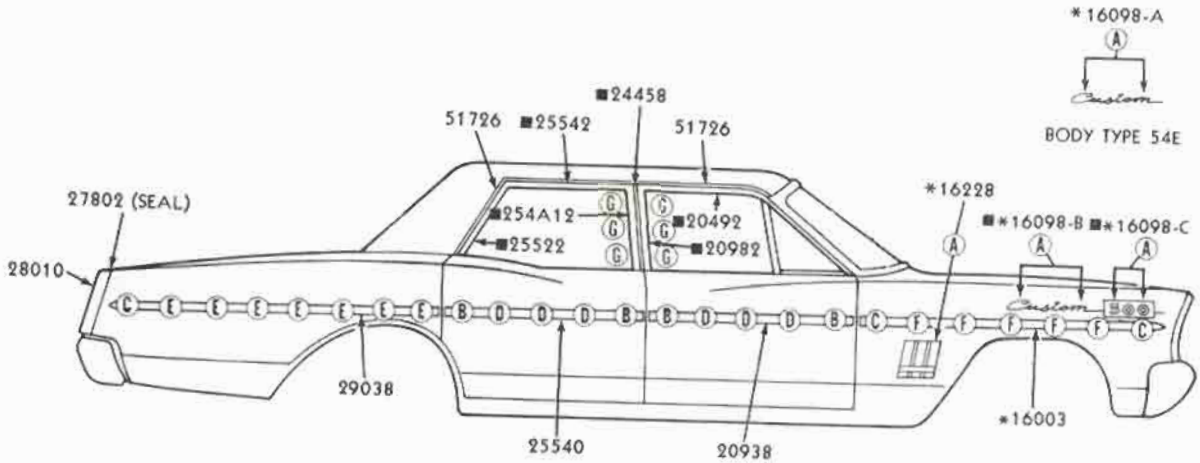

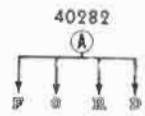

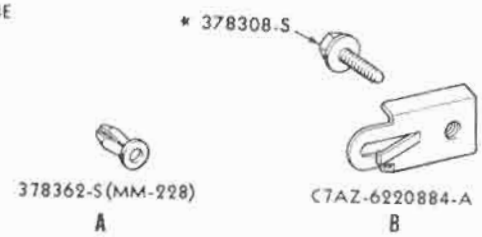

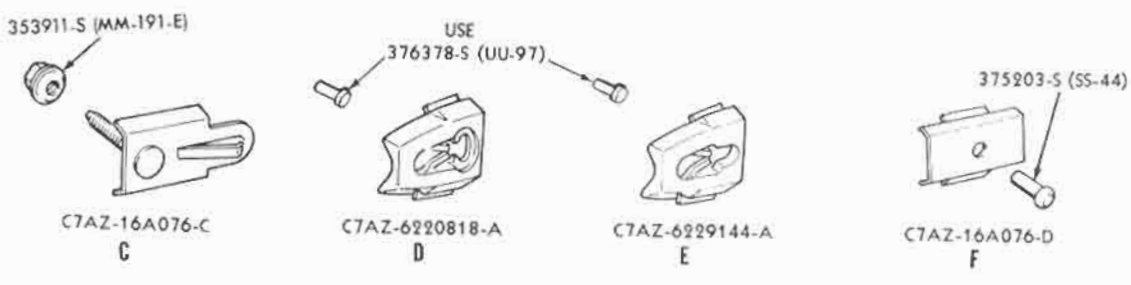

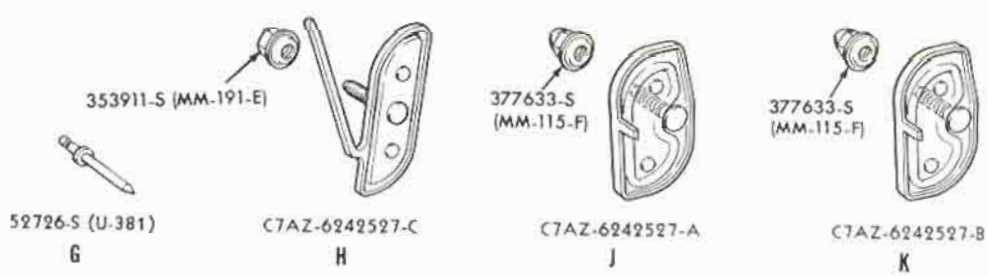

*REFER TO GROUP IN CHASSIS SECTION

P-5560

May, 1975 COPYRIGHT © 1975 — FORD MOTOR COMPANY — DEARBORN, MICHIGAN

A EXTERIOR MOULDING ILLUSTRATION SECTION

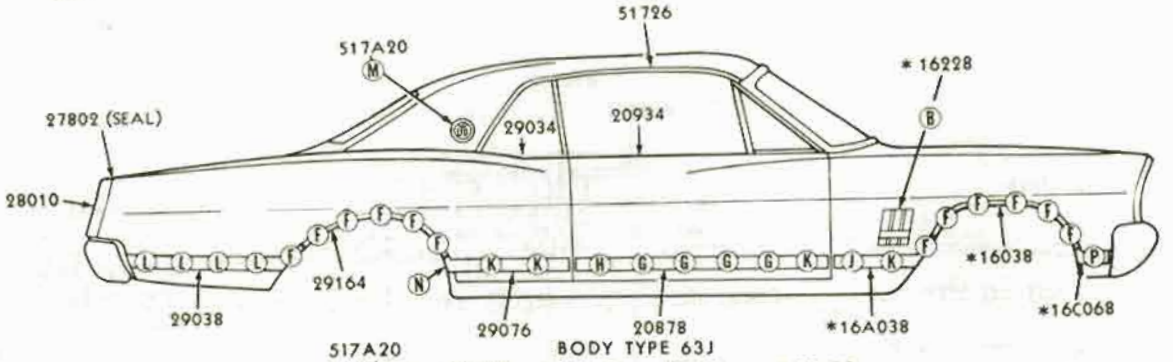

BODY TYPE 63J

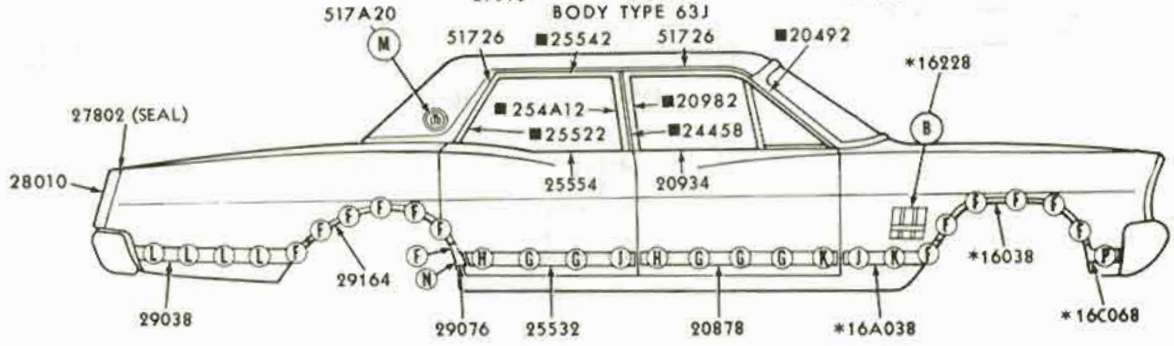

BODY TYPE 54C, 57F

378362-S (MM-228)
B

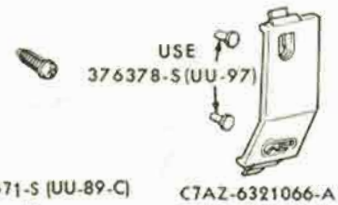

381671-S (UU-89-C)
F

C7AZ-6321066-A
G

C7AZ-6321094-A
H

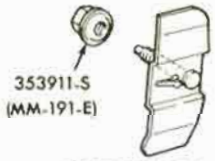

C7AZ-5725563-A
J

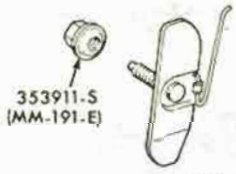

C7AZ-6329288-A
K

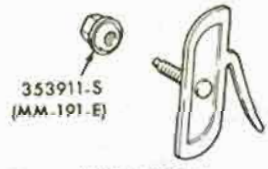

C7AZ-6329124-A
L

375480-S (MM-228-E)
M

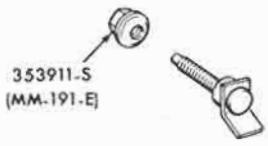

* 353272-S
N

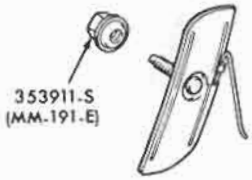

C7AZ-16A076-A
P

■BODY TYPE 54C

•REFER TO GROUP IN CHASSIS SECTION

P-5563

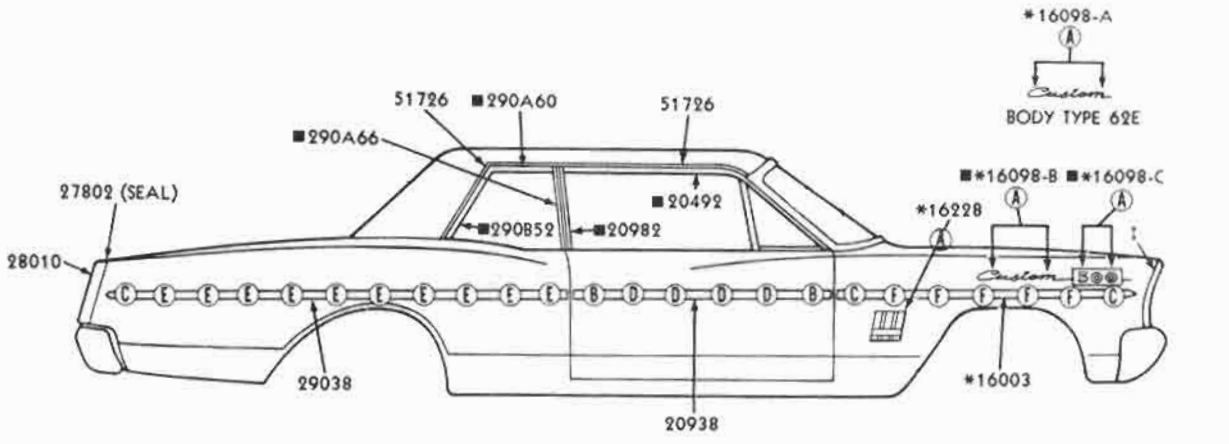

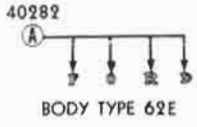

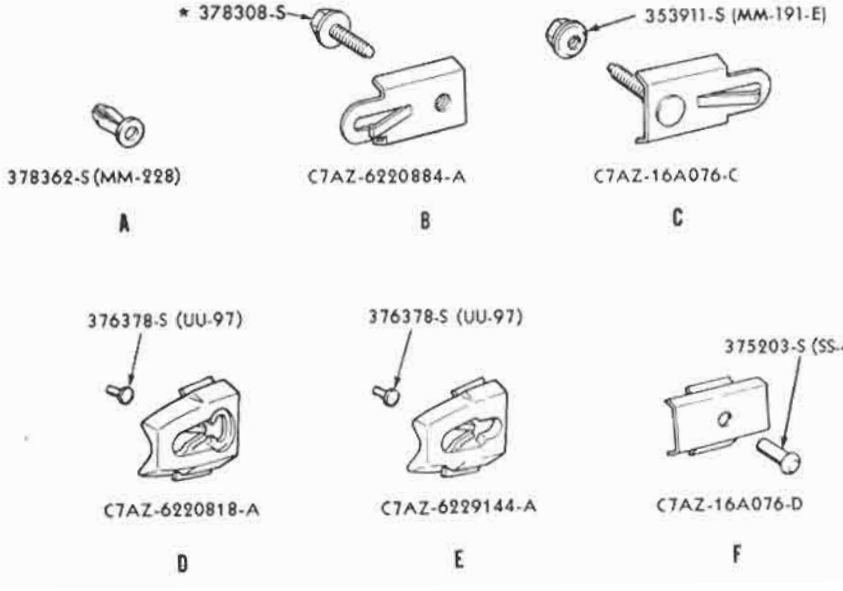

■BODY TYPE 62B

*REFER TO GROUP IN CHASSIS SECTION
‡REFER TO CHASSIS ILLUSTRATION SECTION

P-5564

COPYRIGHT © 1975 — FORD MOTOR COMPANY — DEARBORN, MICHIGAN

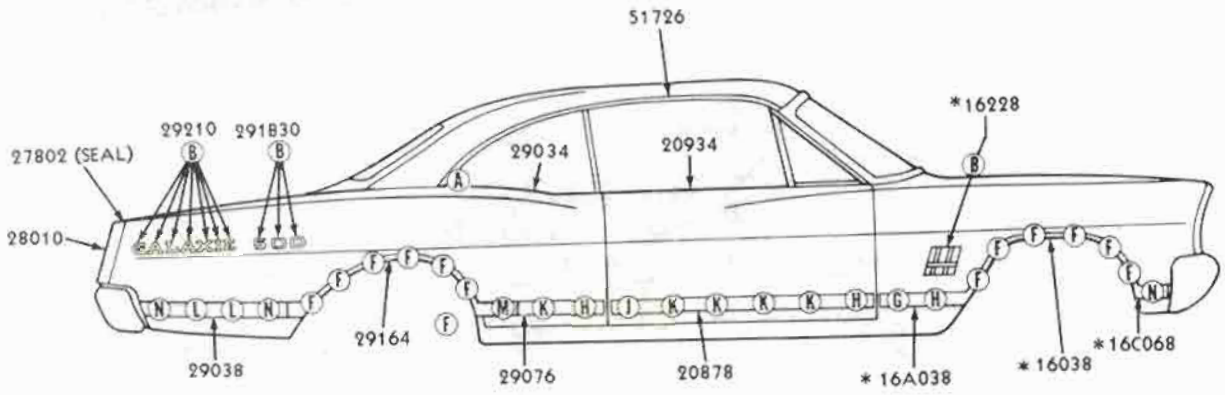

376378-S (UU-97)

A

378362-S (MM-228)

B

381671-S (UU-89-C)

F

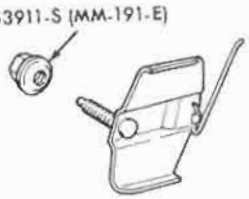

C7AZ-16A076-B

G

C7AZ-16A076-E

H

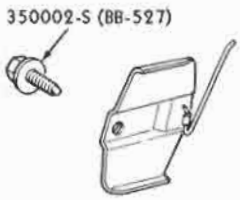

C7AZ-5421094-A

J

C7AZ-5420818-A

K

C7AZ-5429074-A

L

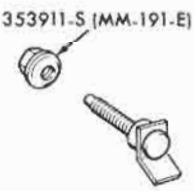

*353272-S

M

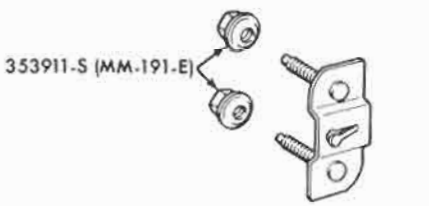

C7AZ-54290D00-A

N

• BODY TYPE 63B, 76A
* REFER TO GROUP IN CHASSIS SECTION
■ BODY TYPE 63C

P-5567

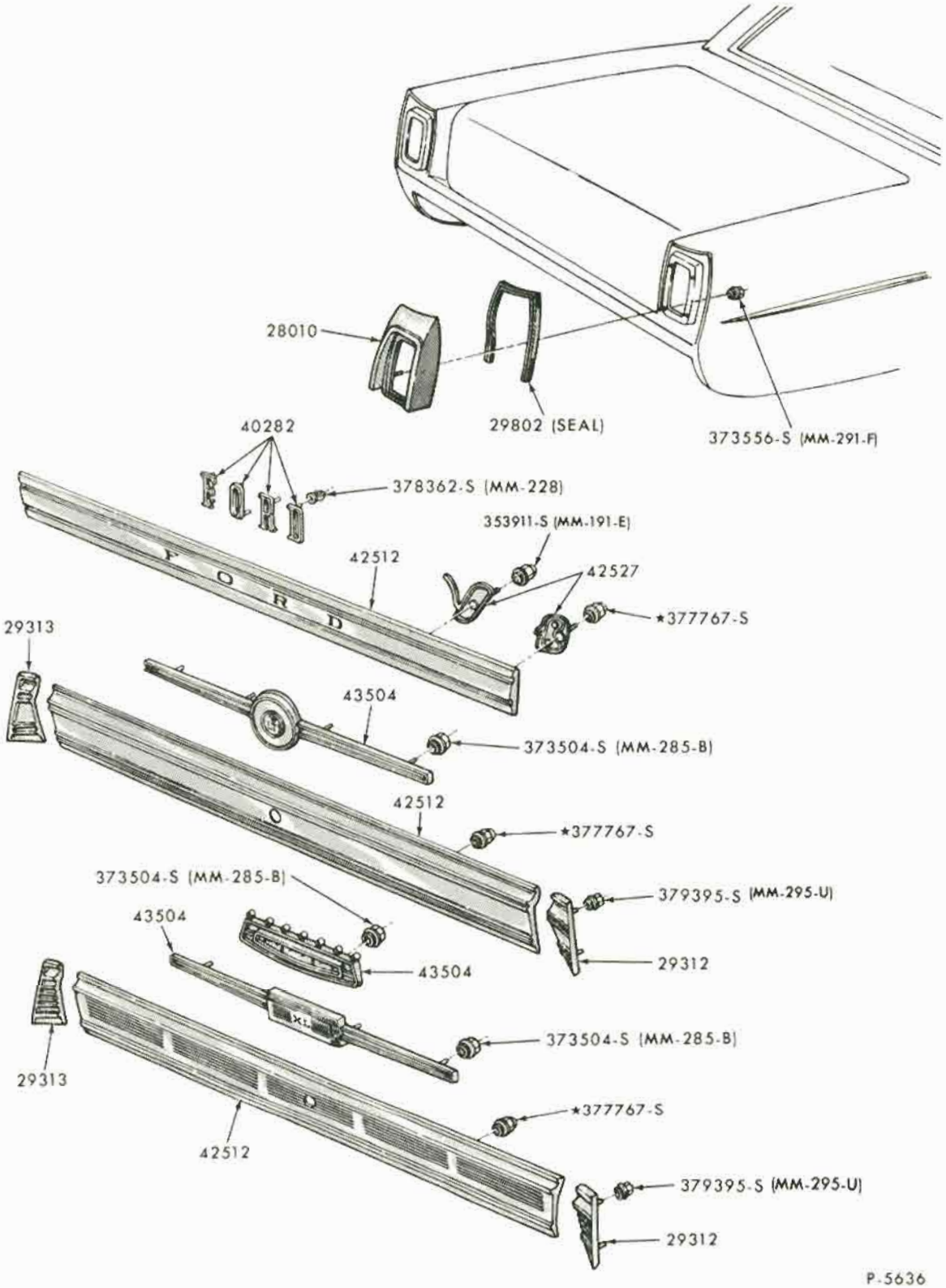

May, 1975 COPYRIGHT © 1975 — FORD MOTOR COMPANY — DEARBORN, MICHIGAN

A EXTERIOR MOULDING ILLUSTRATION SECTION

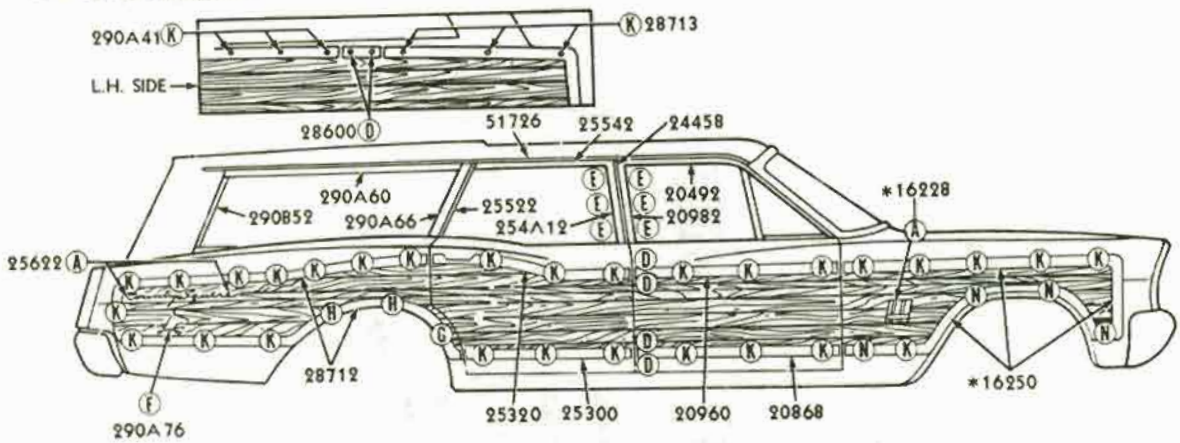

378362-S (MM-228)
A

375964-S (MM-115-E)
D

USE
376378-S (UU-97)
E

375480-S (MM-222-E)
F

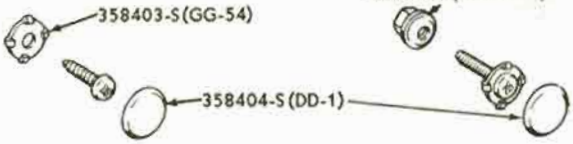

*376362-S (MM-228)
G

*379746-S
H

*379745-S
J

*376746-S
K

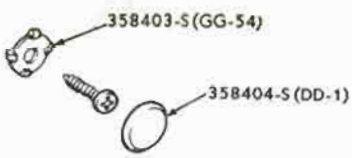

379766-S (UU-86-E)
L

376599-S (UU-81-D)
N

C8AZ-71425A94-A
P

* REFER TO GROUP IN CHASSIS SECTION

FOR WOOD GRAIN TRANSFER — REFER TO GROUP 20748

P-5571

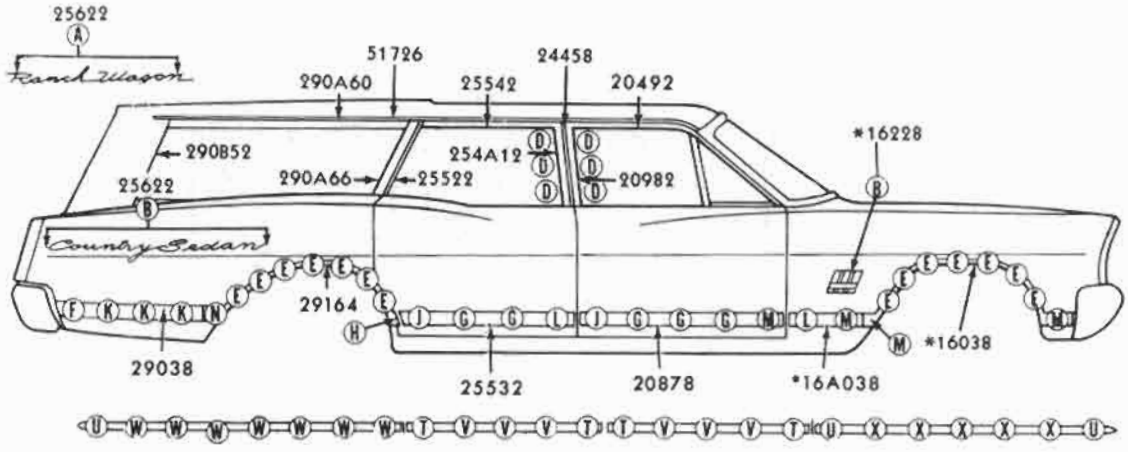

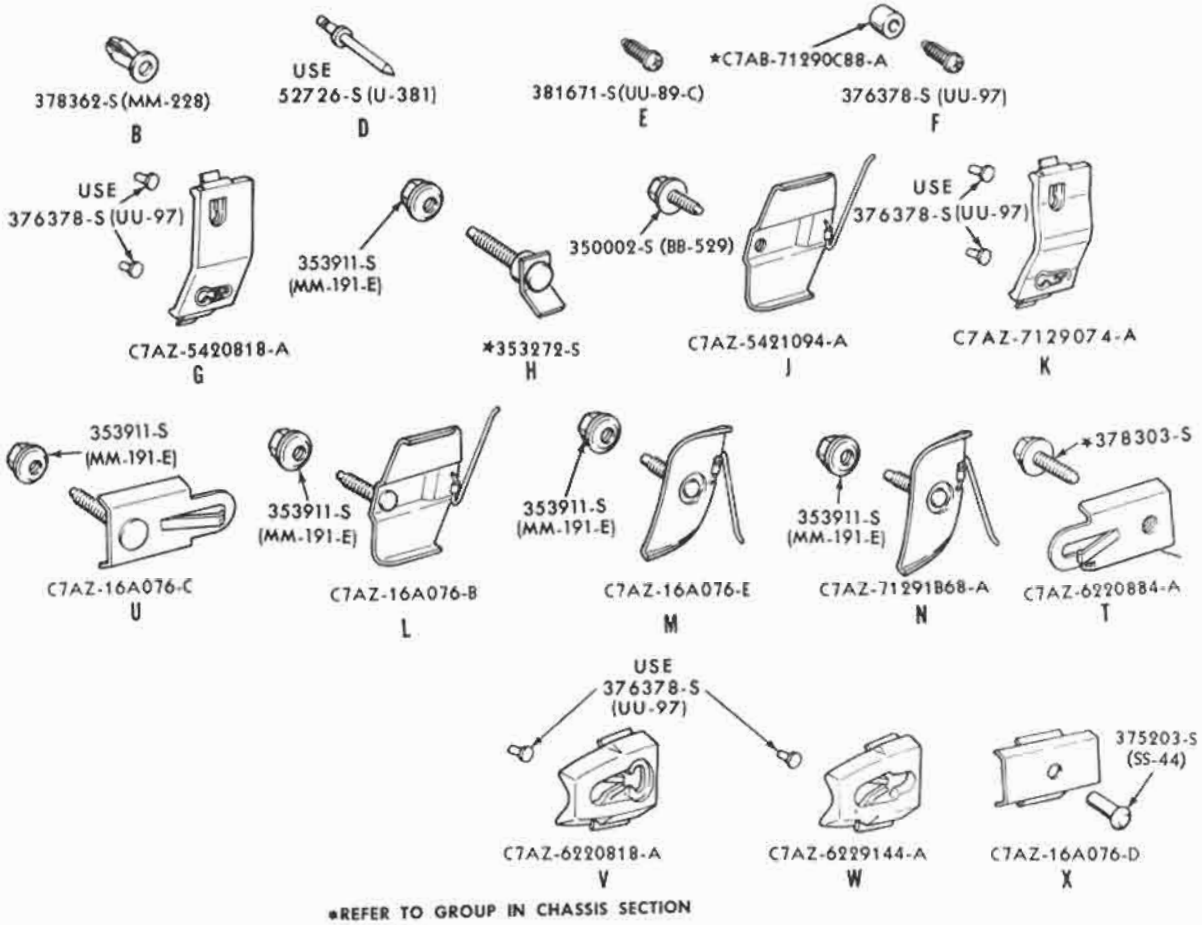

*REFER TO GROUP IN CHASSIS SECTION

P-5569

May, 1975 COPYRIGHT © 1975 — FORD MOTOR COMPANY — DEARBORN, MICHIGAN

FINAL ISSUE

FORD CAR PARTS

A EXTERIOR MOULDING ILLUSTRATION SECTION

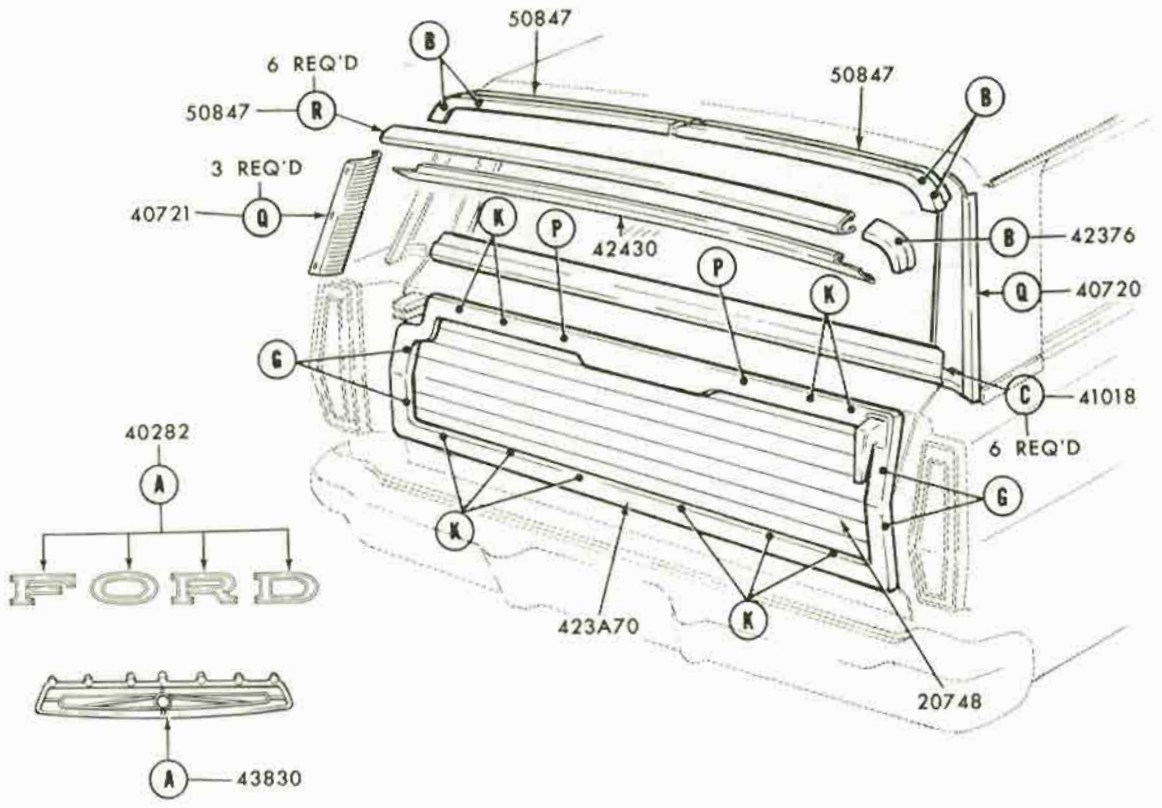

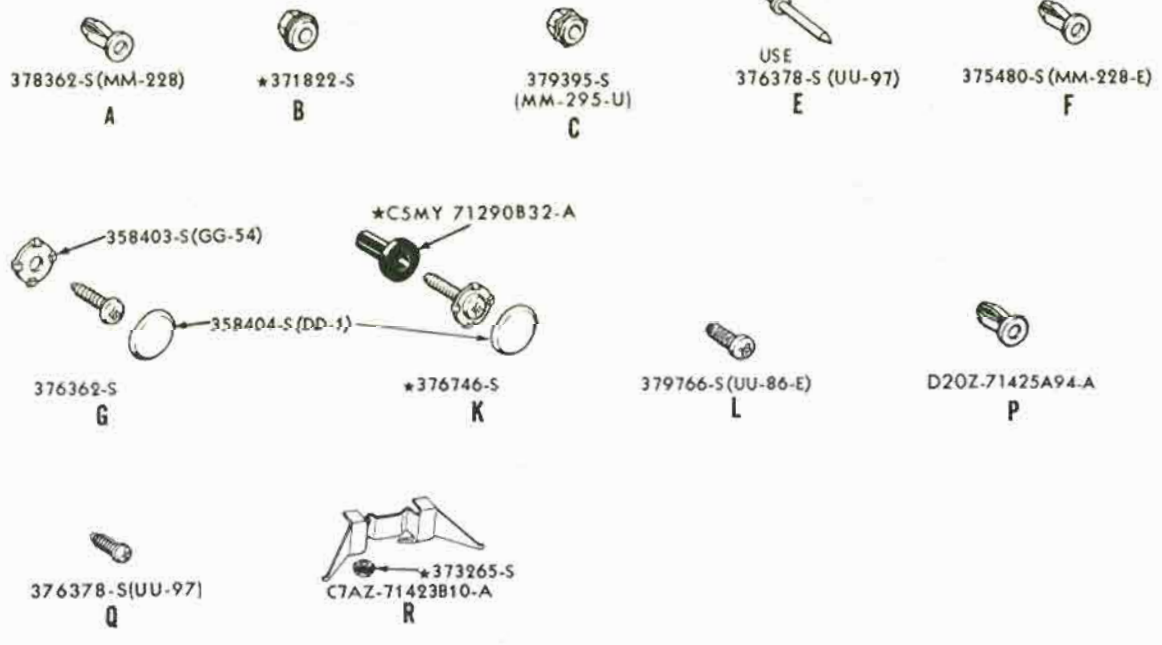

*REFER TO GROUP IN CHASSIS SECTION

P-8354

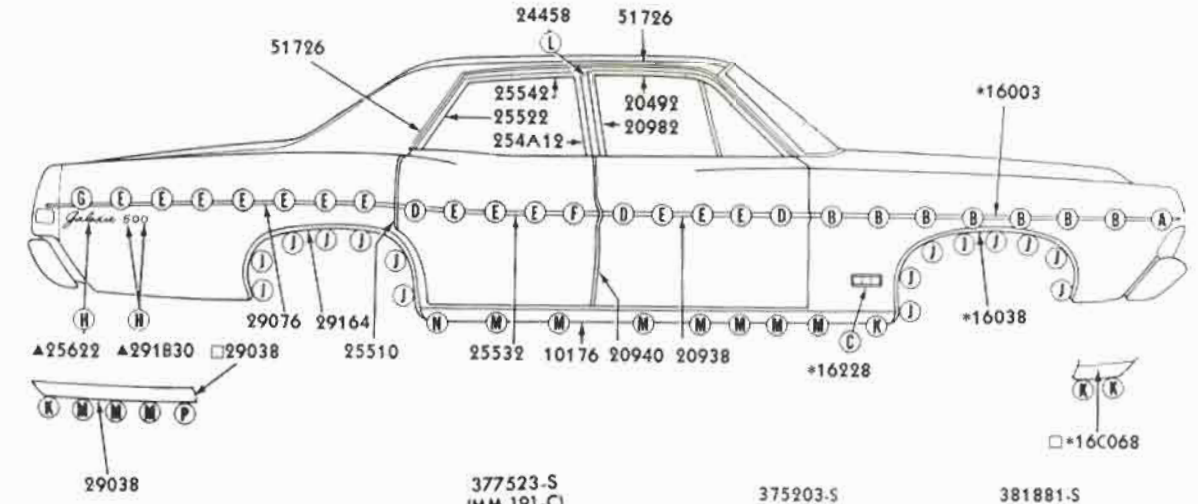

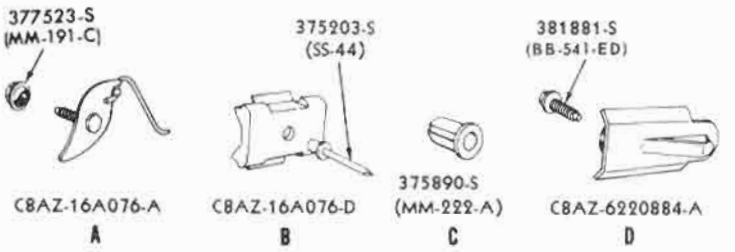

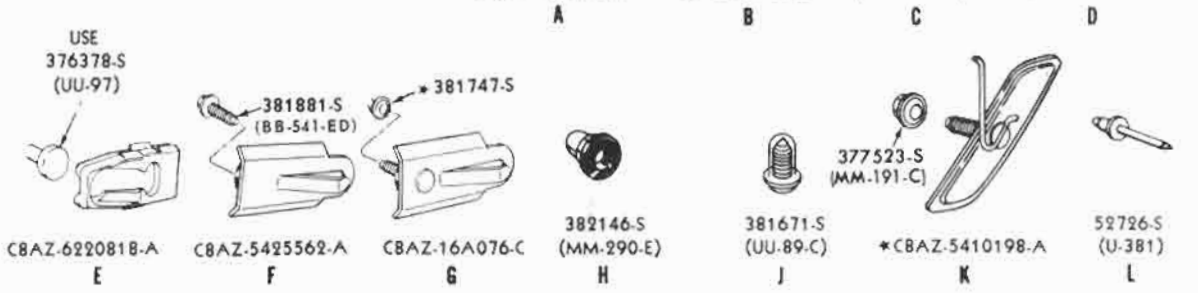

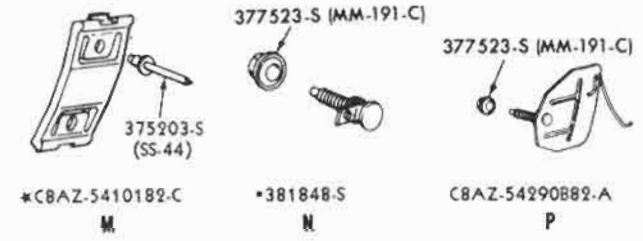

▲BODY TYPE 54A
△REFER TO BODY ILLUSTRATION SECTION 030
*REFER TO GROUP IN CHASSIS SECTION

P-6137

May, 1975 COPYRIGHT © 1975 — FORD MOTOR COMPANY — DEARBORN, MICHIGAN

FORD CAR PARTS

A EXTERIOR MOULDING ILLUSTRATION SECTION

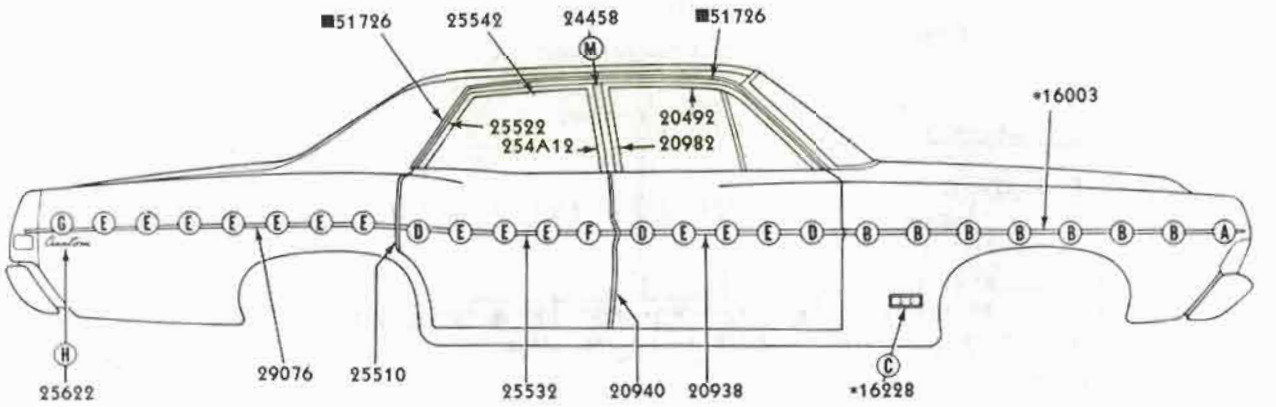

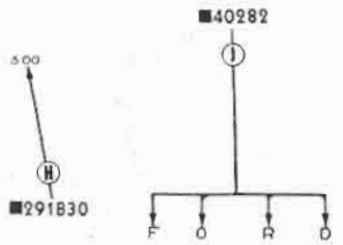

BODY TYPE 54E

C8AZ-16A076-A
A

C8AZ-16A076-D
B

375890-S
(MM-222-A)
C

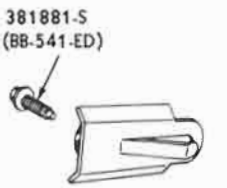

C8AZ-6220884-A
D

C8AZ-6220818-A
E

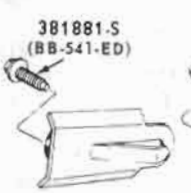

C8AZ-5425562-A
F

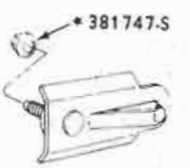

C8AZ-16A076-C
G

382146-S
(MM-290-E)
H

378362-S
(MM-228)
J

C8AZ-6242527-B
L

375936-S (SS-44-DA)
M

*REFER TO GROUP IN CHASSIS SECTION

■FOR SERVICE REPLACEMENT USE ADHESIVE TYPE

P-6140

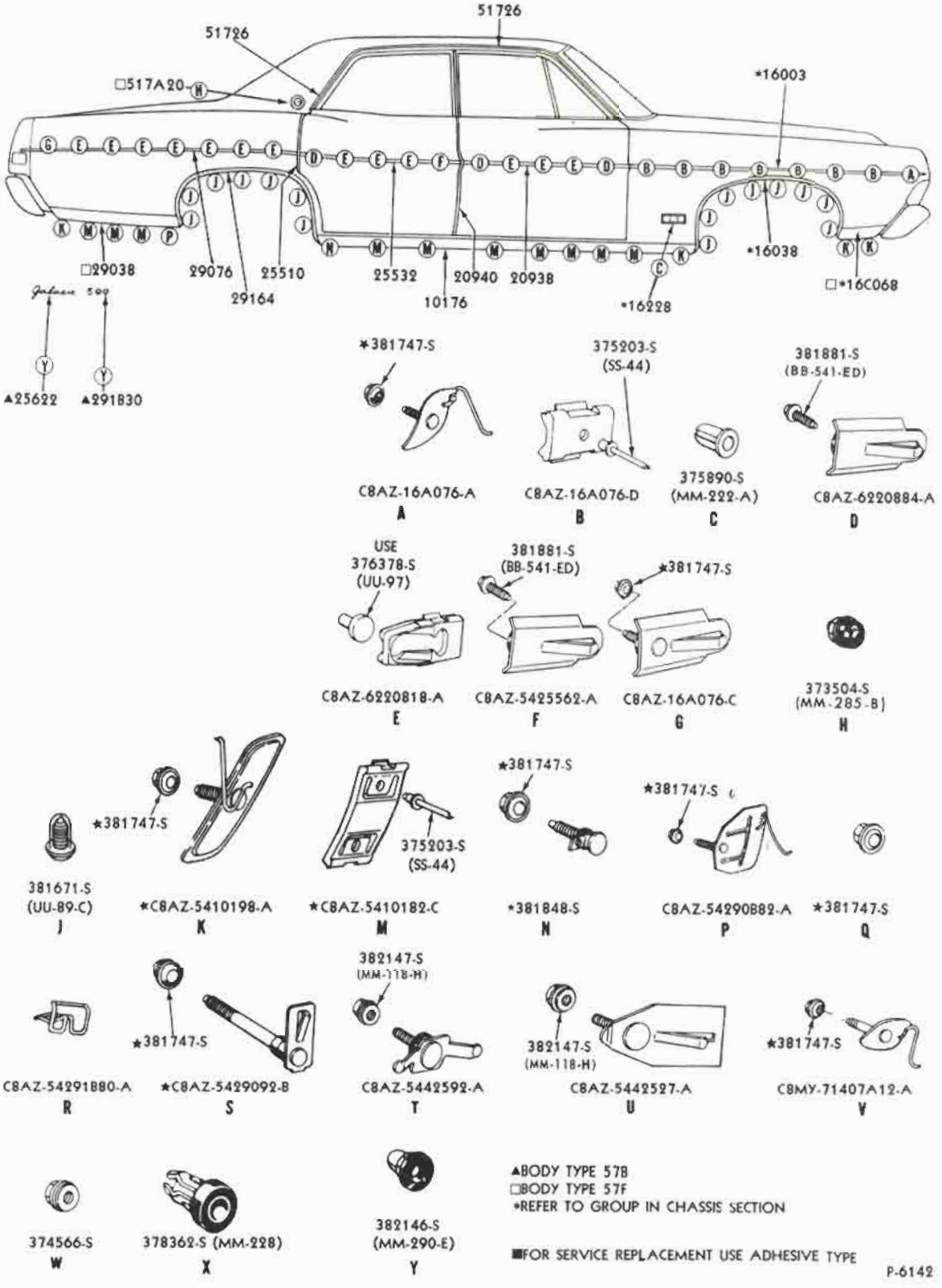

▲BODY TYPE 57B
□BODY TYPE 57F
*REFER TO GROUP IN CHASSIS SECTION

■FOR SERVICE REPLACEMENT USE ADHESIVE TYPE

P-6142

May, 1975 COPYRIGHT © 1975 — FORD MOTOR COMPANY — DEARBORN, MICHIGAN FINAL ISSUE

A EXTERIOR MOULDING ILLUSTRATION SECTION

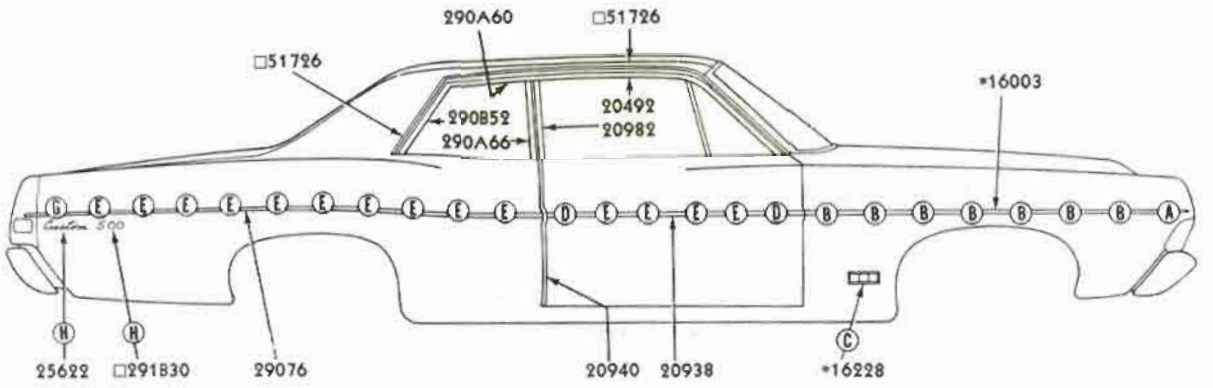

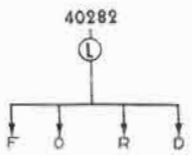

BODY TYPE 62E

C8AZ-16A076-A
A

C8AZ-16A076-D
B

375890-S
(MM-222-A)
C

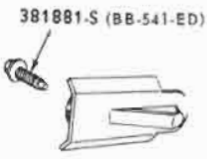

C8AZ-6220884-A
D

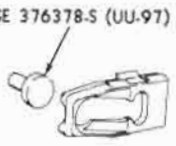

C8AZ-6220818-A
E

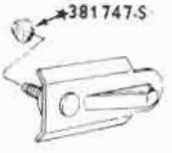

C8AZ-16A076-C
G

382146-S (MM-290-E)
H

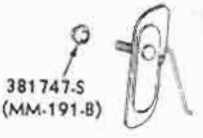

C8AZ-6242527-B
J

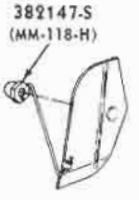

C8AZ-5442527-A
K

378362-S (MM-228)

L

□BODY TYPE 62B

*REFER TO GROUP IN CHASSIS SECTION

P-6143

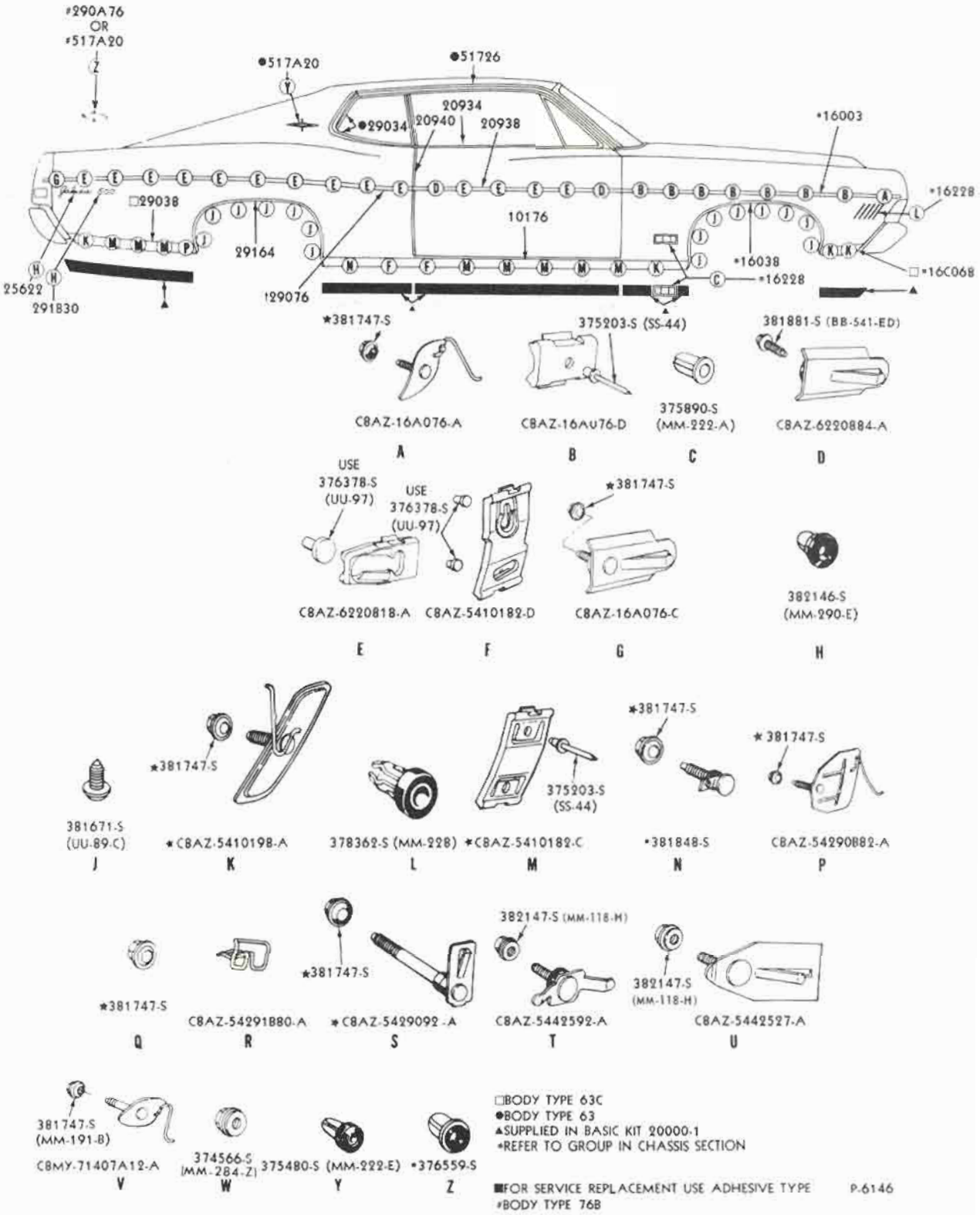

□BODY TYPE 63C
●BODY TYPE 63
▲SUPPLIED IN BASIC KIT 20000-1
*REFER TO GROUP IN CHASSIS SECTION

■FOR SERVICE REPLACEMENT USE ADHESIVE TYPE P-6146
#BODY TYPE 76B

May, 1975 COPYRIGHT © 1975 — FORD MOTOR COMPANY — DEARBORN, MICHIGAN FINAL ISSUE

A EXTERIOR MOULDING ILLUSTRATION SECTION

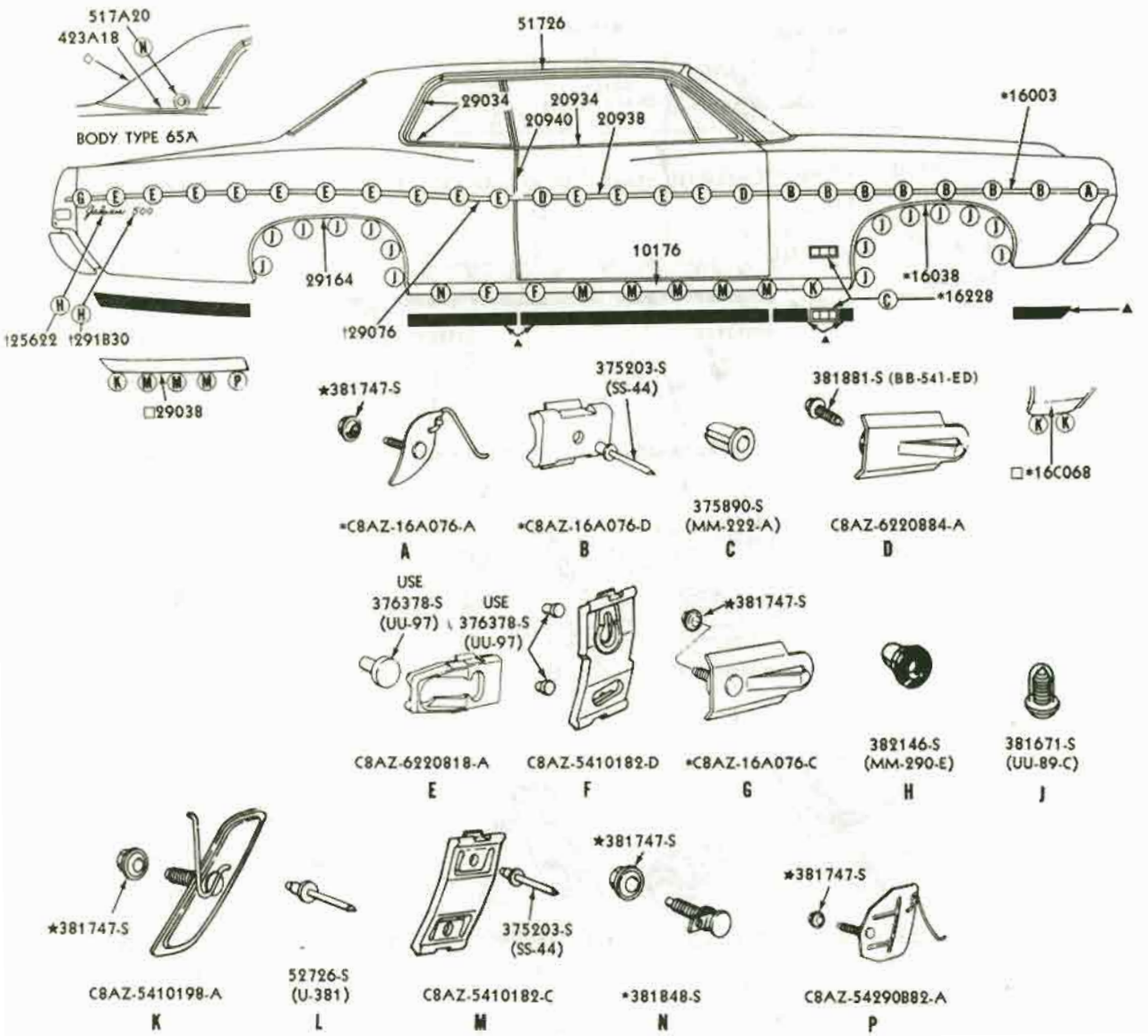

*REFER TO GROUP IN CHASSIS SECTION

!BODY TYPE 65C
▲SUPPLIED IN BASIC KIT 20000-1 FOR 65C

P-6148

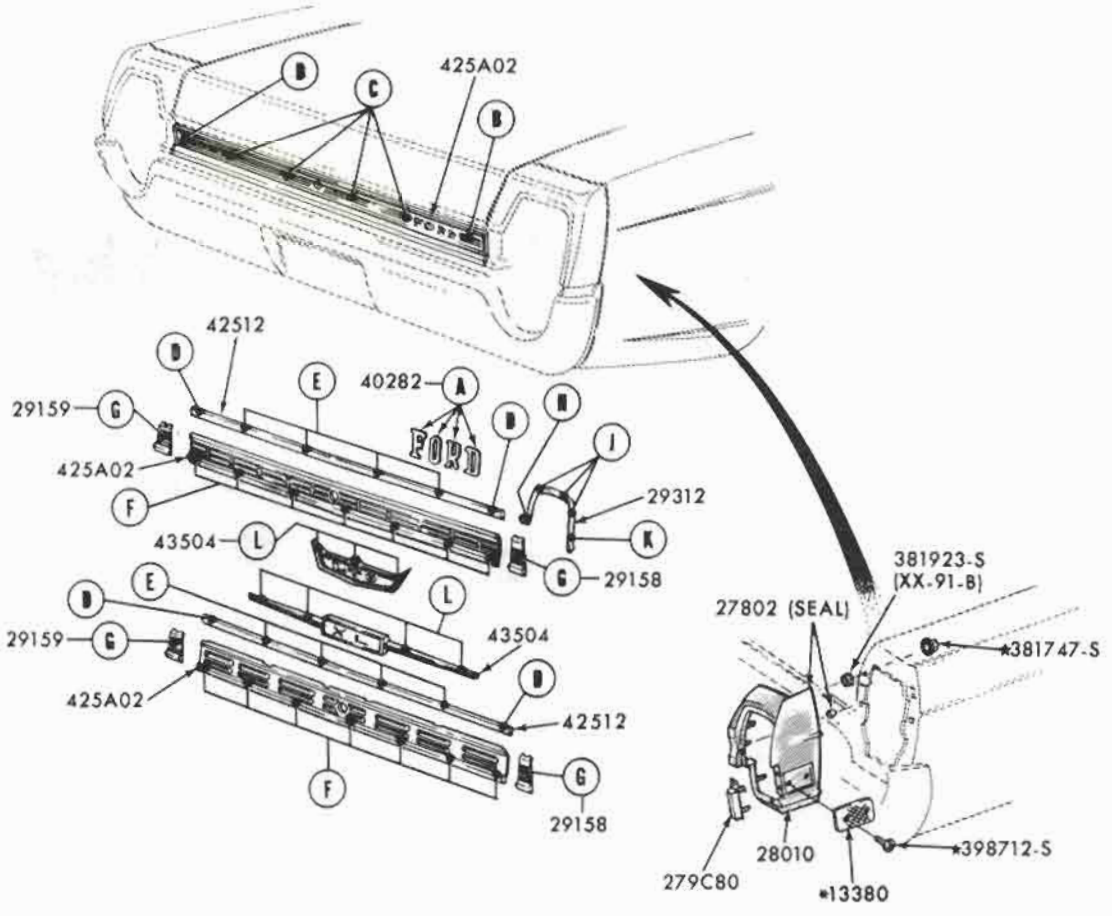

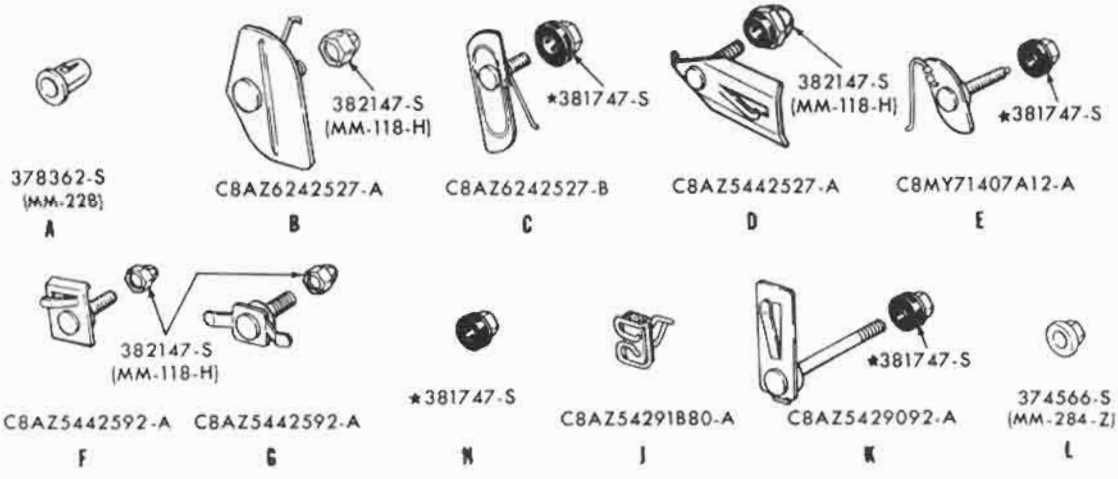

*REFER TO GROUP IN CHASSIS SECTION

P-6950

May, 1975 COPYRIGHT © 1975 — FORD MOTOR COMPANY — DEARBORN, MICHIGAN FINAL ISSUE

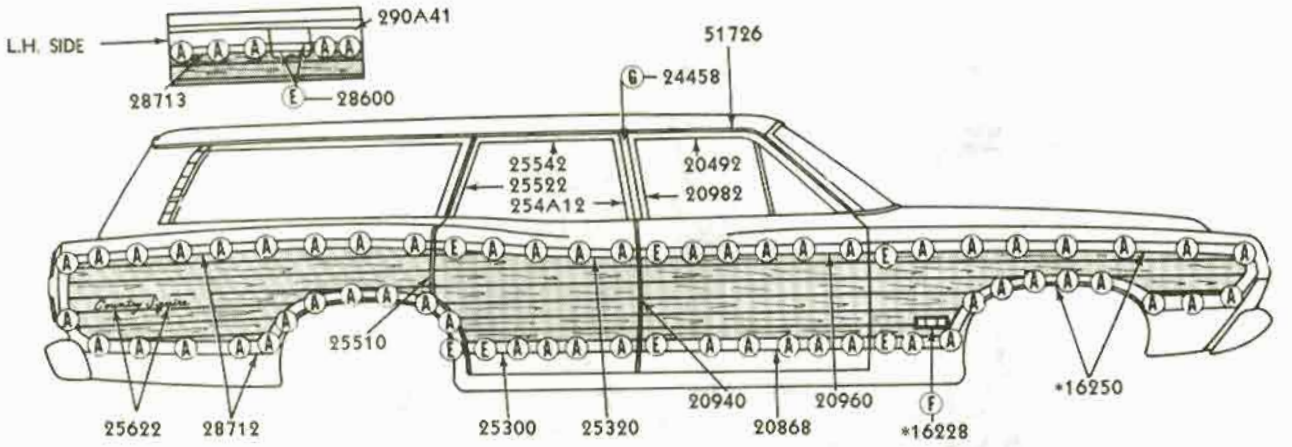

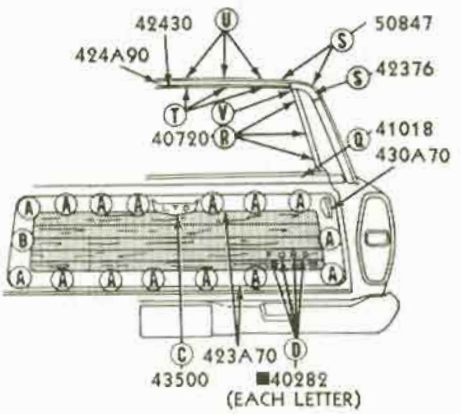

C8AZ-71425A94-A
A

382147-S
(MM-118-H)
B

374566-S
(MM-284-Z)
C

378362-S
(MM-228)
D

377522-S
(MM-115-D)
E

375890-S
(MM-222-A)
F

52726-S (U-381)
G

379395-S (MM-295-U)
Q

375388-S (UU-82-H)
R

373265-S
(MM-291-D)
S

376290-S (UU-56-D)
T

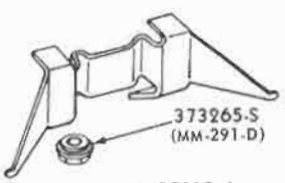

C7AZ-71423B10-A
U

379766-S
(UU-86-E)
V

■FOR SERVICE REPLACEMENT USE ADHESIVE TYPE
*REFER TO GROUP IN CHASSIS SECTION

▲REFER TO BODY ILLUSTRATION SECTION 290
DARK WALNUT GRAIN TRANSFER BLACK PLANKING
C8AZ-7120748-A (DI NOC)
OR C8AZ-7120748-B (ADHESIVE TYPE)

P-6149

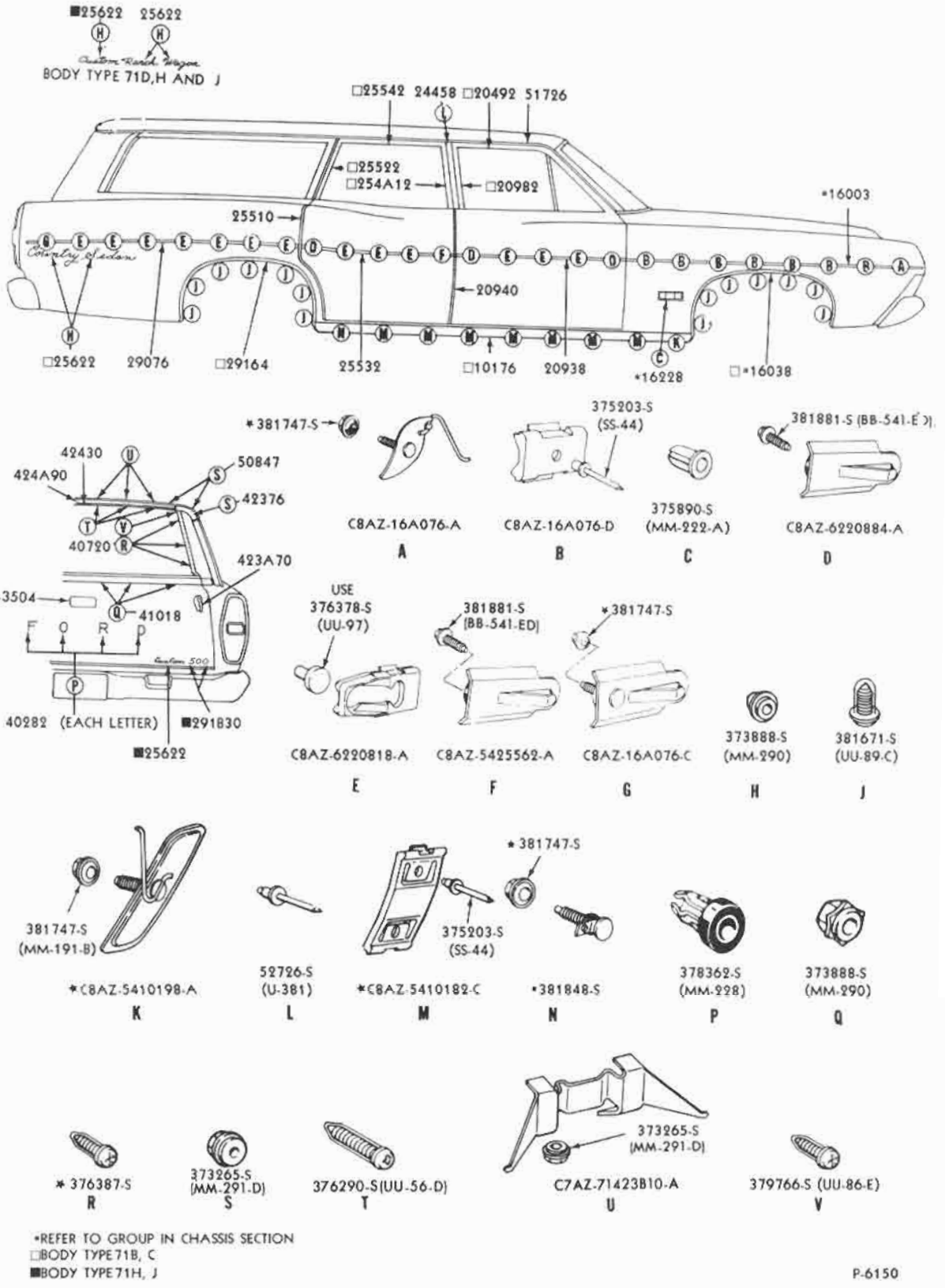

*REFER TO GROUP IN CHASSIS SECTION
□BODY TYPE 71B, C
■BODY TYPE 71H, J

P-6150

May, 1975 COPYRIGHT © 1975 — FORD MOTOR COMPANY — DEARBORN, MICHIGAN FINAL ISSUE

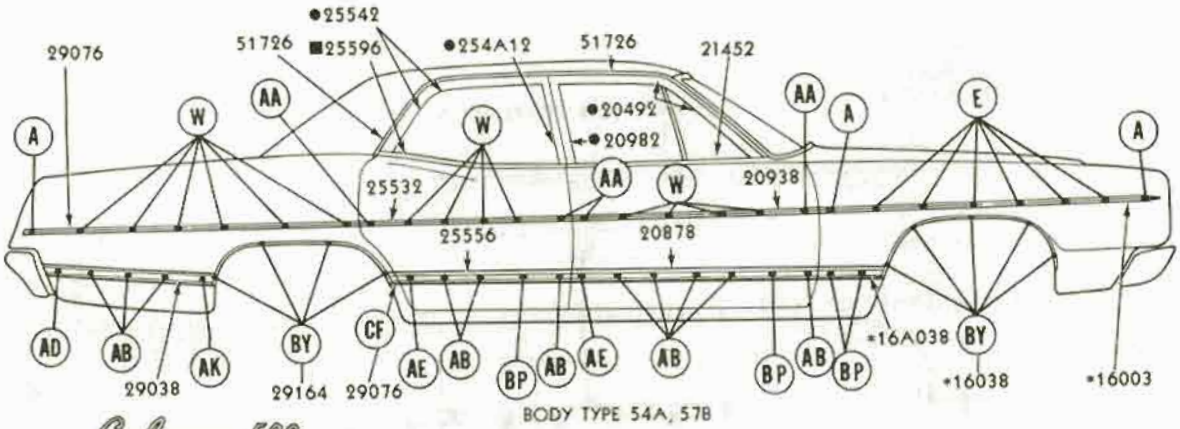

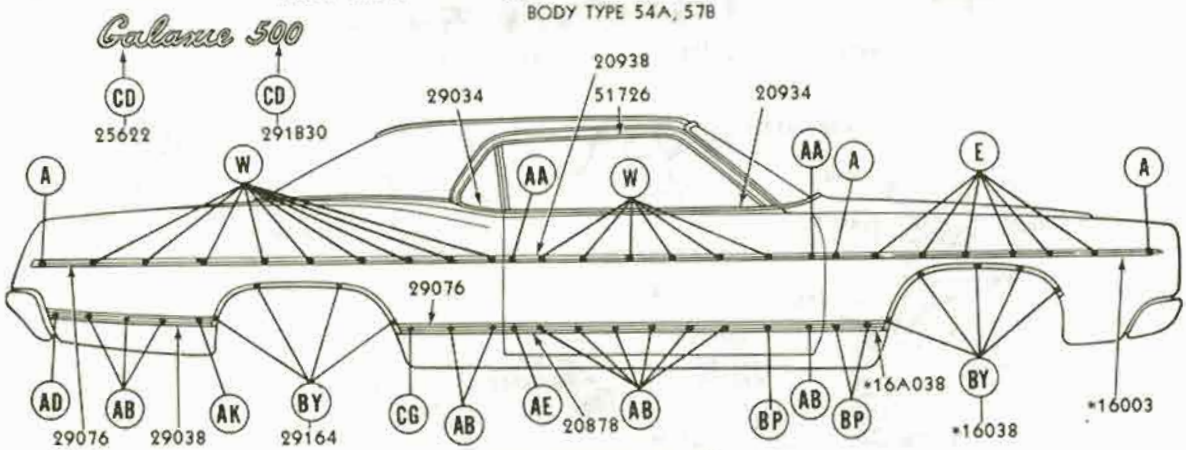

C8AZ-16A076-A
A

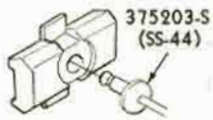

C9AZ-16A076-B
E

C9AZ-6220818-A
W

C9AZ-6220884-A
AA

C9AZ-5421066-A
AB

382371-S (UU-81-L)
AC

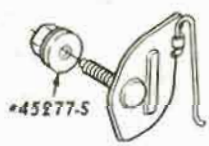

C9AZ-5421094-A
AD

C9AZ-5421094-B
AE

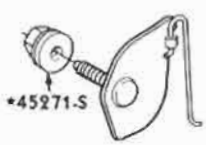

C9AZ-5429033-A
AK

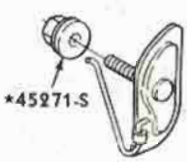

C9AZ-6240248-B
BP

381671-S (UU-89-C)
BY

*45271-S
CF

*REFER TO GROUP IN CHASSIS SECTION ■BODY TYPE 57B ONLY ●BODY TYPE 54A ONLY

P-6563

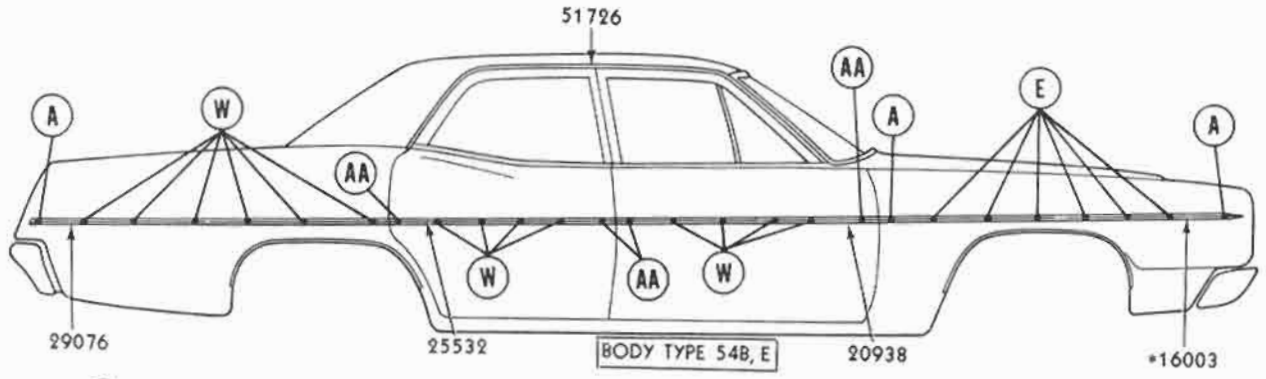

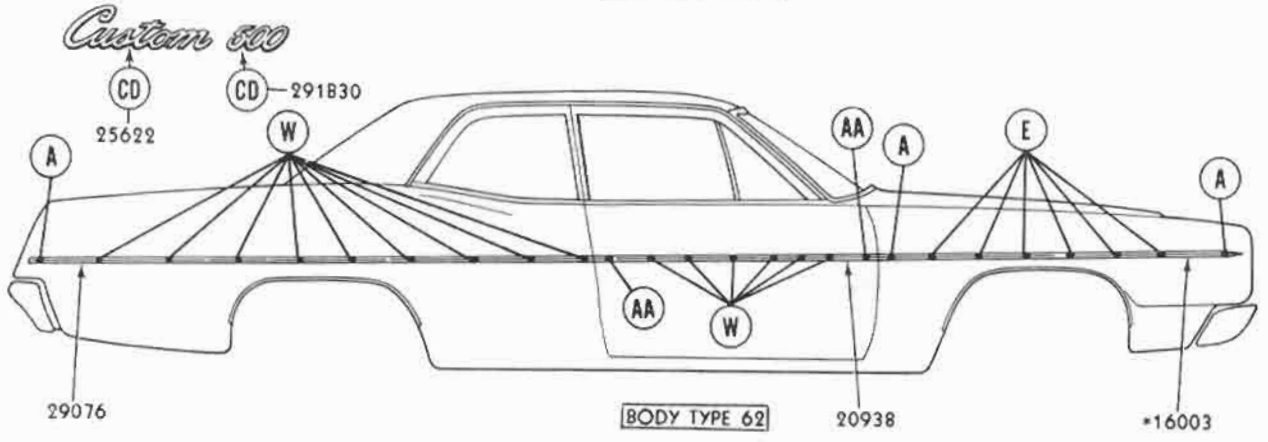

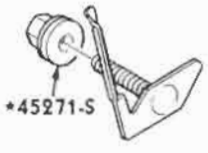

C8AZ-16A076-A
A

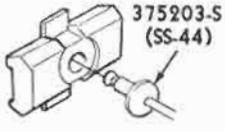

C9AZ-16A076-B
E

C9AZ-6220818-A
W

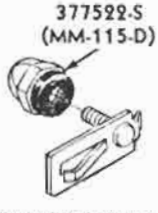

C9AZ-6220884-A
AA

382146-S (MM-290-E)
CD

*REFER TO GROUP IN CHASSIS SECTION

P-6562

May, 1975 COPYRIGHT © 1975 — FORD MOTOR COMPANY — DEARBORN, MICHIGAN

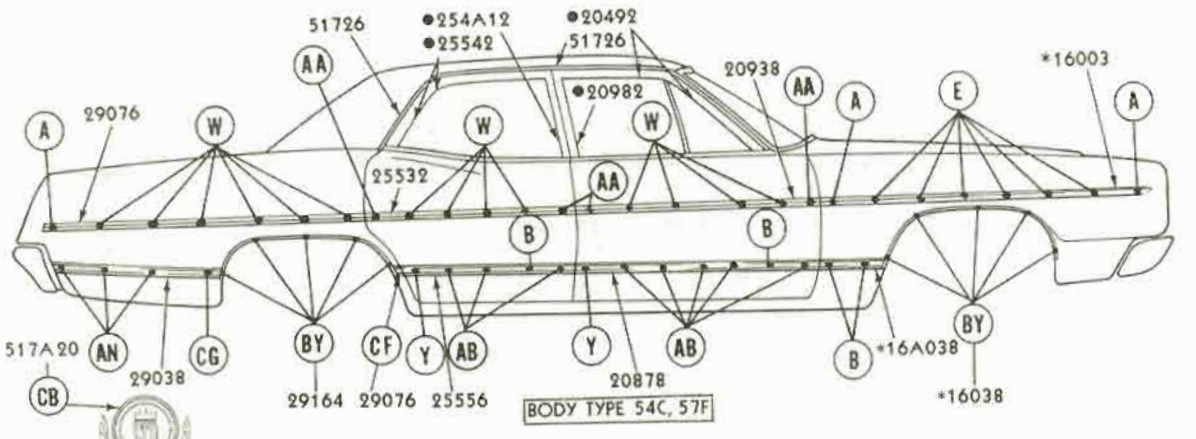

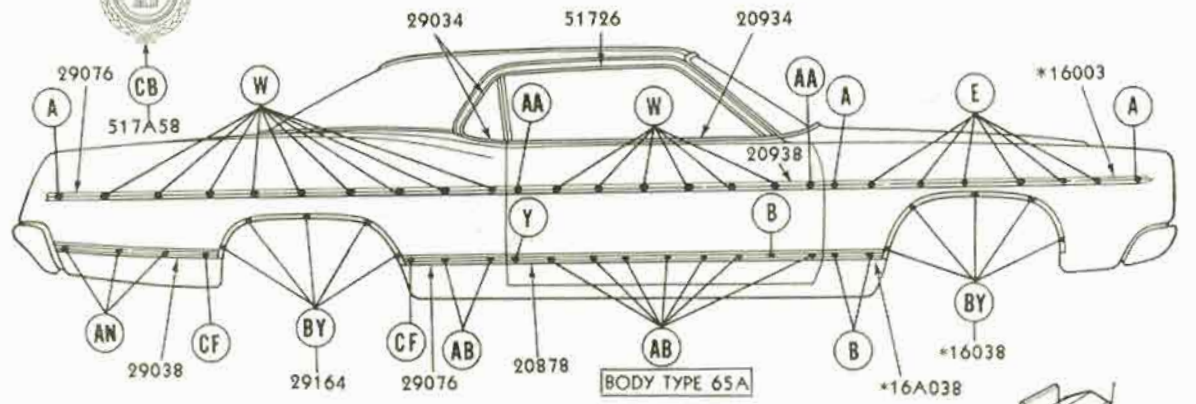

C8AZ-16A076-A
A

C9AZ-16A076-A
B

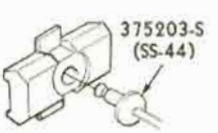

C9AZ-16A076-B
E

C9AZ-6220818-A
W

C9AZ-5420884-A
Y

C9AZ-6220884-A
AA

C9AZ-5421066-A
AB

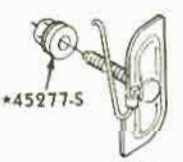

C9AZ-5429124-A
AN

381671-S (UU-89-C)
BY

375890-S (MM222-A)
CB

*45271-S
CF

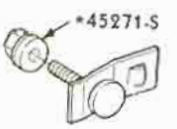

*382861-S
CG

*REFER TO GROUP IN CHASSIS SECTION ■BODY TYPE 57F ONLY ● BODY TYPE 54C ONLY P-6564

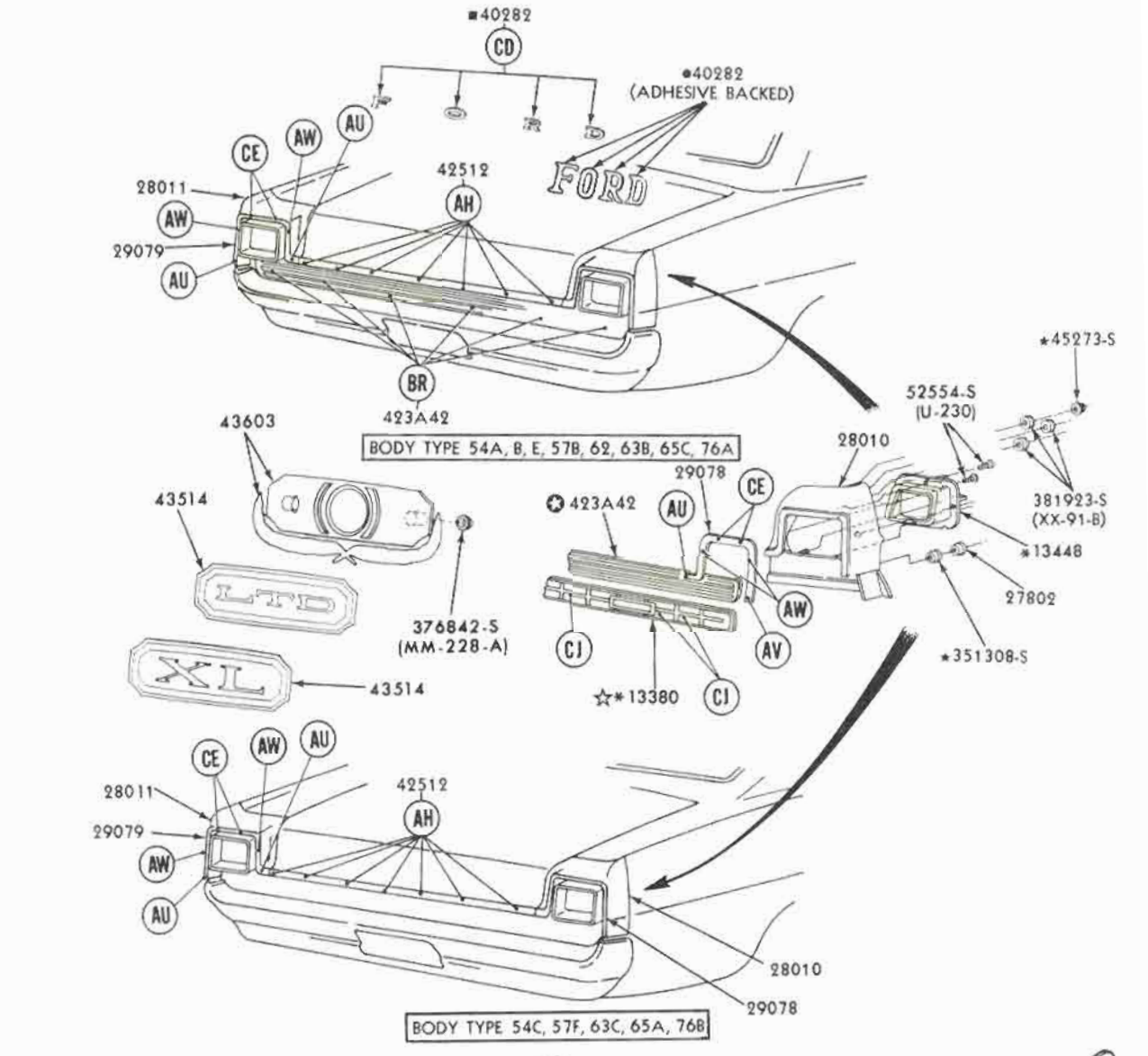

●BODY TYPE 54B, E, 62
■BODY TYPE 54A, 57B, 63B, 65C, 76A
*REFER TO GROUP IN CHASSIS SECTION
☆BODY TYPE 54C,57F,63C,65A,76B
✪BODY TYPE 54A,B,E,57B,62,63B,65C,76A

P-6626

COPYRIGHT © 1975 — FORD MOTOR COMPANY — DEARBORN, MICHIGAN

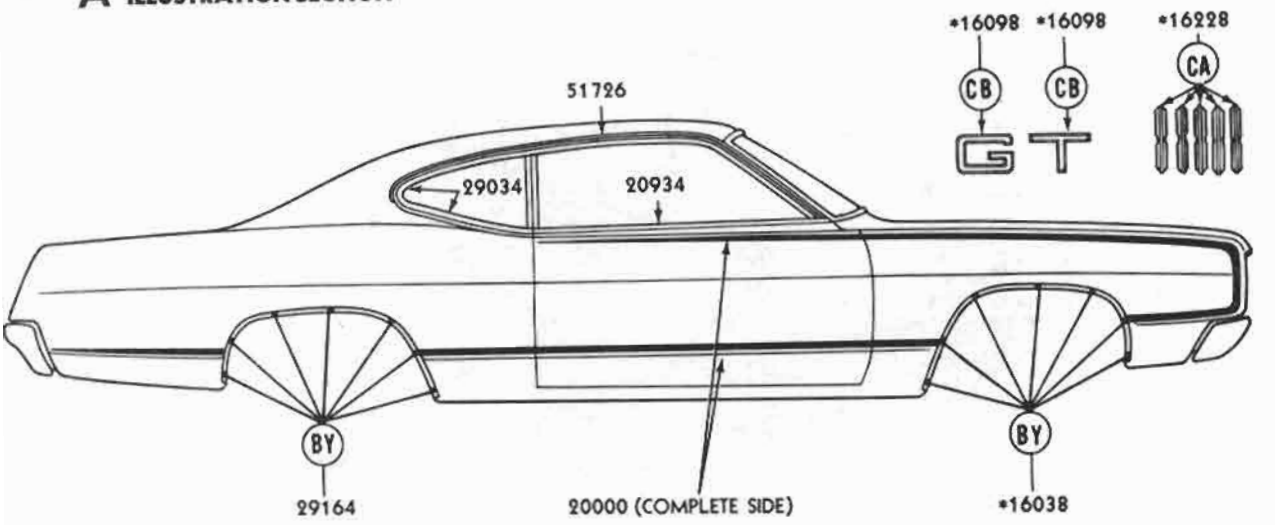

381671-S (UU-89-C)
BY

373888-S (MM-290)
CA

375890-S (MM222-A)
CB

*REFER TO GROUP IN CHASSIS SECTION

P-6565

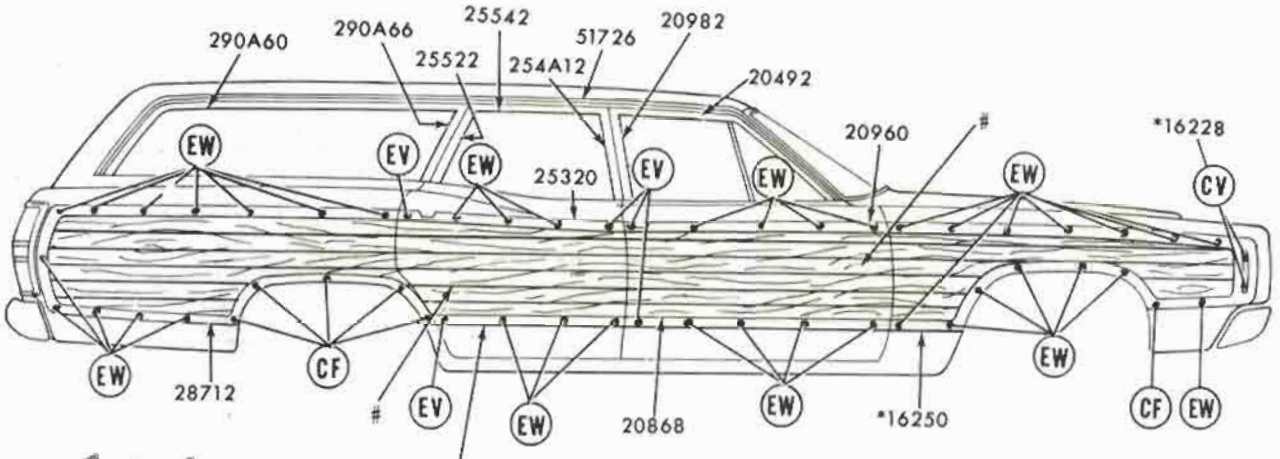

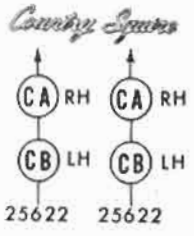

373888-S (MM-290)
CA

375890-S (MM222-A)
CB

*45271-S
CF

52413-S (U-316)
CV

377522-S
(MM-115-D)
EV

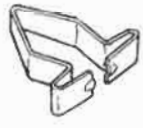

C8AZ-71425A94-A
EW

* REFER TO GROUP IN CHASSIS SECTION
#FOR WOOD GRAIN TRANSFER—REFER TO GROUP 20748

P-6567

May, 1975 COPYRIGHT © 1975 — FORD MOTOR COMPANY — DEARBORN, MICHIGAN FINAL ISSUE

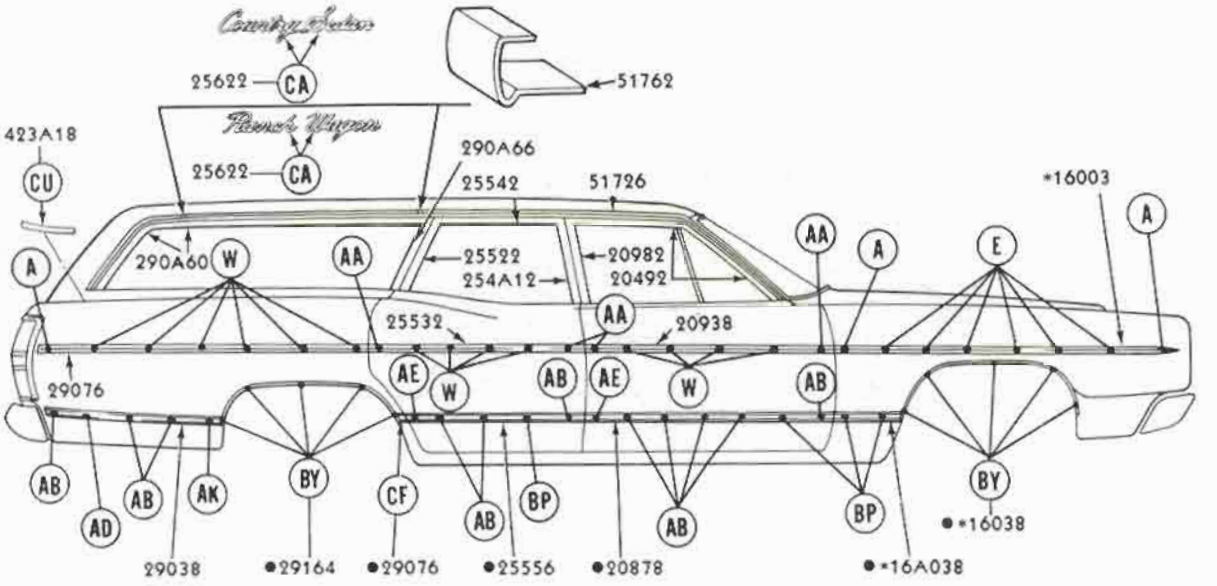

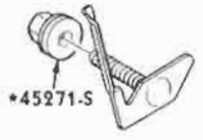

C8AZ-16A076-A
A

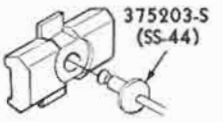

C9AZ-16A076-B
E

C9AZ-6220818-A
W

C9AZ-6220884-A
AA

C9AZ-5421066-A
AB

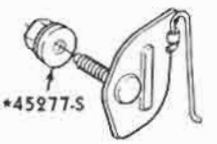

C9AZ-5421094-A
AD

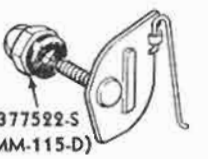

C9AZ-5421094-B
AE

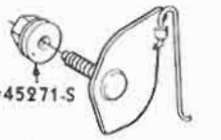

C9AZ-5429033-A
AK

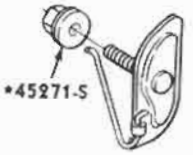

C9AZ-62 40248 -B
BP

381671-S (UU-89-C)
BY

373888-S (MM-290)
CA

*45271-S
CF

*45273-S
CU

*REFER TO GROUP IN CHASSIS SECTION ●BODY TYPE 71B, C ONLY P-6566

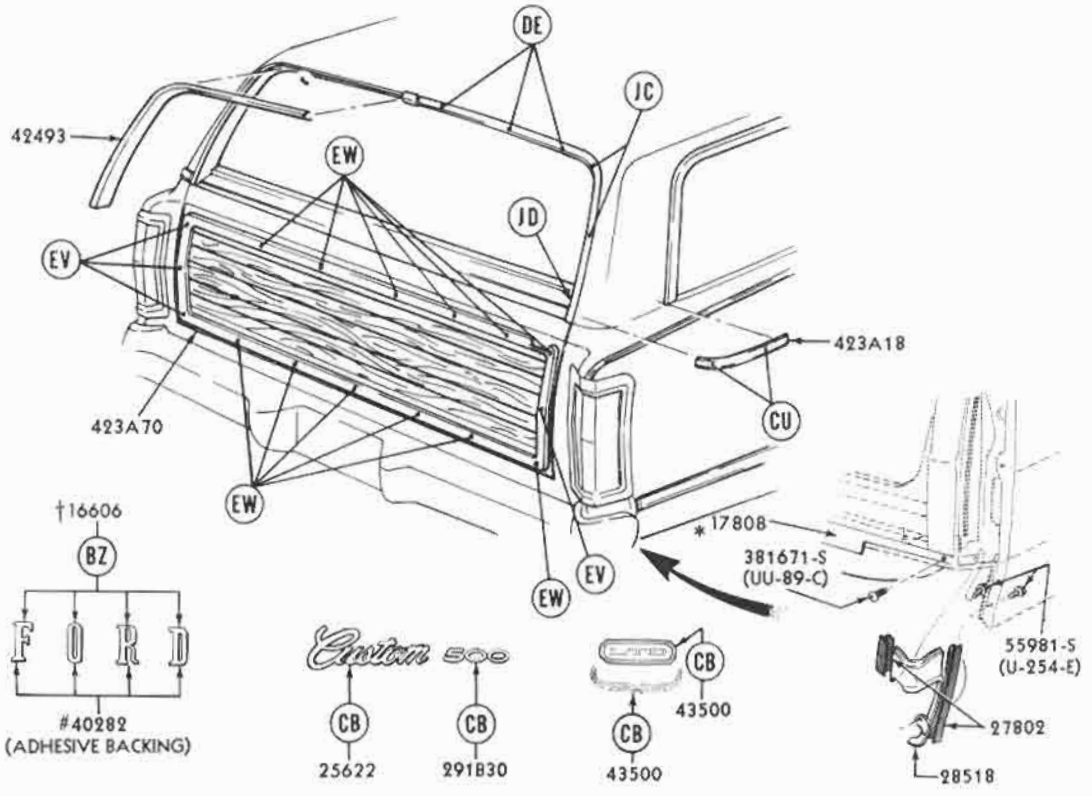

378362-S (MM-228)
BZ

375890-S (MM222-A)
CB

*45273-S
CU

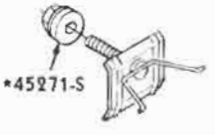

C9AY-7142435-A
DE

377522-S
(MM-115-D)
EV

D20Z-71425A94-A
EW

C9AZ-71423810-B
JC

C9AZ-7142318-B
JD

FOR WOOD GRAIN TRANSFER - REFER TO GROUP 20748
* REFER TO GROUP IN CHASSIS SECTION
† BODY TYPE 71B, C, D, H, J
# BODY TYPE 71A, E

P-6679

May, 1975 COPYRIGHT © 1975 — FORD MOTOR COMPANY — DEARBORN, MICHIGAN

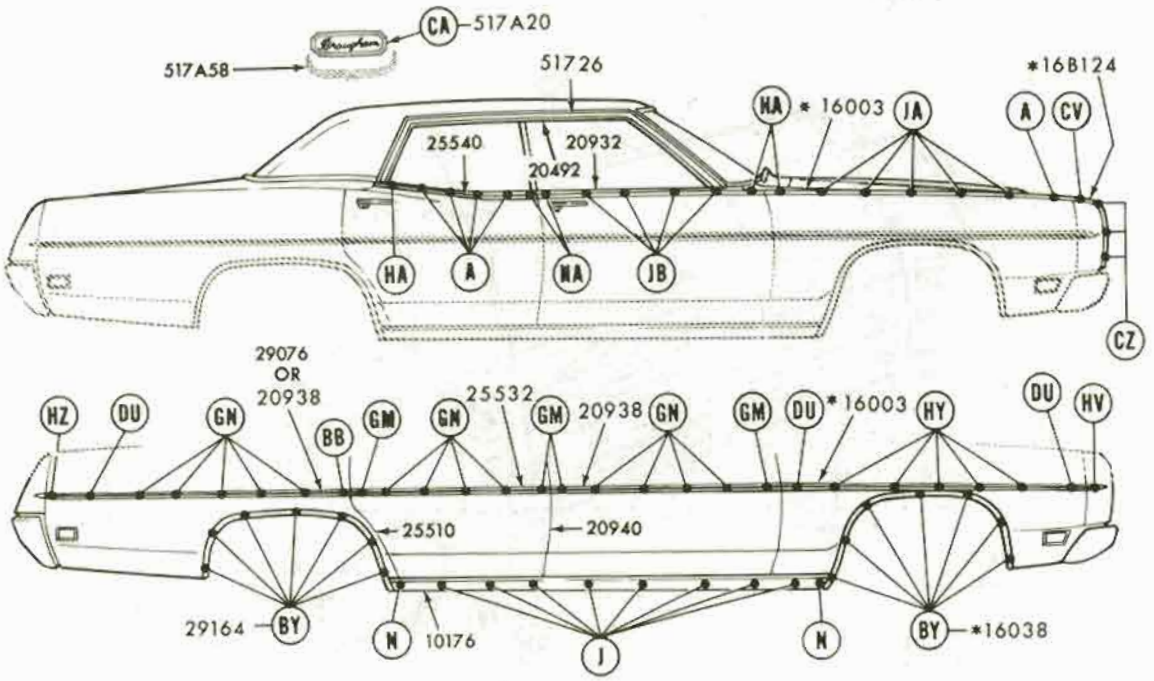

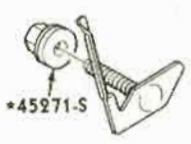

C8AZ-16A076-A
A

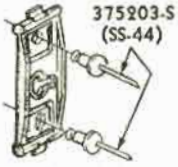

*C9MY-5410182-A
J

*C9MY-5410198-A
N

C7GY-5442331-A
BB

381671-S (UU-89-C)
BY

373888-S (MM-290)
CA

375890-S (MM222-A)
CB

52413-S (U-316)
CV

382110-S (MM-284-X)
CZ

C8MY-71407A12-A
DU

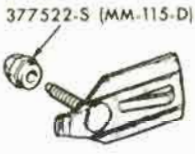

C9GY-71407A12-A
GM

DOVY-6520818-A
GN

DOGY-6520884-A
HA

DOGY-65291B80-A
HV

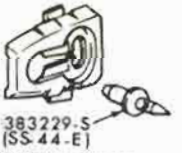

DOVY-6520818-A
HY

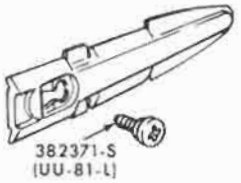

DOAZ-6229144-A
HZ

C6DZ-54254A46-A
JA

C6DZ-54254A46-A
JB

* REFER TO GROUP IN CHASSIS SECTION

P-7105

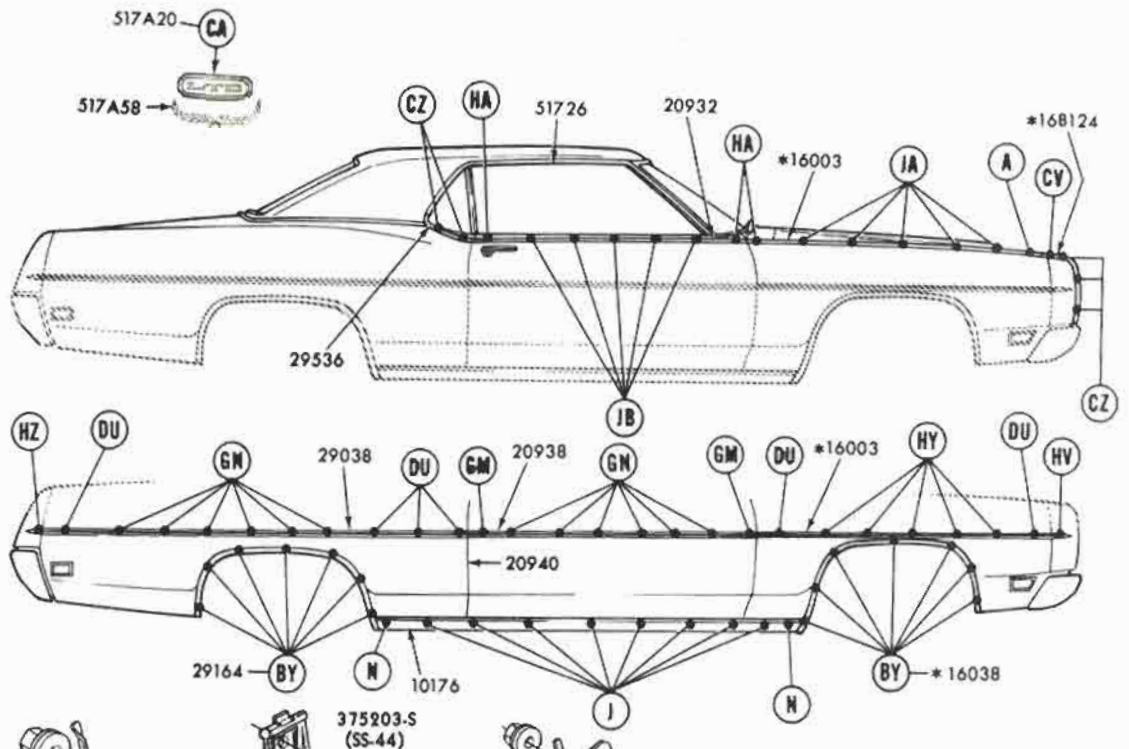

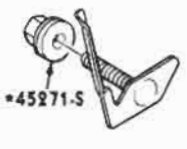

C8AZ-16A076-A
A

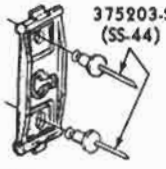

*C9MY-5410182-A
J

*C9MY-5410198-A
N

381671-S (UU-89-C)
BY

373888-S (MM-290)
CA

375890-S (MM222-A)
CB

52413-S (U-316)
CV

382110-S (MM-284-X)
CZ

C8MY-71407A12-A
DU

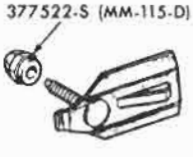

C9GY-71407A12-A
GM

DOVY-6520818-A
GN

DOGY-6520884-A
HA

DOGY-65291880-A
HV

DOVY-6520818-A
HY

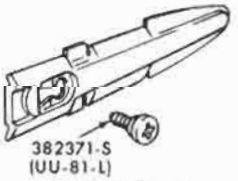

*DOAZ-6229144-A
HZ

C6DZ-54254A46-A
JA

C6DZ-54254A46-A
JB

*REFER TO GROUP IN CHASSIS SECTION

P-7106

May, 1975 COPYRIGHT © 1975 — FORD MOTOR COMPANY — DEARBORN, MICHIGAN

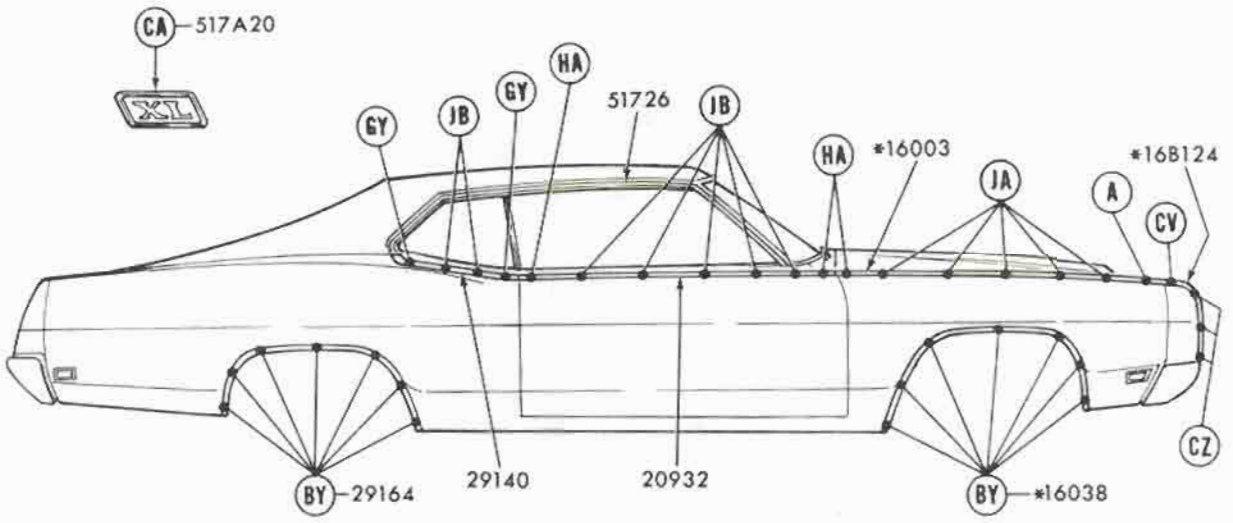

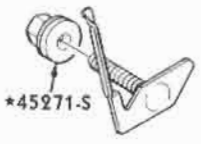

C8AZ-16A076-A
A

381671-S (UU-89-C)
BY

373888-S (MM-290)
CA

375890-S (MM222-A)
CB

52413-S (U-316)
CV

382110-S (MM-284-X)
CZ

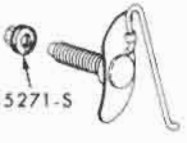

DOGY-16A076-A
GY

DOGY-6520884-A
HA

C6DZ-54254A46-A
JA

C6DZ-54254A46-A
JB

*REFER TO GROUP IN CHASSIS SECTION

P-7109

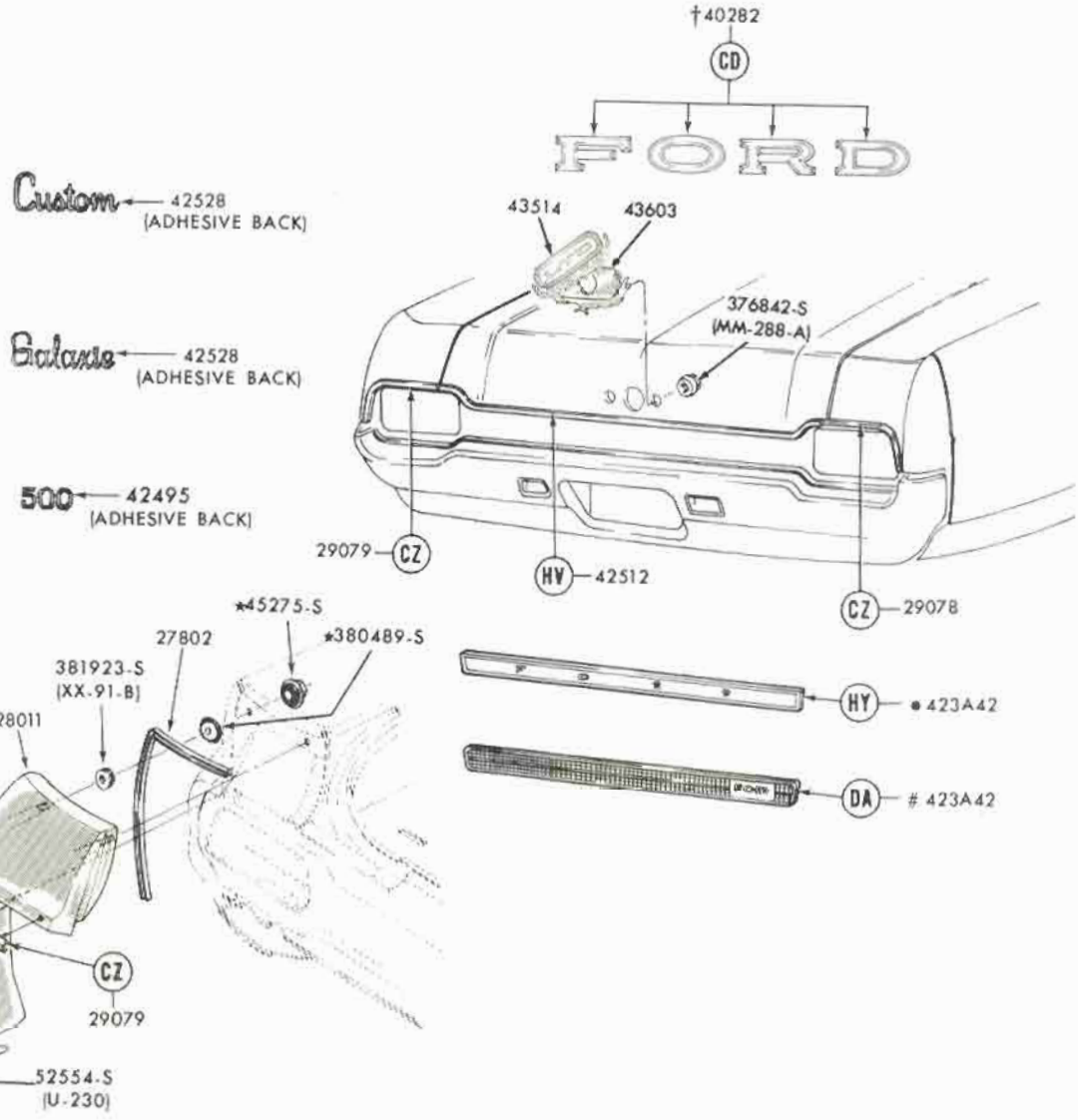

382146-S (MM-290-E)
CD

382110-S (MM-284-X)
CZ

382309-S (MM-118-J)
DA

DOGY-65291880-A
HV

DOVY-6520818-A
HY

•BODY TYPE 54A, 57B, 63B, 65C, 76A
#BODY TYPE 63C, 76B, 54C, 57F, 65A
†BODY TYPE 54B, E, 62B, E

P-7100

COPYRIGHT © 1975 — FORD MOTOR COMPANY — DEARBORN, MICHIGAN

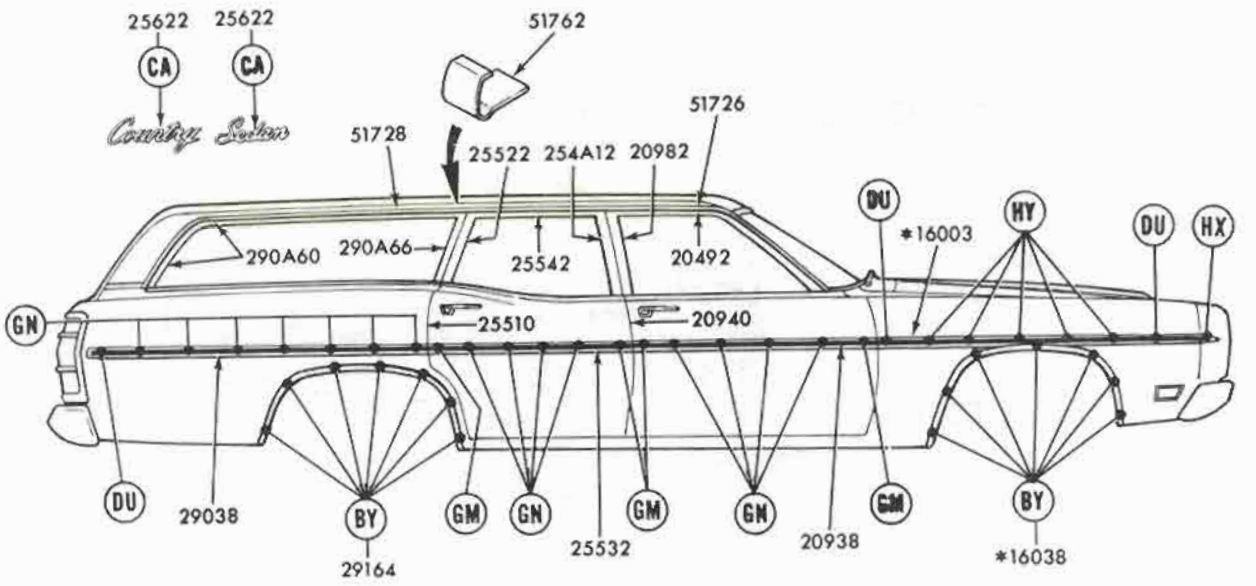

381671-S (UU-89-C)
BY

373888-S (MM-290)
CA

375890-S (MM222-A)
CB

C8MY-71407A12-A
DU

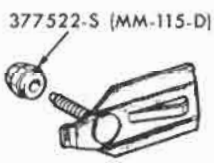

C9GY-71407A12-A
GM

DOVY-6520818-A
GN

*DOAB-16242-A
HX

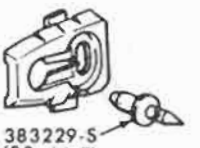

DOVY-6520818-A
HY

*REFER TO GROUP IN CHASSIS SECTION

P-7107

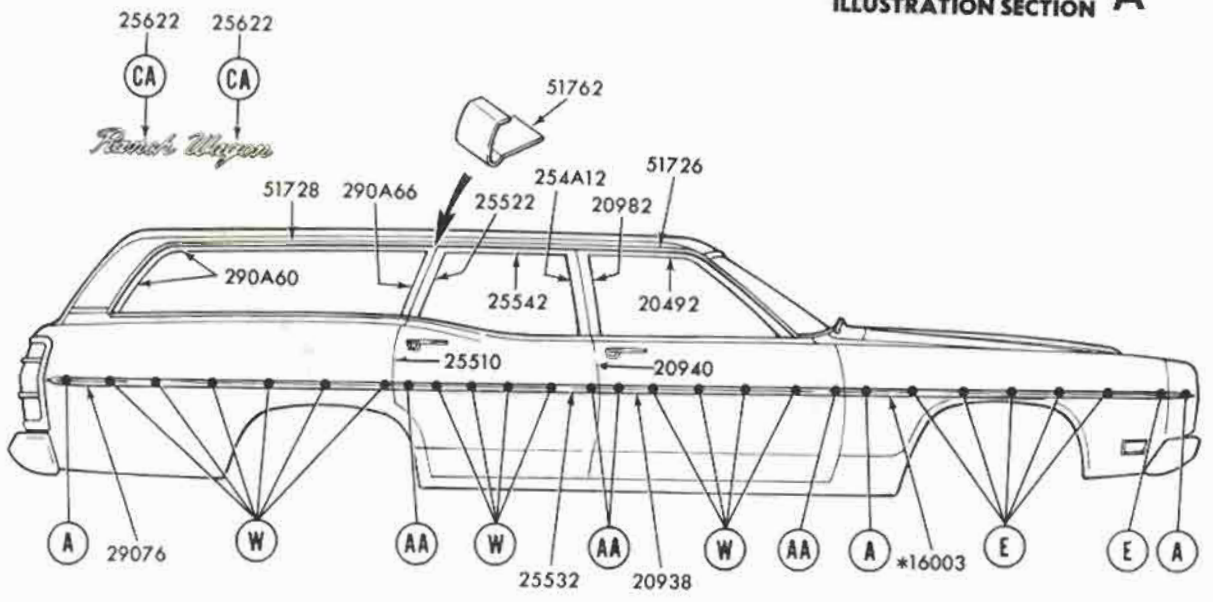

C8AZ-16A076-A
A

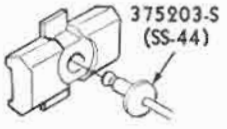

C9AZ-16A076-B
E

C9AZ-6220818-A
W

C9AZ-6220884-A
AA

373888-S (MM-290)
CA

375890-S (MM222-A)
CB

*REFER TO GROUP IN CHASSIS SECTION

P-7108

May, 1975 COPYRIGHT © 1975 — FORD MOTOR COMPANY — DEARBORN, MICHIGAN

Custom

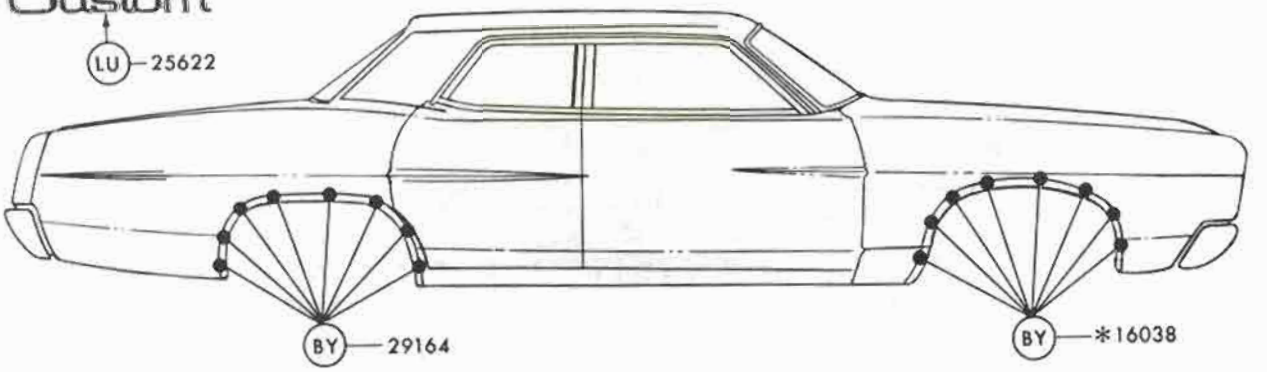

Ranch Wagon

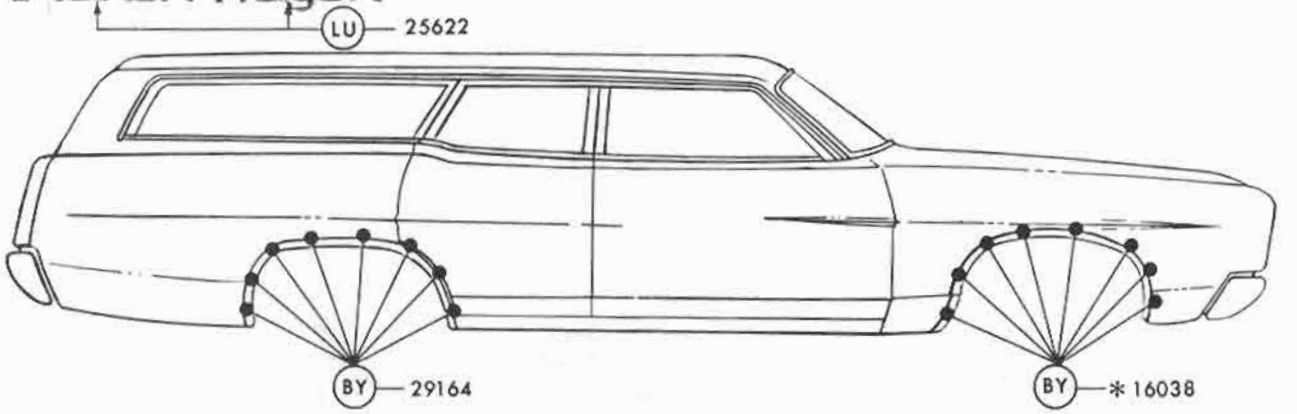

370713-S
(MM-292)
LU

381671-S (UU-89-C)
BY

* REFER TO GROUP IN CHASSIS SECTION

P-7825

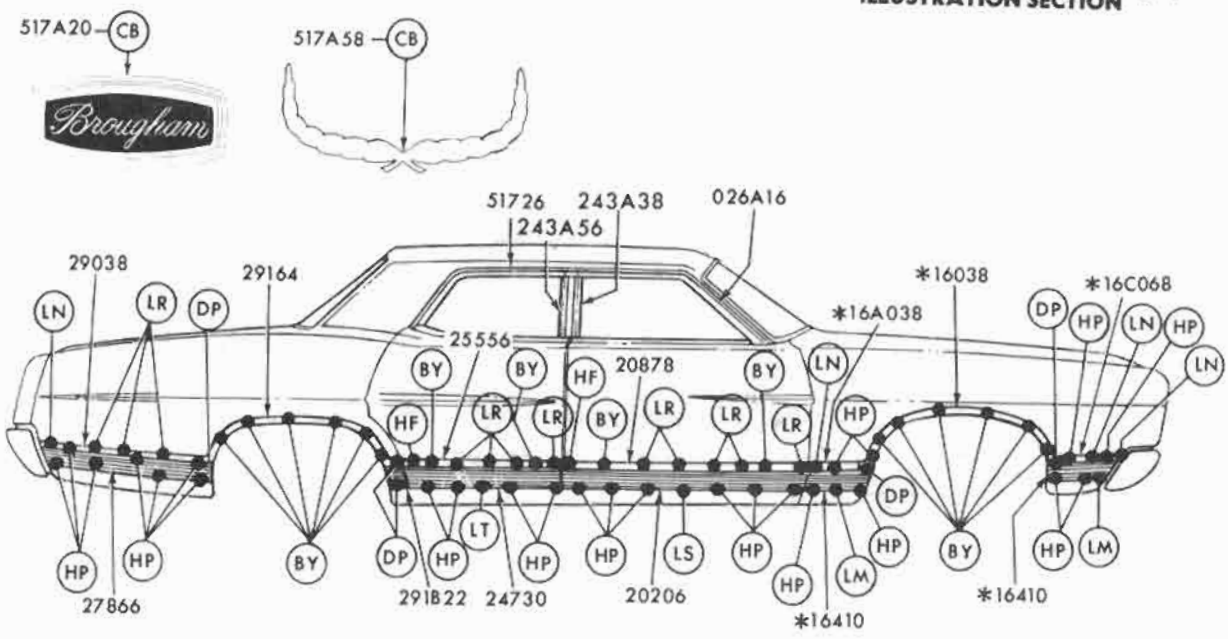

381671-S (UU-89-C)
BY

375890-S (MM222-A)
CB

382121-S
(GG-333-A)
DP

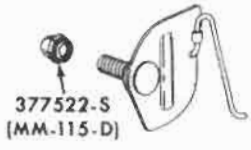

DOGY-7121094-A
HF

375203-S (SS-44)
HP

D1AZ-16A076-B
LM

D1AZ-16A076-A
LN

D1AZ-6521094-B
LR

D1AZ-57208A70-A
LS

D1AZ-65290C74-A
LT

*REFER TO GROUP IN CHASSIS SECTION

P-7821

COPYRIGHT © 1975 — FORD MOTOR COMPANY — DEARBORN, MICHIGAN

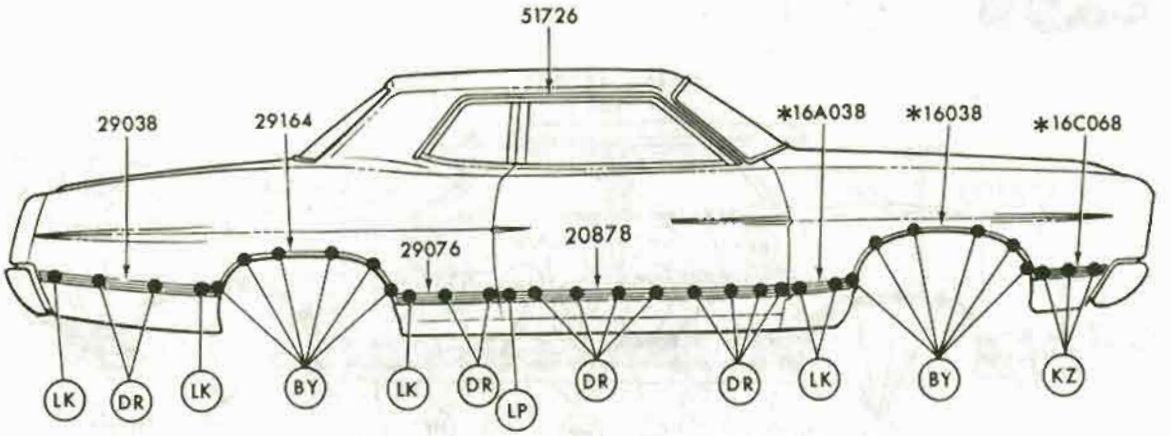

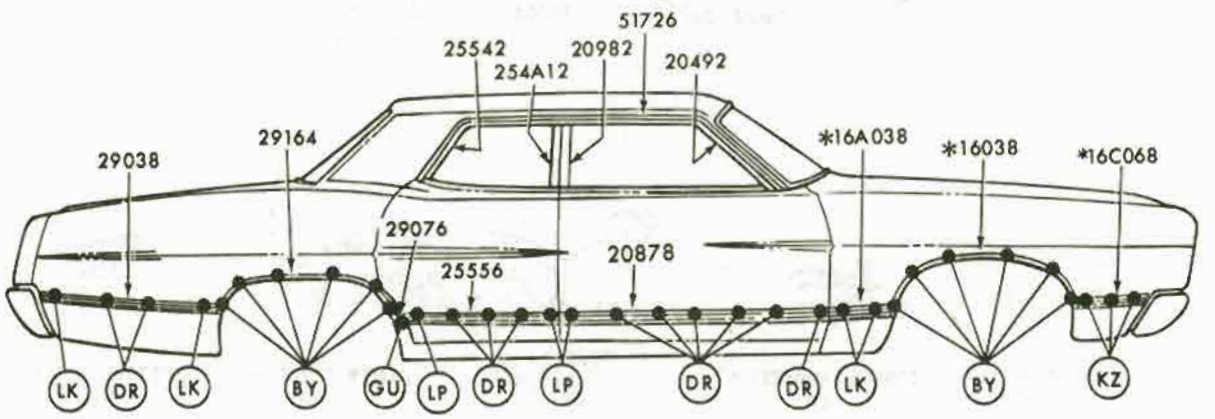

381671-S (UU-89-C)
BY

*45271-S
CF

C9MY-7129124-A
DR

383229-S (SS-44-E)
GU

D1AZ-65290A00-A
LK

D1AZ-6521094-A
LP

C8MY-71425A16-A
KZ

*REFER TO GROUP IN CHASSIS SECTION

P-7823

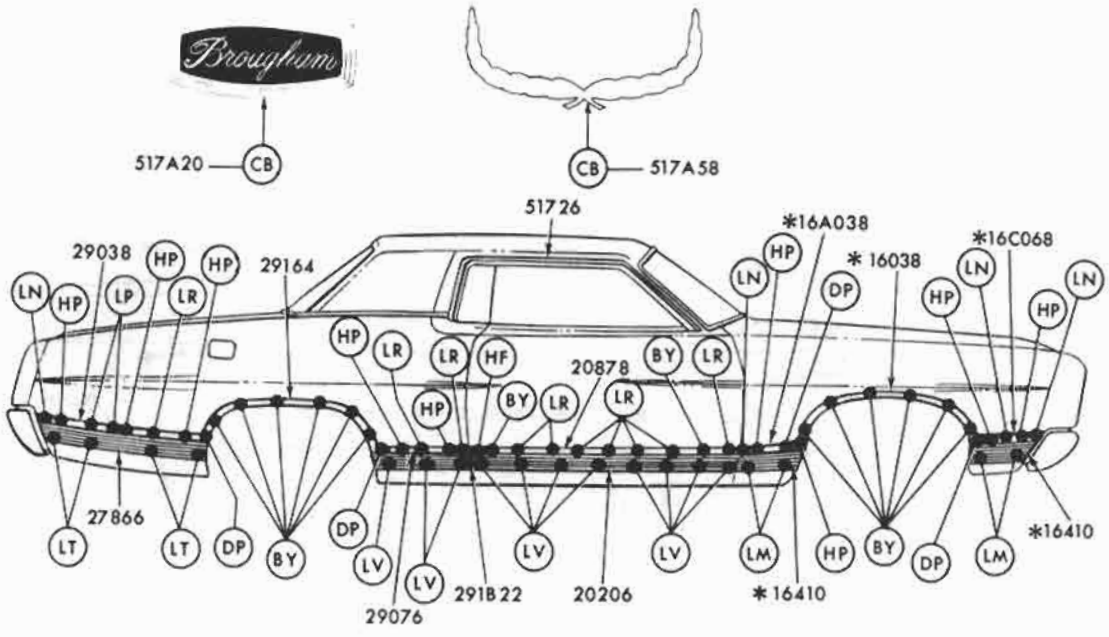

381671-S (UU-89-C)
BY

375890-S (MM222-A)
CB

382121-S
(GG-333-A)
DP

DOGY-7121094-A
HF

D1AZ-16A076-B
LM

D1AZ-16A076-A
LN

D1AZ-65208A70-A
LQ

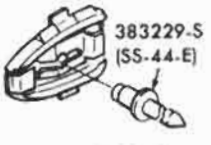

D1AZ-6521094-B
LR

D1AZ-65290C74-A
LT

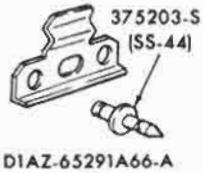

D1AZ-65291A66-A
LV

375203-S (SS-44)
HP

* REFER TO GROUP IN CHASSIS SECTION

P-7822

May, 1975 COPYRIGHT © 1975 — FORD MOTOR COMPANY — DEARBORN, MICHIGAN

FINAL ISSUE

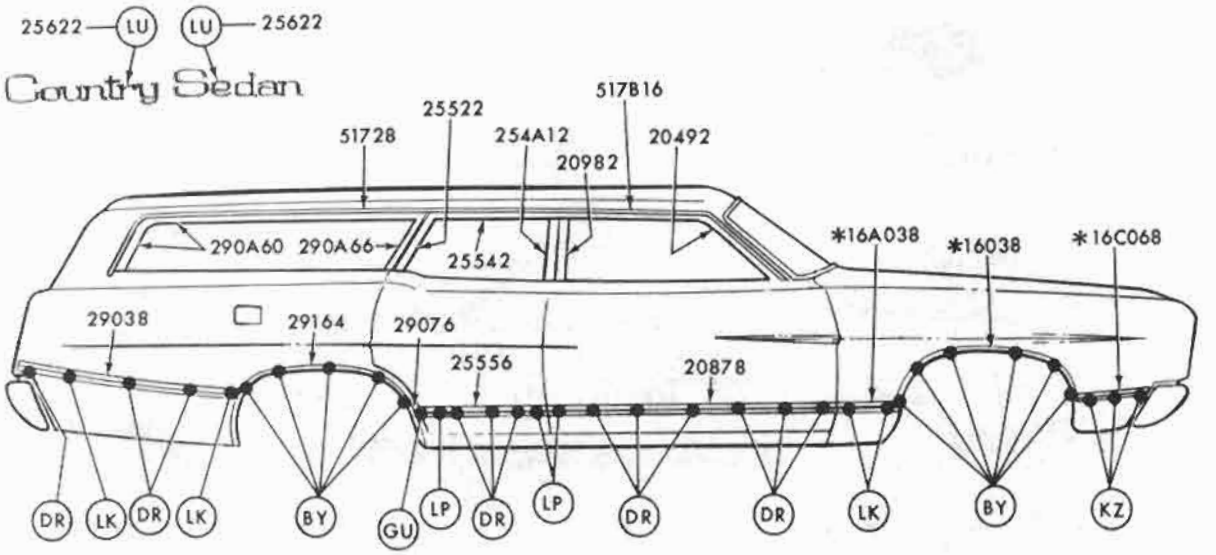

381671-S (UU-89-C)
BY

*45271-S
CF

C9MY-7129124-A
DR

383229-S (SS-44-E)
GU

C8MY-71425A16-A
KZ

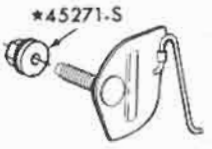

D1AZ-65290A00-A
LK

D1AZ-6521094-A
LP

370713-S
(MM-292)
LU

* REFER TO GROUP IN CHASSIS SECTION

P-7826

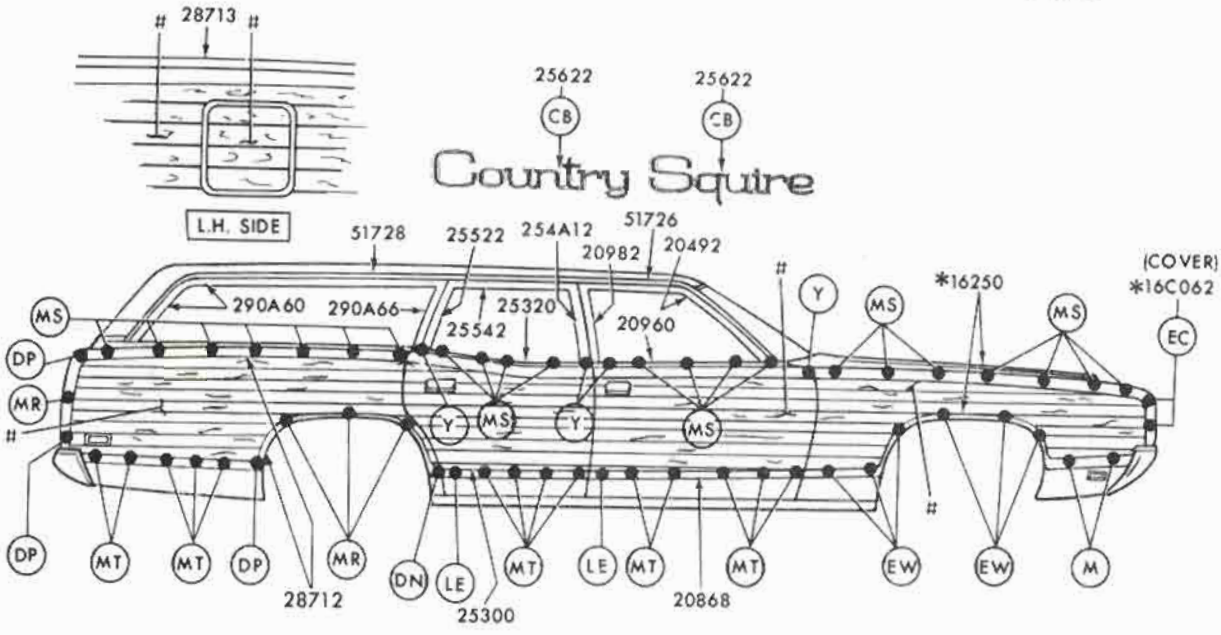

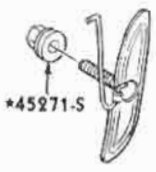

C8AZ-5410198-A
M

C9AZ-5420884-A
Y

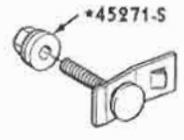

382918-S
(GG-333-B)
DN

382121-S
(GG-333-A)
DP

*55927-S
EC

C8AZ-71425A94-B
EW

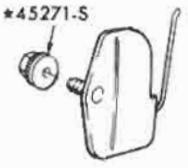

D1AZ-7121094-A
LE

D1AZ-71291866-A
MR

D1AZ-7129192-A
MS

D1AZ-7121066-A
MT

WOOD GRAIN TRANSFER—REFER TO GROUP 20748 IN TEXT
*REFER TO GROUP IN CHASSIS SECTION

P-7829

COPYRIGHT © 1975— FORD MOTOR COMPANY —DEARBORN, MICHIGAN

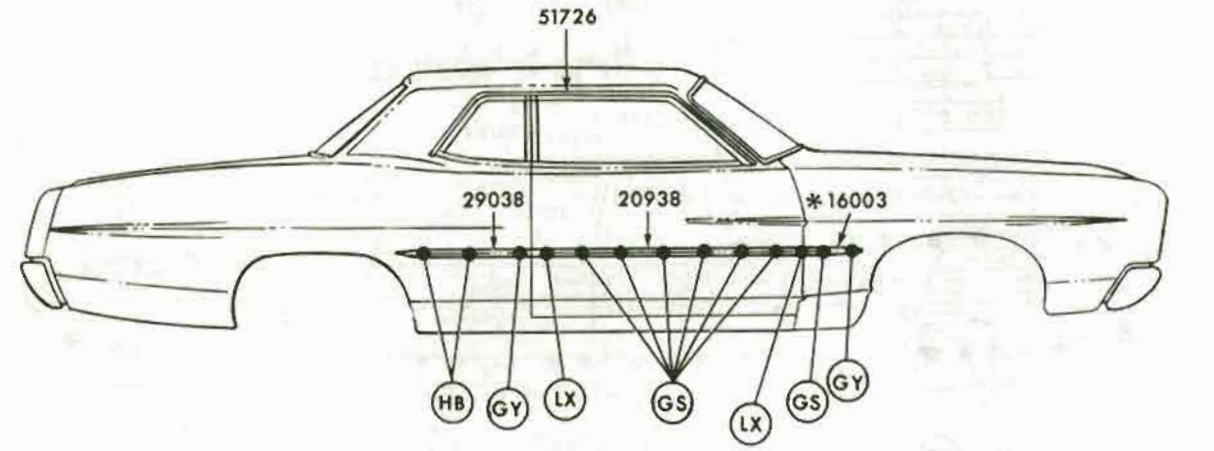

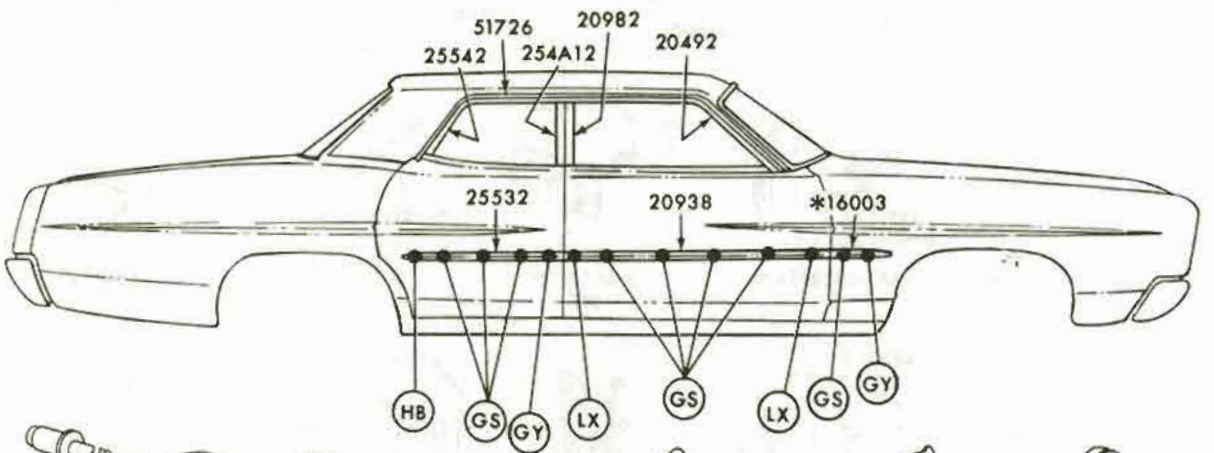

D0OZ-6620818-A
GS

383229-S (SS-44-E)
GU

D0GY-16A076-A
GY

D0DZ-6229120-A
HB

D1AZ-6542533-A
LX

* REFER TO GROUP IN CHASSIS SECTION

P-7827

BODY SIDE PROTECTION MOULDINGS
1971 FORD - ALL except BODY TYPE 71H

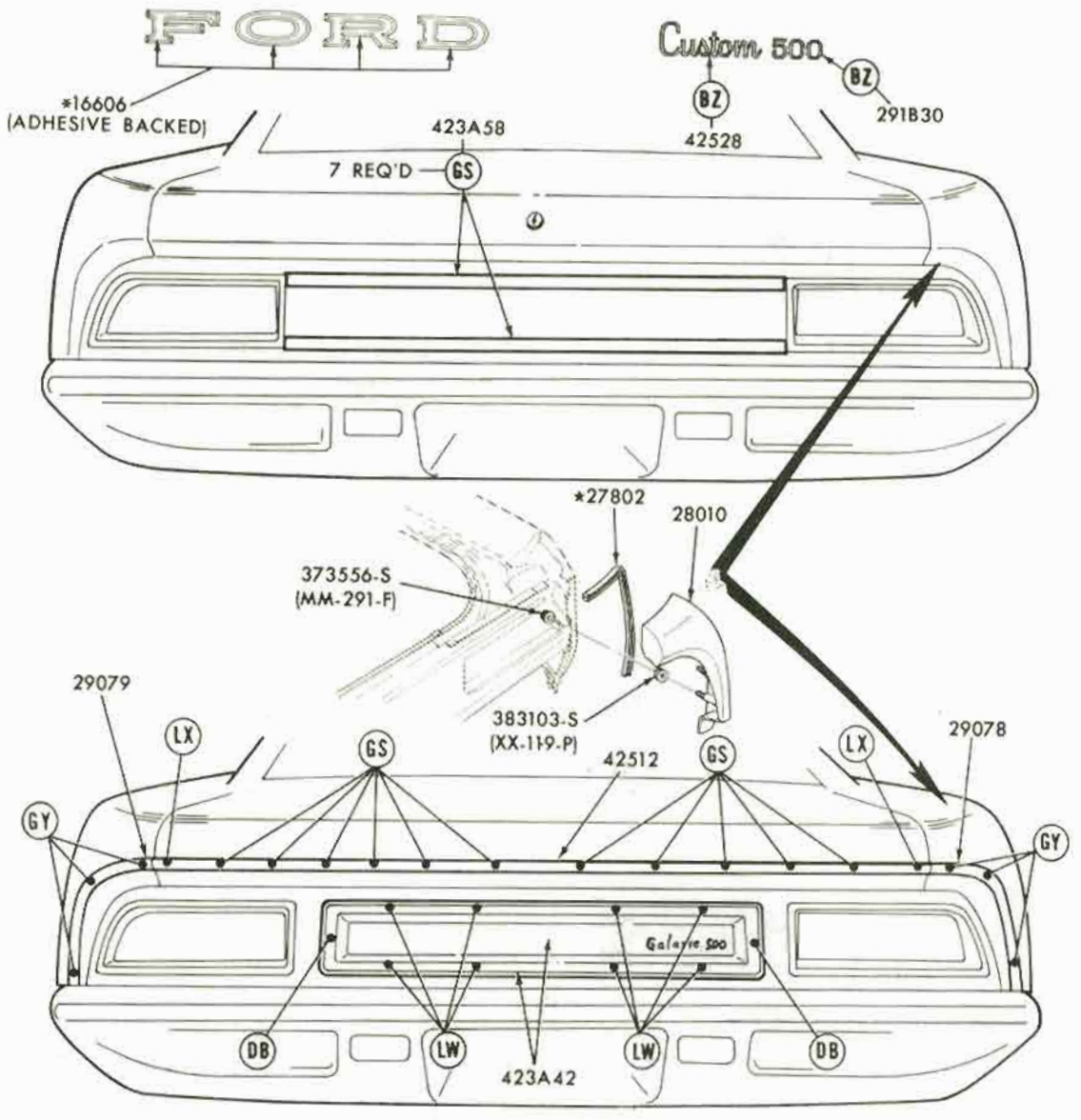

378362-S (MM-228)
BZ

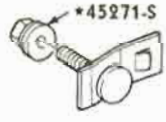

381955-S (GG-333)
DB

DOOZ-6620818-A
GS

DOGY-16A076-A
GY

381896-S
(GG-139-L)
LW

D1AZ-6542533-A
LX

*REFER TO GROUP IN CHASSIS SECTION

P-8170

1971 FORD - BODY TYPES 53, 54, 57, 65, 76 - BACK END

COPYRIGHT © 1975 — FORD MOTOR COMPANY — DEARBORN, MICHIGAN

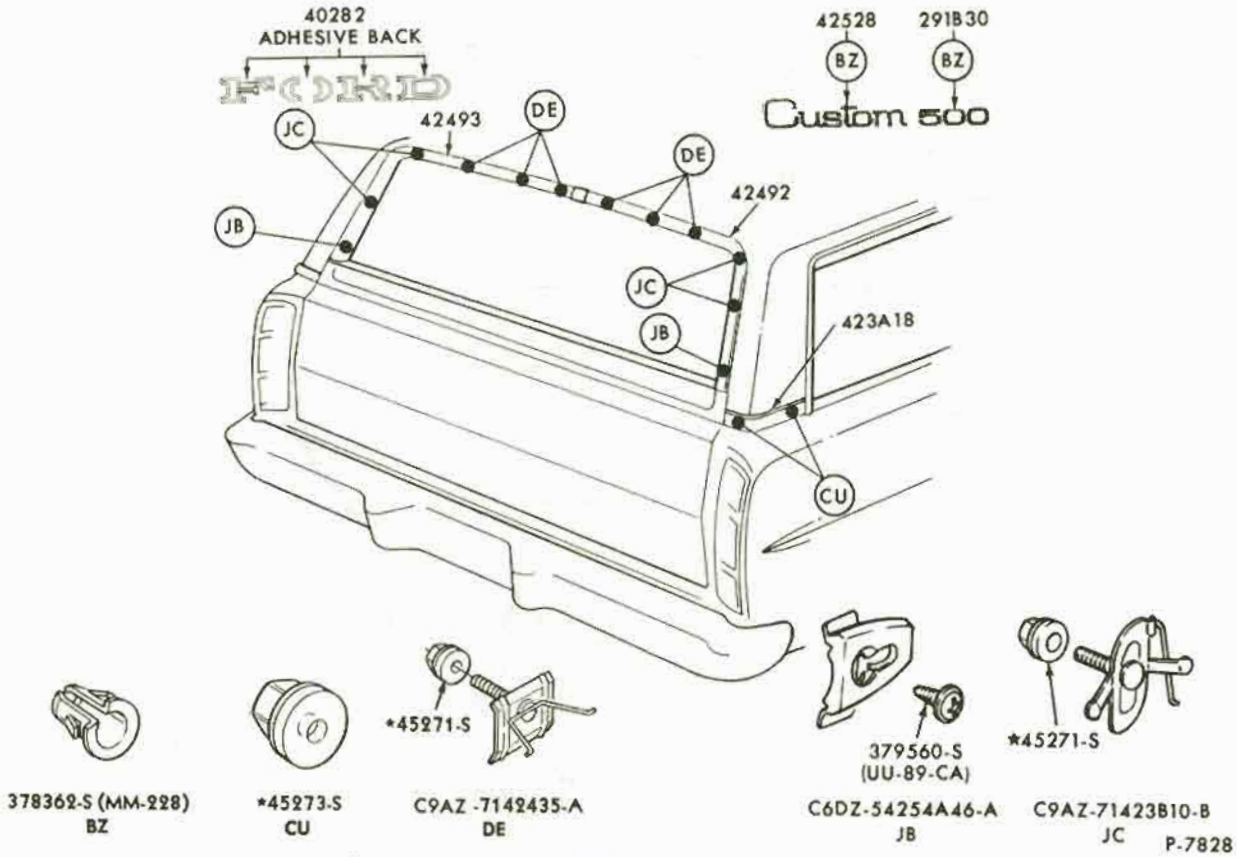

1971/72 FORD - BODY TYPE 71B, D, F - BACK END

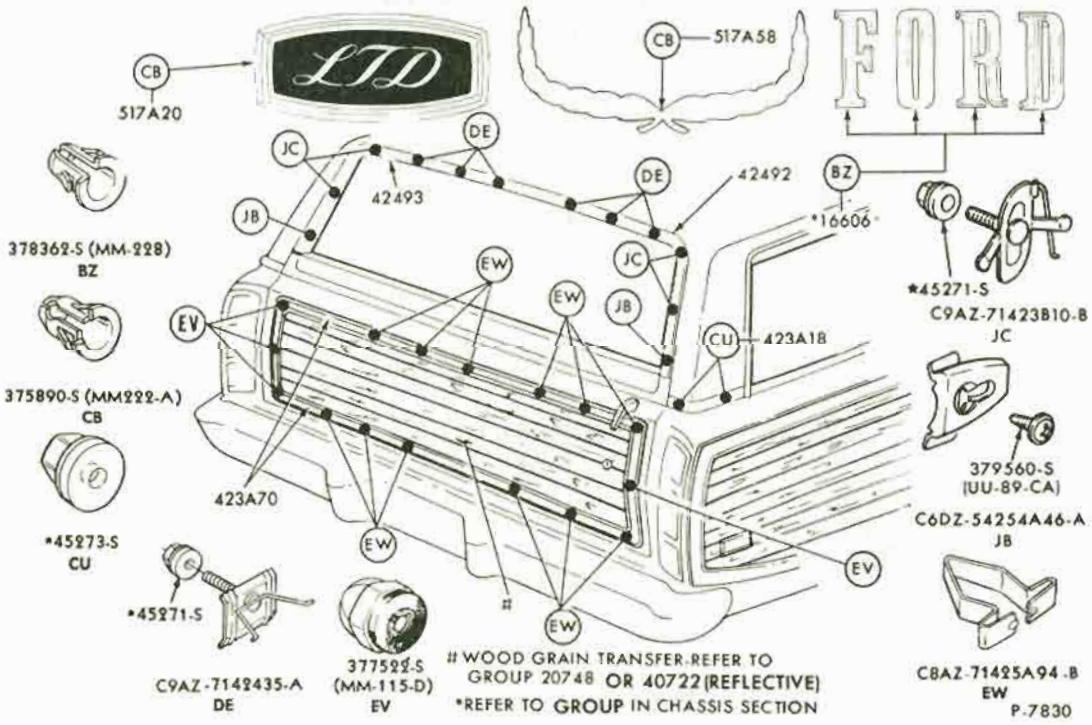

WOOD GRAIN TRANSFER-REFER TO GROUP 20748 OR 40722 (REFLECTIVE)
*REFER TO GROUP IN CHASSIS SECTION

1971 FORD - BODY TYPE 71H - BACK END

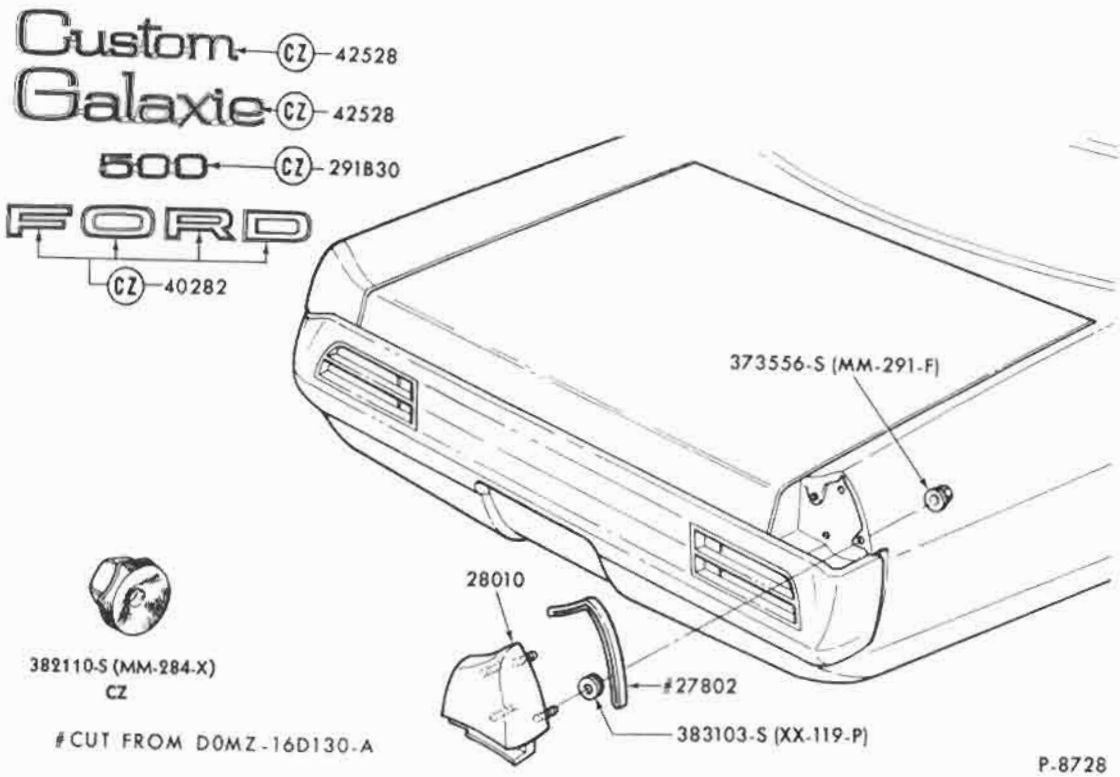

1972 FORD - BODY TYPES 53, 54, 57, 65, 76 - BACK END

COPYRIGHT © 1975 — FORD MOTOR COMPANY — DEARBORN, MICHIGAN

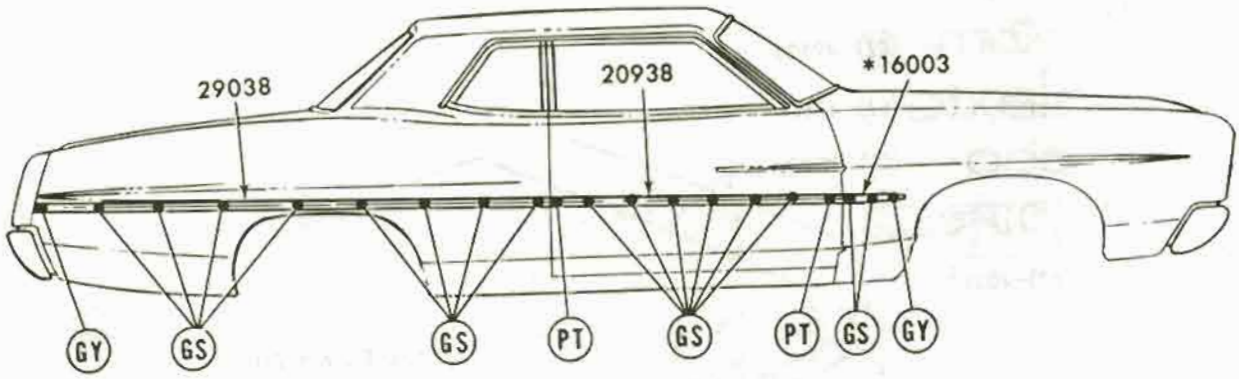

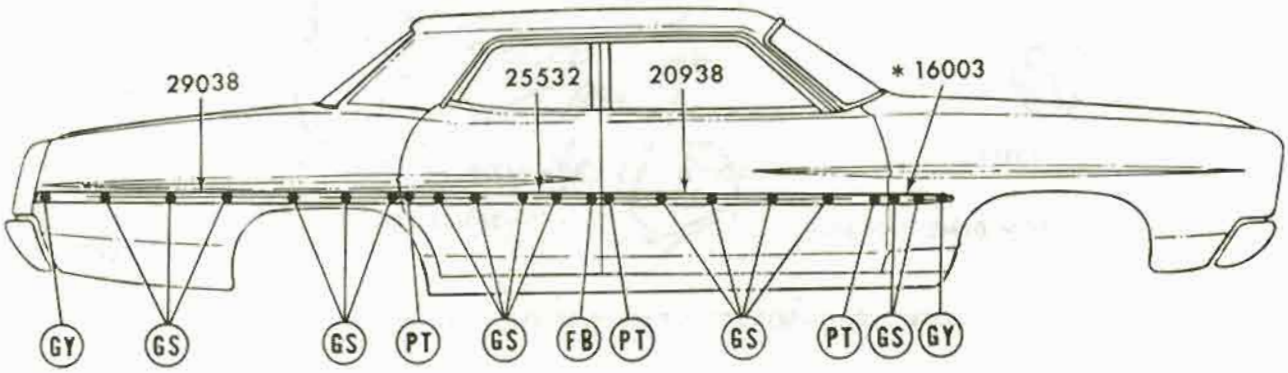

C8MY-5429120-A
FB

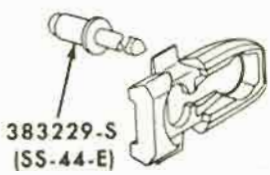

DOOZ-6620818-A
GS

DOGY-16A076-A
GY

D2AZ-6520884-A
PT

* REFER TO GROUP IN CHASSIS SECTION

P-8729

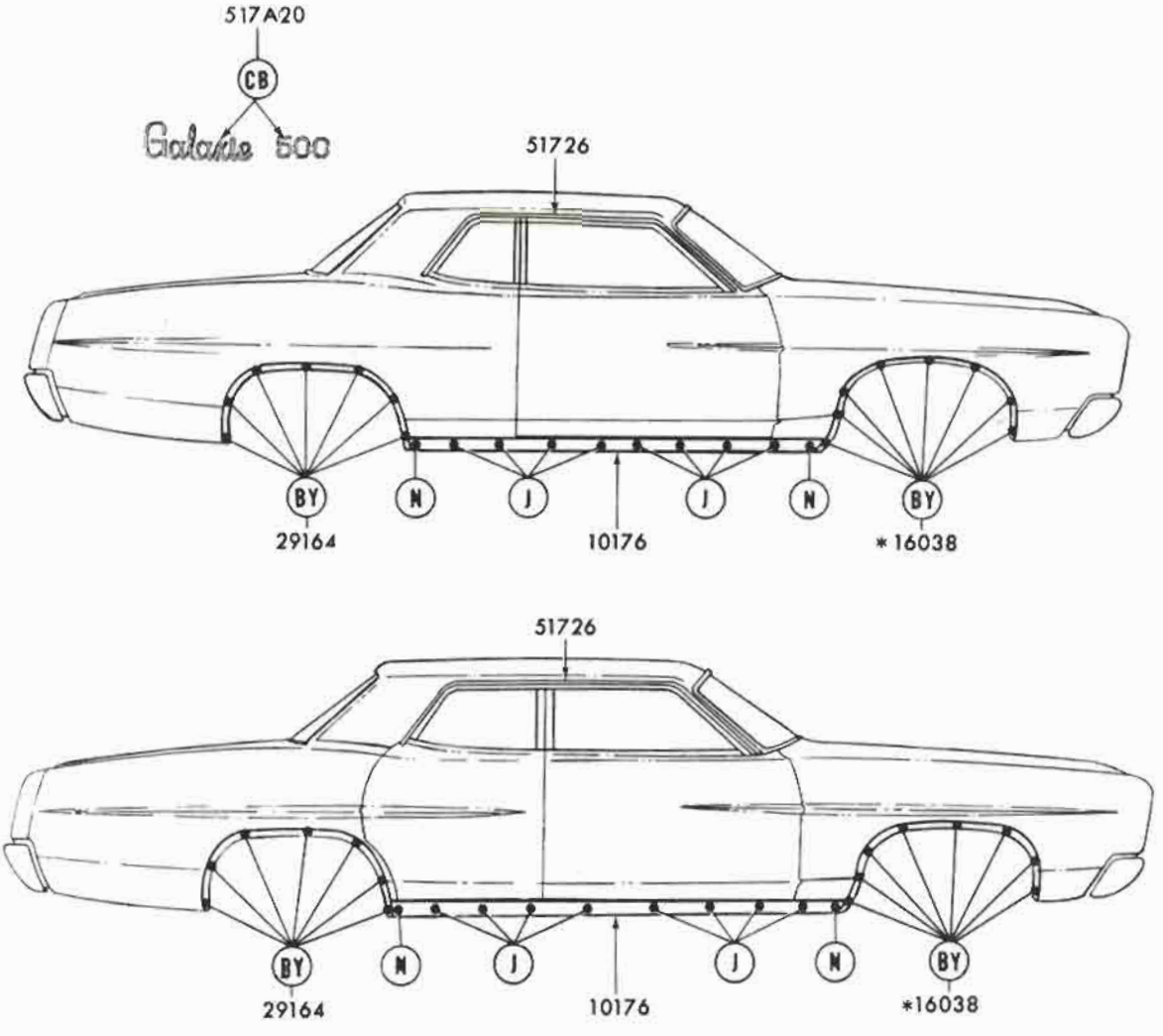

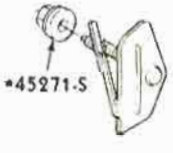

*C9MY-5410198-A
N

*C9MY-5410182-A
J

381671-S (UU-89-C)
BY

375890-S (MM222-A)
CB

*REFER TO GROUP IN CHASSIS SECTION

P-8730

May, 1975 COPYRIGHT © 1975 — FORD MOTOR COMPANY — DEARBORN, MICHIGAN FINAL ISSUE

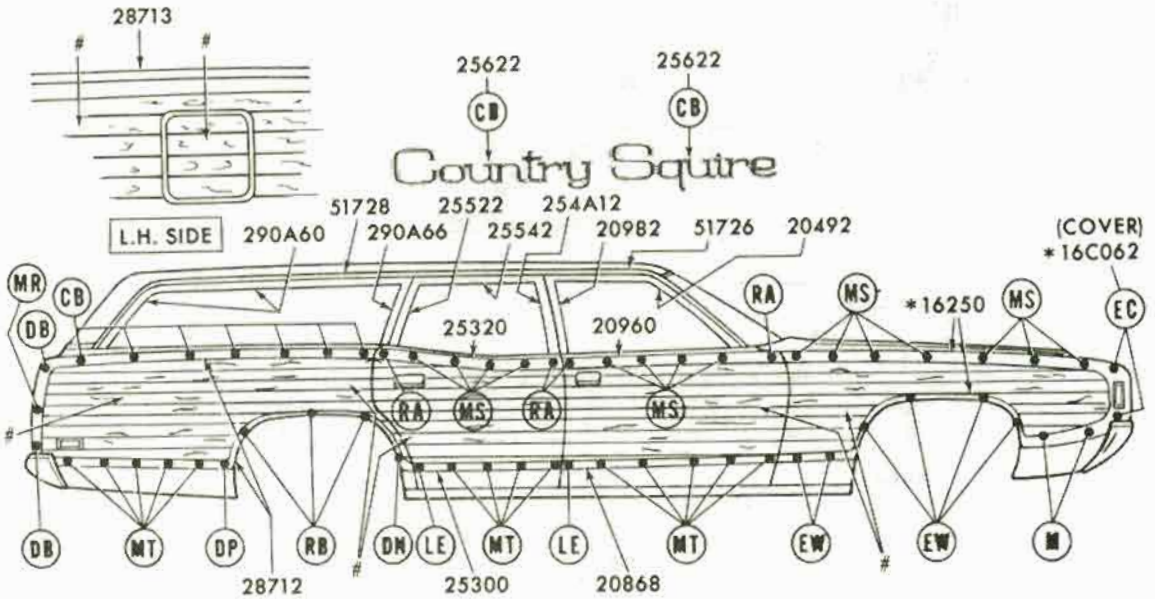

C8AZ-5410198-A
M

375890-S (MM222-A)
CB

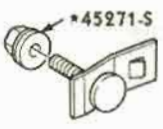

381955-S (GG-333)
DB

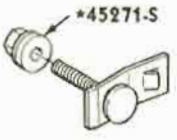

*382918-S
DN

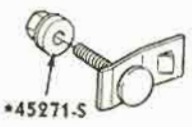

382121-S
(GG-333-A)
DP

*55927-S
EC

*C7AZ-71425A94-A
EW

D1AZ-7121094-A
LE

D1AZ-7129192-A
MS

D1AZ-7121066-A
MT

D1AZ-71291B66-A
MR

*45289-S
RA

D1AZ-71291B66-B
RB

WOOD GRAIN TRANSFER-REFER TO GROUP 20748 IN TEXT
* REFER TO GROUP IN CHASSIS SECTION

P-8726

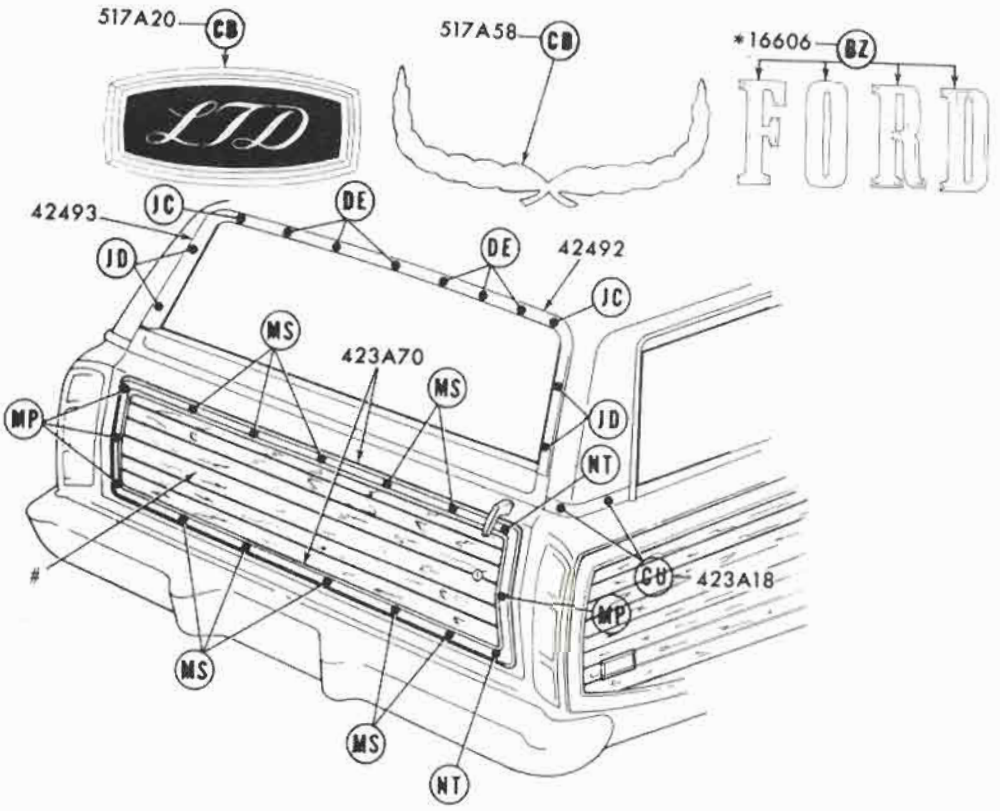

378362-S (MM-228)
BZ

375890-S (MM222-A)
CB

*C9AY-7142435-A
DE

*45273-S
CU

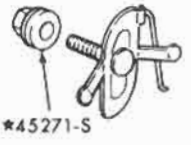

C9AZ-71423B10-B
JC

C9AZ-7142318-B
JD

D1AZ-7129192-A
MS

MP

D20Z-71425A94-A
NT

WOODGRAIN TRANSFER-REFER TO GROUP 20748 OR 40722

P-8727

May, 1975 COPYRIGHT © 1975 — FORD MOTOR COMPANY — DEARBORN, MICHIGAN FINAL ISSUE

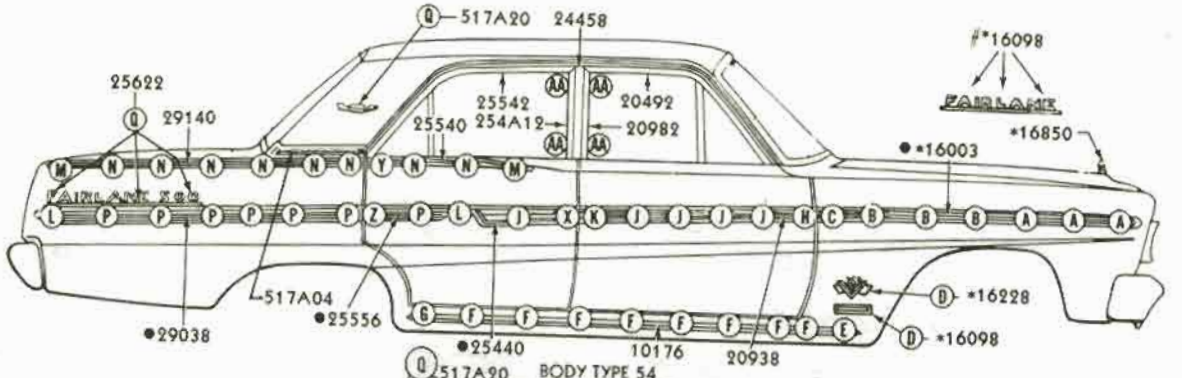

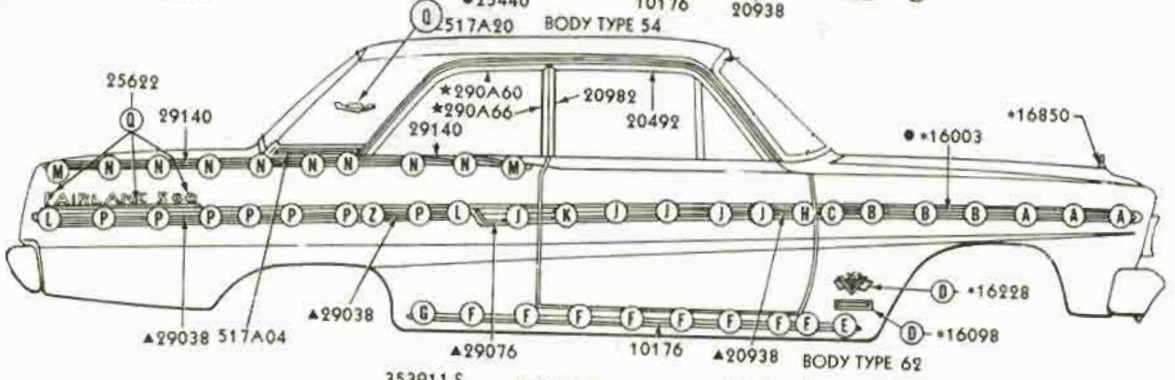

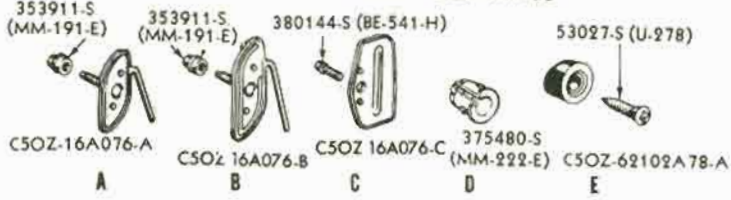

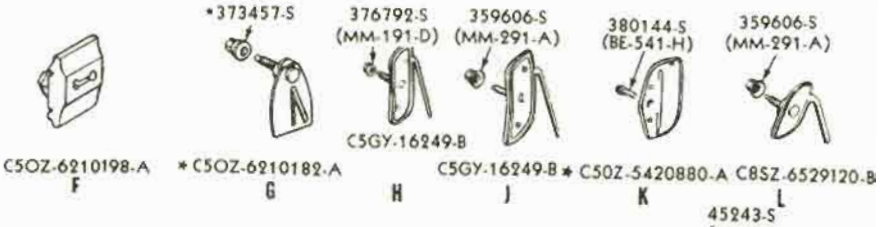

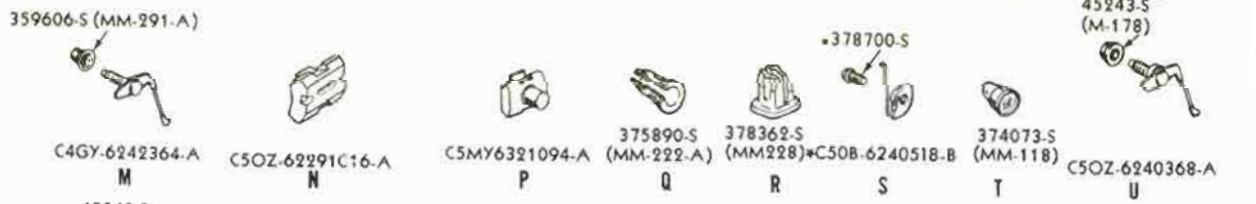

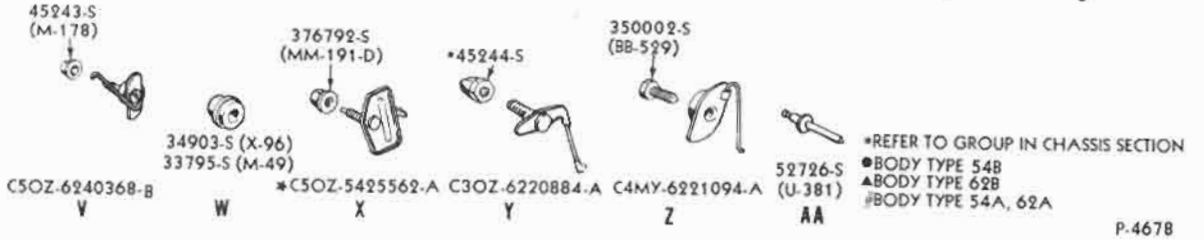

P-4678

1965 FAIRLANE - BODY TYPE 54, 62 - SIDE

COPYRIGHT © 1975 — FORD MOTOR COMPANY — DEARBORN, MICHIGAN

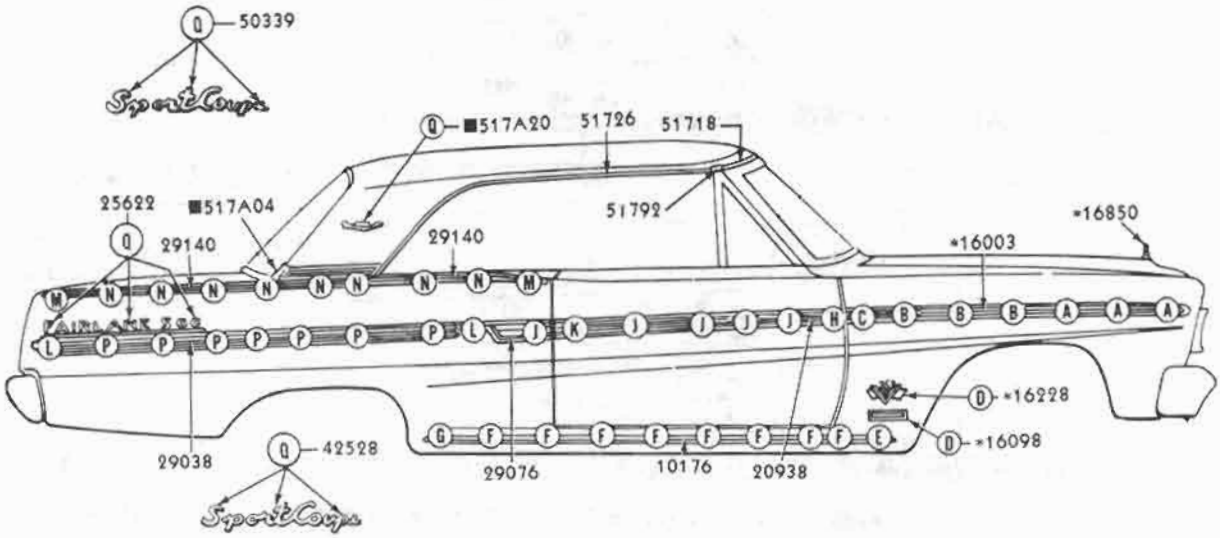

353911-S (MM-191-E)
C5OZ-16A076-A
A

353911-S (MM-191-E)
C5OZ-16A076-B
B

380144-S (BB-541-H)
C5OZ-16A076-C
C

375480-S
(MM-222-E)
D

*376366-S
C5)Z-62102A78-A
E

C5OZ-6210198-A
F

*373457-S
*C5OZ-6210182-A
G

376792-S
(MM-191-D)
C5GY-16249-B
H

359606-S
(MM-291-A)
C5GY-16249-B
J

380144-S
(BB-541-H)
★ C5OZ-5420880-A
K

359606-S
(MM-291-A)
C8SZ-6529120-B
L

359606-S
(MM-291-A)
C4GY-6242364-A
M

C5OZ-62291C16-A
N

C5MY6321094-A
P

375890-S
(MM-222-A)
Q

*REFER TO GROUP IN CHASSIS SECTION
■BODY TYPE 65A

P-4681

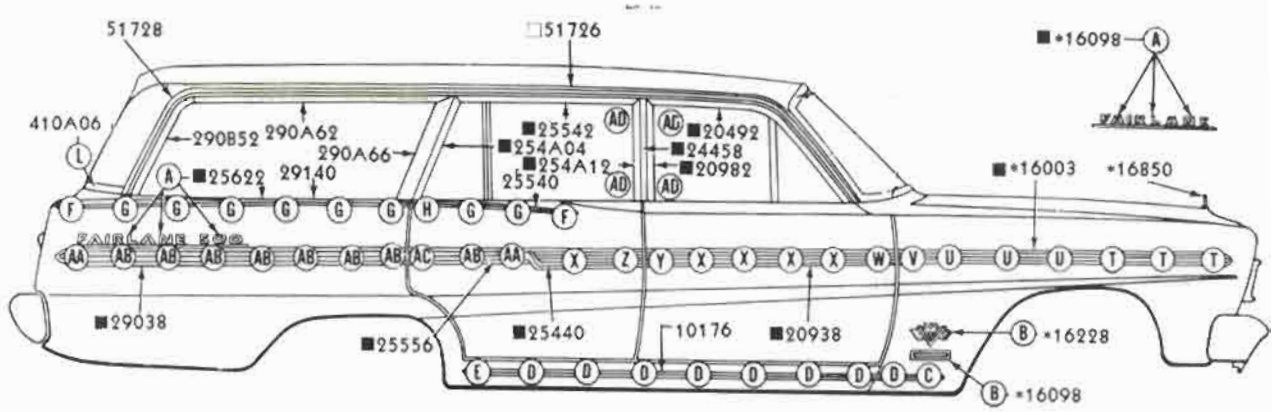

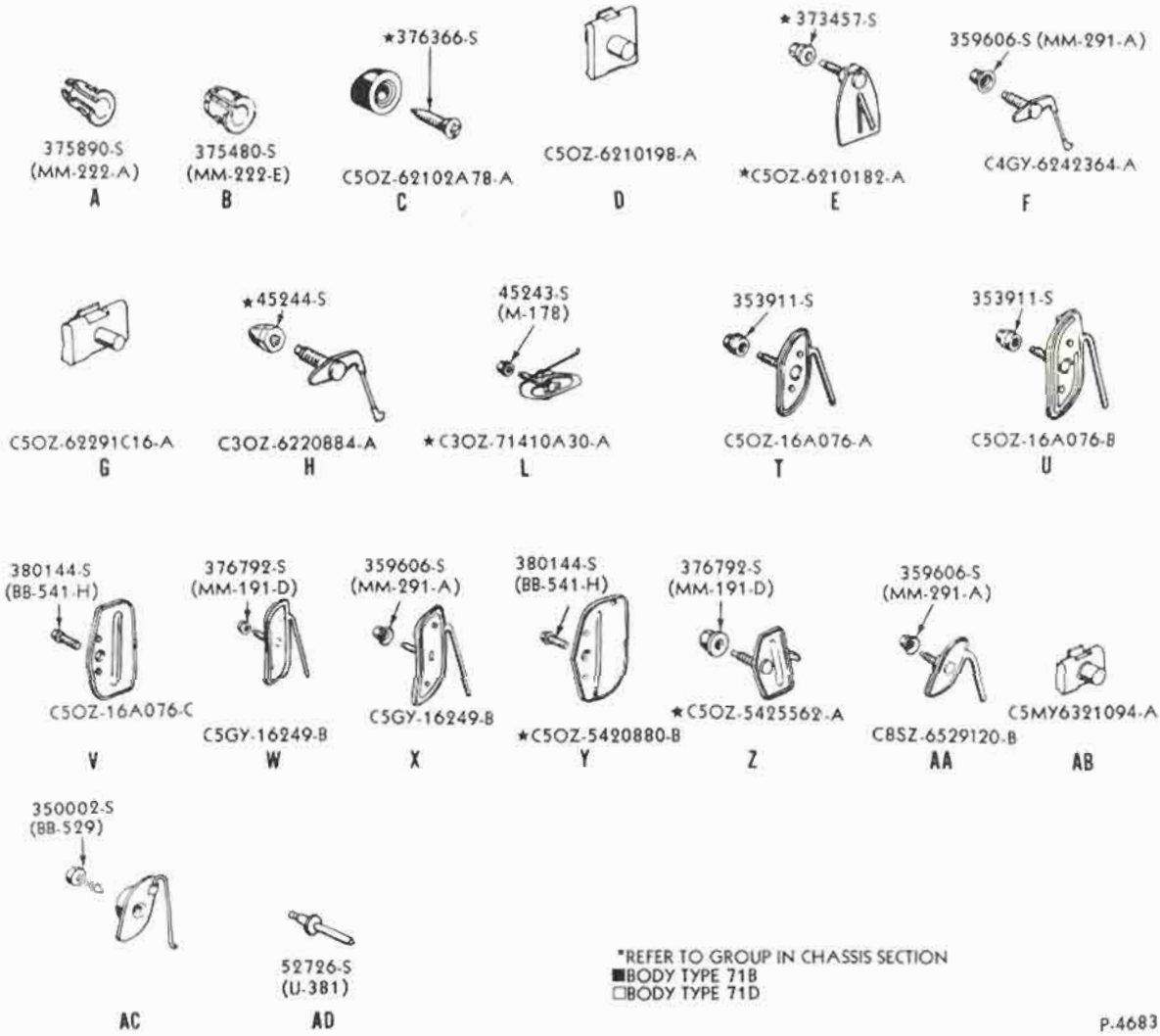

*REFER TO GROUP IN CHASSIS SECTION
■BODY TYPE 71B
□BODY TYPE 71D

P-4683

May, 1975 COPYRIGHT © 1975 — FORD MOTOR COMPANY — DEARBORN, MICHIGAN

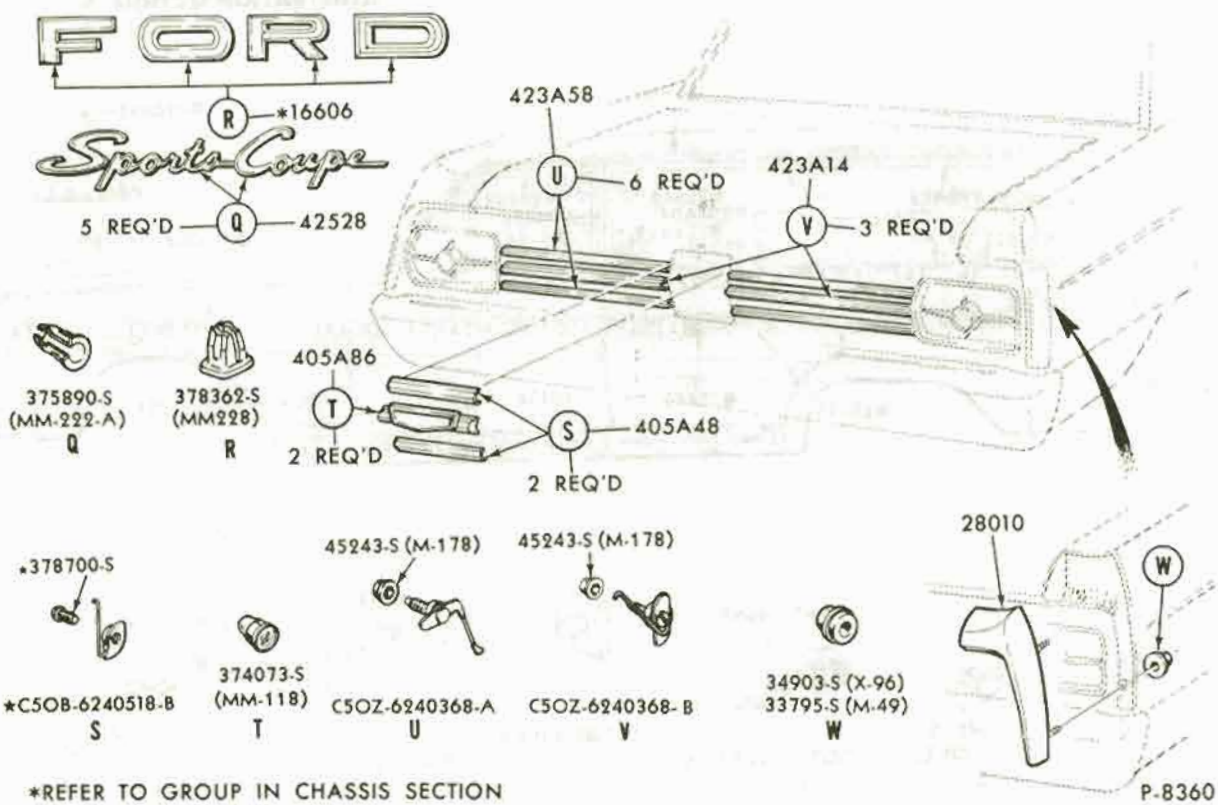

1965 FAIRLANE - BODY TYPES 54, 62, 65 - BACK END

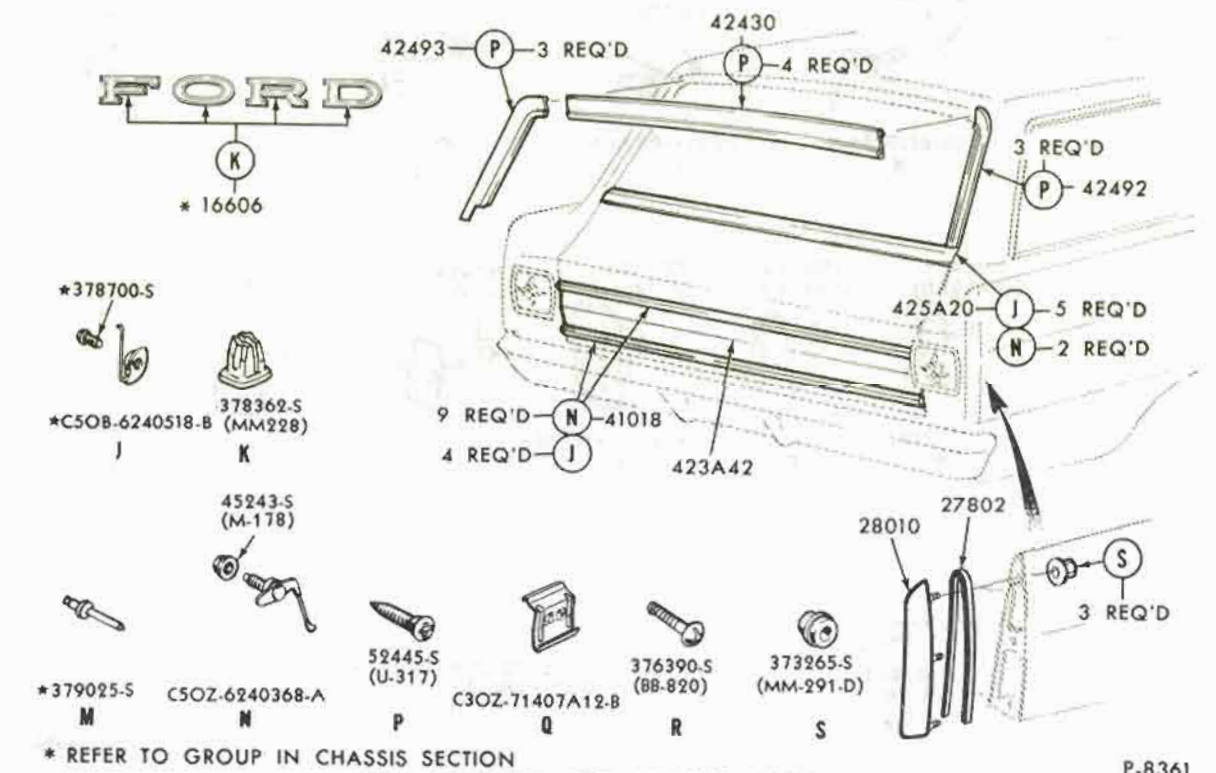

1965 FAIRLANE - BODY TYPE 71 - BACK END

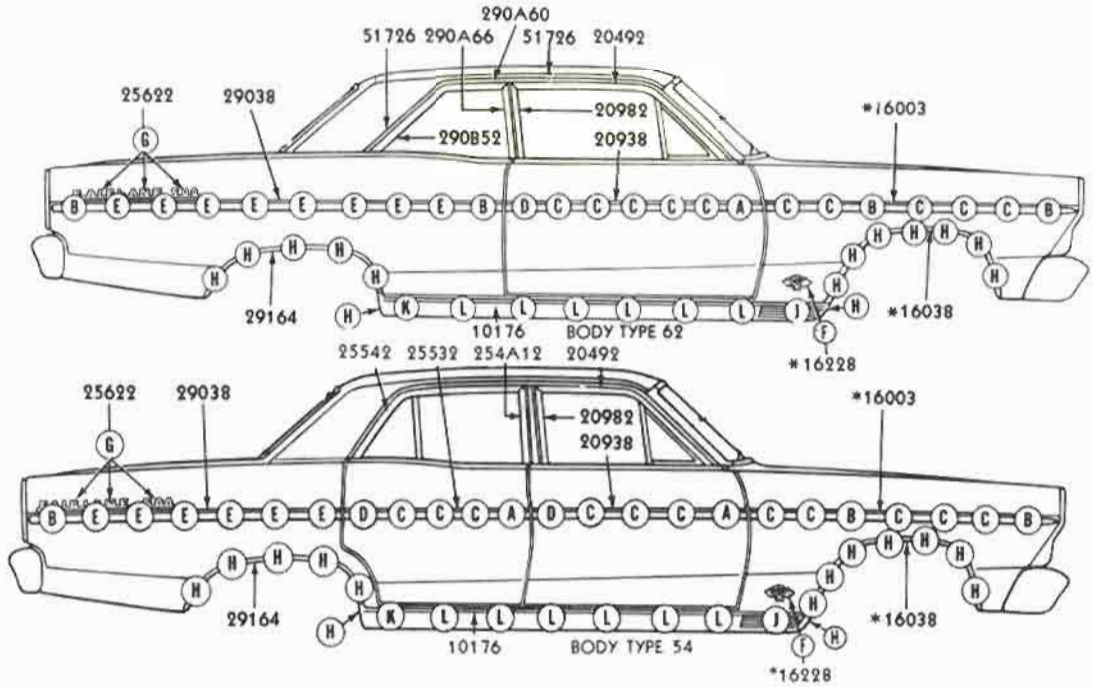

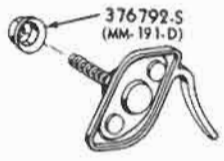
376792-S (MM-191-D)

C6OZ-6220884-A
A

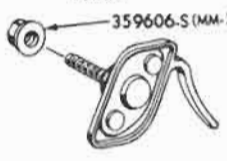
359606-S (MM-291-A)

C6OZ-6220884-A
B

C6OZ-6220818-A
C

350002-S (BB-529)

C6OZ-6220880-A
D

375557-S (UU-82)

C6OZ-6220818-A
E

375480-S (MM-222-E)
F

C6OZ-62290876-A

375890-S (MM-222-A)
G

376378-S (UU-97)
H

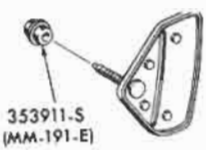
353911-S (MM-191-E)

C6OZ-6210182-B
J

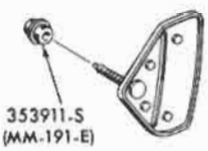
353911-S (MM-191-E)

C6OZ-6210182-C
K

375203-S (SS-44)

C6OZ-6210182-A
L

378362-S (MM-228)
M

373504-S (MM-285-B)
N

*REFER TO GROUP IN CHASSIS SECTION

P-5051

1966 FAIRLANE - BODY TYPE 54, 62 - SIDE

COPYRIGHT © 1975 — FORD MOTOR COMPANY — DEARBORN, MICHIGAN

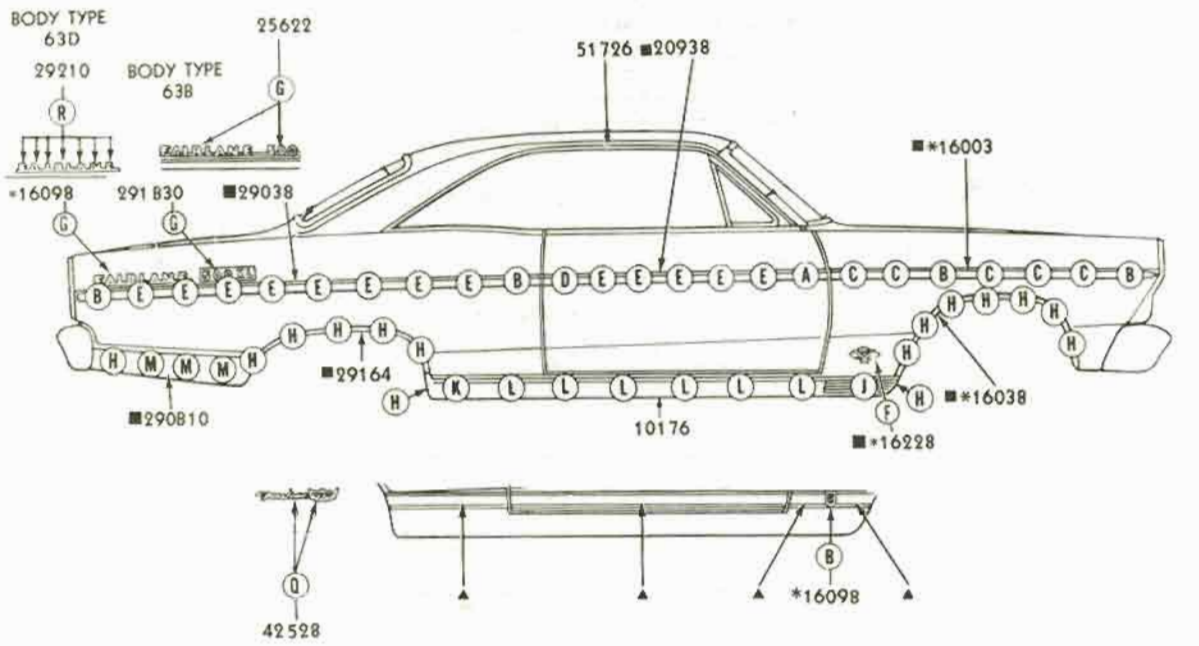

C6OZ-6220884-A
A

C6OZ-6220884-A
B

C60Z-6220818-A
C

C6OZ-6220880-A
D

C6OZ-6220818-A
E

375480-S (MM-222-E)
F

375890-S (MM-222-A)
G

376378-S (UU-97)
H

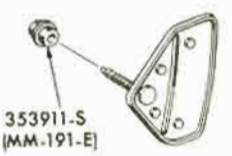

C6OZ-6210182-B
J

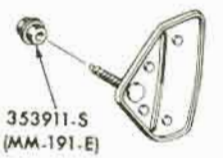

C6OZ-6210182-C
K

C6OZ-6210182-A
L

*C6OZ-63290882-A
M

378362-S (MM-228)
R

*REFER TO GROUP IN CHASSIS SECTION

■BODY TYPE 63B, C

▲SUPPLIED IN BASIC KIT 20000

P-5055

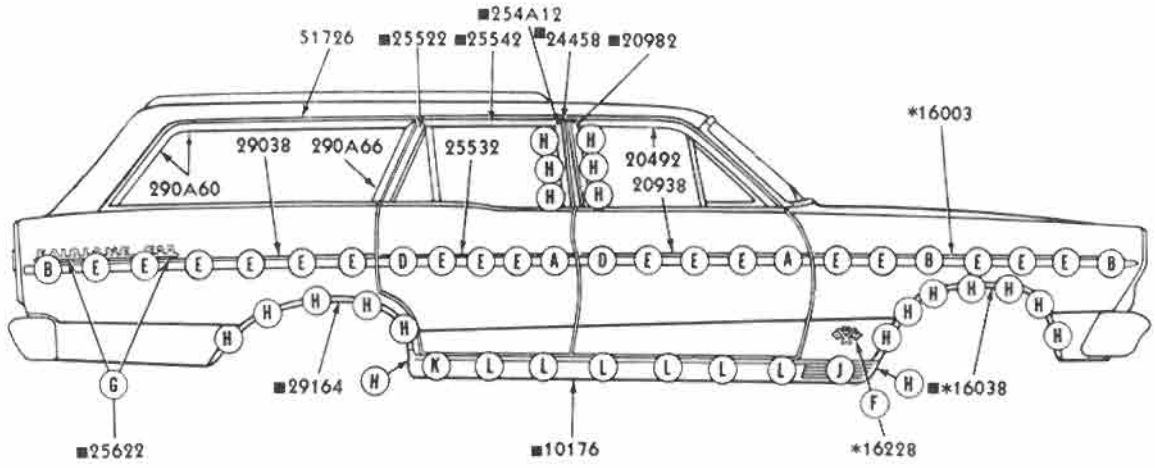

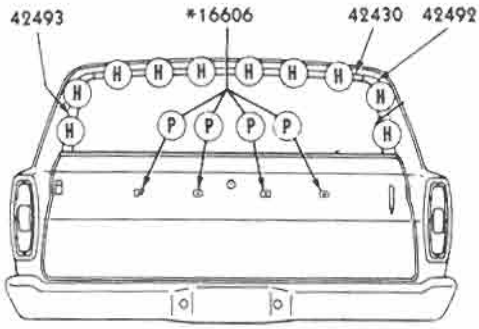

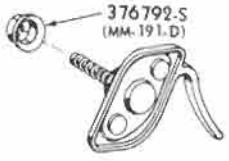

C6OZ-6220884-A
A

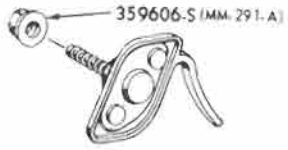

C6OZ-6220884-A
B

C6OZ-6220880-A
D

C6OZ-6220818-A
E

375480-S (MM-222-E)
F

375890-S (MM-222-A)
G

376378-S (UU-97)
H

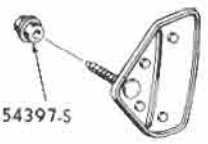

C6OZ-6210182-B
J

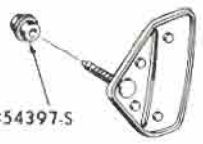

C6OZ-6210182-C
K

C6OZ-6210182-A
L

378362-S (MM-228)
P

*REFER TO GROUP IN CHASSIS SECTION
■BODY TYPE 71B

P-5057

May, 1975 COPYRIGHT © 1975 — FORD MOTOR COMPANY — DEARBORN, MICHIGAN FINAL ISSUE

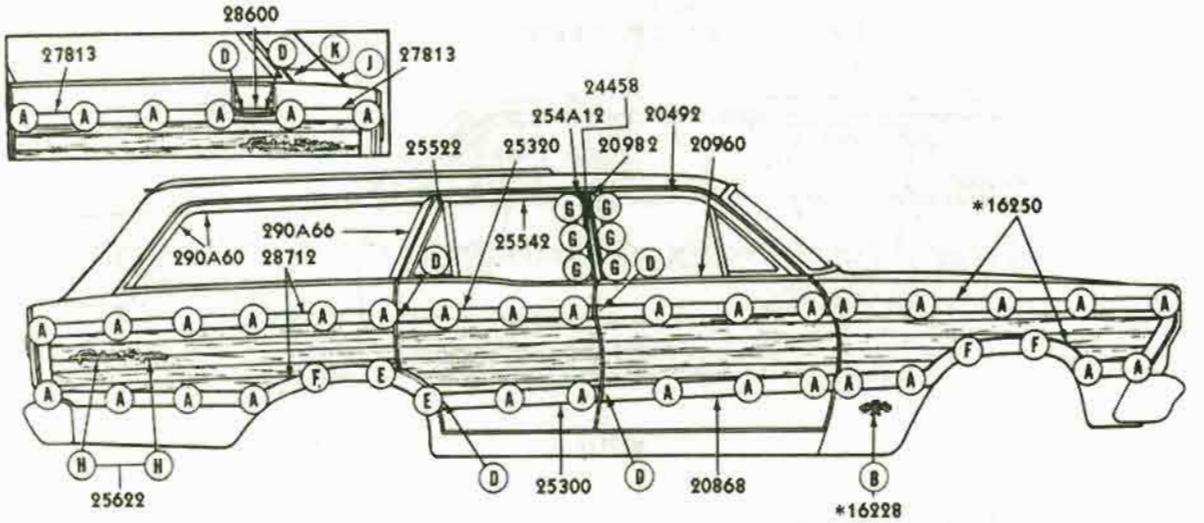

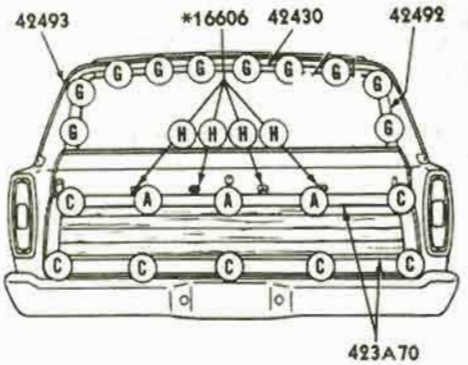

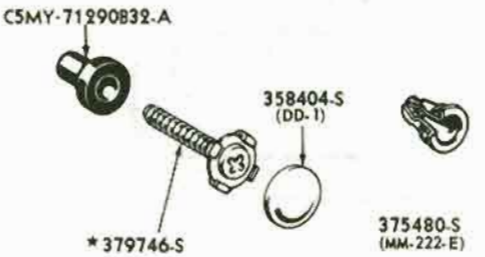

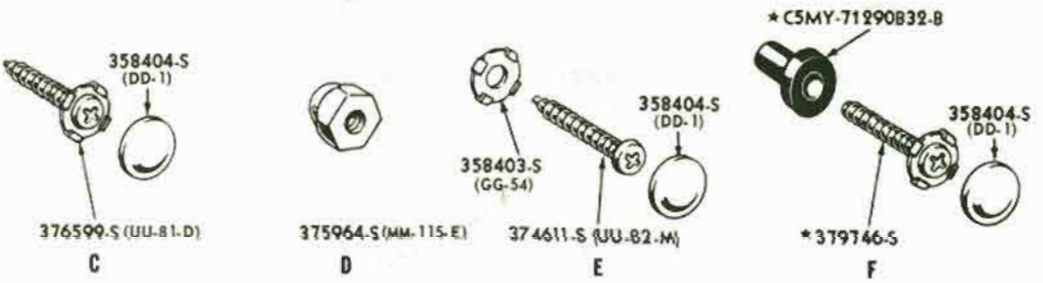

WALNUT GRAIN TRANSFER WITH BLACK PLANKING LINES C6OZ-7120748-A
WALNUT GRAIN TRANSFER WITHOUT BLACK PLANKING LINES C6OZ-7120748-B

*REFER TO GROUP IN CHASSIS SECTION

P-5059

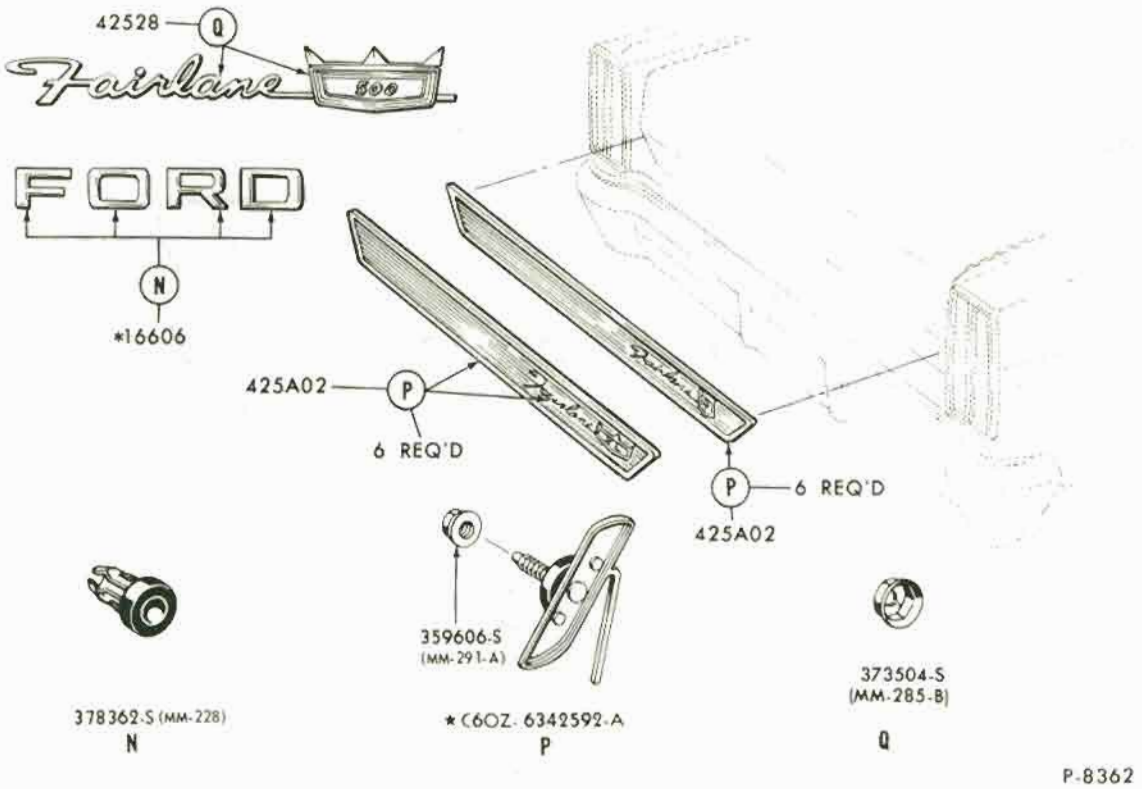

1966 FAIRLANE - BODY TYPES 54, 62, 63, 76 - BACK END

COPYRIGHT © 1975 — FORD MOTOR COMPANY — DEARBORN, MICHIGAN

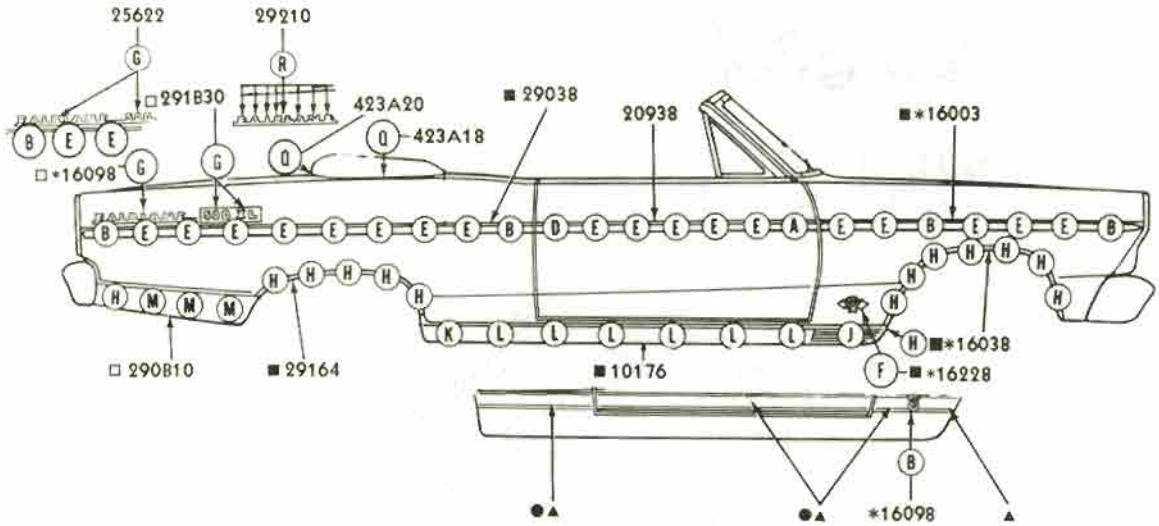

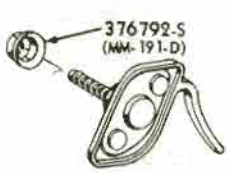

C6OZ-6220884-A
A

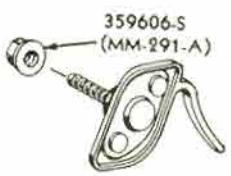

C6OZ-6220884-A
B

373504-S (MM-285-B)
C

C6OZ-6220880-A
D

C6OZ-6220818-A
E

375480-S
(MM-222-E)
F

375890-S (MM-222-A)
G

376378-S (UU-97)
H

C6OZ-6210182-B
J

C6OZ-6210182-C
K

C6OZ-6210182-A
L

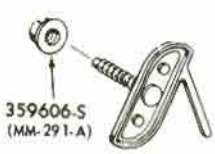

* C6OZ-63290B82-A
M

378362-S (MM-228)
N

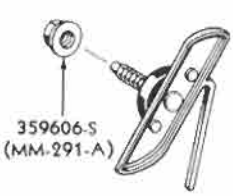

*C6OZ-6342592-A
P

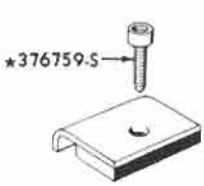

C6OZ-7640248-A
Q

378362-S (MM-228)
R

*REFER TO GROUP IN CHASSIS SECTION
▲SUPPLIED IN BASIC KIT 20000
●BODY TYPE 76D
■BODY TYPE 76B,C
□BODY TYPE 76 C

P-5102

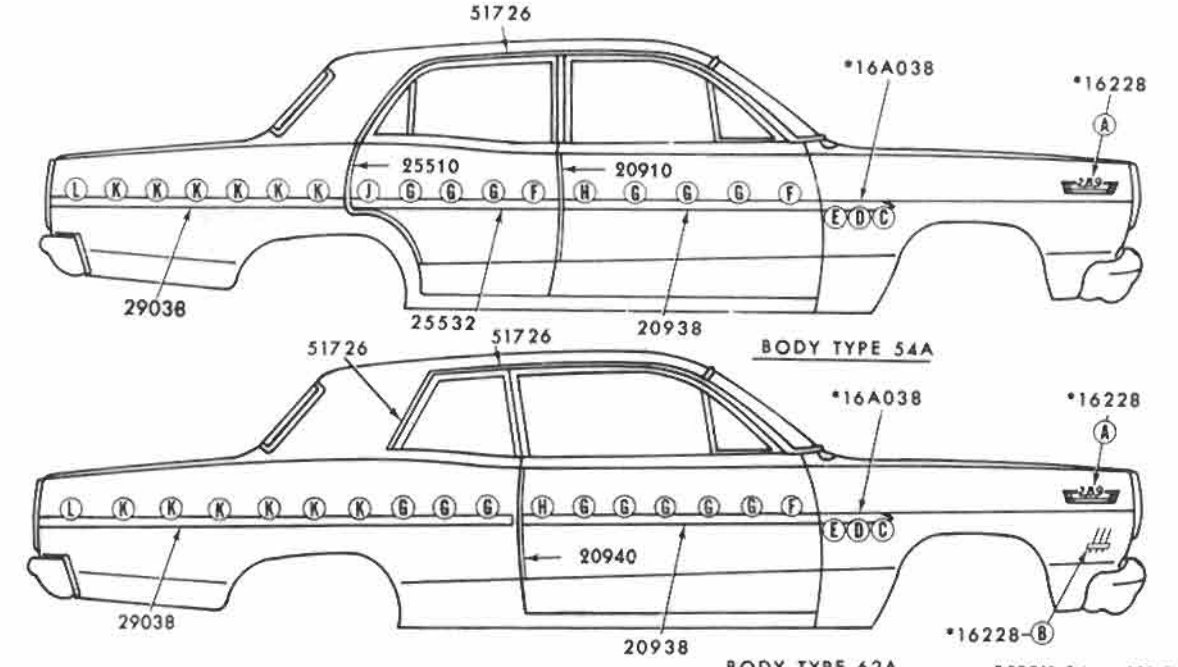

BODY TYPE 62A

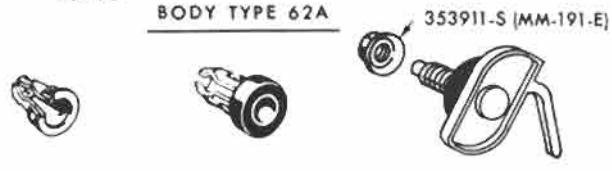

375480-S (MM-222-E) — A

378362-S (MM-228) — B

C8SZ 6529120-B — C

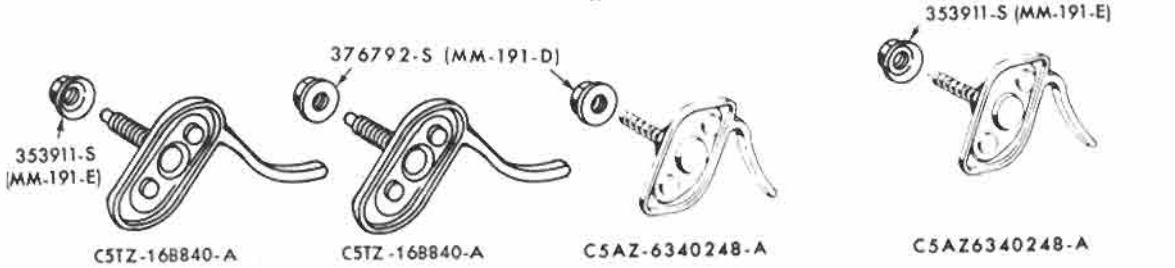

C5TZ-168840-A — D

C5TZ-168840-A — E

C5AZ-6340248-A — F

C5AZ6340248-A — G

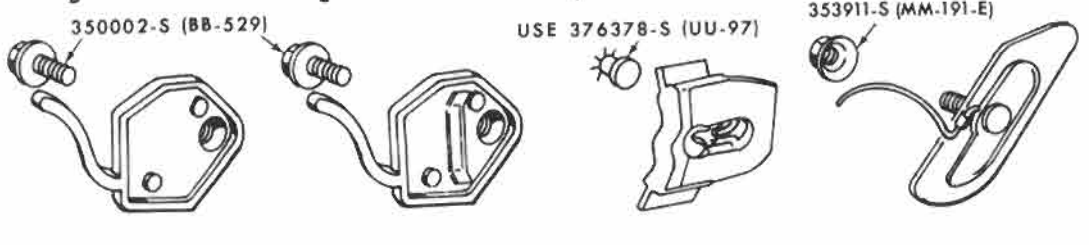

C70Z-6220880-A — H

C70Z-5425562-A — J

C70Z-6229144-A — K

C70Z-6229092-A — L

*REFER TO GROUP IN CHASSIS SECTION

P-5543

1967 FAIRLANE - BODY TYPE 54A, 62A - SIDE

COPYRIGHT © 1975 — FORD MOTOR COMPANY — DEARBORN, MICHIGAN

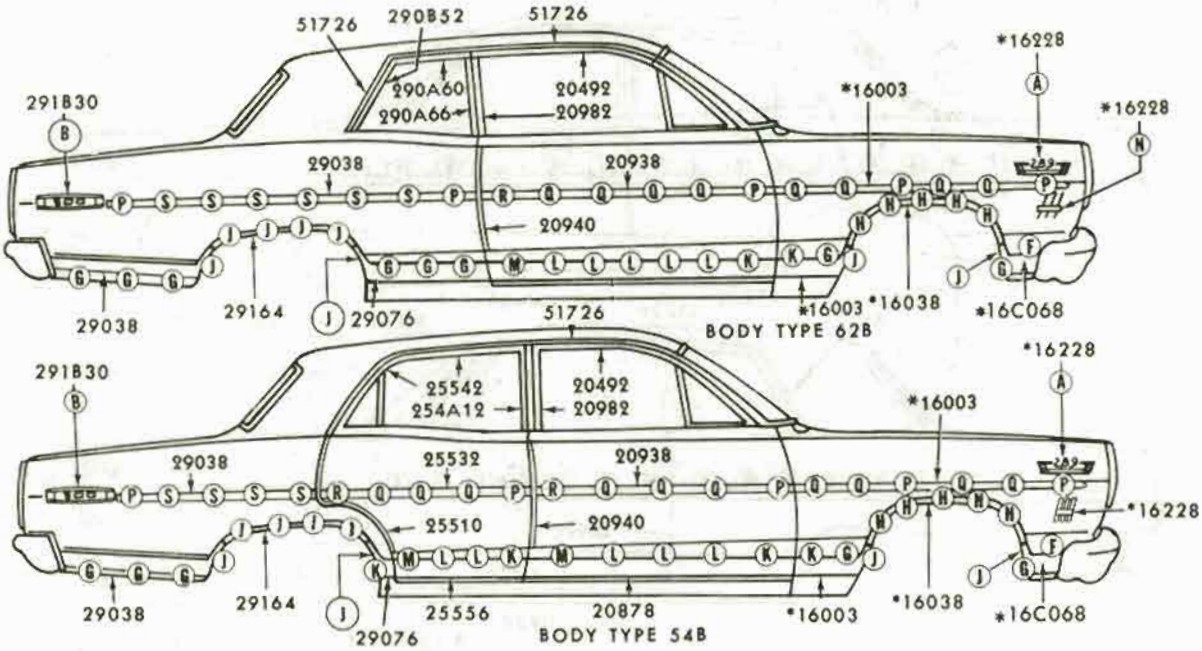

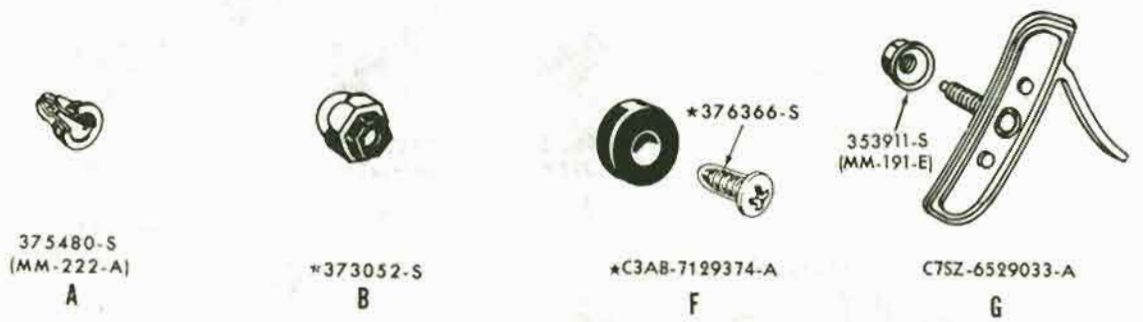

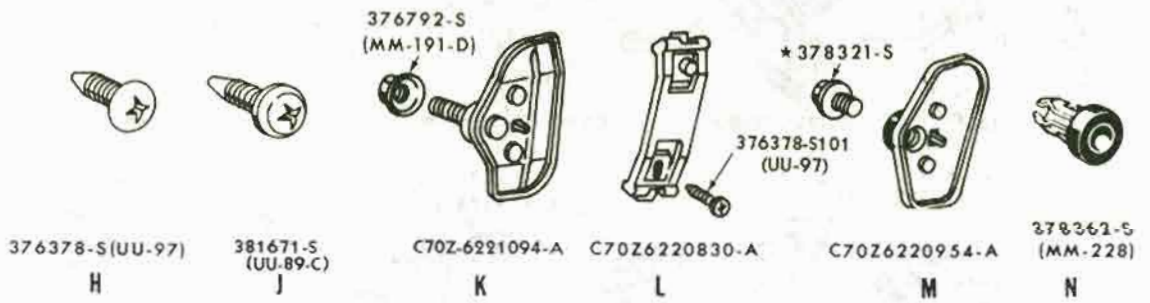

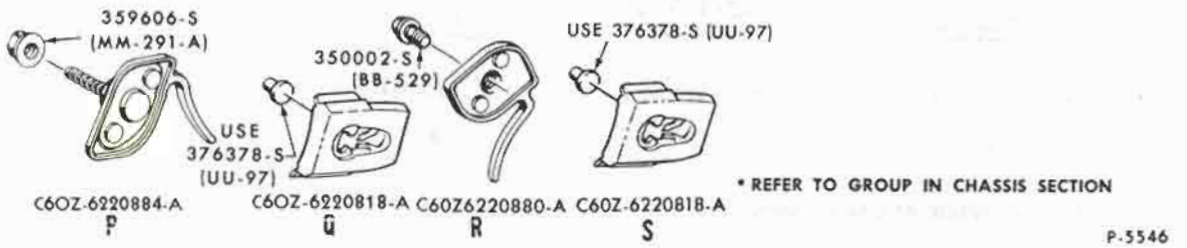

* REFER TO GROUP IN CHASSIS SECTION

P-5546

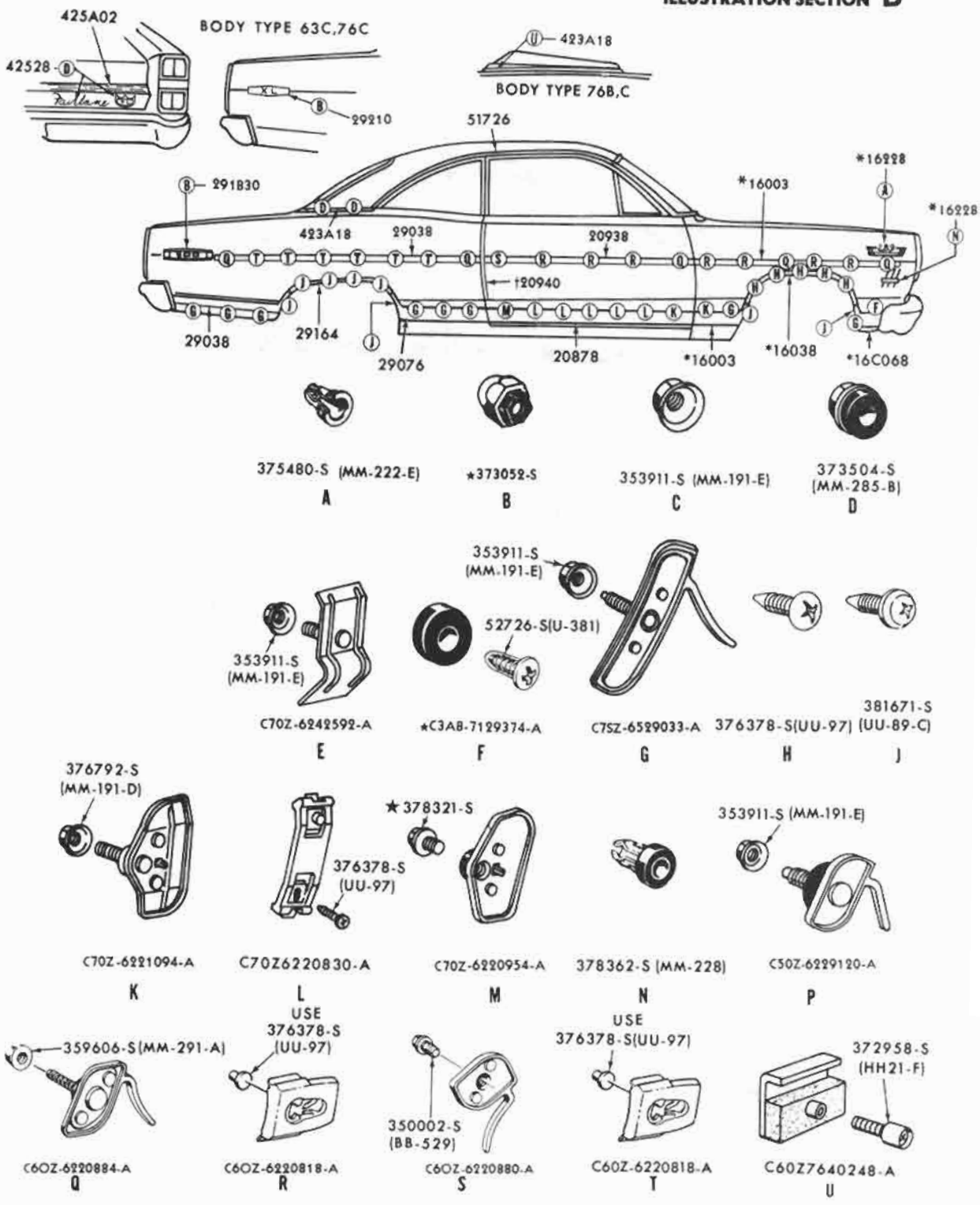

*REFER TO GROUP IN CHASSIS SECTION

P-5547

1967 FAIRLANE - BODY TYPE 63B, C, 76B, C - TYPICAL - SIDE

COPYRIGHT © 1975 — FORD MOTOR COMPANY — DEARBORN, MICHIGAN

B EXTERIOR MOULDING ILLUSTRATION SECTION

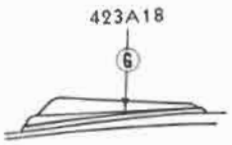

BODY TYPE 76D

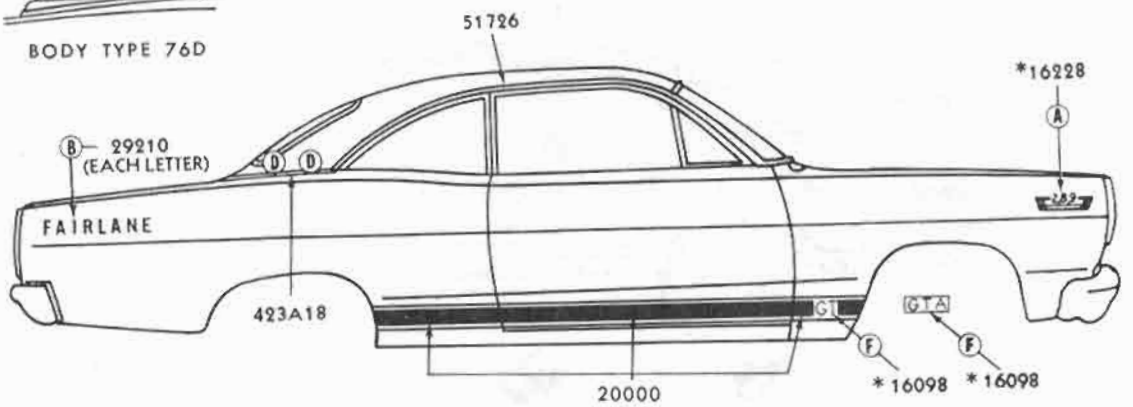

375480-S (MM-222-A)

A

*376559-S

B

353911-S (MM-191-E)

C

373504-S (MM-285-B)

D

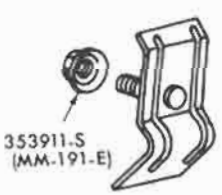

C7OZ-6242592-A

E

375890-S (MM-222-A)

F

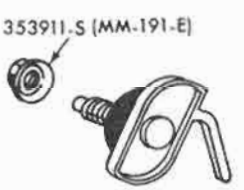

C5OZ 16A746-A

G

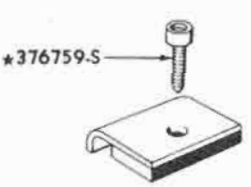

C6OZ-7640248-A

* REFER TO GROUP IN CHASSIS SECTION

P-5549

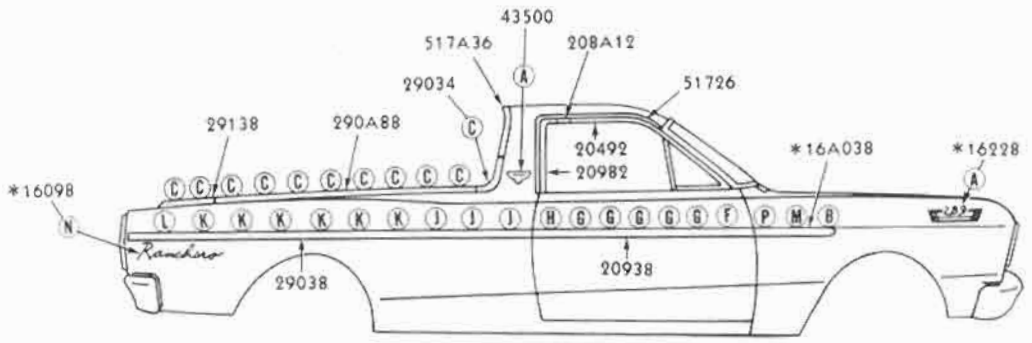

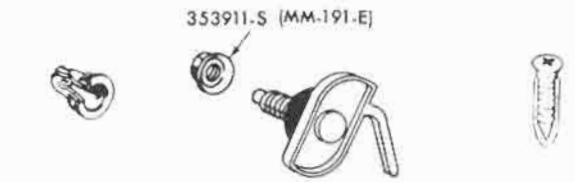

375480-S(MM-222-E) A

C50Z-6229120-A B

★350053-S C

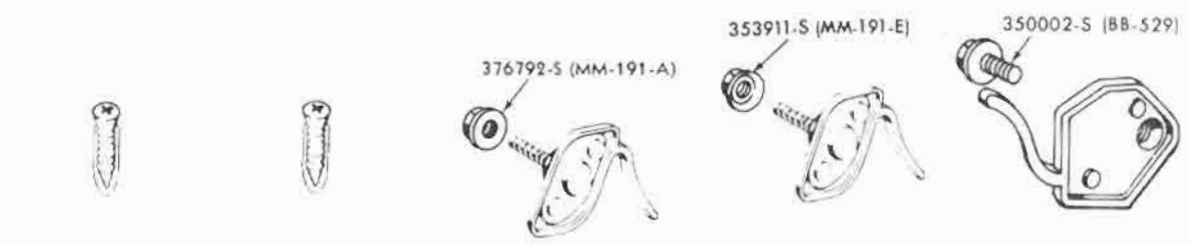

376290-S (UU-56-D) D

52353-S (U-203) E

C5AZ6340248-A F

C5AZ6340248-A G

C70Z-6220880-A H

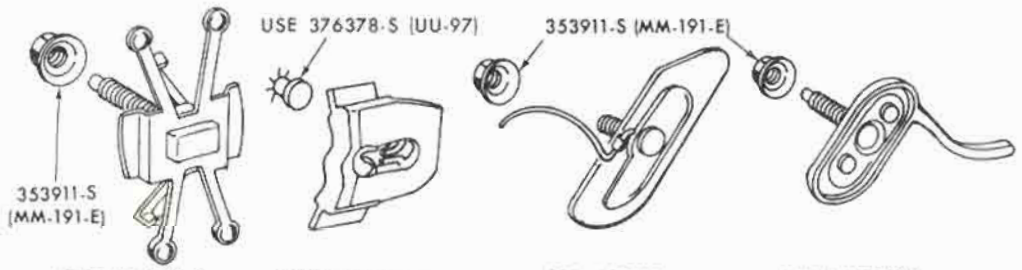

C70Z-6629120-A J

C70Z-6229144-A K

C70Z-6229092-A L

*C5TZ-168840-A M

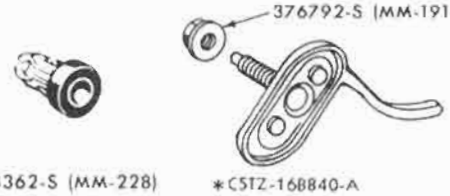

378362-S (MM-228) N

*C5TZ-168840-A P

* REFER TO GROUP IN CHASSIS SECTION

P 5604

1967 FAIRLANE - BODY TYPE 66A - SIDE

COPYRIGHT © 1975 — FORD MOTOR COMPANY — DEARBORN, MICHIGAN

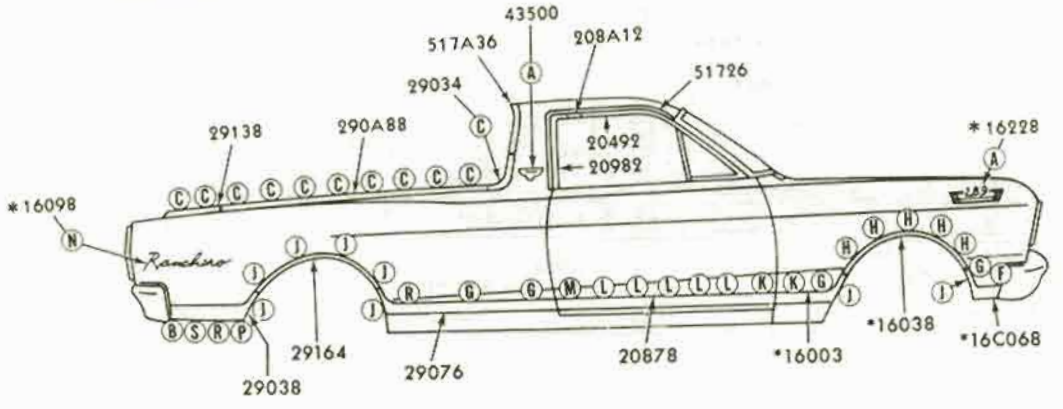

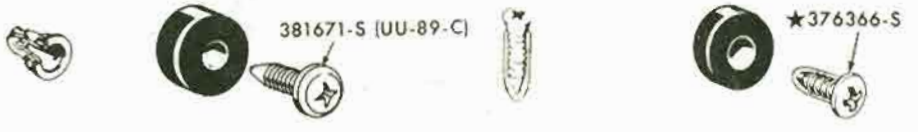

375480-S (MM-222-E) A

*C3AB-7129374-A B

*350053-S C

★C3AB-7129374-A F

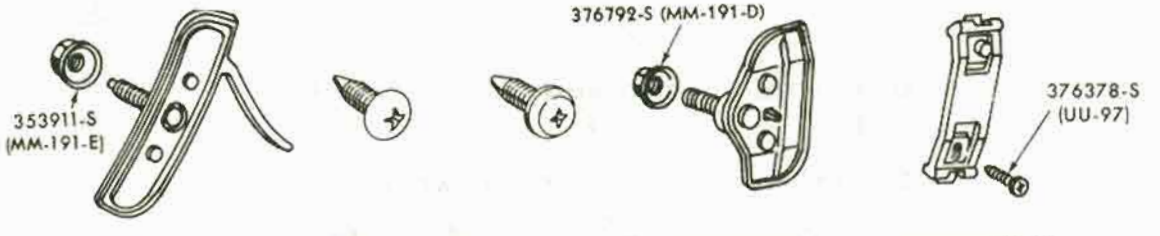

C7SZ-6529033-A G

376378-S (UU-97) H

381671-S (UU-89-C) J

C70Z-6221094-A K

C70Z6220830-A L

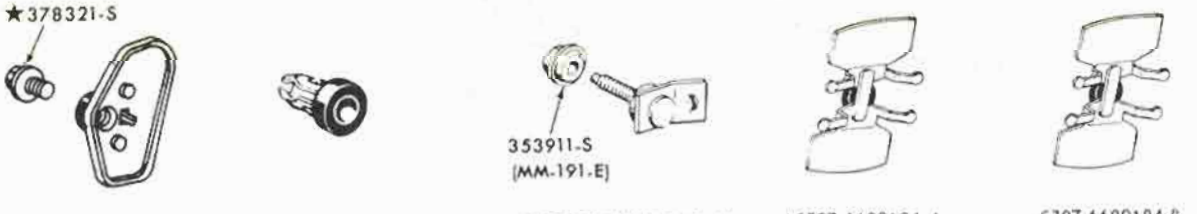

C70Z-6220954-A M

378362-S (MM-228) N

372708-S (BB-643-A) P

★C70Z-6629124-A R

C70Z-6629124-B S

*REFER TO GROUP IN CHASSIS SECTION

P-5578

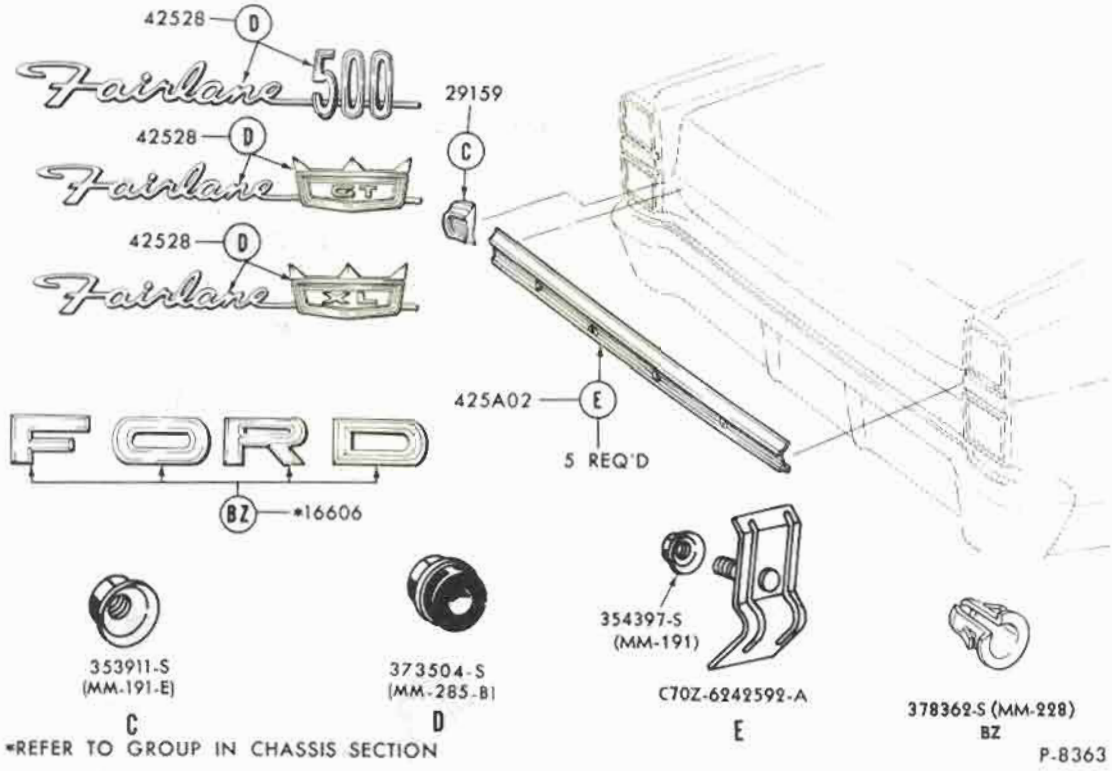

1967 FAIRLANE - BODY TYPES 54, 62, 63, 76 - BACK END

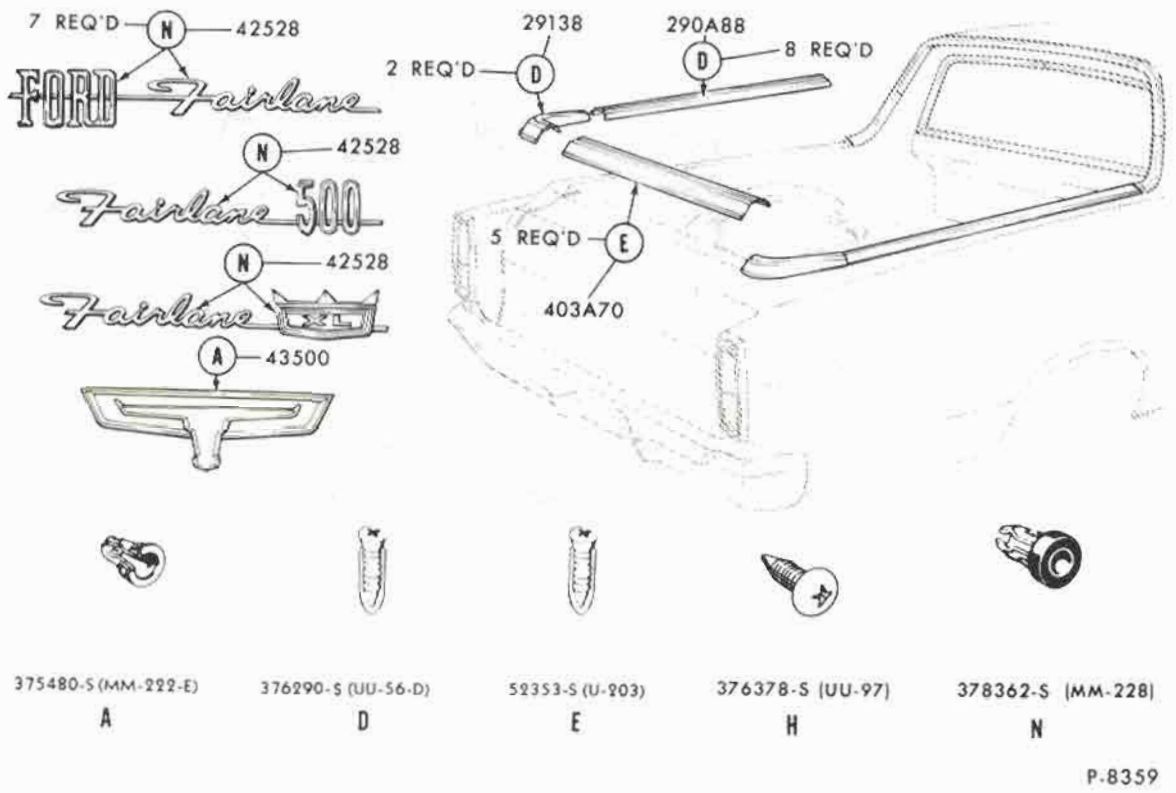

1967 FAIRLANE - BODY TYPE 66 - BACK END

COPYRIGHT © 1975 — FORD MOTOR COMPANY — DEARBORN, MICHIGAN

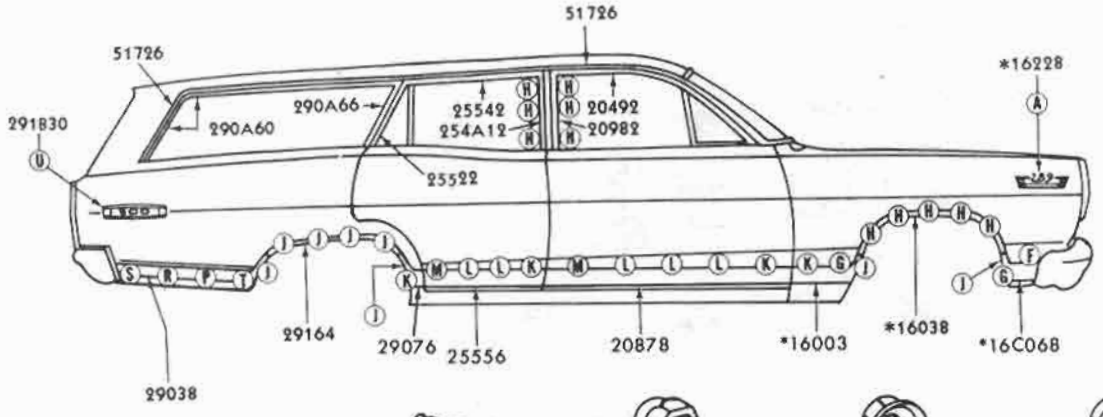

375480-S(MM-222-A)
A

*373052-S
B

353911-S (MM-191-E)
C

373504-S
(MM-285-B)
D

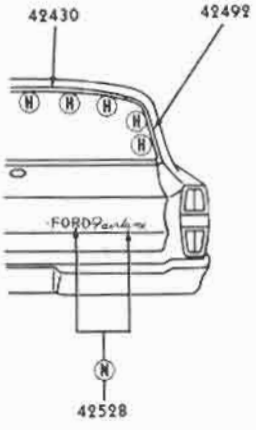

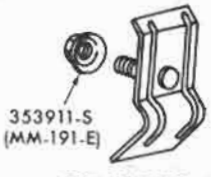

C70Z-6242592-A
E

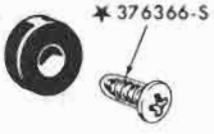

*C3AB-7129374-A
F

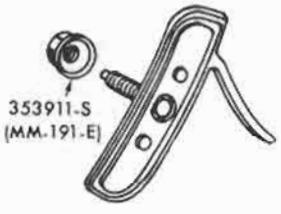

C7SZ-6529033-A
G

376378-S (UU-97)
H

381671-S
(UU-89-C)
J

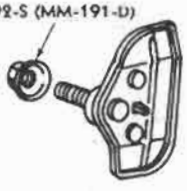

C70Z-6221094-A
K

C70Z6220830-A
L

C70Z-6220954-A
M

378362-S (MM-228)
N

C70Z-6629124-A
P

C70Z-6629124-B
R

*C3A8-7129374-A
S

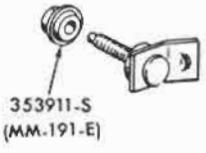

372708-S (BB-643-A)
T

354341-S (MM-223)
U

*REFER TO GROUP IN CHASSIS SECTION

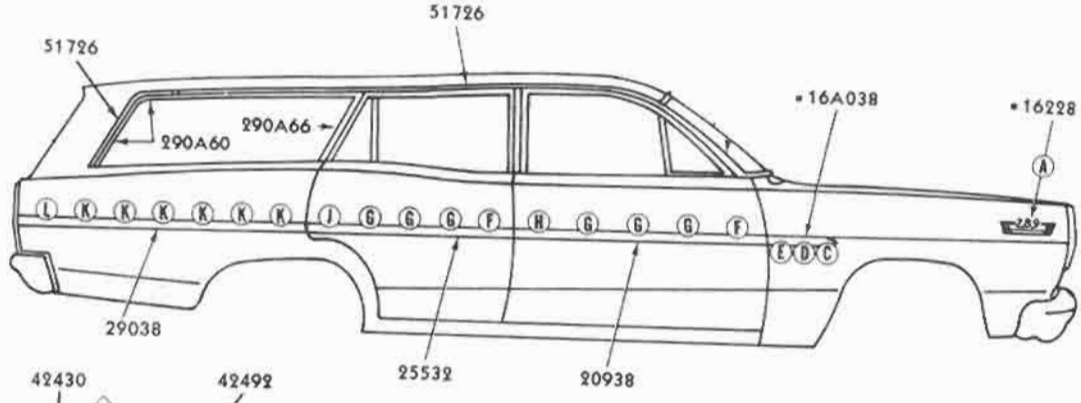

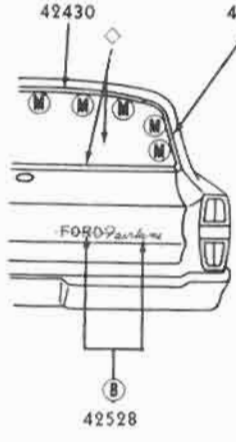

375480-S (MM-222-A)

A

378362-S (MM-228)

B

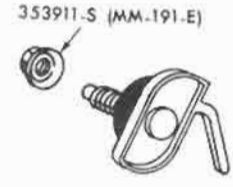

C5OZ 16A746-A

C

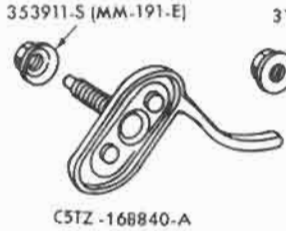

C5TZ-168840-A

D

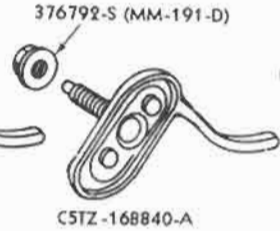

C5TZ-168840-A

E

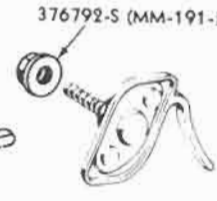

C5AZ-6340248-A

F

C5AZ-6340248-A

G

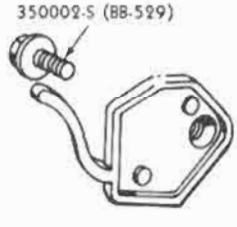

C7OZ-6220880-A

H

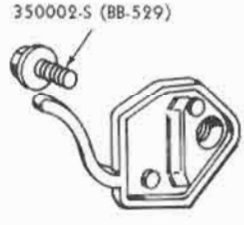

C7OZ-5425562-A

J

C7OZ-6229144-A

K

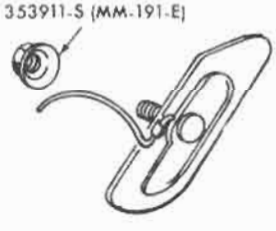

C7OZ-6229092-A

L

376378-S (UU-97)

M

P-5551

*REFER TO GROUP IN CHASSIS SECTION

May, 1975 COPYRIGHT © 1975 — FORD MOTOR COMPANY — DEARBORN, MICHIGAN FINAL ISSUE

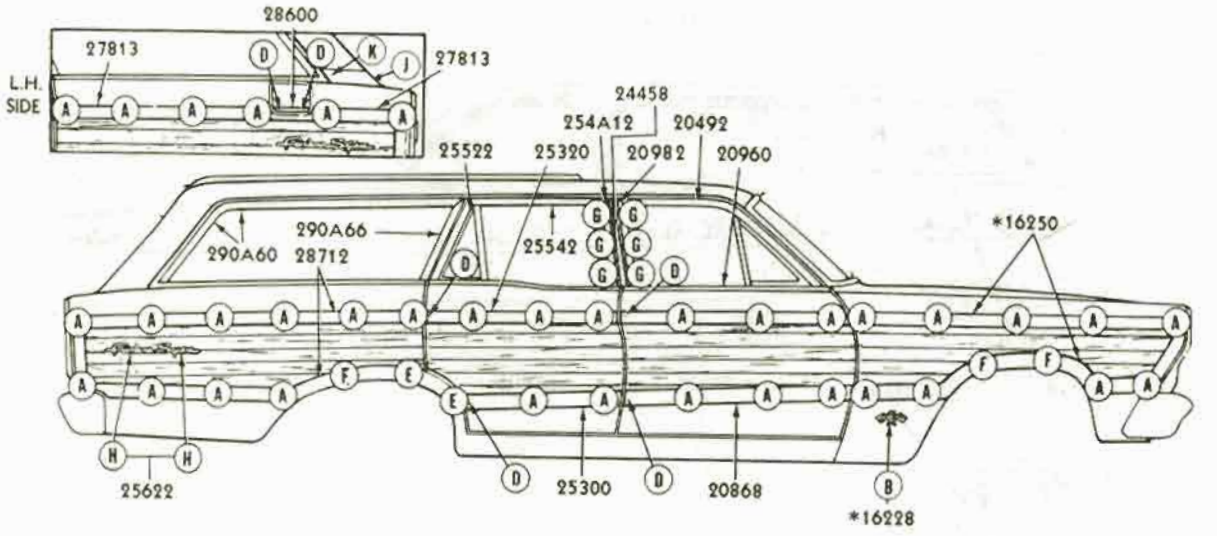

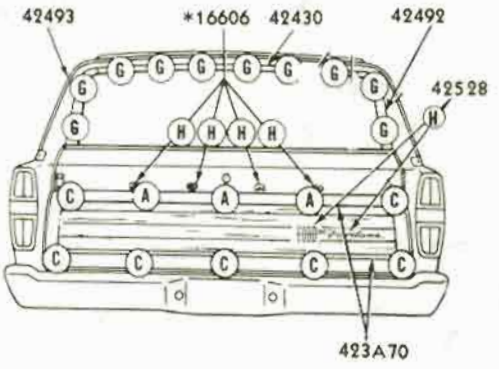

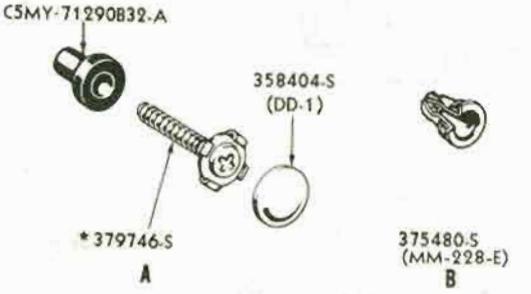

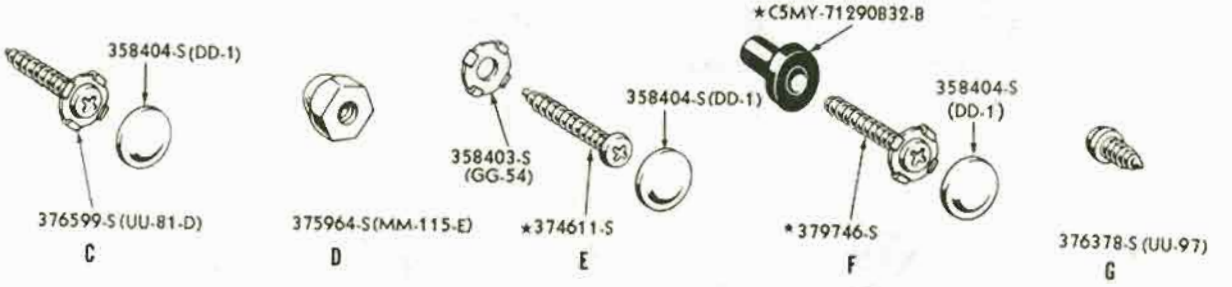

WALNUT GRAIN TRANSFER WITH BLACK PLANKING LINES C7OZ-7120748-A
WALNUT GRAIN TRANSFER WITH BLACK PLANKING LINES C7OZ-7120748-B

* REFER TO GROUP IN CHASSIS SECTION

P-5552

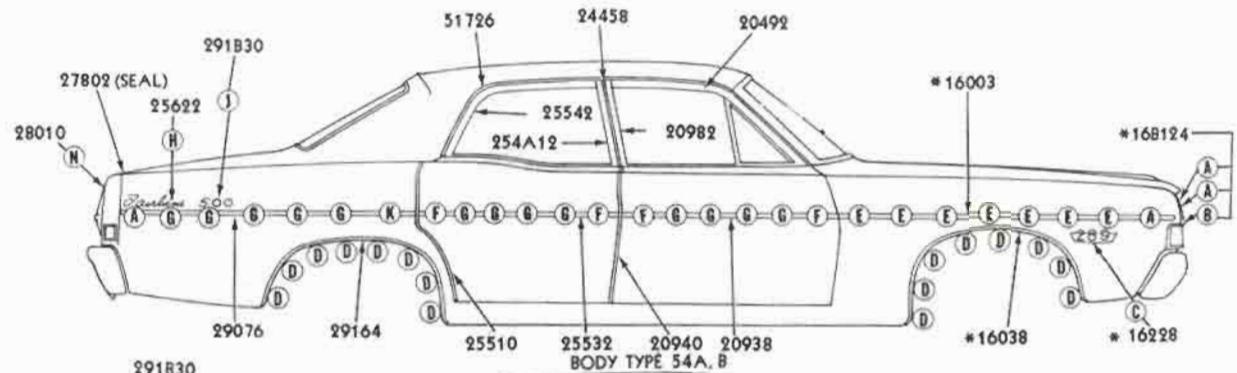

BODY TYPE 54A, B

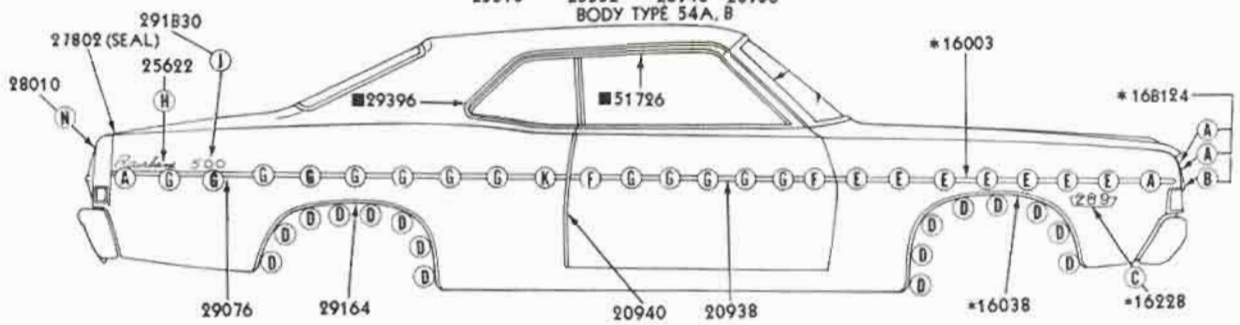

BODY TYPE 65A, B, E, 76B, E

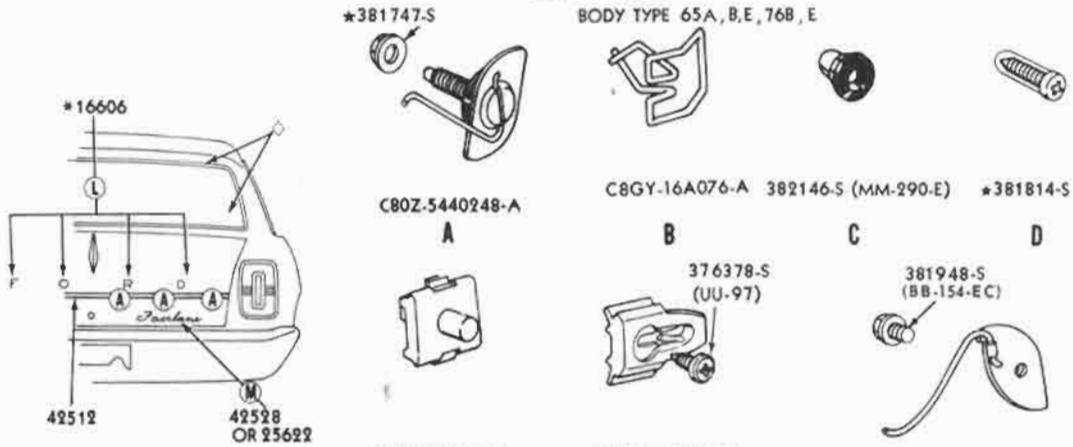

*REFER TO GROUP IN CHASSIS SECTION

P-6114

1968 FAIRLANE - BODY TYPE 54A, B, 65A, B, E, 76B, E - TYPICAL

COPYRIGHT © 1975 — FORD MOTOR COMPANY — DEARBORN, MICHIGAN

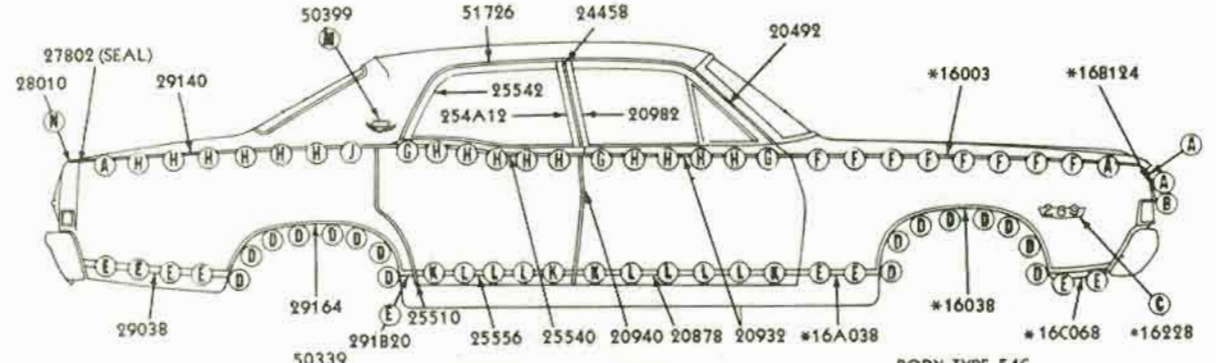

BODY TYPE 54C

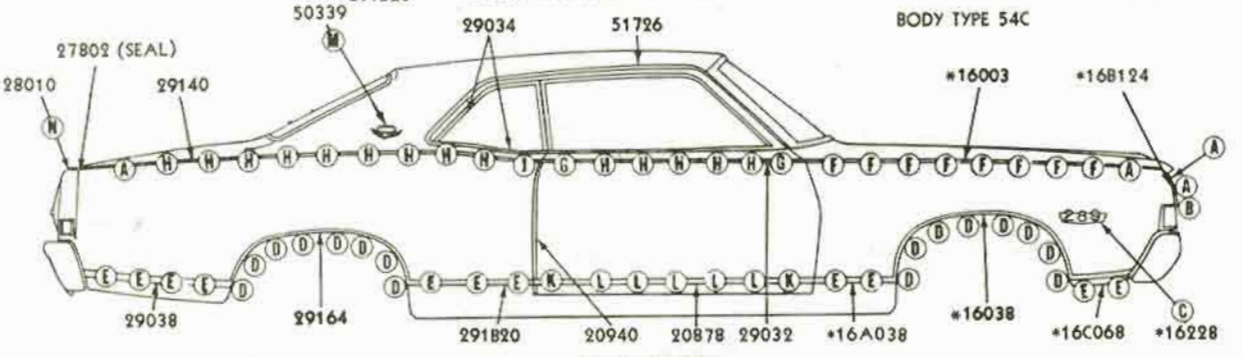

BODY TYPE 65C

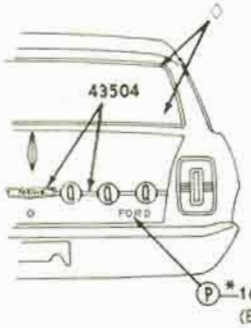

C8OZ-5440248-A
A

C8GY-16A076A
B

382146-S
(MM-290-E)
C

★381814-S
D

C8OZ-5429124-A
E

C6DZ-6229120-A
F

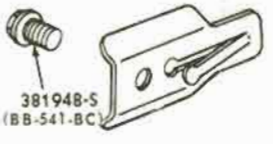

C8OZ-5420884-A
G

C6DZ-54254A46-A
H

C7DZ-6229144-A
J

*C8OZ-5421094-A
K

C7DZ-6220880-A
L

M

N

P

Q

* REFER TO GROUP IN CHASSIS SECTION

P-6111

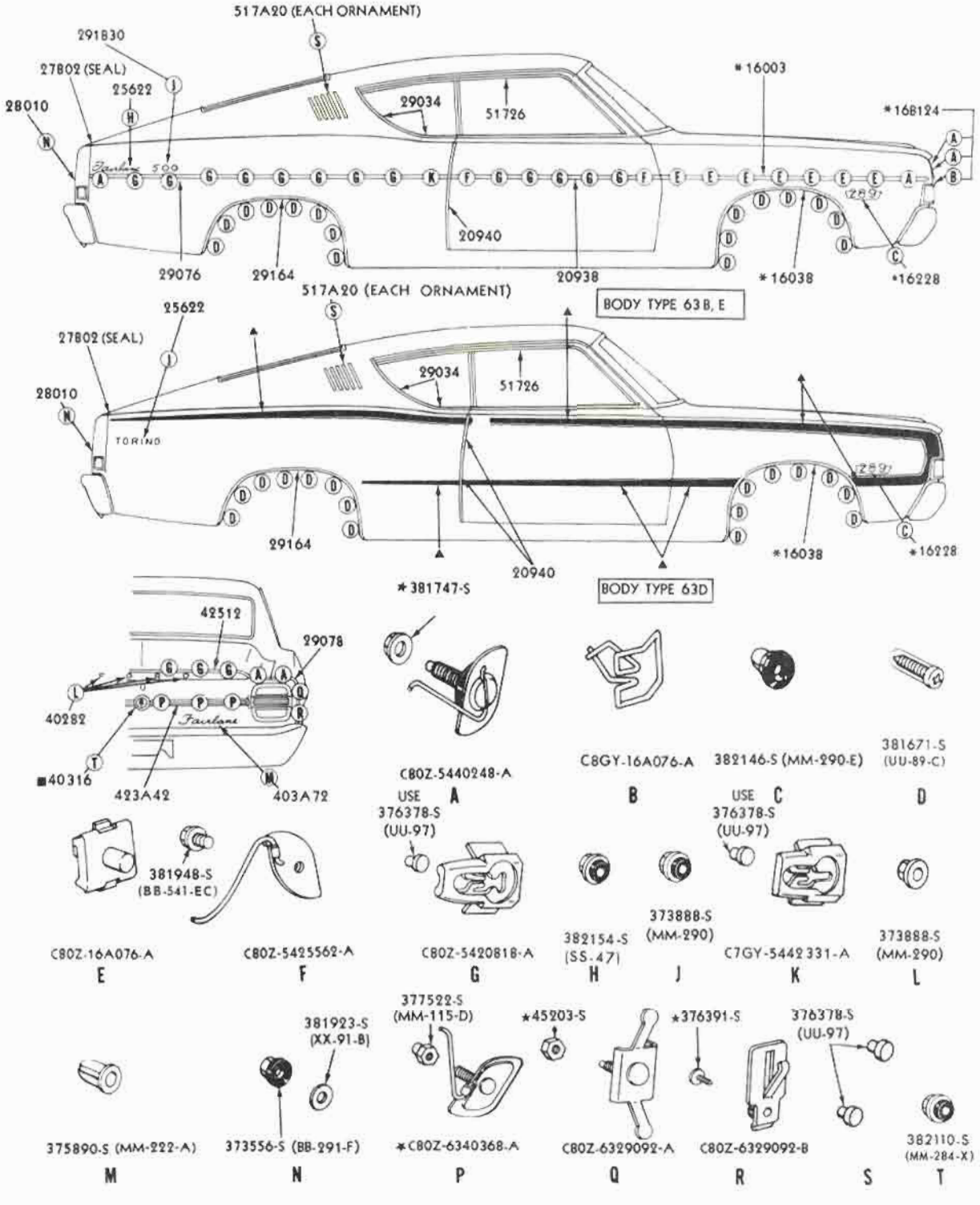

*REFER TO GROUP IN CHASSIS SECTION

P-6112

May, 1975 COPYRIGHT © 1975 — FORD MOTOR COMPANY — DEARBORN, MICHIGAN FINAL ISSUE

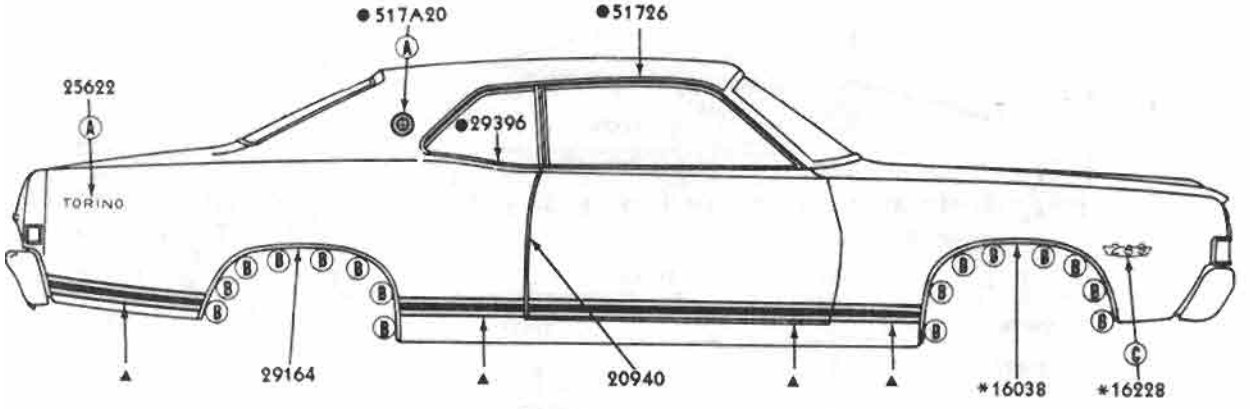

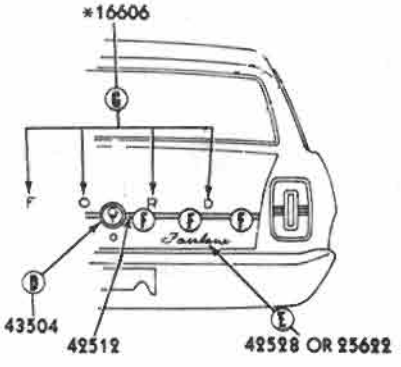

373888-S (MM-290)
A

381671-S
(UU-89-C)
B

382146-S (MM-290-E)
C

382110-S
(MM-284-X)
D

375890-S (MM-222-A)
E

*381747-S

C8OZ-5440248-A
F

373888-S (MM-290)
G

●BODY TYPE 65D
*REFER TO GROUP IN CHASSIS SECTION

▲SUPPLIED IN BASIC KIT 20000-1

P-6116

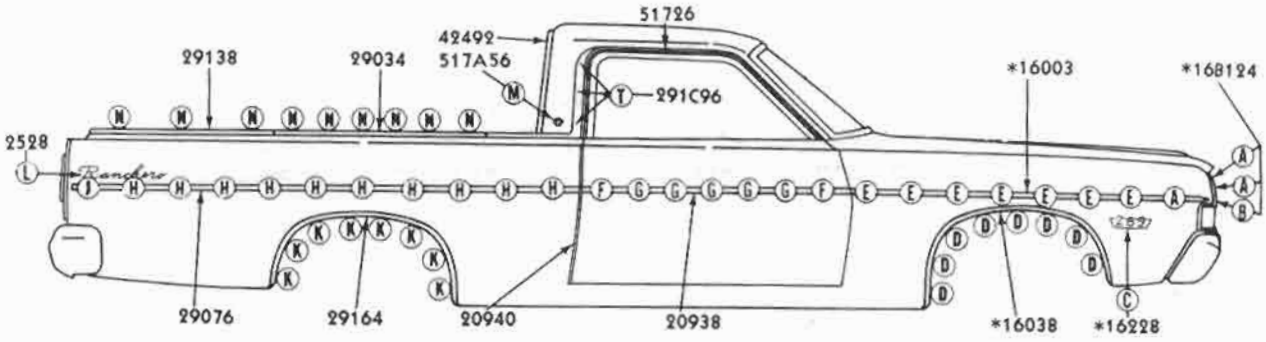

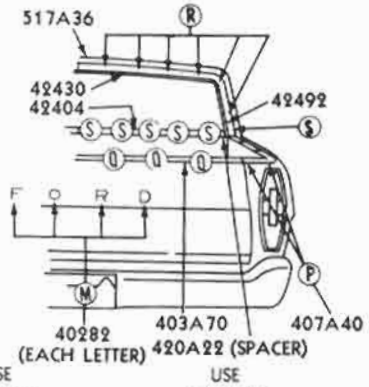

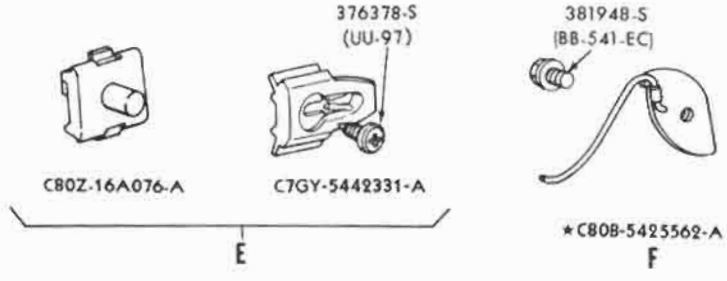

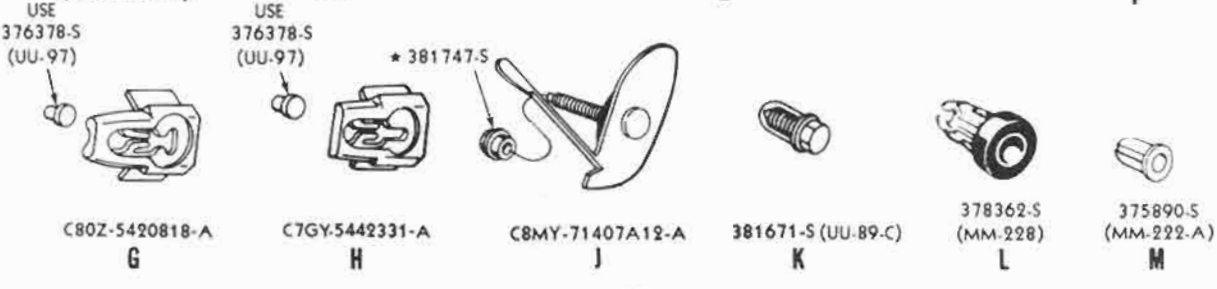

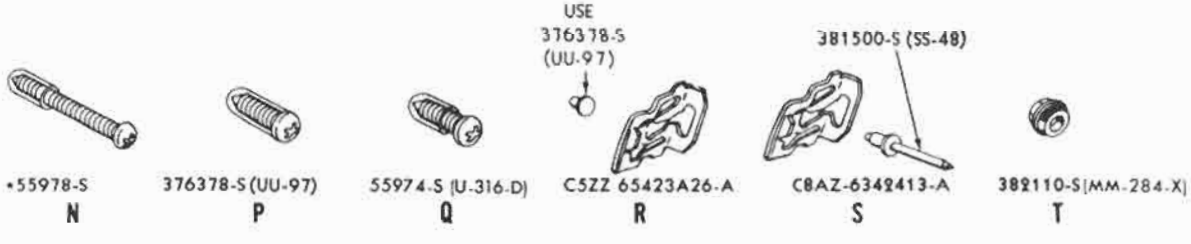

* REFER TO GROUP IN CHASSIS SECTION

P-6117

May, 1975 COPYRIGHT © 1975 — FORD MOTOR COMPANY — DEARBORN, MICHIGAN FINAL ISSUE

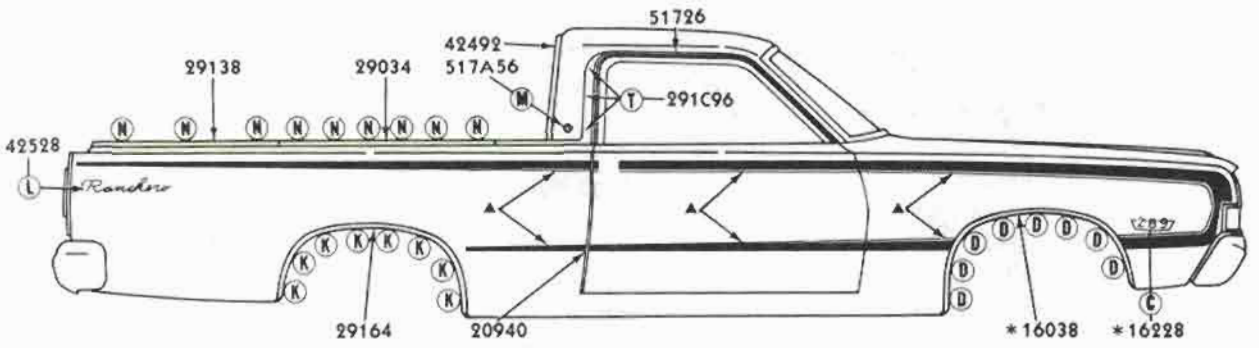

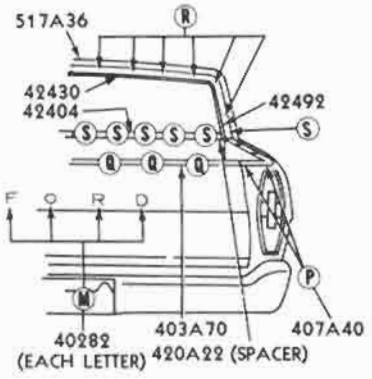

382146-S (MM-290-E)
C

381671-S (UU-89-C)
D

381671-S
(UU-89-C)
K

378362-S (MM-228)
L

375890-S (MM-222-A)
M

*55978
N

376378-S (UU-97)
P

55974-S (U-316-D)
Q

USE
376378-S
(UU-97)

C5ZZ 65423A26-A
R

381500-S (SS-48)

C8AZ-6342413-A
S

382110-S (MM-284-X)
T

* REFER TO GROUP IN CHASSIS SECTION

▲ SERVICED IN 20000-1 KIT

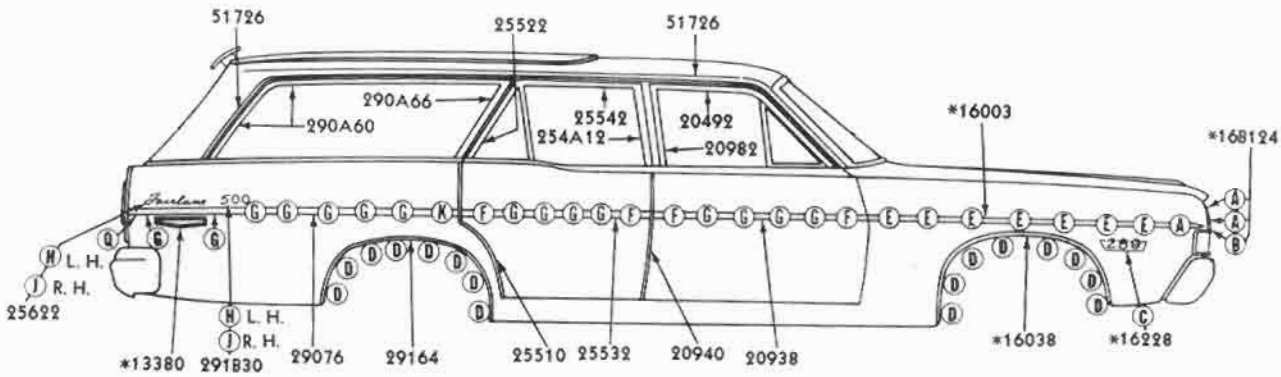

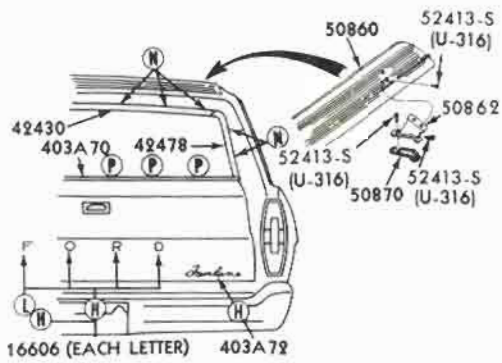

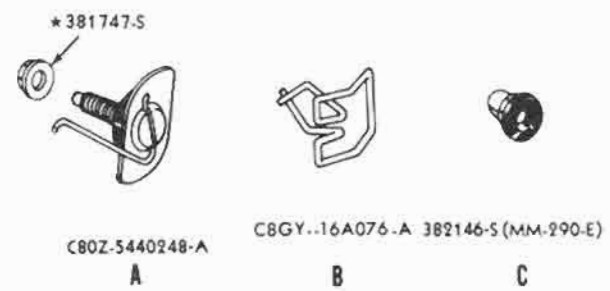

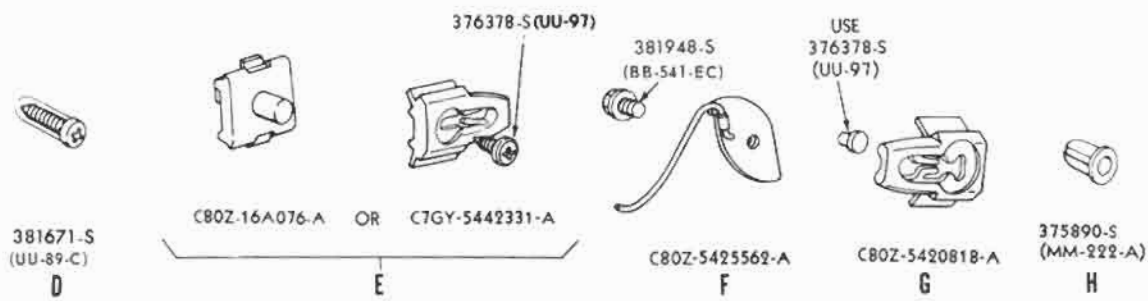

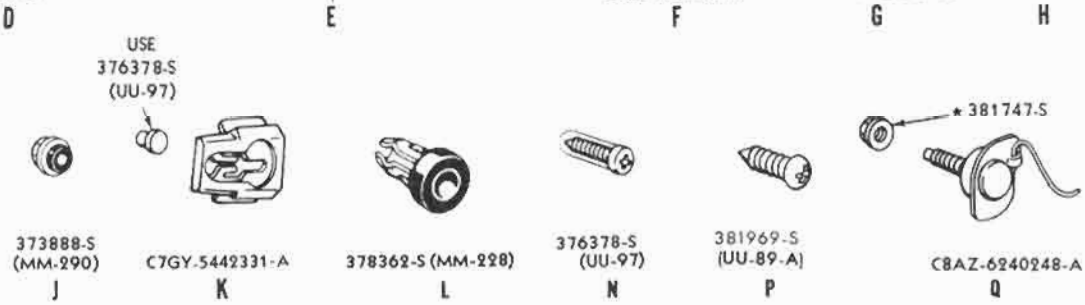

* REFER TO GROUP IN CHASSIS SECTION

P-6134

May, 1975 COPYRIGHT © 1975 — FORD MOTOR COMPANY — DEARBORN, MICHIGAN FINAL ISSUE

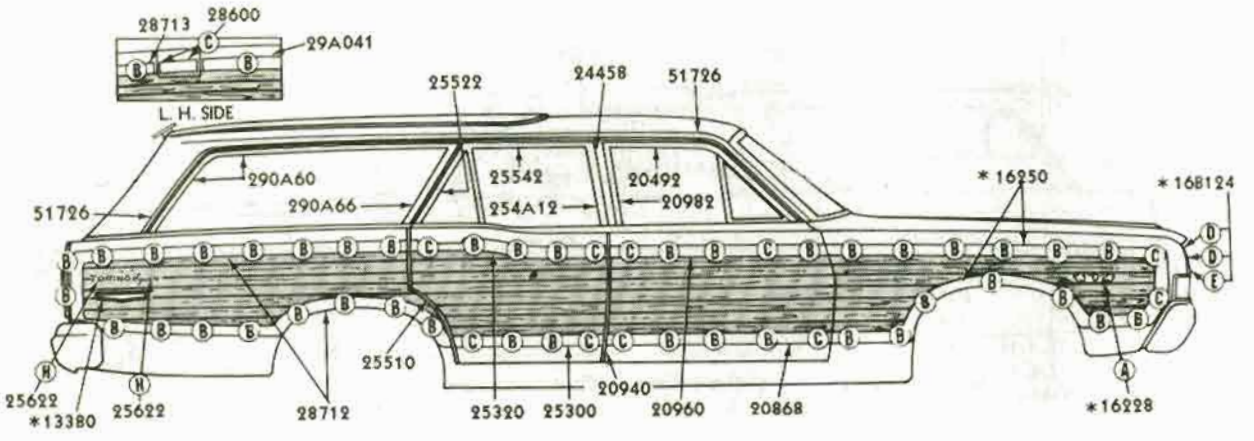

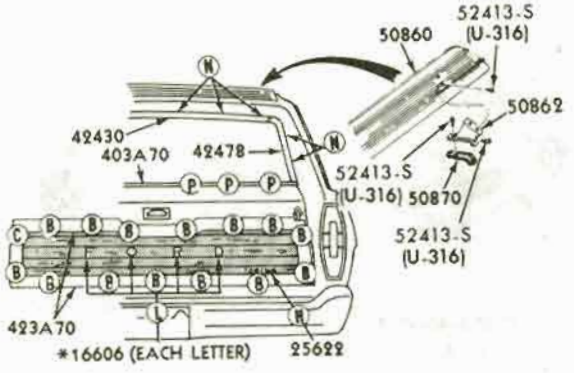

382146-S (MM-290-E)

A

C8AZ-71425A94-A

B

377522-S
(MM-115-D)

C

C80Z-5440248-A

D

C8GY-16A076-A

E

375890-S (MM-222-A)

H

378362-S (MM-228)

L

376378-S (UU-97)

N

381969-S
(M1A-192-QA)

P

* REFER TO GROUP IN CHASSIS SECTION

WALNUT GRAIN TRANSFER WITH BLACK PLANKING LINES
C80Z-7120748-B (PRESSURE SENSITIVE TYPE)

P-6136

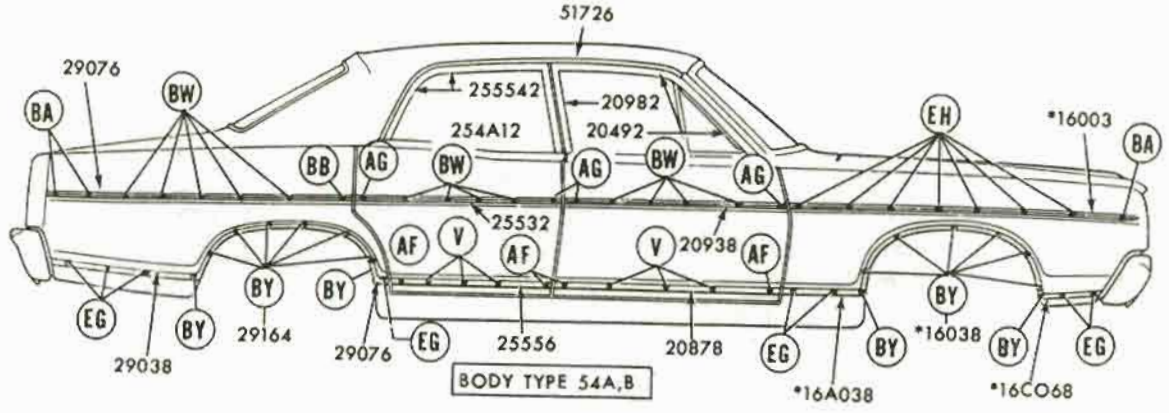

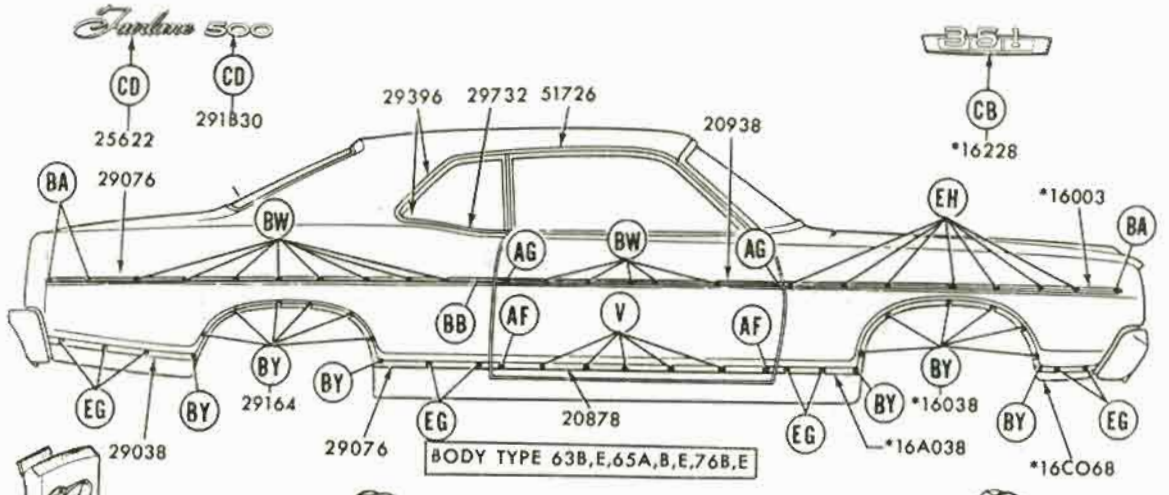

USE 379560-S
(UU-89-CA)

C7DZ-6220880-A
V

377522-S
(MM-115-D)

C8OZ-5421094-B
AF

381948-S
(BB-541-EC)

C8OZ-5425562-A
AG

*45271-S

C8OZ-5440248-A
BA

379560-S (UU-89-CA)

C7GY-5442331-A
BB

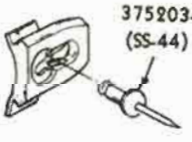

375203-S
(SS-44)

C7GY-5442331-A
BW

381671-S (UU-89-C)
BY

375890-S (MM222-A)
CB

382146-S (MM-290-E)
CD

C8OZ-5429124-A
EG

C8OZ-16A076-A
EH

*REFER TO GROUP IN CHASSIS SECTION

P-6578

May, 1975 COPYRIGHT © 1975 — FORD MOTOR COMPANY — DEARBORN, MICHIGAN FINAL ISSUE

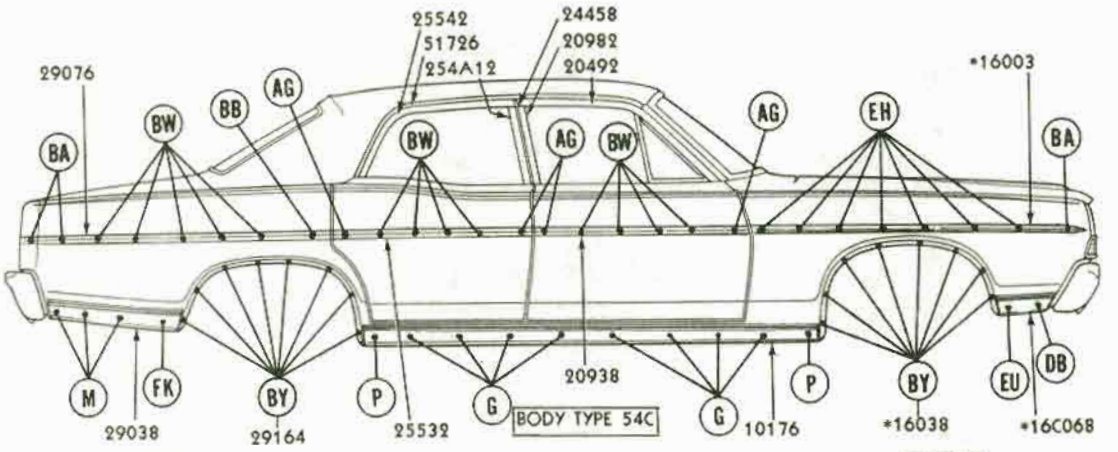

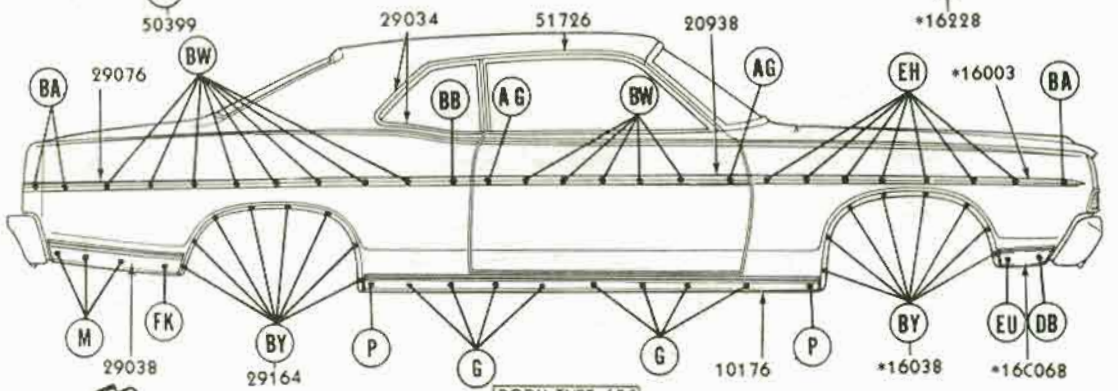

*C9OZ-5410182-A
G

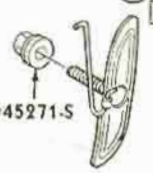

C8AZ-5410198-A
M

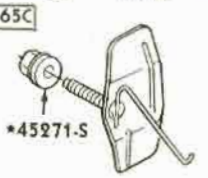

*C9OZ-5410198-A
P

C8OZ-5425562-A
AG

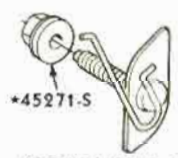

C8OZ-5440248-A
BA

C7GY-5442331-A
BB

C7GY-5442331-A
BW

381671-S (UU-89-C)
BY

375890-S (MM222-A)
CB

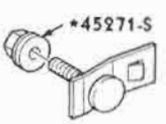

381955-S (GG-333)
DB

C8OZ-16A076-A
EH

C8GY-16A076-A
EU

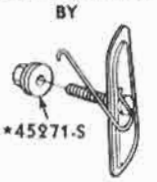

C9OZ-5429288-A
FK

*REFER TO GROUP IN CHASSIS SECTION

P-6579

1969 FAIRLANE/TORINO - BODY TYPE 54C, 65C - SIDE

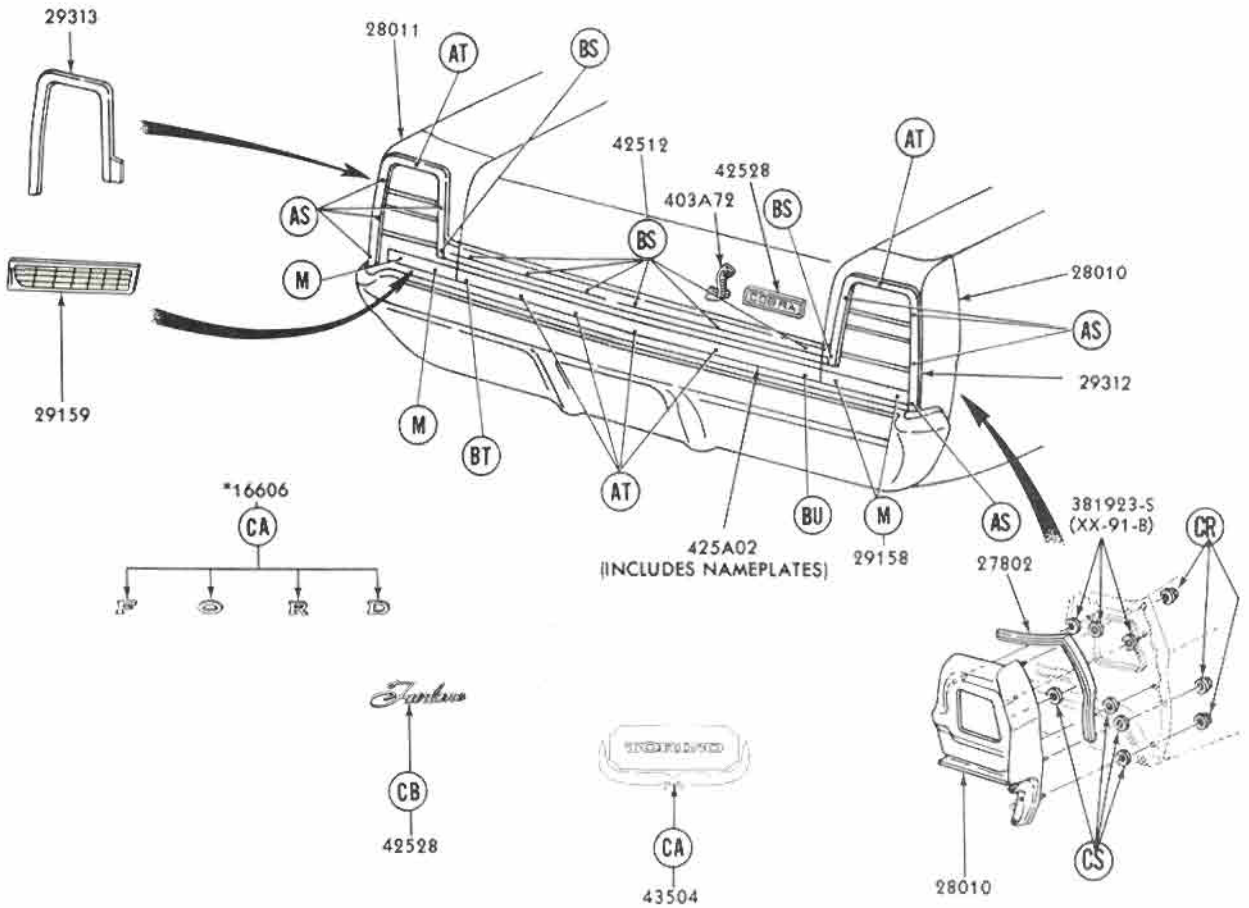

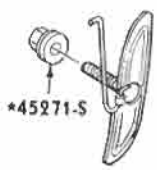

C8AZ-5410198-A
M

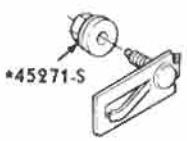

C9OZ-54291B80-A
AS

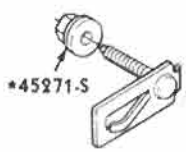

C9OZ-54291B80-B
AT

BS

BT

373888-S (MM-290)
CA

375890-S (MM222-A)
CB

*45275-S
CR

381923-S (XX-91-B)
CS

* REFER TO GROUP IN CHASSIS SECTION

P-6627

May, 1975 COPYRIGHT © 1975 — FORD MOTOR COMPANY — DEARBORN, MICHIGAN FINAL ISSUE

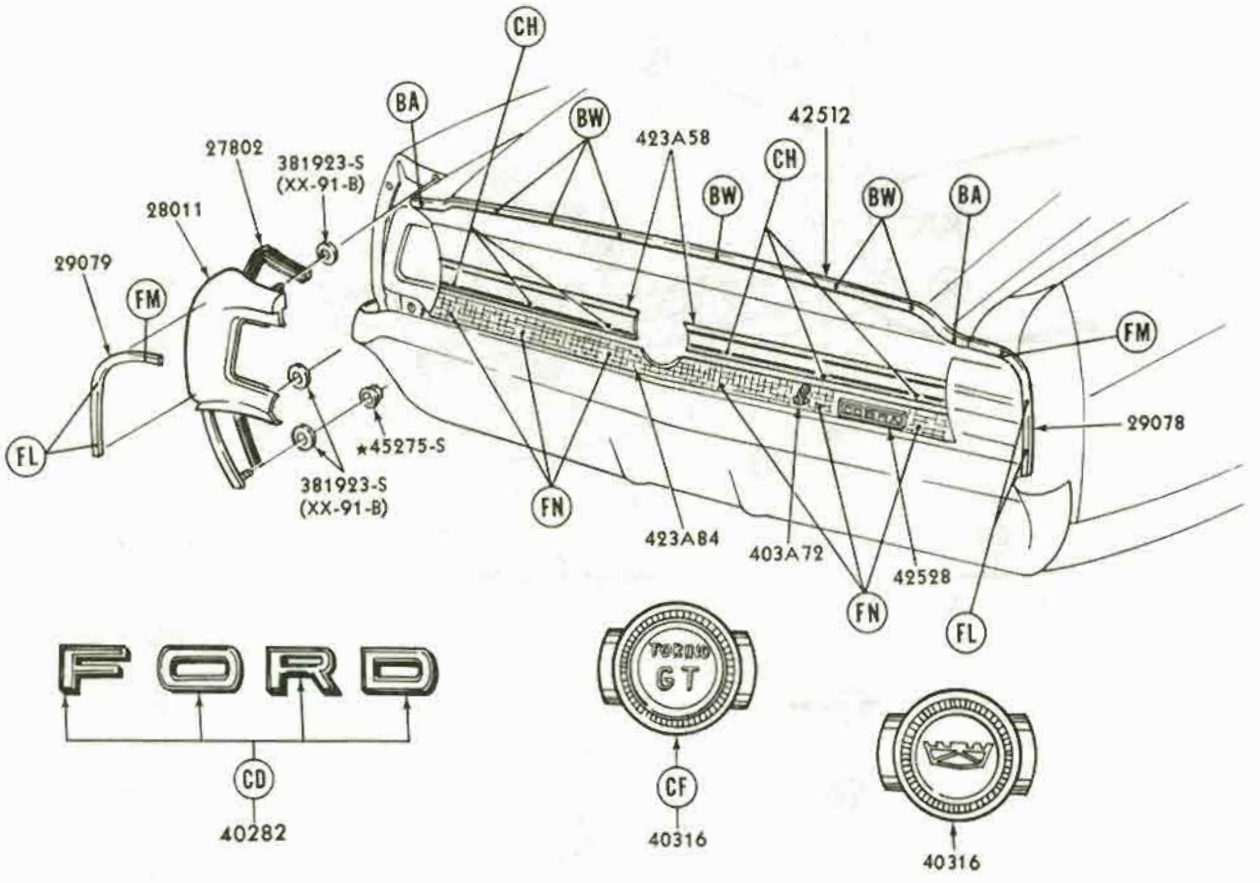

C8OZ-5440248-A
BA

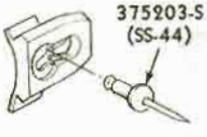

C7GY-5442331-A
BW

382146-S (MM-290-E)
CD

*45271-S
CF

*45277-S
CH

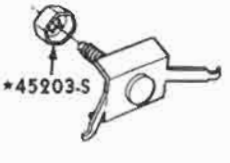

C8OZ-6329092-A
FL

C8DZ-6240248-A
FM

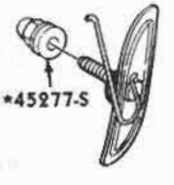

C9OZ-6342527-A
FN

P-6683

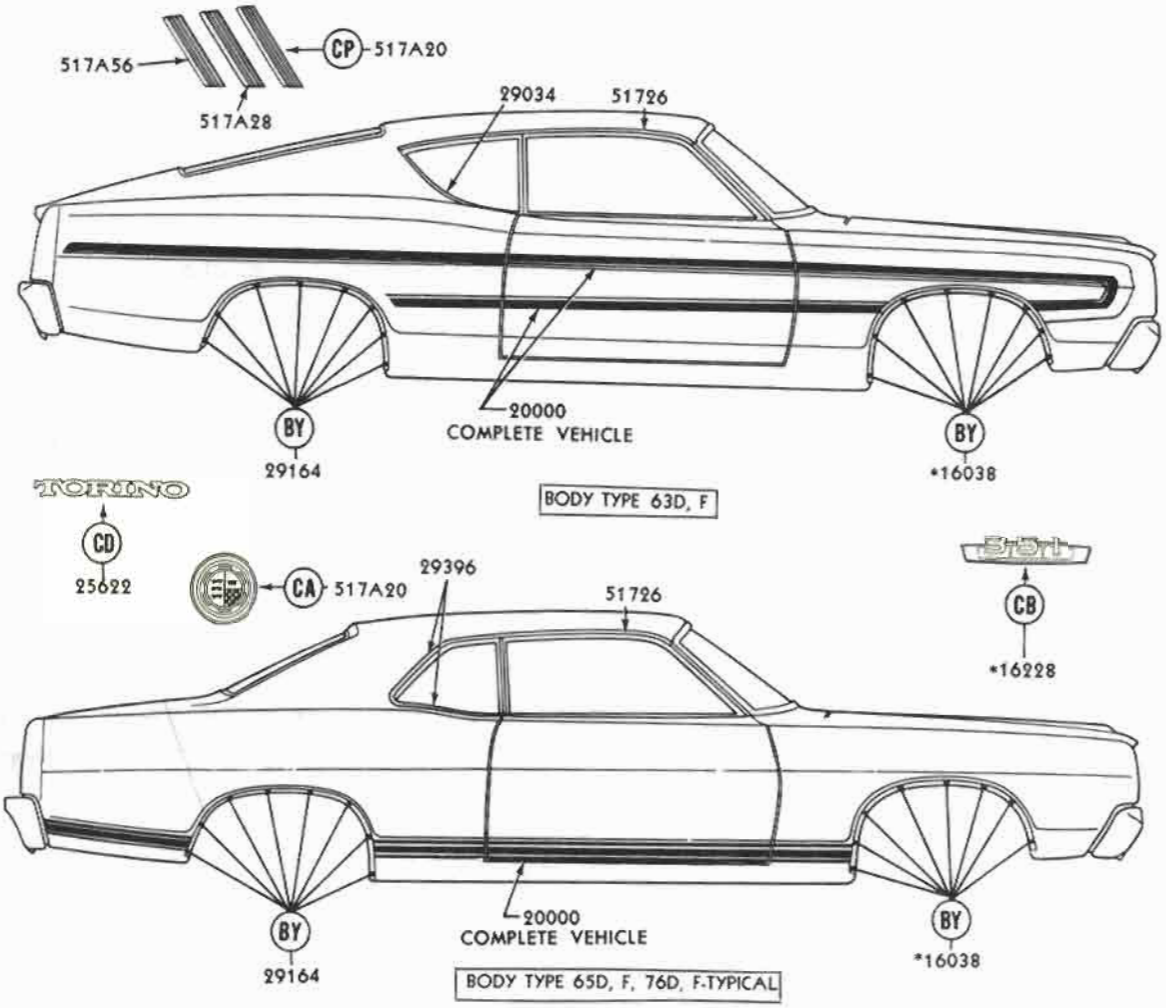

381671-S (UU-89-C)
BY

373888-S (MM-290)
CA

375890-S (MM222-A)
CB

382146-S (MM-290-E)
CD

*382685-S
FOR SERVICE USE
379560-S (UU-89-CA)
CP

*REFER TO GROUP IN CHASSIS SECTION

P-6580

May, 1975 COPYRIGHT © 1975 — FORD MOTOR COMPANY — DEARBORN, MICHIGAN

FINAL ISSUE

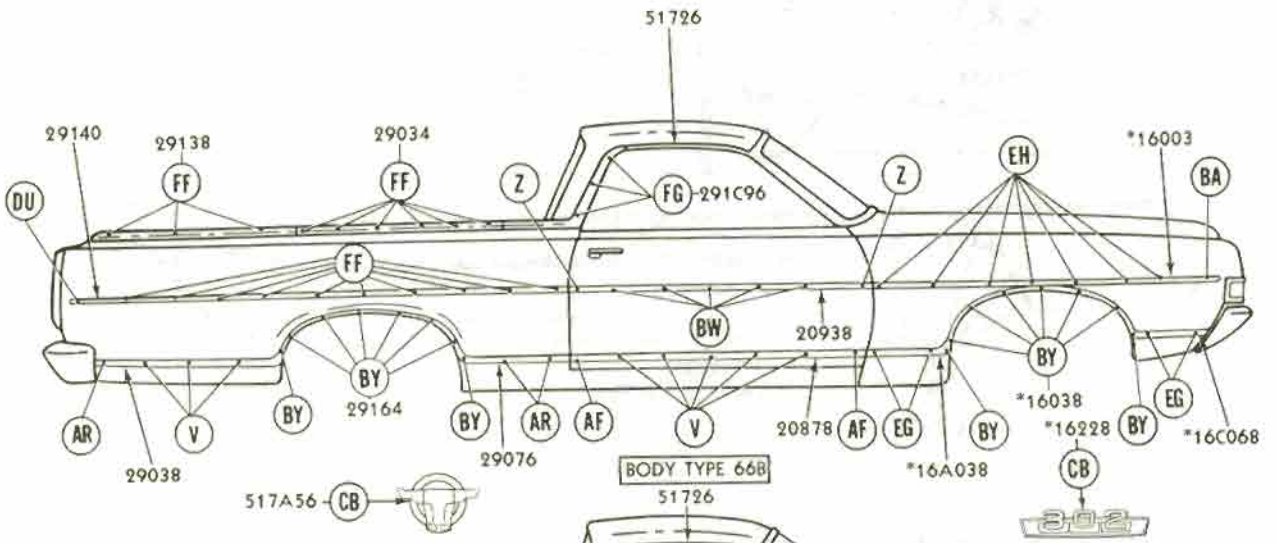

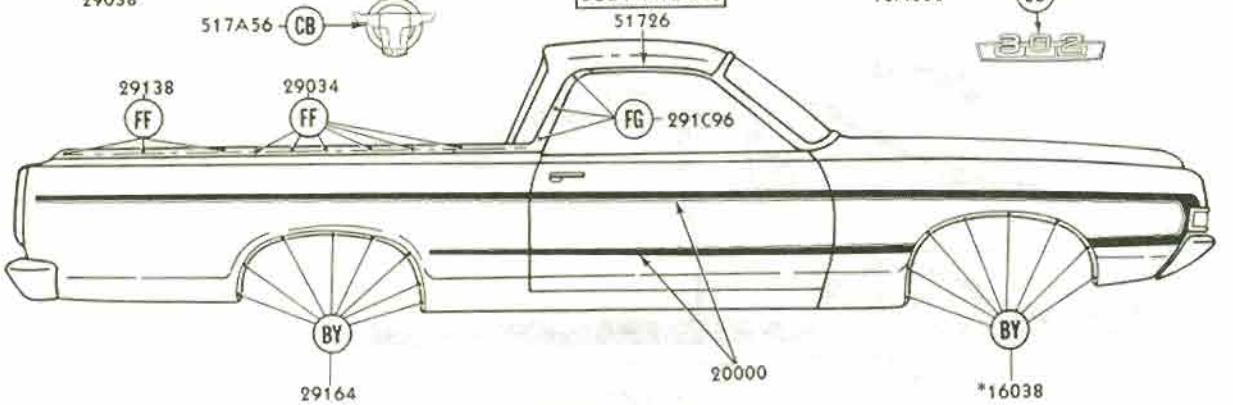

USE 379560-S (UU-89-CA)

C7DZ-6220880-A
V

C8OZ-5420884-B
Z

C8OZ-5421094-B
AF

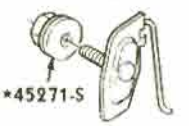

C9OZ-7129124-A
AR

C8OZ-5440248-A
BA

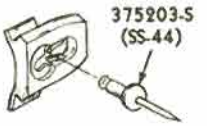

C7GY-5442331-A
BW

381671-S (UU-89-C)
BY

375890-S (MM222-A)
CB

C8MY-71407A12-A
DU

C8OZ-5429124-A
EG

C8OZ-16A076-A
EH

*55978-S
FF

382110-S (MM-284-X)
FG

* REFER TO GROUP IN CHASSIS SECTION

P-6581

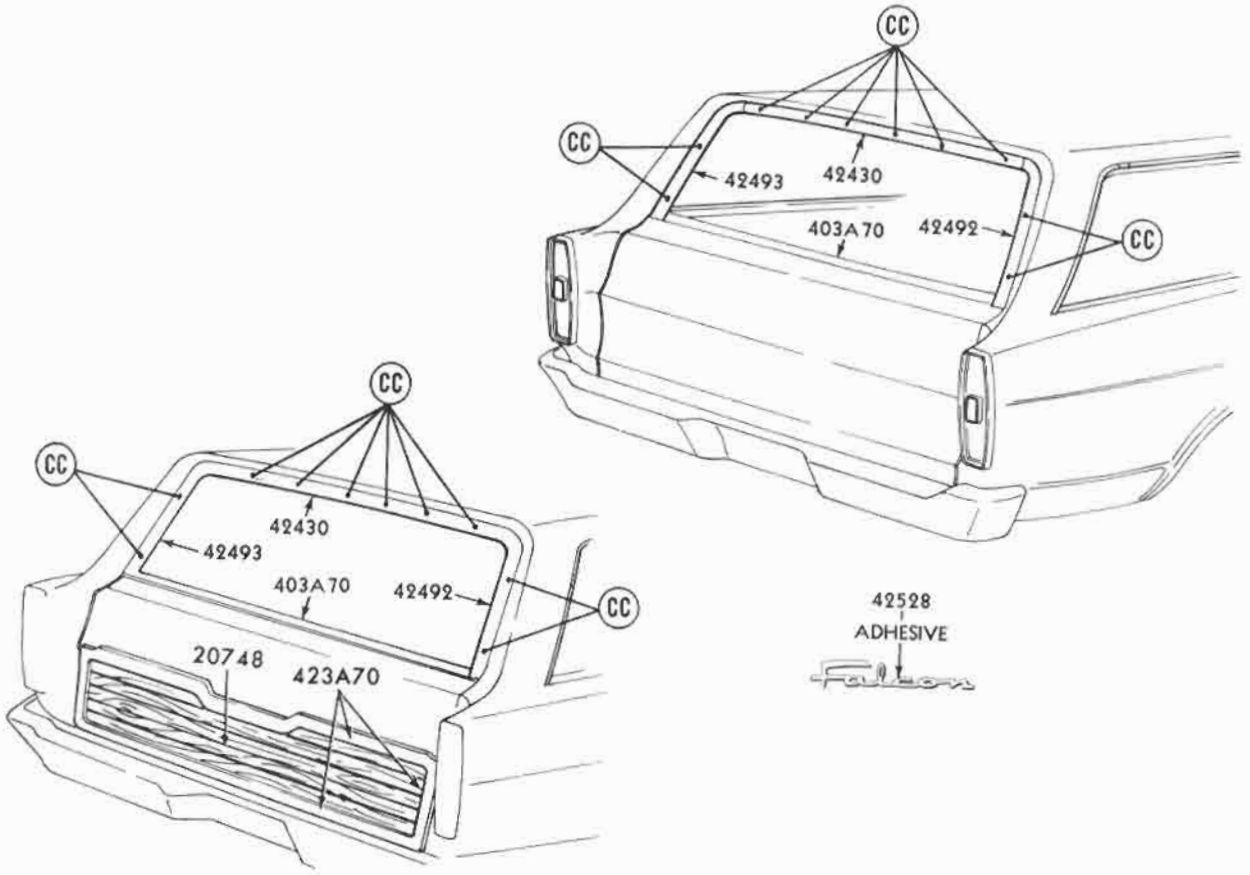

378362-S (MM-228)
BZ

375890-S (MM222-A)
CB

379560-S (UU-89-CA)
CC

*REFER TO GROUP IN CHASSIS SECTION

P-6680

May, 1975 COPYRIGHT © 1975 — FORD MOTOR COMPANY — DEARBORN, MICHIGAN

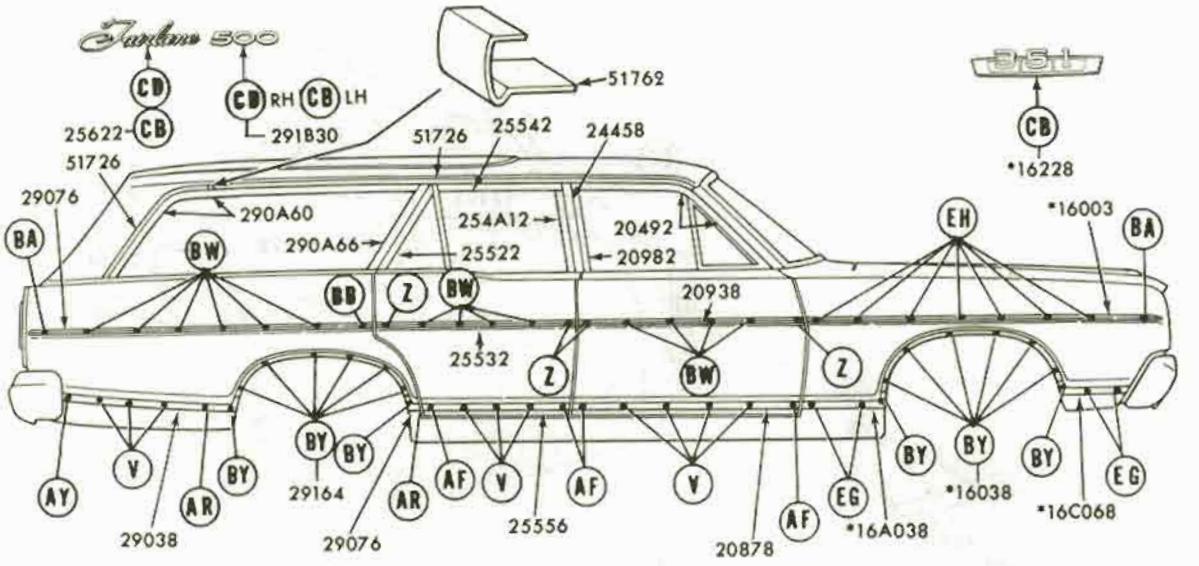

C7DZ-6220880-A
V

C8OZ-5420884-B
Z

*C8OZ-5421094-B
AF

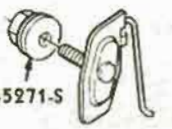

C9OZ-7129124-A
AR

*C3AB-6229374-A
AY

C8OZ-5440248-A
BA

C7GY-5442331-A
BB

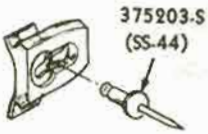

C7GY-5442331-A
BW

381671-S (UU-89-C)
BY

375890-S (MM222-A)
CB

382146-S (MM-290-E)
CD

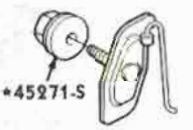

C8OZ-5429124-A
EG

C8OZ-16A076-A
EH

*REFER TO GROUP IN CHASSIS SECTION

P-6582

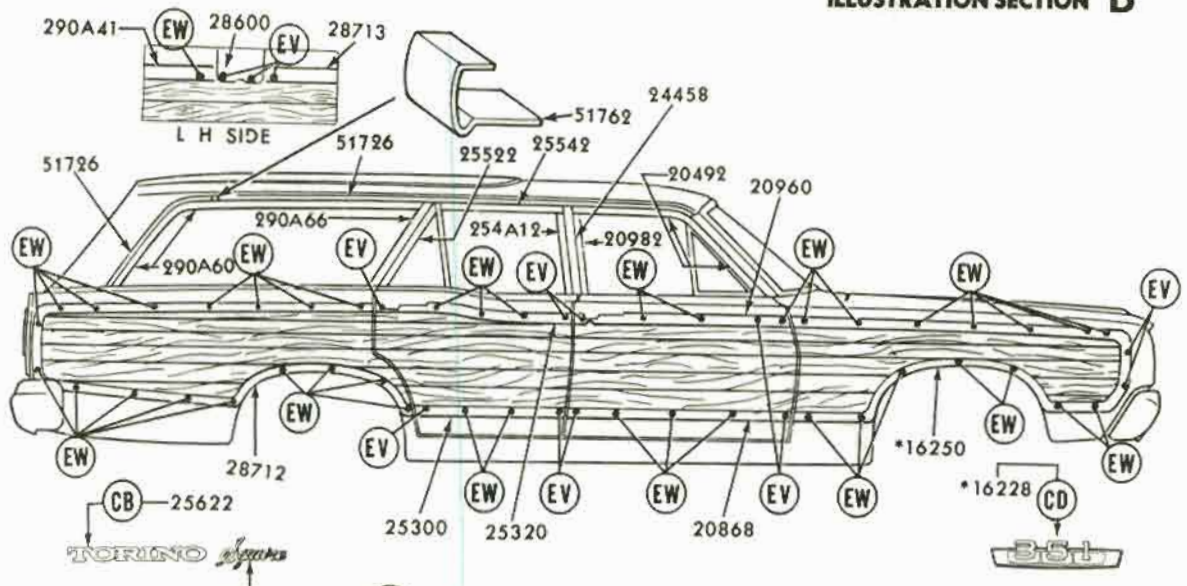

FOR WOOD GRAIN TRANSFER—REFER TO GROUP 20748
* REFER TO GROUP IN CHASSIS SECTION

P-6583

1969 FAIRLANE/TORINO - BODY TYPE 71E - SIDE

COPYRIGHT © 1975— FORD MOTOR COMPANY —DEARBORN, MICHIGAN

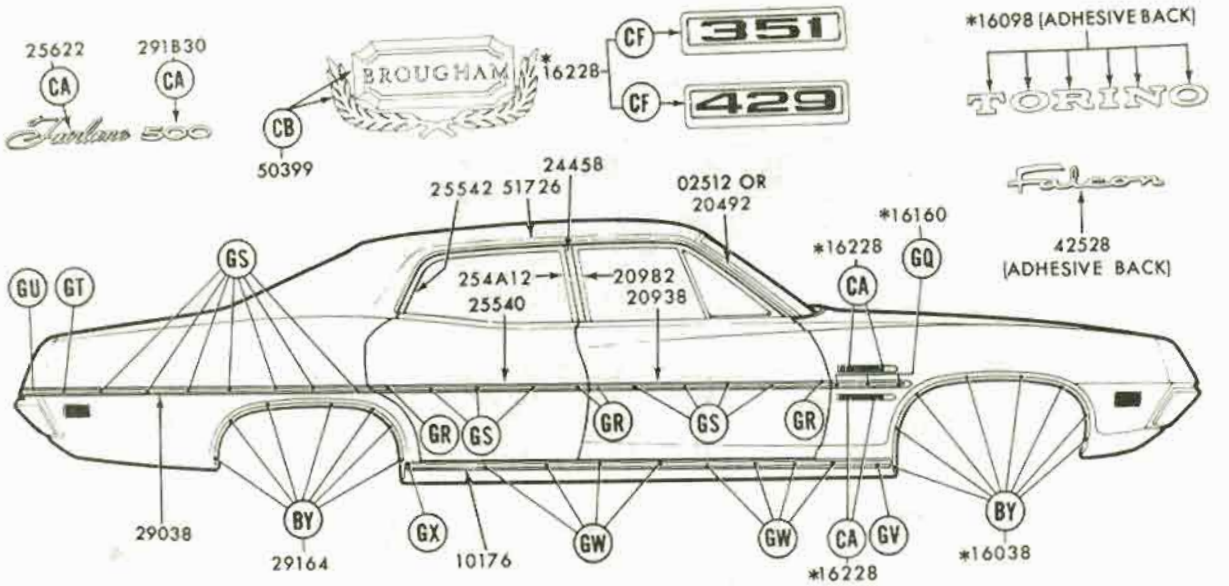

381671-S (UU-89-C)
BY

373888-S (MM-290)
CA

375890-S (MM222-A)
CB

*45271-S
CF

DOOZ-6629120-A
GQ

DOOZ-6520884-A
GR

DOOZ-6620818-A
GS

DOOZ-6629120-A
GT

383229-S (SS-44-E)
GU

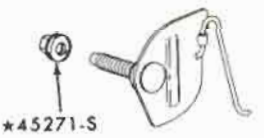

DOOZ-6510198-A
GV

C9MY-7140740-A
GW

53027-S (U-278)
GX

*REFER TO GROUP IN CHASSIS SECTION

P-7048

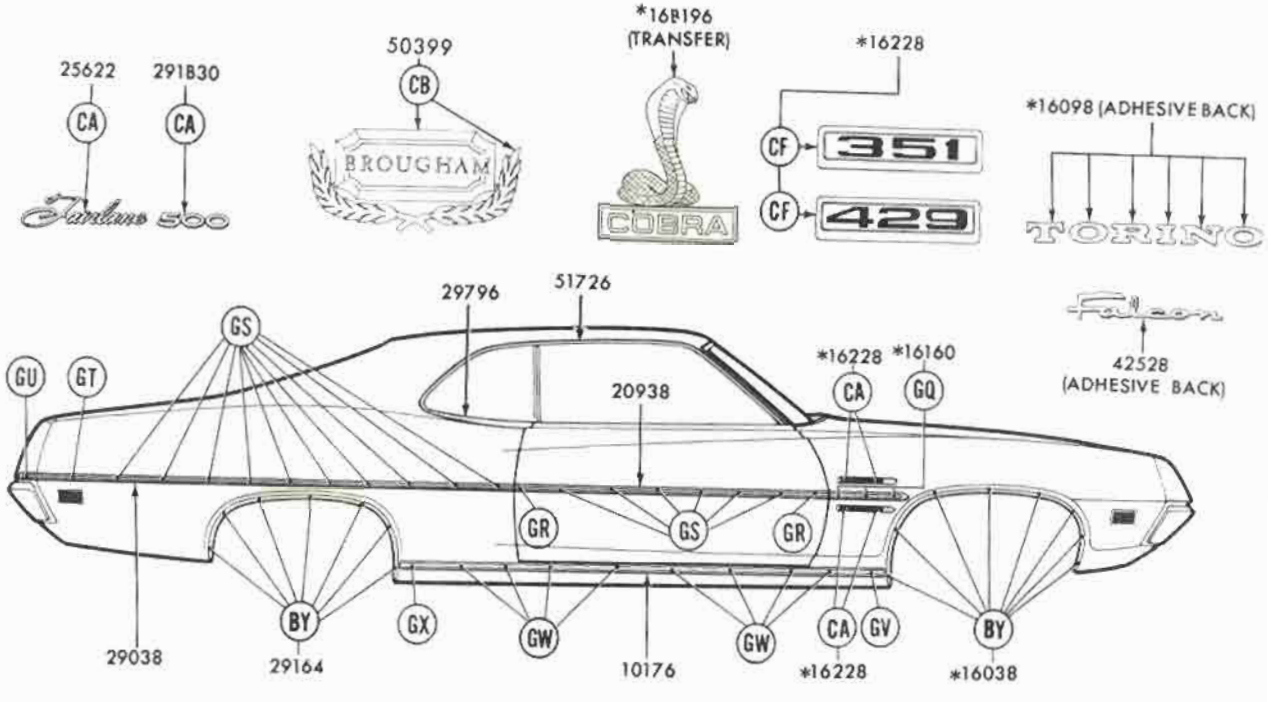

381671-S (UU-89-C)
BY

373888-S (MM-290)
CA

375890-S (MM222-A)
CB

*45271-S
CF

DOOZ-6629120-A
GQ

DOOZ-6520884-A
GR

DOOZ-6620818-A
GS

DOOZ-6629120-A
GT

383229-S (SS-44-E)
GU

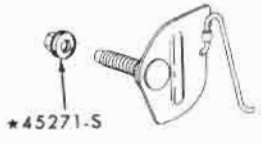

DOOZ-6510198-A
GV

C9MY-7140740-A
GW

53027-S (U-278)
GX

*REFER TO GROUP IN CHASSIS SECTION

P-7047

May, 1975 COPYRIGHT © 1975 — FORD MOTOR COMPANY — DEARBORN, MICHIGAN FINAL ISSUE

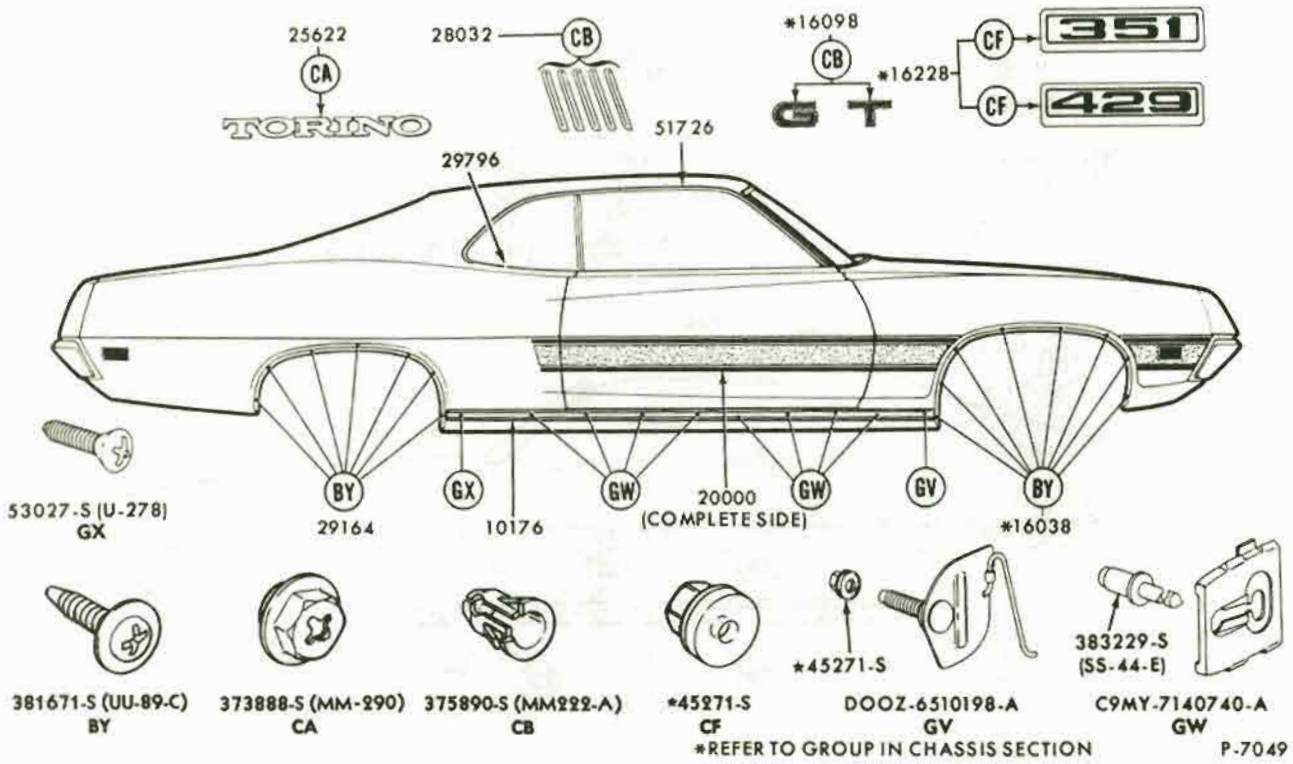

1970 FAIRLANE/TORINO - BODY TYPE 63F, 65F, 66C, 76F - SIDE

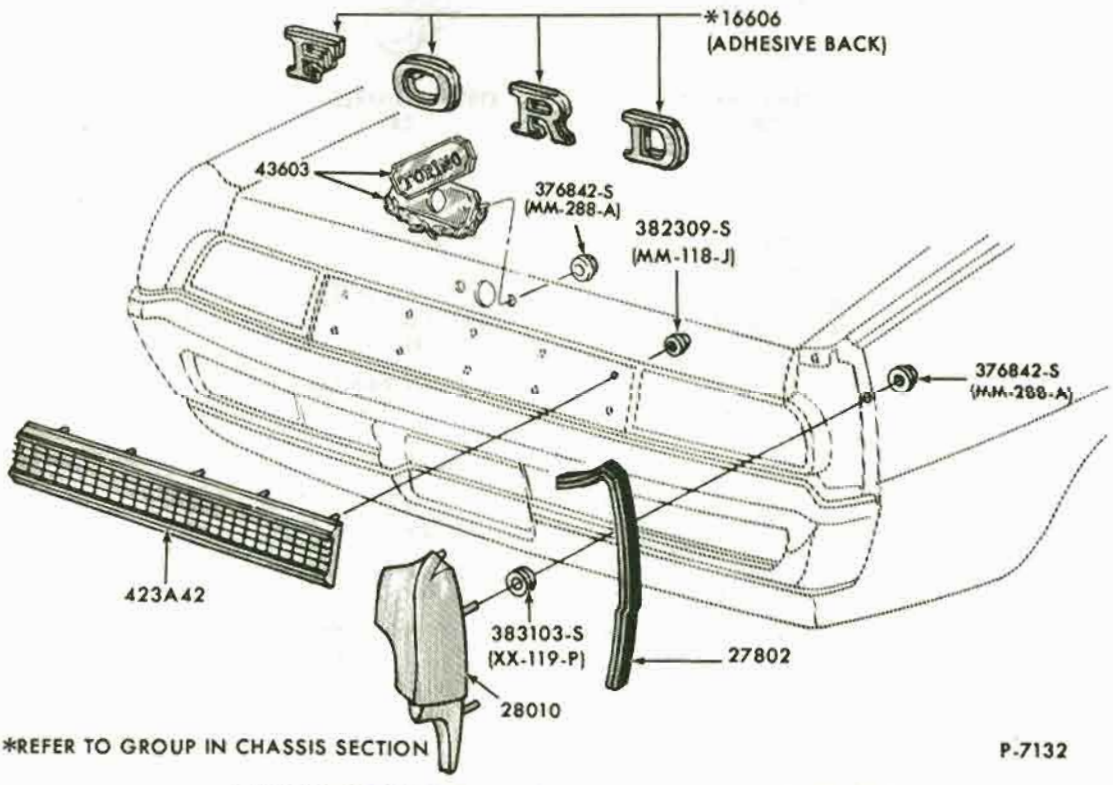

1970 FAIRLANE/TORINO - ALL except BODY TYPE 63, 66, 71 - BACK END

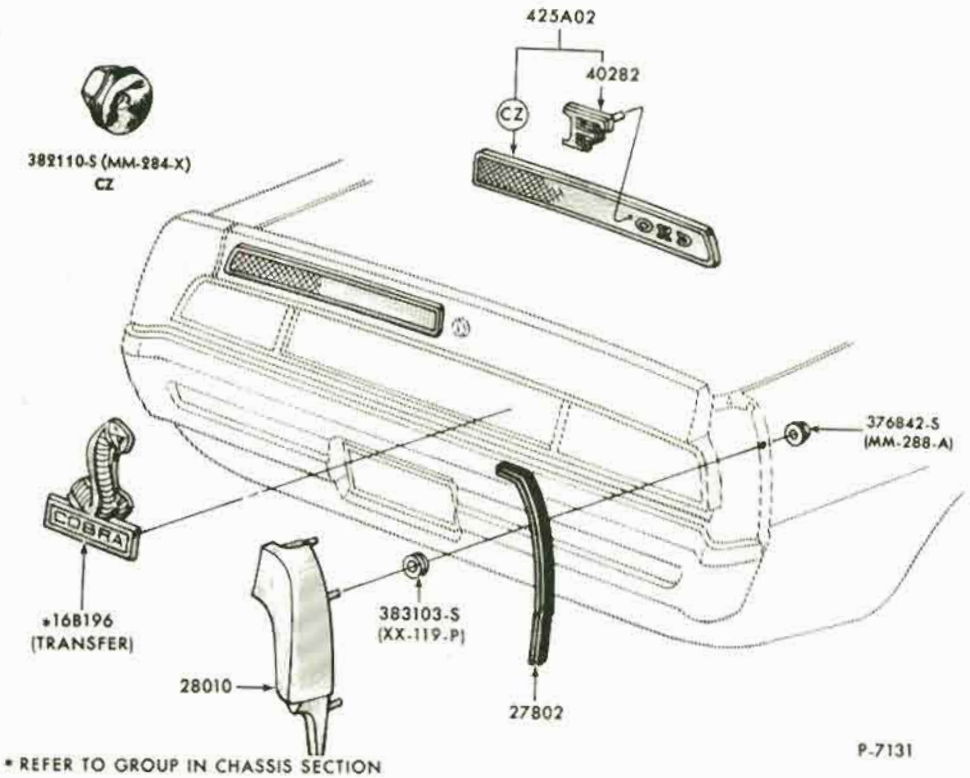

* REFER TO GROUP IN CHASSIS SECTION

1970 FAIRLANE/TORINO - BODY TYPE 63 - BACK END

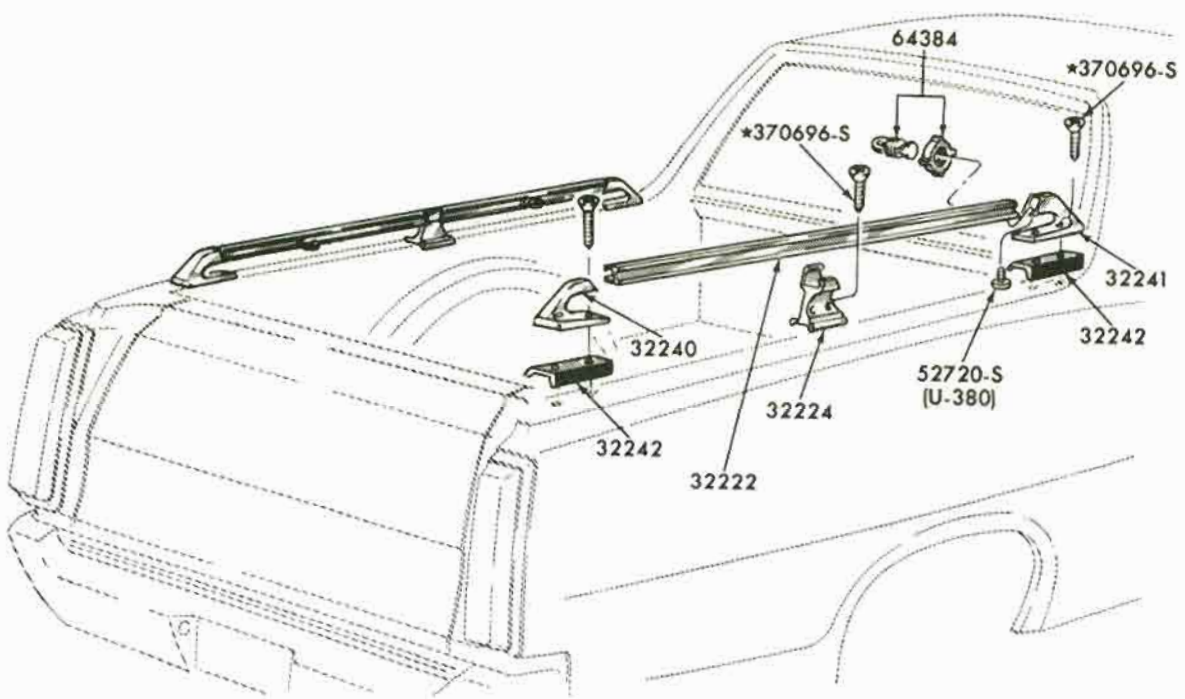

NO KIT AVAILABLE

P-7469

1969 FAIRLANE/TORINO - BODY TYPE 66 - RIO GRANDE RAILS

COPYRIGHT © 1975 — FORD MOTOR COMPANY — DEARBORN, MICHIGAN

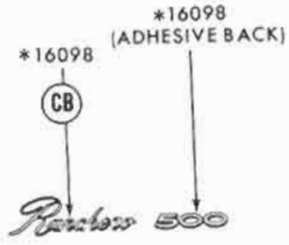

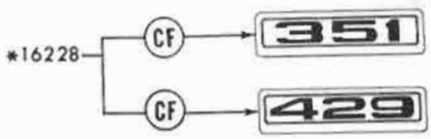

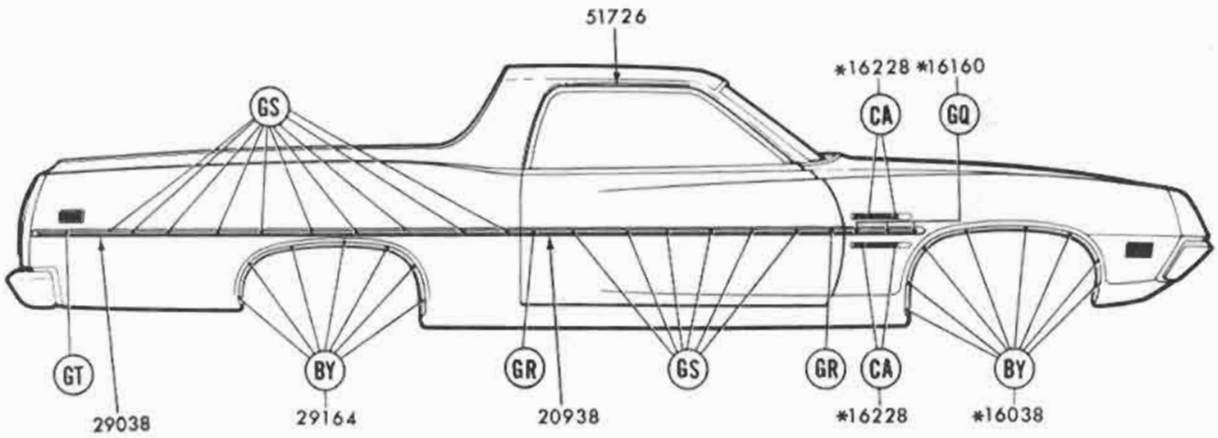

381671-S (UU-89-C)
BY

373888-S (MM-290)
CA

375890-S (MM222-A)
CB

*45271-S
CF

DOOZ-6629120-A
GQ

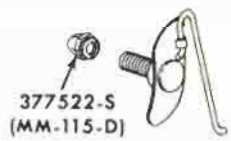

DOOZ-6520884-A
GR

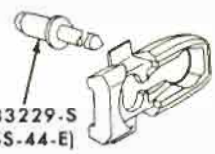

DOOZ-6620818-A
GS

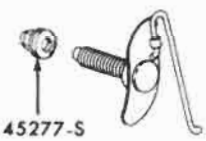

DOOZ-6629120-A
GT

*REFER TO GROUP IN CHASSIS SECTION

P-7050

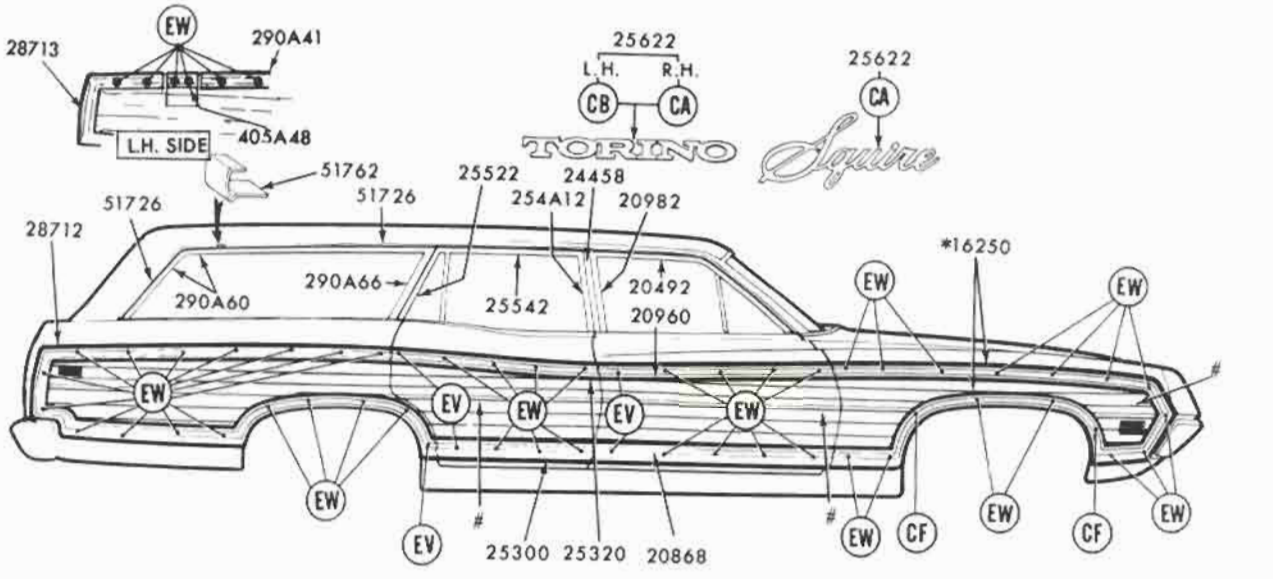

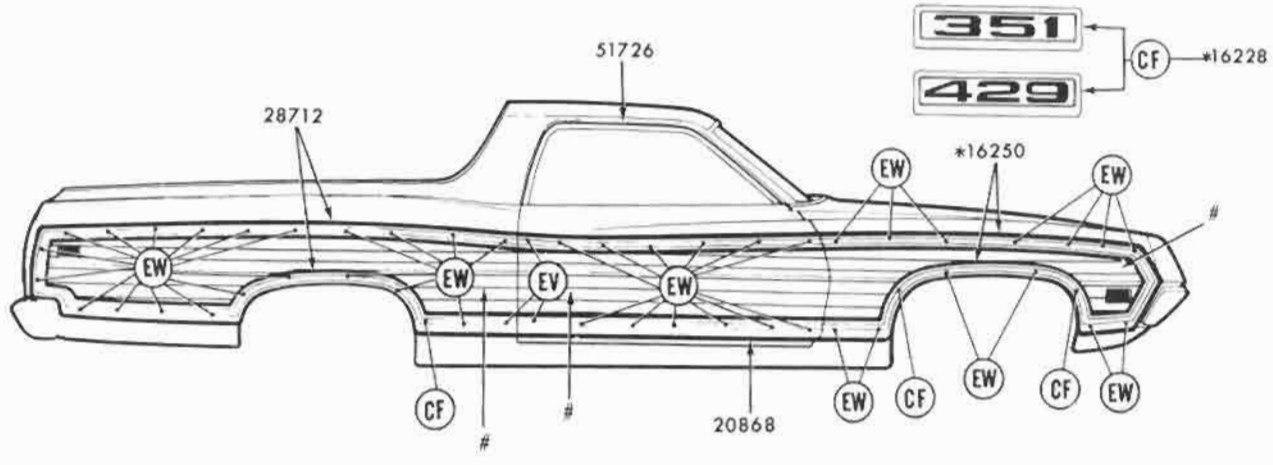

373888-S (MM-290)
CA

375890-S (MM222-A)
CB

*45271-S
CF

377522-S
(MM-115-D)
EV

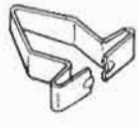

C8AZ-71425A94-A
EW

FOR WOOD GRAIN TRANSFER—REFER TO GROUP 20748
* REFER TO GROUP IN CHASSIS SECTION

P-7052

COPYRIGHT © 1975 — FORD MOTOR COMPANY — DEARBORN, MICHIGAN

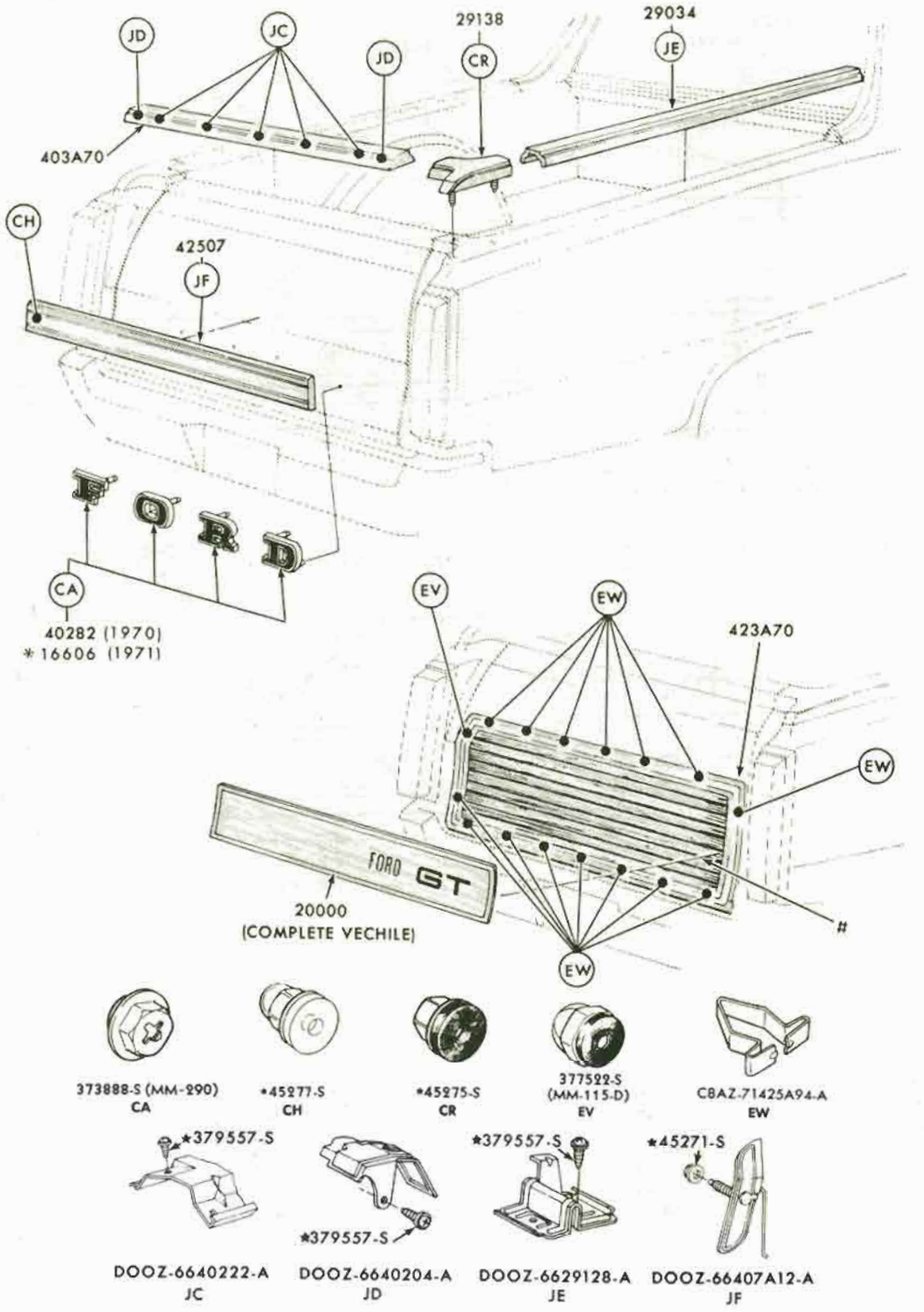

#FOR WOODGRAIN TRANSFER-REFER TO GROUP 20748
* REFER TO GROUP IN CHASSIS SECTION

P-7129

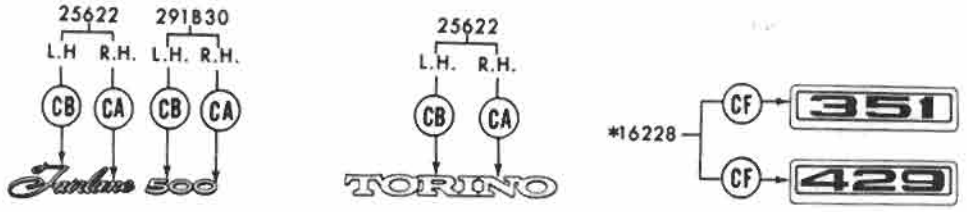

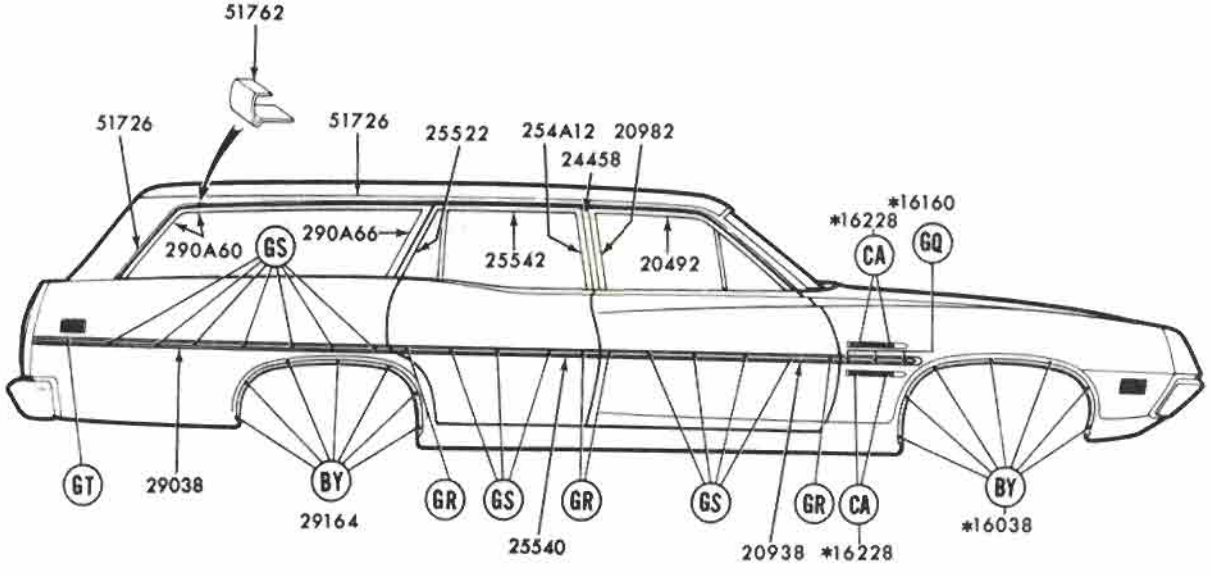

381671-S (UU-89-C)
BY

373888-S (MM-290)
CA

375890-S (MM222-A)
CB

*45271-S
CF

DOOZ-6629120-A
GQ

DOOZ-6520884-A
GR

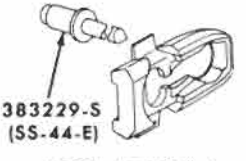

DOOZ-6620818-A
GS

DOOZ-6629120-A
GT

*REFER TO GROUP IN CHASSIS SECTION

P-7051

May, 1975 COPYRIGHT © 1975 — FORD MOTOR COMPANY — DEARBORN, MICHIGAN FINAL ISSUE

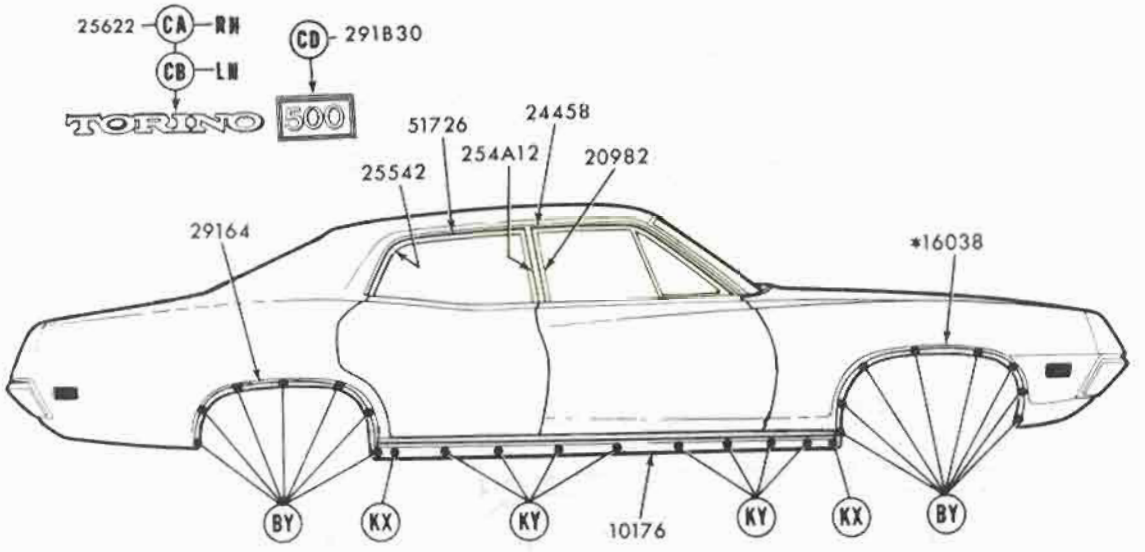

381671-S (UU-89-C)
BY

373888-S (MM-290)
CA

375890-S (MM222-A)
CB

382146-S (MM-290-E)
CD

*45271-S
CF

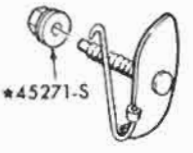

C8MY-57423A04-A
KT

C8LY-6520884-A
KU

C8LY-6520818-A
KV

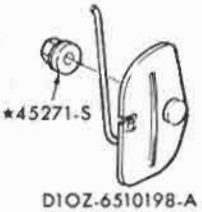

D1OZ-6510198-A
KX

D1OZ-6510182-A
KY

*REFER TO GROUP IN CHASSIS SECTION

P-7791

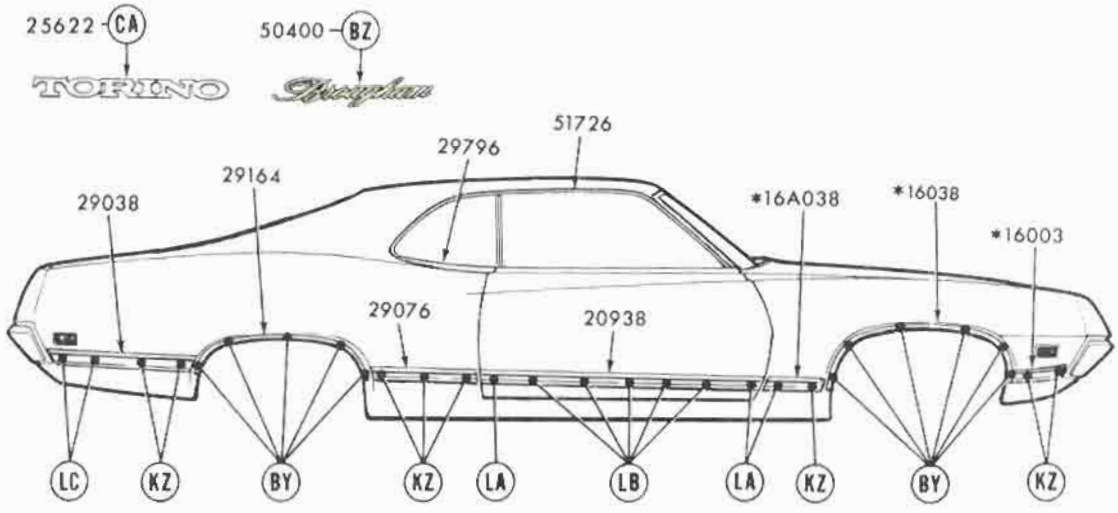

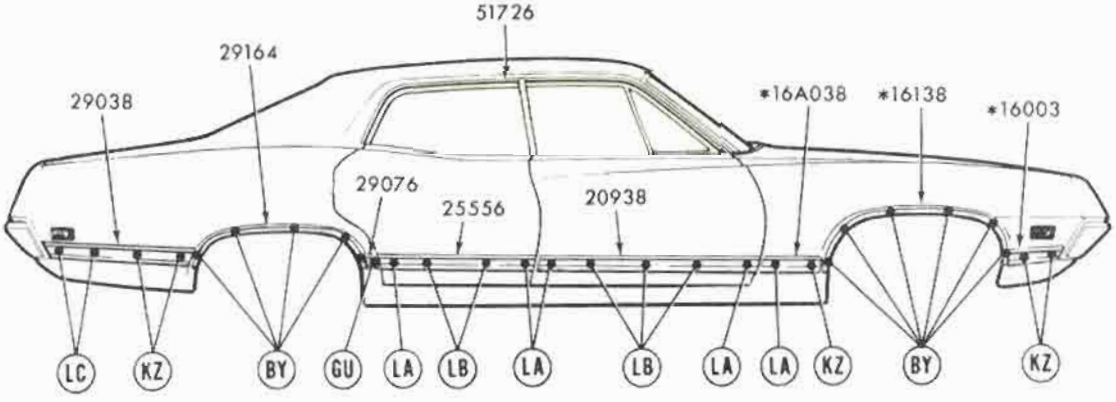

381671-S (UU-89-C)
BY

378362-S (MM-228)
BZ

373888-S (MM-290)
CA

383229-S (SS-44-E)
GU

C8MY-71425A16-A
KZ

D1OZ-6520884-A
LA

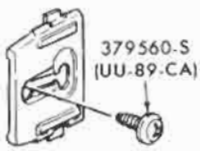

D1OZ-6520818-A
LB

C8MY-7129124-A
LC

*REFER TO GROUP IN CHASSIS SECTION

P-7792

1971 TORINO - BODY TYPE 57E, 65E - SIDE

COPYRIGHT © 1975 — FORD MOTOR COMPANY — DEARBORN, MICHIGAN

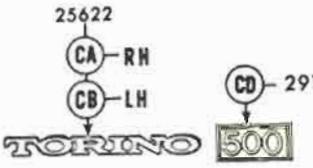

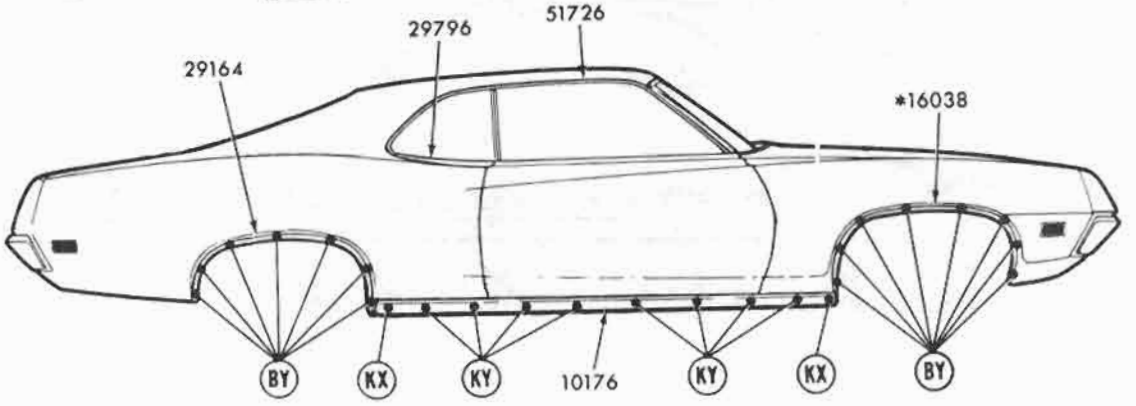

381671-S (UU-89-C)
BY

373888-S (MM-290)
CA

375890-S (MM222-A)
CB

382146-S (MM-290-E)
CD

*45271-S
CF

D1OZ-6510198-A
KX

D1OZ-6510182-A
KY

*REFER TO GROUP IN CHASSIS SECTION

P-7790

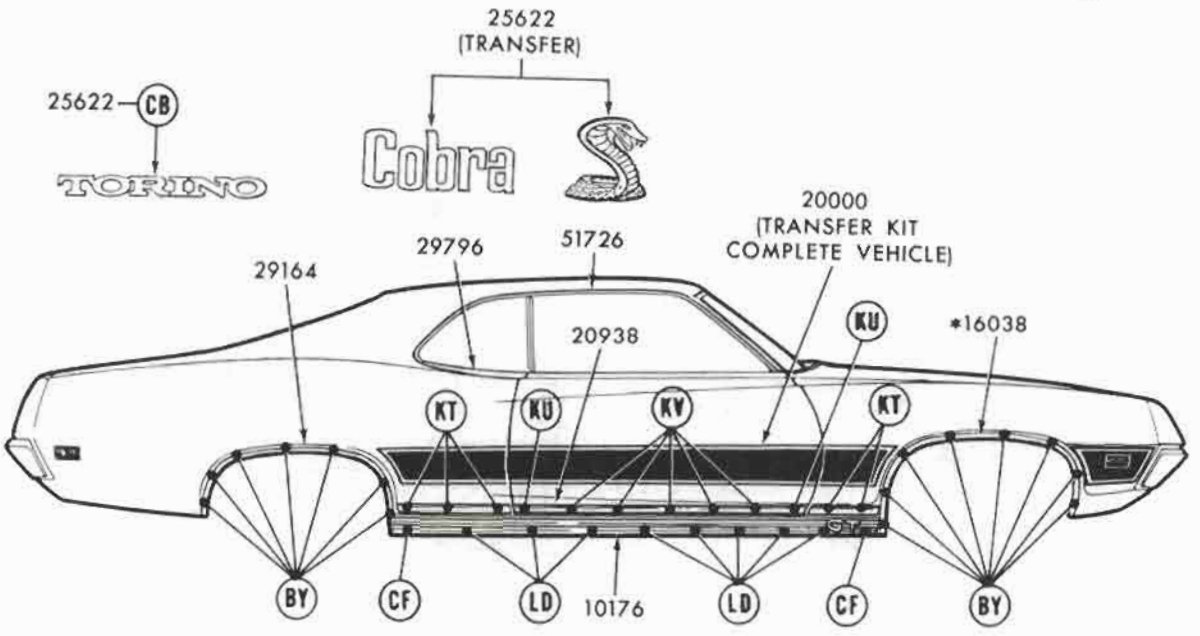

381671-S (UU-89-C)
BY

373888-S (MM-290)
CA

*45271-S
CF

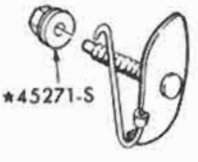

C8MY-57423A04-A
KT

C8LY-6520884-A
KU

C8LY-6520818-A
KV

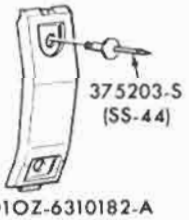

D1OZ-6310182-A
LD

*REFER TO GROUP IN CHASSIS SECTION

P-7789

May, 1975 COPYRIGHT © 1975 — FORD MOTOR COMPANY — DEARBORN, MICHIGAN FINAL ISSUE

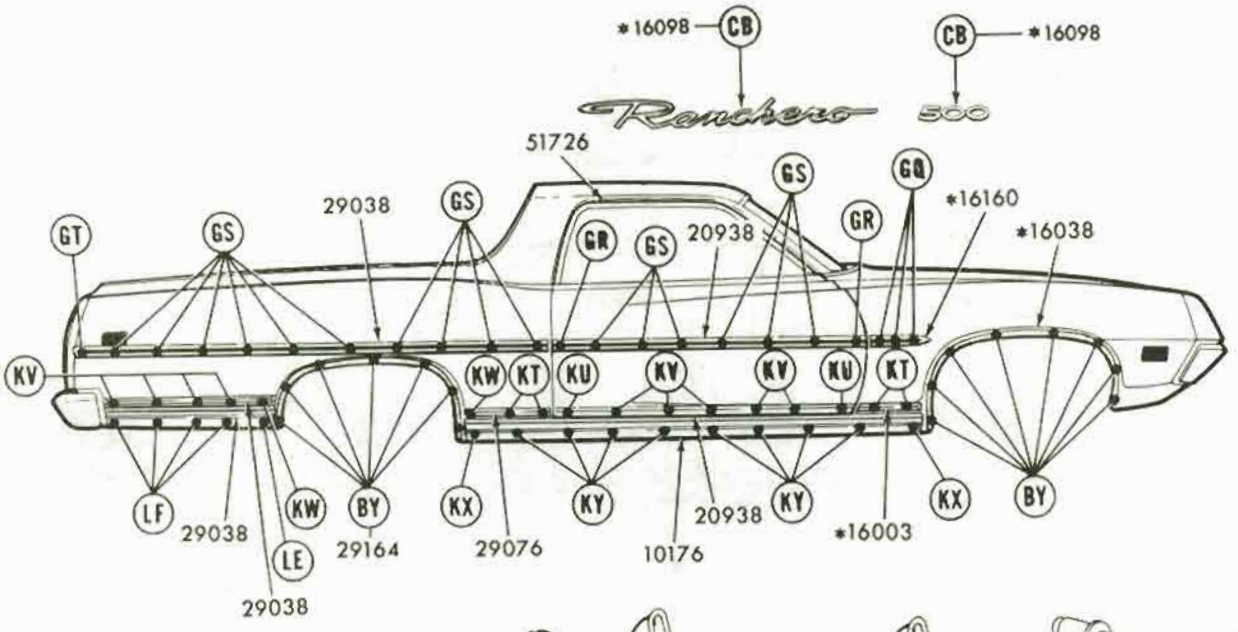

381671-S (UU-89-C)
BY

375890-S (MM222-A)
CB

DOOZ-6629120-A
GQ

DOOZ-6520884-A
GR

DOOZ-6620818-A
GS

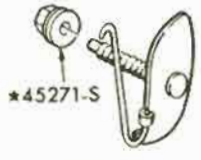

C8MY-57423A04-A
KT

C8LY-6520884-A
KU

C8LY-6520818-A
KV

*C9AB-8A071-A
KW

D1OZ-6510198-A
KX

D1OZ-6510182-A
KY

D1AZ-7121094-A
LE

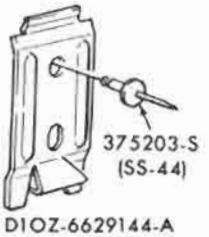

D1OZ-6629144-A
LF

*REFER TO GROUP IN CHASSIS SECTION

P-7797

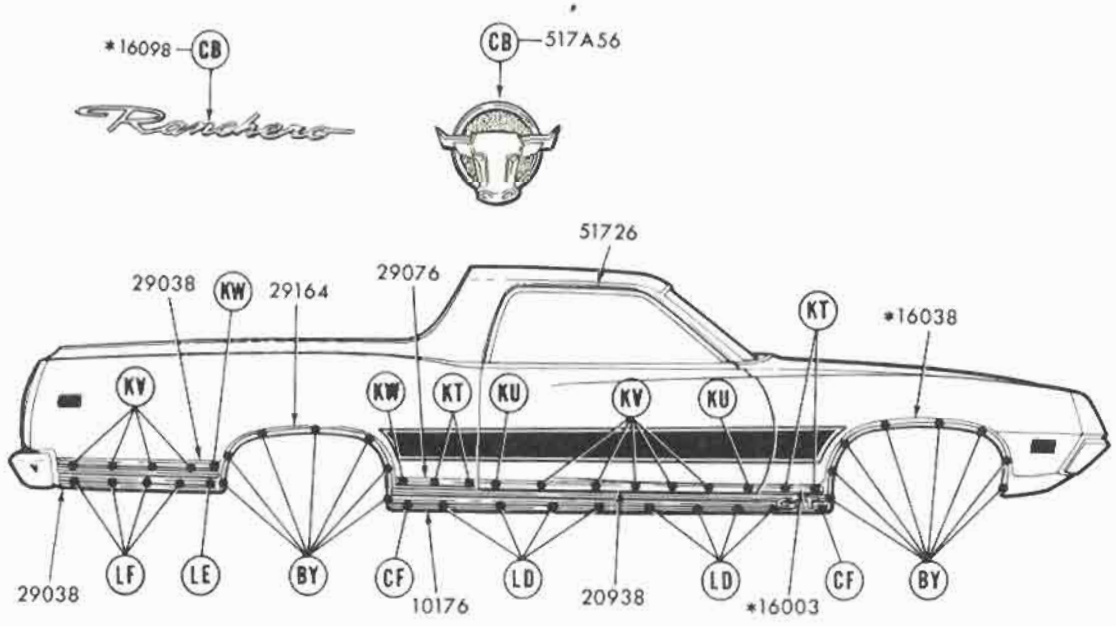

381671-S (UU-89-C)
BY

375890-S (MM222-A)
CB

*45271-S
CF

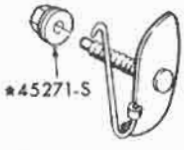

C8MY-57423A04-A
KT

C8LY-6520884-A
KU

C8LY-6520818-A
KV

*C9AB-8A071-A
KW

D1OZ-6510198-A
KX

D1OZ-6510182-A
KY

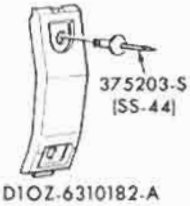

D1OZ-6310182-A
LD

D1AZ-7121094-A
LE

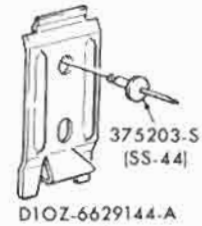

D1OZ-6629144-A
LF

*REFER TO GROUP IN CHASSIS SECTION

P-7798

May, 1975 COPYRIGHT © 1975 — FORD MOTOR COMPANY — DEARBORN, MICHIGAN FINAL ISSUE

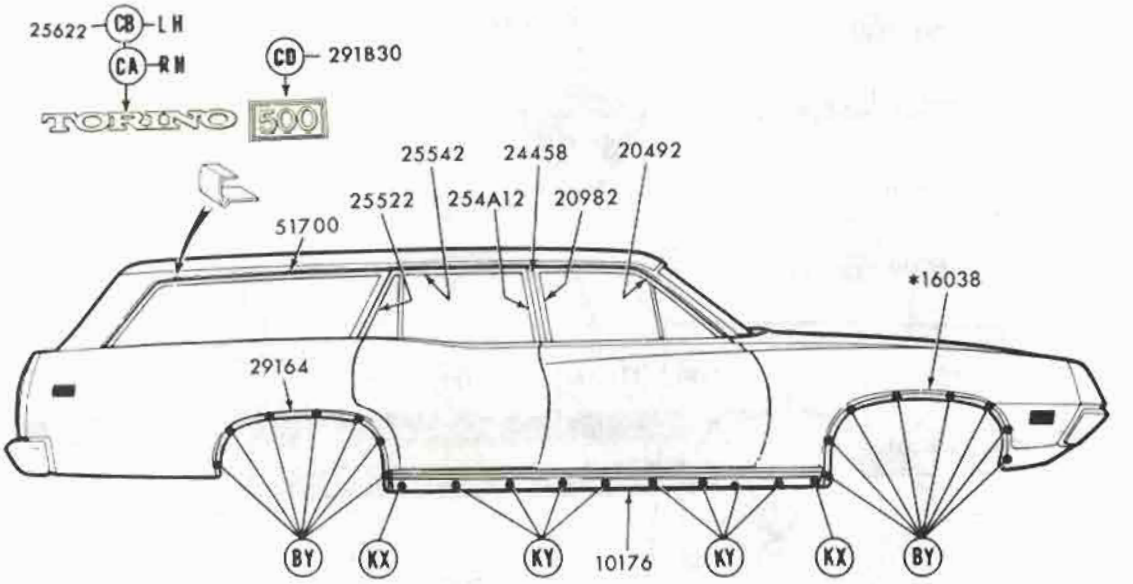

381671-S (UU-89-C)
BY

373888-S (MM-290)
CA

375890-S (MM222-A)
CB

382146-S (MM-290-E)
CD

*45271-S
CF

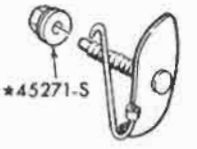

C8MY-57423A04-A
KT

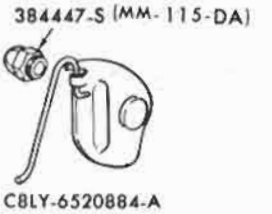

C8LY-6520884-A
KU

C8LY-6520818-A
KV

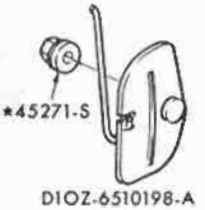

D1OZ-6510198-A
KX

D1OZ-6510182-A
KY

REFER TO GROUP IN CHASSIS SECTION

P-7795

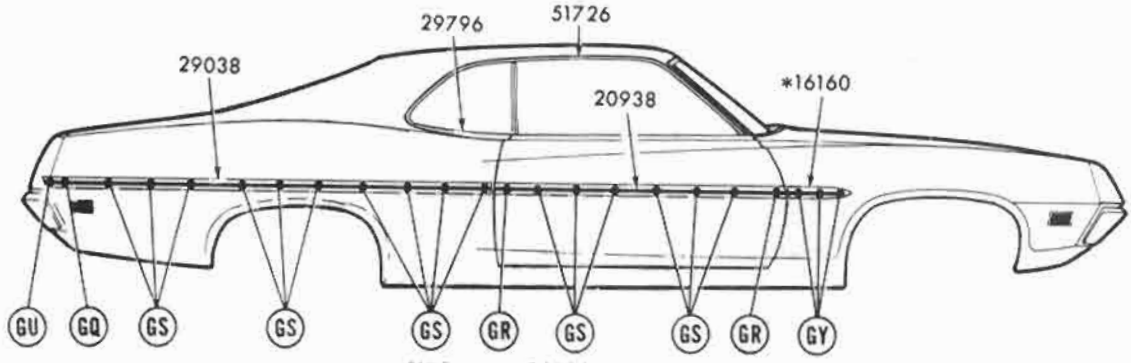

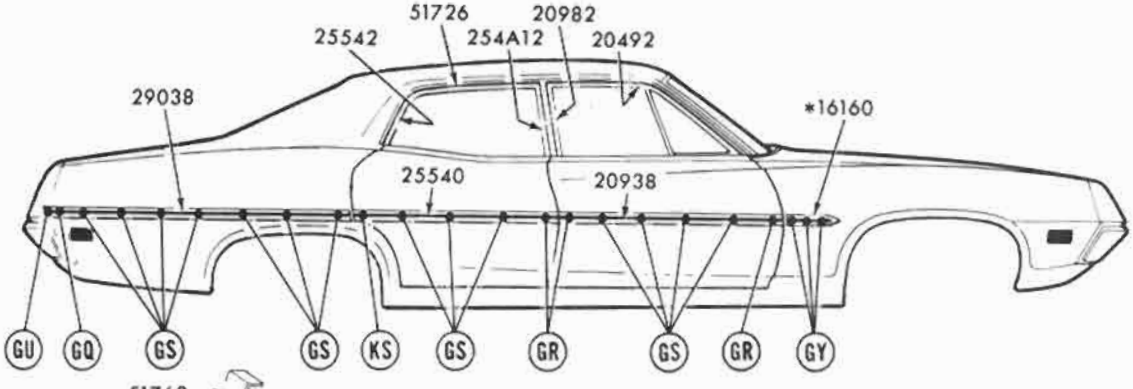

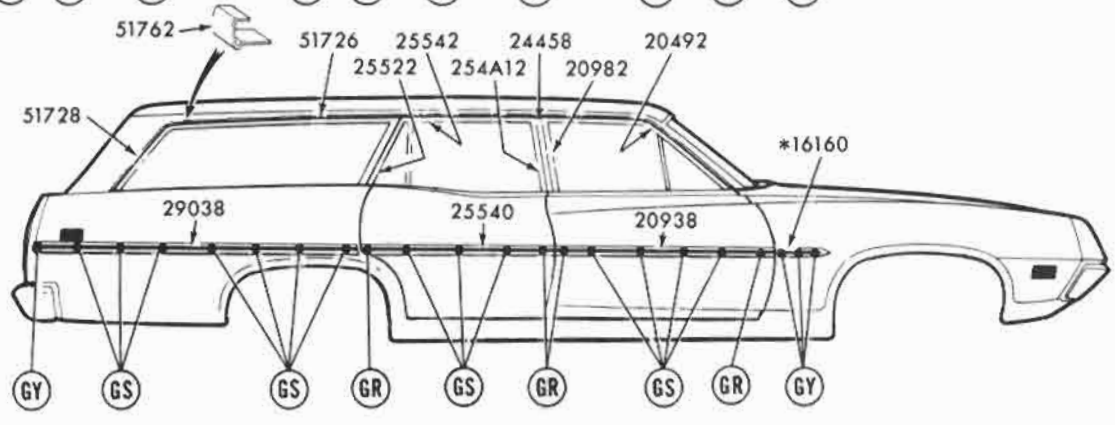

DOOZ-6629120-A
GQ

DOOZ-6520884-A
GR

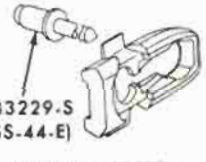

DOOZ-6620818-A
GS

383229-S (SS-44-E)
GU

DOGY-16A076-A
GY

D0OZ-5425562-A
KS

*REFER TO GROUP IN CHASSIS SECTION

P-7794

BODY SIDE PROTECTION MOULDINGS
1971 TORINO

COPYRIGHT © 1975 — FORD MOTOR COMPANY — DEARBORN, MICHIGAN

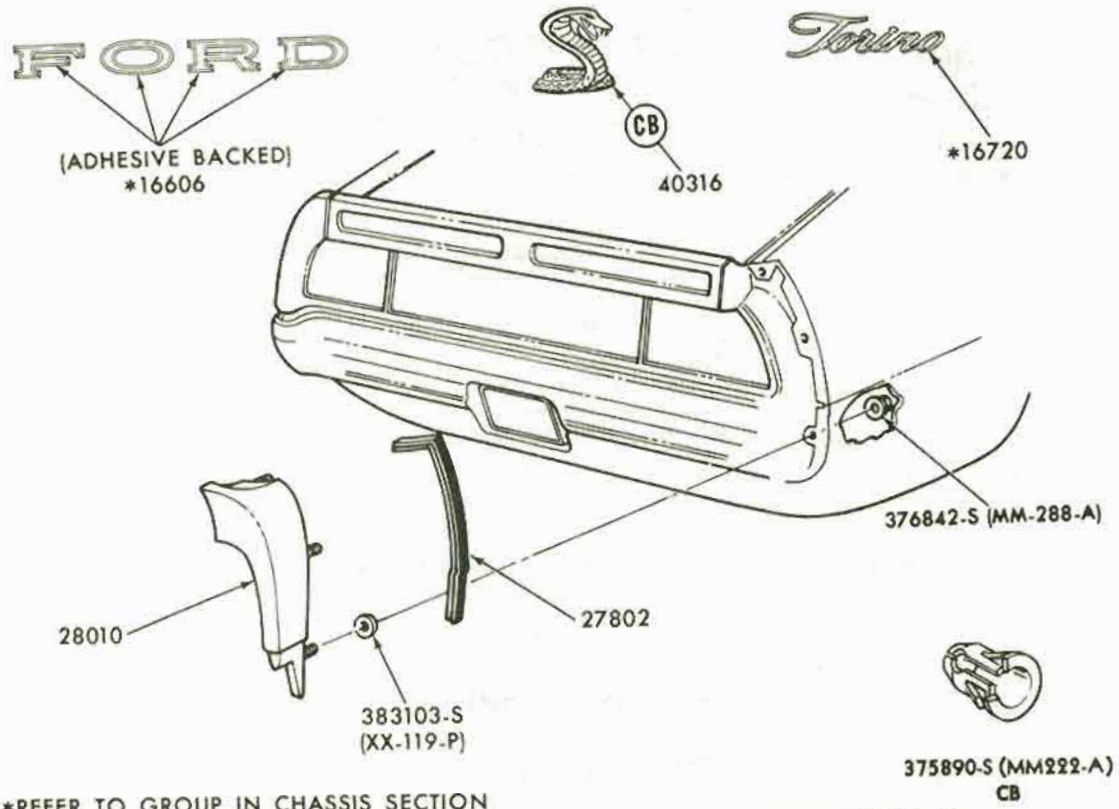

*REFER TO GROUP IN CHASSIS SECTION P-8313

1971 FAIRLANE/TORINO - BODY TYPES 63F,H,76F - BACK END

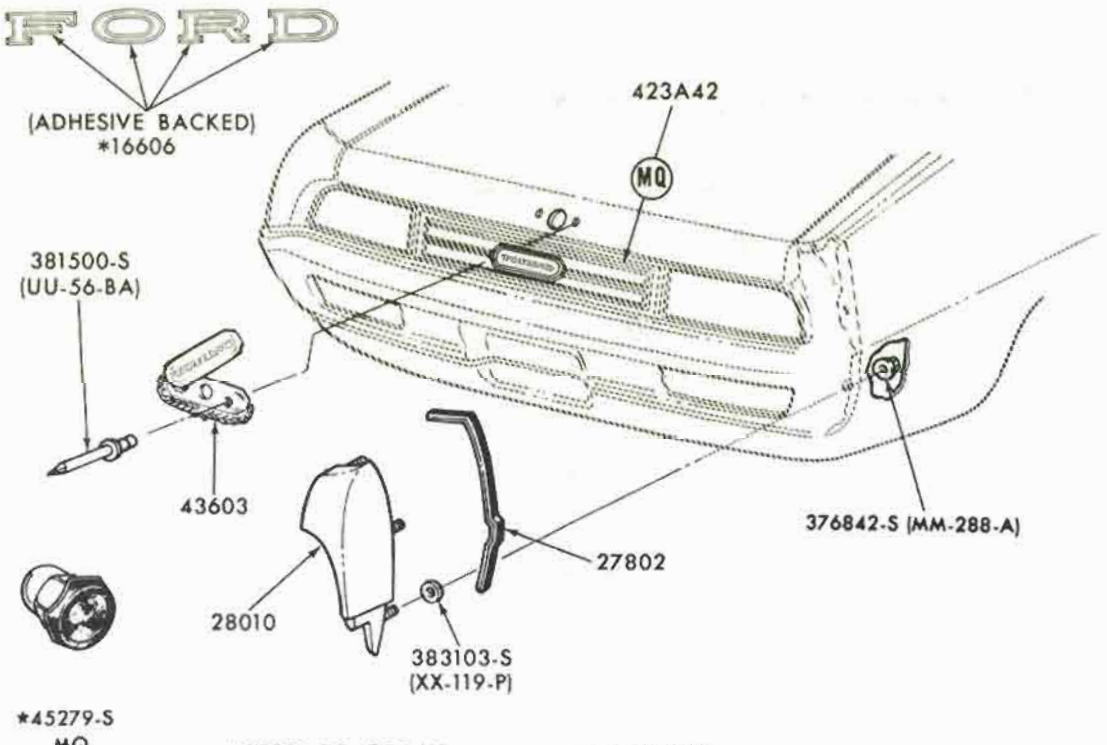

*REFER TO GROUP IN CHASSIS SECTION P-8312

1971 FAIRLANE/TORINO - BODY TYPES 54,57,63C,65 - BACK END

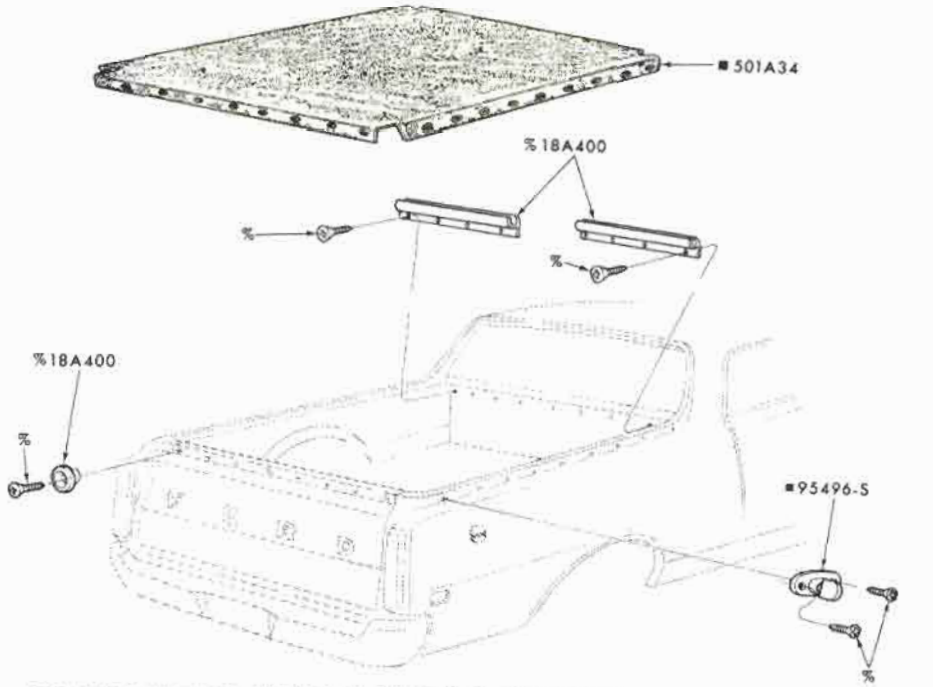

■ SERVICED ONLY IN KIT—GROUP 501A42 (INCLUDES STORAGE BAG)
% ALSO SUPPLIED IN KIT—GROUP 501A42

P-8335

TONNEAU COVER and RELATED PARTS
1971/72 TORINO - BODY TYPES 66,97

COPYRIGHT © 1975 — FORD MOTOR COMPANY — DEARBORN, MICHIGAN

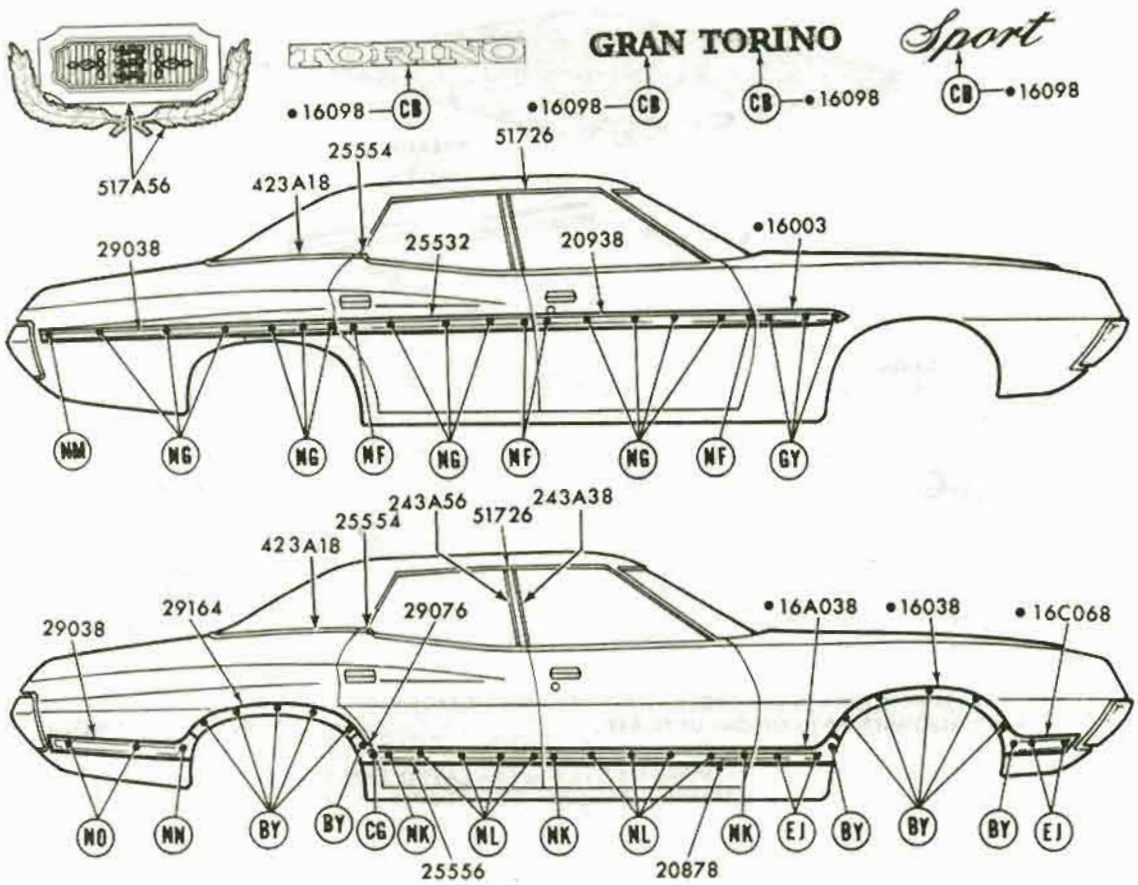

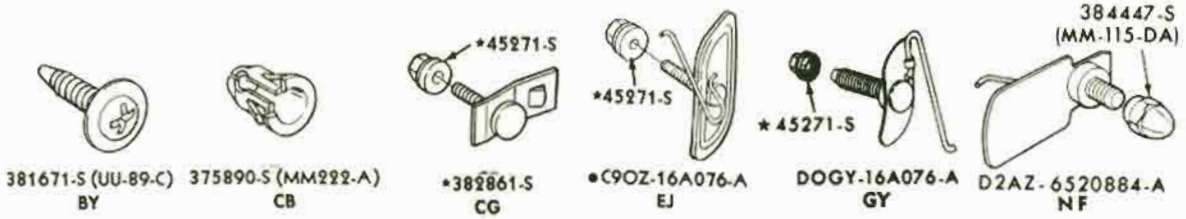

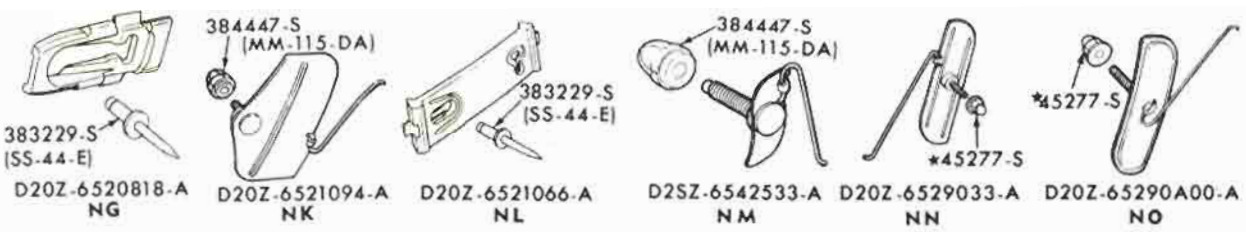

• REFER TO CHASSIS SECTION

P-8706

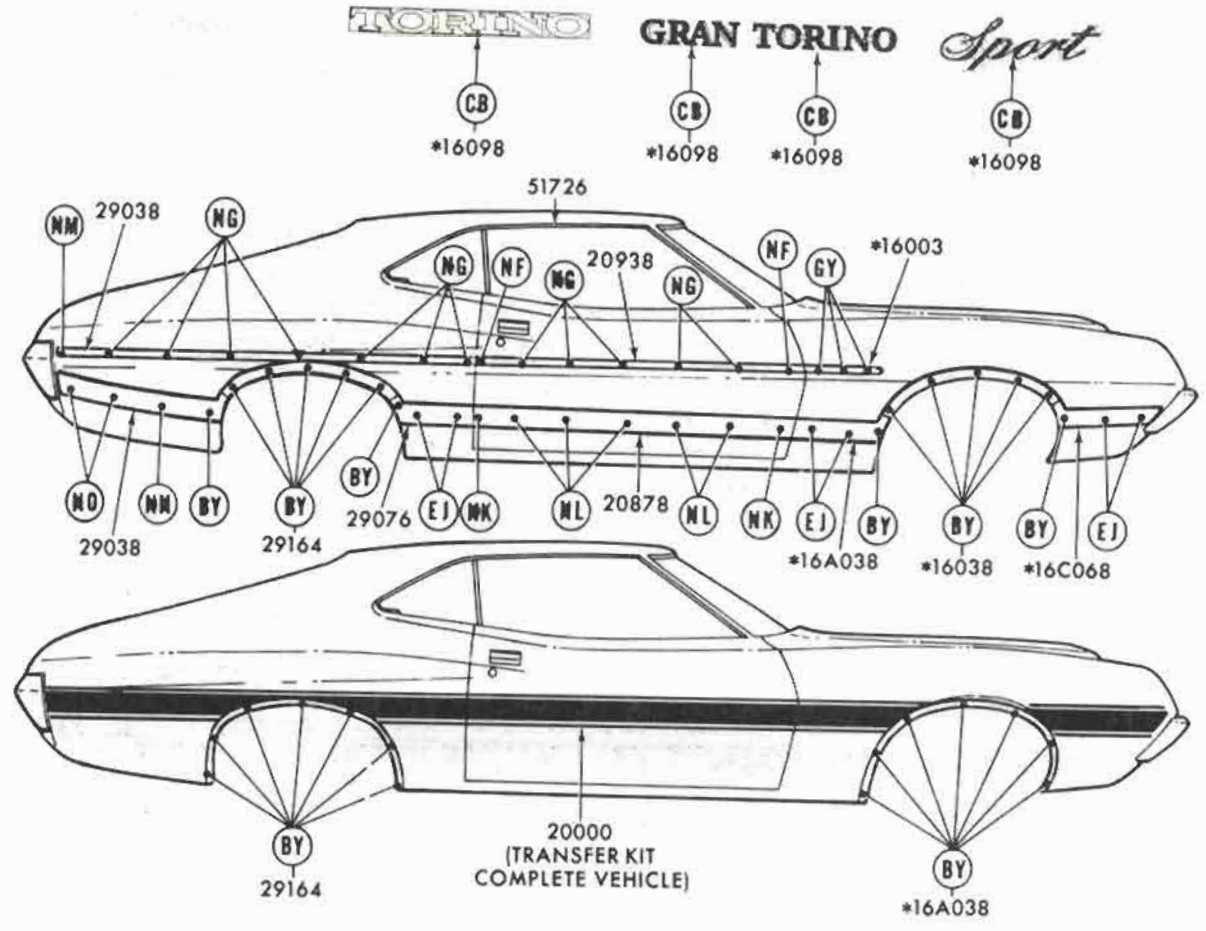

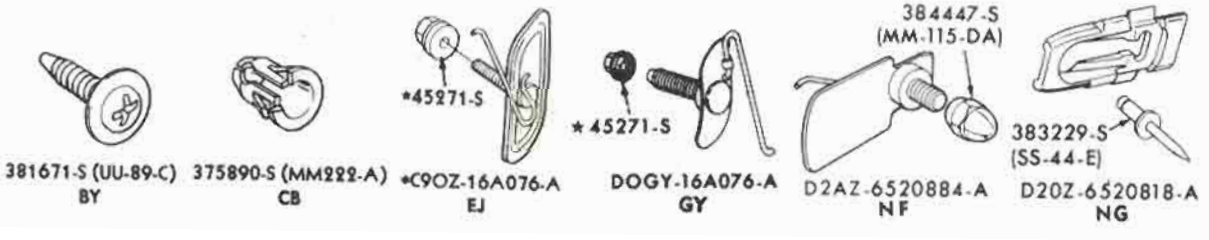

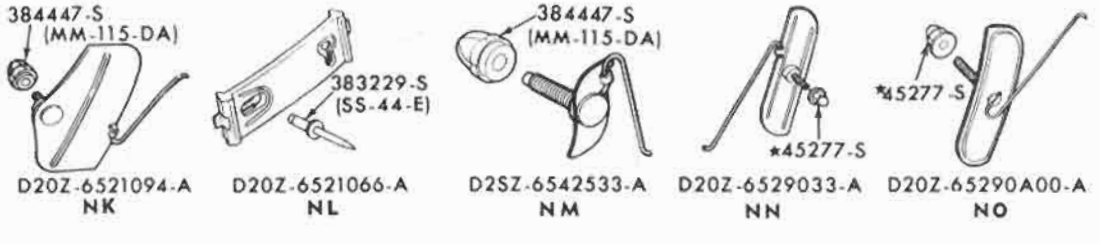

*REFER TO GROUP IN CHASSIS SECTION

P-8708

1972 TORINO - BODY TYPE 63 - SIDE

COPYRIGHT © 1975 — FORD MOTOR COMPANY — DEARBORN, MICHIGAN

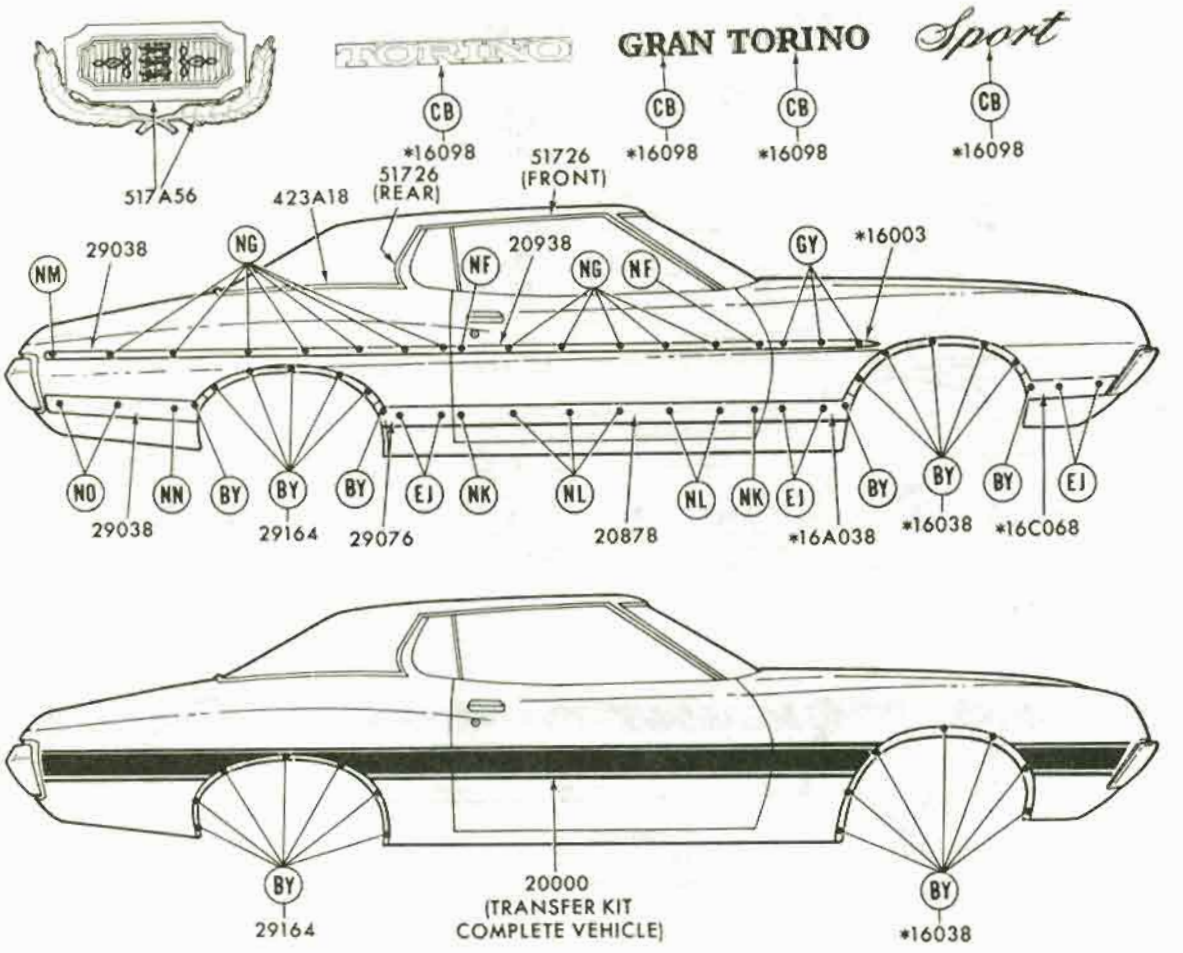

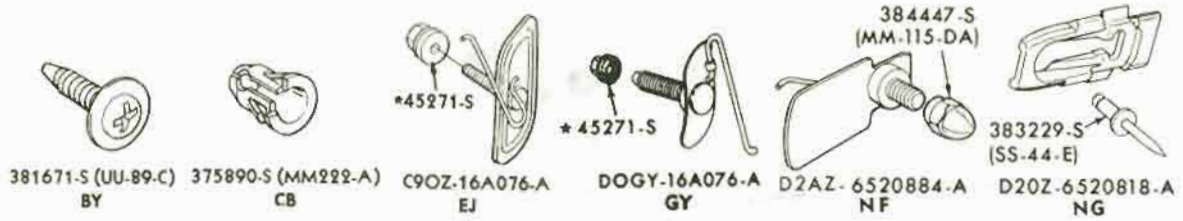

381671-S (UU-89-C) BY
375890-S (MM222-A) CB
C9OZ-16A076-A EJ
DOGY-16A076-A GY
D2AZ-6520884-A NF
D20Z-6520818-A NG

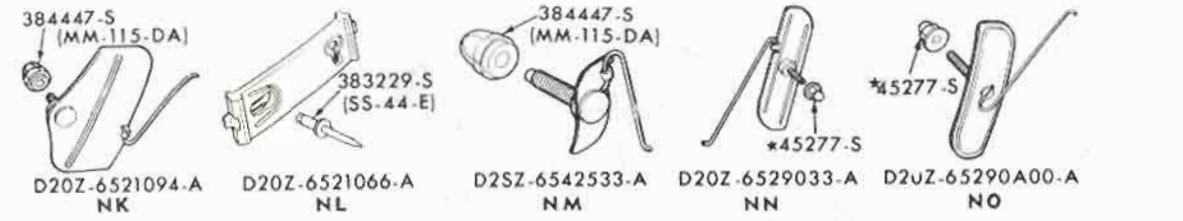

D20Z-6521094-A NK
D20Z-6521066-A NL
D2SZ-6542533-A NM
D20Z-6529033-A NN
D2UZ-65290A00-A NO

*REFER TO GROUP IN CHASSIS SECTION

P-8707

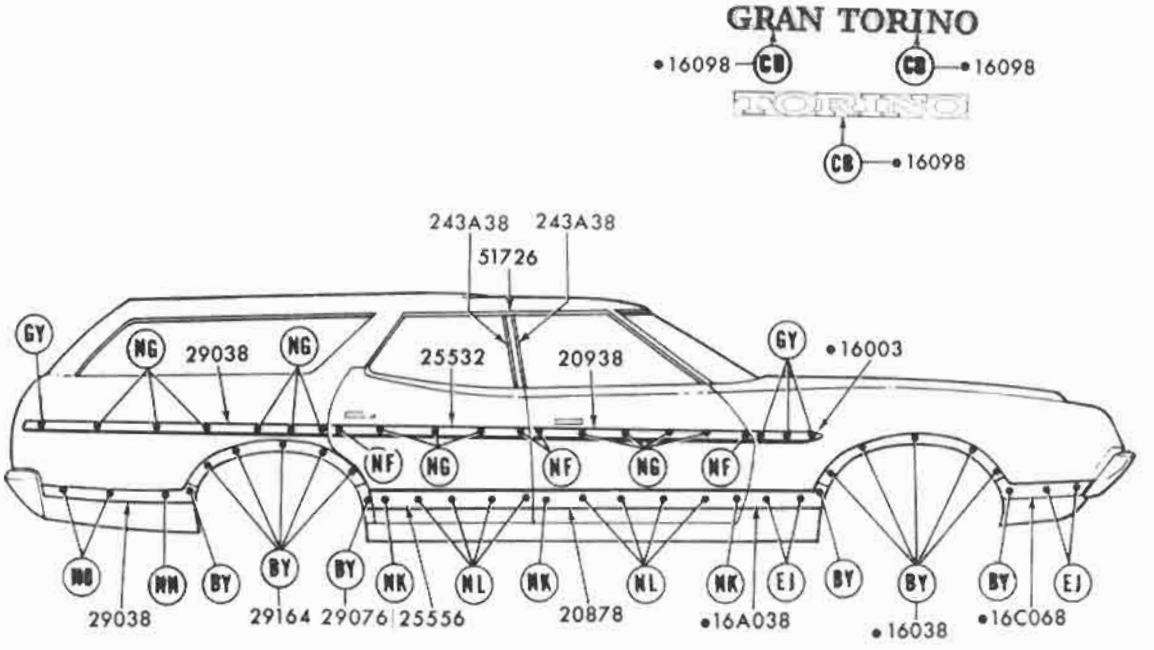

381671-S (UU-89-C)
BY

375890-S (MM222-A)
CB

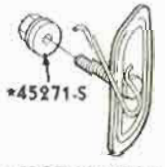

•C9OZ-16A076-A
EJ

DOGY-16A076-A
GY

D2AZ-6520884-A
NF

D20Z-6520818-A
NG

D20Z-6521094-A
NK

D20Z-6521066-A
NL

D20Z-6529033-A
NN

D20Z-65290A00-A
NO

•REFER TO CHASSIS SECTION

P-8702

May, 1975 COPYRIGHT © 1975 — FORD MOTOR COMPANY — DEARBORN, MICHIGAN FINAL ISSUE

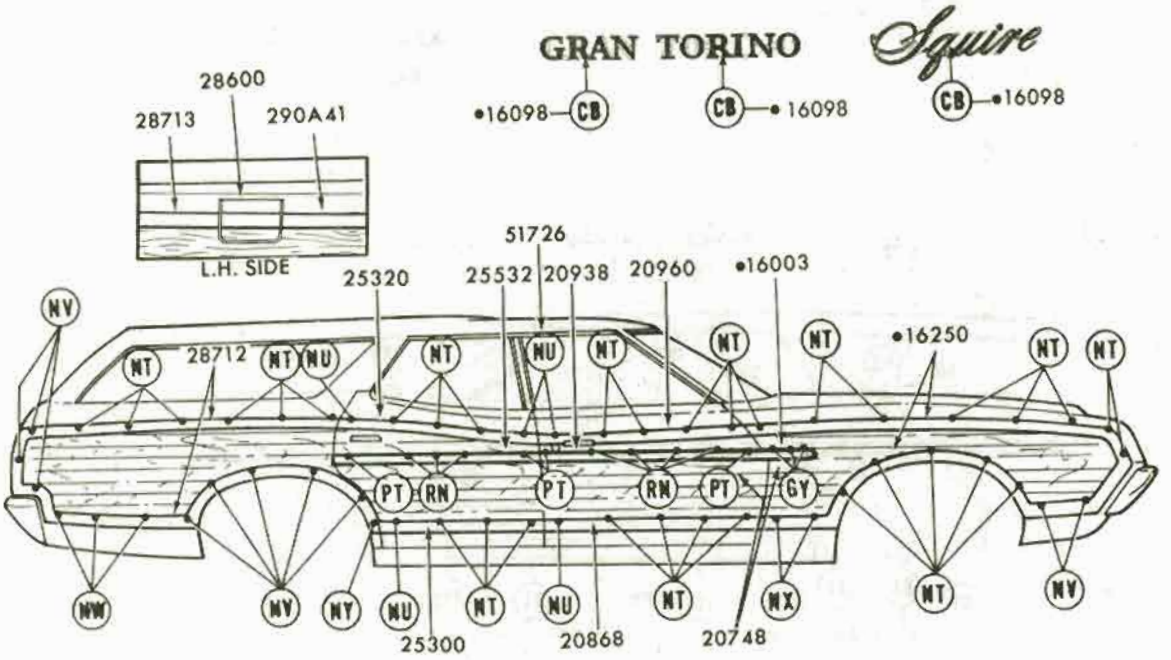

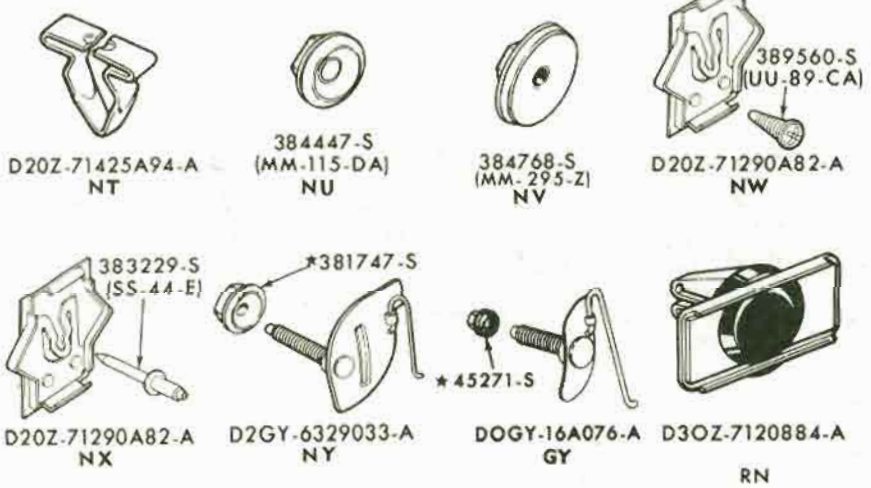

P-8701

•REFER TO CHASSIS SECTION

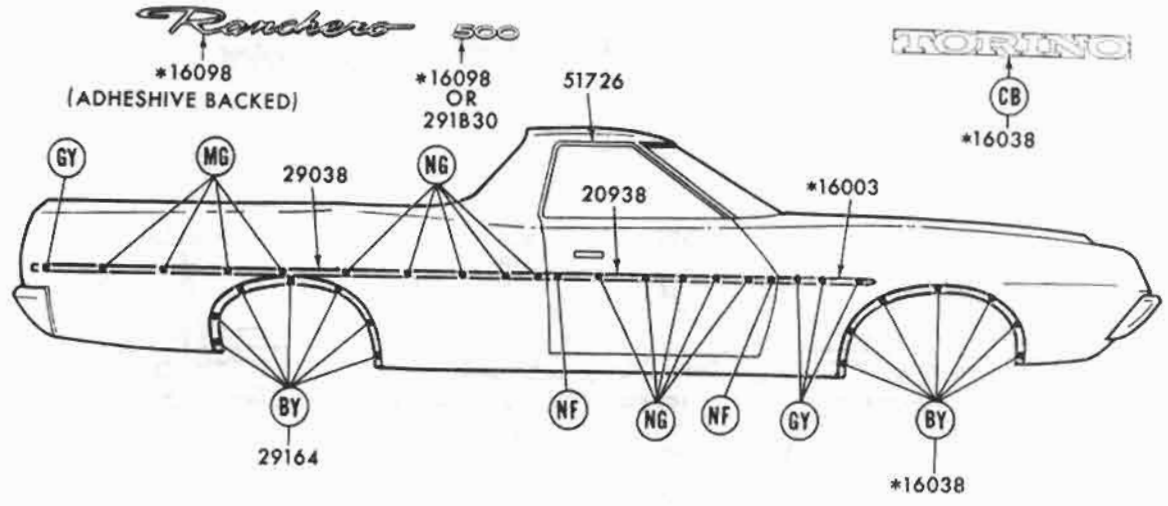

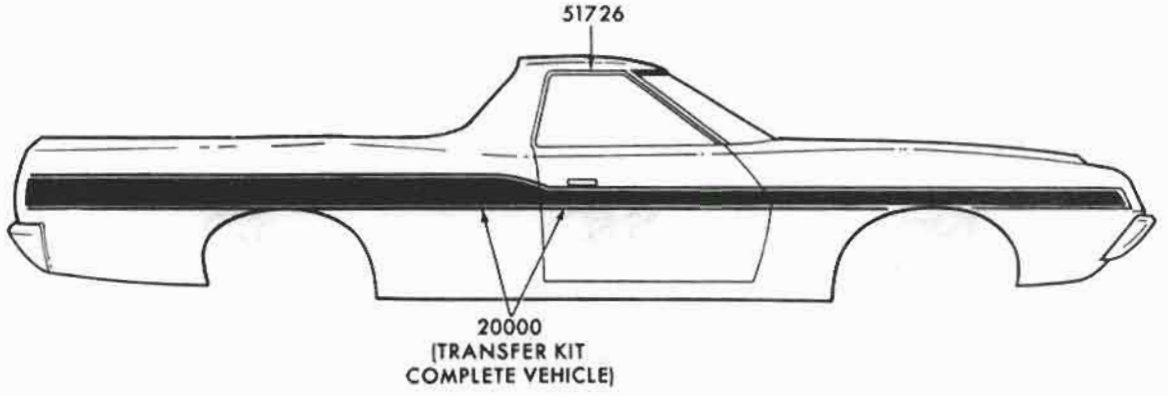

381671-S (UU-89-C)
BY

375890-S (MM222-A)
CB

DOGY-16A076-A
GY

D20Z-6520884-A
NF

D20Z-6520818-A
NG

*REFER TO GROUP IN CHASSIS SECTION

P-8704

May, 1975 COPYRIGHT © 1975 — FORD MOTOR COMPANY — DEARBORN, MICHIGAN FINAL ISSUE

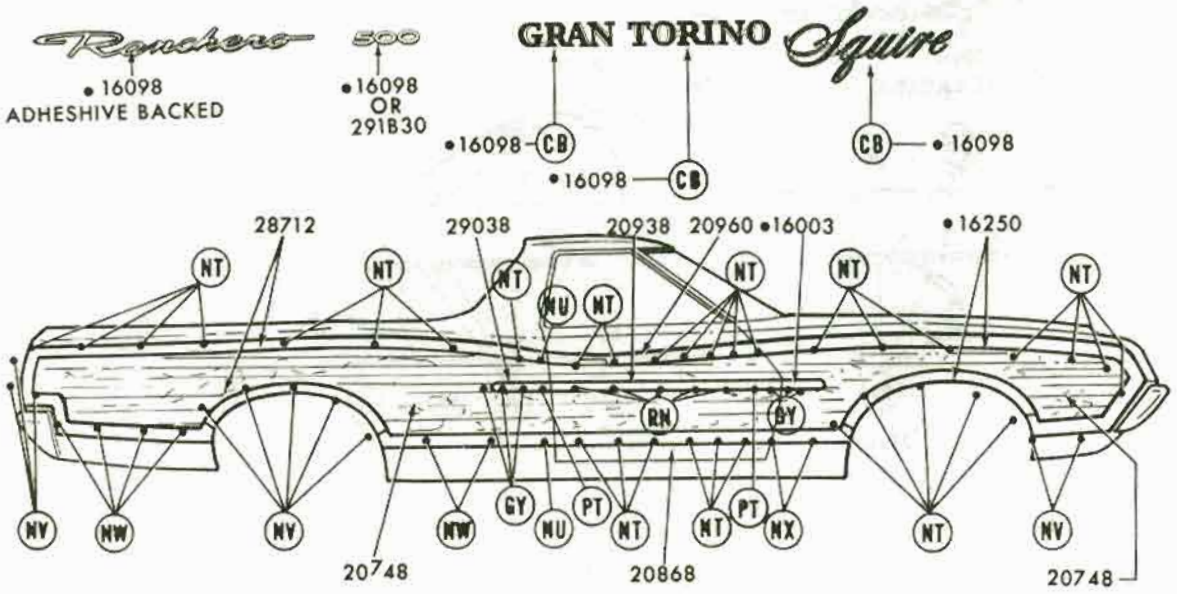

375890-S (MM222-A)
CB

D20Z-71425A94-A
NT

384447-S
(MM-115-DA)
NU

384768-S (MM-295-Z)
NV

D20Z-71290A82-A
NW

D20Z-71290A82-A
NX

DOGY-16A076-A
GY

D2AZ-6520884-A
PT

D3OZ-7120884-A
RN

• REFER TO CHASSIS SECTION

P-8705

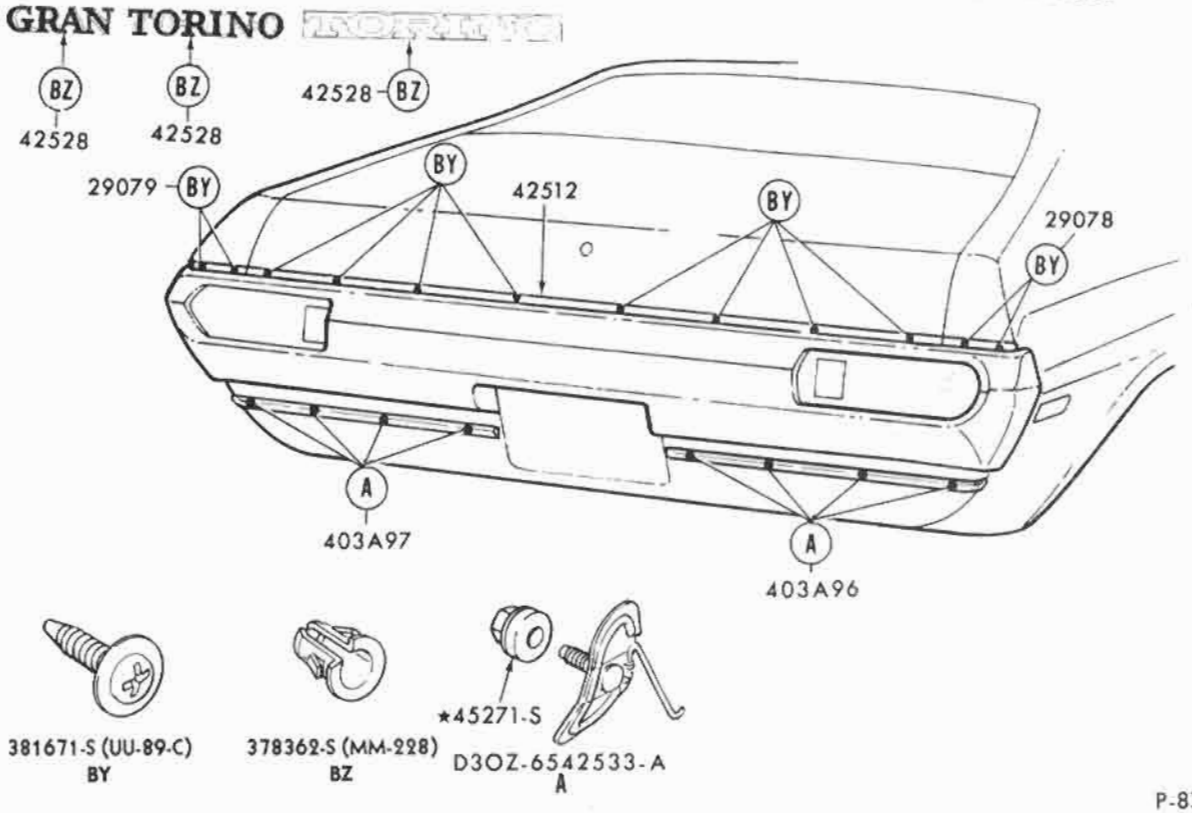

P-8703

1972 TORINO - BODY TYPES 53, 63, 65 - BACK END

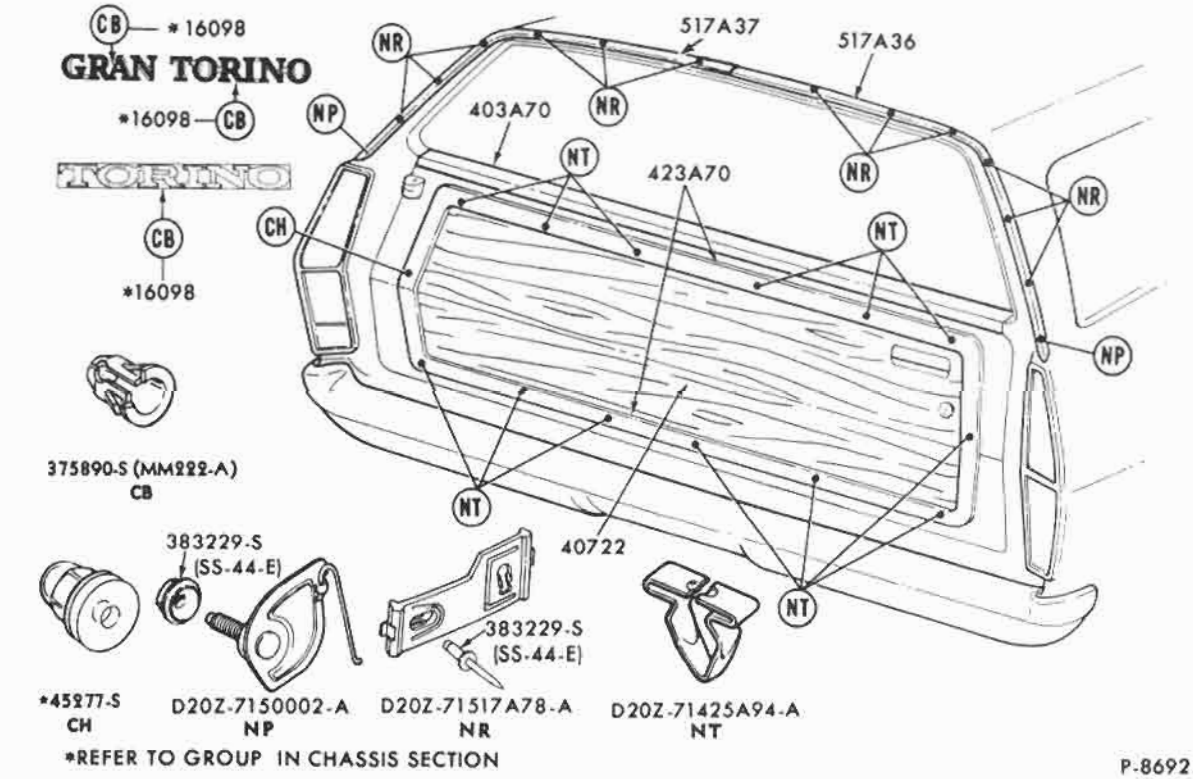

P-8692

1972 TORINO - BODY TYPE 71 - BACK END

COPYRIGHT © 1975 — FORD MOTOR COMPANY — DEARBORN, MICHIGAN

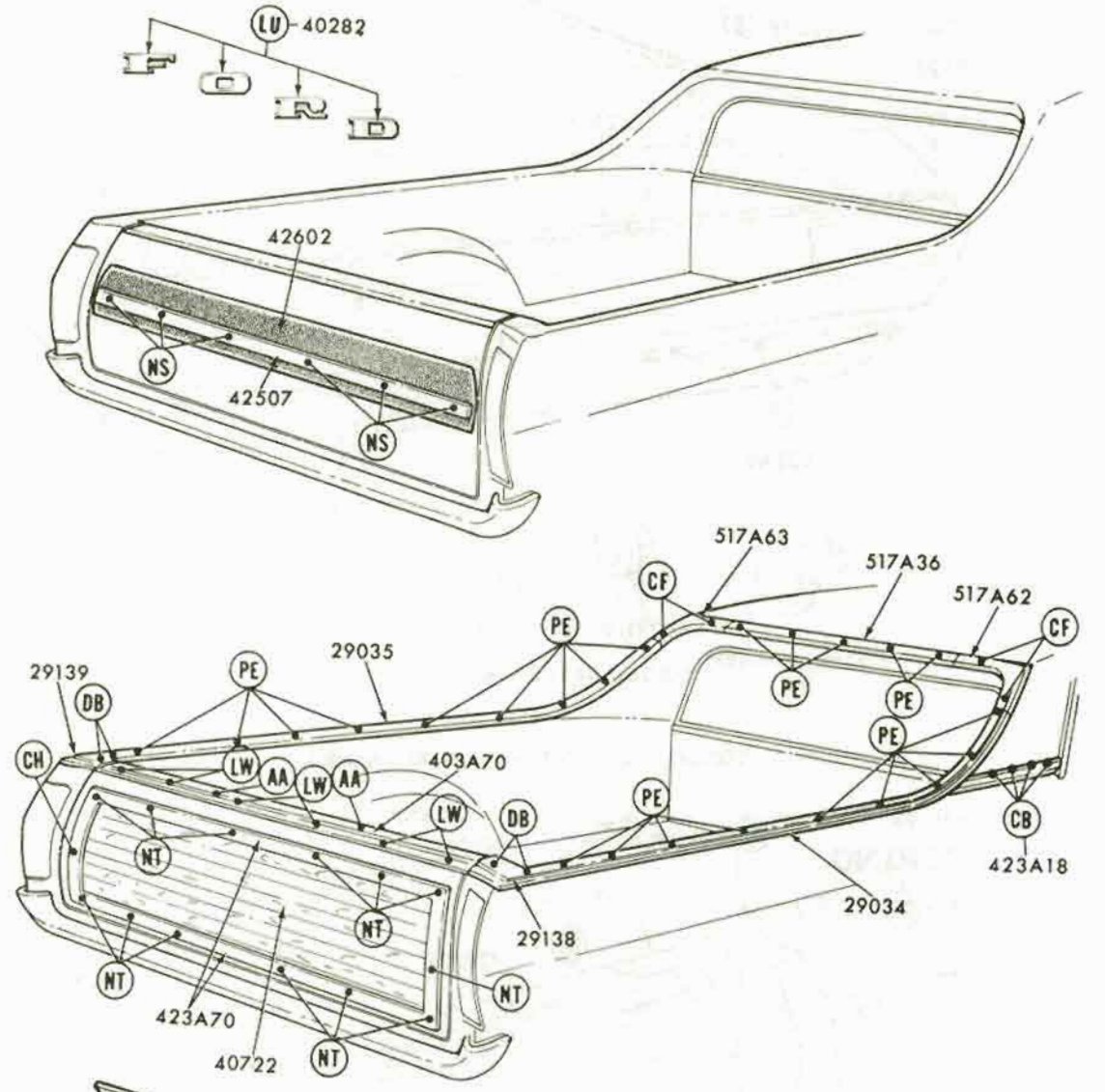
LU 40282
42602
NS
42507
NS
517A63
517A36
517A62
CF
PE
29035
29139
DB
CH
LW
AA
403A70
NT
423A70
40722
29138
29034
CB
423A18

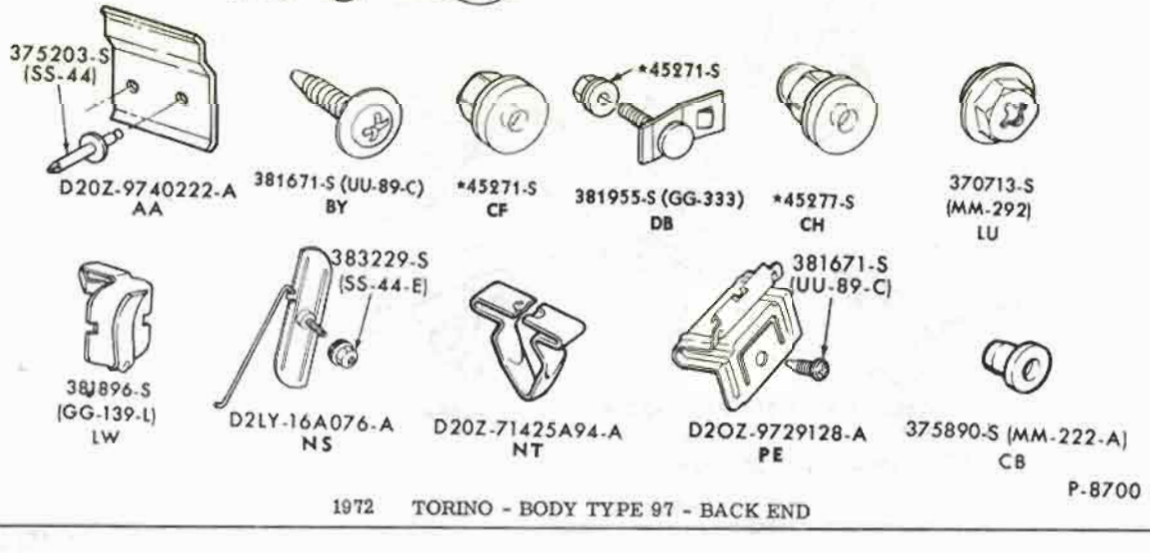
375203-S (SS-44)
D20Z-9740222-A AA
381671-S (UU-89-C) BY
*45271-S CF
*45271-S
381955-S (GG-333) DB
*45277-S CH
370713-S (MM-292) LU
383896-S (GG-139-L) LW
383229-S (SS-44-E)
D2LY-16A076-A NS
D20Z-71425A94-A NT
381671-S (UU-89-C)
D2OZ-9729128-A PE
375890-S (MM-222-A) CB

P-8700

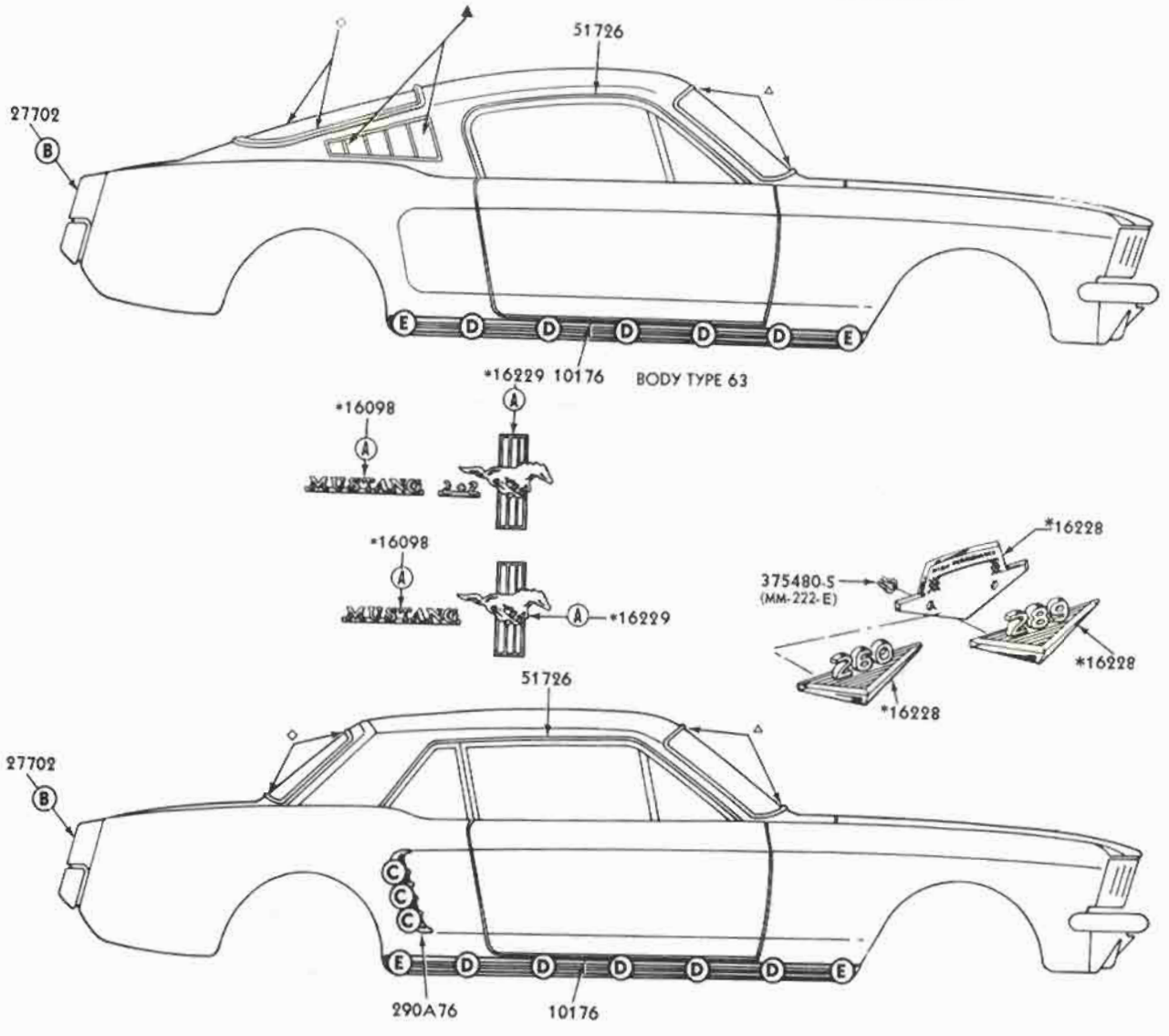

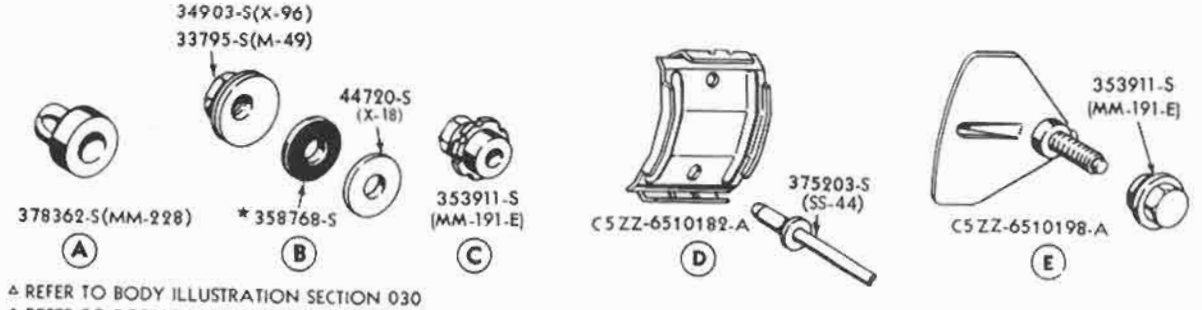

△ REFER TO BODY ILLUSTRATION SECTION 030
◇ REFER TO BODY ILLUSTRATION SECTION 400
* REFER TO GROUP IN CHASSIS SECTION

P-4490

May, 1975 COPYRIGHT © 1975 — FORD MOTOR COMPANY — DEARBORN, MICHIGAN FINAL ISSUE

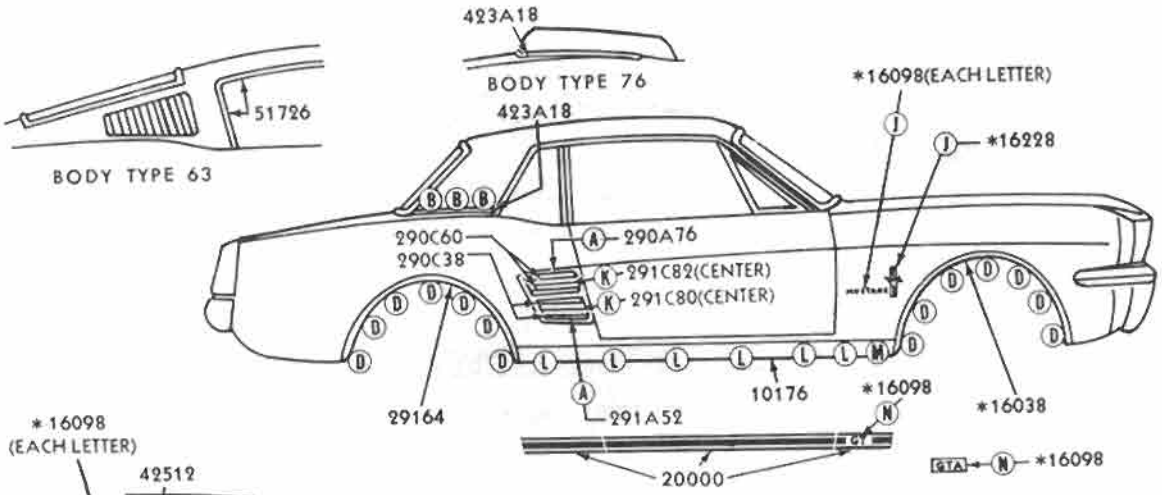

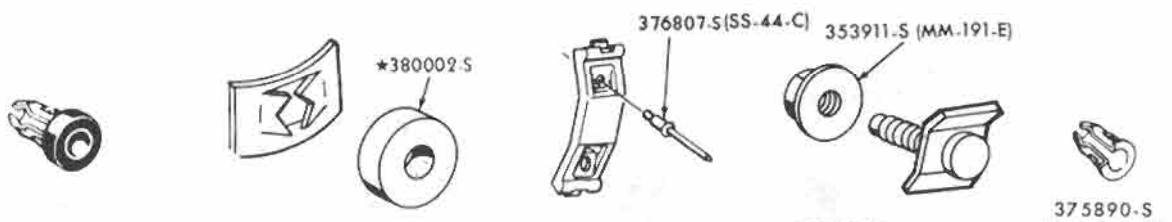

* REFER TO GROUP IN CHASSIS SECTION

P-5541

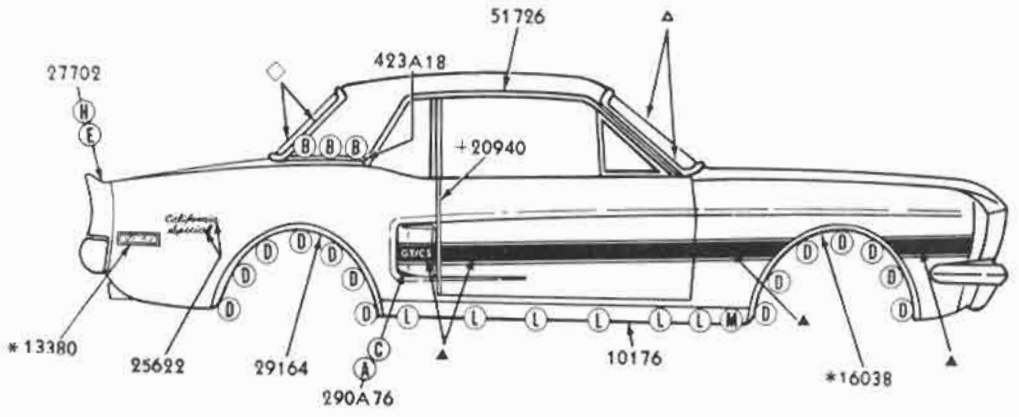

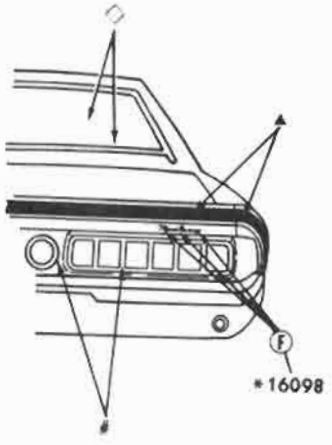

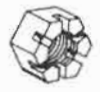

34390-S(M-92)

A

373503-S (MM-285-A)

B

376370-S (UU-56-F)

C

381671-S (UU-89-C)

D

350075-S (UU-88)

E

378362-S (MM-228)

F

373556-S (MM-291-F)

H

C7ZZ-6510182-A

L

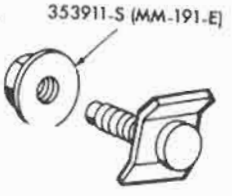

*380873-S

M

△REFER TO BODY ILLUSTRATION SECTION 030 #REFER TO BODY ILLUSTRATION SECTION 430
◇REFER TO BODY ILLUSTRATION SECTION 400 ▲SUPPLIED IN BASIC KIT 20000-1
*REFER TO GROUP IN CHASSIS SECTION

P-6455

COPYRIGHT © 1975 — FORD MOTOR COMPANY — DEARBORN, MICHIGAN

F EXTERIOR MOULDING ILLUSTRATION SECTION

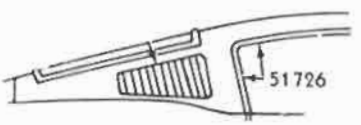

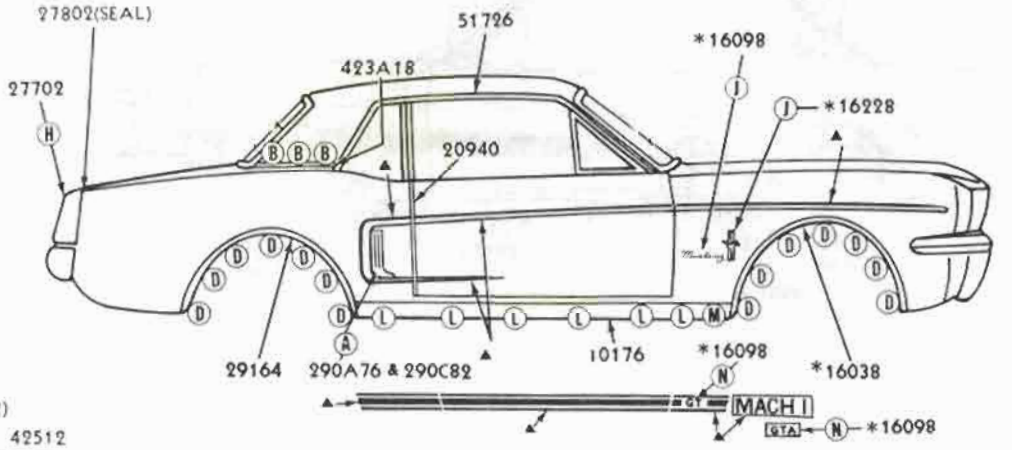

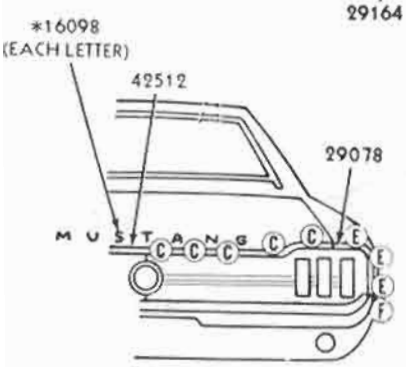

BODY TYPE 65

377523-S (MM-219-C)

A

373503-S (MM-285-A)

B

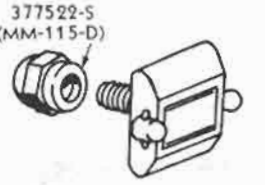

C7ZZ-63291880-A

C

381671-S (UU-89-C)

D

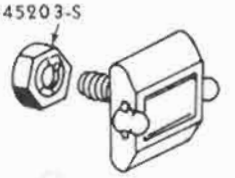

C7ZZ-63291880-A

E

*55972-S

F

373556-S
(MM-291-F)

H

378362-S (MM-228)

J

C7ZZ-6510182-A

L

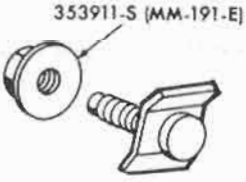

*380873-S

M

375480-S(MM-222-E)

N

*REFER TO GROUP IN CHASSIS SECTION ▲SUPPLIED IN BASIC KIT 20000-1

P-6089

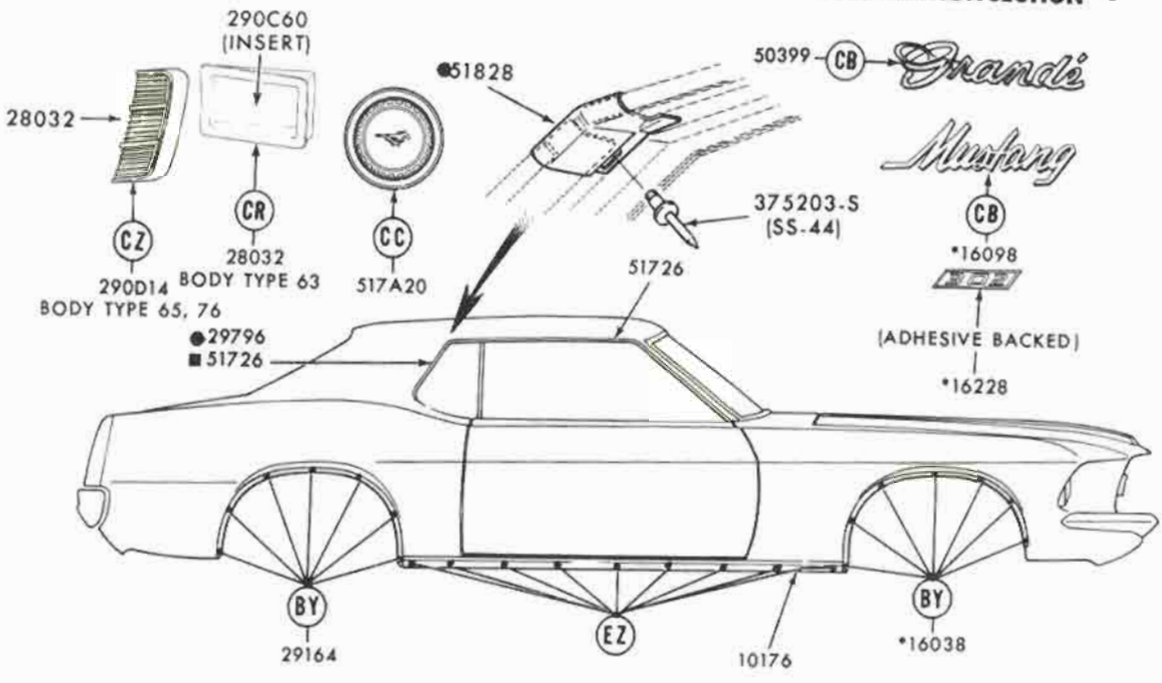

381671-S (UU-89-C)
BY

375890-S (MM222-A)
CB

379560-S (UU-89-CA)
CC

*45275-S
CR

382110-S (MM-284-X)
CZ

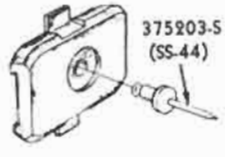

C9ZZ-6510182-A
EZ

●BODY TYPE 63 ONLY
■ BODY TYPE 65 ONLY
* REFER TO GROUP IN CHASSIS SECTION

P-6612

May, 1975 COPYRIGHT © 1975 — FORD MOTOR COMPANY — DEARBORN, MICHIGAN FINAL ISSUE

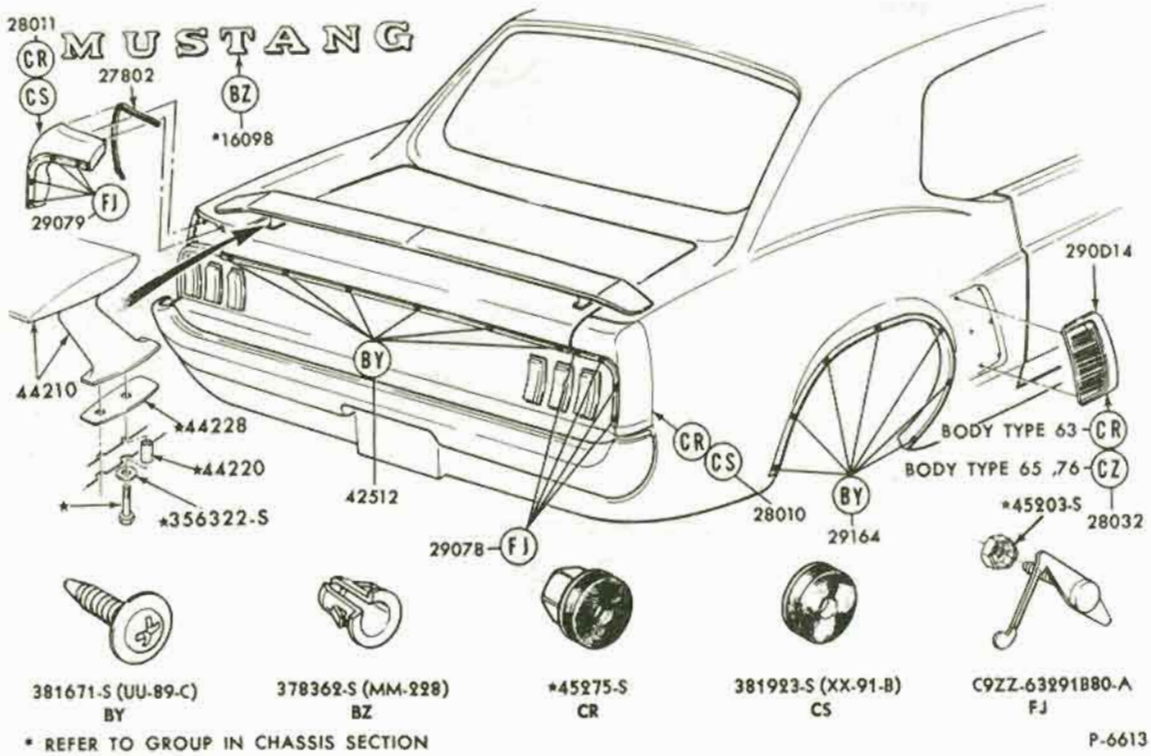

1969 MUSTANG - except SHELBY GT 350/500 - BACK END

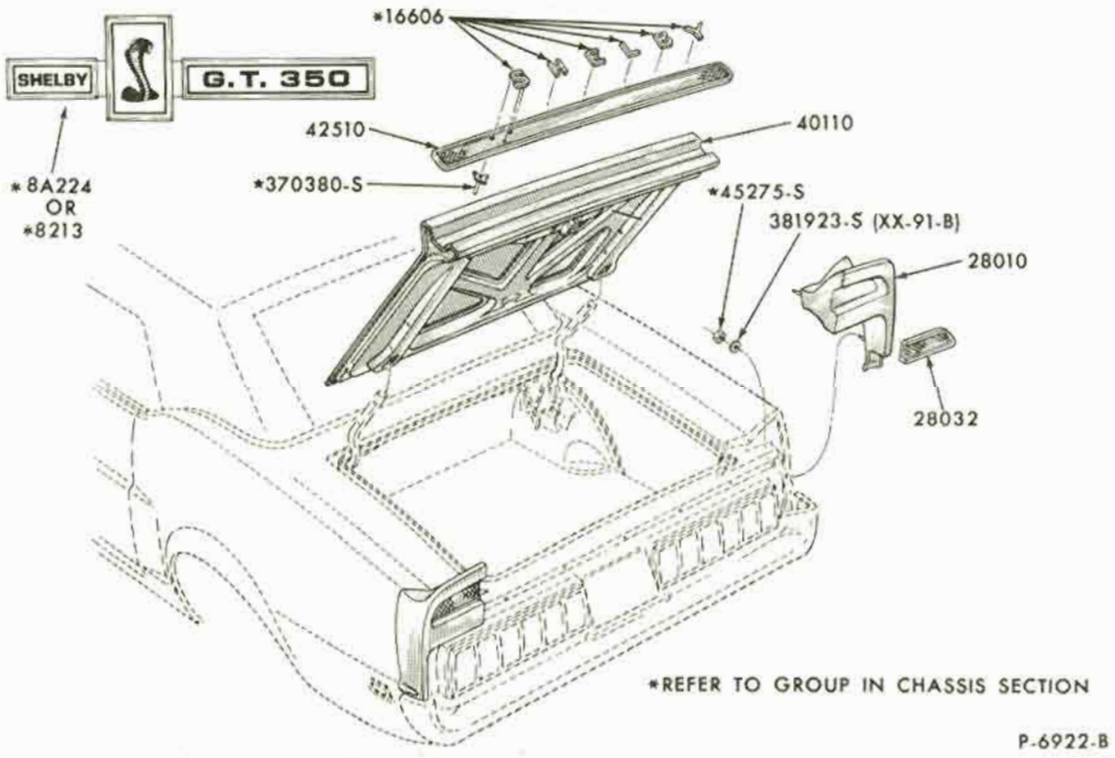

1969/70 MUSTANG - SHELBY GT 350/500 - BACK END

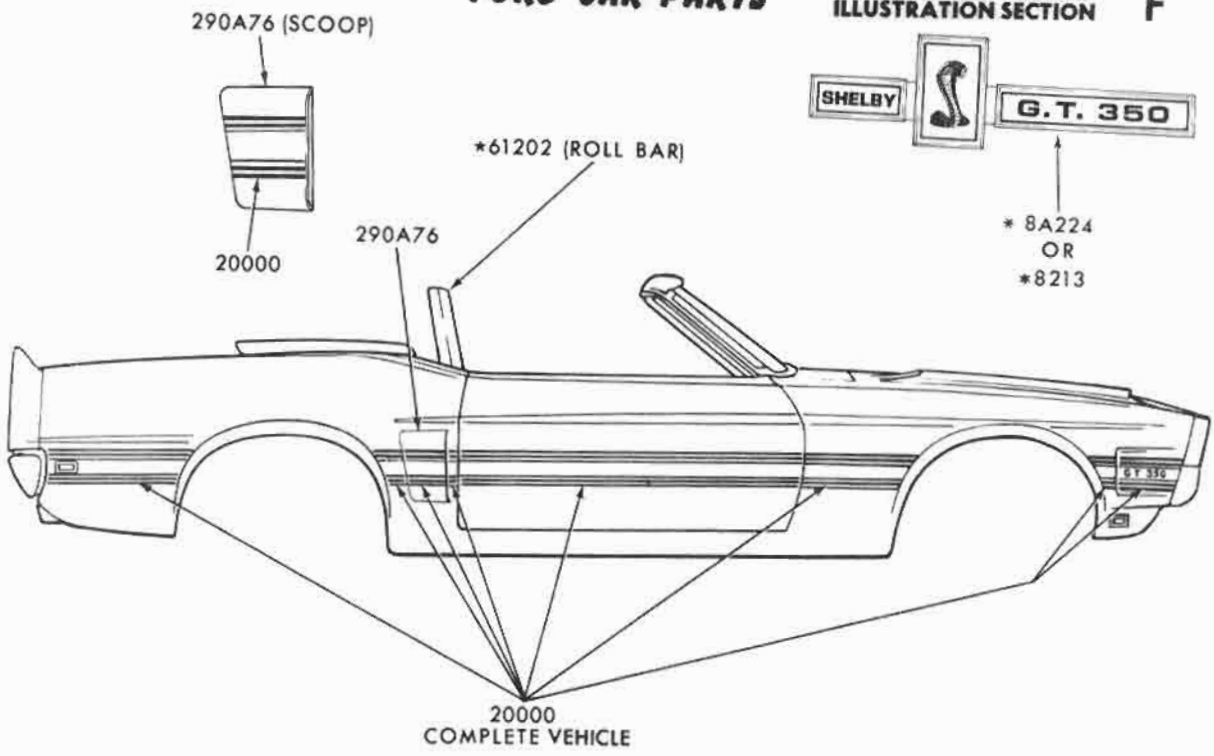

* REFER TO GROUP IN CHASSIS SECTION

P-6923

1969/70 MUSTANG - SHELBY GT 350/500 - SIDE

COPYRIGHT © 1975 — FORD MOTOR COMPANY — DEARBORN, MICHIGAN

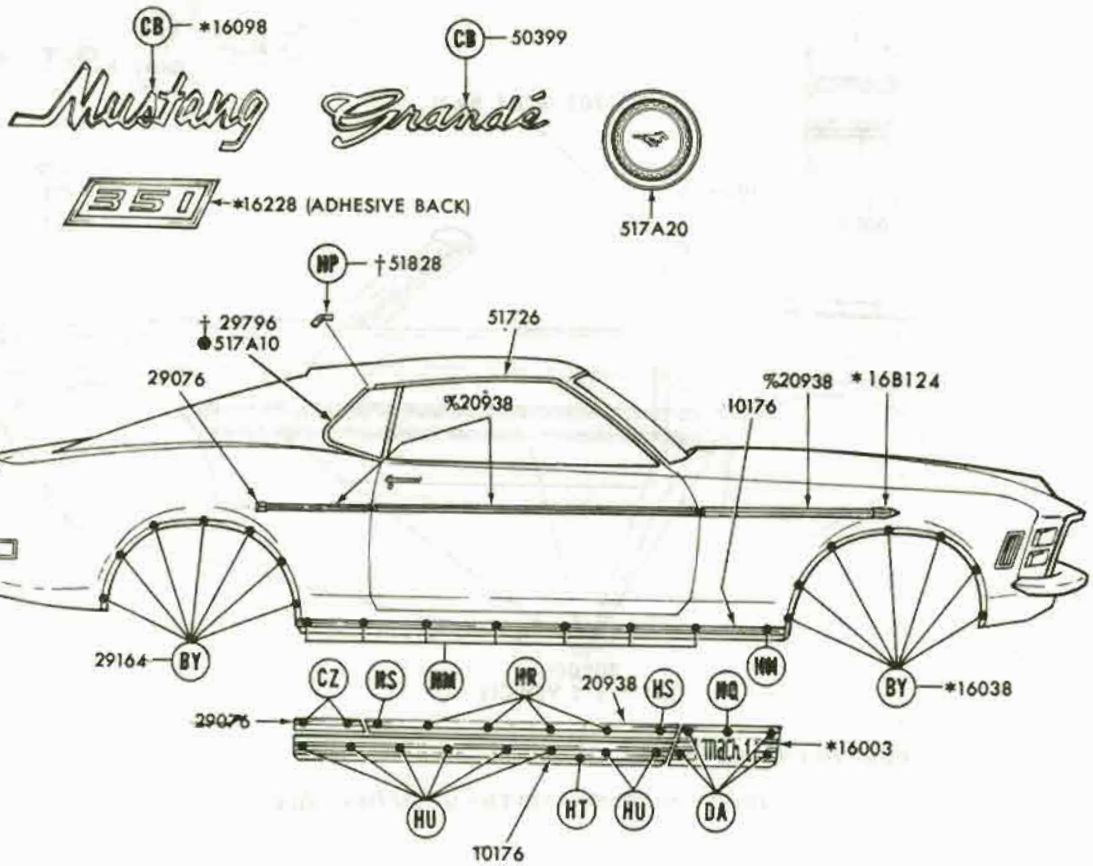

381671-S (UU-89-C)
BY

375890-S (MM222-A)
CB

382110-S (MM-284-X)
CZ

382309-S (MM-118-J)
DA

C7ZZ-6510182-A
HM

HN

375203-S (SS-44)
HP

DOTZ-99291B80-A
HQ

C9ZZ-8244-B
HR

DOZZ-6321094-B
HS

DOZZ-6310198-A
HT

52413-S (U-316)
HU

*REFER TO GROUP IN CHASSIS SECTION %ALSO SERVICED IN KIT - GROUP 21048 IN ACCESSORIES SECTION
†BODY TYPE 63 ONLY
●BODY TYPE 65 ONLY

P-7103

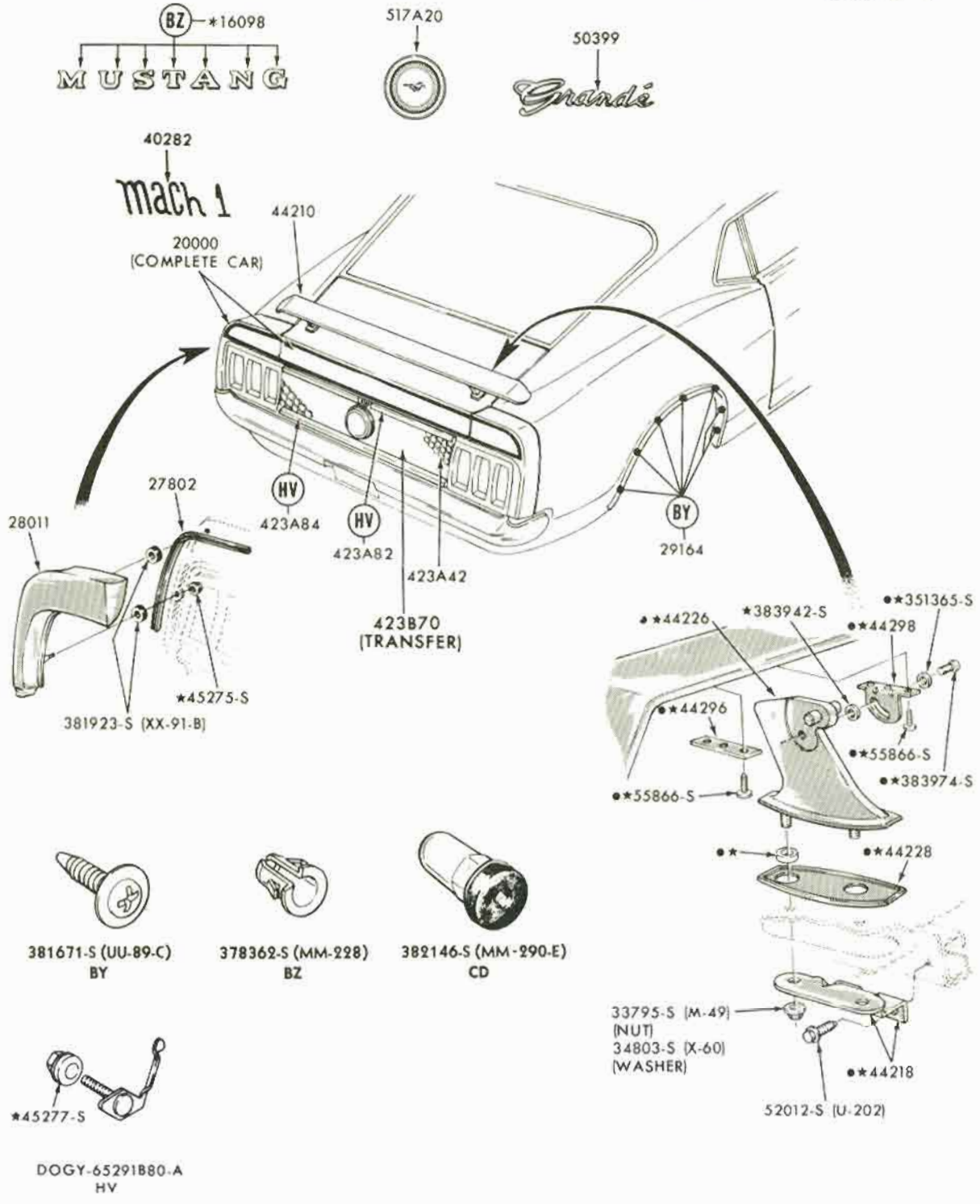

• SERVICED ONLY IN KIT 44210

P-7102

May, 1975 COPYRIGHT © 1975 — FORD MOTOR COMPANY — DEARBORN, MICHIGAN

FINAL ISSUE

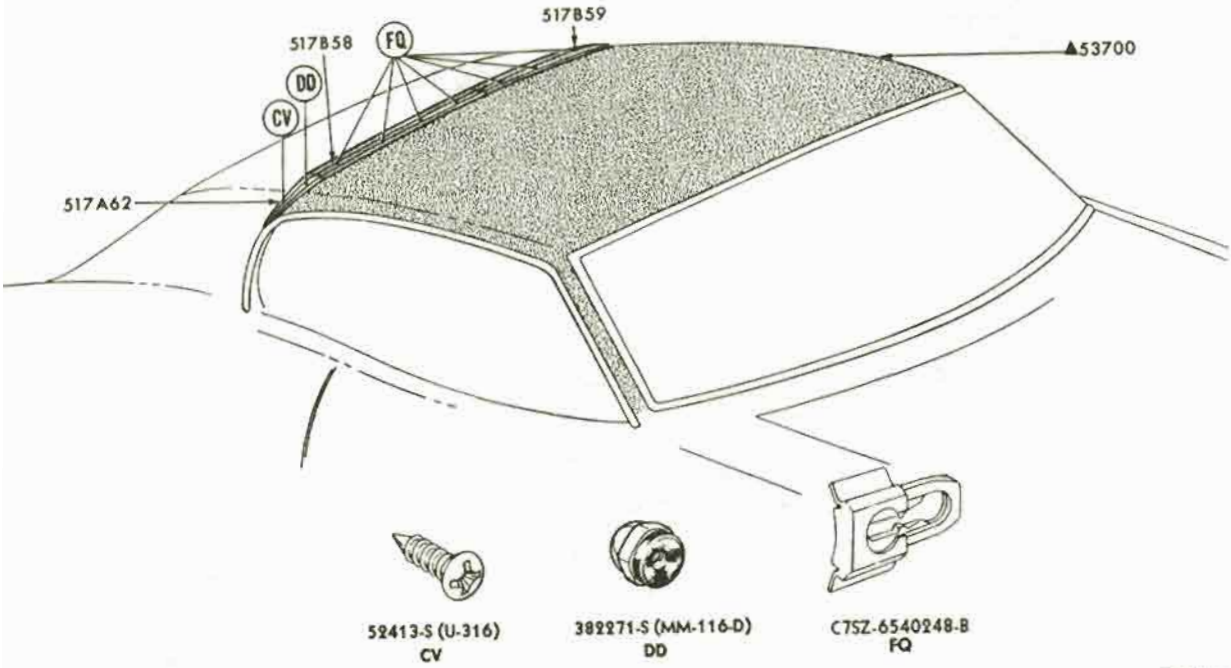

P-7383

▲REFER TO GROUP IN SOFT TRIM SECTION

1970 MUSTANG - BODY TYPE 65E - VINYL ROOF MOULDING

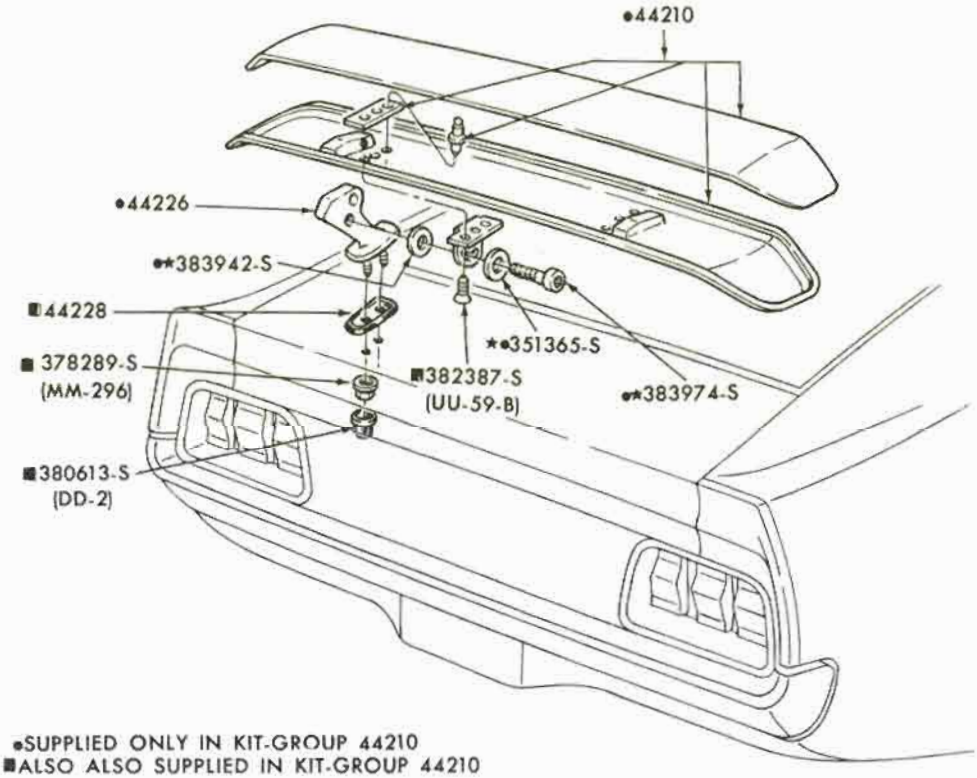

•SUPPLIED ONLY IN KIT-GROUP 44210
■ALSO ALSO SUPPLIED IN KIT-GROUP 44210

P-8112

REAR SPOILER and RELATED PARTS
1971/72 MUSTANG

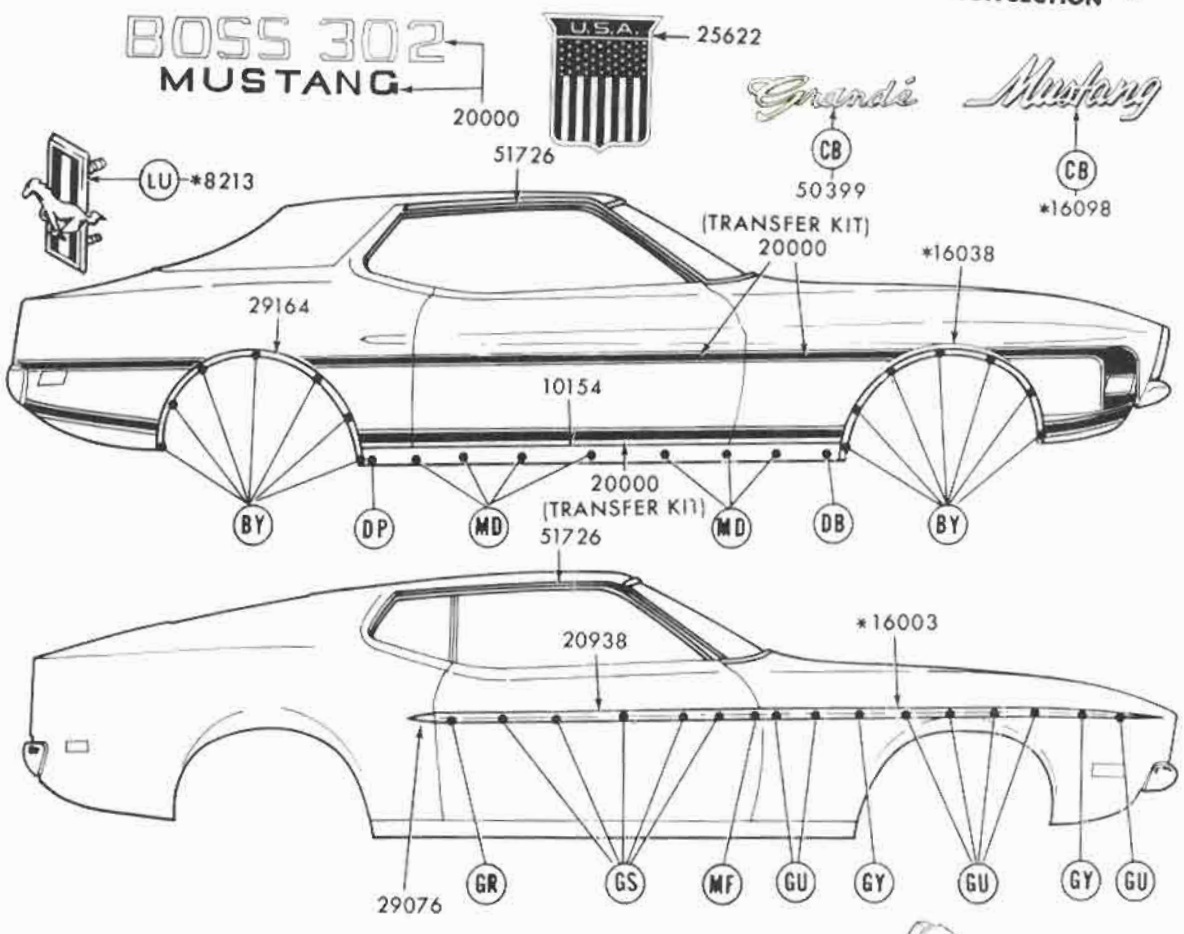

381671-S (UU-89-C)
BY

375890-S (MM222-A)
CB

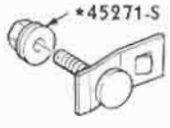

381955-S (GG-333)
DB

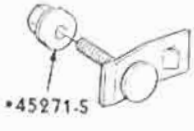

382121-S
(GG-333-A)
DP

DOOZ-6520884-A
GR

DOOZ-6620818-A
GS

383229-S (SS-44-E)
GU

DOGY-16A076-A
GY

370713-S
(MM-292)
LU

D1ZZ-6510182-A
MD

D1ZZ-6520818-A
MF

P-7859

May, 1975 COPYRIGHT © 1975 — FORD MOTOR COMPANY — DEARBORN, MICHIGAN

mach 1 MUSTANG

(TRANSFER KIT) 20000

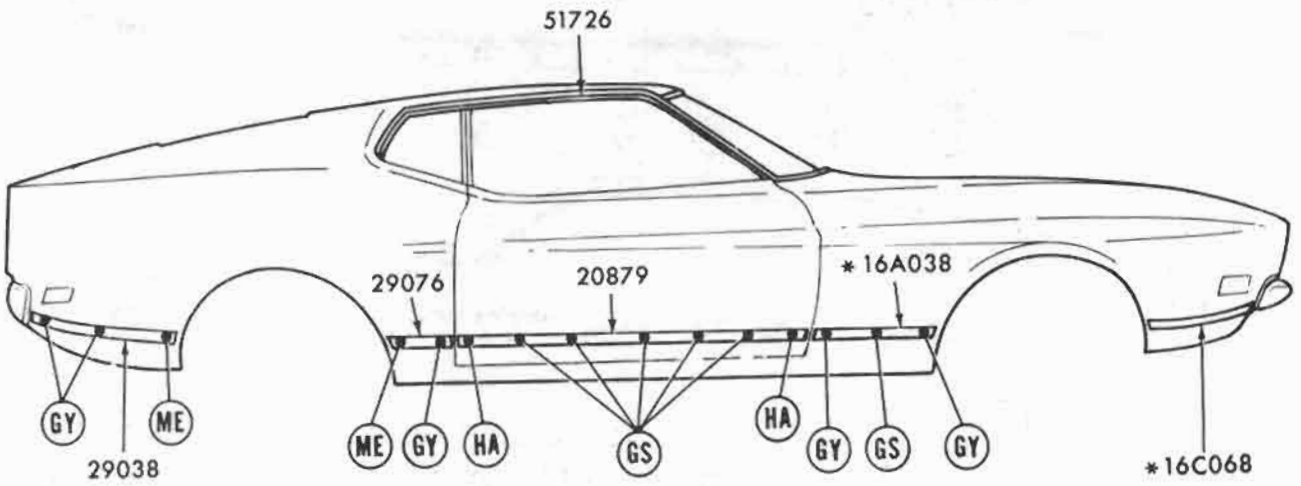

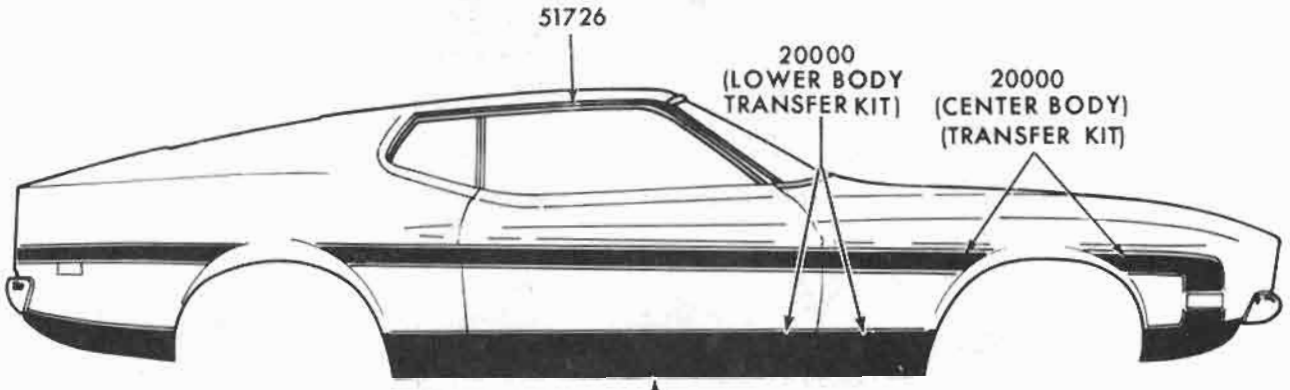

FOR PAINT REPAIR-REFER TO PAINT SECTION PAGE 19 ACRYLIC REPAIR MATERIAL

DOOZ-6620818-A
GS

DOGY-16A076-A
GY

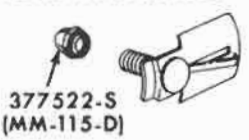

DOGY-6520884-A
HA

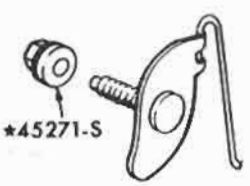

D1ZZ-6329033-A
ME

P-7860

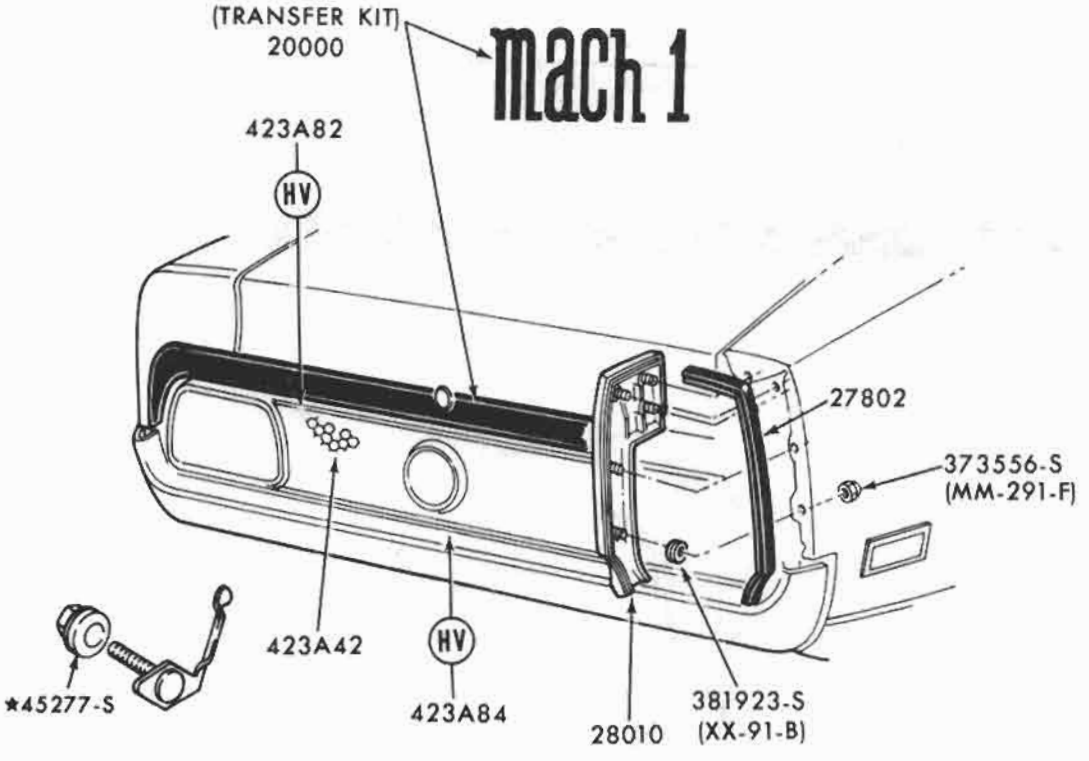

DOGY-65291B80-A
HV

P-7862

1971/72 MUSTANG - BODY TYPE 63R - BACK END

MUSTANG

40282

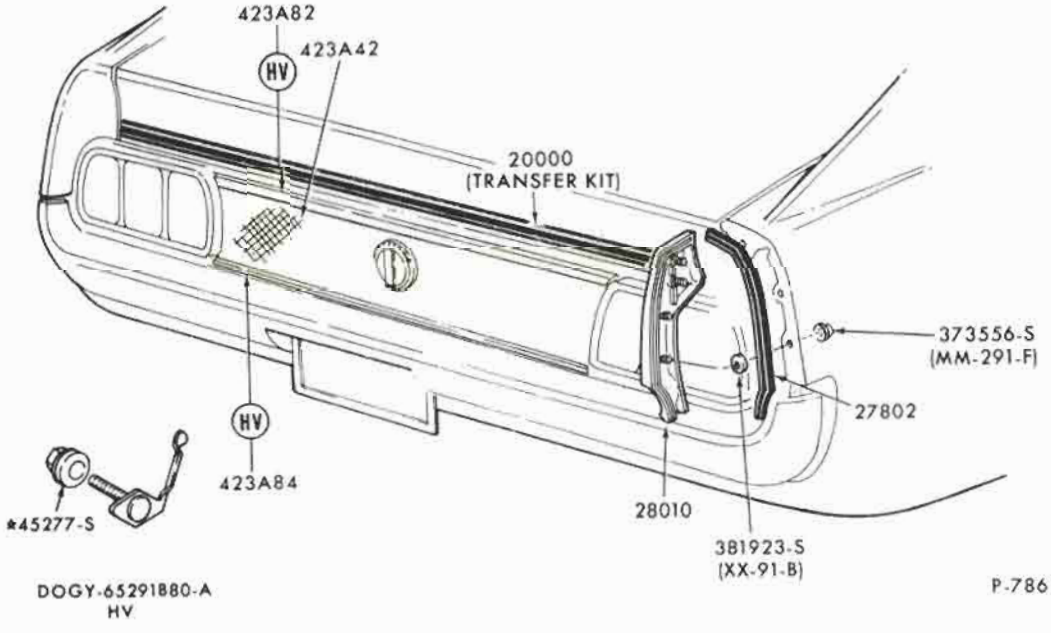

DOGY-65291B80-A
HV

P-7861

1971/72 MUSTANG - BODY TYPE 65D, F, 76 - BACK END

COPYRIGHT © 1975 — FORD MOTOR COMPANY — DEARBORN, MICHIGAN

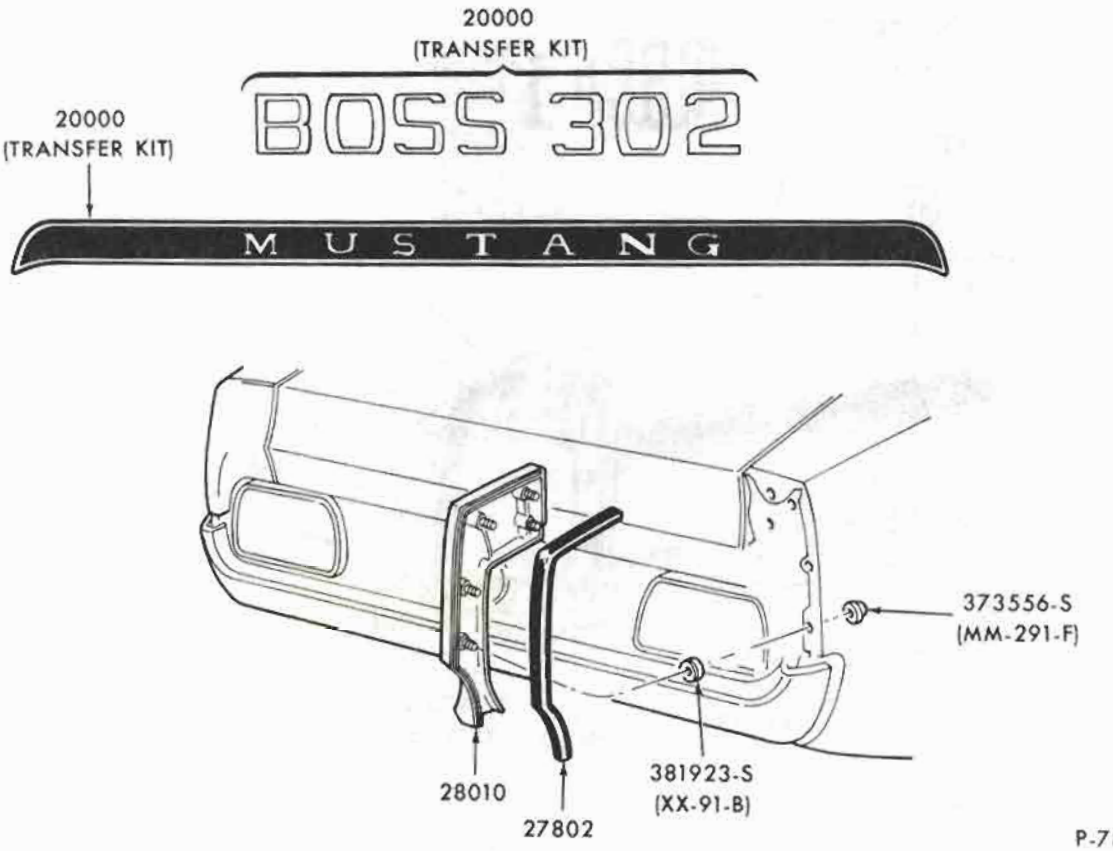

1971/72 MUSTANG - BODY TYPE 63D - BACK END

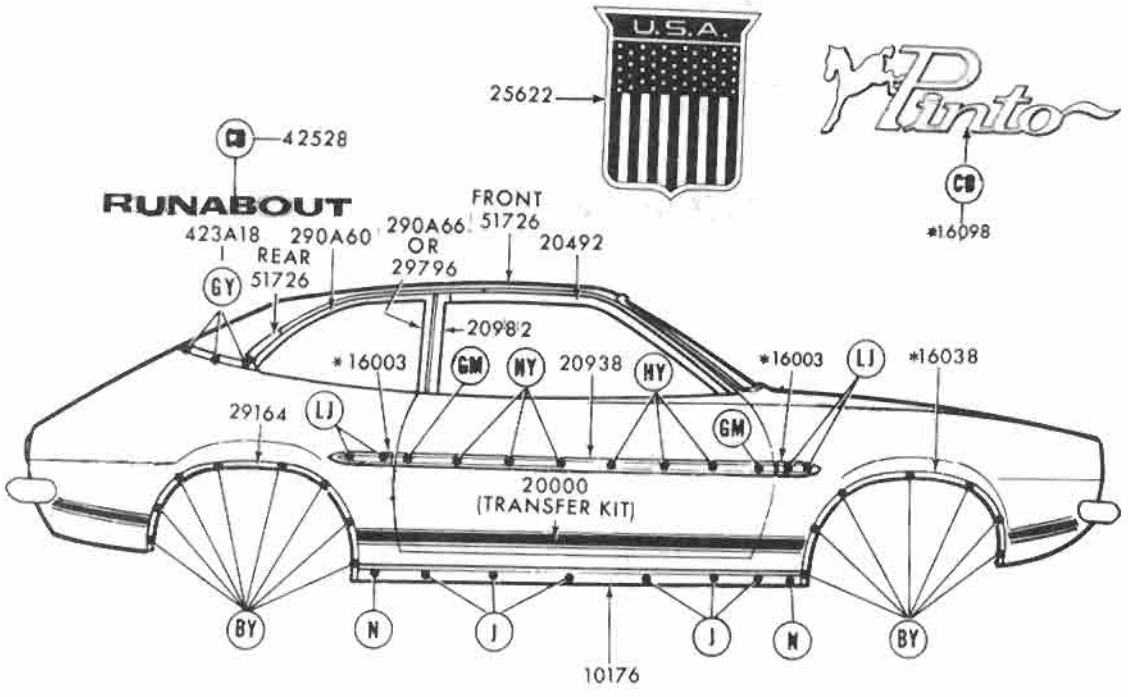

*C9MY-5410182-A
J

*C9MY-5410198-A
N

381671-S (UU-89-C)
BY

378362-S (MM-228)
BZ

375890-S (MM222-A)
CB

*45271-S
CF

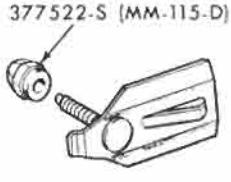

C9GY-71407A12-A
GM

DOGY-16A076-A
GY

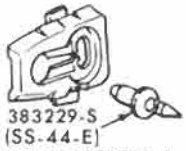

DOVY-6520818-A
HY

D1FZ-16A076-A
LJ

370713-S
(MM-292)
LU

*REFER TO GROUP IN CHASSIS SECTION

P-7844

May, 1975 COPYRIGHT © 1975 — FORD MOTOR COMPANY — DEARBORN, MICHIGAN FINAL ISSUE

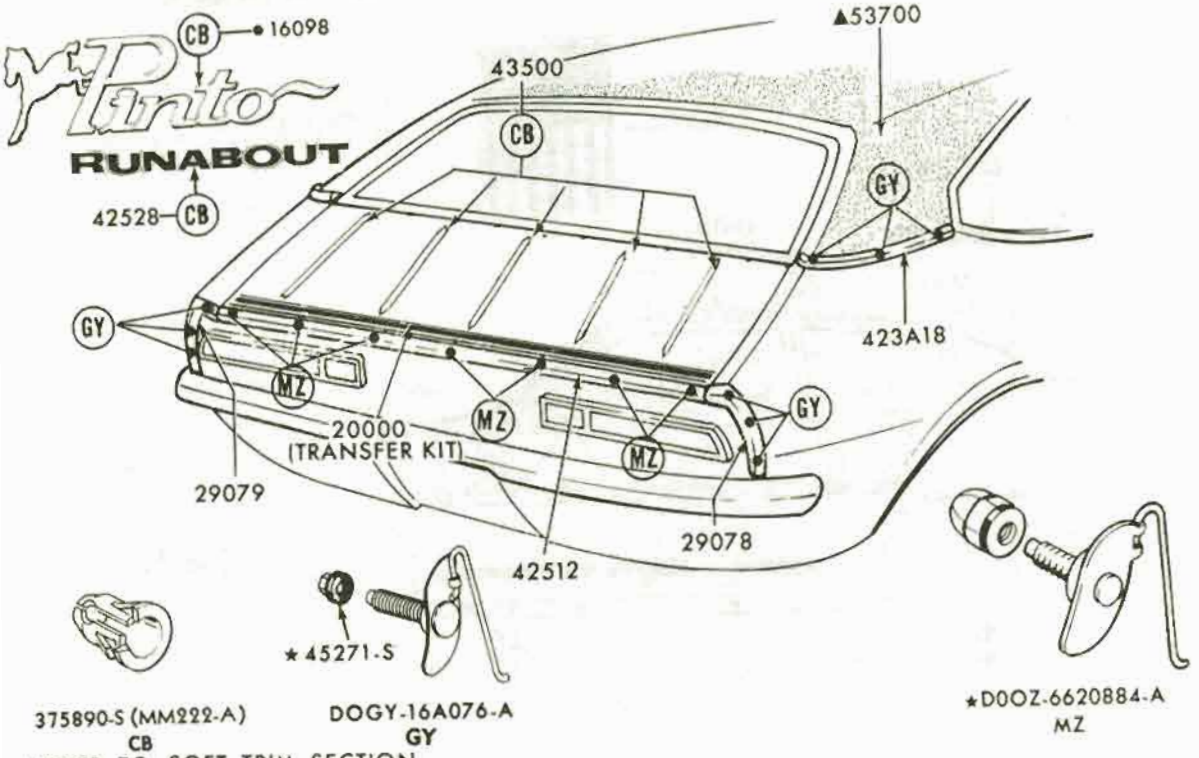

▲REFER TO SOFT TRIM SECTION
•REFER TO CHASSIS SECTION

P-7845

1971/72 PINTO - BODY TYPES 62, 64 - BACK END

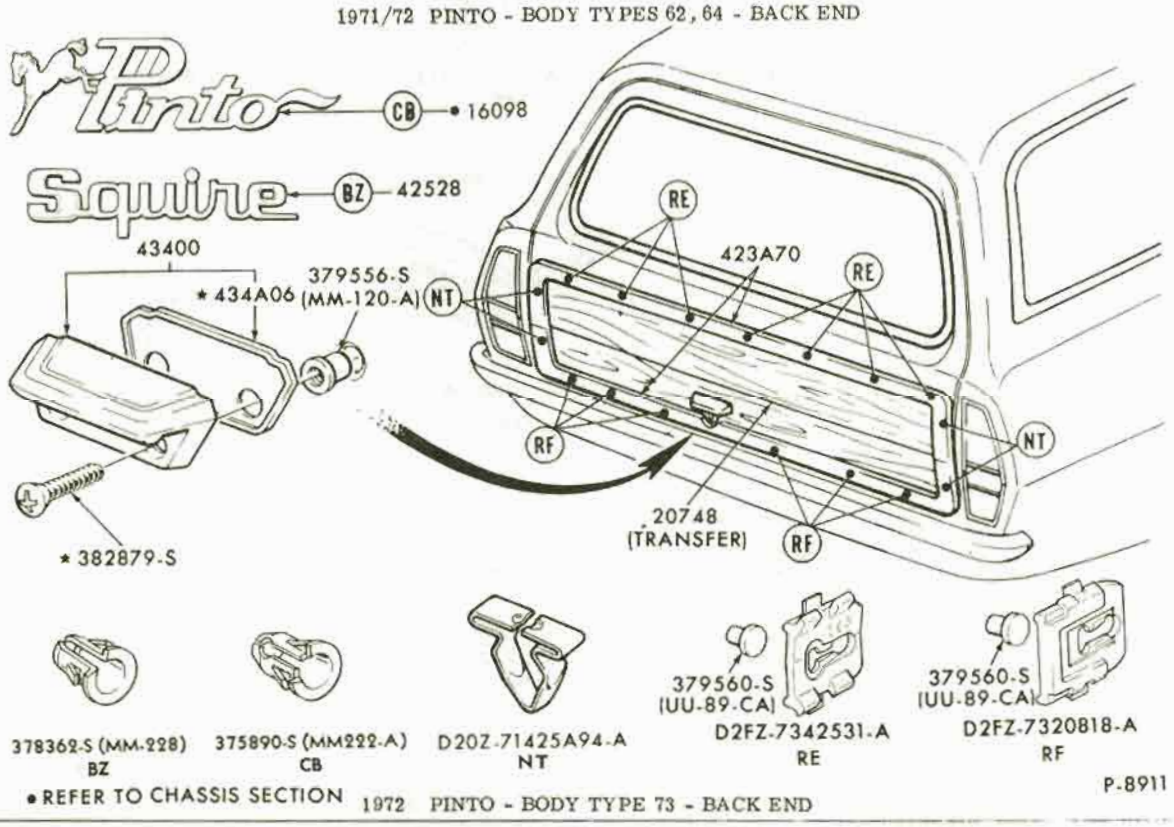

•REFER TO CHASSIS SECTION

P-8911

1972 PINTO - BODY TYPE 73 - BACK END

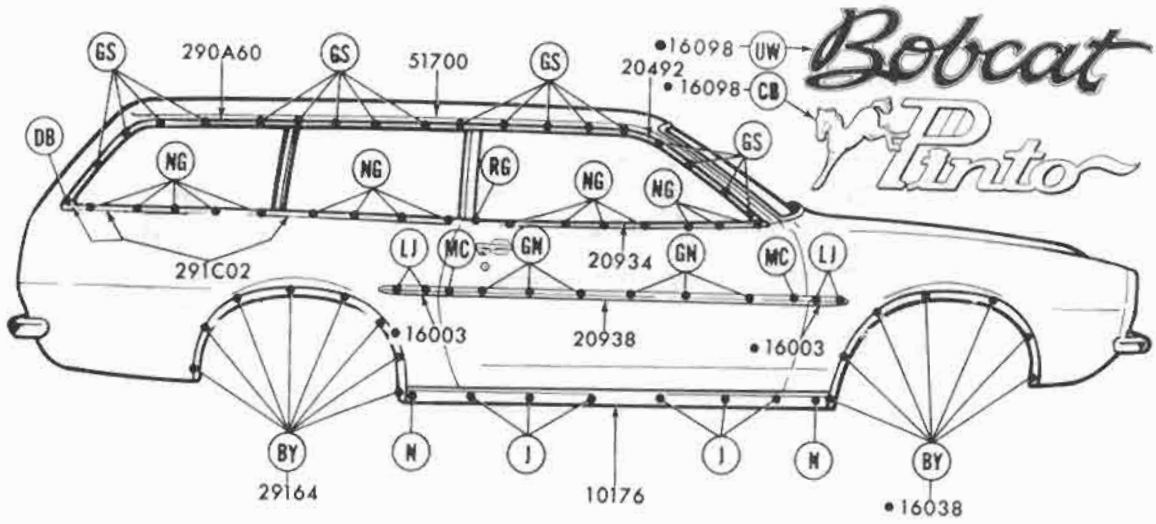

375203-S (SS-44)

*C9MY-5410182-A
J

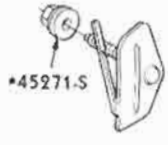
*45271-S

*C9MY-5410198-A
N

381671-S (UU-89-C)
BY

375890-S (MM222-A)
CB

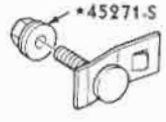
*45271-S

381955-S (GG-333)
DB

379560-S (UU-89-CA)

DOVY-6520818-A
GN

383229-S (SS-44-E)

DOOZ-6620818-A
GS

†D1FZ-16A076-A
LJ

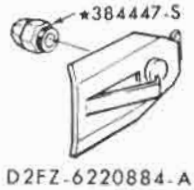
*384447-S

D2FZ-6220884-A
MC

379560-S (UU-89-CA)

D2FZ-7320818-A
RF

384447-S (MM-115-DA)

D2FZ-73208A80-A
RG

385417-S (MM-222-AB)
UW

† BEFORE 3-1-72 ,FROM 3-1-72 USE D2FZ-16A076-B
• REFER TO CHASSIS SECTION

P-8910

May, 1975 COPYRIGHT © 1975 — FORD MOTOR COMPANY — DEARBORN, MICHIGAN

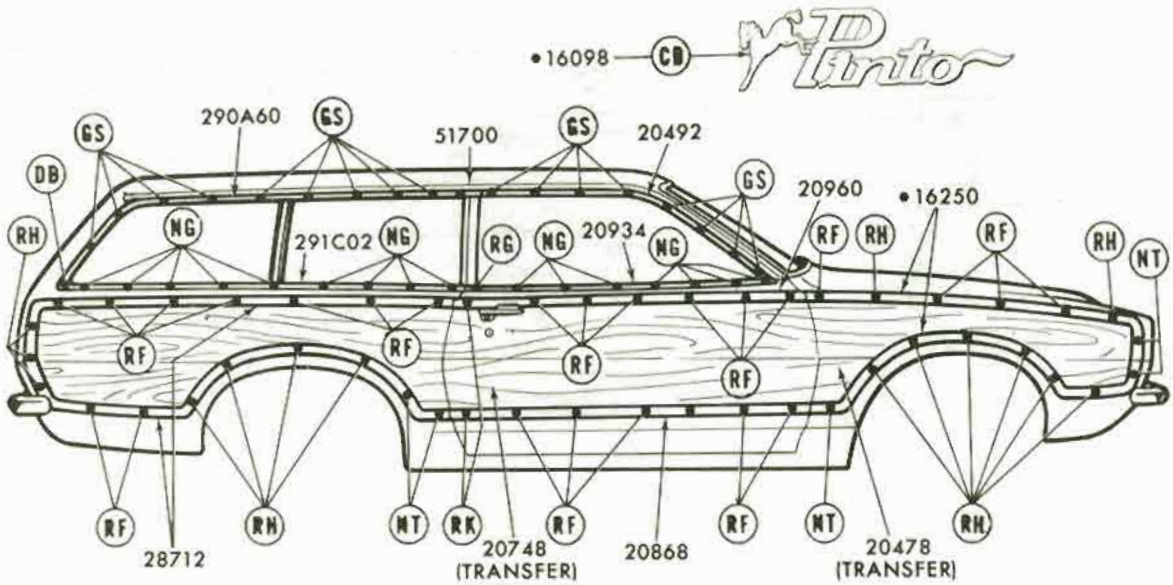

375890-S (MM222-A)
CB

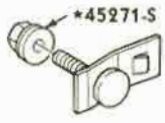

381955-S (GG-333)
DB

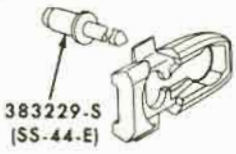

D0OZ-6620818-A
GS

D20Z-6520818-A
NG

D20Z-71425A94-A
NT

D2FZ-7320818-A
RF

D2FZ-73208A80-A
RG

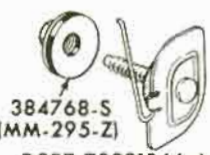

D2FZ-73291B66-A
RH

D2FZ-7320884-A
RK

• REFER TO CHASSIS SECTION

P-8909

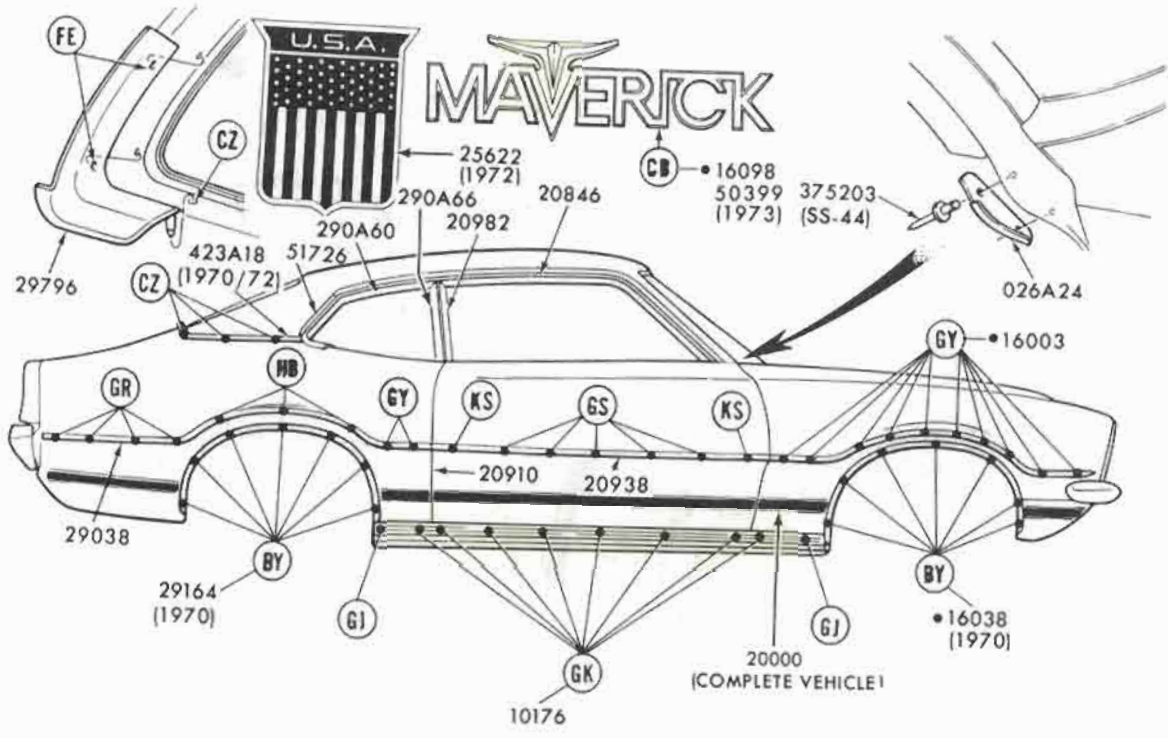

381671-S (UU-89-C)
BY

375890-S (MM222-A)
CB

382110-S (MM-284-X)
CZ

55974-S (U-316-D)
FE

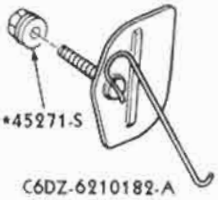

C6DZ-6210182-A
GJ

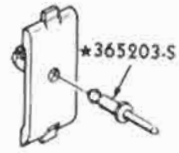

DODZ-6210182-A
GK

DOOZ-6520884-A
GR

DOOZ-6620818-A
GS

DOGY-16A076-A
GY

DODZ-6229120-A
HB

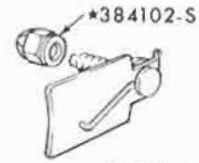

DOOZ-5425562-A
KS

• REFER TO CHASSIS SECTION

P-6839

May, 1975 COPYRIGHT © 1975 — FORD MOTOR COMPANY — DEARBORN, MICHIGAN

FINAL ISSUE

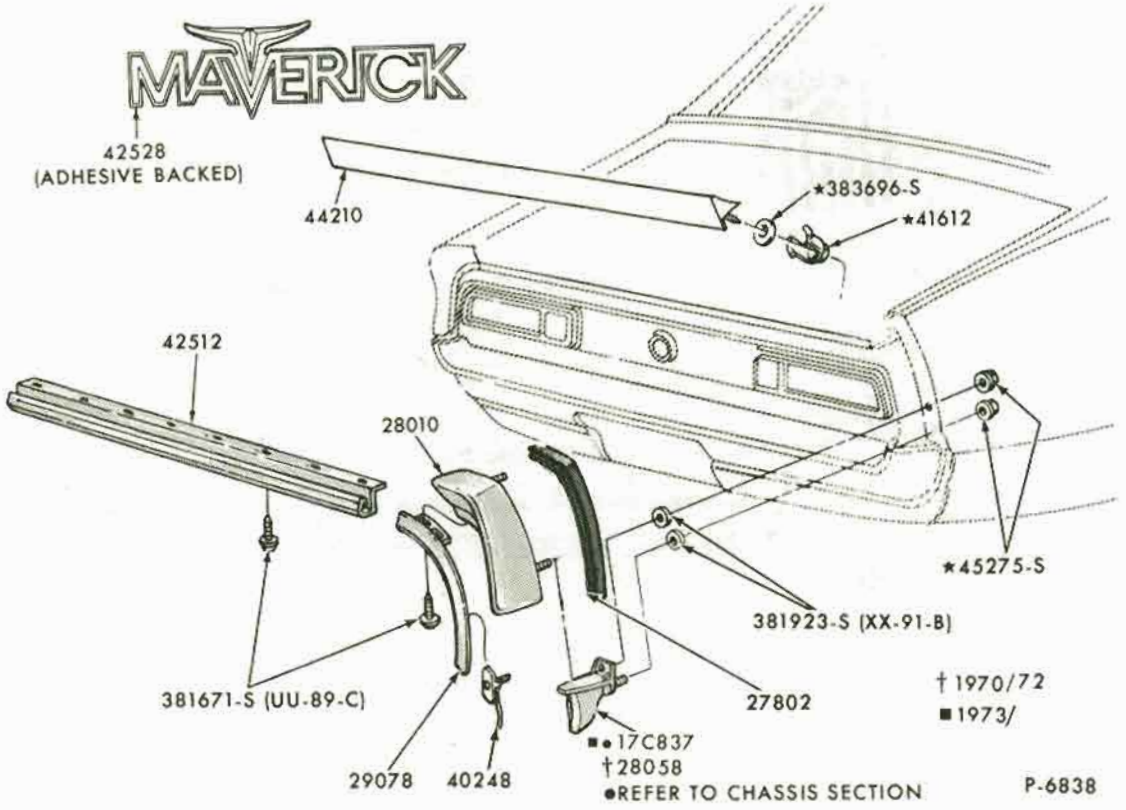

1970/72 MAVERICK - BACK END

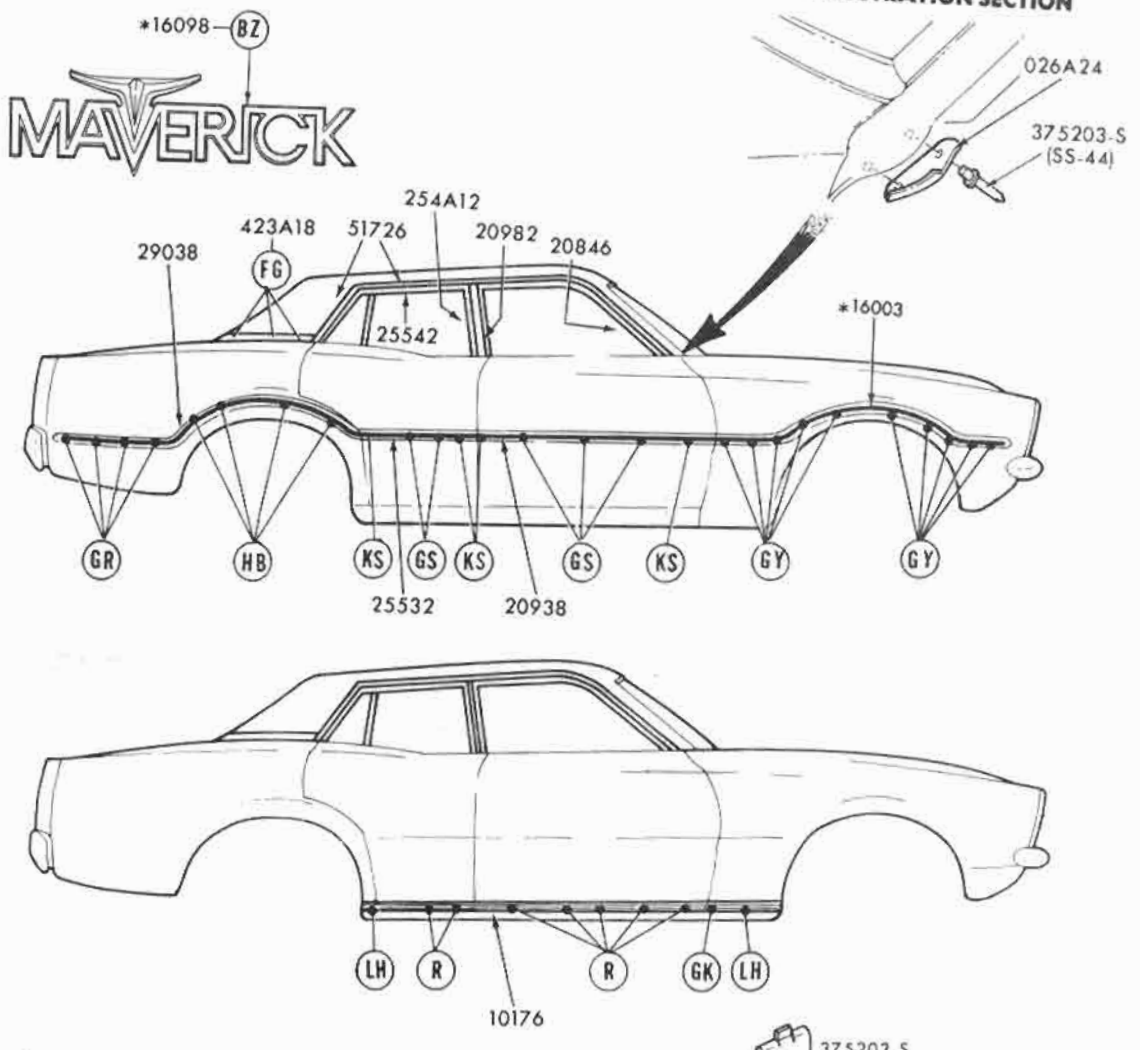

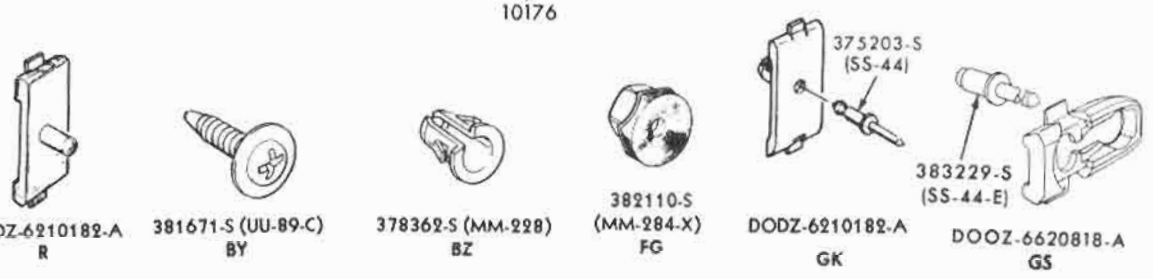

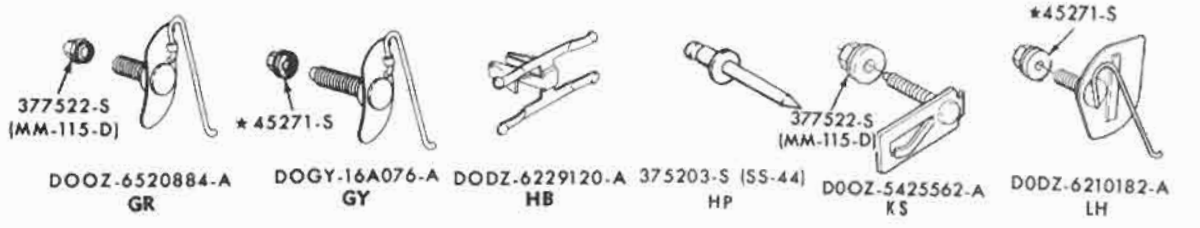

* REFER TO GROUP IN CHASSIS SECTION

P-7840

1971/72 MAVERICK - BODY TYPE 54 (w/o LUXURY DECOR) - SIDE

COPYRIGHT © 1975 — FORD MOTOR COMPANY — DEARBORN, MICHIGAN

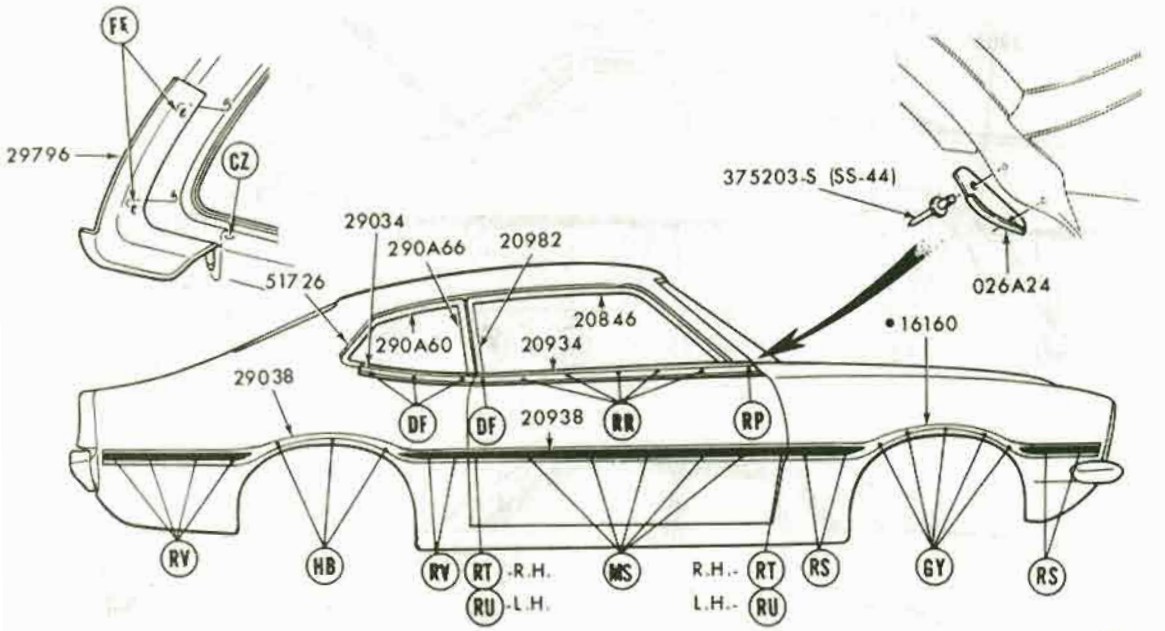

375890-S (MM222-A)
CB

382110-S (MM-284-X)
CZ

C9AZ-71423B10-B
DF

*55974-S
FE

DOGY-16A076-A
GY

DODZ-6229120-A
HB

D1AZ-7129192-A
MS

D2DZ-6220884-A
RP

D2DZ-6220818-A
RR

D2DZ-6220884-B
RT

*D2DZ-6220885-B
RU

D2DZ-6229120-A
RV

• REFER TO CHASSIS SECTION

P-10012

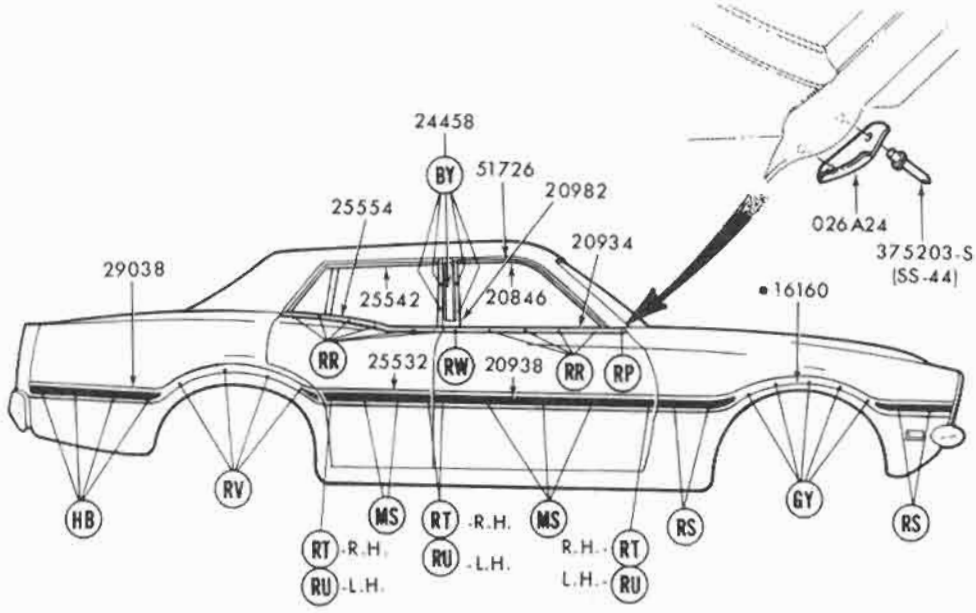

381671-S (UU-89-C)
BY

378362-S (MM-228)
BZ

375890-S (MM222-A)
CB

C9AZ-71423B10-B
DF

382110-S
(MM-284-X)
FG

D0GY-16A076-A
GY

D0DZ-6229120-A
HB

D1AZ-7129192-A
MS

D2DZ-6220884-A
RP

D2DZ-6220818-A
RR

C9AZ-7142318-A
RS

D2DZ-6220884-B
RT

★D2DZ-6220885-B
RU

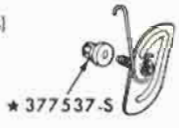

D2DZ-6229120-A
RV

D2DZ-5420884-A
RW

• REFER TO CHASSIS SECTION

P-10011

COPYRIGHT © 1975 — FORD MOTOR COMPANY — DEARBORN, MICHIGAN

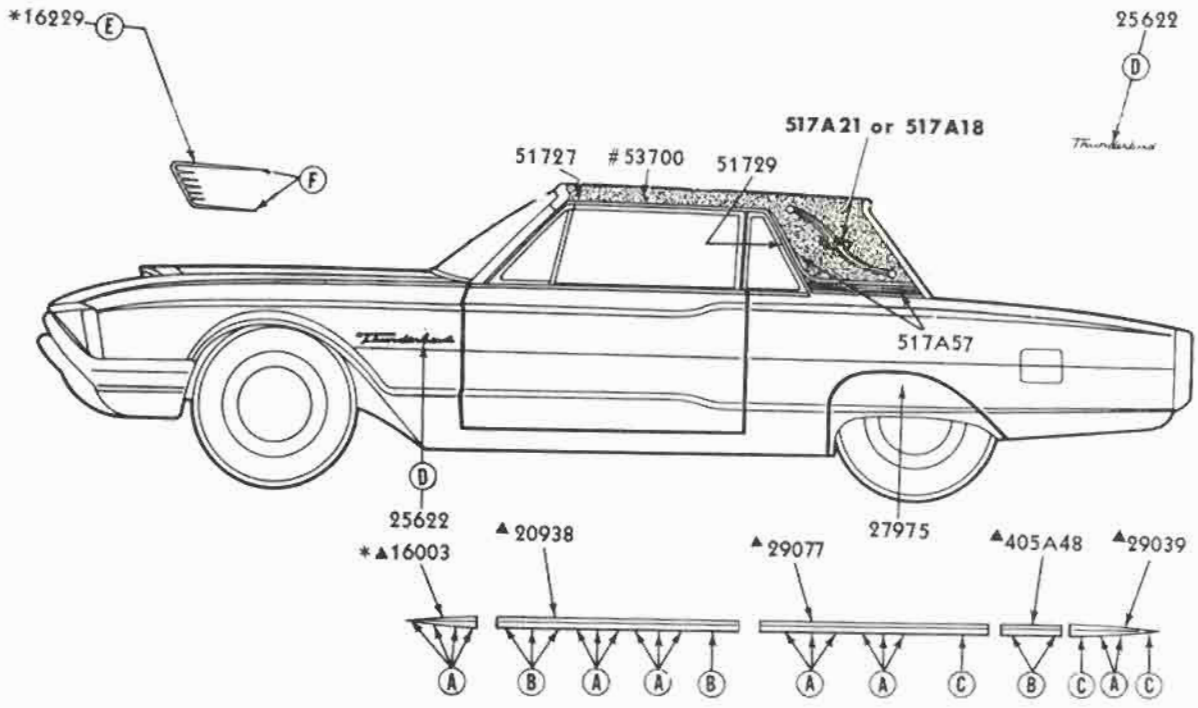

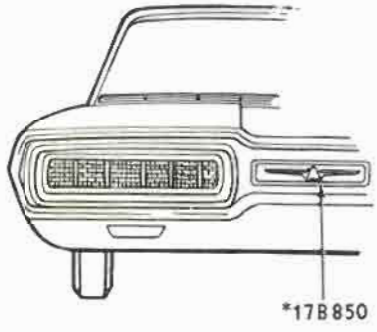

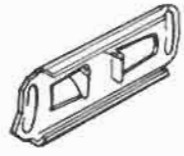

C2DZ-6420842-A
A

357182-S (BB-639)
B

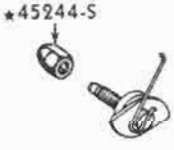

C3OZ-6220884-A
C

375890-S (MM-222-A)
D

*C5SZ-16D070-A
E

*C5SZ-16A076-A
F

378362-S (MM-228)
G

REFER TO SOFT TRIM SECTION
▲ ALSO SUPPLIED IN 21048 BODY SIDE MOULDING KIT
* REFER TO GROUP IN CHASSIS SECTION

P-4301

May, 1975 COPYRIGHT © 1975 — FORD MOTOR COMPANY — DEARBORN, MICHIGAN

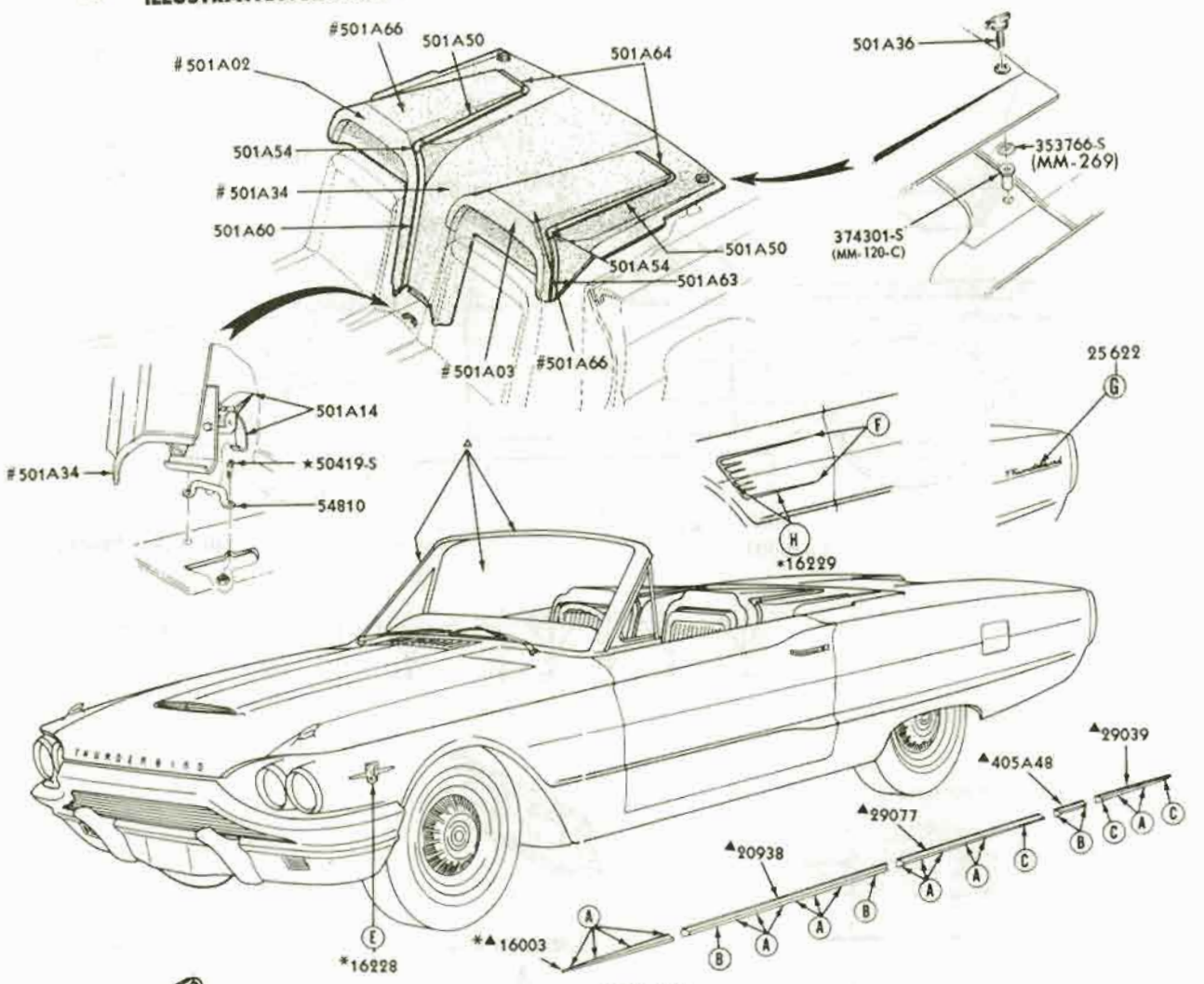

C2DZ-6420842-A
A

357182-S (BB-639)
B

*45244-S7

C3OZ-6220884-A
C

*372927-S
E

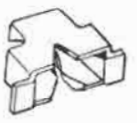

C5SZ-16A076-A
F

378362-S (MM-228)
G

373888-S (MM-290)

*C5SZ-16D070-A
H

▲ REFER TO BODY ILLUSTRATION SECTION 030
◇ REFER TO BODY ILLUSTRATION SECTION 400
REFER TO SOFT TRIM SECTION
▲ ALSO SUPPLIED IN C4SZ-6321048-A BODY SIDE MOULDING KIT
* REFER TO GROUP IN CHASSIS SECTION

P-4302

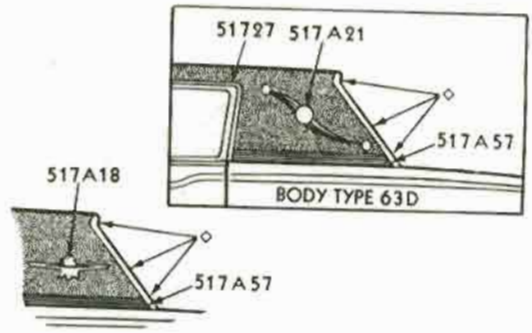

BODY TYPE 63C

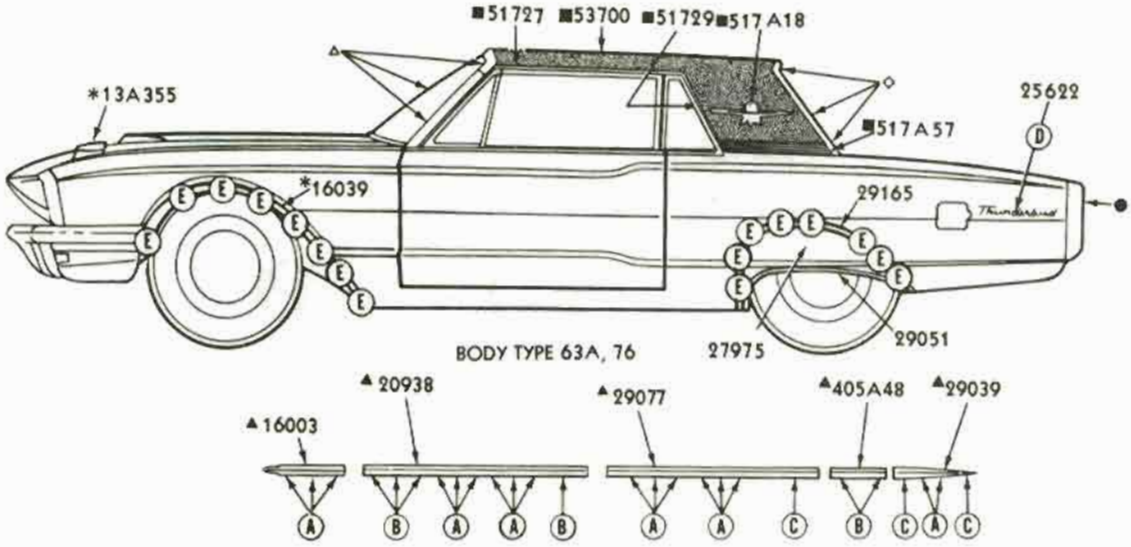

BODY TYPE 63A, 76

C2DZ-6420842-A
A

357182-S (BB-639)
B

C3OZ-6220884-A
C

378362-S (MM-228)
D

376378-S (UU-97)
E

△ REFER TO BODY ILLUSTRATION SECTION 030
◇ REFER TO BODY ILLUSTRATION SECTION 400
*REFER TO GROUP IN CHASSIS SECTION
▲ALSO SUPPLIED IN C4SZ-6321048-A BODY SIDE MOULDING KIT

●REFER TO CHASSIS ILLUSTRATION SECTION 134
■BODY TYPE 63A

P-5015

May, 1975 COPYRIGHT © 1975 — FORD MOTOR COMPANY — DEARBORN, MICHIGAN FINAL ISSUE

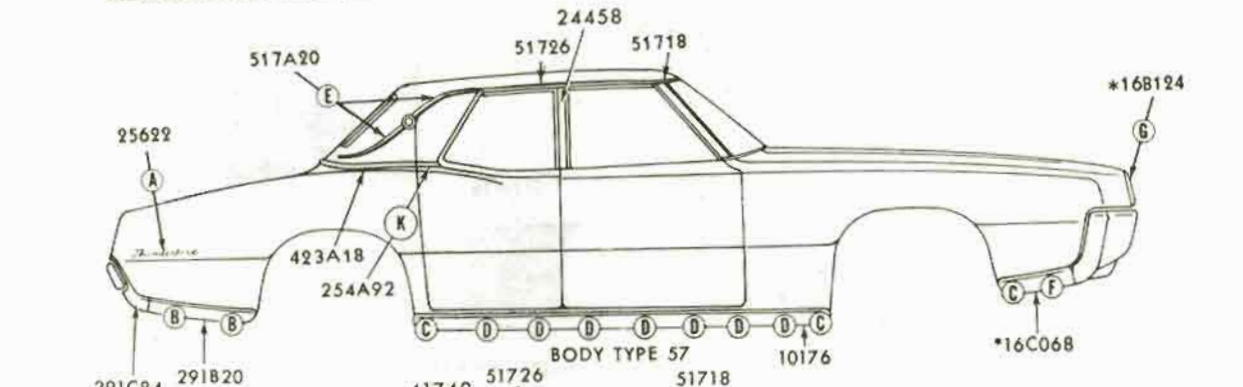

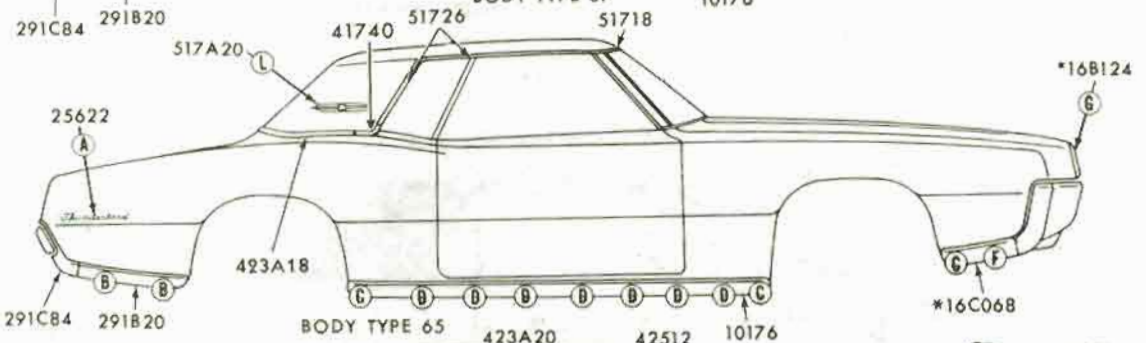

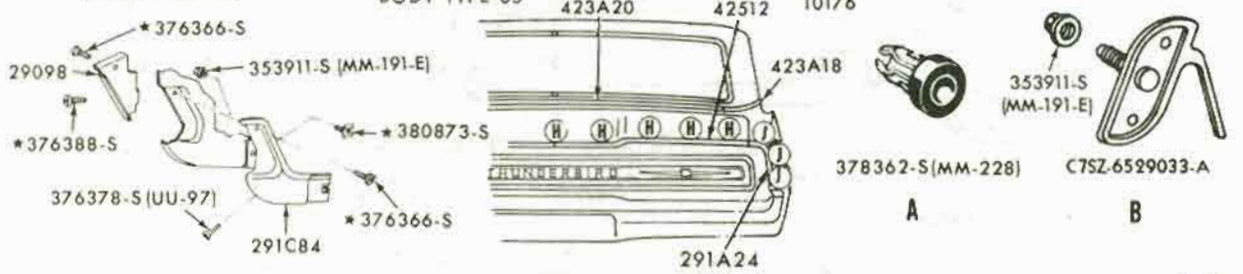

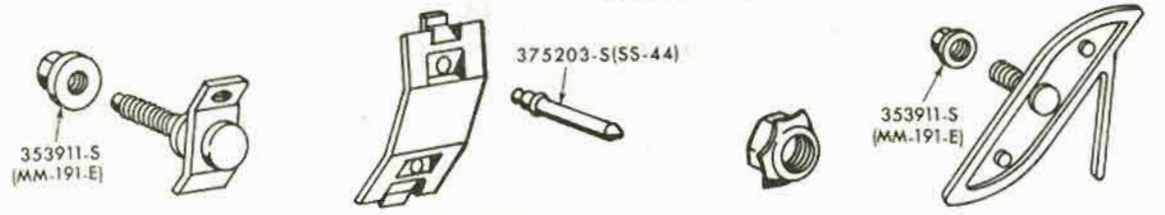

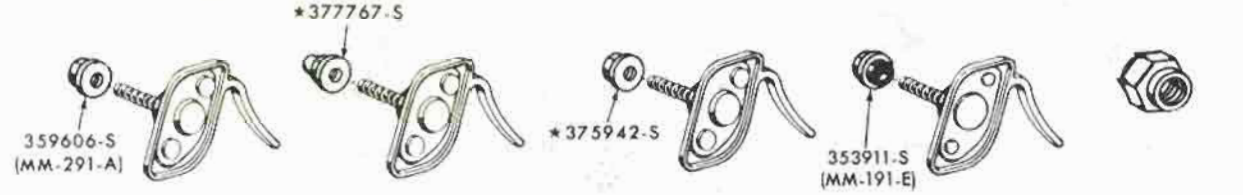

* REFER TO GROUP IN CHASSIS SECTION

P-5364

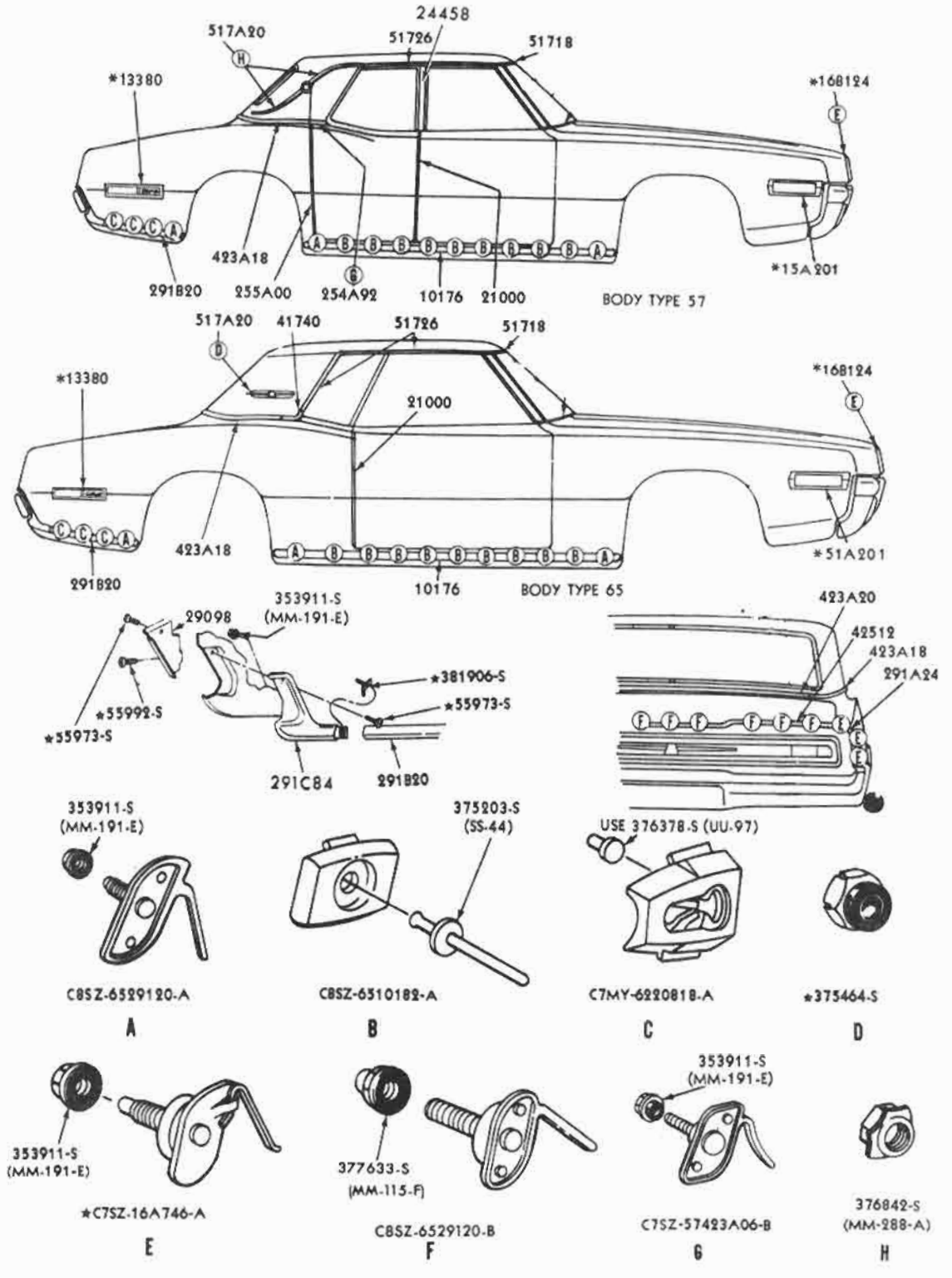

*REFER TO GROUP IN CHASSIS SECTION

P-6092

May, 1975 COPYRIGHT © 1975 — FORD MOTOR COMPANY — DEARBORN, MICHIGAN FINAL ISSUE

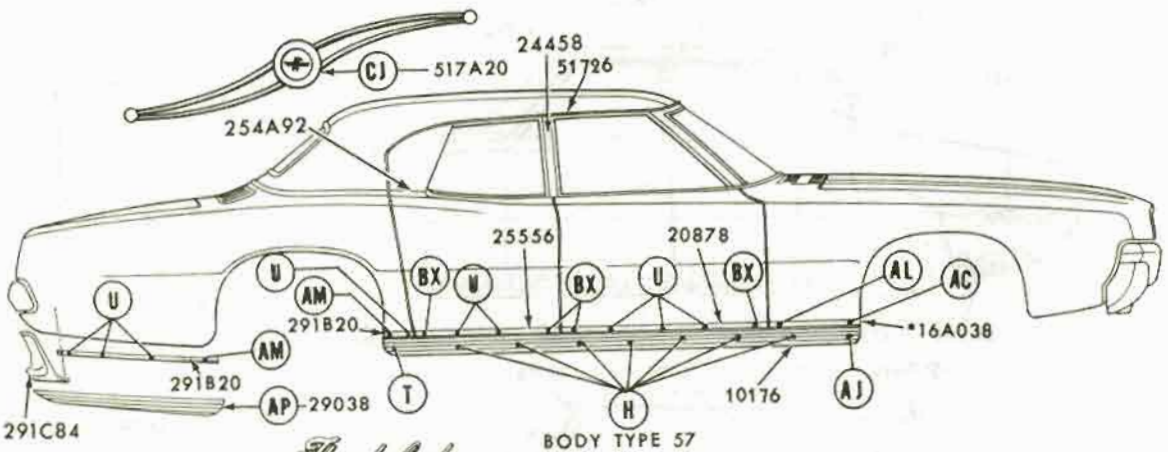

Thunderbird
(ADHESIVE BACKED)
50399

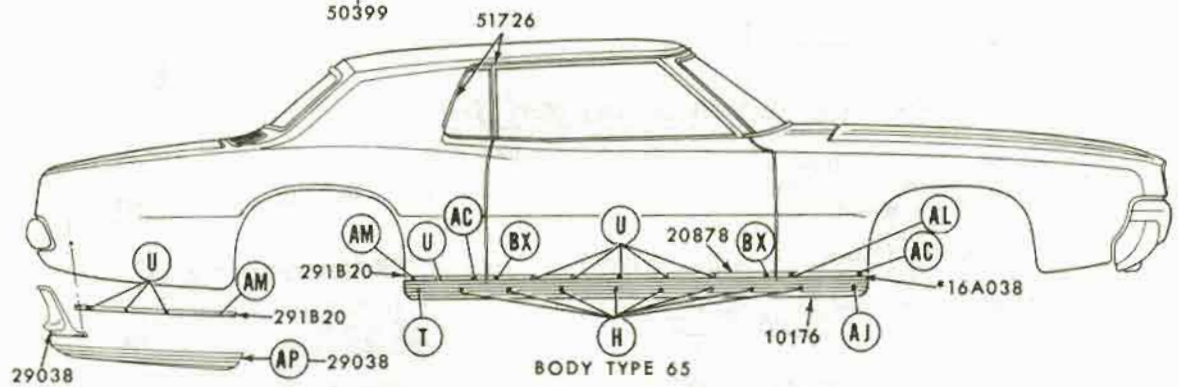

353911-S (MM-191-E)
*C8SZ-16A746-A
F

375203-S (SS-44)
C9SZ-6510198-A
H

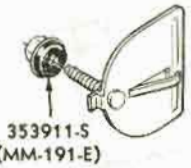
353911-S (MM-191-E)
C9SZ-6510182-A
T

USE 379560-S (UU-89-CA)
C9MY-5420818-A
U

382371-S (UU-81-L)
AC

*378993-S
AJ

353911-S (MM-191-E)
C8SZ-6529120-B
AL

353911-S (MM-191-E)
C9SZ-6529120-A
AM

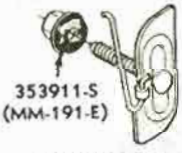
353911-S (MM-191-E)
C9SZ-6529124-A
AP

375964-S (MM-115-E)
C9SZ-6520884-A
BX

381671-S (UU-89-C)
BY

376842-S (MM-288-A)
CJ

* REFER TO GROUP IN CHASSIS SECTION

P-6561

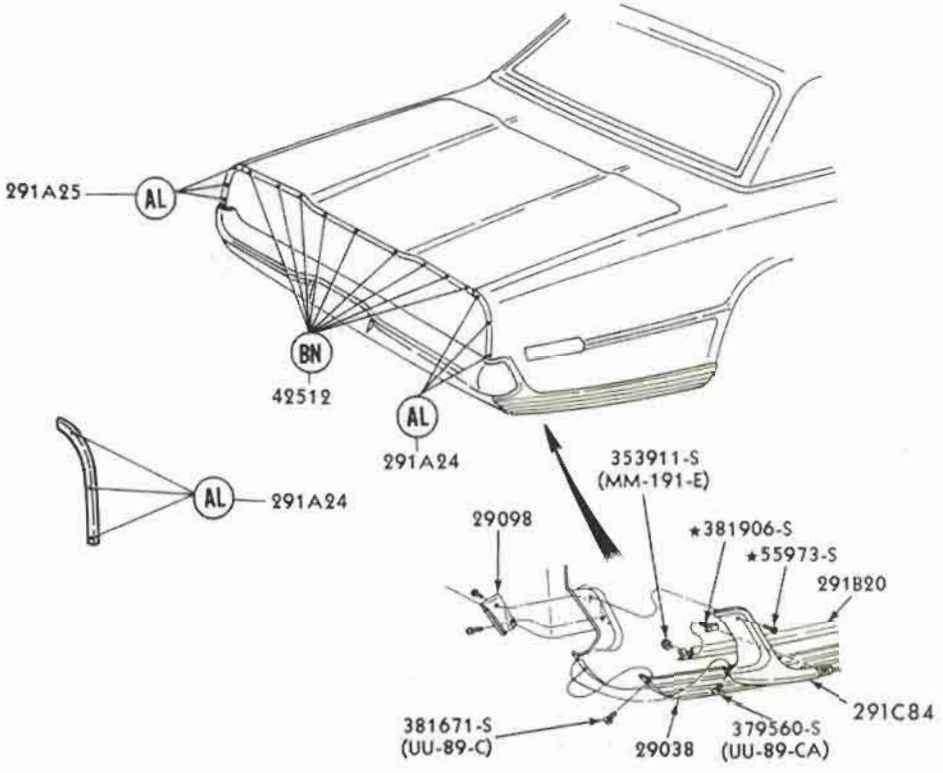

C8SZ-6542527-A
BN

C8SZ-6529120-B
AL

P-6633

1969 THUNDERBIRD - BACK END

COPYRIGHT © 1975 — FORD MOTOR COMPANY — DEARBORN, MICHIGAN

S EXTERIOR MOULDING ILLUSTRATION SECTION

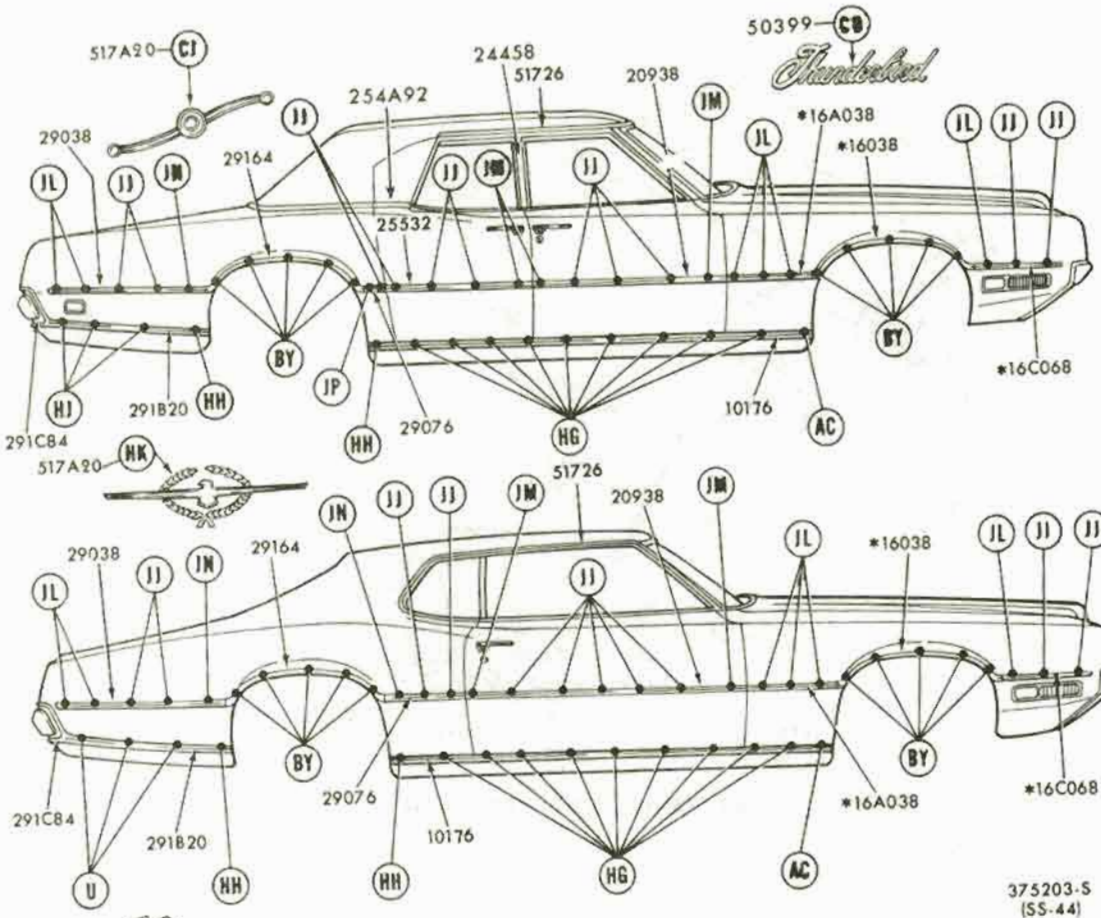

USE 379560-S (UU-89-CA)
C9MY-5420818-A
U

382371-S (UU-81-L)
AC

381671-S (UU-89-C)
BY

376842-S (MM-288-A)
CJ

375203-S (SS-44)
C8SZ-6510182-A
HG

*45271-S
DOSZ-6510182-A
HH

379560-S (UU-89-CA)
C7MY-6220818-A
HJ

*375464-S
HK

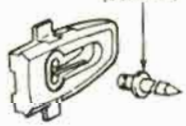

383229-S (SS-44-E)
DOSZ-6521066-A
JJ

*45271-S
DOSZ-16A076-A
JL

37522-S (MM-115-D)
DOSZ-6521094-A
JM

*45271-S
DOSZ-6529288-A
JN

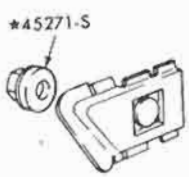

*45271-S
DOSZ-5729288-A
JP

382146-S (MM-290-E)
CD

*REFER TO CHASSIS SECTION

P-7069

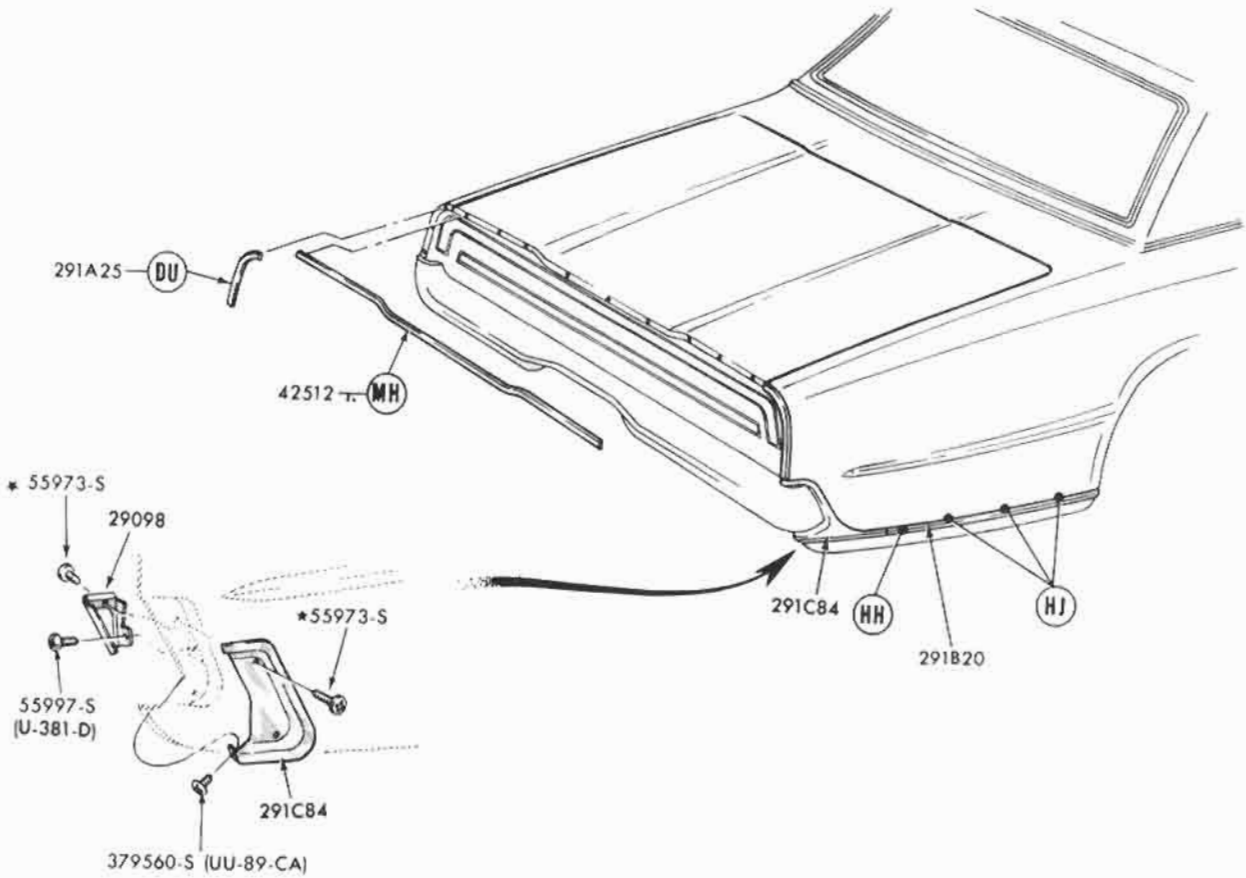

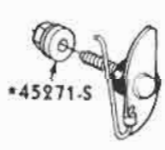

C8MY-71407A12-A
DU

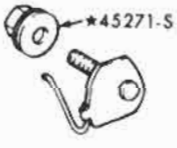

D0SZ-6510182-A
HH

C7MY-6220818-A
HJ

* D0SZ-6542533-A
MH

P-7070

COPYRIGHT © 1975 — FORD MOTOR COMPANY — DEARBORN, MICHIGAN

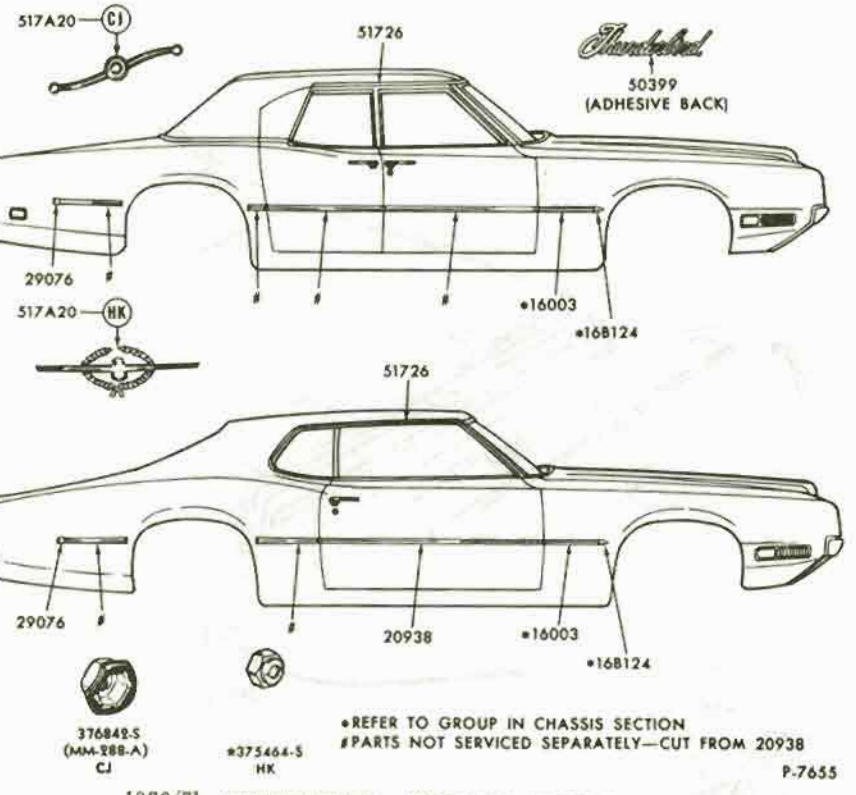

1970/71 THUNDERBIRD - BODY SIDE PROTECTION

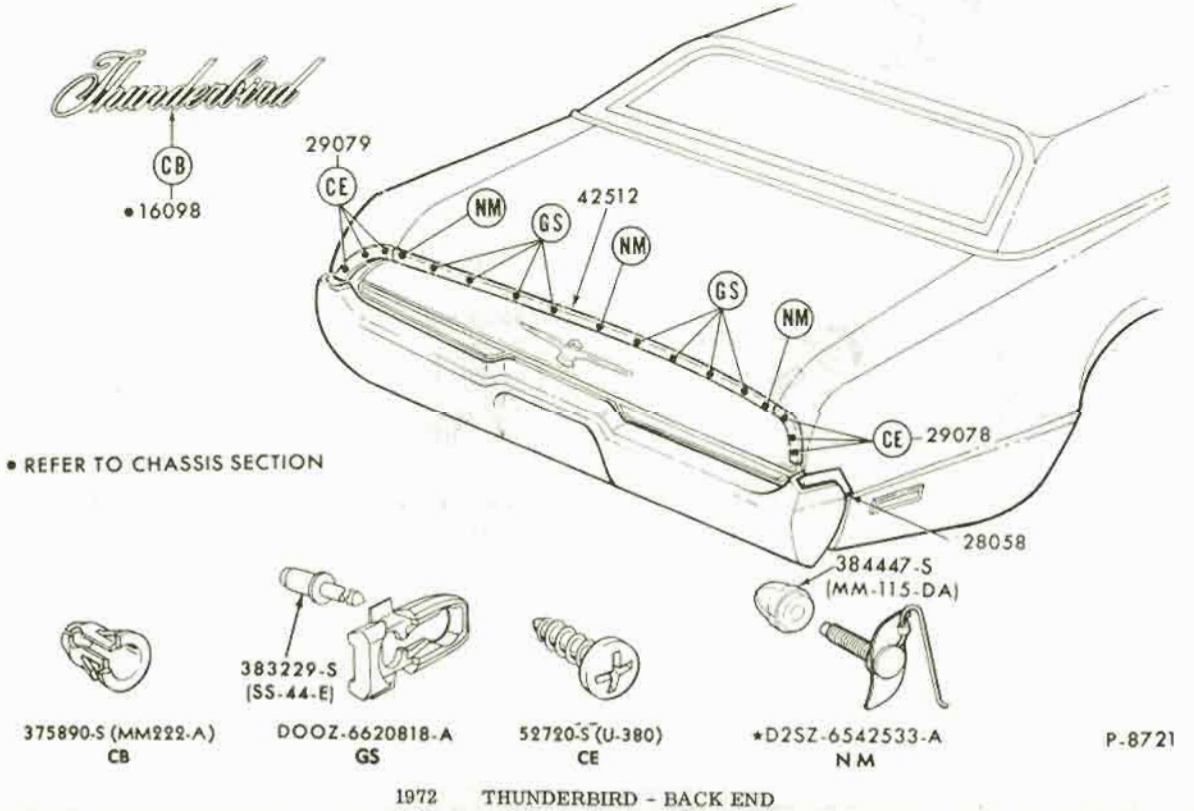

1972 THUNDERBIRD - BACK END

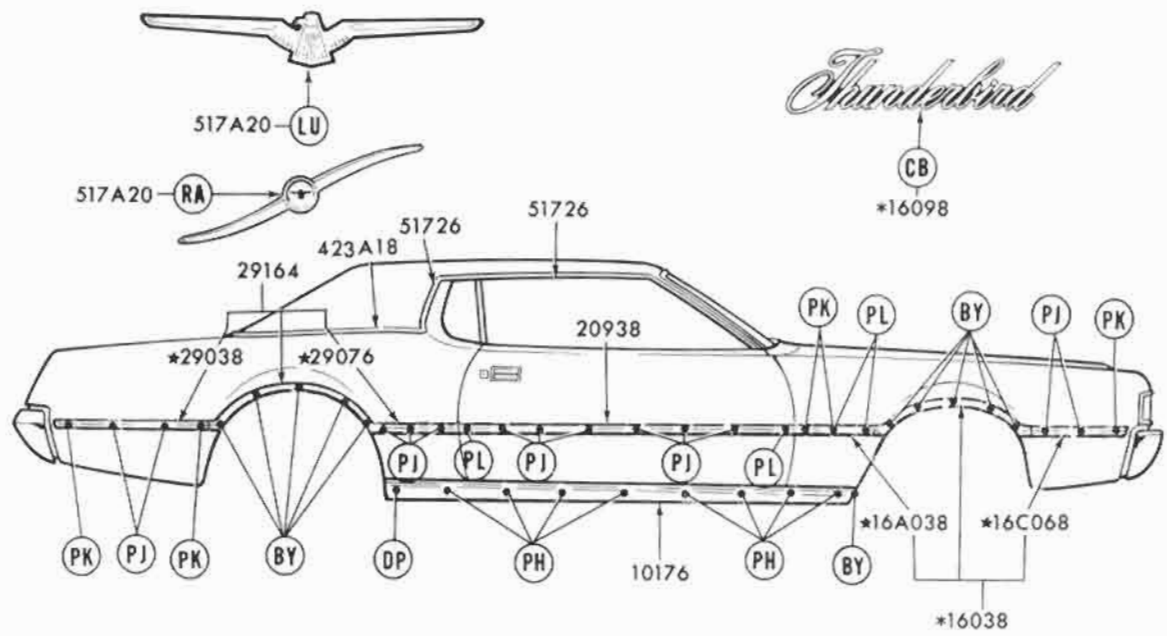

381671-S (UU-89-C)
BY

375890-S (MM222-A)
CB

382121-S
(GG-333-A)
DP

370713-S
(MM-292)
LU

D2SZ-6510182-A
PH

D2SZ-6520818-A
PJ

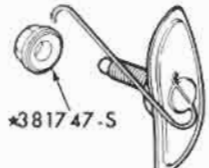

C8GY-16A076-A
PK

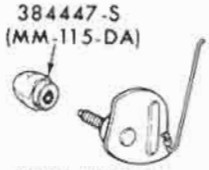

D2SZ-6520884-A
PL

*45289-S
RA

*REFER TO GROUP IN CHASSIS SECTION

P-8720

May, 1975 COPYRIGHT © 1975 — FORD MOTOR COMPANY — DEARBORN, MICHIGAN FINAL ISSUE

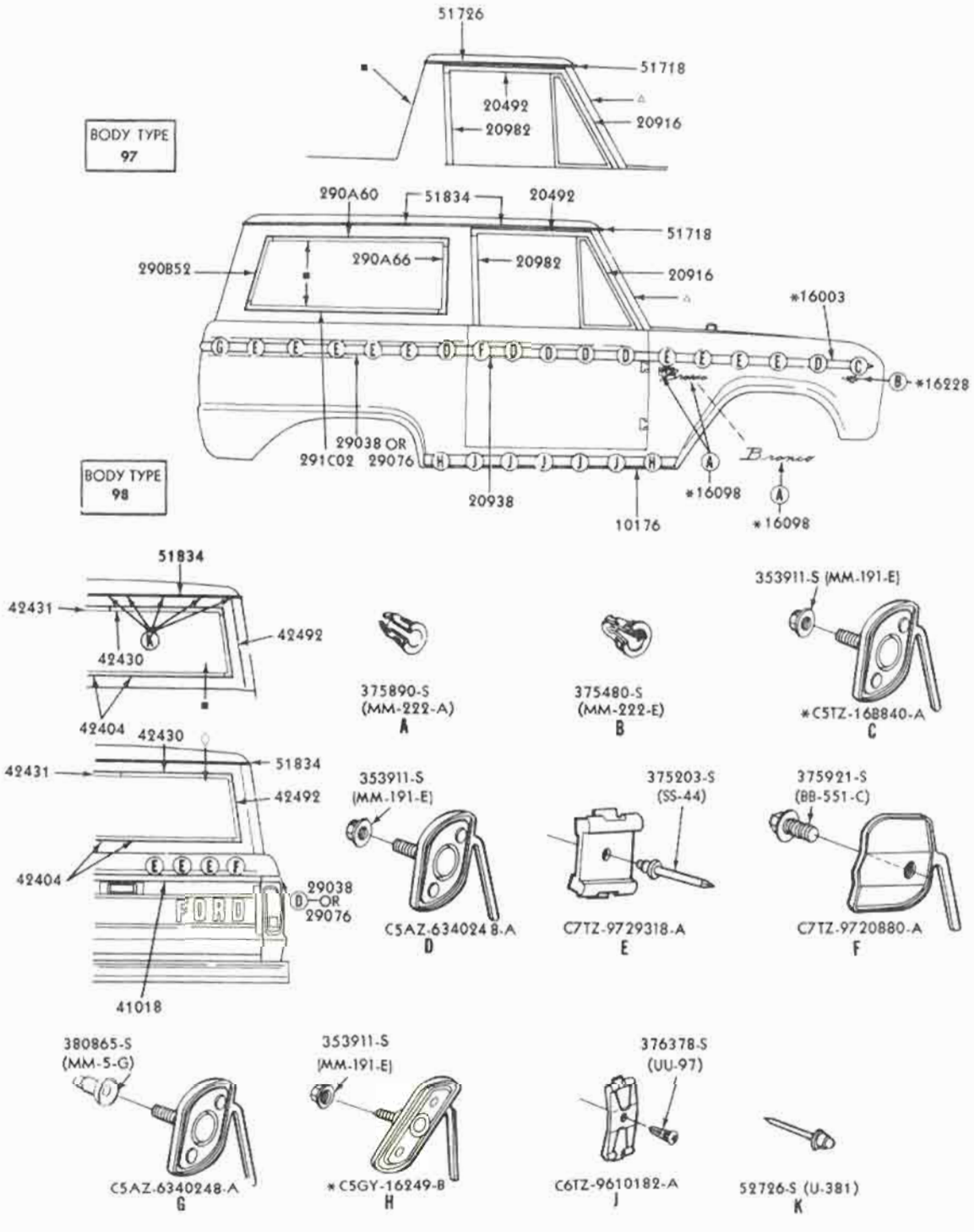

◇REFER TO BODY ILLUSTRATION SECTION 400

*REFER TO GROUP IN CHASSIS SECTION

■REFER TO SHEET METAL ILLUSTRATION SECTION PAGE 127

△REFER TO BODY ILLUSTRATION SECTION 030

P-5548

COPYRIGHT © 1975 — FORD MOTOR COMPANY — DEARBORN, MICHIGAN

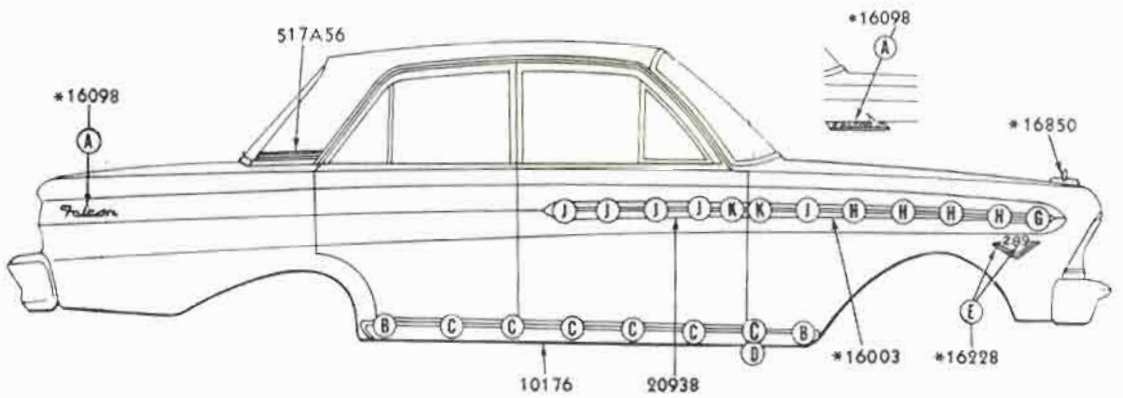

BODY TYPE 54A, D

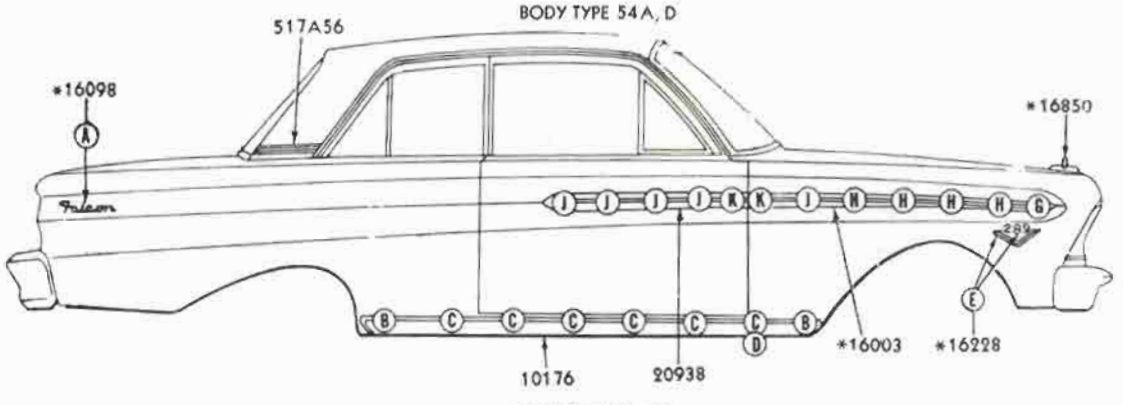

BODY TYPE 62A, D

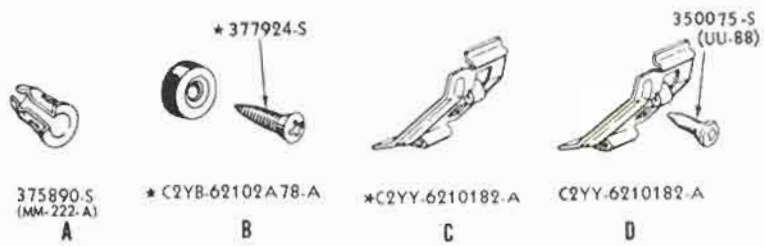

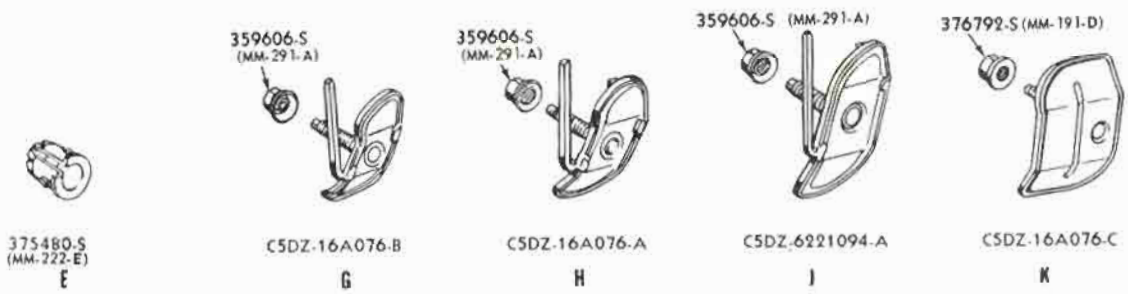

* REFER TO GROUP IN CHASSIS SECTION

P.4689

1965 FALCON - BODY TYPES 54A,D, 62A,D - SIDE

COPYRIGHT © 1975 — FORD MOTOR COMPANY — DEARBORN, MICHIGAN

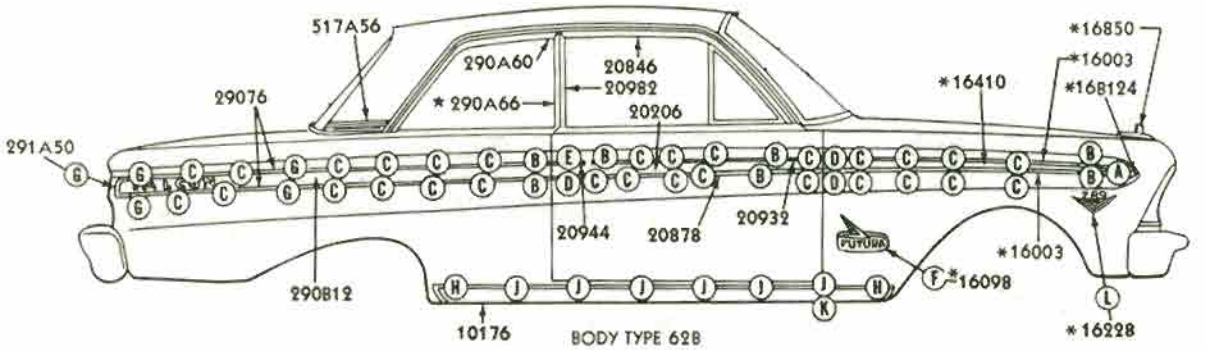

BODY TYPE 62B

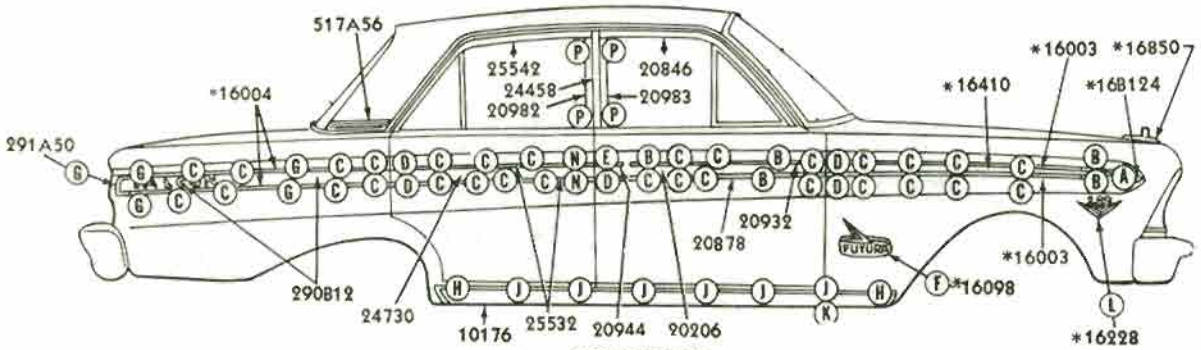

BODY TYPE 54B

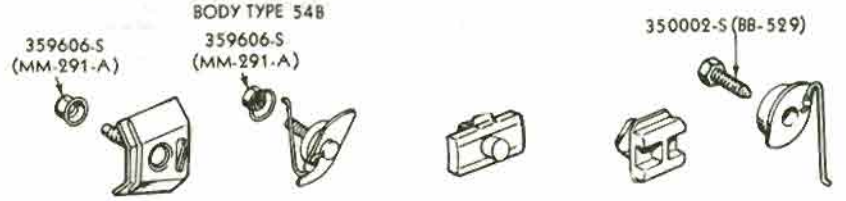

C5DZ-16A076D — A

C4OZ-16A076-A — B

ALTERNATES

C4DZ 16A076 — C

C4MY-6221094-A — D

350002-S (BB-529) — E

375890-S (MM-222-A) — F

C5OZ-16A746-A — G

* C2YB-62102A78-A — H

C2YY-6210182-A — J

C2YY-6210182-A — K

375480-S (MM-222-E) — L

* C5DZ-54254A30-A — N

52726-S (U-381) — P

* REFER TO GROUP IN CHASSIS SECTION

P-4688

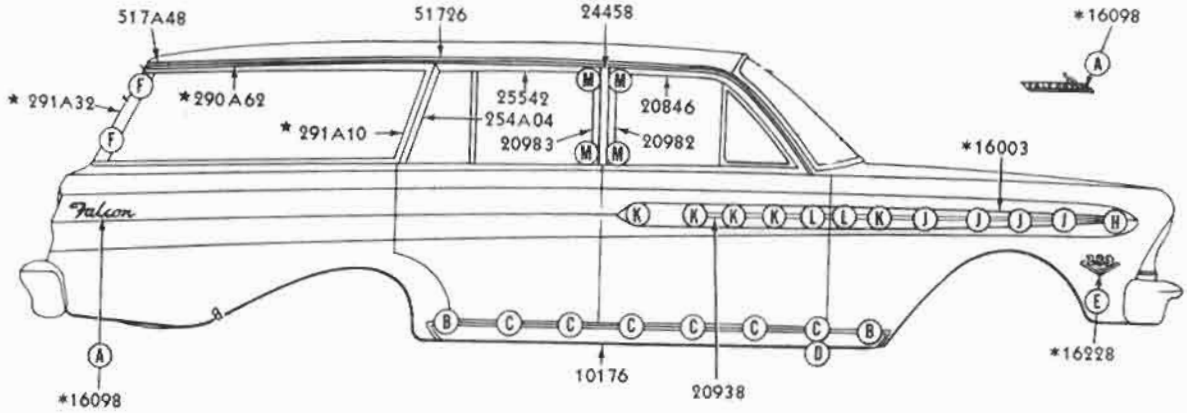

375890-S
(MM-222-A)
A

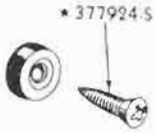

* C2YB-62102A78-A
B

*C2YY-6210182-A
C

C2YY-6210182-A
D

375480-S
(MM-222-E)
E

359606-S
(MM-291-A)
F

C5DZ-16A076-B
H

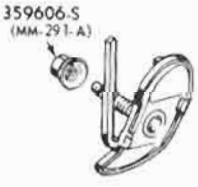

C5DZ-16A076-A
J

C5DZ-6221094-A
K

C5DZ-16A076-C
L

52726-S (U-381)
M

359606-S (MM-291-A)

359606-S (MM-291-A)

359606-S (MM-291-A)

376792-S (MM-191-D)

* REFER TO GROUP IN CHASSIS SECTION

P 4696

May, 1975 COPYRIGHT © 1975 — FORD MOTOR COMPANY — DEARBORN, MICHIGAN FINAL ISSUE

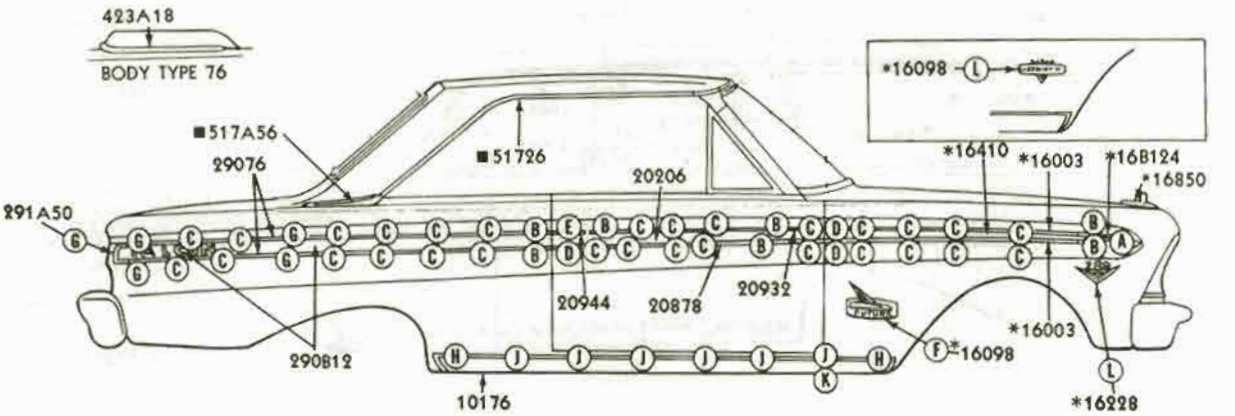

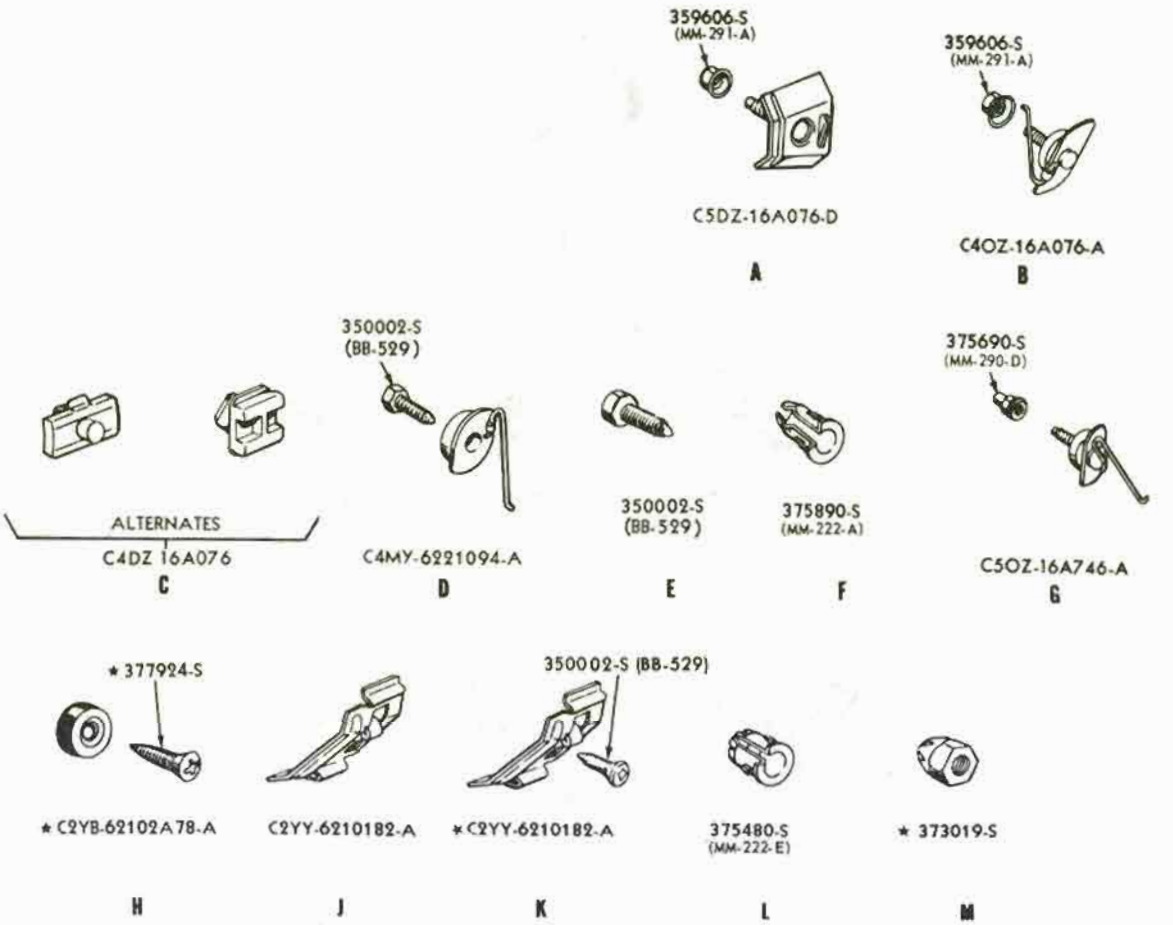

* REFER TO GROUP IN CHASSIS SECTION
■ BODY TYPE 63

P-4694

1965 FALCON - BODY TYPE 63, 76 - TYPICAL - SIDE

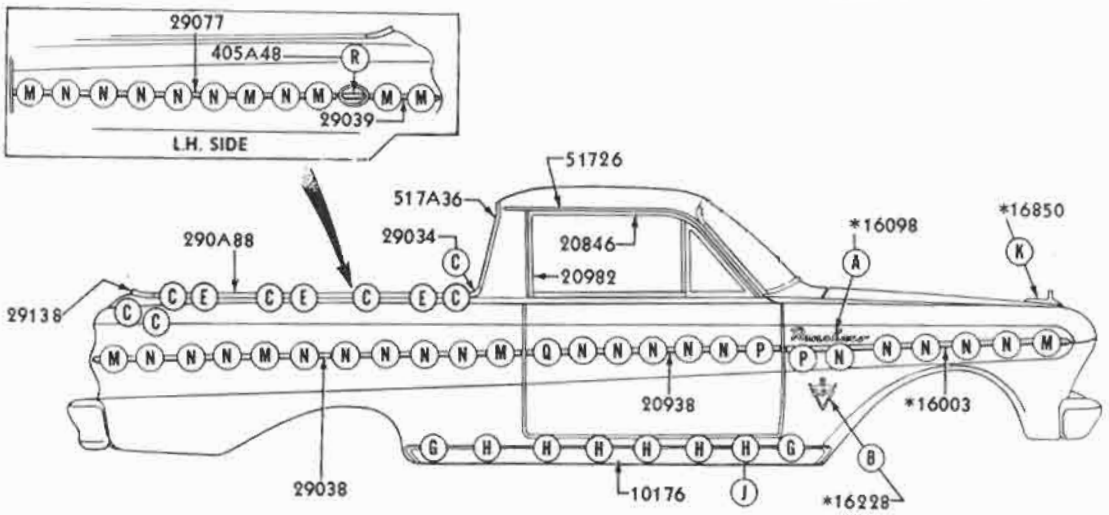

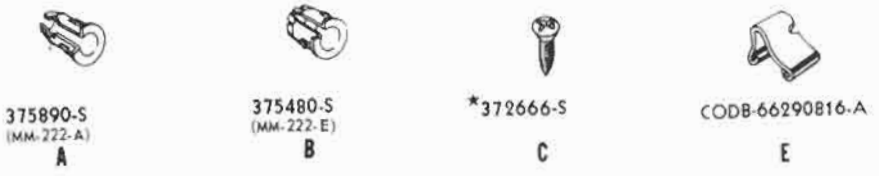

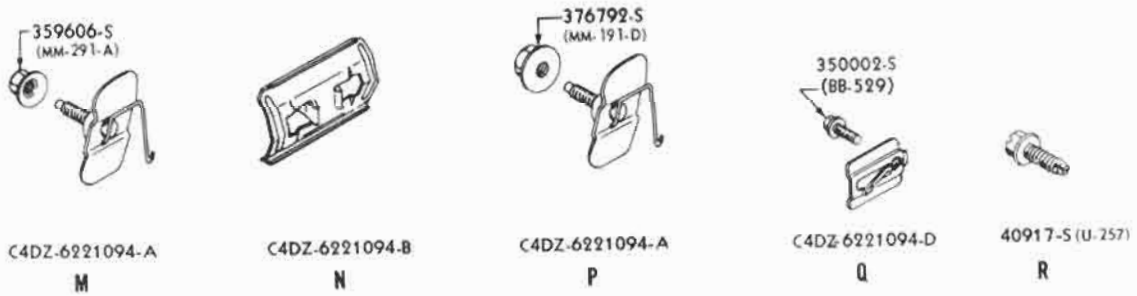

* REFER TO GROUP IN CHASSIS SECTION

P-4296

May, 1975 COPYRIGHT © 1975 — FORD MOTOR COMPANY — DEARBORN, MICHIGAN FINAL ISSUE

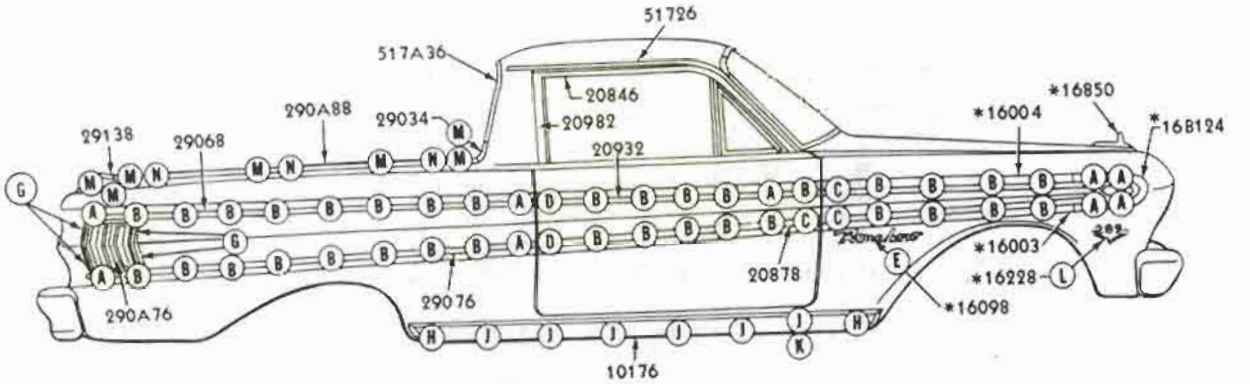

359606-S
(MM-291-A)

C30Z-6220884-A

A

ALTERNATES

C4DZ-16A076-A

B

376799-S
(MM-191-D)

C30Z-6220884-A

C

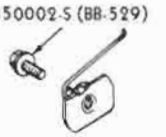
350002-S (BB-529)

C2SZ-6320880-B

D

353911-S
(MM-288-A)

G

* 377924-S

*C2YB-62102A78-A

H

*C2YY-6210182-A

J

350075-S
(UU-88)

K

375480-S
(MM-222-E)

L

376290-S
(UU-56-D)

M

C0DB-66290B16-A

N

* REFER TO GROUP IN CHASSIS SECTION

P-4760

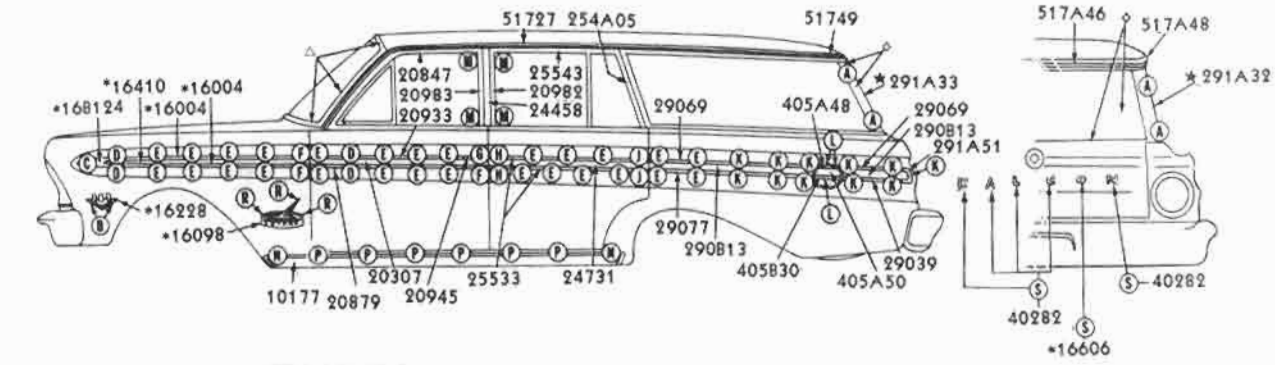

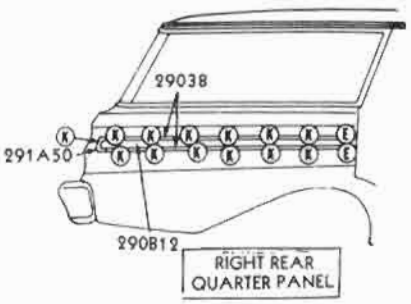

359606-S (MM-291-A)
A

375480-S (MM-222-E)
B

359606-S (MM-291-A)
*C5DZ-16A076-D
C

359606-S (MM-291-A)
*C4OZ-16A076-A
D

C5DZ-6221094-B
E

350002-S (BB-529)
C4MY-6221094-A
F

350002-S (BB-529)
G

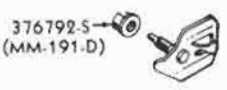
376792-S (MM-191-D)
*C5DZ-54254A30-A
H

*378697-S
C4MY-6221094-A
J

375690-S (MM-290-D)
*C3OZ-6229120-A
K

40254-S (U-219)
L

52726-S (U-381)
M

*377924-S
*C2YB-62102A78-A
N

350075-S (UU-88)
*C2YY-6210182-A
P

375890-S (MM-222-E)
R

378362-S (MM228)
S

△REFER TO BODY ILLUSTRATION SECTION 030
REFER TO BODY ILLUSTRATION SECTION 400
*REFER TO GROUP IN CHASSIS SECTION

P-4837

COPYRIGHT © 1975 — FORD MOTOR COMPANY — DEARBORN, MICHIGAN

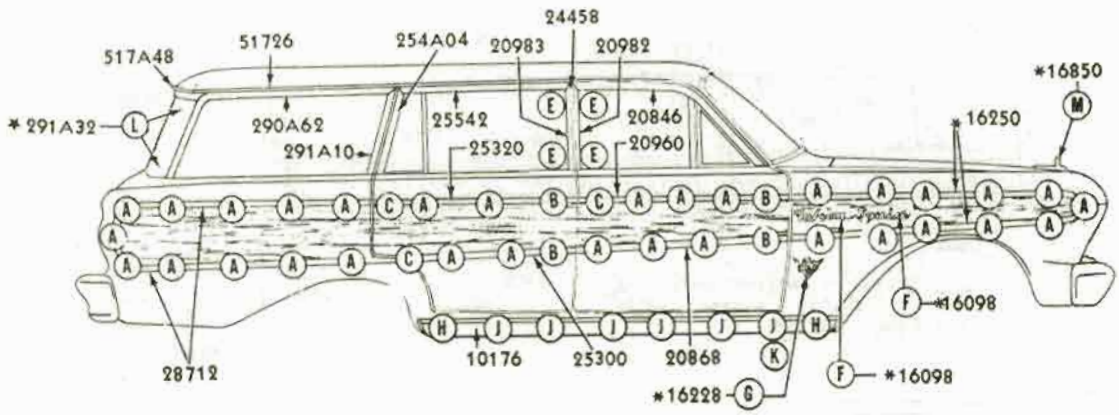

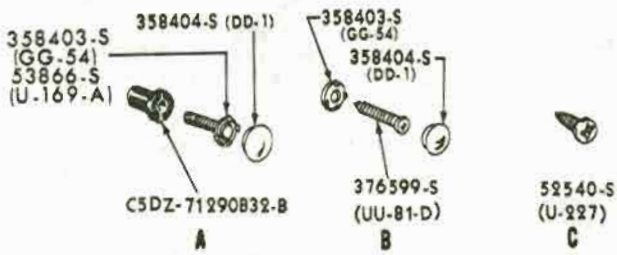

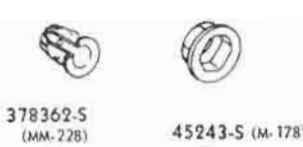

WALNUT GRAIN TRANSFER REFER TO BODY GROUP 20748

* REFER TO GROUP IN CHASSIS SECTION

P-4695

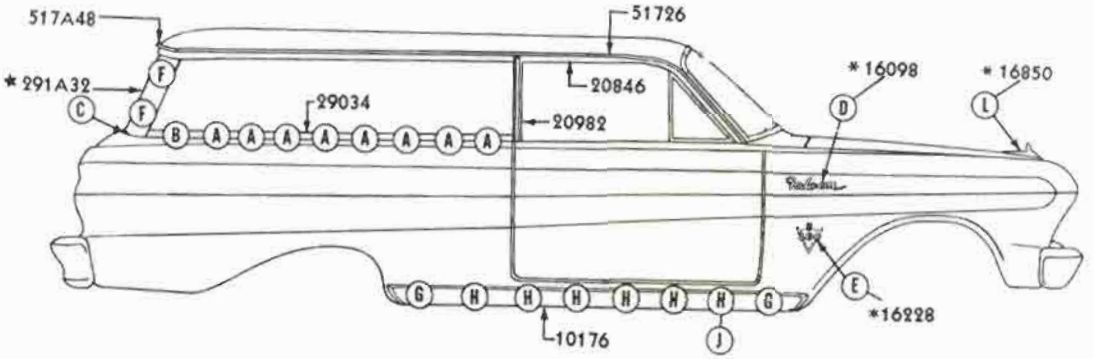

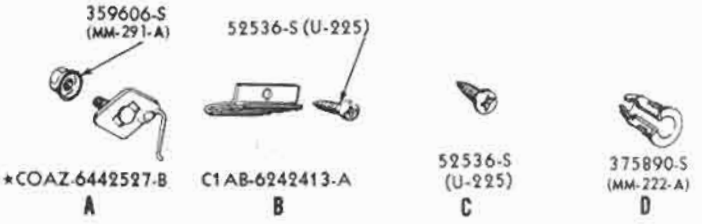

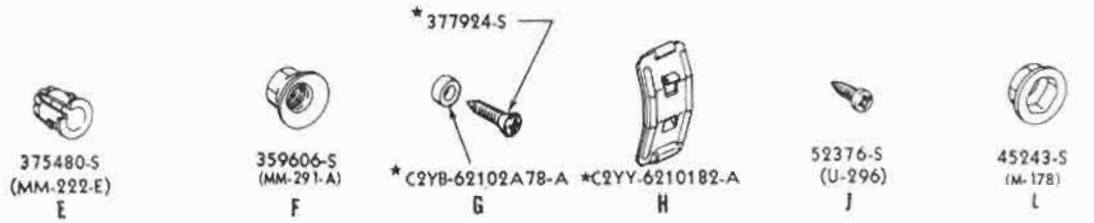

* REFER TO GROUP IN CHASSIS SECTION

P-4295

May, 1975 COPYRIGHT © 1975 — FORD MOTOR COMPANY — DEARBORN, MICHIGAN

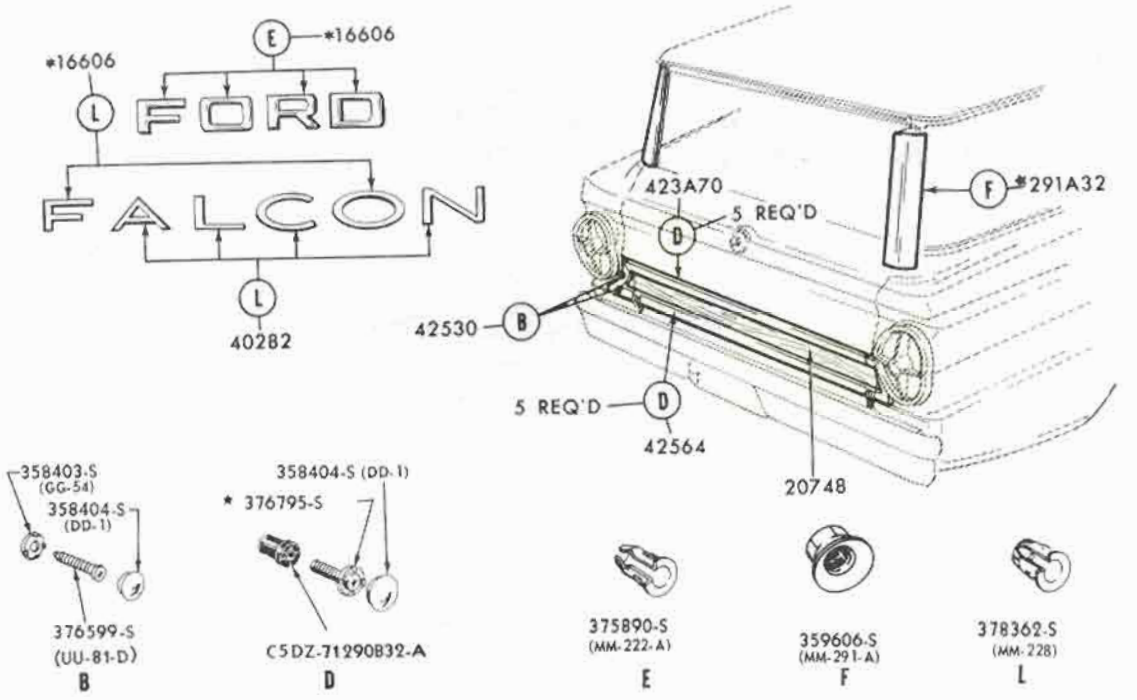

*REFER TO GROUP IN CHASSIS SECTION

P-8353

1965 FALCON - BODY TYPES 59,71,78 - BACK END

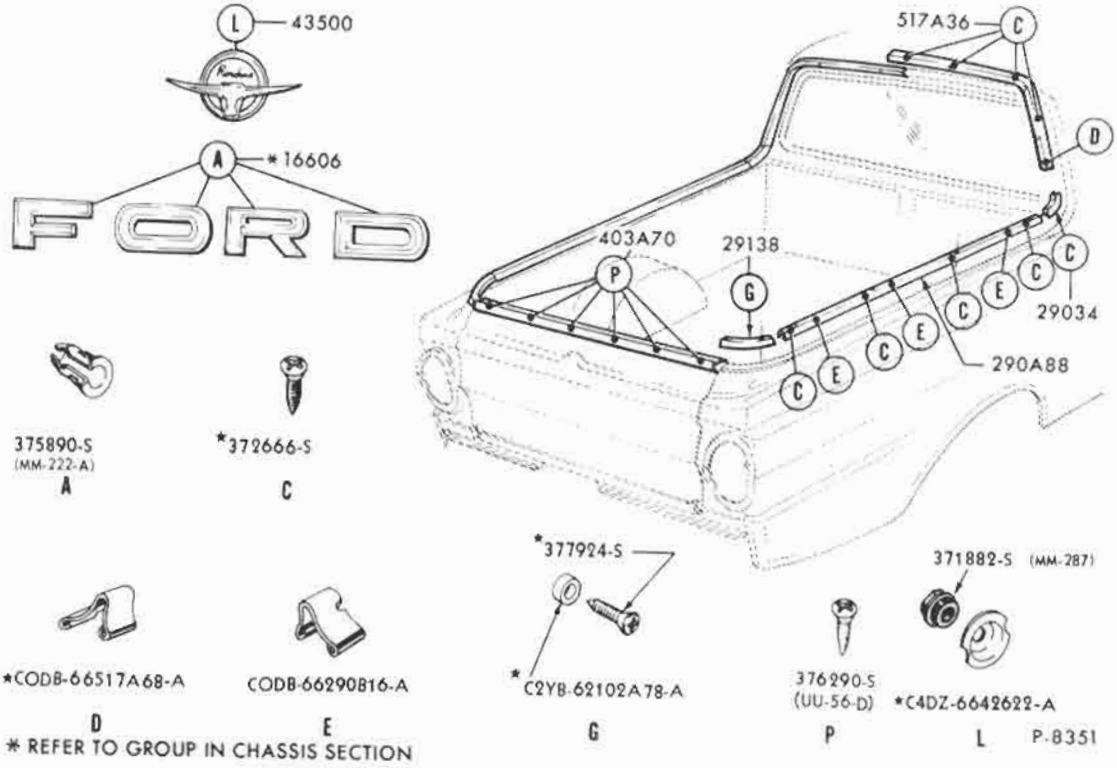

1965 FALCON - BODY TYPE 66 - BACK END

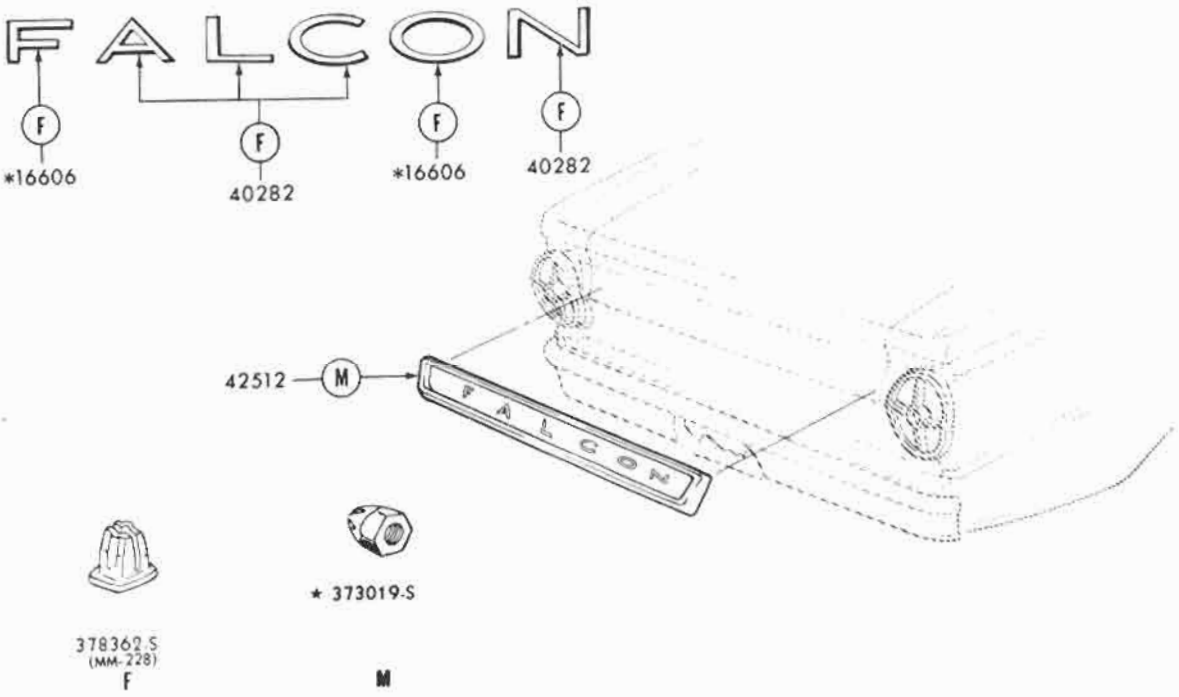

1965 FALCON - BODY TYPES 54, 62, 63, 76 - BACK END

COPYRIGHT © 1975 — FORD MOTOR COMPANY — DEARBORN, MICHIGAN

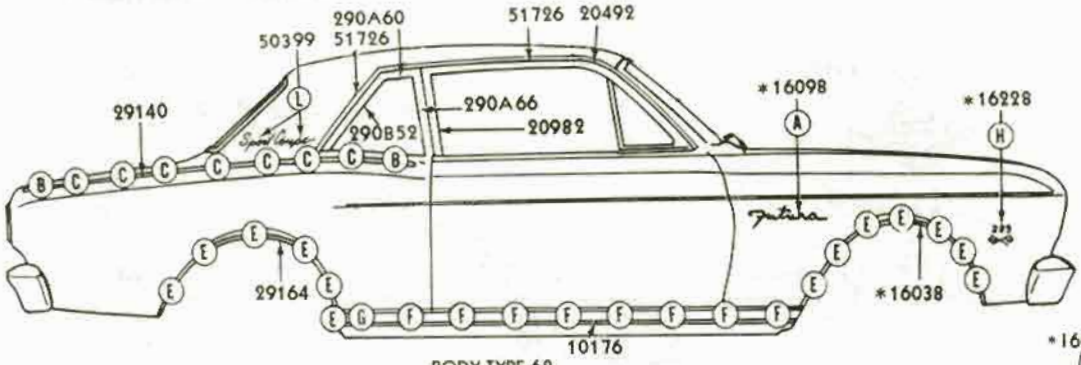

BODY TYPE 62

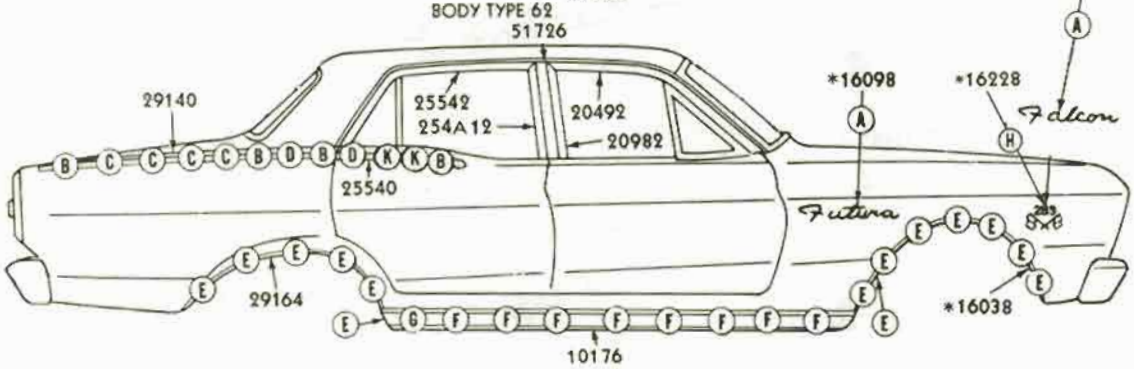

BODY TYPE 54

378362-S (MM-228)
A

359606-S (MM-291-A)
C5OZ-16A746-A
B

C6DZ-6229120-A
C

*378320-S
*C6DZ-5425562-A
D

376378-S (UU-97)
E

C6DZ-6210182-A
F

353911-S (MM-191-E)
*C6DZ-6210182-B
G

375480-S (MM-222-E)
H

376378-S (UU-97)
C6DZ-54254A46-A
K

375890-S (MM-222-A)
L

* REFER TO GROUP IN CHASSIS SECTION

P-5061

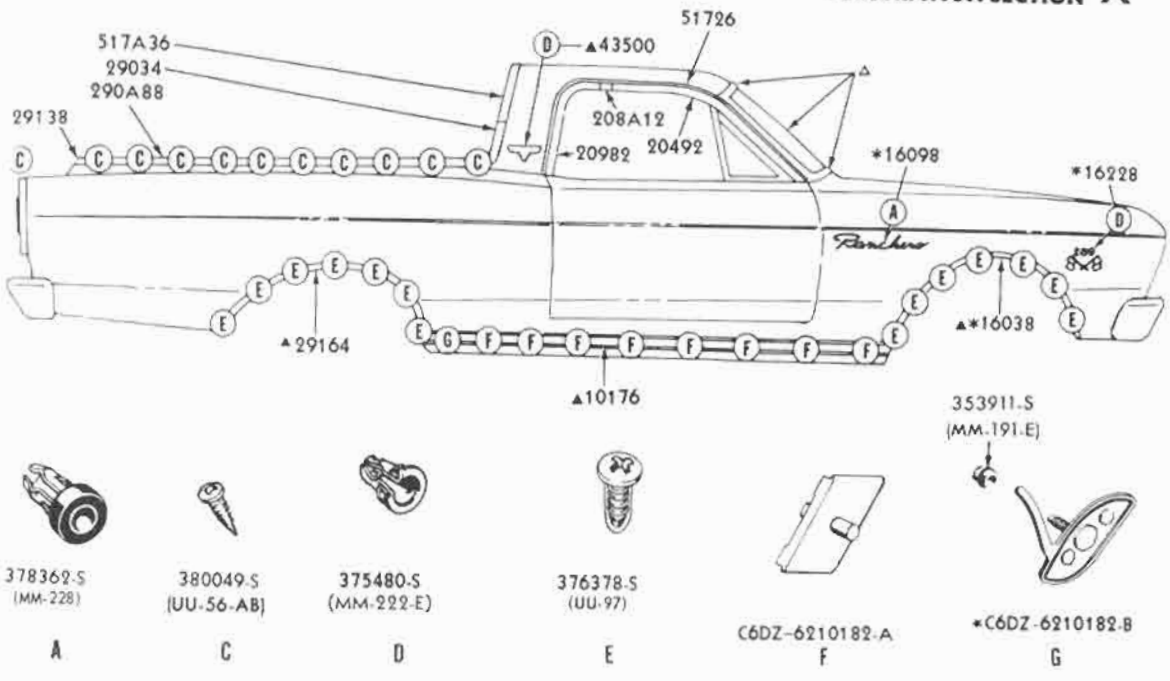

378362-S (MM-228)	380049-S (UU-56-AB)	375480-S (MM-222-E)	376378-S (UU-97)	C6DZ-6210182-A	*C6DZ-6210182-B
A	C	D	E	F	G

*REFER TO GROUP IN CHASSIS SECTION

▲BODY TYPE 66B, D ONLY

P 5065

1966 FALCON - BODY TYPE 66 - SIDE

COPYRIGHT © 1975 — FORD MOTOR COMPANY — DEARBORN, MICHIGAN

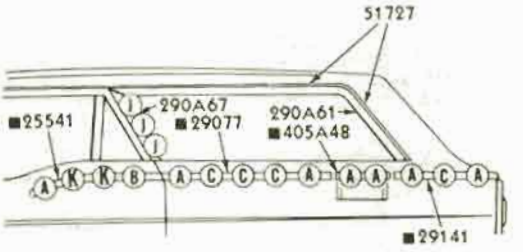

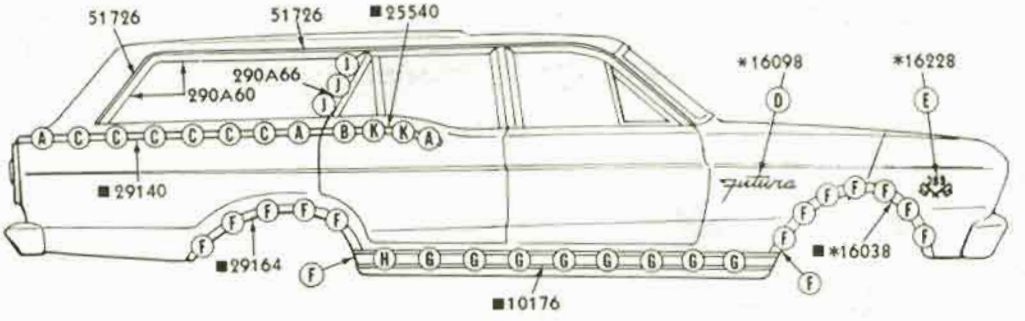

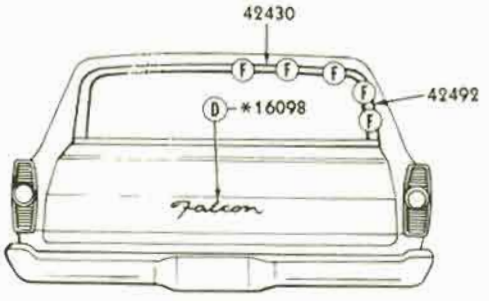

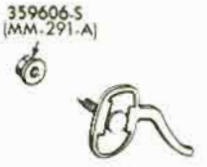
359606-S
(MM-291-A)

C5OZ-16A746-A

A

*378320-S

*C6DZ-5425562-A

B

C6DZ-6229144-A

C

378362-S
(MM-228)

D

375480-S
(MM-222-E)

E

376378-S
(UU-97)

F

C6DZ-6210182-A

G

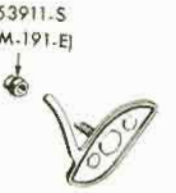
353911-S
(MM-191-E)

* C6DZ-6210182-B

H

376378-S
(UU-97)

J

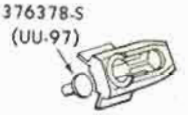
376378-S
(UU-97)

C6DZ-54254A46-A

K

* REFER TO GROUP IN CHASSIS SECTION

■ BODY TYPE 71B

P-5067

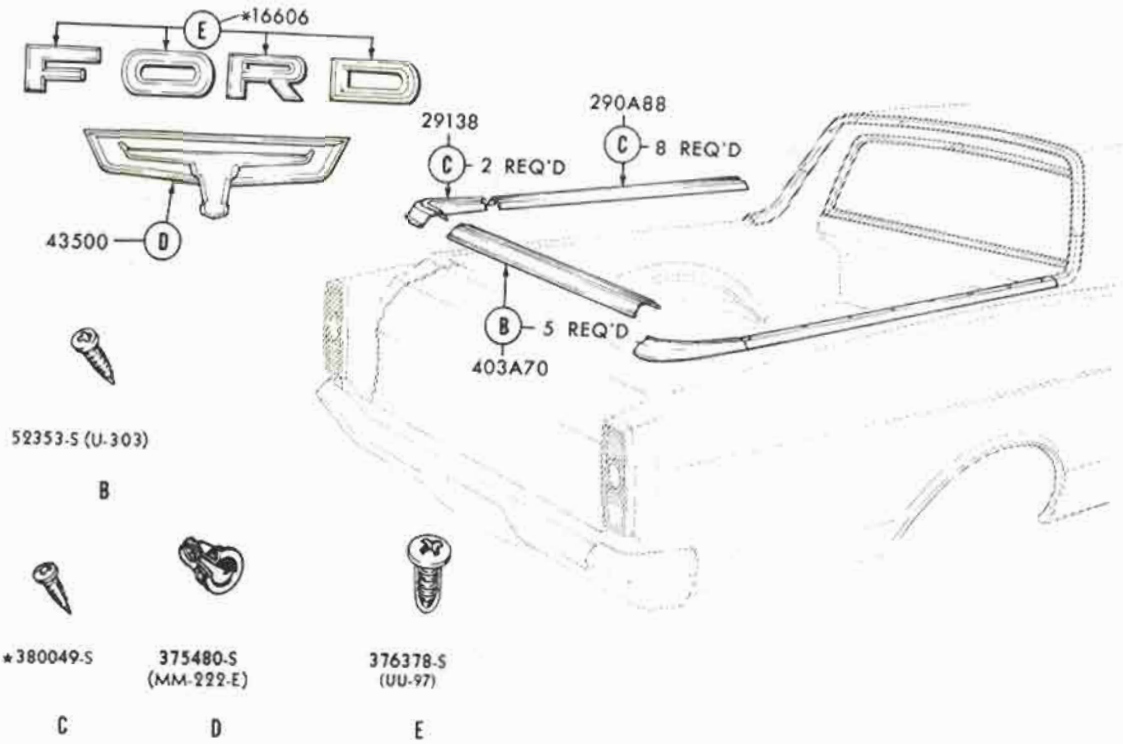

P-8358

* REFER TO GROUP IN CHASSIS SECTION

1966 FALCON - BODY TYPE 66 - BACK END

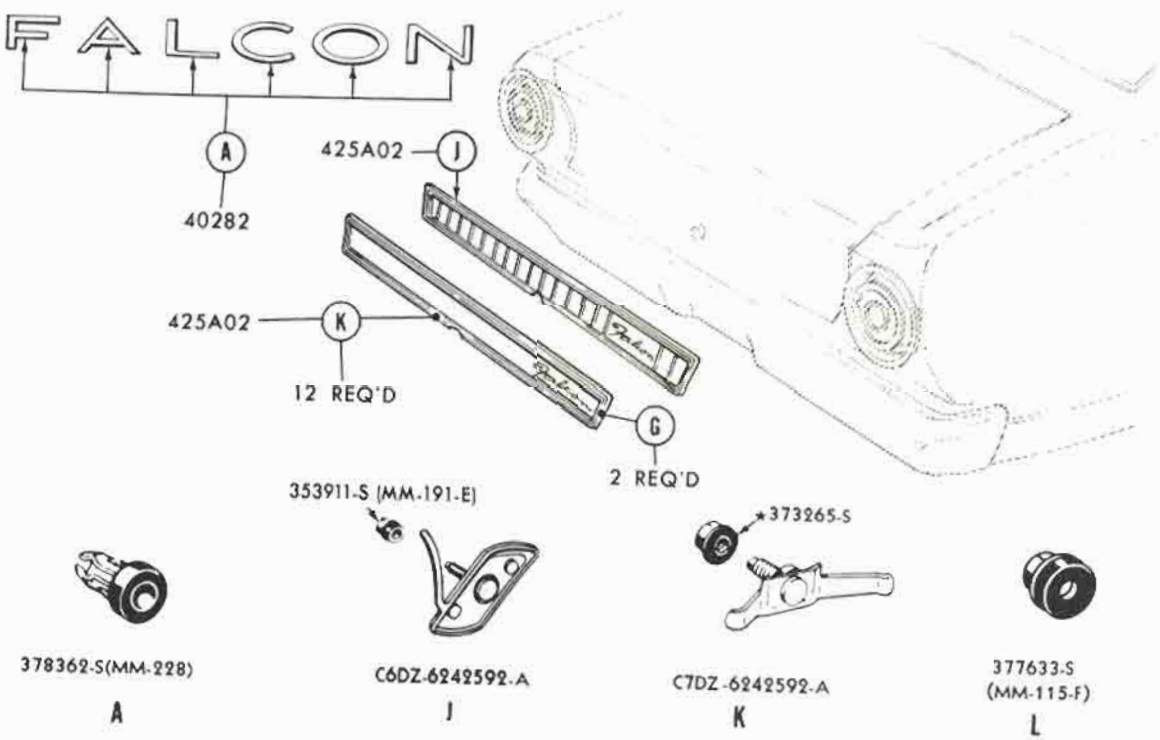

P-8357

1966/67 FALCON - BODY TYPES 54, 62 - BACK END

COPYRIGHT © 1975 — FORD MOTOR COMPANY — DEARBORN, MICHIGAN

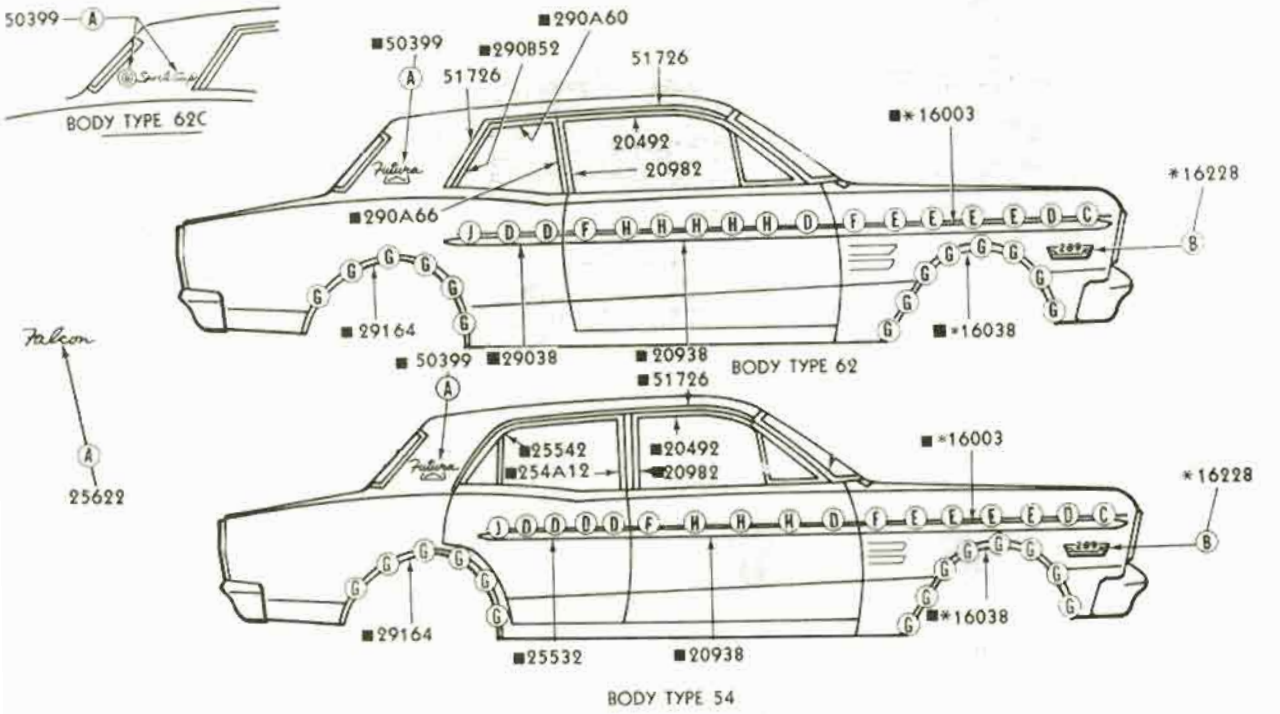

378362-S(MM-228) 375480-S(MM-222-E)

A B

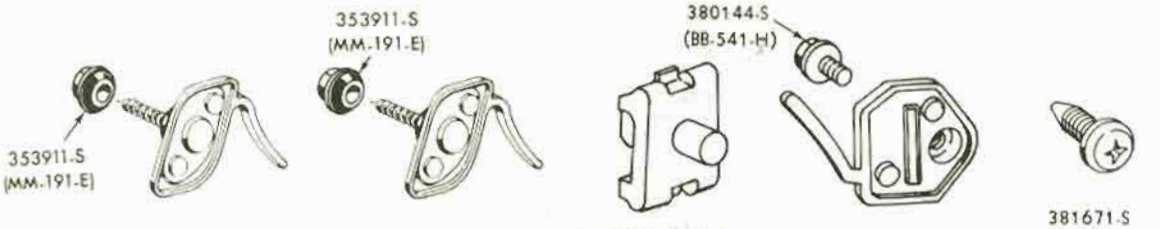

*C5AZ-16A746-B C6MY-6329120-E C6VY-5321094-A C6MY-6320880-B 381671-S (UU-89-C)

C D E F G

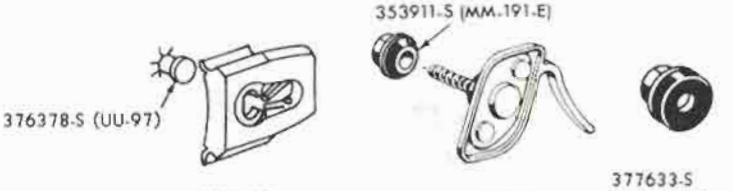

C7DZ-6220880-A *C6DZ-16A746-A 377633-S (MM-115-F)

H J L

*REFER TO GROUP IN CHASSIS SECTION

P-5554

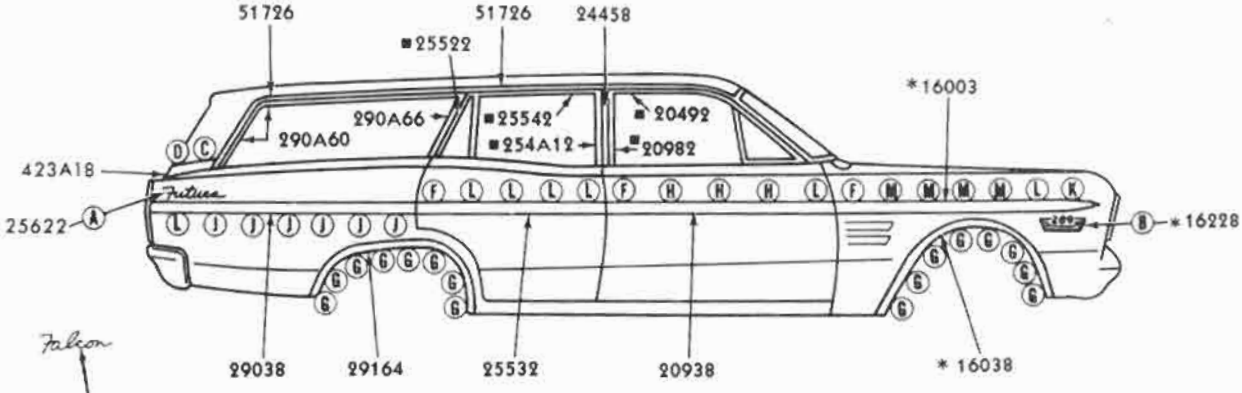

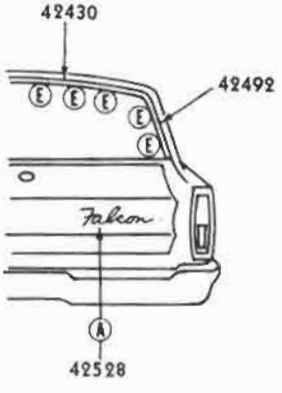

378362-S(MM-228) A

375480-S (MM-222-E) B

*C60B-71423828-A C

52413-S(U-316) D

376378-S(UU-97) E

C6MY-6320880-B F

381671-S (UU-89-C) G

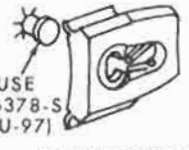

C7DZ-6220880-A H

C7DZ-7129144-A J

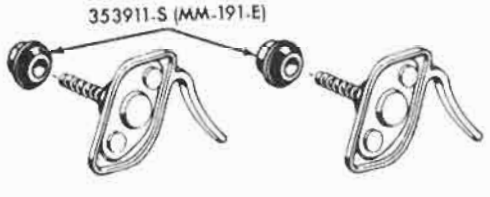

*C5AZ-16A746-B K

C6MY-6329120-E L

C6VY-5321094-A M

* REFER TO GROUP IN CHASSIS SECTION ■ BODY TYPE 71B

P-5558

May, 1975 COPYRIGHT © 1975 — FORD MOTOR COMPANY — DEARBORN, MICHIGAN

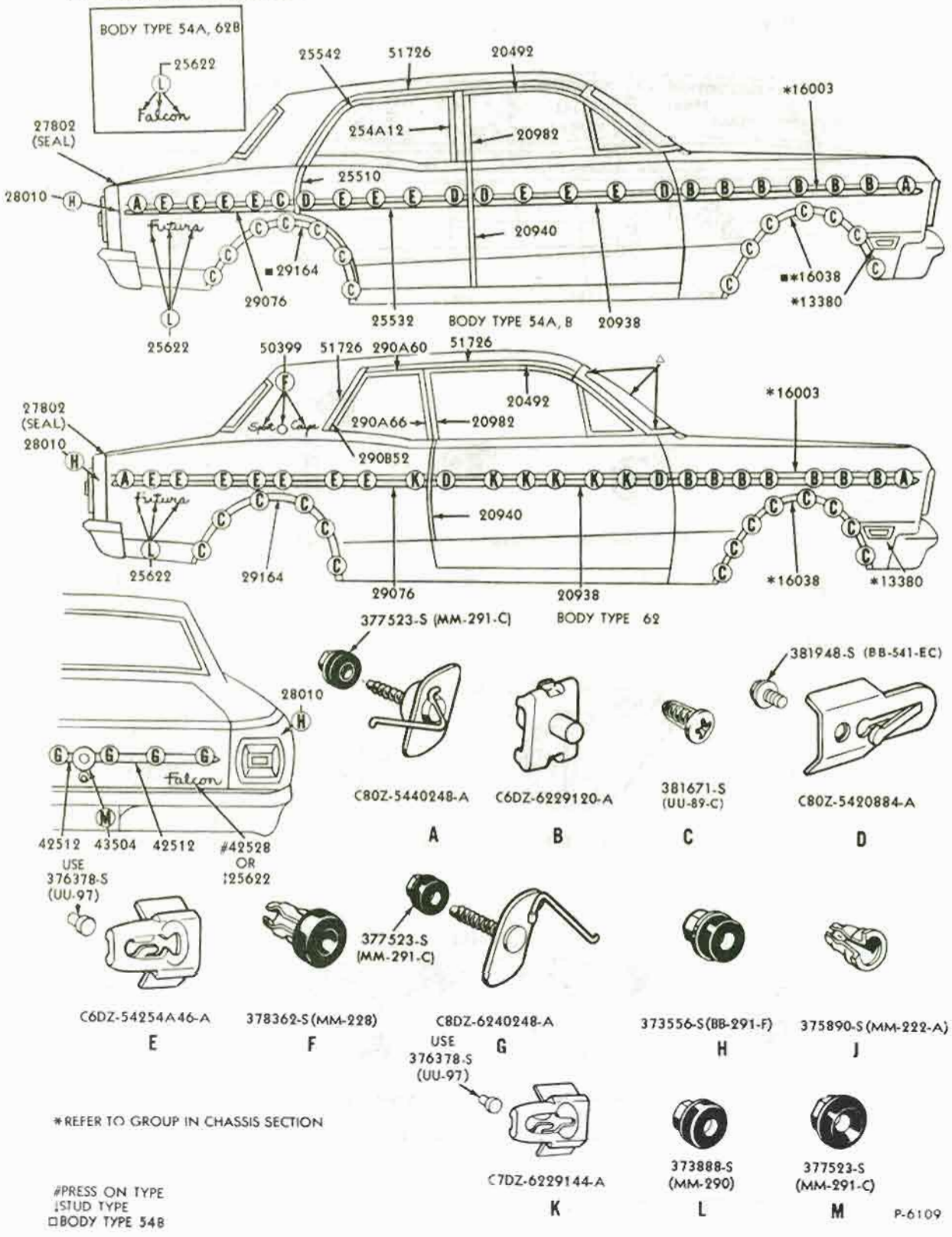

*REFER TO GROUP IN CHASSIS SECTION

#PRESS ON TYPE
‡STUD TYPE
□BODY TYPE 54B

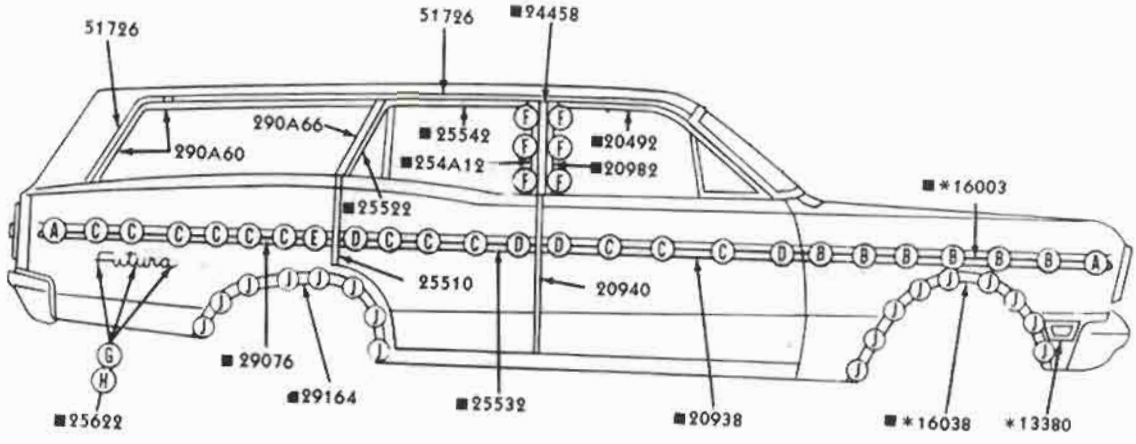

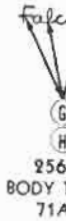

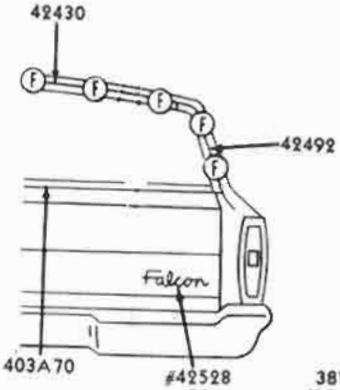

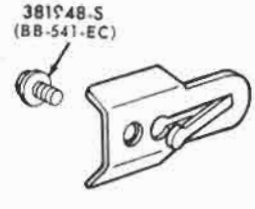

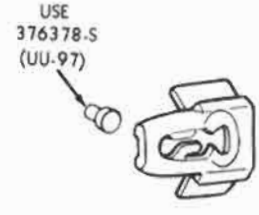

*REFER TO GROUP IN CHASSIS SECTION

#PRESS ON TYPE
‡STUD TYPE
■BODY TYPE 71B

P-6098

May, 1975 COPYRIGHT © 1975 — FORD MOTOR COMPANY — DEARBORN, MICHIGAN FINAL ISSUE

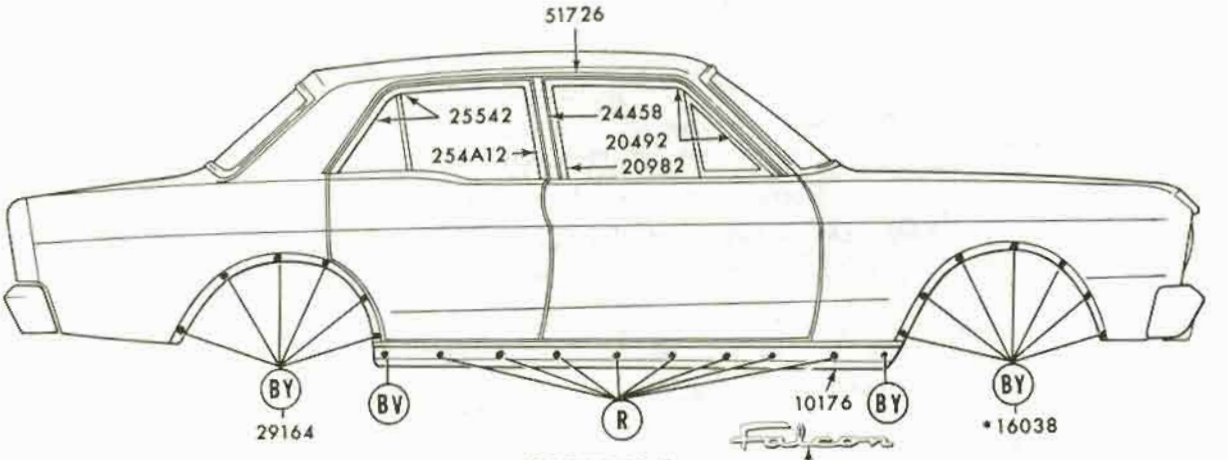

BODY TYPE 54

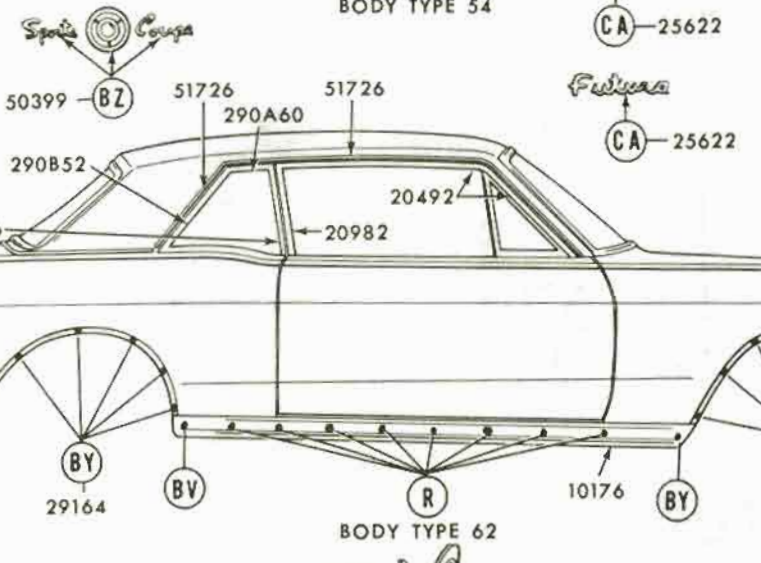

BODY TYPE 62

C6DZ-6210182-A
R

C9DZ-6220884-A
BV

381671-S (UU-89-C)
BY

378362-S (MM-228)
BZ

373888-S (MM-290)
CA

*REFER TO GROUP IN CHASSIS SECTION

P-6559

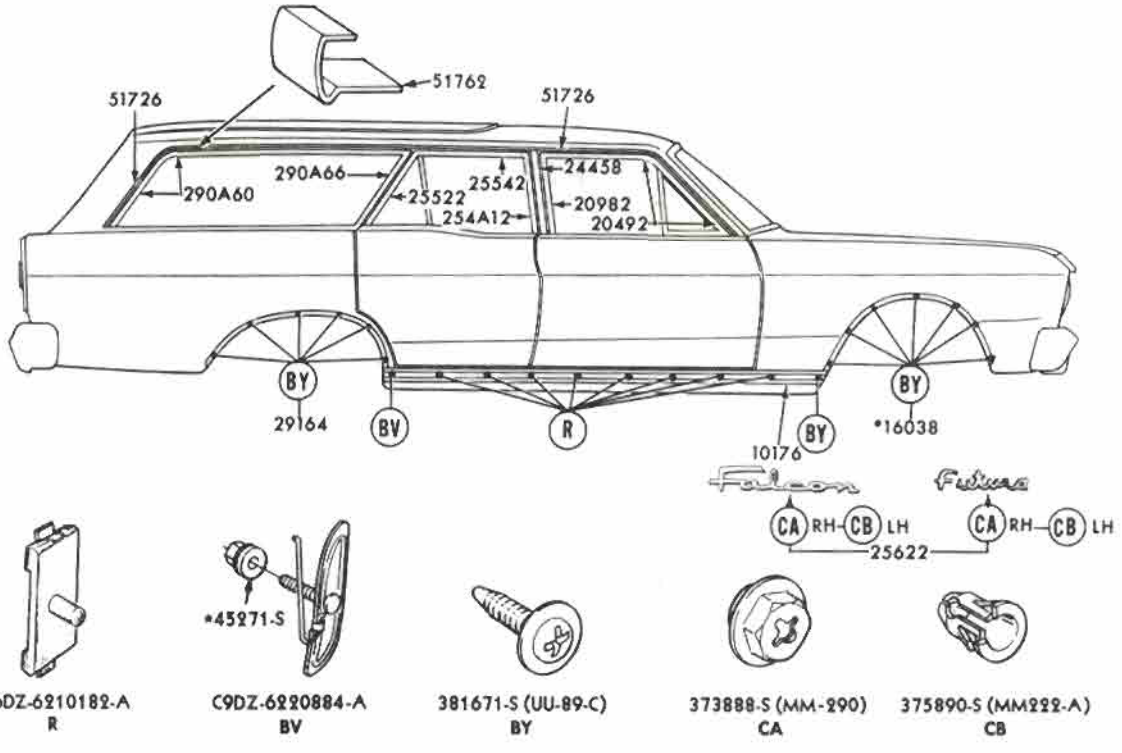

* REFER TO GROUP IN CHASSIS SECTION

P-6560

1969/70 FALCON - BODY TYPE 71 - SIDE

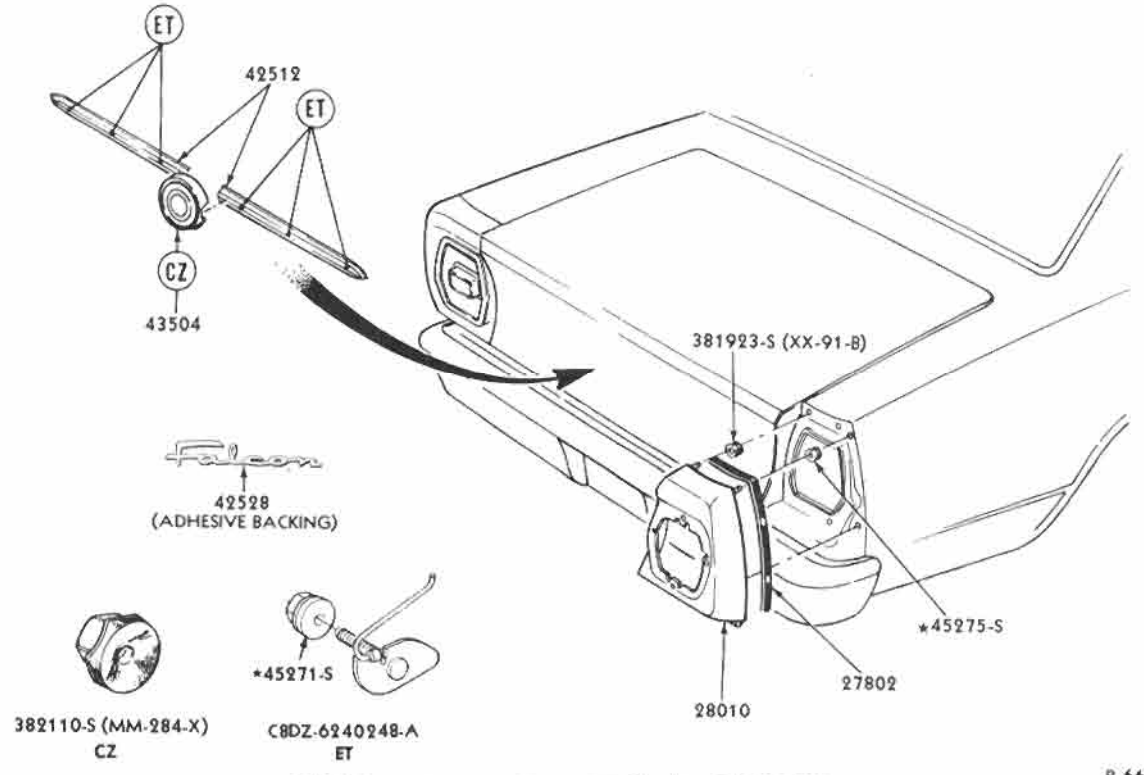

P-6682

1969/70 FALCON - BODY TYPE 54, 62 - BACK END

COPYRIGHT © 1975 — FORD MOTOR COMPANY — DEARBORN, MICHIGAN

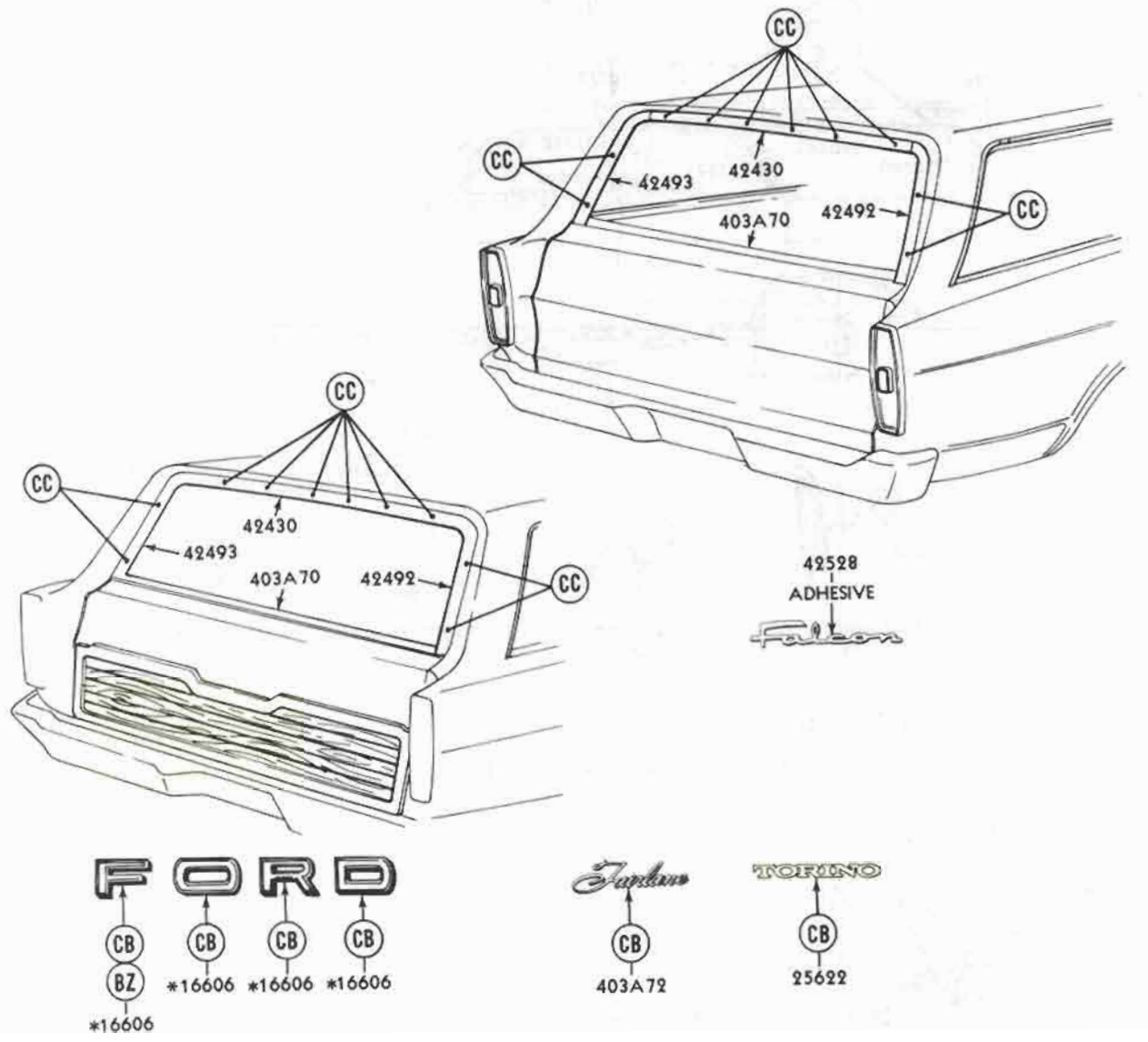

378362-S (MM-228)
BZ

375890-S (MM222-A)
CB

379560-S (UU-89-CA)
CC

*REFER TO GROUP IN CHASSIS SECTION

P-6680

INDEX

TITLE	SECTION	PAGE	ILLUS. NO.
1965			
A (FORD)			
Arm rest and door handle parts	A	1	P-6453
Door and quarter trim panels - body types 57F, 63F (U.S. only)	A	5	P-4818
Door trim panels - body types 53F, 57, 76F (Canada only)	A	34	P-9674
Door and quarter trim panels - body type 62	A	7	P-4820
Door and quarter trim panels - body types 63C, 76B	A	9	P-4814
Interior trim parts - body type 54	A	2	P-6371-A
Interior trim parts - body type 57	A	4	P-4817
Interior trim parts - body type 63	A	8	P-4815
Interior trim parts - body type 71	A	11	P-4763
Interior trim parts - body type 76	A	12	P-4816
Luggage compartment trim - body types 54, 57, 62, 63, 76	A	13	P-4919
B (FAIRLANE)			
Interior trim parts - body type 65	B	1	P-4111
Interior trim parts - body type 71	B	2	P-4112
F (MUSTANG)			
Folding top compartment trim - body type 76	F	4	P-3446
Interior trim parts - body type 63	F	1	P-4767
Interior trim parts - body type 65	F	2	P-4456
Interior trim parts - body type 76	F	3	P-4457
S (THUNDERBIRD)			
Door and quarter trim panels	S	1	P-4324
Interior trim parts - body type 63A, B	S	2	P-4378
Interior trim parts - body type 76	S	4	P-4374
Luggage compartment trim - body type 63	S	5	P-4370
Luggage compartment trim - body type 76	S	5	P-4371
X (FALCON)			
Interior trim parts - body type 59	X	1	P-3167
Interior trim parts - body type 63	X	2	P-4233
Interior trim parts - body type 66	X	6	P-5163
Interior trim parts - body type 71	X	3	P-3200
Interior trim parts - body type 76	X	4	P-4234
Interior trim parts - body type 78	X	5	P-3591
1966			
A (FORD)			
Arm rest and door handle parts	A	1	P-6453
Door and quarter trim panels - body types 57F, 63F	A	6	P-5169
Door and quarter trim panels - body type 62	A	7	P-4820
Door and quarter trim panels - body types 63C, D, 76B, D	A	10	P-5168
Interior trim parts - body type 54	A	2	P-6371-A
Interior trim parts - body type 57	A	4	P-4817
Interior trim parts - body type 63	A	8	P-4815
Interior trim parts - body type 71	A	11	P-4763
Interior trim parts - body type 76	A	12	P-4816
Luggage compartment trim - body types 54, 57, 62, 63, 76	A	13	P-4919
B (FAIRLANE)			
Interior trim parts - body type 54	B	3	P-5160
Interior trim parts - body type 62	B	4	P-5161
Interior trim parts - body type 63	B	4	P-5162
Interior trim parts - body type 71	B	5	P-5164
Interior trim parts - body type 76	B	6	P-5165
Luggage compartment trim - body types 54, 62, 63, 65, 76	B	7	P-5764

COPYRIGHT © 1975 — FORD MOTOR COMPANY — DEARBORN, MICHIGAN

INDEX

TITLE	SECTION	PAGE	ILLUS. NO.
1966			
F (MUSTANG)			
Folding top compartment trim - body type 76	F	4	P-3446
Interior trim parts - body type 63	F	1	P-4767
Interior trim parts - body type 65	F	2	P-4456
Interior trim parts - body type 76	F	3	P-4457
S (THUNDERBIRD)			
Door and quarter trim panels	S	1	P-4324
Interior trim parts - body type 63A, B	S	2	P-4378
Interior trim parts - body type 63C, D	S	3	P-5158
Interior trim parts - body type 76	S	4	P-4374
Luggage compartment trim - body type 63	S	5	P-4370
Luggage compartment trim - body type 76	S	5	P-4371
U (BRONCO)			
Roof trim panels - body type 98	U	2	P-5289
X (FALCON)			
Interior trim parts - body type 54	X	6	P-5160
Interior trim parts - body type 62	X	7	P-5161
Interior trim parts - body type 66	X	6	P-5163
Interior trim parts - body type 71	X	8	P-5166
Luggage compartment trim - body types 54, 62	X	7	P-5764
1967			
A (FORD)			
Arm rest and door handle parts	A	1	P-6453
Door and quarter trim panels - body types 57F, 63J	A	15	P-5586
Door and quarter trim panels - body type 62	A	7	P-4820
Door and quarter trim panels - body types 63C, 76B	A	18	P-5587
Door trim panels - body type 54	A	3	P-6371-B
Interior trim parts - R.H. side - body type 71	A	20	P-5789
Interior trim parts - L.H. side - body type 71	A	19	P-5790
Interior trim parts - body type 54	A	2	P-6371-A
Interior trim parts - body type 57	A	14	P-6419
Interior trim parts - body types 63, 65	A	16	P-6418-A
Interior trim parts - body type 76	A	21	P-6421
Luggage compartment trim - body types 54, 57, 62, 63, 65, 76	A	13	P-5765
B (FAIRLANE)			
Interior trim parts - body type 54	B	3	P-5160
Interior trim parts - body type 62	B	4	P-5161
Interior trim parts - body type 63	B	4	P-5162
Interior trim parts - body type 66	B	3	P-5163
Interior trim parts - body type 71	B	5	P-5164
Interior trim parts - body type 76	B	6	P-5165
Luggage compartment trim - body types 54, 62, 63, 65, 76	B	7	P-5764
F (MUSTANG)			
Door and quarter trim panels - body type 63	F	5	P-5591
Door and quarter trim panels - body type 65	F	6	P-5592
Door and quarter trim panels - body type 76	F	7	P-5593
S (THUNDERBIRD)			
Door and quarter trim panels - body type 57	S	6	P-5584
Door and quarter trim panels - body type 65	S	8	P-5585
Interior trim parts - body type 57	S	7	P-5582
Interior trim parts - body type 65	S	9	P-5583
Luggage compartment trim	S	10	P-5766

INDEX

TITLE	SECTION	PAGE	ILLUS. NO.
1967			
U (BRONCO)			
Door trim panels	U	1	P-5897
Floor mats	U	1	P-5896
Roof trim panels - body type 98	U	2	P-5289
X (FALCON)			
Interior trim parts - body type 54	X	6	P-5160
Interior trim parts - body type 62	X	7	P-5161
Interior trim parts - body type 71	X	8	P-5166
Luggage compartment trim - body types 54, 62	X	7	P-5764
1968			
A (FORD)			
Arm rest and door handle parts	A	1	P-6453
Door and quarter trim panels - body type 62	A	7	P-4820
Door and quarter trim panels - body types 63, 65	A	17	P-6418-B
Door trim panels - body type 54	A	3	P-6371-B
Interior trim parts - body type 54	A	2	P-6371-A
Interior trim parts - body type 57	A	14	P-6419
Interior trim parts - body types 63, 65	A	16	P-6418-A
Interior trim parts - R.H. side - body type 71	A	20	P-5789
Interior trim parts - L.H. side - body type 71	A	19	P-5790
Interior trim parts - body type 76	A	21	P-6421
Luggage compartment trim - body types 54, 57, 62, 63, 65, 76	A	13	P-5765
B (FAIRLANE/TORINO)			
Interior trim parts - body type 54	B	8	P-6353
Interior trim parts - body type 63	B	9	P-6354
Interior trim parts - body type 65	B	10	P-6358
Interior trim parts - body type 66	B	11	P-6352
Interior trim parts - body type 71	B	5	P-5164
Interior trim parts - body type 76	B	12	P-6356
Luggage compartment trim - body types - 54, 62, 63, 65, 76	B	7	P-5764
F (MUSTANG)			
Interior trim parts - body type 63	F	5	P-5591
Interior trim parts - body type 65	F	6	P-5592
Interior trim parts - body type 76	F	7	P-5593
S (THUNDERBIRD)			
Door and quarter trim panels - body type 65	S	10	P-6160
Door trim panels - body type 57	S	11	P-6159
Interior trim parts - body type 57	S	12	P-6161
Interior trim parts - body type 65	S	14	P-6162
Luggage compartment trim	S	10	P-5766
U (BRONCO)			
Door trim panels	U	1	P-5897
Floor mats	U	1	P-5896
Roof trim panels - body type 98	U	2	P-5289
X (FALCON)			
Interior trim parts - body type 54	X	9	P-6353
Interior trim parts - body type 62	X	7	P-5161
Interior trim parts - body type 71	X	8	P-5166
Luggage compartment trim - body types 54, 62	X	7	P-5764

COPYRIGHT © 1975 — FORD MOTOR COMPANY — DEARBORN, MICHIGAN

INDEX

TITLE	SECTION	PAGE	ILLUS. NO.
1969			
A (FORD)			
Arm rest and door handle parts	A	30	P-7472
Door and quarter trim panels - body types 54C, 57F, 65A	A	23	P-6801
Door and quarter trim panels - body type 62	A	7	P-4820
Interior trim parts - body type 54	A	22	P-6795
Interior trim parts - body type 57	A	24	P-6796
Interior trim parts - body types 63, 65	A	25	P-6797
Interior trim parts - R.H. side - body type 71	A	27	P-6798
Interior trim parts - L.H. side - body type 71	A	26	P-6799
Interior trim parts - body type 76	A	28	P-6800
Luggage compartment trim	A	29	P-7425
B (FAIRLANE/TORINO)			
Interior trim parts - body type 54	B	8	P-6353
Interior trim parts - body type 63	B	9	P-6354
Interior trim parts - body type 65	B	10	P-6355
Interior trim parts - body type 66	B	11	P-6352
Interior trim parts - body type 71	B	5	P-5164
Interior trim parts - body type 76	B	12	P-6356
Luggage compartment trim - body types 54, 62, 63, 65, 76	B	7	P-5764
F (MUSTANG)			
Interior trim parts - body type 63 - w/fixed rear seat	F	8	P-6845
Interior trim parts - body type 63 - w/folding rear seat	F	9	P-6848
Interior trim parts - body type 65	F	10	P-6846
Interior trim parts - body type 76	F	11	P-6847
Luggage compartment trim	F	12	P-7428
Roll bar parts - Shelby GT350/500	F	12	P-6939
S (THUNDERBIRD)			
Door and quarter trim panels - body type 65	S	13	P-6160
Door trim panels - body type 57	S	11	P-6159
Interior trim parts - body type 57	S	12	P-6161
Interior trim parts - body type 65	S	14	P-6162
Luggage compartment trim	S	10	P-5766
U (BRONCO)			
Door trim panels	U	1	P-5897
Floor mats	U	1	P-5896
Roof trim panels - body type 98	U	2	P-5289
X (FALCON)			
Interior trim parts - body type 54	X	9	P-6353
Interior trim parts - body type 62	X	7	P-5161
Interior trim parts - body type 71	X	8	P-5166
Luggage compartment trim - body types 54, 62	X	7	P-5764

INDEX

1970

TITLE	SECTION	PAGE	ILLUS. NO.
A (FORD)			
Arm rest and door handle parts	A	30	P-7472
Curtain - driver compartment	A	29	P-7400
Interior trim parts - body type 54	A	22	P-6795
- body type 57	A	24	P-6796
- body types 63, 65	A	25	P-6797
- body type 76	A	28	P-6800
- R.H. side-body type 71	A	27	P-6798
- L.H. side-body type 71	A	26	P-6799
Luggage compartment trim	A	29	P-7425
B (FAIRLANE/TORINO)			
B (FALCON) - FROM 1/2/70			
Interior trim parts - body type 54	B	13	P-7559
- body type 57	B	14	P-7260
- body type 62	B	21	P-7261
- body type 63	B	15	P-7262
- body type 65	B	16	P-7263
- body type 66	B	17	P-7264
- body type 71 - L.H. side	B	18	P-7265
- body type 71 - R.H. side	B	19	P-7266
- body type 76	B	20	P-7267
Luggage compartment trim - body types 54, 62, 63, 65, 76	B	7	P-7427
F (MUSTANG)			
Interior trim parts - body type 63 - w/fixed rear seat	F	8	P-6845
- body type 63 - w/folding rear seat	F	9	P-6848
- body type 65	F	10	P-6846
- body type 76	F	11	P-6847
Luggage compartment trim	F	12	P-7428
Roll bar parts - Shelby GT350/500	F	12	P-6939
P (MAVERICK)			
Interior trim parts - body type 62	P	1	P-6901
Luggage compartment trim	P	2	P-7426
S (THUNDERBIRD)			
Interior trim parts - body type 57	S	15	P-7250
- body type 65	S	16	P-7268
Luggage compartment trim	S	17	P-7429
U (BRONCO)			
Door trim panels	U	1	P-5897
Floor mats	U	1	P-5896
Roof trim panels - body type 98	U	2	P-5289
X (FALCON) - BEFORE 1/2/70			
FOR UNITS BUILT FROM 1/2/70 REFER TO B (FALCON)			
Interior trim parts - body type 54	X	9	P-6353
- body type 62	X	7	P-5161
- body type 71	X	8	P-5166
Luggage compartment trim - body types 54, 62	X	7	P-5764

COPYRIGHT © 1975 — FORD MOTOR COMPANY — DEARBORN, MICHIGAN

INDEX

TITLE	SECTION	PAGE	ILLUS. NO.
1971			
A (FORD)			
Arm rest and door handle parts	A	30	P-7472
Curtain - driver compartment	A	29	P-7400
Interior trim parts - body type 53	A	31	P-8164
- body type 54	A	22	P-6795
- body type 57	A	24	P-6796
- body type 65	A	32	P-8165
- body type 76	A	28	P-6800
- R.H. side-body type 71	A	27	P-6798
- L.H. side-body type 71	A	33	P-8166
Luggage compartment trim	A	29	P-7425
B (TORINO)			
Interior trim parts - body type 54	B	13	P-7559
- body type 57	B	14	P-7260
- body type 63	B	15	P-7262
- body type 65	B	16	P-7263
- body type 66	B	17	P-7264
- body type 71 - L.H. side	B	18	P-7265
- body type 71 - R.H. side	B	19	P-7266
- body type 76	B	20	P-7267
Luggage compartment trim - body types 54, 63, 65, 76	B	7	P-7427
F (MUSTANG)			
Interior trim parts - body type 63 - w/fixed rear seat	F	13	P-8053
- body type 63 - w/folding rear seat	F	14	P-8054
- body type 65	F	15	P-8055
- body type 76	F	16	P-8056
L (PINTO)			
Interior trim parts - body type 62	L	1	P-7946
- body type 64	L	3	P-8275
Luggage compartment trim	L	2	P-7932
P (MAVERICK)			
Interior trim parts - body type 54	P	3	P-8194
- body type 62	P	1	P-6901
Luggage compartment trim	P	2	P-7426
S (THUNDERBIRD)			
Interior trim parts - body type 57	S	15	P-7250
- body type 65	S	16	P-7268
Luggage compartment trim	S	17	P-7429
U (BRONCO)			
Door trim panels	U	1	P-5897
Floor mats	U	1	P-5896
Roof trim panels - body type 98	U	2	P-5289

INDEX

1972

TITLE	SECTION	PAGE	ILLUS. NO.
A (FORD)			
Arm rest and door handle parts	A	30	P-7472
Curtain - driver compartment	A	29	P-7400
Interior trim parts - body type 53	A	31	P-8164
- body type 54	A	22	P-6795
- body type 57	A	24	P-6796
- body type 65	A	32	P-8165
- body type 76	A	28	P-6800
- R.H. side - body type 71	A	27	P-6798
- L.H. side - body type 71	A	33	P-8166
Luggage compartment trim	A	29	P-7425
B (TORINO)			
Interior trim parts - body type 53	B	22	P-8737
- body type 63R	B	27	P-8743
- body type 65	B	23	P-8739
- body type 97D, K	B	26	P-8742
- body type 71 - L. H. side	B	25	P-8741
- body type 71 - R.H. side	B	24	P-8740
- body type 97R	B	28	P-8744
Luggage compartment trim - body types 54, 63, 65	B	29	P-8869
F (MUSTANG)			
Door trim panels	F	17	P-10542
Interior trim parts - body type 63 - w/fixed rear seat	F	13	P-8053
- body type 63 - w/folding rear seat	F	14	P-8054
- body type 65	F	15	P-8055
- body type 76	F	16	P-8056
Luggage compartment trim	F	12	P-7428
L (PINTO)			
Interior trim parts - body type 62	L	1	P-7946
- body type 64	L	3	P-8275
- body type 73	L	4	P-8915
Luggage compartment trim	L	2	P-7932
P (MAVERICK)			
Interior trim parts - body type 54	P	3	P-8194
- body type 62	P	1	P-6901
S (THUNDERBIRD)			
Interior trim parts - body type 65	S	18	P-8615
Luggage compartment trim	S	17	P-8616
U (BRONCO)			
Door trim panels	U	1	P-5897
Floor mats	U	1	P-5896
Roof trim panels - body type 98	U	2	P-5289
Cover - spare tire	U	2	P-10800

COPYRIGHT © 1975 — FORD MOTOR COMPANY — DEARBORN, MICHIGAN

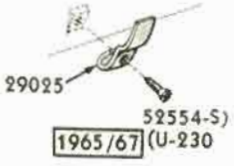

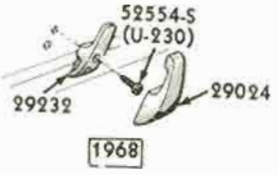

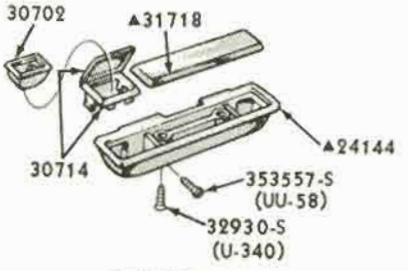

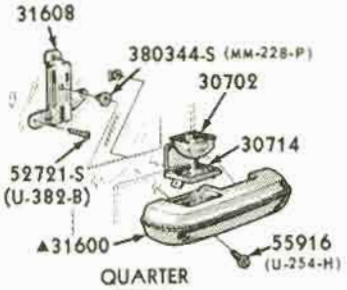

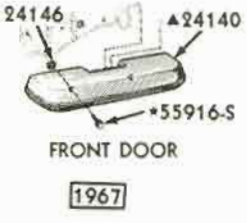

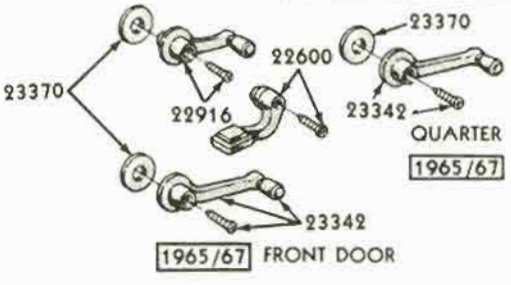

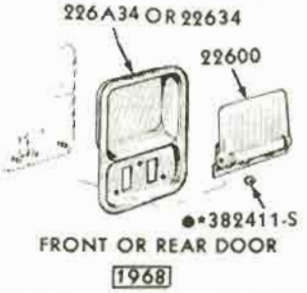

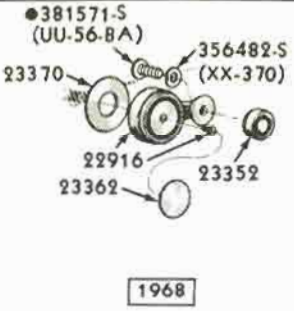

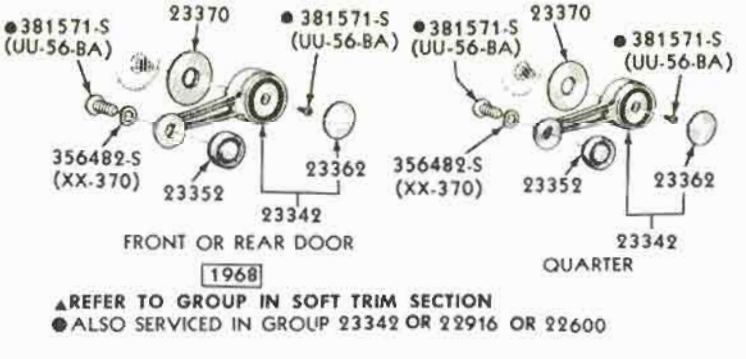

▲REFER TO GROUP IN SOFT TRIM SECTION
●ALSO SERVICED IN GROUP 23342 OR 22916 OR 22600

P-6453

ARM RESTS, DOOR HANDLES and RELATED PARTS
1965/68 FORD

COPYRIGHT © 1975 — FORD MOTOR COMPANY — DEARBORN, MICHIGAN

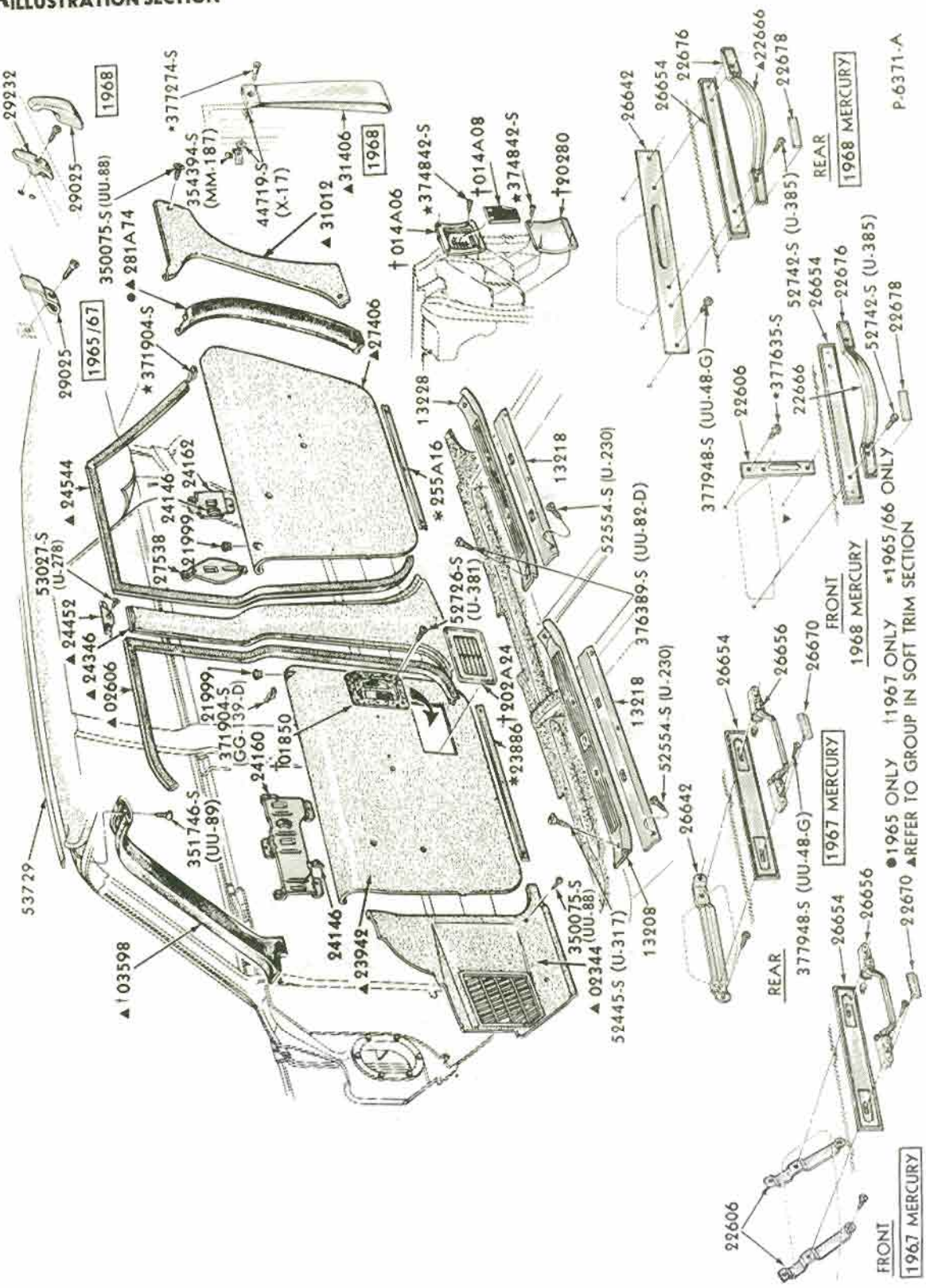
29232
29025
1968
1965/67
350075-S (UU-88)
281A74
*377274-S
354394-S (MM-187)
44719-S (X-17)
31012
31406
1968
014A06
*374842-S
014A08
*374842-S
90280
26642
26654
22676
22666
22678
REAR
1968 MERCURY
P-6371-A
371904-S
27406
255A16
13228
24544
24146
24162
27538
21999
53027-S (U-278)
24452
24346
02606
21999
371904-S (GG-139-D)
24160
01850
351746-S (UU-89)
53729
03598
24146
23942
350075-S (UU-88)
02344
52445-S (U-317)
13208
52726-S (U-381)
23886
202A24
13218
52554-S (U-230)
376389-S (UU-82-D)
52554-S (U-230)
13218
26642
377948-S (UU-48-G)
22606
377635-S
22666
52742-S (U-385)
26654
22676
52742-S (U-385)
22678
26654
26656
26670
FRONT
1968 MERCURY
26654
26656
377948-S (UU-48-G)
1967 MERCURY
REAR
26654
26656
22670
●1965 ONLY †1967 ONLY *1965/66 ONLY
▲REFER TO GROUP IN SOFT TRIM SECTION
22606
FRONT
1967 MERCURY

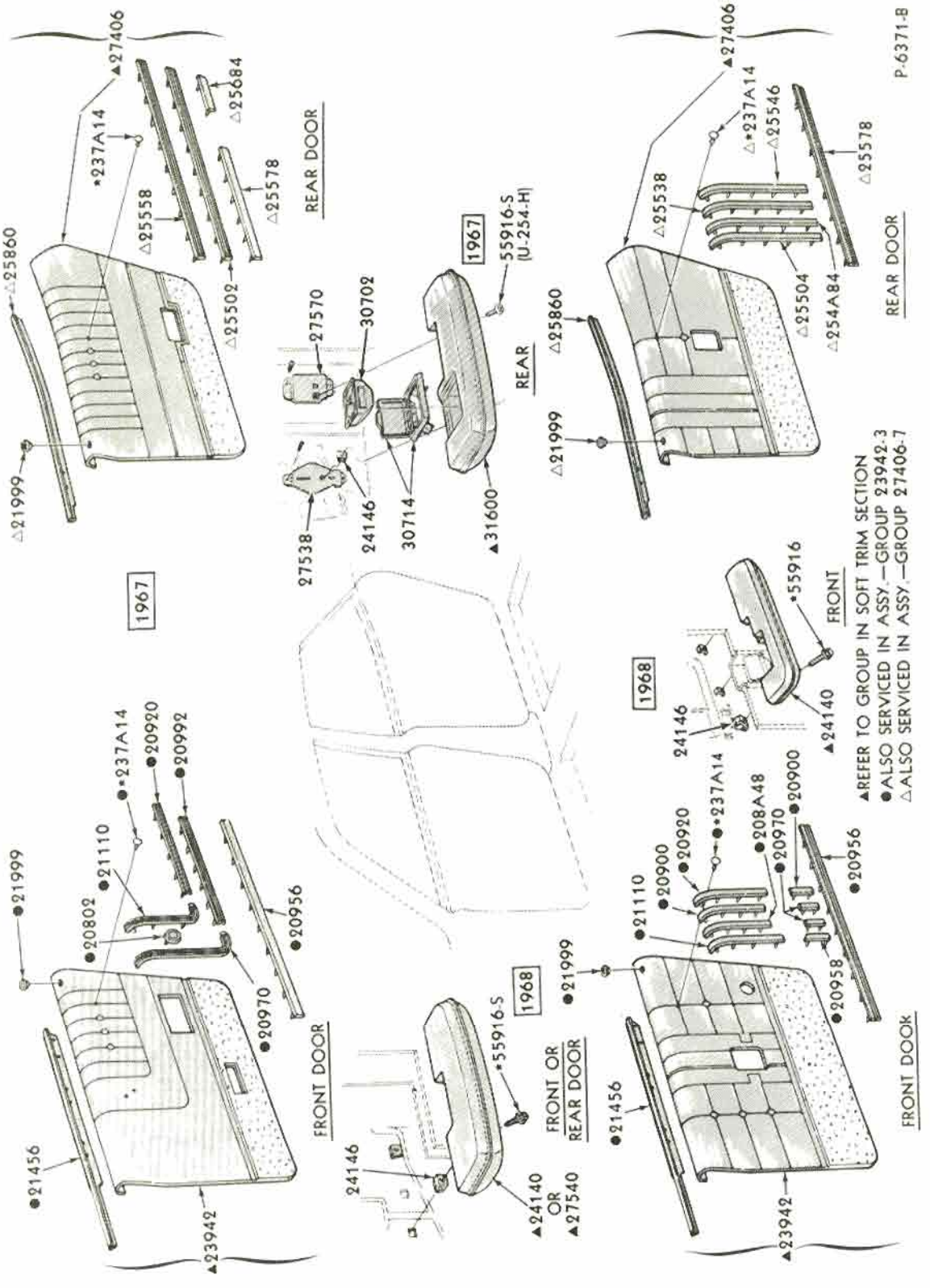

DOOR TRIM PANELS and RELATED PARTS
1967/68 FORD - BODY TYPE 54

COPYRIGHT © 1975 — FORD MOTOR COMPANY — DEARBORN, MICHIGAN

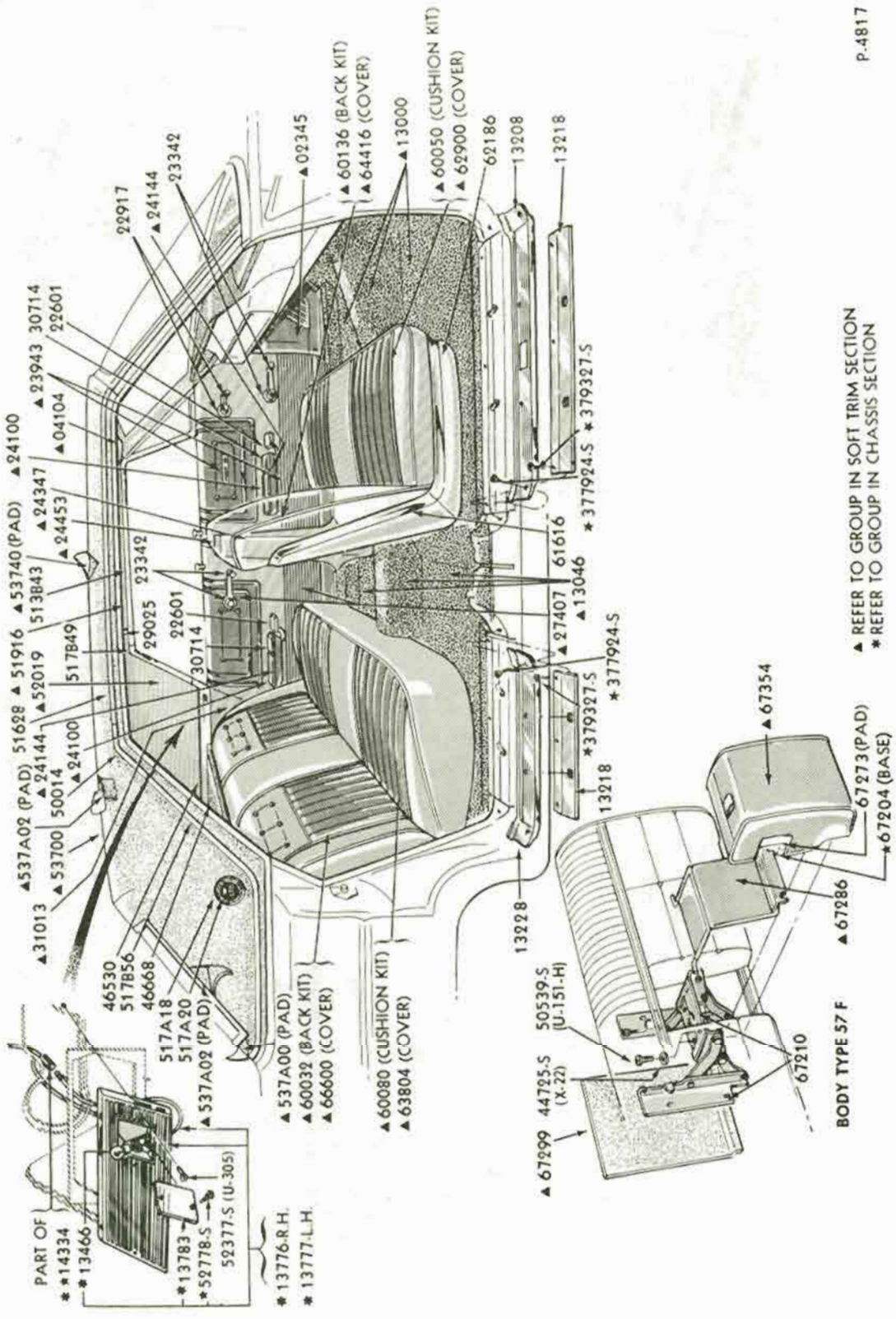

INTERIOR TRIM and RELATED PARTS - TYPICAL
1965/66 FORD - BODY TYPE 57

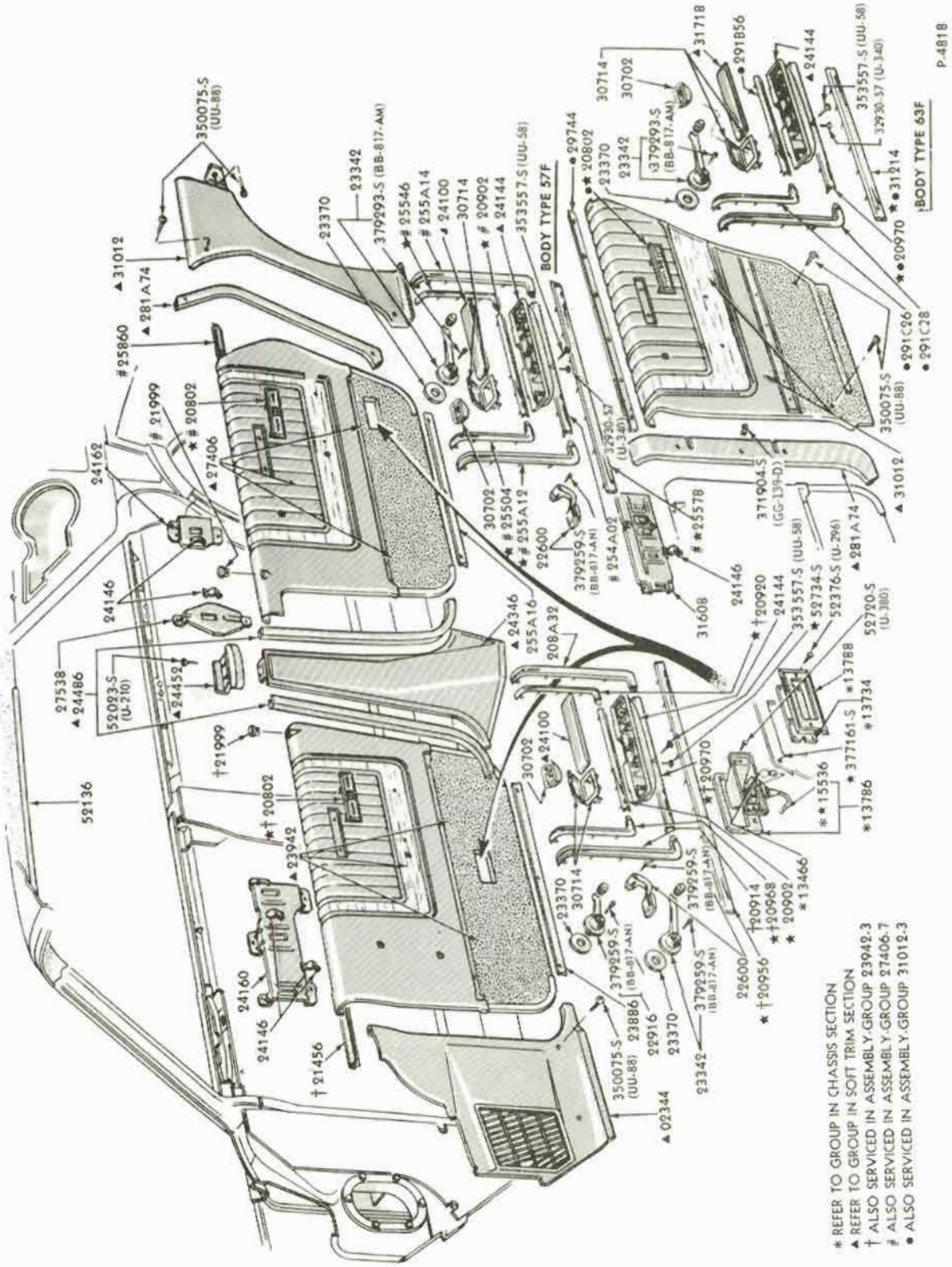

DOOR and QUARTER TRIM PANELS and RELATED PARTS
1965 FORD - BODY TYPES 57F, 63F (U.S. ONLY)

COPYRIGHT © 1975 — FORD MOTOR COMPANY — DEARBORN, MICHIGAN

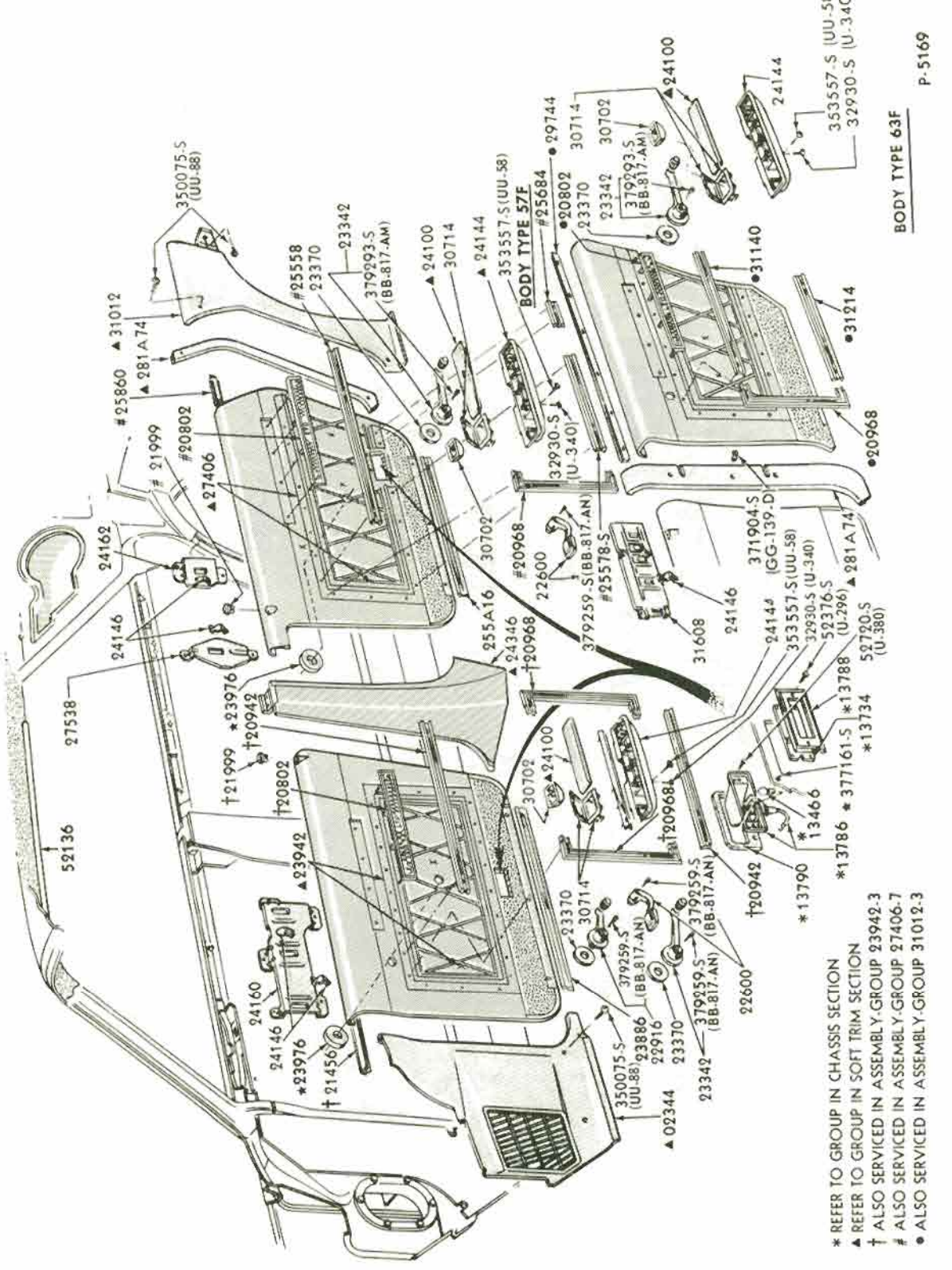

DOOR and QUARTER TRIM PANELS and RELATED PARTS
1966 FORD - BODY TYPE 57F, 63F

P-4820

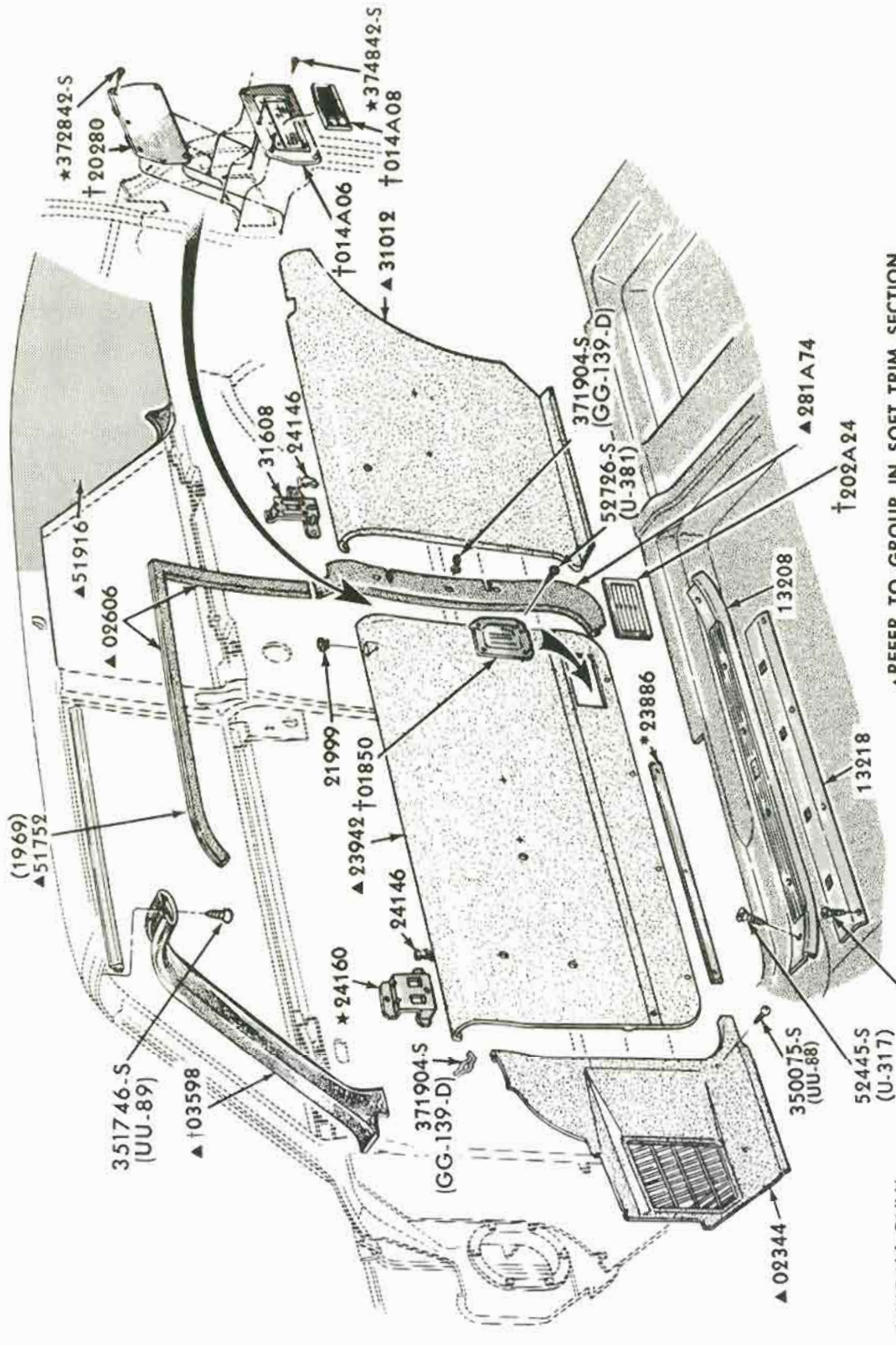

DOOR and QUARTER TRIM PANELS and RELATED PARTS
1965/69 FORD - BODY TYPE 62

COPYRIGHT © 1975 — FORD MOTOR COMPANY — DEARBORN, MICHIGAN

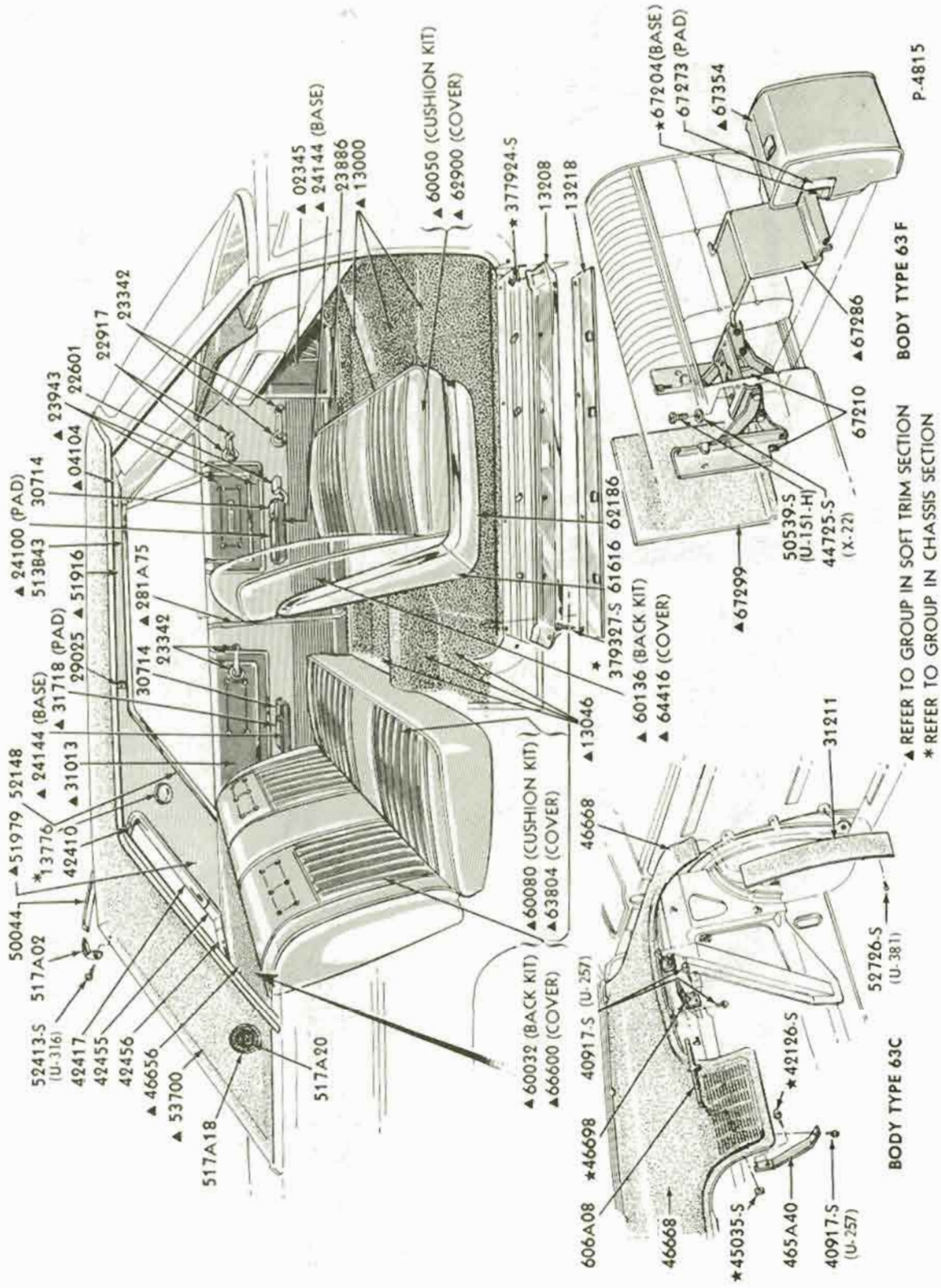

INTERIOR TRIM and RELATED PARTS - TYPICAL
1965/66 FORD - BODY TYPE 63

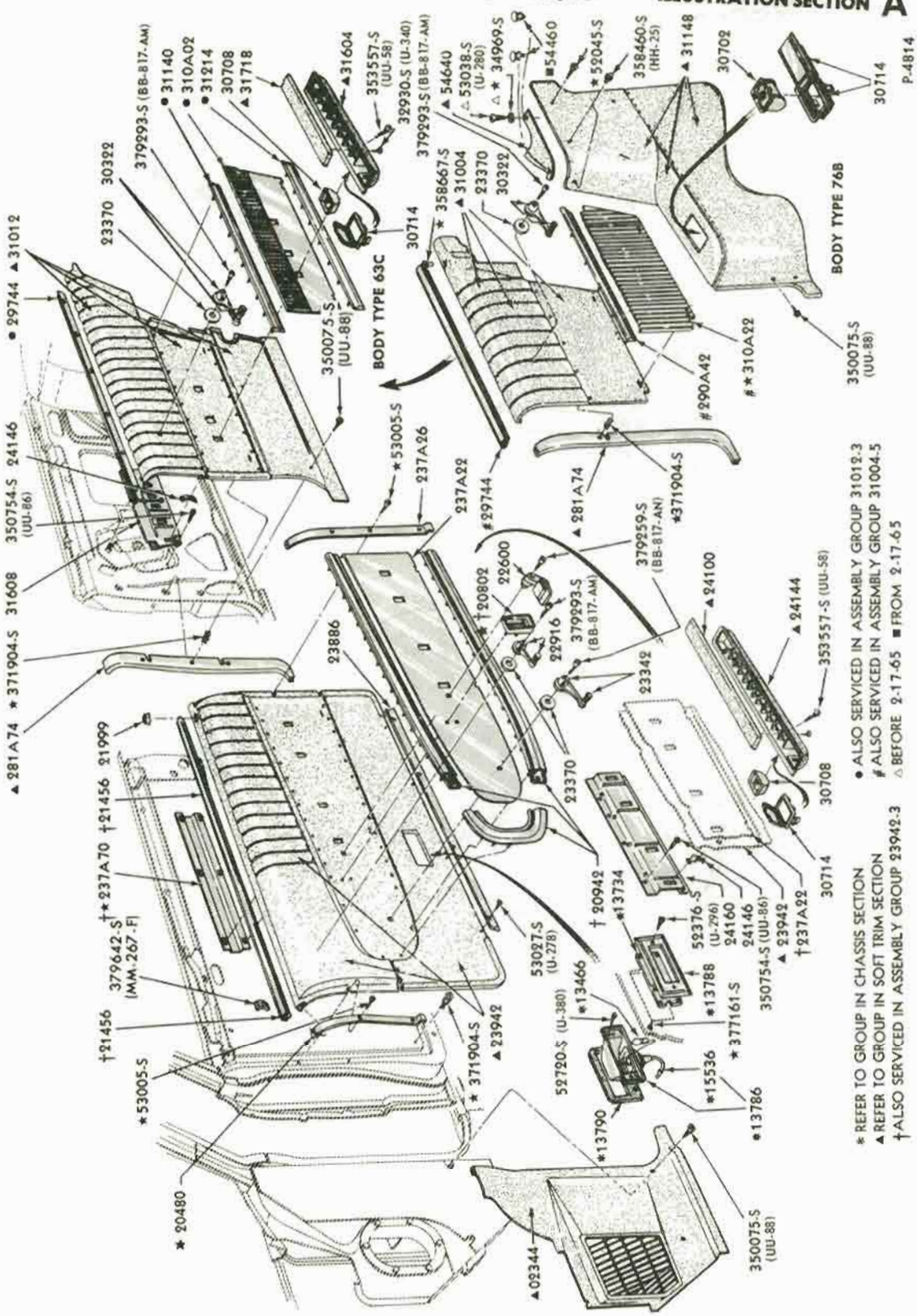

DOOR and QUARTER TRIM PANELS and RELATED PARTS
1965 FORD - BODY TYPES 63C, 76B

COPYRIGHT © 1975 — FORD MOTOR COMPANY — DEARBORN, MICHIGAN

FORD CAR PARTS

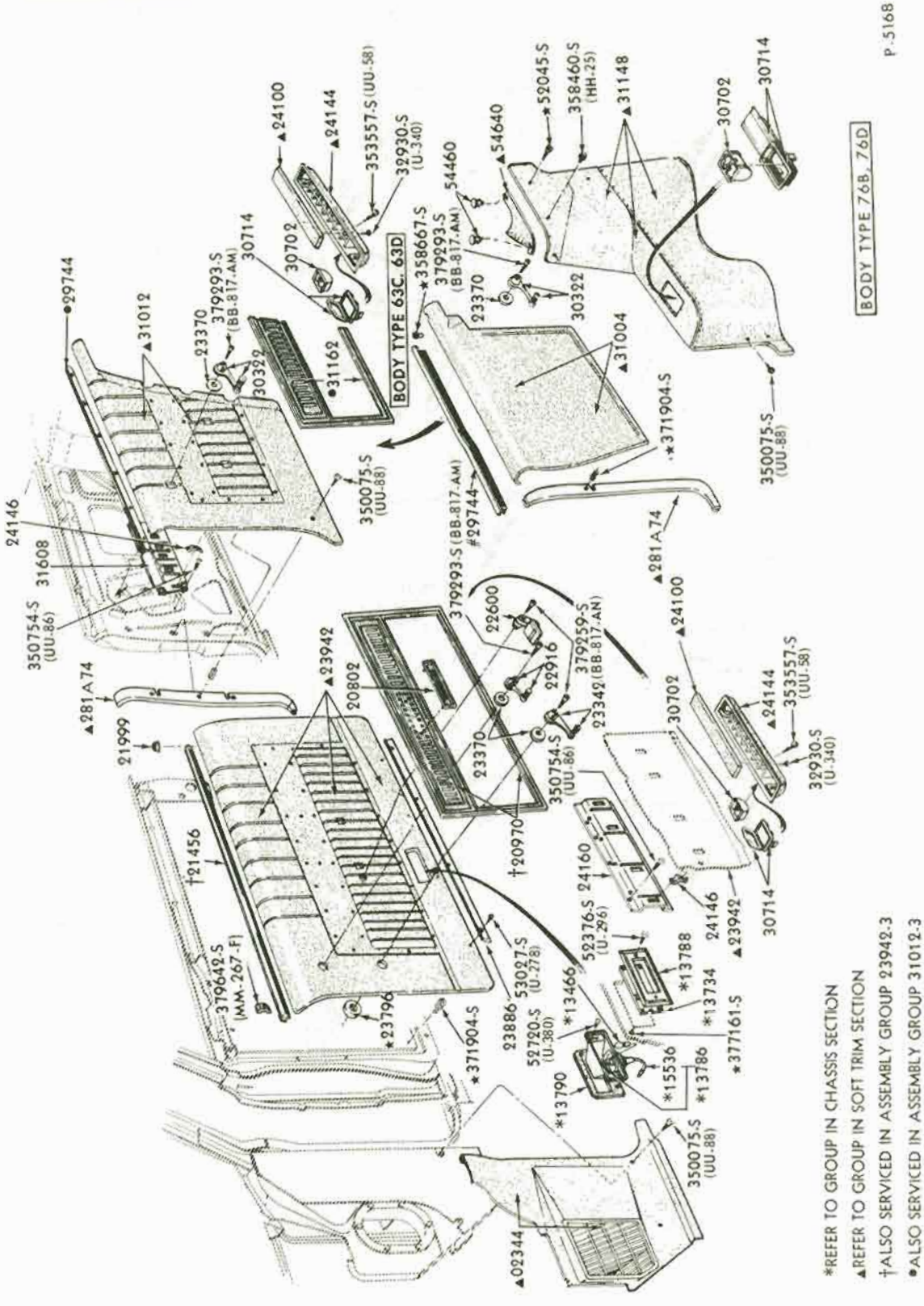

DOOR and QUARTER TRIM PANELS and RELATED PARTS
1966 FORD - BODY TYPES 63C, D, 76B, D

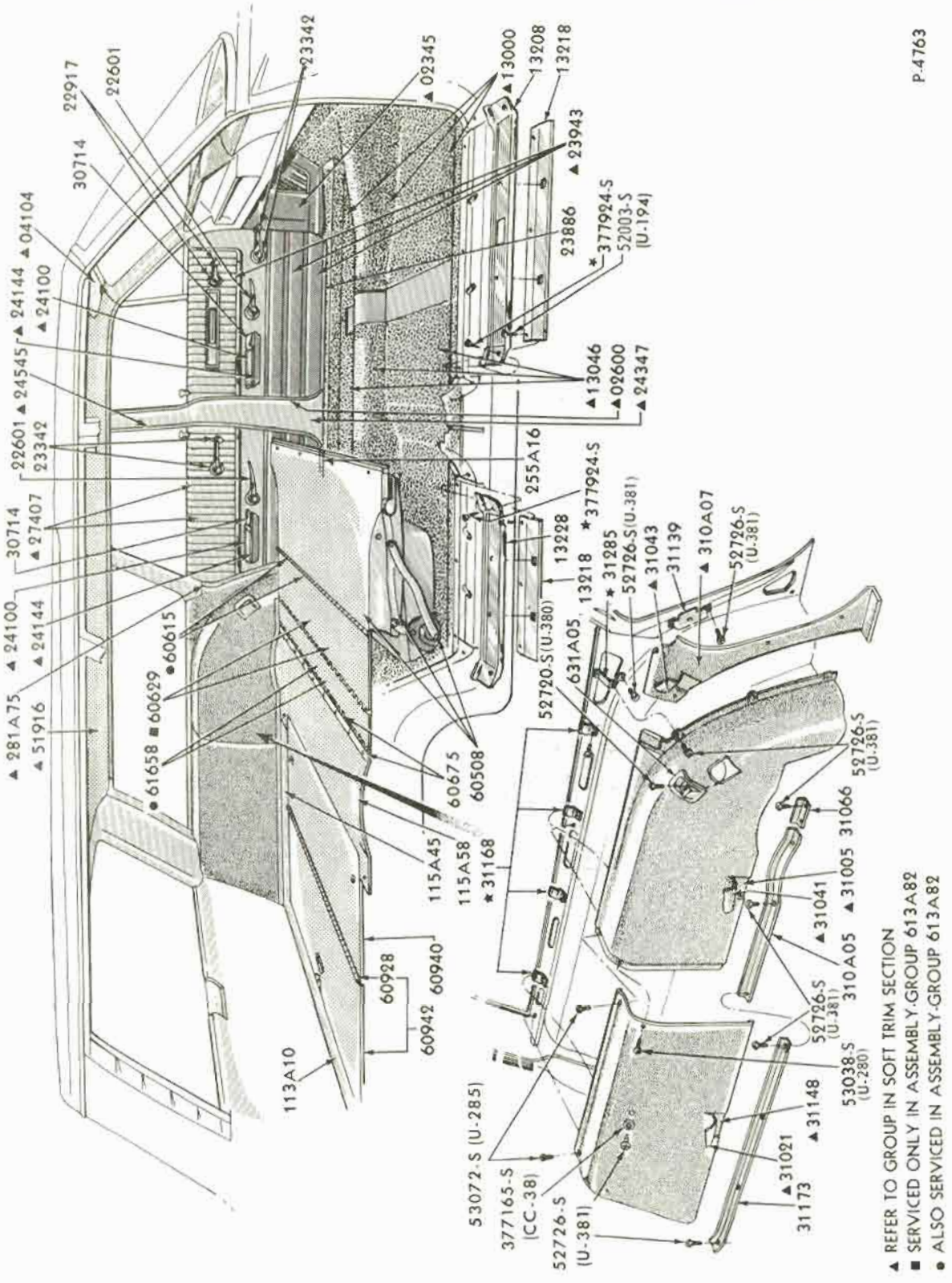

COPYRIGHT © 1975 — FORD MOTOR COMPANY — DEARBORN, MICHIGAN

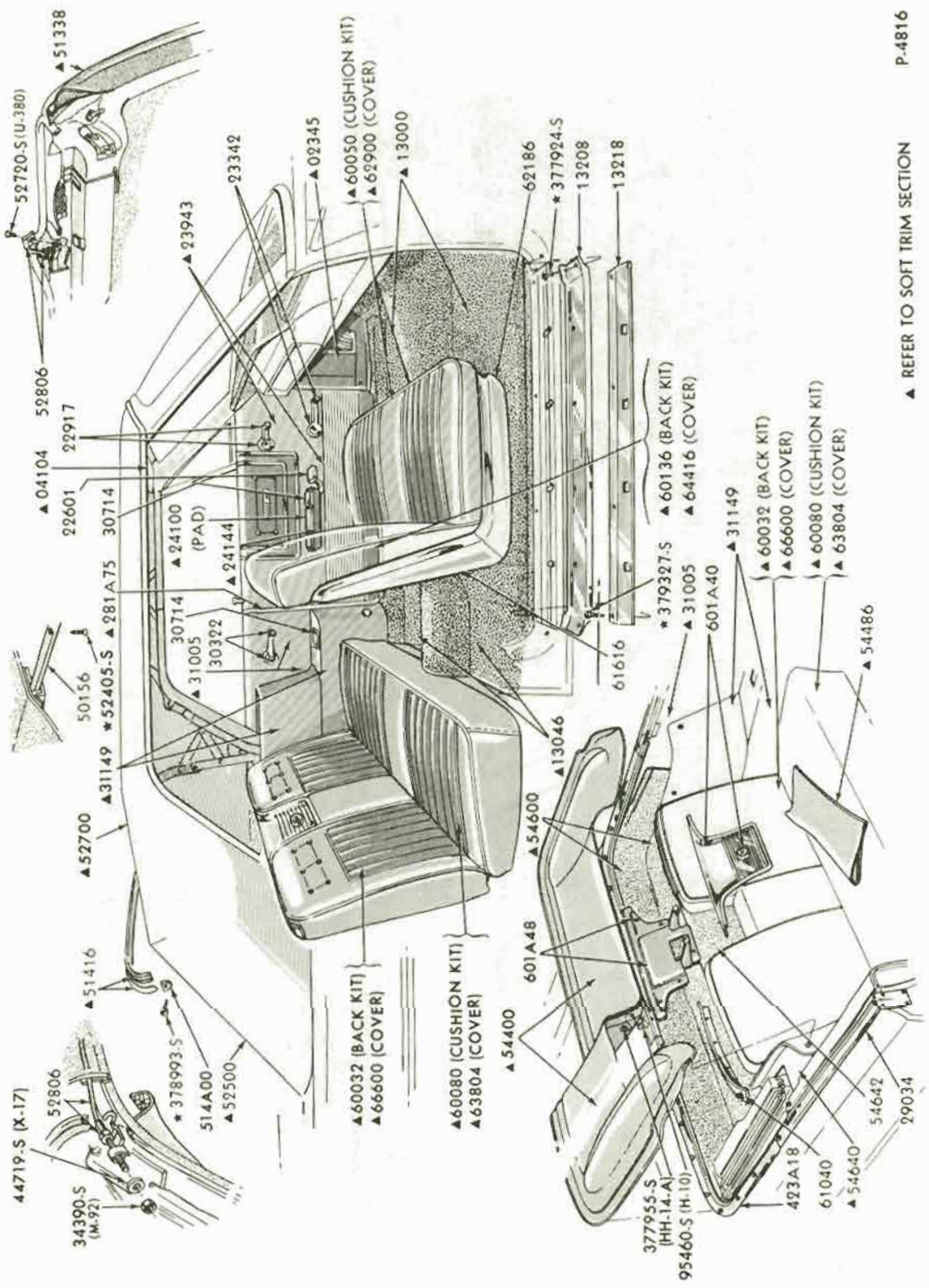

INTERIOR TRIM and RELATED PARTS - TYPICAL
1965/66 FORD - BODY TYPE 76

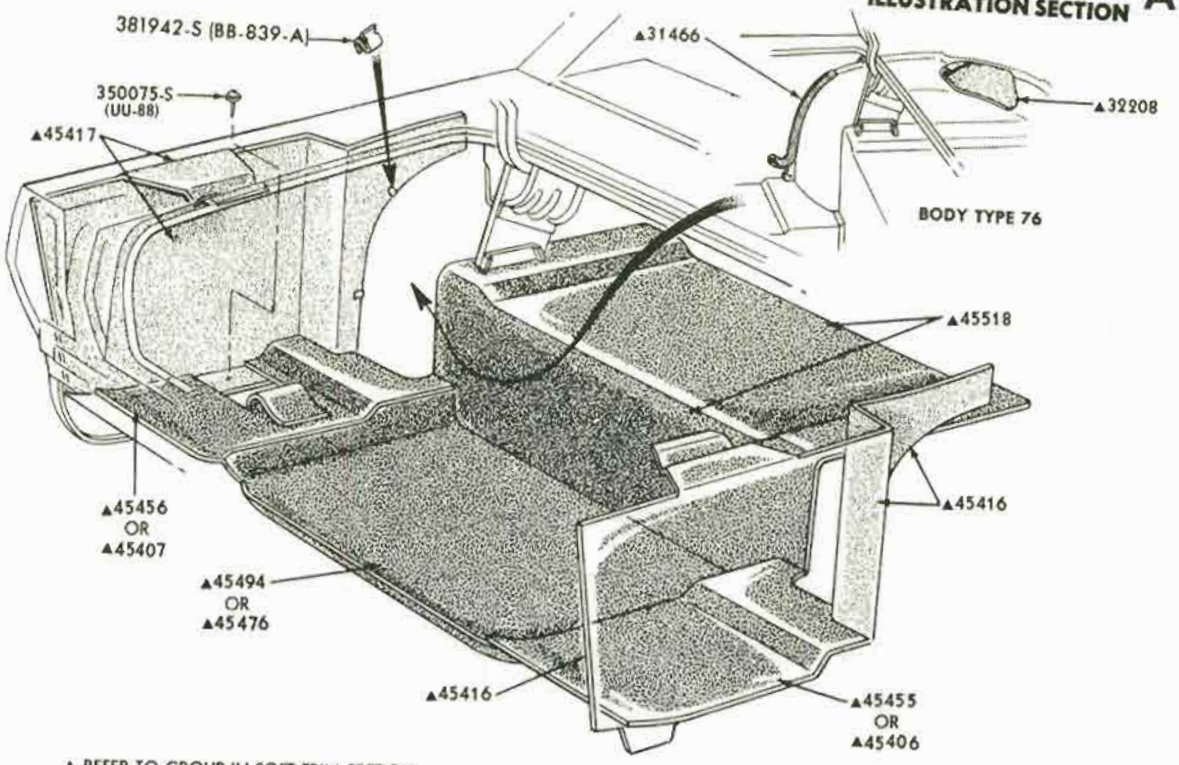

LUGGAGE COMPARTMENT TRIM
1965/66 FORD - BODY TYPES 54, 57, 62, 63, 76

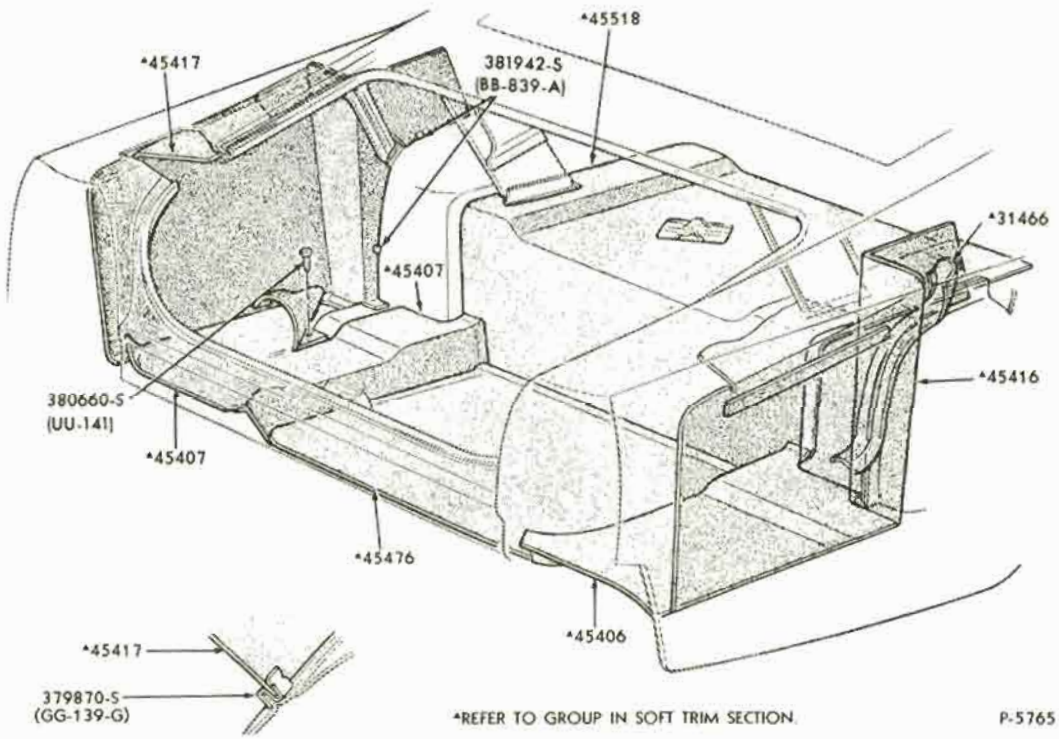

LUGGAGE COMPARTMENT TRIM
1967/68 FORD - BODY TYPES 54, 57, 62, 63, 65, 76

COPYRIGHT © 1975 — FORD MOTOR COMPANY — DEARBORN, MICHIGAN

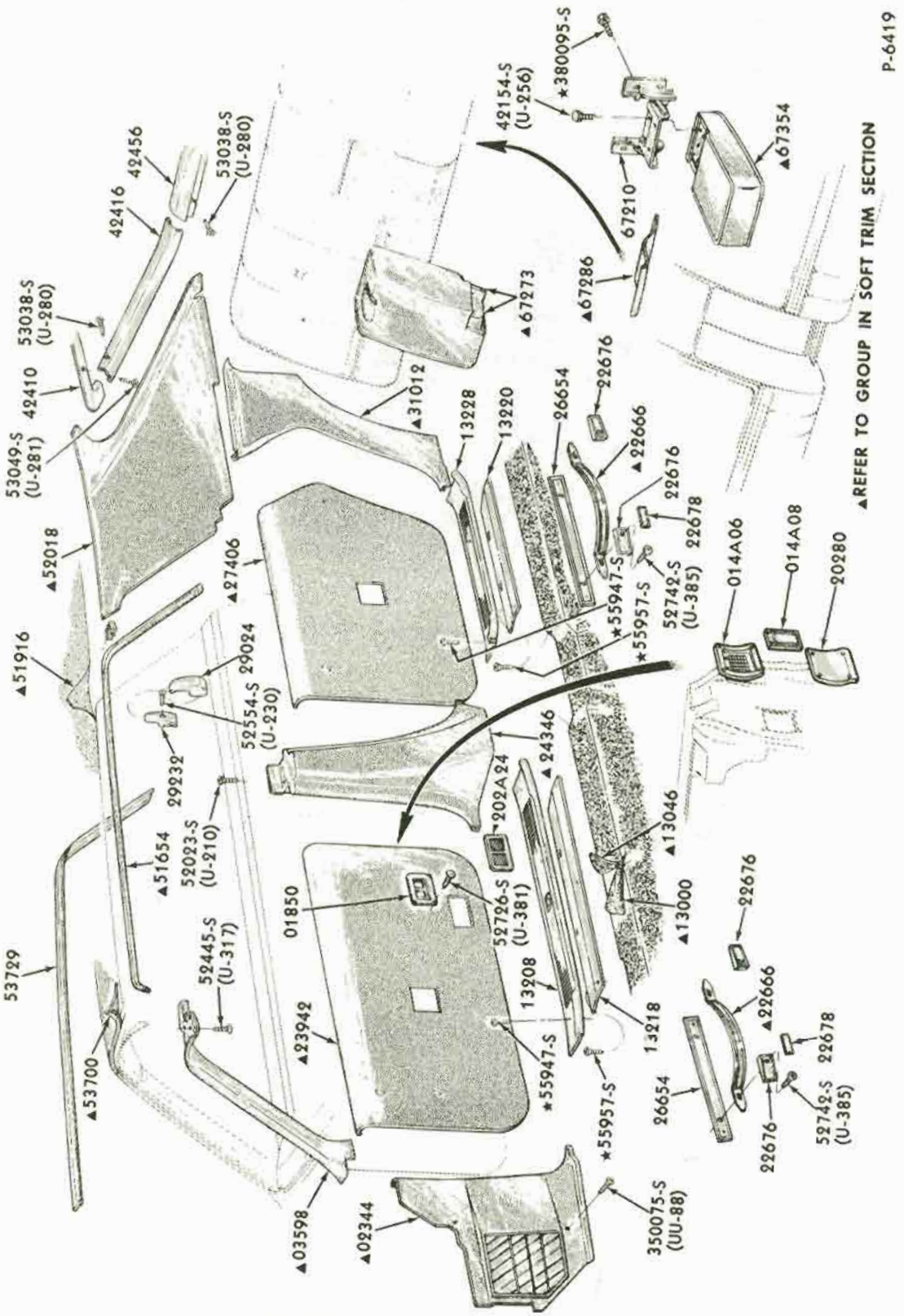

INTERIOR TRIM and RELATED PARTS
1967/68 FORD - BODY TYPE 57

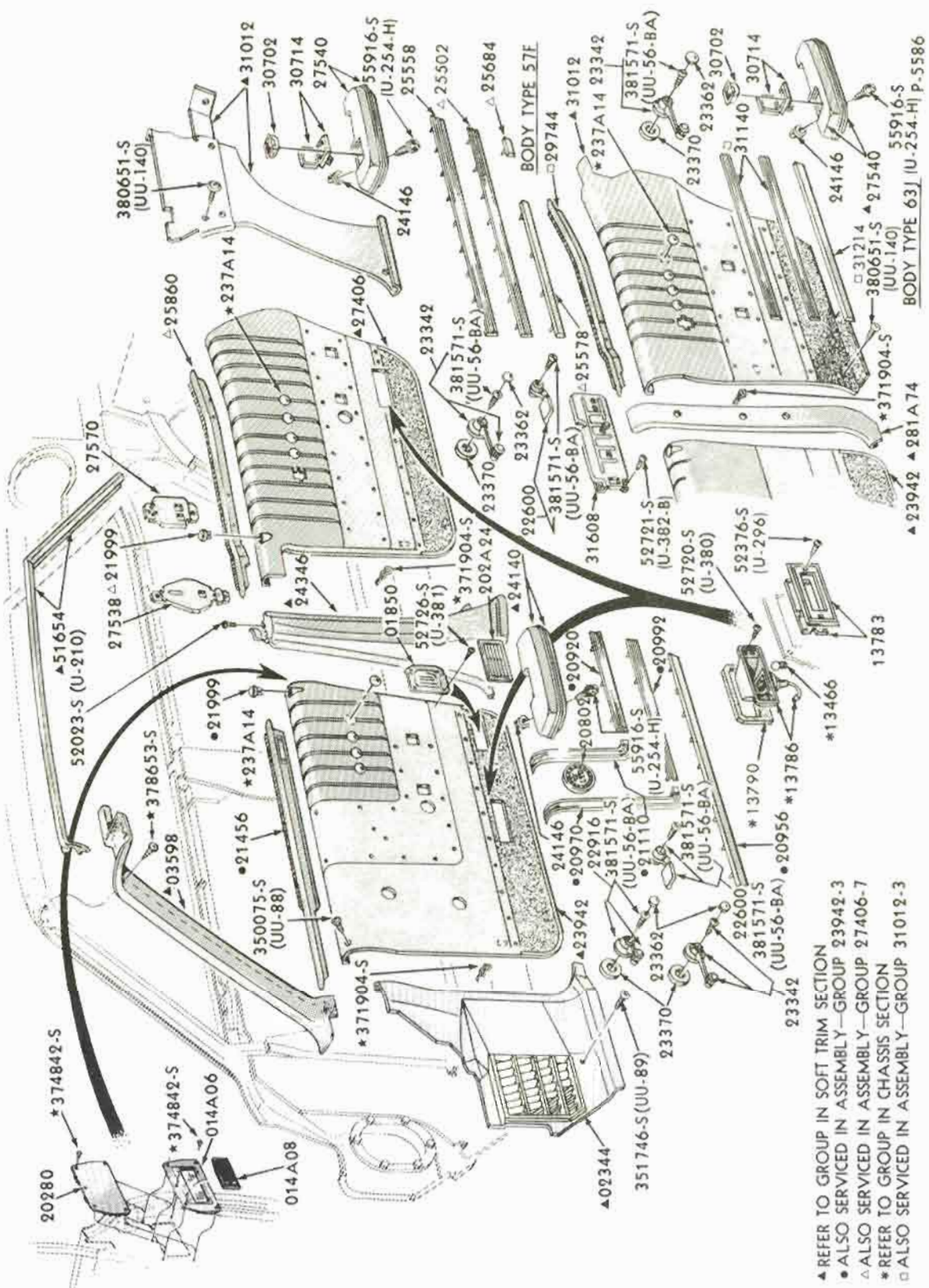

▲ REFER TO GROUP IN SOFT TRIM SECTION
• ALSO SERVICED IN ASSEMBLY—GROUP 23942-3
△ ALSO SERVICED IN ASSEMBLY—GROUP 27406-7
* REFER TO GROUP IN CHASSIS SECTION
□ ALSO SERVICED IN ASSEMBLY—GROUP 31012-3

DOOR and QUARTER TRIM PANELS and RELATED PARTS
1967 FORD - BODY TYPE 57F, 63J

COPYRIGHT © 1975 — FORD MOTOR COMPANY — DEARBORN, MICHIGAN

FORD CAR PARTS

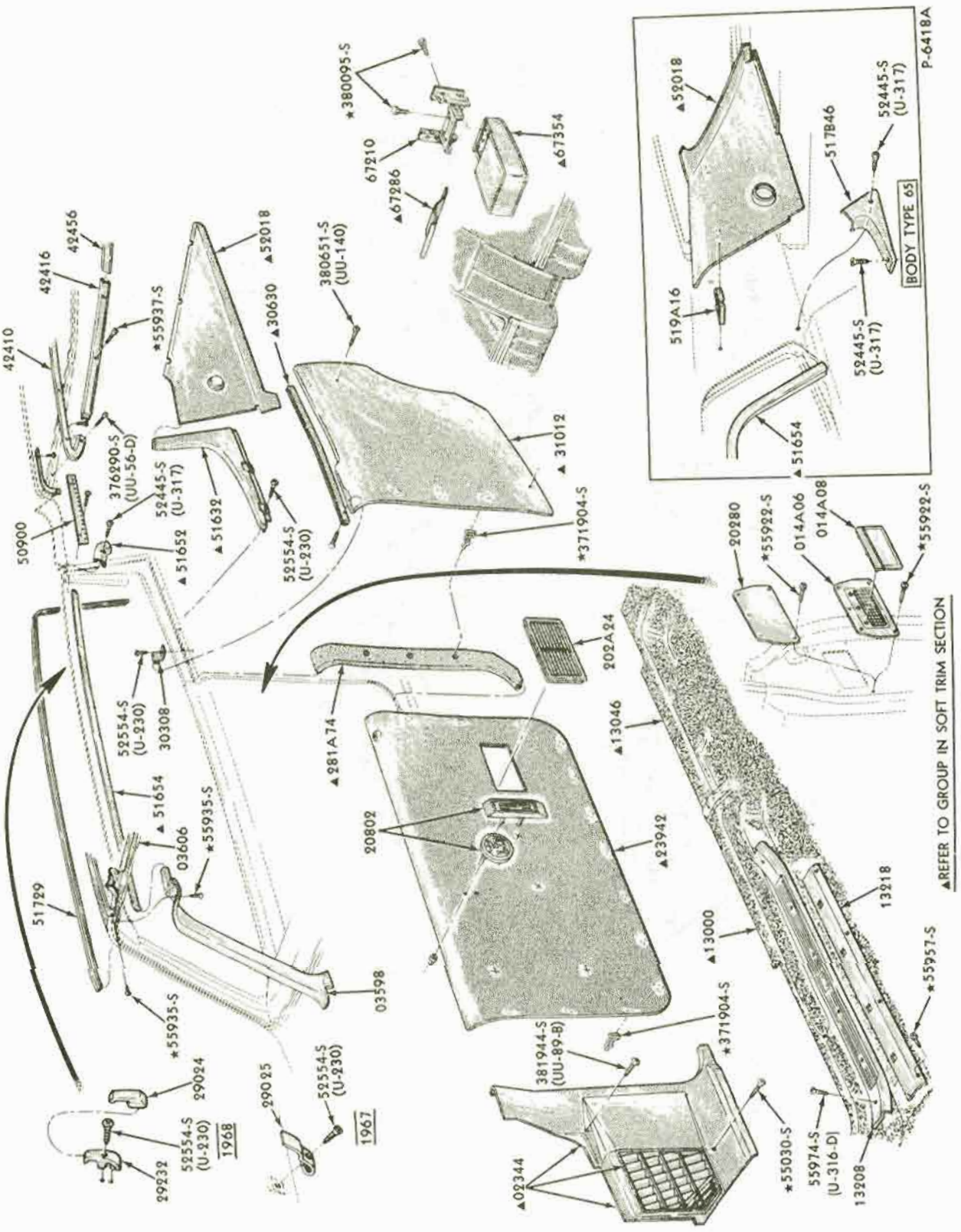

INTERIOR TRIM and RELATED PARTS
1967/68 FORD - BODY TYPE 63, 65

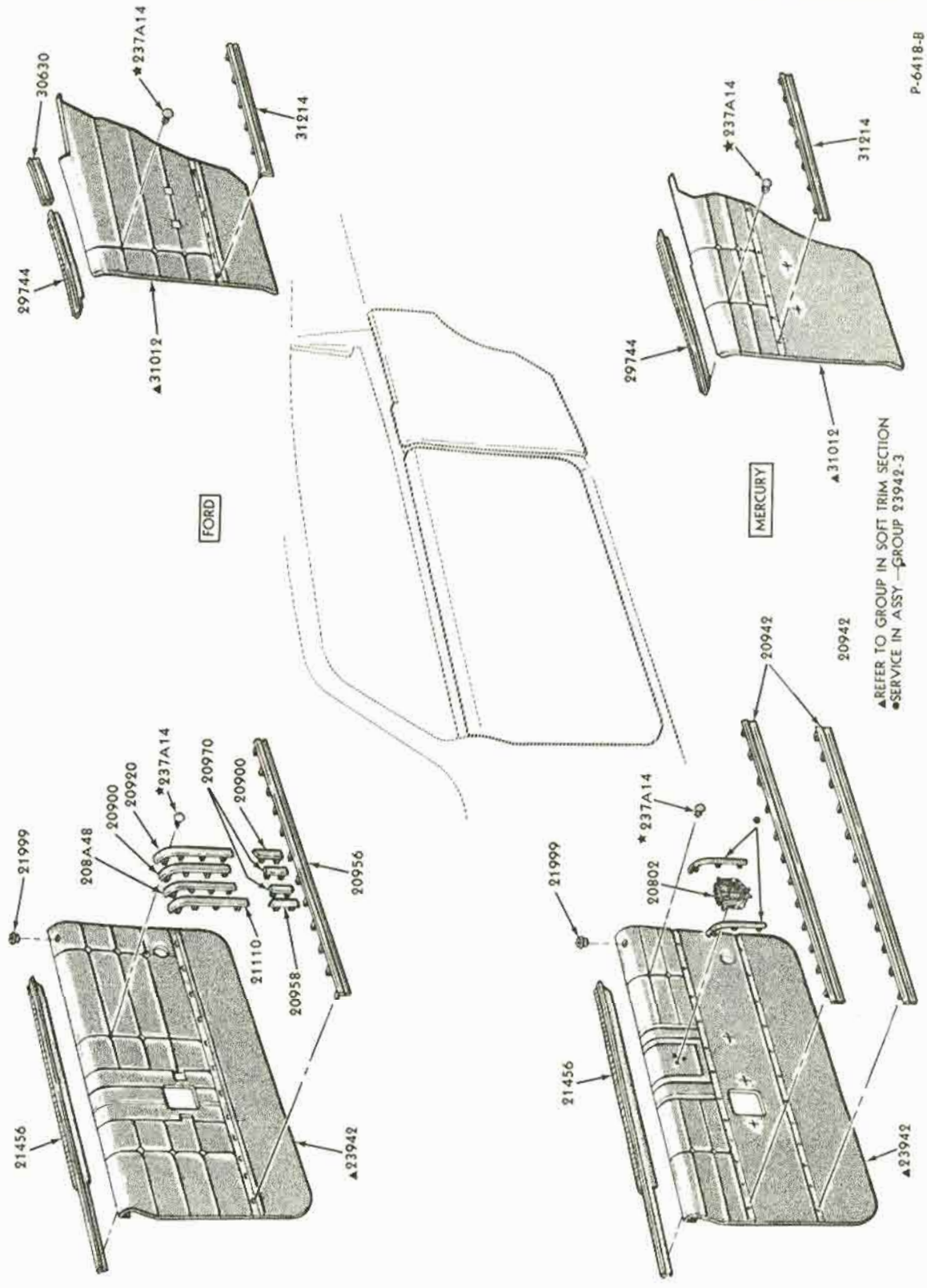

DOOR and QUARTER TRIM PANELS and RELATED PARTS
1968 FORD - BODY TYPE 63, 65

COPYRIGHT © 1975 — FORD MOTOR COMPANY — DEARBORN, MICHIGAN

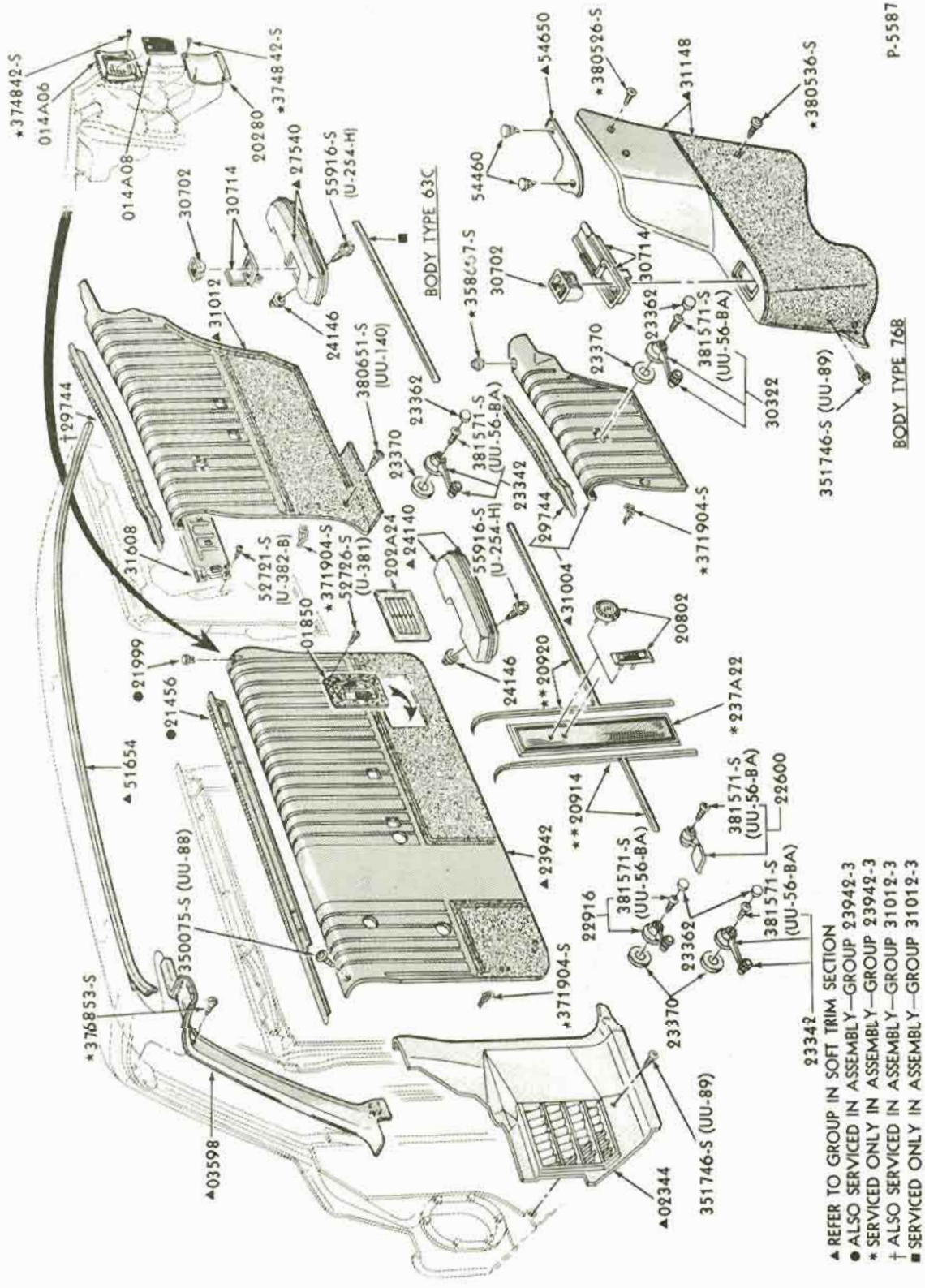

DOOR and QUARTER TRIM PANELS and RELATED PARTS
1967 FORD - BODY TYPE 63C, 76B

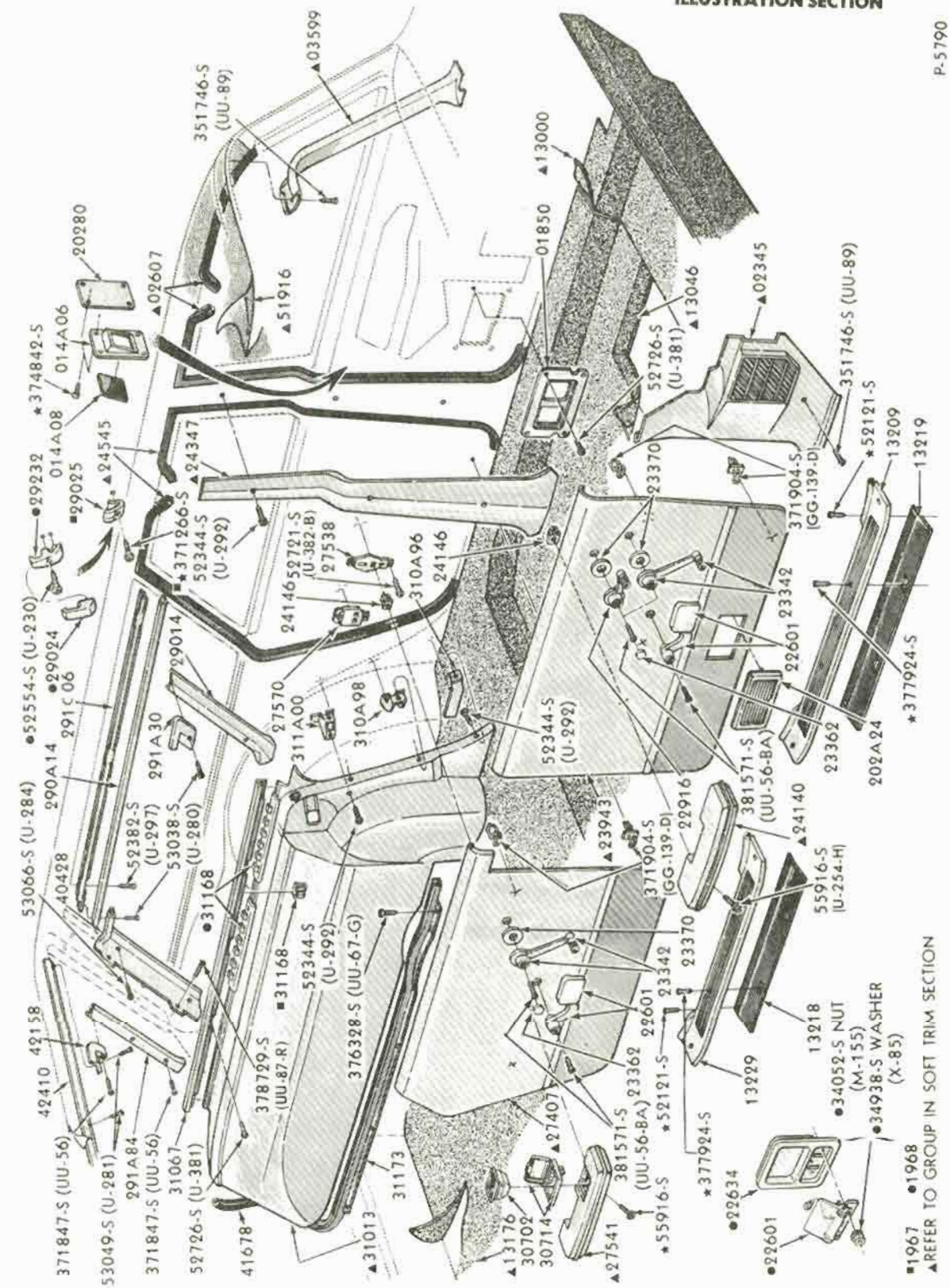

INTERIOR TRIM and RELATED PARTS - L. H. SIDE
1967/68 FORD - BODY TYPE 71

COPYRIGHT © 1975 — FORD MOTOR COMPANY — DEARBORN, MICHIGAN

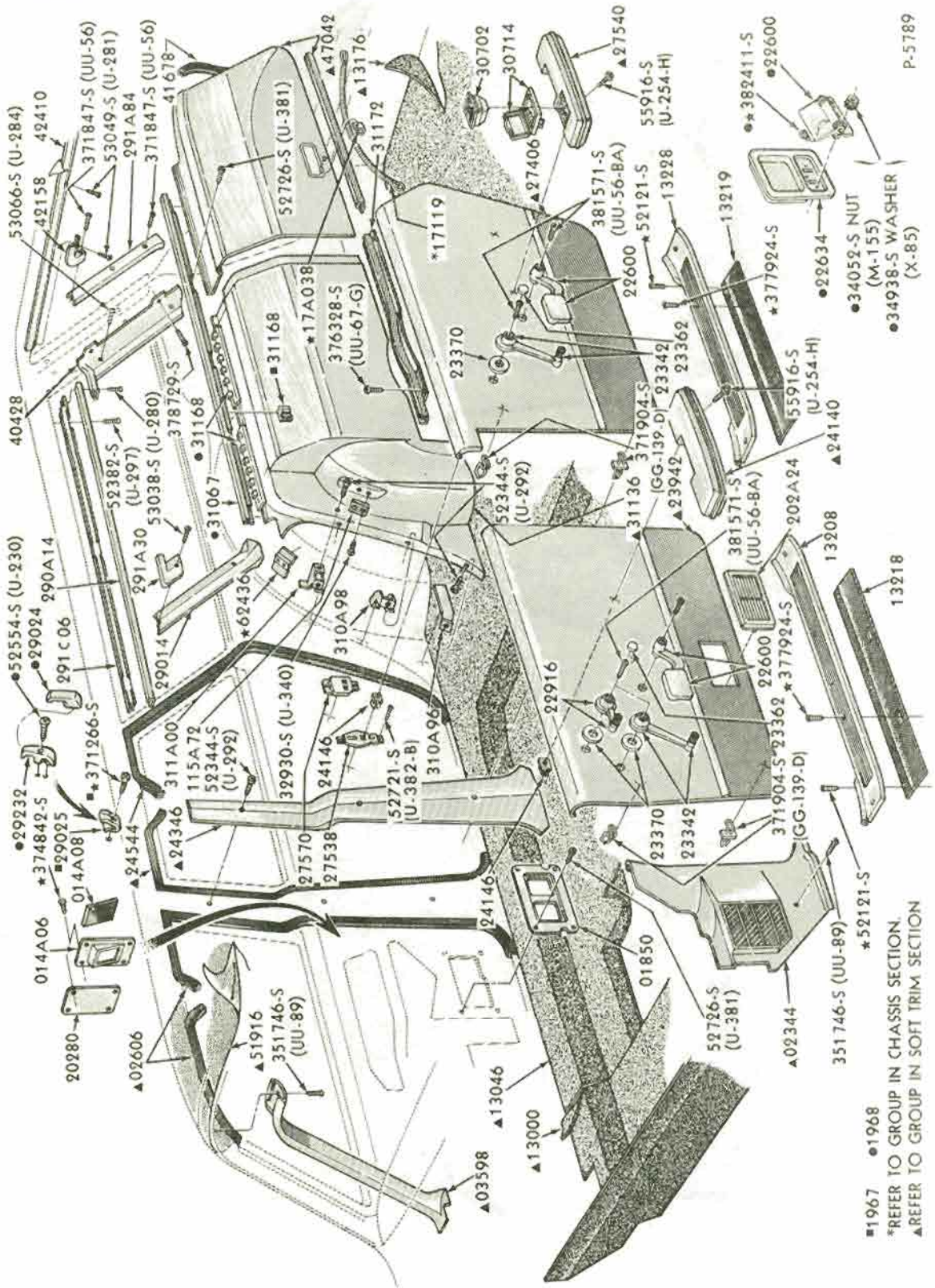

INTERIOR TRIM and RELATED PARTS - R. H. SIDE
1967/68 FORD - BODY TYPE 71

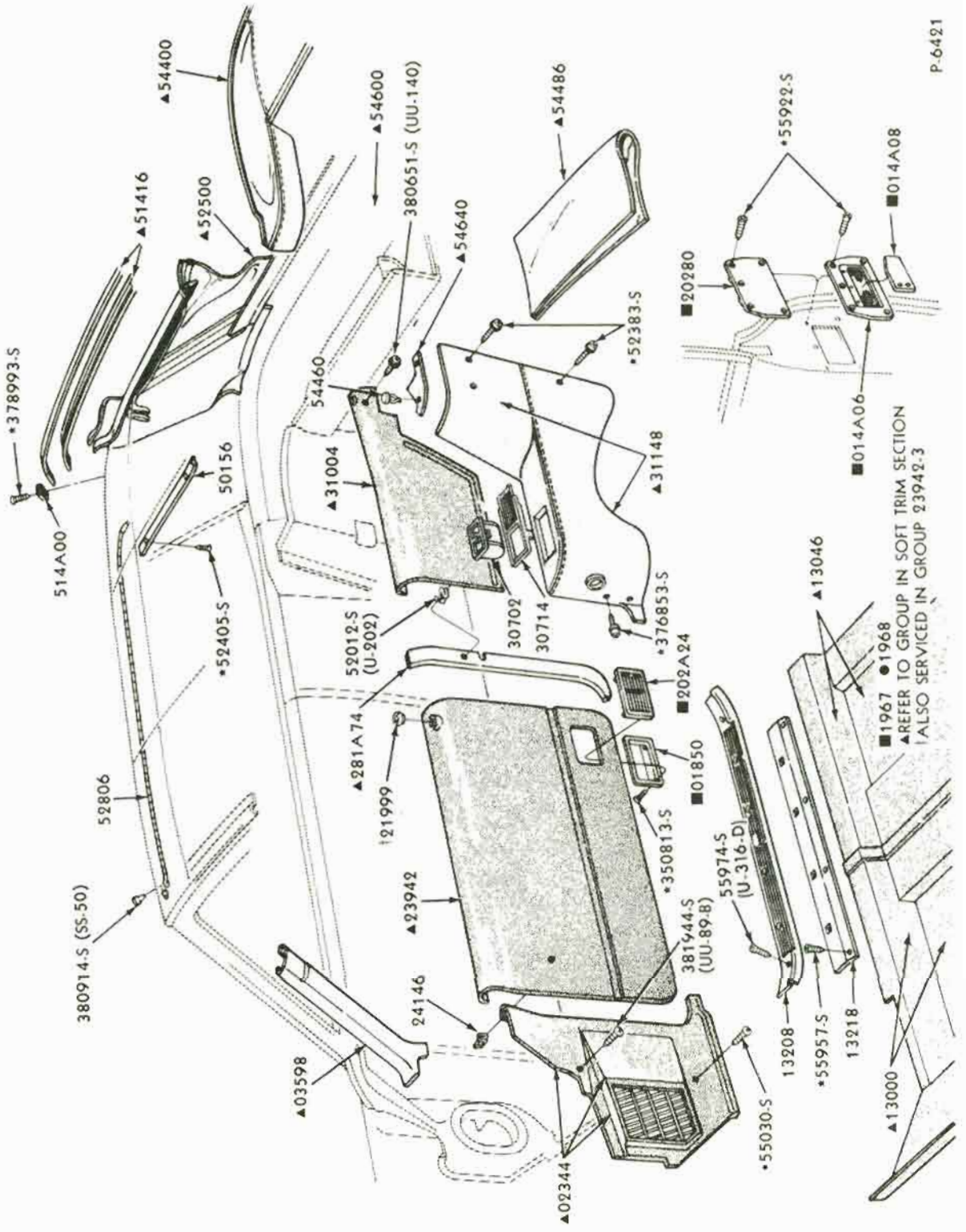

INTERIOR TRIM and RELATED PARTS
1967/68 FORD - BODY TYPE 76

COPYRIGHT © 1975 — FORD MOTOR COMPANY — DEARBORN, MICHIGAN

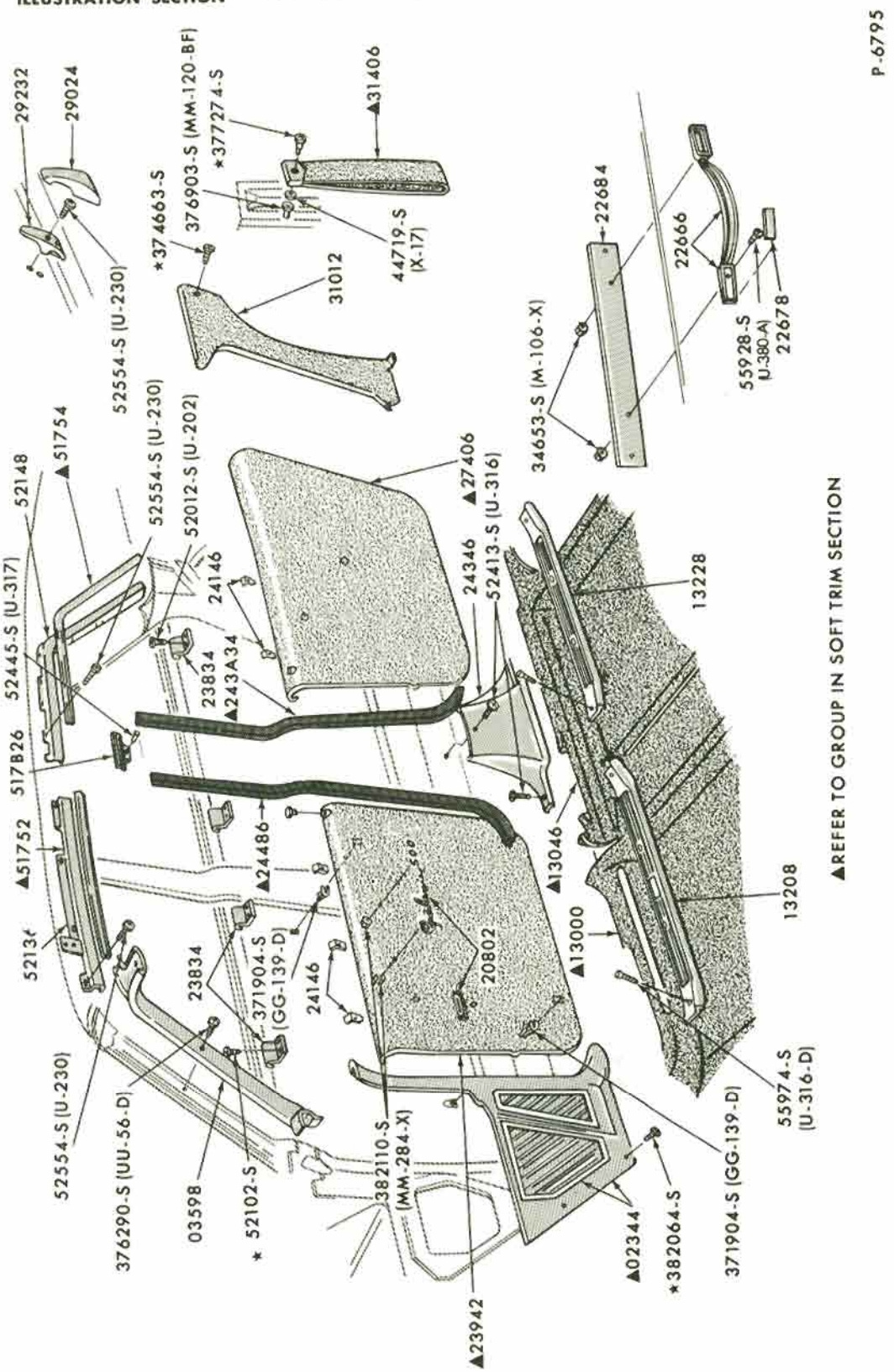

INTERIOR TRIM and RELATED PARTS
1969/72 FORD - BODY TYPE 54

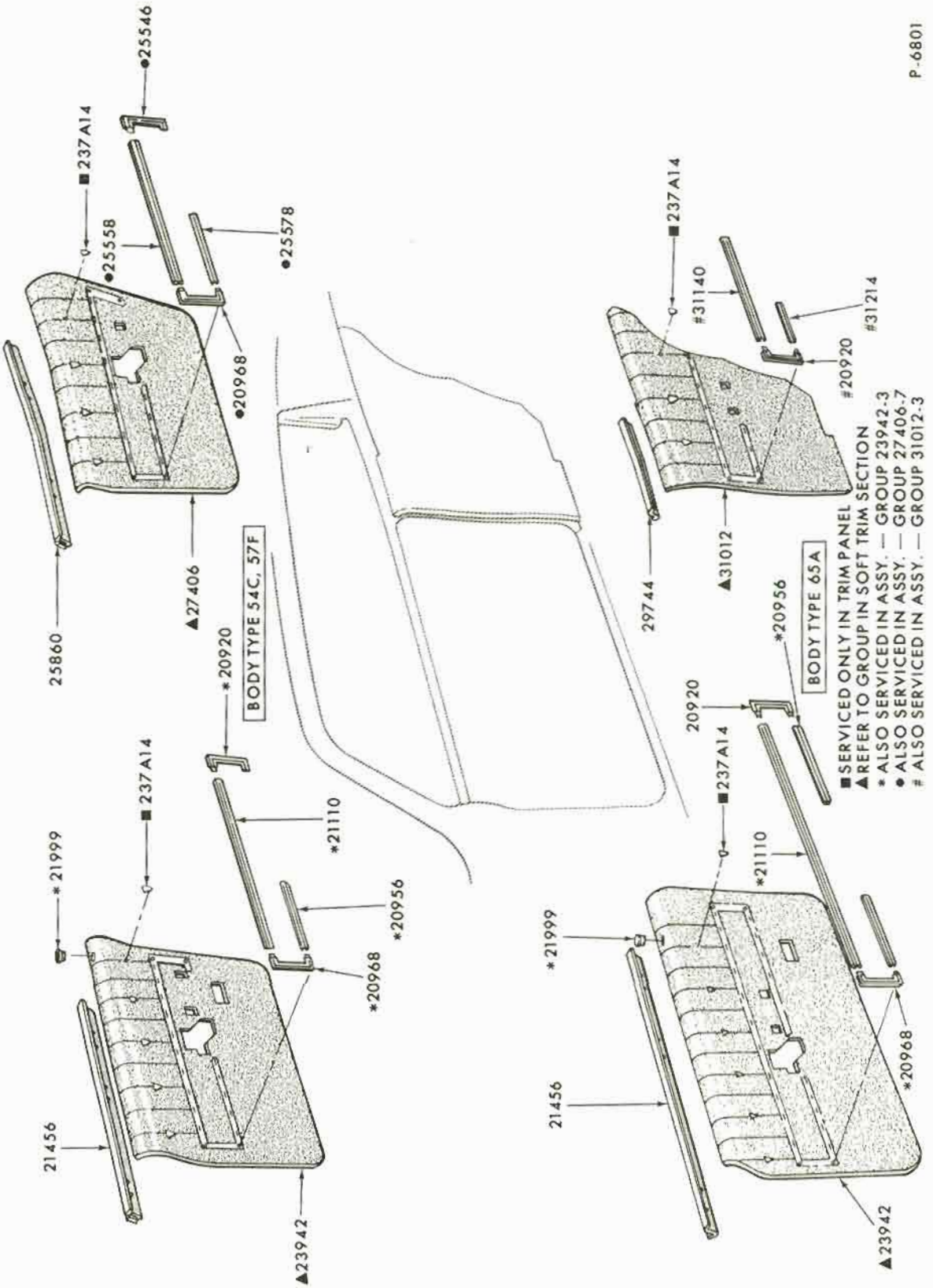

DOOR and QUARTER TRIM PANELS and RELATED PARTS
1969 FORD - BODY TYPES 54C, 57F, 65A

COPYRIGHT © 1975 — FORD MOTOR COMPANY — DEARBORN, MICHIGAN

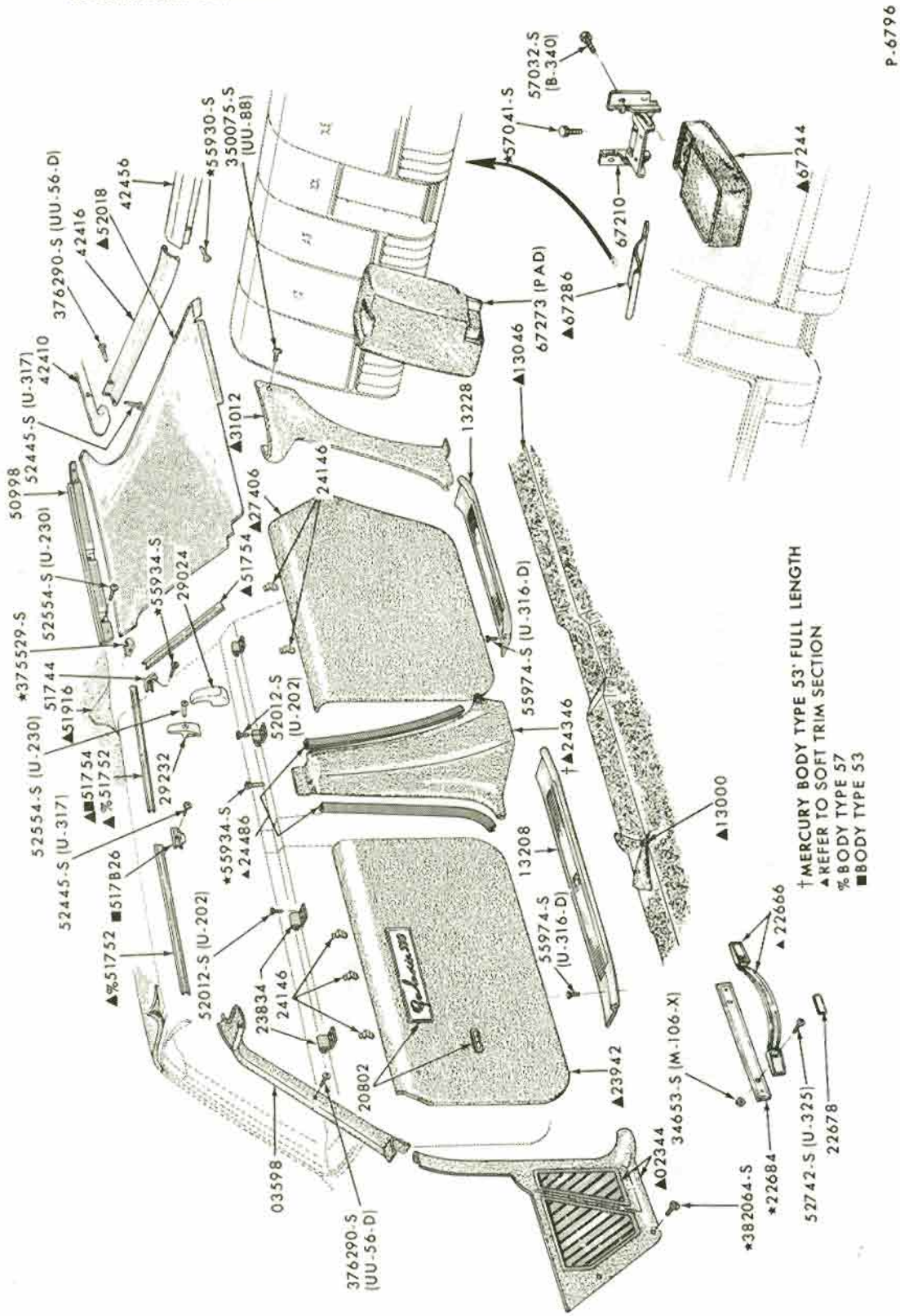

INTERIOR TRIM and RELATED PARTS
1969/72 FORD - BODY TYPE 57

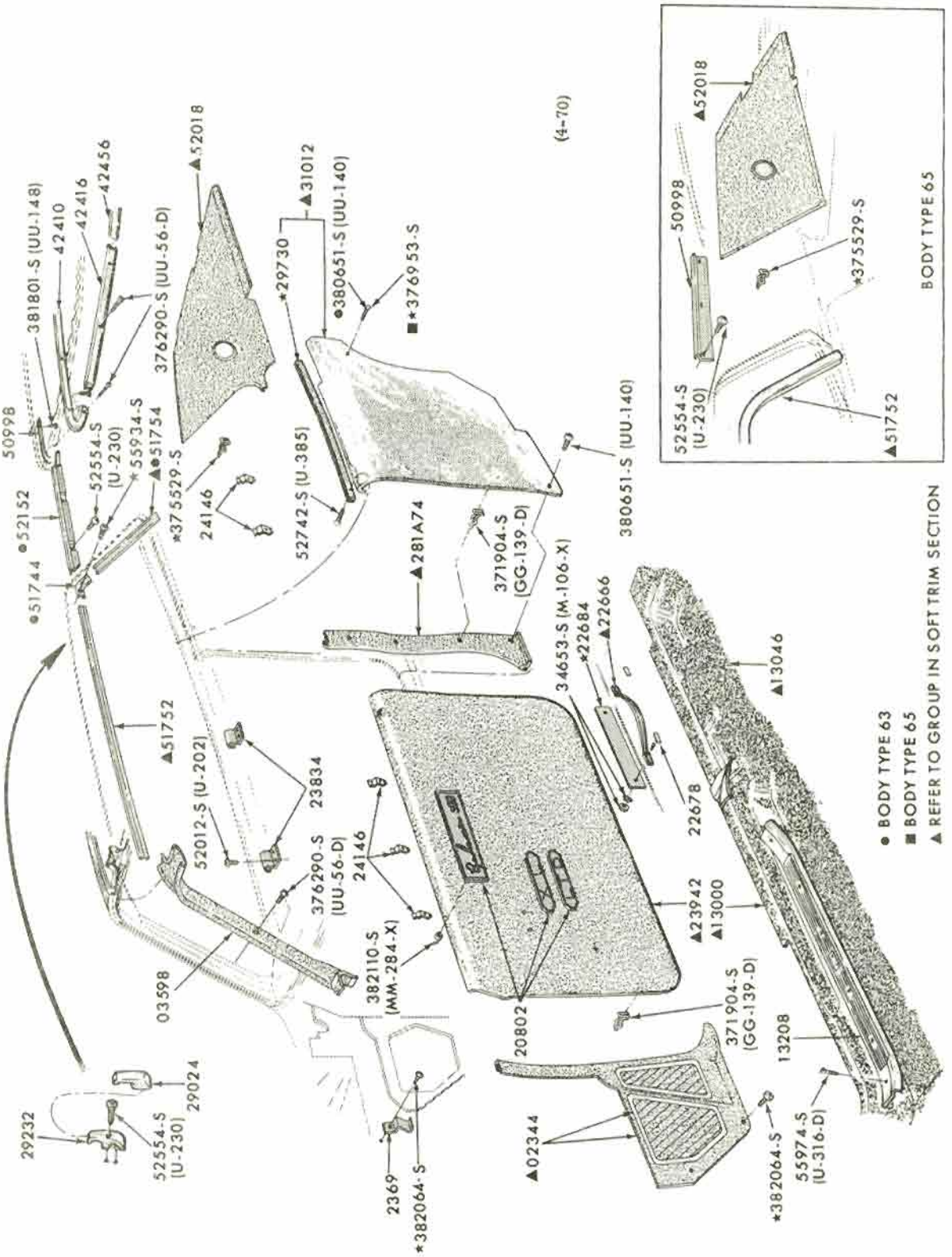

INTERIOR TRIM and RELATED PARTS
1969/70 FORD - BODY TYPES 63, 65

COPYRIGHT © 1975 — FORD MOTOR COMPANY — DEARBORN, MICHIGAN

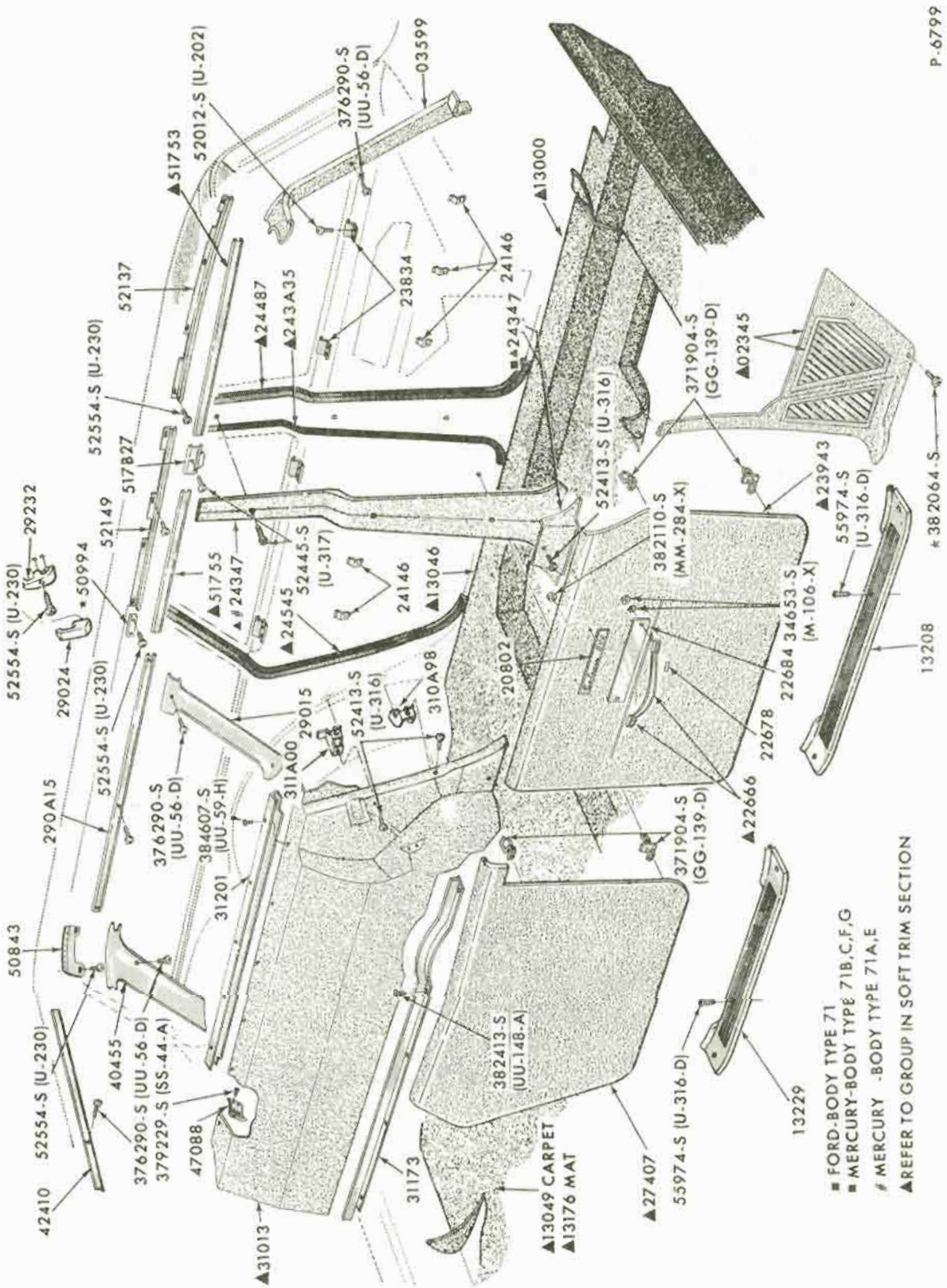

INTERIOR TRIM and RELATED PARTS - L.H. SIDE
1969/70 FORD - BODY TYPE 71

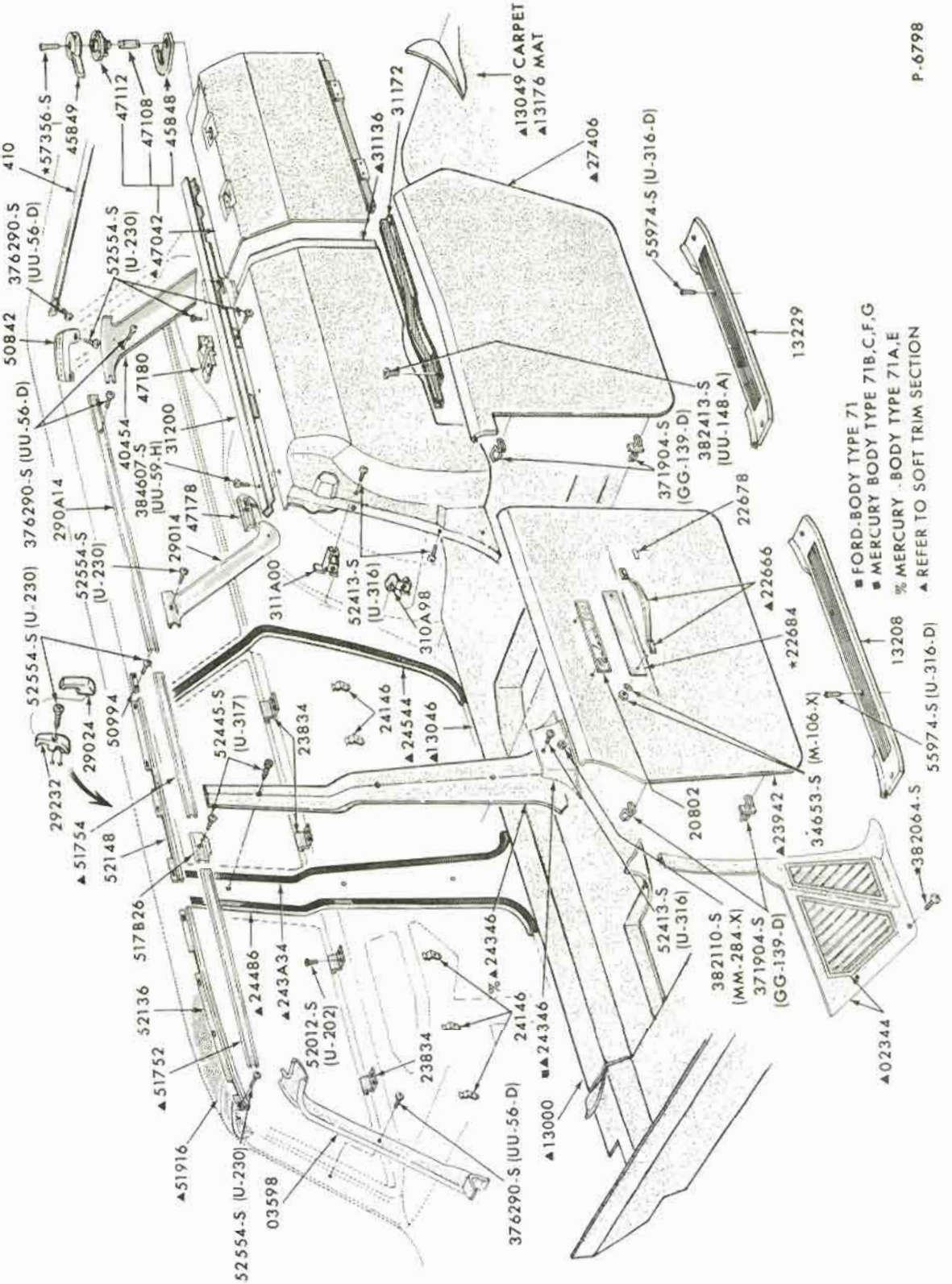

INTERIOR TRIM and RELATED PARTS - R.H. SIDE
1969/72 FORD - BODY TYPE 71

COPYRIGHT © 1975 — FORD MOTOR COMPANY — DEARBORN, MICHIGAN

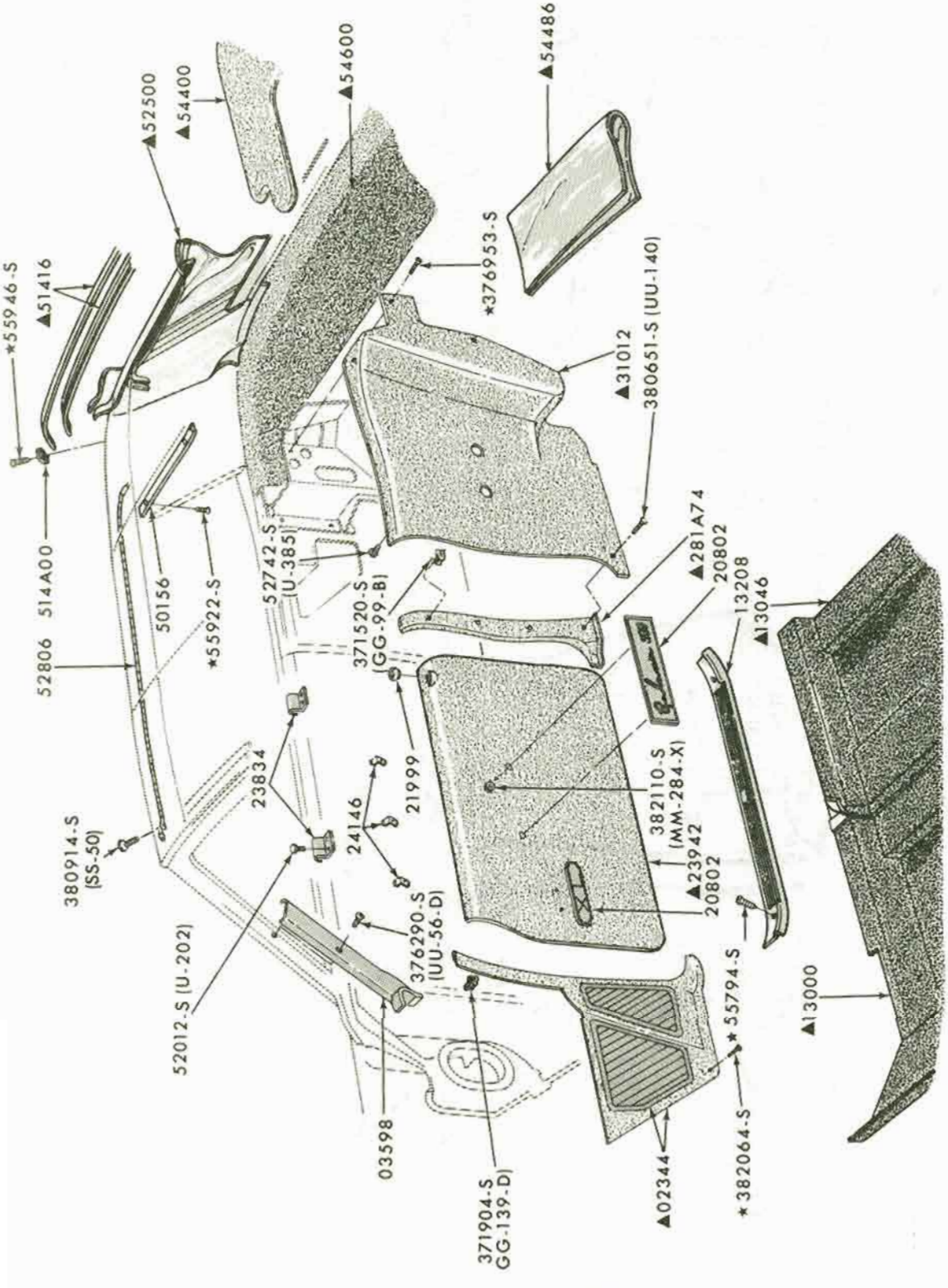

▲REFER TO GROUP IN SOFT TRIM SECTION

P-6800

INTERIOR TRIM and RELATED PARTS
1969/72 FORD - BODY TYPE 76

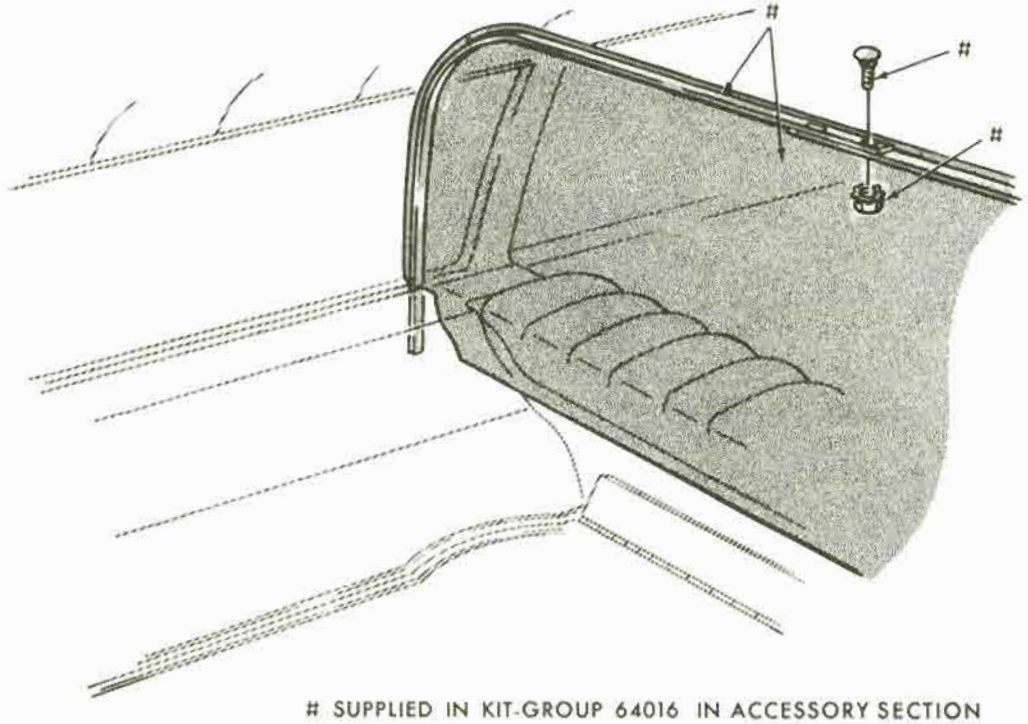

SUPPLIED IN KIT-GROUP 64016 IN ACCESSORY SECTION

P-7400

CURTAIN - DRIVER COMPARTMENT
1970/71 FORD - BODY TYPE 71

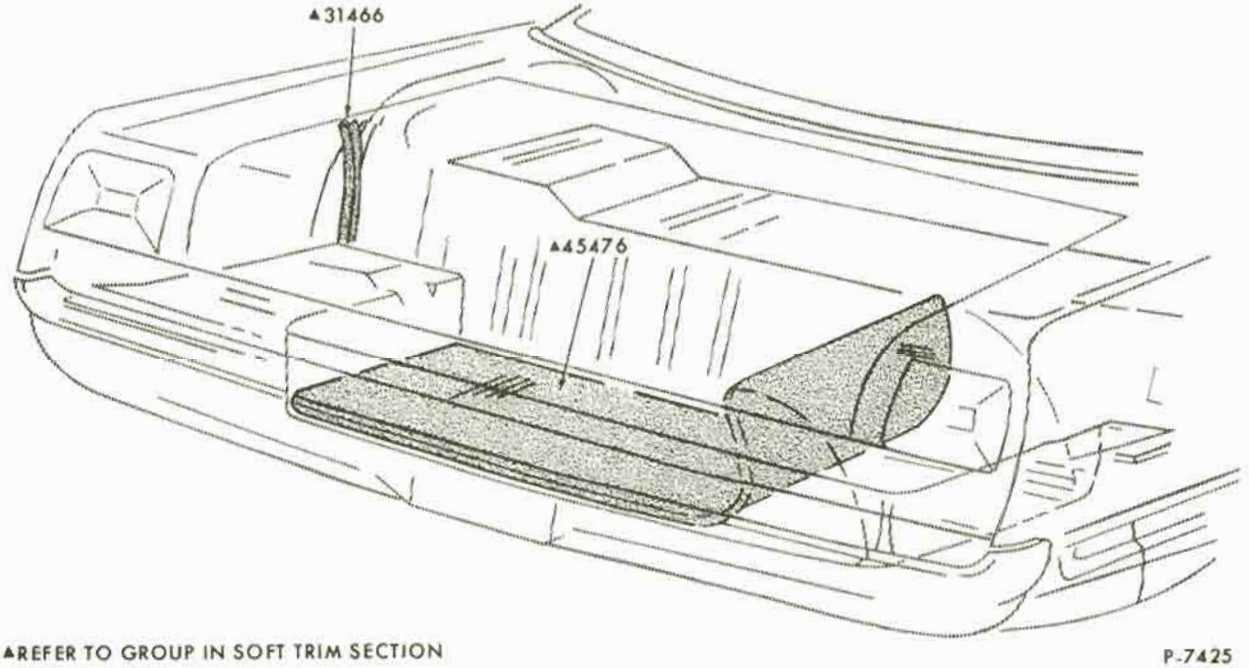

▲REFER TO GROUP IN SOFT TRIM SECTION

P-7425

LUGGAGE COMPARTMENT TRIM
1969/72 FORD

COPYRIGHT © 1975— FORD MOTOR COMPANY — DEARBORN, MICHIGAN

1970/
QUARTER

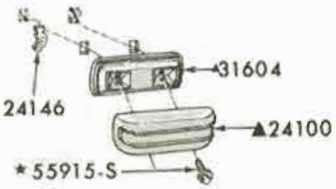

1970/
FRONT OR REAR DOOR

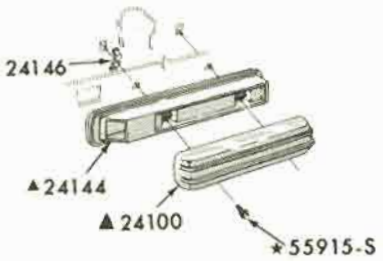

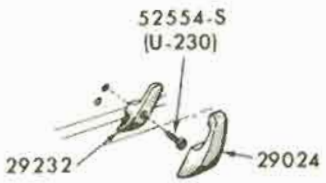

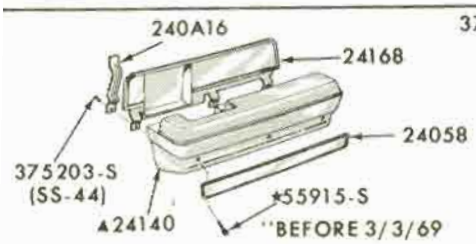

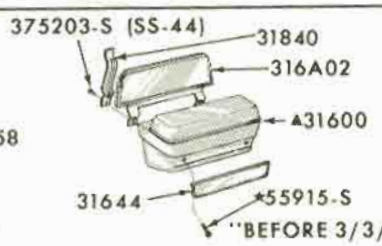

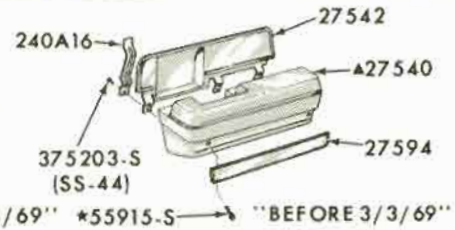

1969
FRONT DOOR

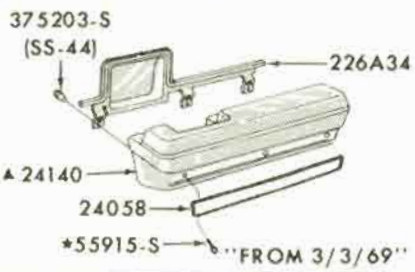

1969
QUARTER

1969
REAR DOOR

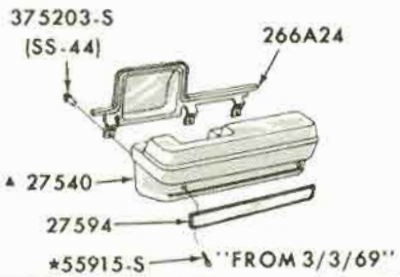

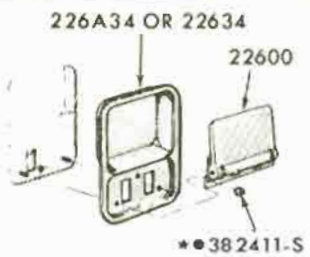

FRONT OR REAR DOOR

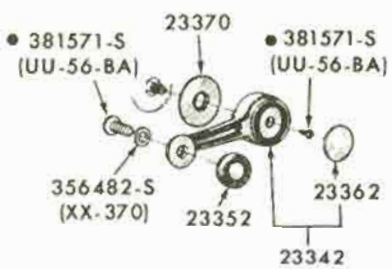

FRONT OR REAR DOOR

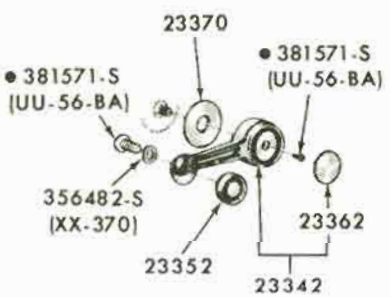

QUARTER

▲ REFER TO GROUP IN SOFT TRIM SECTION
● ALSO SERVICED IN GROUP 23342 OR 22916 OR 22600

P-7472

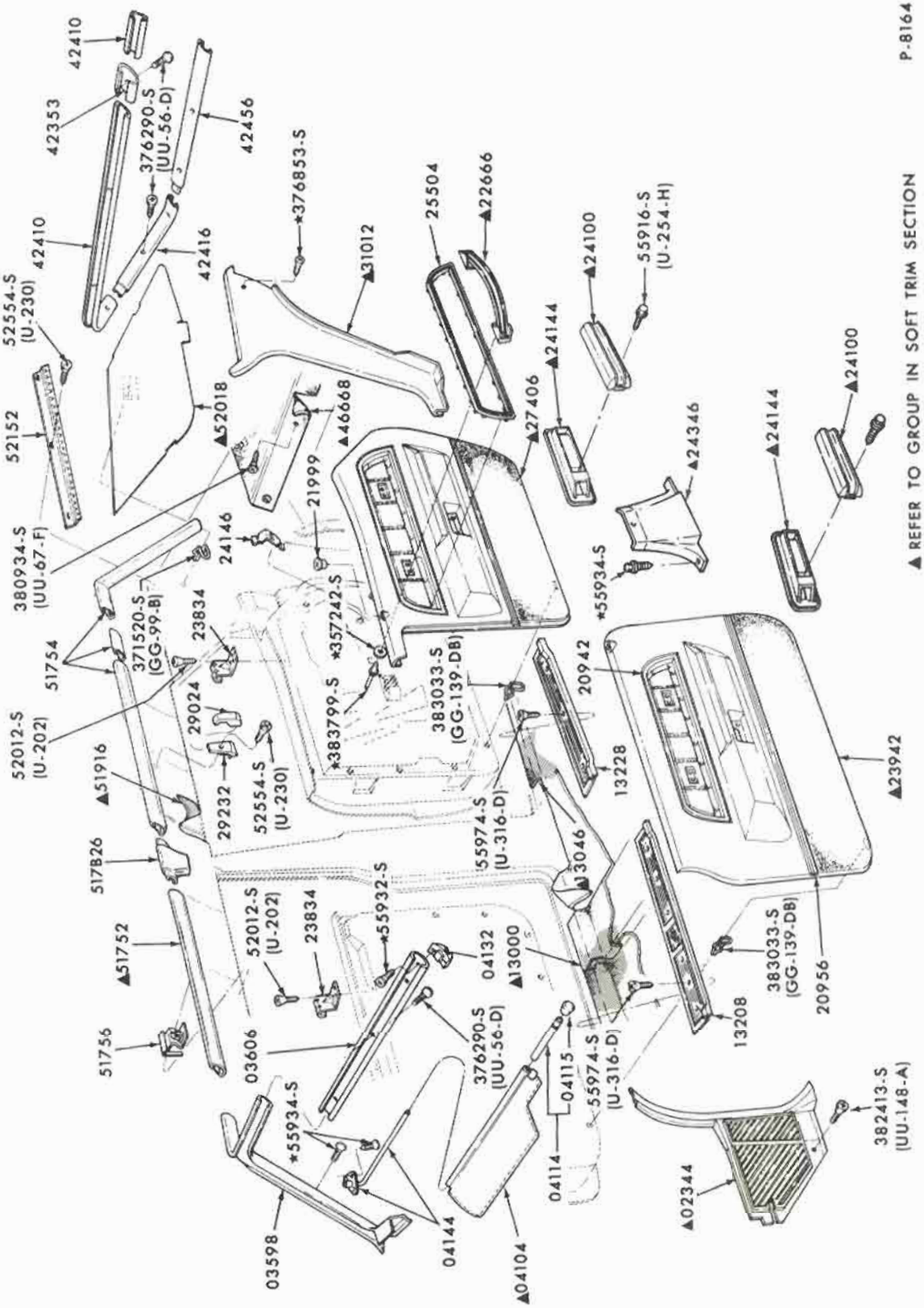

INTERIOR TRIM and RELATED PARTS
1971/72 FORD - BODY TYPE 53

COPYRIGHT © 1975 — FORD MOTOR COMPANY — DEARBORN, MICHIGAN

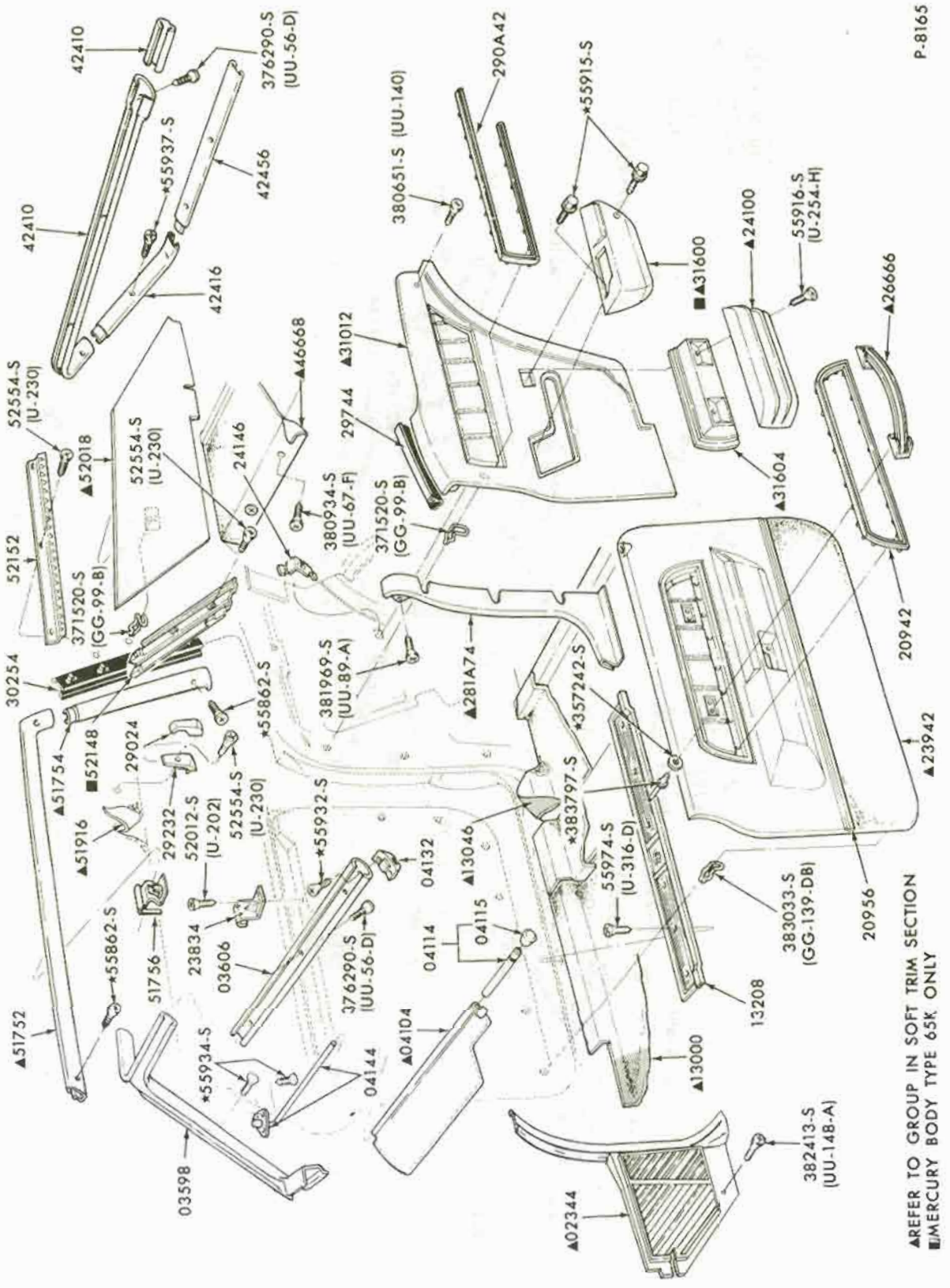

INTERIOR TRIM and RELATED PARTS

1971/72 FORD - BODY TYPE 65

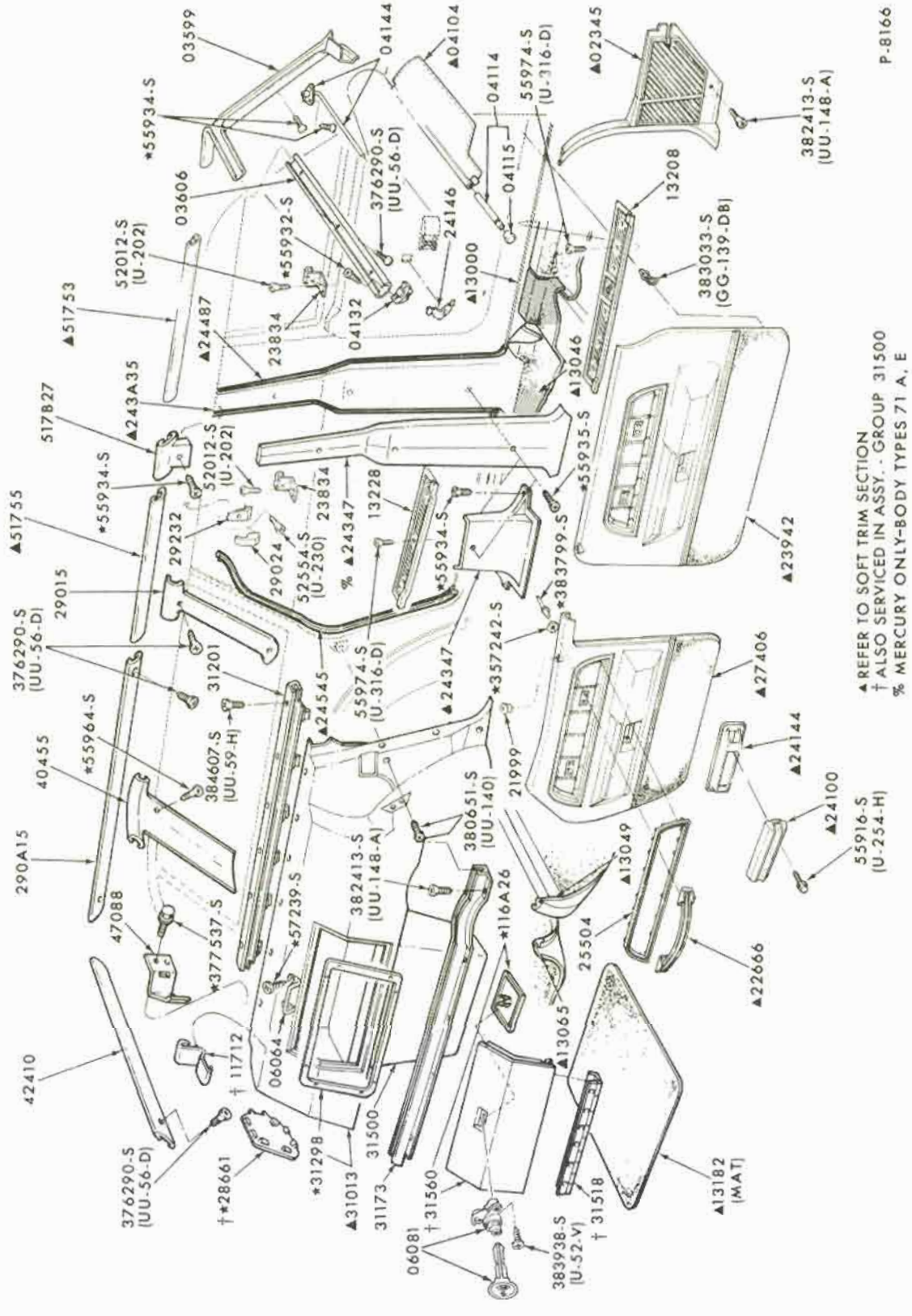

INTERIOR TRIM and RELATED PARTS - L.H. SIDE
1971/72 FORD - BODY TYPE 71

COPYRIGHT © 1975 — FORD MOTOR COMPANY — DEARBORN, MICHIGAN

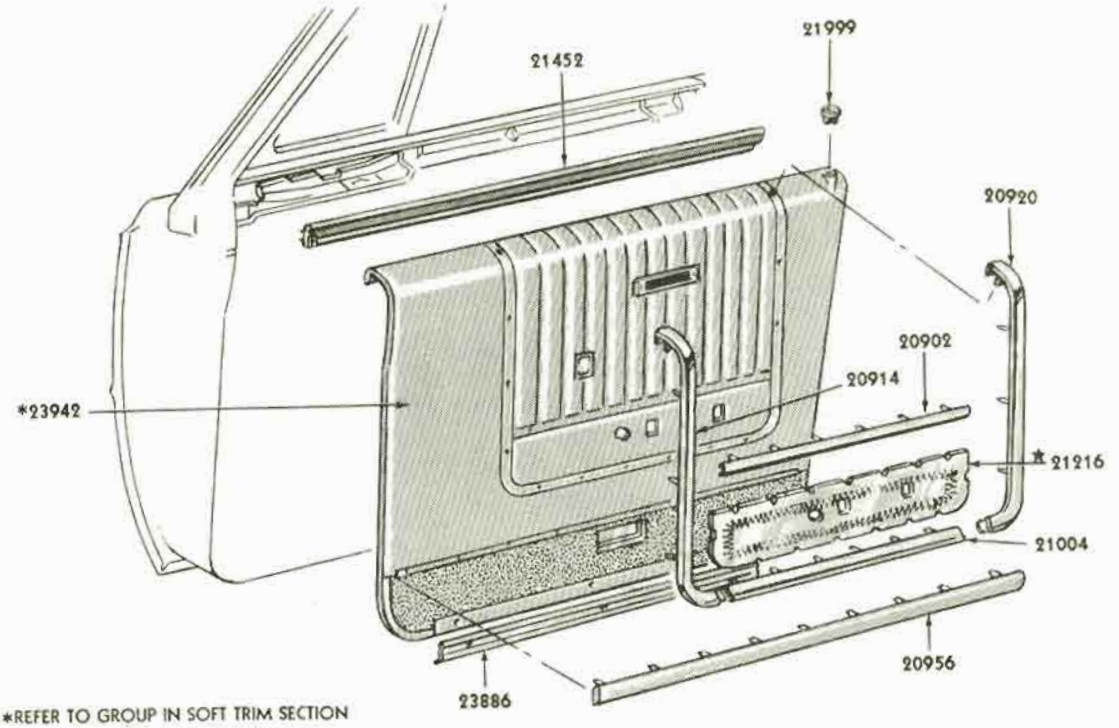

*REFER TO GROUP IN SOFT TRIM SECTION

P-9674

FRONT DOOR TRIM PANEL and RELATED PARTS - TYPICAL
1965 FORD - BODY TYPES 57F, 63F, 76F (CANADA ONLY)

P-4111

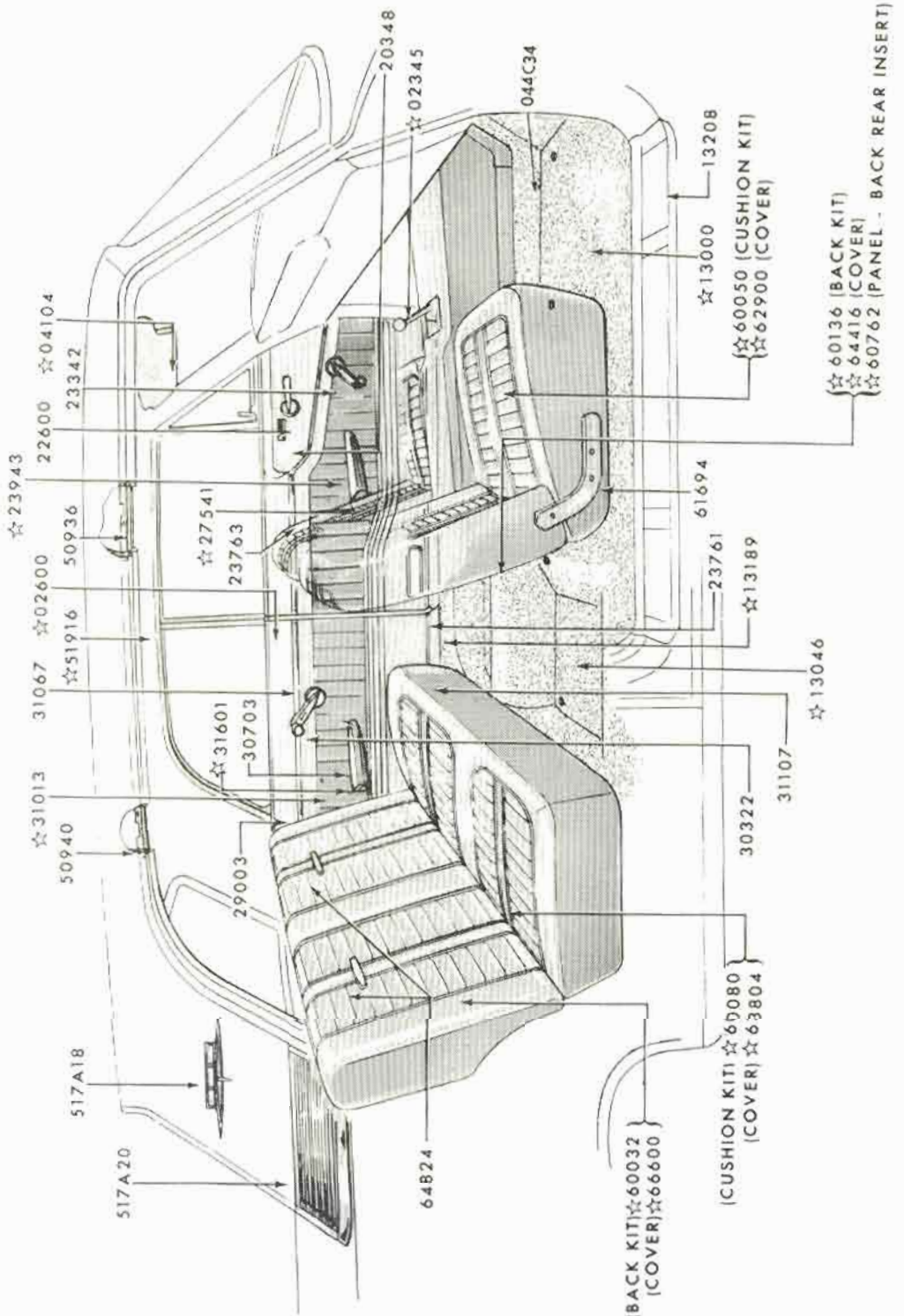

INTERIOR TRIM and RELATED PARTS TYPICAL
1965 FAIRLANE - BODY TYPE 65

COPYRIGHT © 1975 — FORD MOTOR COMPANY — DEARBORN, MICHIGAN

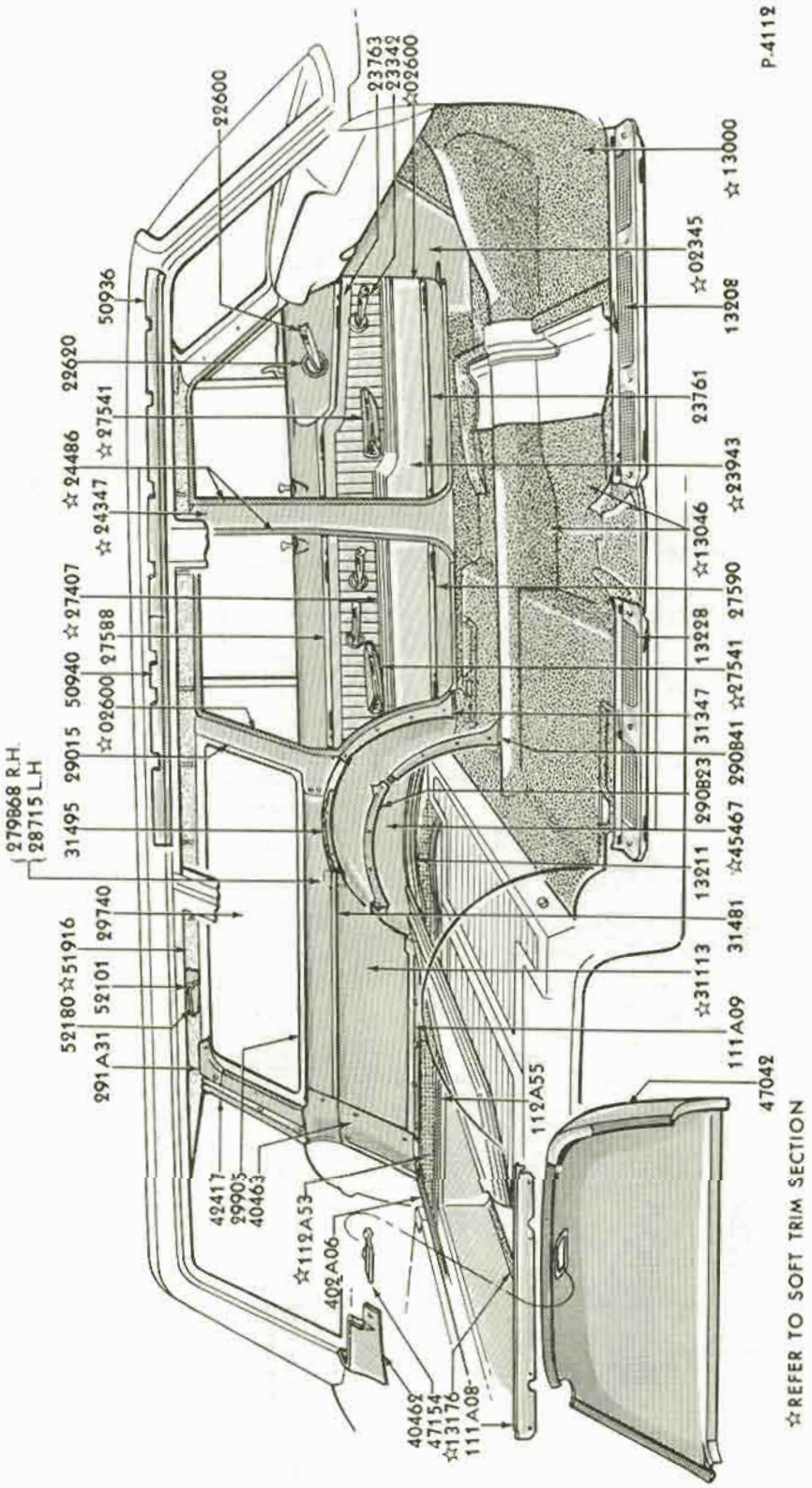

INTERIOR TRIM and RELATED PARTS
1965 FAIRLANE - BODY TYPE 71

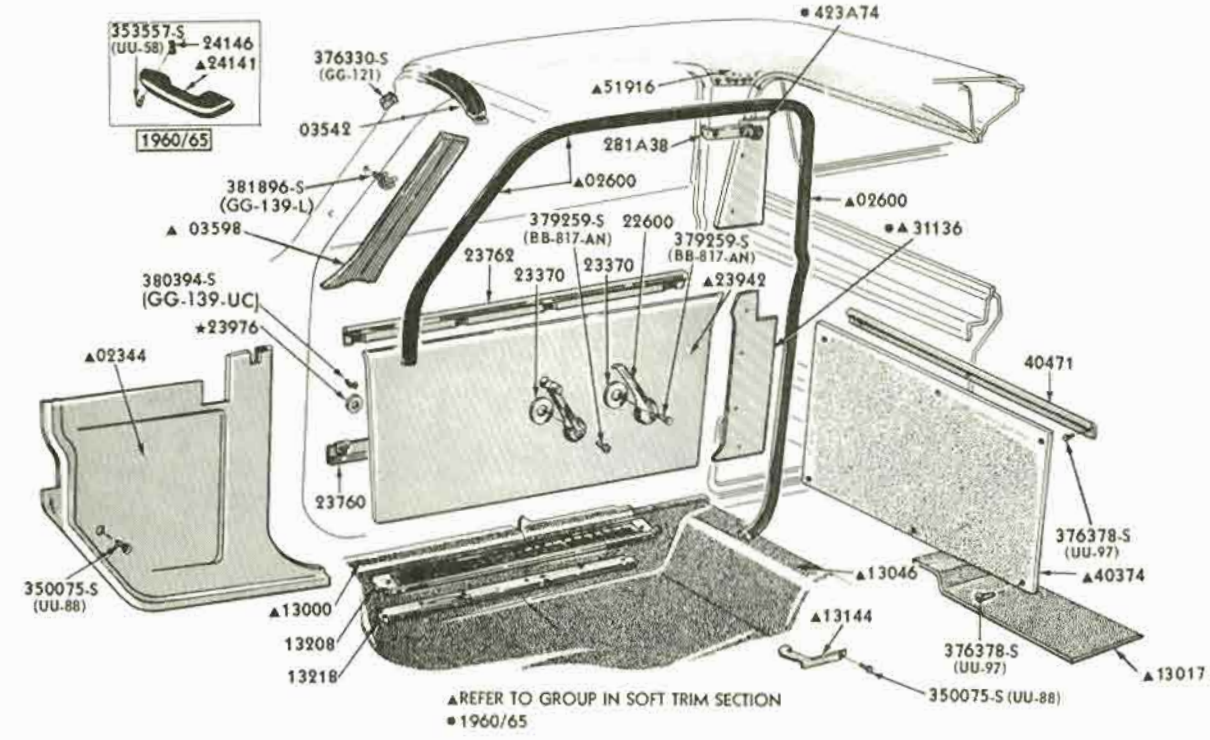

INTERIOR TRIM and RELATED PARTS - TYPICAL
1967 FAIRLANE - BODY TYPE 66

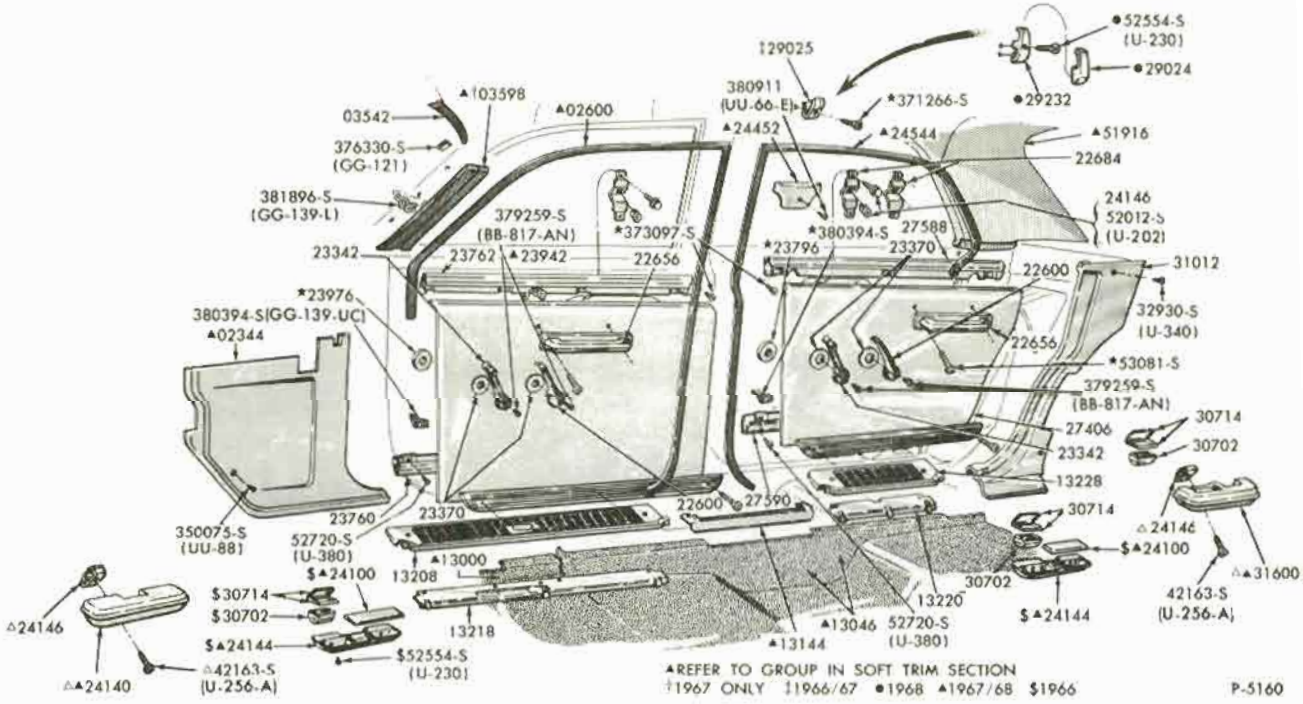

INTERIOR TRIM and RELATED PARTS
1966/67 FAIRLANE - BODY TYPE 54

COPYRIGHT © 1975 — FORD MOTOR COMPANY — DEARBORN, MICHIGAN

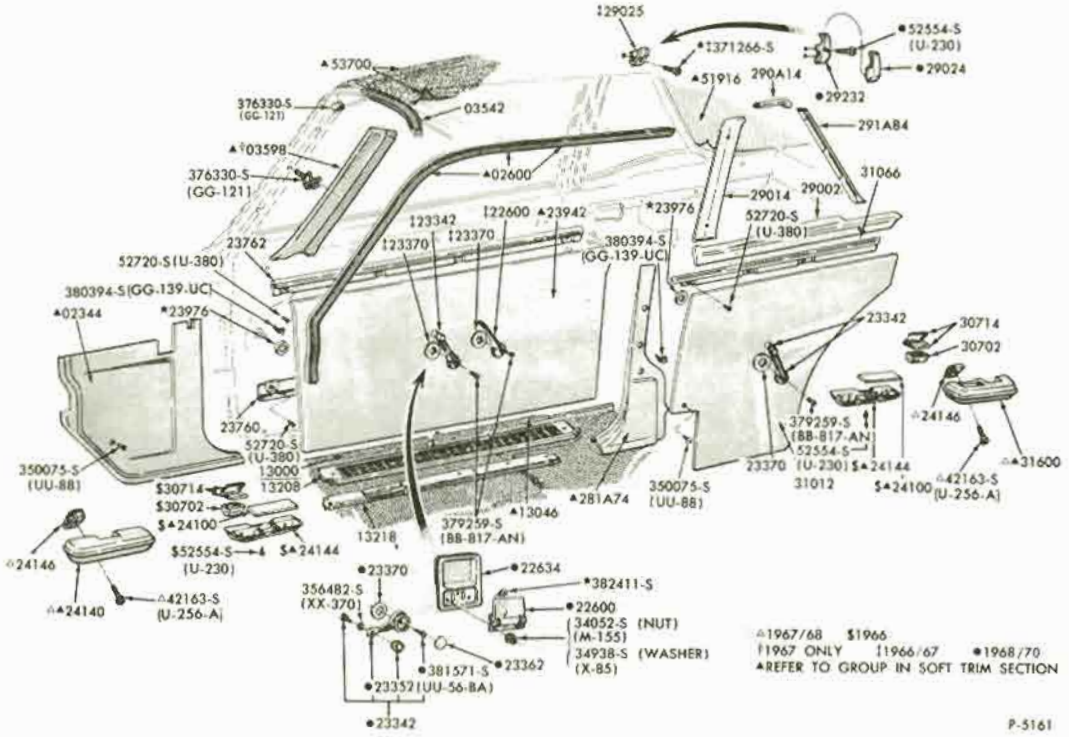

INTERIOR TRIM and RELATED PARTS
1966/67 FAIRLANE - BODY TYPE 62

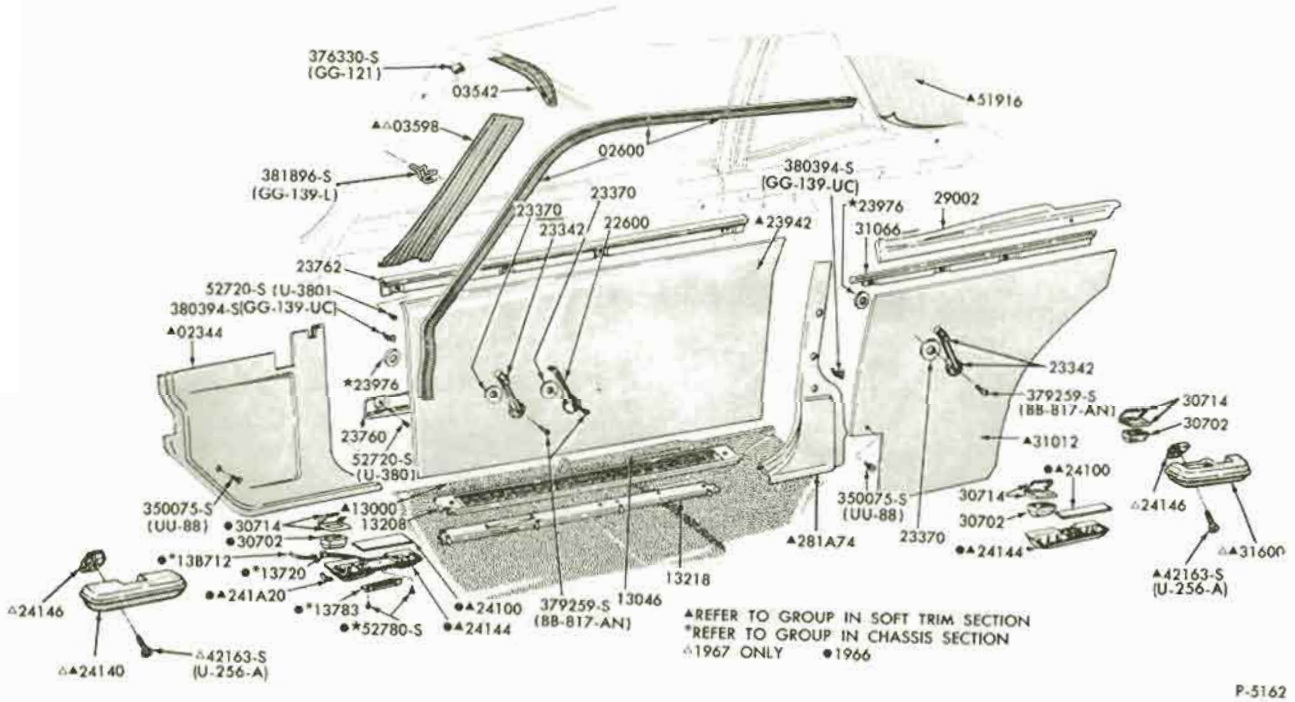

INTERIOR TRIM and RELATED PARTS
1966/67 FAIRLANE - BODY TYPE 63

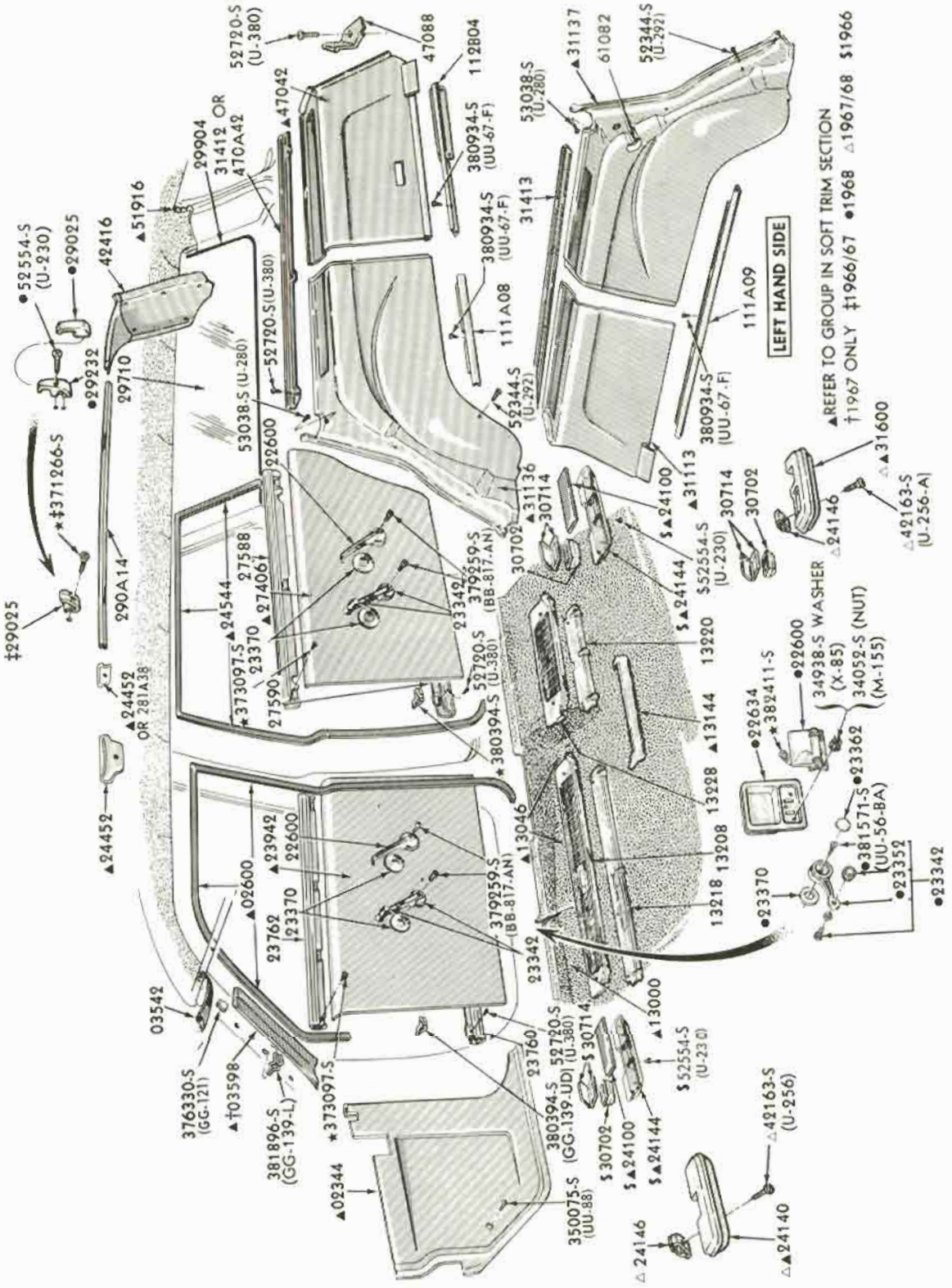

INTERIOR TRIM and RELATED PARTS
1966/69 FAIRLANE/TORINO - BODY TYPE 71

COPYRIGHT © 1975— FORD MOTOR COMPANY —DEARBORN, MICHIGAN

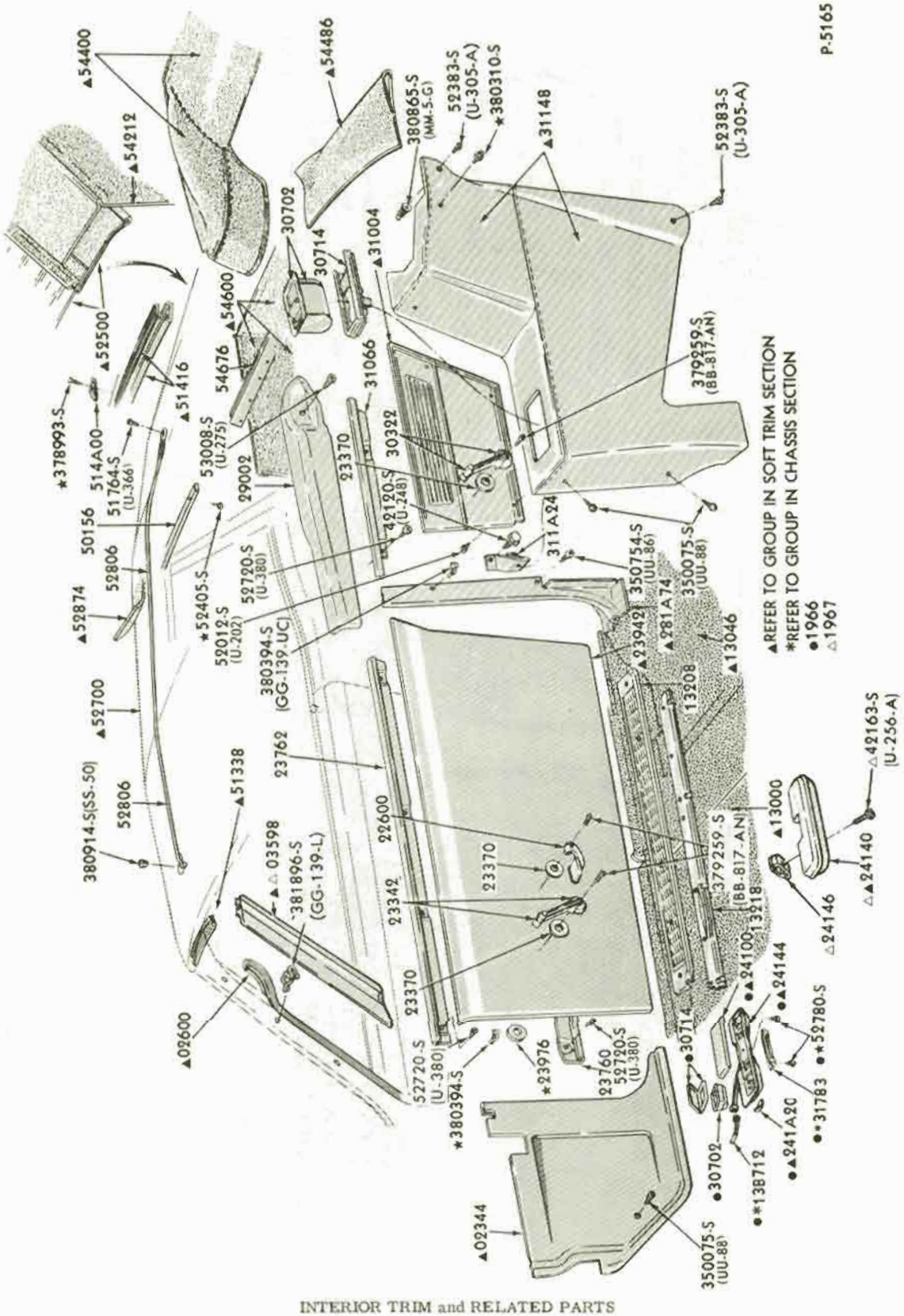

INTERIOR TRIM and RELATED PARTS
1966/67 FAIRLANE - BODY TYPE 76

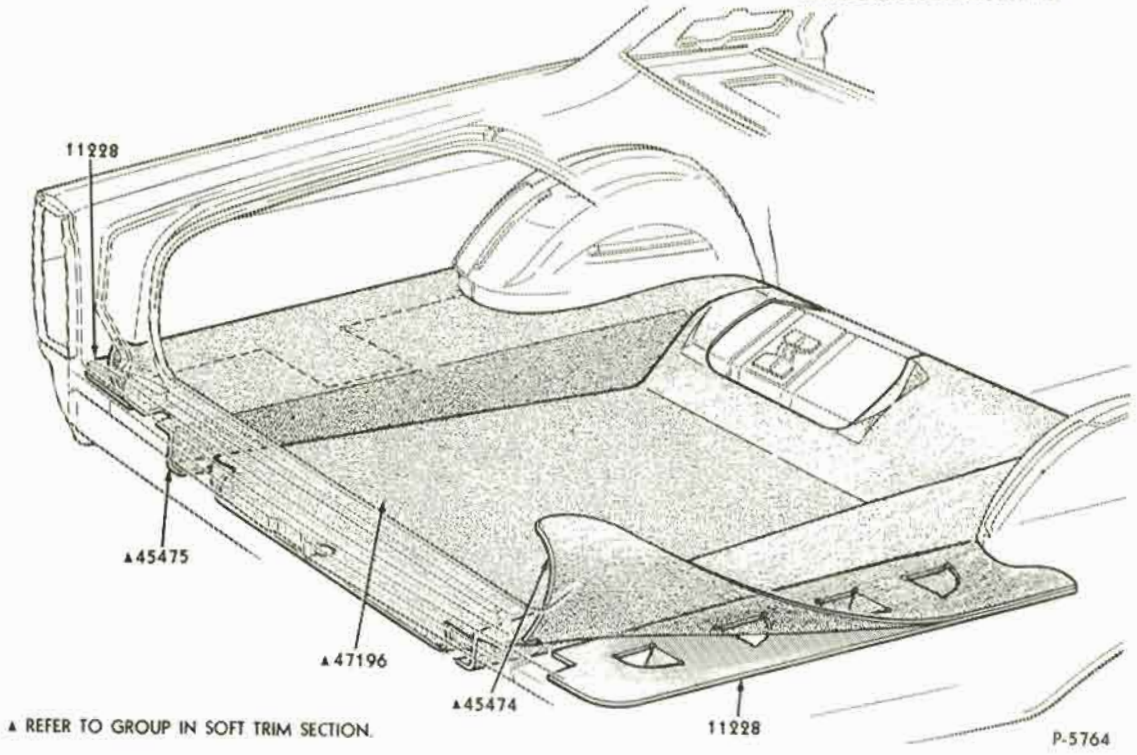

▲ REFER TO GROUP IN SOFT TRIM SECTION.

LUGGAGE COMPARTMENT TRIM
1966/69 FAIRLANE/TORINO - BODY TYPES 54, 62, 63, 65, 76

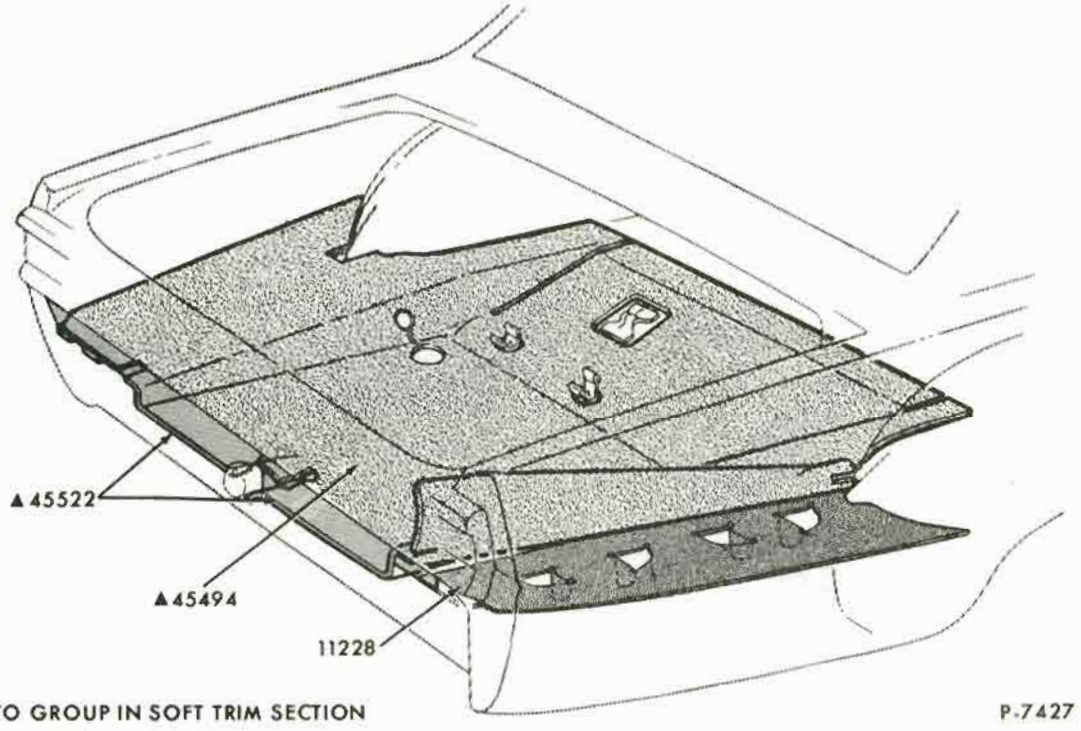

▲ REFER TO GROUP IN SOFT TRIM SECTION

LUGGAGE COMPARTMENT TRIM
1970/71 FAIRLANE/TORINO - BODY TYPES 54, 57, 62, 63, 65 and 76

COPYRIGHT © 1975 — FORD MOTOR COMPANY — DEARBORN, MICHIGAN

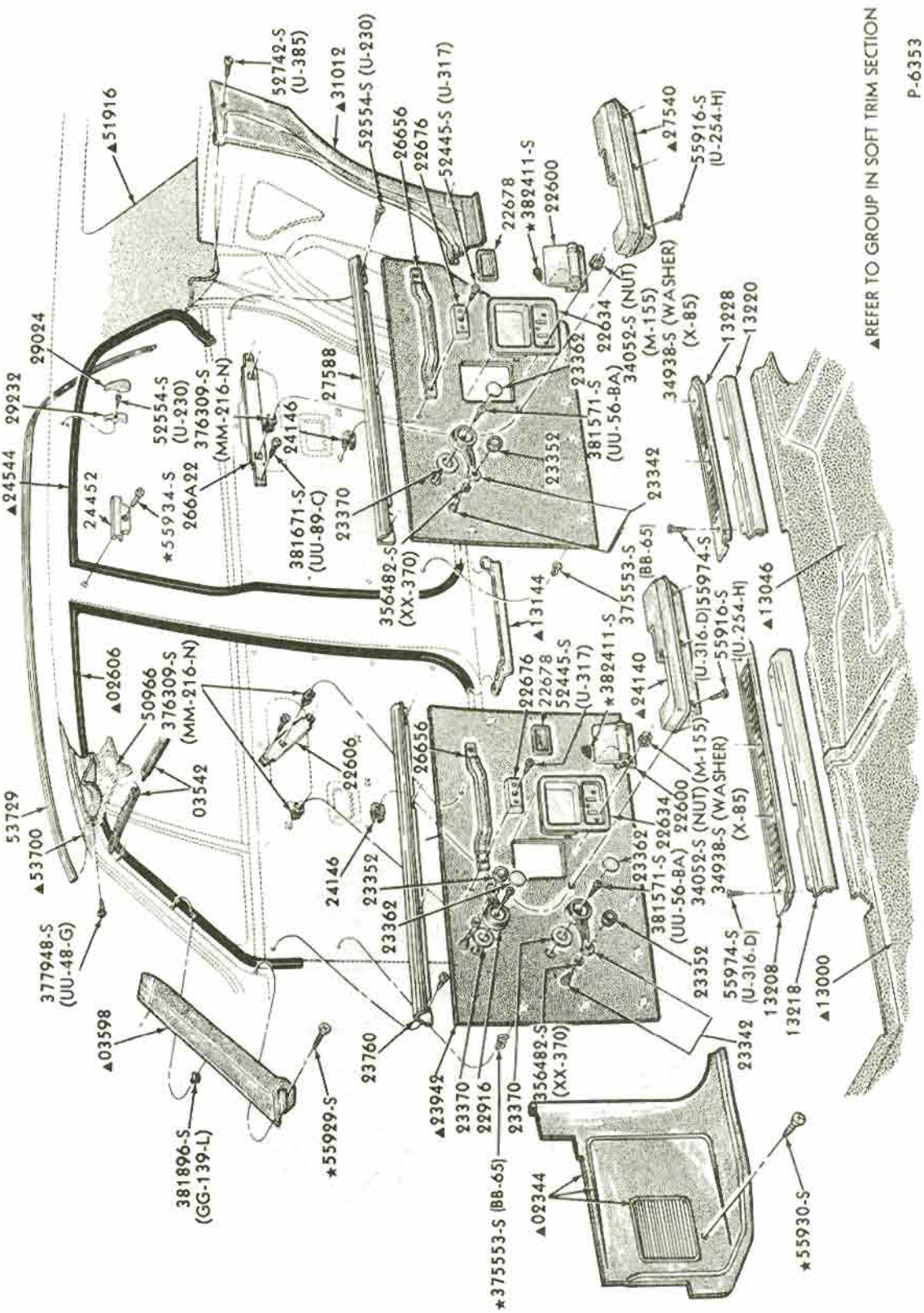

INTERIOR TRIM and RELATED PARTS
1968/69 FAIRLANE/TORINO - BODY TYPE 54

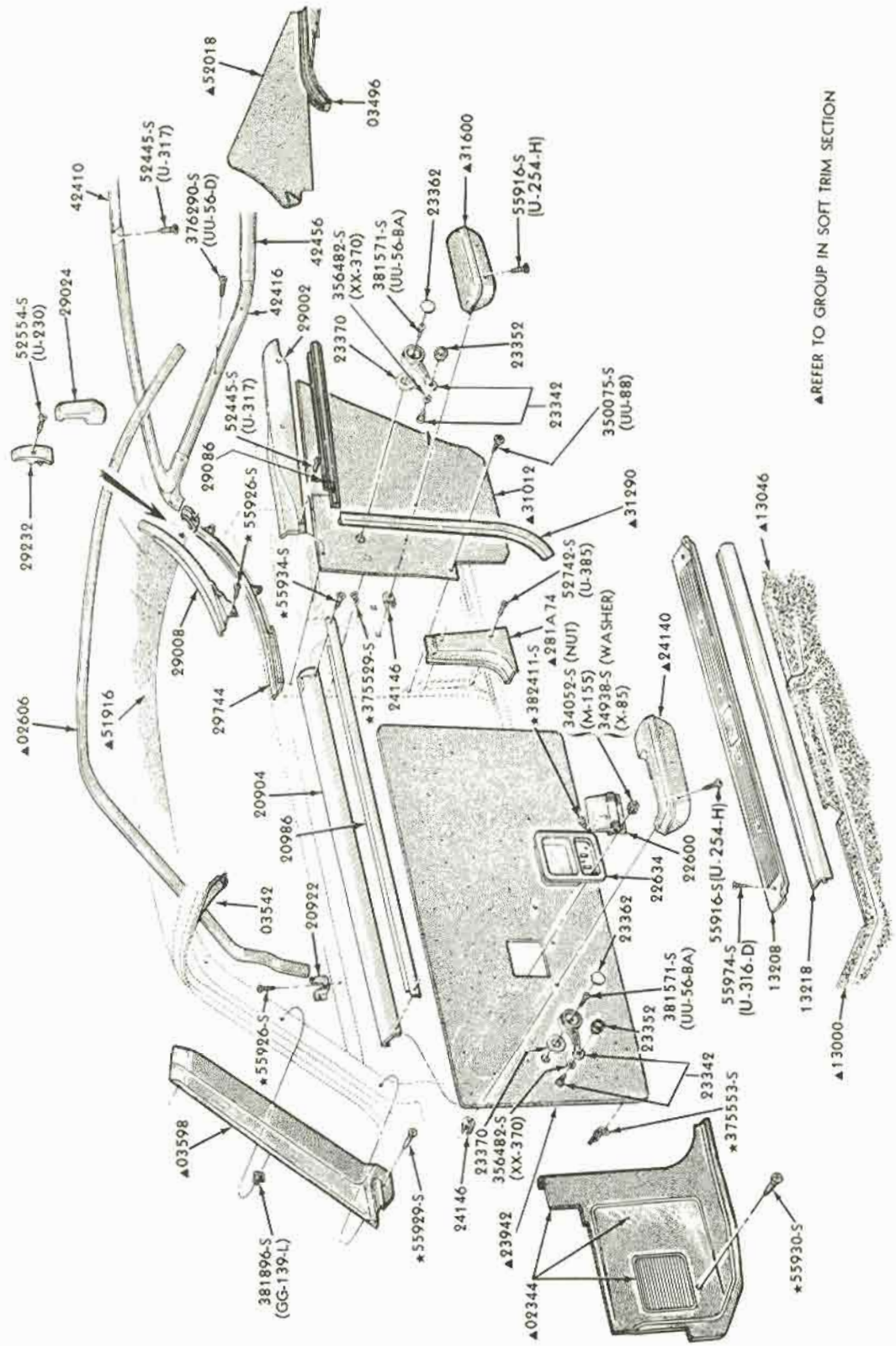

INTERIOR TRIM and RELATED PARTS
1968/69 FAIRLANE/TORINO - BODY TYPE 63

COPYRIGHT © 1975 — FORD MOTOR COMPANY — DEARBORN, MICHIGAN

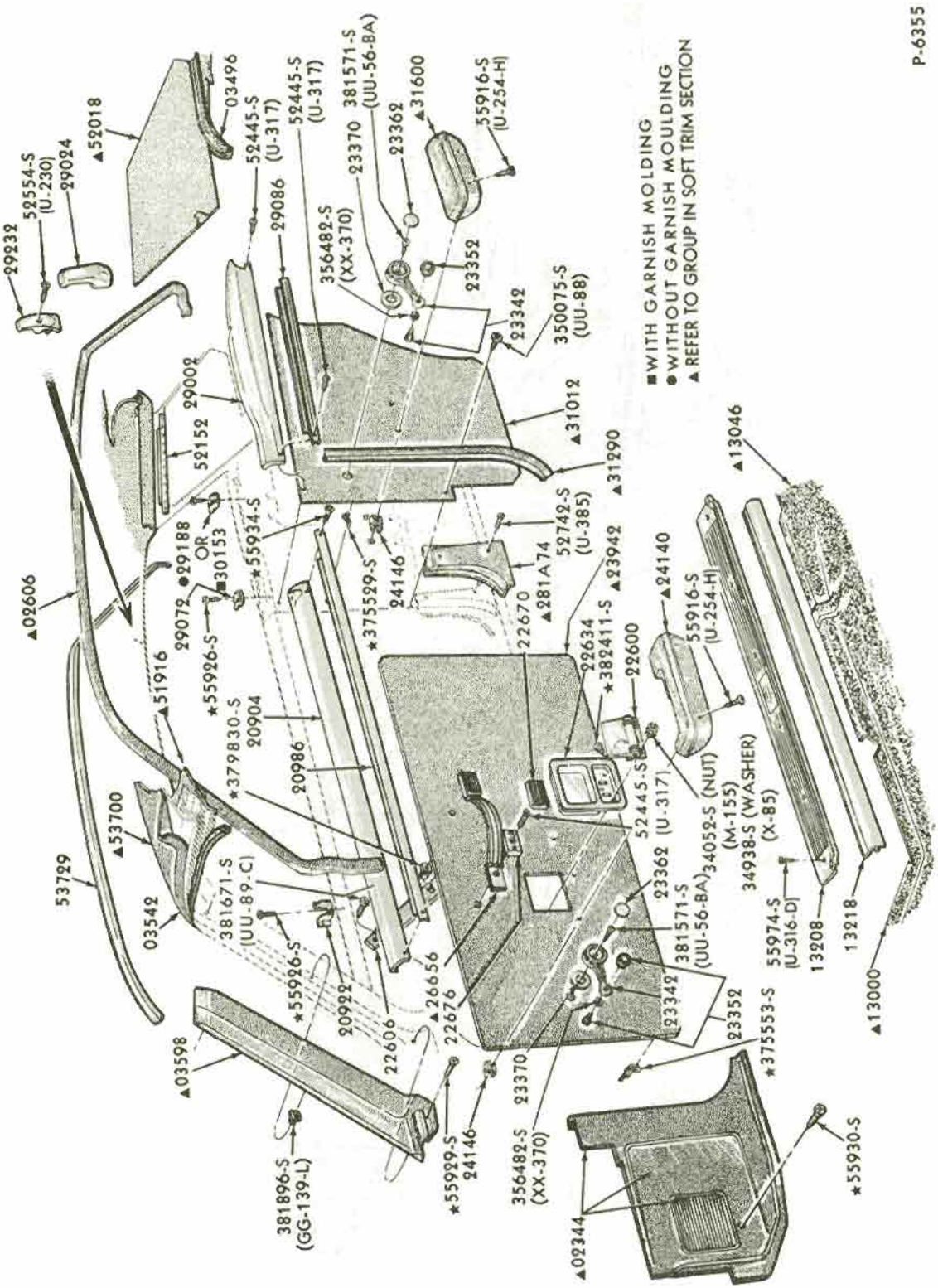

INTERIOR TRIM and RELATED PARTS
1968/69 FAIRLANE/TORINO - BODY TYPE 65

P-6352

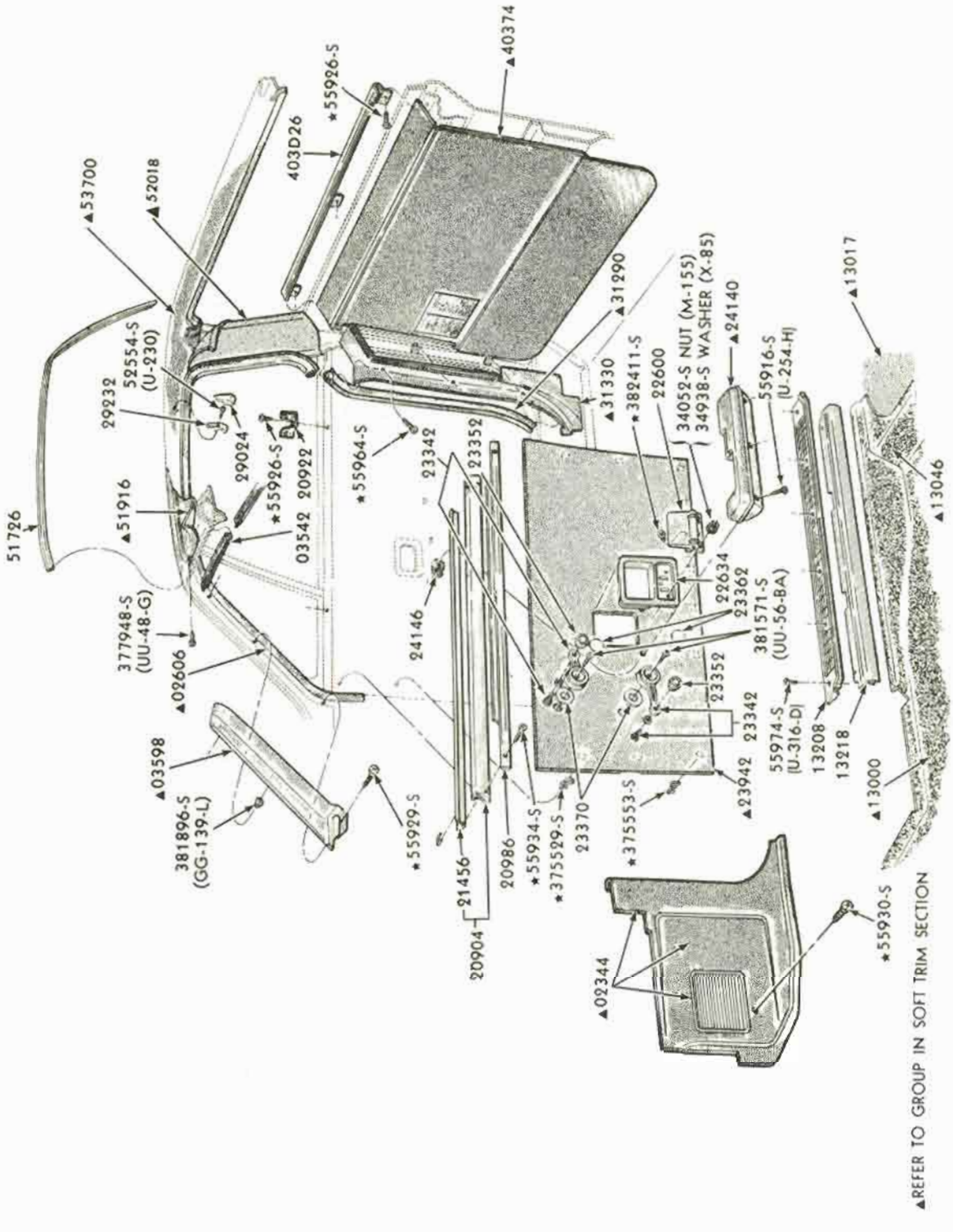

INTERIOR TRIM and RELATED PARTS
1968/69 FAIRLANE - BODY TYPE 66

COPYRIGHT © 1975 — FORD MOTOR COMPANY — DEARBORN, MICHIGAN

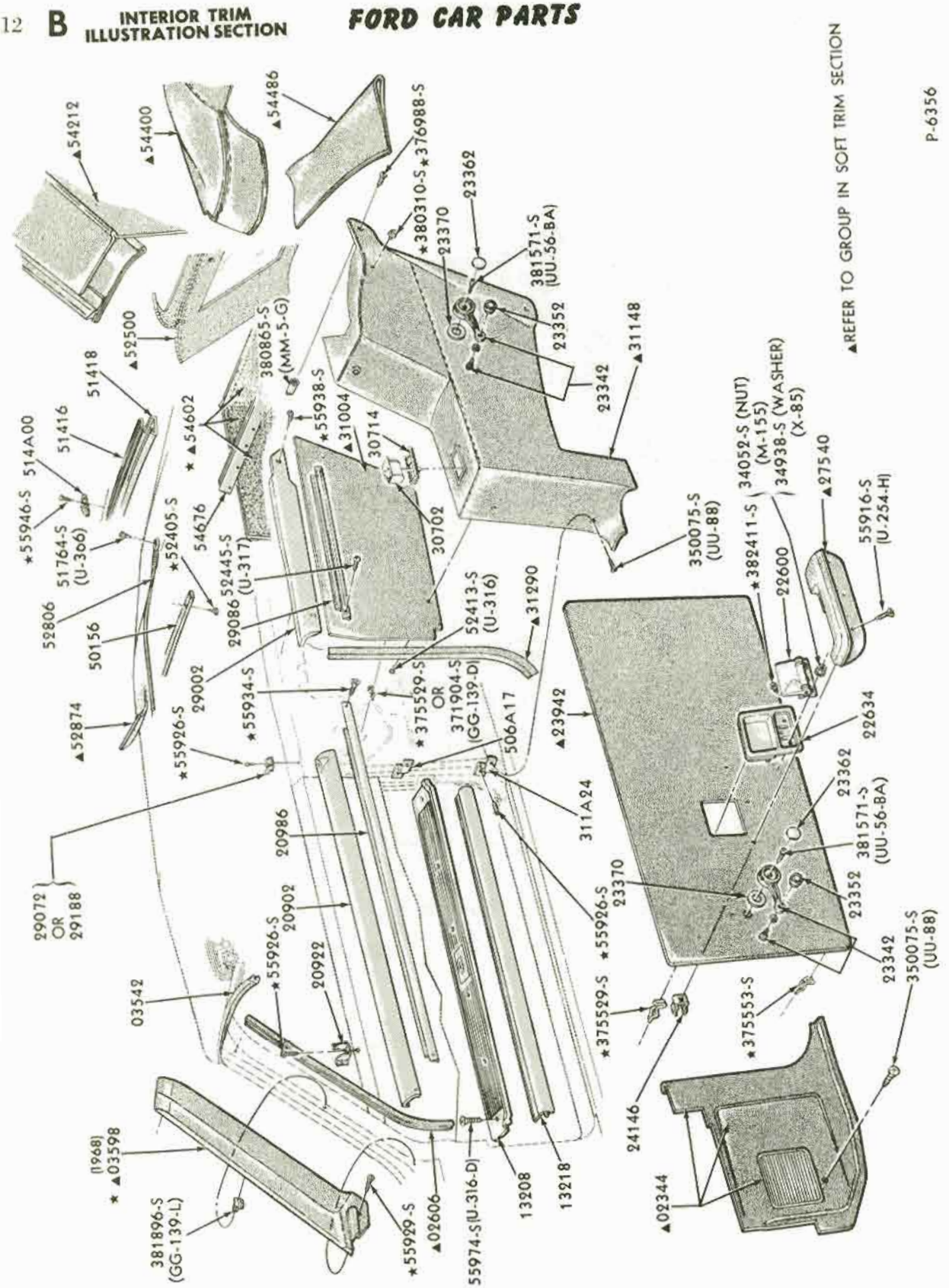

INTERIOR TRIM and RELATED PARTS
1968/69 FAIRLANE/TORINO - BODY TYPE 76

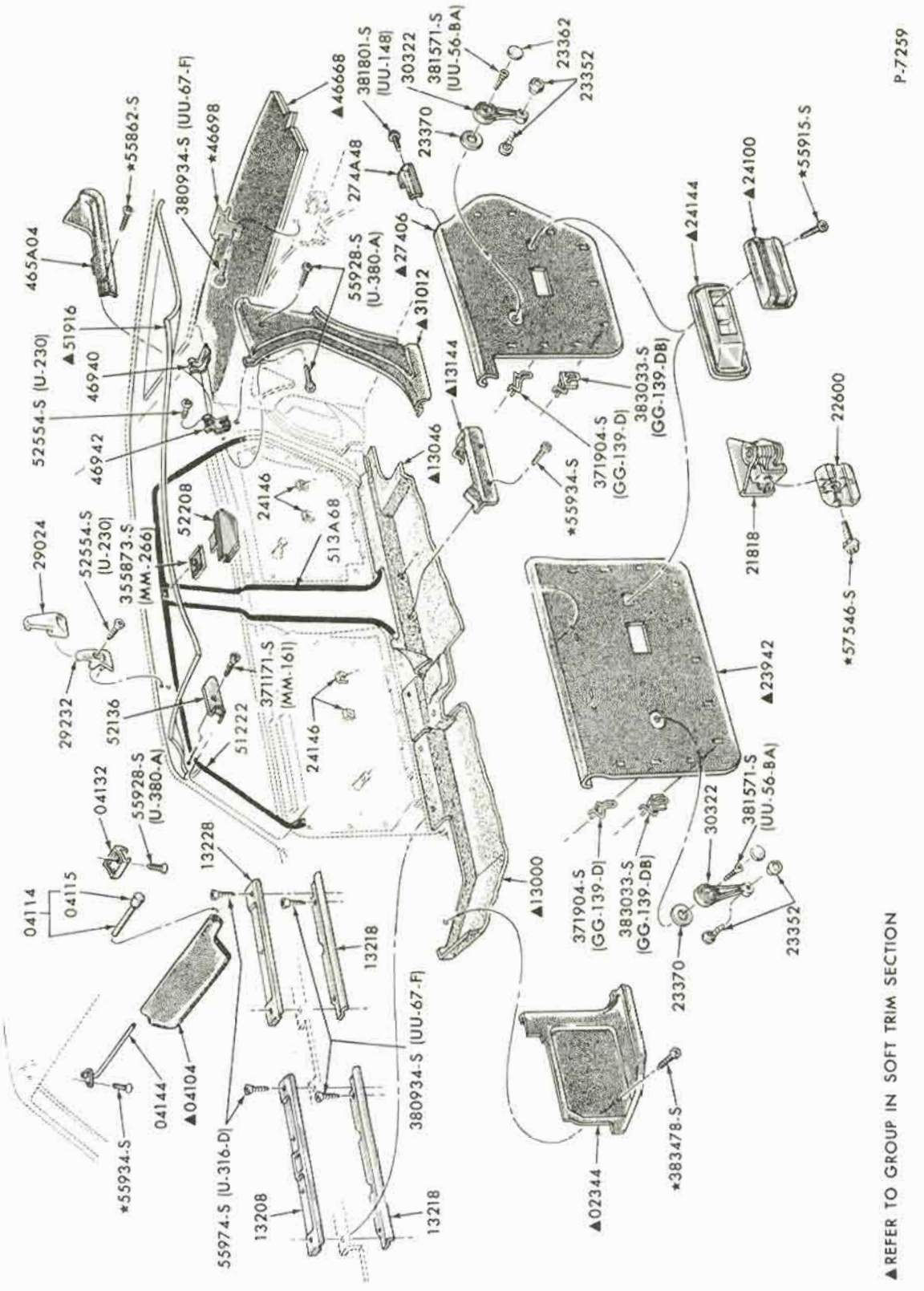

INTERIOR TRIM and RELATED PARTS
1970/71 FAIRLANE/TORINO - BODY TYPE 54

COPYRIGHT © 1975 — FORD MOTOR COMPANY — DEARBORN, MICHIGAN

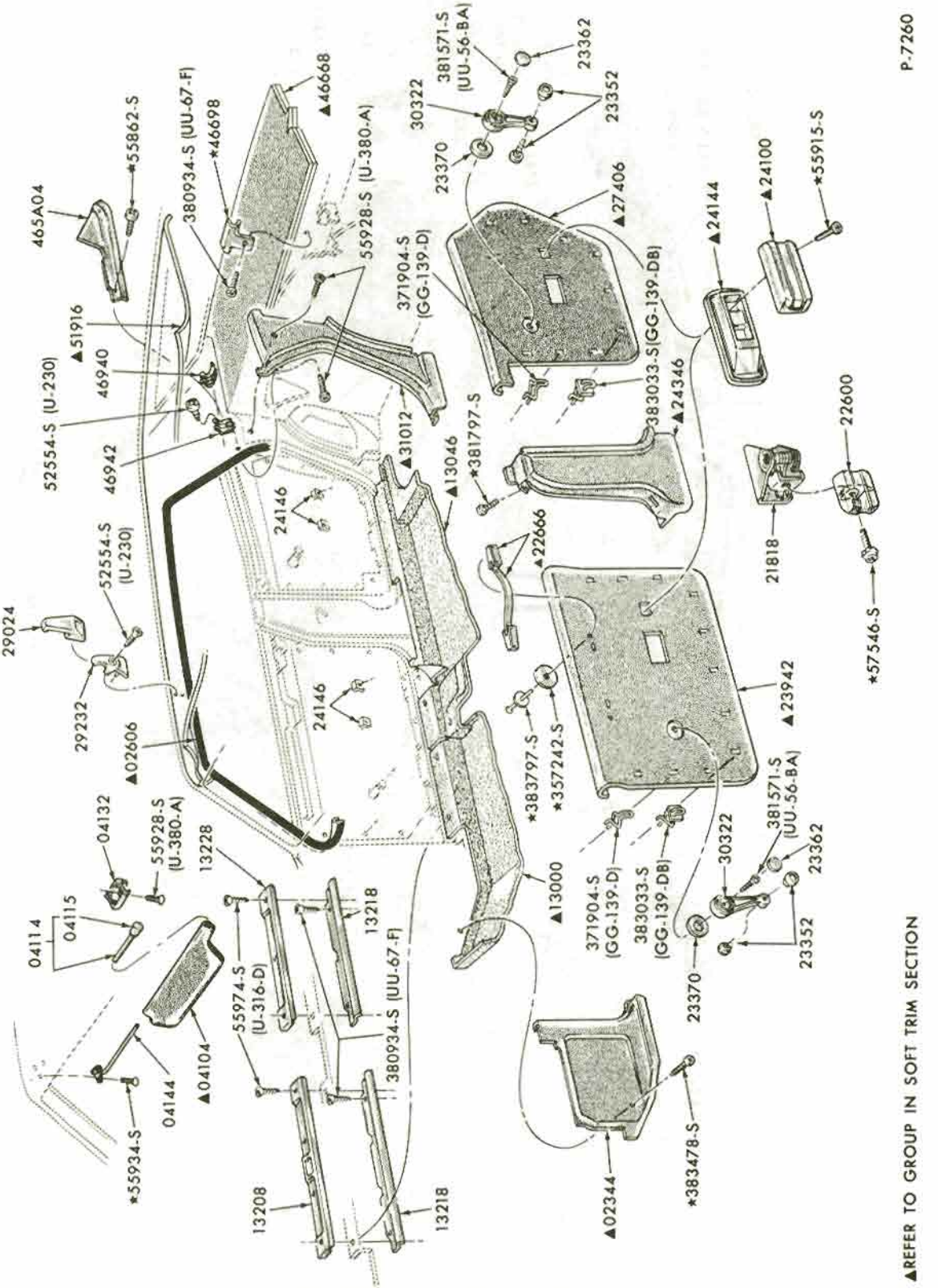

▲REFER TO GROUP IN SOFT TRIM SECTION

P-7260

INTERIOR TRIM and RELATED PARTS
1970/71 FAIRLANE/TORINO - BODY TYPE 57

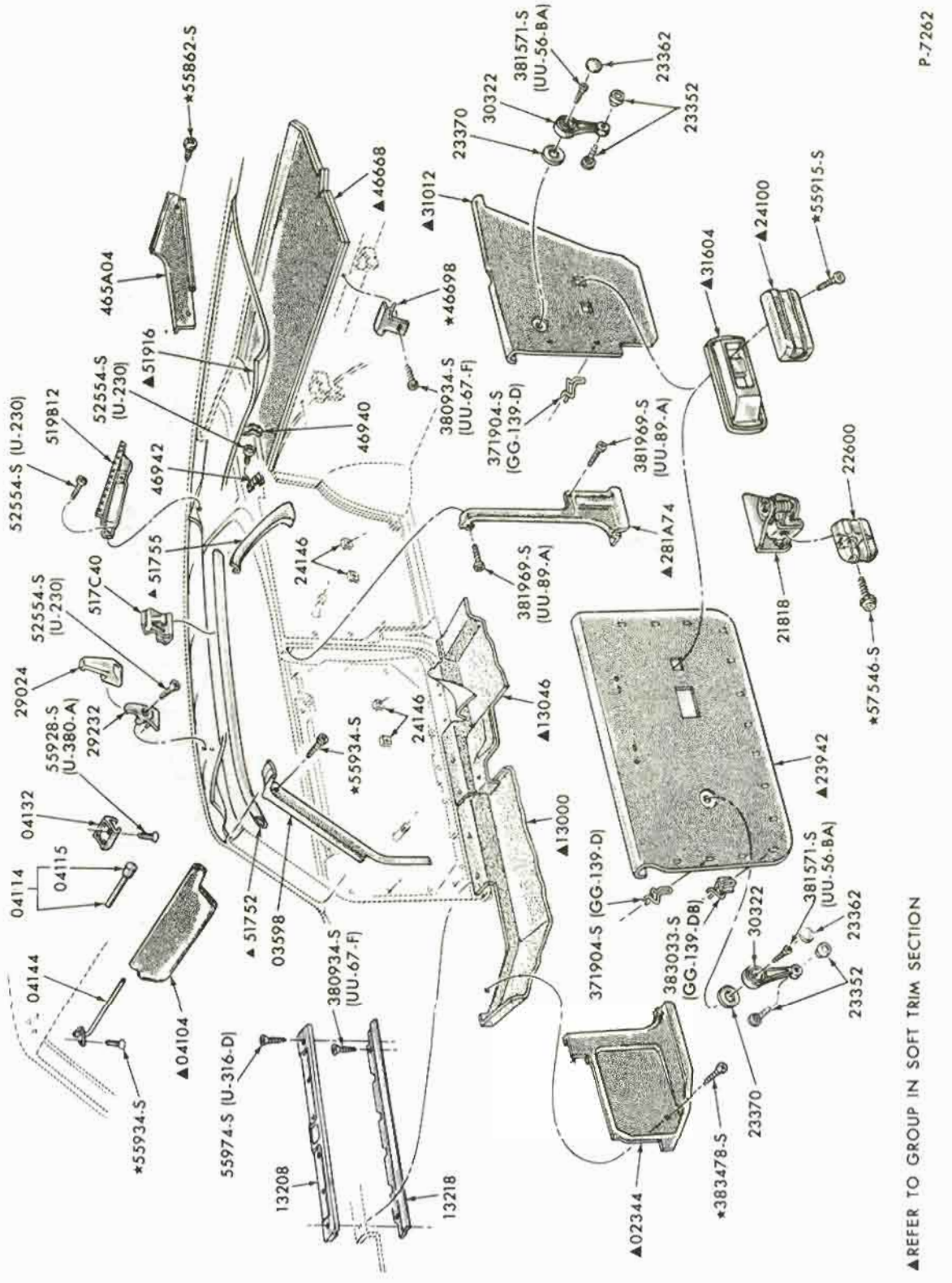

INTERIOR TRIM and RELATED PARTS
1970 FAIRLANE/TORINO - BODY TYPE 63

COPYRIGHT © 1975 — FORD MOTOR COMPANY — DEARBORN, MICHIGAN

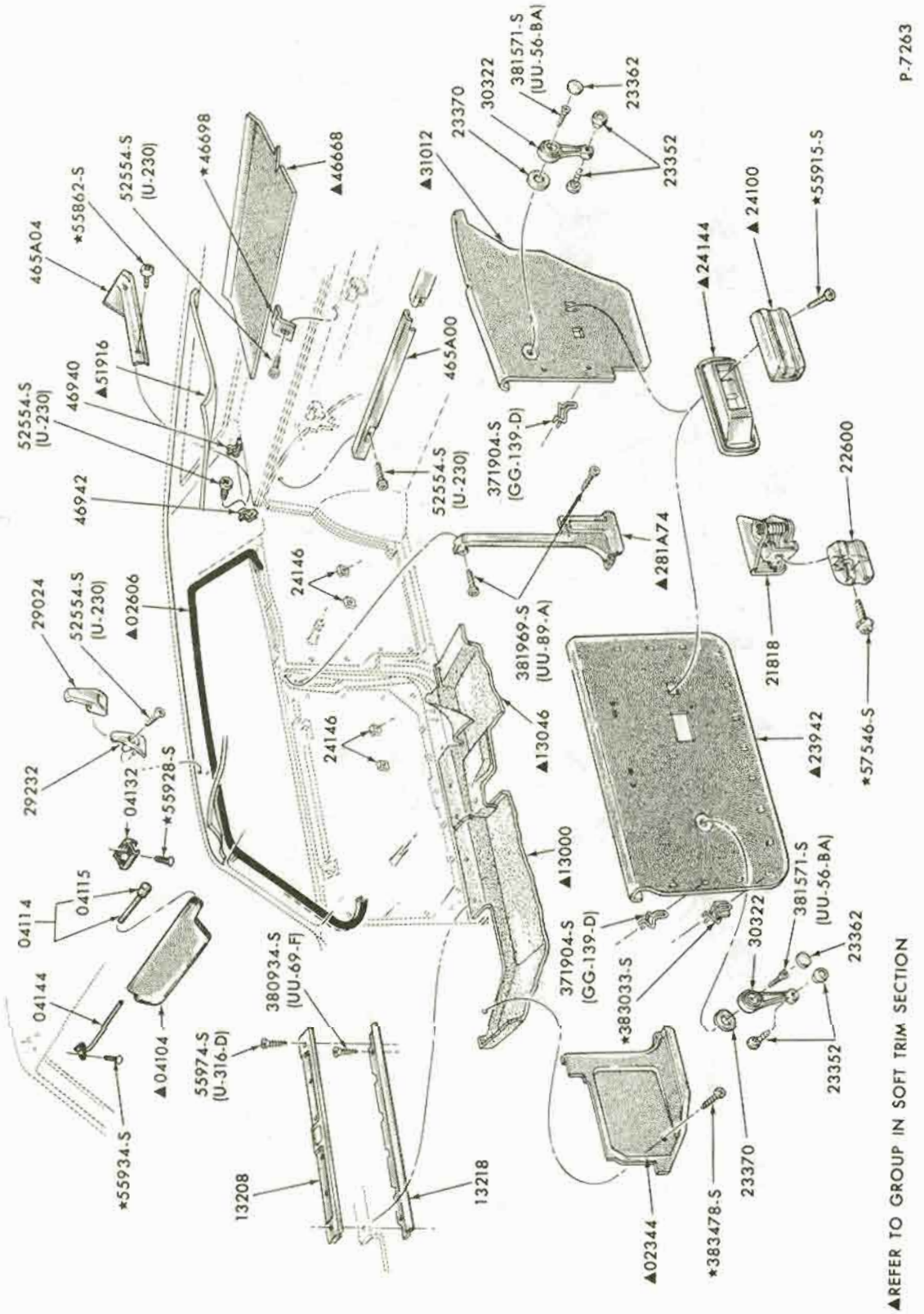
P-7263
▲REFER TO GROUP IN SOFT TRIM SECTION

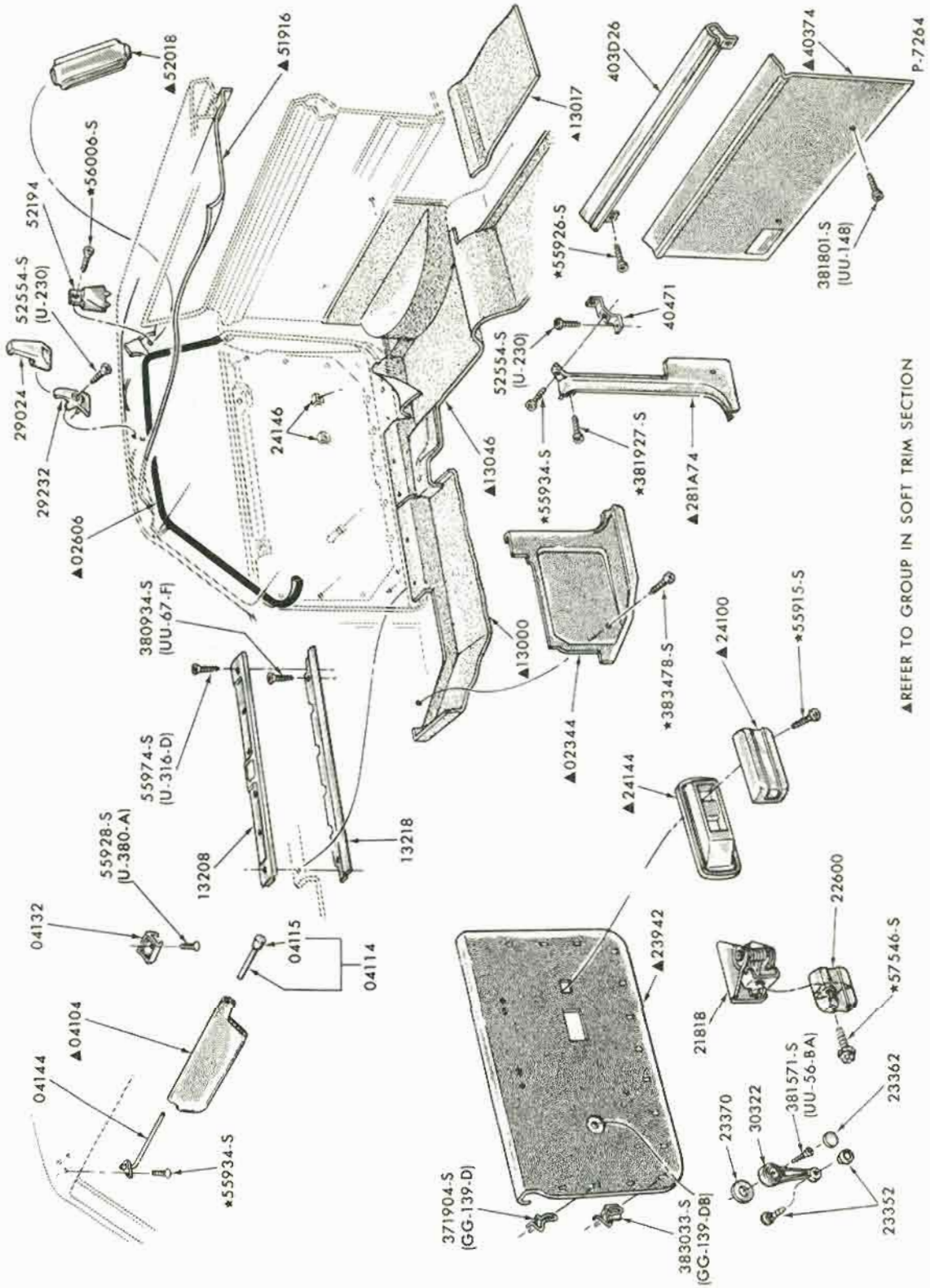

INTERIOR TRIM and RELATED PARTS
1970/71 FAIRLANE/TORINO - BODY TYPE 66

COPYRIGHT © 1975 — FORD MOTOR COMPANY — DEARBORN, MICHIGAN

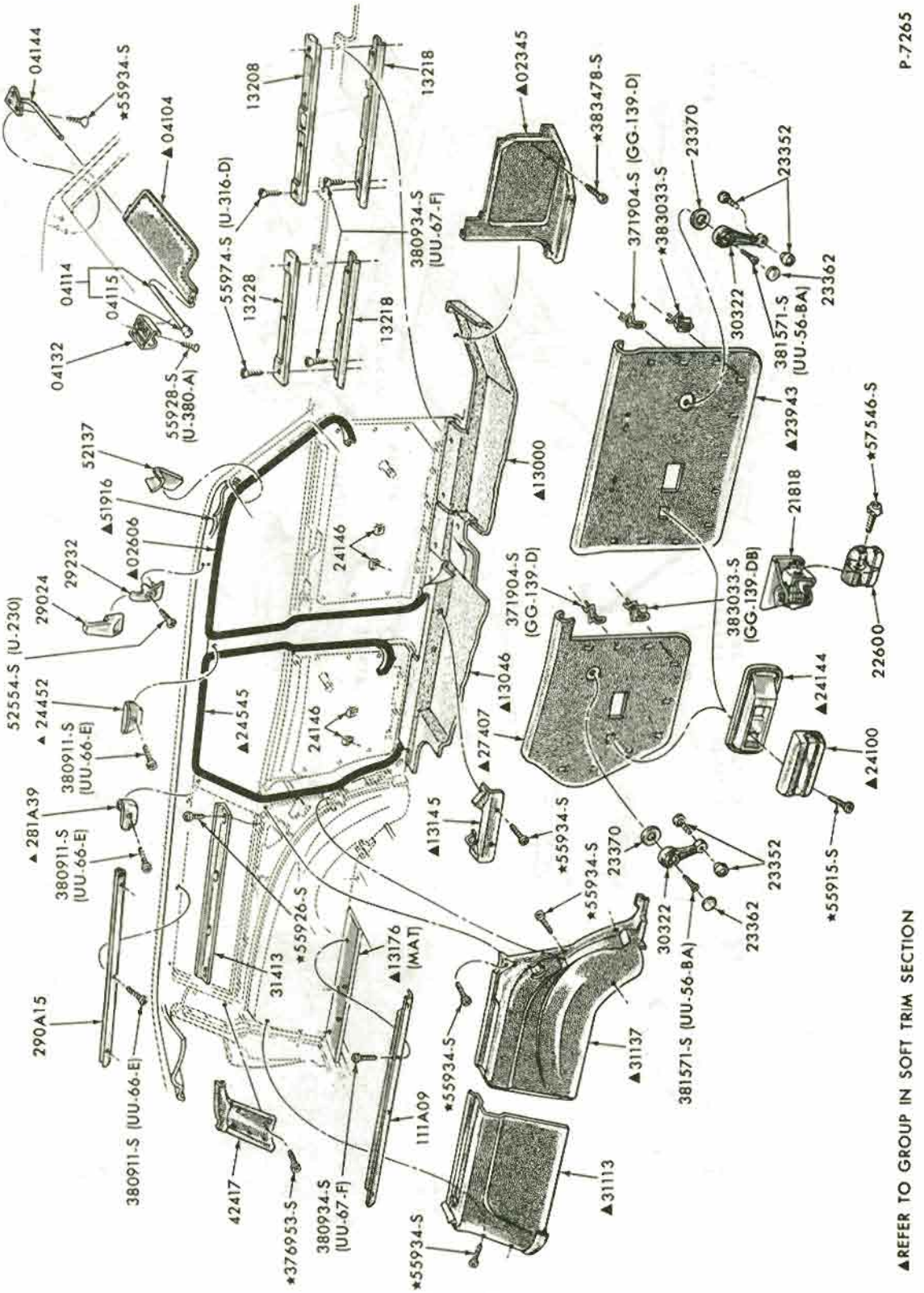

INTERIOR TRIM and RELATED PARTS - L.H. SIDE
1970/71 FAIRLANE/TORINO - BODY TYPE 71

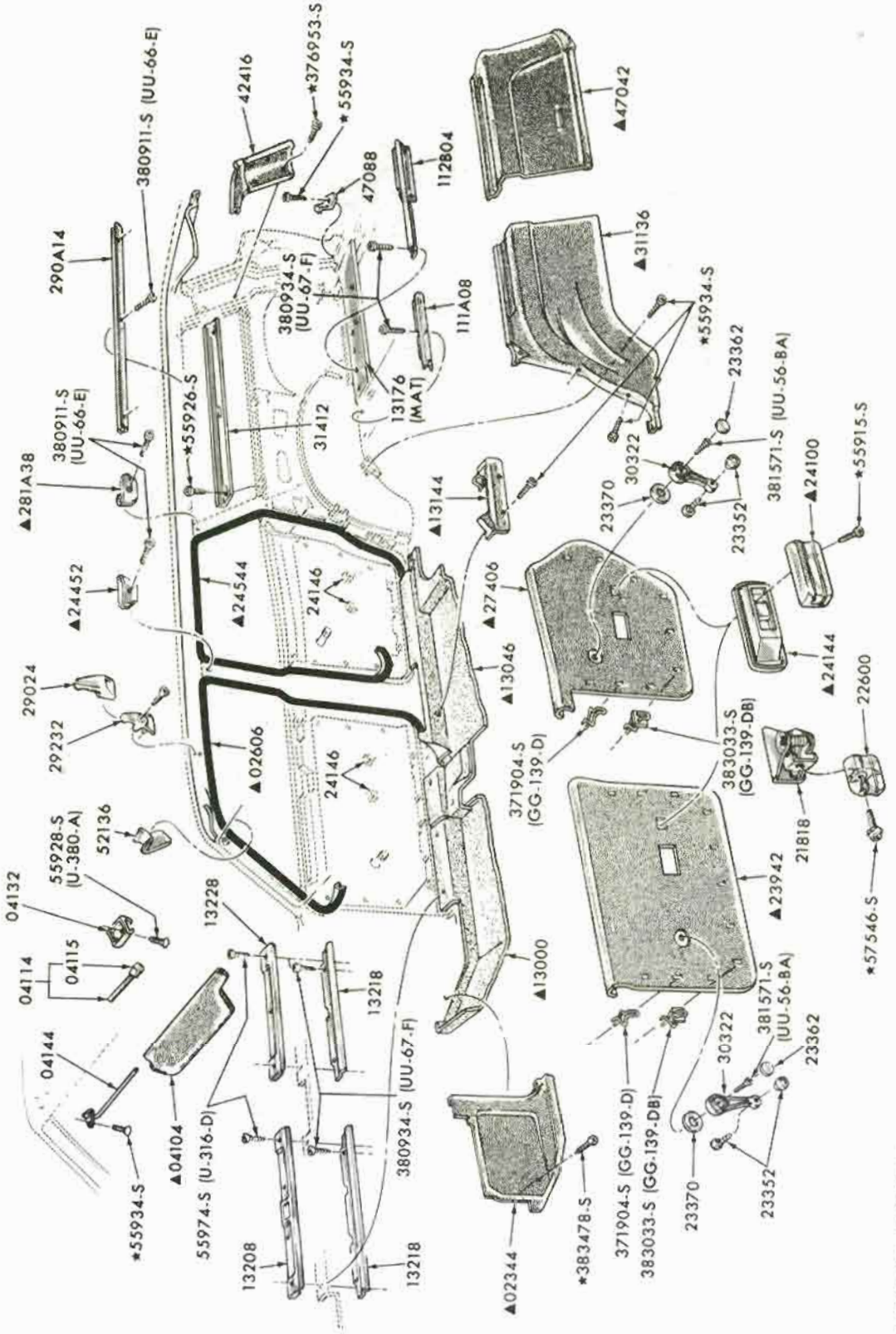

INTERIOR TRIM and RELATED PARTS - R.H. SIDE
1970/71 FAIRLANE/TORINO - BODY TYPE 71

COPYRIGHT © 1975 — FORD MOTOR COMPANY — DEARBORN, MICHIGAN

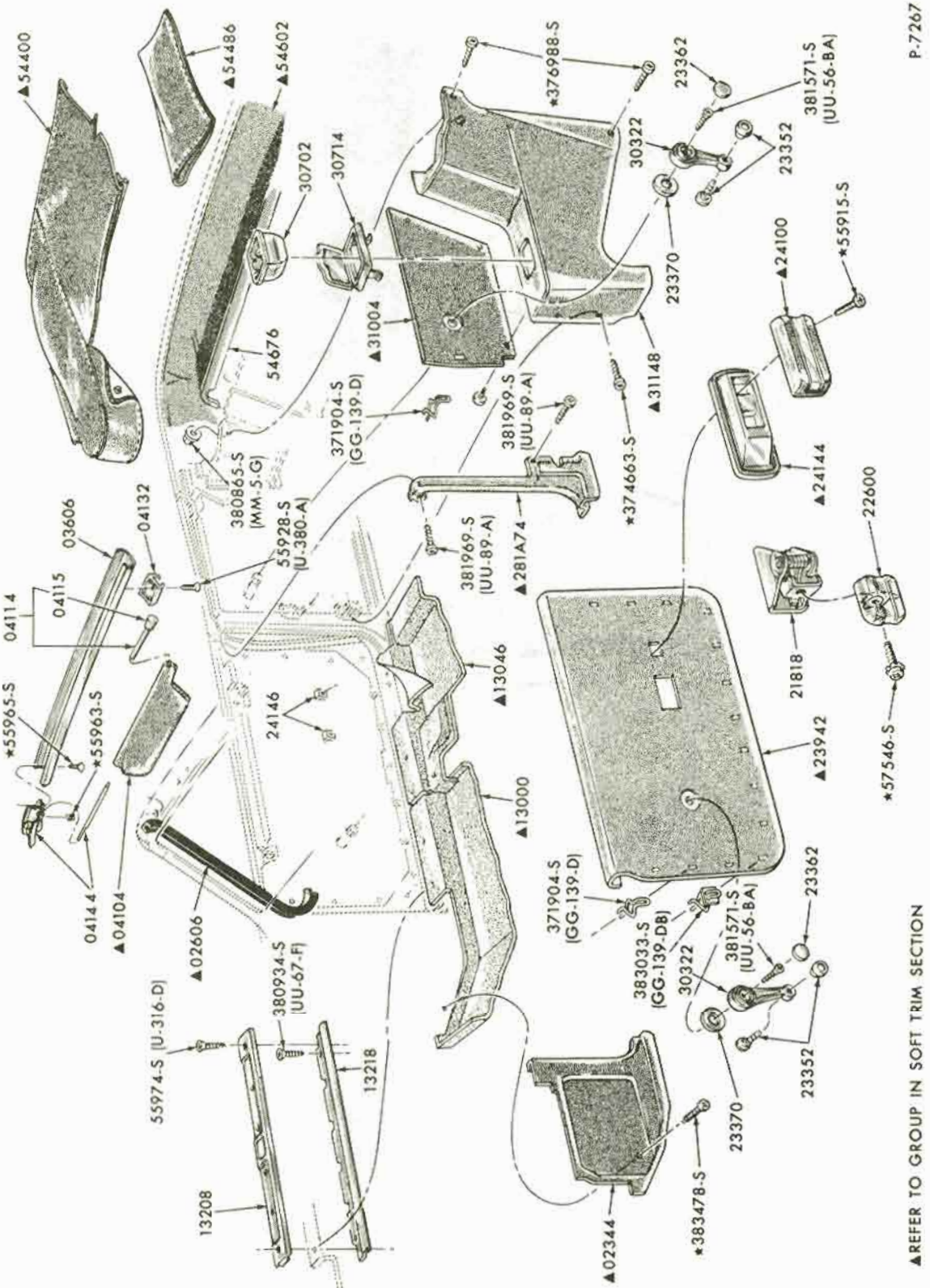

▲REFER TO GROUP IN SOFT TRIM SECTION

INTERIOR TRIM and RELATED PARTS
1970/71 FAIRLANE/TORINO - BODY TYPE 76

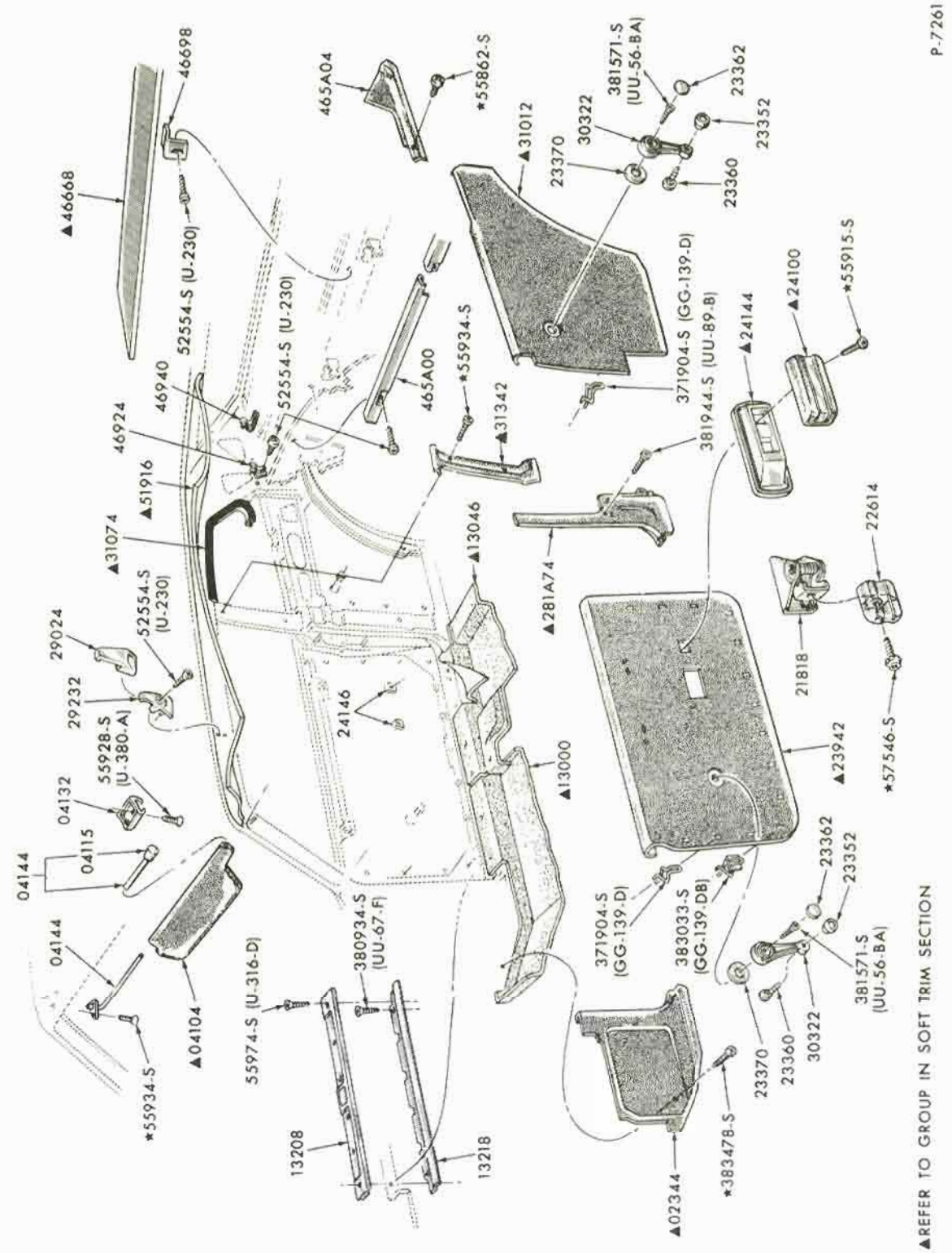

INTERIOR TRIM and RELATED PARTS

1970 FAIRLANE/TORINO - BODY TYPE 62

COPYRIGHT © 1975 — FORD MOTOR COMPANY — DEARBORN, MICHIGAN

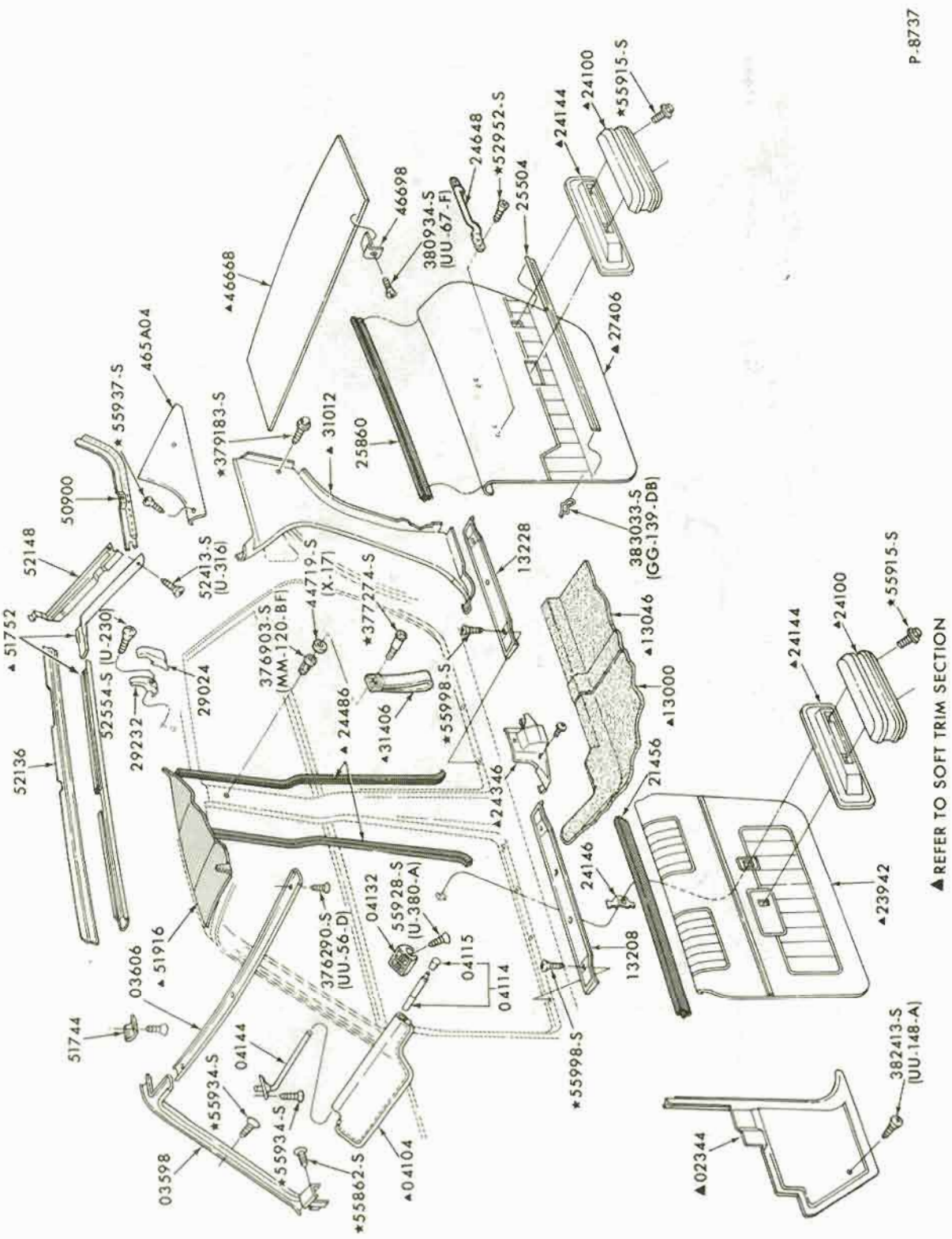

INTERIOR TRIM and RELATED PARTS
1972 TORINO - BODY TYPE 53

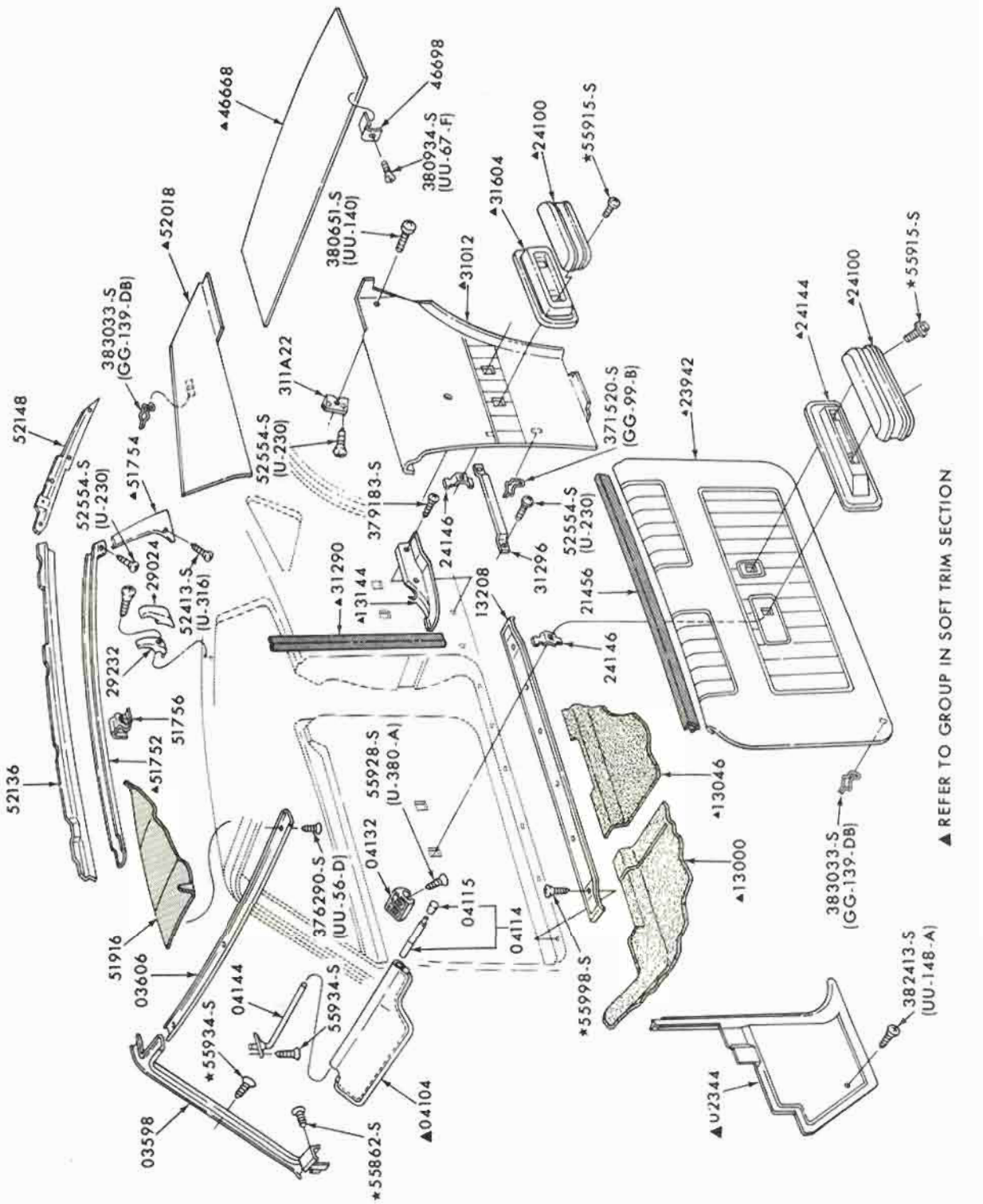

INTERIOR TRIM and RELATED PARTS
1972 TORINO - BODY TYPE 65

COPYRIGHT © 1975 — FORD MOTOR COMPANY — DEARBORN, MICHIGAN

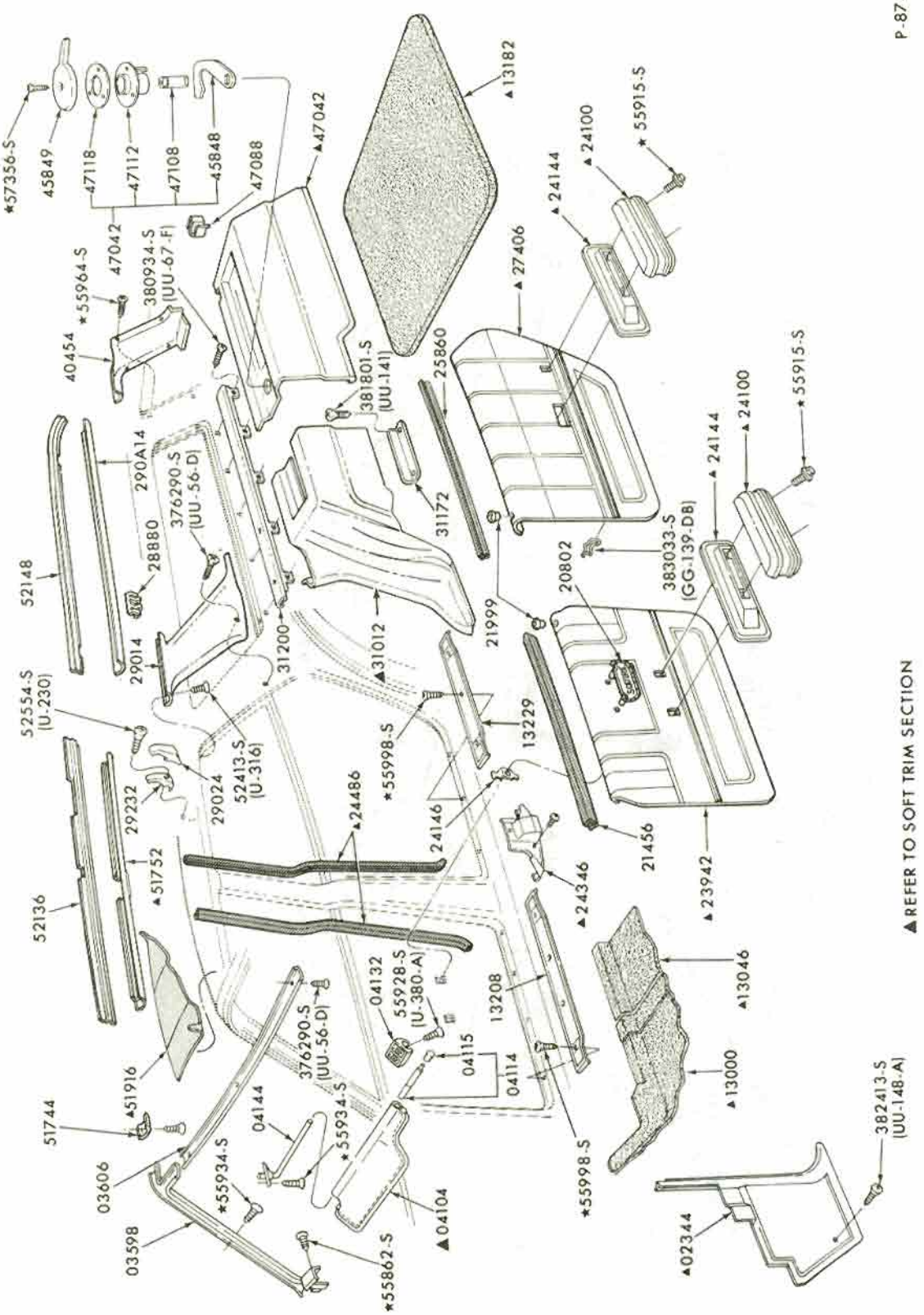

INTERIOR TRIM and RELATED PARTS

1972 TORINO - BODY TYPE 71 - R.H. SIDE

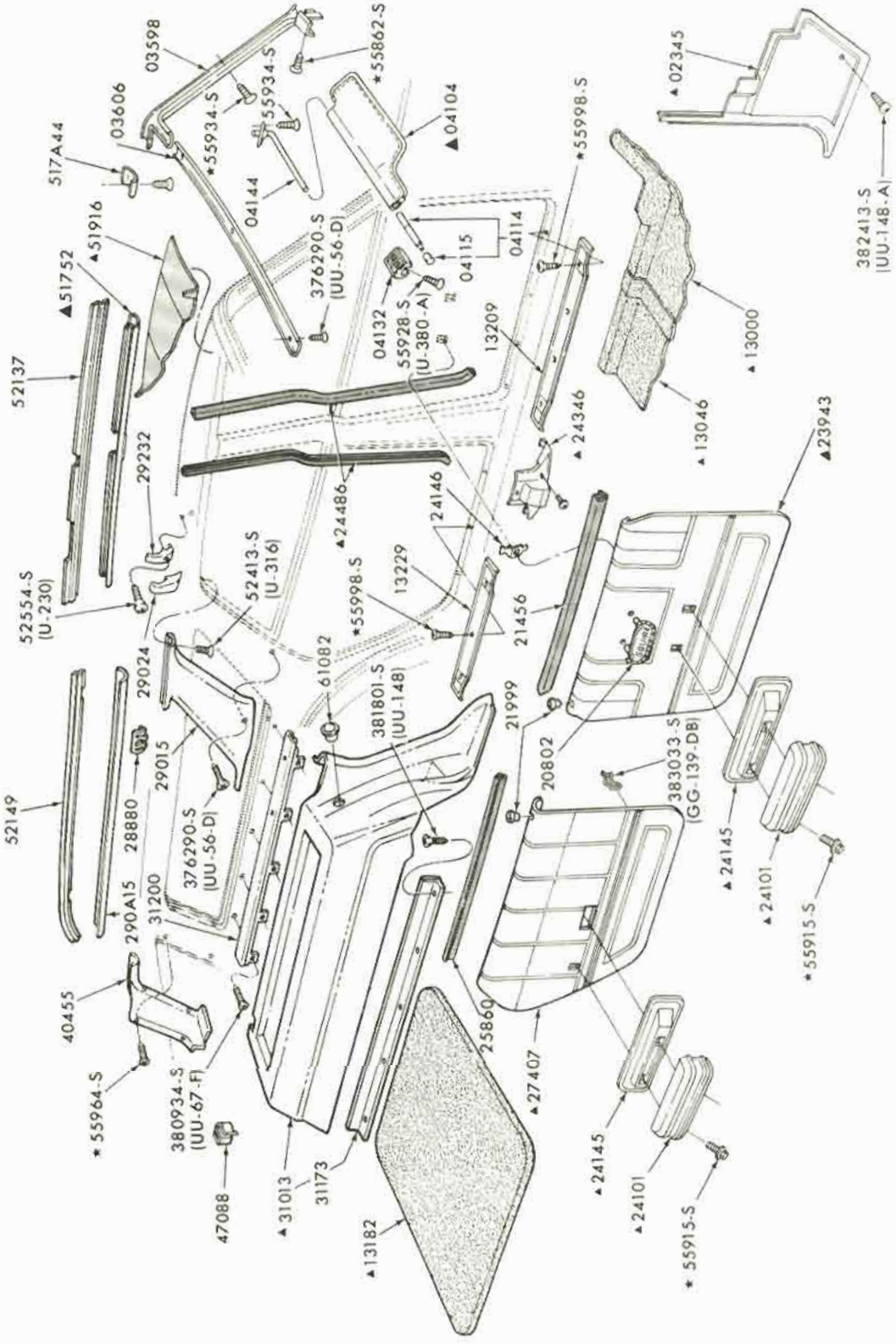

INTERIOR TRIM and RELATED PARTS

1972 TORINO - BODY TYPE 71 - L.H. SIDE

COPYRIGHT © 1975 — FORD MOTOR COMPANY — DEARBORN, MICHIGAN

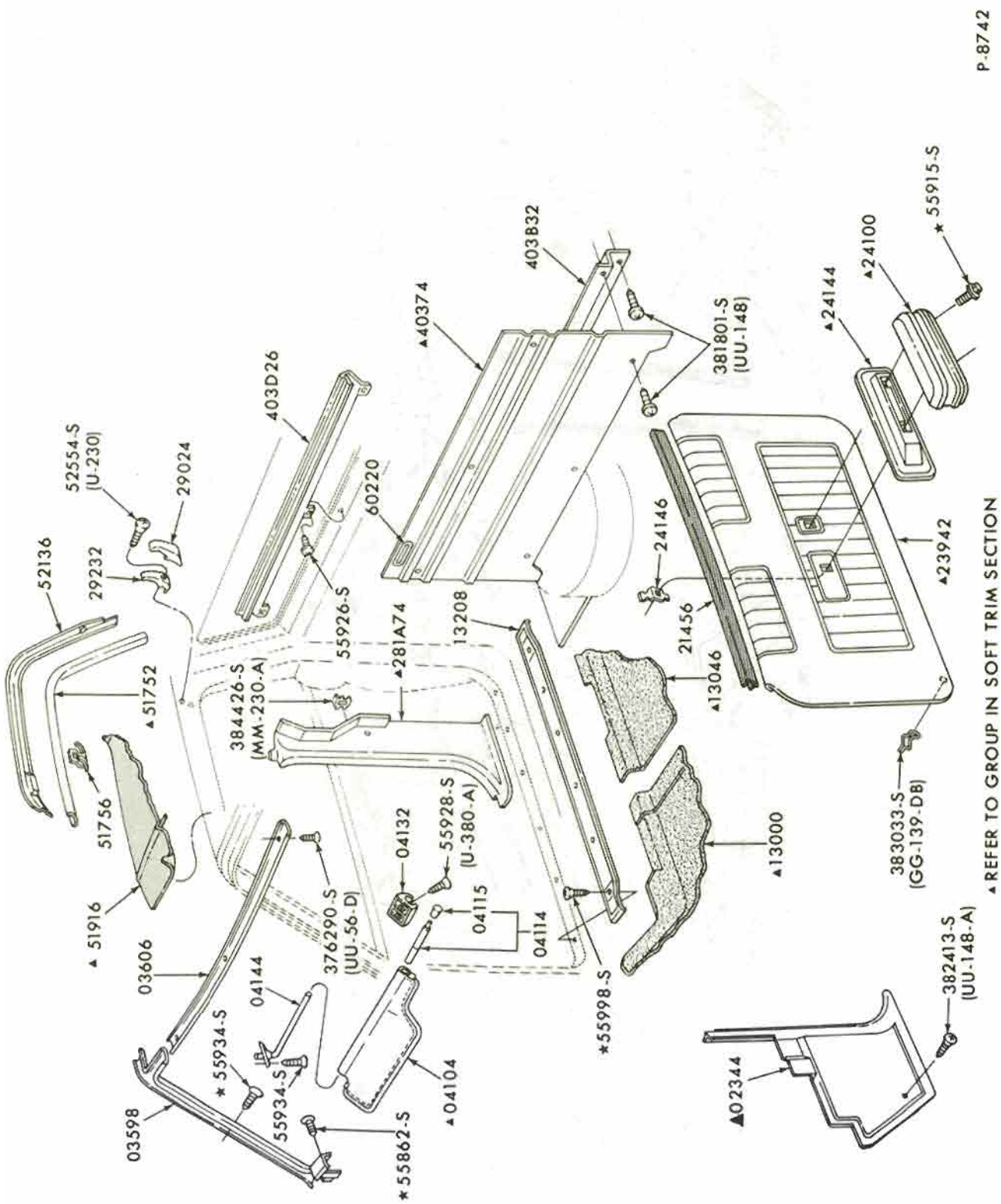

INTERIOR TRIM and RELATED PARTS
1972 TORINO - BODY TYPES 97D, K

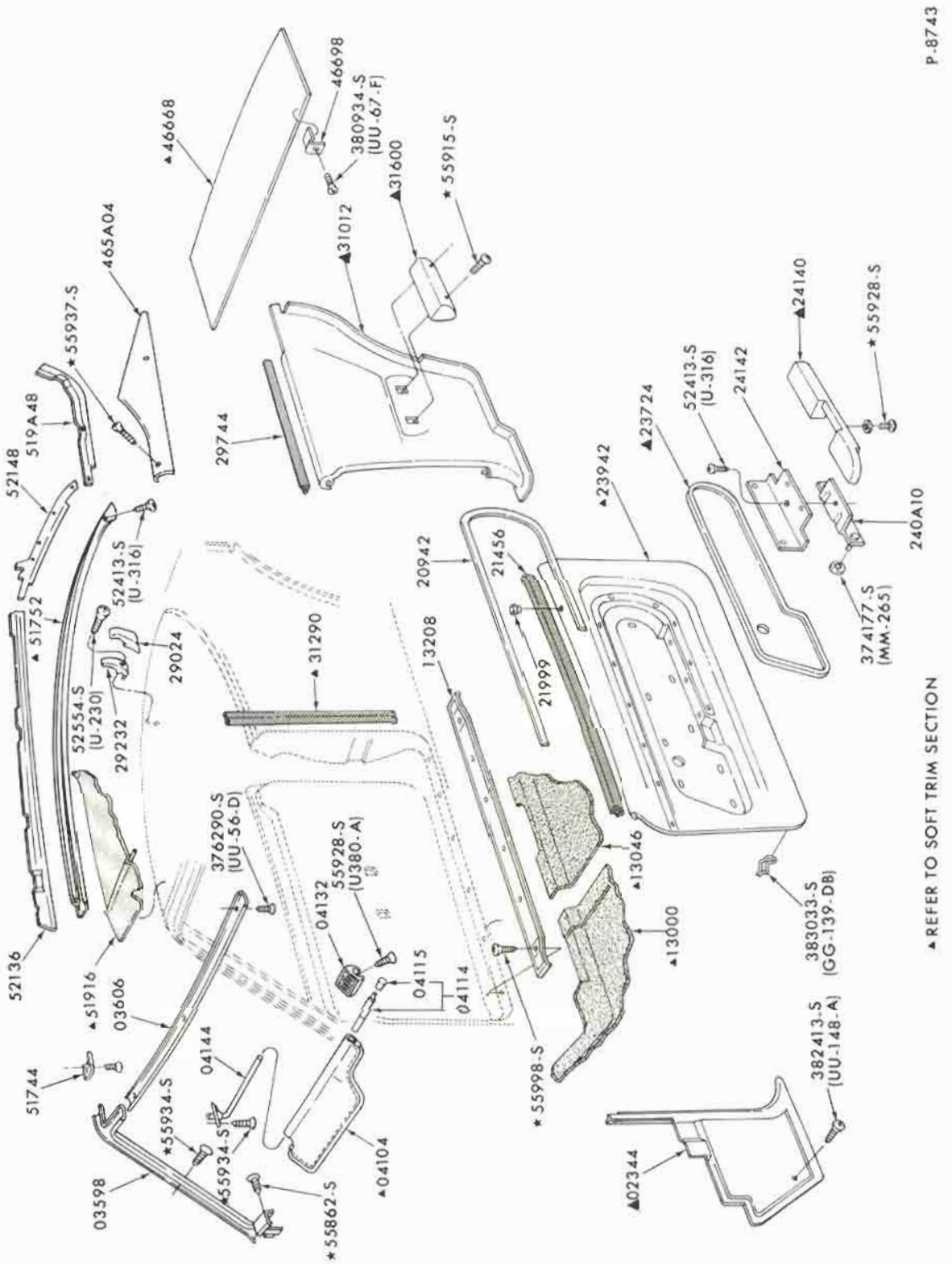

INTERIOR TRIM and RELATED PARTS
1972 TORINO - BODY TYPE 63R

COPYRIGHT © 1975 — FORD MOTOR COMPANY — DEARBORN, MICHIGAN

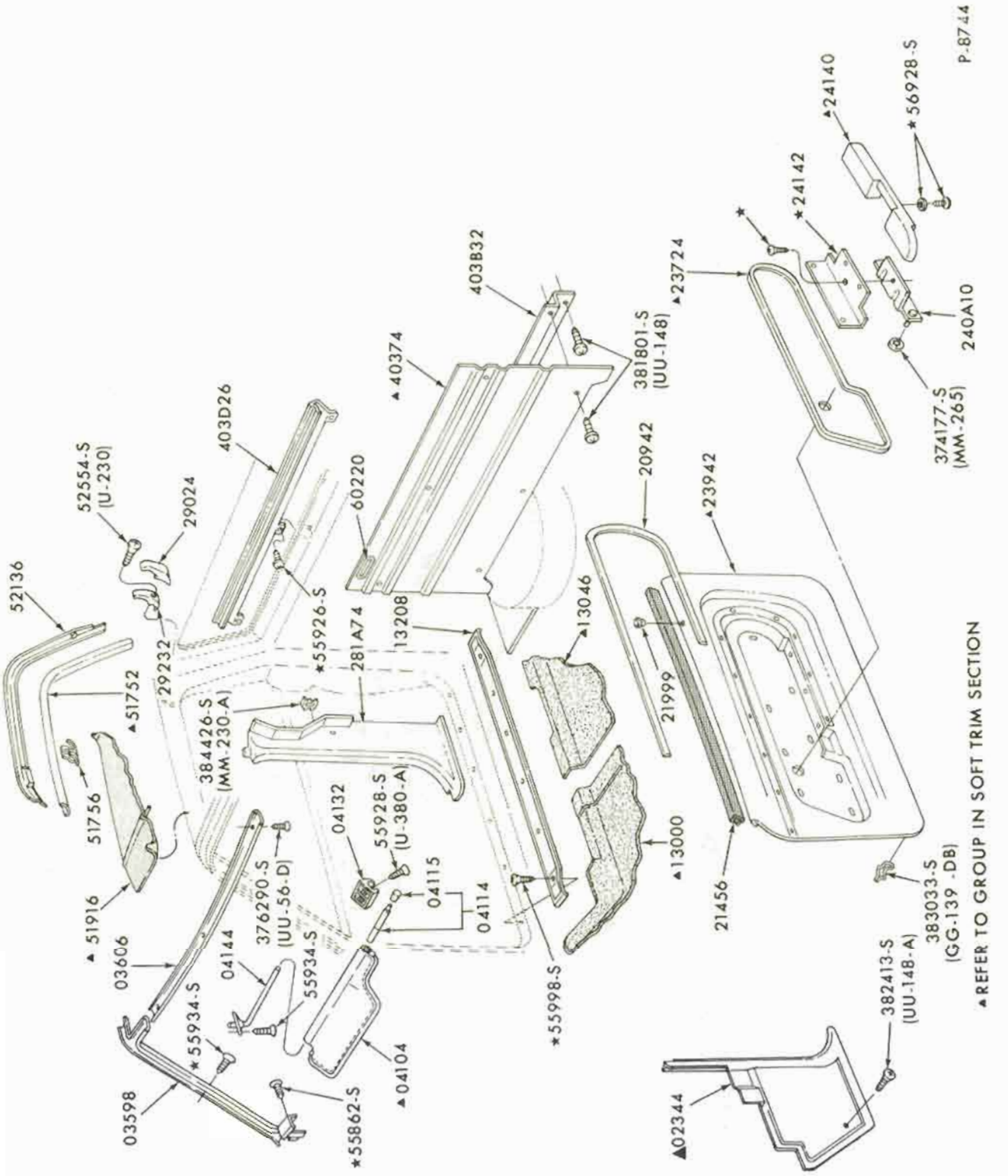

INTERIOR TRIM and RELATED PARTS

1972 TORINO - BODY TYPE 97R

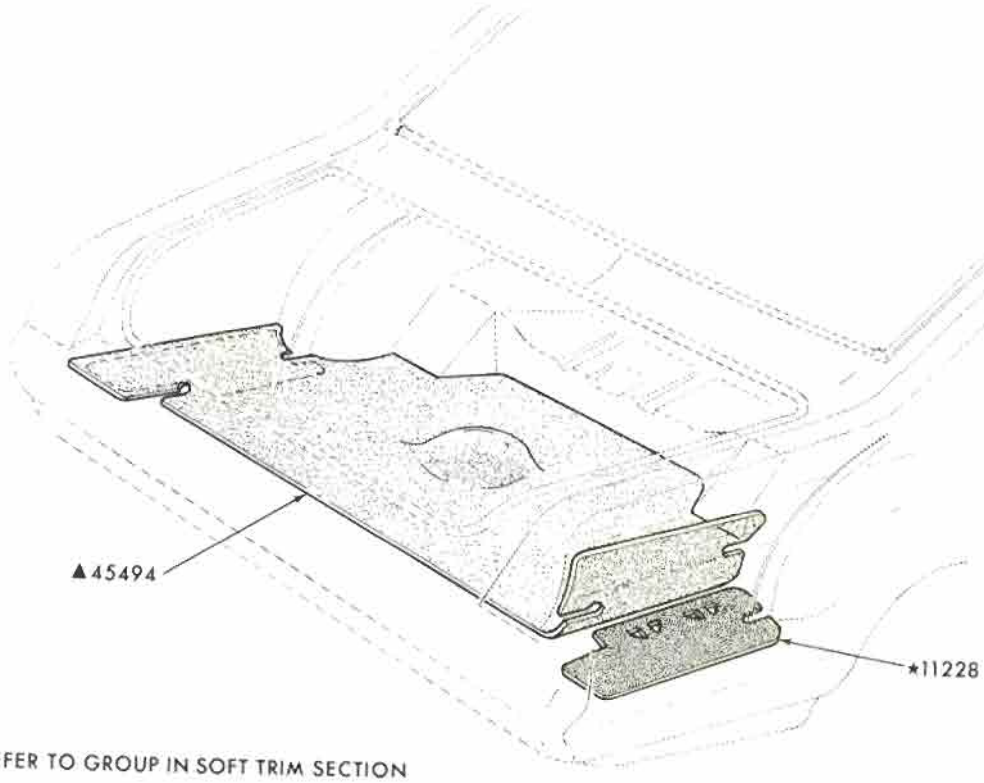

▲REFER TO GROUP IN SOFT TRIM SECTION

P-8869

LUGGAGE COMPARTMENT TRIM
1972 TORINO

COPYRIGHT © 1975— FORD MOTOR COMPANY —DEARBORN, MICHIGAN

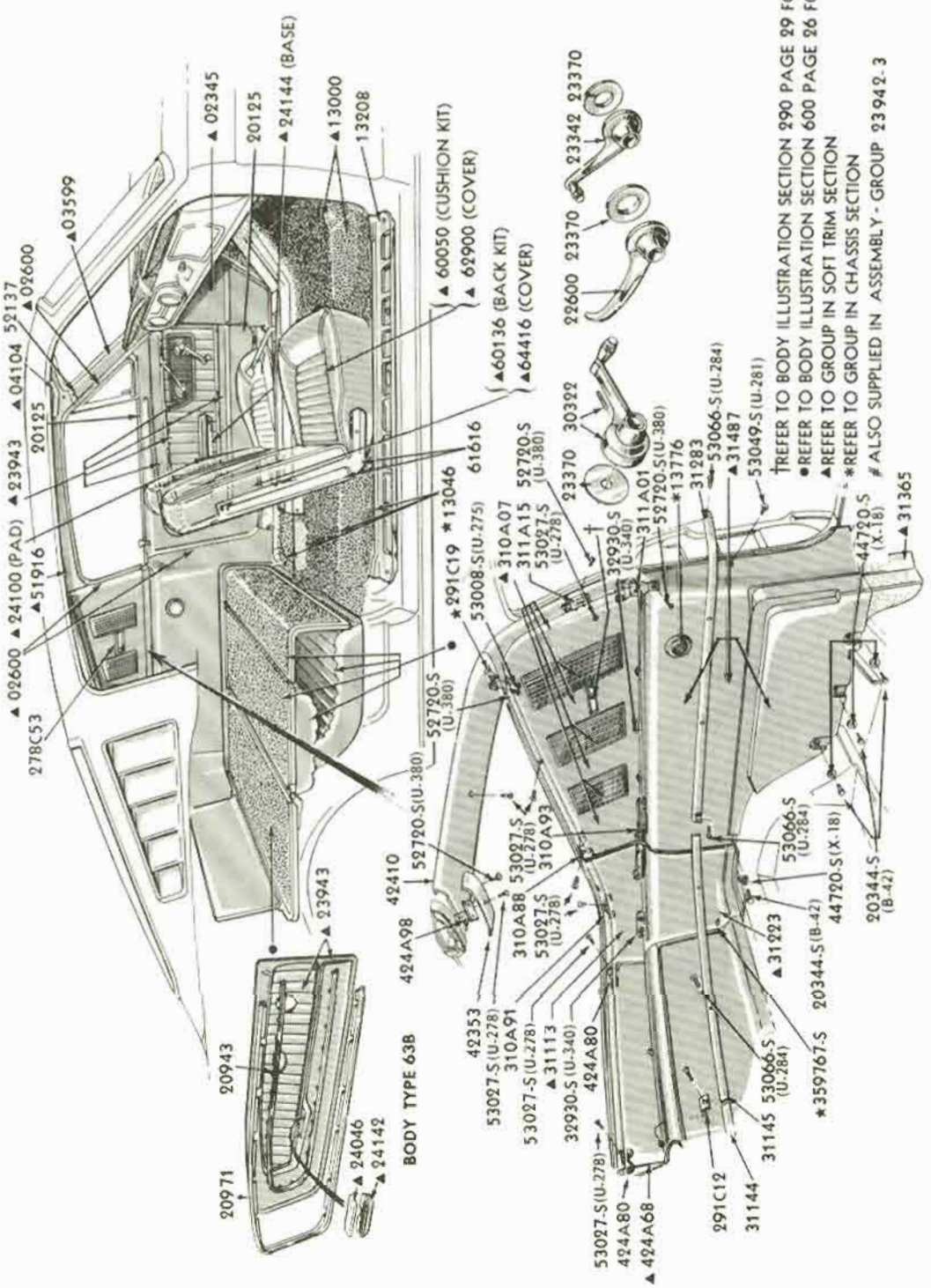

INTERIOR TRIM and RELATED PARTS - TYPICAL
1965/66 MUSTANG - BODY TYPE 63

COPYRIGHT © 1975 — FORD MOTOR COMPANY — DEARBORN, MICHIGAN

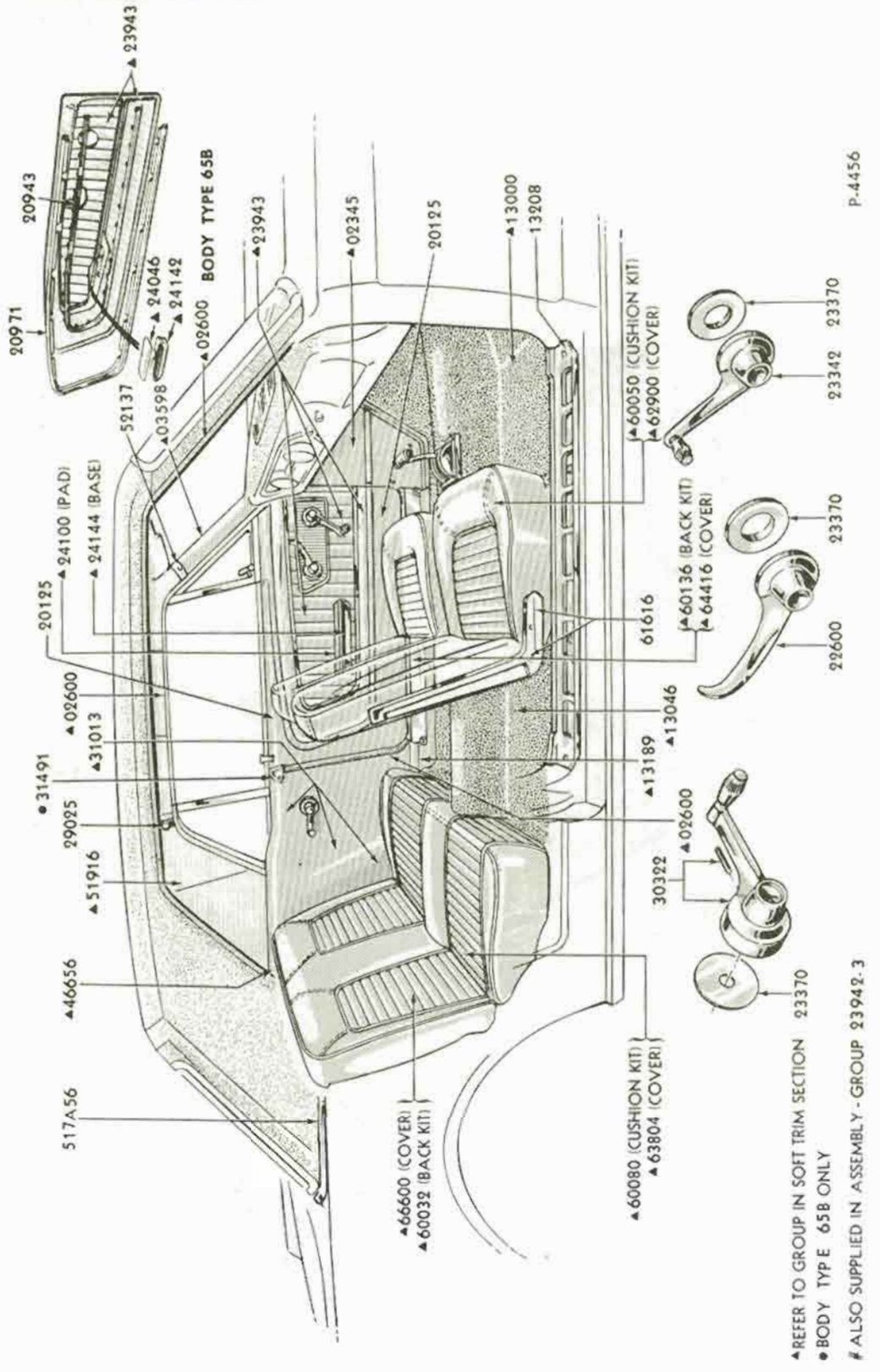

INTERIOR TRIM and RELATED PARTS - TYPICAL
1965/66 MUSTANG - BODY TYPE 65

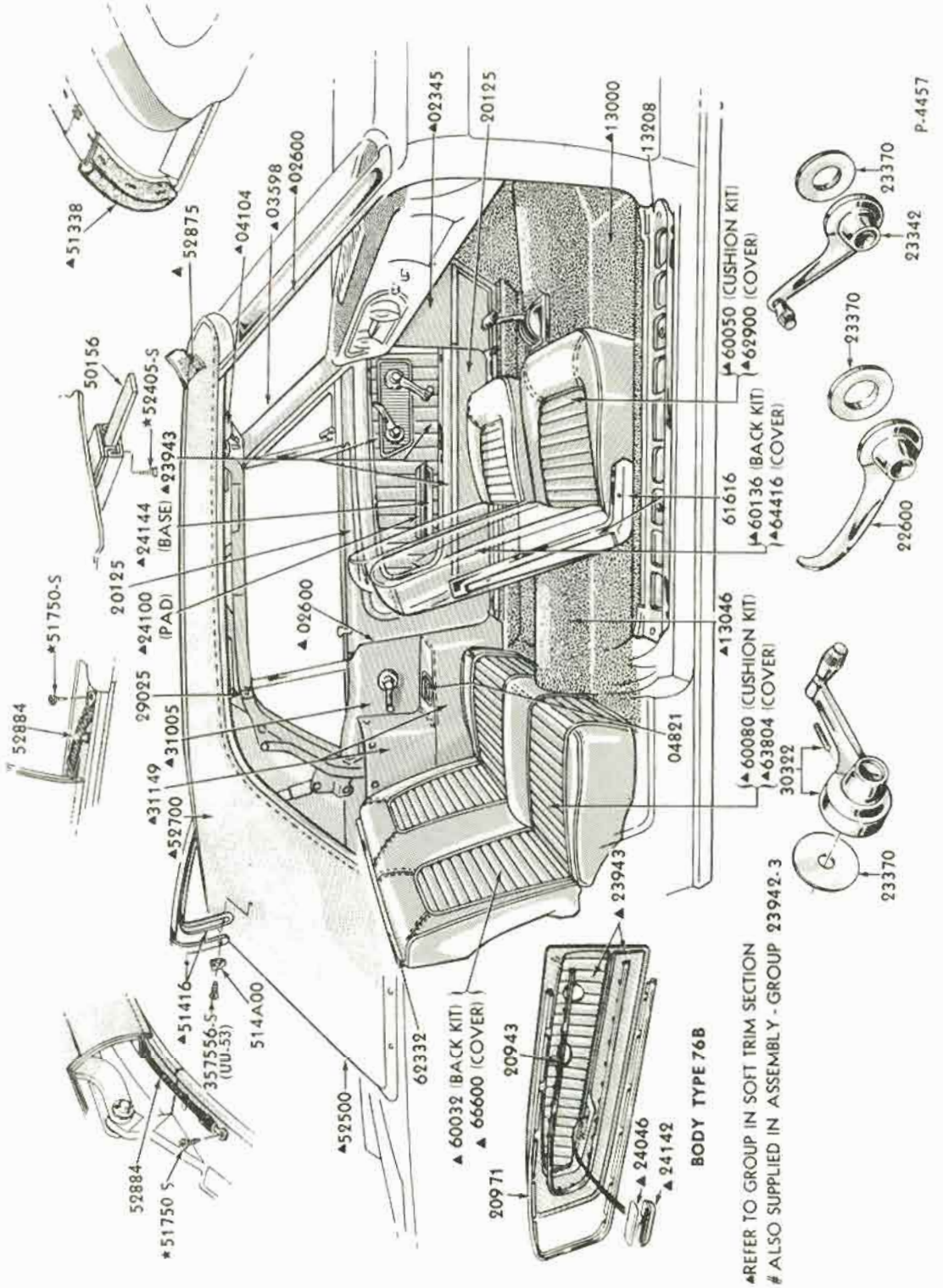

INTERIOR TRIM and RELATED PARTS - TYPICAL
1965/66 MUSTANG - BODY TYPE 76

COPYRIGHT © 1975 — FORD MOTOR COMPANY — DEARBORN, MICHIGAN

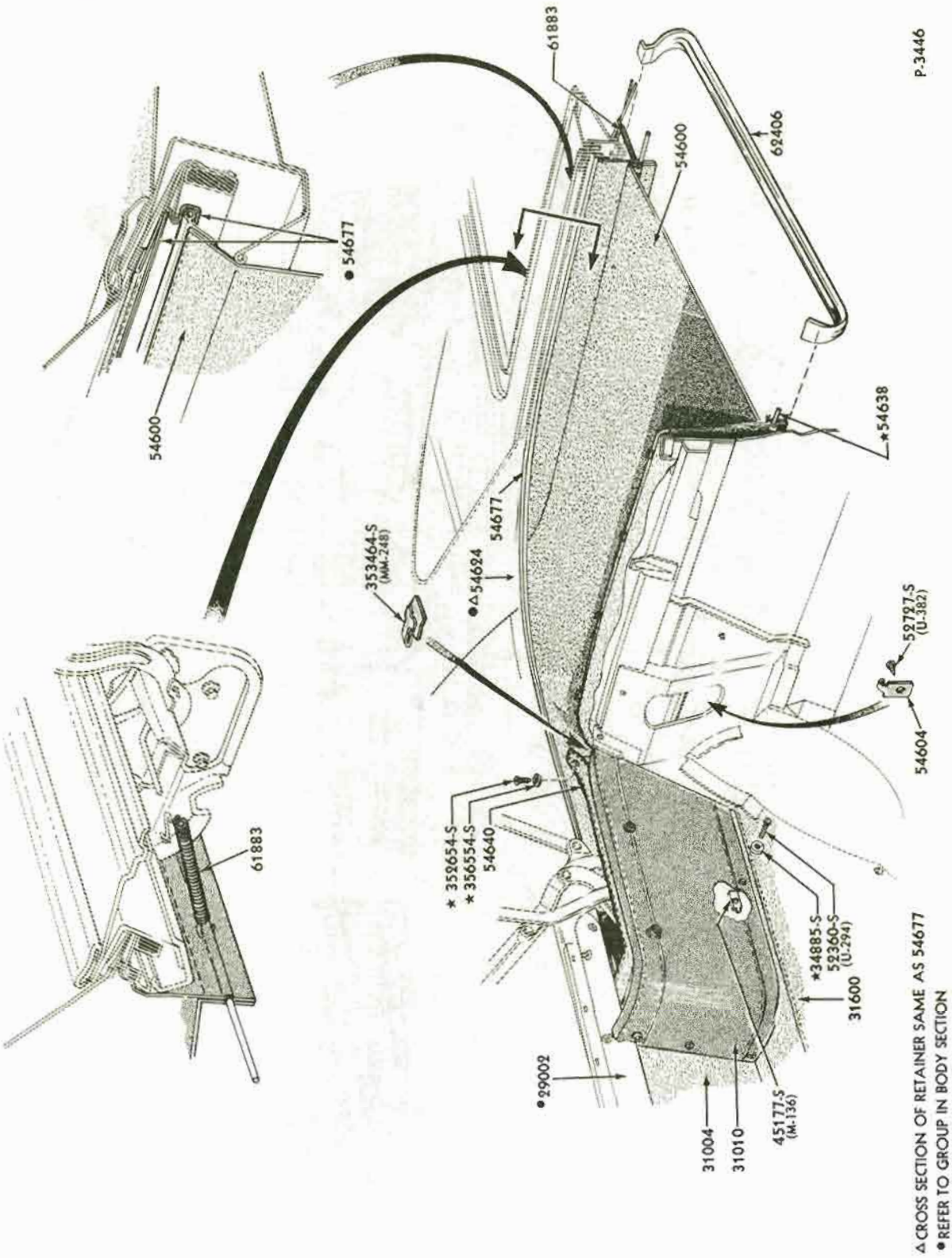

FOLDING TOP COMPARTMENT TRIM and RELATED PARTS
1965/66 MUSTANG - BODY TYPE 76

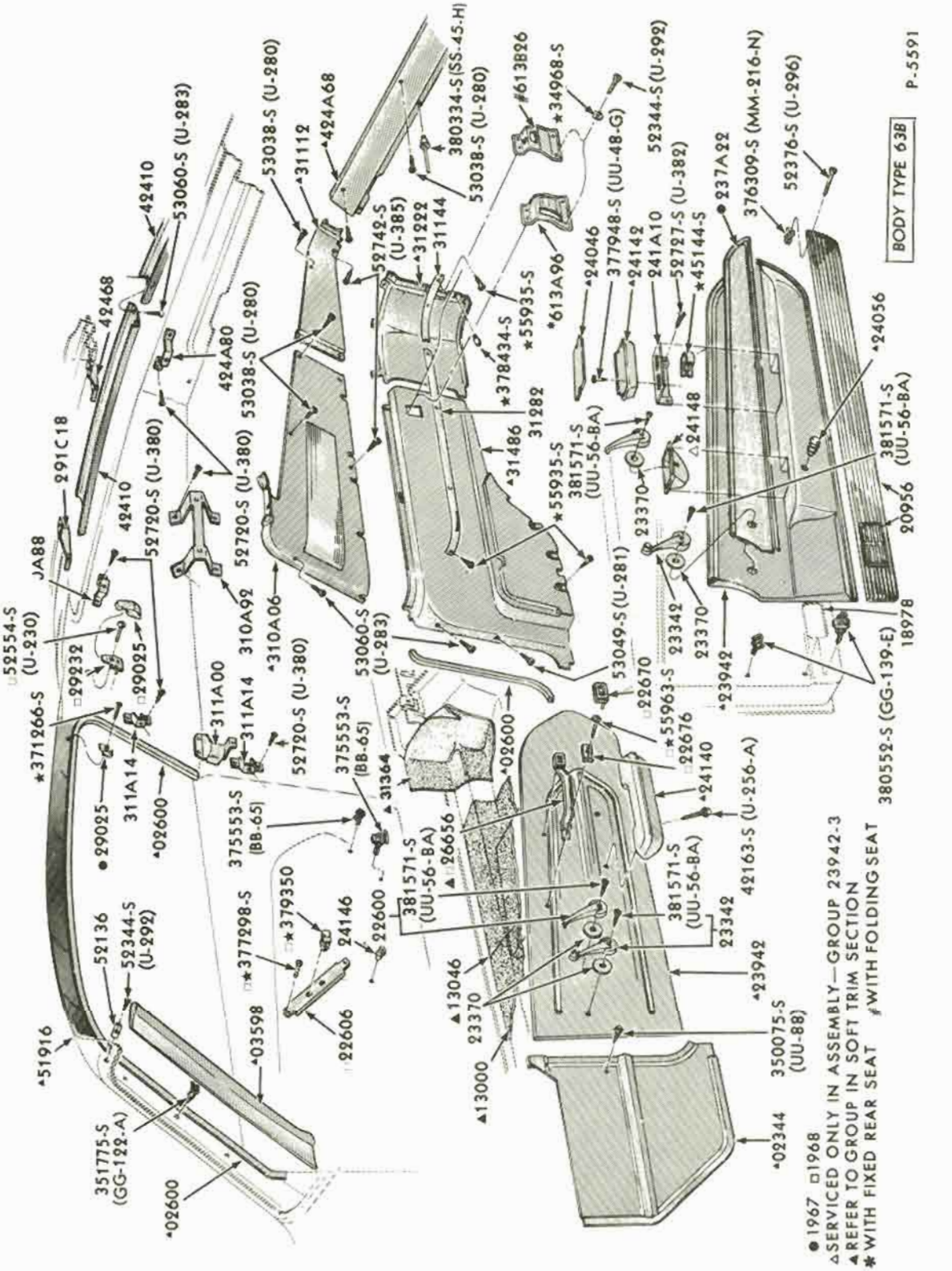

DOOR and QUARTER TRIM PANELS and RELATED PARTS
1967/68 MUSTANG - BODY TYPE 63

COPYRIGHT © 1975 — FORD MOTOR COMPANY — DEARBORN, MICHIGAN

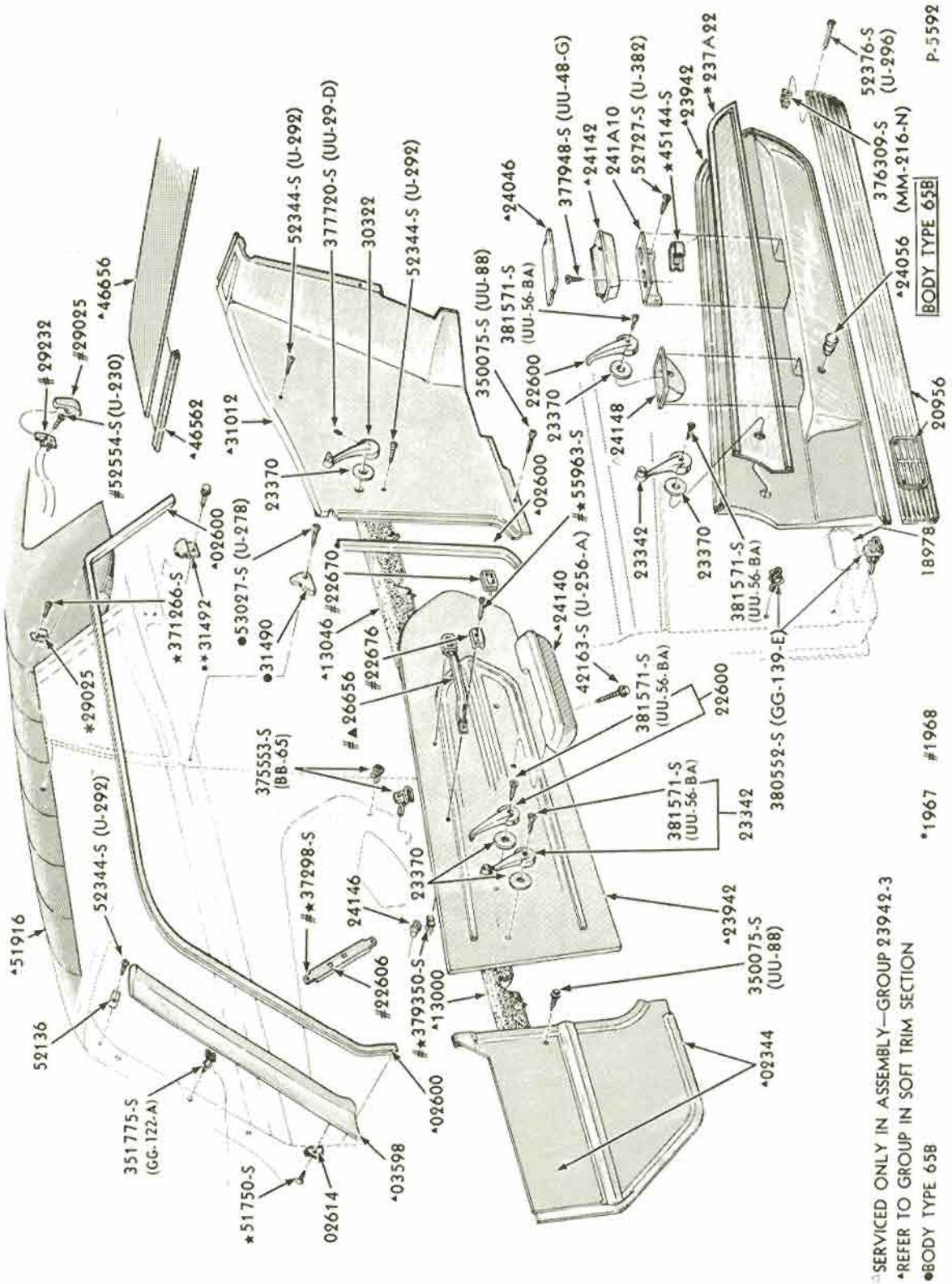

DOOR and QUARTER TRIM PANELS and RELATED PARTS
1967/68 MUSTANG - BODY TYPE 65

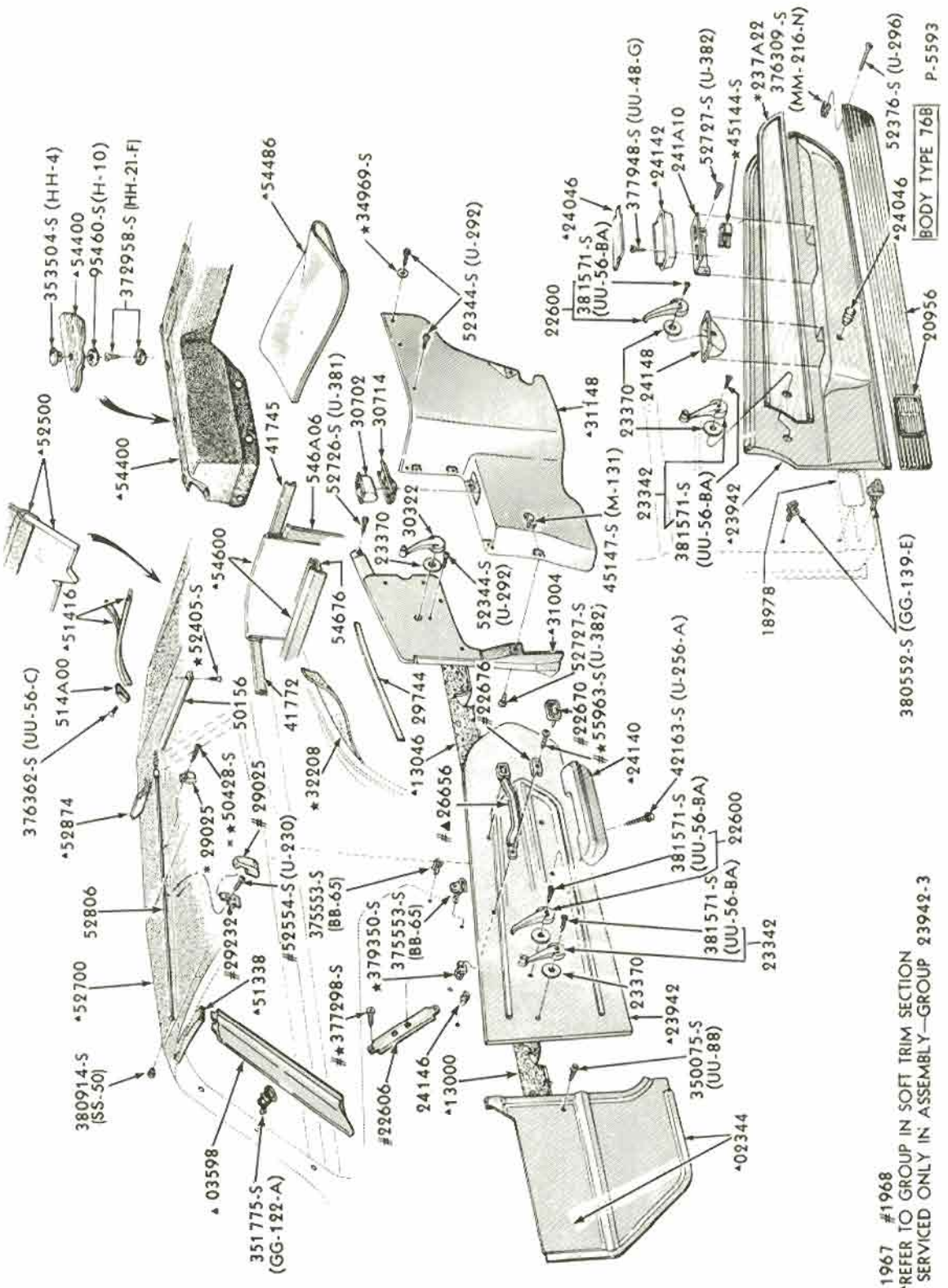

1967 #1968
*REFER TO GROUP IN SOFT TRIM SECTION
△ SERVICED ONLY IN ASSEMBLY—GROUP 23942-3

DOOR and QUARTER TRIM PANELS and RELATED PARTS
1967/68 MUSTANG - BODY TYPE 76

COPYRIGHT © 1975 — FORD MOTOR COMPANY — DEARBORN, MICHIGAN

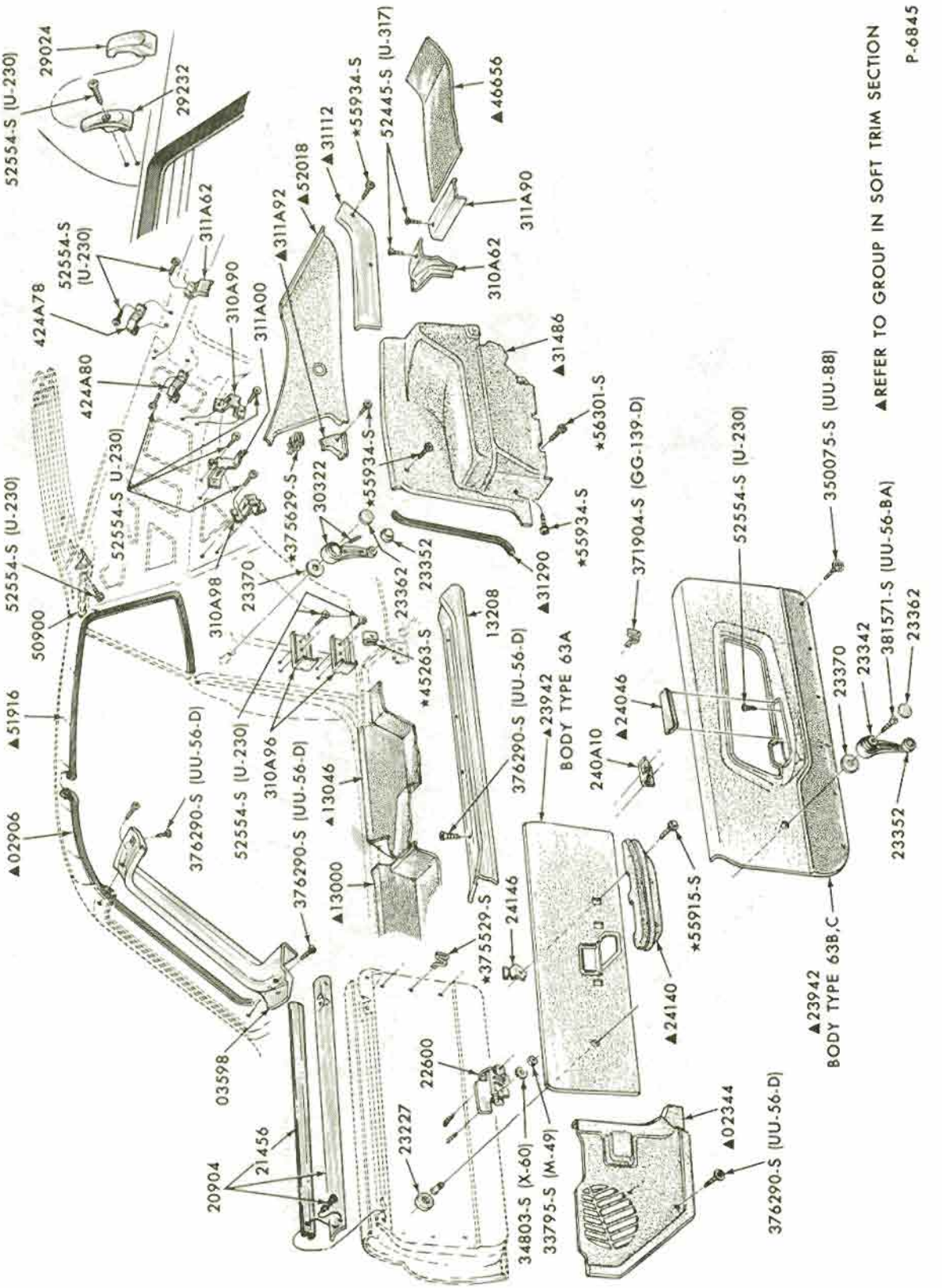

INTERIOR TRIM and RELATED PARTS
1969/70 MUSTANG - BODY TYPE 63 - WITH FIXED REAR SEAT

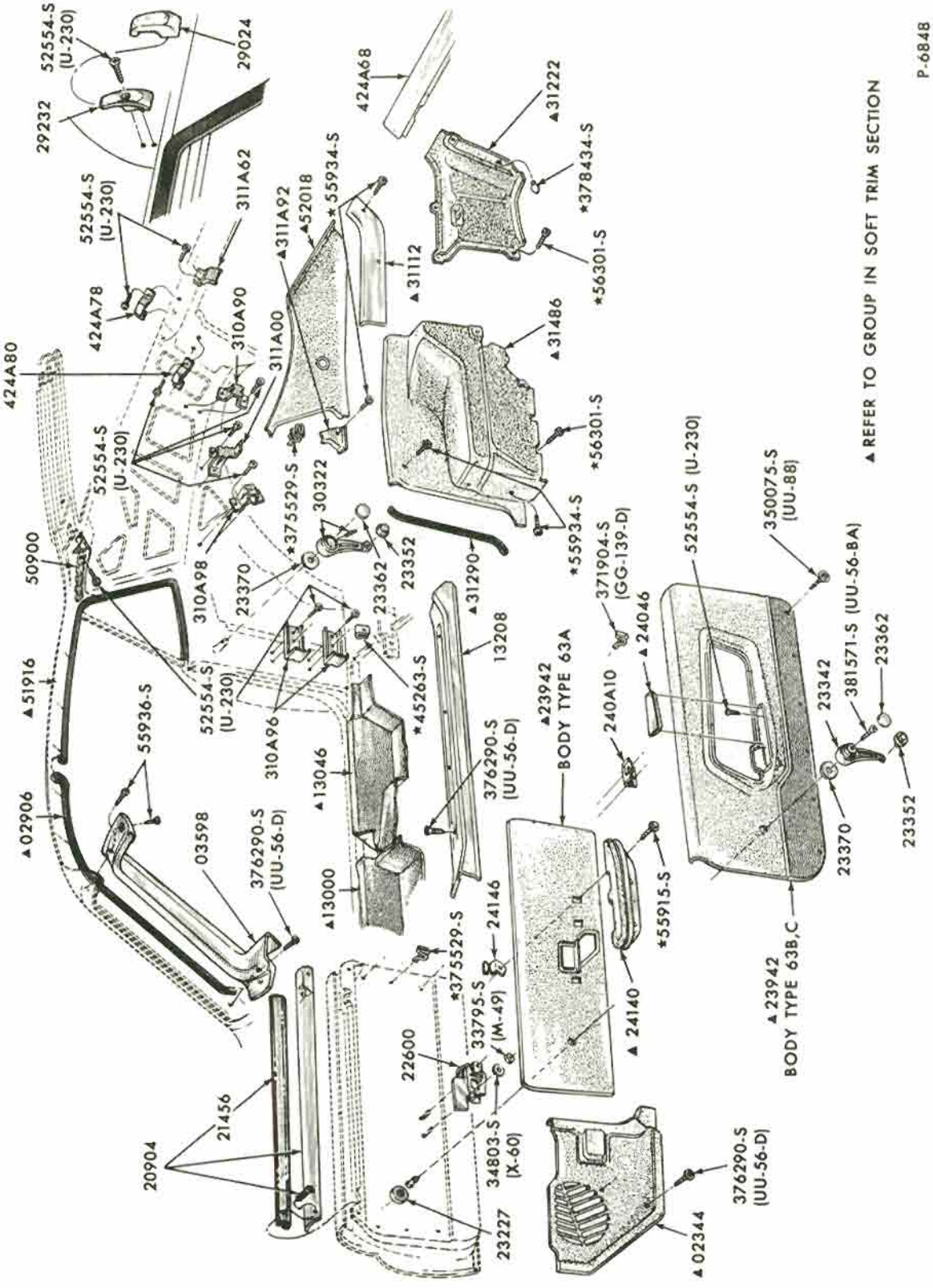

INTERIOR TRIM and RELATED PARTS
1969/70 MUSTANG - BODY TYPE 63 - WITH FOLDING REAR SEAT

COPYRIGHT © 1975 — FORD MOTOR COMPANY — DEARBORN, MICHIGAN

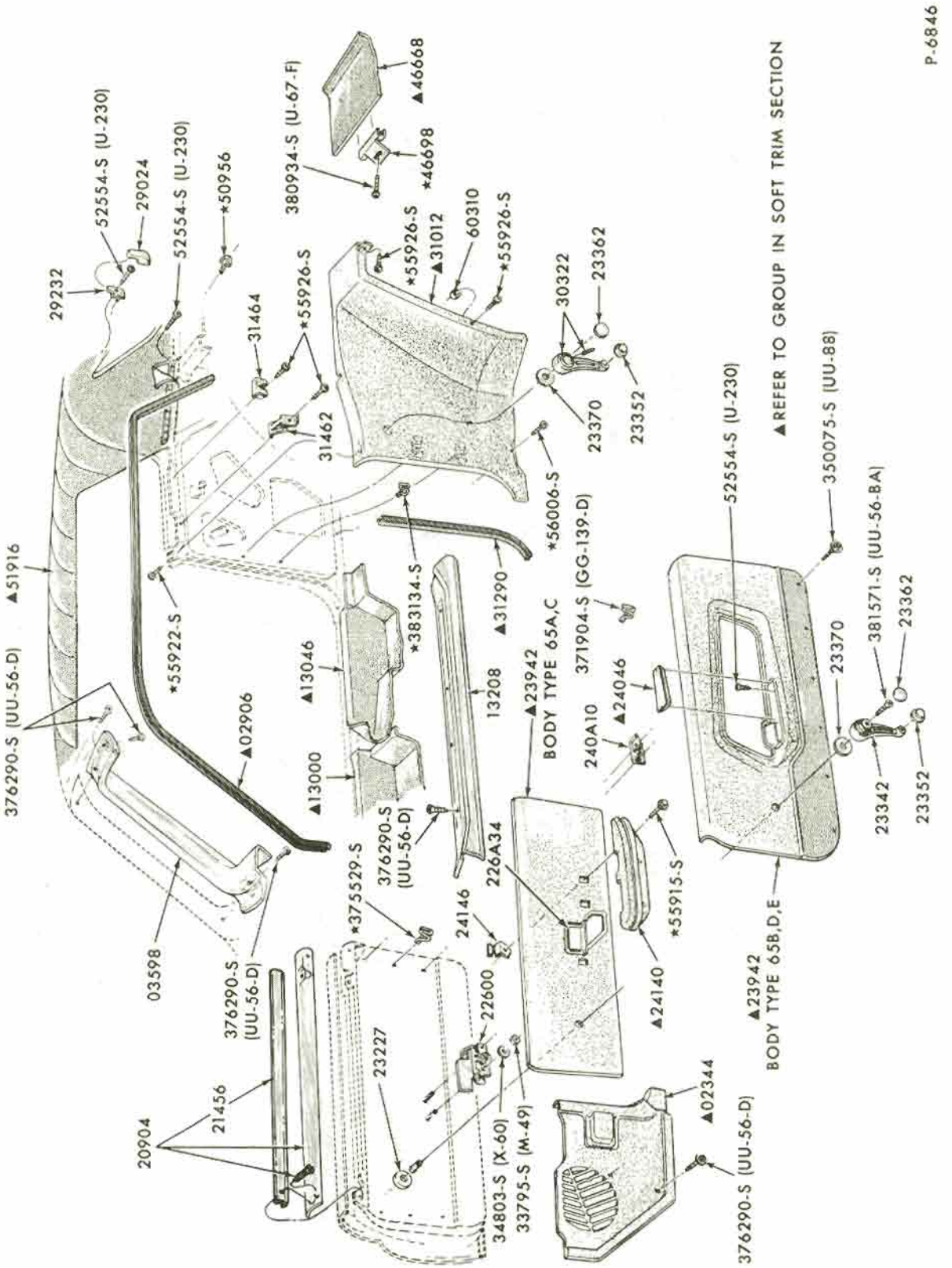

INTERIOR TRIM and RELATED PARTS
1969/70 MUSTANG - BODY TYPE 65

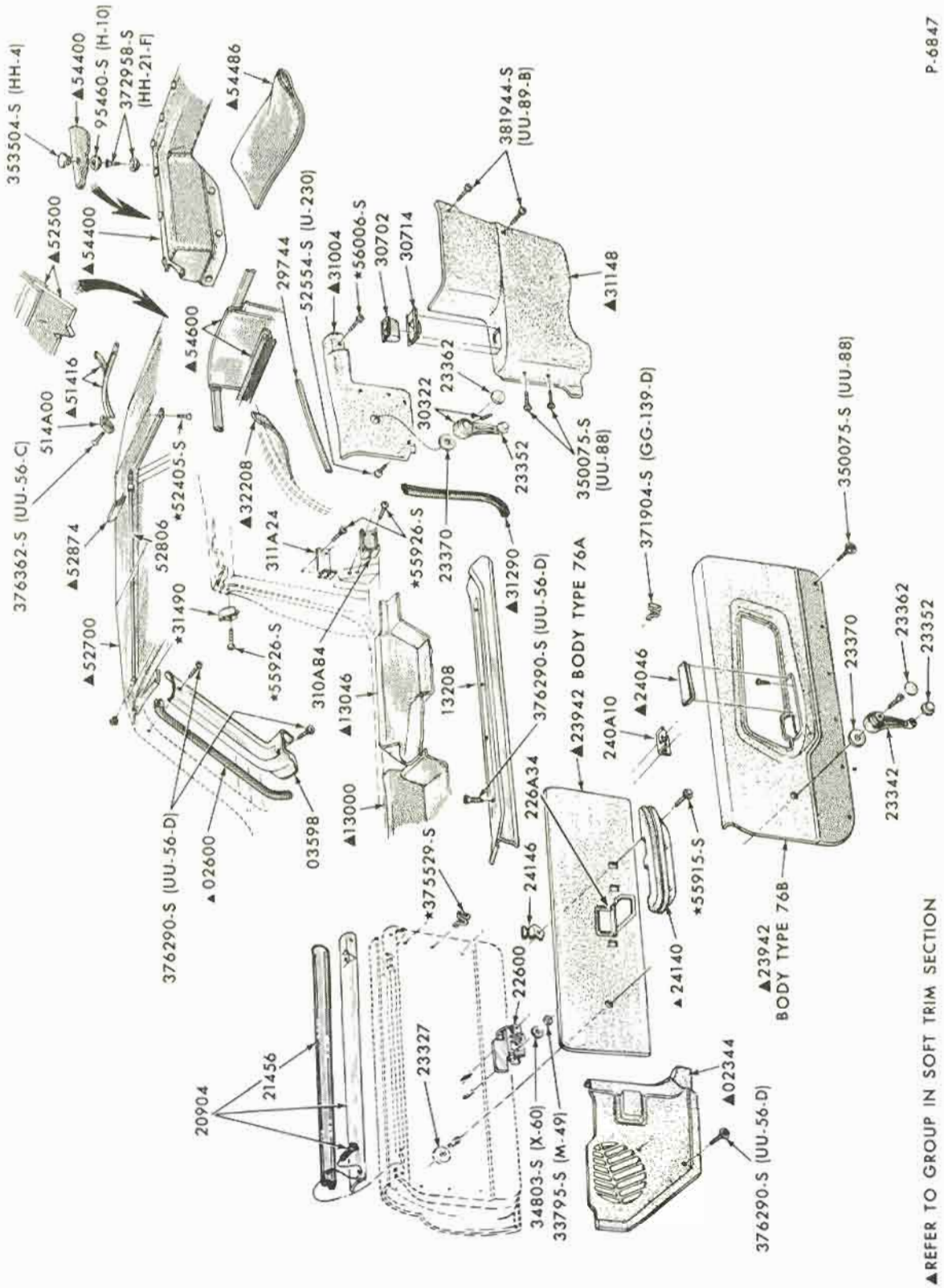

INTERIOR TRIM and RELATED PARTS
1969/70 MUSTANG - BODY TYPE 76

COPYRIGHT © 1975 — FORD MOTOR COMPANY — DEARBORN, MICHIGAN

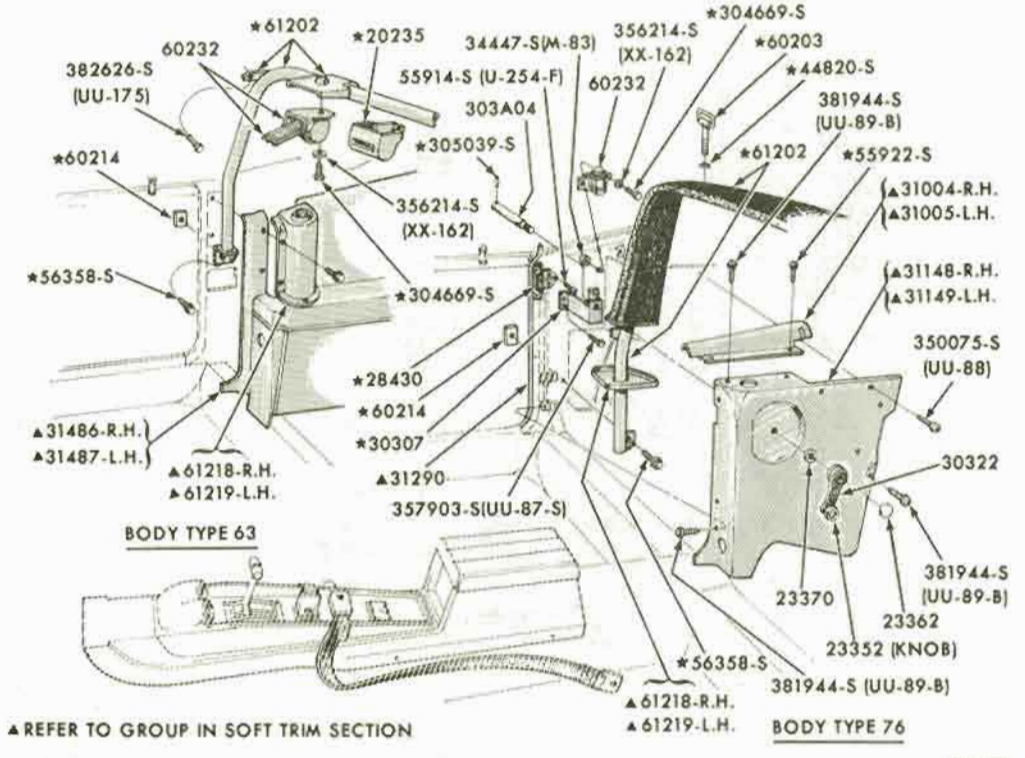

ROLL BAR AND RELATED PARTS
1969/70 MUSTANG-SHELBY GT350/500

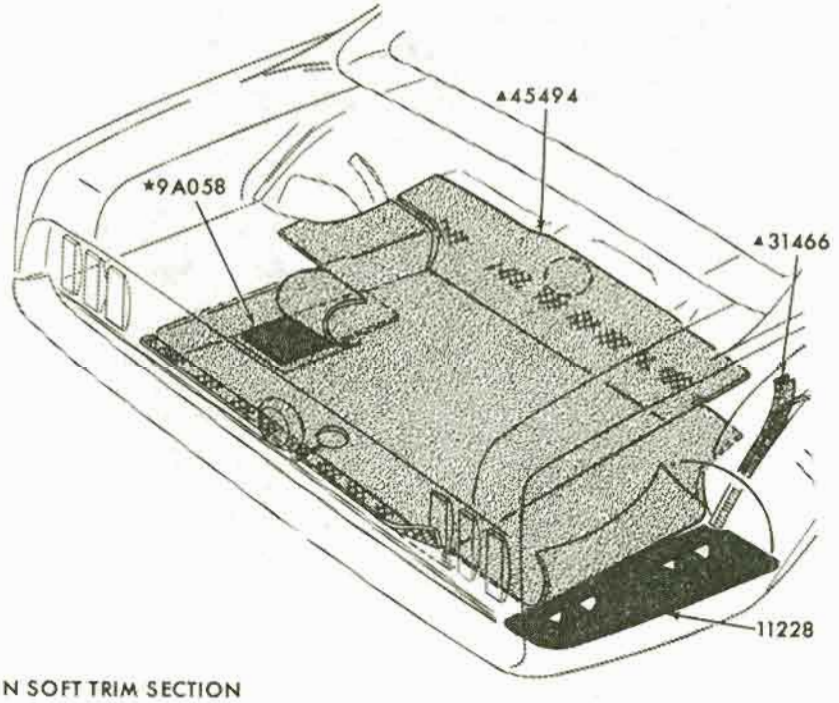

LUGGAGE COMPARTMENT TRIM
1969/72 MUSTANG

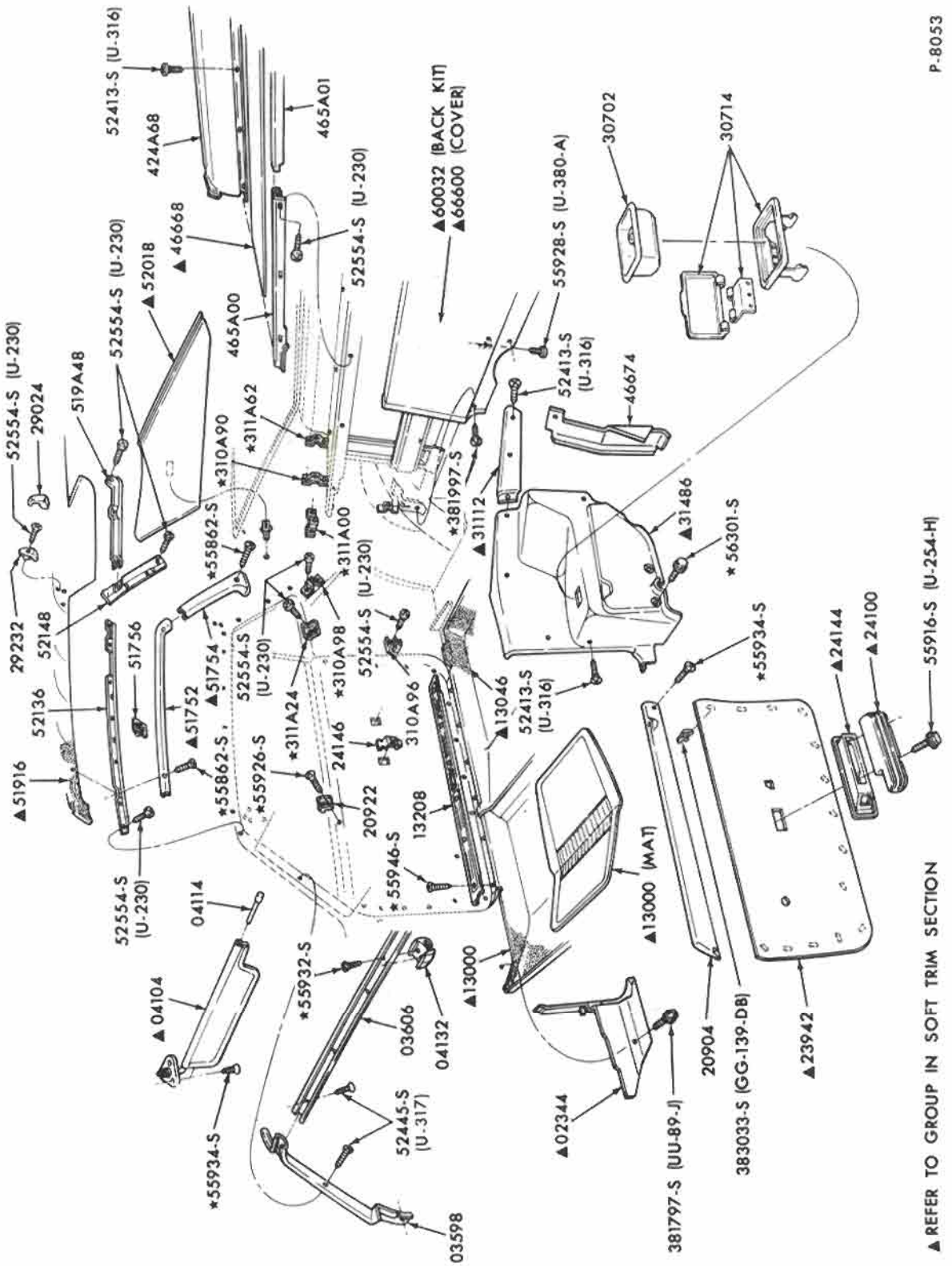

INTERIOR TRIM and RELATED PARTS
1971/72 MUSTANG - BODY TYPE 63 - WITH FIXED REAR SEAT

COPYRIGHT © 1975 — FORD MOTOR COMPANY — DEARBORN, MICHIGAN

FORD CAR PARTS

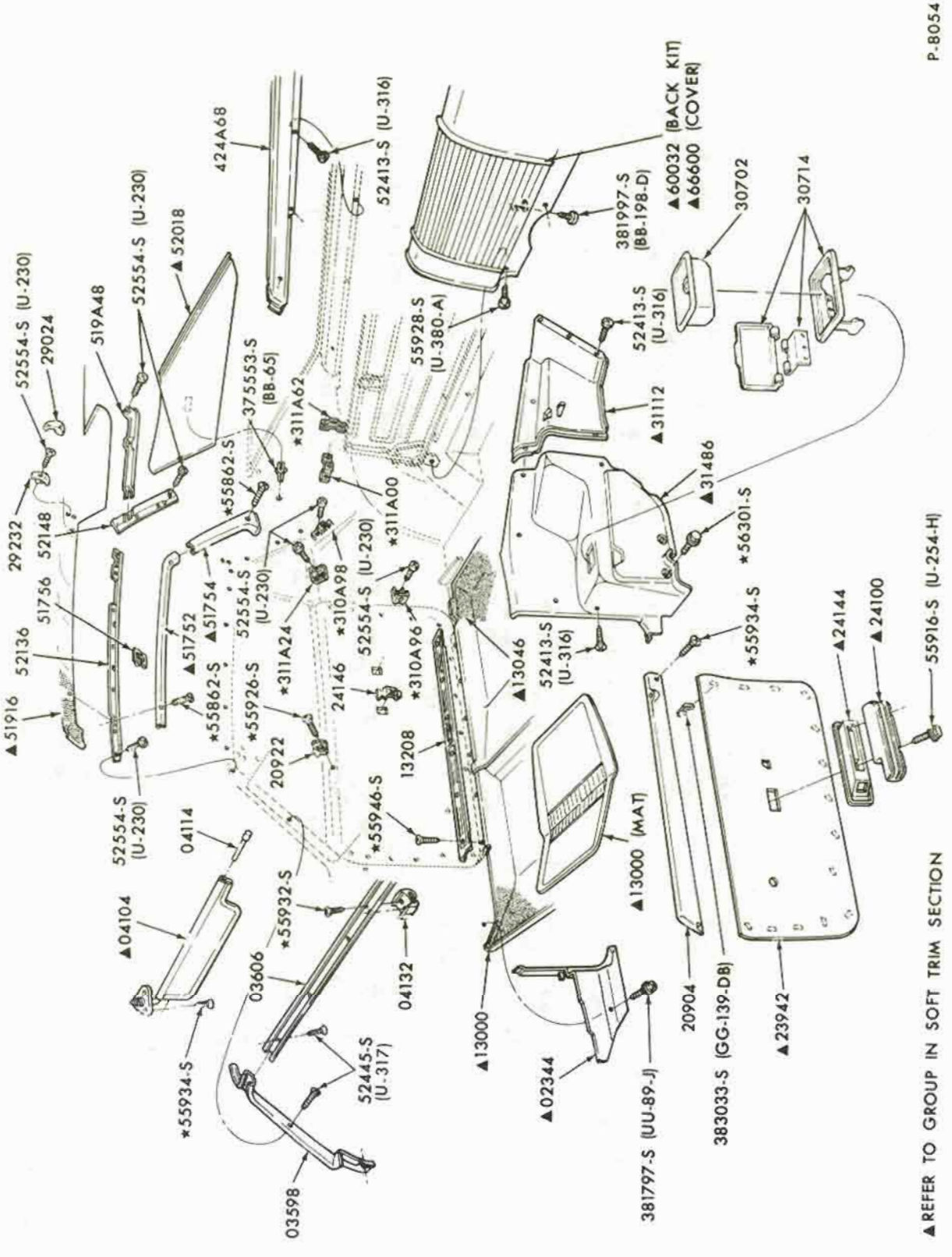

INTERIOR TRIM and RELATED PARTS
1971/72 MUSTANG - BODY TYPE 63 - WITH FOLDING REAR SEAT

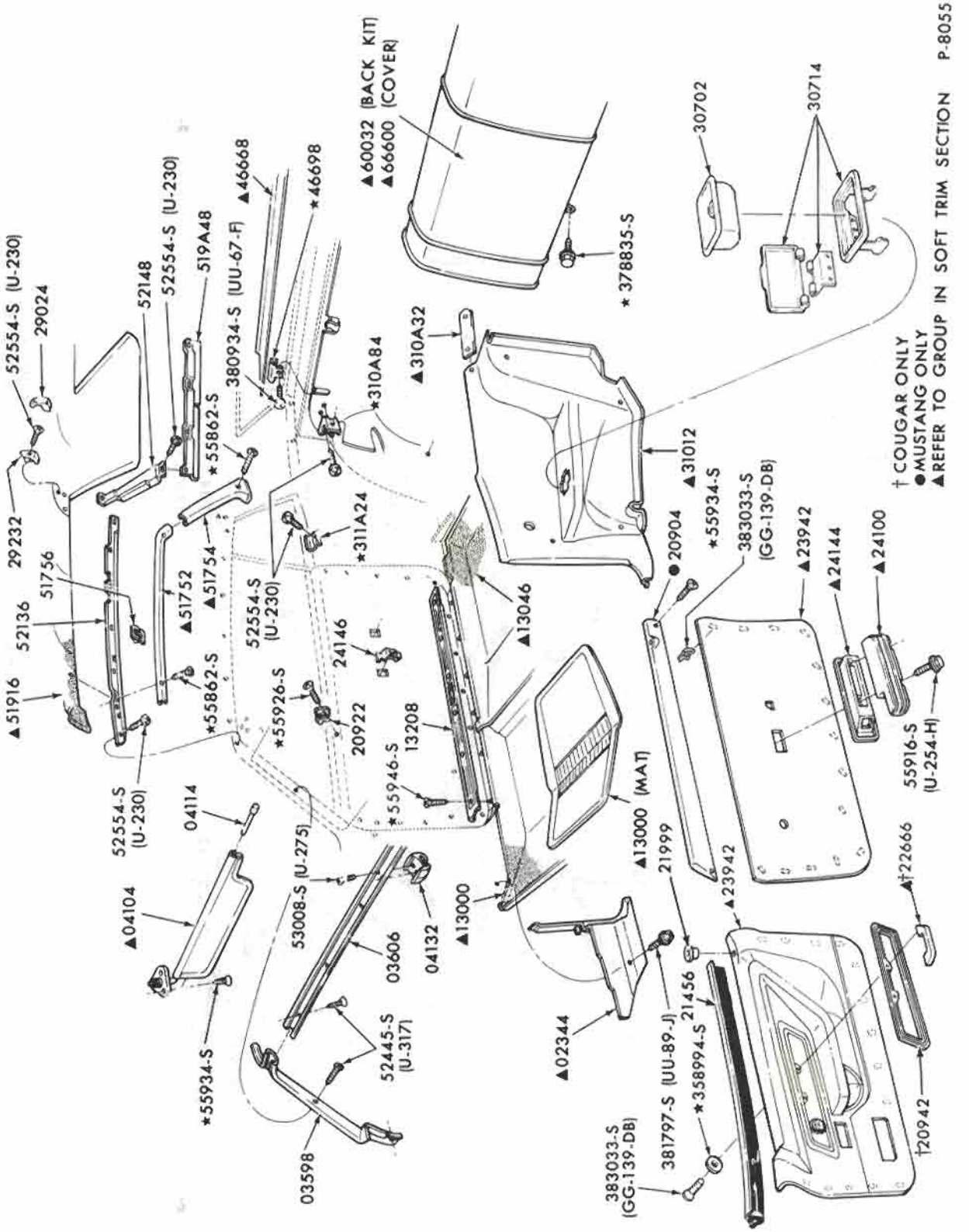

INTERIOR TRIM and RELATED PARTS
1971/72 MUSTANG - BODY TYPE 65

COPYRIGHT © 1975 — FORD MOTOR COMPANY — DEARBORN, MICHIGAN

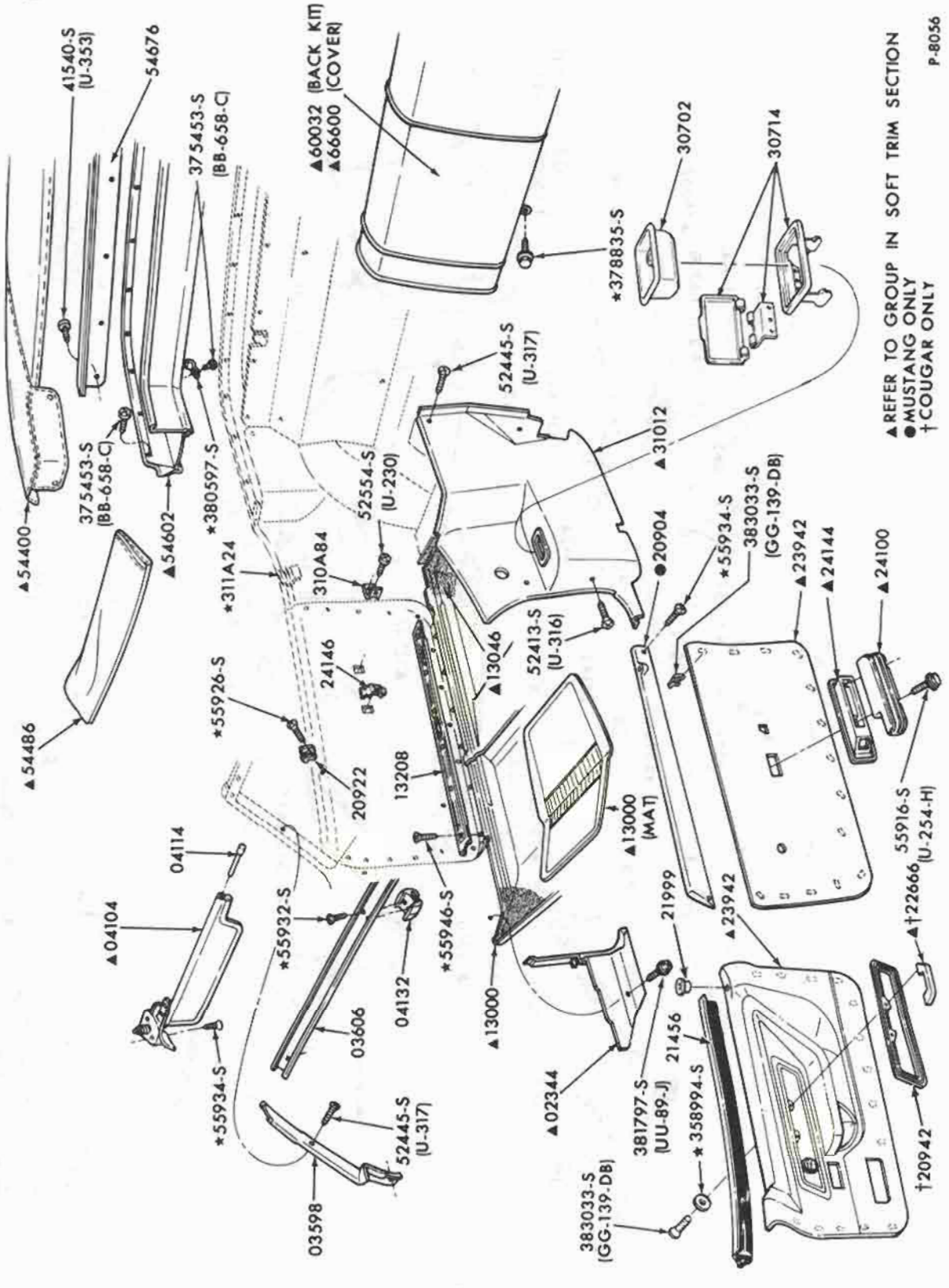

INTERIOR TRIM and RELATED PARTS
1971/72 MUSTANG - BODY TYPE 76

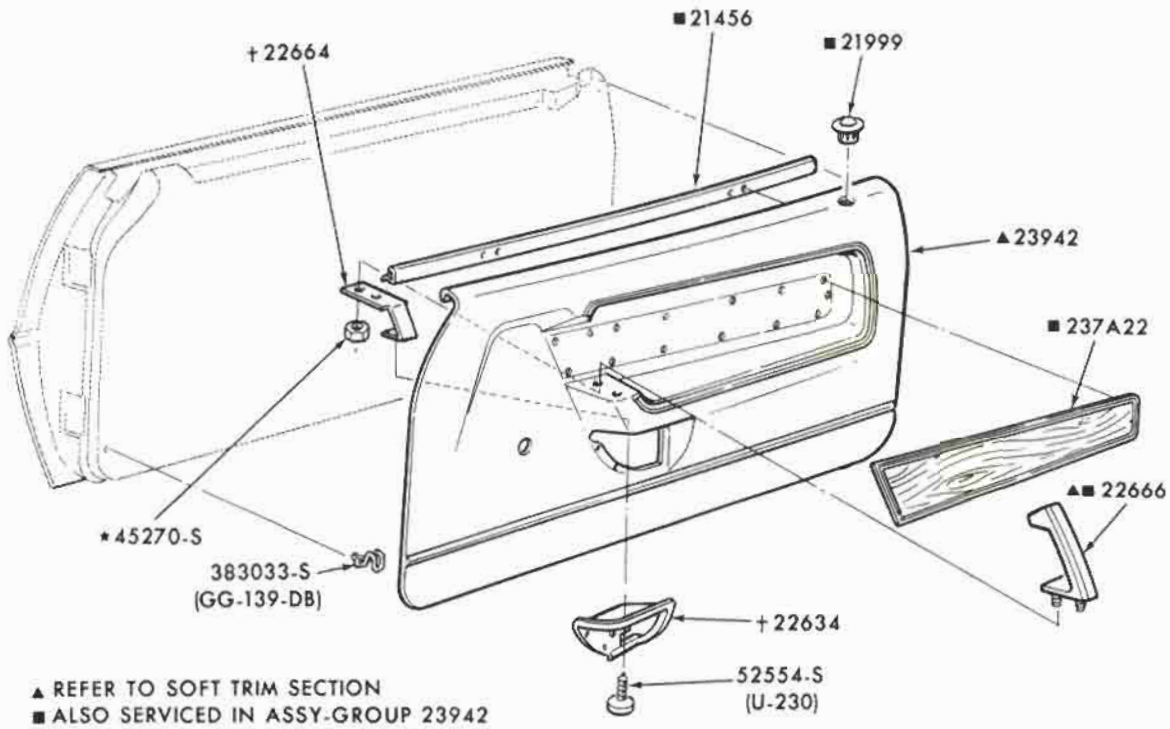

DOOR TRIM PANELS
1972 MUSTANG

COPYRIGHT © 1975 — FORD MOTOR COMPANY — DEARBORN, MICHIGAN

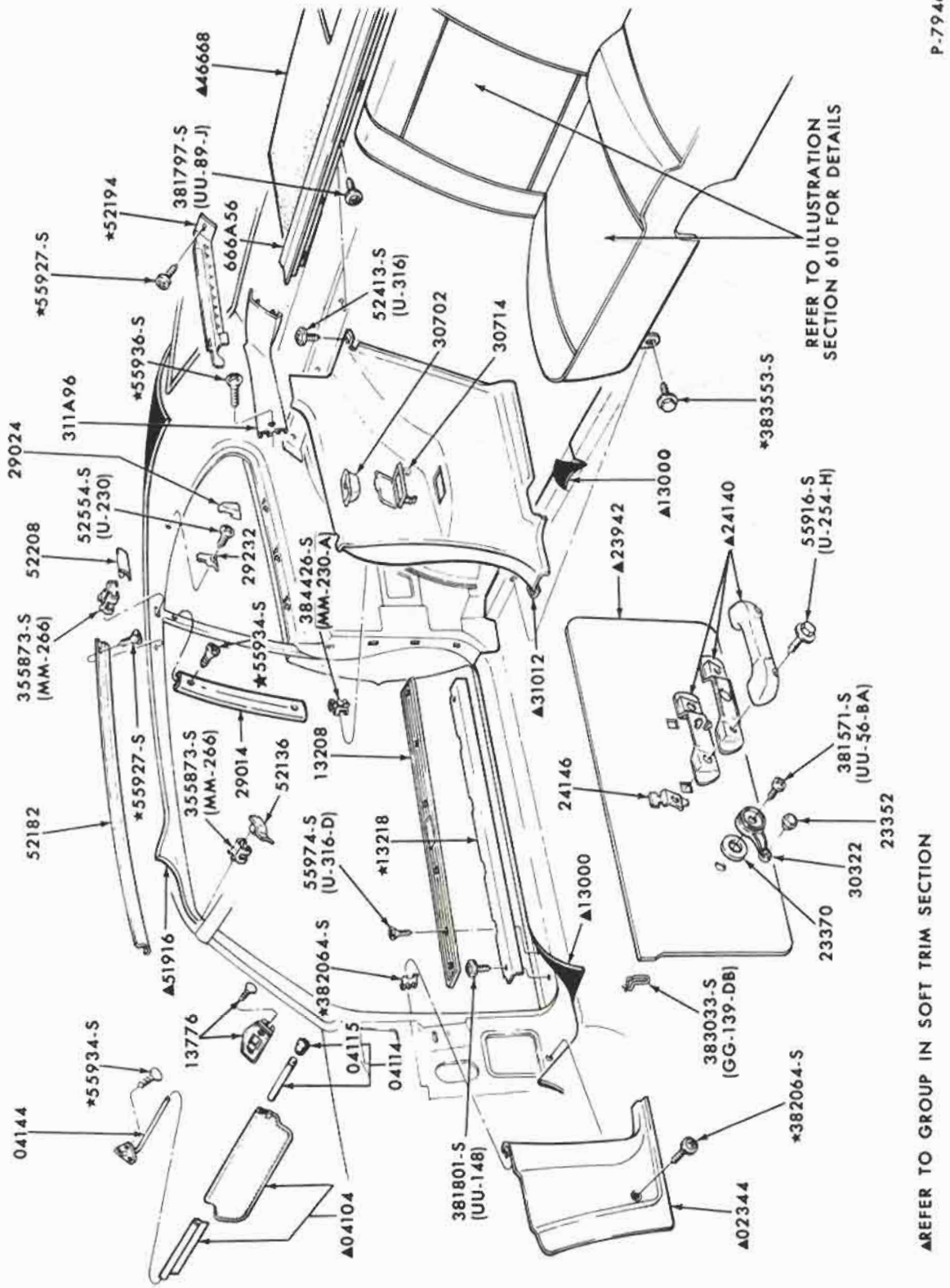

INTERIOR TRIM and RELATED PARTS
1971/72 PINTO - BODY TYPE 62

COPYRIGHT © 1975 — FORD MOTOR COMPANY — DEARBORN, MICHIGAN

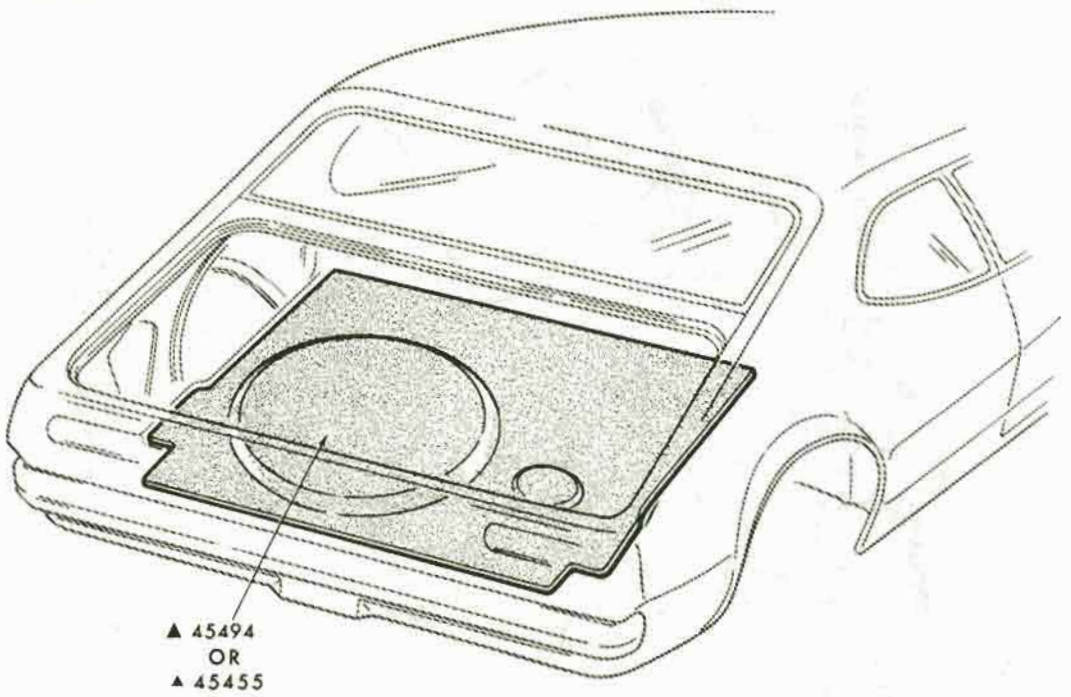

▲REFER TO GROUP IN SOFT TRIM SECTION

P-7932

LUGGAGE COMPARTMENT TRIM
1971/72 PINTO

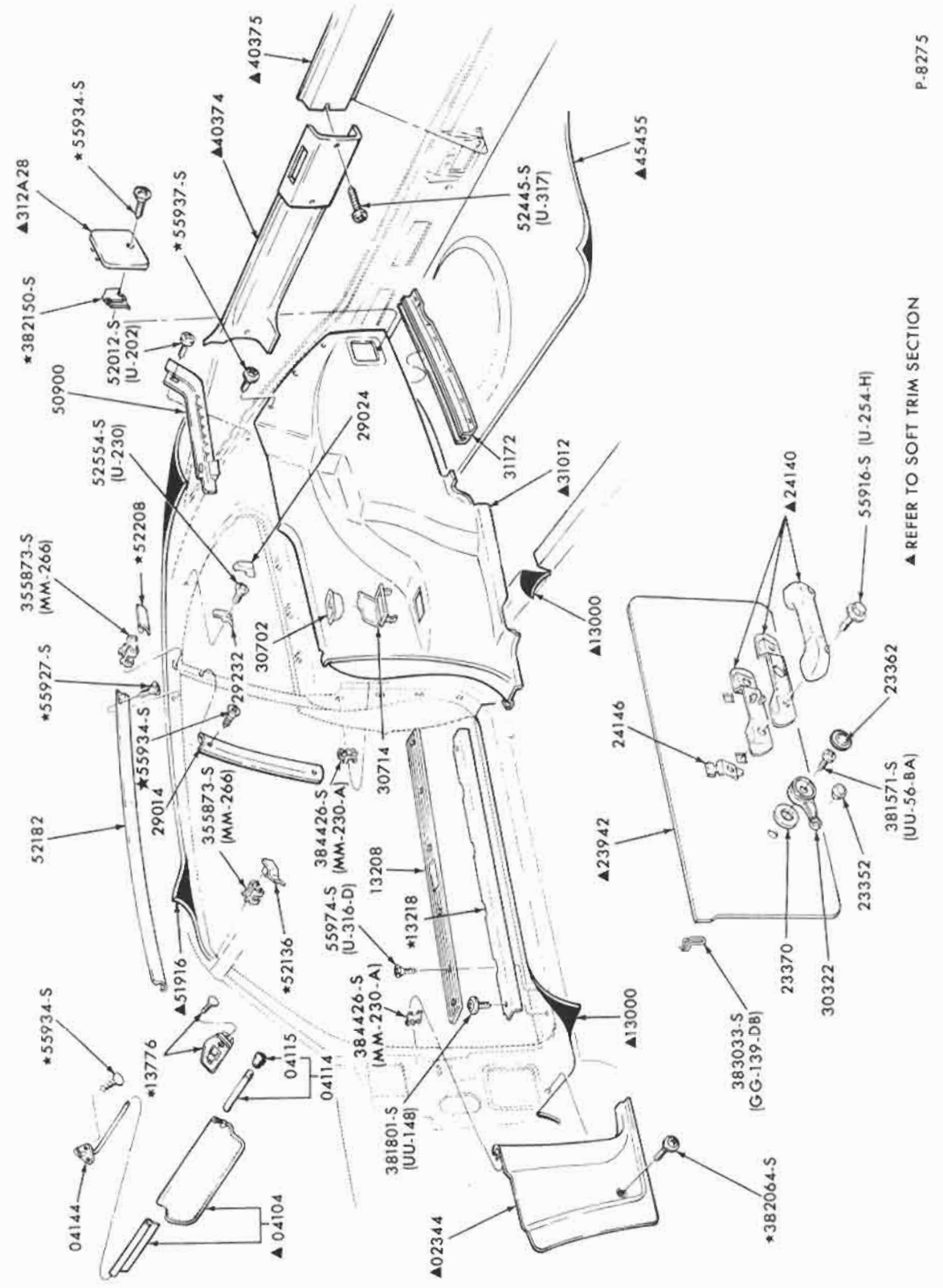

INTERIOR TRIM and RELATED PARTS
1971/72 PINTO - BODY TYPE 64

COPYRIGHT © 1975— FORD MOTOR COMPANY —DEARBORN, MICHIGAN

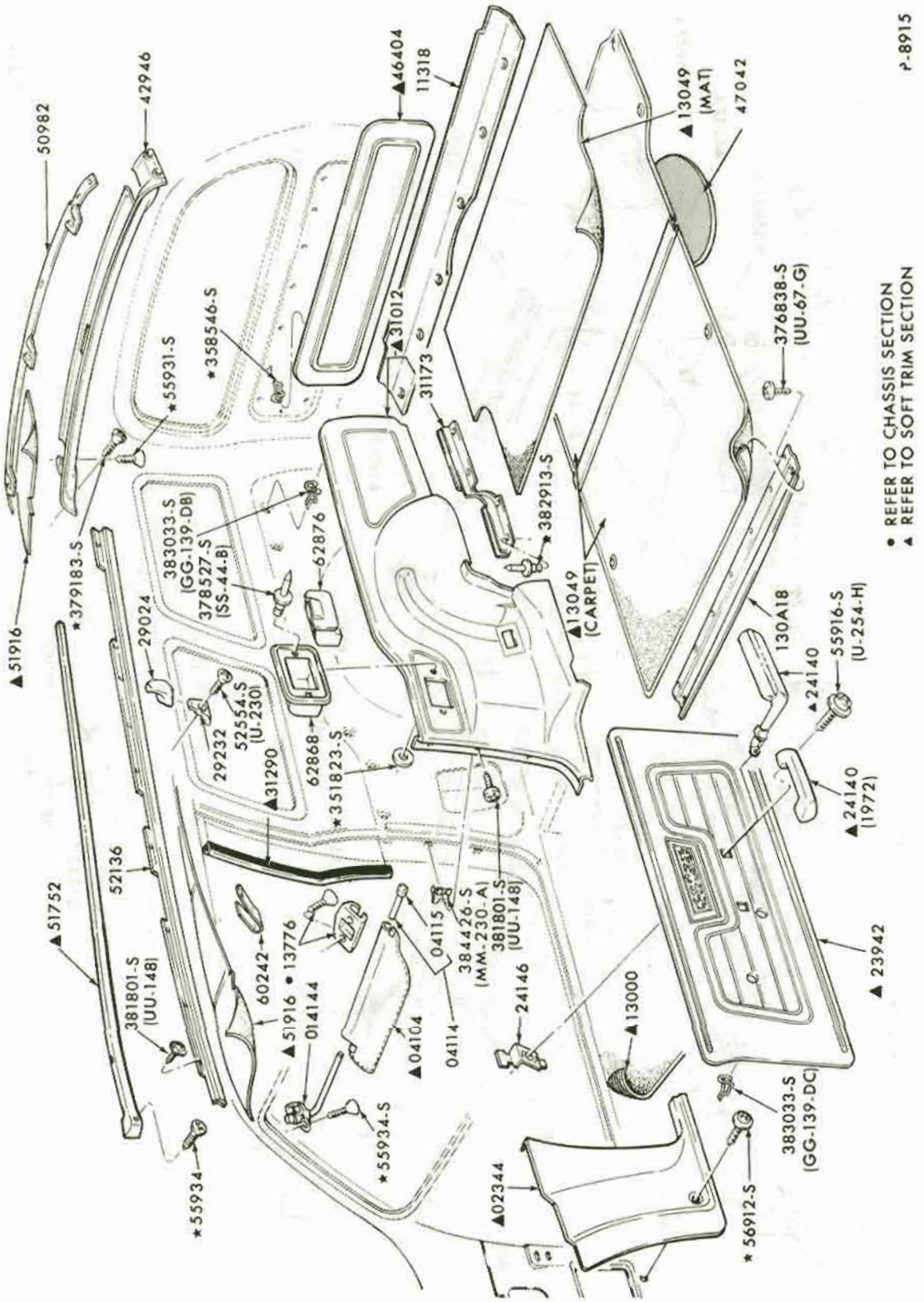

INTERIOR TRIM and RELATED PARTS
1972 PINTO - BODY TYPE 73

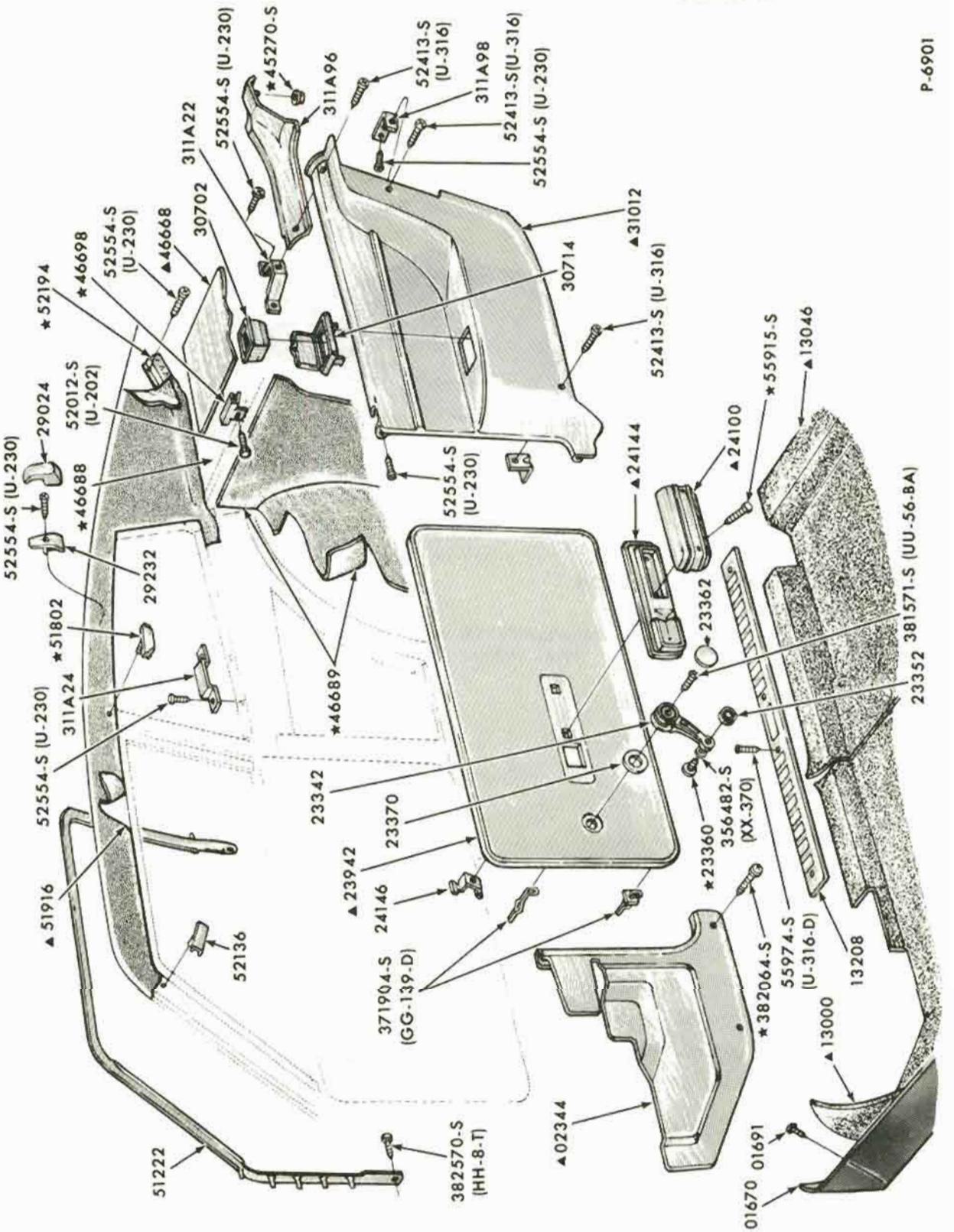

INTERIOR TRIM and RELATED PARTS
1970/72 MAVERICK - BODY TYPE 62

COPYRIGHT © 1975 — FORD MOTOR COMPANY — DEARBORN, MICHIGAN

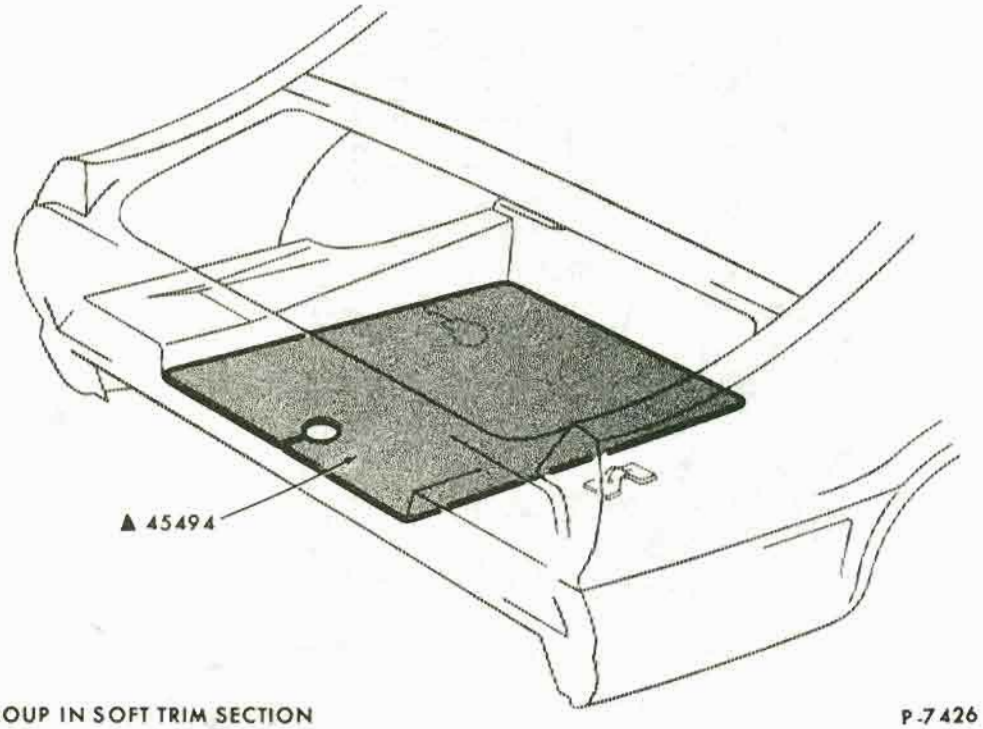

▲REFER TO GROUP IN SOFT TRIM SECTION

P-7426

LUGGAGE COMPARTMENT TRIM
1970 MAVERICK

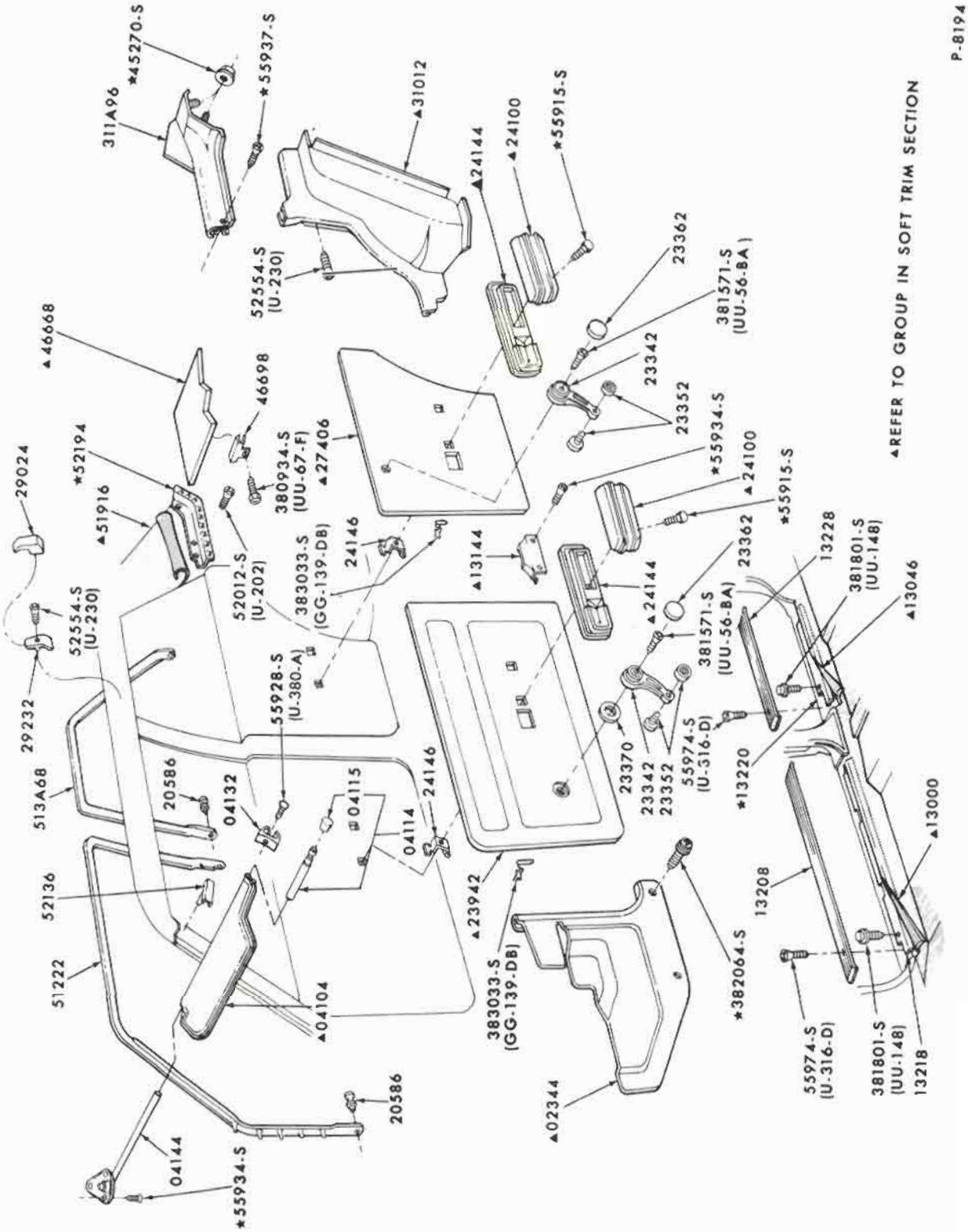

INTERIOR TRIM and RELATED PARTS
1971/72 MAVERICK - BODY TYPE 54

COPYRIGHT © 1975 — FORD MOTOR COMPANY — DEARBORN, MICHIGAN

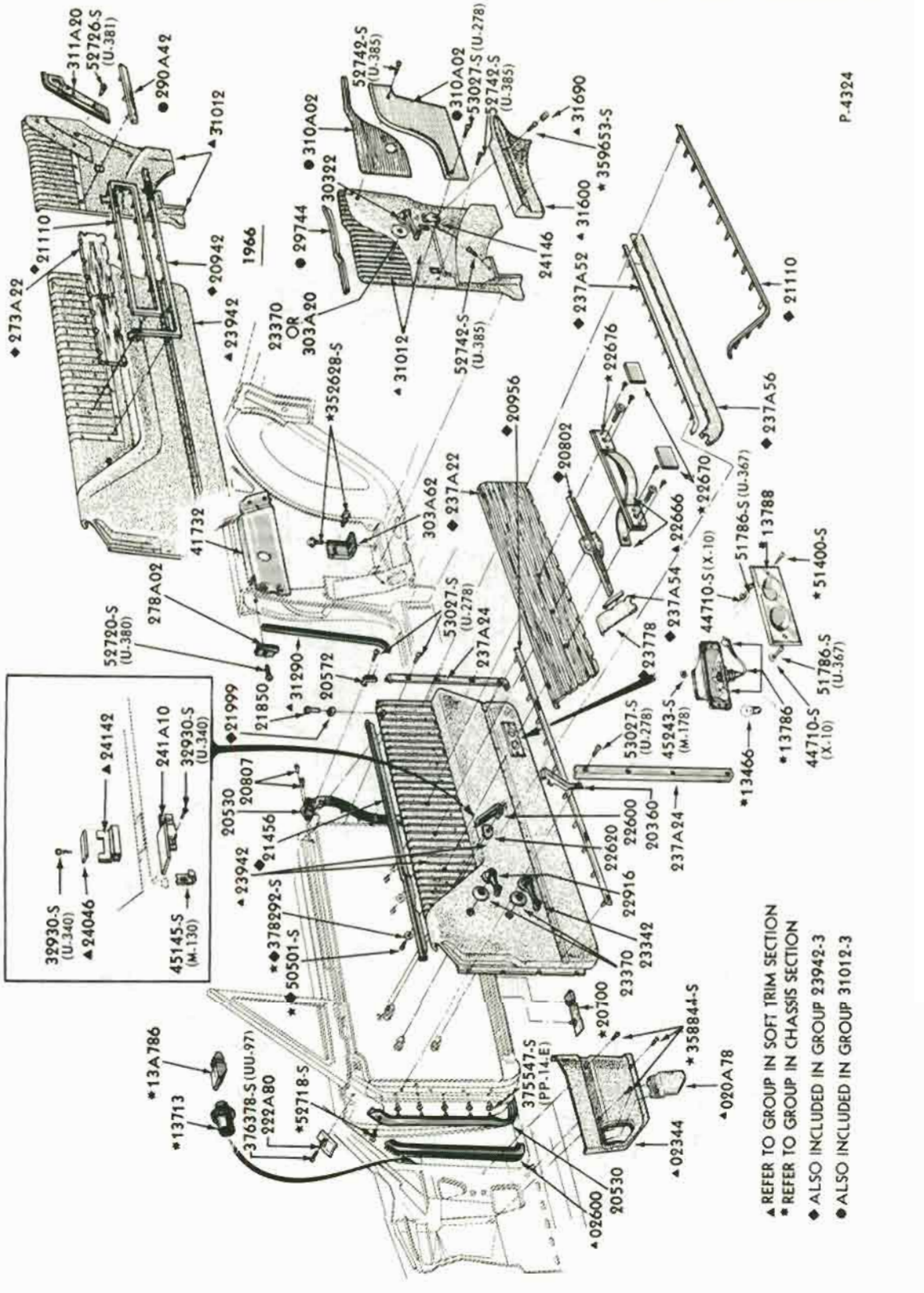

▲ REFER TO GROUP IN SOFT TRIM SECTION
* REFER TO GROUP IN CHASSIS SECTION
◆ ALSO INCLUDED IN GROUP 23942-3
● ALSO INCLUDED IN GROUP 31012-3

DOOR and QUARTER TRIM PANEL and RELATED PARTS
1965/66 THUNDERBIRD

COPYRIGHT © 1975 — FORD MOTOR COMPANY — DEARBORN, MICHIGAN

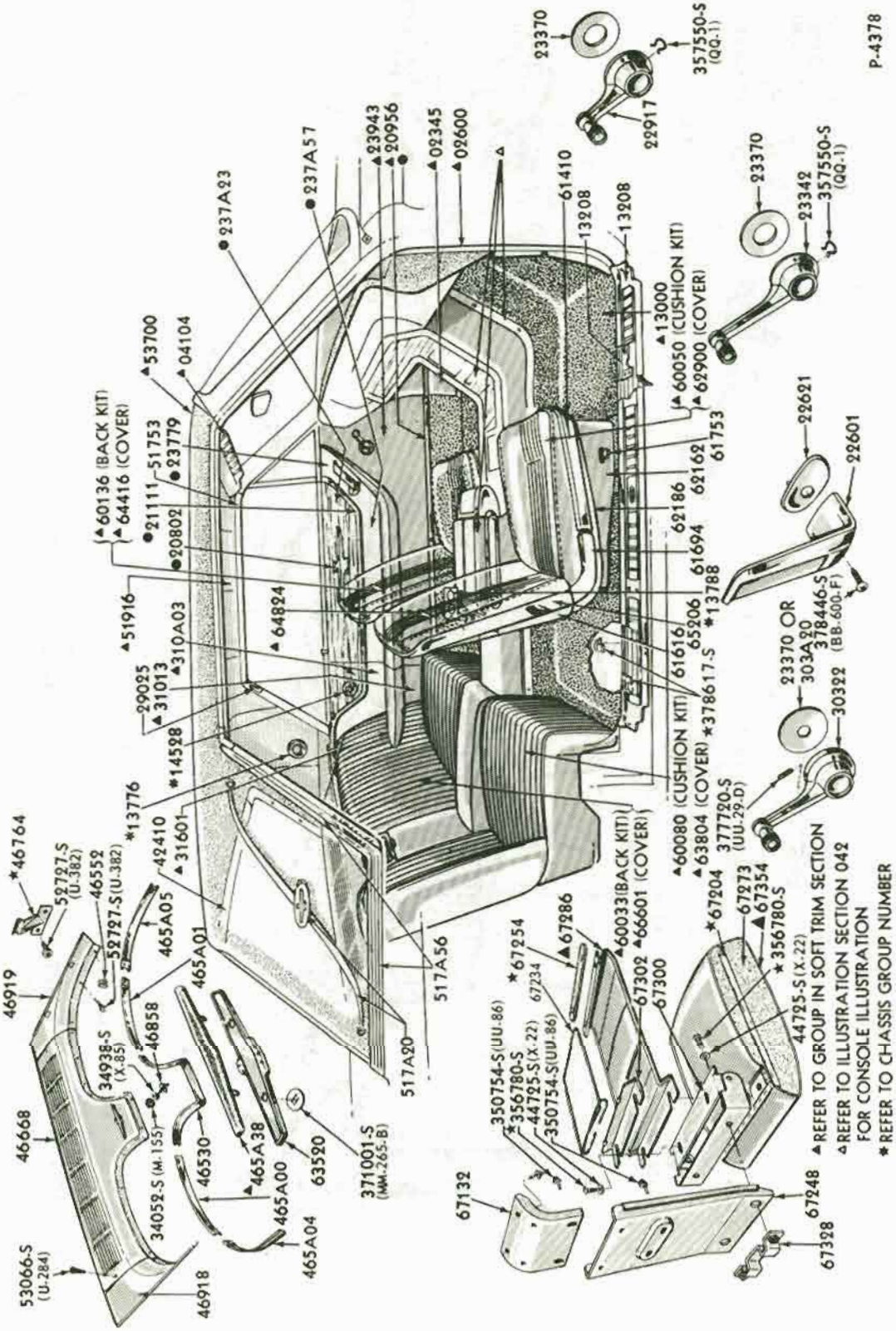

INTERIOR TRIM and RELATED PARTS - TYPICAL
1965/66 THUNDERBIRD - BODY TYPES 63A,B

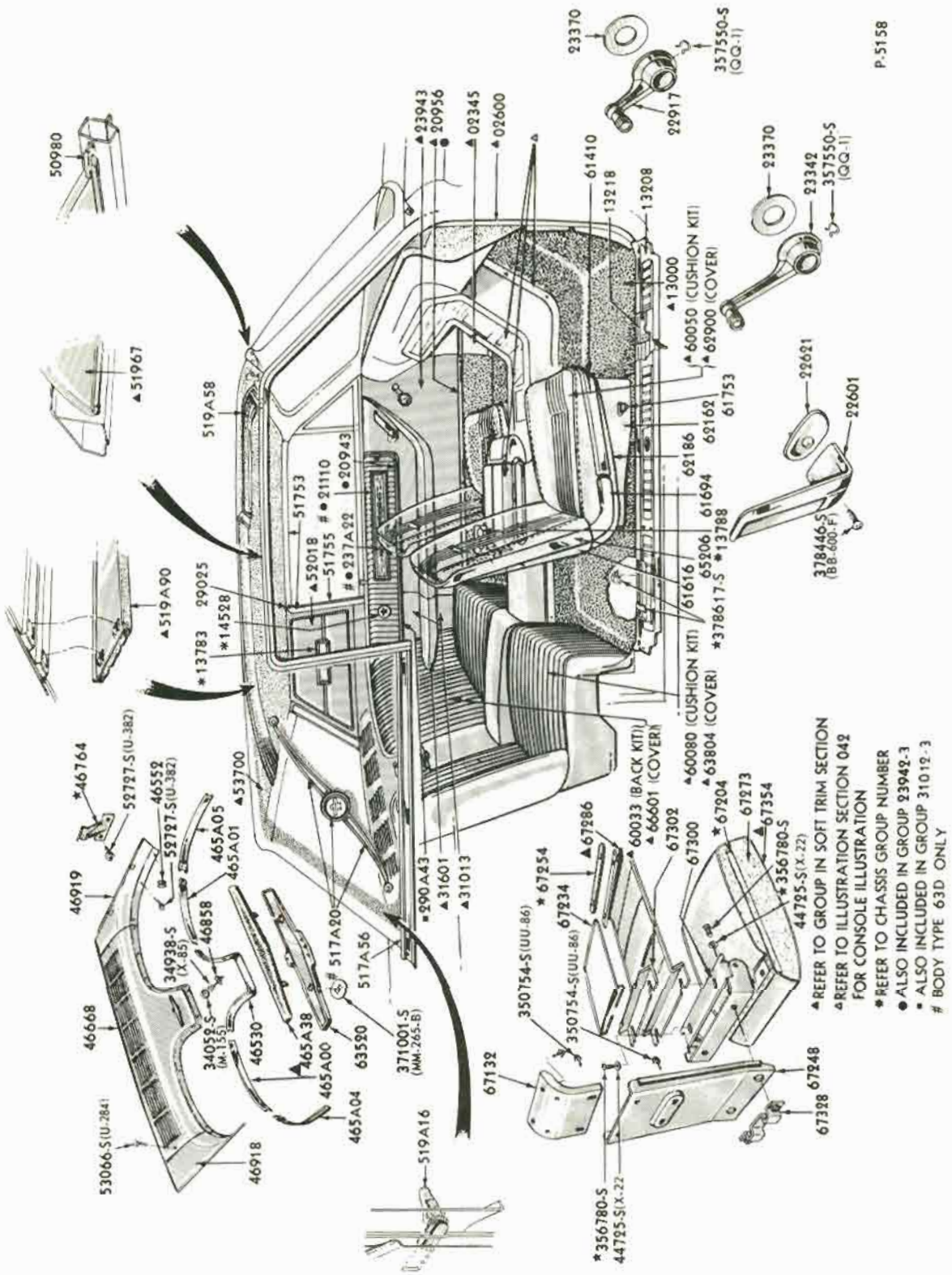

INTERIOR TRIM and RELATED PARTS
1966 THUNDERBIRD - BODY TYPE 63C, 63D

COPYRIGHT © 1975 — FORD MOTOR COMPANY — DEARBORN, MICHIGAN

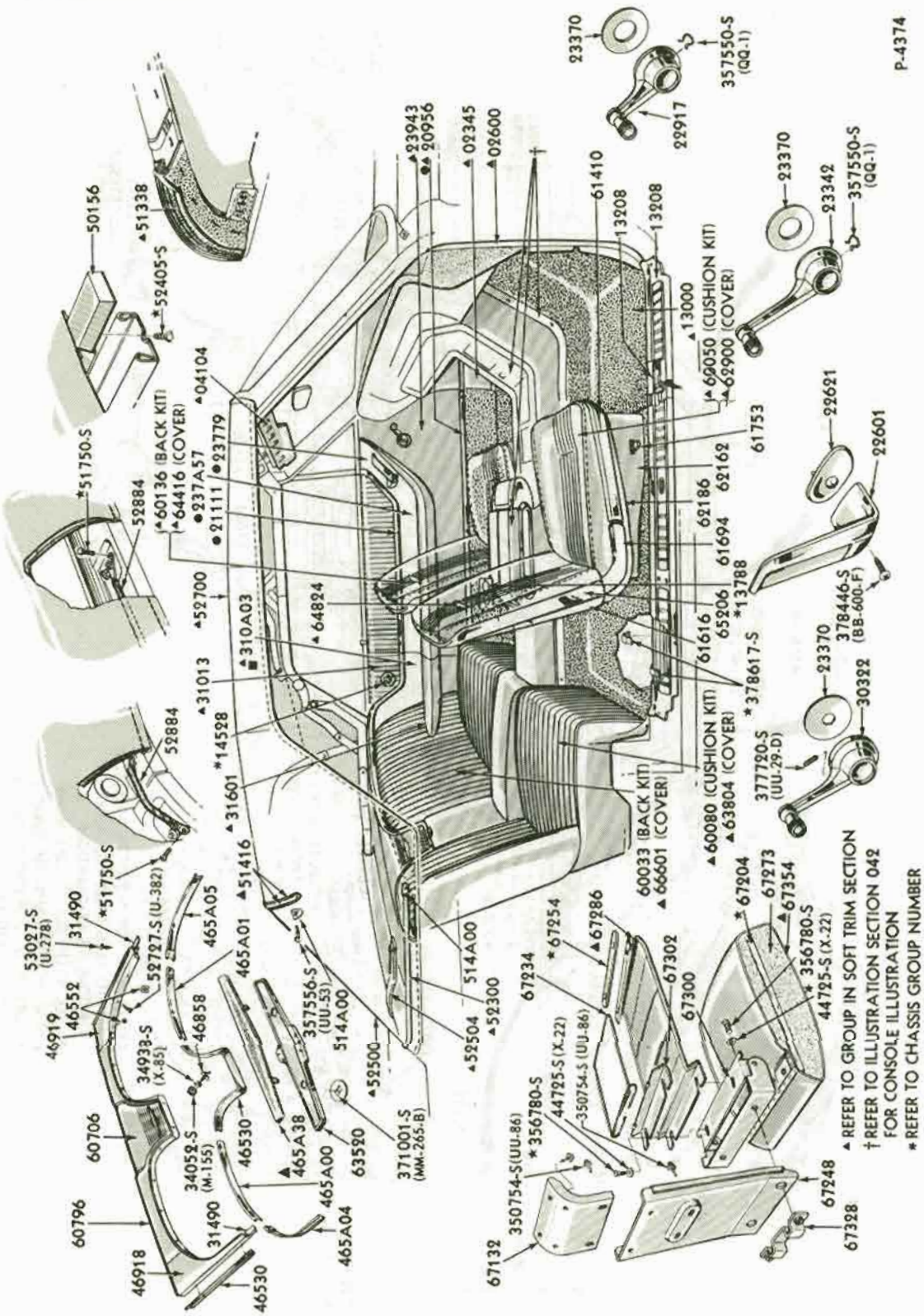

INTERIOR TRIM and RELATED PARTS - TYPICAL
1965/66 THUNDERBIRD - BODY TYPE 76

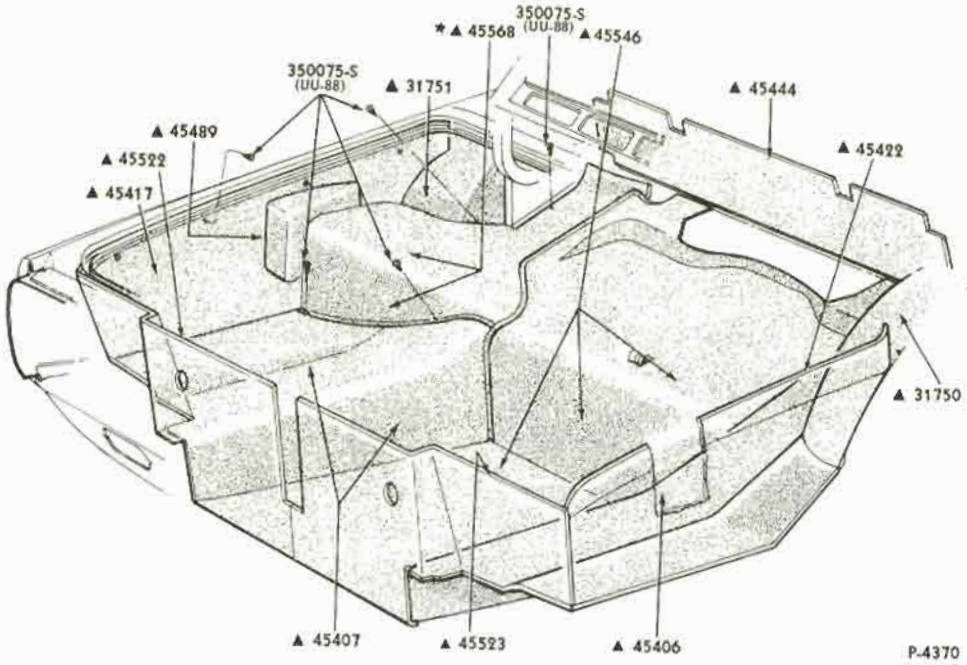

▲ REFER TO GROUP IN SOFT TRIM SECTION

LUGGAGE COMPARTMENT TRIM
1965/66 THUNDERBIRD - BODY TYPE 63

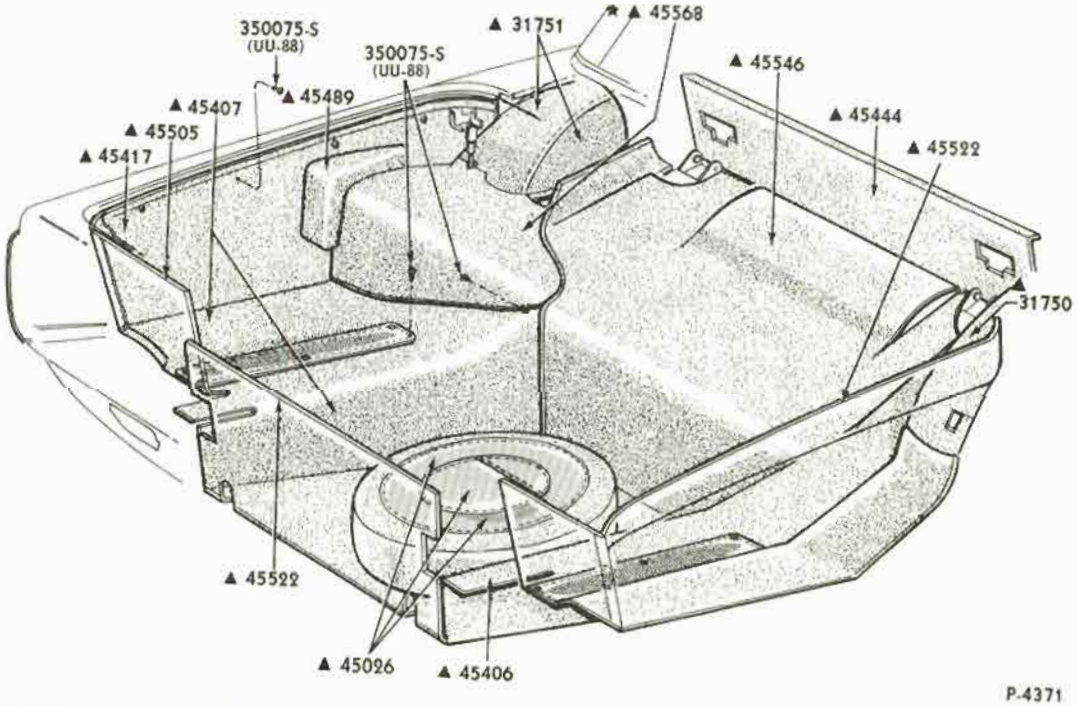

▲ REFER TO SOFT TRIM SECTION

LUGGAGE COMPARTMENT TRIM
1965/66 THUNDERBIRD - BODY TYPE 76

COPYRIGHT © 1975— FORD MOTOR COMPANY —DEARBORN, MICHIGAN

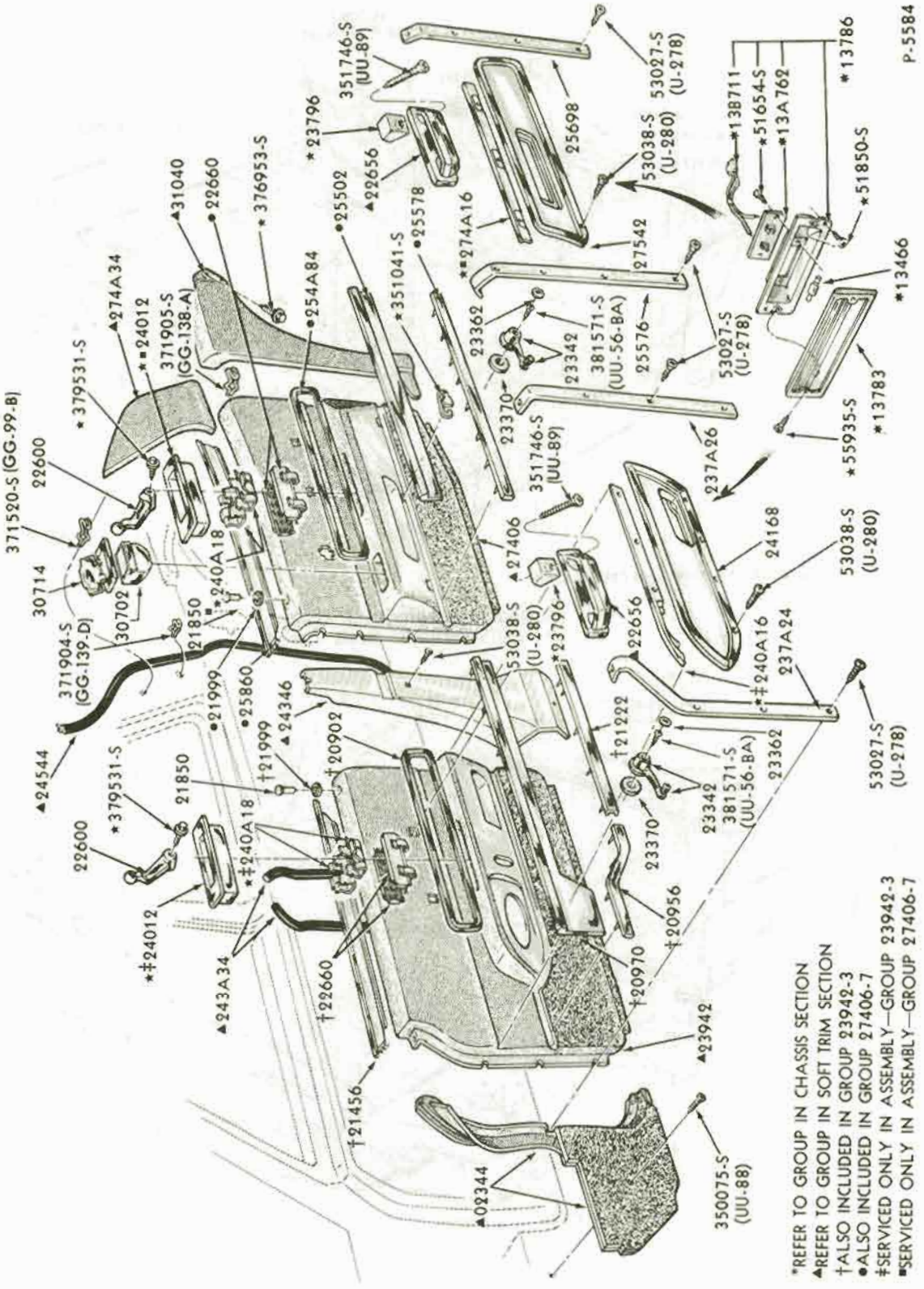

DOOR TRIM PANELS and RELATED PARTS
1967 THUNDERBIRD - BODY TYPE 57

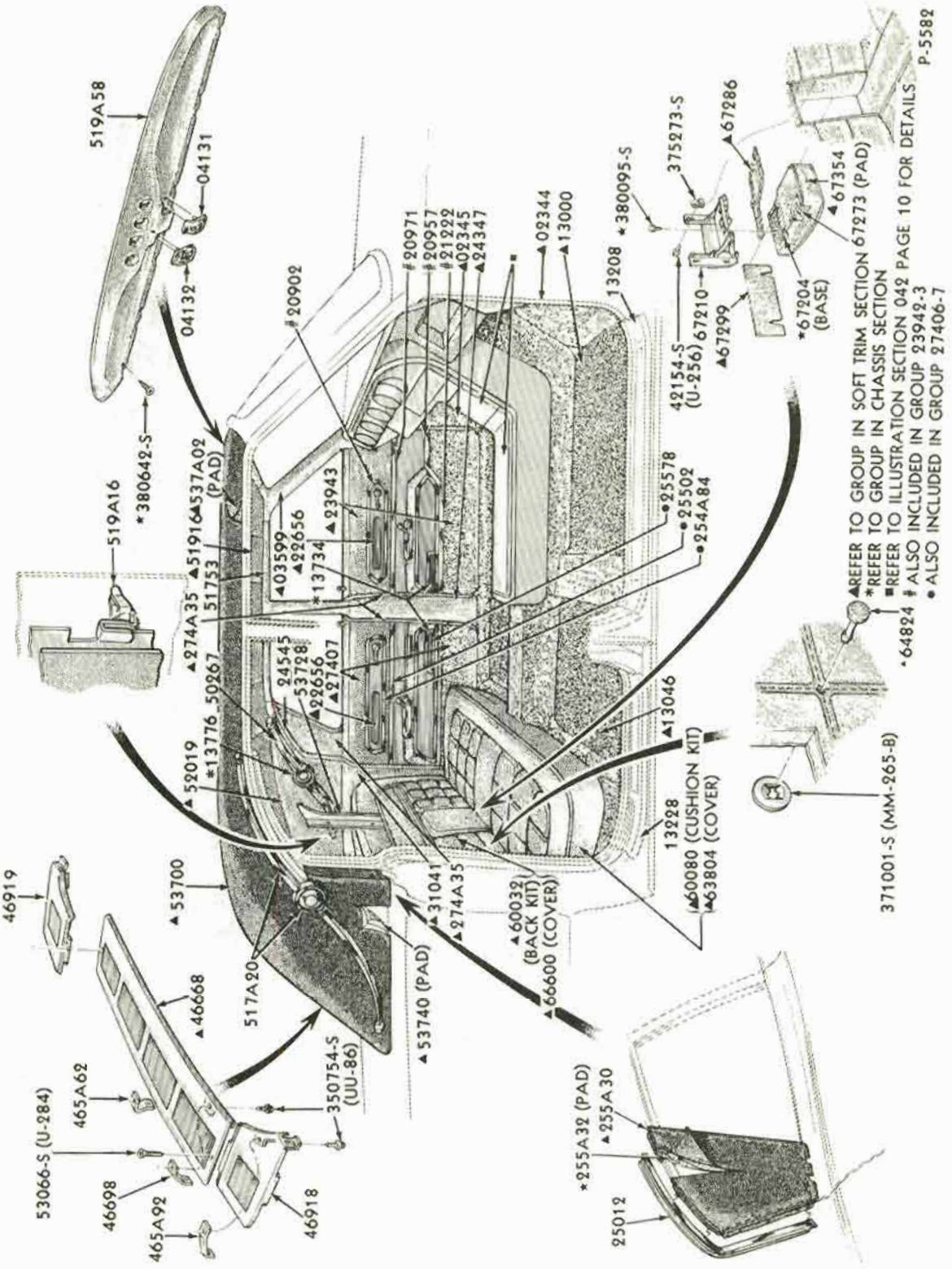

INTERIOR TRIM and RELATED PARTS
1967 THUNDERBIRD - BODY TYPE 57

COPYRIGHT © 1975 — FORD MOTOR COMPANY — DEARBORN, MICHIGAN

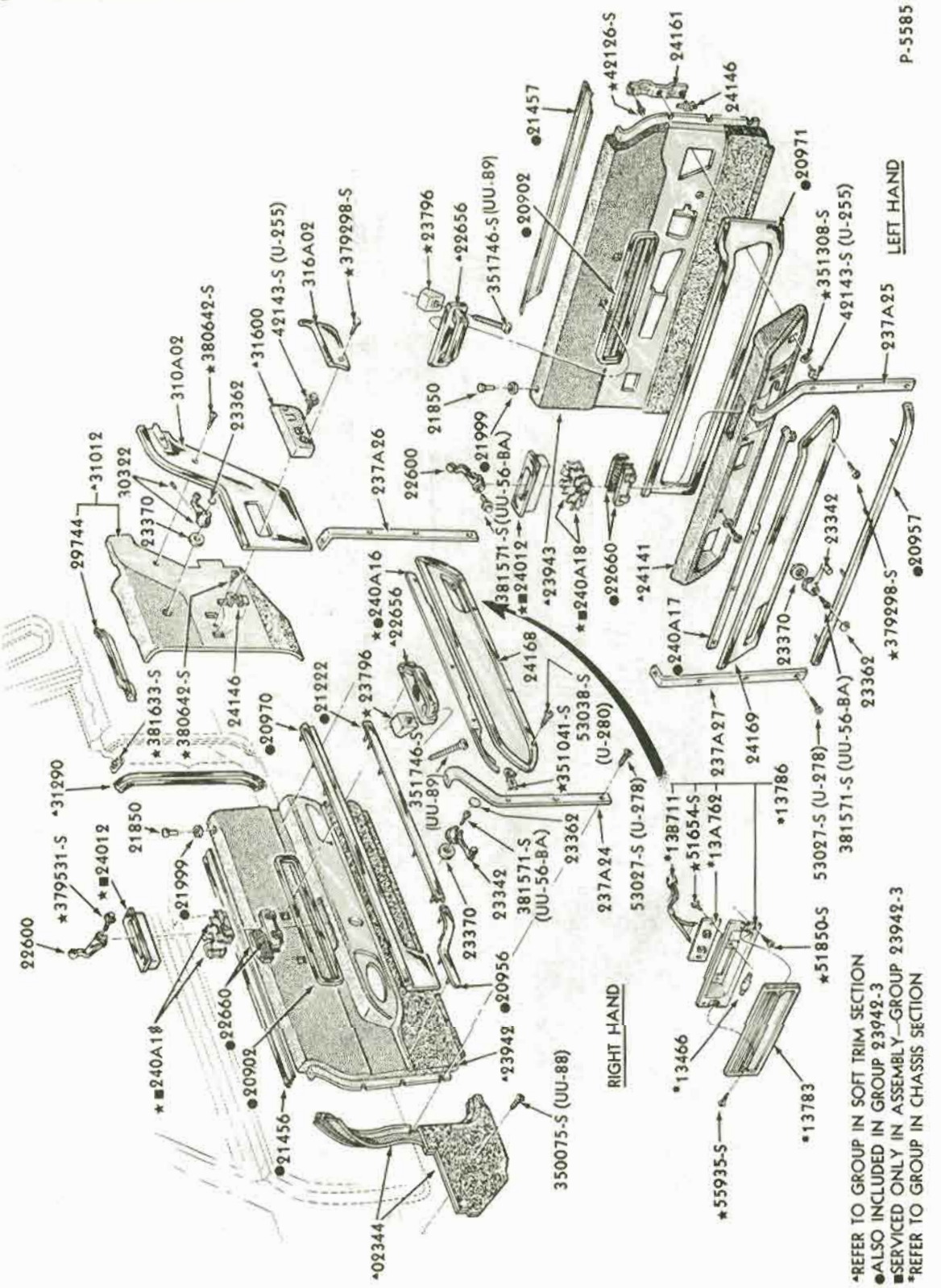

DOOR and QUARTER TRIM PANELS and RELATED PARTS
1967 THUNDERBIRD - BODY TYPE 65

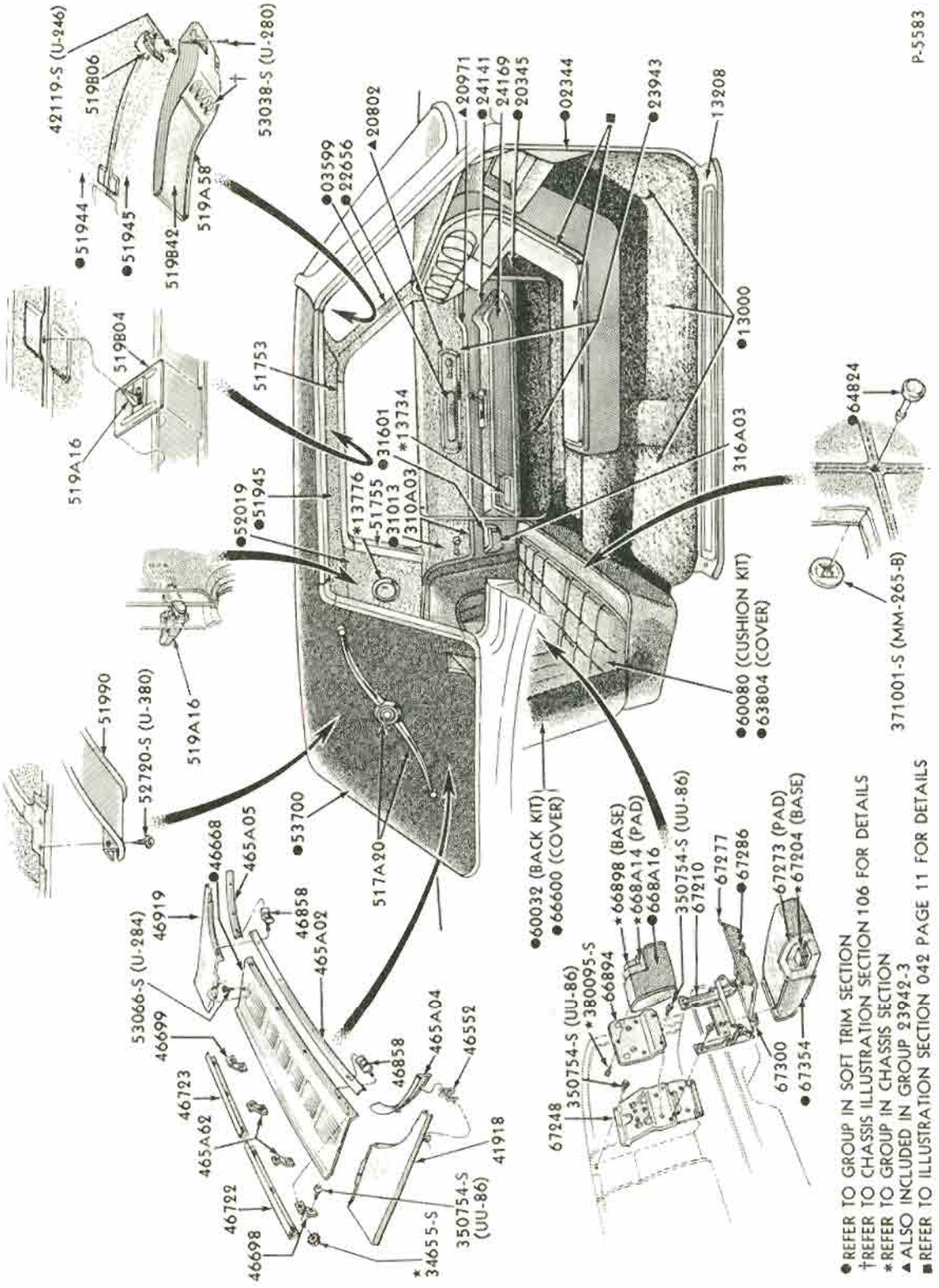

INTERIOR TRIM and RELATED PARTS
1967 THUNDERBIRD - BODY TYPE 65

COPYRIGHT © 1975 — FORD MOTOR COMPANY — DEARBORN, MICHIGAN

FORD CAR PARTS

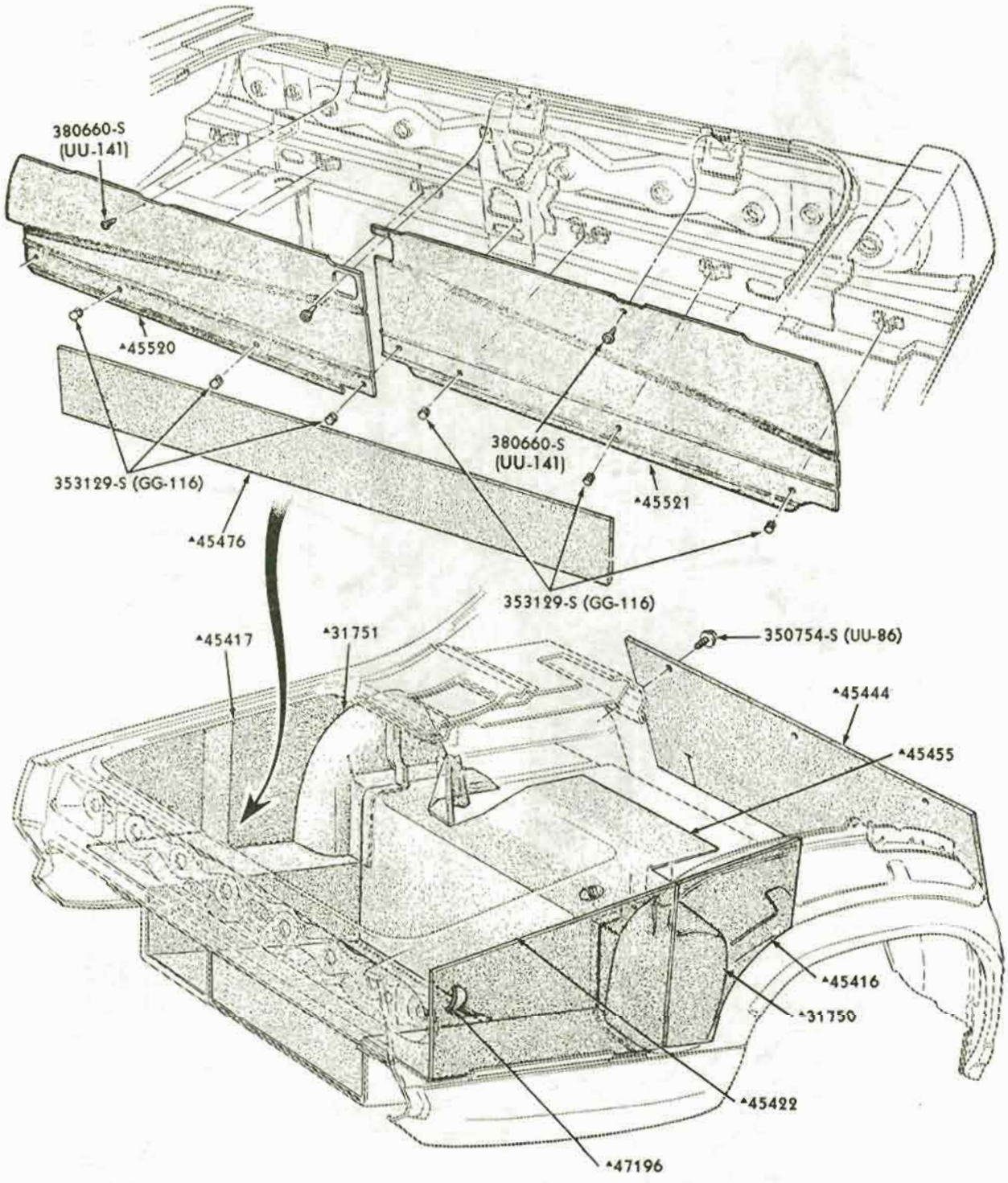

*REFER TO GROUP IN SOFT TRIM SECTION

P-5766

DOOR TRIM PANELS and RELATED PARTS
1968/69 THUNDERBIRD-BODY TYPE 57

COPYRIGHT © 1975 — FORD MOTOR COMPANY — DEARBORN, MICHIGAN

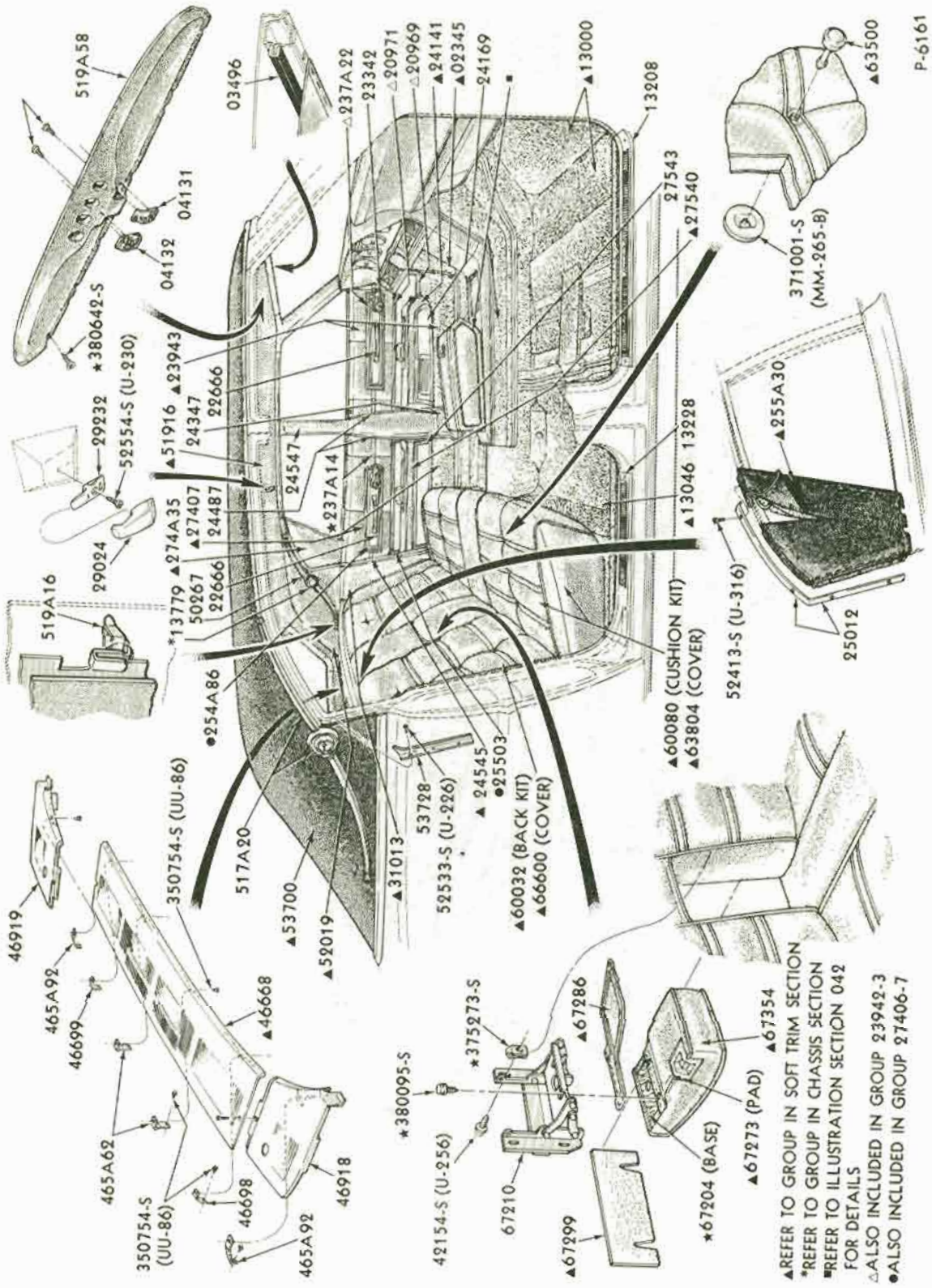

INTERIOR TRIM and RELATED PARTS
1968/69 THUNDERBIRD-BODY TYPE 57

P-6160

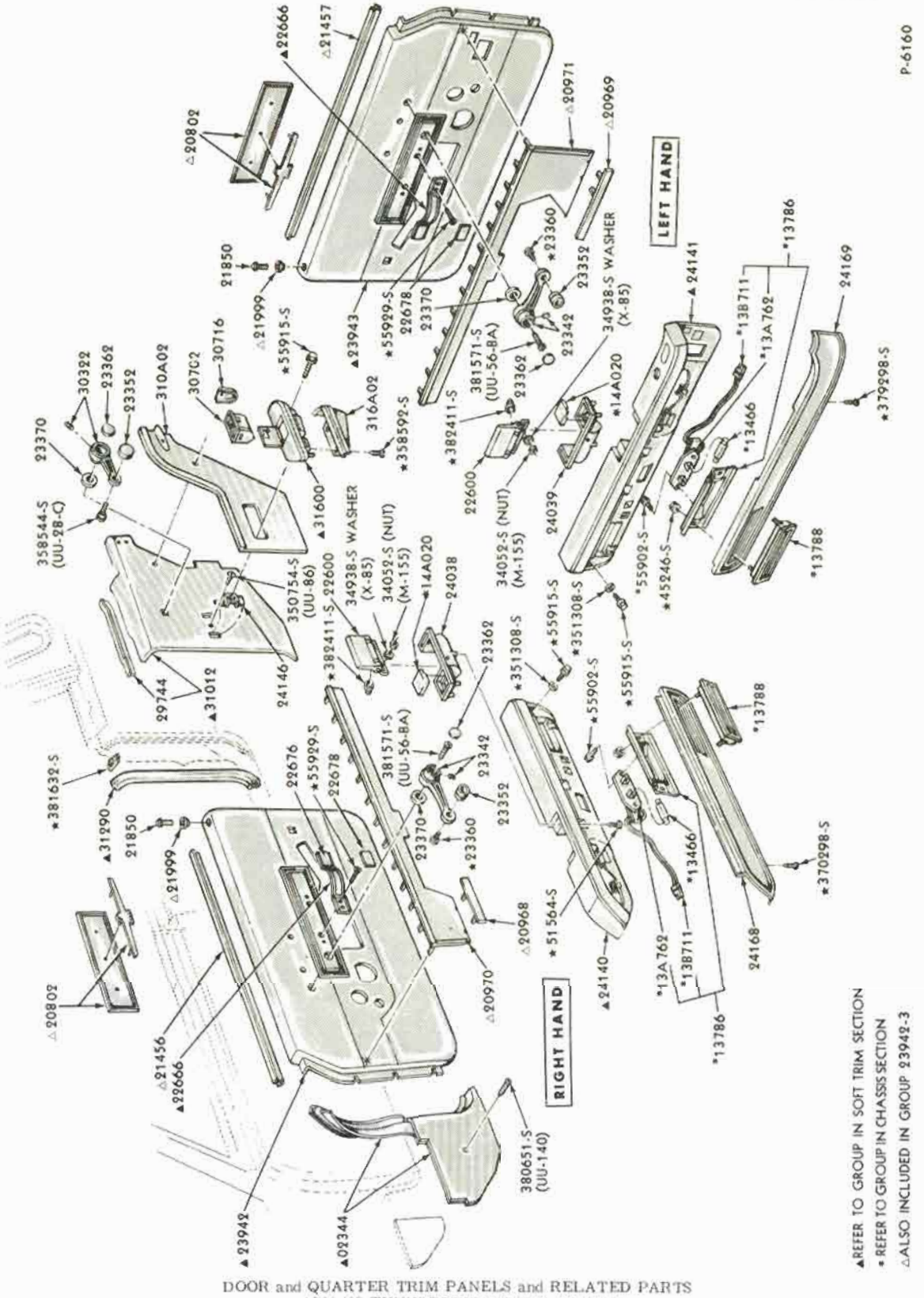

DOOR and QUARTER TRIM PANELS and RELATED PARTS
1968/69 THUNDERBIRD-BODY TYPE 65

COPYRIGHT © 1975 — FORD MOTOR COMPANY — DEARBORN, MICHIGAN

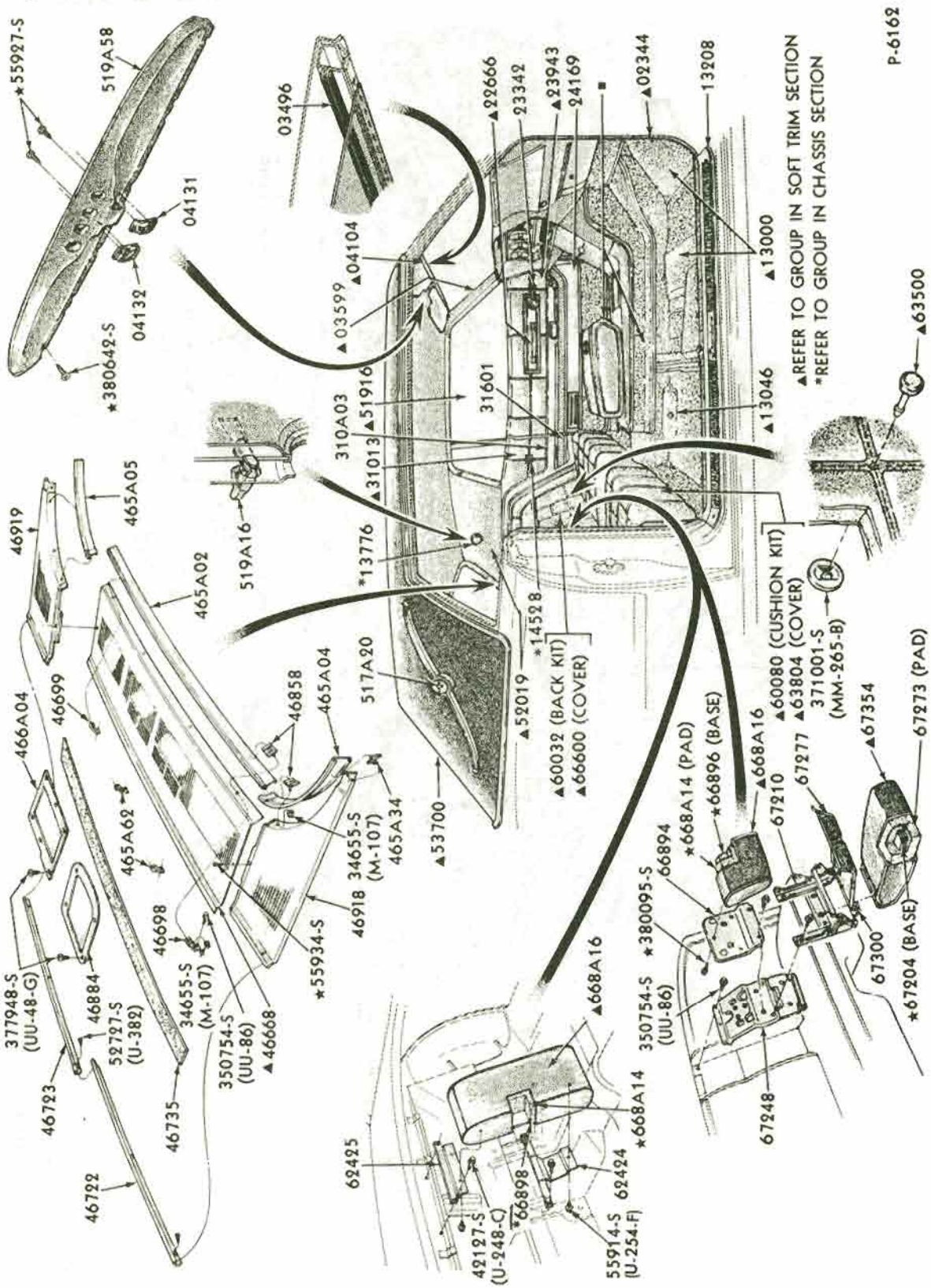

INTERIOR TRIM and RELATED PARTS
1968/69 THUNDERBIRD-BODY TYPE 65

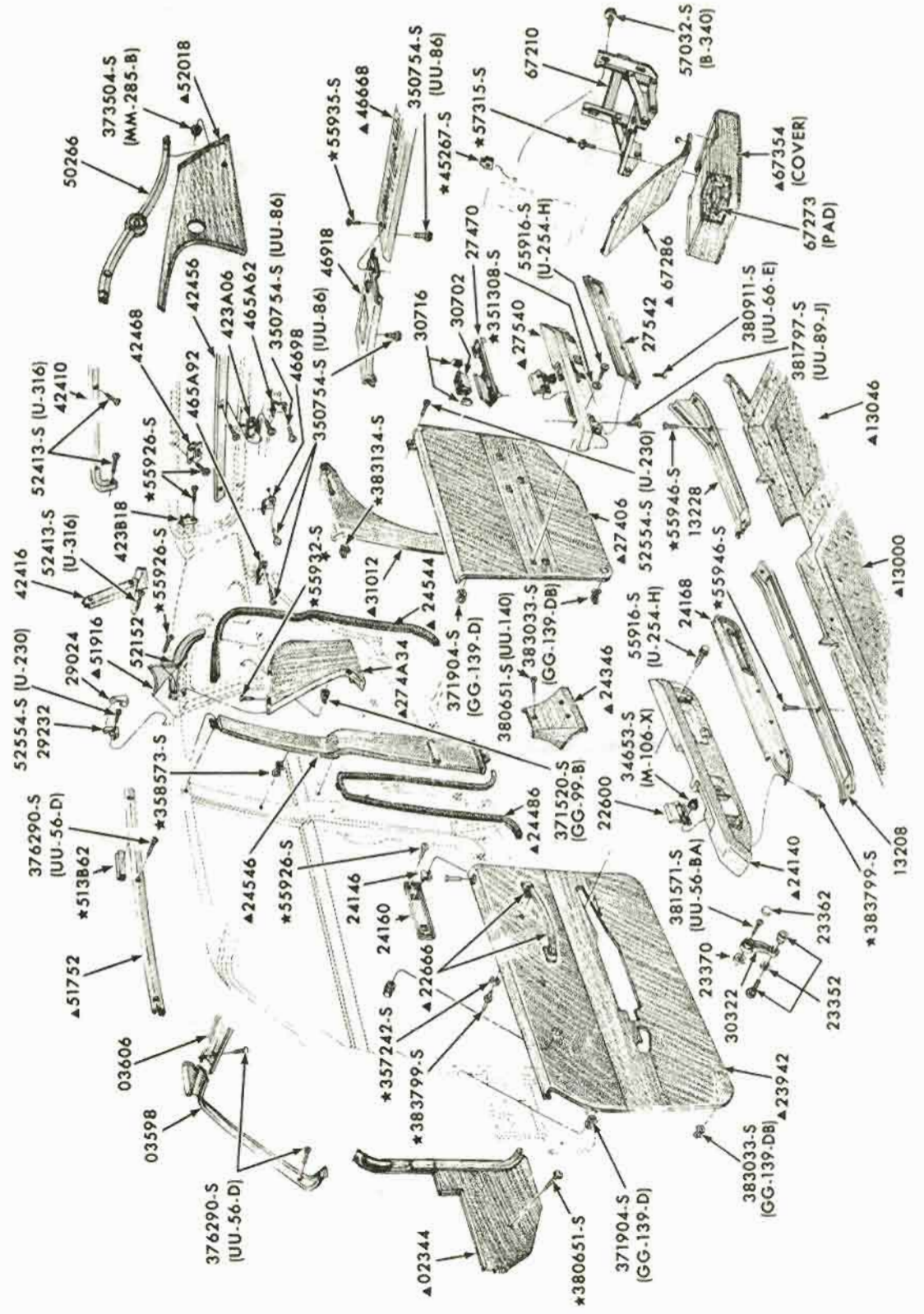

INTERIOR TRIM and RELATED PARTS

1970/71 THUNDERBIRD - BODY TYPE 57

COPYRIGHT © 1975 — FORD MOTOR COMPANY — DEARBORN, MICHIGAN

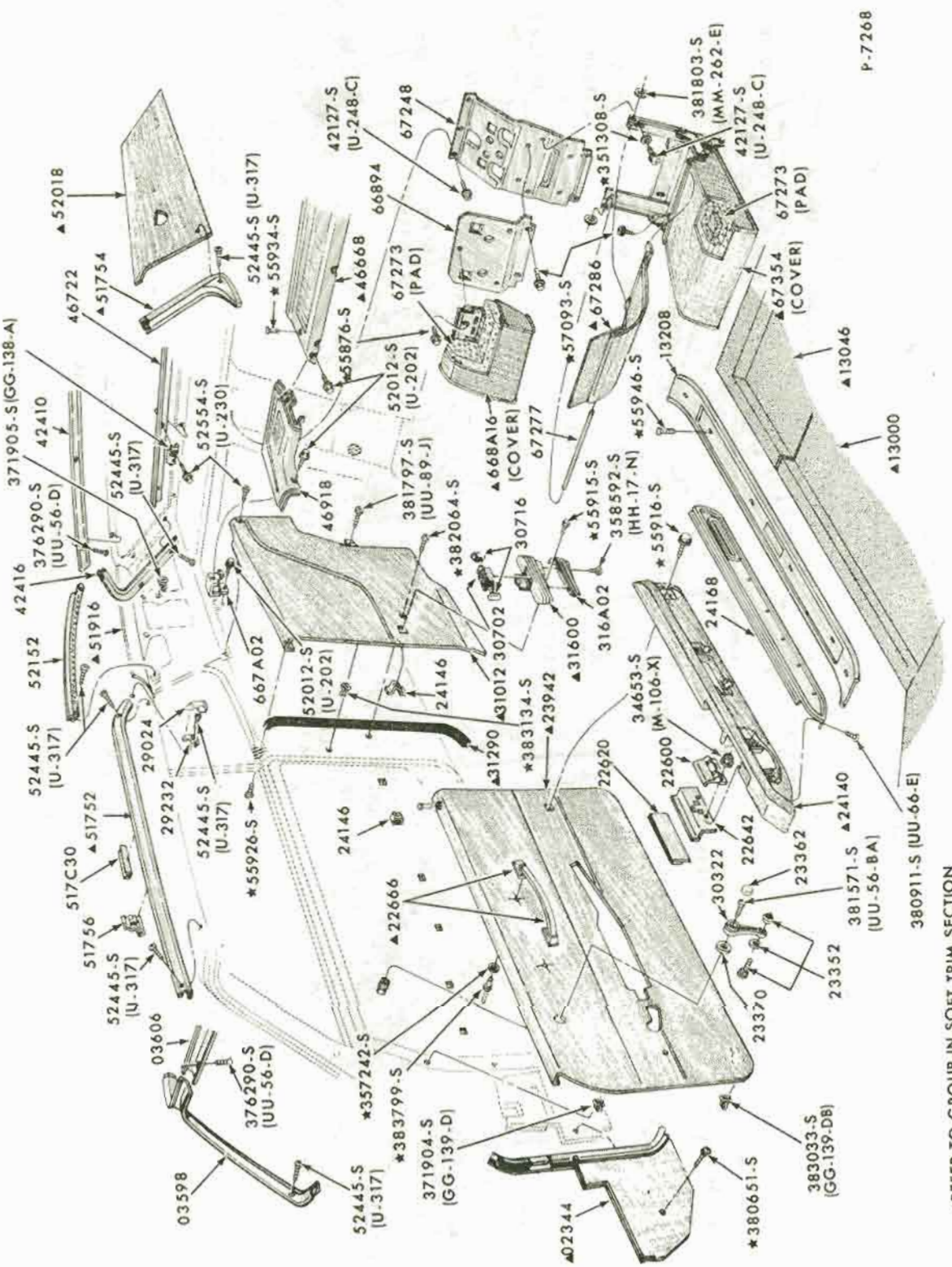

▲ REFER TO GROUP IN SOFT TRIM SECTION

INTERIOR TRIM and RELATED PARTS
1970/71 THUNDERBIRD - BODY TYPE 65

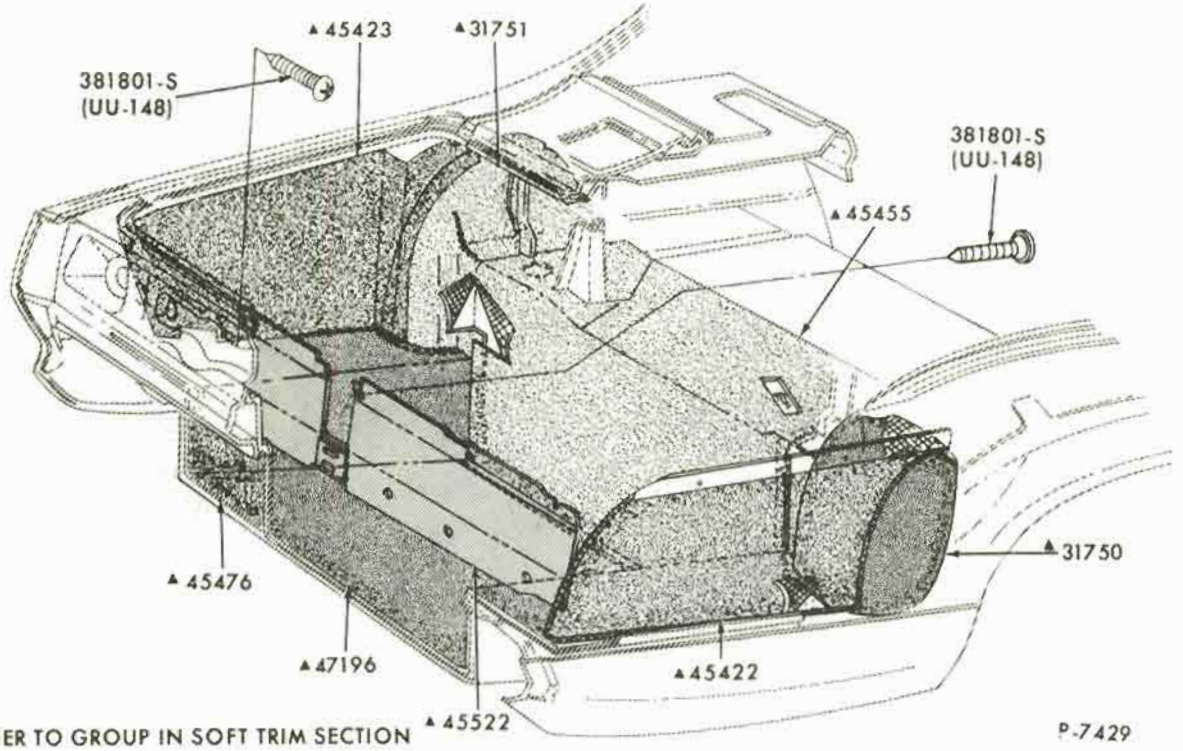

▲REFER TO GROUP IN SOFT TRIM SECTION

P-7429

LUGGAGE COMPARTMENT TRIM
1970/71 THUNDERBIRD

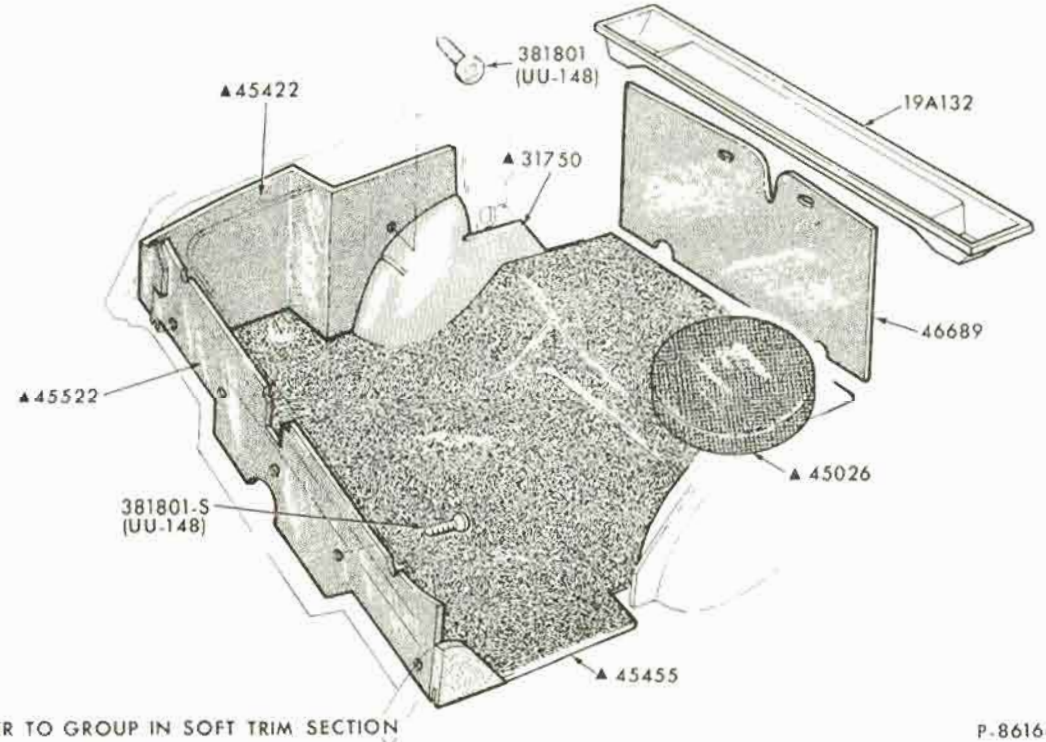

▲REFER TO GROUP IN SOFT TRIM SECTION

P-8616

LUGGAGE COMPARTMENT TRIM
1972 THUNDERBIRD

COPYRIGHT © 1975 — FORD MOTOR COMPANY — DEARBORN, MICHIGAN

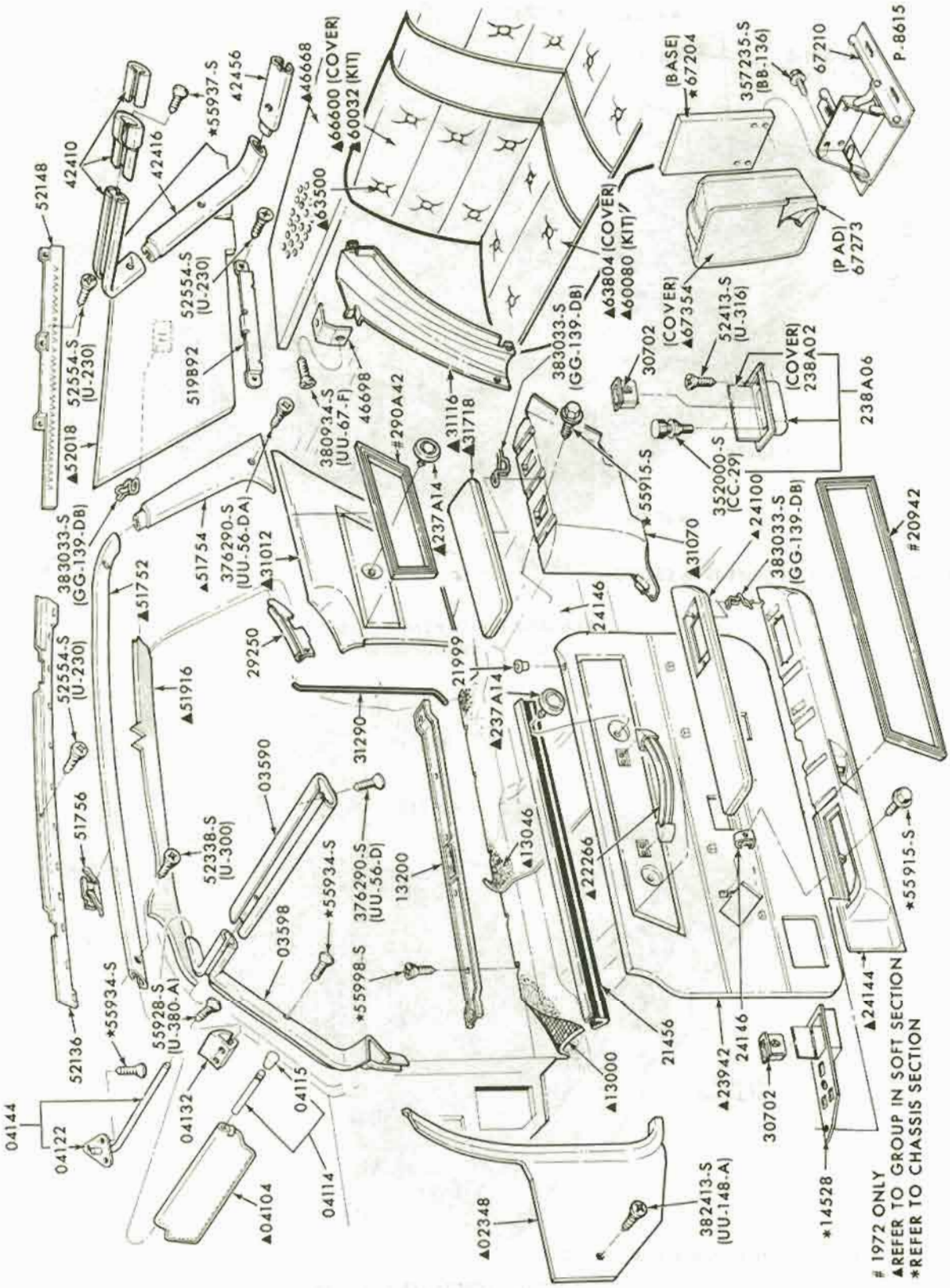

INTERIOR TRIM and RELATED PARTS
1972 THUNDERBIRD

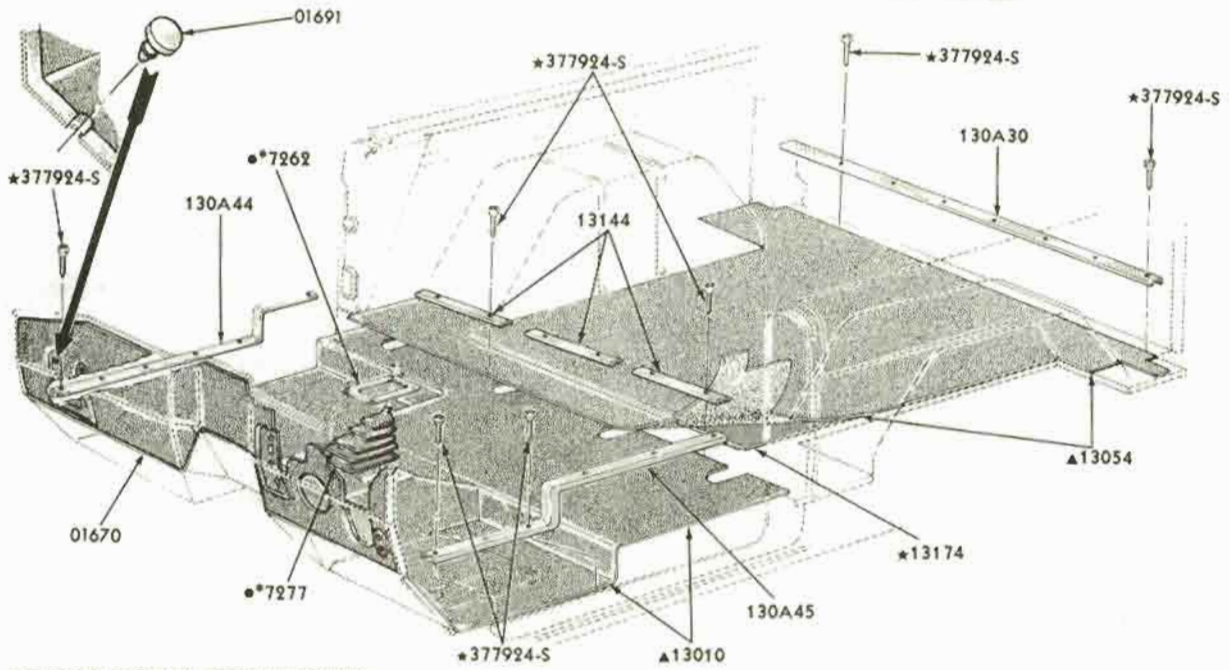

▲ REFER TO GROUP IN SOFT TRIM SECTION
* REFER TO GROUP IN CHASSIS SECTION
● REFER TO CHASSIS ILLUSTRATION SECTION 72 PAGE 18 FOR DETAILS

P-5896

FLOOR MATS and RELATED PARTS
1967/72 BRONCO

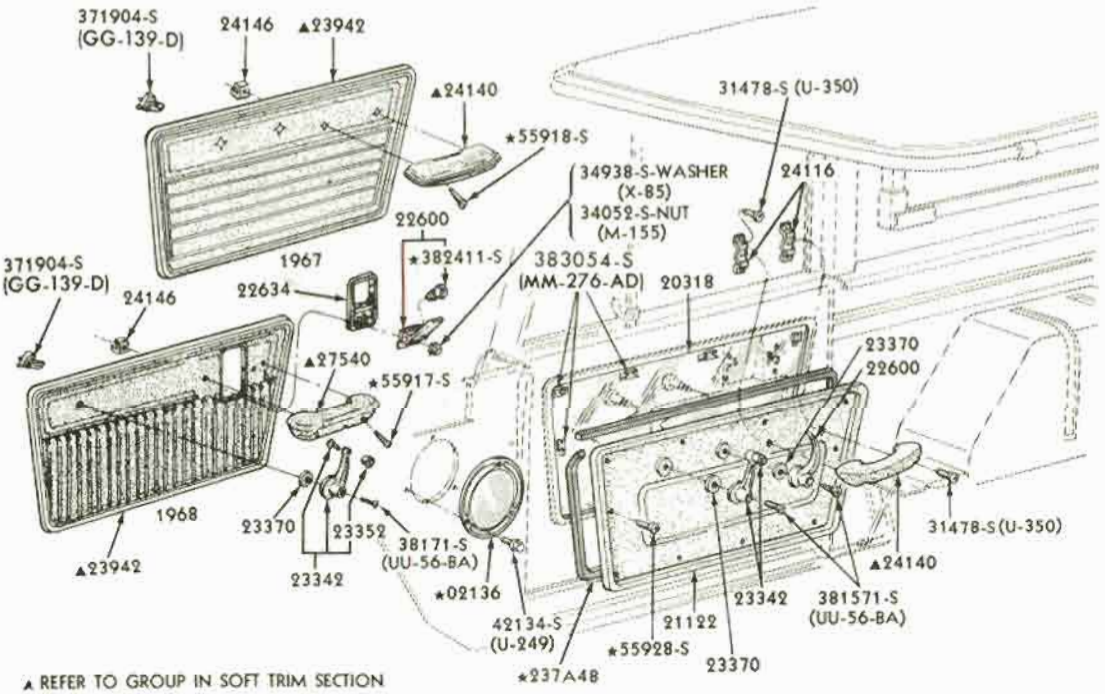

▲ REFER TO GROUP IN SOFT TRIM SECTION

P-5897

DOOR TRIM PANELS AND RELATED PARTS
1967/72 BRONCO

COPYRIGHT © 1975— FORD MOTOR COMPANY —DEARBORN, MICHIGAN

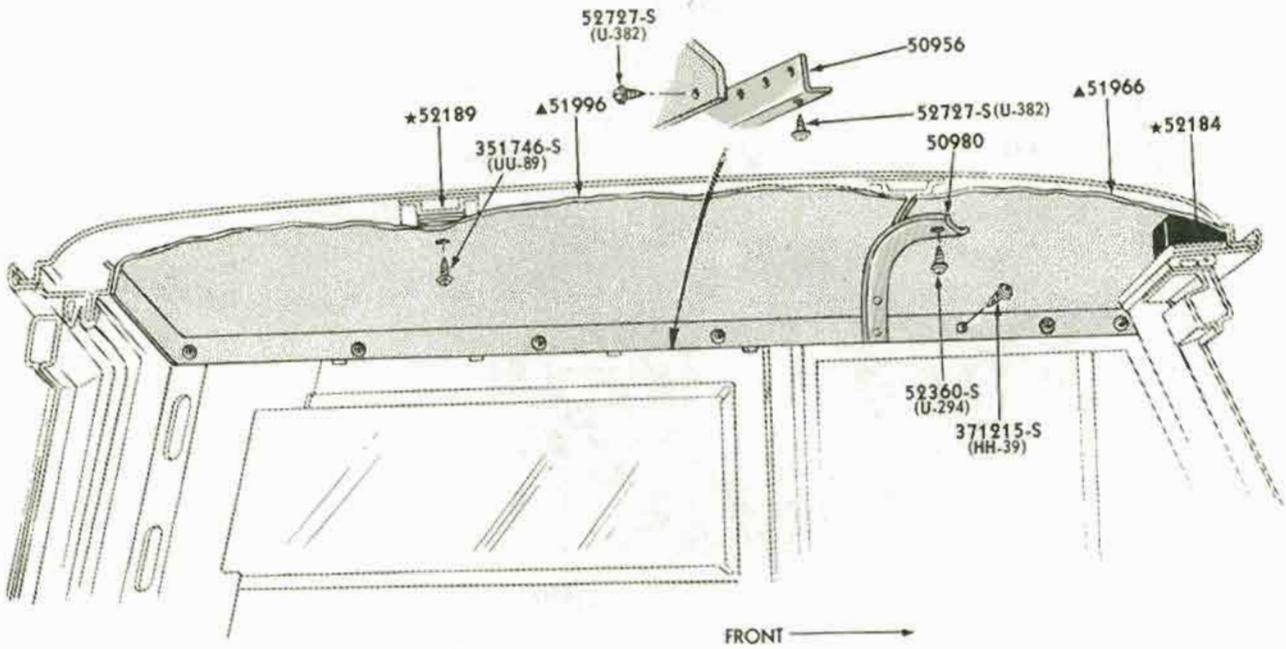

P-5289

▲REFER TO GROUP IN SOFT TRIM SECTION

ROOF TRIM PANEL and RELATED PARTS
1966/72 BRONCO - BODY TYPE 98

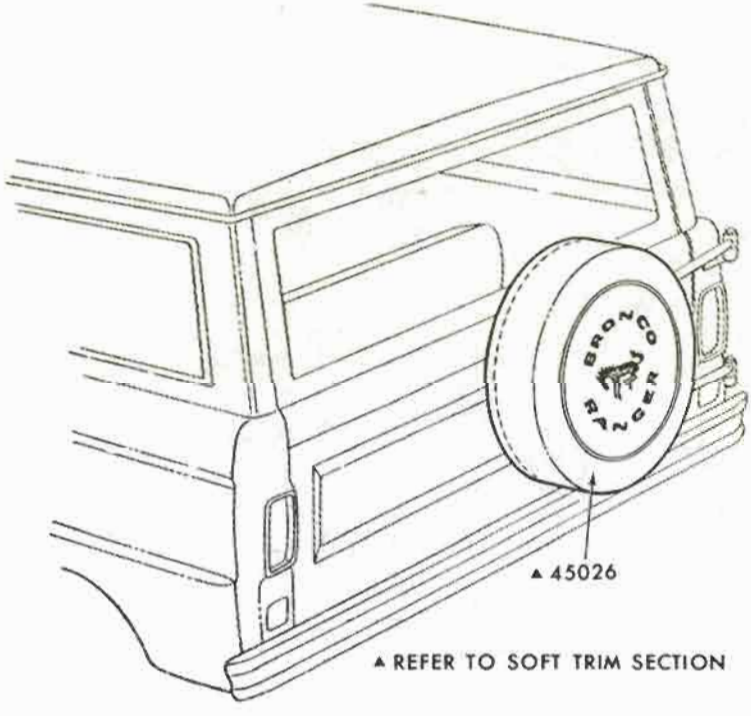

▲ REFER TO SOFT TRIM SECTION

P-10800

COVER - SPARE TIRE
1972 BRONCO

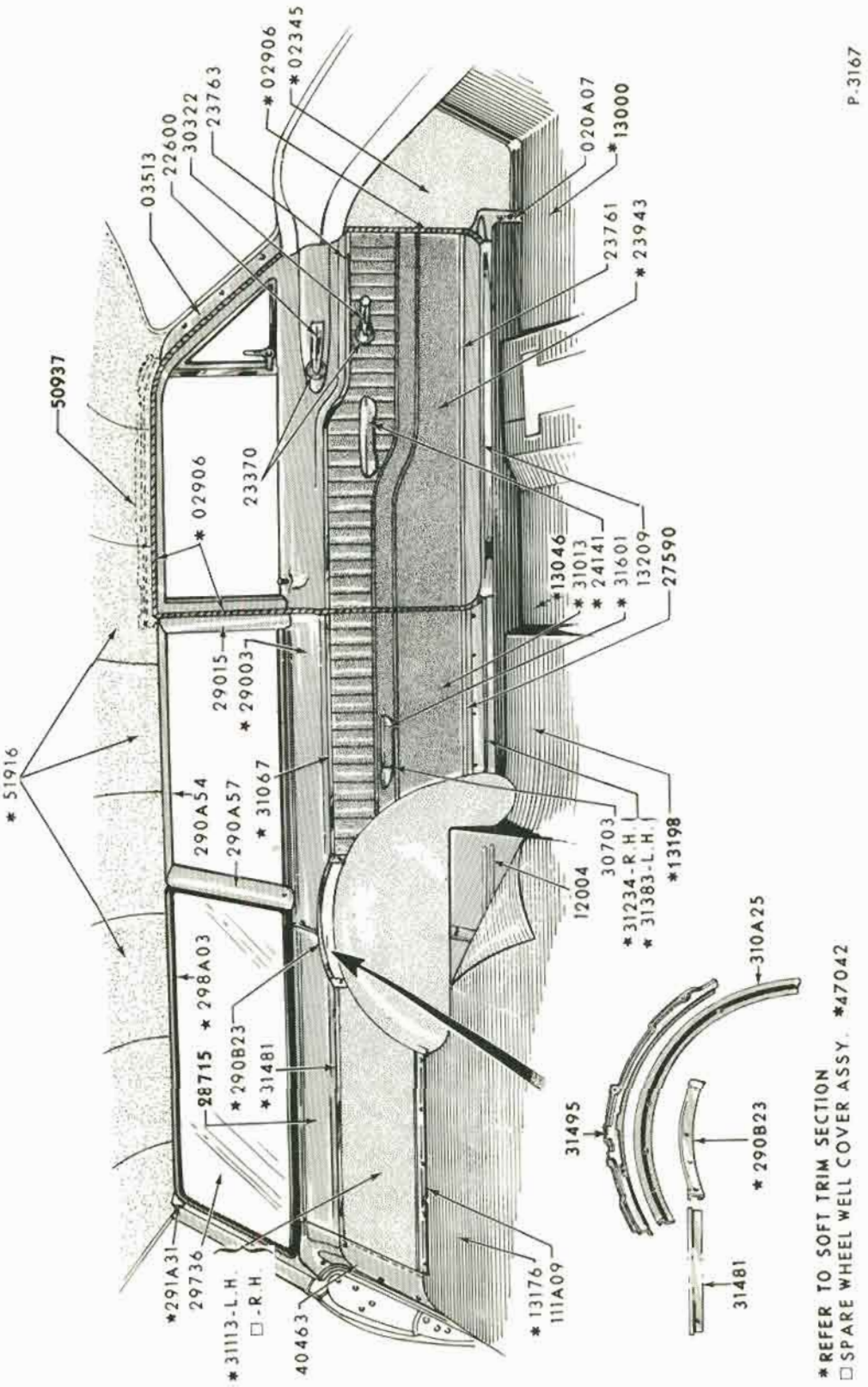

INTERIOR TRIM and RELATED PARTS
1965 FALCON - BODY TYPE 59

COPYRIGHT © 1975 — FORD MOTOR COMPANY — DEARBORN, MICHIGAN

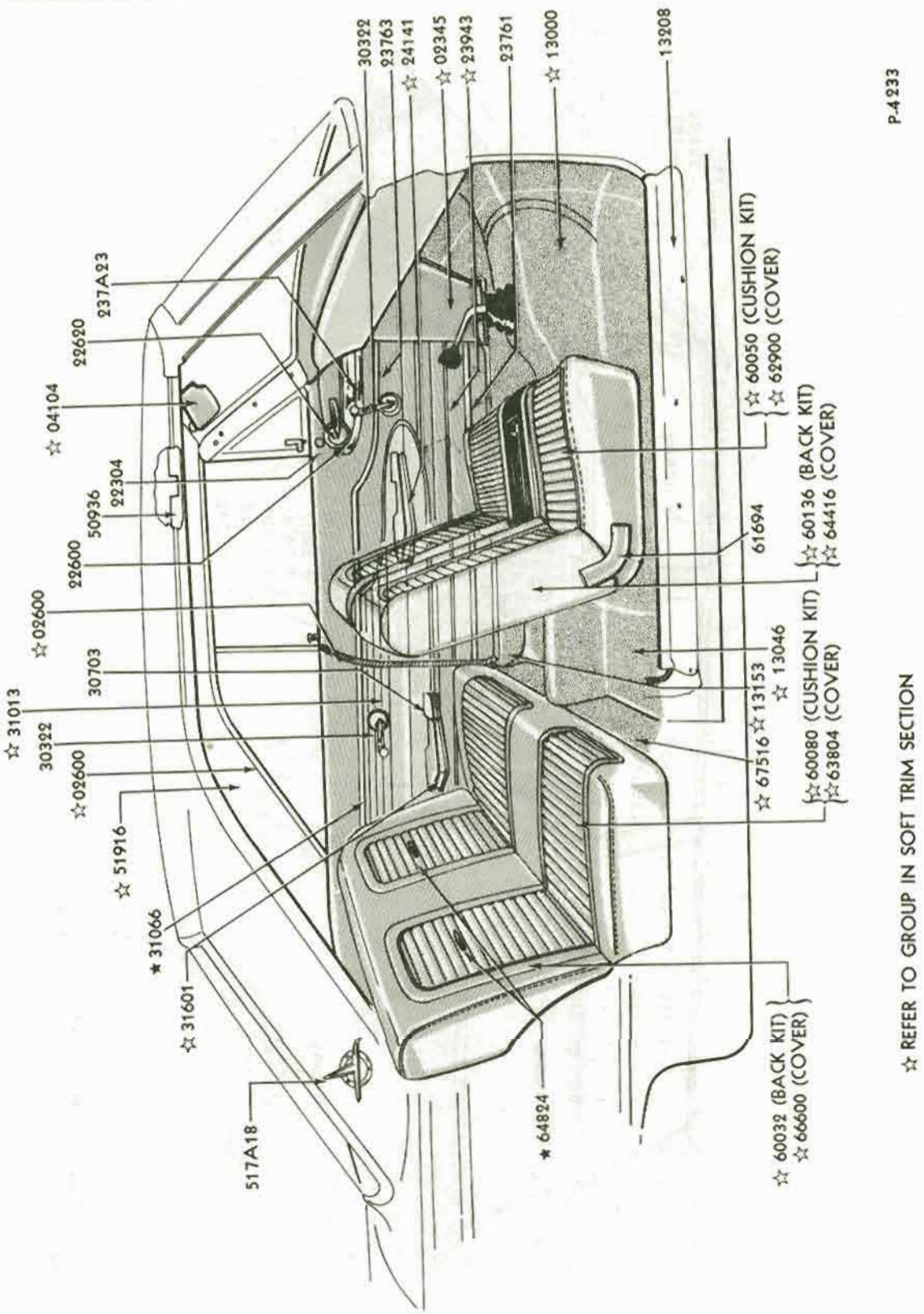

☆ REFER TO GROUP IN SOFT TRIM SECTION

INTERIOR TRIM and RELATED PARTS - TYPICAL
1965 FALCON - BODY TYPE 63

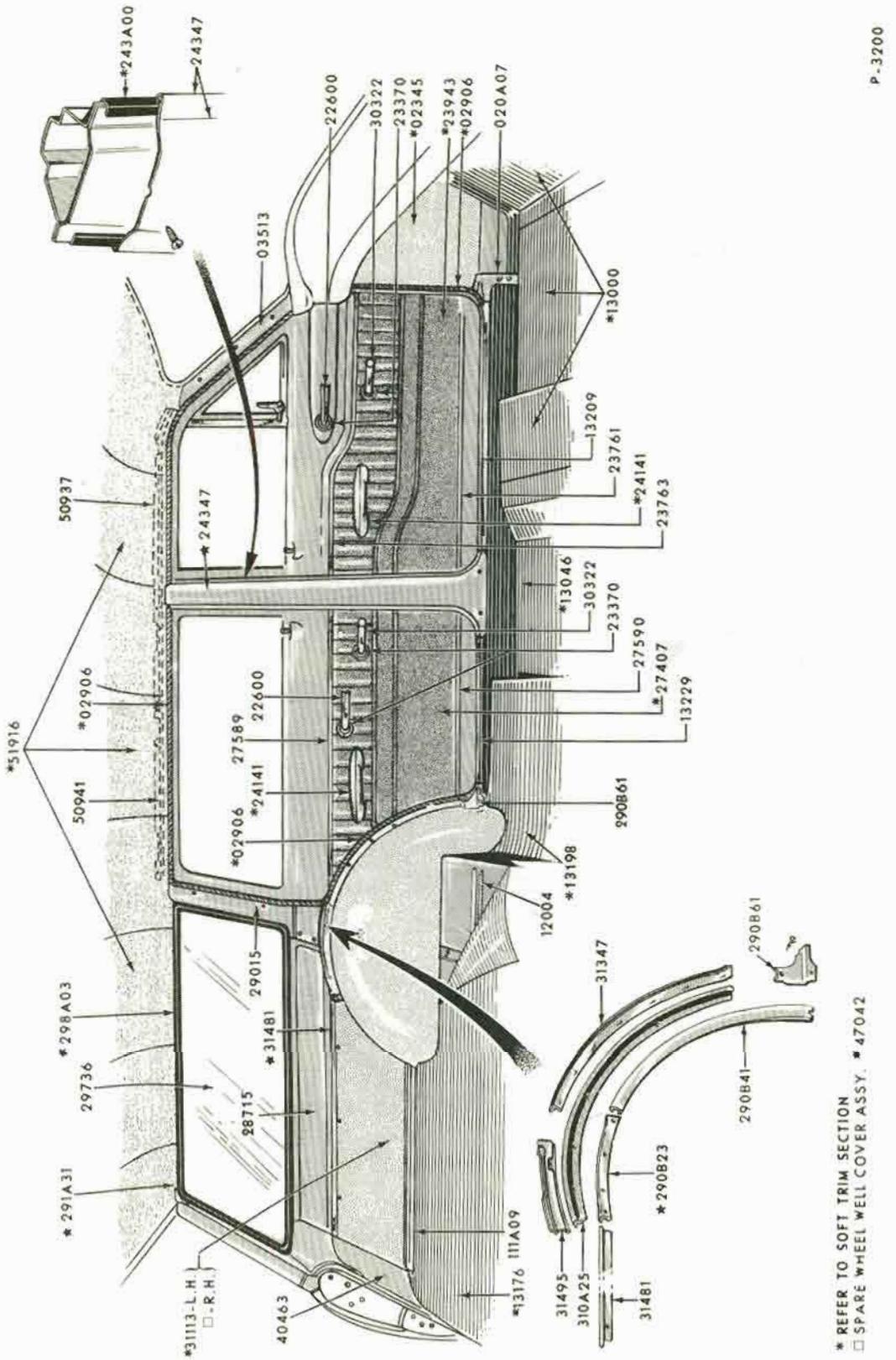

* REFER TO SOFT TRIM SECTION
□ SPARE WHEEL WELL COVER ASSY. * 47042

INTERIOR TRIM and RELATED PARTS
1965 FALCON - BODY TYPE 71

COPYRIGHT © 1975 — FORD MOTOR COMPANY — DEARBORN, MICHIGAN

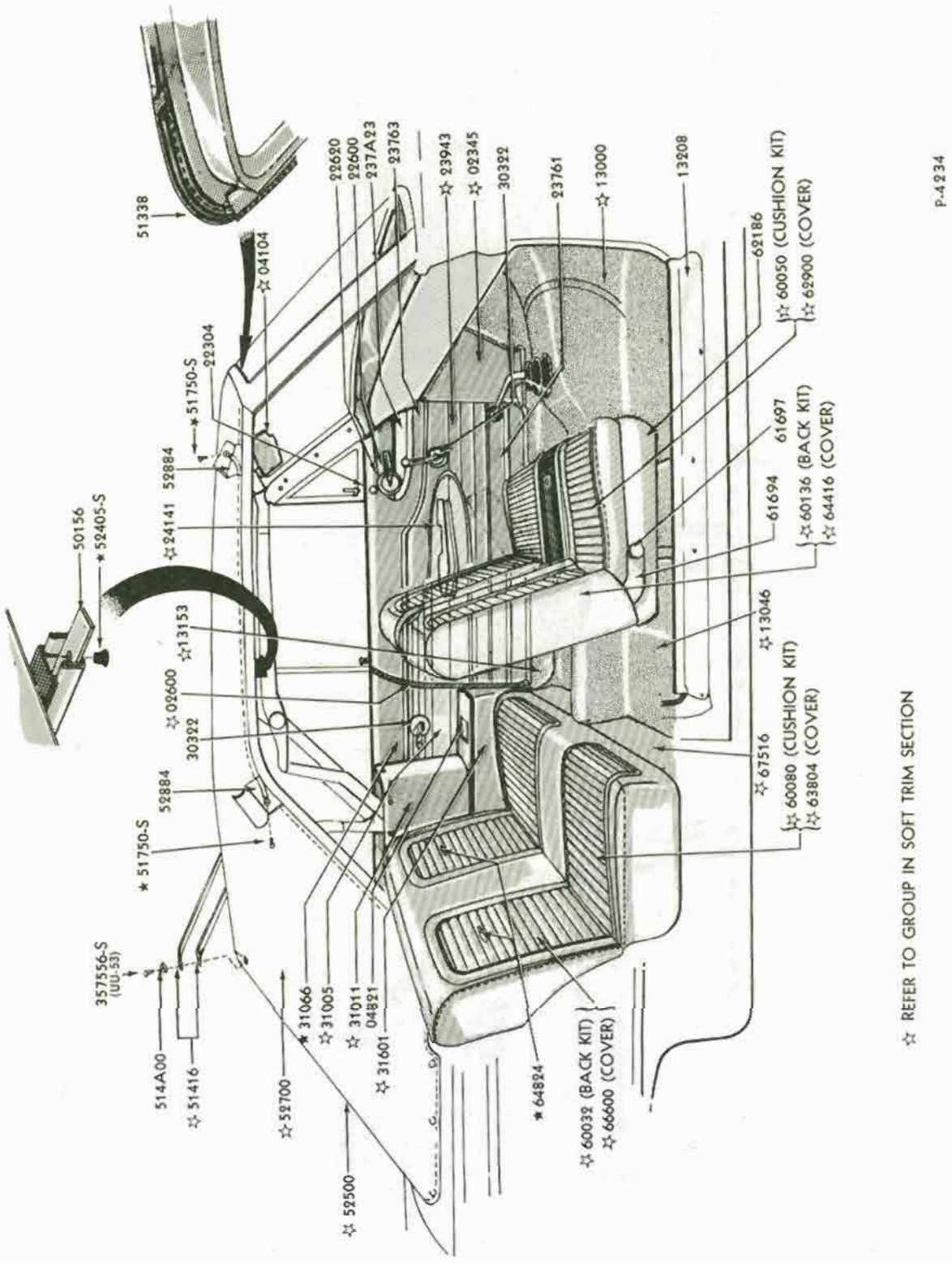

INTERIOR TRIM and RELATED PARTS - TYPICAL
1965 FALCON - BODY TYPE 76

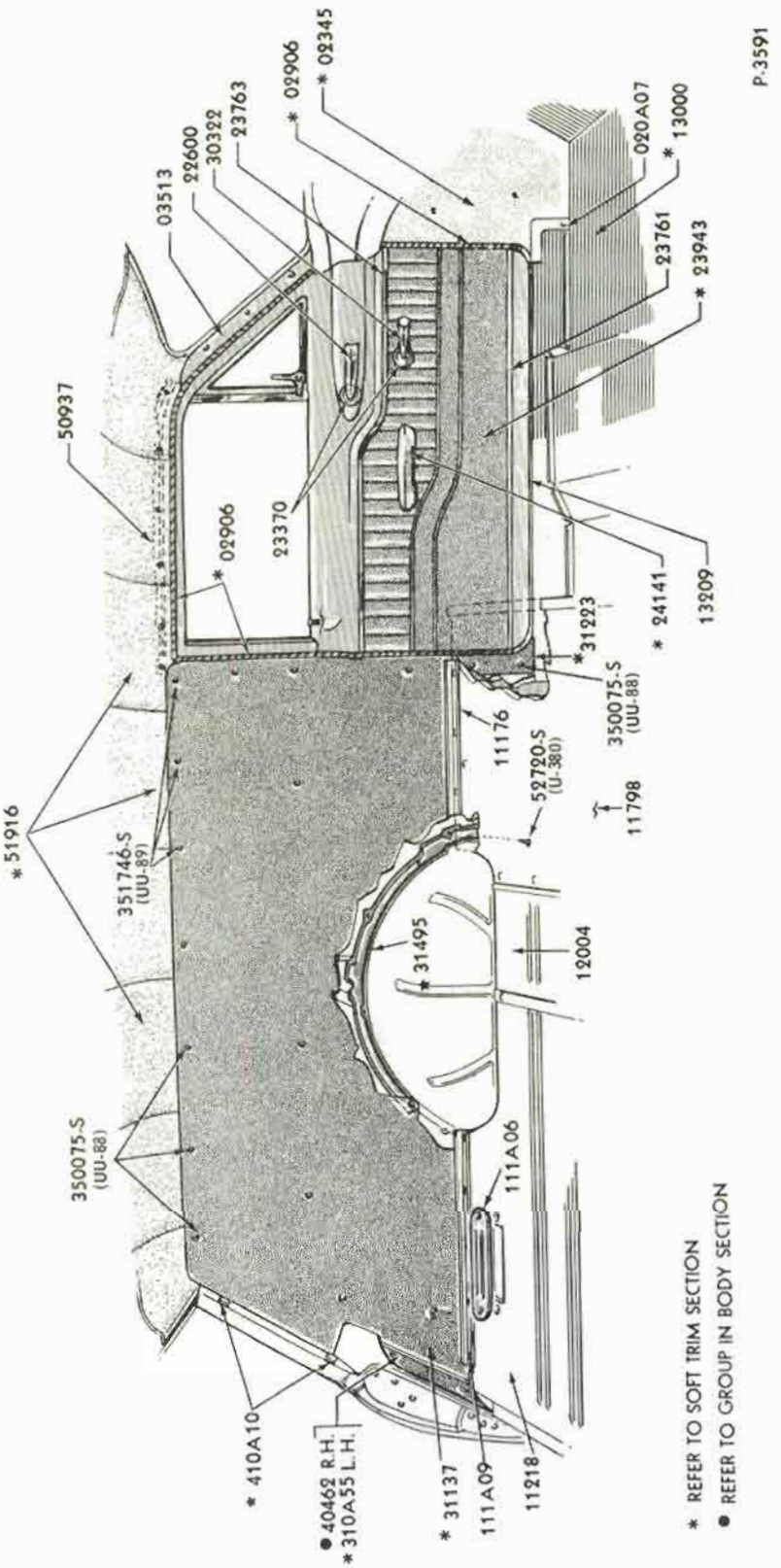

INTERIOR TRIM and RELATED PARTS
1965 FALCON - BODY TYPE 78

COPYRIGHT © 1975 — FORD MOTOR COMPANY — DEARBORN, MICHIGAN

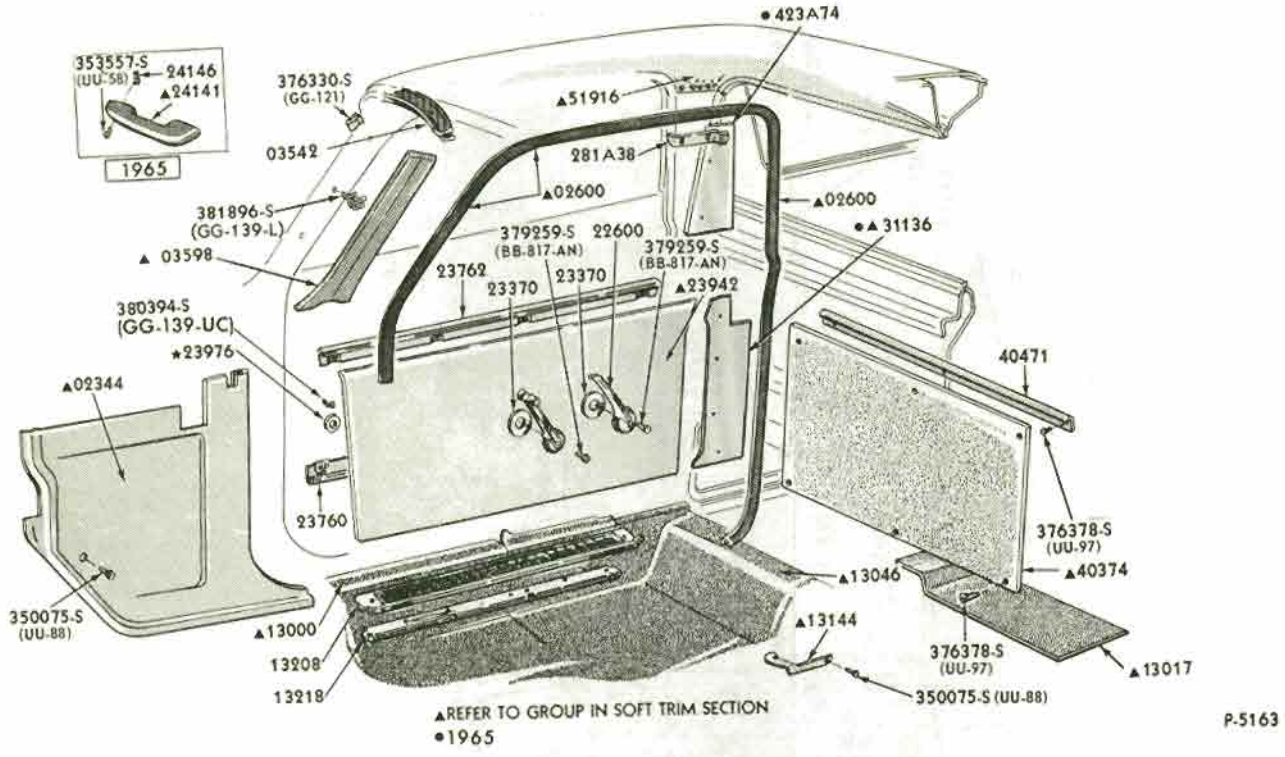

INTERIOR TRIM and RELATED PARTS - TYPICAL
1965/66 FALCON - BODY TYPE 66

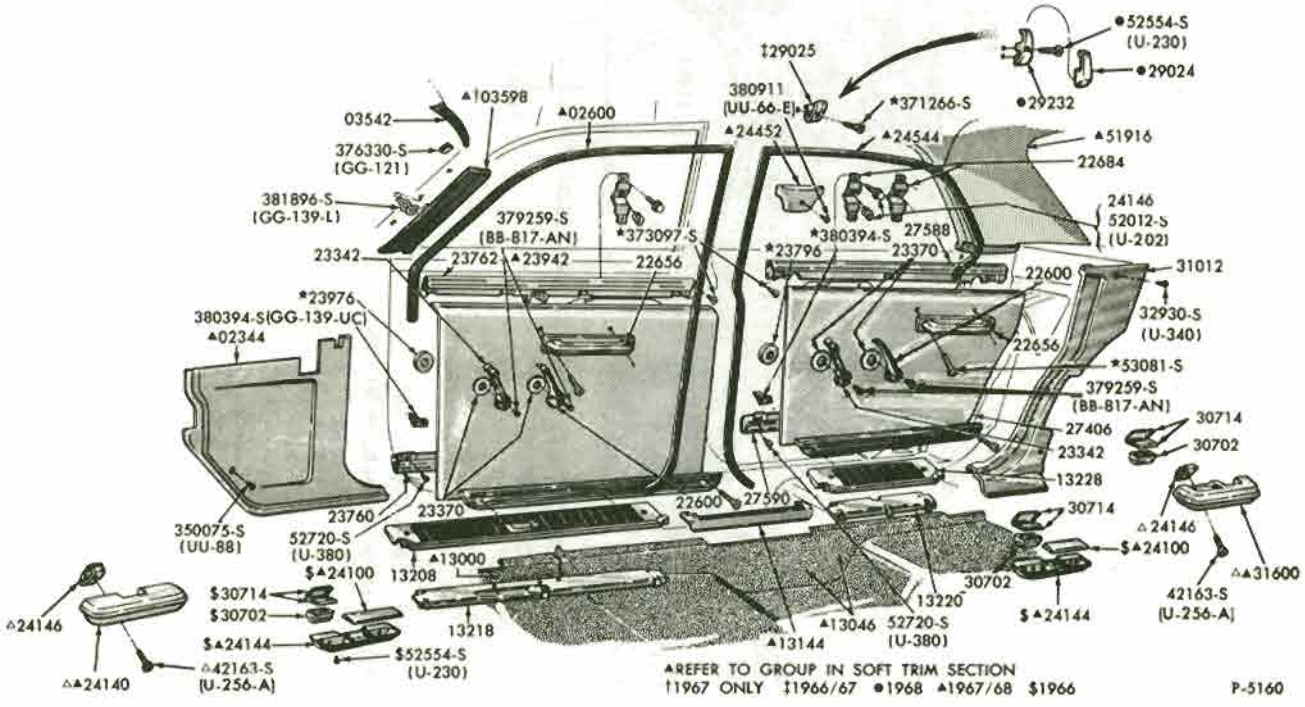

INTERIOR TRIM and RELATED PARTS
1966/67 FALCON - BODY TYPE 54

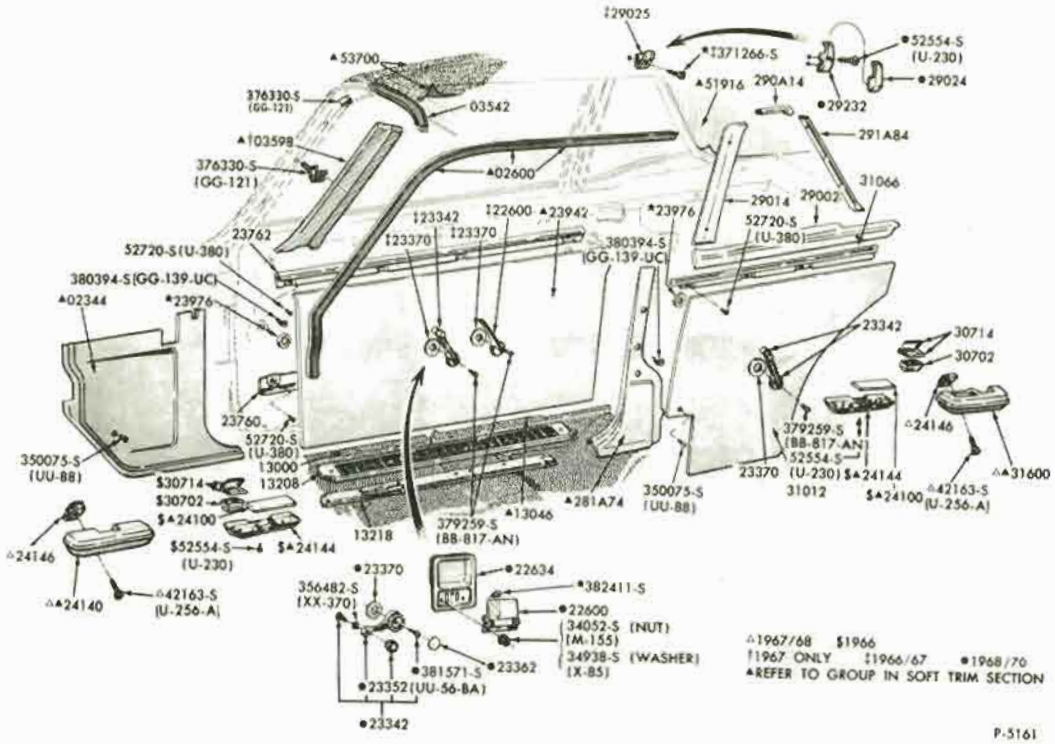

INTERIOR TRIM and RELATED PARTS
1966/70 FALCON - BODY TYPE 62

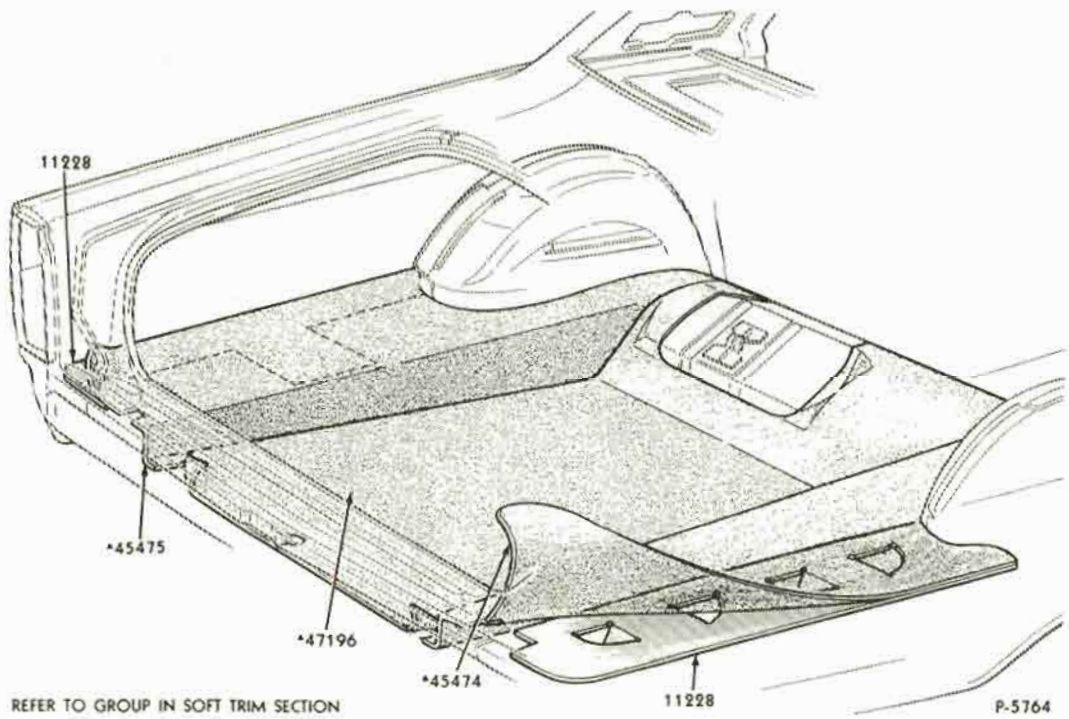

LUGGAGE COMPARTMENT TRIM
1966/70 FALCON - BODY TYPE 54, 62

COPYRIGHT © 1975 — FORD MOTOR COMPANY — DEARBORN, MICHIGAN

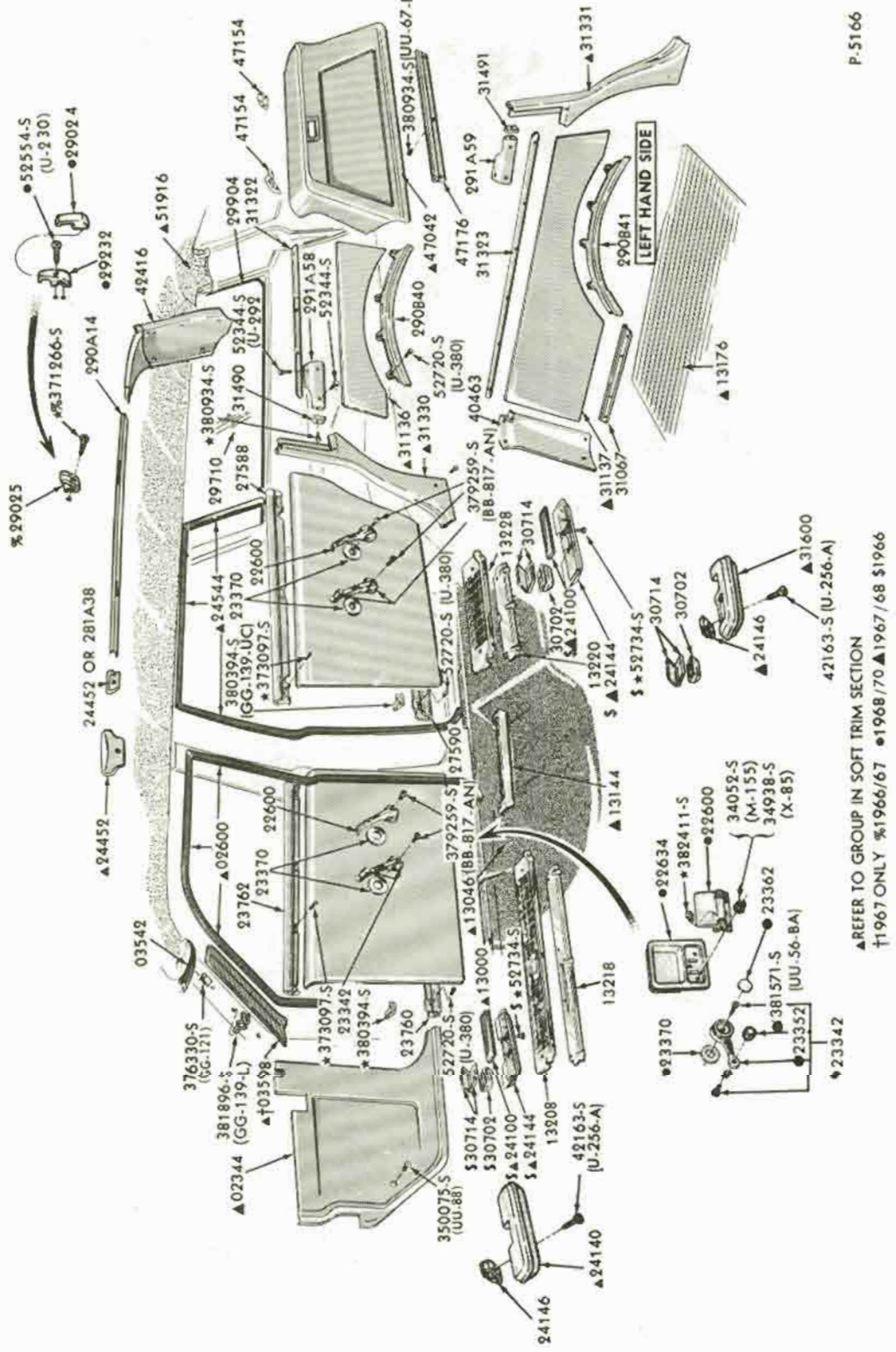

INTERIOR TRIM and RELATED PARTS
1966/70 FALCON - BODY TYPE 71

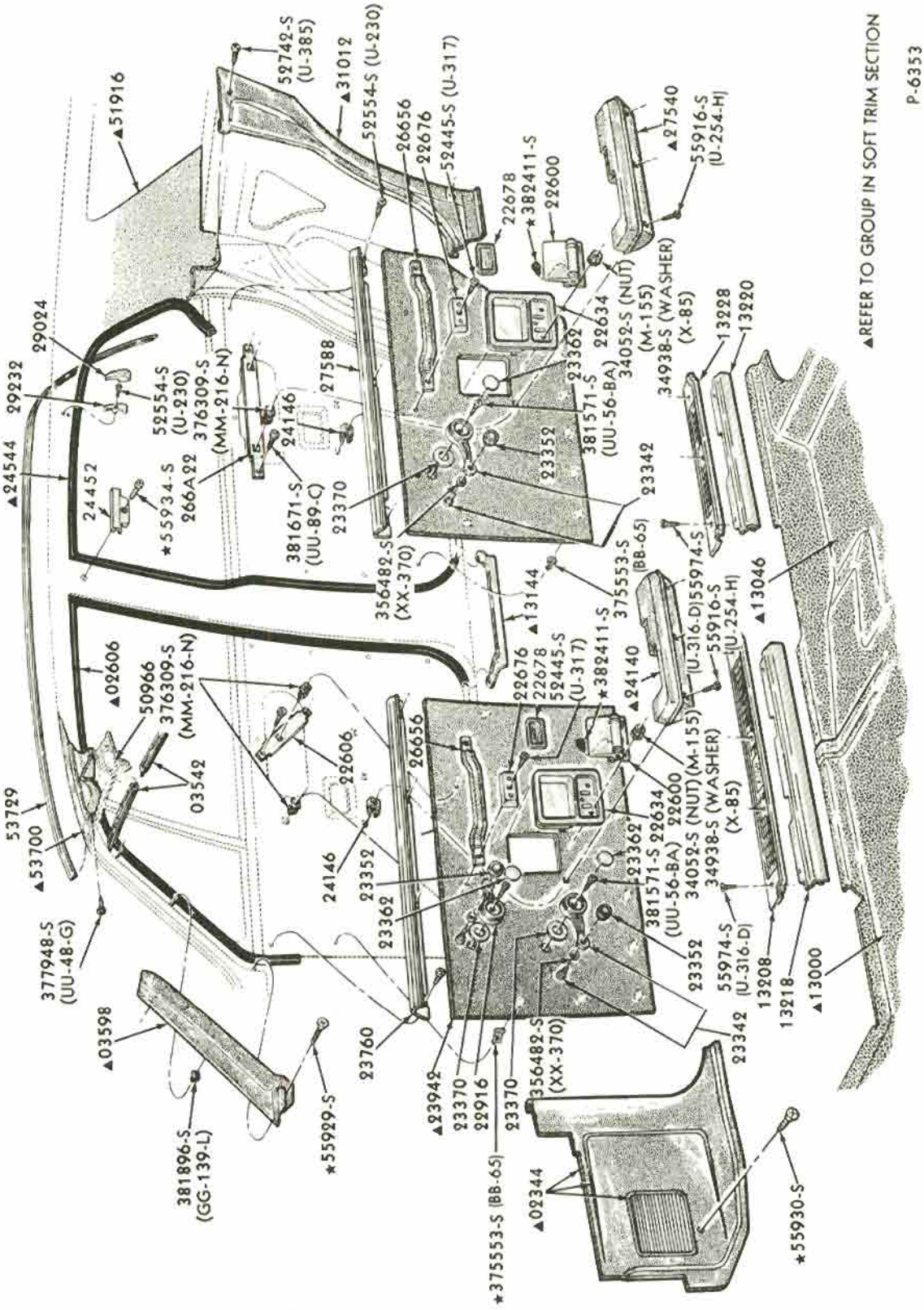

INTERIOR TRIM and RELATED PARTS
1968/70 FALCON - BODY TYPE 54

COPYRIGHT © 1975 — FORD MOTOR COMPANY — DEARBORN, MICHIGAN

MEMO

MEMO

FORM FP 7635-B - FORD CAR ILLUSTRATIONS

FORD CAR MASTER PARTS and ACCESSORIES CATALOG

FINAL ISSUE

MAY, 1975

ATTENTION: Parts Manager

This is a summary of all catalog sections as provided in this Final Issue and will replace all corresponding sections of all previous issues of Form FP 7635-B.

Part 1 of 3 consists of all sections through Section 120.1, Page 14.
Part 2 of 3 consists of Section 120.2, Page 1 through Section 230.1, Page 6.
Part 3 of 3 consists of Section 230.1, Page 7 through Interior Trim Section.

General Information Section.	Page	1,3
Illustration Section 10.	"	A-Q,1,3
" " 20.	"	1-43
" " 20.1.	"	1-11
" " 23.	"	1,3
" " 30.	"	A-S,1-11
" " 32.	"	1-5
" " 35.	"	1-25
" " 36.	"	1-11
" " 36.1.	"	1-5
" " 36.2.	"	1-5
" " 36.3.	"	1,3
" " 36.4.	"	1-11
" " 40.	"	A-G,1-7
" " 46.	"	1-7
" " 50.	"	A-J,1,3
" " 54.	"	1-21
" " 60.	"	A,C,1-21
" " 60.1.	"	1-21
" " 62.	"	1,3
" " 63.	"	1-5
" " 65.	"	1,3
" " 66.	"	1-5
" " 66.1.	"	1-7
" " 70.	"	A-L,1-13
" " 72.	"	1-17
" " 73.	"	1-9
" " 75.	"	1-17
" " A70	"	A,C
" " A70.2	"	1-5
" " A70.3	"	1-5
" " A70.4	"	1,3
" " A70.5	"	1,3
" " A71	"	1-9
" " A72	"	1-25
" " A72.1	"	1-7
" " 80.	"	A-G,1-5
" " 82.	"	1-33
" " 85.	"	1,3

COPYRIGHT © 1975 — FORD MOTOR COMPANY — DEARBORN, MICHIGAN

FINAL ISSUE

Illustration	Section	90.	"	A-W,1-43
"	"	93.	"	1,3
"	"	94.	"	1,3
"	"	94.1.	"	1-25
"	"	95.	"	1-21
"	"	96.	"	1-37
"	"	97.	"	1-27
"	"	97.1.	"	1-25
"	"	98.	"	1-5
"	"	100.	"	A,C,1-9
"	"	106.	"	1-23
"	"	106.1.	"	1-25
"	"	110.	"	1,3
"	"	120.	"	1-13
"	"	120.1.	"	1-13
"	"	120.2.	"	1-17
"	"	120.3.	"	1-17
"	"	120.4.	"	1
"	"	130.	"	A-U,1-31
"	"	130.1.	"	1,3
"	"	130.2.	"	1,3
"	"	130.3.	"	1,3
"	"	130.4.	"	1
"	"	134.	"	1-41
"	"	134.1.	"	1
"	"	137.	"	1-11
"	"	137.	"	13-19
"	"	138.	"	1-9
"	"	140.	"	1-47
"	"	140.1.	"	1-15
"	"	140.2.	"	1,3
"	"	140.3.	"	1-15
"	"	140.4.	"	1-11
"	"	140.5.	"	1-9
"	"	140.6.	"	1,3
"	"	160.	"	A,C,1-27
"	"	166.	"	1-17
"	"	175.	"	A-Q,1-23
"	"	175.1.	"	1-19
"	"	175.2.	"	1-15
"	"	176.	"	1-19
"	"	176.1.	"	1-17
"	"	176.2.	"	1,3
"	"	180.	"	1
"	"	184.	"	1-29
"	"	185.	"	1-7
"	"	186.	"	1-7
"	"	188.	"	1,3
"	"	190.	"	1-23
"	"	190.1.	"	1
"	"	195.	"	1-19
"	"	195.1.	"	1-37

FINAL ISSUE

Illustration Section	197.	Page	1-5
" "	197.1.	"	1-27
" "	197.2.	"	1-49
" "	197.3.	"	1-5
Body Illustration Section	000.	"	A-G,1-7
" " "	030.	"	1-17
" " "	042.	"	1-31
" " "	045.	"	1-23
" " "	230.	"	A-N,1-39
" " "	230.1.	"	1-15
" " "	230.2.	"	1-13
" " "	240.	"	1-23
" " "	240.1.	"	1-9
" " "	290.	"	1-33
" " "	290.1.	"	1-11
" " "	400.	"	A-L,1-25
" " "	420.	"	1-37
" " "	430.	"	1-11
" " "	430.1.	"	1,3
" " "	500.	"	1-19
" " "	530.	"	1-15
" " "	550.	"	1-7
" " "	600.	"	A-L,1-67
" " "	610.....	"	1-23
" " "	620.	"	1-15
Sheet Metal Illustration Section		"	A,C
Section A		"	1-39
Section B		"	1-45
Section F		"	1-19
Section L		"	1-5
Section P		"	1,3
Section S		"	1-15
Section U		"	1
Section X		"	1-21
Exterior Moulding Illustration Section		"	A,C
Section A		"	1-65
Section B		"	1-63
Section F		"	1-13
Section L		"	1,3
Section P		"	1-5
Section S		"	1-11
Section U		"	1
Section X		"	1-21
Interior Trim Illustration Section		"	A-G
Section A		"	1-33
Section B		"	1-29
Section F		"	1-17
Section L		"	1,3
Section P		"	1,3
Section S		"	1-17
Section U		"	1
Section X		"	1-9

COPYRIGHT © 1975 — FORD MOTOR COMPANY — DEARBORN, MICHIGAN