CIVIC

1996-2000
Service Manual

INTRODUCTION

How to Use This Manual

This manual contains information for the 1996 – 2000 CIVIC. It is divided into 24 sections. The first page of each section is marked with a black tab that lines up with its corresponding thumb index tab on this page and the back cover. You can quickly find the first page of each section without looking through a full table of contents. The symbols printed at the top corner of each page can also be used as a quick reference system.

Each section includes:

1. A table of contents, or an exploded view index showing:
   - Parts disassembly sequence.
   - Bolt torques and thread sizes.
   - Page references to descriptions in text.
2. Disassembly/assembly procedures and tools.
3. Inspection.
4. Testing/troubleshooting.
5. Repair.
6. Adjustments.

Special Information

⚠WARNING Indicates a strong possibility of severe personal injury or loss of life if instructions are not followed.

CAUTION: Indicates a possibility of personal injury or equipment damage if instructions are not followed.

NOTICE
The purpose of these messages is to help prevent damage to the vehicle, other property, or the environment.

NOTE: Gives helpful information.

CAUTION: Detailed descriptions of *standard workshop* procedures, safety principles and service operations are not included. Please note that this manual contains warnings and cautions against some specific service methods which could cause PERSONAL INJURY, damage a vehicle or make it unsafe. Please understand that these warnings cannot cover all conceivable ways in which service, whether or not recommended by HONDA, might be done, or of the possible hazardous consequences of every conceivable way, nor could HONDA investigate all such ways. Anyone using service procedures or tools, whether or not recommended by HONDA, *must satisfy himself thoroughly* that neither personal safety nor vehicle safety will be jeopardized.

All information contained in this manual is based on the latest product information available at the time of printing. We reserve the right to make changes at any time without notice. No part of this publication may be reproduced, stored in retrieval system, or transmitted, in any form by any means, electronic, mechanical, photocopying, recording, or otherwise, without the prior written permission of the publisher. This includes text, figures and tables.

First Edition 8/99 1848 pages
HONDA MOTOR CO., LTD.
Service Publication Office
All Right Reserved

As sections with * include SRS components; special precautions are required when servicing.

General Info
Special Tools
Specifications
Maintenance
Engine
Cooling
Fuel and Emissions
*Transaxle
*Steering
Suspension
*Brakes (Including ABS)
*Body
*Heater and Air Conditioning
*Electrical
*SRS

General Information

Chassis and Paint Codes 1-2
Identification Number Locations 1-32
Warning/Caution Label Locations 1-33
Under-hood Emissions
  Control Label 1-37
Lift and Support Points
  Lift and Safety Stands 1-41
  Floor Jack 1-42
Towing 1-43

Chassis and Paint Codes

U.S. 1996 Model (2-door Hatchback)

Vehicle Identification Number

2HG EJ6 3 2 * T H 1 00001

Manufacturer, Make and Type of Vehicle
- 2HG: HONDA OF CANADA MFG., INC. HONDA Passenger vehicle

Line, Body and Engine Type
- EJ6: CIVIC 3-door/D16Y7

Body Type and Transmission Type
- 3: Hatchback/5-speed Manual
- 4: Hatchback/4-speed Automatic

Vehicle Grade
- 2: CX
- 4: DX
- 6: DX

Check Digit

Model Year
- T: 1996

Factory Code
- H: Alliston Plant, Ontario, Canada

Destinations

Serial Number

Engine Number

D16Y7 - 1500001

Engine Type
- D16Y7: 1600 SOHC 16-valves Sequential Multiport Fuel-injected Engine

Serial Number

Transmission Number

A4RA - 5000001

Transmission Type
- A4RA: 4-speed Automatic Transmission
- S40 : 5-speed Manual Transmission

Serial Number
- A4RA: 5000001~
- S40 : 1000001~

Paint Code

Paint Code	Color
GY-16P	Midori Green Pearl
NH-503P	Granada Black Pearl
NH-583M	New Vogue Silver Metallic
R-97	Roma Red

Vehicle Identification Number and Federal Motor Vehicle Safety Standard Certification

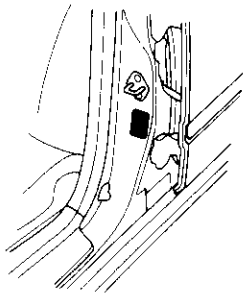

Paint Code

COLOR
GY-16P

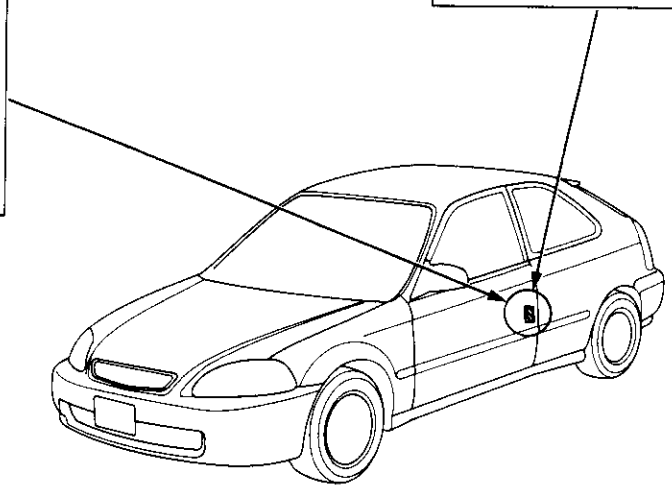

U.S. 1996 Model (4-door Sedan)

Vehicle Identification Number

1HG EJ6 5 2 * T L 000001

Manufacturer, Make and Type of Vehicle
- 1HG: HONDA OF AMERICA MFG., INC. HONDA Passenger vehicle
- 2HG: HONDA OF CANADA MFG., INC. HONDA Passenger vehicle

Line, Body and Engine Type
- EJ6: CIVIC 4-door/D16Y7
- EJ8: CIVIC 4-door/D16Y8

Body Type and Transmission Type
- 5: Sedan/5-speed Manual
- 6: Sedan/4-speed Automatic

Vehicle Grade
- 2: DX
- 4: EX
- 6: LX
- 7: LX with A/C

Check Digit

Model Year
- T: 1996

Factory Code
- L: East Liberty, Ohio Plant, U.S.A.
- H: Alliston Plant, Ontario, Canada

Serial Number

Engine Number

D16Y7 - 1500001

Engine Type
- D16Y7: 1600 SOHC 16-valves Sequential Multiport Fuel-injected Engine
- D16Y8: 1600 SOHC VTEC 16-valves Sequential Multiport Fuel-injected Engine

Serial Number
- U.S.A : D16Y7, D16Y8 – 1500001~

Transmission Number

A4RA - 5000001

Transmission Type
- A4RA: 4-speed Automatic Transmission
- S40 : 5-speed Manual Transmission

Serial Number
- A4RA (U.S.A.): 5000001~
- S40 (JAPAN) : 1000001~

Paint Code

Paint Code	Color
B-73M	Cyclone Blue Metallic
G-82P	Cypress Green Pearl
NH-538	Frost White
NH-503P	Granada Black Pearl
NH-583M	New Vogue Silver Metallic
R-95P	Island Coral Pearl

Vehicle Identification Number and Federal Motor Vehicle Safety Standard Certification

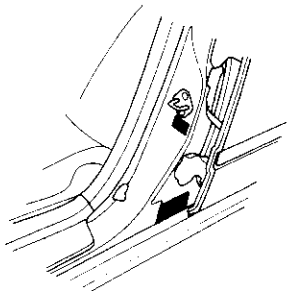

Paint Code

COLOR
B-73M

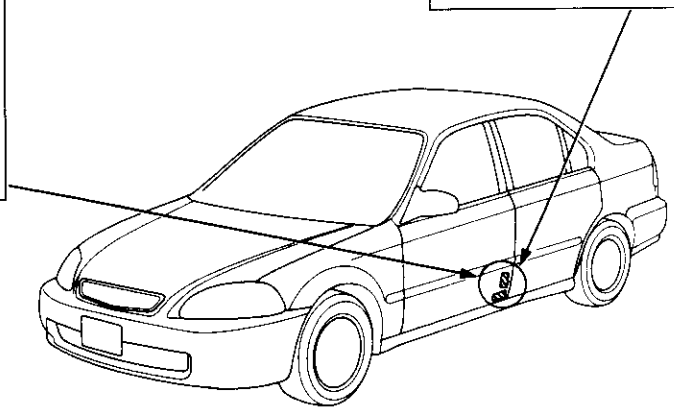

Chassis and Paint Codes

U.S. 1996 Model (2-door Coupe)

Vehicle Identification Number

1HG EJ6 1 2 * T L 000001

Manufacturer, Make and Type of Vehicle
- 1HG: HONDA OF AMERICA MFG., INC. HONDA Passenger vehicle

Line, Body and Engine Type
- EJ6: CIVIC 2-door/D16Y7
- EJ7: CIVIC 2-door/D16Y5
- EJ8: CIVIC 2-door/D16Y8

Body Type and Transmission Type
- 1: Coupe/5-speed Manual
- 2: Coupe/4-speed Automatic, CVT

Vehicle Grade
- 2: DX, HX
- 4: DX with A/C, HX with A/C, EX
- 5: DX with ABS and A/C, EX with ABS

Check Digit

Model Year
- T: 1996

Factory Code
- L: East Liberty, Ohio Plant, U.S.A.

Serial Number

Engine Number

D16Y5 - 1300001

Engine Type
- D16Y5: 1600 SOHC VTEC-E 16-valves Sequential Multiport Fuel-injected Engine
- D16Y7: 1600 SOHC 16-valves Sequential Multiport Fuel-injected Engine
- D16Y8: 1600 SOHC VTEC 16-valves Sequential Multiport Fuel-injected Engine

Serial Number
- JAPAN: D16Y5 – 1300001~
- U.S.A. : D16Y7, D16Y8 – 1500001~

Transmission Number

A4RA - 5000001

Transmission Type
- A4RA : 4-speed Automatic Transmission
- S40 : 5-speed Manual Transmission
- M4VA : Continuously Variable Transmission (CVT)

Serial Number
- A4RA : 5000001~
- S40 : 1000001~
- M4VA: 1000001~

Vehicle Identification Number and Federal Motor Vehicle Safety Standard Certification

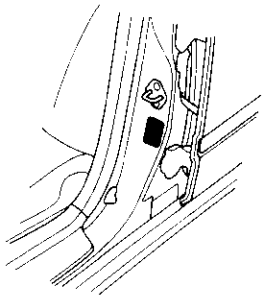

Paint Code

Paint Code	Color
G-82P	Cypress Green Pearl
NH-503P	Granada Black Pearl
NH-538	Frost White
NH-583M	New Vogue Silver Metallic
R-81	Milano Red
R-95P	Island Coral Pearl

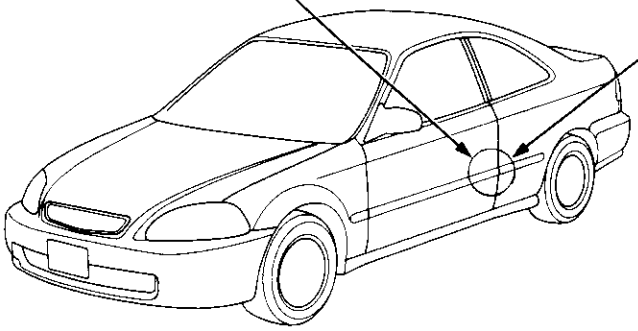

Paint Code

COLOR G-82P

CANADA 1996 Model (2-door Hatchback)

Vehicle Identification Number

2HG EJ6 3 2 * T H 000001

Manufacturer, Make and Type of Vehicle
- 2HG: HONDA OF CANADA MFG., INC. HONDA Passenger vehicle

Line, Body and Engine Type
- EJ6: CIVIC 3-door/D16Y7

Body Type and Transmission Type
- 3: Hatchback/5-speed Manual
- 4: Hatchback/4-speed Automatic

Vehicle Grade
- 2: CX
- 3: CX-G

Check Digit

Model Year
- T: 1996

Factory Code
- H: Alliston Plant, Ontario, Canada

Serial Number

Engine Number

D16Y7 - 1700001

Engine Type
- D16Y7: 1600 SOHC 16-valves Sequential Multiport Fuel-injected Engine

Serial Number

Transmission Number

A4RA - 5000001

Transmission Type
- A4RA: 4-speed Automatic Transmission
- S40 : 5-speed Manual Transmission

Serial Number
- A4RA: 5000001~
- S40 : 1000001~

Paint Code

Paint Code	Color
GY-16P	Midori Green Pearl
NH-503P	Granada Black Pearl
NH-583M	New Vogue Silver Metallic
R-97	Roma Red

Vehicle Identification Number and Canadian Motor Vehicle Safety Standard Certification

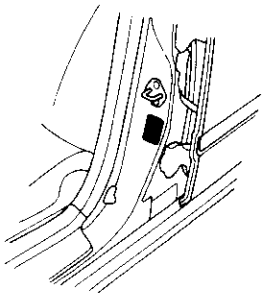

Paint Code

COLOR
GY-16P

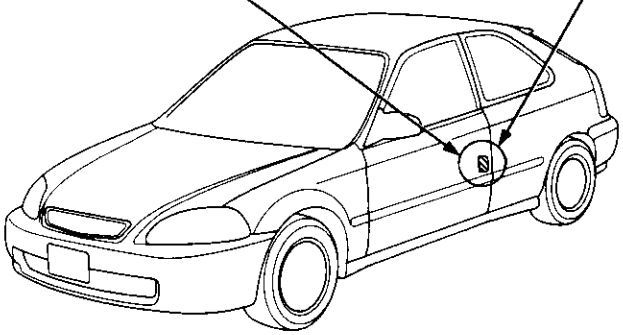

Chassis and Paint Codes

CANADA 1996 Model (4-door Sedan)

Vehicle Identification Number

1HG EJ6 5 3 * T L 800001

Manufacturer, Make and Type of Vehicle
- 1HG: HONDA OF AMERICA MFG., INC. HONDA Passenger vehicle

Line, Body and Engine Type
- EJ6: CIVIC 4-door/D16Y7

Body Type and Transmission Type
- 5: Sedan/5-speed Manual
- 6: Sedan/4-speed Automatic

Vehicle Grade
- 3: LX
- 4: LX with ABS
- 5: LX with ABS and A/C
- 6: EX
- 7: EX with ABS

Check Digit

Model Year
- T: 1996

Factory Code
- L: East Liberty, Ohio Plant, U.S.A.

Serial Number

Engine Number

D16Y7 - 1700001

Engine Type
- D16Y7: 1600 SOHC 16-valves Sequential Multiport Fuel-injected Engine

Serial Number

Transmission Number

A4RA - 5000001

Transmission Type
- A4RA: 4-speed Automatic Transmission
- S40 : 5-speed Manual Transmission

Serial Number
- A4RA: 5000001~
- S40 : 1000001~

Paint Code

Paint Code	Color
B-73M	Cyclone Blue Metallic
G-82P	Cypress Green Pearl
NH-503P	Granada Black Pearl
NH-538	Frost White
NH-583M	New Vogue Silver Metallic

Vehicle Identification Number and Canadian Motor Vehicle Safety Standard Certification

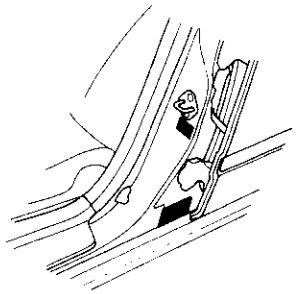

Paint Code

COLOR
B-73M

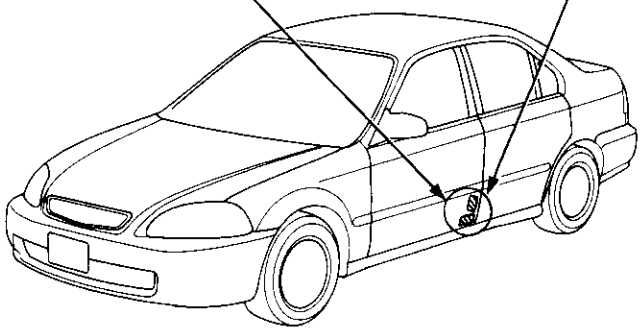

CANADA 1996 Model (2-door Coupe)

Vehicle Identification Number

1HG EJ6 1 2 * T L 000001

Manufacturer, Make and Type of Vehicle
- 1HG: HONDA OF AMERICA MFG., INC. HONDA Passenger vehicle

Line, Body and Engine Type
- EJ6: CIVIC 2-door/D16Y7
- EJ8: CIVIC 2-door/D16Y8

Body Type and Transmission Type
- 1: Coupe/5-speed Manual
- 2: Coupe/4-speed Automatic

Vehicle Grade
- 2: DX, Si
- 3: Si with ABS
- 5: DX with ABS

Check Digit

Model Year
- T: 1996

Factory Code
- L: East Liberty, Ohio Plant, U.S.A.

Serial Number

Engine Number

D16Y7 - 1700001

Engine Type
- D16Y7: 1600 SOHC 16-valves Sequential Multiport Fuel-injected Engine
- D16Y8: 1600 SOHC VTEC 16-valves Sequential Multiport Fuel-injected Engine

Serial Number

Transmission Number

A4RA - 5000001

Transmission Type
- A4RA: 4-speed Automatic Transmission
- S40 : 5-speed Manual Transmission

Serial Number
- A4RA: 5000001~
- S40 : 1000001~

Paint Code

Paint Code	Color
G-82P	Cypress Green Pearl
NH-503P	Granada Black Pearl
NH-538	Frost White
NH-583M	New Vogue Silver Metallic
R-81	Milano Red
R-95P	Island Coral Pearl

Vehicle Identification Number and Canadian Motor Vehicle Safety Standard Certification

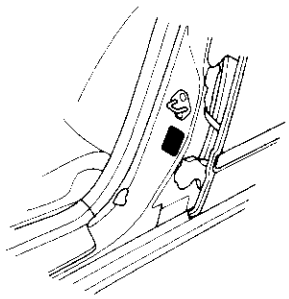

Paint Code

COLOR
NH-538

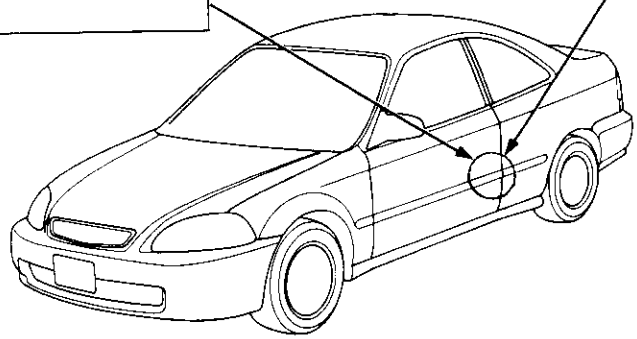

Chassis and Paint Codes

U.S. 1997 Model (2-door Hatchback)

Vehicle Identification Number

2HG EJ6 3 2 * V H 1 00001

Manufacturer, Make and Type of Vehicle
- 2HG: HONDA OF CANADA MFG., INC. HONDA Passenger vehicle

Line, Body and Engine Type
- EJ6: CIVIC 3-door/D16Y7

Body Type and Transmission Type
- 3: Hatchback/5-speed Manual
- 4: Hatchback/4-speed Automatic

Vehicle Grade
- 2: CX
- 4: DX

Check Digit

Model Year
- V: 1997

Factory Code
- H: Alliston Plant, Ontario, Canada

Destinations

Serial Number

Engine Number

D16Y7 - 2500001

Engine Type
- D16Y7: 1600 SOHC 16-valves Sequential Multiport Fuel-injected Engine

Serial Number

Transmission Number

A4RA - 6000001

Transmission Type
- A4RA: 4-speed Automatic Transmission
- B4RA: 4-speed Automatic Transmission
- S40 : 5-speed Manual Transmission

Serial Number
- A4RA: 6000001~
- B4RA: 6000001~
- S40 : 1000001~

Paint Code

Paint Code	Color
NH-503P	Granada Black Pearl
NH-583M	New Vogue Silver Metallic
PB-74P	Dark Amethyst Pearl
R-97	Roma Red

Vehicle Identification Number and Federal Motor Vehicle Safety Standard Certification

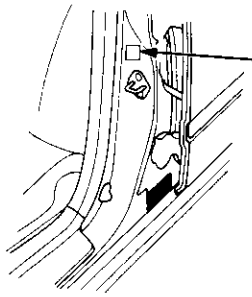

Paint Code

COLOR
NH-583M

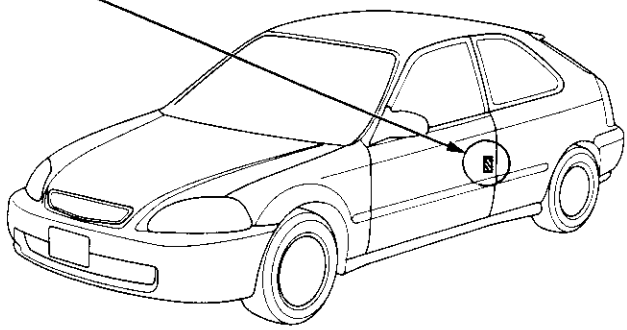

U.S. 1997 Model (4-door Sedan)

Vehicle Identification Number

JHM EJ6 5 2 * V S 000001

Manufacturer, Make and Type of Vehicle
- JHM: HONDA MOTOR CO., LTD. HONDA Passenger vehicle
- 1HG: HONDA OF AMERICA MFG., INC. HONDA Passenger vehicle
- 2HG: HONDA OF CANADA MFG., INC. HONDA Passenger vehicle

Line, Body and Engine Type
- EJ6: CIVIC 4-door/D16Y7
- EJ8: CIVIC 4-door/D16Y8

Body Type and Transmission Type
- 5: Sedan/5-speed Manual
- 6: Sedan/4-speed Automatic

Vehicle Grade
- 2: DX
- 4: EX
- 7: LX with A/C

Check Digit

Model Year
- V: 1997

Factory Code
- L: East Liberty, Ohio Plant, U.S.A.
- S: Suzuka Plant, Mie Prefecture, Japan
- H: Alliston Plant, Ontario, Canada

Serial Number

Engine Number

D16Y7 - 2300001

Engine Type
- D16Y7: 1600 SOHC 16-valves Sequential Multiport Fuel-injected Engine
- D16Y8: 1600 SOHC VTEC 16-valves Sequential Multiport Fuel-injected Engine

Serial Number
- JAPAN: D16Y7, D16Y8 – 2300001~
- U.S.A. : D16Y7, D16Y8 – 2500001~

Transmission Number

A4RA - 6000001

Transmission Type
- A4RA : 4-speed Automatic Transmission
- B4RA : 4-speed Automatic Transmission
- M4RA: 4-speed Automatic Transmission
- S40 : 5-speed Manual Transmission

Serial Number
- A4RA (U.S.A.) : 6000001~
- B4RA (U.S.A.) : 6000001~
- M4RA (JAPAN): 2000001~
- S40 (JAPAN) : 1000001~

Paint Code

Paint Code	Color
B-73M	Cyclone Blue Metallic
G-82P	Cypress Green Pearl
NH-538	Frost White
NH-503P	Granada Black Pearl
NH-583M	New Vogue Silver Metallic
R-96P	Inza Red

Vehicle Identification Number and Federal Motor Vehicle Safety Standard Certification

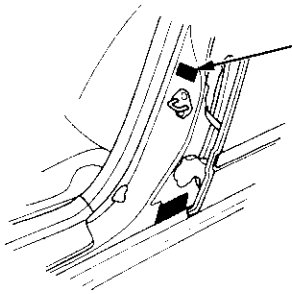

Paint Code

COLOR
B-73M

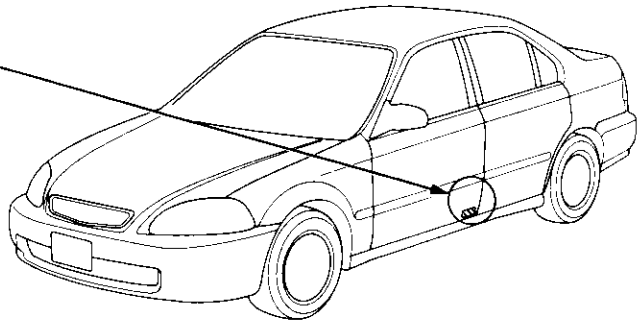

Chassis and Paint Codes

U.S. 1997 Model (2-door Coupe)

Vehicle Identification Number

1HG EJ6 1 4 * V L 000001

Manufacturer, Make and Type of Vehicle
- 1HG: HONDA OF AMERICA MFG., INC. HONDA Passenger vehicle

Line, Body and Engine Type
- EJ6: CIVIC 2-door/D16Y7
- EJ7: CIVIC 2-door/D16Y5
- EJ8: CIVIC 2-door/D16Y8

Body Type and Transmission Type
- 1: Coupe/5-speed Manual
- 2: Coupe/4-speed Automatic, CVT

Vehicle Grade
- 2: DX, HX
- 4: EX
- 5: EX with ABS

Check Digit

Model Year
- V: 1997

Factory Code
- L: East Liberty, Ohio Plant, U.S.A.

Serial Number

Engine Number

D16Y5 - 2300001

Engine Type
- D16Y5: 1600 SOHC VTEC-E 16-valves Sequential Multiport Fuel-injected Engine
- D16Y7: 1600 SOHC 16-valves Sequential Multiport Fuel-injected Engine
- D16Y8: 1600 SOHC VTEC 16-valves Sequential Multiport Fuel-injected Engine

Serial Number
- JAPAN: D16Y5 – 2300001~
- U.S.A. : D16Y7, D16Y8 – 2500001~

Transmission Number

A4RA - 6000001

Transmission Type
- A4RA : 4-speed Automatic Transmission
- B4RA : 4-speed Automatic Transmission
- S40 : 5-speed Manual Transmission
- M4VA: Continuously Variable Transmission (CVT)

Serial Number
- A4RA : 6000001~
- B4RA : 6000001~
- S40 : 1000001~
- M4VA: 2000001~

Vehicle Identification Number and Federal Motor Vehicle Safety Standard Certification

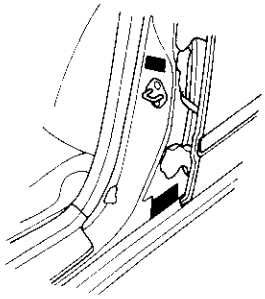

Paint Code

Paint Code	Color
G-82P	Cypress Green Pearl
NH-503P	Granada Black Pearl
NH-538	Frost White
NH-583M	New Vogue Silver Metallic
R-81	Milano Red

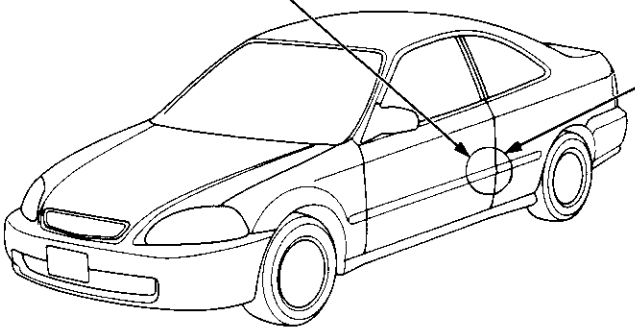

Paint Code

COLOR G-82P

CANADA 1997 Model (2-door Hatchback)

Vehicle Identification Number

2HG EJ6 3 2 * V H 000001

Manufacturer, Make and Type of Vehicle
- 2HG: HONDA OF CANADA MFG., INC. HONDA Passenger vehicle

Line, Body and Engine Type
- EJ6: CIVIC 3-door/D16Y7

Body Type and Transmission Type
- 3: Hatchback/5-speed Manual
- 4: Hatchback/4-speed Automatic

Vehicle Grade
- 2: CX
- 3: CX-G

Check Digit

Model Year
- V: 1997

Factory Code
- H: Alliston Plant, Ontario, Canada

Serial Number

Engine Number

D16Y7 - 2750001

Engine Type
- D16Y7: 1600 SOHC 16-valves Sequential Multiport Fuel-injected Engine

Serial Number

Transmission Number

A4RA - 6000001

Transmission Type
- A4RA: 4-speed Automatic Transmission
- B4RA: 4-speed Automatic Transmission
- S40 : 5-speed Manual Transmission

Serial Number
- A4RA: 6000001~
- B4RA: 6000001~
- S40 : 1000001~

Paint Code

Paint Code	Color
NH-503P	Granada Black Pearl
NH-583M	New Vogue Silver Metallic
PB-74P	Dark Amethyst Pearl
R-97	Roma Red

Vehicle Identification Number and Canadian Motor Vehicle Safety Standard Certification

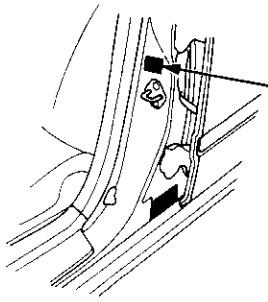

Paint Code

COLOR
NH-503P

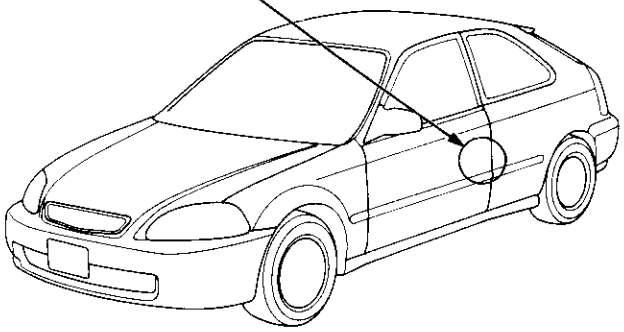

Chassis and Paint Codes

CANADA 1997 Model (4-door Sedan)

Vehicle Identification Number

1HG EJ6 5 3 * V L 800001

Manufacturer, Make and Type of Vehicle
- 1HG: HONDA OF AMERICA MFG., INC. HONDA Passenger vehicle

Line, Body and Engine Type
- EJ6: CIVIC 4-door/D16Y7

Body Type and Transmission Type
- 5: Sedan/5-speed Manual
- 6: Sedan/4-speed Automatic

Vehicle Grade
- 0: EX
- 3: LX
- 4: LX with ABS
- 5: LX with ABS and A/C
- 7: EX with ABS
- 8: EX with ABS and A/C

Check Digit

Model Year
- V: 1997

Factory Code
- L: East Liberty, Ohio Plant, U.S.A.

Serial Number

Engine Number

D16Y7 - 2750001

Engine Type
- D16Y7: 1600 SOHC 16-valves Sequential Multiport Fuel-injected Engine

Serial Number

Transmission Number

A4RA - 6000001

Transmission Type
- A4RA: 4-speed Automatic Transmission
- B4RA: 4-speed Automatic Transmission
- S40 : 5-speed Manual Transmission

Serial Number
- A4RA: 6000001~
- B4RA: 6000001~
- S40 : 1000001~

Paint Code

Paint Code	Color
B-73M	Cyclone Blue Metallic
G-82P	Cypress Green Pearl
NH-503P	Granada Black Pearl
NH-538	Frost White
NH-583M	New Vogue Silver Metallic

Vehicle Identification Number and Canadian Motor Vehicle Safety Standard Certification

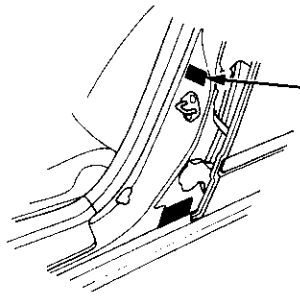

Paint Code

COLOR
B-73M

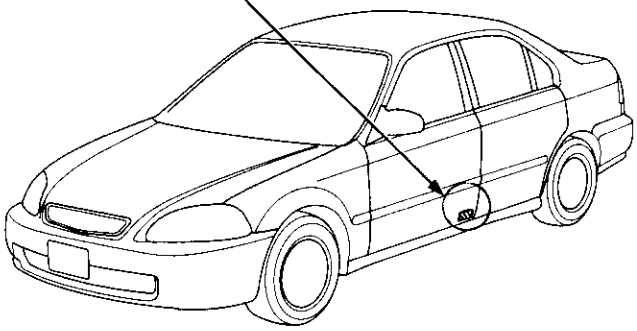

CANADA 1997 Model (2-door Coupe)

Vehicle Identification Number

1HG EJ6 1 2 * V L 800001

Manufacturer, Make and Type of Vehicle
- 1HG: HONDA OF AMERICA MFG., INC. HONDA Passenger vehicle

Line, Body and Engine Type
- EJ6: CIVIC 2-door/D16Y7
- EJ8: CIVIC 2-door/D16Y8

Body Type and Transmission Type
- 1: Coupe/5-speed Manual
- 2: Coupe/4-speed Automatic

Vehicle Grade
- 2: DX, Si
- 3: Si with ABS
- 5: DX with ABS
- 6: DX with ABS and A/C
- 7: Si with ABS and A/C

Check Digit

Model Year
- V: 1997

Factory Code
- L: East Liberty, Ohio Plant, U.S.A.

Serial Number

Engine Number

D16Y7 - 2750001

Engine Type
- D16Y7: 1600 SOHC 16-valves Sequential Multiport Fuel-injected Engine
- D16Y8: 1600 SOHC VTEC 16-valves Sequential Multiport Fuel-injected Engine

Serial Number

Transmission Number

A4RA - 6000001

Transmission Type
- A4RA: 4-speed Automatic Transmission
- B4RA: 4-speed Automatic Transmission
- S40 : 5-speed Manual Transmission

Serial Number
- A4RA: 6000001~
- B4RA: 6000001~
- S40 : 1000001~

Paint Code

Paint Code	Color
G-82P	Cypress Green Pearl
NH-503P	Granada Black Pearl
NH-538	Frost White
NH-583M	New Vogue Silver Metallic
R-81	Milano Red

Vehicle Identification Number and Canadian Motor Vehicle Safety Standard Certification

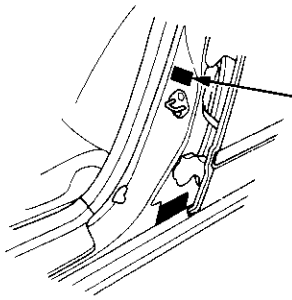

Paint Code

COLOR NH-538

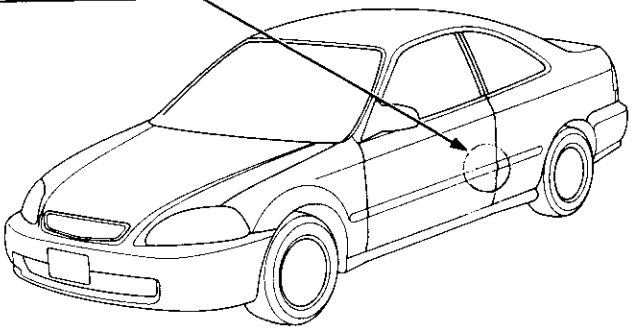

Chassis and Paint Codes

U.S. 1998 Model (2-door Hatchback)

Vehicle Identification Number

2HG EJ6 3 2 * W H 1 00001

Manufacturer, Make and Type of Vehicle
- 2HG: HONDA OF CANADA MFG., INC. HONDA Passenger vehicle

Line, Body and Engine Type
- EJ6: CIVIC 3-door/D16Y7

Body Type and Transmission Type
- 3: Hatchback/5-speed Manual
- 4: Hatchback/4-speed Automatic

Vehicle Grade
- 2: CX
- 4: DX

Check Digit

Model Year
- W: 1998

Factory Code
- H: Alliston Plant, Ontario, Canada

Destinations

Serial Number

Engine Number

D16Y7 - 3500001

Engine Type
- D16Y7: 1600 SOHC 16-valves Sequential Multiport Fuel-injected Engine

Serial Number

Transmission Number

B4RA - 7000001

Transmission Type
- B4RA: 4-speed Automatic Transmission
- S40 : 5-speed Manual Transmission

Serial Number
- B4RA: 7000001~
- S40 : 1000001~

Paint Code

Paint Code	Color
NH-592P	Flamenco Black Pearl
NH-583M	New Vogue Silver Metallic
PB-74P	Dark Amethyst Pearl
R-97	Roma Red

Vehicle Identification Number and Federal Motor Vehicle Safety Standard Certification

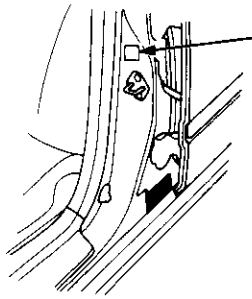

Paint Code

COLOR
NH-583M

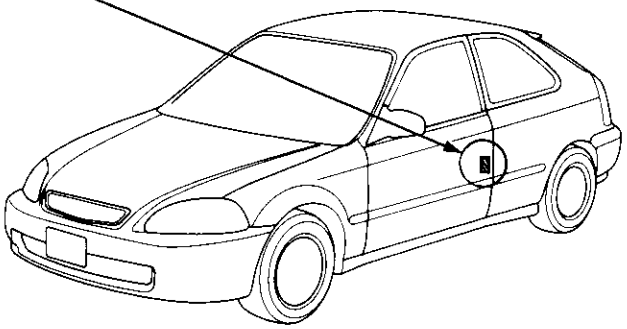

U.S. 1998 Model (4-door Sedan)

Vehicle Identification Number

JHM EJ6 5 2 * W S 000001

Manufacturer, Make and Type of Vehicle
- JHM: HONDA MOTOR CO., LTD. HONDA Passenger vehicle
- 1HG: HONDA OF AMERICA MFG., INC. HONDA Passenger vehicle
- 2HG: HONDA OF CANADA MFG., INC. HONDA Passenger vehicle

Line, Body and Engine Type
- EJ6: CIVIC 4-door/D16Y7
- EJ8: CIVIC 4-door/D16Y8

Body Type and Transmission Type
- 5: Sedan/5-speed Manual
- 6: Sedan/4-speed Automatic

Vehicle Grade
- 2: DX
- 4: EX
- 7: LX with A/C

Check Digit

Model Year
- W: 1998

Factory Code
- L: East Liberty, Ohio Plant, U.S.A.
- S: Suzuka Plant, Mie Prefecture, Japan
- H: Alliston Plant, Ontario, Canada

Serial Number
- 000001: JAPAN, U.S.A.
- 500001: CANADA

Engine Number

D16Y7 - 3300001

Engine Type
- D16Y7: 1600 SOHC 16-valves Sequential Multiport Fuel-injected Engine
- D16Y8: 1600 SOHC VTEC 16-valves Sequential Multiport Fuel-injected Engine

Serial Number
- JAPAN: D16Y7, D16Y8 – 3300001~
- U.S.A : D16Y7, D16Y8 – 3500001~

Transmission Number

B4RA - 7000001

Transmission Type
- B4RA : 4-speed Automatic Transmission
- M4RA: 4-speed Automatic Transmission
- S40 : 5-speed Manual Transmission

Serial Number
- B4RA (U.S.A.) : 7000001~
- M4RA (JAPAN): 3000001~
- S40 (JAPAN) : 1000001~

Paint Code

Paint Code	Color
B-73M	Cyclone Blue Metallic
G-82P	Cypress Green Pearl
NH-578	Taffeta White
NH-592P	Flamenco Black Pearl
NH-583M	New Vogue Silver Metallic
R-96P	Inza Red Pearl

Vehicle Identification Number and Federal Motor Vehicle Safety Standard Certification

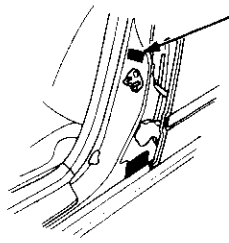

Paint Code

COLOR
B-73M

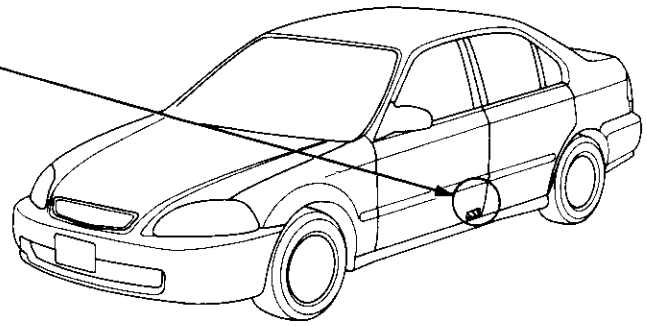

Chassis and Paint Codes

U.S. 1998 Model (2-door Coupe)

Vehicle Identification Number

1HG EJ6 1 2 * W L 000001

Manufacturer, Make and Type of Vehicle
- 1HG: HONDA OF AMERICA MFG., INC. HONDA Passenger vehicle

Line, Body and Engine Type
- EJ6: CIVIC 2-door/D16Y7
- EJ7: CIVIC 2-door/D16Y5
- EJ8: CIVIC 2-door/D16Y8

Body Type and Transmission Type
- 1: Coupe/5-speed Manual
- 2: Coupe/4-speed Automatic, CVT

Vehicle Grade
- 2: DX, HX
- 4: EX
- 5: EX with ABS and A/C

Check Digit

Model Year
- W: 1998

Factory Code
- L: East Liberty, Ohio Plant, U.S.A.

Serial Number

Engine Number

D16Y5 - 3300001

Engine Type
- D16Y5: 1600 SOHC VTEC-E 16-valves Sequential Multiport Fuel-injected Engine
- D16Y7: 1600 SOHC 16-valves Sequential Multiport Fuel-injected Engine
- D16Y8: 1600 SOHC VTEC 16-valves Sequential Multiport Fuel-injected Engine

Serial Number
- JAPAN: D16Y5 – 3300001~
- U.S.A. : D16Y7, D16Y8 – 3500001~

Transmission Number

B4RA - 7000001

Transmission Type
- B4RA : 4-speed Automatic Transmission
- S40 : 5-speed Manual Transmission
- M4VA: Continuously Variable Transmission (CVT)

Serial Number
- B4RA : 7000001~
- S40 : 1000001~
- M4VA: 4000001~

Vehicle Identification Number and Federal Motor Vehicle Safety Standard Certification

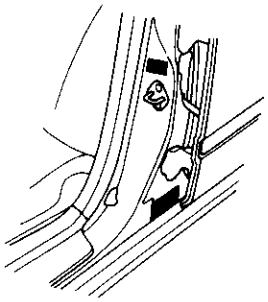

Paint Code

Paint Code	Color
G-82P	Cypress Green Pearl
NH-592P	Flamenco Black Pearl
NH-578	Taffeta White
NH-583M	New Vogue Silver Metallic
R-81	Milano Red

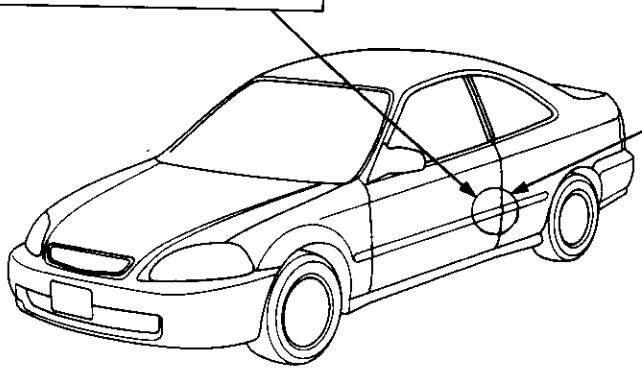

Paint Code

COLOR G-82P

CANADA 1998 Model (2-door Hatchback)

Vehicle Identification Number

2HG EJ6 3 2 * W H 000001

Manufacturer, Make and Type of Vehicle
2HG: HONDA OF CANADA MFG., INC. HONDA Passenger vehicle

Line, Body and Engine Type
EJ6: CIVIC 3-door/D16Y7

Body Type and Transmission Type
3: Hatchback/5-speed Manual
4: Hatchback/4-speed Automatic

Vehicle Grade
2: CX
3: CX-G

Check Digit

Model Year
W: 1998

Factory Code
H: Alliston Plant, Ontario, Canada

Serial Number

Engine Number

D16Y7 - 3750001

Engine Type
D16Y7: 1600 SOHC 16-valves Sequential Multiport Fuel-injected Engine

Serial Number

Transmission Number

B4RA - 7000001

Transmission Type
B4RA: 4-speed Automatic Transmission
S40 : 5-speed Manual Transmission

Serial Number
B4RA: 7000001~
S40 : 1000001~

Paint Code

Paint Code	Color
NH-592P	Flamenco Black Pearl
NH-583M	New Vogue Silver Metallic
PB-74P	Dark Amethyst Pearl
R-97	Roma Red

Vehicle Identification Number and Canadian Motor Vehicle Safety Standard Certification

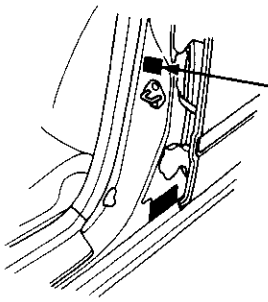

Paint Code

COLOR NH-592P

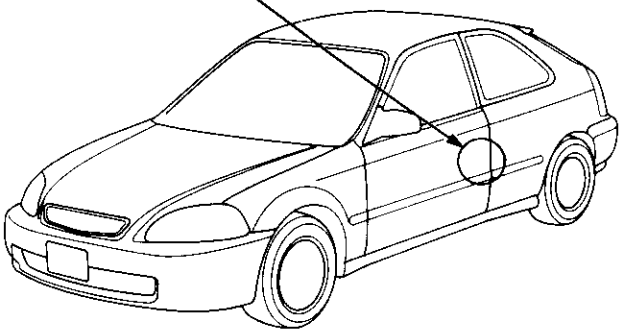

Chassis and Paint Codes

CANADA 1998 Model (4-door Sedan)

Vehicle Identification Number

2HG EJ6 5 3 * W H 900001

Manufacturer, Make and Type of Vehicle
- 2HG: HONDA OF CANADA MFG., INC. HONDA Passenger vehicle
- JHM: HONDA MOTOR CO., LTD. HONDA Passenger vehicle

Line, Body and Engine Type
- EJ6: CIVIC 4-door/D16Y7

Body Type and Transmission Type
- 5: Sedan/5-speed Manual
- 6: Sedan/4-speed Automatic

Vehicle Grade
- 0: EX
- 3: LX
- 4: LX with ABS
- 5: LX with ABS and A/C
- 7: EX with ABS
- 8: EX with ABS and A/C

Check Digit

Model Year
- W: 1998

Factory Code
- H: Alliston Plant, Ontario, Canada
- S: Suzuka Plant, Mie Prefecture, Japan

Serial Number
- 800001~: JAPAN
- 900001~: CANADA

Engine Number

D16Y7 - 3750001

Engine Type
- D16Y7: 1600 SOHC 16-valves Sequential Multiport Fuel-injected Engine

Serial Number
- 3750001~: U.S.A.
- 3700001~: JAPAN

Transmission Number

B4RA - 7000001

Transmission Type
- B4RA : 4-speed Automatic Transmission
- M4RA: 4-speed Automatic Transmission
- S40 : 5-speed Manual Transmission

Serial Number
- B4RA (U.S.A.) : 7000001~
- M4RA (JAPAN): 3000001~
- S40 (JAPAN) : 1000001~

Paint Code

Paint Code	Color
B-73M	Cyclone Blue Metallic
G-82P	Cypress Green Pearl
NH-592P	Flamenco Black Pearl
NH-578	Taffeta White
NH-583M	New Vogue Silver Metallic

Vehicle Identification Number and Canadian Motor Vehicle Safety Standard Certification

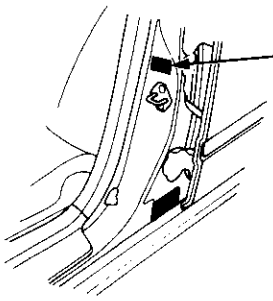

Paint Code

COLOR B-73M

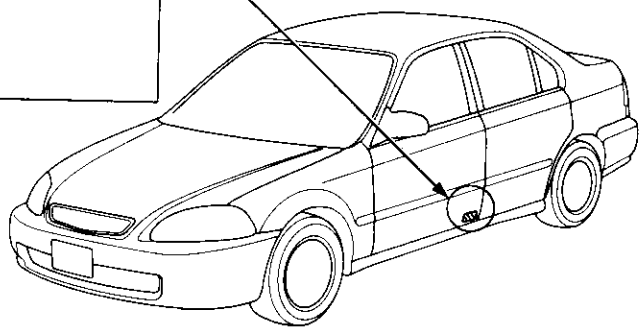

CANADA 1998 Model (2-door Coupe)

Vehicle Identification Number

1HG EJ6 1 2 * W L 800001

Manufacturer, Make and Type of Vehicle
- 1HG: HONDA OF AMERICA MFG., INC. HONDA Passenger vehicle

Line, Body and Engine Type
- EJ6: CIVIC 2-door/D16Y7
- EJ8: CIVIC 2-door/D16Y8

Body Type and Transmission Type
- 1: Coupe/5-speed Manual
- 2: Coupe/4-speed Automatic

Vehicle Grade
- 2: DX, Si
- 3: Si with ABS
- 5: DX with ABS
- 6: DX with ABS and A/C
- 7: Si with ABS and A/C

Check Digit

Model Year
- W: 1998

Factory Code
- L: East Liberty, Ohio Plant, U.S.A.

Serial Number

Engine Number

D16Y7 - 3750001

Engine Type
- D16Y7: 1600 SOHC 16-valves Sequential Multiport Fuel-injected Engine
- D16Y8: 1600 SOHC VTEC 16-valves Sequential Multiport Fuel-injected Engine

Serial Number
- D16Y7: 3750001~
- D16Y8: 3780001~

Transmission Number

B4RA - 7000001

Transmission Type
- B4RA: 4-speed Automatic Transmission
- S40 : 5-speed Manual Transmission

Serial Number
- B4RA: 7000001~
- S40 : 1000001~

Paint Code

Paint Code	Color
G-82P	Cypress Green Pearl
NH-592P	Flamenco Black Pearl
NH-578	Taffeta White
NH-583M	New Vogue Silver Metallic
R-81	Milano Red

Vehicle Identification Number and Canadian Motor Vehicle Safety Standard Certification

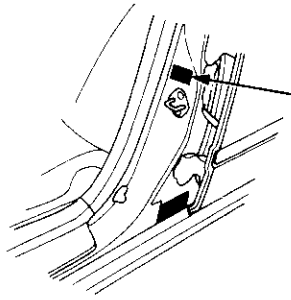

Paint Code

COLOR NH-578

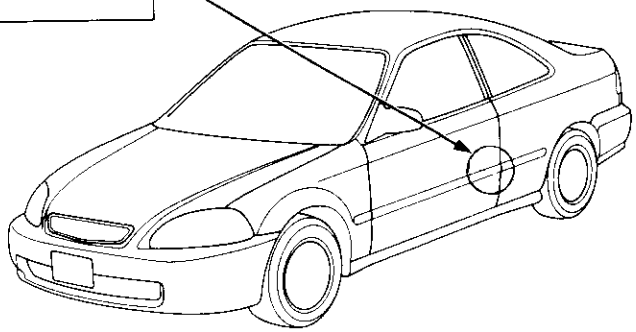

Chassis and Paint Codes

U.S. 1999 Model (2-door Hatchback)

Vehicle Identification Number

2HG EJ6 3 2 * X H 1 00001

Manufacturer, Make and Type of Vehicle
- 2HG: HONDA OF CANADA MFG., INC. HONDA Passenger vehicle

Line, Body and Engine Type
- EJ6: CIVIC 3-door/D16Y7

Body Type and Transmission Type
- 3: Hatchback/5-speed Manual
- 4: Hatchback/4-speed Automatic

Vehicle Grade
- 2: CX
- 4: DX

Check Digit

Model Year
- X: 1999

Factory Code
- H: Alliston Plant, Ontario, Canada

Destinations

Serial Number

Engine Number

D16Y7 - 4500001

Engine Type
- D16Y7: 1600 SOHC 16-valves Sequential Multiport Fuel-injected Engine

Serial Number

Transmission Number

B4RA - 8000001

Transmission Type
- B4RA: 4-speed Automatic Transmission
- S40 : 5-speed Manual Transmission

Serial Number
- B4RA: 8000001~
- S40 : 1000001~

Paint Code

Paint Code	Color
NH-592P	Flamenco Black Pearl
NH-583M	New Vogue Silver Metallic
PB-74P	Dark Amethyst Pearl
R-97	Roma Red

Vehicle Identification Number and Federal Motor Vehicle Safety Standard Certification

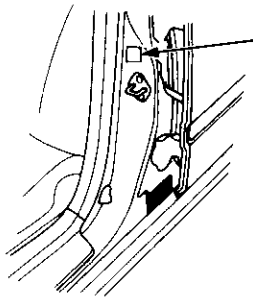

Paint Code

COLOR
NH-583M

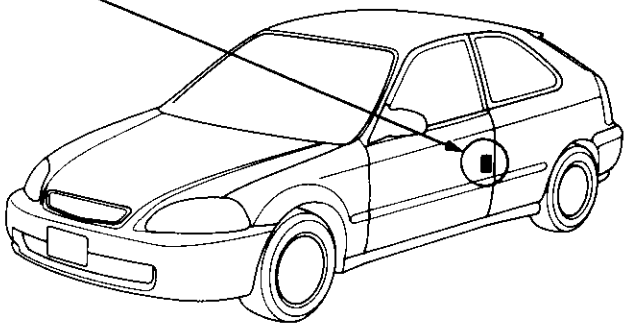

U.S. 1999 Model (4-door Sedan)

Vehicle Identification Number

JHM EJ6 5 2 * X S 000001

Manufacturer, Make and Type of Vehicle
- 1HG: HONDA OF AMERICA MFG., INC. HONDA Passenger vehicle
- 2HG: HONDA OF CANADA MFG., INC. HONDA Passenger vehicle
- JHM: HONDA MOTOR CO., LTD. HONDA Passenger vehicle

Line, Body and Engine Type
- EJ6: CIVIC 4-door/D16Y7
- EJ8: CIVIC 4-door/D16Y8

Body Type and Transmission Type
- 5: Sedan/5-speed Manual
- 6: Sedan/4-speed Automatic

Vehicle Grade
- 1: DX-V
- 2: DX
- 4: EX
- 7: LX

Check Digit

Model Year
- X: 1999

Factory Code
- L: East Liberty, Ohio Plant, U.S.A.
- H: Alliston Plant, Ontario, Canada
- S: Suzuka Plant, Mie Prefecture, Japan

Serial Number
- 000001: JAPAN, U.S.A.
- 500001: CANADA

Engine Number

D16Y7 - 4500001

Engine Type
- D16Y7: 1600 SOHC 16-valves Sequential Multiport Fuel-injected Engine
- D16Y8: 1600 SOHC VTEC 16-valves Sequential Multiport Fuel-injected Engine

Serial Number
- U.S.A : D16Y7, D16Y8 – 4500001~

Transmission Number

B4RA - 8000001

Transmission Type
- B4RA : 4-speed Automatic Transmission
- S40 : 5-speed Manual Transmission

Serial Number
- B4RA (U.S.A.) : 8000001~
- M4RA (JAPAN): 4000001~
- S40 (JAPAN) : 1000001~

Paint Code

Paint Code	Color
BG-41P	Iced Teal Pearl
G-95P	Clover Green Pearl
NH-578	Taffeta White
NH-592P	Flamenco Black Pearl
NH-583M	New Vogue Silver Metallic
R-96P	Inza Red Pearl

Paint Code

COLOR
NH-578

Vehicle Identification Number and Federal Motor Vehicle Safety Standard Certification

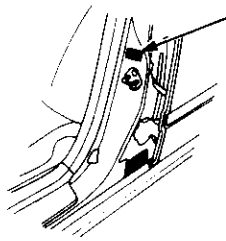

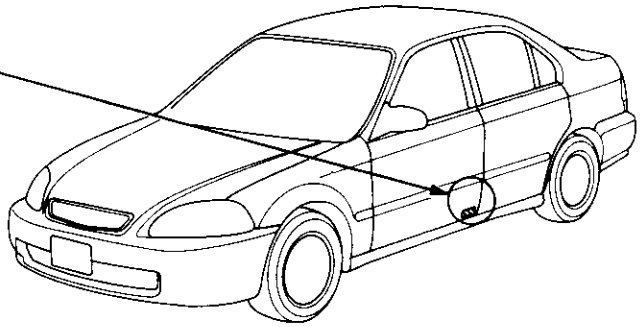

Chassis and Paint Codes

U.S. 1999 Model (2-door Coupe)

Vehicle Identification Number

1HG EJ6 1 2 * X L 000001

Manufacturer, Make and Type of Vehicle
- 1HG: HONDA OF AMERICA MFG., INC. HONDA Passenger vehicle

Line, Body and Engine Type
- EJ6: CIVIC 2-door/D16Y7
- EJ7: CIVIC 2-door/D16Y5
- EJ8: CIVIC 2-door/D16Y8
- EM1: CIVIC 2-door/B16A2

Body Type and Transmission Type
- 1: Coupe/5-speed Manual
- 2: Coupe/4-speed Automatic, CVT

Vehicle Grade
- 2: DX, HX
- 4: EX
- 5: EX with ABS, Si

Check Digit

Model Year
- X: 1999

Factory Code
- L: East Liberty, Ohio Plant, U.S.A.

Serial Number

Engine Number

D16Y5 - 4300001

Engine Type
- B16A2: 1600 DOHC VTEC 16-valves Sequential Multiport Fuel-injected Engine
- D16Y5: 1600 SOHC VTEC-E 16-valves Sequential Multiport Fuel-injected Engine
- D16Y7: 1600 SOHC 16-valves Sequential Multiport Fuel-injected Engine
- D16Y8: 1600 SOHC VTEC 16-valves Sequential Multiport Fuel-injected Engine

Serial Number
- JAPAN: B16A2, D16Y5 – 4300001~
- U.S.A. : D16Y7, D16Y8 – 4500001~

Transmission Number

B4RA - 8000001

Transmission Type
- B4RA : 4-speed Automatic Transmission
- S40, S4C: 5-speed Manual Transmission
- M4VA : Continuously Variable Transmission (CVT)

Serial Number
- B4RA : 8000001~
- S40, S4C: 1000001~
- M4VA : 5000001~

Vehicle Identification Number and Federal Motor Vehicle Safety Standard Certification

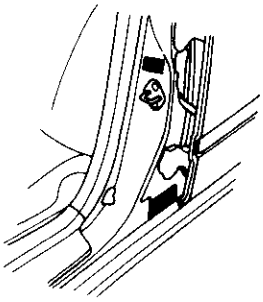

Paint Code

Paint Code	Color
B-95P	Electron Blue Pearl
G-95P	Clover Green Pearl
NH-592P	Flamenco Black Pearl
NH-578	Taffeta White
NH-583M	New Vogue Silver Metallic
R-97	Roma Red

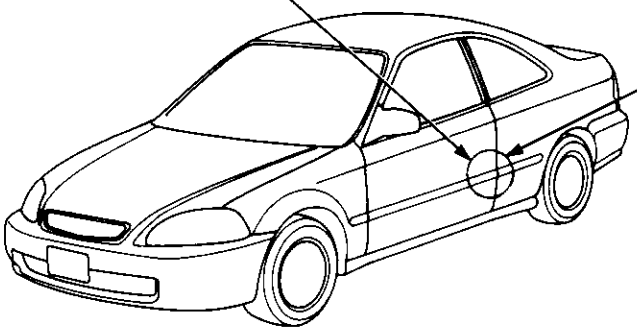

Paint Code

COLOR NH-592P

CANADA 1999 Model (2-door Hatchback)

Vehicle Identification Number

2HG EJ6 3 2 * X H 000001

Manufacturer, Make and Type of Vehicle
- 2HG: HONDA OF CANADA MFG., INC. HONDA Passenger vehicle

Line, Body and Engine Type
- EJ6: CIVIC 3-door/D16Y7

Body Type and Transmission Type
- 3: Hatchback/5-speed Manual
- 4: Hatchback/4-speed Automatic

Vehicle Grade
- 2: CX
- 3: DX

Check Digit

Model Year
- X: 1999

Factory Code
- H: Alliston Plant, Ontario, Canada

Serial Number

Engine Number

D16Y7 - 4750001

Engine Type
- D16Y7: 1600 SOHC 16-valves Sequential Multiport Fuel-injected Engine

Serial Number

Transmission Number

B4RA - 8000001

Transmission Type
- B4RA: 4-speed Automatic Transmission
- S40 : 5-speed Manual Transmission

Serial Number
- B4RA: 8000001~
- S40 : 1000001~

Paint Code

Paint Code	Color
NH-592P	Flamenco Black Pearl
NH-583M	New Vogue Silver Metallic
PB-74P	Dark Amethyst Pearl
R-97	Roma Red

Vehicle Identification Number and Canadian Motor Vehicle Safety Standard Certification

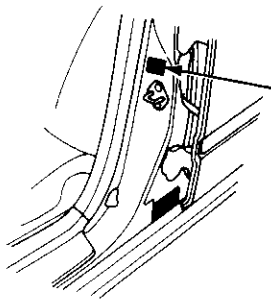

Paint Code

COLOR
NH-592P

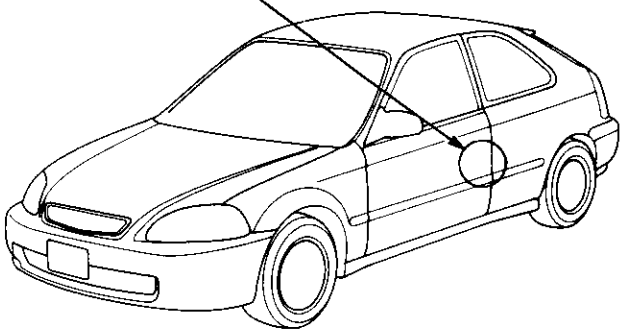

Chassis and Paint Codes

CANADA 1999 Model (4-door Sedan)

Vehicle Identification Number

JHM EJ6 5 3 * X S 800001

Manufacturer, Make and Type of Vehicle
- JHM: HONDA MOTOR CO., LTD. HONDA Passenger vehicle
- 2HG: HONDA OF CANADA MFG., INC. HONDA Passenger vehicle

Line, Body and Engine Type
- EJ6: CIVIC 4-door/D16Y7

Body Type and Transmission Type
- 5: Sedan/5-speed Manual
- 6: Sedan/4-speed Automatic

Vehicle Grade
- 0: EX
- 3: LX
- 4: LX with ABS
- 5: LX with ABS and A/C
- 7: EX with ABS
- 8: EX with ABS and A/C

Check Digit

Model Year
- X: 1999

Factory Code
- S: Suzuka Plant, Mie Prefecture, Japan
- H: Alliston Plant, Ontario, Canada

Serial Number
- 800001: JAPAN
- 900001: CANADA

Engine Number

D16Y7 - 4700001

Engine Type
- D16Y7: 1600 SOHC 16-valves Sequential Multiport Fuel-injected Engine

Serial Number
- JAPAN: D16Y7 – 4700001~
- U.S.A : D16Y7 – 4750001~

Transmission Number

B4RA - 8000001

Transmission Type
- B4RA : 4-speed Automatic Transmission
- M4RA: 4-speed Automatic Transmission
- S40 : 5-speed Manual Transmission

Serial Number
- B4RA (U.S.A.) : 8000001~
- M4RA (JAPAN): 4000001~
- S40 (JAPAN) : 1000001~

Paint Code

Paint Code	Color
BG-41P	Iced Teal Pearl
G-95P	Clover Green Pearl
NH-578	Taffeta White
NH-592P	Flamenco Black Pearl
NH-583M	New Vogue Silver Metallic
R-97	Roma Red

Vehicle Identification Number and Canadian Motor Vehicle Safety Standard Certification

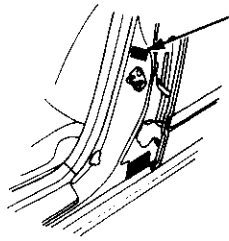

Paint Code

COLOR
BG-41P

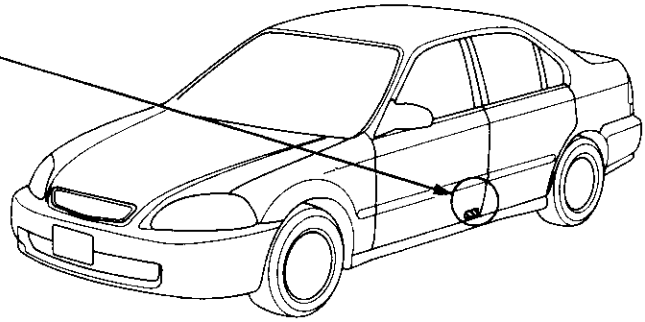

CANADA 1999 Model (2-door Coupe)

Vehicle Identification Number

1HG EJ6 1 2 * X L 800001

Manufacturer, Make and Type of Vehicle
- 1HG: HONDA OF AMERICA MFG., INC. HONDA Passenger vehicle

Line, Body and Engine Type
- EJ6: CIVIC 2-door/D16Y7
- EJ8: CIVIC 2-door/D16Y8
- EM1: CIVIC 2-door/B16A2

Body Type and Transmission Type
- 1: Coupe/5-speed Manual
- 2: Coupe/4-speed Automatic

Vehicle Grade
- 2: DX, Si
- 4: SiR
- 5: SiR with ABS
- 6: DX with ABS and A/C
- 7: Si with ABS and A/C

Check Digit

Model Year
- X: 1999

Factory Code
- L: East Liberty, Ohio Plant, U.S.A.

Serial Number

Engine Number

D16Y7 - 4750001

Engine Type
- B16A2: 1600 DOHC VTEC 16-valves Sequential Multiport Fuel-injected Engine
- D16Y7: 1600 SOHC 16-valves Sequential Multiport Fuel-injected Engine
- D16Y8: 1600 SOHC VTEC 16-valves Sequential Multiport Fuel-injected Engine

Serial Number
- B16A2: 1700001~
- D16Y7: 4750001~
- D16Y8: 4780001~

Transmission Number

B4RA - 8000001

Transmission Type
- B4RA : 4-speed Automatic Transmission
- S40, S4C: 5-speed Manual Transmission

Serial Number
- B4RA : 8000001~
- S40, S4C: 1000001~

Vehicle Identification Number and Canadian Motor Vehicle Safety Standard Certification

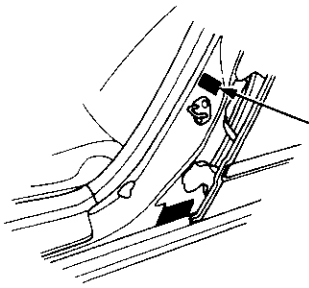

Paint Code

Paint Code	Color
B-95P	Electron Blue Pearl
G-95P	Clover Green Pearl
NH-592P	Flamenco Black Pearl
NH-578	Taffeta White
NH-583M	New Vogue Silver Metallic
R-97	Roma Red

Paint Code

COLOR
NH-592P

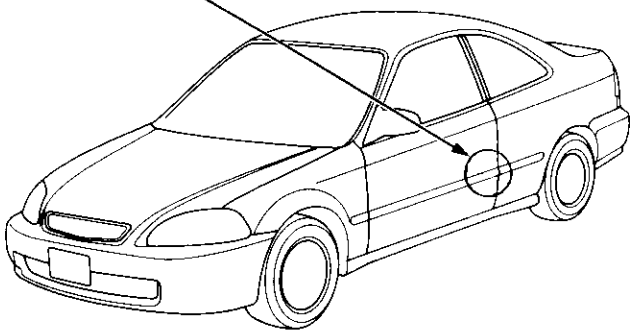

Chassis and Paint Codes

U.S. 2000 Model (2-door Hatchback)

Vehicle Identification Number

2HG EJ6 3 2 * Y H 100001

Manufacturer, Make and Type of Vehicle
- 2HG: HONDA OF CANADA MFG., INC. HONDA Passenger Vehicle

Line, Body and Engine Type
- EJ6: CIVIC 3-door/D16Y7

Body Type and Transmission Type
- 3: Hatchback/5-speed Manual
- 4: Hatchback/4-speed Automatic

Vehicle Grade
- 2: CX
- 4: DX

Check Digit

Model Year
- Y: 2000

Factory Code
- H: Alliston Plant, Ontario, Canada

Serial Number

Engine Number

D16Y7 - 5500001

Engine Type
- D16Y7: 1600 SOHC 16-valves Sequential Multiport Fuel-injected Engine

Serial Number

Transmission Number

B4RA - 9000001

Transmission Type
- B4RA: 4-speed Automatic Transmission
- S40 : 5-speed Manual Transmission

Serial Number
- B4RA: 9000001~
- S40 : 1000001~

Paint Code

Paint Code	Color
NH-578	Taffeta White
NH-583M	New Vogue Silver Metallic
NH-592P	Flamenco Black Pearl
R-97	Roma Red

Vehicle Identification Number and Federal Motor Vehicle Safety Standard Certification

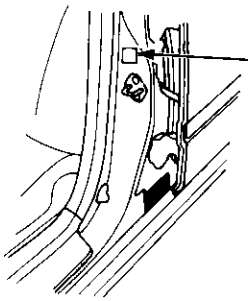

Paint Code

COLOR
NH-583M

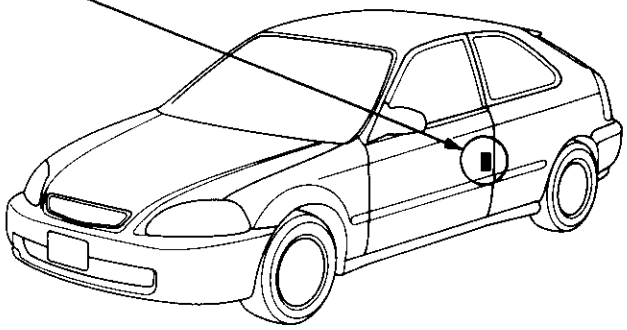

U.S. 2000 Model (4-door Sedan)

Vehicle Identification Number

JHM EJ6 5 2 * Y S 000001

Manufacturer, Make and Type of Vehicle
- JHM: HONDA MOTOR CO., LTD. HONDA Passenger Vehicle
- 1HG: HONDA OF AMERICA MFG., INC. HONDA Passenger Vehicle
- 2HG: HONDA OF CANADA MFG., INC. HONDA Passenger Vehicle

Line, Body and Engine Type
- EJ6: CIVIC 4-door/D16Y7
- EJ8: CIVIC 4-door/D16Y8

Body Type and Transmission Type
- 5: Sedan/5-speed Manual
- 6: Sedan/4-speed Automatic

Vehicle Grade
- 2: DX
- 4: EX
- 7: LX

Check Digit

Model Year
- Y: 2000

Factory Code
- S: Suzuka Plant, Mie Prefecture, Japan
- L: East Liberty, Ohio Plant, U.S.A.
- H: Alliston Plant, Ontario, Canada

Serial Number
- Japan, U.S.A.: 000001~
- Canada: 500001~

Engine Number

D16Y7 - 5300001

Engine Type
- D16Y7: 1600 SOHC 16-valves Sequential Multiport Fuel-injected Engine
- D16Y8: 1600 SOHC VTEC 16-valves Sequential Multiport Fuel-injected Engine

Serial Number
- Japan: 5300001~
- U.S.A.: 5500001~

Transmission Number

S4RA - 5000001

Transmission Type
- S4RA : 4-speed Automatic Transmission
- B4RA : 4-speed Automatic Transmission
- S40, S4C : 5-speed Manual Transmission

Serial Number
- S4RA (Japan) : 5000001~
- B4RA (U.S.A.) : 9000001~
- S40, S4C (Japan) : 1000001~

Paint Code

Paint Code	Color
BG-41P	Iced Teal Pearl
G-95P	Clover Green Pearl
NH-578	Taffeta White
NH-592P	Flamenco Black Pearl
YR-525M	Titanium Metallic
RP-32P	Vintage Plum Pearl

Vehicle Identification Number and Federal Motor Vehicle Safety Standard Certification

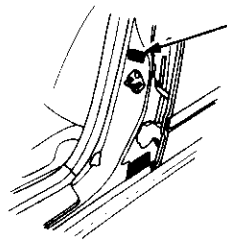

Paint Code

COLOR
NH-578

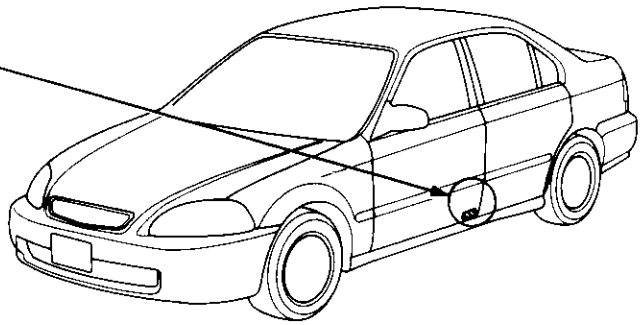

Chassis and Paint Codes

U.S. 2000 Model (2-door Coupe)

Vehicle Identification Number

1HG EJ6 1 2 * Y L 000001

Manufacturer, Make and Type of Vehicle
- 1HG: HONDA OF AMERICA MFG., INC. HONDA Passenger Vehicle

Line, Body and Engine Type
- EJ6: CIVIC 2-door/D16Y7
- EJ7: CIVIC 2-door/D16Y5
- EJ8: CIVIC 2-door/D16Y8
- EM1: CIVIC 2-door/B16A2

Body Type and Transmission Type
- 1: Coupe/5-speed Manual
- 2: Coupe/4-speed Automatic, CVT

Vehicle Grade
- 2: DX, HX
- 4: EX
- 5: EX with ABS, Si

Check Digit

Model Year
- Y: 2000

Factory Code
- L: East Liberty, Ohio Plant, U.S.A.

Serial Number

Engine Number

D16Y5 - 5300001

Engine Type
- B16A2: 1600 DOHC VTEC 16-valves Sequential Multiport Fuel-injected Engine
- D16Y5: 1600 SOHC VTEC-E 16-valves Sequential Multiport Fuel-injected Engine
- D16Y7: 1600 SOHC 16-valves Sequential Multiport Fuel-injected Engine
- D16Y8: 1600 SOHC VTEC 16-valves Sequential Multiport Fuel-injected Engine

Serial Number
- B16A2, D16Y5: 5300001~
- D16Y7, D16Y8: 5500001~

Transmission Number

B4RA - 9000001

Transmission Type
- B4RA : 4-speed Automatic Transmission
- S40, S4C: 5-speed Manual Transmission
- M4VA : Continuously Variable Transmission (CVT)

Serial Number
- B4RA : 9000001~
- S40, S4C: 1000001~
- M4VA : 6000001~

Vehicle Identification Number and Federal Motor Vehicle Safety Standard Certification

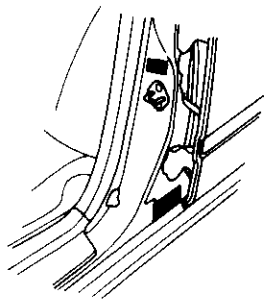

Paint Code

Paint Code	Color
B-95P	Electron Blue Pearl
G-95P	Clover Green Pearl
NH-578	Taffeta White
NH-583M	New Vogue Silver Metallic
NH-592P	Flamenco Black Pearl
R-81	Milano Red

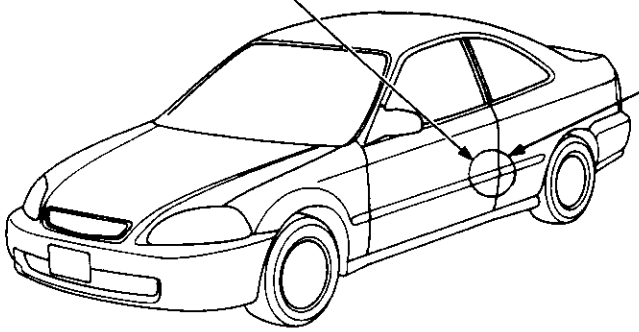

Paint Code

COLOR NH-592P

CANADA 2000 Model (2-door Hatchback)

Vehicle Identification Number

2HG EJ6 3 2 * Y H 000001

Manufacturer, Make and Type of Vehicle
- 2HG: HONDA OF CANADA MFG., INC. HONDA Passenger Vehicle

Line, Body and Engine Type
- EJ6: CIVIC 3-door/D16Y7

Body Type and Transmission Type
- 3: Hatchback/5-speed Manual
- 4: Hatchback/4-speed Automatic

Vehicle Grade
- 2: CX
- 3: DX
- 5: SE

Check Digit

Model Year
- Y: 2000

Factory Code
- H: Alliston Plant, Ontario, Canada

Serial Number

Engine Number

D16Y7 - 5500001

Engine Type
- D16Y7: 1600 SOHC 16-valves Sequential Multiport Fuel-injected Engine

Serial Number

Transmission Number

B4RA - 9000001

Transmission Type
- B4RA: 4-speed Automatic Transmission
- S40 : 5-speed Manual Transmission

Serial Number
- B4RA: 9000001~
- S40 : 1000001~

Paint Code

Paint Code	Color
NH-583M	New Vogue Silver Metallic
NH-592P	Flamenco Black Pearl
R-97	Roma Red
RP-32P	Vintage Plum Pearl

Vehicle Identification Number and Canadian Motor Vehicle Safety Standard Certification

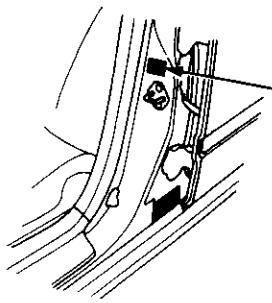

Paint Code

COLOR
NH-592P

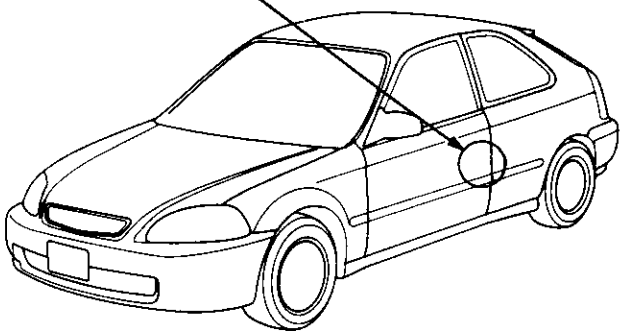

Chassis and Paint Codes

CANADA 2000 Model (4-door Sedan)

Vehicle Identification Number

JHM EJ6 5 2 * Y S 800001

Manufacturer, Make and Type of Vehicle
- JHM: HONDA MOTOR CO., LTD. HONDA Passenger Vehicle
- 2HG: HONDA OF CANADA MFG., INC. HONDA Passenger Vehicle

Line, Body and Engine Type
- EJ6: CIVIC 4-door/D16Y7

Body Type and Transmission Type
- 5: Sedan/5-speed Manual
- 6: Sedan/4-speed Automatic

Vehicle Grade
- 0: EX
- 1: LX-V
- 2: LX-V with ABS
- 3: LX
- 4: LX with ABS
- 5: LX with ABS and A/C
- 7: EX with ABS
- 8: EX with ABS and A/C

Check Digit

Model Year
- Y: 2000

Factory Code
- S: Suzuka Plant, Mie Prefecture, Japan
- H: Alliston Plant, Ontario, Canada

Serial Number
- Japan : 800001~
- Canada: 900001~

Engine Number

D16Y7 - 5700001

Engine Type
- D16Y7: 1600 SOHC 16-valves Sequential Multiport Fuel-injected Engine

Serial Number
- Japan: 5700001~
- U.S.A.: 5750001~

Transmission Number

S4RA - 5000001

Transmission Type
- S4RA : 4-speed Automatic Transmission
- B4RA : 4-speed Automatic Transmission
- S40 : 5-speed Manual Transmission

Serial Number
- S4RA (Japan): 5000001~
- B4RA (U.S.A.): 9000001~
- S40 (Japan) : 1000001~

Paint Code

Paint Code	Color
G-95P	Clover Green Pearl
NH-583M	New Vogue Silver Metallic
NH-592P	Flamenco Black Pearl
YR-525M	Titanium Metallic
RP-32P	Vintage Plum Pearl

Paint Code

COLOR
NH-583M

Vehicle Identification Number and Canadian Motor Vehicle Safety Standard Certification

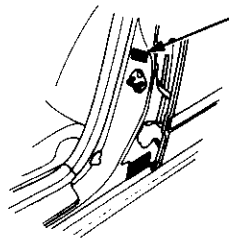

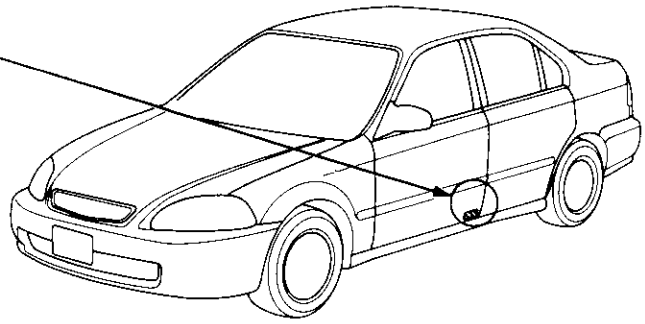

CANADA 2000 Model (2-door Coupe)

Vehicle Identification Number

1HG EJ6 1 2 * Y L 800001

Manufacturer, Make and Type of Vehicle
- 1HG: HONDA OF AMERICA MFG., INC. HONDA Passenger Vehicle

Line, Body and Engine Type
- EJ6: CIVIC 2-door/D16Y7
- EJ8: CIVIC 2-door/D16Y8
- EM1: CIVIC 2-door/B16A2

Body Type and Transmission Type
- 1: Coupe/5-speed Manual
- 2: Coupe/4-speed Automatic

Vehicle Grade
- 2: DX, Si
- 4: SiR
- 5: SiR with ABS
- 6: DX with ABS and A/C
- 7: DX-G

Check Digit

Model Year
- Y: 2000

Factory Code
- L: East Liberty, Ohio Plant, U.S.A.

Serial Number

Engine Number

B16A2 - 5700001

Engine Type
- B16A2: 1600 DOHC VTEC 16-valves Sequential Multiport Fuel-injected Engine
- D16Y7: 1600 SOHC 16-valves Sequential Multiport Fuel-injected Engine
- D16Y8: 1600 SOHC VTEC 16-valves Sequential Multiport Fuel-injected Engine

Serial Number
- B16A2: 5700001~
- D16Y7: 5750001~
- D16Y8: 5780001~

Transmission Number

B4RA - 9000001

Transmission Type
- B4RA : 4-speed Automatic Transmission
- S40, S4C: 5-speed Manual Transmission

Serial Number
- B4RA : 9000001~
- S40, S4C: 1000001~

Vehicle Identification Number and Canadian Motor Vehicle Safety Standard Certification

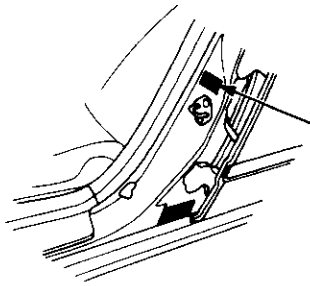

Paint Code

Paint Code	Color
B-95P	Electron Blue Pearl
G-95P	Clover Green Pearl
NH-583M	New Vogue Silver Metallic
NH-592P	Flamenco Black Pearl
R-81	Milano Red

Paint Code

COLOR
NH-592P

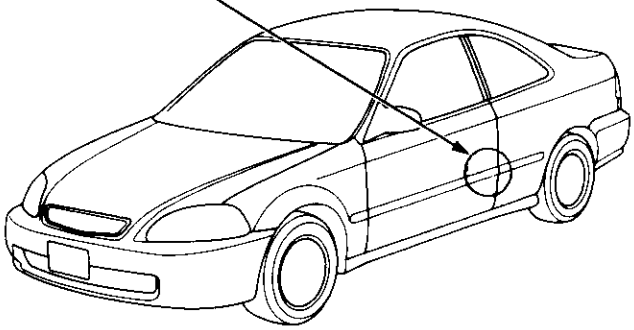

Identification Number Locations

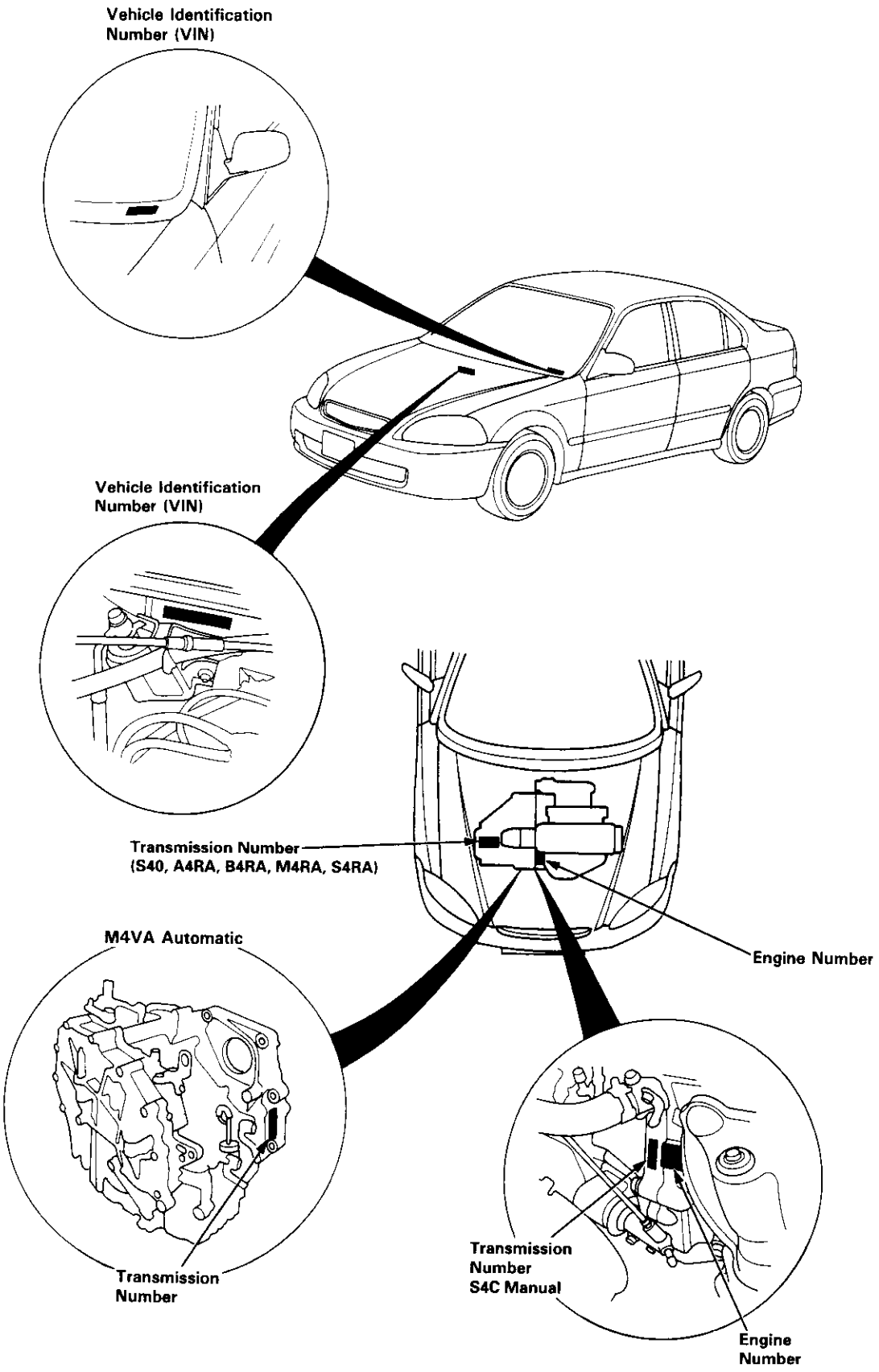

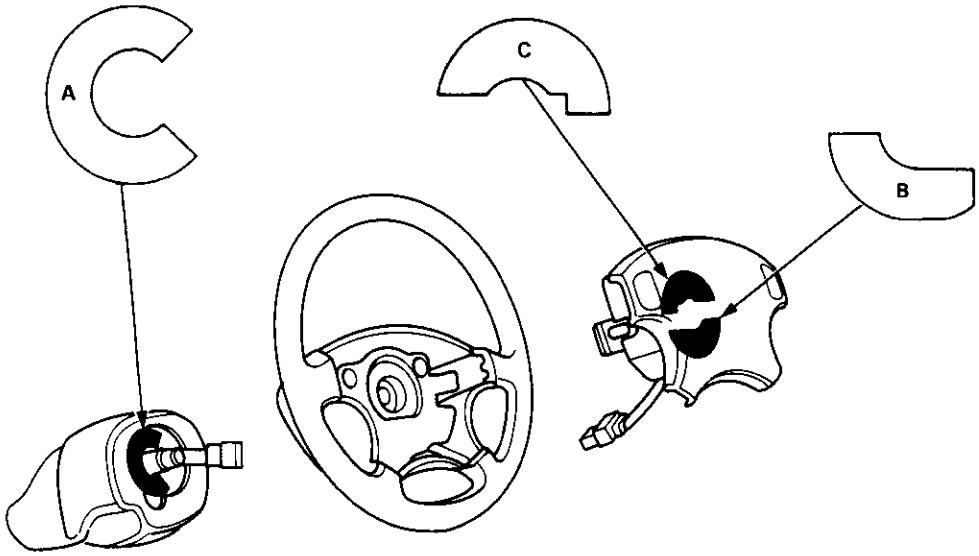

A: CABLE REEL CAUTION A: '96 – 99 model

SRS
REFER TO SERVICE MANUAL FOR DETAILED INSTRUCTIONS.

'00 model

SRS
INSTALLATION OF THE SRS CABLE REEL IS CRITICAL TO THE PROPER OPERATION OF THE SRS SYSTEM. REFER TO THE SERVICE MANUAL DETAILED INSTALLATION INSTRUCTIONS.

B: DRIVER MODULE WARNING

WARNING
THE AIRBAG INFLATOR IS EXPLOSIVE AND, IF ACCIDENTALLY DEPLOYED, CAN SERIOUSLY HURT OR KILL YOU.
- DO NOT USE ELECTRICAL TEST EQUIPMENT OR PROBING DEVICES.
  THEY CAN CAUSE ACCIDENTAL DEPLOYMENT.
- NO SERVICEABLE PARTS INSIDE. DO NOT DISASSEMBLE.
- PLACE AIRBAG UPRIGHT WHEN REMOVED.
- FOLLOW SERVICE MANUAL INSTRUCTIONS CAREFULLY.

C: DRIVER MODULE DANGER

DANGER
EXPLOSIVE/FLAMMABLE
CONTACT WITH ACID, WATER OR HEAVY METALS SUCH AS COPPER, LEAD OR MERCURY MAY PRODUCE HARMFUL AND IRRITATING GASES OR EXPLOSIVE COMPOUNDS. STORAGE TEMPERATURES MUST NOT EXCEED 200°F (100°C). FOR PROPER HANDLING, STORAGE AND DISPOSAL PROCEDURES REFER TO SERVICE MANUAL, SRS SUPPLEMENT.
POISON
CONTAINS POISONOUS SODIUM AZIDE AND POTASSIUM NITRATE.
FIRST AID:
IF CONTENTS ARE SWALLOWED, INDUCE VOMITING. FOR EYE CONTACT, FLUSH EYES WITH WATER FOR 15 MINUTES. IF GASES (FROM ACID OR WATER CONTACT) ARE INHALED, SEEK FRESH AIR. IN EVERY CASE, GET PROMPT MEDICAL ATTENTION.
KEEP OUT OF REACH OF CHILDREN.

(cont'd)

Warning/Caution Label Locations

(cont'd)

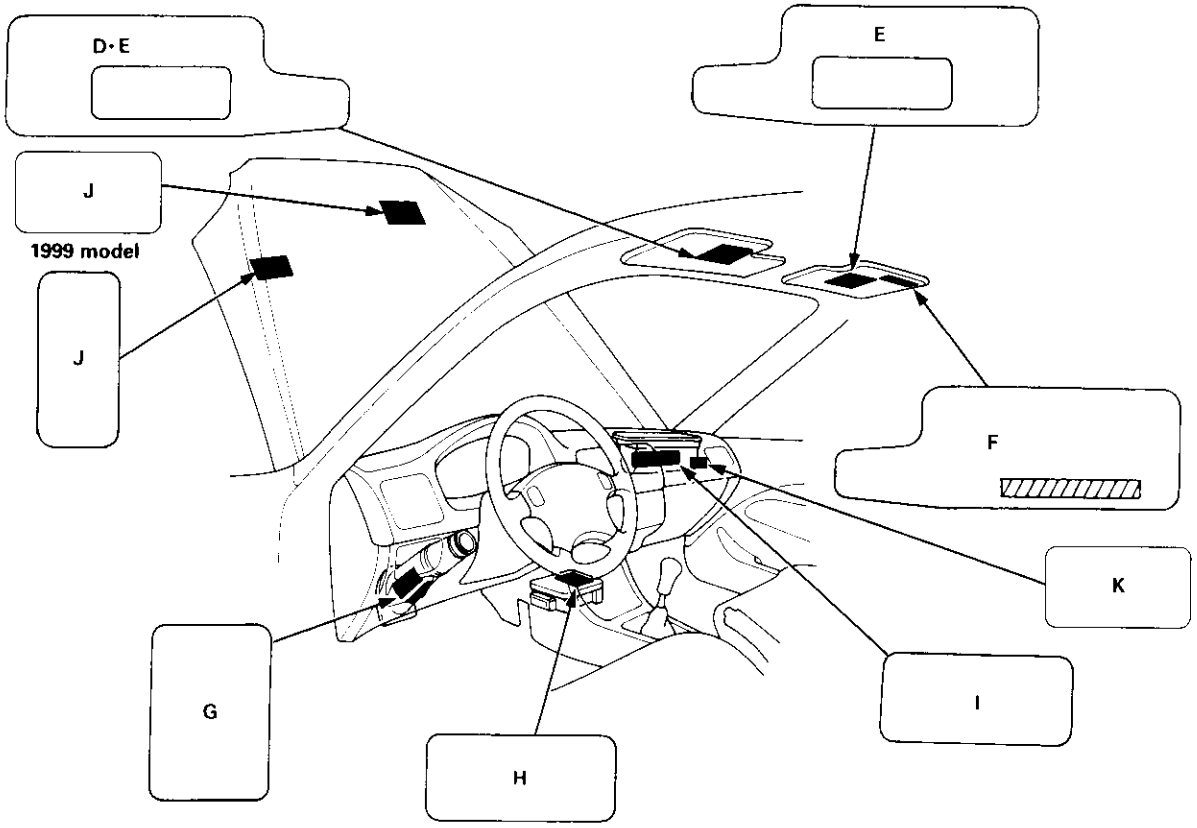

D: DRIVER INFORMATION: CANADA model ('96 – 99 model)

SRS AIRBAG ALWAYS WEAR YOUR SEAT BELT
- THIS CAR IS EQUIPPED WITH A DRIVER AIRBAG AND A FRONT SEAT PASSENGER AIRBAG* AS A SUPPLEMENTAL RESTRAINT SYSTEM (SRS).
- IT IS DESIGNED TO SUPPLEMENT THE SEAT BELT.

* Except CANADA CX

E: SRS INFORMATION: U.S. model ('96, '97 model)

CAUTION
TO AVOID SERIOUS INJURY:
- FOR MAXIMUM SAFETY PROTECTION IN ALL TYPES OF CRASHES, YOU MUST ALWAYS WEAR YOUR SAFETY BELT.
- DO NOT INSTALL REARWARD-FACING CHILD SEATS IN ANY FRONT PASSENGER SEAT POSITION.
- DO NOT SIT OR LEAN UNNECESSARILY CLOSE TO THE AIRBAG.
- DO NOT PLACE ANY OBJECTS OVER THE AIRBAG OR BETWEEN THE AIRBAG AND YOURSELF.
- SEE THE OWNER'S MANUAL FOR FURTHER INFORMATION AND EXPLANATIONS.
- THE SRS MUST BE INSPECTED TEN YEARS AFTER IT IS INSTALLED.
- THE DATE OF INSTALLATION IS SHOWN OF THE DRIVER'S DOORJAMB.

U.S. model ('98, '99 model)

WARNING
DEATH OR SERIOUS INJURY CAN OCCUR.
- CHILDREN 12 AND UNDER CAN BE KILLED BY THE AIRBAG.
- THE BACK SEAT IS THE SAFEST PLACE FOR CHILDREN.
- NEVER PUT A REAR-FACING CHILD SEAT IN THE FRONT.
- SIT AS FAR BACK AS POSSIBLE FROM THE AIRBAG.
- ALWAYS USE SEAT BELTS AND CHILD RESTRAINTS.
- THE SRS MUST BE INSPECTED TEN YEARS AFTER IT IS INSTALLED.
- THE DATE OF INSTALLATION IS SHOWN ON THE DRIVER'S DOORJAMB.

U.S. model ('00 model)

WARNING
DEATH OR SERIOUS INJURY CAN OCCUR.
- CHILDREN 12 AND UNDER CAN BE KILLED BY THE AIRBAG.
- THE BACK SEAT IS THE SAFEST PLACE FOR CHILDREN.
- NEVER PUT A REAR-FACING CHILD SEAT IN THE FRONT.
- SIT AS FAR BACK AS POSSIBLE FROM THE AIRBAG.
- ALWAYS USE SEAT BELTS AND CHILD RESTRAINTS.

CANADA model ('00 model)

CAUTION
TO AVOID SERIOUS INJURY:
- FOR MAXIMUM SAFETY PROTECTION IN ALL TYPES OF CRASHES, YOU MUST ALWAYS WEAR YOUR SAFETY BELT.
- DO NOT INSTALL REARWARD-FACING CHILD SEATS IN ANY FRONT PASSENGER SEAT POSITION.
- DO NOT PLACE ANY OBJECTS OVER THE AIRBAG OR BETWEEN THE AIRBAG AND YOURSELF.
- SEE THE OWNER'S MANUAL FOR FURTHER INFORMATION AND EXPLANATIONS.

Except CX for passenger side

F: ASSISTANT INFORMATION: US MODEL ('96, '97 model)

AIRBAG SEE OTHER SIDE.

U.S. model ('98 – 00 model)

AIRBAG WARNING
FLIP VISOR OVER

G: STEERING COLUMN NOTICE

NOTICE
TO PREVENT SRS DAMAGE, REMOVE STEERING WHEEL BEFORE REMOVING STEERING SHAFT CONNECTING BOLT.

H: MONITOR CAUTION

NOTICE SRS
- NO SERVICEABLE PARTS INSIDE.
- REFER TO SERVICE MANUAL FOR DETAILED INSTRUCTIONS.

I: FRONT SEAT PASSENGER MODULE DANGER

DANGER
EXPLOSIVE/FLAMMABLE
CONTACT WITH ACID, WATER OR HEAVY METALS SUCH AS COPPER, LEAD OR MERCURY MAY PRODUCE HARMFUL AND IRRITATING GASES OR EXPLOSIVE COMPOUNDS. STORAGE TEMPERATURES MUST NOT EXCEED 200°F (100°C). FOR PROPER HANDLING, STORAGE AND DISPOSAL PROCEDURES REFER TO SERVICE MANUAL, SRS SUPPLEMENT.
POISON
CONTAINS POISONOUS SODIUM AZIDE AND POTASSIUM NITRATE.
FIRST AID
IF CONTENTS ARE SWALLOWED, INDUCE VOMITING. FOR EYE CONTACT, FLUSH EYES WITH WATER FOR 15 MINUTES. IF GASES (FROM ACID OR WATER CONTACT) ARE INHALED, SEEK FRESH AIR. IN EVERY CASE, GET PROMPT MEDICAL ATTENTION.
KEEP OUT OF REACH OF CHILDREN.

WARNING
THE AIRBAG INFLATOR IS EXPLOSIVE AND, IF ACCIDENTALLY DEPLOYED, CAN SERIOUSLY HURT OR KILL YOU.
- DO NOT USE ELECTRICAL TEST EQUIPMENT OR PROBING DEVICES.
  THEY CAN CAUSE ACCIDENTAL DEPLOYMENT.
- NO SERVICEABLE PARTS INSIDE. DO NOT DISASSEMBLE.
- PLACE AIRBAG UPRIGHT WHEN REMOVED.
- FOLLOW SERVICE MANUAL INSTRUCTIONS CAREFULLY.

J: SRS WARNING (HOOD)

SUPPLEMENTAL RESTRAINT SYSTEM (SRS)
THIS VEHICLE IS EQUIPPED WITH DRIVER AND FRONT SEAT PASSENGER AIRBAGS*.
ALL SRS ELECTRICAL WIRING AND CONNECTORS ARE COLORED YELLOW.
TAMPERING WITH, DISCONNECTING OR USING ELECTRICAL TEST EQUIPMENT ON THE SRS WIRING CAN MAKE THE SYSTEM INOPERATIVE OR CAUSE ACCIDENTAL FIRING OF THE INFLATOR.

WARNING
THE AIRBAG INFLATOR IS EXPLOSIVE AND, IF ACCIDENTALLY DEPLOYED, CAN SERIOUSLY HURT YOU. FOLLOW SERVICE MANUAL INSTRUCTIONS CAREFULLY.

* Except CANADA CX

K: PASSENGER AIRBAG CAUTION
U.S. model ('98 – 00 model)

WARNING
CHILDREN CAN BE KILLED OR INJURED BY PASSENGER AIRBAG.
THE BACK SEAT IS THE SAFEST PLACE FOR CHILDREN 12 AND UNDER. MAKE SURE ALL CHILDREN USE SEAT BELTS OR CHILD SEATS.

(cont'd)

Warning/Caution Label Locations

(cont'd)

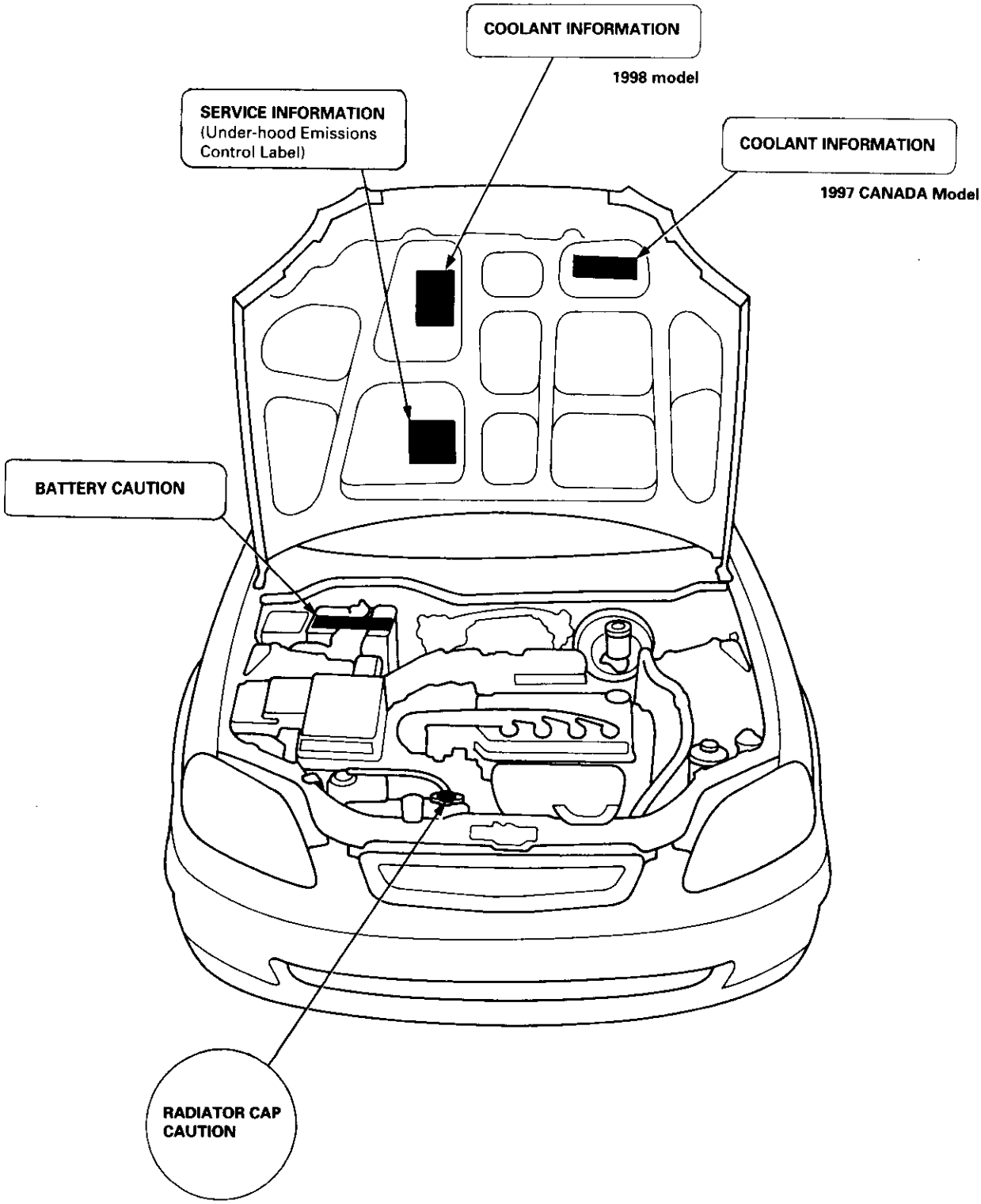

Under-hood Emissions Control Label (1996, 1997 model)

Emission Group Identification

Example:

▷ WHEN ADDING OR CHANGING THE COOLANT, USE **50/50** SOLUTION OF ***HONDA RECOMMENDED** ANTI-FREEZE/COOLANT AND WATER. NEVER DILUTE THE COOLANT, OR THE LIFE OF THE ENGINE MAY BE SERIOUSLY SHORTENED.
▷ REPLACE COOLANT AFTER **36 MONTHS** OR **45,000** MILES (**72,000** km), WHICHEVER COMES FIRST. THEREAFTER, REPLACE EVERY **2 YEARS** OR **30,000** MILES (**48,000** km), WHICHEVER COMES FIRST.
▷ CHECK OR ADD COOLANT AT THE RESERVE TANK, NOT THE RADIATOR.
▷ FOR FURTHER INFORMATION ON THE COOLING SYSTEM, READ THE OWNER'S MANUAL.
*CHECK WITH YOUR HONDA DEALER.

VACUUM HOSE ROUTING DIAGRAM

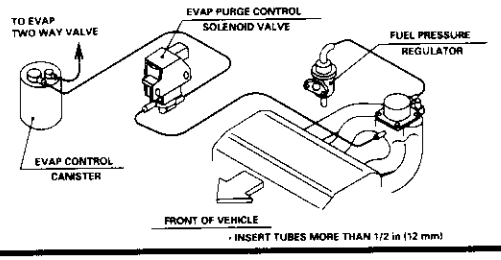

VEHICLE EMISSION CONTROL INFORMATION
ENGINE FAMILY-VHN1.6VJGKGK DISPLACEMENT-1590 cm³-97 CID CIVIC (S•Z)
EVAPORATIVE FAMILY-VHN1077BYMAC
CATALYST TWC HO2S (2) SFI
REFER TO SERVICE MANUAL FOR ADDITIONAL INFORMATION.
TUNE UP CONDITIONS: ENGINE AT NORMAL OPERATING TEMPERATURE, ALL ACCESSORIES TURNED OFF, COOLING FAN OFF, TRANSMISSION IN NEUTRAL
NO OTHER ADJUSTMENTS NEEDED. OBD II CERTIFIED

IDLE SPEED	MANUAL TRANSMISSION		670 ± 50 rpm	
	AUTOMATIC TRANSMISSION		700 ± 50 rpm	
IGNITION TIMING AT IDLE			12° ± 2° BTDC	
VALVE LASH	IN		0.20 ± 0.02 mm COLD	
	EX		0.25 ± 0.02 mm COLD	
SPARK PLUG	TYPE	NGK; ZFR5F-11 ND; KJ16CR-L11	GAP	1.1 $^{0}_{-0.1}$ mm

THIS VEHICLE CONFORMS TO U.S. EPA AND STATE OF CALIFORNIA REGULATIONS APPLICABLE TO 1997 MODEL YEAR NEW MOTOR VEHICLES.
16VJGKGE

EXHAUST EMISSION STANDARDS	STANDARD CATEGORY
CERTIFICATION	TIER 1
IN-USE	TIER 1 FULL

17277-P2E-A02 HONDA MOTOR CO., LTD.

50ST (50 States):
THIS VEHICLE CONFORMS TO U.S. EPA AND STATE OF CALIFORNIA REGULATIONS APPLICABLE TO 1996 AND 1997 MODEL YEAR NEW MOTOR VEHICLES.

49ST (49 States/Federal):
THIS VEHICLE CONFORMS TO U.S. EPA REGULATIONS APPLICABLE TO 1996 AND 1997 MODEL YEAR NEW MOTOR VEHICLES.

CAL (California):
THIS VEHICLE CONFORMS TO U.S. EPA AND STATE OF CALIFORNIA REGULATIONS APPLICABLE TO 1996 AND 1997 MODEL YEAR NEW PASSENGER CARS PROVIDED THAT THIS VEHICLE IS ONLY INTRODUCED INTO COMMERCE FOR SALE IN THE STATE OF CALIFORNIA.

Engine and Evaporative Families

Engine Family: V HN 1.6 V J G K G K

Model Year
- T: 1996
- V: 1997

Manufacturer
- HN: Honda

Displacement

Class
- V: Light Duty Vehicle/Passenger Car

Fuel System and Number of Valves
- J: Electronic Sequential Multiport Injection (three or more valves per cylinder)

Fuel Type
- G: Gasoline

Standard
- F: 49 or 50 States Tier 1
- K: 49 or 50 States Tier 1
- 1: California Tier 1
- 2: California TLEV
- 3: California LEV
- 4: California ULEV

Catalyst
- E, F, G, H: Three Way Catalyst

OBD
- K – T: OBD Equipped

Evaporative Family: V HN 1 077 B Y M A C

Model Year
- T: 1996
- V: 1997

Manufacturer
- HN: Honda

Storage System
- 1: Canister

Canister Working Capacity (grams)

Canister Configuration
- A: Plastic Housing (Closed Bottom)
- B: Plastic Housing (Open Bottom)

Fuel System
- Y: Fuel Injection

Fuel Tank
- M: Metal

Standard
- A: Current Evap
- E: Enhanced Evap

Wild Card

Under-hood Emissions Control Label (1998 model)

Emission Group Identification

Example:

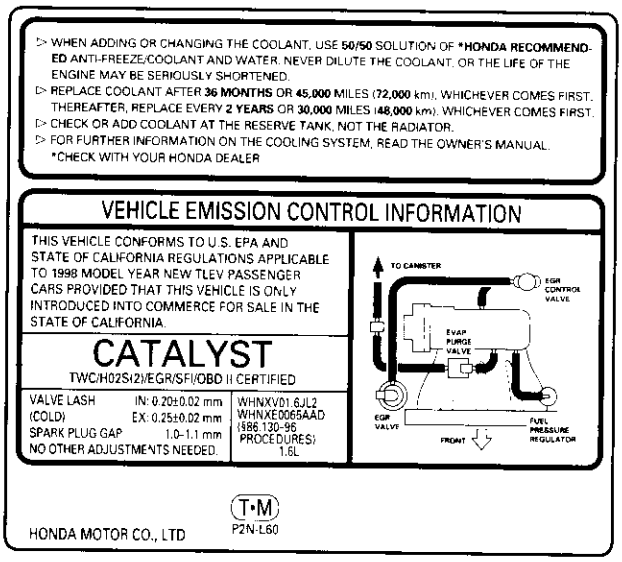

50ST (50 States):
THIS VEHICLE CONFORMS TO U.S. EPA AND STATE OF CALIFORNIA REGULATIONS APPLICABLE TO 1998 MODEL YEAR NEW MOTOR VEHICLES.

49ST (49 States/Federal):
THIS VEHICLE CONFORMS TO U.S. EPA REGULATIONS APPLICABLE TO 1998 MODEL YEAR NEW MOTOR VEHICLES.

CAL (California):
THIS VEHICLE CONFORMS TO U.S. EPA AND STATE OF CALIFORNIA REGULATIONS APPLICABLE TO 1998 MODEL YEAR NEW PASSENGER CARS PROVIDED THAT THIS VEHICLE IS ONLY INTRODUCED INTO COMMERCE FOR SALE IN THE STATE OF CALIFORNIA.

Engine and Evaporative Families

Engine Family:

W HNX V 01.6 JL2

Model Year
W: 1998
Manufacturer
HNX: Honda
Type
V: Light Duty Vehicle/Passenger Car
Displacement
Sequence Characters

Evaporative Family:

W HNX E 0065 AAD

Model Year
W: 1998
Manufacturer
HNX: Honda
Type
E: EVAP
Canister Work Capacity (grams)
Sequence Characters

(1999 model)
Emission Group Identification

Example:

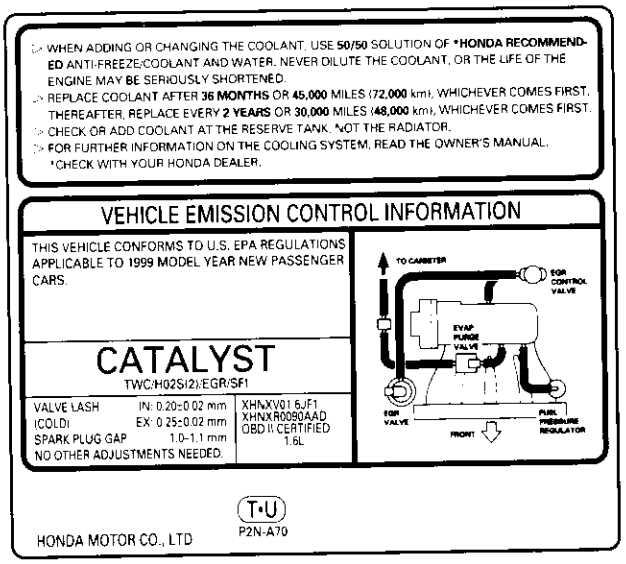

FEDERAL TIER 1:
THIS VEHICLE CONFORMS TO U.S. EPA REGULATIONS APPLICABLE TO 1999 MODEL YEAR NEW PASSENGER CARS.

CALIFORNIA + NLEV (RESTRICTED) TLEV:
THIS VEHICLE CONFORMS TO CALIFORNIA REGULATIONS APPLICABLE TO 1999 MODEL YEAR NEW TLEV PASSENGER CARS AND TO U.S. EPA NLEV PROGRAM REGULATIONS APPLICABLE TO 1999 NEW TLEV PASSENGER CARS.
THIS VEHICLE MAY ONLY BE INTRODUCED INTO COMMERCE FOR SALE IN CALIFORNIA, A STATE THAT HAS THE CALIFORNIA STANDARDS IN EFFECT TO WHICH THIS VEHICLE HAS BEEN CERTIFIED, A STATE THAT HAS OPTED INTO THE NLEV PROGRAM, OR A STATE CONTIGUOUS THERETO.

50 STATE LEV + CFFV + NLEV (UNRESTRICTED):
THIS VEHICLE CONFORMS TO U.S. EPA NLEV AND CLEAN-FUEL VEHICLE AND CALIFORNIA REGULATIONS APPLICABLE TO GASOLINE FUELED 1999 MODEL YEAR NEW LEV *[PASSENGER CARS/LIGHT DUTY TRUCKS]*.

50 STATE TLEV + NLEV (UNRESTRICTED):
THIS VEHICLE CONFORMS TO U.S. EPA NLEV REGULATIONS APPLICABLE TO 1999 MODEL YEAR NEW TLEV PASSENGER CARS AND CALIFORNIA REGULATIONS APPLICABLE TO 1999 MODEL YEAR NEW TLEV *[PASSENGER CARS/LIGHT DUTY TRUCKS]*.

Engine and Evaporative Families

Engine Family: X HNX V 01.6 JF1

- **Model Year** — X: 1999
- **Manufacturer** — HNX: Honda
- **Type** — V: Light Duty Vehicle/Passenger Car
- **Displacement**
- **Sequence Characters**

Evaporative Family: X HNX R 0090 AAD

- **Model Year** — X: 1999
- **Manufacturer** — HNX: Honda
- **Type** — R: ORVR
- **Canister Work Capacity (grams)**
- **Sequence Characters**

Under-hood Emission Control Label (2000 model)

Emission Group Identification

Example:

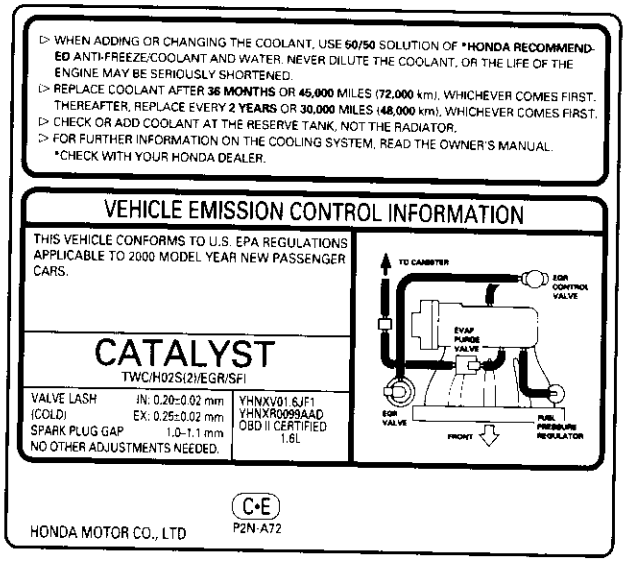

FEDERAL TIER 1:
THIS VEHICLE CONFORMS TO U.S. EPA REGULATIONS APPLICABLE TO 2000 MODEL YEAR NEW PASSENGER CARS.

CALIFORNIA + NLEV (RESTRICTED) TLEV:
THIS VEHICLE CONFORMS TO CALIFORNIA REGULATIONS APPLICABLE TO 2000 MODEL YEAR NEW TLEV PASSENGER CARS AND TO U.S. EPA NLEV PROGRAM REGULATIONS APPLICABLE TO 2000 NEW TLEV PASSENGER CARS.
THIS VEHICLE MAY ONLY BE INTRODUCED INTO COMMERCE FOR SALE IN CALIFORNIA, A STATE THAT HAS THE CALIFORNIA STANDARDS IN EFFECT TO WHICH THIS VEHICLE HAS BEEN CERTIFIED, A STATE THAT HAS OPTED INTO THE NLEV PROGRAM, OR A STATE CONTIGUOUS THERETO.

50 STATE LEV + CFFV + NLEV (UNRESTRICTED):
THIS VEHICLE CONFORMS TO U.S. EPA NLEV AND CLEAN-FUEL VEHICLE AND CALIFORNIA REGULATIONS APPLICABLE TO GASOLINE FUELED 2000 MODEL YEAR NEW LEV PASSENGER CARS.
EPA CERTIFICATION TEST FUEL: EPA UNLEADED GASOLINE

50 STATE TLEV + NLEV (UNRESTRICTED):
THIS VEHICLE CONFORMS TO U.S. EPA NLEV REGULATIONS APPLICABLE TO 2000 MODEL YEAR NEW TLEV PASSENGER CARS AND CALIFORNIA REGULATIONS APPLICABLE TO 2000 MODEL YEAR NEW TLEV PASSENGER CARS.

Engine and Evaporative Families

Engine Family:

Y HNX V 01.6 JF1

- **Model Year** — Y: 2000
- **Manufacturer** — HNX: Honda
- **Type** — V: Light Duty Vehicle/Passenger Car
- **Displacement**
- **Sequence Characters**

Evaporative Family:

Y HNX R 0099 AAD

- **Model Year** — Y: 2000
- **Manufacturer** — HNX: Honda
- **Type** — R: ORVR
- **Canister Work Capacity (grams)**
- **Sequence Characters**

Lift and Safety Stands

⚠ WARNING When heavy rear components such as suspension, fuel tank, spare tire, hatch, and trunk lid are to be removed, place additional weight in the luggage area before hoisting. When substantial weight is removed from the rear of the vehicle, the center of gravity may change and can cause the vehicle to tip forward on the hoist.

NOTE:
- Since each tire/wheel assembly weighs approximately 30 lbs (14 kg), placing the front wheels in the luggage area can assist with the weight distribution.
- Use the same support points to support the vehicle on safety stands.

1. Place the lift blocks as shown.
2. Raise the hoist a few inches (centimeters) and rock the vehicle to be sure it is firmly supported.
3. Raise the hoist to full height, and inspect lift points for solid support.

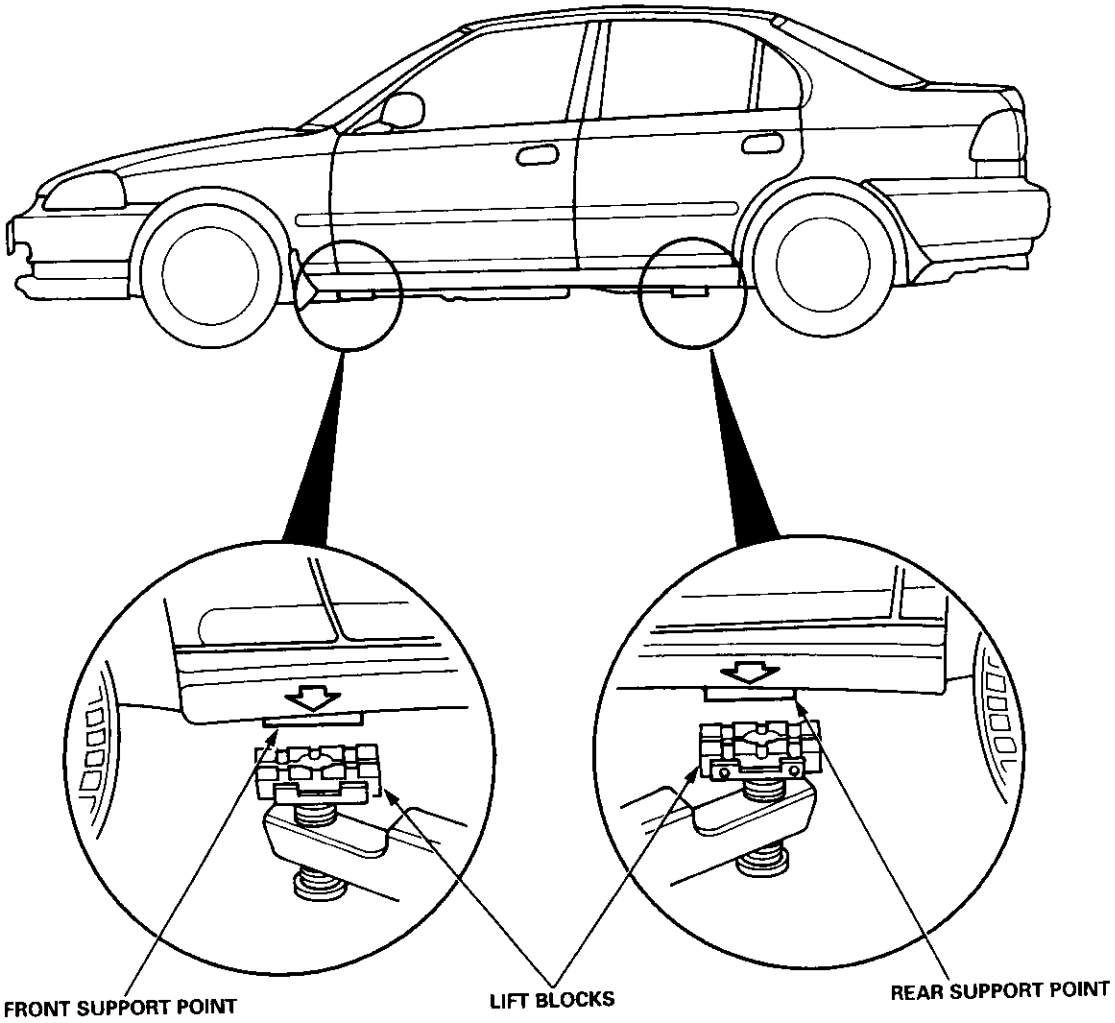

Floor Jack

1. Apply the parking brake and block the wheels that are not being lifted.
2. When lifting the rear of the vehicle, put the gearshift lever in reverse (Automatic transmission/CVT in P position).
3. Raise the vehicle high enough to insert the safety stands.
4. Adjust and place the safety stands so the vehicle will be approximately level, then lower the vehicle onto them.

WARNING

- **Always use safety stands when working on or under any vehicle that is supported by only a jack.**
- **Never attempt to use a bumper jack for lifting or supporting the vehicle.**

FRONT:

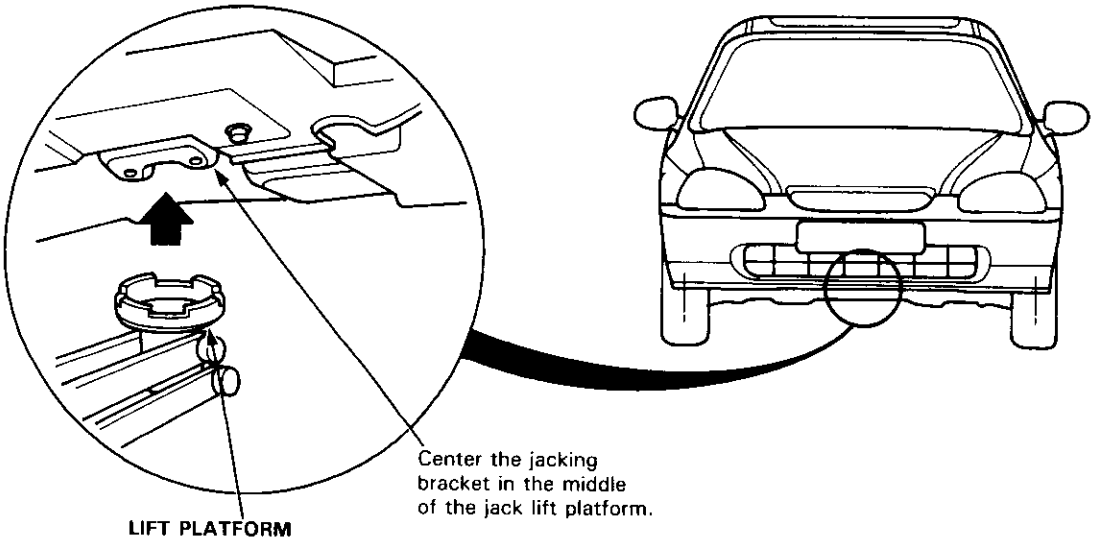

REAR:

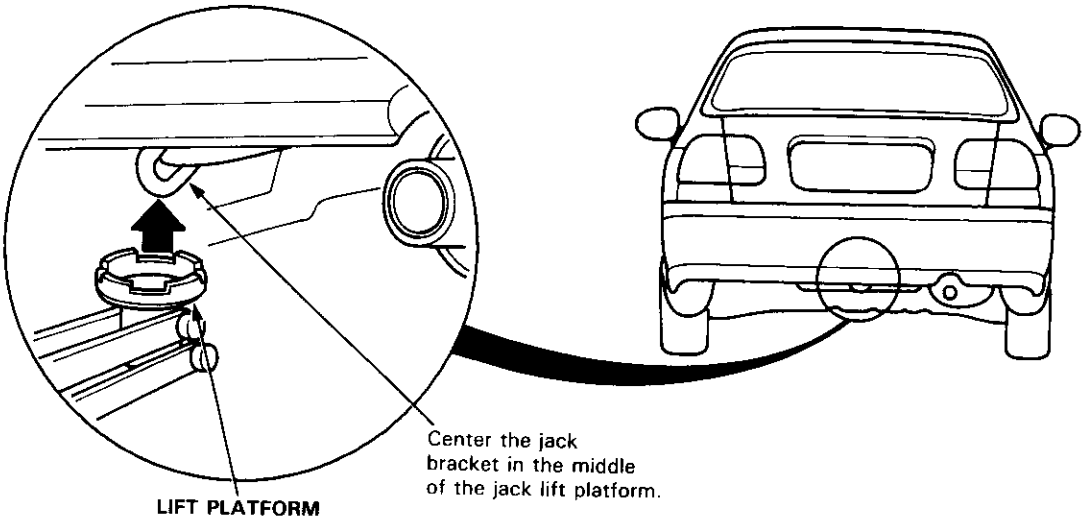

Towing

If the vehicle needs to be towed, call a professional towing service. Never tow the vehicle behind another vehicle with just a rope or chain. It is very dangerous.

Emergency Towing
There are three popular methods of towing a vehicle:

Flat-bed Equipment — The operator loads the vehicle on the back of a truck. This is the best way of transporting the vehicle.

Wheel Lift Equipment — The tow truck uses two pivoting arms that go under the tires (front or rear) and lifts them off the ground. The other two wheels remain on the ground.

Sling-type Equipment — The tow truck uses metal cables with hooks on the ends. These hooks go around parts of the frame or suspension, and the cables lift that end of the vehicle off the ground. The vehicle's suspension and body can be seriously damaged if this method of towing is attempted.

If the vehicle cannot be transported by flat-bed, it should be towed with the front wheels off the ground. If due to damage, the vehicle must be towed with the front wheels on the ground, do the following:

Manual Transmission and CVT
- Release the parking brake.
- Shift the transmission to neutral (CVT to N position).

Automatic Transmission
- Release the parking brake.
- Start the engine.
- Shift to D4 position, then N position.
- Turn off the engine.

CAUTION:
- **Improper towing preparation will damage the transmission. Follow the above procedure exactly. If you cannot shift the transmission or start the engine (automatic transmission), your vehicle must be transported on a flat-bed.**
- **It is best to tow the vehicle no farther than 50 miles (80 km), and keep the speed below 35 mph (55 km/h).**
- **Trying to lift or tow your vehicle by the bumpers will cause serious damage. The bumpers are not designed to support the vehicle's weight.**

Front:

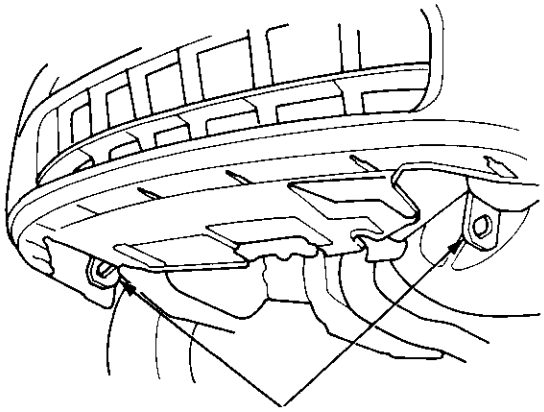

Rear:

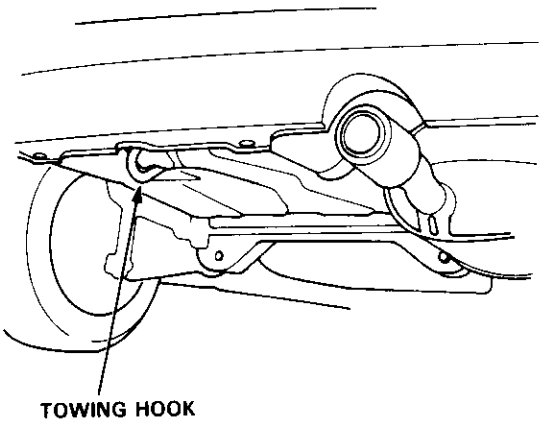

The Special Tools Section of this manual has been omitted intentionally. Each section in the manual that requires the use of special tools has them listed separately for that section.

Specifications

Standards and Service Limits 3-2
Design Specifications 3-20
Body Specifications 3-23

Standards and Service Limits

Cylinder Head/Valve Train (D16Y5, D16Y7, D16Y8 engines) — Section 6

	MEASUREMENT				STANDARD (NEW)	SERVICE LIMIT
Compression	250 rpm and wide open throttle kPa (kgf/cm², psi)		Nominal		———	
			Minimum		930 (9.5, 135)	
			Maximum variation		200 (2.0, 28)	
Cylinder head	Warpage				———	0.05 (0.002)
	Height				92.95 – 93.05 (3.659 – 3.663)	———
Camshaft	End play				0.05 – 0.15 (0.002 – 0.006)	0.5 (0.02)
	Camshaft-to-holder oil clearance				0.050 – 0.089 (0.002 – 0.004)	0.15 (0.006)
	Total runout				0.03 (0.001) max.	0.04 (0.002)
	Cam lobe height	D16Y7	IN		35.299 (1.3897)	———
			EX		37.281 (1.4678)	———
		D16Y5	IN	Primary	38.427 (1.5129)	———
				Secondary	32.193 (1.2674)	———
			EX		38.784 (1.5269)	———
		D16Y8	IN	Primary	36.778 (1.4479)	———
				Mid	38.274 (1.5068)	———
				Secondary	37.065 (1.4592)	———
			EX		38.008 (1.4964)	———
Valve	Valve clearance (Cold)			IN	0.18 – 0.22 (0.007 – 0.009)	———
				EX	0.23 – 0.27 (0.009 – 0.011)	———
	Valve stem O.D.			IN	5.48 – 5.49 (0.2157 – 0.2161)	5.45 (0.2146)
				EX	5.45 – 5.46 (0.2146 – 0.2150)	5.42 (0.2134)
	Stem-to-guide clearance			IN	0.02 – 0.05 (0.001 – 0.002)	0.08 (0.003)
				EX	0.05 – 0.08 (0.002 – 0.003)	0.11 (0.004)
Valve seat	Width			IN	0.85 – 1.15 (0.033 – 0.045)	1.6 (0.063)
				EX	1.25 – 1.55 (0.049 – 0.061)	2.0 (0.079)
	Stem installed height			IN	53.17 – 53.64 (2.093 – 2.112)	53.89 (2.122)
				EX	53.17 – 53.64 (2.093 – 2.112)	53.89 (2.122)
Valve spring	Free length	D16Y7			57.9 (2.28)	———
		D16Y5		IN	56.5 (2.22)	———
				EX	57.9 (2.28)	———
		D16Y8		IN	58.0 (2.28)	———
				EX	58.7 (2.31)	———
Valve guide	I.D.			IN	5.51 – 5.53 (0.217 – 0.218)	5.55 (0.219)
				EX	5.51 – 5.53 (0.217 – 0.218)	5.55 (0.219)
	Installed height			IN	17.85 – 18.35 (0.703 – 0.722)	———
				EX	18.65 – 19.15 (0.734 – 0.754)	———
Rocker arm	Arm-to-shaft clearance			IN	0.017 – 0.050 (0.0007 – 0.0020)	0.08 (0.003)
				EX	0.018 – 0.054 (0.0007 – 0.0021)	0.08 (0.003)

Unit of length: mm (in)

Cylinder Head/Valve Train (B16A2 engine) — Section 6

	MEASUREMENT			STANDARD (NEW)	SERVICE LIMIT
Compression	250 rpm (min^{-1}) and wide open throttle kPa (kgf/cm^2, psi)	Nominal		——	
		Minimum		930 (9.5, 135)	
		Maximum variation		200 (2.0, 28)	
Cylinder head	Warpage			——	0.05 (0.002)
	Height			141.95 – 142.05 (5.589 – 5.593)	——
Camshaft	End play			0.05 – 0.15 (0.002 – 0.006)	0.5 (0.02)
	Camshaft-to-holder oil clearance			0.050 – 0.089 (0.002 – 0.004)	0.15 (0.006)
	Total runout			0.03 (0.001) max.	0.04 (0.002)
	Cam lobe height	IN	Primary	33.088 (1.3027)	——
			Mid	36.267 (1.4278)	——
			Secondary	34.978 (1.3771)	——
		EX	Primary	32.785 (1.2907)	——
			Mid	35.720 (1.4063)	——
			Secondary	34.691 (1.3658)	——
Valve	Valve clearance		IN	0.15 – 0.19 (0.006 – 0.007)*	——
			EX	0.17 – 0.21 (0.007 – 0.008)*	——
	Valve stem O.D.		IN	5.475 – 5.485 (0.2156 – 0.2159)	5.445 (0.2144)
			EX	5.450 – 5.460 (0.2146 – 0.2150)	5.420 (0.2134)
	Stem-to-guide clearance		IN	0.025 – 0.055 (0.0010 – 0.0022)	0.08 (0.003)
			EX	0.050 – 0.080 (0.0020 – 0.0031)	0.11 (0.004)
Valve seat	Width		IN	1.25 – 1.55 (0.049 – 0.061)	2.0 (0.08)
			EX	1.25 – 1.55 (0.049 – 0.061)	2.0 (0.08)
	Stem installed height		IN	37.465 – 37.935 (1.4750 – 1.4935)	38.185 (1.5033)
			EX	37.165 – 37.635 (1.4632 – 1.4817)	37.885 (1.4915)
Valve spring	Free length	IN	OUTER	40.92 (1.611)*1	——
				40.91 (1.611)*2	——
			INNER	36.71 (1.445)	——
		EX		41.96 (1.652)*1	——
				41.94 (1.651)*2	——
Valve guide	I.D.		IN	5.51 – 5.53 (0.217 – 0.218)	5.55 (0.219)
			EX	5.51 – 5.53 (0.217 – 0.218)	5.55 (0.219)
	Installed height		IN	12.55 – 13.05 (0.494 – 0.514)	——
			EX	12.55 – 13.05 (0.494 – 0.514)	——
Rocker arm	Arm-to-shaft clearance		IN	0.025 – 0.052 (0.0010 – 0.0020)	0.08 (0.003)
			EX	0.025 – 0.052 (0.0010 – 0.0020)	0.08 (0.003)

*: Measuring point between camshaft and rocker arm.
*1: NIHON HATSUJO manufactured valve spring. *2: CHUO HATSUJO manufactured valve spring.

Standards and Service Limits

Engine Block (D16Y5, D16Y7, D16Y8 engines) — Section 7

	MEASUREMENT	STANDARD (NEW)	SERVICE LIMIT
Cylinder block	Warpage of deck surface	0.07 (0.003) max.	0.10 (0.004)
	Bore diameter	75.00 – 75.02 (2.953 – 2.954)	75.07 (2.956)
	Bore taper	——	0.05 (0.002)
	Reboring limit	——	0.5 (0.02)
Piston	Skirt O.D. at 5 mm (0.2 in) from bottom of skirt	74.980 – 74.990 (2.9520 – 2.9524)	74.970 (2.9516)
	Clearance in cylinder	0.010 – 0.040 (0.0004 – 0.0016)	0.05 (0.002)
	Groove width (for ring) Top	1.020 – 1.030 (0.0402 – 0.0406)	1.05 (0.041)
	Second	1.220 – 1.230 (0.0480 – 0.0484)	1.25 (0.049)
	Oil	2.805 – 2.820 (0.1104 – 0.1110)	2.85 (0.112)
Piston ring	Ring-to-groove clearance Top	0.035 – 0.060 (0.0014 – 0.0024)	0.13 (0.005)
	Second	0.030 – 0.055 (0.0012 – 0.0022)	0.13 (0.005)
	Ring end gap Top	0.15 – 0.30 (0.006 – 0.012)	0.60 (0.024)
	Second	0.30 – 0.45 (0.012 – 0.018)	0.70 (0.028)
	Oil	0.20 – 0.70 (0.008 – 0.028)	0.80 (0.031)
Piston pin	O.D.	18.994 – 19.000 (0.7478 – 0.7480)	——
	Pin-to-piston clearance	0.010 – 0.022 (0.0004 – 0.0009)	——
Connecting rod	Pin-to-rod interference	0.014 – 0.040 (0.0006 – 0.0016)	——
	Small end bore diameter	18.96 – 18.98 (0.746 – 0.747)	——
	Large end bore diameter Nominal	48.0 (1.89)	——
	End play installed on crankshaft	0.15 – 0.30 (0.006 – 0.012)	0.40 (0.016)
Crankshaft	Main journal diameter	54.976 – 55.000 (2.1644 – 2.1654)	——
	Rod journal diameter	44.976 – 45.000 (1.7707 – 1.7717)	——
	Taper	0.0025 (0.0001) max.	0.005 (0.0002)
	Out-of-round	0.0025 (0.0001) max.	0.005 (0.0002)
	End play	0.10 – 0.35 (0.004 – 0.014)	0.45 (0.018)
	Total runout	0.03 (0.001) max.	0.04 (0.002)
Bearings	Main bearing-to-journal oil clearance No. 1 and 5 journals	0.018 – 0.036 (0.0007 – 0.0014)	0.05 (0.002)
	No. 2, 3 and 4 journals	0.024 – 0.042 (0.0009 – 0.0017)	0.05 (0.002)
	Rod bearing-to-journal oil clearance	0.020 – 0.038 (0.0008 – 0.0015)	0.05 (0.002)

Unit of length: mm (in)

Engine Block (B16A2 engine) — Section 7

	MEASUREMENT		STANDARD (NEW)	SERVICE LIMIT
Cylinder block	Warpage of deck surface		0.05 (0.002)	0.08 (0.03)
	Bore diameter		81.00 – 81.02 (3.189 – 3.190)	81.07 (3.192)
	Bore taper		——	0.05 (0.002)
	Reboring limit		——	0.25 (0.01)
Piston	Skirt O.D. At 15 mm (0.6 in) from bottom of skirt		80.980 – 80.990 (3.1882 – 3.1886)	80.970 (3.1878)
	Clearance in cylinder		0.010 – 0.040 (0.0004 – 0.0016)	0.05 (0.002)
	Groove width (for ring)	Top	1.030 – 1.040 (0.0406 – 0.0409)	1.060 (0.0417)
		Second	1.230 – 1.240 (0.0484 – 0.0488)	1.260 (0.0496)
		Oil	2.805 – 2.820 (0.1104 – 0.1110)	2.840 (0.1118)
Piston ring	Ring-to-groove clearance	Top	0.045 – 0.070 (0.0018 – 0.0028)	0.13 (0.005)
		Second	0.040 – 0.065 (0.0016 – 0.0026)*1	0.13 (0.005)
			0.045 – 0.070 (0.0018 – 0.0028)*2	0.13 (0.005)
	Ring end gap	Top	0.20 – 0.35 (0.008 – 0.014)*1	0.60 (0.024)
			0.20 – 0.30 (0.008 – 0.012)*2	0.60 (0.024)
		Second	0.40 – 0.55 (0.016 – 0.022)	0.70 (0.028)
		Oil	0.20 – 0.50 (0.008 – 0.020)*1	0.70 (0.028)
			0.20 – 0.45 (0.008 – 0.018)*2	0.70 (0.028)
Piston pin	O.D.		20.994 – 21.000 (0.8265 – 0.8268)	——
	Pin-to-piston clearance		0.010 – 0.022 (0.0004 – 0.0009)	——
Connecting rod	Pin-to-rod interference		0.013 – 0.032 (0.0005 – 0.0013)	——
	Small end bore diameter		20.968 – 20.981 (0.8255 – 0.8260)	——
	Large end bore diameter	Nominal	48.0 (1.89)	——
	End play installed on crankshaft		0.15 – 0.30 (0.006 – 0.012)	0.40 (0.016)
Crankshaft	Main journal diameter			
	No. 1, 2, 4 and 5 journals		54.976 – 55.000 (2.1644 – 2.1654)	——
	No. 3 journal		54.970 – 54.994 (2.1642 – 2.1651)	——
	Rod journal diameter		44.976 – 45.000 (1.7707 – 1.7717)	——
	Taper		0.005 (0.0002) max.	0.010 (0.0004)
	Out of round		0.004 (0.0002) max.	0.006 (0.0002)
	End play		0.10 – 0.35 (0.004 – 0.014)	0.45 (0.018)
	Total runout		0.020 (0.0008) max.	0.030 (0.0012)
Bearing	Main bearing-to-journal oil clearance			
	No. 1, 2, 4 and 5 journals		0.024 – 0.042 (0.0009 – 0.0017)	0.06 (0.002)
	No. 3 journal		0.030 – 0.048 (0.0012 – 0.0019)	0.06 (0.002)
	Rod bearing-to-journal oil clearance		0.032 – 0.050 (0.0013 – 0.0020)	0.06 (0.002)

*1: RIKEN manufactured piston ring.
*2: TEIKOKU PISTON RING manufactured piston ring.

Engine Lubrication (D16Y5, D16Y7, D16Y8 engines) — Section 8

	MEASUREMENT		STANDARD (NEW)	SERVICE LIMIT
Engine oil	Capacity ℓ (US qt, Imp qt)	D16Y7	4.3 (4.5, 3.8) for engine overhaul	
			3.6 (3.8, 3.2) for oil change, including filter	
			3.3 (3.5, 2.9) for oil change, without filter	
		D16Y5, D16Y8	3.7 (3.9, 3.3) for engine overhaul	
			3.3 (3.5, 2.9) for oil change, including filter	
			3.0 (3.2, 2.6) for oil change, without filter	
Oil pump	Inner-to-outer rotor radial clearance		0.02 – 0.14 (0.001 – 0.006)	0.20 (0.008)
	Pump housing-to-outer rotor radial clearance		0.10 – 0.18 (0.004 – 0.007)	0.20 (0.008)
	Pump housing-to rotor axial clearance		0.03 – 0.08 (0.001 – 0.003)	0.15 (0.006)
Relief valve	Pressure setting with oil temperature 176°F (80°C) kPa (kgf/cm², psi)	at idle	70 (0.7, 10) min.	
		at 3,000 rpm	340 (3.5, 50) min.	

(cont'd)

Standards and Service Limits

Engine Lubrication (B16A2 engine) (cont'd) — Section 8

	MEASUREMENT	STANDARD (NEW)	SERVICE LIMIT
Engine oil	Capacity ℓ (US qt, Imp qt)	4.8 (5.1, 4.2) for engine overhaul 4.0 (4.2, 3.5) for oil change, including oil filter 3.7 (3.9, 3.3) for oil change, without filter	
Oil pump	Inner-to-outer rotor radial clearance Pump body-to-outer rotor radial clearance Pump body-to-rotor axial clearance	0.04 – 0.16 (0.002 – 0.006) 0.10 – 0.19 (0.004 – 0.007) 0.02 – 0.07 (0.001 – 0.003)	0.20 (0.008) 0.20 (0.008) 0.15 (0.006)
Relief valve	Pressure setting 176°F (80°C) kPa (kgf/cm², psi) at idle at 3,000 rpm	 70 (0.7, 10) min. 340 (3.5, 50) min.	

Cooling — Section 10

	MEASUREMENT	STANDARD (NEW)
Radiator	Coolant capacity ℓ (US qt, Imp qt) including engine, heater, cooling line and reservoir Reservoir capacity: 0.4 ℓ (0.42 US qt, 0.35 Imp qt)	B16A2 engine 5.0 (5.3, 4.4) for overhaul 4.5 (4.8, 4.0) for coolant change D16Y5, D16Y7, D16Y8 engines: M/T: 4.2 (4.4, 3.7) for overhaul 3.1 (3.3, 2.7) for coolant change A/T: D16Y7 4.1 (4.3, 3.6) for overhaul 3.0 (3.2, 2.6) for coolant change D16Y8 4.3 (4.5, 3.8) for overhaul 3.2 (3.3, 2.8) for coolant change CVT: 4.3 (4.5, 3.8) for overhaul 3.2 (3.3, 2.8) for coolant change
Radiator cap	Opening pressure kPa(kgf/cm², psi)	93 – 123 (0.95 – 1.25, 14 – 18)
Thermostat	Start to open °F (°C) Fully open °F (°C) Valve lift at fully open	169 – 176 (76 – 80) 194 (90) 8.0 (0.31) min.
Cooling fan	Thermoswitch "ON" temperature °F (°C) Thermoswitch "OFF" temperature °F (°C)	196 – 203 (91 – 95) Subtract 5 – 15 (3 – 8) from actual "ON" temperature

Unit of length: mm (in)

Fuel and Emission — Section 11

	MEASUREMENT		STANDARD (NEW)			
Fuel pressure regulator	Pressure with fuel pressure regulator vacuum hose disconnected kPa (kgf/cm², psi)	D16Y5	260 – 310 (2.7 – 3.2, 38 – 46)			
		D16Y7	260 – 310 (2.7 – 3.2, 38 – 46)			
		D16Y8	260 – 310 (2.7 – 3.2, 38 – 46)			
		B16A2	270 – 320 (2.8 – 3.3, 40 – 47)			
Fuel tank	Capacity ℓ (US gal, Imp gal)		45 (11.9, 9.9)			
Engine	Idle speed rpm		M/T (neutral)		A/T or CVT (N or P position)	
			U.S.A.	Canada	U.S.A.	Canada
		D16Y5	670 ± 50	——	700 ± 50	——
		D16Y7	670 ± 50	750 ± 50	700 ± 50	750 ± 50
		D16Y8	670 ± 50	750 ± 50	700 ± 50	750 ± 50
		B16A2	700 ± 50	750 ± 50	——	——
	Idle CO %		0.1 max.			

Clutch — Section 12

	MEASUREMENT		STANDARD (NEW)	SERVICE LIMIT
Clutch pedal	Pedal height	to floor	165 (6 1/2)	——
	Stroke		130 – 140 (5 1/8 – 5 1/2)	——
	Pedal play		12 – 21 (1/2 – 13/16)	——
	Disengagement height	to floor	83 (3 1/4)	——
		to carpet	44 (1 3/4) min. Reference	——
Flywheel	Clutch surface runout		0.05 (0.002) max.	0.15 (0.006)
Clutch disc	Rivet head depth		1.3 – 1.9 (0.05 – 0.07)	0.2 (0.01)
	Thickness		8.5 – 9.1 (0.33 – 0.36)	5.5 (0.22)
Pressure plate	Warpage		0.03 (0.001) max.	0.15 (0.006)
	Diaphragm spring fingers alignment		0.6 (0.02) max.	1.0 (0.04)

Standards and Service Limits

Manual Transmission S40 — Section 13

	MEASUREMENT	STANDARD (NEW)	SERVICE LIMIT
Transmission oil	Capacity ℓ (US qt, Imp qt)	1.9 (2.0, 1.7) for overhaul 1.8 (1.9, 1.6) for oil change	
Mainshaft	End play	0.11 – 0.18 (0.004 – 0.007)	Adjust
	Diameter of ball bearing contact area A (Transmission housing side)	21.987 – 22.000 (0.8656 – 0.8661)	21.930 (0.8634)
	Diameter of 4th, 5th gear contact area B	26.980 – 26.993 (1.0622 – 1.0627)	26.930 (1.0602)
	Diameter of 3rd gear contact area C	33.984 – 34.000 (1.3380 – 1.3386)	33.930 (1.3358)
	Diameter of ball bearing contact area D (Clutch housing side)	25.977 – 25.990 (1.0227 – 1.0232)	25.920 (1.0205)
	Runout	0.02 (0.001) max.	0.05 (0.002)
Mainshaft 3rd and 4th gears	I.D.	39.009 – 39.025 (1.5358 – 1.5364)	39.07 (1.538)
	End play 3rd	0.06 – 0.21 (0.002 – 0.008)	0.33 (0.013)
	4th	0.06 – 0.19 (0.002 – 0.007)	0.31 (0.012)
	Thickness 3rd	30.22 – 30.27 (1.190 – 1.192)	30.15 (1.187)
	4th	30.12 – 30.17 (1.186 – 1.188)	30.05 (1.183)
Mainshaft 5th gear	I.D.	37.009 – 37.025 (1.4570 – 1.4577)	37.07 (1.459)
	End play	0.06 – 0.19 (0.002 – 0.007)	0.31 (0.012)
	Thickness	28.42 – 28.47 (1.119 – 1.121)	28.35 (1.116)
Countershaft	Diameter of needle bearing contact area A	30.000 – 30.015 (1.1811 – 1.1817)	29.950 (1.1791)
	Diameter of 1st gear contact area B	35.984 – 36.000 (1.4167 – 1.4173)	35.930 (1.4146)
	Diameter of ball bearing contact area C	24.980 – 24.993 (0.9835 – 0.9840)	24.930 (0.9815)
	Runout	0.02 (0.001) max.	0.05 (0.002)
Countershaft 1st gear	I.D.	41.009 – 41.025 (1.6145 – 1.6152)	41.07 (1.617)
	End play (When tightened by the specified torque)	0.03 – 0.10 (0.001 – 0.004)	0.22 (0.009)
	Thickness	30.41 – 30.44 (1.197 – 1.198)	30.36 (1.195)
Countershaft 2nd gear	I.D.	44.009 – 44.025 (1.7326 – 1.7333)	44.07 (1.735)
	End play (When tightened by the specified torque)	0.04 – 0.12 (0.002 – 0.005)	0.24 (0.009)
	Thickness	31.91 – 31.96 (1.256 – 1.258)	31.85 (1.254)
Spacer collar (Countershaft 2nd gear)	I.D.	33.000 – 33.010 (1.2992 – 1.2996)	33.04 (1.301)
	O.D.	38.989 – 39.000 (1.5350 – 1.5354)	38.93 (1.533)
	Length	32.03 – 32.06 (1.261 – 1.262)	32.01 (1.260)
Spacer collar (Mainshaft 4th and 5th gear)	I.D.	27.002 – 27.012 (1.0631 – 1.0635)	27.06 (1.065)
	O.D. 4th	33.989 – 34.000 (1.3381 – 1.3386)	33.93 (1.336)
	5th	31.989 – 32.000 (1.2594 – 1.2598)	31.93 (1.257)
	Length 4th	22.83 – 22.86 (0.899 – 0.900)	22.81 (0.898)
	5th	23.53 – 23.56 (0.926 – 0.928)	23.51 (0.926)
Reverse idler gear	I.D.	15.016 – 15.043 (0.5912 – 0.5922)	15.08 (0.594)
	Gear-to-reverse gear shaft clearance	0.032 – 0.077 (0.0013 – 0.0030)	0.14 (0.006)
Synchro ring	Ring-to-gear clearance (Ring pushed against gear)	0.73 – 1.18 (0.029 – 0.046)	0.4 (0.016)
Shift fork	Fork finger thickness 1st/2nd/5th	6.2 – 6.4 (0.244 – 0.252)	——
	3rd/4th	7.4 – 7.6 (0.291 – 0.299)	——
	Fork-to-synchro sleeve clearance	0.35 – 0.65 (0.014 – 0.026)	1.0 (0.04)
Reverse shift fork	Fork pawl groove width	12.7 – 13.0 (0.50 – 0.51)	——
	Fork-to-reverse idler gear clearance	0.5 – 1.1 (0.020 – 0.043)	1.8 (0.07)
	L-groove width	7.05 – 7.25 (0.278 – 0.285)	——
	Fork-to-5th/reverse shift piece pin clearance	0.05 – 0.35 (0.002 – 0.014)	0.5 (0.02)
Shift arm A	Inner diameter of shift arm C contact point	13.05 – 13.13 (0.514 – 0.517)	——
	Shift arm A-to-shift arm C clearance	0.05 – 0.23 (0.002 – 0.009)	0.35 (0.014)
Shift arm B	Inner diameter of shift arm B shaft contact point	13.973 – 14.000 (0.5501 – 0.5512)	——
	Shift arm B-to-shaft clearance	0.013 – 0.070 (0.0005 – 0.0028)	0.16 (0.006)
	Shift arm B-to-shift piece clearance	0.2 – 0.5 (0.008 – 0.020)	0.62 (0.0244)
	Diameter of shift piece contact point	12.9 – 13.0 (0.508 – 0.512)	12.78 (0.5031)
MBS Shift piece	Diameter of pin	6.9 – 7.1 (0.27 – 0.28)	6.8 (0.268)
Differential carrier	Pinion shaft bore diameter	18.010 – 18.028 (0.7091 – 0.7098)	——
	Carrier-to-pinion shaft clearance	0.023 – 0.057 (0.0009 – 0.0022)	0.095 (0.004)
	Driveshaft bore diameter	26.025 – 26.045 (1.0246 – 1.0254)	——
	Carrier-to-driveshaft clearance	0.045 – 0.086 (0.0018 – 0.0034)	0.14 (0.006)
Differential pinion gear	Backlash	0.05 – 0.15 (0.002 – 0.006)	——
	Pinion gear bore diameter	18.042 – 18.066 (0.7103 – 0.7113)	——
	Pinion gear-to-pinion shaft clearance	0.055 – 0.095 (0.0021 – 0.0037)	0.15 (0.006)
Set ring-to-bearing outer race		0 – 0.1 (0 – 0.004)	Adjust with shim

Unit of length: mm (in)

Manual Transmission S4C — Section 13

	MEASUREMENT	STANDARD (NEW)	SERVICE LIMIT
Transmission oil	Capacity ℓ (US qt, Imp qt)	2.3 (2.4, 2.0) for overhaul 2.2 (2.3, 1.9) for oil change	
Mainshaft	End play Diameter of ball bearing contact area C (Clutch housing side) Diameter of 3rd gear contact area B Diameter of ball bearing contact area A (Transmission housing side) Runout	0.11 – 0.18 (0.004 – 0.007) 27.977 – 27.990 (1.1015 – 1.1020) 37.984 – 38.000 (1.4954 – 1.4960) 27.987 – 28.000 (1.1018 – 1.1024) 0.02 (0.001) max.	Adjust 27.930 (1.0996) 37.930 (1.4933) 27.940 (1.1000) 0.05 (0.002)
Mainshaft 3rd and 4th gears	I.D. End play Thickness 3rd Thickness 4th	43.009 – 43.025 (1.6933 – 1.6939) 0.06 – 0.21 (0.002 – 0.008) 34.92 – 34.97 (1.375 – 1.377) 31.42 – 31.47 (1.237 – 1.239)	43.08 (1.696) 0.3 (0.01) 34.3 (1.350) 31.3 (1.232)
Mainshaft 5th gear	I.D. End play Thickness	43.009 – 43.025 (1.6933 – 1.6939) 0.06 – 0.21 (0.002 – 0.008) 31.42 – 31.47 (1.237 – 1.239)	43.08 (1.696) 0.3 (0.01) 31.3 (1.232)
Countershaft	Diameter of ball bearing contact area A Diameter of 1st gear contact area B Diameter of needle bearing contact area C Runout	24.980 – 24.993 (0.9835 – 0.9840) 36.984 – 37.000 (1.4561 – 1.4567) 33.000 – 33.015 (1.2992 – 1.2998) 0.02 (0.0008) max.	24.940 (0.9818) 36.930 (1.4539) 32.950 (1.2970) 0.05 (0.002)
Countershaft 1st gear	I.D. End play (When tightened by the specified torque)	41.009 – 41.025 (1.6145 – 1.6152) 0.045 – 0.205 (0.0018 – 0.0081)	41.07 (1.617) 0.25 (0.01)
Countershaft 2nd gear	I.D. End play (When tightened by the specified torque) Thickness	44.009 – 44.025 (1.7326 – 1.7333) 0.07 – 0.14 (0.003 – 0.006) 28.92 – 28.97 (1.1386 – 1.1405)	44.07 (1.735) 0.24 (0.009) 28.8 (1.134)
Spacer collar (Countershaft 2nd gear)	I.D. O.D. Length	36.521 – 36.531 (1.4378 – 1.4382) 41.989 – 42.000 (1.6531 – 1.6535) 29.07 – 29.09 (1.1444 – 1.1453)	36.54 (1.439) 41.93 (1.651) ——
Spacer collar (Mainshaft 4th and 5th gear)	I.D. O.D. Length 4th/5th gear side	31.002 – 31.012 (1.2205 – 1.2209) 36.989 – 37.000 (1.4563 – 1.4570) 56.45 – 56.55 (2.2224 – 2.2264) 26.03 – 26.08 (1.025 – 1.027)	31.06 (1.223) 36.94 (1.454) —— ——

(cont'd)

Standards and Service Limits

Manual Transmission S4C (cont'd) — Section 13

	MEASUREMENT	STANDARD (NEW)	SERVICE LIMIT
Reverse idler gear	I.D.	20.016 – 20.043 (0.7880 – 0.7891)	20.09 (0.7909)
	Gear-to-reverse gear shaft clearance	0.036 – 0.084 (0.0014 – 0.0033)	0.16 (0.006)
Synchro ring	Ring-to-gear clearance (Ring pushed against gear)	0.73 – 1.18 (0.029 – 0.046)	0.4 (0.016)
Double cone	Clearance (Ring pushed against gear)		
	Outer synchro ring-to-gear	0.95 – 1.68 (0.037 – 0.066)	0.6 (0.024)
	Inner synchro ring-to-gear	0.5 – 1.0 (0.02 – 0.04)	0.3 (0.01)
	Outer synchro ring-to-synchro cone	0.5 – 1.0 (0.02 – 0.04)	0.3 (0.01)
Shift fork	Fork finger thickness	7.4 – 7.6 (0.291 – 0.299)	———
	Fork-to-synchro sleeve clearance	0.35 – 0.65 (0.015 – 0.026)	1.0 (0.04)
Reverse shift fork	Fork pawl groove width	13.0 – 13.3 (0.512 – 0.524)	———
	Fork-to-reverse idler gear clearance	0.5 – 1.0 (0.02 – 0.04)	1.8 (0.07)
	L-groove width At 5th gear side	7.4 – 7.7 (0.29 – 0.30)	———
	At reverse side	7.05 – 7.25 (0.278 – 0.285)	———
	Fork-to-5th/reverse shift piece pin clearance		
	At 5th gear side	0.4 – 0.9 (0.02 – 0.04)	———
	At reverse side	0.05 – 0.45 (0.002 – 0.018)	———
Shift piece	Shift piece-to-shift arm clearance	0.1 – 0.3 (0.004 – 0.012)	0.6 (0.02)
	Groove width of shift arm contact area	8.1 – 8.2 (0.319 – 0.323)	———
	Shift-piece-to-shift fork shaft clearance	0.2 – 0.5 (0.008 – 0.020)	0.8 (0.03)
	Width of shift fork contact area	11.9 – 12.0 (0.469 – 0.472)	———
Select arm	Select arm-to-interlock clearance	0.05 – 0.20 (0.002 – 0.008)	0.45 (0.018)
	Select arm-to-shim clearance	0.01 – 0.2 (0.0004 – 0.008)	———
Interlock	Width of select arm contact area	9.9 – 10.0 (0.390 – 0.394)	———
Change piece	Change piece-to-shift arm holder clearance	0.05 – 0.35 (0.002 – 0.014)	0.8 (0.03)
	Groove width of shift arm holder contact area	12.05 – 12.15 (0.474 – 0.478)	———
	Change piece-to-select arm clearance	0.05 – 0.25 (0.002 – 0.010)	0.5 (0.02)
	Groove width of select arm contact area	12.05 – 12.15 (0.474 – 0.478)	———
Final driven gear	Backlash	0.090 – 0.149 (0.0035 – 0.0059)	0.200 (0.008)
Differential carrier	Pinion shaft bore diameter	18.000 – 18.016 (0.7087 – 0.7093)	———
	Carrier-to-pinion shaft clearance	0.013 – 0.045 (0.001 – 0.002)	0.10 (0.004)
	Driveshaft bore diameter	28.000 – 28.021 (1.1024 – 1.1032)	———
	Carrier-to-driveshaft clearance	0.020 – 0.062 (0.0008 – 0.0024)	0.12 (0.005)
	Carrier-to-intermediate shaft clearance	0.05 – 0.087 (0.0020 – 0.0034)	0.14 (0.006)
Differential pinion gear	Backlash	0.05 – 0.15 (0.002 – 0.006)	———
	Pinion gear bore diameter	18.042 – 18.066 (0.710 – 0.711)	———
	Pinion gear-to-pinion shaft clearance	0.055 – 0.095 (0.002 – 0.004)	0.15 (0.006)
Set ring-to-bearing outer race		0 – 0.10 (0 – 0.004)	Adjust with shim

Unit of length: mm (in)

Automatic Transmission — Section 14

	MEASUREMENT		STANDARD (NEW)	SERVICE LIMIT
Transmission fluid	Capacity ℓ (US qt, Imp qt)		5.9 (6.2, 5.2) for overhaul 2.7 (2.9, 2.4) for fluid change	
Hydraulic pressure kPa (kgf/cm², psi)	Line pressure at 2,000 rpm in N or P position		830 – 880 (8.5 – 9.0, 120 – 130)	780 (8.0, 110)
	1st clutch pressure at 2,000 rpm in D4 position			
	2nd clutch pressure at 2,000 rpm in D4 position		800 – 850 (8.2 – 8.7, 120 – 124)	760 (7.7, 110)
	3rd and 4th clutch pressure at 2,000 rpm in D4 position		810 – 860 (8.3 – 8.8, 118 – 125)	760 (7.8, 111)
Stall speed rpm (Check with vehicle on level ground)			2,700	2,550 – 2,850
Clutch	Clutch initial clearance	1st, 2nd	0.65 – 0.85 (0.026 – 0.033)	——
		3rd, 4th	0.40 – 0.60 (0.016 – 0.024)	——
	Clutch return spring free length (A4RA, B4RA Transmission)	1st	32.0 (1.26)	30.0 (1.18)
		2nd, 3rd, 4th	30.5 (1.20)	28.5 (1.12)
	(M4RA Transmission)	1st	31.1 (1.22)	29.1 (1.15)
		2nd, 3rd, 4th	30.5 (1.20)	28.5 (1.12)
	Clutch disc thickness		1.88 – 2.00 (0.074 – 0.079)	Until grooves worn out
	Clutch plate thickness	1st	1.55 – 1.65 (0.061 – 0.065)	Discoloration
		2nd, 3rd, 4th	1.95 – 2.05 (0.077 – 0.081)	
	Clutch end plate thickness (A4RA, B4RA Transmission)	Mark 1	2.05 – 2.10 (0.081 – 0.083)	Discoloration
		Mark 2	2.15 – 2.20 (0.085 – 0.087)	↑
		Mark 3	2.25 – 2.30 (0.089 – 0.091)	
		Mark 4	2.35 – 2.40 (0.093 – 0.094)	
		Mark 5	2.45 – 2.50 (0.096 – 0.098)	
		Mark 6	2.55 – 2.60 (0.100 – 0.102)	
		Mark 7	2.65 – 2.70 (0.104 – 0.106)	
		Mark 8	2.75 – 2.80 (0.108 – 0.110)	↓
		Mark 9	2.85 – 2.90 (0.112 – 0.114)	Discoloration
	Clutch end plate thickness (M4RA Transmission)	Mark 1	2.3 – 2.4 (0.091 – 0.094)	Discoloration
		Mark 2	2.4 – 2.5 (0.094 – 0.098)	↑
		Mark 3	2.5 – 2.6 (0.098 – 0.102)	
		Mark 4	2.6 – 2.7 (0.102 – 0.106)	
		Mark 5	2.7 – 2.8 (0.106 – 0.110)	
		Mark 6	2.8 – 2.9 (0.110 – 0.114)	
		Mark 7	2.9 – 3.0 (0.114 – 0.118)	
		Mark 8	3.0 – 3.1 (0.118 – 0.122)	
		Mark 9	3.1 – 3.2 (0.122 – 0.126)	
		Mark 10	3.2 – 3.3 (0.126 – 0.130)	
		Mark 11	2.0 – 2.1 (0.079 – 0.083)	
		Mark 12	2.1 – 2.2 (0.083 – 0.087)	
		Mark 13	2.2 – 2.3 (0.087 – 0.091)	
		Mark 14	3.3 – 3.4 (0.130 – 0.134)	
		Mark 15	3.4 – 3.5 (0.134 – 0.138)	
		Mark 16	3.5 – 3.6 (0.138 – 0.142)	
		Mark 17	3.6 – 3.7 (0.142 – 0.146)	↓
		Mark 18	3.7 – 3.8 (0.146 – 0.150)	Discoloration

(cont'd)

Standards and Service Limits

Automatic Transmission (cont'd) — Section 14

	MEASUREMENT	STANDARD (NEW)	SERVICE LIMIT
Transmission	Diameter of needle bearing contact area		
	On mainshaft stator shaft bearing	22.980 – 22.993 (0.9047 – 0.9052)	Wear or damage
	On mainshaft 2nd gear	35.975 – 35.991 (1.4163 – 1.4169)	↑
	On mainshaft 4th gear collar	31.975 – 31.991 (1.2589 – 1.2595)	
	On mainshaft 1st gear collar	30.975 – 30.991 (1.2195 – 1.2201)	
	On countershaft (left side)	36.004 – 36.017 (1.4175 – 1.4180)	
	On countershaft 3rd gear collar	35.980 – 35.996 (1.4165 – 1.4172)	
	On countershaft 4th gear	27.980 – 27.993 (1.1016 – 1.1021)	
	On countershaft reverse gear collar	31.975 – 31.991 (1.2589 – 1.2595)	
	On countershaft 1st gear collar	31.975 – 31.991 (1.2589 – 1.2595)	↓
	On reverse idler gear shaft	13.990 – 14.000 (0.5508 – 0.5512)	Wear or damage
	Inside diameter of needle bearing contact area		
	On mainshaft 1st gear	35.000 – 35.016 (1.3780 – 1.3786)	Wear or damage
	On mainshaft 2nd gear	41.000 – 41.016 (1.6142 – 1.6148)	↑
	On mainshaft 4th gear	38.000 – 38.016 (1.4961 – 1.4967)	
	On countershaft 1st gear	38.000 – 38.016 (1.4961 – 1.4967)	
	On countershaft 3rd gear	41.000 – 41.016 (1.6142 – 1.6148)	
	On countershaft 4th gear	33.000 – 33.016 (1.2992 – 1.2998)	
	On countershaft reverse gear	38.000 – 38.016 (1.4961 – 1.4967)	
	On reverse idler gear	18.007 – 18.020 (0.7089 – 0.7094)	
	On stator shaft (ATF pump side)	29.000 – 29.013 (1.1417 – 1.1422)	
	On stator shaft (stator side)	27.000 – 27.021 (1.0630 – 1.0638)	↓
	Reverse idler gear shaft holder I.D.	14.416 – 14.434 (0.5676 – 0.5683)	Wear or damage
	End play		
	Mainshaft 1st gear	0.08 – 0.19 (0.003 – 0.007)	——
	Mainshaft 2nd gear	0.05 – 0.13 (0.002 – 0.005)	——
	Mainshaft 4th gear	0.075 – 0.185 (0.003 – 0.007)	——
	Countershaft 1st gear	0.1 – 0.5 (0.004 – 0.020)	——
	Countershaft 3rd gear	0.05 – 0.17 (0.002 – 0.007)	——
	Countershaft 4th gear	0.10 – 0.18 (0.004 – 0.007)	——
	Reverse idler gear	0.05 – 0.18 (0.002 – 0.007)	——
	Countershaft reverse gear	0.10 – 0.25 (0.004 – 0.010)	——
	Selector hub O.D.	51.87 – 51.90 (2.042 – 2.043)	Wear or damage
	Mainshaft 4th gear collar length	45.00 – 45.03 (1.771 – 1.773)	——
	Mainshaft 4th gear collar flange thickness	4.435 – 4.525 (0.1746 – 0.1781)	Wear or damage
	Mainshaft 1st gear collar length	27.00 – 27.15 (1.063 – 1.069)	——
	Countershaft distance collar length	38.87 – 38.90 (1.530 – 1.531)	——
		38.92 – 38.95 (1.532 – 1.533)	——
		38.97 – 39.00 (1.534 – 1.535)	——
		39.02 – 39.05 (1.536 – 1.537)	——
		39.07 – 39.10 (1.538 – 1.539)	——
		39.12 – 39.15 (1.540 – 1.541)	——
		39.17 – 39.20 (1.542 – 1.543)	——
		39.22 – 39.25 (1.544 – 1.545)	——
		39.27 – 39.30 (1.546 – 1.547)	——
	Countershaft 3rd gear collar length '96 – 97 models	21.15 – 21.20 (0.833 – 0.835)	——
	'98 – 00 models	20.65 – 20.70 (0.813 – 0.825)	——
	Countershaft reverse gear collar length	14.5 – 14.6 (0.571 – 0.575)	——
	Countershaft reverse gear collar flange thickness	2.4 – 2.6 (0.094 – 0.102)	Wear or damage
	Countershaft 1st gear collar length	14.5 – 14.6 (0.571 – 0.575)	——
	Countershaft 1st gear collar flange thickness	2.4 – 2.6 (0.094 – 0.102)	Wear or damage

Unit of length: mm (in)

Automatic Transmission — Section 14

	MEASUREMENT	STANDARD (NEW)	SERVICE LIMIT
Transmission	Mainshaft 2nd gear thrust washer thickness	3.97 – 4.00 (0.156 – 0.157) 4.02 – 4.05 (0.158 – 0.159) 4.07 – 4.10 (0.160 – 0.161) 4.12 – 4.15 (0.162 – 0.163) 4.17 – 4.20 (0.164 – 0.165) 4.22 – 4.25 (0.166 – 0.167) 4.27 – 4.30 (0.168 – 0.169) 4.32 – 4.35 (0.170 – 0.171) 4.37 – 4.40 (0.172 – 0.173) 4.42 – 4.45 (0.174 – 0.175)	Wear or damage ↕ Wear or damage
	Thrust washer thickness Mainshaft ball bearing left side Mainshaft 1st gear Countershaft 3rd gear splined washer '96 – 97 models '98 – 00 models	 2.95 – 3.05 (0.116 – 0.120) 2.43 – 2.50 (0.096 – 0.098) 4.45 – 4.50 (0.175 – 0.177) 4.95 – 5.00 (0.195 – 0.197)	 Wear or damage ↕ Wear or damage
	One-way clutch contact area Countershaft 1st gear I.D. Park gear O.D. Mainshaft feed pipe A, O.D. (at 15 mm (0.59 in) from end) Mainshaft feed pipe B, O.D. (at 30 mm (1.2 in) from end) Countershaft feed pipe O.D. (at 15 mm (0.59 in) from end) Mainshaft sealing ring thickness (29 mm (1.1 in) and 35 mm (1.4 in)) Mainshaft bushing I.D. Mainshaft bushing I.D. Countershaft bushing I.D. Mainshaft sealing ring goove width	 83.339 – 83.365 (3.2810 – 3.2821) 66.685 – 66.698 (2.6254 – 2.6259) 8.97 – 8.98 (0.353 – 0.354) 5.97 – 5.98 (0.2350 – 0.2354) 7.97 – 7.98 (0.3138 – 0.3142) 1.87 – 1.97 (0.074 – 0.078) 6.018 – 6.030 (0.2369 – 0.2374) 9.000 – 9.015 (0.3543 – 0.3549) 8.000 – 8.022 (0.3150 – 0.3158) 2.025 – 2.075 (0.0797 – 0.0817)	 Wear or damage Wear or damage 8.95 (0.352) 5.95 (0.234) 7.95 (0.313) 1.80 (0.071) 6.045 (0.2380) 9.03 (0.356) 8.03 (0.316) 2.08 (0.082)
Regulator valve body	Sealing ring contact area I.D.	35.000 – 35.025 (1.3780 – 1.3782)	35.050 (1.3799)
Shifting device and park brake control	Reverse shift fork finger thickness Park brake pawl Park gear	5.90 – 6.00 (0.232 – 0.236) ——— ———	5.40 (0.213) Wear or other defect
Servo body	Shift fork shaft bore I.D. Shift fork shaft valve bore I.D.	14.000 – 14.010 (0.5512 – 0.5516) 37.000 – 37.039 (1.4567 – 1.4582)	——— 37.045 (1.4585)
ATF pump	ATF pump gear side clearance ATF pump gear-to-body clearance Drive Driven ATF pump driven gear I.D. ATF pump driven gear shaft O.D.	0.03 – 0.05 (0.001 – 0.002) 0.1050 – 0.1325 (0.0041 – 0.0052) 0.0350 – 0.0625 (0.0014 – 0.0025) 14.016 – 14.034 (0.5518 – 0.5525) 13.980 – 13.990 (0.5504 – 0.5508)	0.07 (0.003) ——— ——— Wear or damage Wear or damage
Differential carrier	Pinion shaft contact area I.D. Carrier-to-pinion clearance Driveshaft contact are I.D. Carrier-to-driveshaft clearance	18.010 – 18.028 (0.7091 – 0.7098) 0.023 – 0.057 (0.0009 – 0.0022) 26.025 – 26.045 (1.0246 – 1.0254) 0.045 – 0.086 (0.0018 – 0.0034)	——— 0.1 (0.004) ——— 0.12 (0.005)
Differential pinion gear	Backlash I.D. Pinion gear-to-pinion shaft clearance	0.05 – 0.15 (0.002 – 0.006) 18.042 – 18.066 (0.7103 – 0.7113) 0.055 – 0.095 (0.0022 – 0.0037)	——— ——— 0.15 (0.006)
Set ring-to-bearing outer race clearance		0 – 0.15 (0 – 0.006)	Adjust

(cont'd)

Standards and Service Limits

Automatic Transmission (cont'd) — Section 14

	MEASUREMENT	STANDARD (NEW)			
		Wire Dia.	O.D.	Free Length	No. of Coils
Springs	Regulator valve spring A	1.8 (0.071)	14.7 (0.584)	87.8 (3.457)	16.5
	Regulator valve spring B	1.8 (0.071)	9.6 (0.381)	44.0 (1.732)	11.0
	Stator reaction spring	4.5 (0.177)	35.4 (1.407)	30.3 (1.193)	1.9
	Modulator valve spring	1.4 (0.055)	9.4 (0.374)	35.0 (1.378)	10.9
	Torque converter check valve spring	1.0 (0.039)	8.4 (0.334)	33.8 (1.331)	8.2
	Cooler relief valve spring	1.0 (0.039)	8.4 (0.334)	33.8 (1.331)	8.2
	Relief valve spring	1.1 (0.043)	8.6 (0.342)	37.1 (1.461)	13.4
	2nd orifice control valve spring	0.7 (0.028)	6.6 (0.262)	34.8 (1.370)	22.0
	1-2 shift valve spring	0.9 (0.035)	7.6 (0.302)	41.3 (1.626)	16.3
	2-3 shift valve spring	0.9 (0.035)	7.6 (0.302)	57.0 (2.244)	26.8
	3-4 shift valve spring	0.9 (0.035)	7.6 (0.302)	57.0 (2.244)	26.8
	1st accumulator spring	2.1 (0.083)	16.0 (0.636)	89.1 (3.508)	16.2
	4th accumulator spring B	2.3 (0.091)	10.2 (0.402)	51.6 (2.031)	13.8
	4th accumulator spring A	2.6 (0.102)	17.0 (0.676)	87.0 (3.425)	14.2
	2nd accumulator spring A	2.4 (0.094)	29.0 (1.152)	39.0 (1.535)	2.9
	3rd accumulator spring A	2.8 (0.110)	17.5 (0.695)	89.3 (3.516)	15.6
	2nd accumulator spring B	1.6 (0.063)	9.0 (0.358)	20.7 (0.815)	6.1
	3rd accumulator spring B	2.2 (0.087)	31.0 (1.220)	35.1 (1.382)	2.4
	2nd accumulator spring C	2.2 (0.087)	14.5 (0.576)	68.0 (2.677)	13.9
	Lock-up shift valve spring	0.9 (0.035)	7.6 (0.302)	73.7 (2.902)	32.0
	Lock-up timing valve spring	0.9 (0.035)	8.1 (0.319)	80.7 (3.177)	45.8
	Lock-up control valve spring	0.7 (0.028)	6.6 (0.262)	38.0 (1.496)	14.1
	3-4 orifice control valve spring	0.7 (0.028)	6.6 (0.262)	37.5 (1.476)	24.6
	Servo control valve spring	1.0 (0.039)	8.1 (0.322)	52.1 (2.051)	20.8
	CPC valve spring	0.6 (0.024)	5.6 (0.223)	12.2 (0.480)	5.5
	CPB valve spring	0.9 (0.035)	8.1 (0.322)	47.2 (1.858)	18.3
	4th exhaust valve spring	0.9 (0.035)	6.1 (0.242)	36.4 (1.433)	19.5

CVT — Section 14

	MEASUREMENT		STANDARD (NEW)	SERVICE LIMIT
Transmission fluid	Capacity ℓ (US qt, Imp. qt)		6.4 (6.8, 5.6) for overhaul 3.9 (4.1, 3.4) for fluid change	
Hydraulic pressure MPa (kgf/cm², psi)	Forward clutch pressure at 1,500 rpm in D position		1.4 – 1.75 (14.3 – 17.8, 203 – 253)	
	Reverse brake pressure at 1,500 rpm in R position		1.4 – 1.75 (14.3 – 17.8, 203 – 253)	
	Drive pulley pressure at 1,500 rpm in N position		0.2 – 0.7 (2.0 – 7.1, 28 – 101)	
	Driven pulley pressure at 1,500 rpm in N position		1.5 – 2.3 (15.3 – 23.5, 218 – 334)	
	Lubrication pressure at 3,000 rpm in N position		Above 0.2 (2, 30)	
Stall speed rpm (Check with vehicle on level ground) D position S, L, R positions			 2,500 3,000	 2,350 – 2,650 2,800 – 3,100
Clutch	Clutch initial clearance	Forward clutch	0.6 – 0.8 (0.024 – 0.031)	———
		Start clutch	0.5 – 0.7 (0.020 – 0.028)	———
		Reverse brake	0.45 – 0.75 (0.018 – 0.030)	———
	Clutch return spring free length	Forward clutch	30.5 (1.201)	28.5 (1.122)
		Start clutch	40.9 (1.610)	38.9 (1.531)
		Reverse brake	29.4 (1.157)	27.4 (1.079)
	Clutch disc thickness	Forward clutch	1.88 – 2.00 (0.074 – 0.079)	Until grooves worn out
		Start clutch	1.88 – 2.00 (0.074 – 0.079)	———
		Reverse brake	1.94 – 2.06 (0.076 – 0.081)	Until grooves worn out
	Clutch plate thickness	Forward clutch	1.95 – 2.05 (0.077 – 0.081)	Discoloration
		Start clutch	2.25 – 2.35 (0.089 – 0.093)	Discoloration
		Reverse brake	1.90 – 2.00 (0.075 – 0.079)	Discoloration

Unit of length: mm (in)

CVT — Section 14

	MEASUREMENT		STANDARD (NEW)	SERVICE LIMIT
Clutch	Forward clutch end plate thickness	Mark 1 or 15	3.4 – 3.5 (0.134 – 0.138)	Discoloration
		Mark 2 or 16	3.5 – 3.6 (0.138 – 0.142)	↑
		Mark 3 or 17	3.6 – 3.7 (0.142 – 0.146)	
		Mark 4 or 18	3.7 – 3.8 (0.146 – 0.150)	
		Mark 5 or 19	3.8 – 3.9 (0.150 – 0.154)	
		Mark 6 or 20	3.9 – 4.0 (0.154 – 0.157)	
		Mark 7 or 21	4.0 – 4.1 (0.157 – 0.161)	
		Mark 8 or 22	4.1 – 4.2 (0.161 – 0.165)	
		Mark 9 or 23	4.2 – 4.3 (0.165 – 0.169)	
		Mark 10 or 24	4.3 – 4.4 (0.169 – 0.173)	
		Mark 11 or 25	4.4 – 4.5 (0.173 – 0.177)	
		Mark 12 or 26	4.5 – 4.6 (0.177 – 0.181)	↓
		Mark 13 or 27	4.6 – 4.7 (0.181 – 0.185)	Discoloration
	Reverse brake end plate thickness	Mark 1	3.55 – 3.65 (0.140 – 0.144)	Discoloration
		Mark 2	3.75 – 3.85 (0.148 – 0.152)	↑
		Mark 3	3.95 – 4.05 (0.156 – 0.159)	
		Mark 4	4.15 – 4.25 (0.163 – 0.167)	
		Mark 5	4.35 – 4.45 (0.171 – 0.175)	
		Mark 6	4.55 – 4.65 (0.179 – 0.183)	
		Mark 7	4.75 – 4.85 (0.187 – 0.191)	↓
		Mark 8	4.95 – 5.05 (0.195 – 0.199)	Discoloration
ATF pump	ATF pump drive gear shaft O.D.		9.98 – 9.99 (0.3929 – 0.3933)	Wear or damaged
	ATF pump driven gear shaft O.D.		9.98 – 9.99 (0.3929 – 0.3933)	Wear or damaged
	ATF pump body bushing I.D.	Drive gear shaft	10.000 – 10.015 (0.3937 – 0.3943)	Wear or damaged
		Driven gear shaft	10.000 – 10.015 (0.3937 – 0.3943)	Wear or damaged
	ATF pump gear side clearance		0.015 – 0.035 (0.0006 – 0.0014)	——
	ATF pump gear-to-body clearance	Drive gear	0.035 – 0.0505 (0.0014 – 0.0020)	——
		Driven gear	0.035 – 0.0505 (0.0014 – 0.0020)	——
Transmission	Diameter of needle bearing contact area			
	Input shaft – flywheel side		19.987 – 20.000 (0.7869 – 0.7874)	Wear or damaged
	Input shaft – forward clutch side		19.987 – 20.000 (0.7869 – 0.7874)	Wear or damaged
	Drive pulley shaft – start clutch side		43.981 – 43.991 (1.7315 – 1.7319)	Wear or damaged
	Drive pulley shaft – flywheel side		24.007 – 24.020 (0.945 – 0.946)	Wear or damaged
	Drive pulley shaft – forward clutch side		24.007 – 24.020 (0.945 – 0.946)	Wear or damaged
	Thrust clearance			
	Carrier and ring gear		0.050 – 0.110 (0.0020 – 0.0043)	——
	Driven pulley shaft and start clutch hub		0.000 – 0.130 (0.000 – 0.005)	——
	Input shaft and ATF pump driven sprocket		0.370 – 0.650 (0.015 – 0.026)	——
	Secondary gear shaft and flywheel ball bearing		0.00 – 0.15 (0.00 – 0.006)	——

(cont'd)

	MEASUREMENT	STANDARD (NEW)	SERVICE LIMIT
Transmission (cont'd)	Thrust shim, 25 x 31 mm thickness	1.02 – 1.05 (0.040 – 0.041) 1.09 – 1.12 (0.043 – 0.044) 1.16 – 1.19 (0.046 – 0.047) 1.23 – 1.26 (0.048 – 0.050) 1.30 – 1.33 (0.051 – 0.052) 1.37 – 1.40 (0.054 – 0.055) 1.44 – 1.47 (0.057 – 0.058) 1.51 – 1.54 (0.059 – 0.061) 1.58 – 1.61 (0.062 – 0.063) 1.65 – 1.68 (0.065 – 0.066) 1.72 – 1.75 (0.068 – 0.069) 1.79 – 1.82 (0.070 – 0.072) 1.055 – 1.085 (0.0415 – 0.0427) 1.125 – 1.155 (0.0443 – 0.0454) 1.195 – 1.225 (0.0470 – 0.0482) 1.265 – 1.295 (0.0498 – 0.0510) 1.335 – 1.365 (0.0526 – 0.0537) 1.405 – 1.435 (0.0553 – 0.0565) 1.475 – 1.505 (0.0580 – 0.0593) 1.545 – 1.575 (0.0608 – 0.0620) 1.615 – 1.645 (0.0636 – 0.0648) 1.685 – 1.715 (0.0663 – 0.0675) 1.755 – 1.785 (0.0691 – 0.0703)	Wear or damaged ↕ Wear or damaged
	Cotters thickness	2.87 – 2.90 (0.113 – 0.114) 2.97 – 3.00 (0.117 – 0.118) 3.07 – 3.10 (0.121 – 0.122) 3.17 – 3.20 (0.125 – 0.126)	Wear or damaged ↕ Wear or damaged
	ATF pump drive sprocket thrust shim, 22 x 28 mm thickness	1.12 – 1.15 (0.044 – 0.045) 1.37 – 1.40 (0.054 – 0.055) 1.62 – 1.65 (0.064 – 0.065) 1.87 – 1.90 (0.074 – 0.075) 2.12 – 2.15 (0.083 – 0.085) 2.37 – 2.40 (0.093 – 0.094)	Wear or damaged ↕ Wear or damaged
	Secondary gear shaft thrust shim, 25 x 35 mm thickness	2.80 – 2.85 (0.110 – 0.112) 2.90 – 2.95 (0.114 – 0.116) 3.00 – 3.05 (0.118 – 0.120) 3.10 – 3.15 (0.122 – 0.124) 3.20 – 3.25 (0.126 – 0.128) 3.30 – 3.35 (0.130 – 0.132) 3.40 – 3.45 (0.134 – 0.136) 3.50 – 3.55 (0.138 – 0.140) 3.60 – 3.65 (0.142 – 0.144) 3.70 – 3.75 (0.146 – 0.148) 3.80 – 3.85 (0.150 – 0.152)	Wear or damaged ↕ Wear or damaged
	Input shaft feed pipe O.D.		
	Drive pulley feed pipe	6.97 – 6.98 (0.274 – 0.275)	6.95 (0.274)
	Forward clutch feed pipe	11.47 – 11.48 (0.4516 – 0.4520)	11.45 (0.451)
	Input shaft bushing I.D.		
	Drive pulley feed pipe bushing	7.000 – 7.015 (0.2756 – 0.2762)	7.030 (0.277)
	Forward clutch feed pipe bushing	11.500 – 11.518 (0.4528 – 0.4535)	11.533 (0.454)
	Driven shaft feed pipe O.D.		
	Start clutch feed pipe (right side cover side)	6.97 – 6.98 (0.274 – 0.275)	6.95 (0.274)
	Driven pulley feed pipe	11.47 – 11.48 (0.4516 – 0.4520)	11.45 (0.451)
	Start clutch feed pipe (flywheel housing side)	8.97 – 8.98 (0.353 – 0.354)	8.95 (0.352)
	Driven pulley shaft bushing I.D.		
	Start clutch feed pipe (right side cover side)	7.000 – 7.015 (0.2756 – 0.2762)	7.030 (0.277)
	Drive pulley feed pipe	11.500 – 11.518 (0.4528 – 0.4535)	11.533 (0.454)
	Start clutch feed pipe (flywheel housing side)	9.000 – 9.015 (0.354 – 0.355)	9.03 (0.356)
	Secondary driven gear sealing ring groove width	2.50 – 2.65 (0.098 – 0.104)	2.655 (0.105)
	Start clutch end plate I.D.	88.900 – 88.935 (3.500 – 3.501)	Wear or damaged
	Input shaft sealing ring groove width	2.00 – 2.10 (0.079 – 0.083)	2.105 (0.083)
	Drive pulley shaft I.D. at sealing ring	24.007 – 24.020 (0.945 – 0.946)	Wear or damaged
Shifting device and park brake control	Park brake cone	——	Wear or other defect
	Park brake pawl	——	Wear or other defect
	Park gear	——	Wear or other defect

Unit of length: mm (in)

CVT — Section 14

	MEASUREMENT	STANDARD (NEW)	SERVICE LIMIT
Differential carrier	Pinion shaft contact area I.D.	18.010 – 18.028 (0.7091 – 0.7098)	——
	Carrier-to-pinion clearance	0.023 – 0.057 (0.0009 – 0.0022)	0.1 (0.004)
	Drive shaft contact area I.D.	26.025 – 26.045 (1.0246 – 1.0254)	——
	Carrier-to-driveshaft clearance	0.045 – 0.086 (0.0018 – 0.0034)	0.12 (0.005)
Differential pinion gear	Backlash	0.05 – 0.15 (0.002 – 0.006)	——
	I.D.	18.042 – 18.066 (0.7103 – 0.7113)	——
	Pinion gear-to-pinion shaft clearance	0.055 – 0.095 (0.0022 – 0.0037)	0.15 (0.006)
Set ring-to-bearing outer race clearance		0 – 0.15 (0 – 0.006)	Adjust

	MEASUREMENT	Wire Dia.	O.D.	Free Length	No. of Coils
Springs	PH regulator valve spring	1.2 (0.047)	9.0 (0.354)	26.7 (1.051)	10.0
	PH control valve spring	1.7 (0.067)	13.4 (0.528)	39.4 (1.551)	8.7
	PL regulator valve spring	0.9 (0.035)	7.2 (0.283)	14.6 (0.575)	7.2
	PH-PL control valve spring	1.0 (0.039)	10.0 (0.394)	31.4 (1.236)	8.6
	Clutch reducing valve spring	1.9 (0.075)	16.8 (0.661)	44.4 (1.748)	8.0
	Lubrication valve spring	1.6 (0.063)	13.4 (0.528)	51.6 (2.031)	11.6
	Shift valve spring	1.4 (0.055)	8.2 (0.323)	34.1 (1.343)	13.0
	Shift control valve spring	1.0 (0.039)	7.4 (0.291)	19.3 (0.760)	7.5
	Start clutch control valve spring	0.4 (0.016)	4.1 (0.161)	12.1 (0.476)	6.8
	Pitot regulator valve spring	0.6 (0.024)	5.7 (0.224)	9.5 (0.374)	5.0
	Start clutch valve accumulator spring	1.2 (0.047)	8.3 (0.327)	29.8 (1.173)	12.3
	Reverse control valve spring	1.2 (0.047)	9.4 (0.370)	31.4 (1.236)	11.0
	Shift inhibitor valve spring	1.3 (0.051)	13.2 (0.520)	48.3 (1.902)	10.6

Steering — Section 17

	MEASUREMENT		STANDARD (NEW)
Steering wheel	Play at steering wheel circumference		0 – 10 (0 – 0.4)
	Starting load at steering wheel circumference N (kgf, lbf)		
	Manual steering		15 (1.5, 3.3)
	Power steering	Engine running	29 (3.0, 6.6)
Gearbox	Angle of rack guide screw loosened from locked position	M/S	20 ± 5°
		P/S	20° Max
	Preload at pinion gear shaft N·m (kgf·cm, lbf·in)	M/S	0.5 – 1.7 (5 – 17, 4.3 – 14.8)
		P/S	0.6 – 1.2 (6 – 12, 5.20 – 10.42)
Pump	Pump pressure with valve closed (oil temp./speed: 40°C (105°F) min./idle. Do not run for more than 5 seconds). kPa (kgf/cm², psi)		6,400 – 7,400 (65 – 75, 920 – 1,070)
Power steering fluid	Recommended power steering fluid		HONDA Power Steering Fluid
	Fluid capacity ℓ (US qt, Imp qt)		0.85 (0.90, 0.75) at disassembly
		Reservoir	0.4 (0.42, 0.35)
Power steering belt*	Deflection with 98 N (10 kgf, 22 lbf) between pulleys '99 model: B16A2 Engine Type only		7.5 – 11.0 (0.30 – 0.43) with used belt 5.0 – 7.0 (0.20 – 0.28) with new belt
	'96 – '99 models: Other Engine Types		10.5 – 14.0 (0.41 – 0.55) with used belt 7.5 – 10.0 (0.30 – 0.39) with new belt
	Tension measured with belt tension gauge N (kgf, lbf) '99 model:	B16A2 Engine Type only	390 – 540 (40 – 55, 88 – 120) with used belt
	'96 – '99 models:	Other Engine Types	340 – 490 (35 – 50, 77 – 110) with used belt
	'99 model:	B16A2 Engine Type only	740 – 880 (75 – 90, 170 – 200) with new belt
	'96 – '99 models:	Other Engine Types	640 – 780 (65 – 80, 143 – 176) with new belt

M/S: Manual steering, P/S: Power steering

*: When using a new belt, adjust deflection or tension to new values. Run the engine for 5 minutes then turn it off. Readjust the deflection or tension to used belt values.

Standards and Service Limits

Suspension — Section 18

	MEASUREMENT			STANDARD (NEW)	SERVICE LIMIT
Wheel alignment	Camber		Front	0°00′ ± 1°	——
			Rear	−1° ± 1°	——
	Caster		Front	1°40′ ± 1°	——
	Total toe		Front	In 1.0 ± 2.0 (1/16 ± 1/16)	——
			Rear	In 2.0 $^{+2.0}_{-1.0}$ (1/16 ± 1/16)	——
	Front wheel turning angle	Inward wheel		39°50′	——
		Outward wheel		33°10′ (Reference)	——
Wheel	Rim runout	Aluminum wheel	Axial	0 – 0.7 (0 – 0.03)	2.0 (0.08)
			Radial	0 – 0.7 (0 – 0.03)	1.5 (0.06)
		Steel wheel	Axial	0 – 1.0 (0 – 0.04)	2.0 (0.08)
			Radial	0 – 1.0 (0 – 0.04)	1.5 (0.06)
Wheel bearing	End play		Front	0 – 0.05 (0 – 0.002)	——
			Rear	0 – 0.05 (0 – 0.002)	——

Brakes — Section 19

	MEASUREMENT		STANDARD (NEW)	SERVICE LIMIT
Parking brake lever	Play in stroke at 196 N (20 kgf, 44 lbf) lever force		To be locked when pulled 6 – 9 notches	——
Foot brake pedal	Pedal height (with floor mat removed)	M/T	156.5 (6.16)	——
		A/T, CVT	161 (6 5/16)	——
	Free play		1 – 5 (1/16 – 3/16)	——
Master cylinder	Piston-to-pushrod clearance		0 – 0.4 (0 – 0.02)	——
Disc brake	Disc thickness	Front	20.9 – 21.8 (0.82 – 0.86)	19.0 (0.75)
		Rear	8.9 – 9.1 (0.350 – 0.358)	8.0 (0.31)
	Disc runout	Front	——	0.10 (0.004)
		Rear	——	0.10 (0.004)
	Disc parallelism	Front and rear	——	0.015 (0.0006)
	Pad thickness	Front	9.5 – 10.5*1	1.6 (0.06)
			8.5 – 9.5*2	1.6 (0.06)
		Rear	7.0 – 8.0 (0.28 – 0.31)	1.6 (0.06)
Rear brake drum	I.D.		200 (7.87)	201 (7.91)
	Lining thickness		4.0 (0.16)	2.0 (0.08)

*1. 5410 Stamped on the caliper body.
*2. 2056 Stamped on the caliper body.

Air Conditioning — Section 22

	MEASUREMENT		STANDARD (NEW)
Air Conditioning system SANDEN	Lubricant type: SP-10 (P/N 38897 – P13 – A01AH or 38899 – P13 – A01) (For refrigerant: HFC-134a (R-134a))		
	Lubricant capacity mℓ (fl oz, Imp oz)	Condenser	20 (2/3 0.7)
		Evaporator	45 (1 2/3, 1.6)
		Line or hose	10 (1/3, 0.4)
		Receiver	10 (1/3, 0.4)
NIPPONDENSO	Lubricant type: ND-OIL8 (P/N 38899 – PR7 – 003) (For Refrigerant: HFC-134a (R-134a))		
	Lubricant capacity mℓ (fl oz, Imp oz)	Condenser	25 (5/6 0.9)
		Evaporator	60 (2, 2.1)
		Line or hose	10 (1/3, 0.4)
		Receiver	10 (1/3, 0.4)
Compressor SANDEN	Lubricant type: SP-10		
	Lubricant capacity mℓ (fl oz, Imp oz)		130 – 150 (4 1/3 – 4.6, 5.0 – 5.3)
	Field coil resistance at 68°F (20°C) Ω		3.05 – 3.35
	Pulley-to-pressure plate clearance		0.5 ± 0.15 (0.020 ± 0.006)
NIPPONDENSO	Lubricant type: ND-OIL8 (P/N 38899 – PR7 – 003 or P/N 38899 – PR7 – A01) (For Refrigerant: HFC-134a (R-134a))		
	Lubricant capacity mℓ (fl oz, Imp oz)		140 (4.7, 4.9) – 155 (5.2, 5.4)
	Stator coil resistance at 20°C (68°F) Ω		3.4 – 3.8
	Pulley-to-pressure plate clearance		0.5 ± 0.15 (0.02 ± 0.006)
Compressor belt*	Deflection with 98 N (10 kgf, 22 lbf) between pulleys		7.5 – 9.5 (0.30 – 0.37) with used belt 5.0 – 6.5 (0.20 – 0.26) with new belt
	Belt tension N (kgf, lbf) Measured with belt tension gauge		340 – 490 (35 – 50, 77 – 110) with used belt 690 – 830 (70 – 85, 150 – 190) with new belt

*: When using a new belt, adjust deflection or tension to new values. Run the engine for 5 minutes then turn it off. Readjust deflection or tension to used belt values.

Unit of length: mm (in)

Electrical — Section 23

	MEASUREMENT	STANDARD (NEW)	
Ignition coil	Rated voltage V	12	
	Primary winding resistance at 68°F (20°C) Ω		
	HITACHI	0.45 – 0.55	
	TEC	0.63 – 0.77	
	Secondary winding resistance at 68°F (20°C) kΩ		
	HITACHI	22.4 – 33.6	
	TEC	12.8 – 19.2	
Ignition wire	Resistance at 68°F (20°C) kΩ	25 max.	
	Firing order	1 – 3 – 4 – 2	
Spark plug	Type	See section 23	
	Gap	$1.1^{0}_{-0.1}$ ($0.043^{0}_{-0.004}$)	
Ignition timing	At idle	12 ± 2	
	° BTDC (Red)		
Alternator belt*	Deflection with 98 N (10 kgf, 22 lbf) between pulleys	8.0 – 10.5 (0.31 – 0.41) with used belt 6.0 – 8.5 (0.26 – 0.33) with new belt	
	Belt tension N (kgf, lbf) Measured with belt tension gauge	340 – 490 (35 – 50, 77 – 110) with used belt 540 – 740 (55 – 75, 121 – 165) with new belt	
		STANDARD (NEW)	SERVICE LIMIT
Alternator (MITSUBISHI)	Output 13.5 V at hot A	75	
	Coil resistance (rotor) at 68°F (20°C) kΩ	3.4 – 3.8	——
	Slip ring O.D.	22.7 (0.89)	22.2 (0.87)
	Brush length	19.0 (0.75)	5.0 (0.20)
	Brush spring tension g (oz)	340 – 420 (12.0 – 14.8)	——
Alternator (DENSO)	Output 13.5 V at hot A	80	
	Coil resistance (rotor) at 68°F (20°C) kΩ	2.2 – 3.0	——
	Slip ring O.D.	14.4 (0.57)	14.0 (0.55)
	Brush length	10.5 (0.41)	1.5 (0.06)
	Brush spring tension g (oz)	330 (11.6)	——
Starter motor (MITSUBA 1.0 kW 1.2 kW)	Type	Gear reduction	
	Commutator mica depth	0.4 – 0.5 (0.016 – 0.020)	0.15 (0.006)
	Commutator runout	0 – 0.02 (0 – 0.0008)	0.05 (0.002)
	Commutator O.D.	28.0 – 28.1 (1.102 – 1.106)	27.5 (1.083)
	Brush length	15.8 – 16.2 (0.62 – 0.64)	11.0 (0.43)
	Brush spring tension (new)	15.7 – 17.7	——
	N (kgf, lbf)	(1.60 – 1.80, 3.5 – 4.0)	

*: When using a new belt, adjust deflection or tension to new values. Run the engine for 5 minutes then turn it off. Readjust deflection or tension to used belt values.

Design Specifications

	ITEM		METRIC	ENGLISH	NOTE
DIMENSIONS	Overall Length				
	2-door Coupe/4-door Sedan	('96 – 98)	4,445 mm	175.0 in	
		('99, '00)	4,450 mm	175.2 in	
	2-door Hatchback	('96, '97)	4,170 mm	164.2 in	
		('98 – 00)	4,180 mm	164.6 in	
	Overall width		1,705 mm	67.1 in	
	Overall height	2-door Coupe/2-door Hatchback	1,375 mm	54.1 in	
		4-door Sedan	1,390 mm	54.7 in	
	Wheelbase		2,620 mm	103.1 in	
	Track	Front/Rear	1,475/1,475 mm	58.1/58.1 in	
	Ground Clearance		150 mm	5.9 in	
	Seating Capacity		Five		
WEIGHT (USA)	Gross Vehicle Weight Rating (GVWR)				
	2-door Coupe	HX M/T, DX M/T	——	3,290 lbs	
		HX CVT ('96)	——	3,320 lbs	
		HX CVT ('97, '98)	——	3,330 lbs	
		HX CVT ('99)	——	3,360 lbs	
		DX A/T ('96 – 98)	——	3,290 lbs	
		DX A/T ('99, '00)	——	3,310 lbs	
		EX	——	3,440 lbs	
		Si	——	3,480 lbs	
	2-door Hatchback	CX, DX ('96, '97)	——	3,285 lbs	
		CX, DX ('98)	——	3,290 lbs	
		CX ('99, '00)	——	3,290 lbs	
		DX M/T ('99, '00)	——	3,290 lbs	
		DX A/T ('99, '00)	——	3,330 lbs	
	4-door Sedan	DX, LX, DX-V	——	3,330 lbs	
		EX	——	3,460 lbs	
WEIGHT (CANADA)	Gross Vehicle Weight Rating (GVWR)				
	2-door Coupe	DX ('96)	1,500 kg	——	
		DX ('97 – 00)	1,510 kg	——	
		DX-G	1,510 kg	——	
		Si ('96)	1,560 kg	——	
		Si ('97 – 00)	1,570 kg	——	
		SiR	1,590 kg	——	
	2-door Hatchback	CX, CX-G ('96)	1,495 kg	——	
		CX, CX-G ('97)	1,505 kg	——	
		CX-G ('98)	1,510 kg	——	
		CX ('98 – 00)	1,510 kg	——	
		DX M/T, SE M/T	1,510 kg	——	
		DX A/T, SE A/T	1,530 kg	——	
	4-door Sedan	LX, LX-V	1,510 kg	——	
		EX M/T	1,510 kg	——	
		EX A/T	1,540 kg	——	
ENGINE	Type		Water-cooled, 4-stroke SOHC*1, SOHC VTEC*2, SOHC VTEC-E*3, DOHC VTEC*4 gasoline engine		*1: D16Y7 *2: D16Y8 *3: D16Y5 *4: B16A2
	Cylinder Arrangement		Inline 4-cylinder, transverse		
	Bore and Stroke	D16Y5, D16Y7, D16Y8	75.0 x 90.0 mm	2.95 x 3.54 in	
		B16A2	81.0 x 77.4 mm	3.19 x 3.05 in	
	Displacement	D16Y5, D16Y7, D16Y8	1,590 cm³	97.0 cu-in	
		B16A2	1,595 cm³	97.3 cu-in	
	Compression Ratio	D16Y5, D16Y7	9.4		
		D16Y8	9.6		
		B16A2	10.2		
	Valve Train		Belt driven, 4 valve per cylinder		
	Lubrication System		Forced and wet sump, trochoid pump		
	Oil Pump Displacement at 6,800 engine rpm				
		D16Y5, D16Y7, D16Y8	33.4 ℓ (35.3 US qt, 29.4 Imp qt)/minute		
		B16A2	43.8 ℓ (46.3 US qt, 38.6 Imp qt)/minute		
	Water Pump Displacement at 6,000 engine rpm	D16Y5, D16Y7, D16Y8	125 ℓ (132 US qt, 110 Imp qt)/minute		
		B16A2	140 ℓ (148 US qt, 123 Imp qt)/minute		
	Fuel Required	D16Y5, D16Y7, D16Y8	UNLEADED gasoline with 86 Pump Octane Number or higher		
		B16A2	Premium UNLEADED gasoline 91 Pump Octane Number or higher		
STARTER	Type/Make		Gear reduction/MITSUBA		
	Normal Output		1.0 kW, 1.2 kW		
	Nominal Voltage		12 V		
	Hour Rating		30 seconds		
	Direction of Rotation		Clockwise as viewed from gear end		

	ITEM			METRIC		ENGLISH		NOTES
STARTER (cont'd)	Weight	MITSUBA 1.0, 1.2 kW		3.4 kg		7.5 lbf		
CLUTCH	Clutch Type		M/T	Single plate dry, diaphragm spring				
			A/T	Torque converter				
			CVT	Multi plates wet sanp, hydraulic				
	Clutch Facing Area		M/T	160 cm²		25 sq-in		
TRANSMISSION	Transmission Type		M/T	Synchronized 5-speed forward, 1 reverse				
			A/T	4-speed automatic, 1 reverse				
			CVT	Non-stage speed forward, 1 reverse				
	Primary Reduction			Direct 1 : 1				
	Manual transmission			Engine type				
				D16Y5	D16Y7	D16Y8	B16A2	
	Gear Ratio	1st		3.250	3.250	3.250	3.230	*1: 2-door Hatch back
		2nd		1.782	1.782	1.909	2.105	
		3rd		1.172	1.172	1.250	1.458	*2: 2-door Coupe, and 4-door Sedan
		4th		0.909	0.909	0.909	1.107	
		5th		0.702	0.702	0.702	0.875	
		Reverse		3.153	3.153	3.153	3.000	
	Final Reduction	Gear ratio		3.722	3.722*1/4.058*2	4.250	4.266	
		Gear type		Single helical gear				
	Automatic transmission			Engine type				
				D16Y7		D16Y8		
	Gear Ratio	1st		2.600		2.722		
		2nd		1.468		1.516		
		3rd		0.926		0.975		
		4th		0.638		0.638		
		Reverse		1.954		1.954		
	Final Reduction	Gear ratio		4.357		4.357		
		Gear type		Single helical gear				
	CVT Gear Ratio	Low – O.D.		2.466 – 0.449				
		Reverse		2.466				
	Secondary Reduction Gear Ratio			1.333				
	Final Reduction Gear Ratio			4.357				
AIR CONDITIONING	Cooling Capacity			3,530 Kcal/h		14,000 BTU/h		
	Compressor	Type/Make		Scroll/SANDEN				
		No. of Cylinders		—				
		Capacity		85.7 mℓ/rev		5.22 cu-in/rev		
		Max. Speed		10,000 rpm				
		Lubricant Capacity		130 mℓ		4 1/3 fl oz, 4.6 Imp oz		SP-10
	Compressor	Type/Manufacturer		Swash-plate/DENSO				
		No. of Cylinder		10				
		Capacity		155.3 mℓ/rev		9.4 cu-in/rev		
		Max. Speed		76,000 rpm				
		Lubricant Capacity		140 mℓ		4 2/3 fl oz, 4.9 Imp oz		
		Lubricant Type		ND-OIL8				
	Condenser	Type		Corrugated fin				
	Evaporator	Type		Corrugated fin				
	Blower	Type		Sirocco fan				
		Motor Input		200 W/12 V				
		Speed Control		4-speed variable				
		Max. Capacity		460 m³/h		16,200 cu-ft/h		
	Temperature Control			Air-mix type				
	Compressor Clutch	Type		Dry, single plate, poly-V-belt drive				
		Power Consumption		40 W max./12 V at 68°F (20°C)				
	Refrigerant	Type		HFC-134a (R-134a)				
		Quantity		650 $^{0}_{-50}$ g		22.9 $^{0}_{-1.8}$ oz		

(cont'd)

Design Specifications

(cont'd)

	ITEM		METRIC	ENGLISH	NOTE
STEERING SYSTEM	Type	P/S	Power assisted, rack and pinion		
		M/S	Rack and pinion		
	Overall Ratio	P/S	17.7		
		M/S	20.3		
	Turns, Lock-to-Lock	P/S	3.6		
		M/S	4.1		
	Steering Wheel Dia.		380 mm	15.0 in	
SUSPENSION	Type	Front and Rear	Independent double wishbone, coil spring		
		Front and Rear	Telescopic, hydraulic nitrogen gas-filled		
WHEEL ALIGNMENT	Camber	Front	0°00′		
		Rear	– 1°		
	Caster	Front	1°40′		
	Total Toe	Front	In 1 mm	In 1/16	
		Rear	In 2 mm	In 1/16	
BRAKE SYSTEM	Type	Front	Power assisted self-adjusting ventilated disc		
		Rear	Power assisted self-adjusting solid disc		
			Power assisted self-adjusting drum		
	Pad Surface Area	Front	37.5 cm² x 4	5.8 sq-in x 4	5410 stamped on the caliper body
			44.1 cm² x 4	6.84 sq-in x 4	2056 stamped on the caliper body
		Rear	67.2 cm² x 4	10.4 sq-in x 4	Drum
			21.2 cm² x 4	3.3 sq-in x 4	Disc
	Parking Brake	Type	Mechanical actuating, rear two wheel brakes		
TIRE	Size and Pressure		See tire information label		
WASHER	Capacity	2-door Coupe/4-door Sedan	2.5 ℓ (2.6 US qt, 2.2 Imp qt)		USA model
			4.5 ℓ (4.8 US qt, 4.0 Imp qt)		Canada model
		2-door Hatchback	2.5 ℓ (2.6 US qt, 2.2 Imp qt)		DX
			4.5 ℓ (4.8 US qt, 4.0 Imp qt)		Except DX
ELECTRICAL	Battery		12 V – 38 AH/5 HR		
	Starter		12 V – 1.0 kW, 1.2 kW		
	Alternator		12 V – 75 A, 80 A		
	Fuses	In Under-dash Fuse/Relay Box	7.5 A, 10 A, 15 A, 20 A		
		In Under-hood Fuse/Relay Box	7.5 A, 10 A, 15 A, 20 A, 30 A, 40 A, 80 A		
		In Under-hood ABS Fuse/Relay Box	7.5 A, 20 A, 40 A		
	Headlights		12 V – 60/55 W		
	Front Turn Signal/Parking Lights		12 V – 21/5 W		
	Rear Turn Signal Lights		12 V – 21 W		
	Brake/Taillights		12 V – 21/5 W		
	Inner Taillights*2		12 V – 5 W		
	High Mount Brake Light		12 V – 18 W*2, 21 W*1, *3		
	Back-up Lights		12 V – 21 W		
	License Plate Lights		12 V – 5 W		
	Ceiling Light		12 V – 8 W (With moonroof)		
			12 V – 5 W (Without moonroof)		
	Trunk Lights		12 V – 3.4 W*4, 5 W*5		
	Gauge Lights		12 V – 1.4 W, 3 W		
	Indicator Lights		12 V – 1.12 W, 1.4 W		
	Illumination and Pilot Lights		12 V – 0.84 W, 1.4 W		
	Heater Control Panel Lights		12 V – 1.4 W		

P/S: Power Steering M/S: Manual Steering
*1: 2-door Coupe *2: 2-door Hatchback *3: 4-door Sedan
*4: USA (HAM), Canada (HCM) produced *5: Japan produced

Body Specifications

2-door Coupe:

Unit: mm (in)

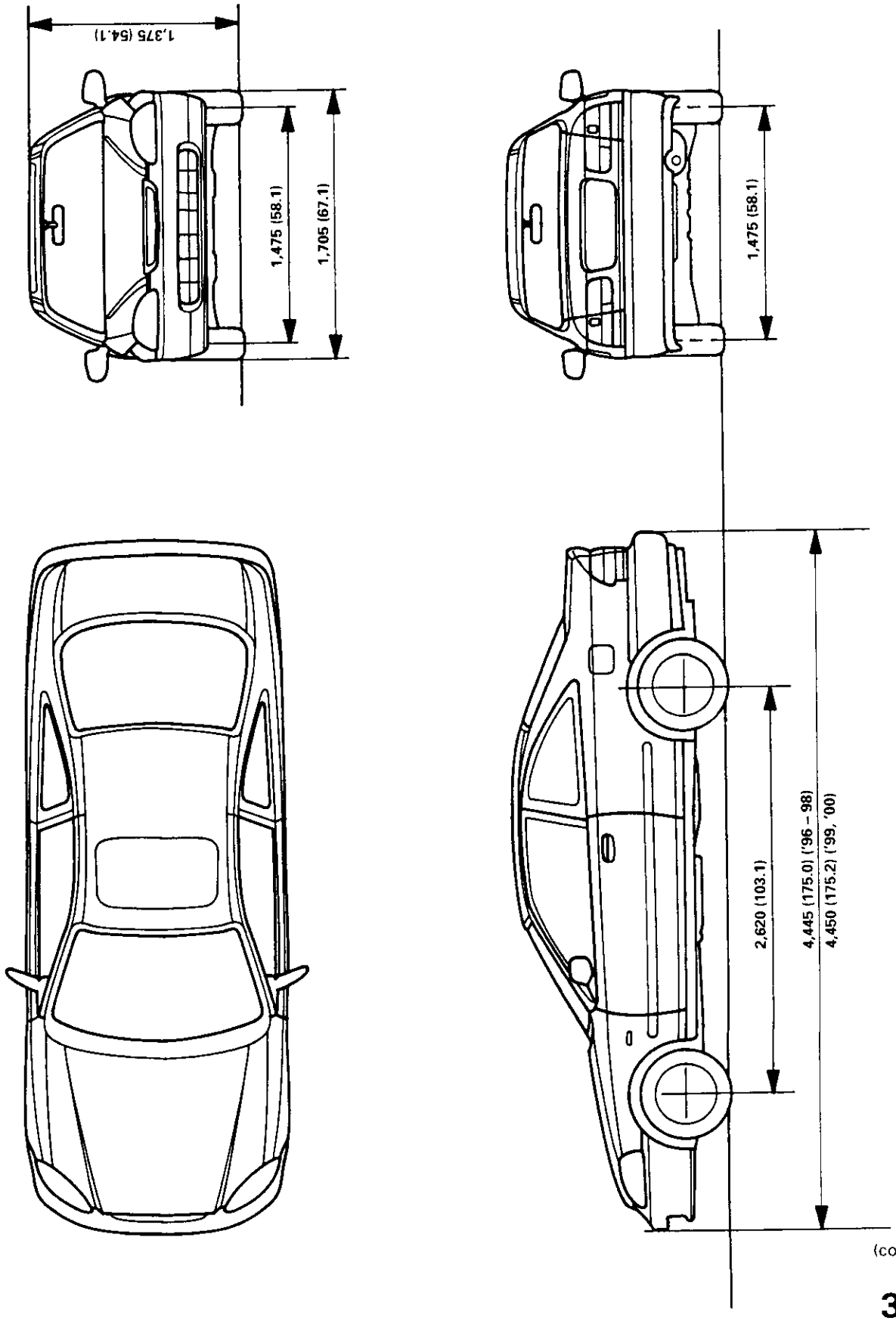

(cont'd)

2-door Hatchback:

Unit: mm (in)

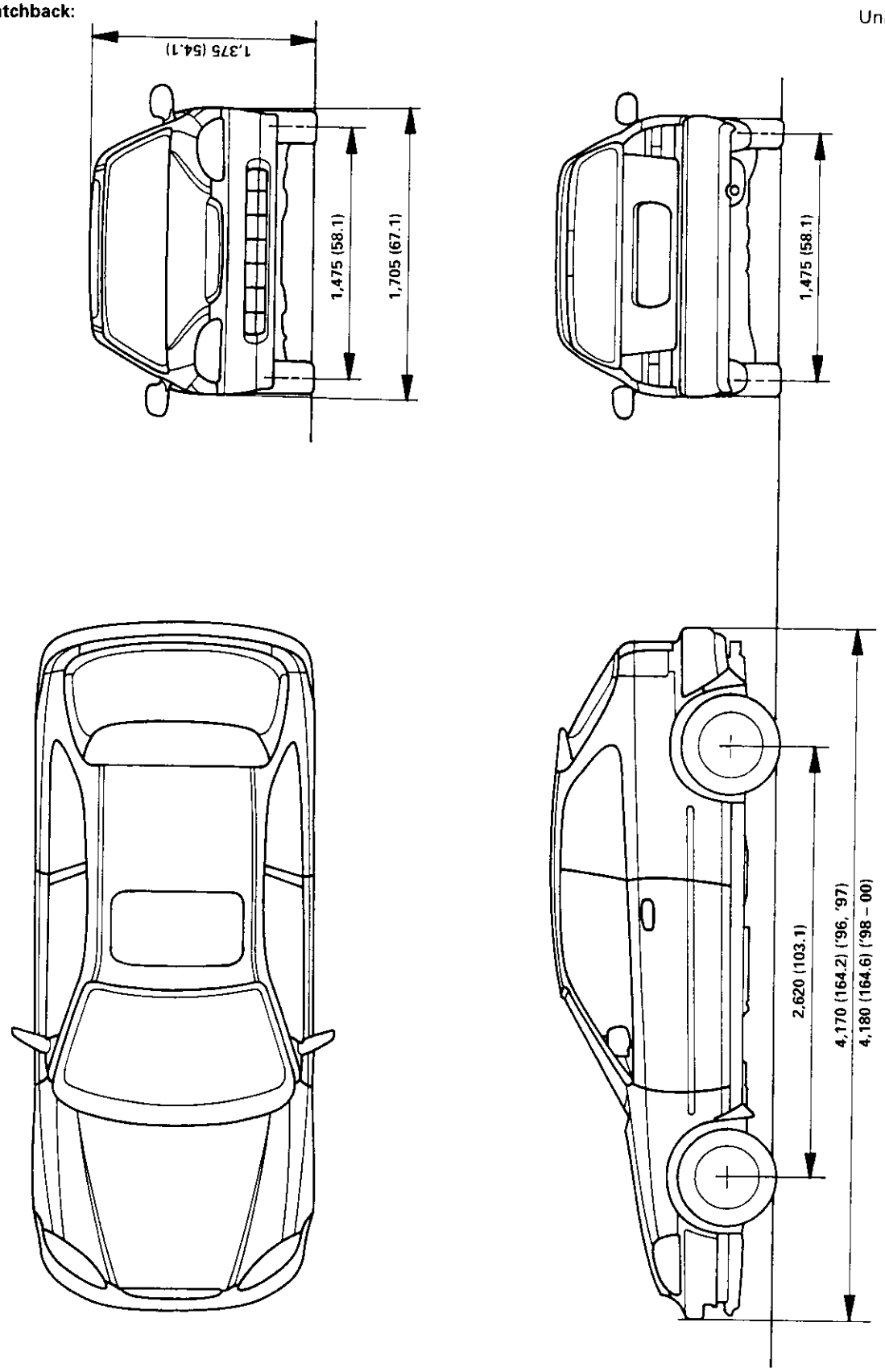

4-door Sedan:

Unit: mm (in)

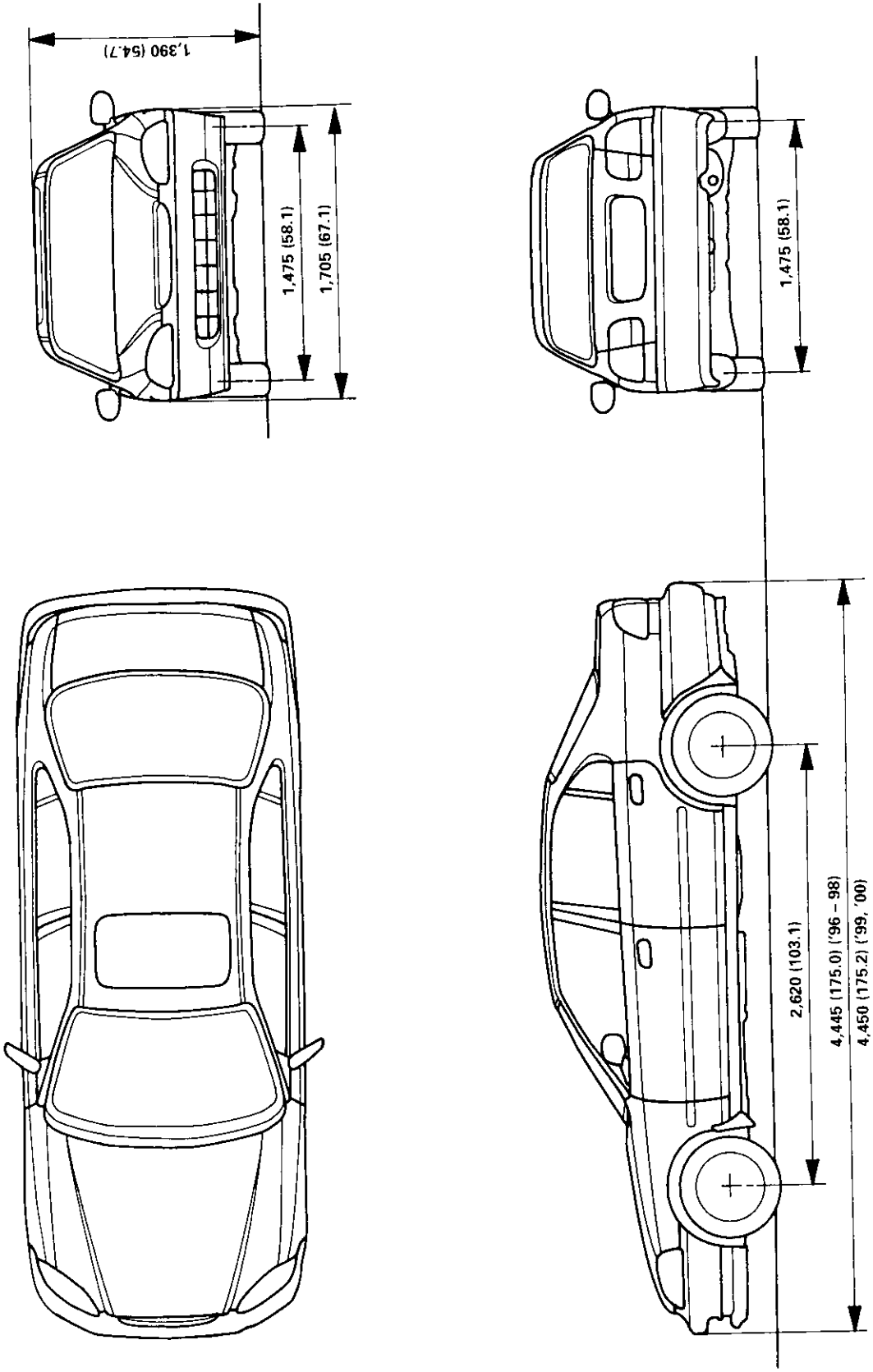

Maintenance

Lubrication Points 4-2
Maintenance Schedule for 1996 Model
  Normal Conditions 4-4
  Severe Conditions 4-6
Maintenance Schedule for 1997 Model
  Normal Conditions 4-8
  Severe Conditions 4-10
Maintenance Schedule for 1998 Model
  Normal Conditions 4-12
  Severe Conditions 4-14
Maintenance Schedule for 1999 Model
  Normal Conditions 4-16
  Severe Conditions 4-18
Maintenance Schedule for 2000 Model
  Normal Conditions 4-20
  Severe Conditions 4-22

Lubrication Points

For the details of lubrication points and types of lubricants to be applied, refer to the Illustrated Index and various work procedures (such as Assembly/Reassembly, Replacement, Overhaul, Installation, etc.) contained in each section.

No.	LUBRICATION POINTS		LUBRICANT
1	Engine		API Service Grade: Use SH "Energy Conserving II" or SJ "Energy Conserving" grade oil. The oil container may also display the API Certification mark shown below. Make sure it says "For Gasoline Engines." SAE Viscosity: See chart below.
2	Transmission	Manual	Genuine Honda MTF*1
		Automatic	Genuine Honda Premium Formula Automatic Transmission Fluid (ATF)*2
		CVT	Genuine Honda CVT Fluid*3
3	Brake Line		Genuine Honda DOT3 Brake Fluid*4
4	Clutch Line		Genuine Honda DOT3 Brake Fluid*4
5	Power steering gearbox		Steering grease P/N 08733 – B070E
6	Shift lever pivots (manual transmission)		Grease with molybdenum disulfide
7	Release fork (manual transmission)		Super High Temp Urea Grease (P/N 08798 – 9002)
8 9 10 11 12 13	Steering boots Tailgate hinges and latches (2-door Hatchback) Steering ball joints Shift lever (automatic transmission) Pedal linkage Brake master cylinder pushrod		Multi-purpose grease
14 15 16 17	Trunk hinges and latch (4-door Sedan and 2-door Coupe) Door hinges upper and lower Door opening detents Hood hinge and hood latch		Honda White Lithium Grease
18 19 20 21 22	Fuel filler lid Clutch master cylinder pushrod Throttle cable end and throttle linkage Rear brake shoe linkages Steering wheel (back side)		Multi-purpose grease
23 24	Caliper piston seal, dust seal, caliper pin, piston Throttle cable end (dashboard lower panel)		Silicone grease
25	Power steering system (for cars with P/S)		Genuine Honda Power Steering Fluid*5
26	Air conditioning compressor		Compressor oil: SANDEN: SP-10 P/N 38897 – P13 – A01AH or 38899 – P13 – A01 (For Refrigerant: HFC-134a (R-134a))

API SERVICE LABEL

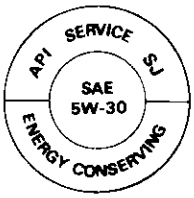

API CERTIFICATION SEAL

Recommended Engine Oil

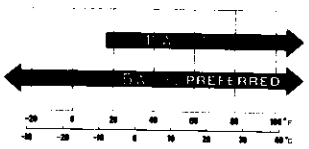

Engine oil viscosity for ambient temperature ranges

NOTE: The items marked *1, *2, *3, *4 and *5 on above chart are described as follows:

*1: Always use Genuine Honda Manual Transmission Fluid (MTF). Using motor oil can cause stiffer shifting because it does not contain the proper additives.

*2: Always use Genuine Honda Premium Formula Automatic Transmission Fluid (ATF). Using a non-Honda ATF can affect shift quality.

*3: Use Genuine Honda CVT fluid only. Using other fluid can affect transmission operation and may reduce transmission life.

*4: Always use Genuine Honda DOT3 Brake Fluid. Using a non-Honda brake fluid can cause corrosion and decrease the life of the system.

*5: Always use Genuine Honda Power Steering Fluid. Using any other type of power steering fluid or automatic transmission fluid can cause increased wear and poor steering in cold weather.

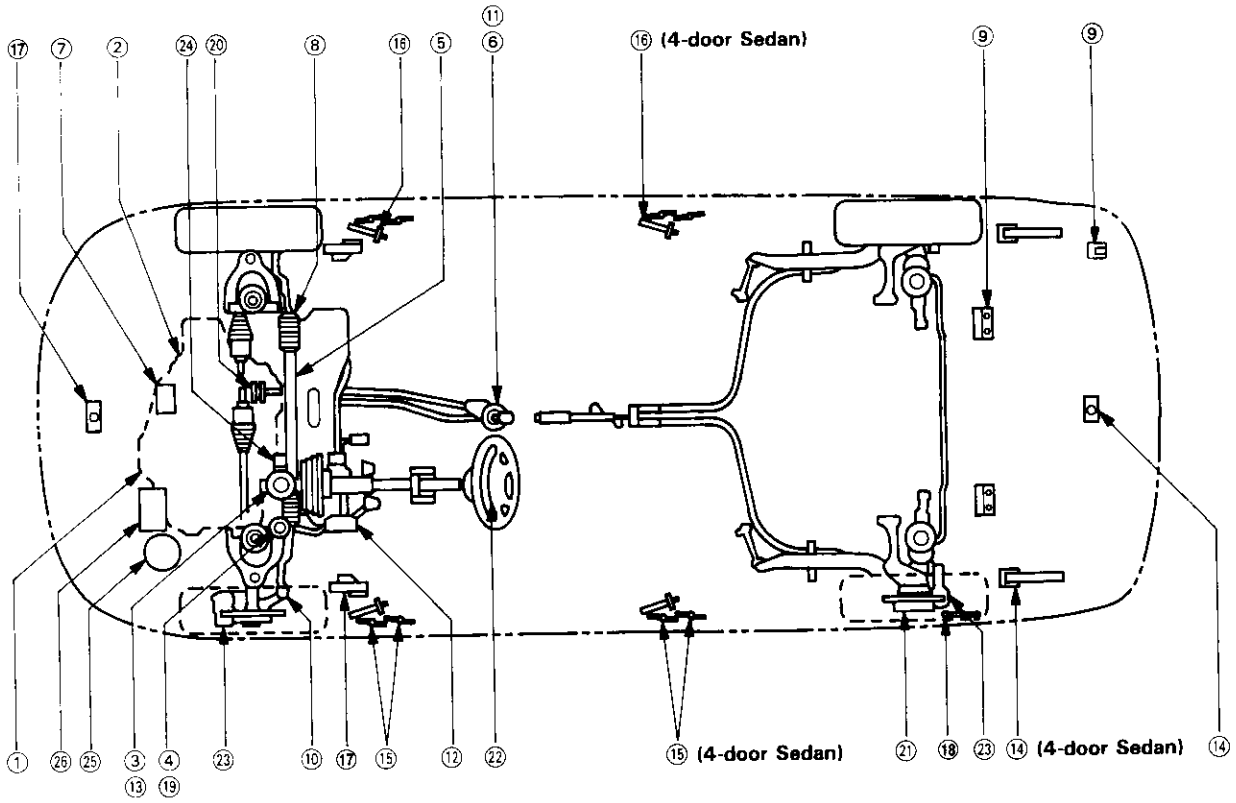

NOTE: Lubricate all hinges, latches and locks once a year.
In corrosive areas, more frequent lubrication is necessary.
We recommend Honda White Lithium Grease.

Maintenance Schedule for 1996 Model

Normal Conditions

Follow the Normal Conditions Maintenance Schedule for 1996 Model if the severe driving conditions specified in the Severe Conditions Maintenance Schedule for 1996 Model on pages 4-6 and 4-7 do not apply.

Service at the indicated distance or time whichever comes first.	km x 1,000	24	48	72	96	120	144	168	NOTE	SECTION and PAGE
	miles x 1,000	15	30	45	60	75	90	105		
	months	12	24	36	48	60	72	84		
Replace engine oil		Replace every 7,500 miles (12,000 km) or 12 months							Capacity for change with filter: D16Y7: 3.6 ℓ (3.8 US qt, 3.2 Imp qt) D16Y5, D16Y8: 3.3 ℓ (3.5 US qt, 2.9 Imp qt)	8-6
Replace engine oil filter		●	●	●	●	●	●	●		8-8
Check engine oil and coolant		Check oil and coolant at each fuel stop							Check levels and check for leaks.	8-6, 10-6
Replace air cleaner element			●		●		●			11-244
Inspect valve clearance		Inspect at 30,000 miles (48,000 km) only							Intake: 0.18 – 0.22 mm (0.007 – 0.009 in) Exhaust: 0.23 – 0.27 mm (0.009 – 0.011 in) Measured when cold	6-12
Replace spark plugs			●		●		●		D16Y5: NGK: ZFR4F-11 DENSO: KJ14CR-L11 D16Y7, D16Y8: NGK: ZFR5F-11 DENSO: KJ16CR-L11 Gap: 1.0 – 1.1 mm (0.039 – 0.043 in)	23-111
Inspect distributor cap* and rotor*					●					23-107, 108
Replace timing belt* and inspect water pump							●			6-19, 62, 10-14
Inspect and adjust drive belts			●		●		●		Check for cracks and damage. Check deflection and tension at center of following belts pressing with 98 N (10 kgf, 22 lbf) tension: Alternator drive belt: 8.0 – 10.5 mm (0.31 – 0.41 in) P/S pump belt: 10.5 – 14.0 mm (0.41 – 0.55 in) A/C compressor belt: 7.5 – 9.5 mm (0.30 – 0.37 in)	17-32 22-43 23-125
Inspect idle speed*					●				U.S. Model: 670 ± 50 rpm (M/T: neutral) 700 ± 50 rpm (A/T or CVT: N or P position) Canada Model: 750 ± 50 rpm (M/T: neutral) 750 ± 50 rpm (A/T or CVT: N or P position)	11-220 to 11-223
Replace engine coolant				●		●		●	Capacity for change: M/T: 3.8 ℓ (4.0 US qt, 3.3 Imp qt) A/T: D16Y7: 3.7 ℓ (3.9 US qt, 3.3 Imp qt) D16Y8: 3.9 ℓ (4.1 US qt, 3.4 Imp qt) CVT: 3.9 ℓ (4.1 US qt, 3.4 Imp qt) Check specific gravity for freezing point.	10-7
Replace transmission fluid	MT						●		Manual transmission: Honda Genuine MTF 1.8 ℓ (1.9 US qt, 1.6 Imp qt)*1 2.2 ℓ (2.3 US qt, 1.9 Imp qt)*2 for change Automatic transmission: 2.7 ℓ (2.9 US qt, 2.4 Imp qt) for change with Honda Genuine Premium Formula ATF CVT: 3.9 ℓ (4.1 US qt, 3.4 Imp qt) for change with Genuine Honda CVT Fluid	13-3 14-118 14-299
	AT						●			
	CVT		●	●	●	●	●	●		
Inspect front and rear brakes		●	●	●	●	●	●	●	• Check the brake pad and disc thickness and free movement. • Check the wheel cylinder for leaks. • Check the brake linings for cracking, glazing, wear, or contamination. • Check the calipers for leakage.	19-4, 8, 10, 12 16, 18, 24, 26, 31, 35, 36, 39
Replace brake fluid (Including ABS)				●			●		Use Honda Genuine DOT3 brake fluid. Check that the brake fluid level is between the upper and lower marks on the reservoir.	19-7
Check parking brake adjustment		●	●	●	●	●	●	●	Fully engaged 6 to 9 clicks.	19-6
Rotate tires (Check tire inflation and condition at least once per month)		Rotate tires every 7,500 miles (12,000 km)							The suggested rotation method is shown in the diagram in the Owner's Manual.	——

*1: S40 Transmission
*2: S4C Transmission

Service at the indicated distance or time whichever comes first.	km x 1,000	24	48	72	96	120	144	168	NOTE	SECTION and PAGE
	miles x 1,000	15	30	45	60	75	90	105		
	months	12	24	36	48	60	72	84		
Visually inspect the following items:									• Check for correct installation and position, check for cracks, deterioration, rust, and leaks. • Check tightness of screws, nuts, and joints. If necessary, retighten.	——
Brake hoses and lines (including ABS)										19-39
All fluid levels and condition of fluids									Check levels and check for leaks. If necessary, add transmission fluid, engine coolant, brake fluid, clutch fluid, windshield washer fluid, power steering fluid and battery fluid.	10-6 13-3 14-117, 299 19-7
Tie-rod ends, steering gear box, and boots									• Check rack grease and steering linkage. • Check the boots for damage or leaking grease. • Check the fluid line for damage and leaks.	17-31
Suspension components		•	•	•	•	•	•	•		18-8, 21
Driveshaft boots									Check boots and boot band for cracks. Check rack grease.	16-3
Cooling system hoses and connections									Check all hoses for damage, leaks or deterioration. Check all hose clamps. Retighten if necessary.	10-2
Exhaust system*									Check the catalytic converter heat shield, exhaust pipe and muffler for damage, leaks and tightness.	9-6 to 9-12
Fuel lines and connections*									Check fuel lines for loose connections, cracks, and deterioration. Retighten loose connections and replace any damaged parts.	11-224
Inspect supplemental restraint system		10 years after production								——

According to state and federal regulations, failure to perform maintenance on the items marked with an asterisk (*) will not void customer's emission warranties. However, Honda recommends that all maintenance services be performed at the recommended time or mileage period to ensure long-term reliability.

For 1996 Canada Model:
This Maintenance Schedule outlines the minimum required maintenance that you should perform to ensure the trouble-free operation of Canadian model. Due to regional and climatic differences, some additional servicing may be required.

Maintenance Schedule for 1996 Model

Severe Conditions

Follow the Severe Conditions Maintenance Schedule for 1996 Model if the vehicle is driven MAINLY under one or more of the Severe Driving Conditions (page 4-7):

Service at the indicated distance or time whichever comes first.	km x 1,000	24	48	72	96	120	144	168	NOTE	SECTION and PAGE
	miles x 1,000	15	30	45	60	75	90	105		
	months	12	24	36	48	60	72	84		
Replace engine oil and oil filter		Replace every 3,750 miles (6,000 km) or 6 months							Capacity for change with filter: D16Y7: 3.6 ℓ (3.8 US qt, 3.2 Imp qt) D16Y5, D16Y8: 3.3 ℓ (3.5 US qt, 2.9 Imp qt)	8-6, 8
Check engine oil and coolant		Check oil and coolant at each fuel stop							Check levels and check for leaks.	8-6, 10-6
Replace air cleaner element Use normal schedule except in dusty conditions		●	●	●	●	●	●	●		11-244
Inspect valve clearance		Inspect at 30,000 miles (48,000 km) only							Intake: 0.18 – 0.22 mm (0.007 – 0.009 in) Exhaust: 0.23 – 0.27 mm (0.009 – 0.011 in) Measured when cold	6-12
Replace spark plugs			●		●		●		D16Y5 NGK: ZFR4F-11 DENSO: KJ14CR-L11 D16Y7, D16Y8: NGK: ZFR5F-11 DENSO: KJ16CR-L11 Gap: 1.0 – 1.1 mm (0.039 – 0.043 in)	23-111
Inspect distributor cap* and rotor*					●					23-102
Replace timing belt*1 and inspect water pump		Replace every 60,000miles (96,000 km)								6-19, 62, 10-14
Inspect and adjust drive belts			●		●		●		Check for cracks and damage. Check deflection and tension at center of following belts pressing with 98 N (10 kgf, 22 lbf) tension: Alternator drive belt: 8.0 – 10.5 mm (0.31 – 0.41 in) P/S pump belt: 10.5 – 14.0 mm (0.41 – 0.55 in) A/C compressor belt: 7.5 – 9.5 mm (0.30 – 0.37 in)	17-32 22-43 23-125
Inspect idle speed*					●				U.S. Model: 670 ± 50 rpm (M/T: neutral) 700 ± 50 rpm (A/T or CVT: N or P position) Canada model: 750 ± 50 rpm (M/T: neutral) 750 ± 50 rpm (A/T or CVT: N or P position)	11-220 to 11-223
Replace engine coolant				●		●		●	Capacity for change: M/T: 3.8 ℓ (4.0 US qt, 3.3 Imp qt) A/T: D16Y7: 3.7 ℓ (3.9 US qt, 3.3 Imp qt) D16Y8: 3.9 ℓ (4.1 US qt, 3.4 Imp qt) CVT: 3.9 ℓ (4.1 US qt, 3.4 Imp qt) Check specific gravity for freezing point.	10-7
Replace transmission fluid	MT		●		●		●		Manual transmission: Honda Genuine MTF 1.8 ℓ (1.9 US qt, 1.6 Imp qt)*3 2.2 ℓ (2.3 US qt, 1.9 Imp qt)*4 for change Automatic transmission: 2.7 ℓ (2.9 US qt, 2.4 Imp qt) for change with Honda Genuine Premium Formula ATF CVT: 3.9 ℓ (4.1 US qt, 3.4 Imp qt) for change with Genuine Honda CVT Fluid	13-3 14-118 14-299
	AT		●		●		●			
	CVT*2		●	●	●	●	●	●		
Inspect front and rear brakes		Inspect every 7,500 miles (12,000 km) or 6 months							• Check the brake pad and disc thickness and free movement. • Check the wheel cylinder for leaks. • Check the brake linings for cracking, glazing, wear, or contamination. • Check the calipers for leakage.	19-4, 8, 10, 12 16, 18, 24, 26, 31, 35, 36, 39
Replace brake fluid (Including ABS)				●			●		Use Honda Genuine DOT3 brake fluid. Check that brake fluid level is between the upper and lower marks on the reservoir.	19-7
Check parking brake adjustment		●	●	●	●	●	●	●	Fully engaged 6 to 9 clicks.	19-6
Rotate tires (Check tire inflation and condition at least once per month)		Rotate tires every 7,500 miles (12,000 km)							The suggested rotation method is shown in the diagram in the Owner's Manual.	——

*1: Replace the timing belt at 60,000 miles (USA) 100,000 km (Canada) if the vehicle regularly is driven in one or more of these conditions:
- In very high temperatures (over 110°F, 43°C).
- In very low temperatures (under –20°F, –29°C).

*2: If the customer drives at high speed in high temperatures [90°F (32°C) above], the transmission fluid should be changed every 12,000 miles (20,000 km).
*3: S40 Transmission *4: S4C Transmission

Service at the indicated distance or time whichever comes first.	km x 1,000	24	48	72	96	120	144	168	NOTE	SECTION and PAGE
	miles x 1,000	15	30	45	60	75	90	105		
	months	12	24	36	48	60	72	84		
Visually inspect the following items:									• Check for correct installation and position, check for cracks, deterioration, rust, and leaks. • Check tightness of screws, nuts, and joints. If necessary, retighten.	——
Tie-rod ends, steering gear box, and boots	Every 7,500 miles (12,000 km) or 6 months								• Check rack grease and steering linkage. • Check the boots for damage or leaking grease. • Check the fluid line for damage and leaks.	17-31
Suspension components										18-8, 21
Driveshaft boots									Check boots and boot band for cracks. Check rack grease.	16-3
Brake hoses and lines (including ABS)										19-39
All fluid levels and condition of fluids									Check levels and check for leaks. If necessary, add transmission fluid, engine coolant, brake fluid, clutch fluid, windshield washer fluid, power steering fluid and battery fluid.	10-6 13-3 14-117, 299 19-7
Cooling system hoses and connections	•	•	•	•	•	•	•		Check all hoses for damage, leaks or deterioration. Check all hose clamps. Retighten if necessary.	10-2
Exhaust system*									Check the catalytic converter heat shield, exhaust pipe and muffler for damage, leaks and tightness.	9-6 to 9-12
Fuel lines and connections*									Check fuel lines for loose connections, cracks, and deterioration. Retighten loose connections and replace any damaged parts.	11-224
Inspect supplemental restraint system	10 years after production									——

According to state and federal regulations, failure to perform maintenance on the items marked with an asterisk (*) will not void customer's emission warranties. However, Honda recommends that all maintenance services be performed at the recommended time or mileage period to ensure long-term reliability.

Severe Driving Conditions:

- Driving less than 8 km (5 miles) per trip or, in freezing temperatures, driving less than 16 km (10 miles) per trip.
- Driving in extremely hot [over 90°F (32°C)] conditions.
- Extensive idling or long periods of stop-and-go driving.
- Trailer towing, driving with a roof-top carrier, or driving in mountainous conditions.
- Driving on muddy, dusty, or de-iced roads.

NOTE: If the car is driven OCCASIONALLY under a "severe" condition, you should follow the Normal Conditions Maintenance Schedule for 1996 Model on pages 4-4 and 4-5.

Maintenance Schedule for 1997 Model

Normal Conditions

Follow the Normal Conditions Maintenance Schedule for 1997 Model if the severe driving conditions specified in the Severe Conditions Maintenance Schedule for 1997 Model on pages 4-10 and 4-11 do not apply.

Service at the indicated distance or time whichever comes first.	miles x 1,000	15	30	45	60	75	90	105	120	NOTE	SECTION and PAGE
	km x 1,000	24	48	72	96	120	144	168	192		
	months	12	24	36	48	60	72	84	96		
Replace engine oil		Replace every 7,500 miles (12,000 km) or 12 months								Capacity for change with filter: D16Y7: 3.6 ℓ (3.8 US qt, 3.2 Imp qt) D16Y5, D16Y8: 3.3 ℓ (3.5 US qt, 2.9 Imp qt)	8-6
Replace engine oil filter		●	●	●	●	●	●	●	●		8-8
Check engine oil and coolant		Check oil and coolant at each fuel stop								Check levels and check for leaks.	8-6, 10-6
Replace air cleaner element			●		●		●		●		11-244
Inspect valve clearance		Inspect at 30,000 miles (48,000 km) only								Intake: 0.18 – 0.22 mm (0.007 – 0.009 in) Exhaust: 0.23 – 0.27 mm (0.009 – 0.011 in) Measured when cold	6-12
Replace spark plugs			●		●		●		●	D16Y5: NGK: ZFR4F-11 DENSO: KJ14CR-L11 D16Y7, D16Y8: NGK: ZFR5F-11 DENSO: KJ16CR-L11 Gap: 1.0 – 1.1 mm (0.039 – 0.043 in)	23-111
Replace timing belt* and inspect water pump								●			6-19, 62, 10-14
Inspect and adjust drive belts			●		●		●		●	Check for cracks and damage. Check deflection and tension at center of following belts pressing with 98 N (10 kgf, 22 lbf) tension: Alternator drive belt: 8.0 – 10.5 mm (0.31 – 0.41 in) P/S pump belt: 10.5 – 14.0 mm (0.41 – 0.55 in) A/C compressor belt: 7.5 – 9.5 mm (0.30 – 0.37 in)	17-32 22-43 23-125
Inspect idle speed*								●		U.S. Model: 670 ± 50 rpm (M/T: neutral) 700 ± 50 rpm (A/T or CVT: N or P position) Canada Model: 750 ± 50 rpm (M/T: neutral) 750 ± 50 rpm (A/T or CVT: N or P position)	11-220 to 11-223
Replace engine coolant				●		●		●		Capacity for change: M/T: 3.8 ℓ (4.0 US qt, 3.3 Imp qt) A/T: D16Y7: 3.7 ℓ (3.9 US qt, 3.3 Imp qt) D16Y8: 3.9 ℓ (4.1 US qt, 3.4 Imp qt) CVT: 3.9 ℓ (4.1 US qt, 3.4 Imp qt) Check specific gravity for freezing point.	10-7
Replace transmission fluid	MT						●			Manual transmission: Genuine Honda MTF 1.8 ℓ (1.9 US qt, 1.6 Imp qt) for change Automatic transmission: 2.7 ℓ (2.9 US qt, 2.4 Imp qt) for change with Genuine Honda Premium Formula ATF CVT: 3.9 ℓ (4.1 US qt, 3.4 Imp qt) for change with Genuine Honda CVT Fluid	13-3 14-118 14-299
	AT						●				
	CVT		●		●		●		●		
Inspect front and rear brakes		●	●	●	●	●	●	●	●	• Check the brake pad and disc thickness and free movement. • Check the wheel cylinder for leaks. • Check the brake linings for cracking, glazing, wear, or contamination. • Check the calipers for leakage.	19-4, 8, 10, 12, 16, 18, 24, 26, 31, 35, 36, 39
Replace brake fluid (Including ABS)				●			●			Use Genuine Honda DOT3 brake fluid. Check that the brake fluid level is between the upper and lower marks on the reservoir.	19-7
Check parking brake adjustment		●	●	●	●	●	●	●	●	Fully engaged 6 to 9 notches.	19-6
Rotate tires (Check tire inflation and condition at least once per month)		Rotate tires every 7,500 miles (12,000 km)								The suggested rotation method is shown in the diagram in the Owner's Manual.	——

Service at the indicated distance or time whichever comes first.	miles x 1,000	15	30	45	60	75	90	105	120	NOTE	SECTION and PAGE
	km x 1,000	24	48	72	96	120	144	168	192		
	months	12	24	36	48	60	72	84	96		
Visually inspect the following items:											
Tie-rod ends, steering gear box, and boots		●	●	●	●	●	●	●	●	Check steering linkage for looseness. Check condition of boots. Check for fluid leaks.	17-31
Suspension components		●	●	●	●	●	●	●	●	Check the bolts for tightness. Check the condition of ball joint boots.	18-8, 21
Driveshaft boots		●	●	●	●	●	●	●	●	Check condition of boots.	16-3
Brake hoses and lines (including ABS)		●	●	●	●	●	●	●	●	Check for damage or leakage.	19-39
All fluid levels and condition of fluids		●	●	●	●	●	●	●	●	Check levels, condition of fluids, and check for leaks. If brake fluid is low, check brake pad thickness.	10-6, 13-3, 14-117, 299 19-7
Cooling system hoses and connections		●	●	●	●	●	●	●	●	Check all hoses for damage, leaks, and deterioration. Check for proper fan operation.	10-2
Exhaust system*		●	●	●	●	●	●	●	●	Check the catalytic converter heat shield, exhaust pipe, and muffler for damage, leaks, and tightness.	9-6 to 9-12
Fuel lines and connections*		●	●	●	●	●	●	●	●	Check for leaks. Retighten loose connections and replace any damaged parts.	11-224
Inspect supplemental restraint system		10 years after production									——

According to state and federal regulations, failure to perform maintenance on the items marked with an asterisk (*) will not void customer's emission warranties. However, Honda recommends that all maintenance services be performed at the recommended time or mileage period to ensure long-term reliability.

For 1997 Canada model: Follow the Severe Conditions Maintenance Schedule for 1997 Model on page 4-10 and 4-11.

Maintenance Schedule for 1997 Model

Severe Conditions

Follow the Severe Conditions Maintenance Schedule for 1997 Model if the vehicle is driven MAINLY under one or more of the Severe Driving Conditions (page 4-11):

Service at the indicated distance or time whichever comes first.	miles x 1,000	15	30	45	60	75	90	105	120	NOTE	SECTION and PAGE
	km x 1,000	24	48	72	96	120	144	168	192		
	months	12	24	36	48	60	72	84	96		
Replace engine oil and oil filter		Replace every 3,750 miles (6,000 km) or 6 months								Capacity for change with filter: D16Y7: 3.6 ℓ (3.8 US qt, 3.2 Imp qt) D16Y5, D16Y8: 3.3 ℓ (3.5 US qt, 2.9 Imp qt)	8-6, 8
Check engine oil and coolant		Check oil and coolant at each fuel stop								Check levels and check for leaks.	8-6, 10-6
Replace air cleaner element Use normal schedule except in dusty conditions		●	●	●	●	●	●	●	●		11-244
Inspect valve clearance		Inspect at 30,000 miles (48,000 km) only								Intake: 0.18 – 0.22 mm (0.007 – 0.009 in) Exhaust: 0.23 – 0.27 mm (0.009 – 0.011 in) Measured when cold	6-12
Replace spark plugs			●		●		●		●	D16Y5: NGK: ZFR4F-11 DENSO: KJ14CR-L11 D16Y7, D16Y8: NGK: ZFR5F-11 DENSO: KJ16CR-L11 Gap: 1.0 – 1.1 mm (0.039 – 0.043 in)	23-111
Replace timing belt*1 and inspect water pump								●			6-19, 62, 10-14
Inspect and adjust drive belts			●		●		●		●	Check for cracks and damage. Check deflection and tension at center of following belts pressing with 98 N (10 kgf, 22 lbf) tension: Alternator drive belt: 8.0 – 10.5 mm (0.31 – 0.41 in) P/S pump belt: 10.5 – 14.0 mm (0.41 – 0.55 in) A/C compressor belt: 7.5 – 9.5 mm (0.30 – 0.37 in)	17-32 22-43 23-125
Inspect idle speed*								●		U.S. Model: 670 ± 50 rpm (M/T: neutral) 700 ± 50 rpm (A/T or CVT: N or P position) Canada Model: 750 ± 50 rpm (M/T: neutral) 750 ± 50 rpm (A/T or CVT: N or P position)	11-220 to 11-223
Replace engine coolant				●		●		●		Capacity for change: M/T: 3.8 ℓ (4.0 US qt, 3.3 Imp qt) A/T: D16Y7: 3.7 ℓ (3.9 US qt, 3.3 Imp qt) D16Y8: 3.9 ℓ (4.1 US qt, 3.4 Imp qt) CVT: 3.9 ℓ (4.1 US qt, 3.4 Imp qt) Check specific gravity for freezing point.	10-7
Replace transmission fluid	MT		●		●		●		●	Manual transmission: Genuine Honda MTF 1.8 ℓ (1.9 US qt, 1.6 Imp qt) for change Automatic transmission: 2.7 ℓ (2.9 US qt, 2.4 Imp qt) for change with Genuine Honda Premium Formula ATF CVT: 3.9 ℓ (4.1 US qt, 3.4 Imp qt) for change with Genuine Honda CVT Fluid	13-3 14-118 14-299
	AT		●		●		●		●		
	CVT*2		●		●		●		●		
Inspect front and rear brakes		Inspect every 7,500 miles (12,000 km) or 6 months								• Check the brake pad and disc thickness and free movement. • Check the wheel cylinder for leaks. • Check the brake linings for cracking, glazing, wear, or contamination. • Check the calipers for leakage.	19-4, 8, 10, 12, 16, 18, 24, 26, 31, 35, 36, 39
Replace brake fluid (Including ABS)				●			●			Use Genuine Honda DOT3 brake fluid. Check that the brake fluid level is between the upper and lower marks on the reservoir.	19-7
Check parking brake adjustment		●	●	●	●	●	●	●	●	Fully engaged 6 to 9 clicks.	19-6

*1: Replace the timing belt at 60,000 miles (USA) 100,000 km (Canada) if the vehicle regularly is driven in one or more of these conditions:
- In very high temperatures (over 110°F, 43°C).
- In very low temperatures (under – 20°F, – 29°C).

*2: If the customer drives at high speed in high temperatures [90°F (32°C) above], the transmission fluid should be changed every 12,000 miles (20,000 km).

Service at the indicated distance or time whichever comes first.	miles x 1,000	15	30	45	60	75	90	105	120	NOTE	SECTION and PAGE
	km x 1,000	24	48	72	96	120	144	168	196		
	months	12	24	36	48	60	72	84	96		
Lubricate locks and hinges		●	●	●	●	●	●	●	●		4-2, 3
Clean antenna mast		●	●	●	●	●	●	●	●		23-193
Rotate tires (check tire inflation and condition at least once per month)		Rotate tires every 7,500 miles (12,000 km)								The suggested rotation method is shown in the diagram in the Owner's Manual.	——
Visually inspect the following items:											
Tie-rod ends, steering gear box, and boots		Every 7,500 miles (12,000 km) or 6 months								Check steering linkage for looseness. Check condition of boots. Check for fluid leaks.	17-31
Suspension components										Check the bolts for tightness. Check the condition of ball joint boots.	18-8, 21
Driveshaft boots										Check condition of boots.	16-3
Brake hoses and lines (including ABS)		●	●	●	●	●	●	●	●	Check for damage or leakage.	19-39
All fluid levels and condition of fluids										Check levels, condition of fluids, and check for leaks. If brake fluid is low, check brake pad thickness.	10-6, 13-3, 14-117, 299 19-7
Cooling system hoses and connections										Check all hoses for damage, leaks, and deterioration. Check for proper fan operation.	10-2
Exhaust system*										Check the catalytic converter heat shield, exhaust pipe, and muffler for damage, leaks, and tightness.	9-6 to 9-12
Fuel lines and connections*										Check for leaks.	11-224
Lights and controls										Check all lighting functions.	23-168
Vehicle underbody										Check for damage and fluid leaks.	——
Inspect supplemental restraint system		10 years after production									——

According to state and federal regulations, failure to perform maintenance on the items marked with an asterisk (*) will not void customer's emission warranties. However, Honda recommends that all maintenance services be performed at the recommended time or mileage period to ensure long-term reliability.

Severe Driving Conditions:

- Driving less than 5 miles (8 km) per trip or, in freezing temperatures, driving less than 10 miles (16 km) per trip.
- Driving in extremely hot [over 90°F (32°C)] conditions.
- Extensive idling or long periods of stop-and-go driving.
- Trailer towing, driving with a roof-top carrier, or driving in mountainous conditions.
- Driving on muddy, dusty, or de-iced roads.

NOTE: If the car is driven OCCASIONALLY under a "severe" condition, you should follow the Normal Conditions Maintenance Schedule for 1997 Model on pages 4-8 and 4-9.

Maintenance Schedule for 1998 Model

Normal Conditions

Follow the Normal Conditions Maintenance Schedule for 1998 Model if the severe driving conditions specified in the Severe Conditions Maintenance Schedule for 1998 Model on pages 4-14 and 4-15 do not apply.

Service at the indicated distance or time whichever comes first.	miles x 1,000	15	30	45	60	75	90	105	120	NOTE	SECTION and PAGE
	km x 1,000	24	48	72	96	120	144	168	192		
	months	12	24	36	48	60	72	84	96		
Replace engine oil		Every 7,500 miles (12,000 km) or 12 months								Capacity for change with filter: D16Y7: 3.6 ℓ (3.8 US qt, 3.2 Imp qt) D16Y5, D16Y8: 3.3 ℓ (3.5 US qt, 2.9 Imp qt)	8-6
Replace engine oil filter		●	●	●	●	●	●	●	●		8-8
Check engine oil and coolant		Check oil and coolant at each fuel stop								Check levels and check for leaks.	8-6, 10-6
Replace air cleaner element			●		●		●		●		11-244
Inspect valve clearance		At 30,000 miles (48,000 km) only								Intake: 0.18 – 0.22 mm (0.007 – 0.009 in) Exhaust: 0.23 – 0.27 mm (0.009 – 0.011 in) Measured when cold	6-12
Replace spark plugs			●		●		●		●	D16Y5: NGK: ZFR4F-11 DENSO: KJ14CR-L11 D16Y7, D16Y8: NGK: ZFR5F-11 DENSO: KJ16CR-L11 Gap: 1.0 – 1.1 mm (0.039 – 0.043 in)	23-111
Replace timing belt and inspect water pump								●			6-19, 62, 10-14
Inspect and adjust drive belts			●		●		●		●	Check for cracks and damage. Check deflection and tension at center of following belts pressing with 98 N (10 kgf, 22 lbf) tension: Alternator drive belt: 8.0 – 10.5 mm (0.31 – 0.41 in) P/S pump belt: 10.5 – 14.0 mm (0.41 – 0.55 in) A/C compressor belt: 7.5 – 9.5 mm (0.30 – 0.37 in)	17-32 22-43 23-125
Inspect idle speed								●		U.S. Model: 670 ± 50 rpm (M/T: neutral) 700 ± 50 rpm (A/T or CVT: N or P position) Canada Model: 750 ± 50 rpm (M/T: neutral) 750 ± 50 rpm (A/T or CVT: N or P position)	11-220 to 11-223
Replace engine coolant				●		●		●		Capacity for change: M/T: 3.8 ℓ (4.0 US qt, 3.3 Imp qt) A/T: D16Y7: 3.7 ℓ (3.9 US qt, 3.3 Imp qt) D16Y8: 3.9 ℓ (4.1 US qt, 3.4 Imp qt) CVT: 3.9 ℓ (4.1 US qt, 3.4 Imp qt) Check specific gravity for freezing point.	10-7
Replace transmission fluid	MT						●			Manual transmission: Genuine Honda MTF 1.8 ℓ (1.9 US qt, 1.6 Imp qt) for change Automatic transmission: 2.7 ℓ (2.9 US qt, 2.4 Imp qt) for change with Genuine Honda Premium Formula ATF CVT: 3.9 ℓ (4.1 US qt, 3.4 Imp qt) for change with Genuine Honda CVT Fluid	13-3 14-118 14-299
	AT						●				
	CVT*1		●		●		●		●		
Inspect front and rear brakes		●	●	●	●	●	●	●	●	• Check the brake pad and disc thickness and free movement. • Check the wheel cylinder for leaks. • Check the brake linings for cracking, glazing, wear, or contamination. • Check the calipers for leakage.	19-4, 8, 10, 12, 16, 18, 24, 26, 31, 35, 36, 39
Replace brake fluid (Including ABS)				●			●			Use Genuine Honda DOT3 brake fluid. Check that the brake fluid level is between the upper and lower marks on the reservoir.	19-7
Check parking brake adjustment		●	●	●	●	●	●	●	●	Fully engaged 6 to 9 notches.	19-6
Rotate tires (Check tire inflation and condition at least once per month)		Rotate tires every 7,500 miles (12,000 km)								The suggested rotation method is shown in the diagram in the Owner's Manual.	——

*1: 2 door

Service at the indicated distance or time whichever comes first.	miles x 1,000	15	30	45	60	75	90	105	120	NOTE	SECTION and PAGE
	km x 1,000	24	48	72	96	120	144	168	192		
	months	12	24	36	48	60	72	84	96		
Visually inspect the following items:											
Tie-rod ends, steering gear box, and boots		●	●	●	●	●	●	●	●	Check steering linkage for looseness. Check condition of boots. Check for fluid leaks.	17-31
Suspension components		●	●	●	●	●	●	●	●	Check the bolts for tightness. Check the condition of ball joint boots.	18-8, 21
Driveshaft boots		●	●	●	●	●	●	●	●	Check condition of boots.	16-3
Brake hoses and lines (including ABS)		●	●	●	●	●	●	●	●	Check for damage or leakage.	19-39
All fluid levels and condition of fluids		●	●	●	●	●	●	●	●	Check levels, condition of fluids, and check for leaks. If brake fluid is low, check brake pad thickness.	10-6, 13-3, 14-117, 299 19-7
Cooling system hoses and connections		●	●	●	●	●	●	●	●	Check all hoses for damage, leaks, and deterioration. Check for proper fan operation.	10-2
Exhaust system*		●	●	●	●	●	●	●	●	Check the catalytic converter heat shield, exhaust pipe, and muffler for damage, leaks, and tlightness.	9-6 to 9-12
Fuel lines and connections*		●	●	●	●	●	●	●	●	Check for leaks. Retighten loose connections and replace any damaged parts.	11-224

According to state and federal regulations, failure to perform maintenance on the items marked with an asterisk (*) will not void customer's emission warranties. However, Honda recommends that all maintenance services be performed at the recommended time or mileage period to ensure long-term reliability.

For 1998 Canada model: Follow the Severe Conditions Maintenance Schedule for 1998 Model on page 4-14 and 4-15.

Maintenance Schedule for 1998 Model

Severe Conditions

Follow the Severe Conditions Maintenance Schedule for 1998 Model if the vehicle is driven MAINLY under one or more of the Severe Driving Conditions (page 4-15):

Service at the indicated distance or time whichever comes first.	miles x 1,000	15	30	45	60	75	90	105	120	NOTE	SECTION and PAGE
	km x 1,000	24	48	72	96	120	144	168	192		
	months	12	24	36	48	60	72	84	96		
Replace engine oil and oil filter		Every 3,750 miles (6,000 km) or 6 months								Capacity for change with filter: D16Y7: 3.6 ℓ (3.8 US qt, 3.2 Imp qt) D16Y5, D16Y8: 3.3 ℓ (3.5 US qt, 2.9 Imp qt)	8-6, 8
Check engine oil and coolant		Check oil and coolant at each fuel stop								Check levels and check for leaks.	8-6, 10-6
Replace air cleaner element Use normal schedule except in dusty conditions		●	●	●	●	●	●	●	●		11-244
Inspect valve clearance		At 30,000 miles (48,000 km) only								Intake: 0.18 – 0.22 mm (0.007 – 0.009 in) Exhaust: 0.23 – 0.27 mm (0.009 – 0.011 in) Measured when cold	6-12
Replace spark plugs			●		●		●		●	D16Y5: NGK: ZFR4F-11 DENSO: KJ14CR-L11 D16Y7, D16Y8: NGK: ZFR5F-11 DENSO: KJ16CR-L11 Gap: 1.0 – 1.1 mm (0.039 – 0.043 in)	23-111
Replace timing belt*1 and inspect water pump								●			6-19, 62, 10-14
Inspect and adjust drive belts			●		●		●		●	Check for cracks and damage. Check deflection and tension at center of following belts pressing with 98 N (10 kgf, 22 lbf) tension: Alternator drive belt: 8.0 – 10.5 mm (0.31 – 0.41 in) P/S pump belt: 10.5 – 14.0 mm (0.41 – 0.55 in) A/C compressor belt: 7.5 – 9.5 mm (0.30 – 0.37 in)	17-23 22-43 23-125
Inspect idle speed								●		U.S. Model: 670 ± 50 rpm (M/T: neutral) 700 ± 50 rpm (A/T or CVT: N or P position) Canada Model: 750 ± 50 rpm (M/T: neutral) 750 ± 50 rpm (A/T or CVT: N or P position)	11-220 to 11-223
Replace engine coolant				●		●		●		Capacity for change: M/T: 3.8 ℓ (4.0 US qt, 3.3 Imp qt) A/T: D16Y7: 3.7 ℓ (3.9 US qt, 3.3 Imp qt) D16Y8: 3.9 ℓ (4.1 US qt, 3.4 Imp qt) CVT: 3.9 ℓ (4.1 US qt, 3.4 Imp qt) Check specific gravity for freezing point.	10-7
Replace transmission fluid	MT		●		●		●		●	Manual transmission: Genuine Honda MTF 1.8 ℓ (1.9 US qt, 1.6 Imp qt) for change Automatic transmission: 2.7 ℓ (2.9 US qt, 2.4 Imp qt) for change with Genuine Honda Premium Formula ATF CVT: 3.9 ℓ (4.1 US qt, 3.4 Imp qt) for change with Genuine Honda CVT Fluid	13-3 14-118 14-299
	AT		●		●		●		●		
	CVT*2		●		●		●		●		
Inspect front and rear brakes		Every 7,500 miles (12,000 km) or 6 months								• Check the brake pad and disc thickness and free movement. • Check the wheel cylinder for leaks. • Check the brake linings for cracking, glazing, wear, or contamination. • Check the calipers for leakage.	19-4, 8, 10, 12, 16, 18, 24, 26, 31, 35, 36, 39
Replace brake fluid				●			●			Use Genuine Honda DOT3 brake fluid. Check that the brake fluid level is between the upper and lower marks on the reservoir.	19-7
Check parking brake adjustment		●	●	●	●	●	●	●	●	Fully engaged 6 to 9 clicks.	19-6

*1: Replace the timing belt at 60,000 miles (USA) 100,000 km (Canada) if the vehicle regularly is driven in one or more of these conditions:
- In very high temperatures (over 110°F, 43°C).
- In very low temperatures (under – 20°F, – 29°C).

*2: If the customer drives at high speed in high temperatures [90°F (32°C) above], the transmission fluid should be changed every 12,000 miles (20,000 km).

Service at the indicated distance or time whichever comes first.	miles x 1,000	15	30	45	60	75	90	105	120	NOTE	SECTION and PAGE
	km x 1,000	24	48	72	96	120	144	168	196		
	months	12	24	36	48	60	72	84	96		
Lubricate locks and hinges		●	●	●	●	●	●	●	●	Lubricate all hinges, latches and locks.	4-2, 3
Clean antenna mast		●	●	●	●	●	●	●	●		23-193
Rotate tires (check tire inflation and condition at least once per month)		Rotate tires every 7,500 miles (12,000 km)								The suggested rotation method is shown in the diagram in the Owner's Manual.	——
Visually inspect the following items:											
Tie-rod ends, steering gear box, and boots		Every 7,500 miles (12,000 km) or 6 months								Check steering linkage for looseness. Check condition of boots. Check for fluid leaks.	17-31
Suspension components										Check the bolts for tightness. Check the condition of ball joint boots.	18-8, 21
Driveshaft boots										Check condition of boots.	16-3
Brake hoses and lines (including ABS)		●	●	●	●	●	●	●	●	Check for damage or leakage.	19-39
All fluid levels and condition of fluids										Check levels, condition of fluids, and check for leaks. If brake fluid is low, check brake pad thickness.	10-6, 13-3, 14-117, 299 19-7
Cooling system hoses and connections										Check all hoses for damage, leaks, and deterioration. Check for proper fan operation.	10-2
Exhaust system*										Check the catalytic converter heat shield, exhaust pipe, and muffler for damage, leaks, and tightness.	9-6 to 9-12
Fuel lines and connections*										Check for leaks.	11-224
Lights and controls										Check all lighting functions.	23-168
Vehicle underbody										Check for damage and fluid leaks.	——

According to state and federal regulations, failure to perform maintenance on the items marked with an asterisk (*) will not void customer's emission warranties. However, Honda recommends that all maintenance services be performed at the recommended time or mileage period to ensure long-term reliability.

Severe Driving Conditions:

- Driving less than 5 miles (8 km) per trip or, in freezing temperatures, driving less than 10 miles (16 km) per trip.
- Driving in extremely hot [over 90°F (32°C)] conditions.
- Extensive idling or long periods of stop-and-go driving.
- Trailer towing or driving in mountainous conditions.
- Driving on muddy, dusty, or de-iced roads.

NOTE: If the car is driven OCCASIONALLY under a "severe" condition, you should follow the Normal Conditions Maintenance Schedule for 1998 Model on pages 4-12 and 4-13.

Maintenance Schedule for 1999 Model

Normal Conditions

Follow the Normal Conditions Maintenance Schedule for 1999 Model if the severe driving conditions specified in the Severe Conditions Maintenance Schedule for 1999 Model on pages 4-18 and 4-19 do not apply.

Service at the indicated distance or time whichever comes first.		miles x 1,000	15	30	45	60	75	90	105	120	NOTE	SECTION and PAGE
		km x 1,000	24	48	72	96	120	144	168	192		
		months	12	24	36	48	60	72	84	96		
Replace engine oil			Every 7,500 miles (12,000 km) or 12 months								Capacity for change with filter: D16Y7: 3.6 ℓ (3.8 US qt, 3.2 Imp qt) D16Y5, D16Y8: 3.3 ℓ (3.5 US qt, 2.9 Imp qt) B16A2: 4.0 ℓ (4.2 US qt, 3.5 Imp qt)	8-6
Replace engine oil filter			●	●	●	●	●	●	●	●		8-8
Check engine oil and coolant			Check oil and coolant at each fuel stop								Check levels and check for leaks.	8-6, 10-6
Replace air cleaner element				●		●		●		●		11-244
Inspect valve clearance			At 30,000 miles (48,000 km) only								Intake: 0.18 – 0.22 mm (0.007 – 0.009 in) Exhaust: 0.23 – 0.27 mm (0.009 – 0.011 in) Measured when cold	6-12
Replace spark plugs	D16Y5, D16Y7, D16Y8 engines			●		●		●		●	D16Y5: NGK: ZFR4F-11 DENSO: KJ14CR-L11 D16Y7, D16Y8: NGK: ZFR5F-11 DENSO: KJ16CR-L11 Gap: 1.0 – 1.1 mm (0.039 – 0.043 in)	23-111
	B16A2 engine								●		NGK: PFR6L-13 DENSO: PK20PR-L13	23-111
Replace timing belt and inspect water pump									●			6-19, 62, 10-14
Inspect and adjust drive belts				●		●		●		●	Check for cracks and damage. Check deflection and tension at center of following belts pressing with 98 N (10 kgf, 22 lbf) tension: Alternator drive belt: 8.0 – 10.5 mm (0.31 – 0.41 in) P/S pump belt: B16A2 engine: 7.5 – 11.0 mm (0.30 – 0.43 in) Except B16A2 engine: 10.5 – 14.0 mm (0.41 – 0.55 in) A/C compressor belt: B16A2 engine: 6.0 – 9.5 mm (0.24 – 0.37 in) Except B16A2 engine: 7.5 – 9.5 mm (0.30 – 0.37 in)	17-32 22-43 23-125
Inspect idle speed									●		U.S. Model: B16A2 engine 700 ± 50 rpm (M/T: neutral) Except B16A2 engine 670 ± 50 rpm (M/T: neutral) 700 ± 50 rpm (A/T or CVT: N or P position) Canada Model: 750 ± 50 rpm (M/T: neutral) 750 ± 50 rpm (A/T or CVT: N or P position)	11-220 to 11-223
Replace engine coolant					●		●		●		Capacity for change: M/T: Except B16A2 engine: 3.8 ℓ (4.0 US qt, 3.3 Imp qt) B16A2 engine: 4.5 ℓ (4.8 US qt, 4.0 Imp qt) A/T: D16Y7 engine: 3.7 ℓ (3.9 US qt, 3.3 Imp qt) D16Y8 engine: 3.9 ℓ (4.1 US qt, 3.4 Imp qt) CVT: 3.9 ℓ (4.1 US qt, 3.4 Imp qt) Check specific gravity for freezing point.	10-7
Replace transmission fluid	MT							●			Manual transmission: Genuine Honda MTF 1.8 ℓ (1.9 US qt, 1.6 Imp qt)*2 2.2 ℓ (2.3 US qt, 1.9 Imp qt)*3 for change Automatic transmission: 2.7 ℓ (2.9 US qt, 2.4 Imp qt) for change with Genuine Honda Premium Formula ATF CVT: 3.9 ℓ (4.1 US qt, 3.4 Imp qt) for change with Genuine Honda CVT Fluid	13-3 14-118 14-299
	AT							●				
	CVT*1			●		●		●		●		
Inspect front and rear brakes			●	●	●	●	●	●	●	●	• Check the brake pad and disc thickness and free movement. • Check the wheel cylinder for leaks. • Check the brake linings for cracking, glazing, wear, or contamination. • Check the calipers for leakage.	19-4, 8, 10, 12, 16, 18, 24, 26, 31, 35, 36, 39

*1: 2 door coupe *2: S40 Transmission *3: S4C Transmission

Service at the indicated distance or time whichever comes first.	miles x 1,000	15	30	45	60	75	90	105	120	NOTE	SECTION and PAGE
	km x 1,000	24	48	72	96	120	144	168	192		
	months	12	24	36	48	60	72	84	96		
Replace brake fluid (Including ABS)				●			●			Use Genuine Honda DOT3 brake fluid. Check that brake fluid level is between the upper and lower marks on the reservoir.	19-7
Check parking brake adjustment		●	●	●	●	●	●	●	●	Fully engaged 6 to 9 clicks.	19-6
Rotate tires (Check tire inflation and condition at least once per month)		Rotate tires every 7,500 miles (12,000 km)								The suggested rotation method is shown in the diagram in the Owner's Manual.	——
Visually inspect the following items:											
Tie-rod ends, steering gear box, and boots		●	●	●	●	●	●	●	●	Check steering linkage for looseness. Check condition of boots. Check for fluid leaks.	17-31
Suspension components										Check the bolts for tightness. Check the condition of ball joint boots.	18-8, 9, 21, 22
Driveshaft boots										Check condition of boots.	16-3
Brake hoses and lines (including ABS)										Check for damage or leakage.	19-39
All fluid levels and condition of fluids										Check levels, condition of fluids, and check for leaks. If brake fluid is low, check brake pad thickness.	10-6, 13-3, 14-117, 299 19-7
Cooling system hoses and connections										Check all hoses for damage, leaks, and deterioration. Check for proper fan operation.	10-2
Exhaust system*										Check the catalytic converter heat shield, exhaust pipe, and muffler for damage, leaks, and tightness.	9-6 to 9-12
Fuel lines and connections*										Check for leaks. Retighten loose connections and replace any damaged parts.	11-224

According to state and federal regulations, failure to perform maintenance on the items marked with an asterisk (*) will not void customer's emission warranties. However, Honda recommends that all maintenance services be performed at the recommended time or mileage period to ensure long-term reliability.

For 1999 Canada model: Follow the Severe Conditions Maintenance Schedule for 1999 Model on page 4-18 and 4-19.

Maintenance Schedule for 1999 Model

Severe Conditions

Follow the Severe Conditions Maintenance Schedule for 1999 Model if the vehicle is driven MAINLY under one or more of the Severe Driving Conditions (page 4-19):

Service at the indicated distance or time whichever comes first.	miles x 1,000	15	30	45	60	75	90	105	120	NOTE	SECTION and PAGE
	km x 1,000	24	48	72	96	120	144	168	192		
	months	12	24	36	48	60	72	84	96		
Replace engine oil and oil filter		Every 3,750 miles (6,000 km) or 6 months								Capacity for change with filter: D16Y7: 3.6 ℓ (3.8 US qt, 3.2 Imp qt) D16Y5, D16Y8: 3.3 ℓ (3.5 US qt, 2.9 Imp qt) B16A2: 4.0 ℓ (4.2 US qt, 3.5 Imp qt)	8-6, 8
Check engine oil and coolant		Check oil and coolant at each fuel stop								Check levels and check for leaks.	8-6, 10-6
Replace air cleaner element Use normal schedule except in dusty conditions		●	●	●	●	●	●	●	●		11-244
Inspect valve clearance		At 30,000 miles (48,000 km) only								Intake: 0.18 – 0.22 mm (0.007 – 0.009 in) Exhaust: 0.23 – 0.27 mm (0.009 – 0.011 in) Measured when cold	6-12
Replace spark plugs	D16Y5, D16Y7, D16Y8 engines		●		●		●		●	D16Y5: NGK: ZFR4F-11 DENSO: KJ14CR-L11 D16Y7, D16Y8: NGK: ZFR5F-11 DENSO: KJ16CR-L11 Gap: 1.0 – 1.1 mm (0.039 – 0.043 in)	23-111
	B16A2 engine							●		NGK: PFR6L-13 DENSO: PK20PR-L13	23-111
Replace timing belt*1 and inspect water pump								●			6-19, 62, 10-14
Inspect and adjust drive belts			●		●		●		●	Check for cracks and damage. Check deflection and tension at center of following belts pressing with 98 N (10 kgf, 22 lbf) tension: Alternator drive belt: 8.0 – 10.5 mm (0.31 – 0.41 in) P/S pump belt: B16A2 engine: 7.5 – 11.0 mm (0.30 – 0.43 in) Except B16A2 engine: 10.5 – 14.0 mm (0.41 – 0.55 in) A/C compressor belt: B16A2 engine: 6.0 – 9.5 mm (0.24 – 0.37 in) Except B16A2 engine: 7.5 – 9.5 mm (0.30 – 0.37 in)	17-32 22-43 23-125
Inspect idle speed								●		U.S. Model: B16A2 engine 700 ± 50 rpm (M/T: neutral) Except B16A2 engine 670 ± 50 rpm (M/T: neutral) 700 ± 50 rpm (A/T or CVT: N or P position) Canada Model: 750 ± 50 rpm (M/T: neutral) 750 ± 50 rpm (A/T or CVT: N or P position)	11-220 to 11-223
Replace engine coolant				●		●		●		Capacity for change: M/T: Except B16A2 engine: 3.8 ℓ (4.0 US qt, 3.3 Imp qt) B16A2 engine: 4.5 ℓ (4.8 US qt, 4.0 Imp qt) A/T: D16Y7 engine: 3.7 ℓ (3.9 US qt, 3.3 Imp qt) D16Y8 engine: 3.9 ℓ (4.1 US qt, 3.4 Imp qt) CVT: 3.9 ℓ (4.1 US qt, 3.4 Imp qt) Check specific gravity for freezing point.	10-7
Replace transmission fluid	MT		●		●		●		●	Manual transmission: Genuine Honda MTF 1.8 ℓ (1.9 US qt, 1.6 Imp qt)*3 2.2 ℓ (2.3 US qt, 1.9 Imp qt)*4 for change Automatic transmission: 2.7 ℓ (2.9 US qt, 2.4 Imp qt) for change with Genuine Honda Premium Formula ATF CVT: 3.9 ℓ (4.1 US qt, 3.4 Imp qt) for change with Genuine Honda CVT Fluid	13-3 14-118 14-299
	AT		●		●		●		●		
	CVT*2		●		●		●		●		
Inspect front and rear brakes		Every 7,500 miles (12,000 km) or 6 months								• Check the brake pad and disc thickness and free movement. • Check the wheel cylinder for leaks. • Check the brake linings for cracking, glazing, wear, or contamination. • Check the calipers for leak.	19-4, 8, 10, 12, 16, 18, 24, 26, 31, 35, 36, 39

*1: Replace the timing belt at 60,000 miles (USA) 100,000 km (Canada) if the vehicle regularly is driven in one or more of these conditions:
- In very high temperatures (over 110°F, 43°C).
- In very low temperatures (under – 20°F, – 29°C).

*2: If the customer drives at high speed in high temperatures [90°F (32°C) above], the transmission fluid should be changed every 15,000 miles (24,000 km).
2 door coupe *3: S40 Transmission *4: S4C Transmission

Service at the indicated distance or time whichever comes first.	miles x 1,000	15	30	45	60	75	90	105	120	NOTE	SECTION and PAGE
	km x 1,000	24	48	72	96	120	144	168	196		
	months	12	24	36	48	60	72	84	96		
Replace brake fluid				●			●			Use Genuine Honda DOT3 brake fluid. Check that brake fluid level is between the upper and lower marks on the reservoir.	19-7
Check parking brake adjustment		●	●	●	●	●	●	●	●	Fully engaged 6 to 9 clicks.	19-6
Lubricate all hinges, locks, and latches		●	●	●	●	●	●	●	●	Lubricate all hinges, latches and locks.	4-2, 3
Clean antenna mast		●	●	●	●	●	●	●	●		23-193
Rotate tires (Check tire inflation and condition at least once per month)		Rotate tires every 7,500 miles (12,000 km)								The suggested rotation method is shown in the diagram in the Owner's Manual.	——
Visually inspect the following items:											
Tie-rod ends, steering gear box, and boots		Every 7,500 miles (12,000 km) or 6 months								Check steering linkage for looseness. Check condition of boots. Check for fluid leaks.	17-31
Suspension components										Check the bolts for tightness. Check the condition of ball joint boots.	18-8, 9, 21, 22
Driveshaft boots										Check condition of boots.	16-3
Brake hoses and lines (including ABS)		●	●	●	●	●	●	●	●	Check for damage or leakage.	19-39
All fluid levels and condition of fluids										Check levels, condition of fluids, and check for leaks. If brake fluid is low, check brake pad thickness.	10-6, 13-3, 14-117, 299 19-7
Cooling system hoses and connections										Check all hoses for damage, leaks, and deterioration. Check for proper fan operation.	10-2
Exhaust system*										Check the catalytic converter heat shield, exhaust pipe, and muffler for damage, leaks, and tightness.	9-6 to 9-12
Fuel lines and connections*										Check for leaks.	11-224
Lights and controls										Check all lighting functions.	23-168
Vehicle underbody										Check for damage and fluid leaks.	——

According to state and federal regulations, failure to perform maintenance on the items marked with an asterisk (*) will not void customer's emission warranties. However, Honda recommends that all maintenance services be performed at the recommended time or mileage period to ensure long-term reliability.

Severe Driving Conditions:

- Driving less than 5 miles (8 km) per trip or, in freezing temperatures, driving less than 10 miles (16 km) per trip.
- Driving in extremely hot [over 90°F (32°C)] conditions.
- Extensive idling or long periods of stop-and-go driving.
- Trailer towing or driving in mountainous conditions.
- Driving on muddy, dusty, or de-iced roads.

NOTE: If the car is driven OCCASIONALLY under a "severe" condition, you should follow the Normal Conditions Maintenance Schedule for 1999 Model on pages 4-16 and 4-17.

Maintenance Schedule for 2000 Model

Normal Conditions

Follow the Normal Conditions Maintenance Schedule for 2000 Model if the severe driving conditions specified in the Severe Conditions Maintenance Schedule for 2000 Model on pages 4-22 and 4-23 do not apply.

Service at the indicated distance or time whichever comes first.		miles x 1,000	15	30	45	60	75	90	105	120	NOTE	SECTION and PAGE
		km x 1,000	24	48	72	96	120	144	168	192		
		months	12	24	36	48	60	72	84	96		
Replace engine oil			Every 7,500 miles (12,000 km) or 12 months								Capacity for change with filter: D16Y7: 3.6 ℓ (3.8 US qt, 3.2 Imp qt) D16Y5, D16Y8: 3.3 ℓ (3.5 US qt, 2.9 Imp qt) B16A2: 4.0 ℓ (4.2 US qt, 3.5 Imp qt)	8-6
Replace engine oil filter			●	●	●	●	●	●	●	●		8-8
Check engine oil and coolant			Check oil and coolant at each fuel stop								Check levels and check for leaks.	8-6, 10-6
Replace air cleaner element				●		●		●		●		11-244
Inspect valve clearance			At 30,000 miles (48,000 km) only								Intake: 0.18 – 0.22 mm (0.007 – 0.009 in) Exhaust: 0.23 – 0.27 mm (0.009 – 0.011 in) Measured when cold	6-12
Replace spark plugs	D16Y5, D16Y7, D16Y8 engines			●		●		●		●	D16Y5: NGK: ZFR4F-11 DENSO: KJ14CR-L11 D16Y7, D16Y8: NGK: ZFR5F-11 DENSO: KJ16CR-L11 Gap: 1.0 – 1.1 mm (0.039 – 0.043 in)	23-111
	B16A2 engine								●		NGK: PFR6L-13 DENSO: PK20PR-L13	23-111
Replace timing belt and inspect water pump									●			6-19, 62, 10-14
Inspect and adjust drive belts				●		●		●		●	Check for cracks and damage. Check deflection and tension at center of following belts pressing with 98 N (10 kgf, 22 lbf) tension: Alternator drive belt: 8.0 – 10.5 mm (0.31 – 0.41 in) P/S pump belt: B16A2 engine: 7.5 – 11.0 mm (0.30 – 0.43 in) Except B16A2 engine: 10.5 – 14.0 mm (0.41 – 0.55 in) A/C compressor belt: B16A2 engine: 6.0 – 9.5 mm (0.24 – 0.37 in) Except B16A2 engine: 7.5 – 9.5 mm (0.30 – 0.37 in)	17-32 22-43 23-125
Inspect idle speed									●		U.S. Model: B16A2 engine 700 ± 50 rpm (M/T: neutral) Except B16A2 engine 670 ± 50 rpm (M/T: neutral) 700 ± 50 rpm (A/T or CVT: N or P position) Canada Model: 750 ± 50 rpm (M/T: neutral) 750 ± 50 rpm (A/T or CVT: N or P position)	11-220 to 11-223
Replace engine coolant					●		●		●		Capacity for change: M/T: Except B16A2 engine: 3.8 ℓ (4.0 US qt, 3.3 Imp qt) B16A2 engine: 4.5 ℓ (4.8 US qt, 4.0 Imp qt) A/T: D16Y7 engine: 3.7 ℓ (3.9 US qt, 3.3 Imp qt) D16Y8 engine: 3.9 ℓ (4.1 US qt, 3.4 Imp qt) CVT: 3.9 ℓ (4.1 US qt, 3.4 Imp qt) Check specific gravity for freezing point.	10-7
Replace transmission fluid	MT							●			Manual transmission: Genuine Honda MTF 1.8 ℓ (1.9 US qt, 1.6 Imp qt)*2 2.2 ℓ (2.3 US qt, 1.9 Imp qt)*3 for change Automatic transmission: 2.7 ℓ (2.9 US qt, 2.4 Imp qt) for change with Genuine Honda Premium Formula ATF CVT: 3.9 ℓ (4.1 US qt, 3.4 Imp qt) for change with Genuine Honda CVT Fluid	13-3 14-118 14-299
	AT							●				
	CVT*1			●		●		●		●		
Inspect front and rear brakes			●	●	●	●	●	●	●	●	• Check the brake pad and disc thickness and free movement. • Check the wheel cylinder for leaks. • Check the brake linings for cracking, glazing, wear, or contamination. • Check the calipers for leakage.	19-4, 8, 10, 12, 16, 18, 24, 26, 31, 35, 36, 39

*1: 2 door coupe *2: S40 Transmission *3: S4C Transmission

Service at the indicated distance or time whichever comes first.	miles x 1,000	15	30	45	60	75	90	105	120	NOTE	SECTION and PAGE
	km x 1,000	24	48	72	96	120	144	168	192		
	months	12	24	36	48	60	72	84	96		
Replace brake fluid (Including ABS)				●			●			Use Genuine Honda DOT3 brake fluid. Check that brake fluid level is between the upper and lower marks on the reservoir.	19-7
Check parking brake adjustment		●	●	●	●	●	●	●	●	Fully engaged 6 to 9 notches.	19-6
Rotate tires (Check tire inflation and condition at least once per month)		Rotate tires every 7,500 miles (12,000 km)								The suggested rotation method is shown in the diagram in the Owner's Manual.	——
Visually inspect the following items:											
Tie-rod ends, steering gear box, and boots		●	●	●	●	●	●	●	●	Check steering linkage for looseness. Check condition of boots. Check for fluid leaks.	17-31
Suspension components										Check the bolts for tightness. Check the condition of ball joint boots.	18-8, 9, 21, 22
Driveshaft boots										Check condition of boots.	16-3
Brake hoses and lines (including ABS)										Check for damage or leakage.	19-39
All fluid levels and condition of fluids										Check levels, condition of fluids, and check for leaks. If brake fluid is low, check brake pad thickness.	10-6, 13-3, 14-117, 299 19-7
Cooling system hoses and connections										Check all hoses for damage, leaks, and deterioration. Check for proper fan operation.	10-2
Exhaust system*										Check the catalytic converter heat shield, exhaust pipe, and muffler for damage, leaks, and tightness.	9-6 to 9-12
Fuel lines and connections*										Check for leaks. Retighten loose connections and replace any damaged parts.	11-224

According to state and federal regulations, failure to perform maintenance on the items marked with an asterisk (*) will not void customer's emission warranties. However, Honda recommends that all maintenance services be performed at the recommended time or mileage period to ensure long-term reliability.

For 2000 Canada model: Follow the Severe Conditions Maintenance Schedule for 2000 Model on page 4-22 and 4-23.

Maintenance Schedule for 1999 Model

Severe Conditions

Follow the Severe Conditions Maintenance Schedule for 2000 Model if the vehicle is driven MAINLY under one or more of the Severe Driving Conditions (page 4-23):

Service at the indicated distance or time whichever comes first.		miles x 1,000	15	30	45	60	75	90	105	120	NOTE	SECTION and PAGE
		km x 1,000	24	48	72	96	120	144	168	192		
		months	12	24	36	48	60	72	84	96		
Replace engine oil and oil filter			Every 3,750 miles (6,000 km) or 6 months								Capacity for change with filter: D16Y7: 3.6 ℓ (3.8 US qt, 3.2 Imp qt) D16Y5, D16Y8: 3.3 ℓ (3.5 US qt, 2.9 Imp qt) B16A2: 4.0 ℓ (4.2 US qt, 3.5 Imp qt)	8-6, 8
Check engine oil and coolant			Check oil and coolant at each fuel stop								Check levels and check for leaks.	8-6, 10-6
Replace air cleaner element Use normal schedule except in dusty conditions			●	●	●	●	●	●	●	●		11-244
Inspect valve clearance			At 30,000 miles (48,000 km) only								Intake: 0.18 – 0.22 mm (0.007 – 0.009 in) Exhaust: 0.23 – 0.27 mm (0.009 – 0.011 in) Measured when cold	6-12
Replace spark plugs	D16Y5, D16Y7, D16Y8 engines			●		●		●		●	D16Y5: NGK: ZFR4F-11 DENSO: KJ14CR-L11 D16Y7, D16Y8: NGK: ZFR5F-11 DENSO: KJ16CR-L11 Gap: 1.0 – 1.1 mm (0.039 – 0.043 in)	23-111
	B16A2 engine								●		NGK: PFR6L-13 DENSO: PK20PR-L13	23-111
Replace timing belt*1 and inspect water pump									●			6-19, 62, 10-14
Inspect and adjust drive belts				●		●		●		●	Check for cracks and damage. Check deflection and tension at center of following belts pressing with 98 N (10 kgf, 22 lbf) tension: Alternator drive belt: 8.0 – 10.5 mm (0.31 – 0.41 in) P/S pump belt: B16A2 engine: 7.5 – 11.0 mm (0.30 – 0.43 in) Except B16A2 engine: 10.5 – 14.0 mm (0.41 – 0.55 in) A/C compressor belt: B16A2 engine: 6.0 – 9.5 mm (0.24 – 0.37 in) Except B16A2 engine: 7.5 – 9.5 mm (0.30 – 0.37 in)	17-32 22-43 23-125
Inspect idle speed									●		U.S. Model: B16A2 engine 700 ± 50 rpm (M/T: neutral) Except B16A2 engine 670 ± 50 rpm (M/T: neutral) 700 ± 50 rpm (A/T or CVT: [N] or [P] position) Canada Model: 750 ± 50 rpm (M/T: neutral) 750 ± 50 rpm (A/T: [N] or [P] position)	11-220 to 11-223
Replace engine coolant					●		●		●		Capacity for change: M/T: Except B16A2 engine: 3.8 ℓ (4.0 US qt, 3.3 Imp qt) B16A2 engine: 4.5 ℓ (4.8 US qt, 4.0 Imp qt) A/T: D16Y7 engine: 3.7 ℓ (3.9 US qt, 3.3 Imp qt) D16Y8 engine: 3.9 ℓ (4.1 US qt, 3.4 Imp qt) CVT: 3.9 ℓ (4.1 US qt, 3.4 Imp qt) Check specific gravity for freezing point.	10-7
Replace transmission fluid	MT			●		●		●		●	Manual transmission: Genuine Honda MTF 1.8 ℓ (1.9 US qt, 1.6 Imp qt)*3 2.2 ℓ (2.3 US qt, 1.9 Imp qt)*4 for change Automatic transmission: 2.7 ℓ (2.9 US qt, 2.4 Imp qt) for change with Genuine Honda Premium Formula ATF CVT: 3.9 ℓ (4.1 US qt, 3.4 Imp qt) for change with Genuine Honda CVT Fluid	13-3 14-118 14-299
	AT			●		●		●		●		
	CVT*2			●		●		●		●		

*1: Replace the timing belt at 60,000 miles (USA) 100,000 km (Canada) if the vehicle regularly is driven in one or more of these conditions:
- In very high temperatures (over 110°F, 43°C).
- In very low temperatures (under – 20°F, – 29°C).

*2: If the customer drives at high speed in high temperatures [90°F (32°C) above], the transmission fluid should be changed every 15,000 miles (24,000 km).
2 door coupe *3: S40 Transmission *4: S4C Transmission

Service at the indicated distance or time whichever comes first.	miles x 1,000	15	30	45	60	75	90	105	120	NOTE	SECTION and PAGE
	km x 1,000	24	48	72	96	120	144	168	196		
	months	12	24	36	48	60	72	84	96		
Inspect front and rear brakes		Every 7,500 miles (12,000 km) or 6 months								• Check the brake pad and disc thickness and free movement. • Check the wheel cylinder for leaks. • Check the brake linings for cracking, glazing, wear, or contamination. • Check the calipers for leakage.	19-4, 8, 10, 12, 16, 18, 24, 26, 31, 35, 36, 39
Replace brake fluid				●			●			Use Genuine Honda DOT3 brake fluid. Check that brake fluid level is between the upper and lower marks on the reservoir.	19-7
Check parking brake adjustment		●	●	●	●	●	●	●	●	Fully engaged 6 to 9 clicks.	19-6
Lubricate all hinges, locks, and latches		●	●	●	●	●	●	●	●	Lubricate all hinges, latches and locks.	4-2, 3
Clean antenna mast		●	●	●	●	●	●	●	●		23-193
Rotate tires (Check tire inflation and condition at least once per month)		Rotate tires every 7,500 miles (12,000 km)								The suggested rotation method is shown in the diagram in the Owner's Manual.	——
Visually inspect the following items:											
Tie-rod ends, steering gear box, and boots		Every 7,500 miles (12,000 km) or 6 months								Check steering linkage for looseness. Check condition of boots. Check for fluid leaks.	17-31
Suspension components										Check the bolts for tightness. Check the condition of ball joint boots.	18-8, 9, 21, 22
Driveshaft boots										Check condition of boots.	16-3
Brake hoses and lines (including ABS)		●	●	●	●	●	●	●	●	Check for damage or leakage.	19-39
All fluid levels and condition of fluids										Check levels, condition of fluids, and check for leaks. If brake fluid is low, check brake pad thickness.	10-6, 13-3, 14-117, 299 19-7
Cooling system hoses and connections										Check all hoses for damage, leaks, and deterioration. Check for proper fan operation.	10-2
Exhaust system*										Check the catalytic converter heat shield, exhaust pipe, and muffler for damage, leaks, and tightness.	9-6 to 9-12
Fuel lines and connections*										Check for leaks.	11-224
Lights and controls										Check all lighting functions.	23-168
Vehicle underbody										Check for damage and fluid leaks.	——

According to state and federal regulations, failure to perform maintenance on the items marked with an asterisk (*) will not void customer's emission warranties. However, Honda recommends that all maintenance services be performed at the recommended time or mileage period to ensure long-term reliability.

Severe Driving Conditions:

- Driving less than 5 miles (8 km) per trip or, in freezing temperatures, driving less than 10 miles (16 km) per trip.
- Driving in extremely hot [over 90°F (32°C)] conditions.
- Extensive idling or long periods of stop-and-go driving.
- Trailer towing or driving in mountainous conditions.
- Driving on muddy, dusty, or de-iced roads.

NOTE: If the car is driven OCCASIONALLY under a "severe" condition, you should follow the Normal Conditions Maintenance Schedule for 2000 Model on pages 4-20 and 4-21.

Engine

Engine Removal/Installation 5-1
Cylinder Head/Valve Train 6-1
Engine Block 7-1
Engine Lubrication 8-1
Intake Manifold/Exhaust System 9-1
Cooling 10-1

Engine Removal/Installation

Removal 5-2
Installation 5-12

Removal

⚠ WARNING

- **Make sure jacks and safety stands are placed properly and hoist brackets are attached to the correct positions on the engine.**
- **Make sure the vehicle will not roll off stands and fall while you are working under it.**

CAUTION:

- **Use fender covers to avoid damaging painted surface.**
- **Unplug the wiring connectors carefully while holding the connector portion to avoid damage.**
- **Mark all wiring and hoses to avoid misconnection. Also, be sure that they do not contact other wiring or hoses or interfere with other parts.**

1. Secure the hood as open as possible.

2. Disconnect the battery negative terminal first, then the positive terminal. Remove the battery.

3. Remove the strut brace (B16A2 engine).

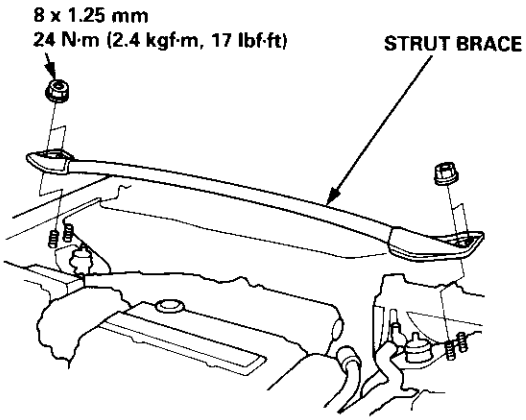

4. Disconnect the battery cables from the under-hood fuse/relay box and battery positive terminal.

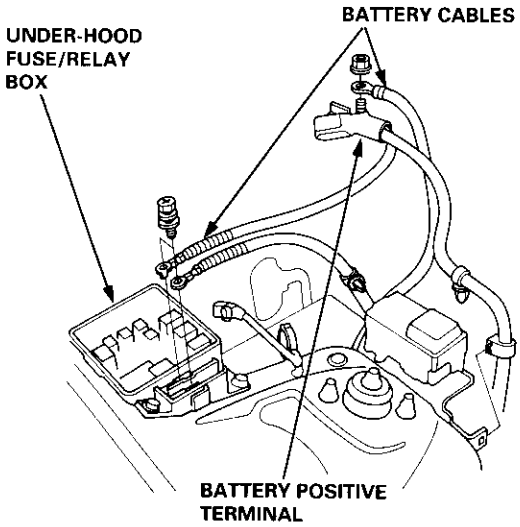

5. Remove the battery and battery base.

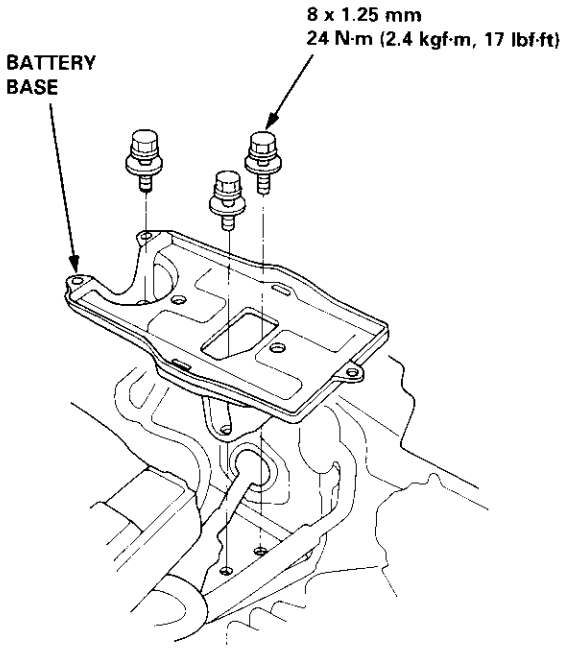

6. Disconnect the connectors from the ECM/PCM.

7. Disconnect the main wire harness connector.

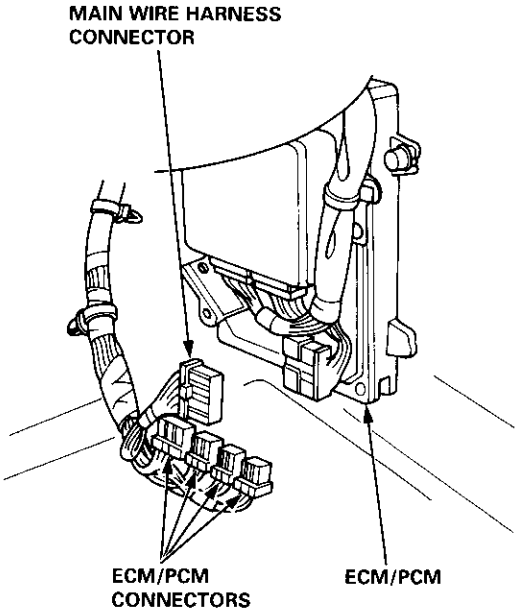

8. Remove the intake air duct and air cleaner housing.

D16Y7 engine:

a. Remove the resonator and intake air duct.

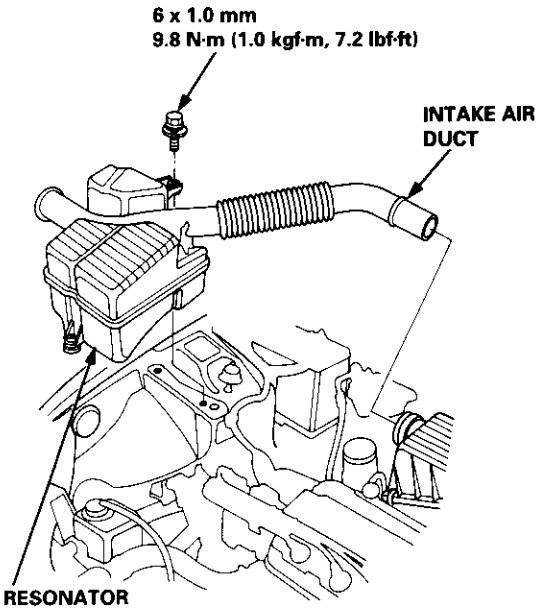

b. Disconnect the intake air temperature (IAT) sensor connector, then remove the air cleaner housing.

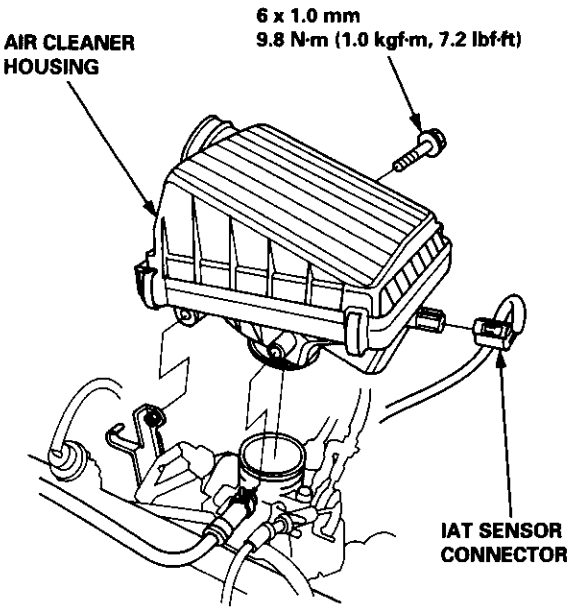

D16Y5, D16Y8, B16A2 engines:

a. Disconnect the IAT sensor connector, then remove the intake air duct and air cleaner housing.

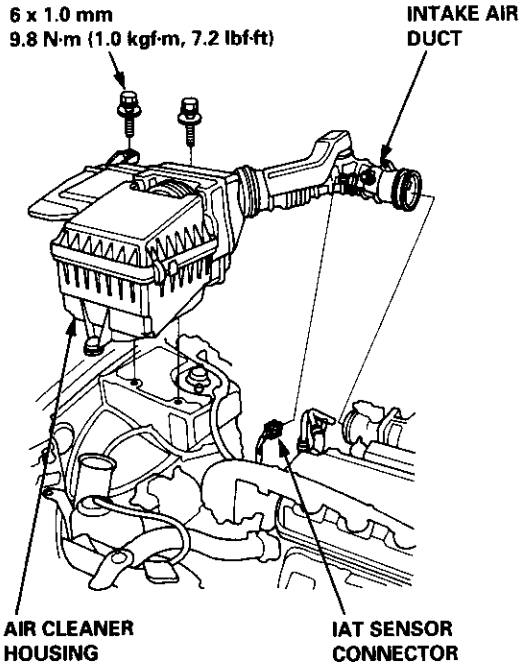

9. Disconnect the engine wire harness connector on the left side of the engine compartment.

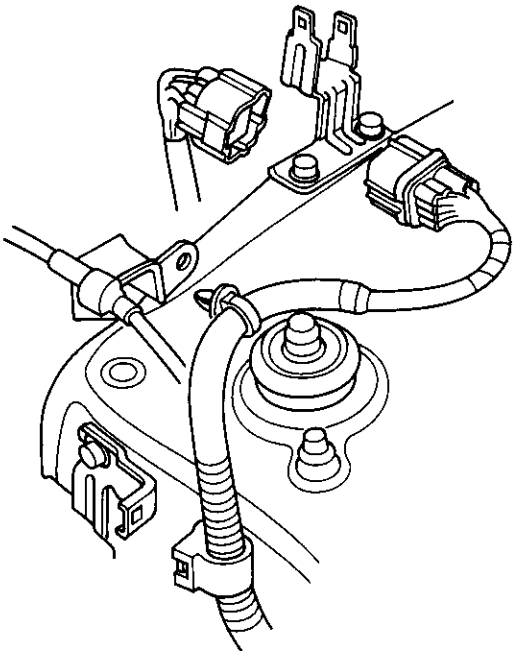

(cont'd)

Removal (cont'd)

10. Relieve fuel pressure (see section 11).

⚠ WARNING Do not smoke while working on the fuel system. Keep open flame or spark away from the work area. Drain fuel only into an approved container.

11. Remove the evaporative emission (EVAP) control canister hose and fuel feed hose.

D16Y7 engine:

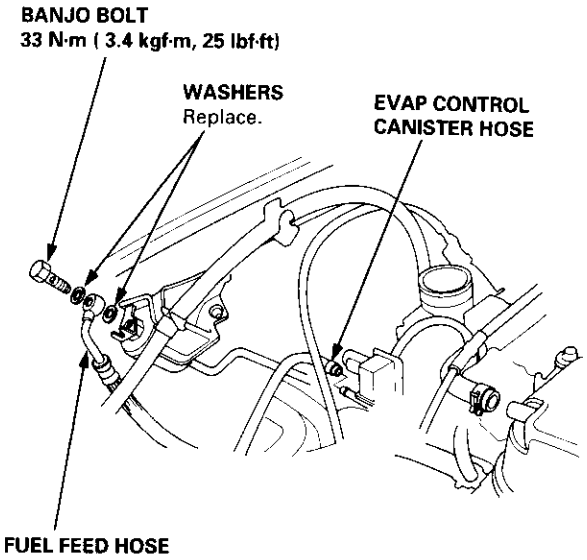

D16Y5, D16Y8, B16A2 engines:

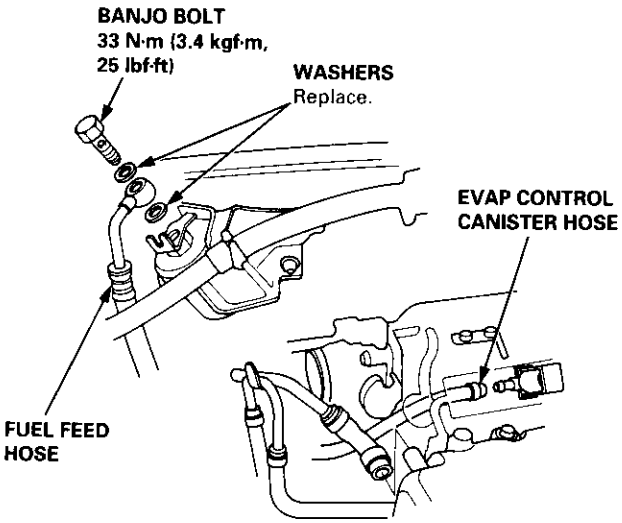

12. Remove the brake booster vacuum hose, fuel return hose and vacuum hose.

D16Y7 engine:

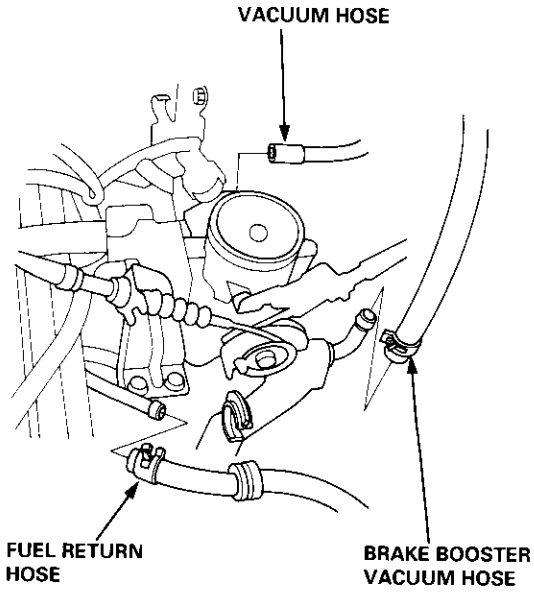

D16Y5, D16Y8, B16A2 engines:

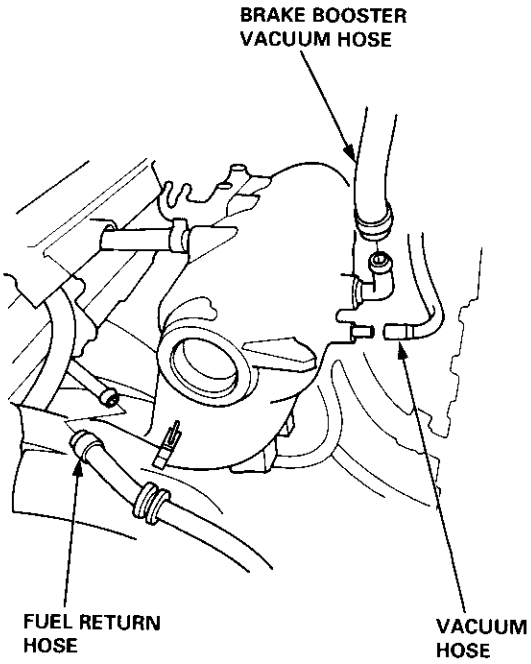

13. Remove the throttle cable by loosening the locknut, then slip the cable end out of the accelerator linkage.

NOTE:
- Take care not to bend the cable when removing it. Always replace any kinked cable with a new one.
- Adjust the throttle cable when installing (see section 11).

D16Y7 engine:

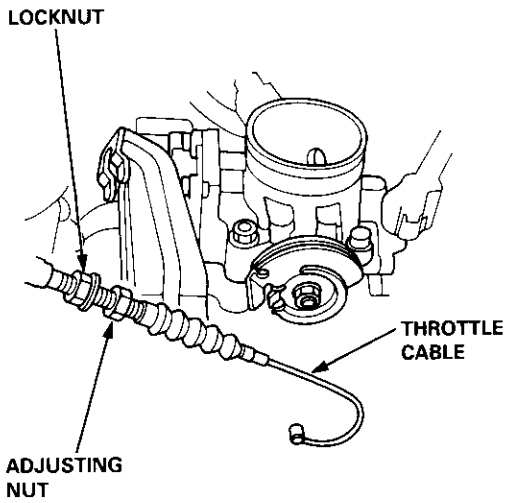

D16Y5, D16Y8, B16A2 engines:

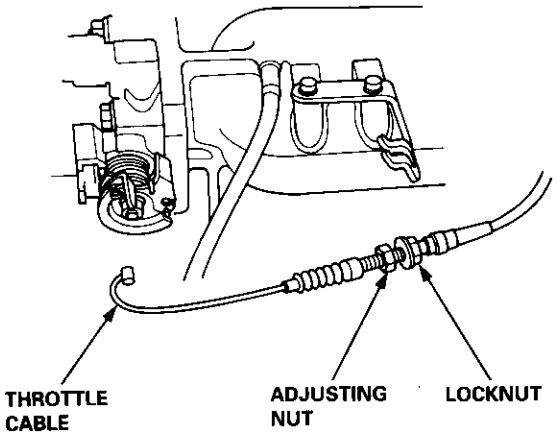

14. Disconnect the connectors from the PCM.

15. Remove the grommet and wire harness clamps, then pull out the ECM/PCM connectors.

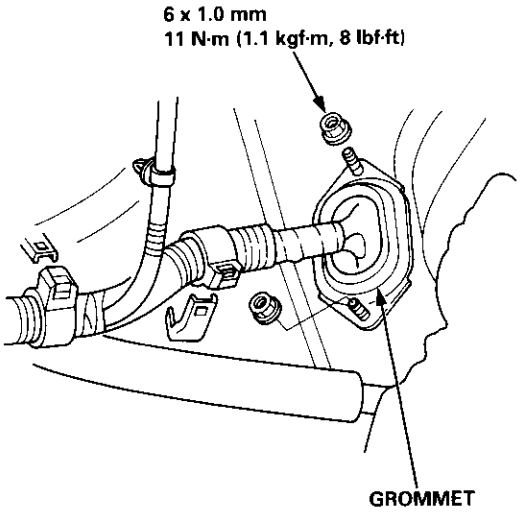

16. Remove the mounting bolt and lock bolt, then remove the power steering (P/S) pump belt and pump.

NOTE: Do not disconnect the P/S hoses.

B16A2 engine:

-1. Remove the adjusting bolt and mounting bolts, then remove the P/S pump belt and pump.

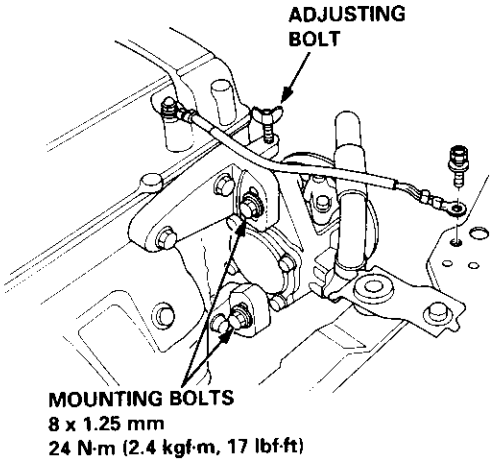

(cont'd)

Removal (cont'd)

D16Y5, D16Y7, D16Y8 engines:

-1. Remove the mounting bolt and lock bolt, then remove the P/S pump belt and pump.

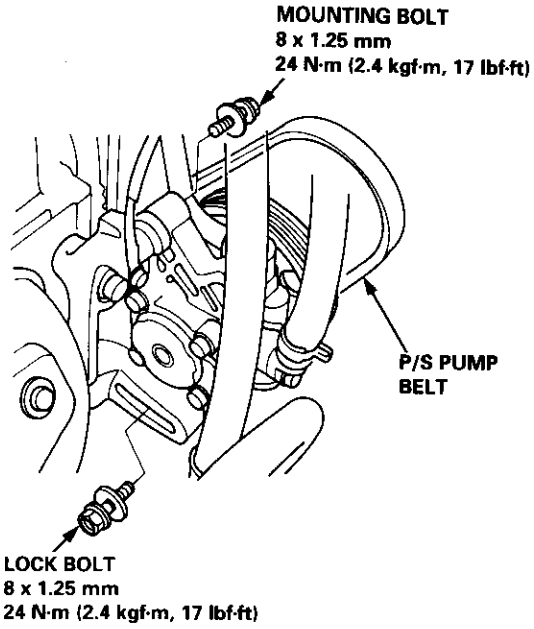

17. Loosen the idler pulley center nut and adjusting bolt, then remove the air conditioning (A/C) compressor belt.

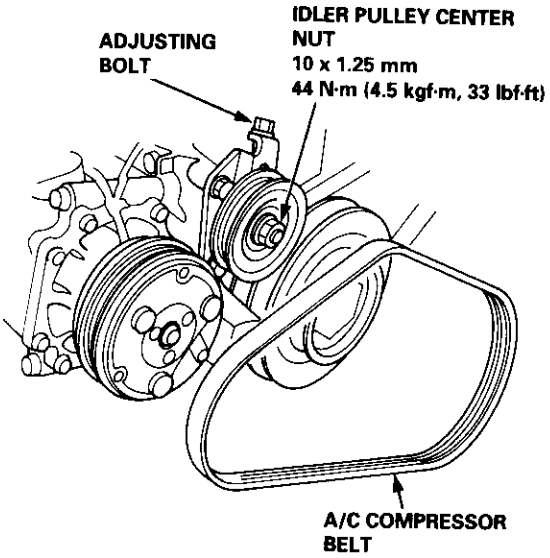

18. Remove the transmission ground cable and hose clamp.

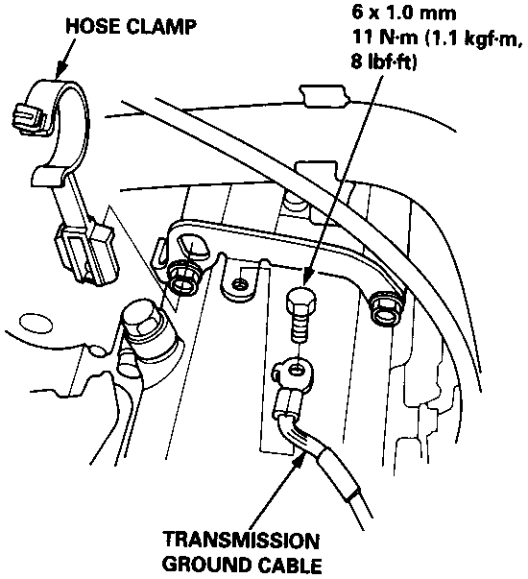

19. Remove the clutch slave cylinder and line/hose assembly (M/T).

NOTE:
- Do not disconnect the pipe/hose assembly.
- Do not operate the clutch pedal once the slave cylinder has been removed.
- Take care not to bend the line.

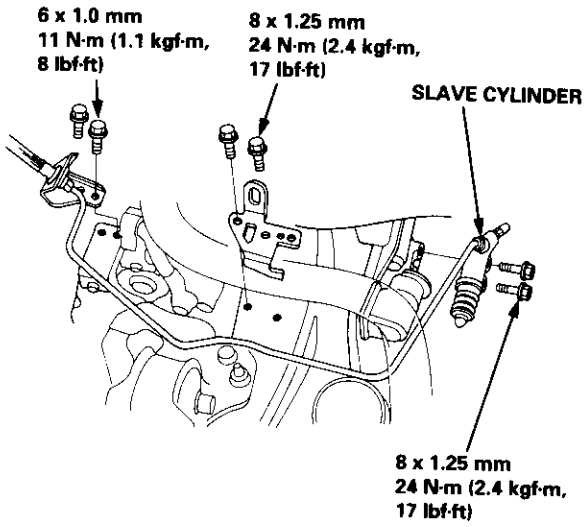

20. Remove the shift cable (CVT).

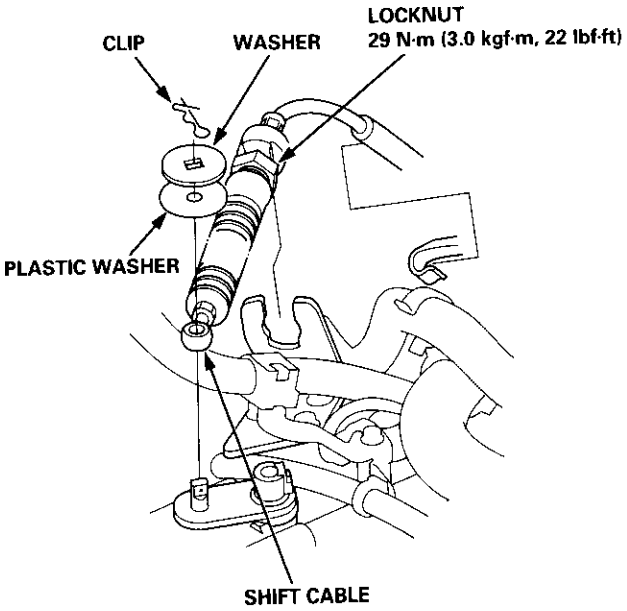

21. Disconnect the power steering pressure (PSP) switch connector, and remove the wire harness clamp.

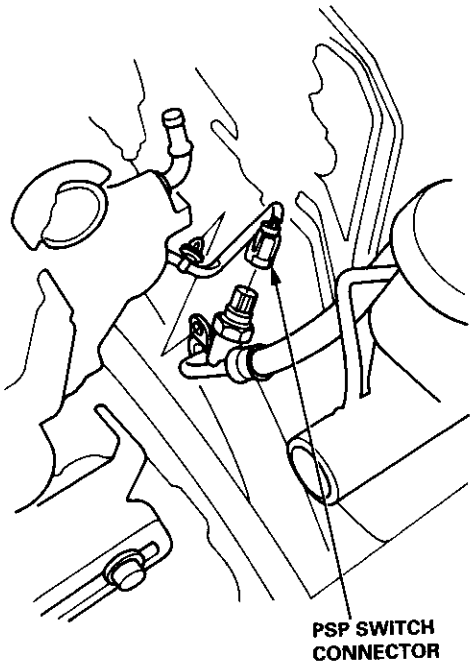

22. Remove the radiator cap.

⚠ WARNING Use care when removing the radiator cap to avoid scalding by hot coolant or steam.

23. Raise the hoist to full height.

24. Remove the front tires/wheels and splash shield.

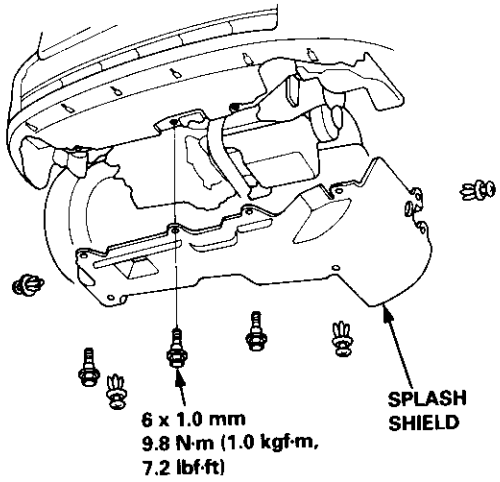

25. Drain the engine coolant (see page 10-7). Loosen the drain plug in the radiator.

26. Drain the transmission fluid. Reinstall the drain plug using a new washer (see section 13, 14).

27. Drain the engine oil. Reinstall the drain bolt using a new washer (see page 8-6).

28. Remove the shift rod and extension rod (M/T).

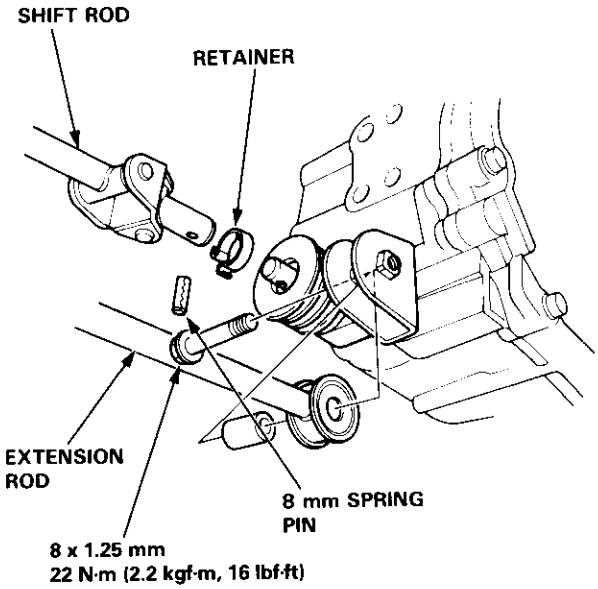

(cont'd)

Removal (cont'd)

29. Remove the A/C compressor.

    NOTE: Do not disconnect the A/C hoses.

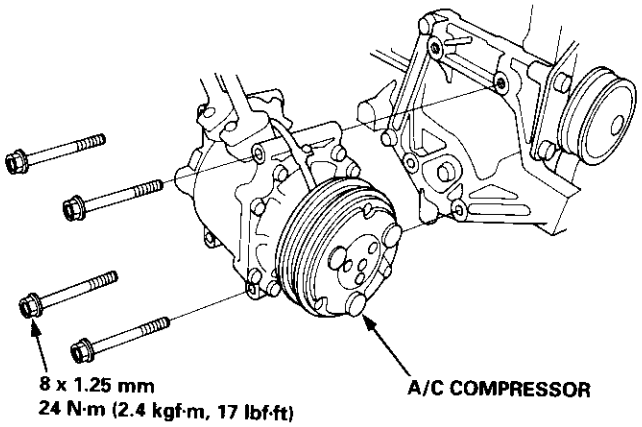

30. Remove the shift cable (A/T).

    NOTE:
    - Take care not to bend the cable when removing it. Always replace any kinked cable with a new one.
    - Adjust the shift cable when installing (see section 14).

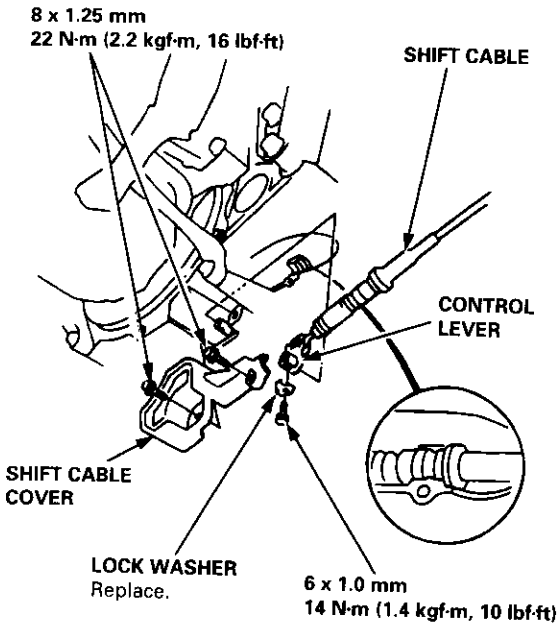

31. Remove exhaust pipe A.

D16Y5, D16Y7 engines:

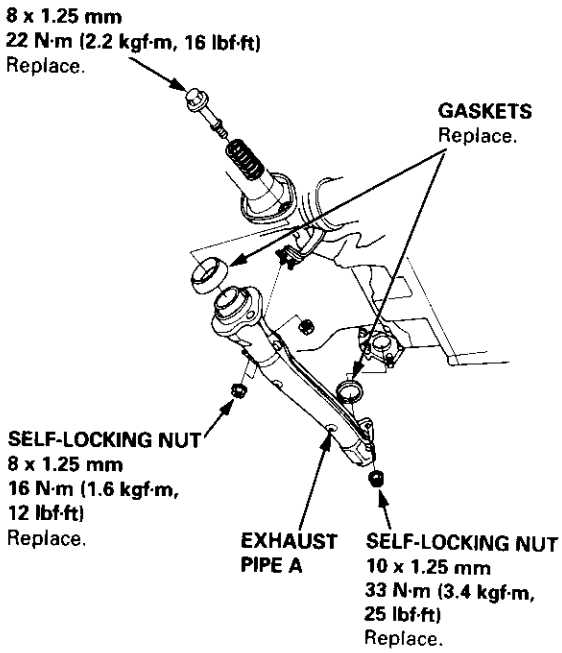

D16Y8 engine:

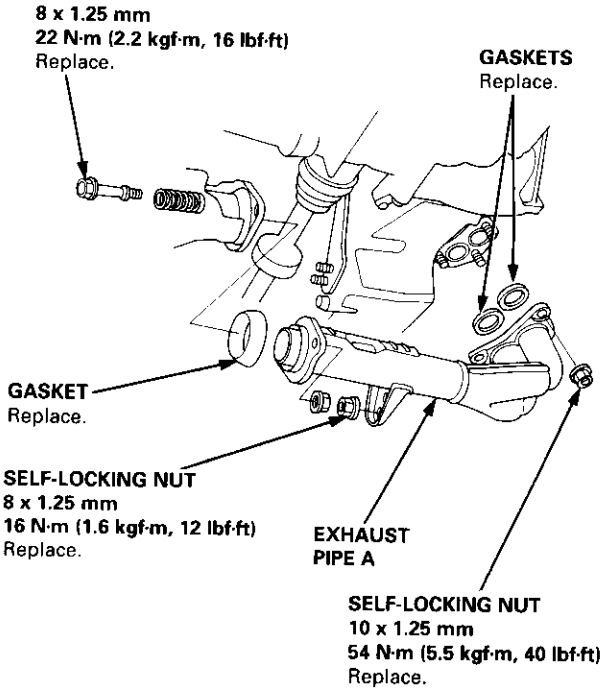

B16A2 engine:

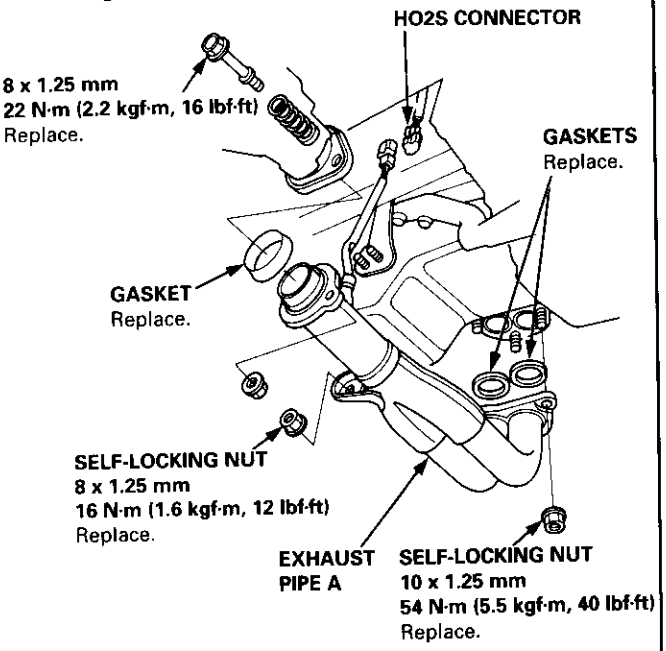

32. Remove the damper forks (see section 18).

33. Disconnect the suspension lower arm ball joints (see section 18).

34. Remove the driveshafts.

CAUTION:
- **Do not pull on the driveshaft, the CV joint may come apart.**
- **Use care when prying out the assembly. Pull it straight to avoid damaging the differential oil seal or intermediate shaft dust seal.**

NOTE: Coat all precision-finished surfaces with clean engine oil. Tie plastic bags over the driveshaft ends.

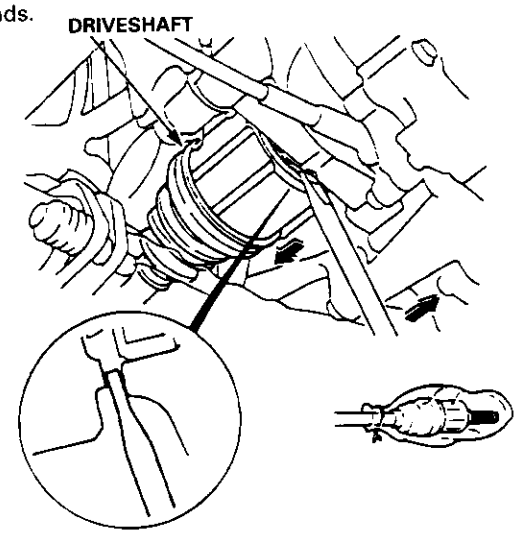

35. Lower the hoist.

36. Remove the upper and lower radiator hoses and heater hoses.

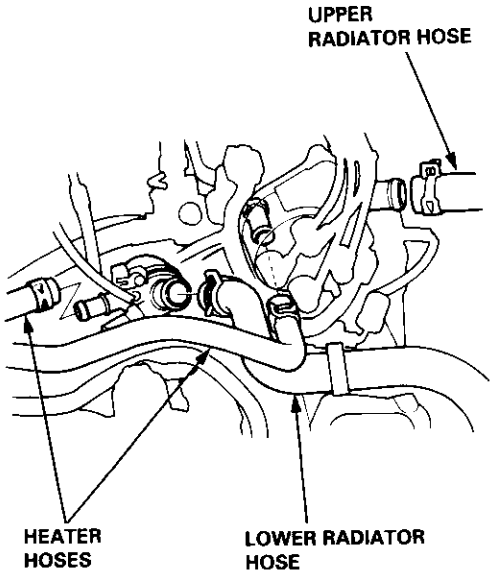

37. Remove the ATF cooler hoses, then plug the ATF cooler hoses and pipes (A/T).

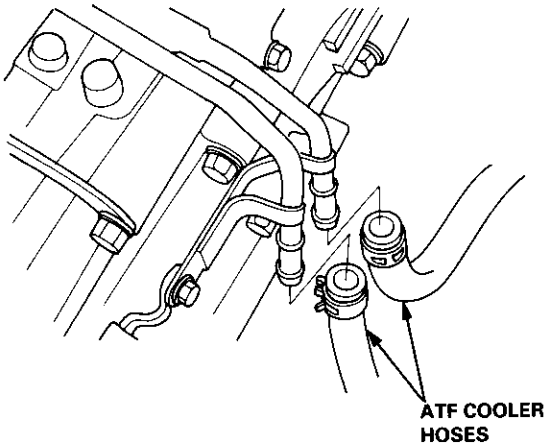

(cont'd)

Removal (cont'd)

38. Attach the chain hoist to the engine.

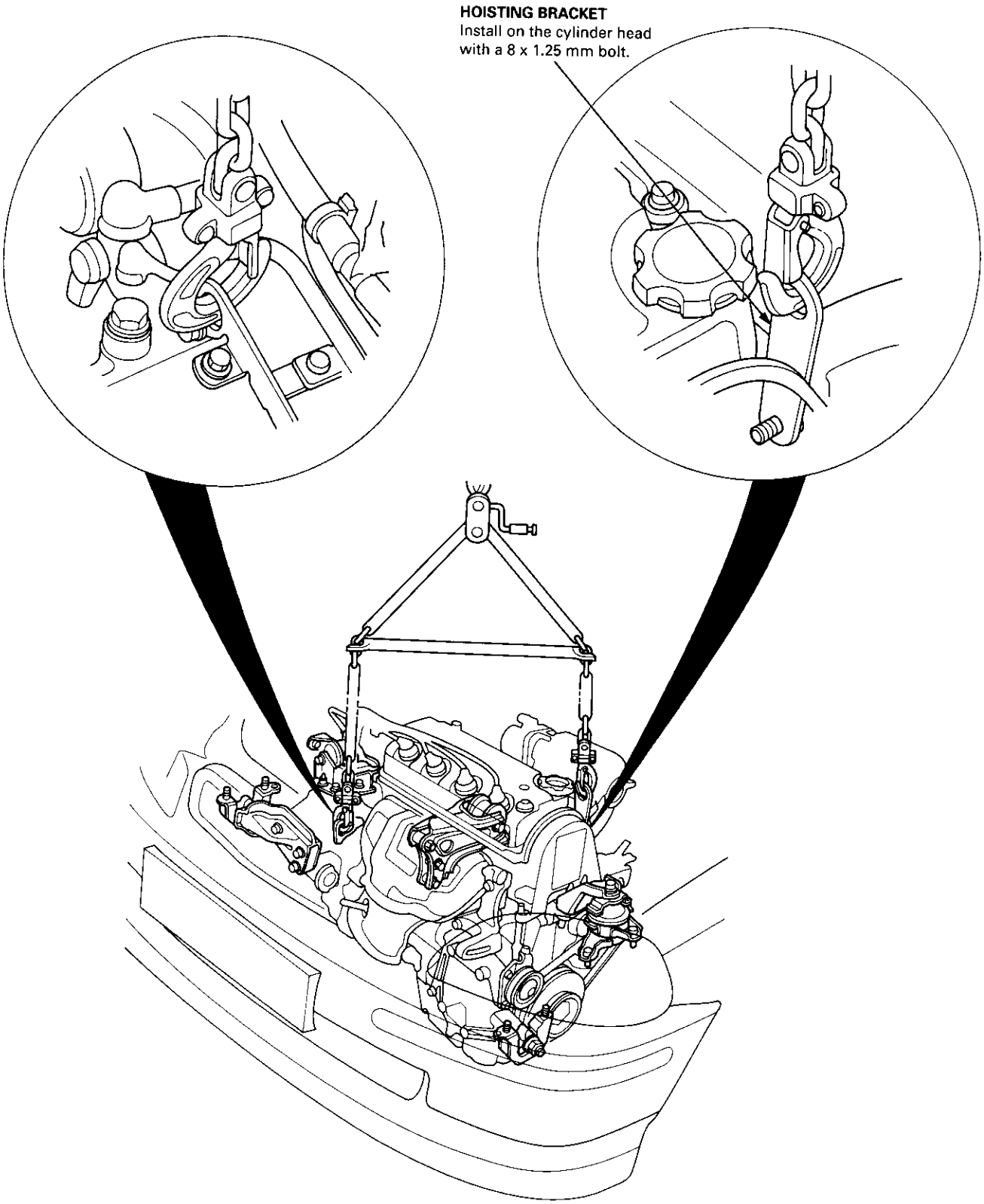

39. Remove the left and right front mount and bracket.

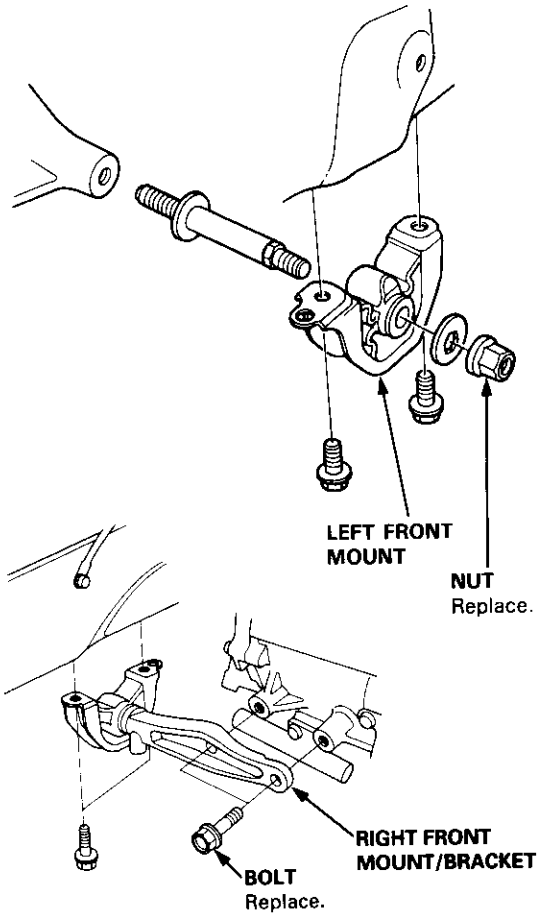

40. Remove the rear mount bracket.

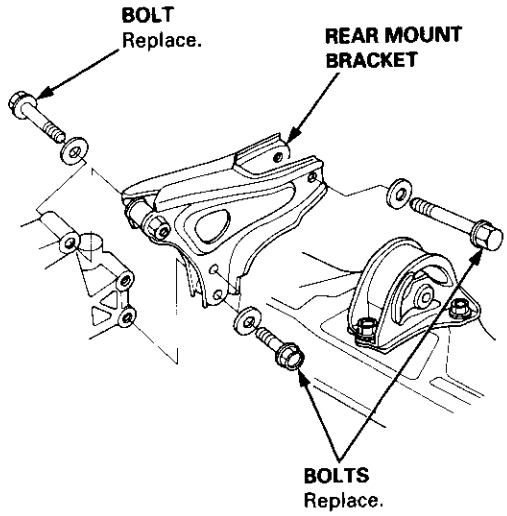

41. Remove the upper bracket.

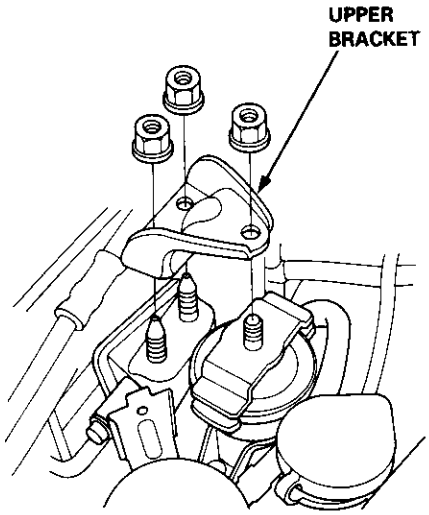

42. Remove the transmission mount bracket, then remove the transmission mount.

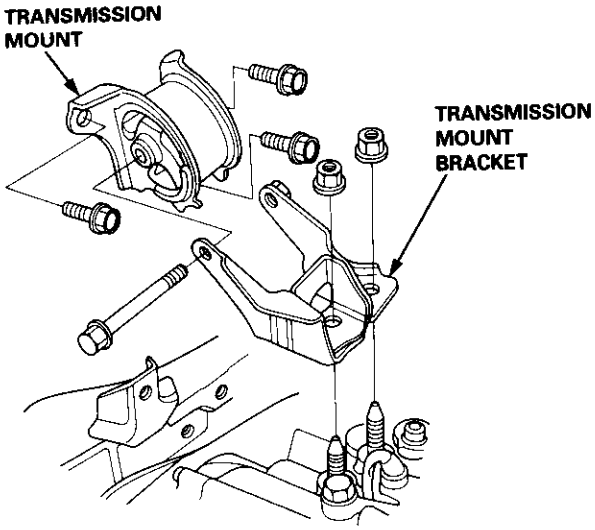

43. Check that the engine/transmission is completely free of vacuum hoses, fuel and coolant hoses and electrical wiring.

44. Slowly raise the engine approximately 150 mm (6 in). Check once again that all hoses and wires are disconnected from the engine/transmission.

45. Raise the engine all the way, and remove it from the car.

Installation

Bracket Bolts Torque Specifications:

D16Y5, D16Y7, D16Y8 engines

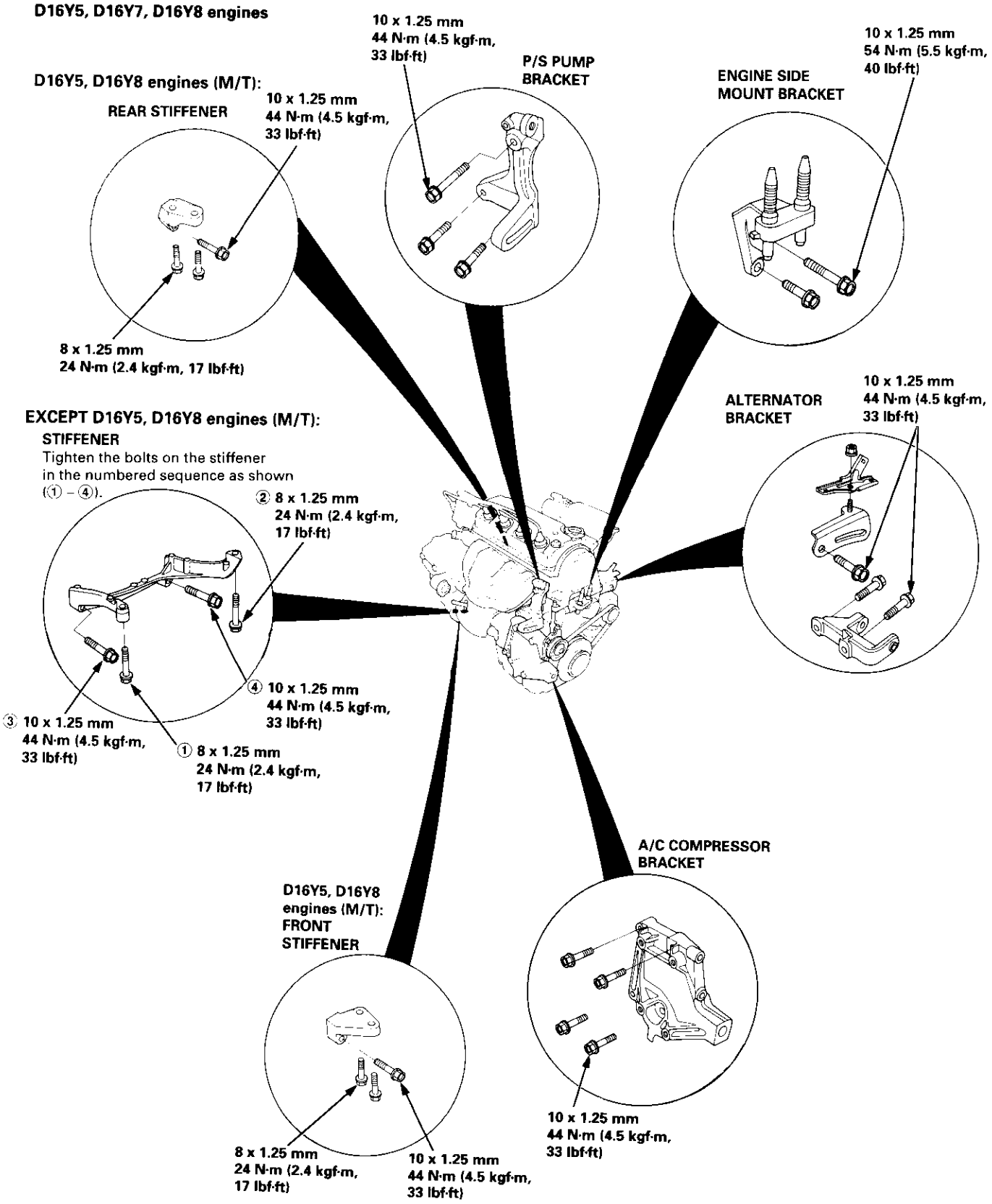

B16A2 engine

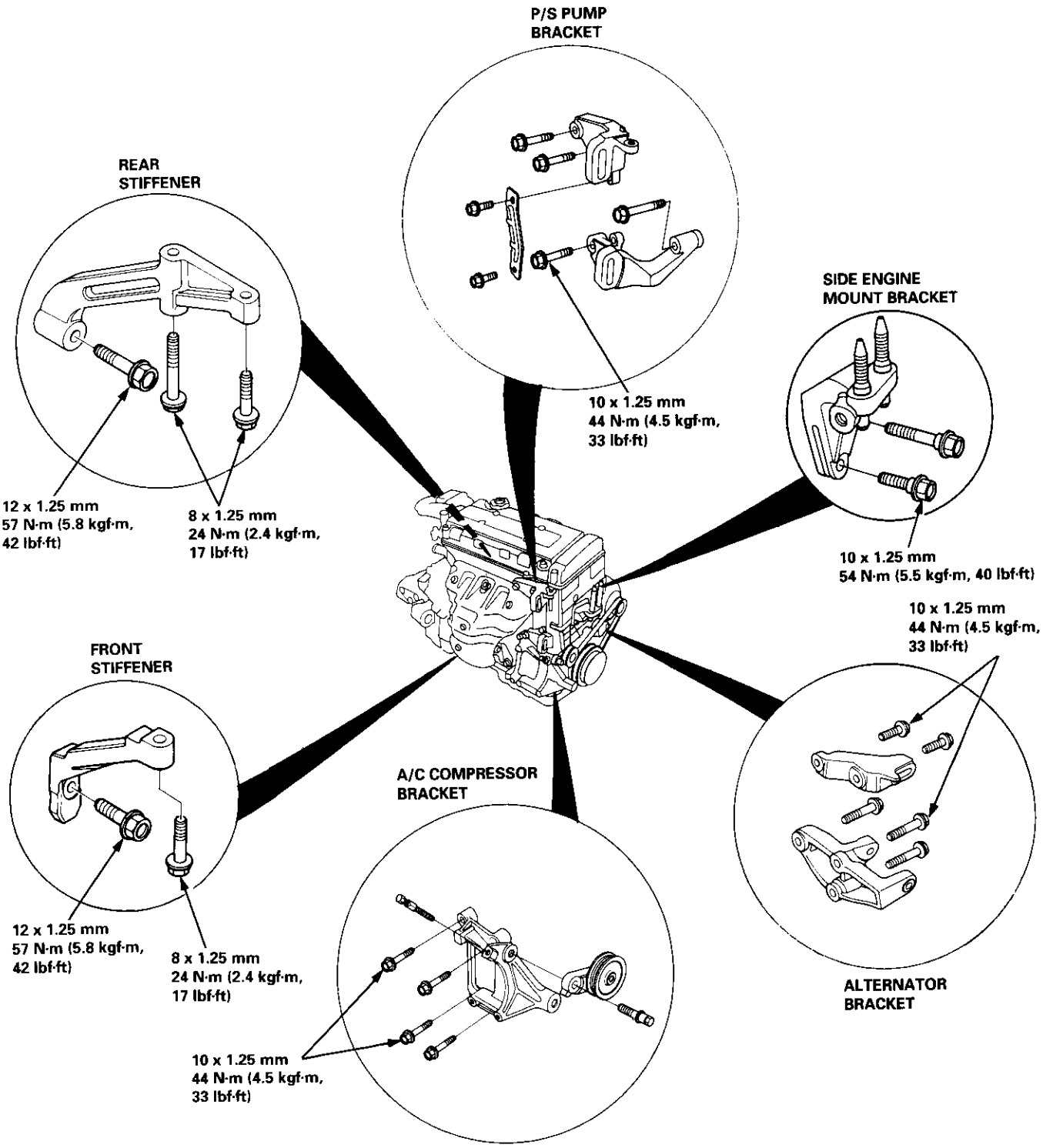

(cont'd)

Installation (cont'd)

Engine Installation:

Install the engine in the reverse order of removal. Reinstall the mount bolts/nuts in the following sequence. Failure to follow these procedures may cause excessive noise and vibration, and reduce bushing life.

1. Install the transmission mount and bracket, then tighten the bolts on the frame side.

   NOTE: Do not tighten the bolts/nuts on the transmission side.

   CVT:

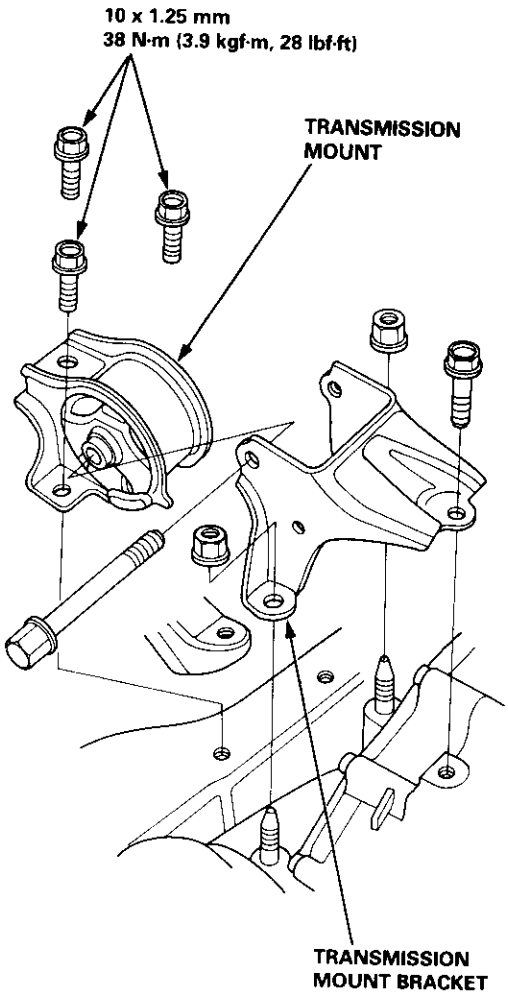

Except CVT:

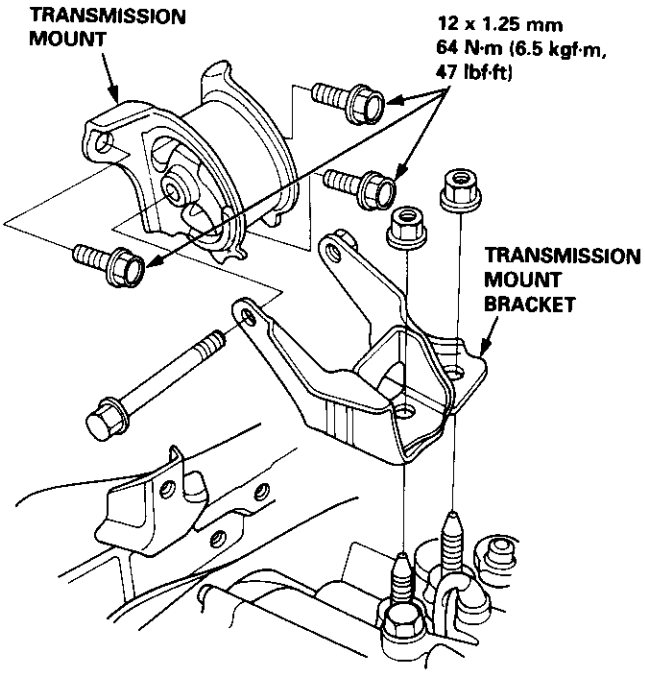

2. Install the upper bracket, then tighten the nuts in the numbered sequence shown (① – ②).

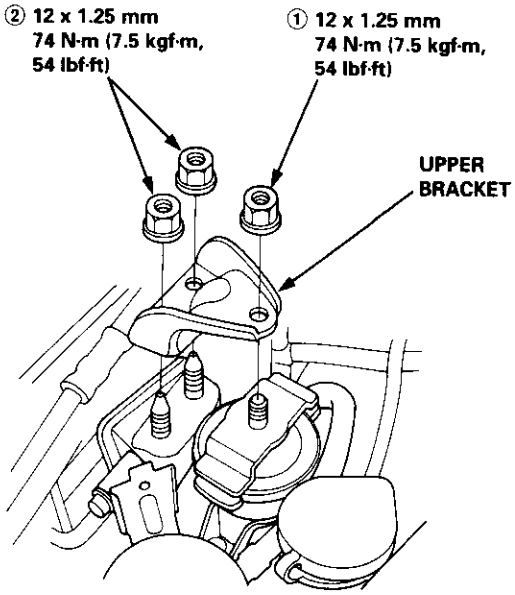

3. Install the rear mount bracket, then tighten the bolts in the numbered sequence shown (① – ③).

CVT:

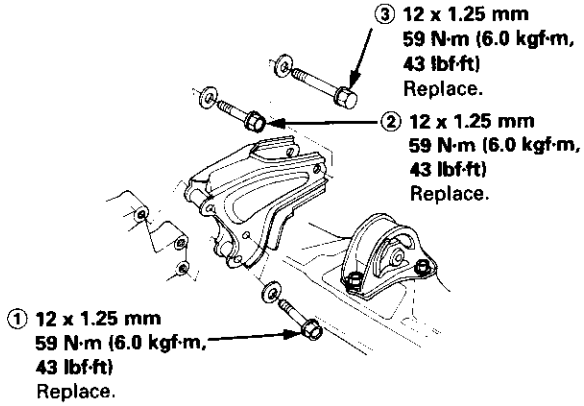

Except CVT:

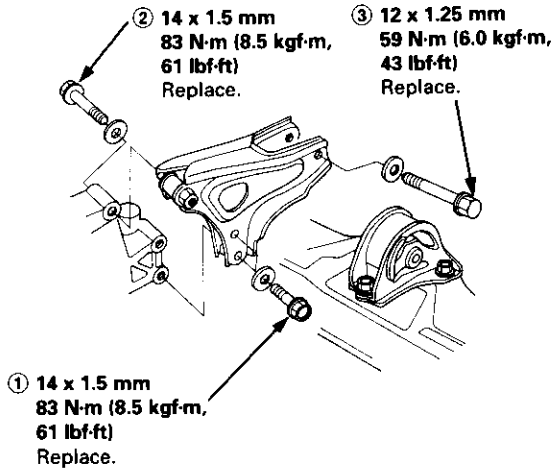

4. Tighten the bolt/nuts on the transmission mount bracket in the numbered sequence shown (① – ②).

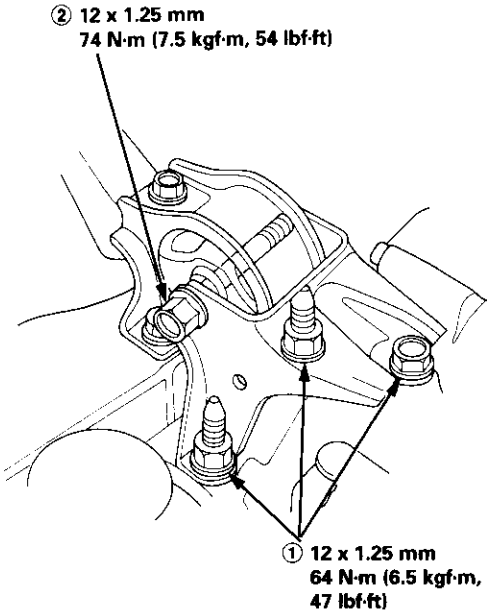

5. Tighten the bolts on the right front mount/bracket in the numbered sequence shown (① – ②).

CVT:

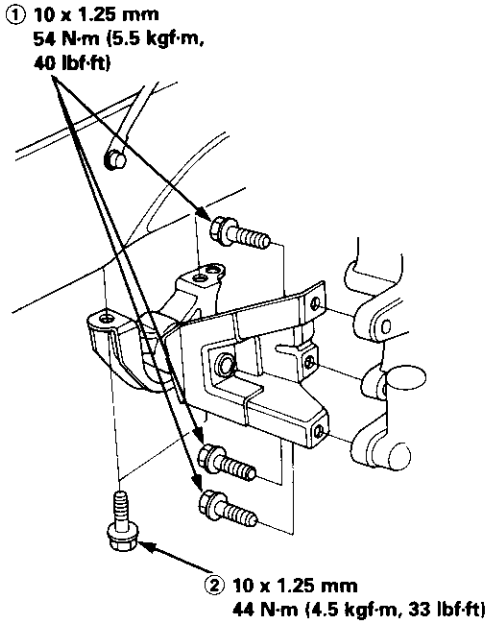

(cont'd)

Installation (cont'd)

Except CVT:

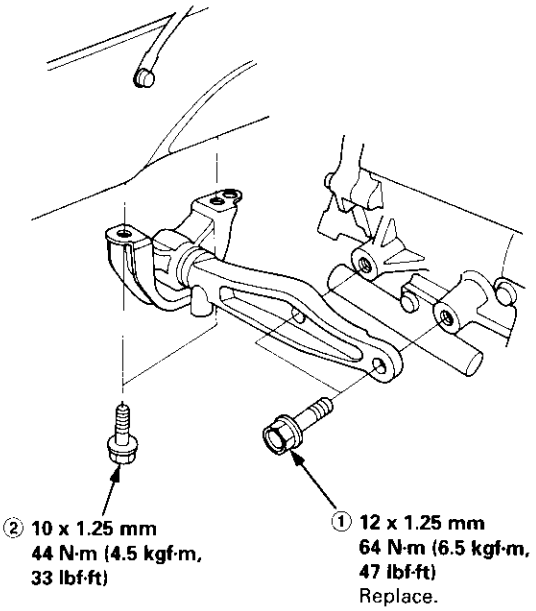

6. Tighten the bolts/nut on the left front mount in the numbered sequence shown (① – ③).

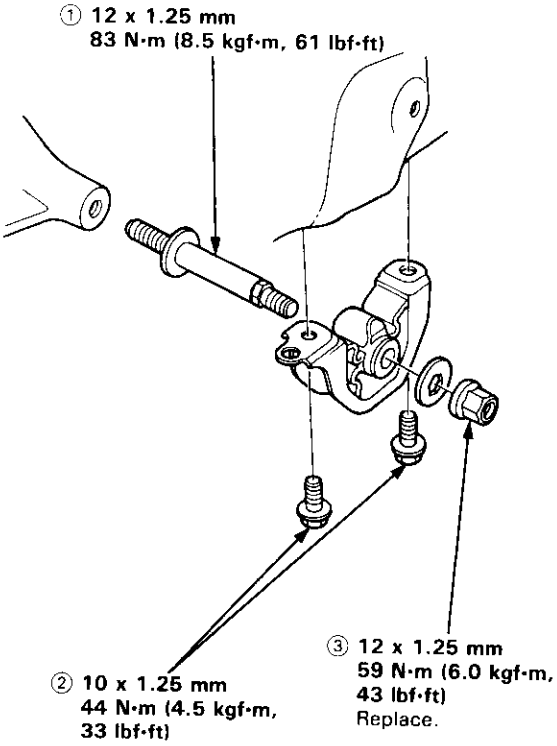

7. Perform the following:

- Clean the areas where the driveshaft(s) and the intermediate shaft contact the transmission (differential) thoroughly with solvent or carburetor cleaner, and dry with compressed air.
- Check that the set rings on the ends of the driveshaft and intermediate shaft click into place.
  CAUTION: Use new set rings.
- Adjust the shift cable (see section 14).
- Adjust the throttle cable (see section 11).
- Adjust the cruise control cable (see section 23).
- Refill the engine with engine oil (see page 8-6).
- Refill the transmission with fluid (see section 13, 14).
- Refill the radiator with engine coolant (see page 10-7).
- Bleed air from the cooling system with the heater valve open (see page 10-7).
- Clean the battery posts and cable terminals with sandpaper, assemble them, then apply grease to prevent corrosion.
- Inspect for fuel leakage (see section 11).
  After assembling the fuel line, turn on (II) the ignition switch (do not operate the starter) so that the fuel pump runs for approximately two seconds and the fuel line pressurizes. Repeat this operation two or three times, then check for fuel leakage at any point in the fuel line.

Mount and Bracket Bolts/Nuts Torque Value Specifications:

A: 10 x 1.25 mm
64 N·m (6.5 kgf·m, 47 lbf·ft)
B: 10 x 1.25 mm
44 N·m (4.5 kgf·m, 33 lbf·ft)
C: 12 x 1.25 mm
83 N·m (8.5 kgf·m, 61 lbf·ft)
D: 12 x 1.25 mm
59 N·m (6.0 kgf·m, 43 lbf·ft)
Replace.

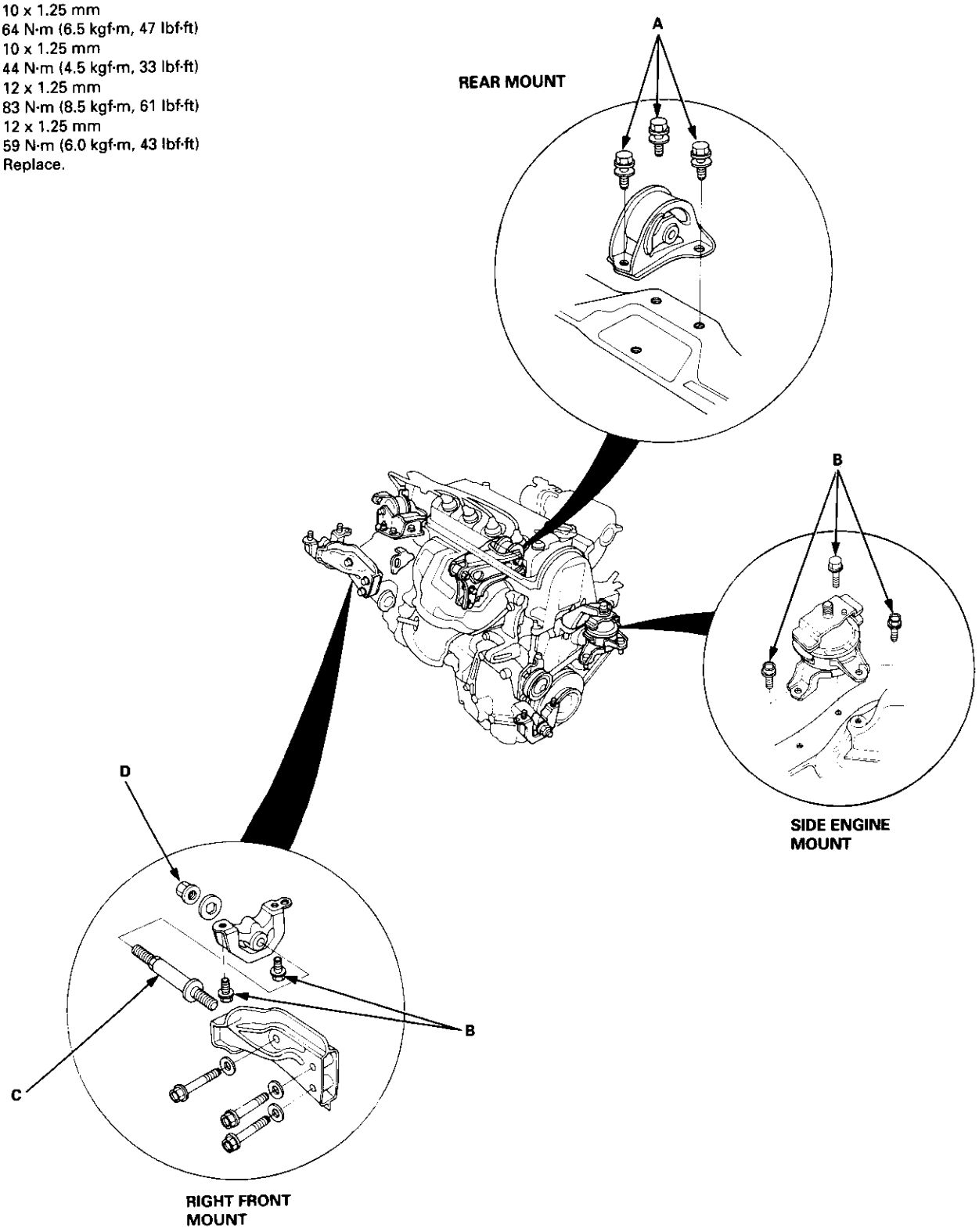

Cylinder Head/Valve Train
D16Y5, D16Y7, D16Y8 engines

Special Tools 6-2
VTEC Control System
  Troubleshooting Flowchart 6-3
VTEC Solenoid Valve
  Inspection 6-6
VTEC Rocker Arms
  Manual Inspection
    (D16Y5 engine) 6-7
  Manual Inspection
    (D16Y8 engine) 6-7
  Inspection Using Special Tools
    (D16Y5 engine) 6-8
  Inspection Using Special Tools
    (D16Y8 engine) 6-10
Valve Clearance
  Adjustment 6-12
Valve Seals
  Replacement (Cylinder head removal
    not required) 6-14
Crankshaft Pulley and Pulley Bolt
  Replacement 6-16
Timing Belt
  Illustrated Index 6-17
  Inspection 6-18
  Tension Adjustment 6-18
  Removal 6-19
  Installation 6-20
Crankshaft Speed Fluctuation (CKF) Sensor
  Replacement 6-22
Cylinder Head
  Illustrated Index 6-23
  Removal 6-27
  Warpage 6-40
  Installation 6-45
Rocker Arms
  Removal 6-30
  Disassembly/Reassembly 6-31
Rocker Arms and Lost Motion Assemblies
  Inspection (D16Y5, D16Y8
    engines) 6-34
Rocker Arms and Shafts
  Clearance Inspection 6-35
Camshaft
  Inspection 6-36
Valves, Valve Springs and Valve Seals
  Removal 6-38
Valve Guides
  Valve Movement 6-39
  Replacement 6-41
  Reaming 6-43
Valve Seats
  Reconditioning 6-40
Valves
  Installation 6-43
Camshaft/Rocker Arms and
Camshaft Seal/Pulley
  Installation 6-44

Special Tools

Ref. No.	Tool Number	Description	Qty	Page Reference
①	07HAH – PJ7010B	Valve Guide Reamer, 5.5 mm	1	6-43
②	07JAA – 001010A	Socket, 17 mm	1	6-16
③	07JAB – 001020A	Holder Handle	1	6-16
④	07LAJ – PR3020B	Air Stopper	1	6-8, 10
⑤	07NAB – 001040A	Holder Attachment, 50 mm	1	6-16
⑥	07NAJ – P07010A	Pressure Gauge Adapter	1	6-4
⑦	07406 – 0020201	A/T Pressure Hose	1	6-4
or ⑦ – 1	07MAJ – PY4011A	A/T Pressure Hose, 2,210 mm	1	6-4
and ⑦ – 2	07MAJ – PY40120	A/T Pressure Adapter	1	6-4
⑧	07406 – 0070300	A/T Low Pressure Gauge W/Panel	1	6-4
⑨	07742 – 0010100	Valve Guide Driver, 5.5 mm	1	6-41, 42

①

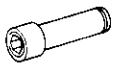

②

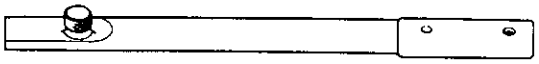

③

④

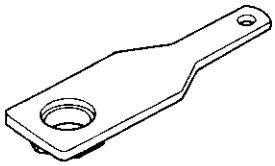

⑤

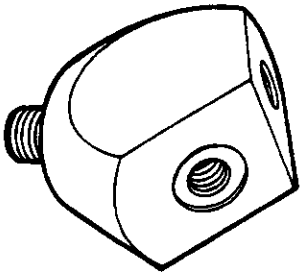

⑥

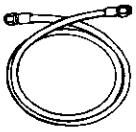

⑦
⑦ – 1

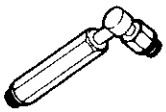

⑦ – 2

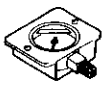

⑧

⑨

Troubleshooting Flowchart

P1259 The scan tool indicates Diagnostic Trouble Code (DTC) P1259: A problem in the VTEC Pressure Switch circuit or VTEC Solenoid Valve circuit.

Refer to page 11-38 through 11-55 before troubleshooting.

— The MIL has been reported on.
— DTC P1259 is stored.

Check the VTEC Control System:
1. Do the engine control module (ECM)/powertrain control module (PCM) Reset Procedure (see section 11).
2. Start the engine.
3. Warm up the engine to normal operating temperature (cooling fan comes on).
4. Do the Road Test.*

* Road Test:
Accelerate in 1st gear to an engine speed over 3,000 rpm (D16Y5 engine) or 6,000 rpm (D16Y8 engine).
Hold that engine speed for at least two seconds.
If DTC P1259 is not repeated during the first road test, repeat this test two more times.

Is DTC P1259 indicated?

NO → **Intermittent failure, system is OK at this time. Check for poor connections or loose wires at VTEC pressure switch, VTEC solenoid valve and ECM/PCM.**

YES ↓

Test the VTEC Pressure Switch:
1. Turn the ignition switch OFF.
2. Disconnect the VTEC Pressure switch 2P connector.
3. Check for continuity between VTEC pressure switch 2P connector terminal No. 1 and No. 2.

VTEC PRESSURE SWITCH 2P CONNECTOR

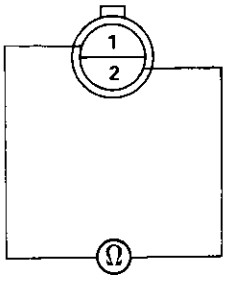

Terminal side of male terminals

Is there continuity?

NO → **Replace the VTEC pressure switch.**

YES ↓

Test the VTEC Pressure Switch Wire:
1. Turn the ignition switch ON (II).
2. Measure the voltage between VTEC pressure switch 2P connector No. 1 and body ground.

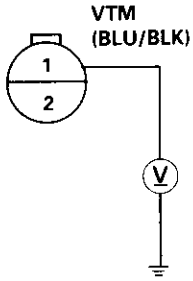

Wire side of female terminals

Is there battery voltage?

NO → **Inspect for an open or short to ground in the wire between the VTEC pressure switch and ECM/PCM ('96 – 98: C15, '99 – 00: C10). If the wire is OK, substitute a known-good ECM/PCM and recheck.**

YES ↓

(To page 6-4)

(cont'd)

Troubleshooting Flowchart (cont'd)

(From page 6-3)

Test the VTEC Pressure Switch Wire:
Measure voltage across the VTEC pressure switch 2P connector.

Is there battery voltage?

NO →
- **Repair open in the wire between VTEC pressure switch and G101.**
- **If the wire is OK, substitute a known-good ECM/PCM and recheck.**

YES ↓

VTEC PRESSURE SWITCH 2P CONNECTOR

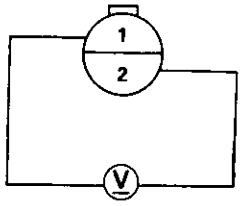

Wire side of female terminals

Test the VTEC Solenoid Valve:
1. Turn the ignition switch OFF.
2. Disconnect the VTEC solenoid valve 1P connector.
3. Check for continuity between the VTEC solenoid valve 1P connector terminal No. 1 and body ground.

VTEC SOLENOID VALVE 1P CONNECTOR

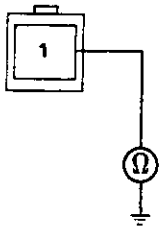

Terminal side of male terminal

Is there 14 – 30 Ω?

NO → **Replace VTEC solenoid valve.**

YES ↓

Test the VTEC Solenoid Valve:
1. Remove the VTEC pressure switch and install the special tool as shown, then reinstall the VTEC pressure switch.
2. Reconnect the VTEC solenoid valve 1P connector and VTEC pressure switch 2P connector.
3. Connect the tachometer (see section 11).
4. Start the engine.
5. Warm up engine to normal operating temperature (cooling fan comes on).
6. Check oil pressure at engine speeds D16Y5 engine: 1,000 and 3,000 rpm, D16Y8 engine: 1,000, 3,000 and 5,000 rpm.

NOTE: Keep measuring time as short as possible because engine is running with no load (less than one minute).

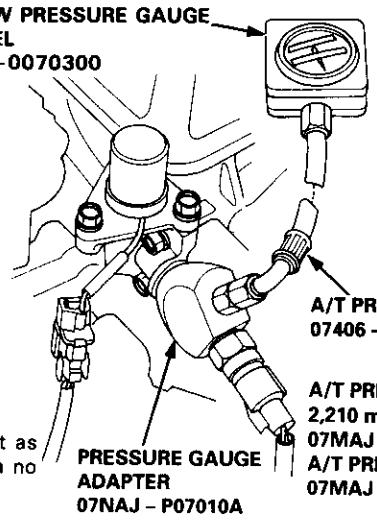

Is pressure below 49 kPa (0.5 kgf/cm², 7 psi)?

NO → **Inspect the VTEC solenoid valve (see page 6-6).**

YES ↓

(To page 6-5)

(From page 6-4)

Test the VTEC Solenoid Valve:
1. Turn the ignition switch OFF.
2. Disconnect the VTEC solenoid valve 1P connector.
3. Attach the battery positive terminal to the VTEC solenoid valve terminal.
4. Start the engine and check the oil pressure at engine speed of 5,000 rpm.

VTEC SOLENOID VALVE 1P CONNECTOR

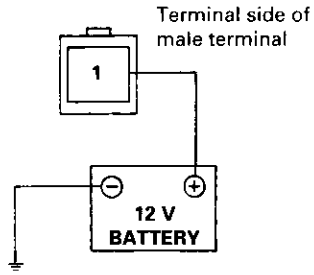

Is the pressure above 390 kPa (4.0 kgf/cm², 57 psi)?

NO → **Inspect the VTEC solenoid valve (see page 6-6).**

YES ↓

Test the VTEC Pressure Switch:
With the battery positive terminal connected to the VTEC solenoid valve, measure voltage between the ECM/PCM connector terminal '96 – 98: C15, '99 – 00: C10 and body ground.

ECM/PCM CONNECTOR C (31P)

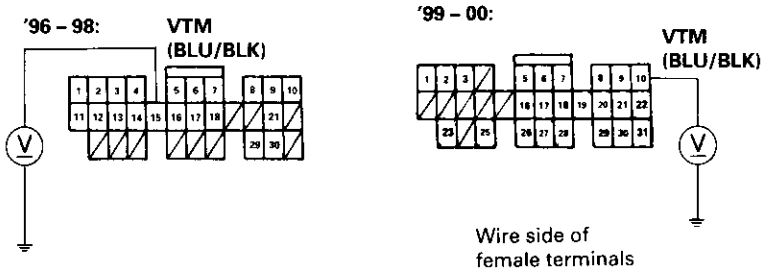

Is there battery voltage above 5,000 rpm?

NO → **Replace the VTEC pressure switch.**

YES ↓

Test the VTEC Solenoid Valve Wire:
1. Turn the ignition switch OFF.
2. Check for continuity between the VTEC solenoid valve 1P connector terminal and the ECM/PCM connector terminal '96 – 98: A8, '99 – 00: B12.

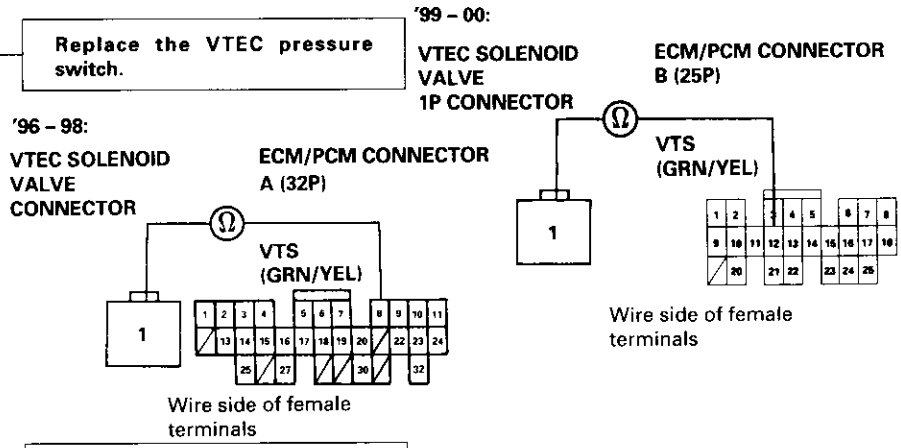

Is there continuity?

NO → **Repair open in the wire between the ECM/PCM ('96 – 98: A8, '99 – 00: B12) and VTEC solenoid valve connector.**

YES ↓

Test the VTEC Solenoid Valve Wire:
Check for continuity between the VTEC solenoid valve 1P connector terminal and body ground.

VTEC SOLENOID VALVE 1P CONNECTOR

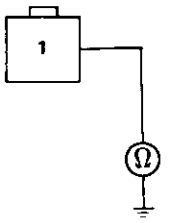

Is there continuity?

YES → **Repair short in the wire between the ECM/PCM ('96 – 98: A8, '99 – 00: B12) and VTEC solenoid valve connector.**

NO ↓

Substitute a known-good ECM/PCM and recheck. If symptom/indication goes away, replace the original ECM/PCM.

VTEC Solenoid Valve

Inspection

1. Disconnect the 1P connector from the VTEC solenoid valve.

2. Measure resistance between the terminal and body ground.

   Resistance: 14 – 30 Ω

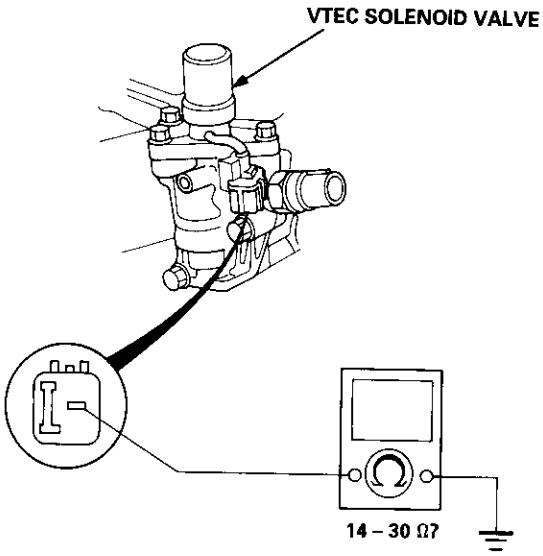

3. If the resistance is within specifications, remove the VTEC solenoid valve assembly from the cylinder head, and check the VTEC solenoid valve filter for clogging.

   - If there is clogging, replace the engine oil filter and the engine oil.

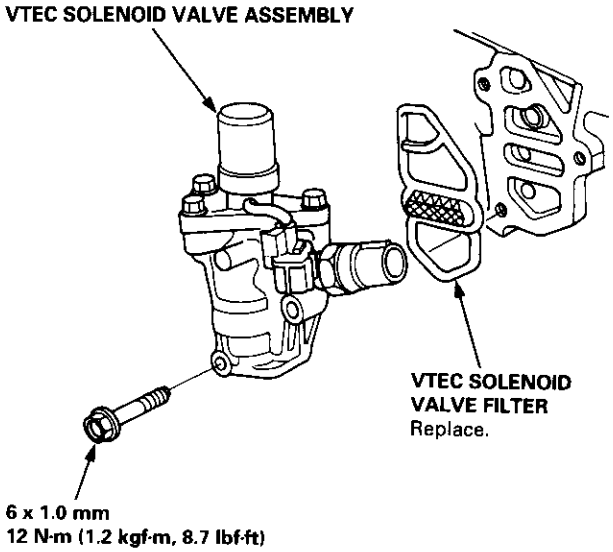

4. If the filter is not clogged, push the VTEC solenoid valve with your finger and check its movement.

   - If the VTEC solenoid valve is normal, check the engine oil pressure.

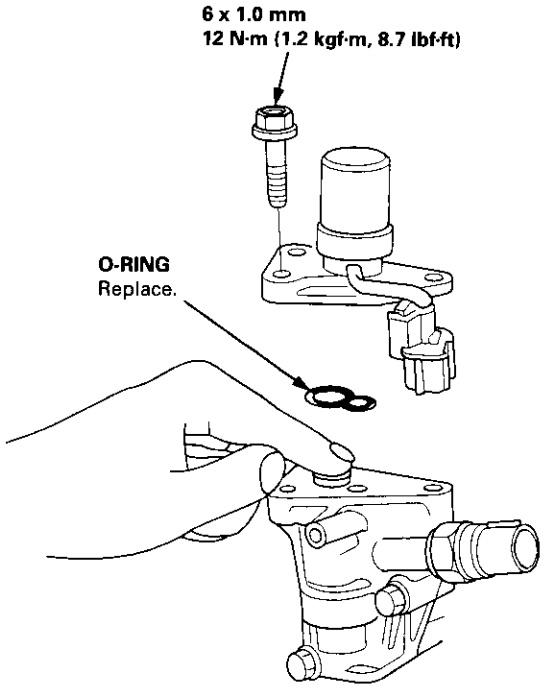

Manual Inspection (D16Y5 engine)

1. Set the No. 1 piston at TDC.
2. Remove the cylinder head cover.

   NOTE: Refer to page 6-46 when installing the cylinder head cover.
3. Move the intake secondary rocker arm on the No. 1 cylinder manually.
4. Check that the intake secondary rocker arm moves independently of the primary intake rocker arm.

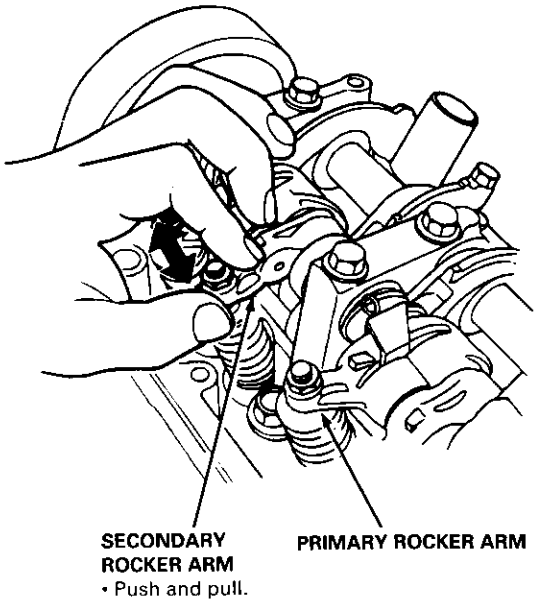

5. Check the intake secondary rocker arm of each cylinder at TDC.
   - If the intake secondary rocker arm does not move, remove the primary and secondary intake rocker arms as an assembly and check that the pistons in the secondary and primary rocker arms move smoothly.
   - If any rocker arm needs replacing, replace the primary and secondary rocker arms as an assembly.

Manual Inspection (D16Y8 engine)

1. Set the No. 1 piston at TDC.
2. Remove the cylinder head cover.

   NOTE: Refer to page 6-46 when installing the cylinder head cover.
3. Push the intake mid rocker arm on the No. 1 cylinder manually.
4. Check that the intake mid rocker arm moves independently of the primary and secondary intake rocker arms.

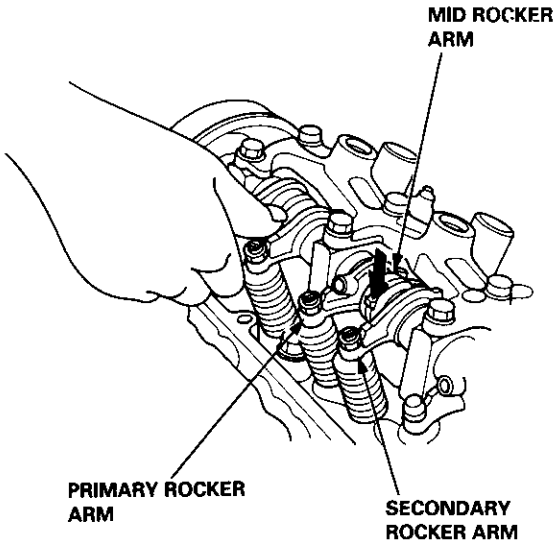

5. Check the intake mid rocker arm of each cylinder at TDC.
   - If the intake mid rocker arm does not move, remove the mid, primary and secondary intake rocker arms as an assembly and check that the pistons in the mid and primary rocker arms move smoothly.
   - If any rocker arm needs replacing, replace the primary, mid, and secondary rocker arms as an assembly.

Inspection Using Special Tools (D16Y5 engine)

CAUTION:
- **Before using the Valve Inspection Tool, make sure that the air pressure gauge on the air compressor indicates over 400 kPa (4 kgf/cm², 57 psi).**
- **Inspect the valve clearance before rocker arm inspection.**
- **Cover the timing belt with a shop towel to protect the belt.**
- **Check the intake primary rocker arm of each cylinder at TDC.**

1. Remove the cylinder head cover.

   NOTE: Refer to page 6-46 when installing the cylinder head cover.

2. Plug the relief hole with the special tool.

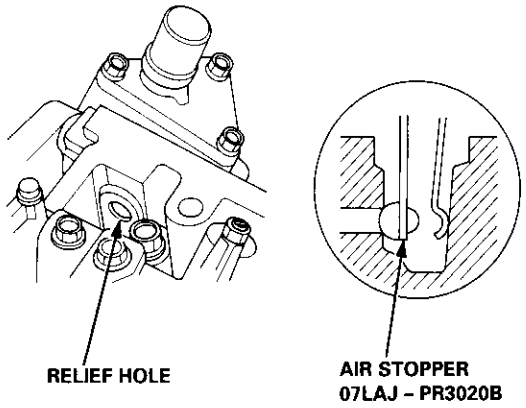

3. Remove the sealing bolt from the inspection hole and connect the an air pressure regulator with a 0 – 100 psi gauge.

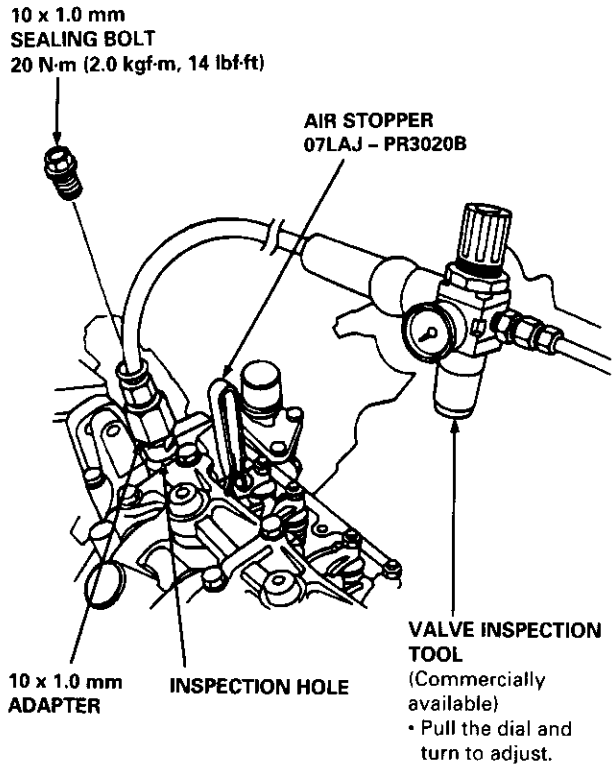

4. Loosen the regulator valve on the valve inspection tool and apply the specified air pressure.

   Specified Air Pressure:
   250 kPa (2.5 kgf/cm², 36 psi)

5. With the specified air pressure applied, push up the timing plate; the synchronizing piston will pop out and engage the intake secondary rocker arm.
Visually check the engagement of the synchronizing piston.

NOTE:
- The synchronizing piston can be seen in the gap between the secondary and primary rocker arms.
- With the timing plate engaged in the groove on the timing piston, the piston is locked in the pushed out position.

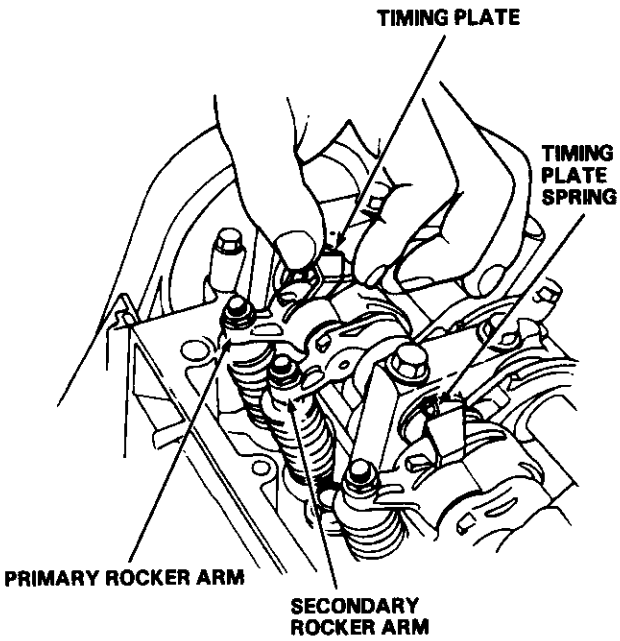

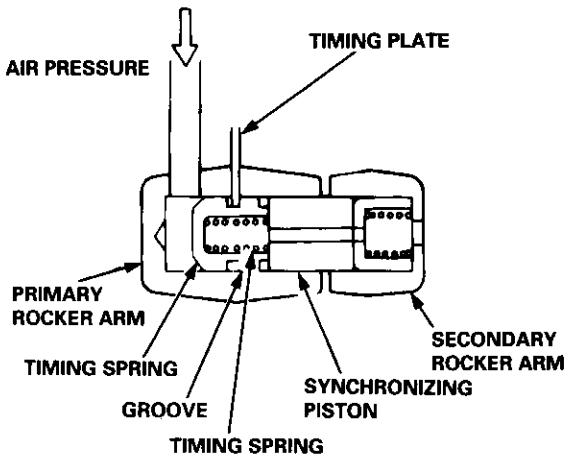

6. Stop applying air pressure and push up the timing plate; the synchronizing piston will snap back to its original position.
Visually check the disengagement of the synchronizing pistons.

NOTE:
- When the timing plate is pushed up, it releases the timing piston, letting the return spring move the synchronizing piston to its original position.

7. Replace the intake rocker arms as an assembly if either does not work correctly.

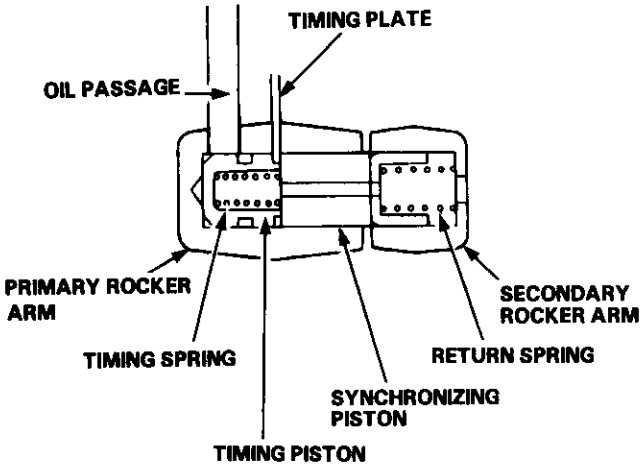

8. Remove the special tools.

9. After inspection, check that the malfunction indicator lamp (MIL) does not come on.

Inspection Using Special Tools (D16Y8 engine)

CAUTION:

- **Before using the Valve Inspection Tool, make sure that the air pressure gauge on the air compressor indicates over 400 kPa (4 kgf/cm², 57 psi).**
- **Inspect the valve clearance before rocker arm inspection.**
- **Cover the timing belt with a shop towel to protect the belt.**
- **Check the intake primary rocker arm of each cylinder at TDC.**

1. Remove the cylinder head cover.

   NOTE: Refer to page 6-46 when installing the cylinder head cover.

2. Plug the relief hole with the special tool.

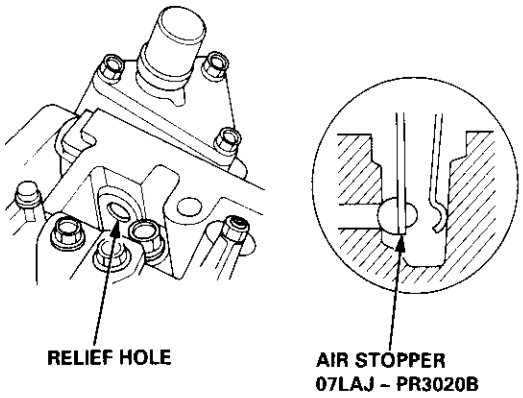

3. Remove the sealing bolt from the inspection hole and connect an air pressure regulator with a 0 – 100 psi gauge.

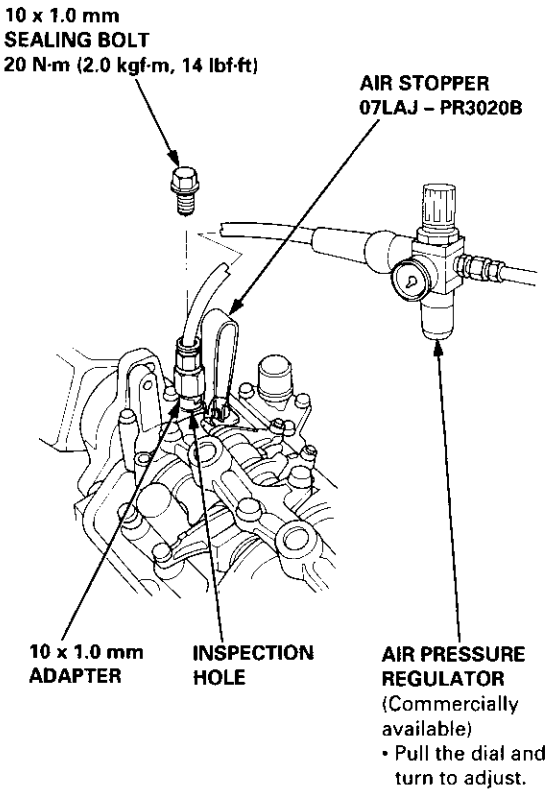

4. Loosen the regulator valve on the valve inspection tool and apply the specified air pressure.

Specified Air Pressure:
250 kPa (2.5 kgf/cm², 36 psi)

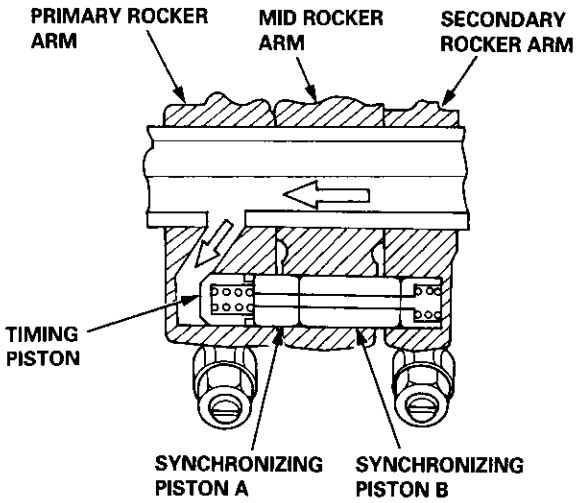

5. Make sure that the intake primary and secondary rocker arms are mechanically connected by the piston and that the mid rocker arm does not move when pushed manually.

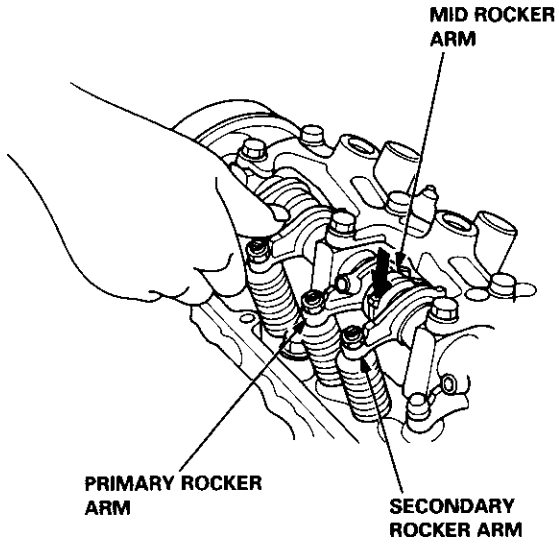

6. If any intake mid rocker arm moves independently of the primary and secondary rocker arms, replace the rocker arms as a set.

7. Remove the special tools.

8. Use a 10 mm diameter rod to depress each lost motion assembly through its full movement. Replace any lost motion assembly that does move smoothly.

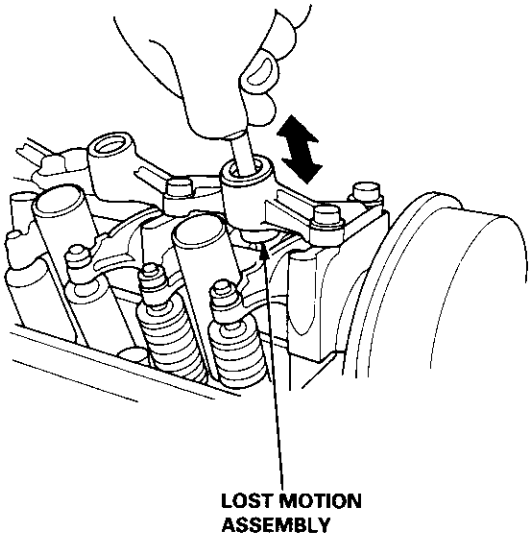

9. After inspection, check that the MIL does not come on.

Adjustment

NOTE:
- Valves should be adjusted only when the cylinder head temperature is less than 100°F (38°C).
- After adjusting, retorque the crankshaft pulley bolt (see page 6-16).

1. Remove the cylinder head cover.

   NOTE: Refer to page 6-46 when installing the cylinder head cover.

2. Remove the upper cover (see page 6-19).

3. Set the No. 1 piston at TDC. The "UP" mark on the cam-shaft pulley should be at top, and the TDC marks should align with the cylinder head surface.

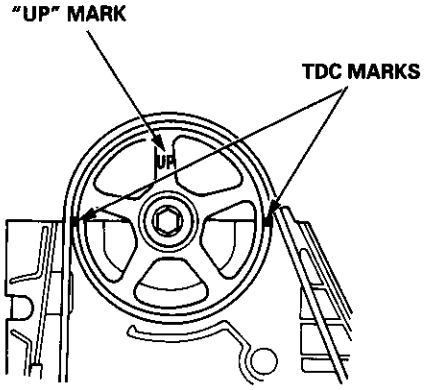

4. Adjust valves on No. 1 cylinder.

   Intake: 0.18 – 0.22 mm (0.007 – 0.009 in)
   Exhaust: 0.23 – 0.27 mm (0.009 – 0.011 in)

5. Loosen the locknut, and turn the adjustment screw until the feeler gauge slides back and forth with a slight amount of drag.

   D16Y7 engine:

   CAUTION: Do not overtighten the locknuts; the rocker arms are made of aluminum.

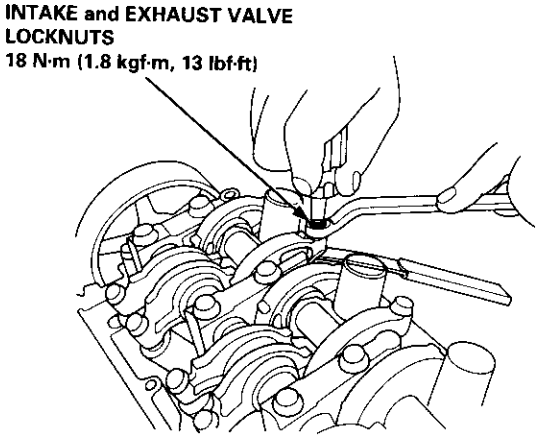

D16Y5, D16Y8 engines:

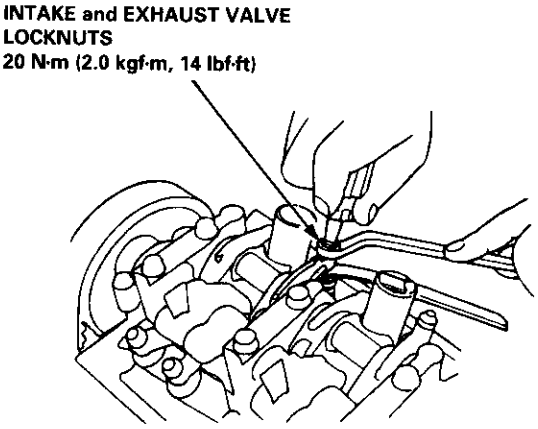

Adjusting screw locations:

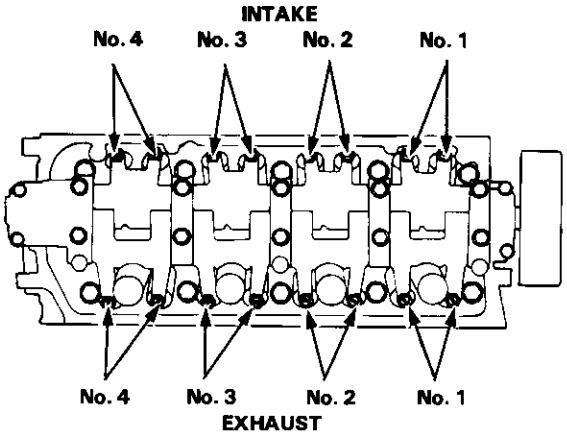

6. Tighten the locknut, and check the clearance again. Repeat the adjustment if necessary.

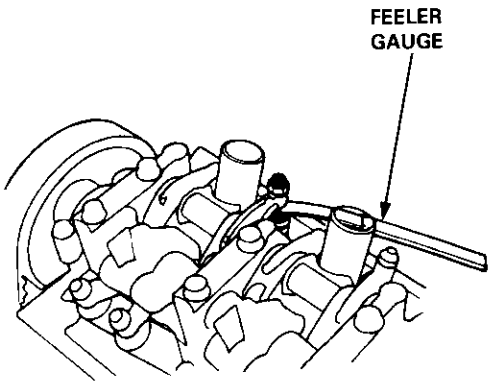

7. Rotate the crankshaft 180° counterclockwise (camshaft pulley turns 90°). The "UP" mark should be on the exhaust side. Adjust valves on No. 3 cylinder.

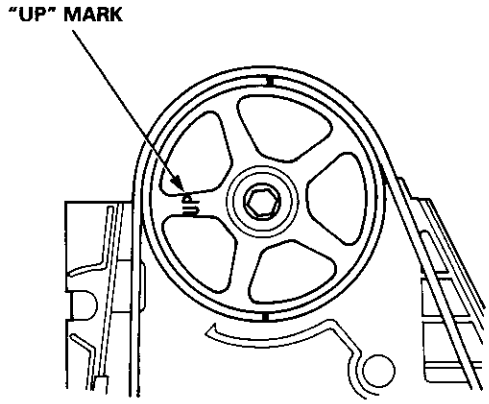

8. Rotate the crankshaft 180° counterclockwise to bring No. 4 piston to TDC. Both TDC grooves are once again visible. Adjust valves on No. 4 cylinder.

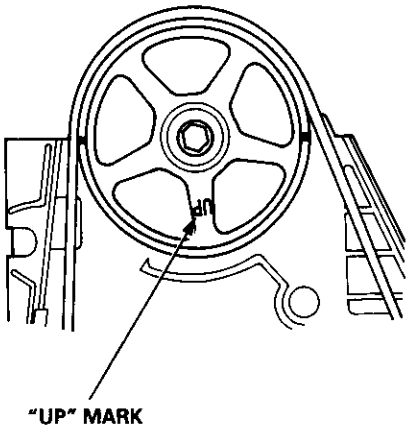

9. Rotate the crankshaft 180° counterclockwise to bring No. 2 piston to TDC. The "UP" mark should be on the intake side. Adjust valves on No. 2 cylinder.

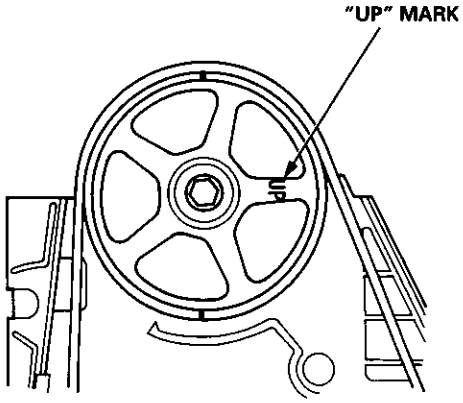

Replacement (Cylinder head removal not required)

NOTE: Cylinder head removal is not required in this procedure.

The procedure shown below applies when using the in-car valve spring compressor (Snap-on YA8845 with YA8845 – 2 A 7/8" attachment).

⚠ WARNING Alway wear approved eye protection when using the in-car valve spring compressor.

1. Turn the crankshaft so that the No. 1 and the No. 4 pistons are at top dead center (TDC).

2. Remove the cylinder head cover and the rocker arm assembly.

   NOTE:
   - Refer to page 6-30 for rocker arm assembly removal.
   - When removing or installing the rocker arm assembly, do not remove the camshaft holder bolts. The bolts will keep the holders, springs and rocker arms on the shaft.
   - Refer to page 6-46 when installing the cylinder head cover.

3. Remove the fuel injectors and the wire harness.

4. Using the 8 mm bolts supplied with the tool, mount the two uprights to the cylinder head at the end camshaft holders. The uprights fit over the camshaft as shown.

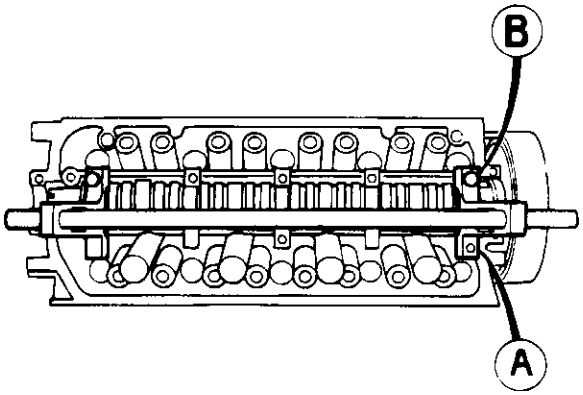

5. Insert the cross shaft through the top hole of the two uprights.

Intake Valve Seals:

6. Select the 7/8 in diameter short compressor attachment, and fasten the attachment to the No. 4 hole of the lever arm with the speed pin supplied.

7. Insert an air adaptor into the spark plug hole. Pump air into the cylinder to keep the valve closed while compressing springs and removing the valve keepers.

8. Put shop towels over the oil passages to prevent the valve keepers from falling into the cylinder head.

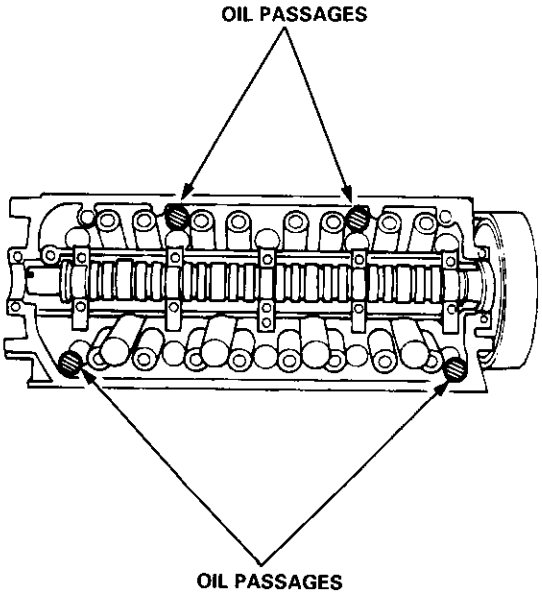

9. Position the lever arm under the cross shaft so the lever is perpendicular to the shaft and the compressor attachment rests on top of the retainer for the spring being compressed. Use the front position slot on the lever as shown.

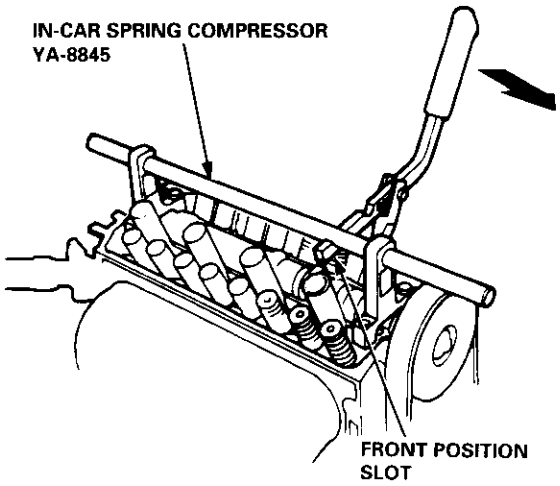

10. Using a downward motion on the lever arm, compress the valve spring and remove the keepers from the valve stem. Slowly release pressure on the spring.

11. Remove the valve seals (see page 6-38).

12. Install the valve seals (see page 6-43).

13. Install the springs, the retainers and the keepers in reverse order of removal.

Exhaust Valve Seals:

14. Select the 7/8 in. diameter short compressor attachment, and fasten the attachment to the No. 2 hole of the lever arm with the speed pin supplied.

15. Position the lever arm under the cross shaft so the lever is perpendicular to the shaft and the compressor attachment rests on top of the retainer for the spring being compressed. Use the front position slot on the lever as shown.

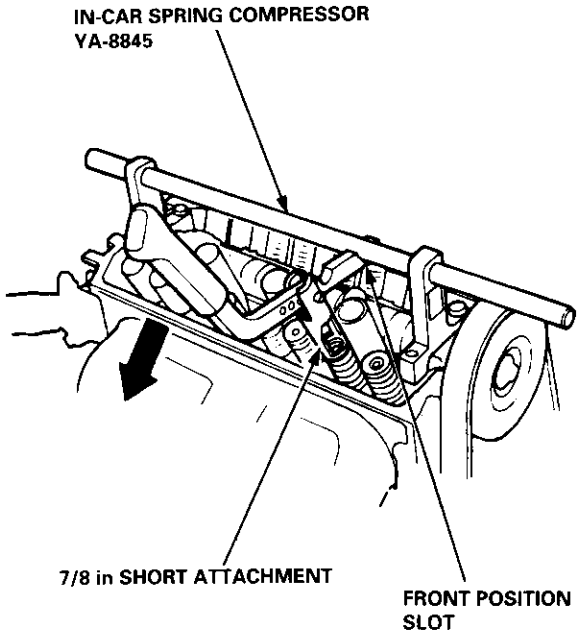

16. Using a downward motion on the lever arm, compress the valve spring and remove the keepers from the valve stem. Slowly release pressure on the spring.

17. Remove the valve seals (see page 6-38).

18. Install the valve seals (see page 6-43).

19. Install the springs, the retainers and the keepers in reverse order of removal.

20. Repeat steps 6 to 19 on the other cylinders.

Replacement

When installing and tightening the pulley, follow the procedure below.

Clean, remove any oil, and lubricate points shown below.
○: Clean
×: Remove any oil
●: Lubricate

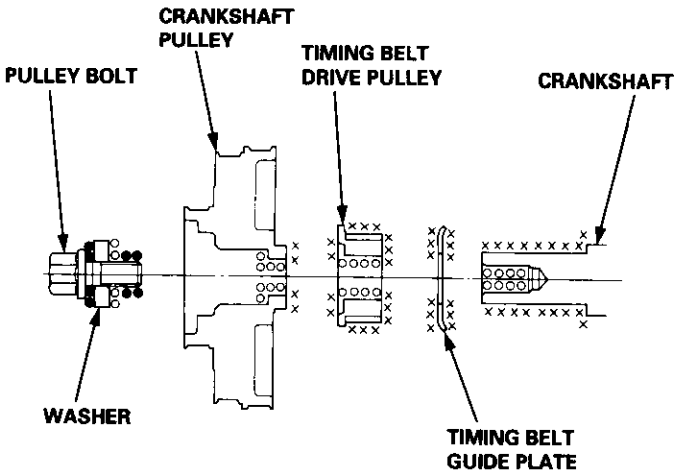

Crankshaft pulley bolt size and torque value:
14 x 1.25 mm
20 N·m (2.0 kgf·m, 14 lbf·ft) + 90°

NOTE: Do not use an impact wrench when installing.

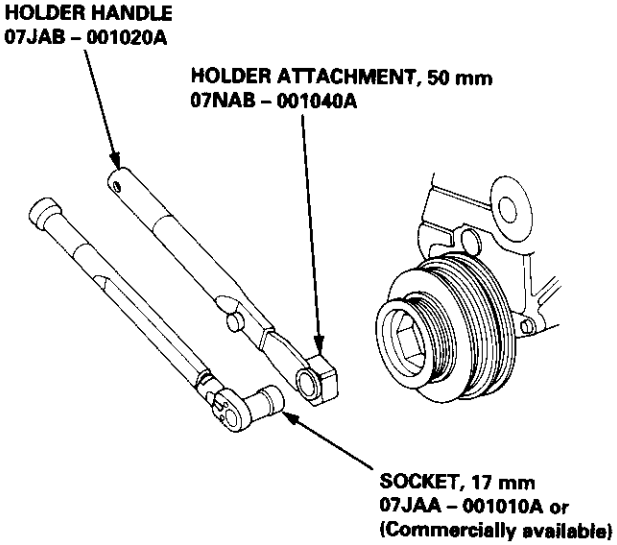

1. Tighten the pulley bolt to the specified torque.

   Torque: 20 N·m (2.0 kgf·m, 14 lbf·ft)

2. Use a felt tip pen to mark the pulley bolt head and washer.

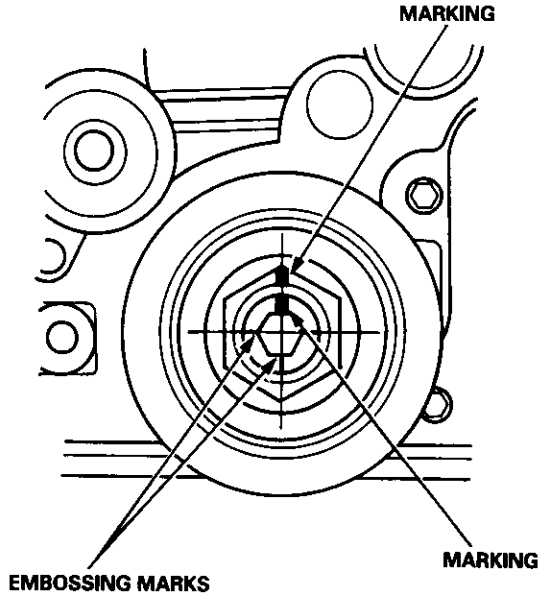

3. Tighten the pulley bolt an additional 90°.

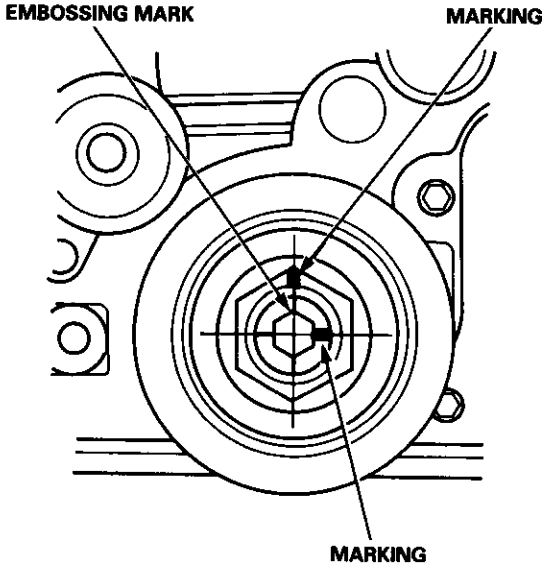

Illustrated Index

NOTE:
- Refer to page 6-20 for how to position the crankshaft and pulley before installing the belt.
- Mark the direction of rotation on the belt before removing.
- Do not use the upper cover and lower cover for storing removed items.
- Clean the upper cover and lower cover before installing.
- Replace the camshaft seals and crankshaft seals if there is oil leakage.
- Refer to page 6-16 before installing the timing belt.

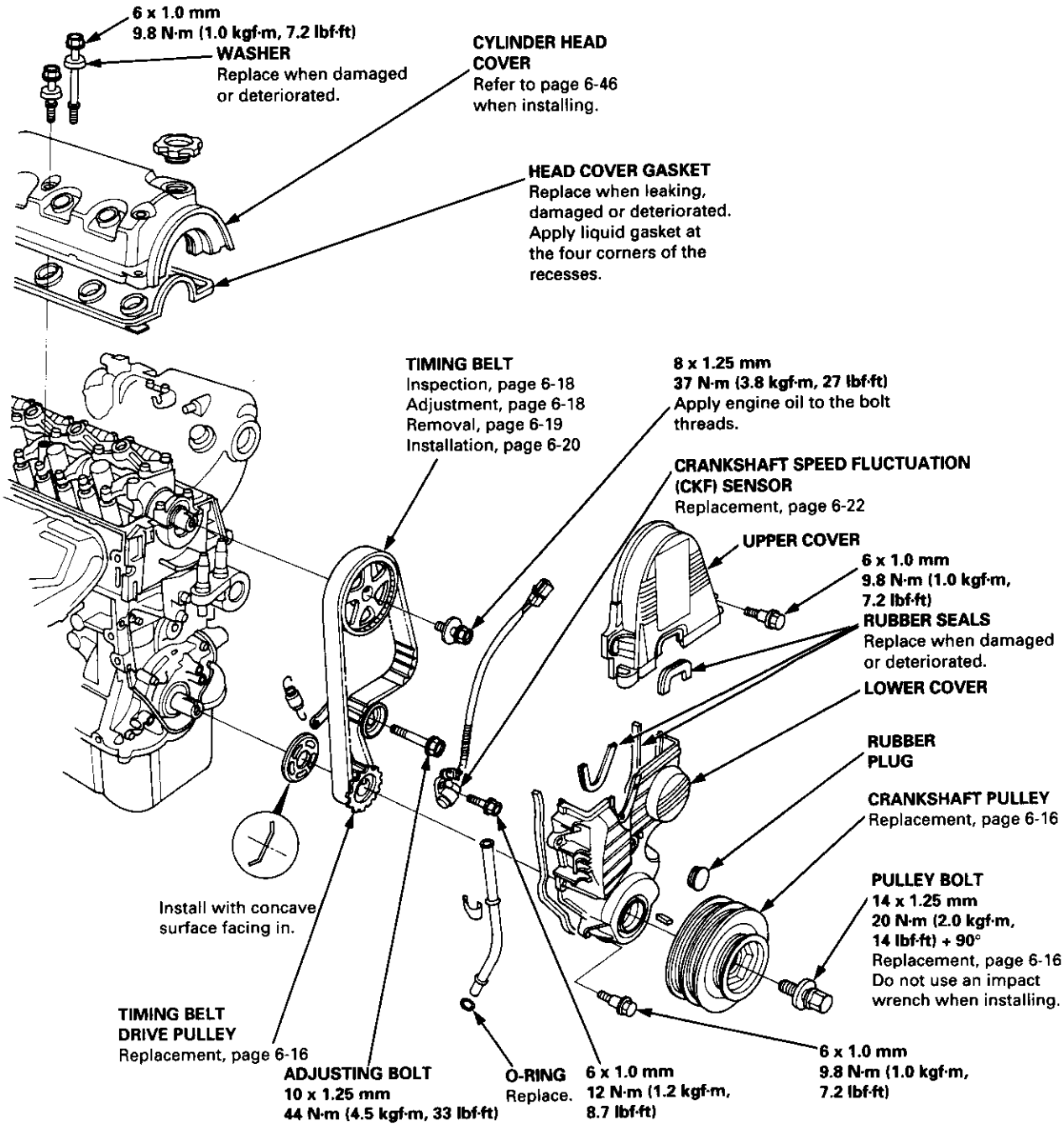

Inspection

1. Remove the cylinder head cover.
   - Refer to page 6-46 when installing.
2. Remove the upper cover (see page 6-19).
3. Inspect the timing belt for cracks and oil or coolant soaking.

   NOTE:
   - Replace the belt if oil or coolant soaked.
   - Remove any oil or solvent that gets on the belt.

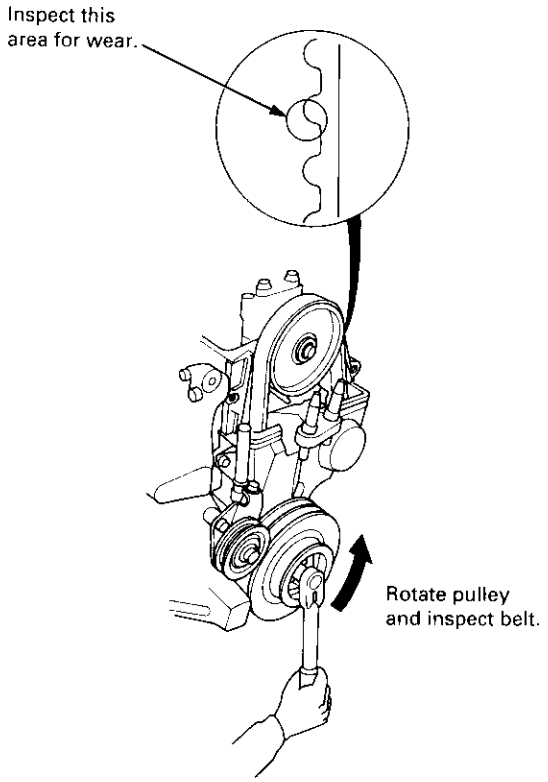

4. After inspecting, retorque the crankshaft pulley bolt (see page 6-16).

Tension Adjustment

CAUTION: Always adjust the timing belt tension with the engine cold.

NOTE:
- The tensioner is spring-loaded to apply tension to the belt automatically after making the following adjustment.
- Always rotate the crankshaft counterclockwise when viewed from the pulley side. Rotating it clockwise may result in improper adjustment of the belt tension.
- Inspect the timing belt before adjusting the belt tension.

1. Remove the cylinder head cover.
   - Refer to page 6-46 when installing.
2. Remove the upper cover (see page 6-19).
3. Rotate the crankshaft five or six revolutions to set the belt.
4. Set the No. 1 piston at TDC (see page 6-21).
5. Loosen the adjusting bolt 180°.

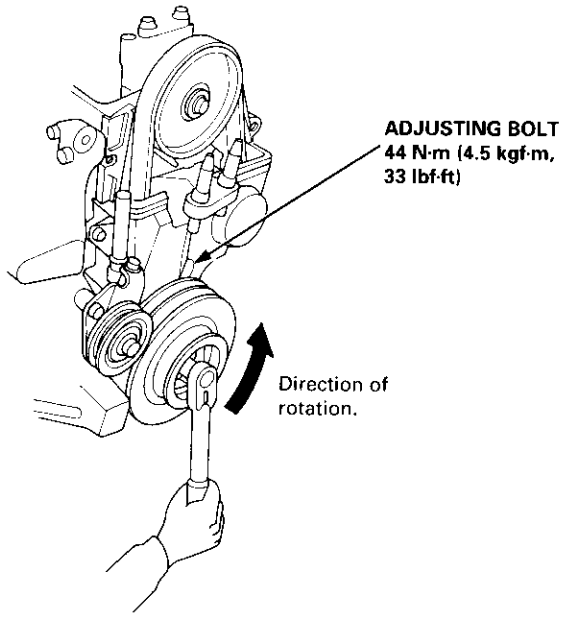

6. Rotate the crankshaft counterclockwise three teeth on the camshaft pulley.
7. Tighten the adjusting bolt.
8. After inspecting, retorque the crankshaft pulley bolt (see page 6-16).

Removal

NOTE:
- Replace the timing belt at 105,000 miles (168,000 km) according to the maintenance schedule (normal conditions/severe conditions).
  If the vehicle is regularly driven in one or more of the following conditions, replace the timing belt at 60,000 miles (U.S.A.) 100,000 km (Canada).
  - In very high temperatures (over 110°F, 43°C).
  - In very low temperatures (under −20°F, −29°C).
- Turn the crankshaft pulley so the No. 1 piston is at top dead center (TDC) before removing the belt (see page 6-21).
- Inspect the water pump before installing the timing belt (see page 10-14).

1. Remove the splash shield (see page 5-7).

2. Loosen the mounting bolt and lock bolt, then remove the power steering (P/S) pump belt and pump.

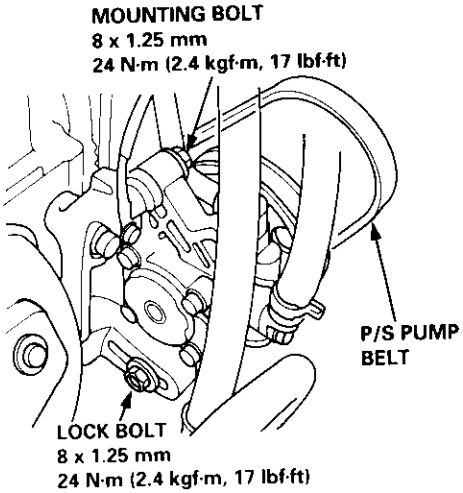

3. Loosen the idler pulley center nut and adjusting bolt, then remove the air conditioning (A/C) compressor belt (see page 5-6).

4. Loosen the mounting nut and lock bolt, then remove the alternator belt.

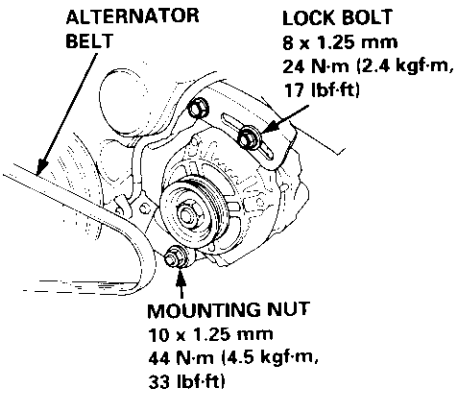

5. Remove the dipstick, then remove the upper cover and idler pulley bracket.

   NOTE: Do not use the upper cover to store removed items.

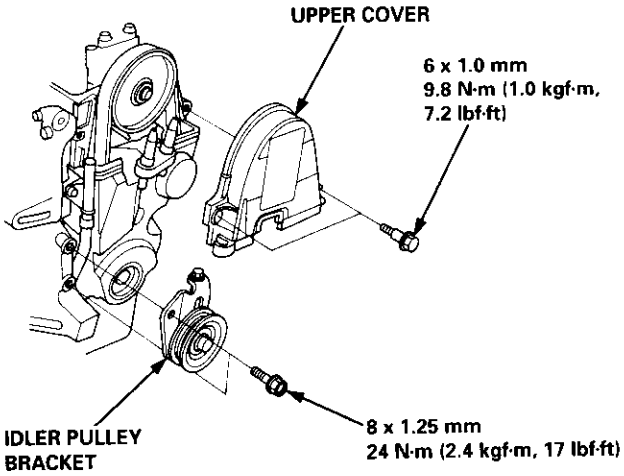

6. Remove the upper bracket (see page 6-29).

   NOTE:
   - Use a jack to support the engine before the upper bracket is removed.
   - Make sure to place a cushion between the oil pan and the jack.

7. Remove the crankshaft pulley (see page 6-16).

8. Remove the lower cover and dipstick tube.

   NOTE: Do not use the lower cover to store removed items.

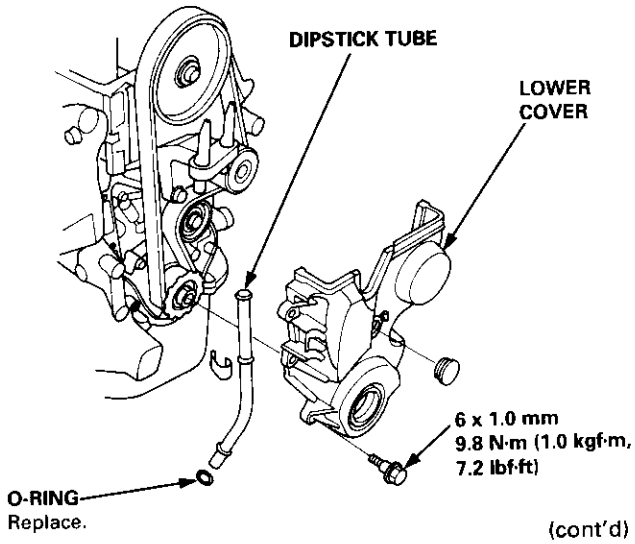

(cont'd)

Removal (cont'd)

9. Remove the CKF sensor from the oil pump.

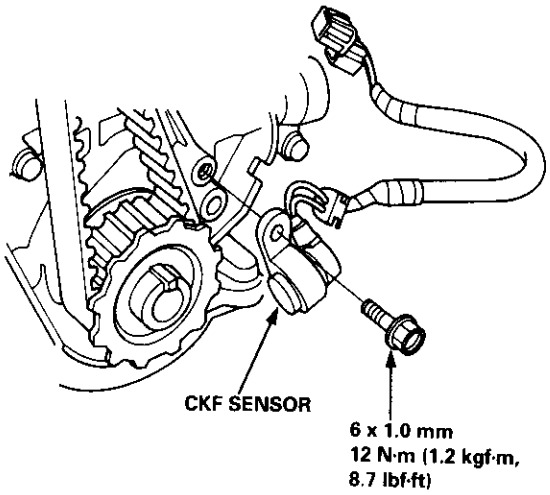

10. Loosen the adjusting bolt 180°. Push the tensioner to remove tension from the timing belt, then retighten the adjusting bolt.

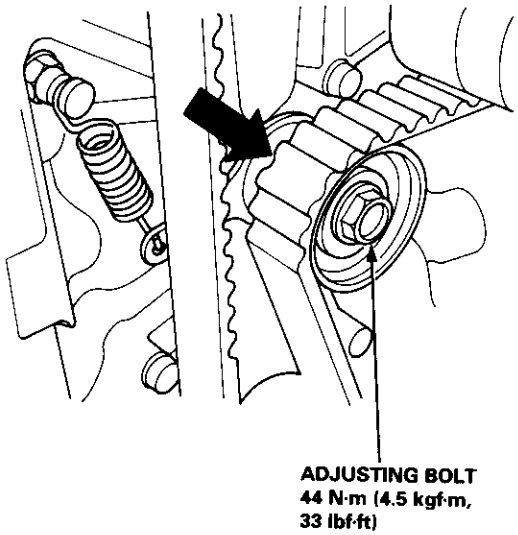

11. Remove the timing belt.

Installation

Install the timing belt in the reverse order of removal; Only key points are described here.

1. Set the timing belt drive pulley so that the No. 1 piston is at top dead center (TDC). Align the groove on the timing belt drive pulley to the pointer on the oil pump.

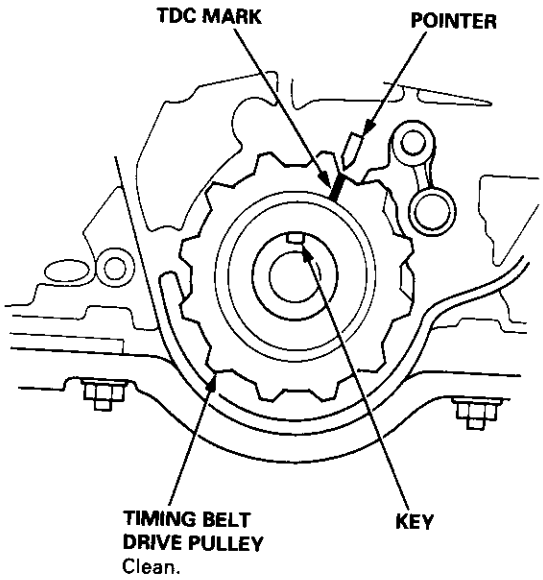

2. Set the camshaft pulley to TDC. Align the TDC marks on the camshaft pulley to the cylinder head surface.

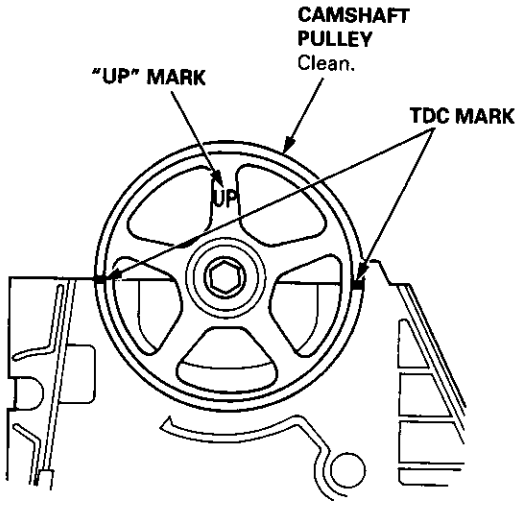

3. Install the timing belt tightly in the sequence shown. ①Timing belt drive pulley (crankshaft) →②Adjusting pulley →③Water pump pulley →④Camshaft pulley.

   NOTE: Make sure the timing belt drive pulley and camshaft pulley are at TDC.

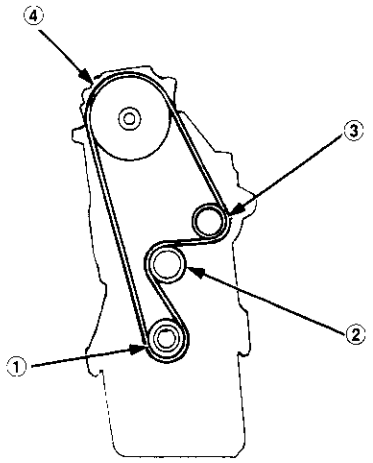

4. Loosen and retighten the adjusting bolt to tension the timing belt.

5. Install the lower cover and upper cover.

   NOTE: Clean the upper and lower covers before installation.

6. Install the crankshaft pulley, then tighten the pulley bolt (see page 6-16).

7. Rotate the crankshaft pulley about five or six turns counterclockwise so that the timing belt positions on the pulleys.

8. Adjust the timing belt tension (see page 6-18).

9. Check that the crankshaft pulley and camshaft pulley are both at TDC.

CRANKSHAFT PULLEY:

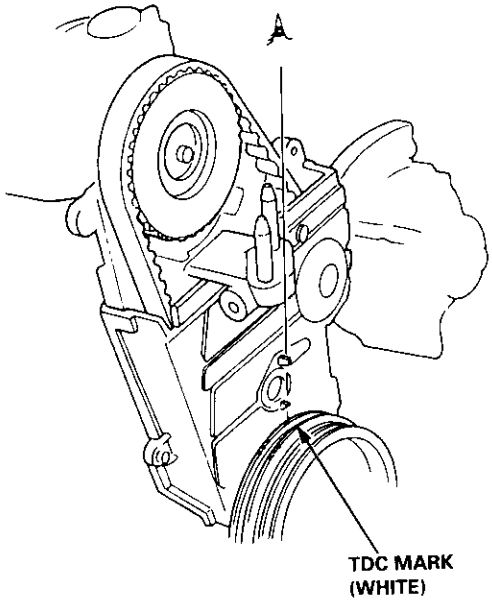

CAMSHAFT PULLEY:

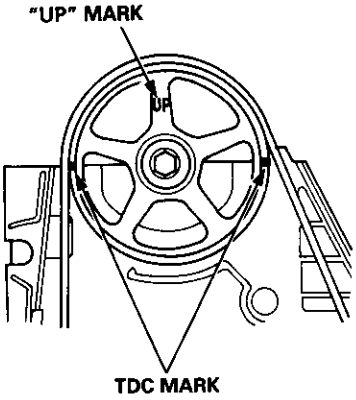

10. If the camshaft and crankshaft pulleys are not positioned at TDC, remove the timing belt and adjust the position following the procedure on page 6-20. Then reinstall the timing belt.

11. After installation, adjust the tension of each belt.

    - See section 23 for alternator belt tension adjustment.
    - See section 22 for A/C compressor belt tension adjustment.
    - See section 17 for P/S pump belt tension adjustment.

Crankshaft Speed Fluctuation (CKF) Sensor

Replacement

1. Remove the cylinder head cover.

   NOTE: Refer to page 6-46 when installing.

2. Remove the crankshaft pulley (see page 6-16).

3. Remove the upper cover and dipstick/tube (see page 6-19).

4. Remove the lower cover and idler pulley bracket (see page 6-19).

5. Disconnect the CKF sensor connector, then remove the CKF sensor.

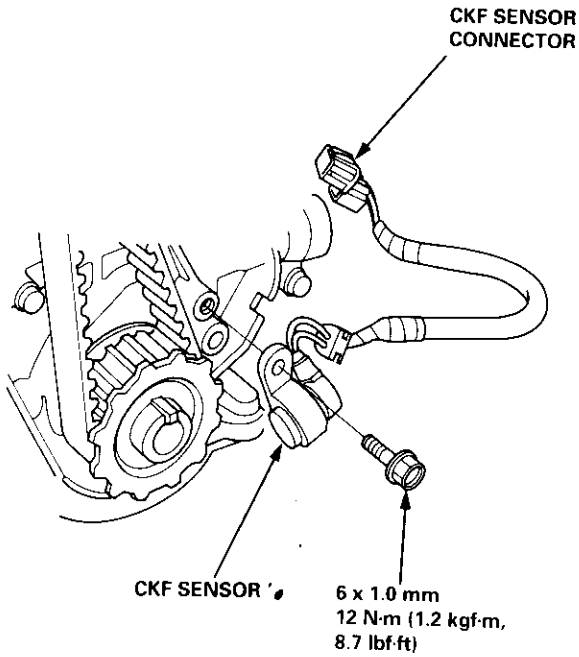

6. Install the CKF sensor in reverse order of removal.

Illustrated Index

CAUTION:
- **To avoid damage, wait until the engine coolant temperature drops below 100°F (38°C) before removing the cylinder head.**
- **When handling a metal gasket, take care not to fold it or damage the contact surface.**

NOTE: Use new O-rings and gaskets when reassembling.

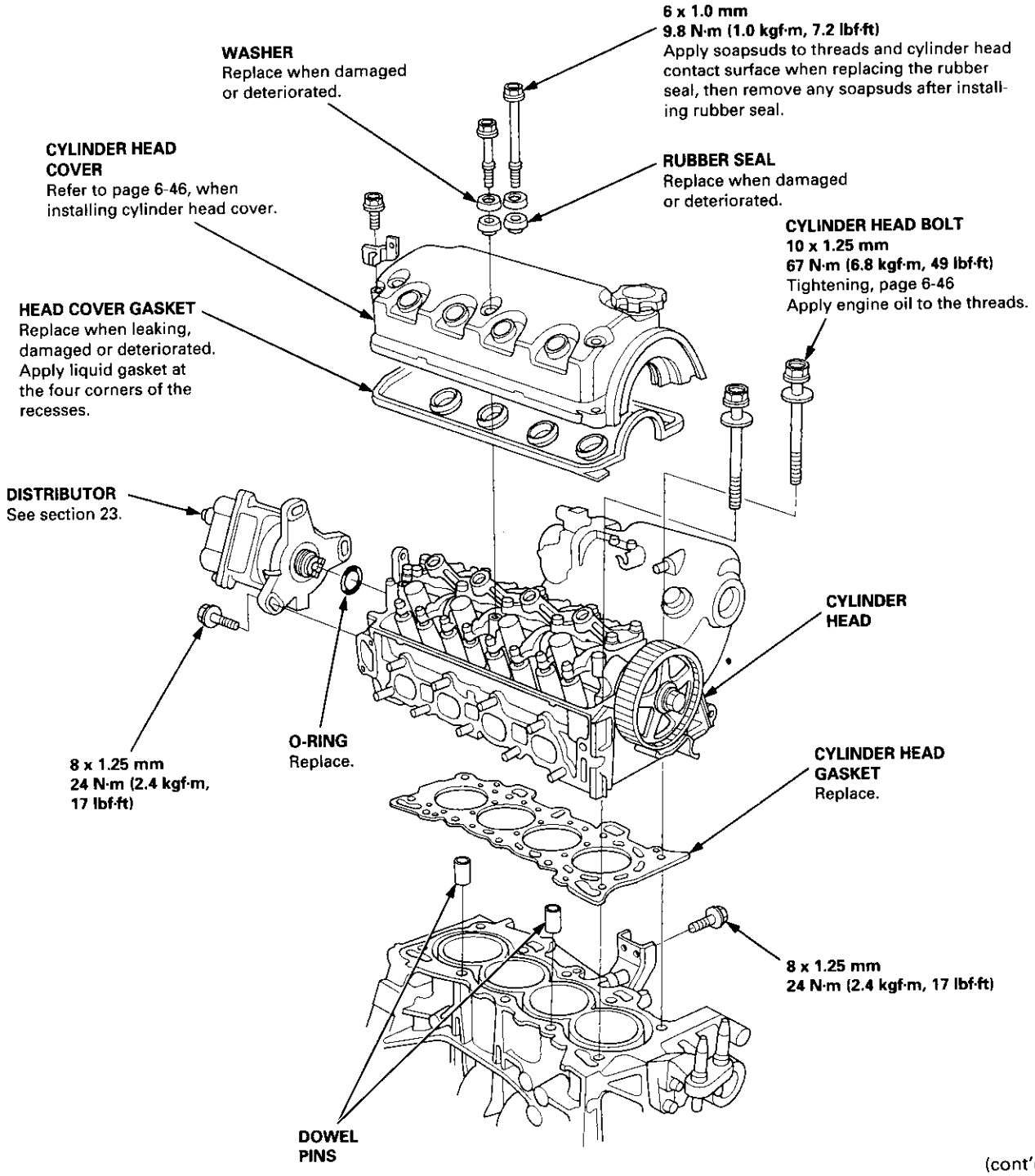

(cont'd)

Illustrated Index (cont'd)

Prior to reassembling, clean all the parts in solvent, dry them and apply lubricant to any contact parts.

D16Y7 engine:

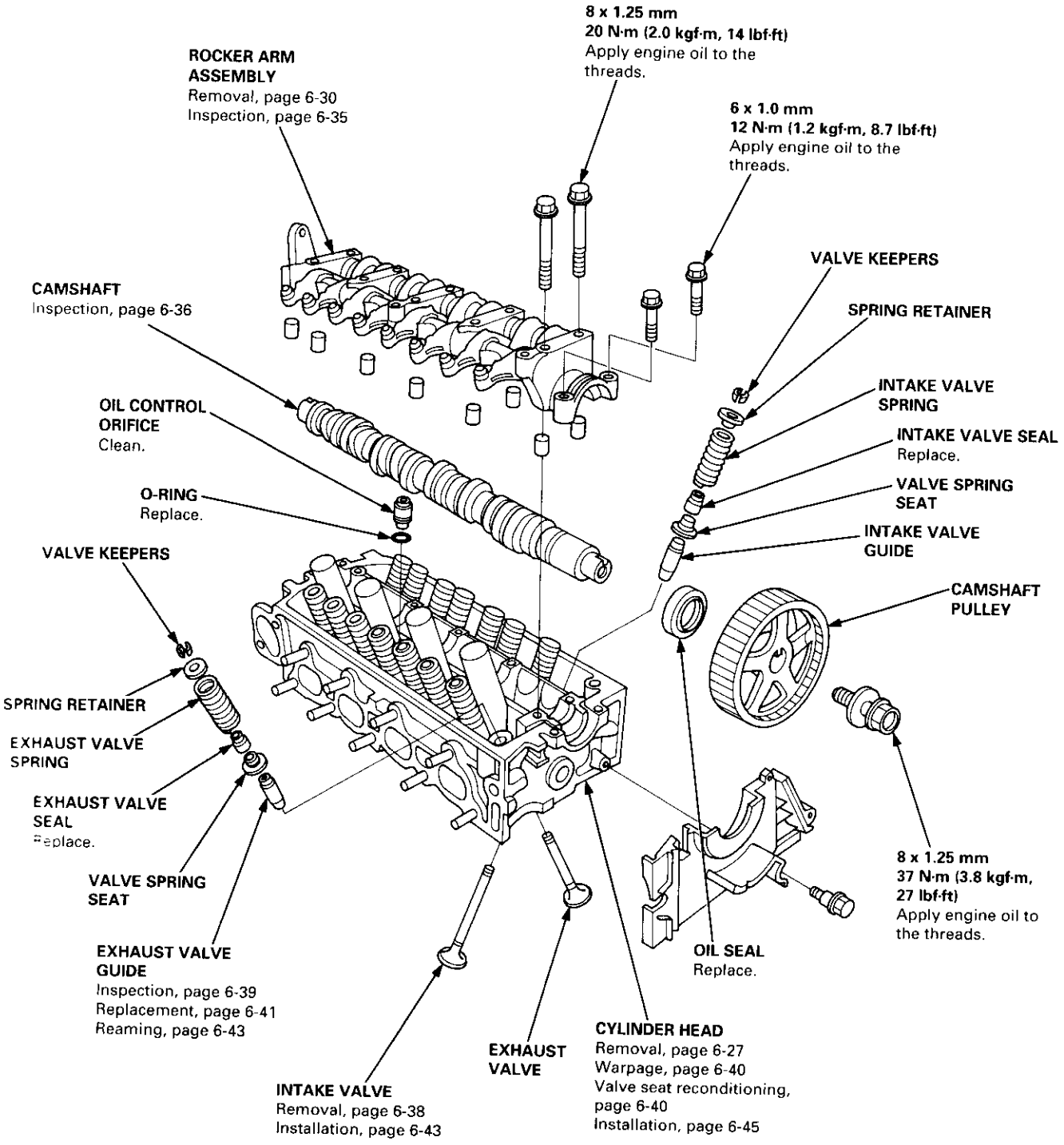

D16Y5 engine:

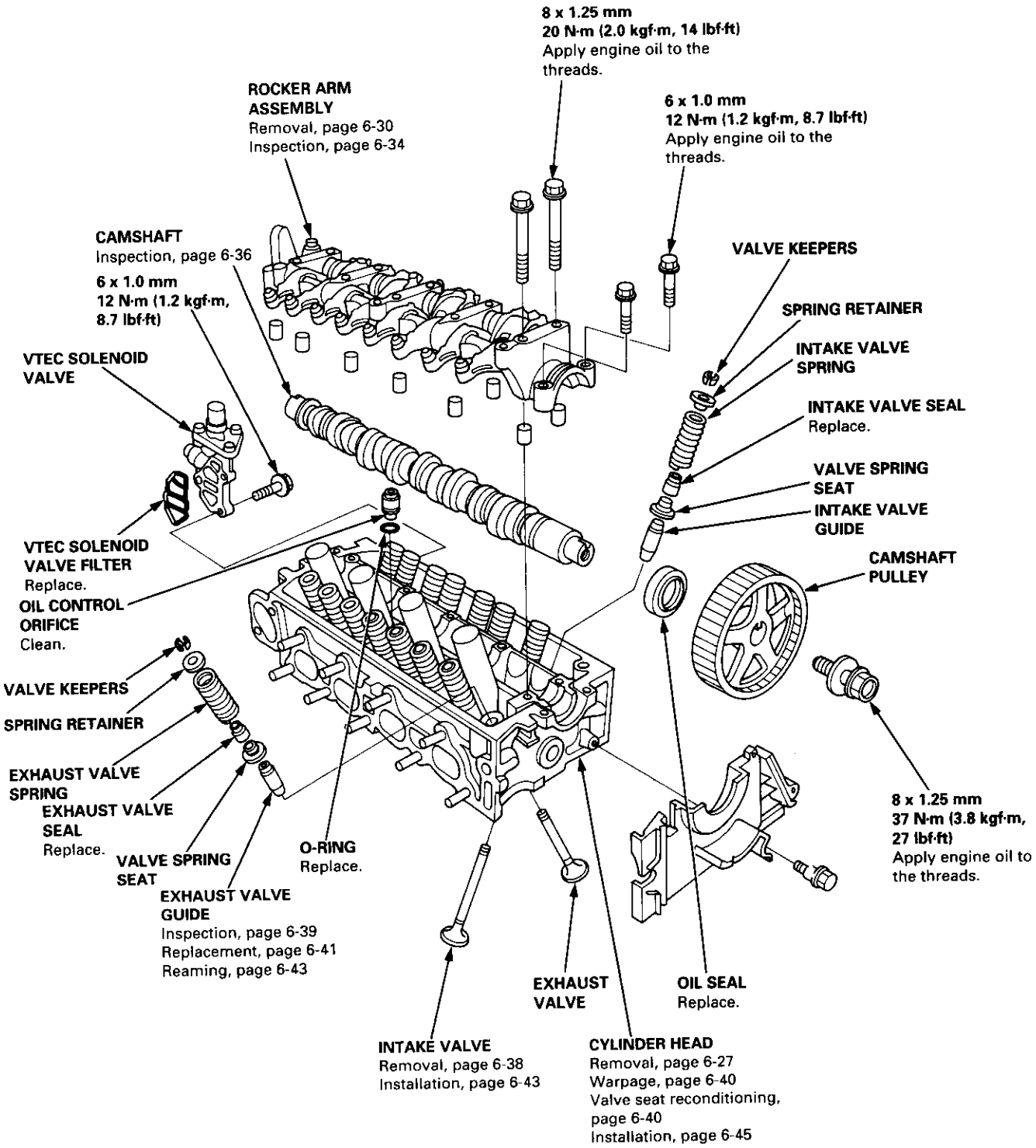

(cont'd)

Illustrated Index (cont'd)

Prior to reassembling, clean all the parts in solvent, dry them and apply lubricant to any contact parts.

D16Y8 engine:

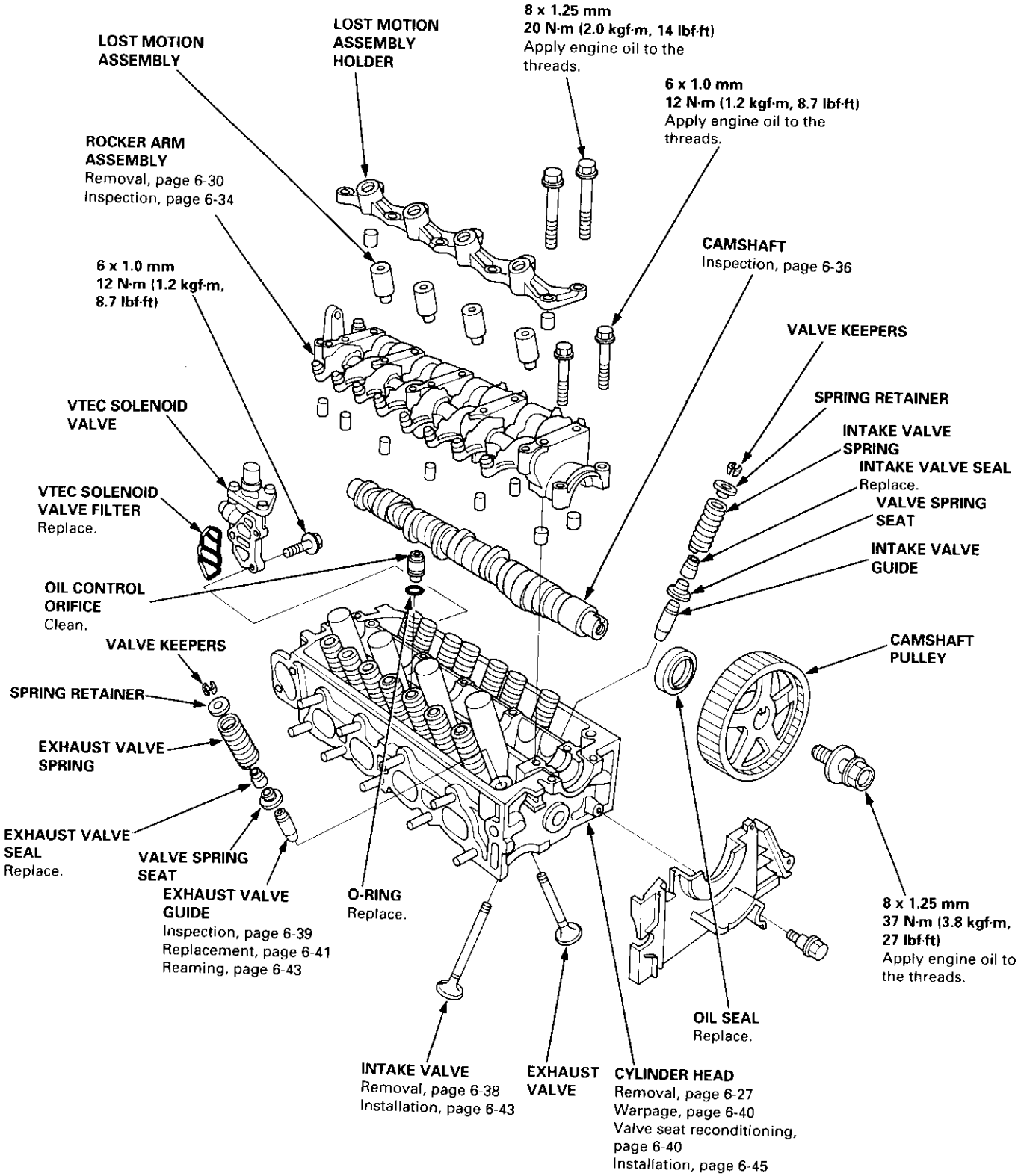

Removal

Engine removal is not required for this procedure.

⚠WARNING Make sure jacks and safety stands are placed properly and hoist brackets are attached to the correct positions on the engine.

CAUTION:
- **Use fender covers to avoid damaging painted surfaces.**
- **To avoid damage, unplug the wiring connectors carefully while holding the connector portion to avoid damage.**
- **To avoid damaging the cylinder head, wait until the engine coolant temperature drops below 100°F (38°C) before loosening the retaining bolts.**

NOTE:
- Mark all wiring and hoses to avoid misconnection. Also, be sure that they do not contact other wiring or hoses, or interfere with other parts.
- Inspect the timing belt before removing the cylinder head.
- Turn the crankshaft pulley so that the No. 1 piston is at top dead center (see page 6-21).

1. Disconnect the negative terminal from the battery.

2. Drain the engine coolant (see page 10-7).

   - Remove the radiator cap to speed draining.

3. Remove the intake air duct and air cleaner housing (see page 5-3).

4. Remove the mounting bolt and lock bolt, then remove the power steering (P/S) pump belt and pump (see page 5-5).

5. Loosen the idler pulley center nut and adjusting bolt, then remove the air conditioning (A/C) compressor belt (see page 5-6).

6. Loosen the mounting nut and lock bolt, then remove the alternator belt (see page 6-19).

7. Remove the P/S pump bracket (see page 5-12).

8. Remove the throttle cable by loosening the locknut, then slip the cable end out of the throttle linkage.

   NOTE:
   - Take care not to bend the cable when removing it. Always replace any kinked cable with a new one.
   - Adjust the throttle cable when installing (see section 11).

D16Y7 engine:

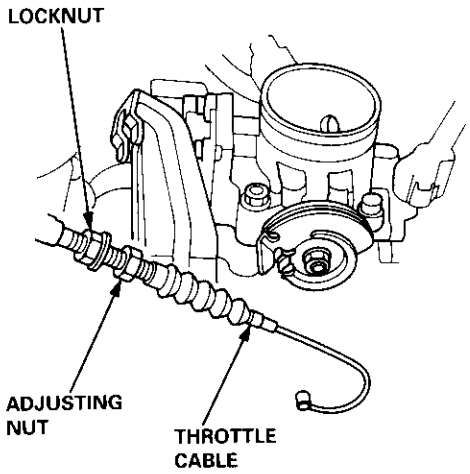

D16Y5, D16Y8 engines:

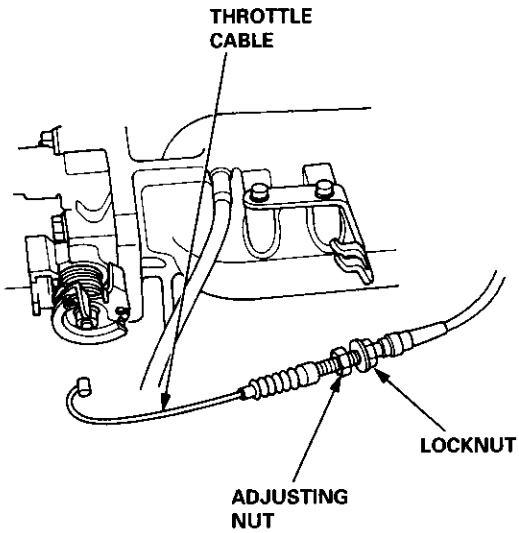

(cont'd)

Removal (cont'd)

9. Relieve fuel pressure (see section 11).

⚠ WARNING Do not smoke while working on the fuel system. Keep open flame or spark away from the work area. Drain fuel only into an approved container.

10. Remove the evaporative emission (EVAP) control canister hose, fuel feed hose and breather hose.

D16Y7 engine:

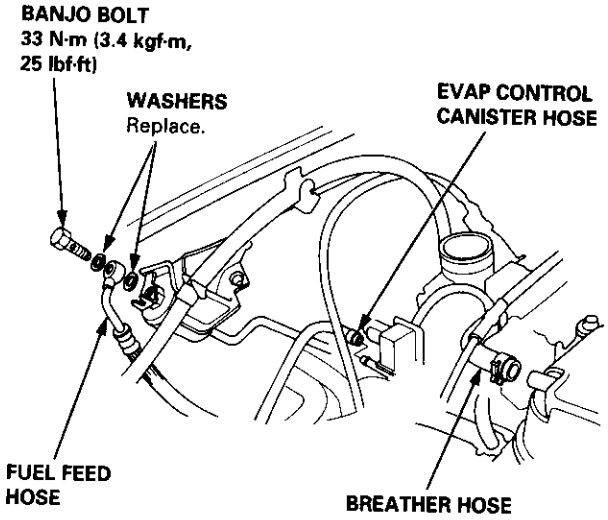

D16Y5, D16Y8 engines:

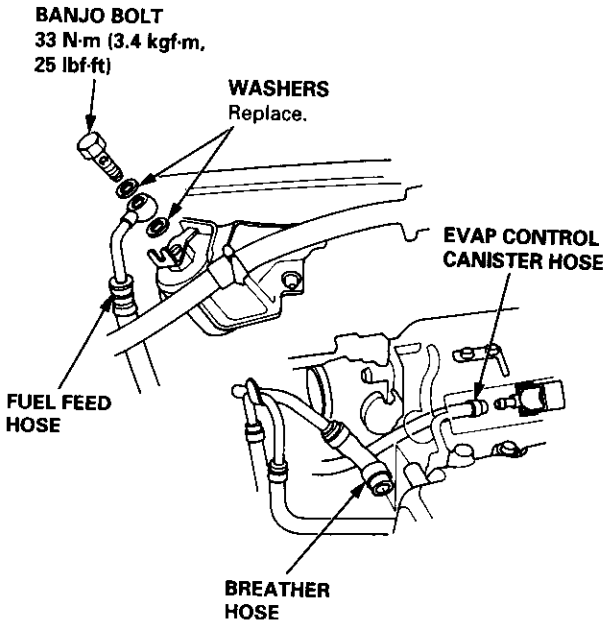

11. Remove the brake booster vacuum hose, fuel return hose and vacuum hose (see page 5-4).

12. Remove the water bypass hose and positive crankcase ventilation (PCV) hose.

D16Y7 engine:

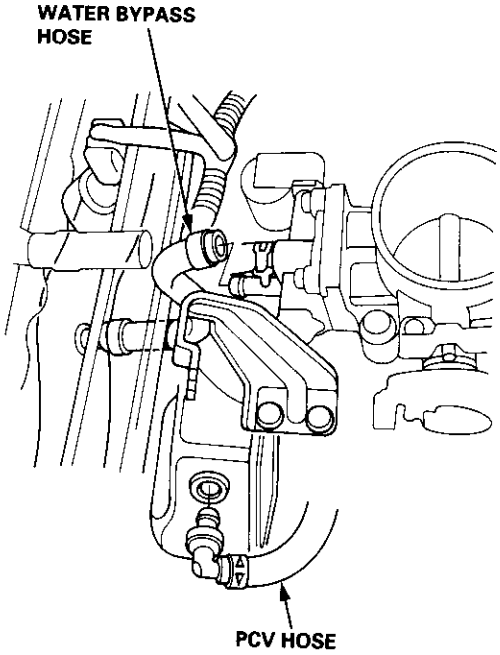

D16Y5, D16Y8 engines:

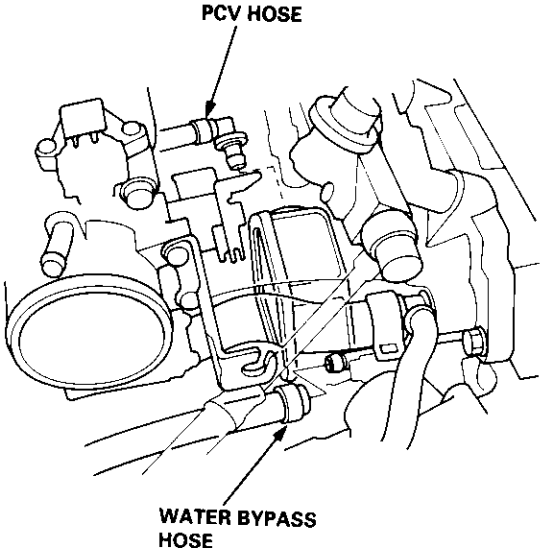

13. Remove the upper radiator hose, heater hose and water bypass hose.

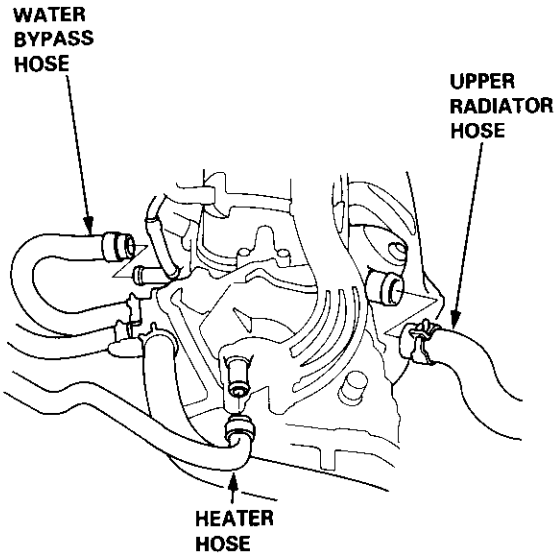

14. Remove the engine wire harness connectors and wire harness clamps from the cylinder head and the intake manifold.

- Four fuel injector connectors
- Engine coolant temperature (ECT) sensor connector
- ECT switch connector
- ECT gauge sending unit connector
- Throttle position sensor connector
- Manifold absolute pressure (MAP) sensor connector
- Primary heated oxygen sensor (primary HO2S) connector
- Secondary heated oxygen sensor (secondary HO2S) connector (D16Y7 engine)
- Exhaust gas recirculation (EGR) valve lift sensor connector (D16Y5 engine)
- VTEC solenoid valve connector (D16Y5, D16Y8 engines)
- VTEC pressure switch connector (D16Y5, D16Y8 engines)
- Idle air control (IAC) valve connector

15. Remove the spark plug caps and distributor from the cylinder head.

16. Remove the upper bracket.

NOTE:
- Use a jack to support the engine before the upper bracket is removed.
- Make sure to place a cushion between the oil pan and the jack.

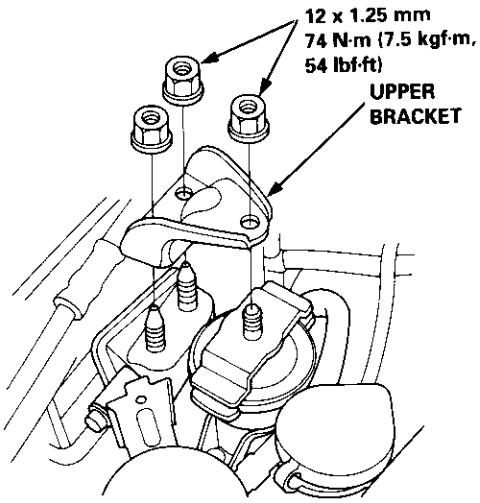

17. Remove the cylinder head cover.

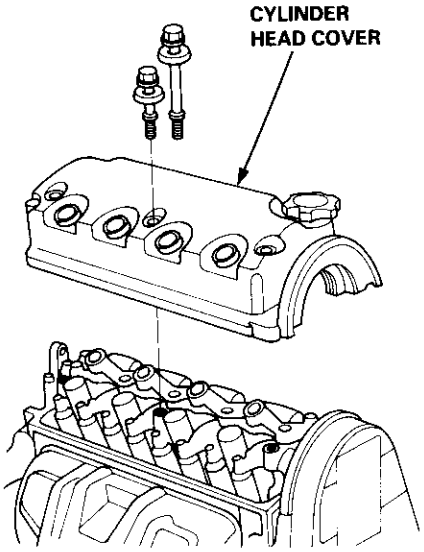

(cont'd)

Removal (cont'd)

18. Remove the timing belt (see page 6-19).

19. Remove the camshaft pulley and back cover.

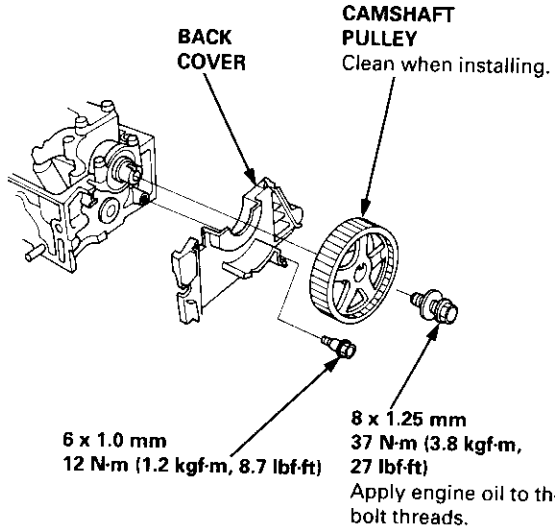

20. Remove the exhaust manifold (see pages 9-6 and 9-7).

21. Remove the intake manifold (see pages 9-2 thru 4).

22. Remove the cylinder head bolts, then remove the cylinder head.

CAUTION: To prevent warpage, unscrew the bolts in sequence 1/3 turn at a time; repeat the sequence until all bolts are loosened.

CYLINDER HEAD BOLTS LOOSENING SEQUENCE:

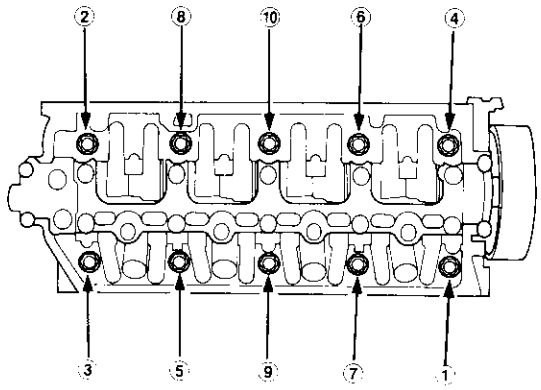

Removal

1. Loosen the adjusting screws.

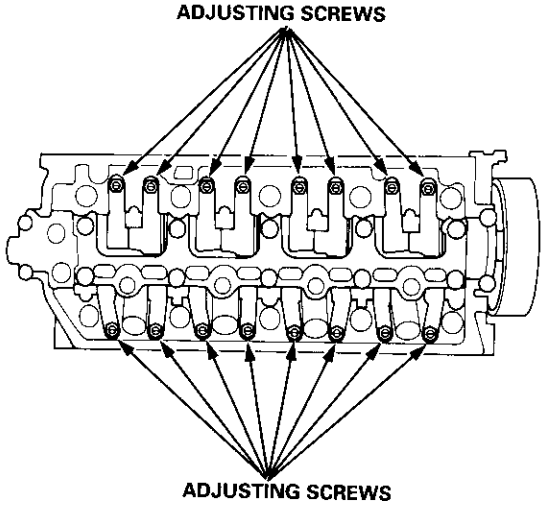

2. Unscrew the camshaft holder bolts, then remove the rocker arm assembly.

NOTE:
- Unscrew the camshaft holder bolts two turns at a time, in a crisscross pattern, to prevent damaging the valves or rocker arm assembly.
- When removing the rocker arm assembly, do not remove the camshaft holder bolts. The bolts will keep the camshaft holders, the springs and the rocker arms on the shaft.

CAMSHAFT HOLDER BOLTS LOOSENING SEQUENCE:

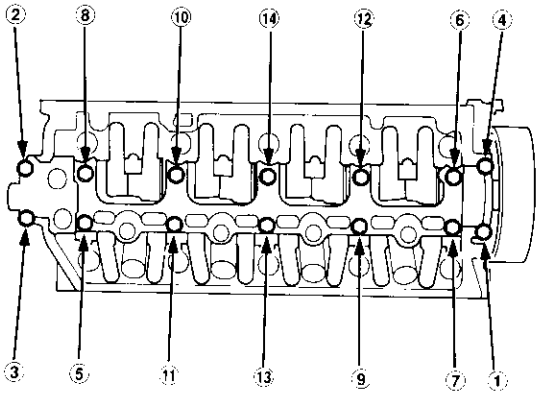

Disassembly/Reassembly

NOTE:
- Identify parts as they are removed to ensure reinstallation in original locations.
- Inspect rocker shafts and rocker arms (see page 6-35).
- Rocker arms must be installed in the same position if reused.
- When removing or installing the rocker arm assembly, do not remove the camshaft holder bolts. The bolts will keep the holders, springs and rocker arms on the shaft.

OIL Prior to reassembling, clean all the parts in solvent, dry them and apply lubricant to any contact points.

D16Y7 engine:

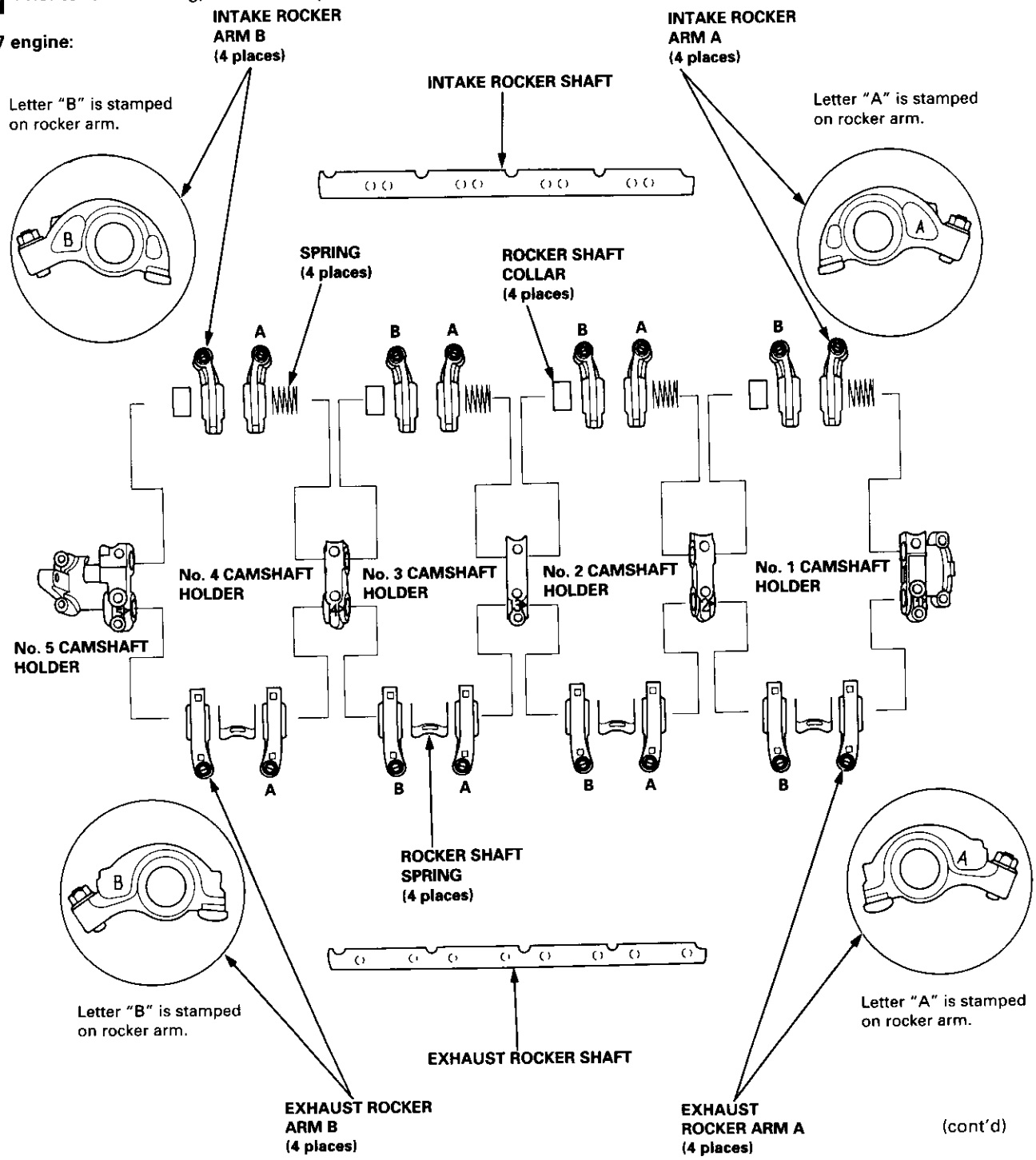

(cont'd)

Disassembly/Reassembly (cont'd)

NOTE:
- Identify parts as they are removed to ensure reinstallation in original locations.
- Inspect rocker shafts and rocker arms (see page 6-34).
- Rocker arms must be installed in the same position if reused.
- When removing or installing the rocker arm assembly, do not remove the camshaft holder bolts. The bolts will keep the holders, springs and rocker arms on the shaft.

OIL Prior to reassembling, clean all the parts in solvent, dry them and apply lubricant to any contact points.

D16Y5 engine:

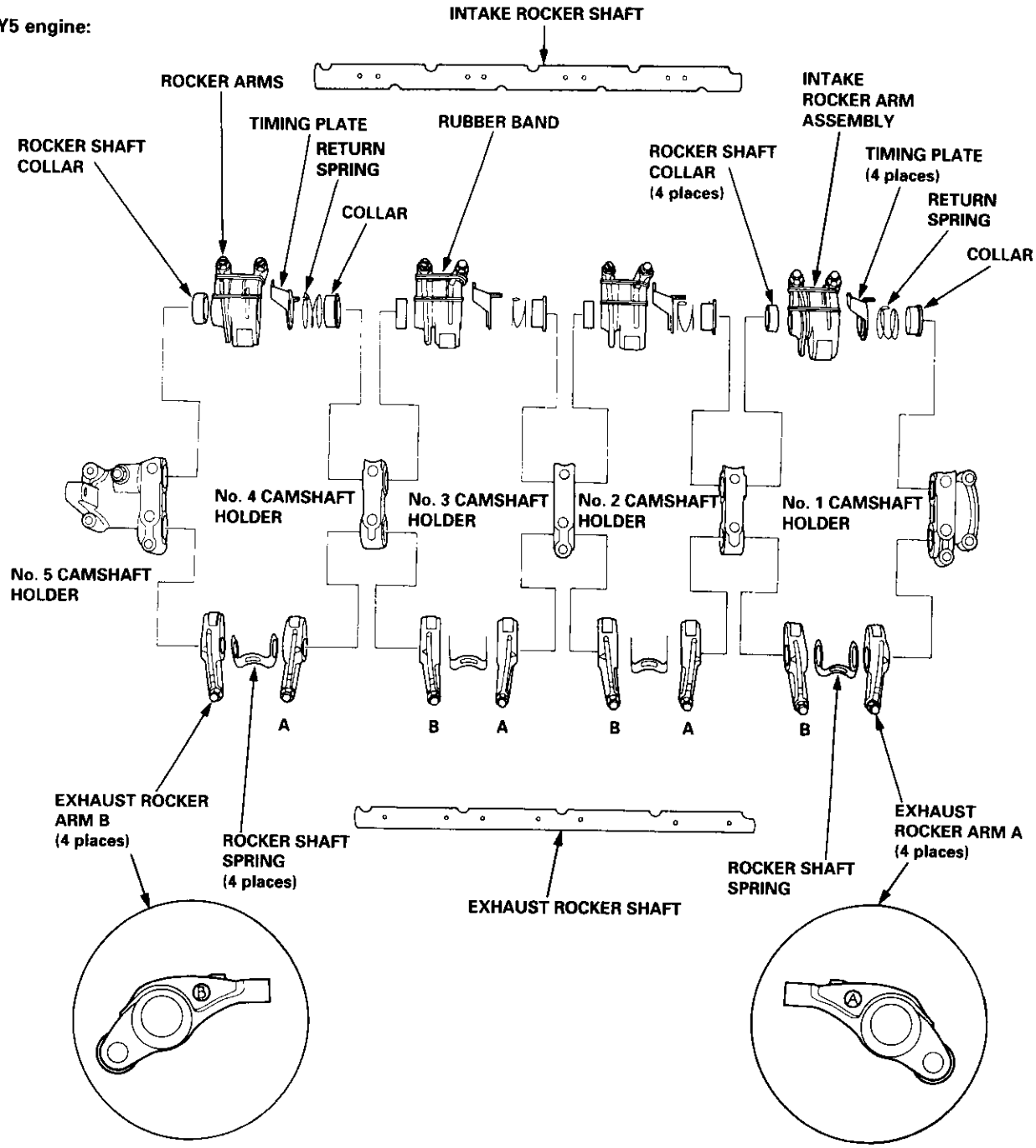

Letter "B" is stamped on rocker arm.

Letter "A" is stamped on rocker arm.

D16Y8 engine:

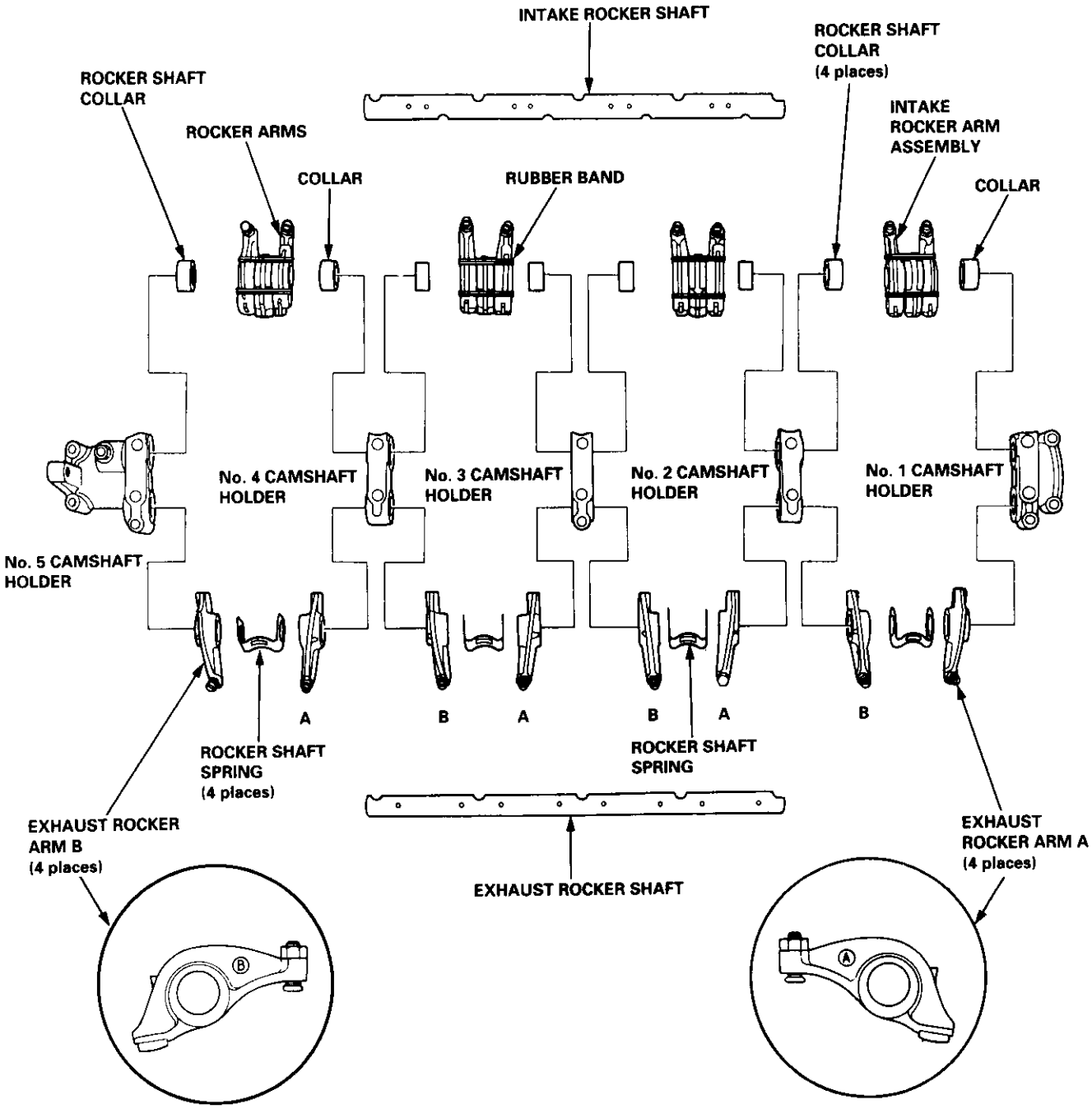

Letter "B" is stamped on rocker arm.

Letter "A" is stamped on rocker arm.

Inspection (D16Y5, D16Y8 engines)

NOTE: When reassembling the primary rocker arm, carefully apply air pressure to the oil passage of the rocker arm.

1. Inspect the rocker arm piston. Push it manually.
   — If it does not move smoothly, replace the rocker arm assembly.

D16Y5 engine:

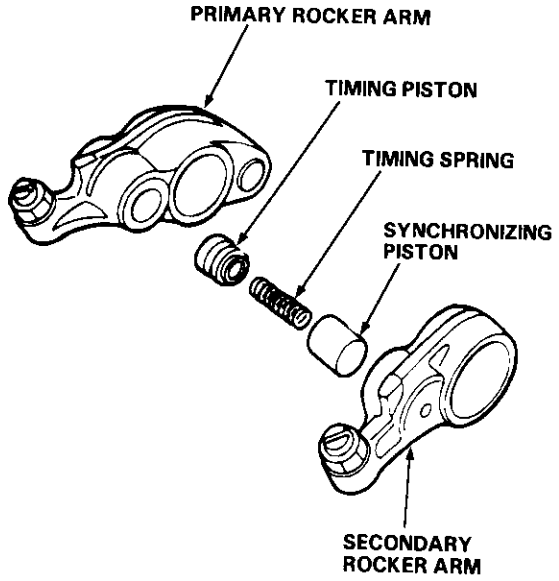

D16Y8 engine:

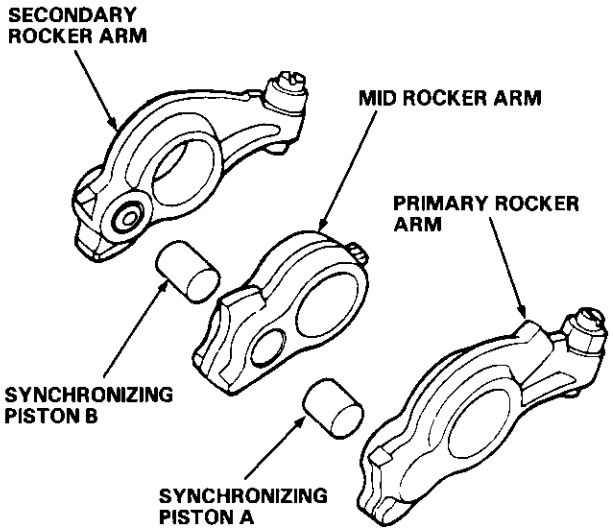

NOTE:
- Apply oil to the pistons when reassembling.
- Bundle the rocker arms with a rubber band to prevent them from separating.

D16Y5 engine:

NOTE: Set the timing plate and return spring as shown below.

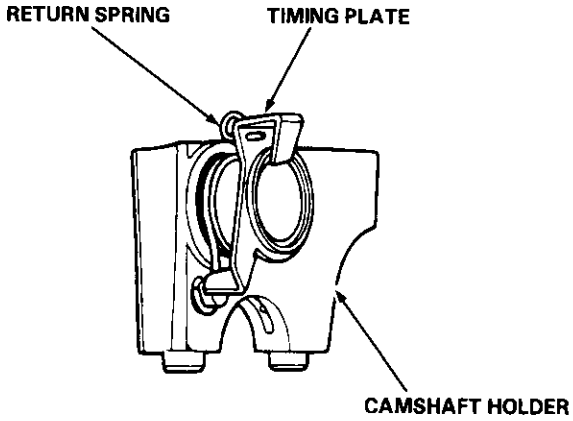

D16Y8 engine:

2. Remove the lost motion assembly from the holder and inspect it. Test it by pushing the plunger with your finger.
   — If the lost motion assembly plunger does not move smoothly, replace it.

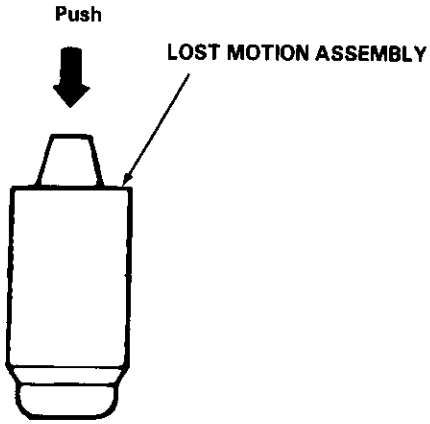

Clearance Inspection

Measure both the intake rocker shaft and exhaust rocker shaft.

1. Measure the diameter of the shaft at the first rocker location.

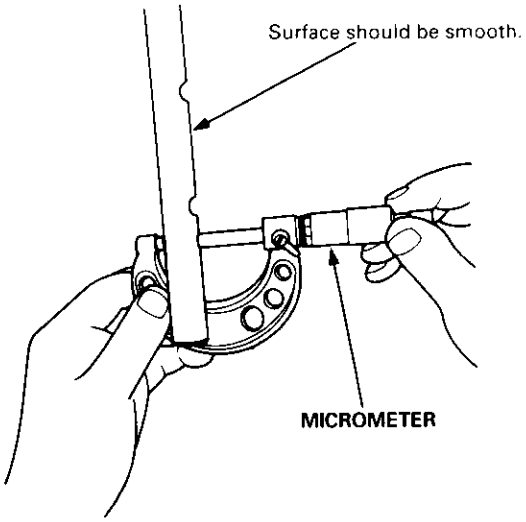

2. Zero the gauge to the shaft diameter.

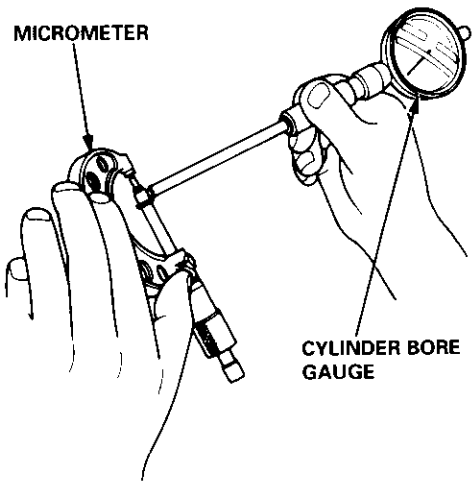

3. Measure the inside diameter of the rocker arm and check for an out-of-round condition.

Rocker Arm-to-Shaft Clearance:
Standard (New):
Intake: 0.017 – 0.050 mm (0.0007 – 0.0020 in)
Exhaust: 0.018 – 0.054 mm (0.0007 – 0.0021 in)
Service Limit: 0.08 mm (0.003 in)

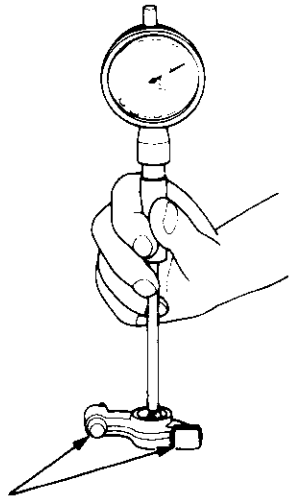

4. Repeat these measurements on all the rockers.
   — If the clearance is over the service limit, replace the rocker shaft and all over-tolerance rocker arms.

Inspection

NOTE:
- Do not rotate the camshaft during inspection.
- Remove the rocker arms and rocker shafts.

1. Put the camshaft and the camshaft holders on the cylinder head, then tighten the bolts to the specified torque.

   Specified torque:
   8 mm bolts: 20 N·m (2.0 kgf·m 14 lbf·ft)
   Apply engine oil to the threads.
   6 mm bolts: 12 N·m (1.2 kgf·m 8.7 lbf·ft)
   Apply engine oil to the threads.

6 mm bolts: ⑪, ⑫ ⑬, ⑭

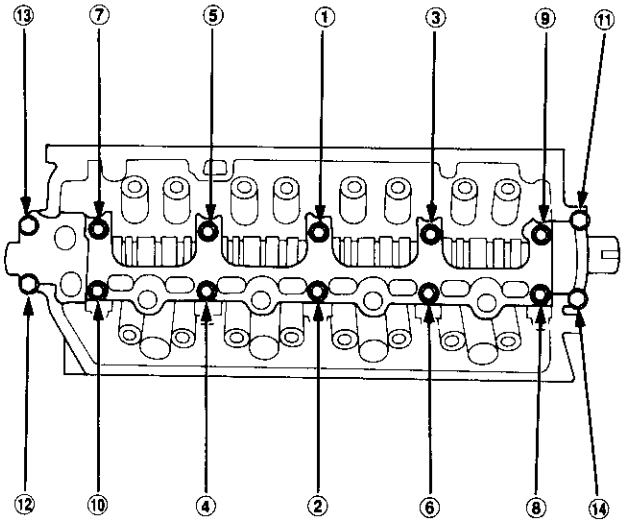

2. Seat the camshaft by pushing it toward the rear of the cylinder head.

3. Zero the dial indicator against the end of the camshaft. Push the camshaft back and forth, and read the end play.

   Camshaft End Play:
   Standard (New): 0.05 – 0.15 mm (0.002 – 0.006 in)
   Service Limit: 0.5 mm (0.02 in)

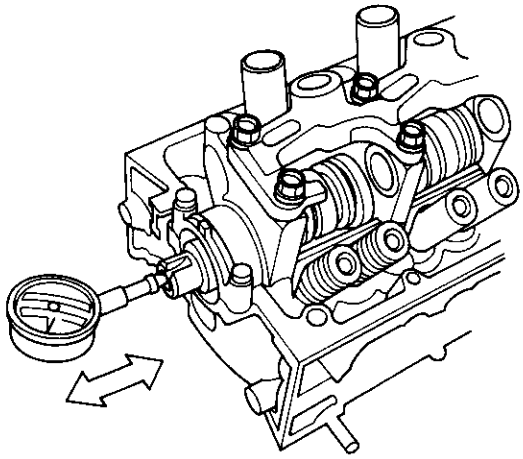

4. Remove the bolts, then remove the camshaft holders from the cylinder head.
   — Lift the camshaft out of the cylinder head, wipe it clean, then inspect the lift ramps. Replace the camshaft if any lobes are pitted, scored, or excessively worn.
   — Clean the camshaft bearing surfaces in the cylinder head, then set the camshaft back in place.
   — Place a plastigage strip across each journal.

5. Install the camshaft holders, and tighten the bolts to the specified torque.

6. Remove the camshaft holders, then measure the widest portion of the plastigage on each journal.

Camshaft-to-Holder Oil Clearance:
Standard (New): 0.050 – 0.089 mm (0.002 – 0.004 in)
Service Limit : 0.15 mm (0.006 in)

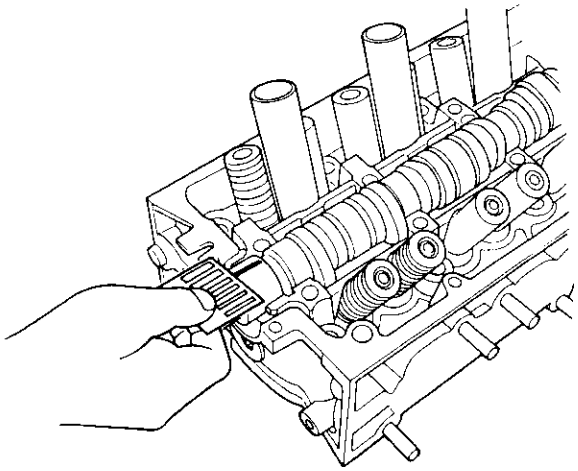

7. If the camshaft-to-holder oil clearance is out of tolerance:
   — And the camshaft has already been replaced, you must replace the cylinder head.
   — If the camshaft has not been replaced, first check the total runout with the camshaft supported on V-blocks.

Camshaft Total Runout:
Standard (New): 0.03 mm (0.001 in) max.
Service Limit: 0.04 mm (0.002 in)

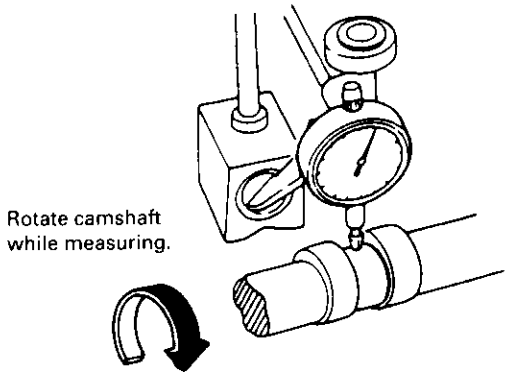

   — If the total runout of the camshaft is within tolerance, replace the cylinder head.
   — If the total runout is out of tolerance, replace the camshaft and recheck the camshaft-to-holder oil clearance. If the oil clearance is still out of tolerance, replace the cylinder head.

8. Check the cam lobe height wear.

Cam lobe height standard (New)

Unit mm (in)

		INTAKE	EXHAUST
D16Y7 engine		35.299 (1.3897)	37.281 (1.4678)
D16Y5 engine	PRI	38.427 (1.5129)	38.784 (1.5269)
	SEC	32.193 (1.2674)	
D16Y8 engine	PRI	36.778 (1.4479)	38.008 (1.4964)
	MID	38.274 (1.5068)	
	SEC	37.065 (1.4592)	

PRI: Primary cam lobe, SEC: Secondary cam lobe
MID: Mid cam lobe, T/B: Timing belt
IN: Intake, EX: Exhaust

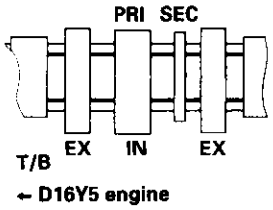

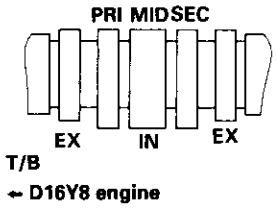

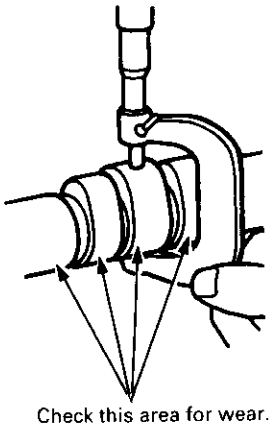

Check this area for wear.

Removal

NOTE: Identify valves and valve springs as they are removed so that each item can be reinstalled in its original position.

1. Using an appropriate-sized socket and plastic mallet, lightly tap the valve retainer to loosen the valve keepers before installing the valve spring compressor.

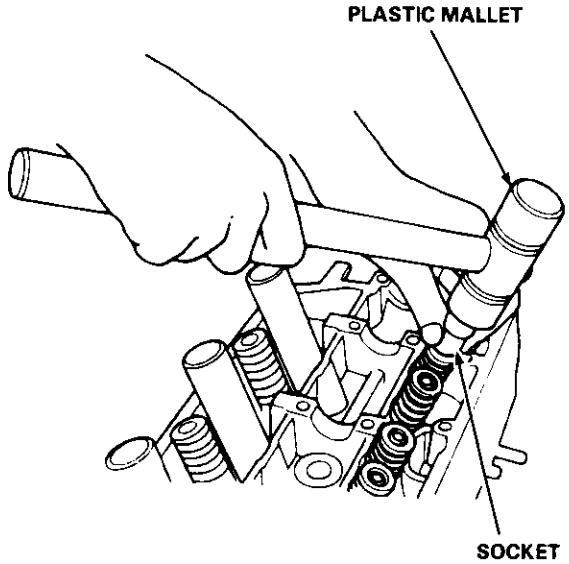

2. Install the spring compressor. Compress the spring and remove the valve keeper.

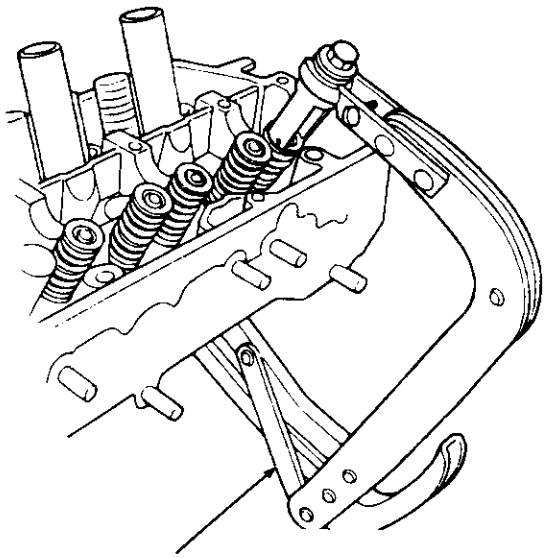

3. Install the valve guide seal remover.

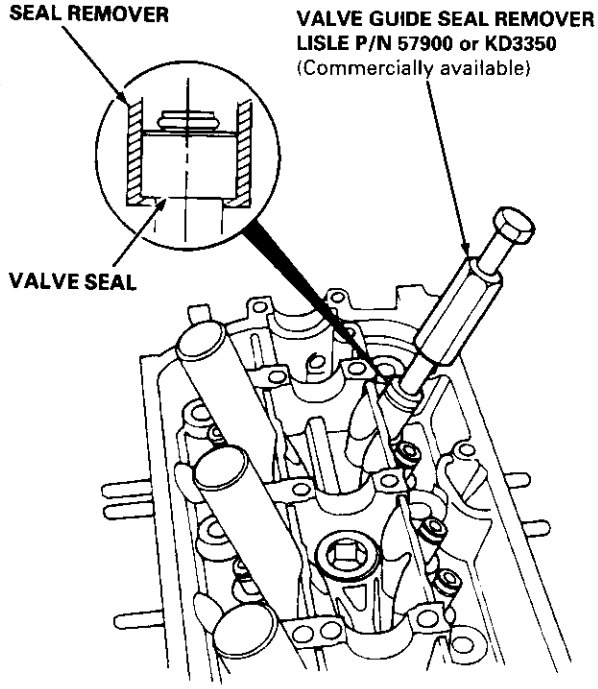

4. Remove the valve seal.

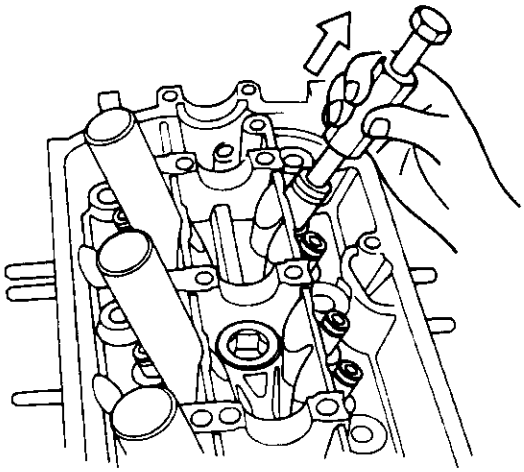

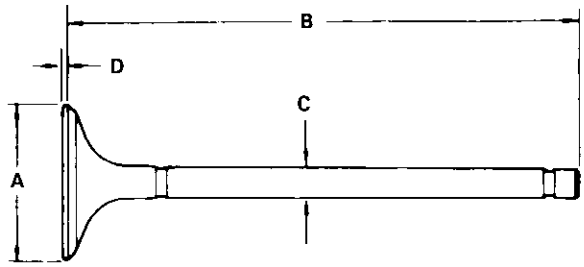

Intake Valve Dimensions

A	Standard (New):	29.9 – 30.1 mm (1.18 – 1.19 in)
B	Standard (New):	117.42 – 117.72 mm (4.623 – 4.635 in)
C	Standard (New):	5.48 – 5.49 mm (0.2157 – 0.2161 in)
C	Service Limit:	5.45 mm (0.2146 in)
D	Standard (New):	0.85 – 1.15 mm (0.033 – 0.045 in)
D	Service Limit:	0.65 mm (0.026 in)

Exhaust Valve Dimensions

A	Standard (New):	25.9 – 26.1 mm (1.02 – 1.03 in)
B	Standard (New):	114.60 – 114.90 mm (4.512 – 4.524 in)
C	Standard (New):	5.45 – 5.46 mm (0.2146 – 0.2150 in)
C	Service Limit:	5.42 mm (0.2134 in)
D	Standard (New):	1.05 – 1.35 mm (0.041 – 0.053 in)
D	Service Limit:	0.95 mm (0.037 in)

Valve Movement

Measure the guide-to-stem clearance with a dial indicator while rocking the stem in the direction of normal thrust (wobble method).

Intake Valve Stem-to-Guide Clearance:
Standard (New): 0.04 – 0.10 mm (0.002 – 0.004 in)
Service Limit: 0.16 mm (0.006 in)

Exhaust Valve Stem-to-Guide Clearance:
Standard (New): 0.10 – 0.16 mm (0.004 – 0.006 in)
Service Limit: 0.22 mm (0.009 in)

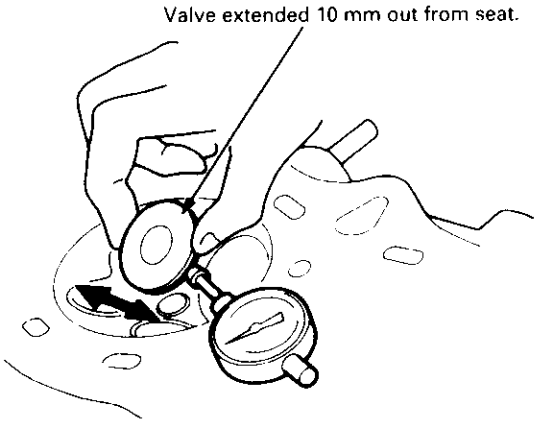

- If the measurement exceeds the service limit, recheck using a new valve.
- If the measurement is now within the service limit, reassemble using a new valve.
- If the measurement still exceeds the limit, recheck using the alternate method below, then replace the valve and guide, if necessary.

NOTE: An alternate method of checking guide to stem clearance is to subtract the O.D. of the valve stem, measured with a micrometer, from the I.D. of the valve guide, measured with an inside micrometer or ball gauge. Take the measurements in three places along the valve stem and three places inside the valve guide. The difference between the largest guide measurement and the smallest stem measurement should not exceed the service limit.

Intake Valve Stem-to-Guide Clearance:
Standard (New): 0.02 – 0.05 mm (0.001 – 0.002 in)
Service Limit: 0.08 mm (0.003 in)

Exhaust Valve Stem-to-Guide Clearance:
Standard (New): 0.05 – 0.08 mm (0.002 – 0.003 in)
Service Limit: 0.11 mm (0.004 in)

Warpage

NOTE: If the camshaft-to-holder oil clearances (see page 6-36) are not within specification, the cylinder head cannot be resurfaced.

If the camshaft-to-holder oil clearances are within specifications, check the cylinder head for warpage.

- If warpage is less than 0.05 mm (0.002 in), cylinder head resurfacing is not required.
- If warpage is between 0.05 mm (0.002 in) and 0.2 mm (0.008 in), resurface the cylinder head.
- Maximum resurface limit is 0.2 mm (0.008 in) based on a height of 93 mm (3.66 in).

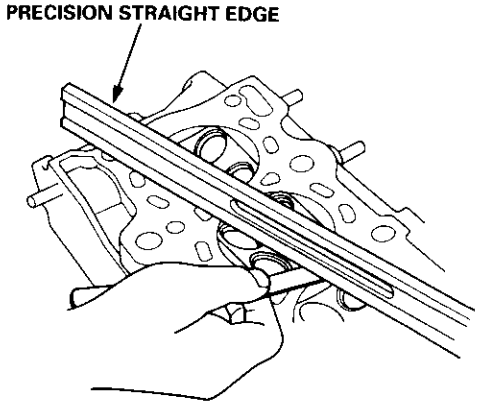

Measure along edges, and three ways across center.

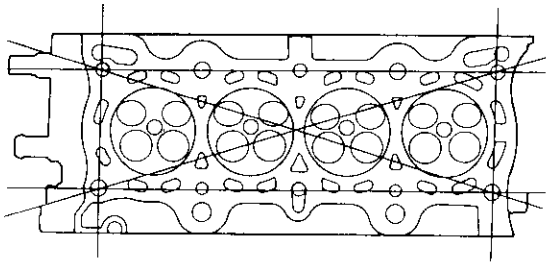

Cylinder Head Height:
Standard (New): 92.95 – 93.05 mm (3.659 – 3.663 in)

Reconditioning

1. Renew the valve seats in the cylinder head using a valve seat cutter.

   NOTE: If the guides are worn (see page 6-39), replace them (see page 6-41) before cutting the valve seats.

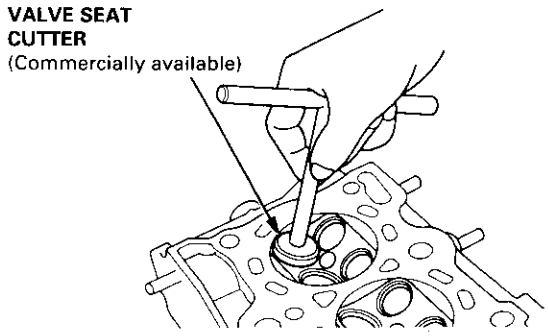

2. Carefully cut a 45° seat, removing only enough material to ensure a smooth and concentric seat.

3. Bevel the upper edge of the seat with the 30° cutter and the lower edge of the seat with the 60° cutter. Check the width of the seat and adjust accordingly.

4. Make one more very light pass with the 45° cutter to remove any possible burrs caused by the other cutters.

   Valve Seat Width:
   Standard (New):
   Intake: 0.85 – 1.15 mm (0.033 – 0.045 in)
   Exhaust: 1.25 – 1.55 mm (0.049 – 0.061 in)
   Service Limit:
   Intake: 1.6 mm (0.063 in)
   Exhaust: 2.0 mm (0.079 in)

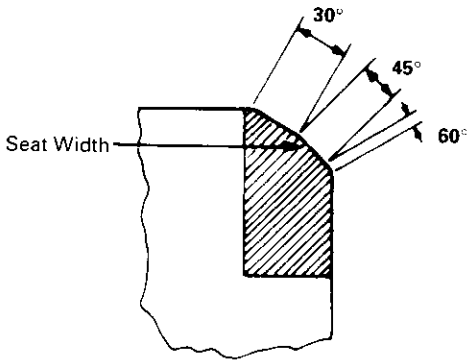

5. After resurfacing the seat, inspect for even valve seating: Apply Prussian Blue compound to the valve face, and insert the valve in its original location in the head, then lift and snap it closed against the seat several times.

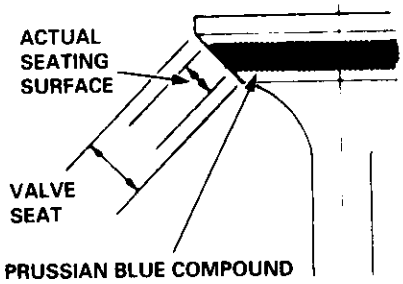

6. The actual valve seating surface, as shown by the blue compound, should be centered on the seat.
   - If it is too high (closer to the valve stem), you must make a second cut with the 60° cutter to move it down, then one more cut with the 45° cutter to restore seat width.
   - If it is too low (closer to the valve edge), you must make a second cut with the 30° cutter to move it up, then one more cut with the 45° cutter to restore seat width.

   NOTE: The final cut should always be made with the 45° cutter.

7. Insert the intake and exhaust valves in the head and measure the valve stem installed height.

   Intake, Exhaust Stem Installed Height:
   Standard (New): 53.17 – 53.64 mm (2.093 – 2.112 in)
   Service Limit: 53.89 mm (2.122 in)

8. If the valve stem installed height is over the service limit, replace the valve and recheck. If its still over the service limit, replace the cylinder head; the valve seat in the head is too deep.

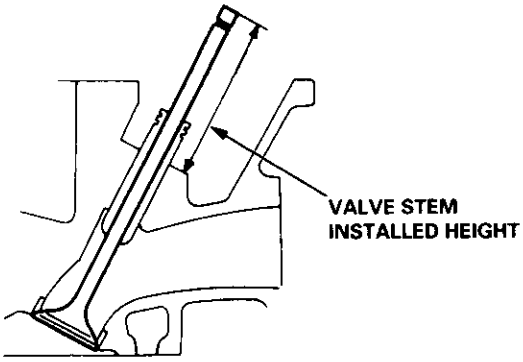

Replacement

1. As illustrated below, use a commercially-available air-impact valve guide driver attachment modified to fit the diameter of the valve guides. In most cases, the same procedure can be done using the special tool and a conventional hammer.

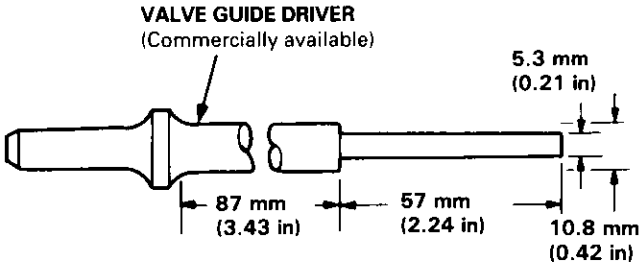

   or
   VALVE GUIDE DRIVER, 5.5 mm
   07742 – 0010100

2. Select the proper replacement guides, and chill them in the freezer section of a refrigerator for about an hour.

3. Use a hot plate or oven to evenly heat the cylinder head to 300°F (150°C). Monitor the temperature with a cooking thermometer.

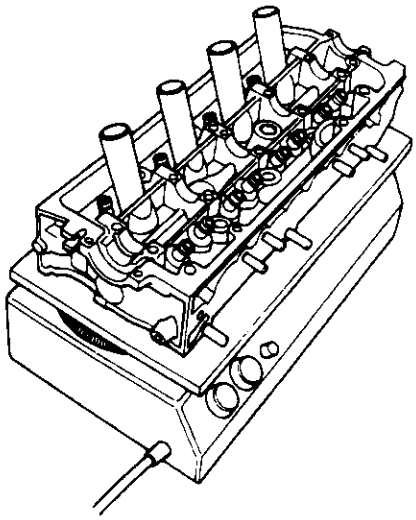

CAUTION:
- **Do not use a torch; it may warp the head.**
- **Do not get the head hotter than 300°F (150°C); excessive heat may loosen the valve seats.**
- **To avoid burns, use heavy gloves when handling the heated cylinder head.**

(cont'd)

Replacement (cont'd)

4. Working from the camshaft side, use the driver and an air hammer to drive the guide about 2 mm (0.1 in) towards the combustion chamber. This will knock off some of the carbon and make removal easier.

   CAUTION:
   - **Always wear safety goggles or a face shield when driving valve guides.**
   - **Hold the air hammer directly in line with the valve guide to prevent damaging the driver.**

5. Turn the head over, and drive the guide out toward the camshaft side of the head.

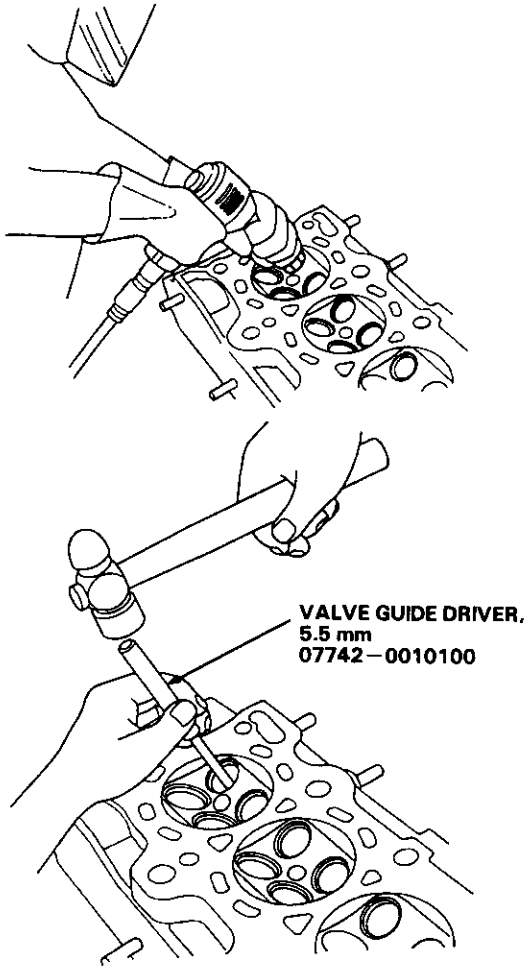

If a valve guide still won't move, drill it out with a 8 mm (5/16 in) bit, then try again.

CAUTION: Drill guides only in extreme cases; you could damage the cylinder head if the guide breaks.

6. Remove the new guides from the freezer, one at a time, as you need them.

7. Apply a thin coat of clean engine oil to the outside of the new valve guide. Install the guide from the camshaft side of the head; use the special tool to drive the guide in to the specified installed height. If you have all 16 guides to do, you may have to reheat the head.

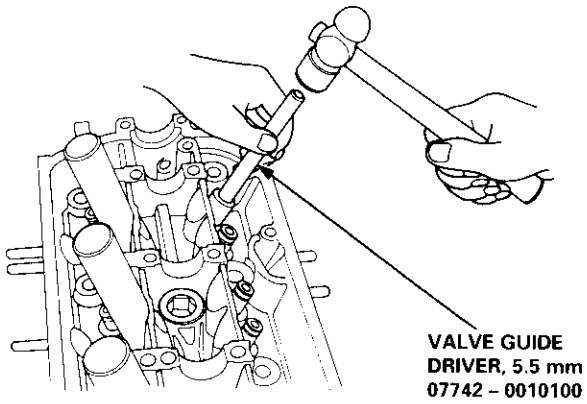

Valve Guide Installed Height:
Intake: 17.85 – 18.35 mm (0.703 – 0.722 in)
Exhaust: 18.65 – 19.15 mm (0.734 – 0.754 in)

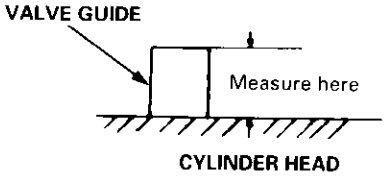

Reaming

NOTE: For new valve guides only.

1. Coat both the reamer and valve guide with cutting oil.
2. Rotate the reamer clockwise the full length of the valve guide bore.
3. Continue to rotate the reamer clockwise while removing it from the bore.
4. Thoroughly wash the guide in detergent and water to remove any cutting residue.
5. Check the clearance with a valve (see page 6-39). Verify that the valve slides in the valve guide without exerting pressure.

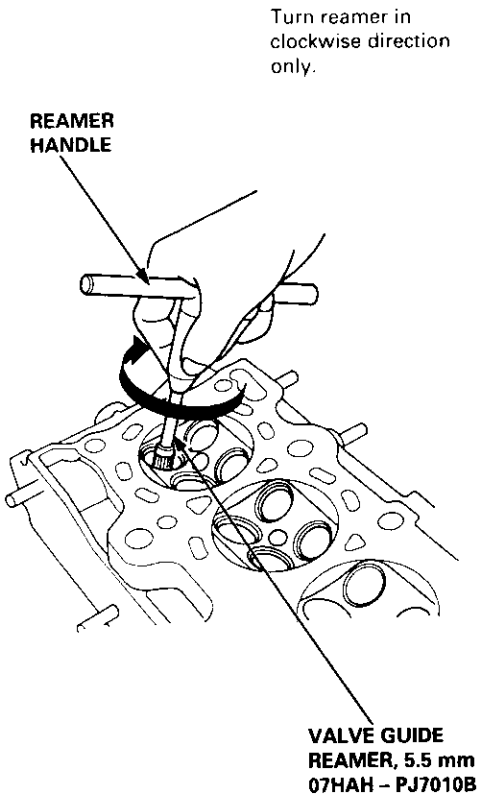

Installation

1. Coat valve stems with engine oil. Insert the valves in the valve guides.

   NOTE: Make sure the valves move up and down smoothly.

2. Install the spring seats on the cylinder head.
3. Install the valve seals using the valve guide seal installer.

   NOTE: Exhaust and intake valve seals are not interchangeable.

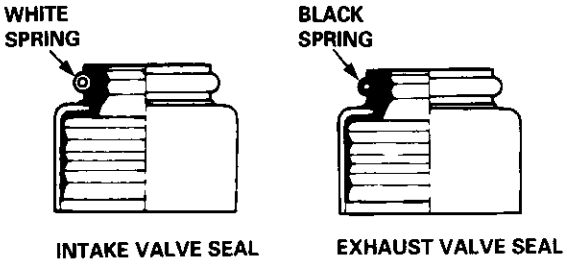

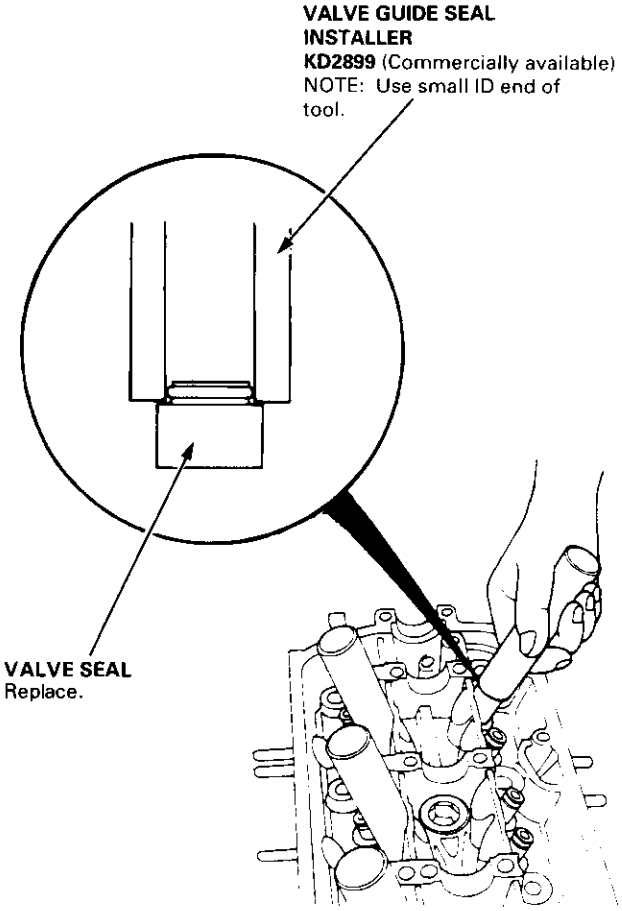

(cont'd)

Installation (cont'd)

4. Install the valve spring and valve retainer, then install the valve spring compressor. Compress the spring and install the valve keepers.

   NOTE: Place the end of the valve spring with closely wound coils toward the cylinder head.

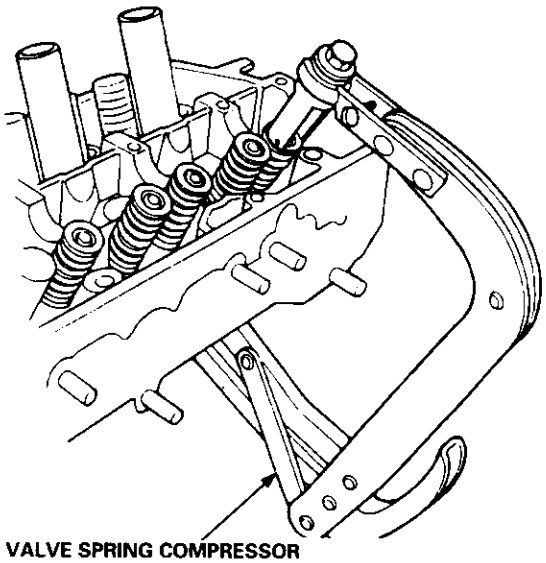

VALVE SPRING COMPRESSOR
(Commercially available)
Snap-on CF711 or KD - 383
with #32 JAWS

5. Lightly tap the end of each valve stem two or three times with a plastic mallet to ensure proper seating of the valve and valve keepers.

   NOTE: Tap the valve stem only along its axis so you do not bend the stem.

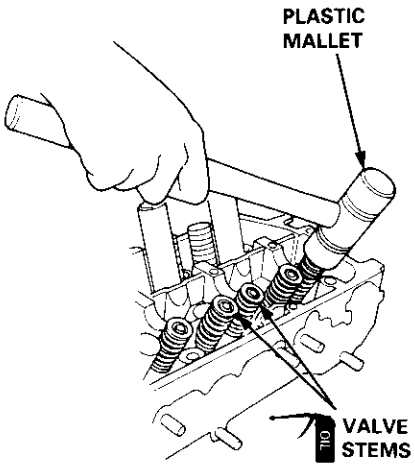

Installation

CAUTION:
- **Make sure that all rockers are in alignment with their valves when torquing the rocker assembly bolts.**
- **Valve locknuts should be loosened and adjusting screws backed off before installation.**
- **To prevent the rocker arm assembly from coming apart, leave the camshaft holder bolts in the holders.**

1. After wiping down the camshaft, camshaft seal and journals in the cylinder head, lubricate both surfaces and install the camshaft.

2. Clean and install the oil control orifice with a new O-ring.

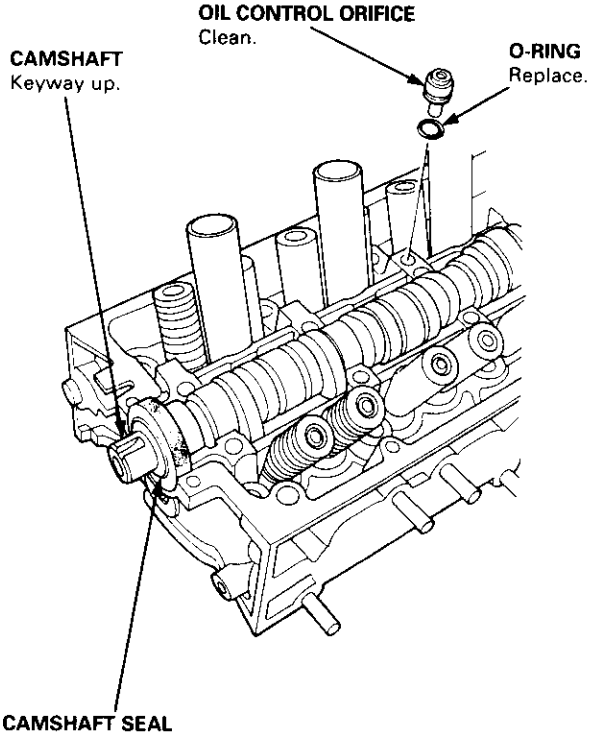

CAMSHAFT SEAL
Seal housing surface should be dry.
Apply a light coat of oil to camshaft and inner lip of seal.

3. Turn the camshaft until its keyway is facing up (No. 1 piston TDC).

4. Apply liquid gasket (Part No. 08718 – 0001 or 08718 – 0003) to the head mating surfaces of the No. 1 and No. 5 camshaft holders.
   — Apply liquid gasket to the shaded areas.

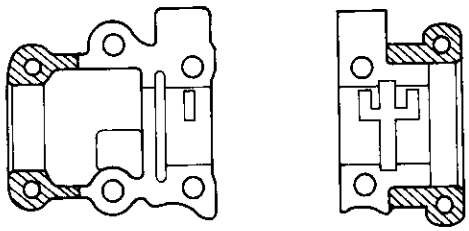

No. 5 No. 1

5. Set the rocker arm assembly in place and loosely install the bolts.
   — Make sure that the rocker arms are properly positioned on the valve stems.

6. Tighten each bolt two turns at a time in the sequence shown below to ensure that the rockers do not bind on the valves.

   Specified torque:
   8 mm bolts: 20 N·m (2.0 kgf·m, 14 lbf·ft)
   Apply engine oil to the threads.
   6 mm bolts: 12 N·m (1.2 kgf·m, 8.7 lbf·ft)
   Apply engine oil to the threads.

   6 mm bolts: ⑪, ⑫, ⑬, ⑭

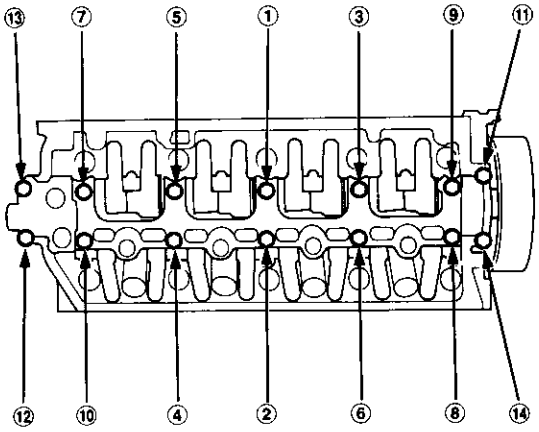

7. Install the back cover, then install the camshaft pulley.

Installation

Install the cylinder head in the reverse order of removal:

NOTE:
- Always use a new head gasket.
- Cylinder head and cylinder block surface must be clean.
- "UP" mark on the camshaft pulley should be at the top.
- Turn the crankshaft so the No. 1 piston is at TDC (see page 6-20).
- Clean the oil control orifice before installing.
- Do not use the upper cover and lower cover to store removed items.
- Clean the upper cover and lower cover before installation.

1. Cylinder head dowel pins must be aligned.

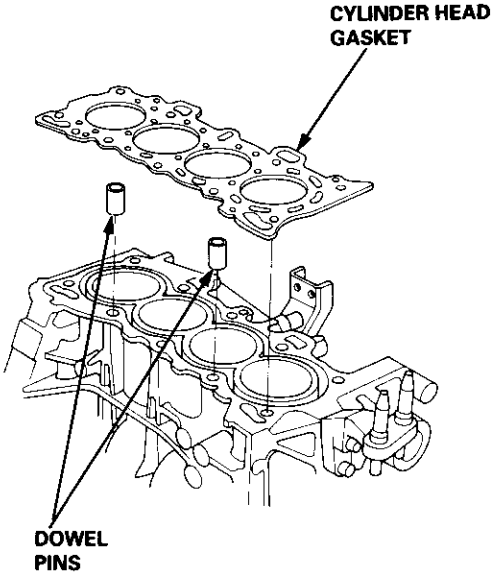

(cont'd)

Installation (cont'd)

2. Position the camshaft correctly (see page 6-20).

3. Tighten the cylinder head bolts sequentially in four steps.

   1st step: ① – ⑩ 20 N·m (2.0 kgf·m, 14 lbf·ft)
   2nd step: ① – ⑩ 49 N·m (5.0 kgf·m, 36 lbf·ft)
   3rd step: ① – ⑩ 67 N·m (6.8 kgf·m, 49 lbf·ft)
   4th step: ①, ② 67 N·m (6.8 kgf·m, 49 lbf·ft)

   NOTE:
   - We recommend using a beam-type torque wrench. When using a preset-type torque wrench, be sure to tighten slowly and not to overtighten.
   - If a bolt makes any noise while you are torquing it, loosen the bolt, and retighten it from the 1st step.

CYLINDER HEAD BOLTS TORQUE SEQUENCE:

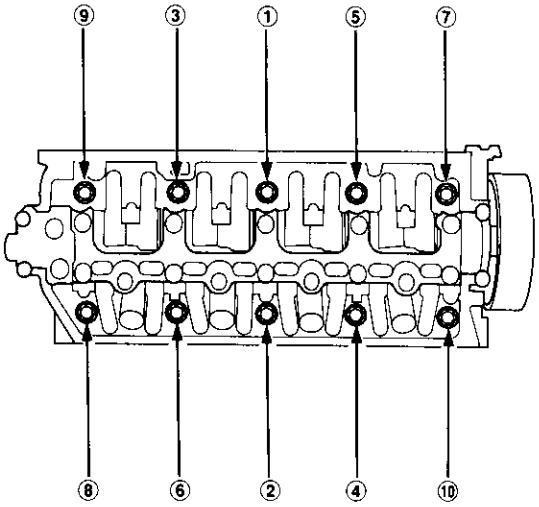

4. Install the intake manifold and tighten the nuts in a crisscross pattern in two or three steps, beginning with the inner nuts (see pages 9-2 thru 9-4).

   - Always use a new intake manifold gasket.

5. Install the exhaust manifold and tighten the nuts in a crisscross pattern in two or three steps, beginning with the inner nut (see pages 9-6 and 9-7).

   - Always use a new exhaust manifold gasket.

6. Install the exhaust manifold bracket. Install the exhaust pipe A and the bracket, then install the cover.

7. Install the timing belt (see page 6-20).

8. Adjust the valve clearance (see page 6-12).

9. Install the head cover gasket in the groove of the cylinder head cover. Seat the recesses for the camshaft first, then work it into the groove around the outside edges.

   NOTE:
   - Before installing the head cover gasket, thoroughly clean the seal and the groove.
   - When installing, make sure the head cover gasket is seated securely in the corners of the recesses with no gap.

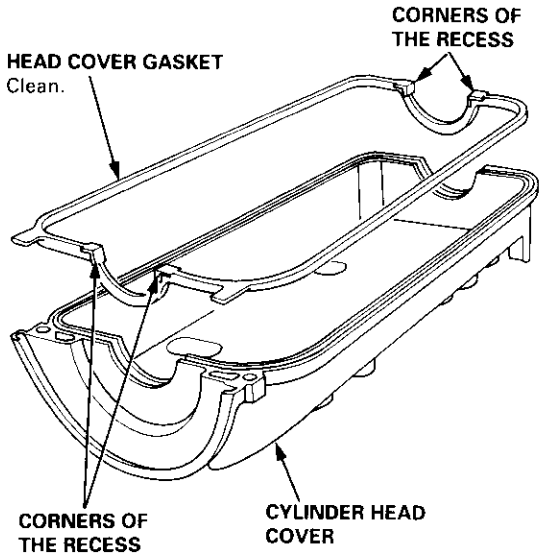

10. Apply liquid gasket to the head cover gasket at the four corners of the recesses.

    NOTE:
    - Use liquid gasket, Part No. 08718 – 0001 or 08718 – 0003.
    - Check that the mating surfaces are clean and dry before applying liquid gasket.
    - Do not install the parts if five minutes or more have elapsed since applying liquid gasket. Instead, reapply liquid gasket after removing old residue.
    - After assembly, wait at least 30 minutes before filling the engine with oil.

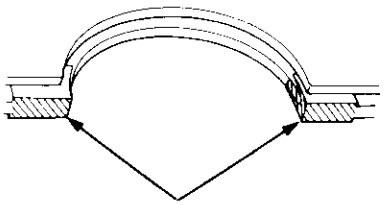

Apply liquid gasket to the shaded areas.

11. When installing the cylinder head cover, hold the head cover gasket in the groove by placing your fingers on the camshaft holder contacting surfaces (top of the semicircles).
Set the spark plug seal on the spark plug tube.
Once the cylinder head cover is on the cylinder head, slide the cover slightly back and forth to seat the head cover gasket.

NOTE:
- Before installing the cylinder head cover, clean the cylinder head contacting surfaces with a shop towel.
- Do not touch the parts where liquid gasket was applied.
- Take care not to damage the spark plug seals when installing the cylinder head cover.
- Visually check the spark plug seals for damage.
- Replace any washer that is damaged or deteriorated.

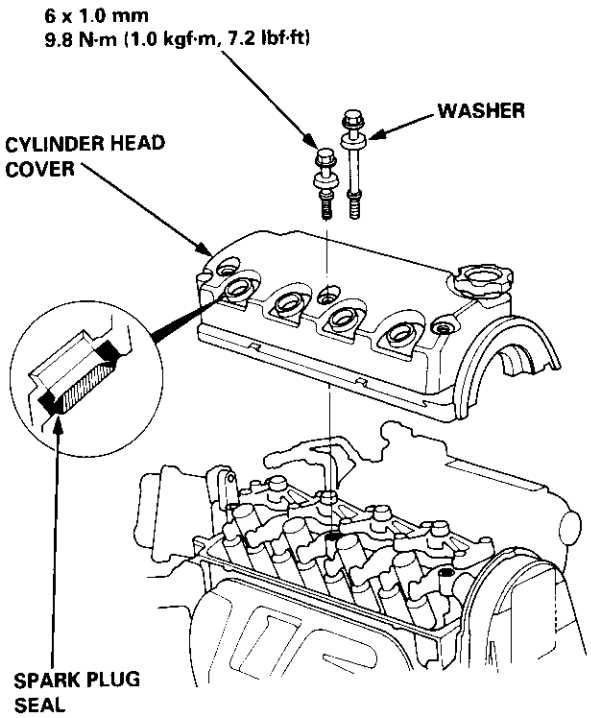

12. Tighten the nuts in two or three steps. In the final step, tighten all bolts, in sequence, to 9.8 N·m (1.0 kgf·m, 7.2 lbf·ft).

NOTE: After assembly, wait at least 30 minutes before filling the engine with oil.

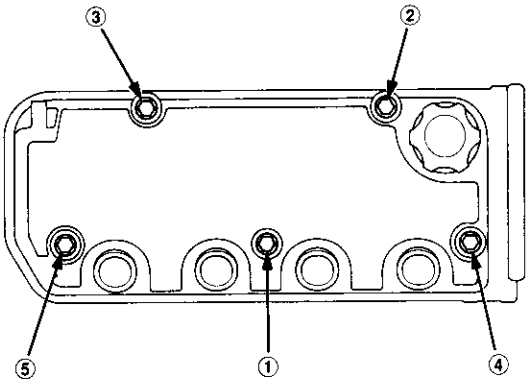

13. After installation, check that all tubes, hoses and connectors are installed correctly.

Cylinder Head/Valve Train
B16A2 engine

Special Tools 6-50
VTEC Control System
  Troubleshooting Flowchart 6-51
VTEC Solenoid Valve
  Inspection 6-54
VTEC Rocker Arms
  Manual Inspection 6-54
  Inspection Using Special Tools 6-55
Valve Clearance
  Adjustment 6-57
Crankshaft Pulley and Pulley Bolt
  Replacement 6-59
Timing Belt
  Illustrated Index 6-60
  Inspection 6-61
  Tension Adjustment 6-61
  Removal 6-62
  Installation 6-63
Cylinder Head
  Illustrated Index 6-65
  Removal 6-67
  Warpage 6-79
  Installation 6-84
Rocker Arms
  Removal 6-71
  Disassembly/Reassembly 6-72
Rocker Arms and Lost Motion Assemblies
  Inspection 6-73
Rocker Arms and Shafts
  Clearance Inspection 6-74
Camshafts
  Inspection 6-75
Valves,Valve Springs and Valve Seals
  Removal 6-77
Valve Seats
  Reconditioning 6-78
Valve Guides
  Valve Movement 6-79
  Replacement 6-80
  Reaming 6-81
Valves
  Installation 6-82
Rocker Arms
  Installation 6-83

Special Tools

Ref. No.	Tool Number	Description	Qty	Page Reference
①	07HAH – PJ7010B	Valve Guide Reamer, 5.5 mm	1	6-81
②	07JAA – 001020A	Socket, 19 mm	1	6-59
③	07JAB – 001020A	Holder Handle	1	6-59
④	07JAB – 001040A	Pulley Holder Attachment, 50 mm	1	6-59
⑤	07LAJ – PR3020A	Air Stopper	1	6-55
⑥	07MAA – PR70100	Tappet Adjuster	1	6-57
⑦	07MAA – PR70120	Tappet Locknut Wrench	1	6-57
⑧	07MAF – PR9010A	Valve Spring Compressor Attachment Extension	1	6-77
⑨	07742 – 0010100	Valve Guide Driver, 5.5 mm	1	6-80, 81
⑩	07757 – PJ1010A	Valve Spring Compressor Attachment	1	6-77

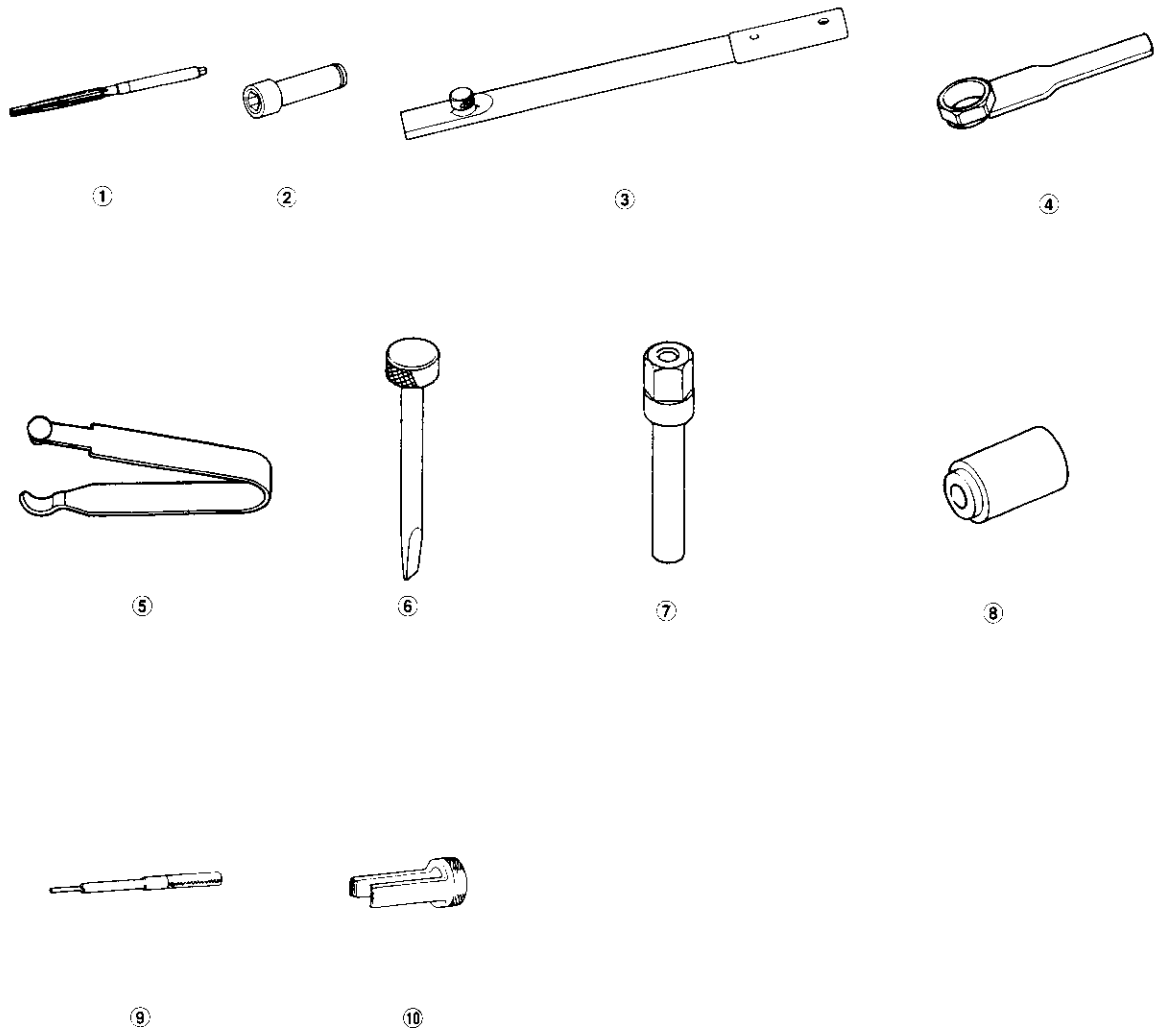

Troubleshooting Flowchart

P1259 The scan tool indicates Diagnostic Trouble Code (DTC) P1259: A problem in the VTEC Pressure Switch circuit or VTEC Solenoid Valve circuit.

Refer to page 11-38 through 11-55 before troubleshooting.

— The MIL has been reported on.
— DTC P1259 is stored.

Check the VTEC Control System:
1. Do the engine control module (ECM) Reset Procedure (see section 11).
2. Start the engine.
3. Warm up the engine to normal operating temperature (cooling fan comes on).
4. Do the Road Test.*

* Road Test:
Accelerate in 1st gear to an engine speed over 6,000 rpm.
Hold that engine speed for at least two seconds.
If the DTC P1259 is not repeated during the first road test, repeat this test two more times.

Is DTC P1259 indicated?

NO → **Intermittent failure, system is OK at this time.**
Check for poor connections or loose wires at VTEC pressure switch, VTEC solenoid valve and ECM.

YES ↓

Test the VTEC Pressure Switch:
1. Turn the ignition switch OFF.
2. Disconnect the VTEC Pressure switch 2P connector.
3. Check for continuity between VTEC pressure switch 2P connector terminal No. 1 and No. 2.

VTEC PRESSURE SWITCH 2P CONNECTOR

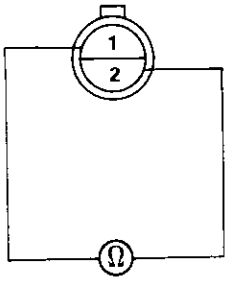

Terminal side of male terminals

Is there continuity?

NO → **Replace the VTEC pressure switch.**

YES ↓

Test the VTEC Pressure Switch Wire:
1. Turn the ignition switch ON (II).
2. Measure the voltage between VTEC pressure switch 2P connector No. 1 and body ground.

VTM (BLU/BLK)

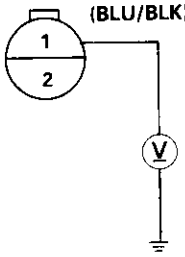

Wire side of female terminals

Is there battery voltage?

NO → **Inspect for an open or short to ground in the wire between the VTEC pressure switch and ECM (C10).**
If the wire is OK, substitute a known-good ECM and recheck.

YES ↓

(To page 6-52)

(cont'd)

Troubleshooting Flowchart (cont'd)

(From page 6-51)

Test the VTEC Pressure Switch Wire:
Measure voltage across the VTEC pressure switch 2P connector.

VTEC PRESSURE SWITCH 2P CONNECTOR

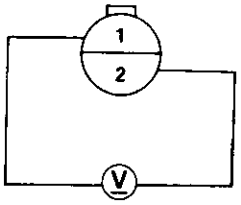

Wire side of female terminals

Is there battery voltage?

NO → **Repair open in the wire between VTEC pressure switch and G101. If the wire is OK, substitute a known-good ECM and recheck.**

YES

Test the VTEC Solenoid Valve:
1. Turn the ignition switch OFF.
2. Disconnect the VTEC solenoid valve 1P connector.
3. Check for continuity between the VTEC solenoid valve 1P connector terminal No. 1 and body ground.

VTEC SOLENOID VALVE 1P CONNECTOR

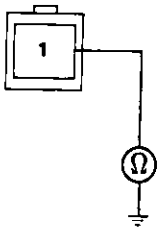

Terminal side of male terminal

Is there 14 – 30 Ω?

NO → **Replace VTEC solenoid valve.**

YES

Test the VTEC Solenoid Valve:
1. Remove the VTEC pressure switch and install the special tool as shown, then reinstall the VTEC pressure switch.
2. Reconnect the VTEC solenoid valve 1P connector and VTEC pressure switch 2P connector.
3. Connect the tachometer (see section 11).
4. Start the engine.
5. Warm up engine to normal operating temperature (cooling fan comes on).
6. Check oil pressure at engine speed of 1,000, 3,000 and 5,000 rpm.

OIL PRESSURE GAUGE (Commercially available)

GAUGE JOINT ADAPTER SNAP-ON MT26-17 10 x 1.0 mm
• Use new washer when installing the sealing bolt.

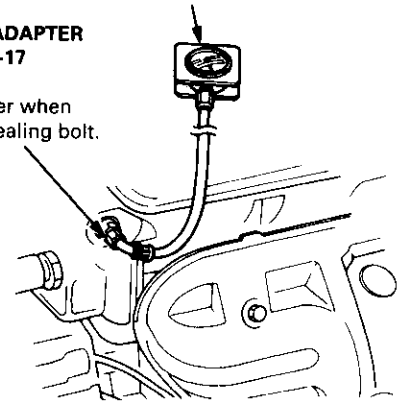

NOTE: Keep measuring time as short as possible because engine is running with no load (less than one minute).

Is pressure below 49 kPa (0.5 kgf/cm², 7 psi)?

NO → **Inspect the VTEC solenoid valve (see page 6-54).**

YES

(To page 6-53)

(From page 6-52)

Test the VTEC Solenoid Valve:
1. Turn the ignition switch OFF.
2. Disconnect the VTEC solenoid valve 1P connector.
3. Attach the battery positive terminal to the VTEC solenoid valve terminal.
4. Start the engine and check the oil pressure at engine speed of 5,000 rpm.

VTEC SOLENOID VALVE 1P CONNECTOR

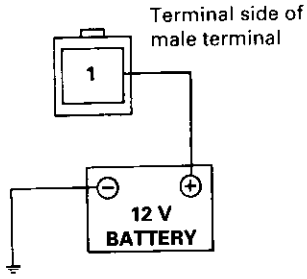

Is the pressure above 390 kPa (4.0 kgf/cm², 57 psi)?

NO → **Inspect the VTEC solenoid valve (see page 6-54).**

YES

Test the VTEC Pressure Switch:
With the battery positive terminal connected to the VTEC solenoid valve, measure voltage between the ECM connector terminal C10 and body ground.

ECM CONNECTOR C (31P)

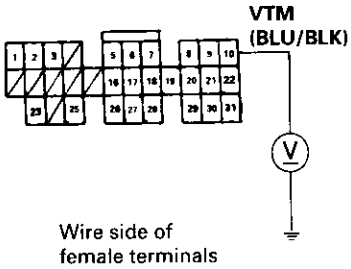

Is there battery voltage above 5,000 rpm?

NO → **Replace the VTEC pressure switch.**

YES

Test the VTEC Solenoid Valve Wire:
1. Turn the ignition switch OFF.
2. Check for continuity between the VTEC solenoid valve 1P connector terminal and the ECM connector terminal B12.

VTEC SOLENOID VALVE 1P CONNECTOR / **ECM CONNECTOR B (25P)**

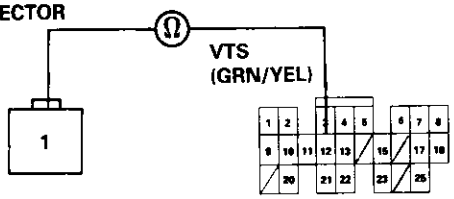

Is there continuity?

NO → **Repair open in the wire between the ECM (B12) and VTEC solenoid valve connector.**

YES

Test the VTEC Solenoid Valve Wire:
Check for continuity between the VTEC solenoid valve 1P connector terminal and body ground.

VTEC SOLENOID VALVE 1P CONNECTOR

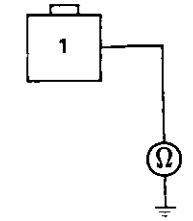

Is there continuity?

YES → **Repair short in the wire between the ECM (B12) and VTEC solenoid valve connector.**

NO

Substitute a known-good ECM and recheck. If symptom/indication goes away, replace the original ECM.

Inspection

1. Remove the VTEC solenoid valve assembly from the cylinder head, and check the VTEC solenoid valve filter for clogging.
   - If there is clogging, replace the engine oil filter and engine oil.

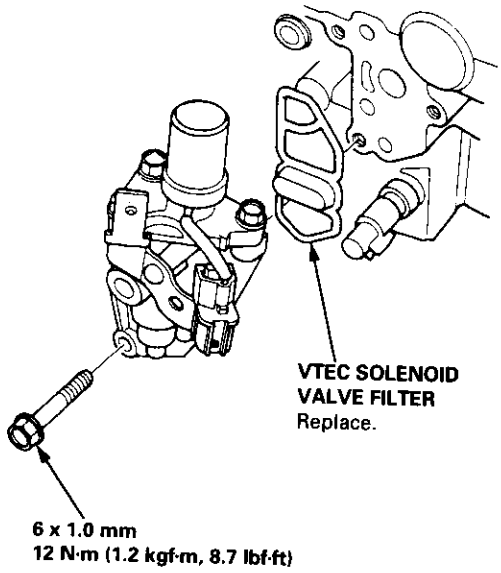

2. If the filter is not clogged, push the VTEC solenoid valve with your finger and check its movement.
   - If the VTEC solenoid valve is normal, check the engine oil pressure.

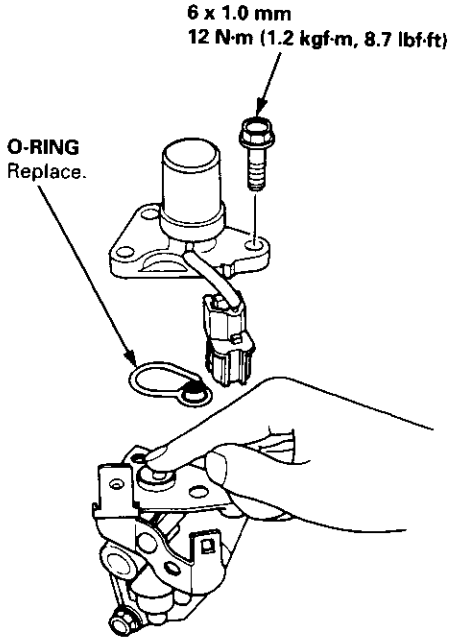

Manual Inspection

1. Set the No. 1 piston at TDC.
2. Remove the ignition wire cover and the wires.
3. Remove the ignition clamps while pulling up on the lock.

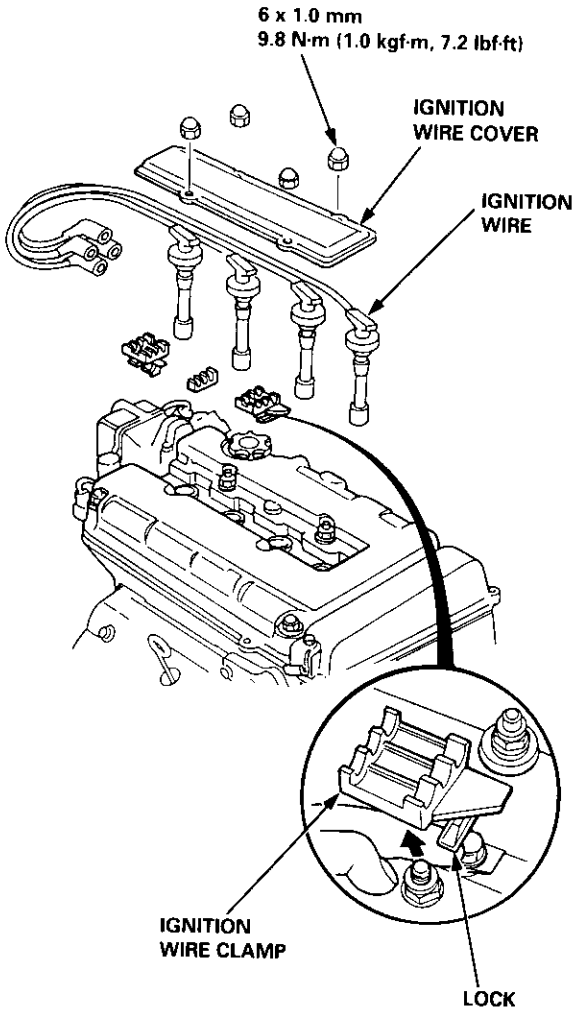

4. Remove the cylinder head cover.

   NOTE: Refer to page 6-88 when installing the cylinder head cover.

5. Push the mid rocker arm on the No. 1 cylinder manually.

6. Check that the mid rocker arm moves independently of the primary and secondary rocker arms.

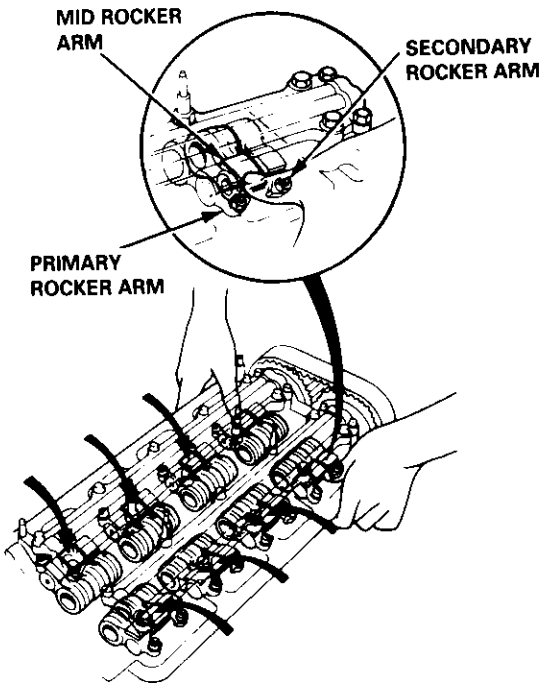

7. Check the mid rocker arm of each cylinder at TDC.

   - If the mid rocker arm does not move, remove the mid, primary and secondary rocker arms as an assembly and check that the pistons in the mid and primary rocker arms move smoothly.
   - If any rocker arm needs replacing, replace the primary, mid, and secondary rocker arms as an assembly.

Inspection Using Special Tools

CAUTION:
- **Before using the valve inspection tool, make sure that the air pressure gauge on the air compressor indicates over 400 kPa (4 kgf/cm², 57 psi)**
- **Inspect the valve clearance before rocker arm inspection.**
- **Cover the timing belt with a shop towel to prevent getting oil on the belt.**
- **Check the mid rocker arm of each cylinder at TDC.**

1. Remove the cylinder head cover.

   NOTE: Refer to page 6-86 when installing the cylinder head cover.

2. Plug the relief hole with the special tool (Air Stopper).

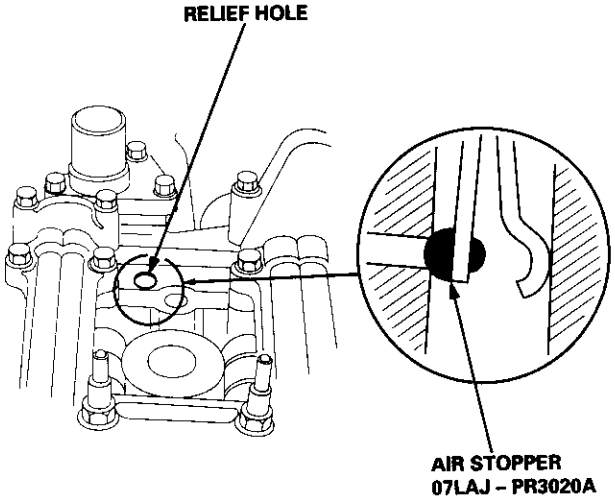

3. Remove the bolt and washer from the inspection hole and connect the an air pressure regulator with a 0 – 100 psi gauge.

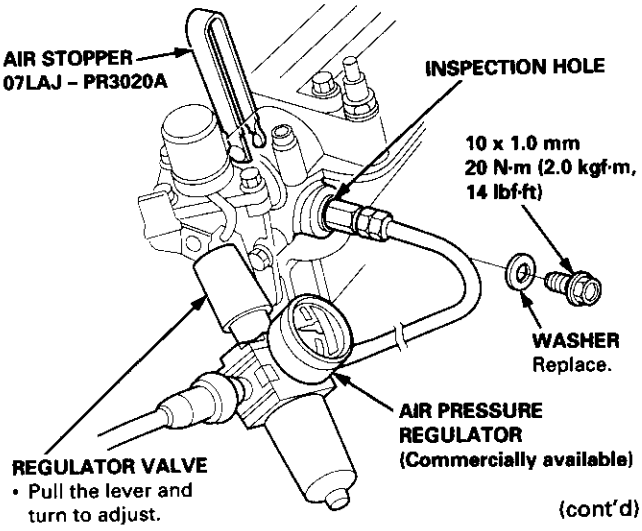

(cont'd)

Inspection Using Special Tools (cont'd)

4. Loosen the valve on the regulator and apply the specified air pressure.

   Specified Air Pressure:
   250 kPa (2.5 kgf/cm², 36 psi)
   — 490 kPa (5.0 kgf/cm², 71 psi)

5. Make sure that the primary and secondary rocker arms are mechanically connected by the pistons and that the mid rocker arms do not move when pushed manually.

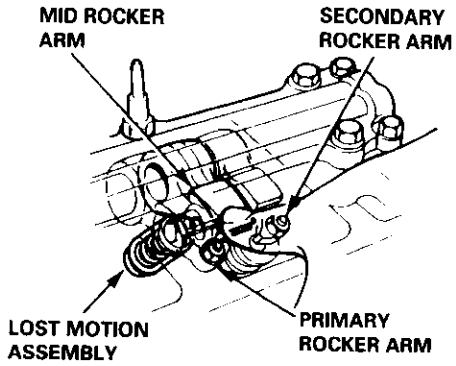

   - If any mid rocker arm moves independently of the primary and secondary rocker arms, replace the rocker arms as a set.

6. Remove the tools.

7. Check the operation of the lost motion assembly by pushing on the mid rocker arm. The lost motion assembly should compress fully and operate smoothly through its full stroke. Replace the assembly if it does not work smoothly.

8. After inspection, check that the Malfunction Indicator Lamp (MIL) does not come on.

Adjustment

NOTE:
- Valves should be adjusted only when the cylinder head temperature is less than 100°F (38°C).
- After adjusting, retorque the crankshaft pulley bolt to 177 N·m (18.0 kgf·m, 130 lbf·ft)

1. Remove the cylinder head cover.

   NOTE: Refer to page 6-86 when installing the cylinder head cover.

2. Set No. 1 piston at TDC. The "UP" mark on the pulley should be at the top, and TDC grooves on the pulley should align with the pointer on the back cover. TDC grooves (white paint) on the crankshaft pulley should align with the pointer on the timing belt lower cover.

Number 1 piston at TDC:

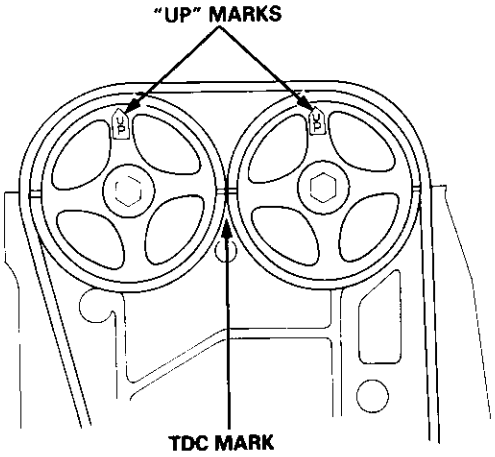

3. Adjust valves on No. 1 cylinder.
   Intake: 0.15 – 0.19 mm (0.006 – 0.007 in)
   Exhaust: 0.17 – 0.21 mm (0.007 – 0.008 in)

4. Loosen the locknut, and turn the adjusting screw until the feeler gauge slides back and forth with a slight amount of drag.

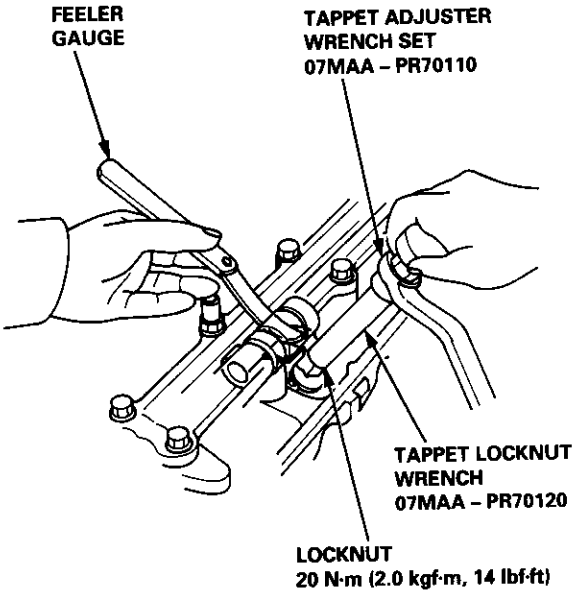

Adjusting screw location:

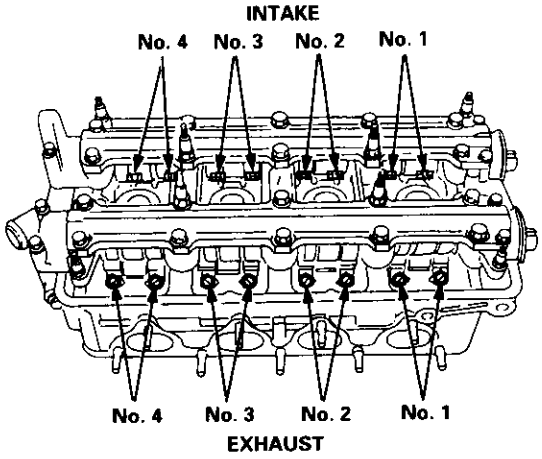

(cont'd)

Adjustment (cont'd)

5. Tighten the locknut and recheck clearance. Repeat adjustment if necessary.

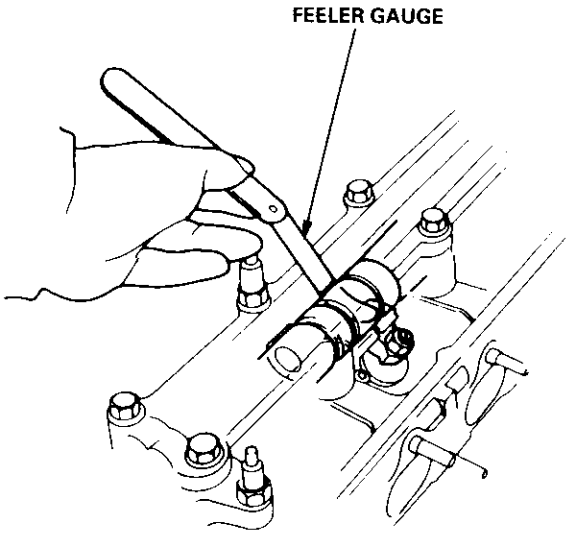

6. Rotate the crankshaft 180° counterclockwise (camshaft pulley turns 90°). The "UP" mark should be on the exhaust side. Adjust valves on No. 3 cylinder.

Number 3 piston at TDC:

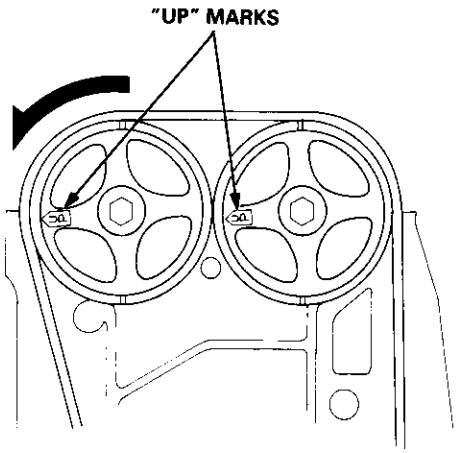

7. Rotate the crankshaft 180° counterclockwise to bring No. 4 piston to TDC. The "UP" mark should be pointing straight down. Adjust valves on No. 4 cylinder.

Number 4 piston at TDC:

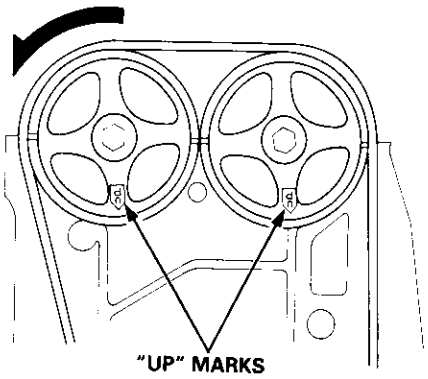

8. Rotate the crankshaft 180° counterclockwise to bring No. 2 piston to TDC. The "UP" marks should be on the intake side. Adjust valves on No. 2 cylinder.

Number 2 piston at TDC:

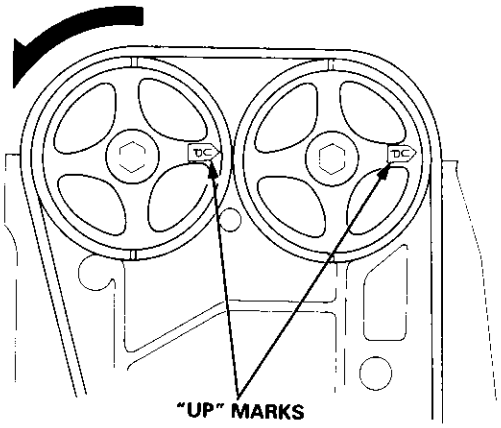

Replacement

When installing and tightening the pulley, follow the procedure below.

Clean, remove any oil, and lubricate points shown below.

○: Clean
×: Remove any oil
●: Lubricate

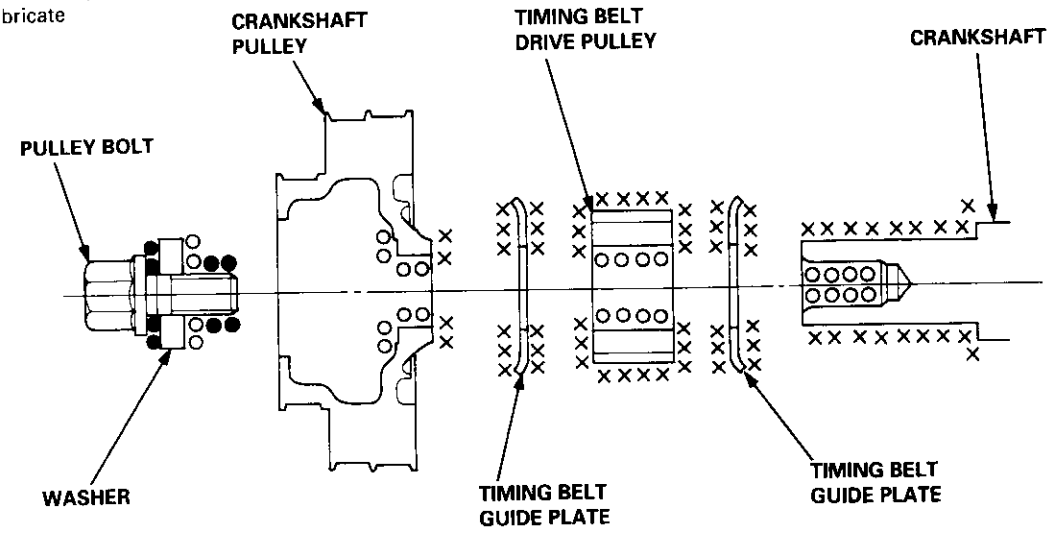

Crankshaft pulley bolt size and torque value:
14 x 1.25 mm
177 N·m (18.0 kgf·m, 130 lbf·ft)

NOTE: Do not use an impact wrench when installing.

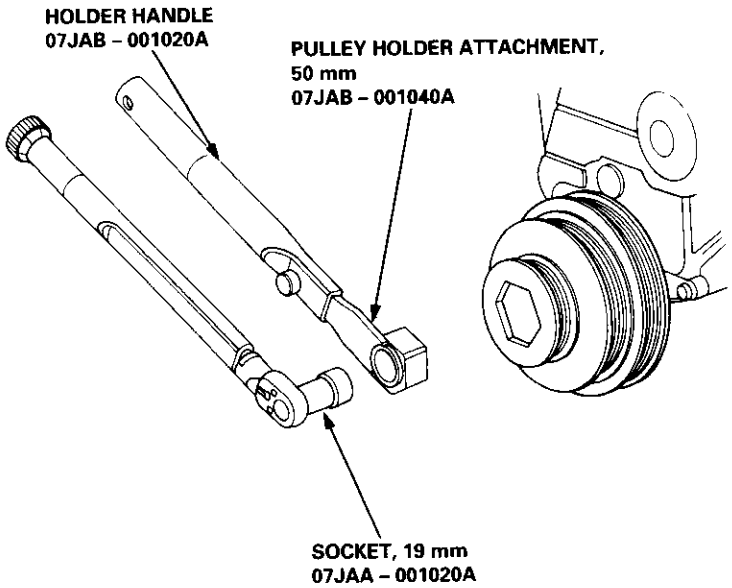

Illustrated Index

NOTE:
- Refer to page 6-59 for positioning crankshaft and pulley before installing belt.
- Mark the direction of rotation on the belt before removing.
- Do not use the middle cover and lower cover for storing removed items.
- Clean the middle cover and lower cover before installation.

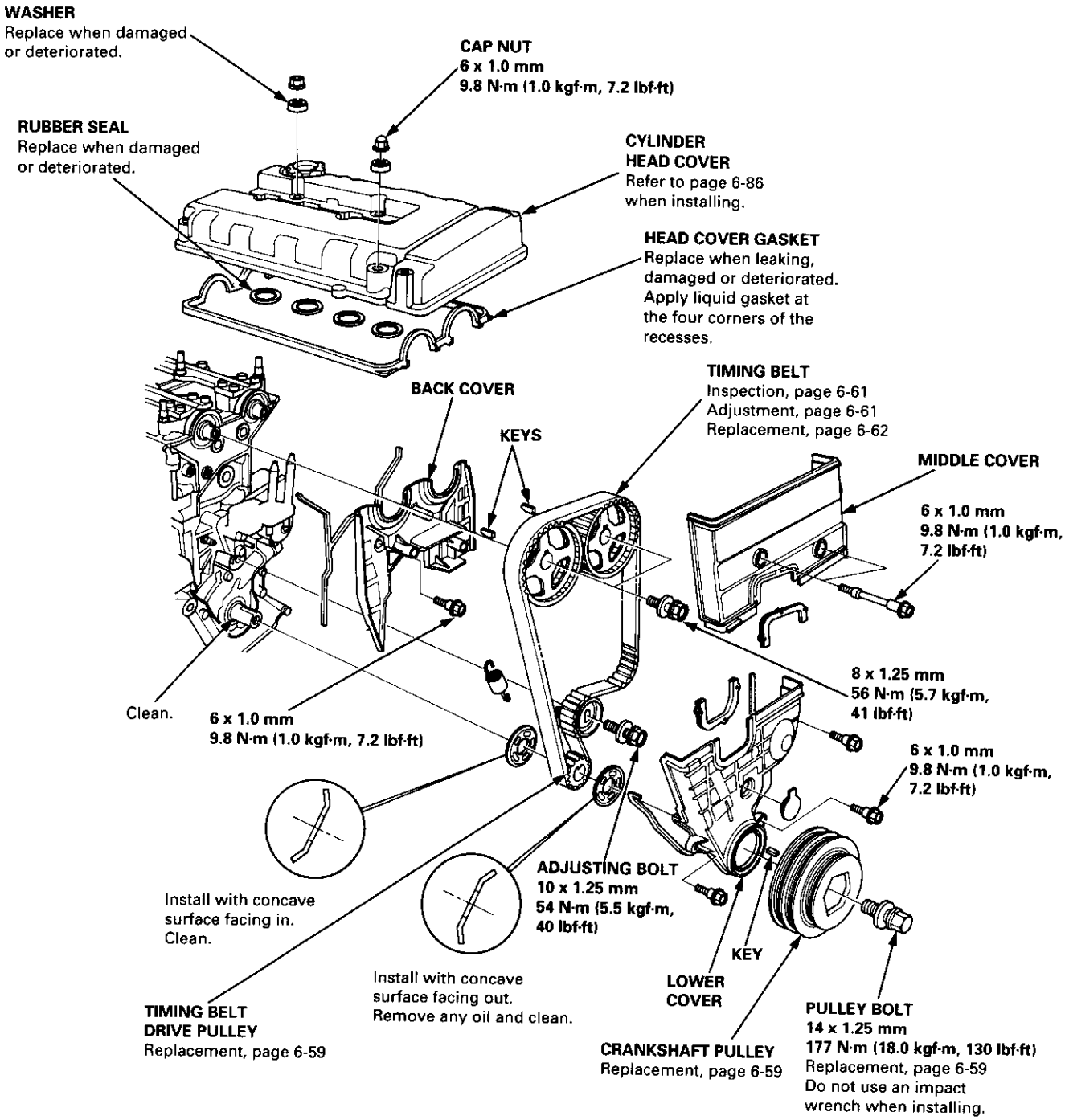

Inspection

1. Remove the cylinder head cover.

   NOTE: Refer to page 6-86 when installing the cylinder head cover.

2. Inspect the timing belt for cracks and oil or coolant soaking.

   NOTE:
   - Replace the belt if oil or coolant soaked.
   - Remove any oil or solvent that gets on the belt.

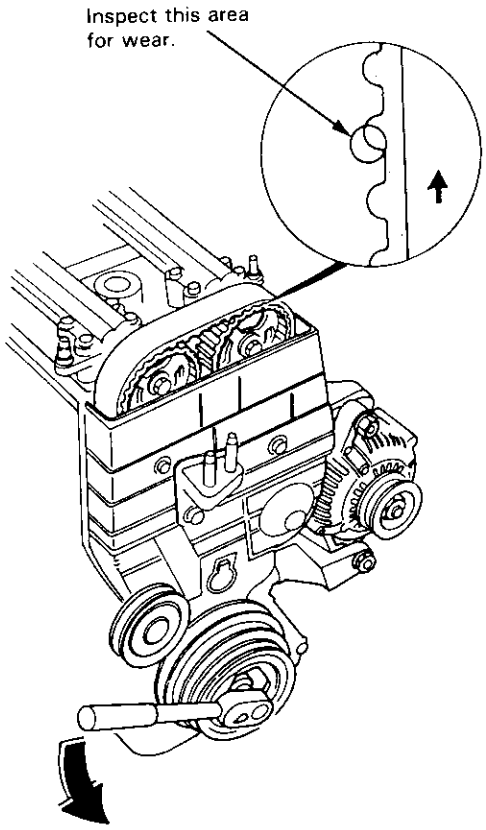

4. After inspecting, retorque the crankshaft pulley bolt to 177 N·m (18.0 kgf·m, 130 lbf·ft).

Tension Adjustment

CAUTION: Always adjust timing belt tension with the engine cold.

NOTE:
- The tensioner is spring-loaded to apply proper tension to the belt automatically after making the following adjustment.
- Always rotate the crankshaft counterclockwise when viewed from the pulley side. Rotating it clockwise may result in improper adjustment of the belt tension.

1. Remove the cylinder head cover.

   NOTE: Refer to page 6-86 when installing the cylinder head cover.

2. Set the No. 1 piston at TDC (see page 6-64).

3. Rotate the crankshaft five or six revolutions to set the belt.

4. Set the No. 1 piston at TDC.

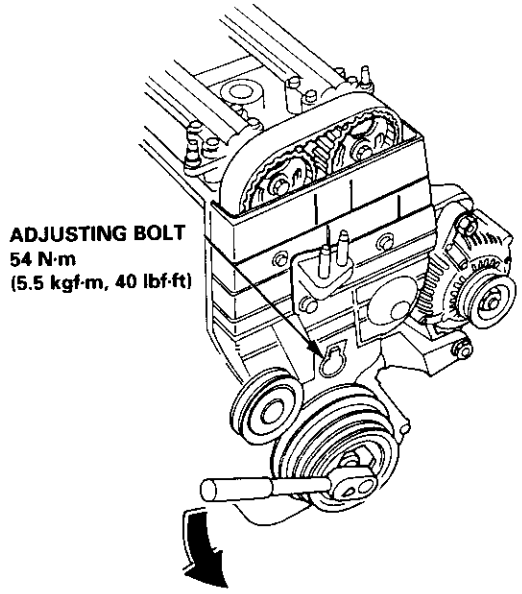

5. Loosen the adjusting bolt 180°.

6. Rotate the crankshaft counterclockwise three teeth on the camshaft pulley.

7. Tighten the adjusting bolt.

8. After adjusting, retorque the crankshaft pulley bolt to 177 N·m (18.0 kgf·m, 130 lbf·ft).

Removal

NOTE:
- Replace the timing belt at 105,000 miles (168,000 km) according to the maintenance schedule (normal conditions/severe conditions).
  If the vehicle is regularly driven in one or more of the following conditions, replace the timing belt at 60,000 miles (U.S.A.) 100,000 km (Canada).
  - In very high temperatures (over 110°F, 43°C).
  - In very low temperatures (under −20°F, −29°C).
- Turn the crankshaft pulley so the No. 1 piston is at top dead center (TDC) before removing the belt (see page 6-57).
- Inspect the water pump before installing the timing belt (see page 10-14).

1. Remove the splash shield (see page 5-9).

2. Remove the adjusting bolt and mounting bolts, then remove the power steering (P/S) pump belt and pump.

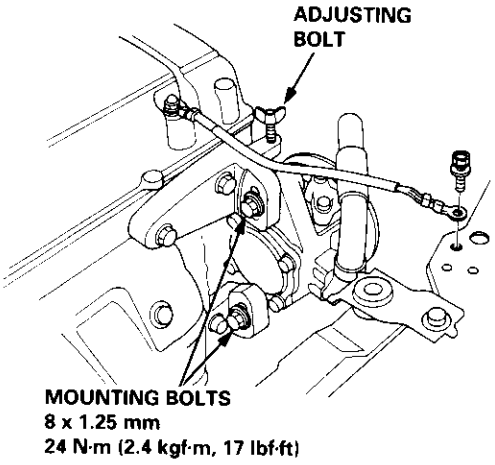

3. Loosen the idler pulley bracket bolt and adjusting bolt, then remove the air conditioning (A/C) compressor belt.

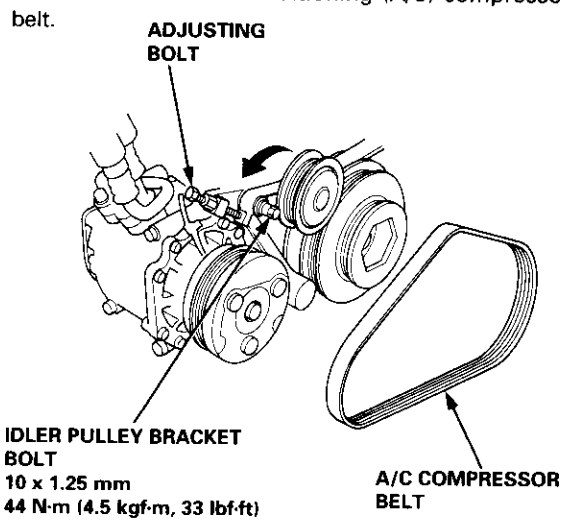

4. Loosen the mounting nut and lock bolt, then remove the alternator belt.

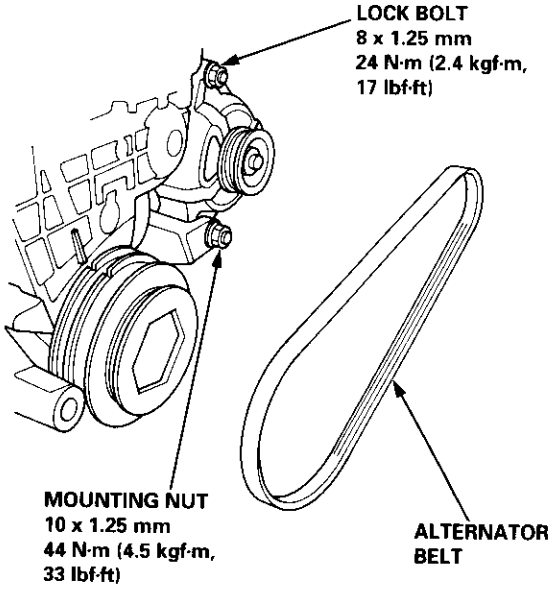

5. Remove the upper bracket (see page 6-69).

   NOTE:
   - Use a jack to support the engine before removing the upper bracket.
   - Place a cushion between the oil pan and the jack.

6. Remove the P/S pump lower bracket.

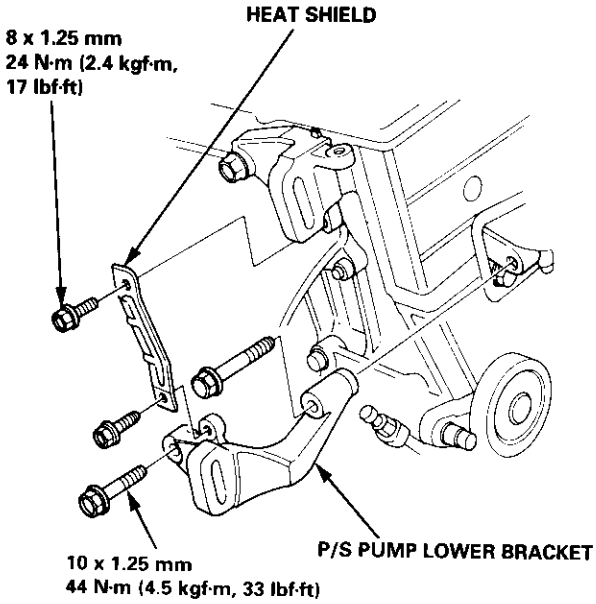

7. Remove the crankshaft pulley (see page 6-59).

8. Remove the cylinder head cover.

   NOTE: Refer to page 6-86 when installing the cylinder head cover.

9. Remove the middle cover and lower cover.

   NOTE: Do not use the middle and lower covers for storing removed items.

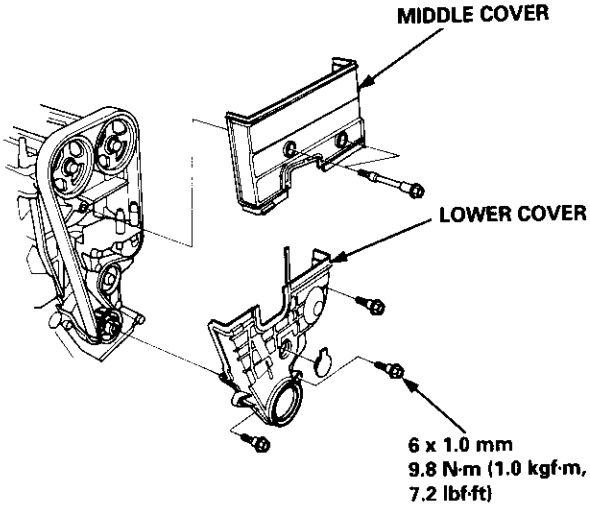

10. Loosen the adjusting bolt 180°. Push the tensioner to remove tension from the timing belt, then retighten the adjusting bolt.

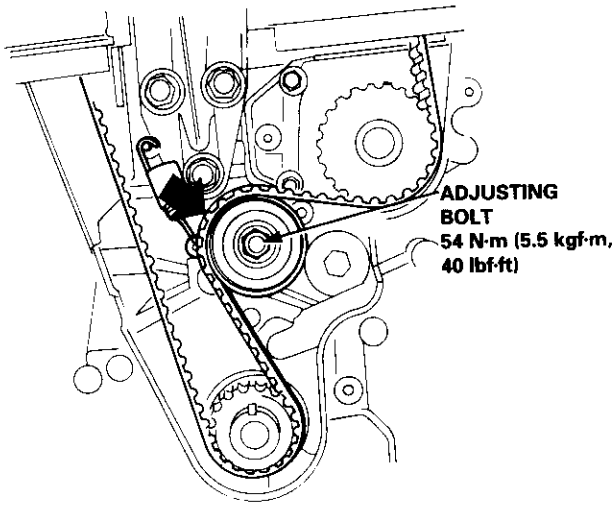

11. Remove the timing belt.

Installation

Install the timing belt in the reverse order of removal; Only key points are described here.

1. Set the timing belt drive pulley so that the No. 1 piston is at top dead center (TDC). Align the groove on the timing belt drive pulley to the ∇ pointer on the oil pump.

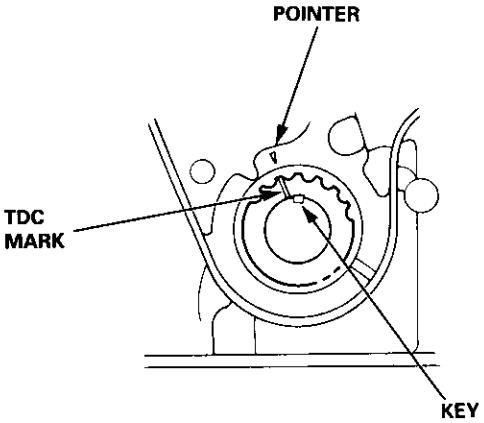

2. Set the camshaft pulleys so that the No. 1 piston is at TDC.
   Align the TDC marks on the intake and exhaust camshaft pulleys.

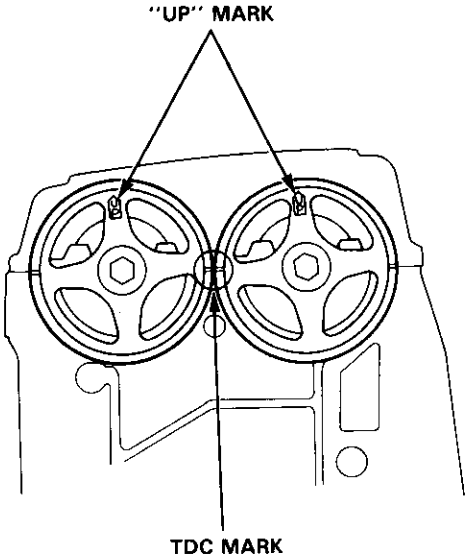

(cont'd)

Installation (cont'd)

3. Install the timing belt tightly in the sequence shown. ① Timing belt drive pulley (crankshaft) → ② Adjusting pulley → ③ Water pump pulley → ④ Intake camshaft pulley → ⑤ Exhaust camshaft pulley.

   NOTE: Make sure the timing belt drive pulley and camshaft pulleys are at TDC.

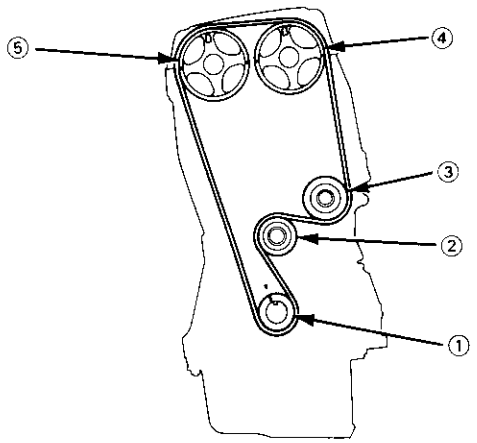

4. Loosen and retighten the adjusting bolt to tension the timing belt.

5. Install the lower cover and middle cover.

   NOTE: Clean the middle and lower covers before installing.

6. Install the crankshaft pulley, then tighten the pulley bolt (see page 6-59).

7. Rotate the crankshaft pulley about five or six turns counterclockwise so that the timing belt positions on the pulleys.

8. Adjust the timing belt tension (see page 6-61).

9. Check that the crankshaft pulley and camshaft pulleys are both at TDC.

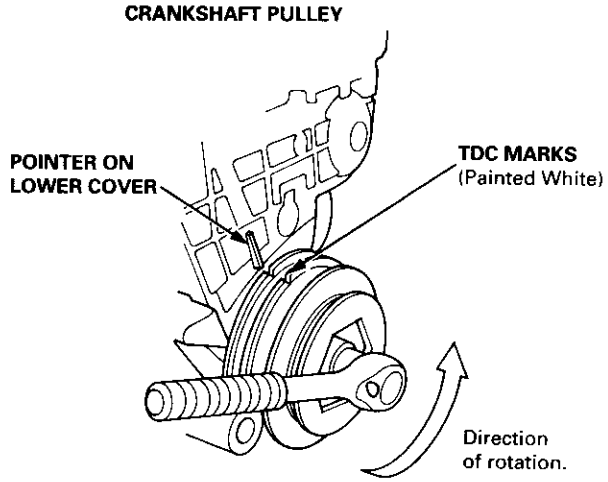

CAMSHAFT PULLEY:

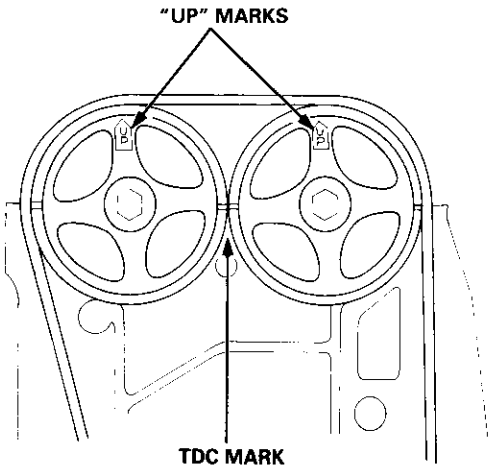

10. If the camshaft and crankshaft pulleys are not positioned at TDC, remove the timing belt, adjust the position following the procedure on page 6-63, then reinstall the timing belt.

11. After installation, adjust the tension of each belt.

    - See section 23 for alternator belt tension adjustment.
    - See section 22 for A/C compressor belt tension adjustment.
    - See section 17 for P/S pump belt tension adjustment.

Illustrated Index

CAUTION:
- **To avoid damaging the cylinder head, wait until the engine coolant temperature drops below 100°F (38°C) before removing it.**
- **When handling a metal gasket, take care not to fold the gasket or damage the contact surface of the gasket.**

NOTE: Use new O-rings and gaskets when reassembling.

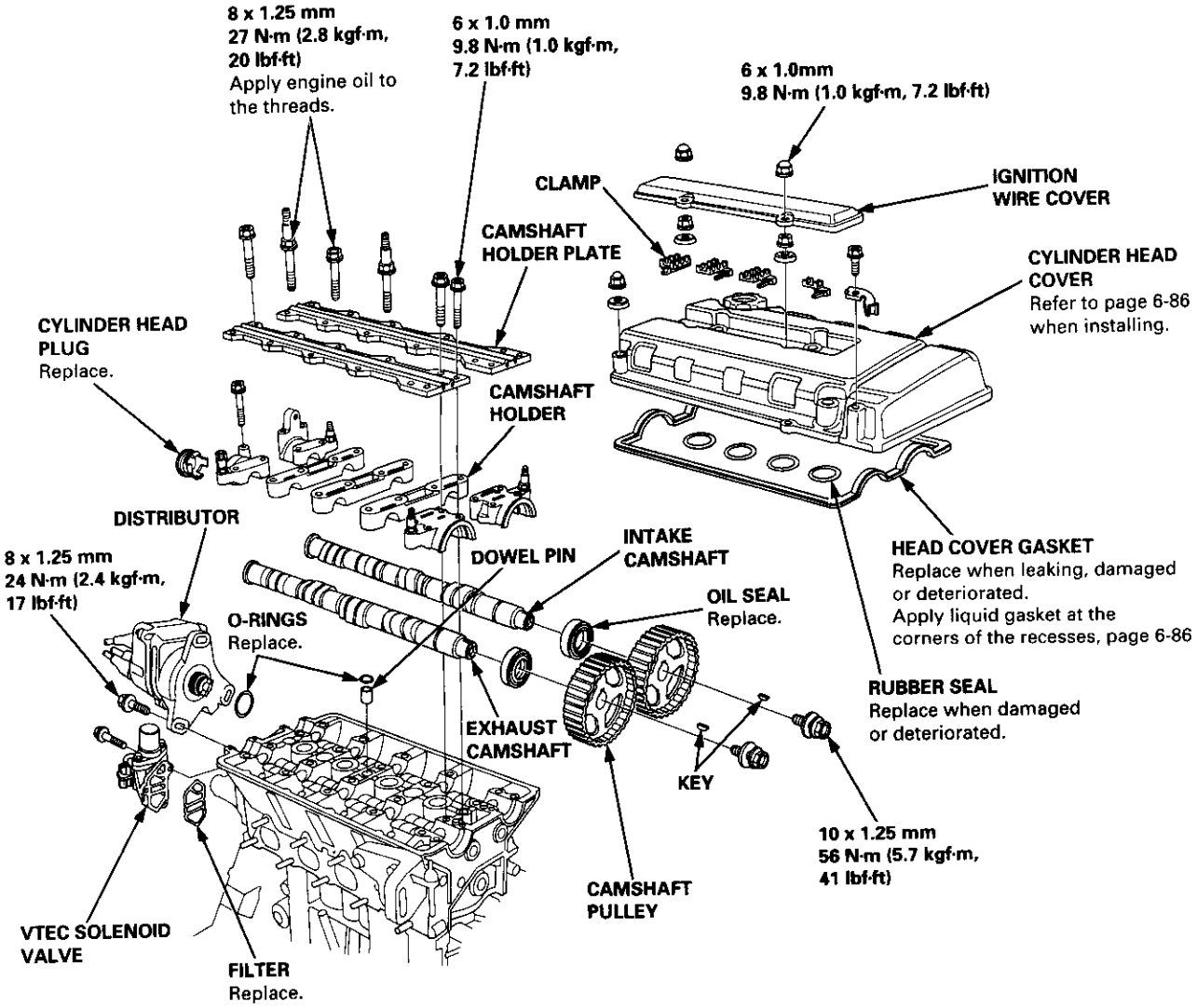

(cont'd)

Illustrated Index (cont'd)

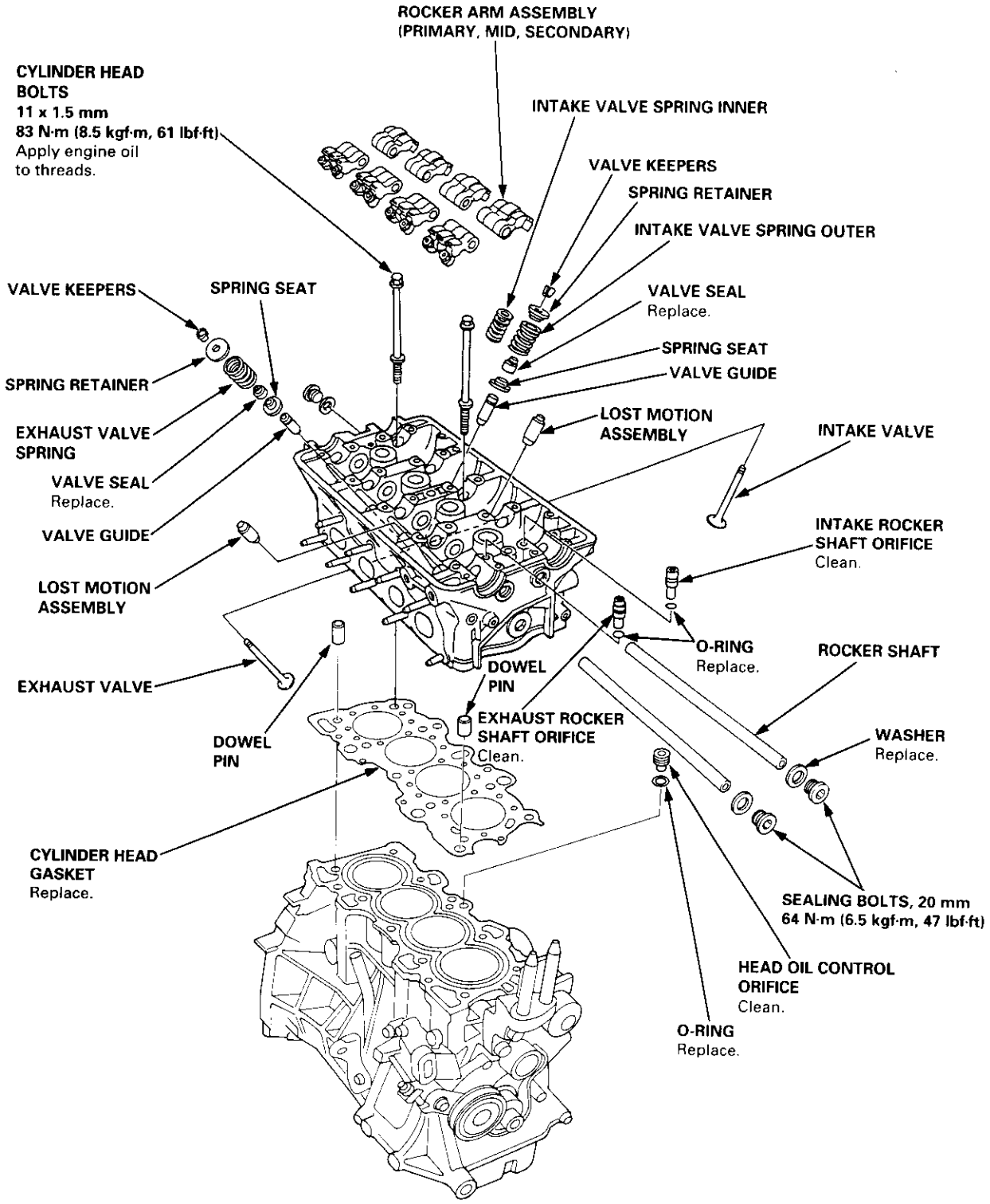

Removal

Engine removal is not required for this procedure.

⚠WARNING Make sure jacks and safety stands are placed properly and hoist brackets are attached to correct position on the engine.

CAUTION:
- **Use fender covers to avoid damaging painted surfaces.**
- **To avoid damage, unplug the wiring connectors carefully while holding the connector portion.**
- **To avoid damaging the cylinder head, wait until the engine coolant temperature drops below 100°F (38°C) before loosening the retaining bolt.**

NOTE:
- Unspecified items are common.
- Mark all wiring and hoses to avoid misconnection. Also, be sure that they do not contact other wiring or hoses or interfere with other parts.
- Inspect the timing belt before removing the cylinder head.
- Turn the crankshaft pulley so that the No. 1 piston is at top dead center (see page 6-64).

1. Disconnect the negative terminal from the battery.

2. Drain the engine coolant (see page 10-7).

   - Remove the radiator cap to speed draining.

3. Remove the strut brace (see page 5-2).

4. Remove the intake air duct and air cleaner housing (see page 5-3).

5. Remove the adjusting bolt and mounting bolt, then remove the power steering (P/S) pump belt and pump (see page 5-5).

6. Loosen the idler pulley bracket bolt and adjusting bolt, then remove the air conditioning (A/C) compressor belt.

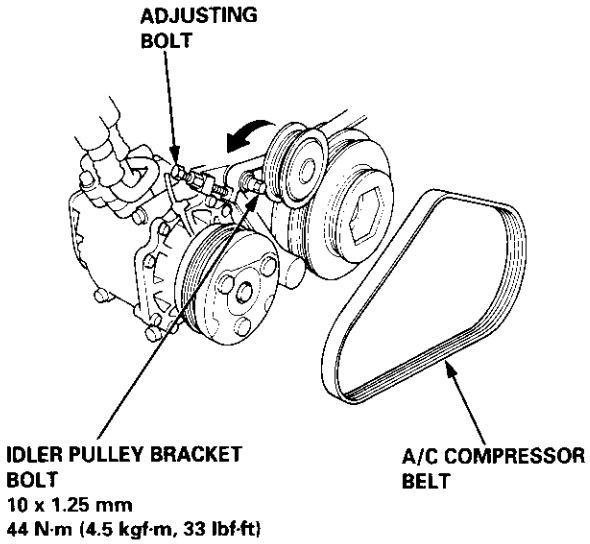

7. Loosen the mounting nut and lock bolt, then remove the alternator belt.

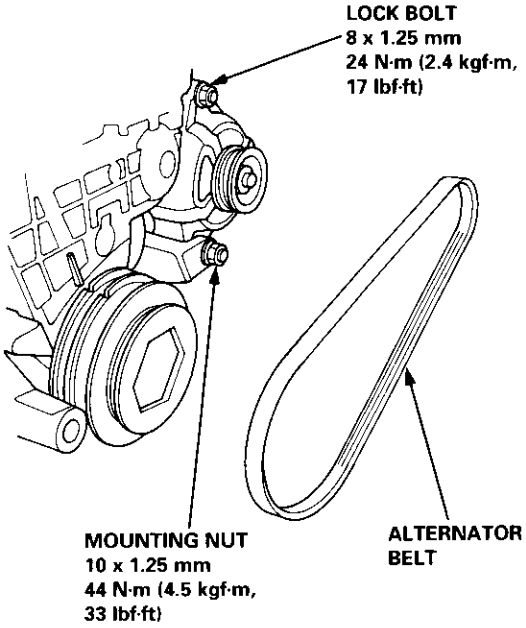

(cont'd)

Removal (cont'd)

8. Remove the P/S pump lower bracket.

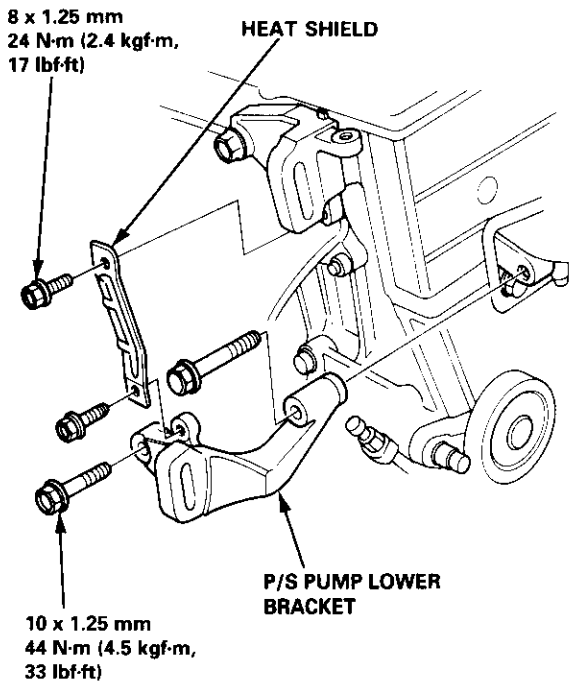

9. Relieve fuel pressure (see section 11).

⚠ WARNING Do not smoke while working on fuel system, keep open flame or spark away from work area. Drain fuel only into an approved container.

10. Remove the evaporative emission (EVAP) control canister hose, fuel feed hose and breather hose.

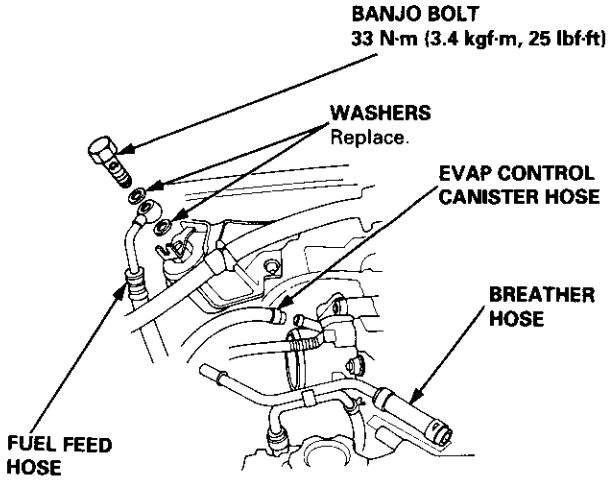

11. Remove the brake booster vacuum hose, fuel return hose and vacuum hose (see page 5-4).

12. Remove the water bypass hose and positive crankcase ventilation (PCV) hose.

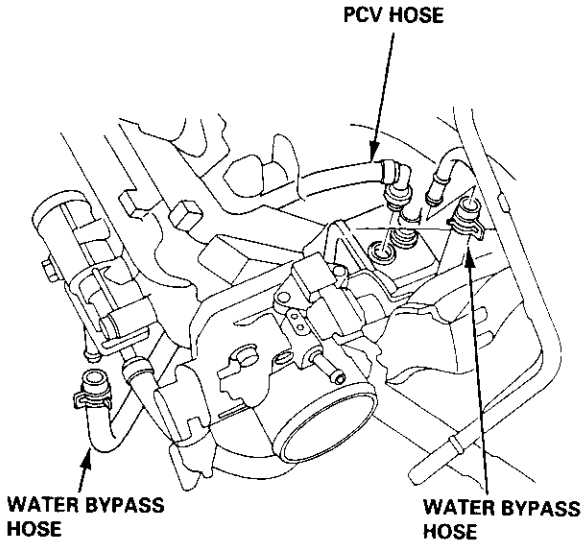

13. Remove the throttle cable and throttle control cable by loosening the locknut, then slip the cable end out of the throttle linkage.

NOTE:
- Take care not to bend the cables when removing them. Always replace any kinked cable with a new one.
- Adjust the throttle cable when installing (see section 11).
- Adjust the throttle control cable when installing (see section 14).

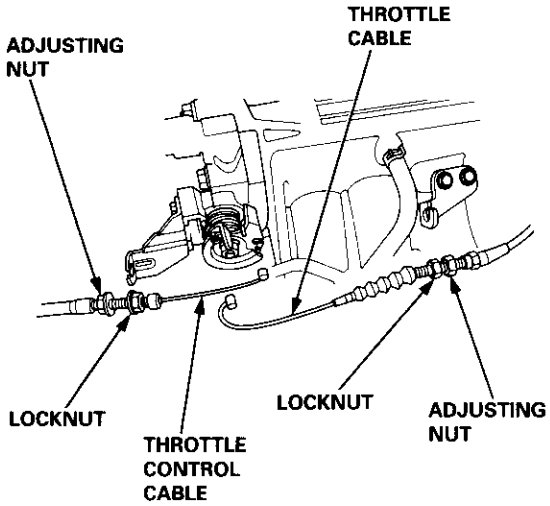

14. Remove the upper radiator hose, heater hose and water bypass hose.

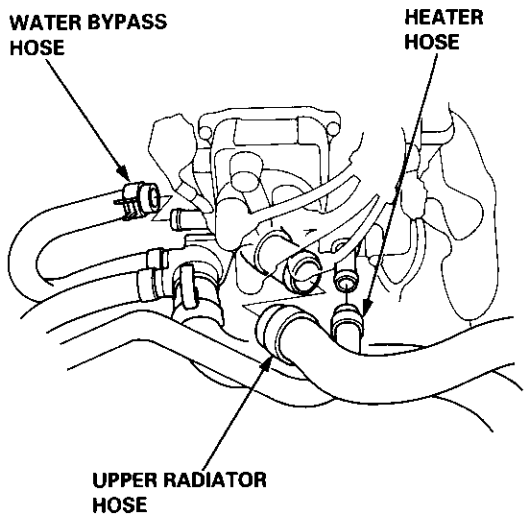

15. Remove the engine wire harness connectors and wire harness clamps from the cylinder head and the intake manifold.

- Four fuel injector connector
- Engine coolant temperature (ECT) sensor connector
- ECT gauge sending unit connector
- ECT switch connector
- Idle air control (IAC) valve connector
- Manifold absolute pressure (MAP) sensor connector
- Throttle position sensor connector
- Primary Heated oxygen sensor (Primary HO2S) connector
- VTEC solenoid valve connector

16. Remove the spark plug caps and distributor form the cylinder head.

17. Remove the upper bracket.

NOTE:
- Use a jack to support the engine before removing the upper bracket is removed.
- Place a cushion between the oil pan and the jack.

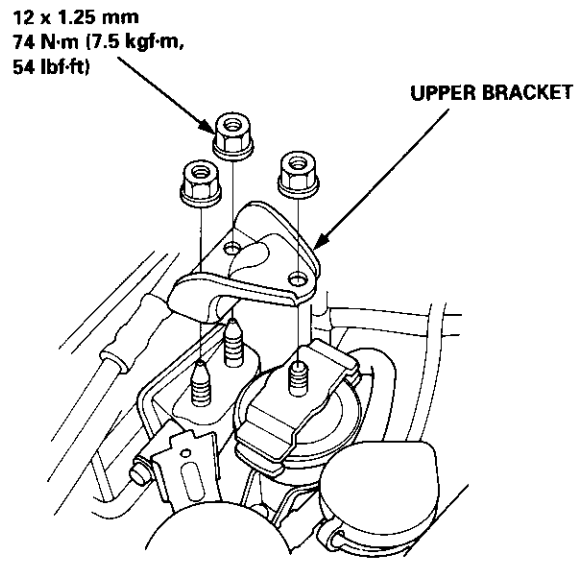

18. Remove the cylinder head cover.

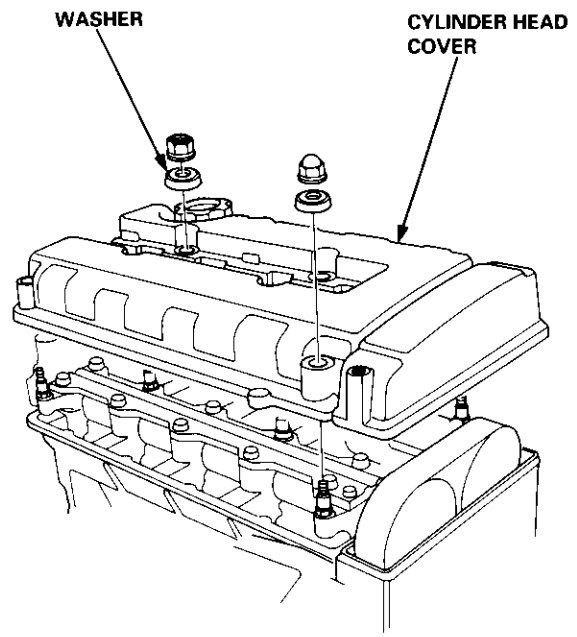

(cont'd)

Removal (cont'd)

19. Remove the timing belt (see page 6-62).

20. Remove the back cover and camshaft pulleys.

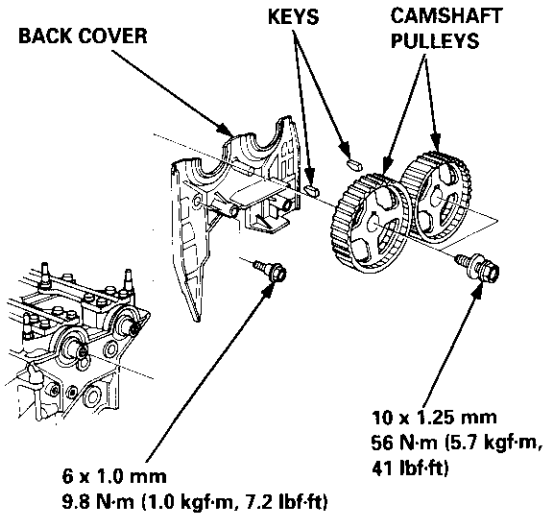

21. Remove the exhaust manifold (see page 9-8).

22. Remove the intake manifold (see page 9-5).

23. Loosen the adjusting screws.

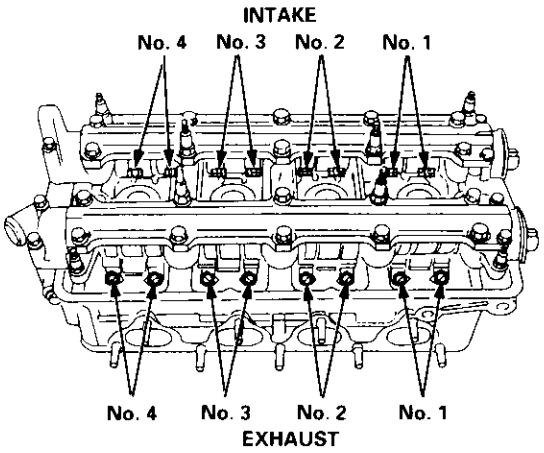

24. Remove the camshaft holder plates, camshaft holders and camshafts.

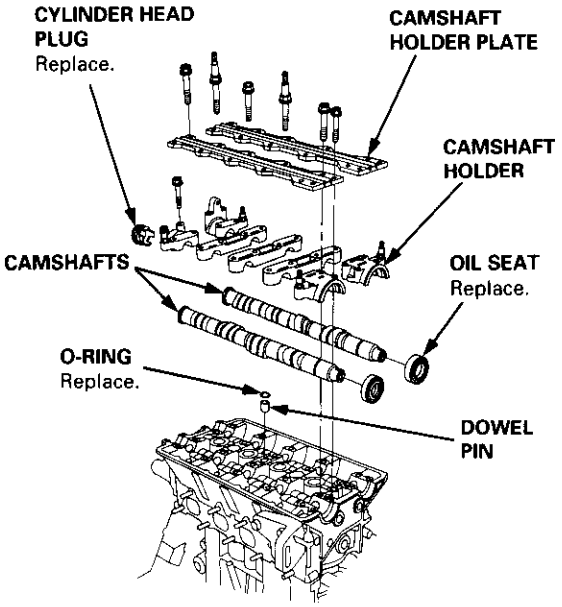

25. Remove the cylinder head bolts, then remove the cylinder head.

CAUTION: To prevent warpage, unscrew the bolts in sequence 1/3 turn at a time; repeat the sequence until all bolts are loosened.

CYLINDER HEAD BOLTS LOOSENING SEQUENCE:

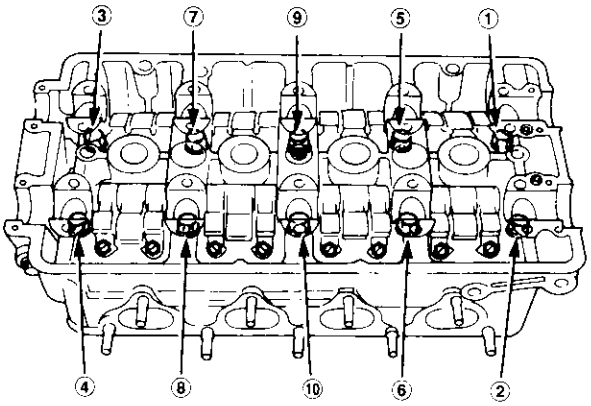

Removal

1. Hold the rocker arms together with a rubber band to prevent them from separating.

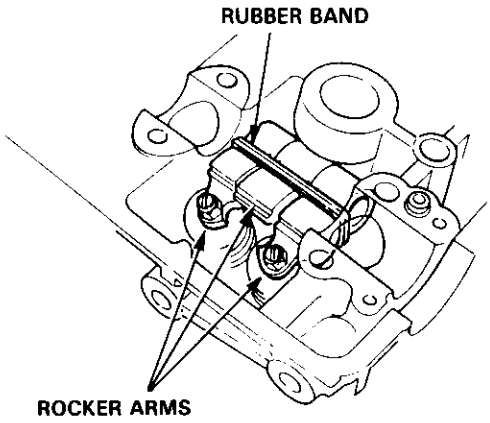

2. Remove the intake and exhaust rocker shaft oil control orifices, then remove the VTEC solenoid valve and the sealing bolts.

   NOTE: The shapes of the intake and exhaust oil control orifices are different. Identify the parts as they are removed to ensure reinstallation in the original locations.

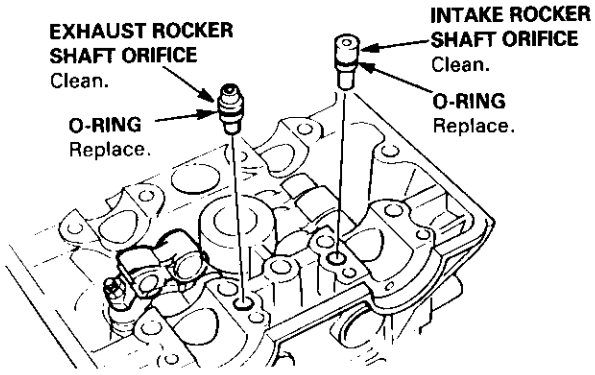

3. Screw 12 mm bolts into the rocker arm shafts. Remove each rocker arm set while slowly pulling out the intake and exhaust rocker arm shafts.

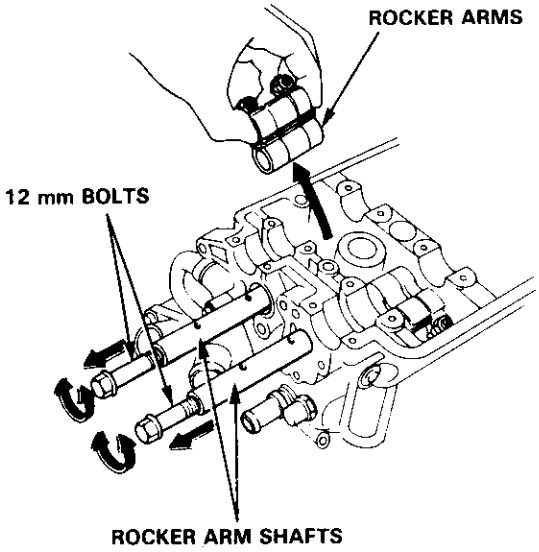

Disassembly/Reassembly

CAUTION: After installing the rocker shaft orifice, make sure that the orifice is correctly installed in the hole of rocker shaft by trying to turn the rocker shaft. If the orifice is in place, it should not turn.

NOTE:
- Identify parts as they are removed to ensure reinstallation in original locations.
- Inspect rocker shafts and rocker arms (see page 6-73).
- Rocker arms must be installed in the same position if reused.
- Clean the rocker shaft orifices when installing.

OIL Prior to reinstalling, clean all the parts in solvent, dry them, and apply lubricant to any contact surfaces.

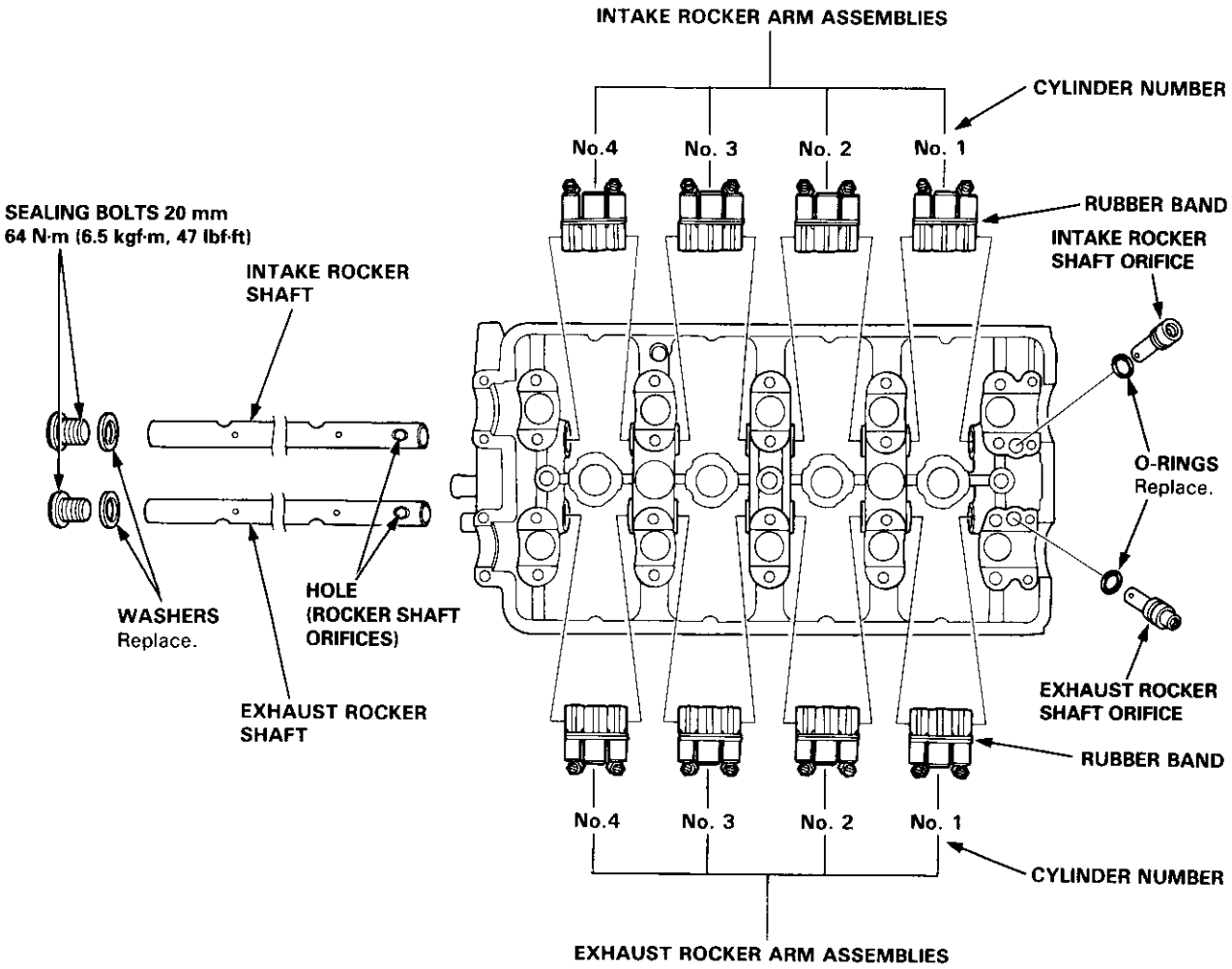

Inspection

NOTE: When reassembling the primary rocker arm, carefully apply air pressure to the oil passage of the rocker arm.

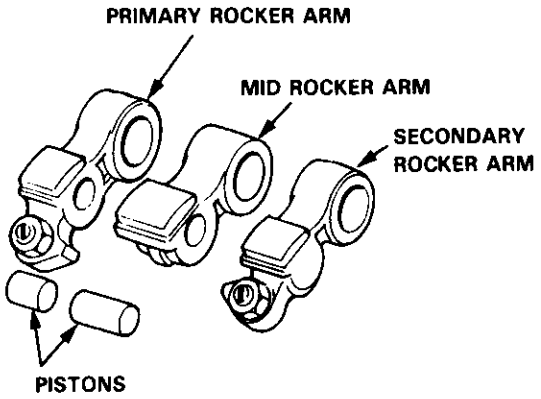

1. Inspect each rocker arm piston. Push it manually.

   — If it does not move smoothly, replace the rocker arm assembly.

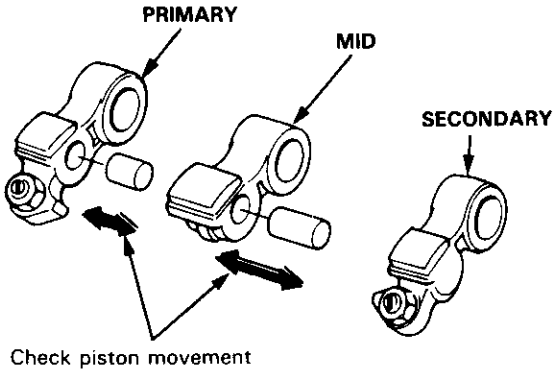

NOTE:
- Apply oil to the pistons when reassembling.
- Bundle the rocker arms with a rubber band to keep them together as a set.

2. Remove the lost motion assembly from the cylinder head and inspect it. Test it by pushing the plunger with your finger.

   — If the lost motion assembly does not move smoothly, replace it.

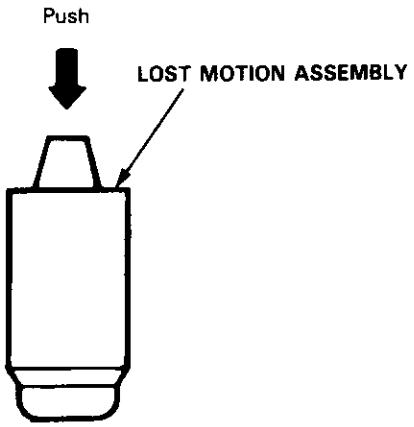

Clearance Inspection

Measure both the intake rocker shaft and exhaust rocker shaft.

1. Measure diameter of shaft at the first rocker location.

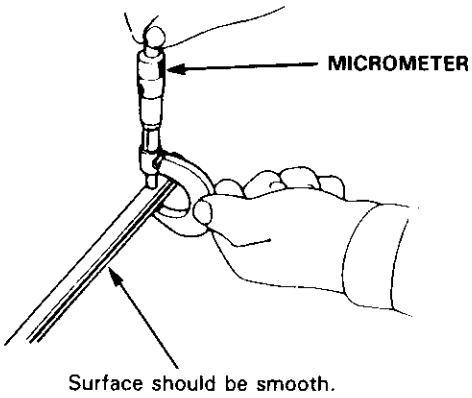

2. Zero gauge to shaft diameter.

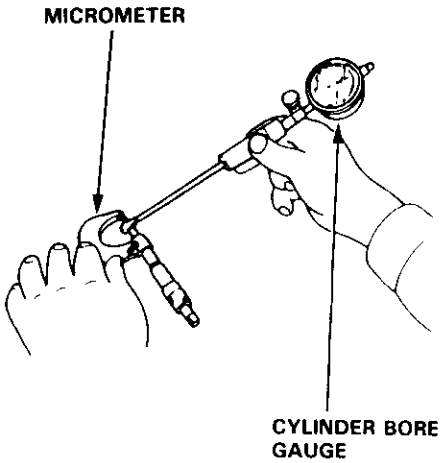

3. Measure the inside diameter of each rocker arm and check for out-of-round condition.

Rocker Arm-to-Shaft Clearance:
Intake and Exhaust
Standard (New): 0.025 – 0.052 mm (0.0010 – 0.0020 in)
Service Limit: 0.08 mm (0.003 in)

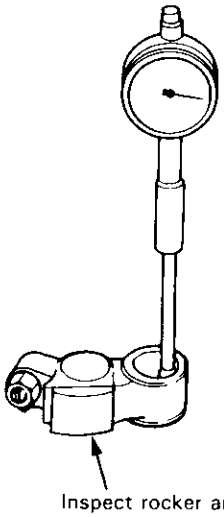

Repeat for all rockers.
— If over limit, replace rocker shaft and all overtolerance rocker arms.

NOTE: If any rocker arm needs replacement, replace all three rocker arms in that set (primary, mid, and secondary).

Inspection

NOTE:
- Do not rotate the camshaft during inspection.
- Remove the rocker arms and rocker shafts.

1. Put the camshafts and camshaft holders on the cylinder head, and then tighten the bolts to the specified torque.

   Specified Torque:
   ❶ – ❿: 8 mm bolts 27 N·m (2.8 kgf·m, 20 lbf·ft)
   Apply engine oil to the threads.
   ⓫ – ⓮: 6 mm bolts 9.8 N·m (1.0 kgf·m, 7.2 lbf·ft)

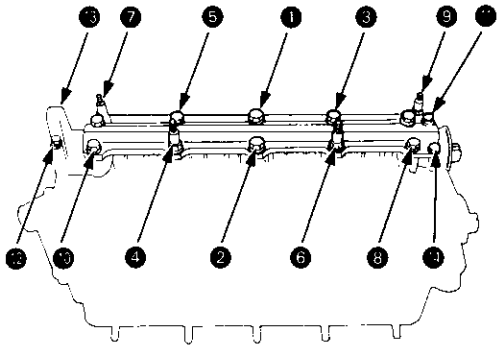

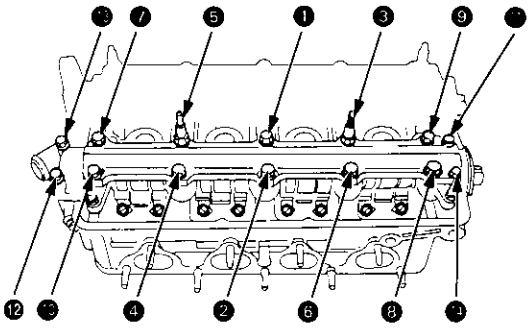

2. Seat the camshaft by pushing it toward the distributor end of the cylinder head.

3. Zero the dial indicator against the end of the distributor drive, then push the camshaft back and forth and read the end play.

   Camshaft End Play:
   Standard (New): 0.05 – 0.15 mm (0.002 – 0.006 in)
   Service limit: 0.5 mm (0.02 in)

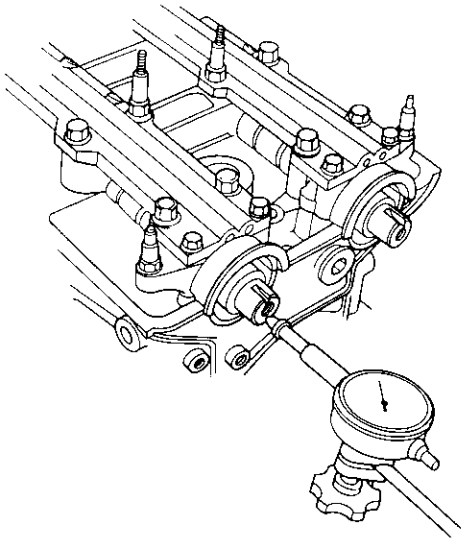

4. Remove the bolts, then remove the camshaft holders from the cylinder head.

   — Lift the camshaft out of the cylinder head, wipe clean, then inspect the lift ramps. Replace the camshaft if lobes are pitted, scored, or excessively worn.
   — Clean the camshaft bearing surfaces in the cylinder head, then set the camshaft back in place.
   — Insert a plastigage strip across each journal.

5. Put the camshaft on the cylinder head, then install the camshaft holders, and then tighten the bolts to the specified torque as shown in the left column on this page.

6. Remove the camshaft holders, then measure the widest portion of the plastigage on each journal.

   Camshaft-to-Holder Oil Clearance:
   Standard (New): 0.050 – 0.089 mm (0.002 – 0.004 in)
   Service Limit: 0.15 mm (0.006 in)

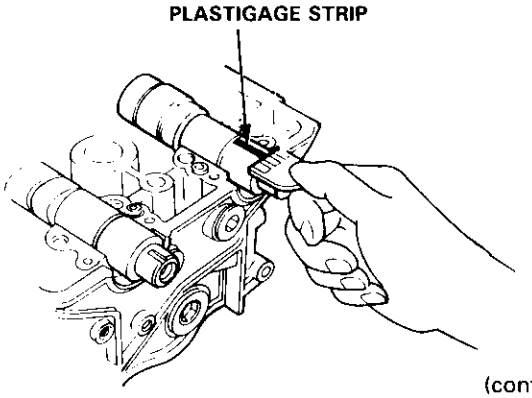

(cont'd)

Inspection (cont'd)

7. If the camshaft-to-holder oil clearance is out of tolerance:

   — And the camshaft has already been replaced, you must replace the cylinder head.
   — If the camshaft has not been replaced, first check the total runout with the camshaft supported on V-blocks.

   Camshaft Total Runout:
   Standard (New): 0.03 mm (0.001 in) max.
   Service Limit: 0.04 mm (0.002 in)

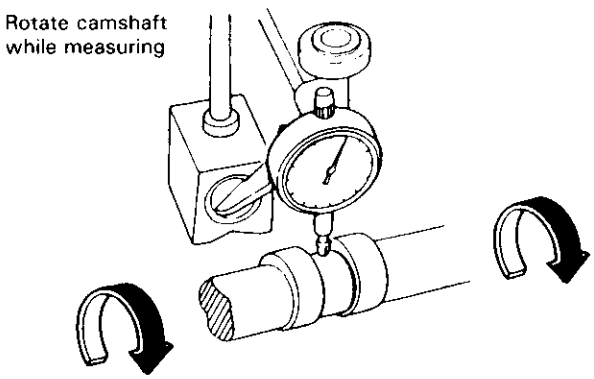

   — If the total runout of the camshaft is within tolerance, replace the cylinder head.
   — If the total runout is out of tolerance, replace the camshaft and recheck the camshaft-to-holder oil clearance. If the oil clearance is still out of tolerance, replace the cylinder head.

8. Check the cam lobe height.

Cam lobe height standard (New):

	INTAKE	EXHAUST
PRIMARY	33.088 mm (1.3027 in)	32.785 mm (1.2907 in)
MID	36.267 mm (1.4278 in)	35.720 mm (1.4063 in)
SECONDARY	34.978 mm (1.3771 in)	34.691 mm (1.3658 in)

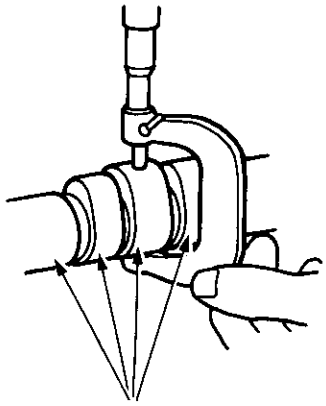

Cam Position

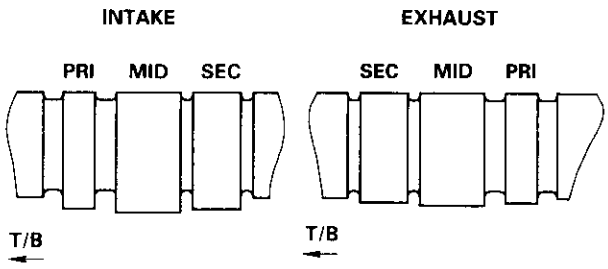

T/B: TIMING BELT
PRI: PRIMARY
MID: MID
SEC: SECONDARY

Removal

NOTE: Identify valves and valve springs as they are removed so that each item can be reinstalled in its original position.

1. Using an appropriate-sized socket and plastic mallet, lightly tap the valve retainer to loosen the valve keepers.

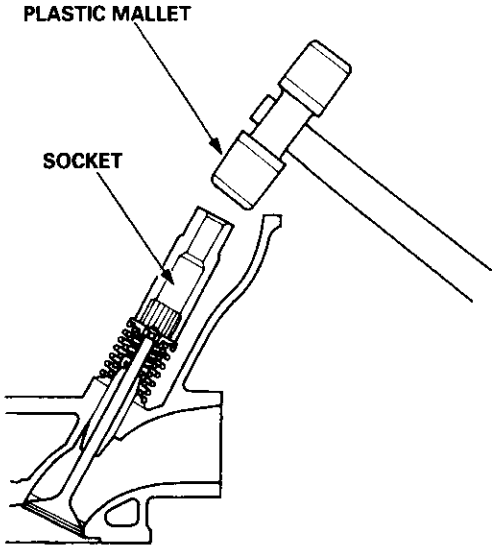

2. Install the valve spring compressor. Compress the spring and remove the valve keepers.

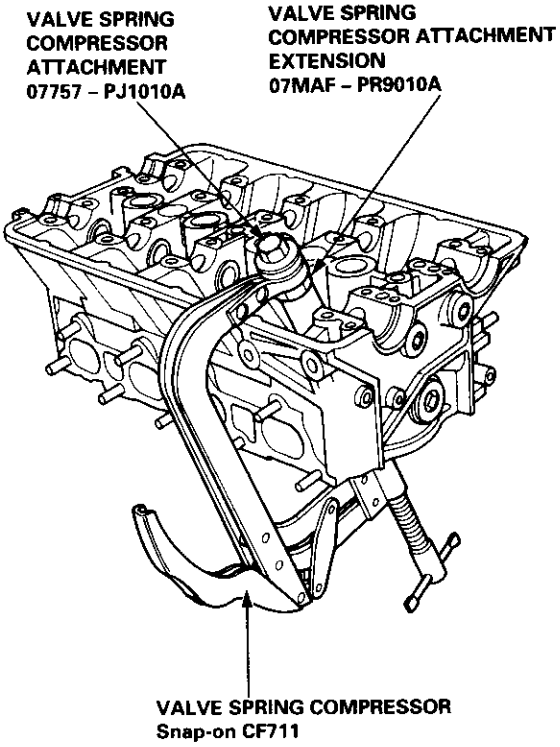

3. Install the valve guide seal remover.

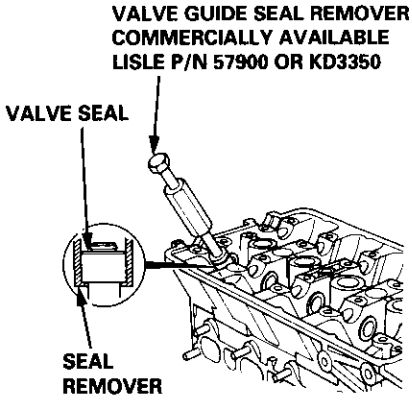

4. Remove the valve guide seal.

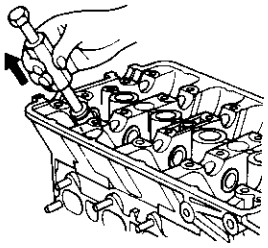

Valve Dimensions

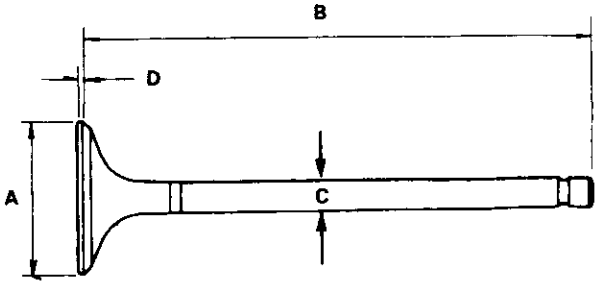

Intake Valve
A Standard (New): 32.90 – 33.10 mm (1.295 – 1.303 in)
B Standard (New): 101.00 – 101.30 mm (3.976 – 3.988 in)
C Standard (New): 5.475 – 5.485 mm (0.2156 – 0.2159 in)
C Service Limit: 5.445 (0.2144 in)
D Standard (New): 1.05 – 1.35 mm (0.041 – 0.053 in)
D Service Limit: 0.85 mm (0.033 in)

Exhaust Valve
A Standard (New): 27.90 – 28.10 mm (1.098 – 1.106 in)
B Standard (New): 100.60 – 100.90 mm (3.961 – 3.972 in)
C Standard (New): 5.450 – 5.460 mm (0.2146 – 0.2150 in)
C Service Limit: 5.420 (0.2134 in)
D Standard (New): 1.65 – 1.95 mm (0.065 – 0.077 in)
D Service Limit: 1.45 mm (0.057 in)

Reconditioning

1. Renew the valve seats in the cylinder head with a valve seat cutter.

   NOTE: If any guides are worn (see page 6-79), replace them (see page 6-80) before cutting the valve seats.

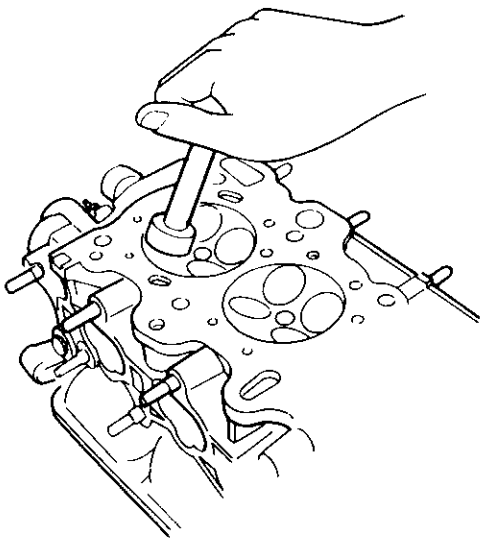

2. Carefully cut a 45° seat, removing only enough material to ensure a smooth and concentric seat.

3. Bevel the upper edge of the seat with the 30° cutter and the lower edge of the seat with the 60° cutter. Check width of seat and adjust accordingly.

4. Make one more very light pass with the 45° cutter to remove any possible burrs caused by the other cutters.

   Valve Seat Width:
   Standard (New): 1.25 – 1.55 mm (0.049 – 0.061 in)
   Service Limit: 2.0 mm (0.08 in)

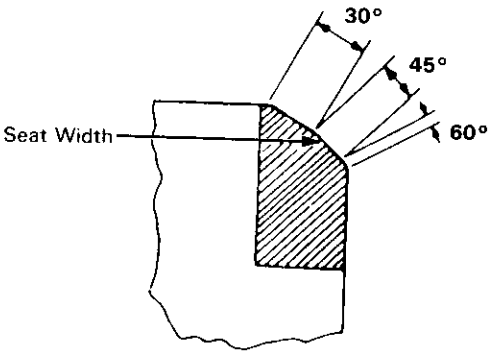

5. After resufacing the seat, inspect for even valve seating: Apply Prussian Blue Compound to the valve face, and insert the valve in its original location in the head, then lift it and snap it closed against the seat several times.

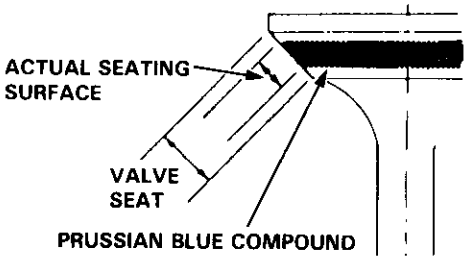

6. The actual valve seating surface, as shown by the blue compound, should be centered on the seat.
   - If it is too high (closer to the valve stem), you must make a second cut with the 60° cutter to move it down, then one more cut with the 45° cutter to restore seat width.
   - If it is too low (closer to the valve edge), you must make a second cut with the 30° cutter to move it up, then one more cut with the 45° cutter to restore seat width.

   NOTE: The final cut should always be made with the 45° cutter.

7. Insert the intake and exhaust valves in the head and measure valve stem installed height.

   Intake Valve Stem Installed Height:
   Standard (New): 37.465 – 37.935 mm (1.4750 – 1.4935 in)
   Service Limit: 38.185 mm (1.5033 in)

   Exhaust Valve Stem Installed Height:
   Standard (New): 37.165 – 37.635 mm (1.4632 – 1.4817 in)
   Service Limit: 37.885 (1.4915 in)

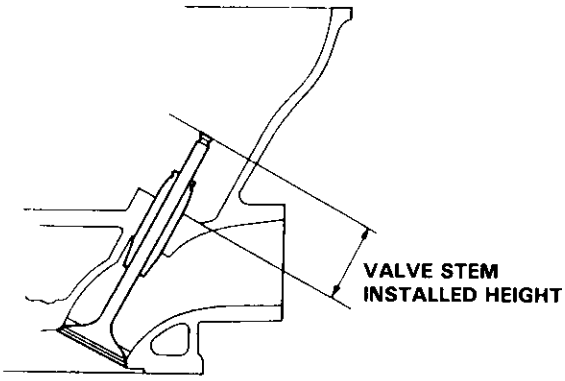

8. If valve stem installed height is over the service limit, replace the valve and recheck. If it is still over the service limit, replace the cylinder head; the valve seat in the head is too deep.

Warpage

NOTE: If camshaft-to-holder oil clearances (see page 6-75) are not within specification, the head cannot be resurfaced.

If camshaft-to-holder oil clearances are within specifications, check the head for warpage.

- If warpage is less than 0.05 mm (0.002 in) cylinder head resurfacing is not required.
- If warpage is between 0.05 mm (0.002 in) and 0.2 mm (0.008 in), resurface cylinder head.
- Maximum resurface limit is 0.2 mm (0.008 in) based on a height of 142 mm (5.59 in).

PRECISION STRAIGHT EDGE

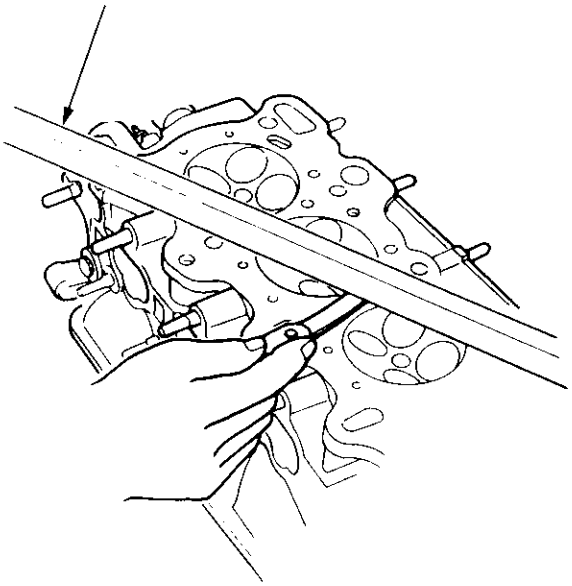

Measure along edges, and three ways across center.

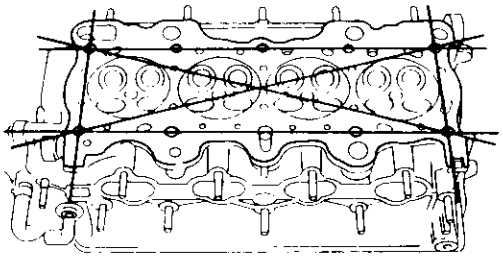

Cylinder Head Height:
Standard (New): 141.95 – 142.05 mm (5.589 – 5.593 in)

Valve Movement

Measure the guide-to-stem clearance with a dial indicator while rocking the stem in the direction of normal thrust (wobble method).

Intake Valve Stem-to-Guide Clearance:
Standard (New): 0.05 – 0.11 mm (0.0020 – 0.0043 in)
Service Limit: 0.15 mm (0.0059 in)

Exhaust Valve Stem-to-Guide Clearance:
Standard (New): 0.10 – 0.16 mm (0.0039 – 0.0063 in)
Service Limit: 0.24 (0.0094 in)

Valve extended 10 mm out from seat.

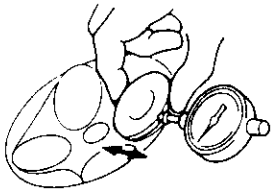

- If the measurement exceeds the service limit, recheck using a new valve.
- If the measurement is now within the service limit, reassemble using the new valve.
- If the measurement still exceeds the limit, recheck using the alternate method below, then replace the valve and guide, if necessary.

NOTE: An alternate method of checking guide to stem clearance is to subtract the O.D. of the valve stem, measured with a micrometer, from the I.D. of the valve guide, measured with an inside micrometer or ball gauge.
Take the measurements in three places along the valve stem and three places inside the valve guide.
The difference between the largest guide measurement and the smallest stem measurement should not exceed the service limit.

Intake Valve Stem-to-Guide Clearance:
Standard (New): 0.025 – 0.055 mm (0.0010 – 0.0022 in)
Service Limit: 0.08 mm (0.003 in)
Exhaust Valve Stem-to Guide Clearance:
Standard (New): 0.050 – 0.080 mm (0.0020 – 0.0031 in)
Service Limit: 0.11 mm (0.004 in)

Replacement

1. As illustrated below, use a commercially available air-impact valve guide driver attachment modified to fit the diameter of the valve guides. In most cases, the same procedure can be done using the special tool and a conventional hammer.

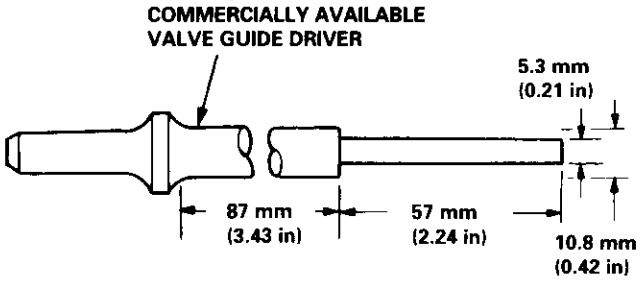

or
VALVE GUIDE DRIVER,
5.5 mm
07742 - 0010100

2. Select the proper replacement guides and chill them in the freezer section of a refrigerator for about an hour.

3. Use a hot plate or oven to evenly heat the cylinder head to 300°F (150°C). Monitor the temperature with a cooking thermometer.

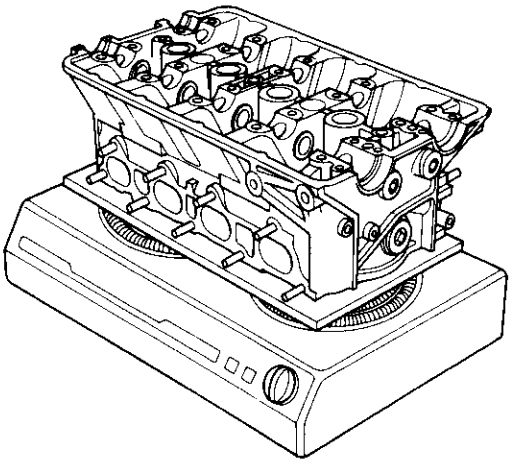

CAUTION:
- **Do not use a torch; it may warp the head.**
- **Do not get the head hotter than 300°F (150°C); excessive heat may loosen the valve seats.**
- **To avoid burns, use heavy gloves when handling the heated cylinder head.**

4. Working from the camshaft side, use the driver and an air hammer to drive the guide about 2 mm (0.1 in) towards the combustion chamber. This will knock off some of the carbon and make removal easier.

CAUTION:
- **Always wear safety goggles or a face shield when driving valve guides.**
- **Hold the air hammer directly in line with the valve guide to prevent damaging the driver.**

5. Turn the head over and drive the guide out toward the camshaft side of the head.

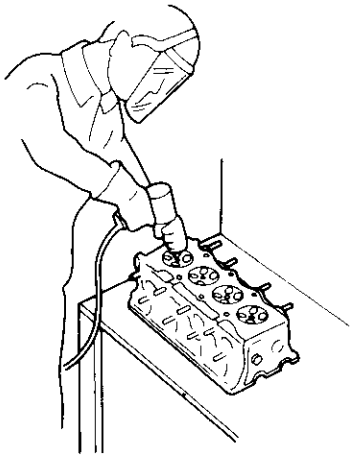

VALVE GUIDE DRIVER,
5.5 mm
07742 - 0010100

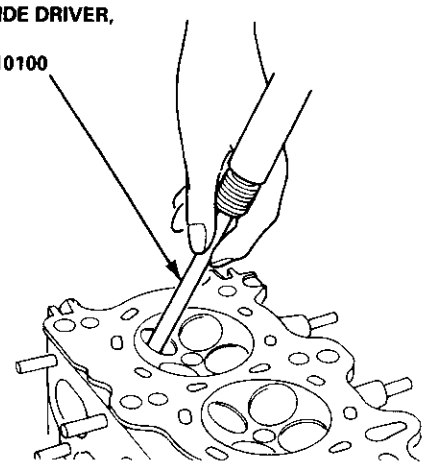

If a valve guide still won't move, drill it out with a 8.0 mm (5/16 in) bit, then try again.

CAUTION: Drill guides only in extreme cases; you could damage the cylinder head if the guide breaks.

6. Remove the new guide(s) from the freezer, one at a time, as you need them.

7. Apply a thin coat of clean engine oil to the outside of the new valve guide. Install the guide from the camshaft side of the head; use the special tool to drive the guide in to the specified installed height. If you have all 16 guides to do, you may have to reheat the head.

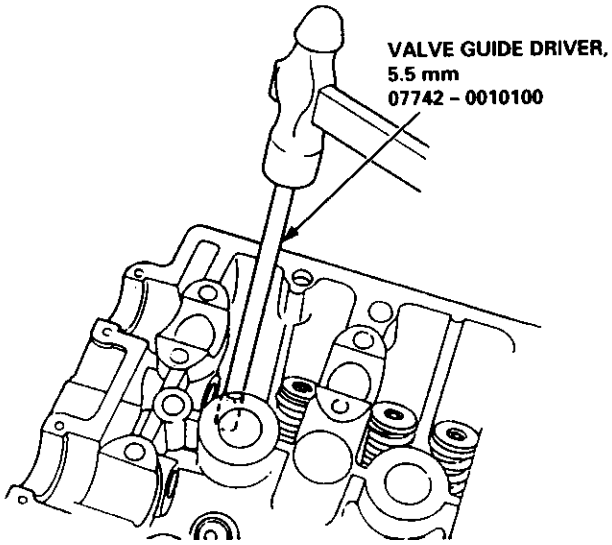

Valve Guide Installed Height:
Intake: 12.55 - 13.05 mm (0.494 - 0.514 in)
Exhaust: 12.55 - 13.05 mm (0.494 - 0.514 in)

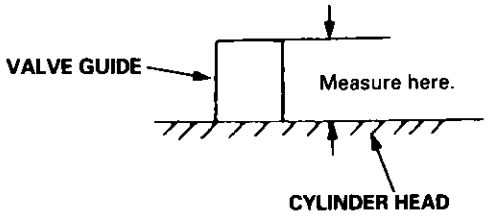

Reaming

NOTE: For new valve guides only.

1. Coat both reamer and valve guide with cutting oil.
2. Rotate the reamer clockwise the full length of the valve guide bore.
3. Continue to rotate the reamer clockwise while removing it from the bore.
4. Thoroughly wash the guide in detergent and water to remove any cutting residue.
5. Check clearance with a valve (see page 6-73).
   - Verify that the valve slides in the intake and exhaust valve guides without exerting pressure.

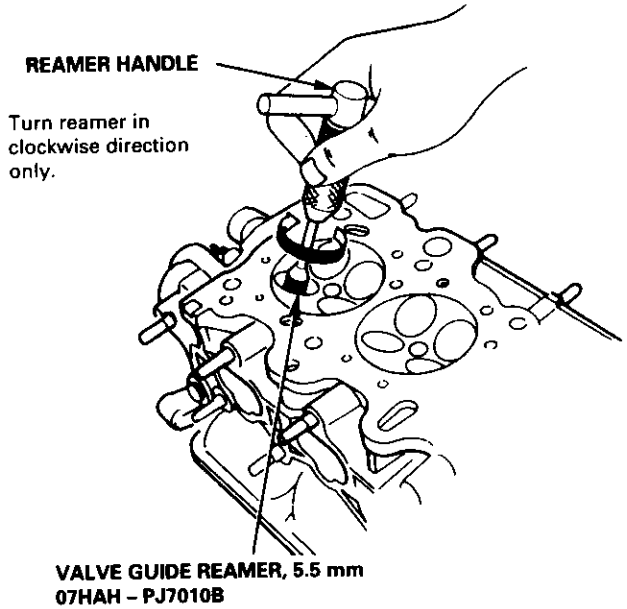

Installation

1. Coat the valve stems with oil. Insert the valves into the valve guides.

   NOTE: Check that the valves move up and down smoothly.

2. Install the spring seats on the cylinder head.

3. Install the valve seals using the special tool.

   NOTE: Exhaust and intake valve seals are not interchangeable.

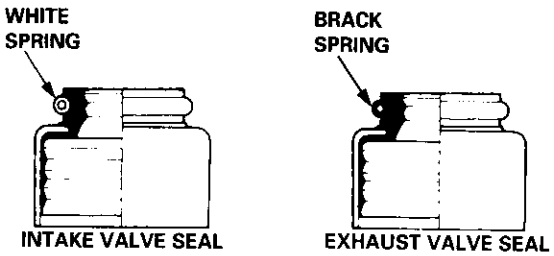

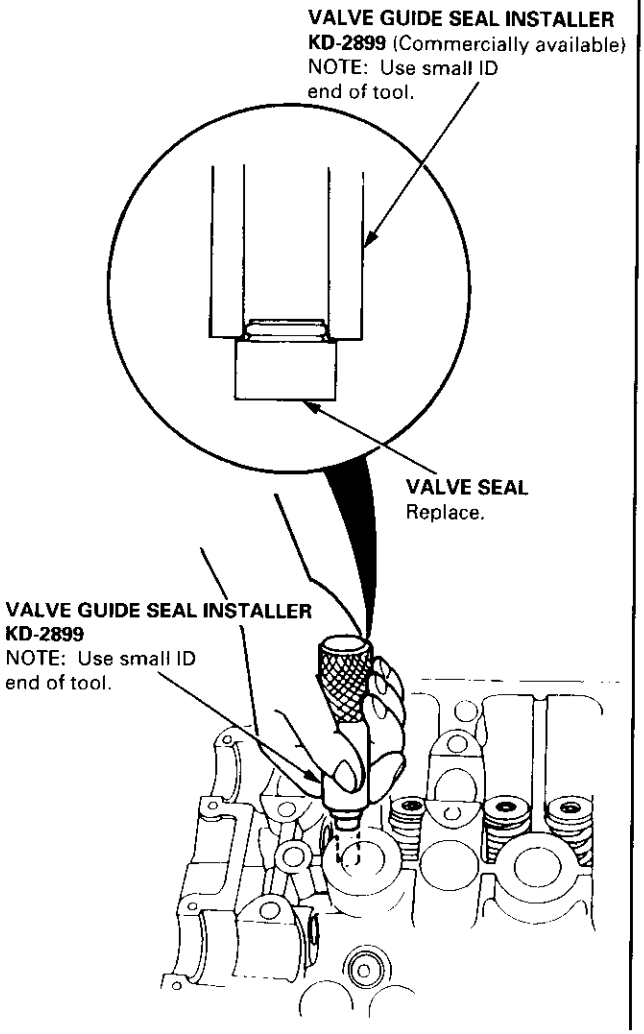

4. Install the valve spring and valve retainer, then install the valve spring compressor. Compress the spring, and install the valve keepers.

   NOTE: Place the end of the valve spring with closely wound coils toward the cylinder head.

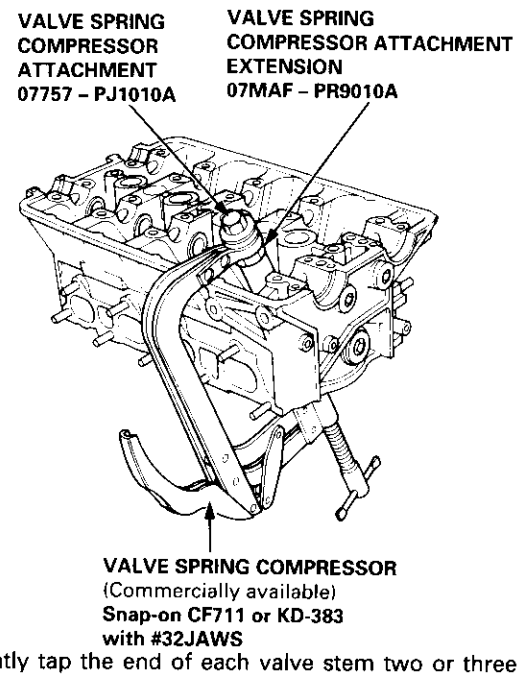

5. Lightly tap the end of each valve stem two or three times with the wooden handle of a hammer to ensure proper seating of the valve and valve keepers.

   NOTE: Tap the valve stem only along its axis so you do not bend the stem.

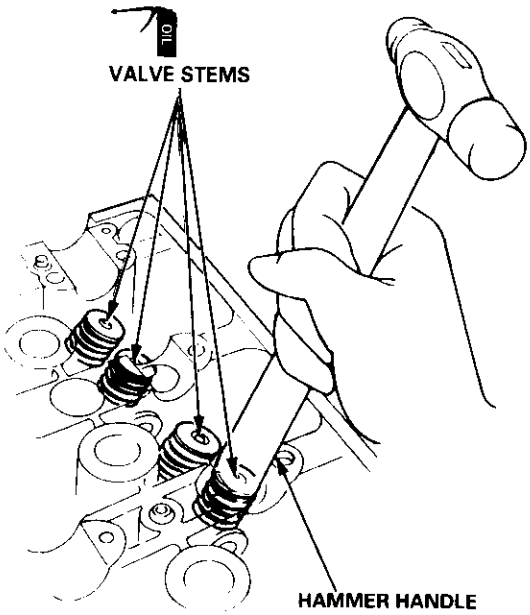

Installation

1. Install the rocker arms in the reverse order of removal:
   - Valve adjusting locknuts should be loosened and the adjusting screw, backed off before installation.
   - The component parts must be reinstalled in the original locations.

2. Install the lost motion assemblies.

3. Install the rocker arms while inserting the rocker arm shaft into the cylinder head.

   NOTE: Remove the rubber band after installing the rocker arms.

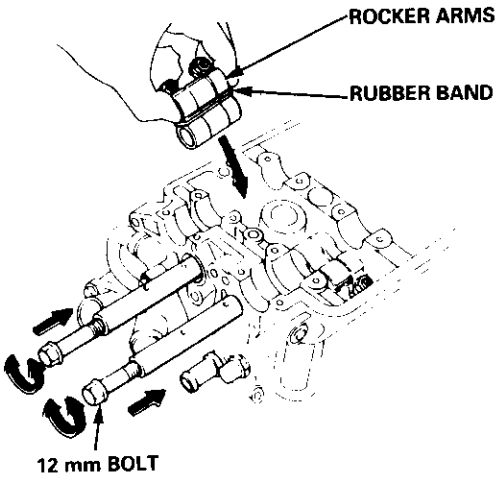

4. Clean and install the rocker shaft orifices with new O-rings. If the holes in the rocker arm shaft and cylinder head are not in line with each other, screw a 12 mm bolt into the rocker arm shaft and rotate the shaft.

   NOTE: The shapes of the rocker shaft orifices for the intake and exhaust are different. The orifice must be installed in the proper locations.

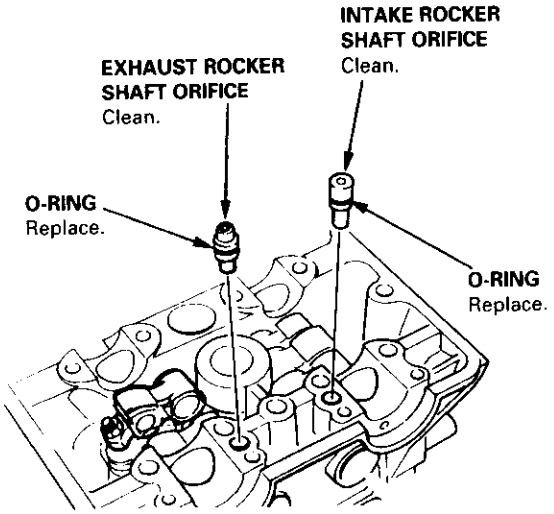

Installation

Install the cylinder head in the reverse order of removal:

NOTE:
- Always use a new head and manifold gasket.
- The cylinder head gasket is a metal gasket. Take care not to bend it.
- Rotate the crankshaft, set the No. 1 piston at TDC (see page 6-63).
- Do not use the middle cover and lower cover for storing removed items.
- Clean the middle cover and lower cover before installation.
- Replace any washers that are damaged or deteriorated.

1. Install the cylinder head gasket, dowel pins and the head oil control orifice on the cylinder head.

   NOTE: Clean the oil control orifice when installing.

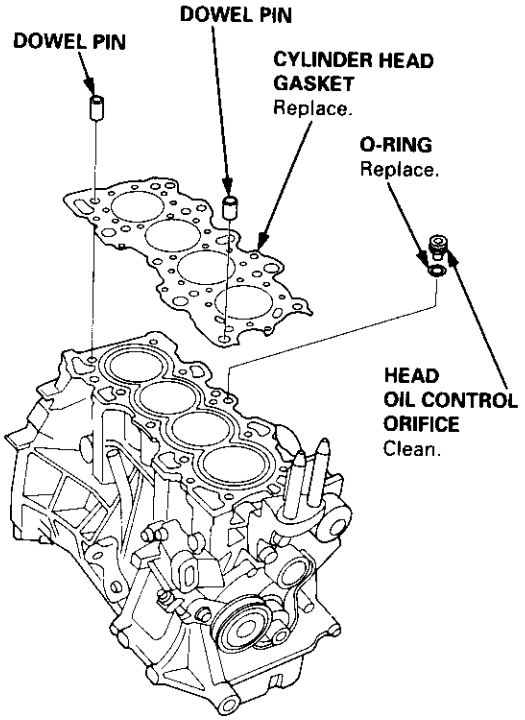

2. Tighten the cylinder head bolts in two steps. In the first step, tighten all bolts in sequence to about 29 N·m (3.0 kgf·m, 22 lbf·ft). In the final step, tighten in the same sequence to 83 N·m (8.5 kgf·m, 61 lbf·ft).

   NOTE:
   - Apply clean engine oil to the bolt threads and under the bolt head.
   - We recommend using a beam-type torque wrench. When using a preset-type torque wrench, be sure to tighten slowly and not to overtighten.
   - If a bolt makes any noise while you are torquing it, loosen the bolt, and retighten it from the 1st step.

CYLINDER HEAD BOLT TORQUE SEQUENCE

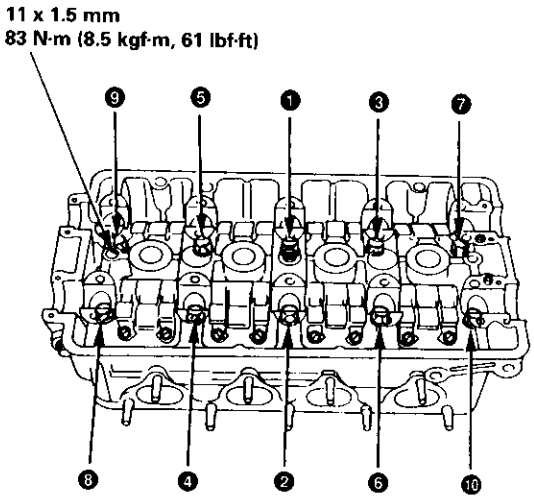

3. Install the intake manifold and tighten the nuts in a crisscross pattern in two or three steps, beginning with the inner nuts.
   - Always use a new intake manifold gasket.

4. Install the exhaust manifold and tighten the new self-locking nuts in a crisscross pattern in two or three steps, beginning with the inner nuts.
   - Always use a new exhaust manifold gasket.

5. Install the camshafts and camshaft oil seals.

NOTE:
- Install the camshafts with the keyway facing up.
- Install the oil seal with the spring side facing in.
- The oil seal housing surface should be dry.
- Set the O-ring and dowel pin in the oil passage of the No. 3 camshaft holder.

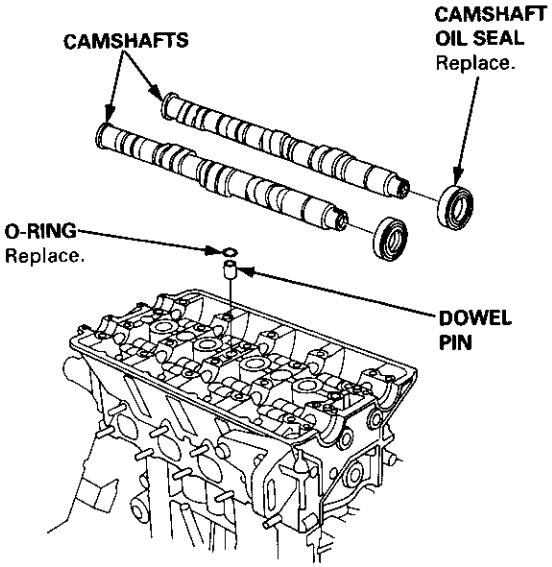

6. Apply liquid gasket (P/N 08718 - 0001 or 08718 - 0003) to the head mating surfaces of the No. 1 and No. 5 camshaft holders on both the intake and exhaust side.

NOTE: Clean and dry the cylinder head mating surfaces before applying liquid gasket.

— Apply liquid gasket to the shaded areas.

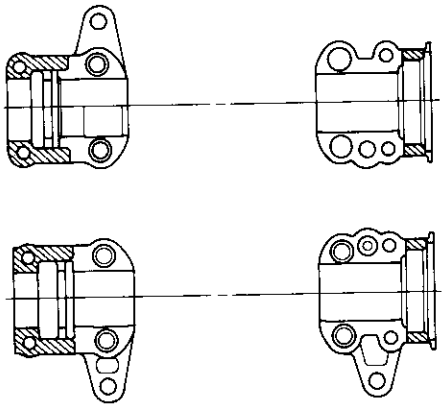

No. 5 No. 1

7. Install the camshaft holders and camshaft holder plate.
NOTE: The arrows marked on the camshaft holders should point to the timing belt.

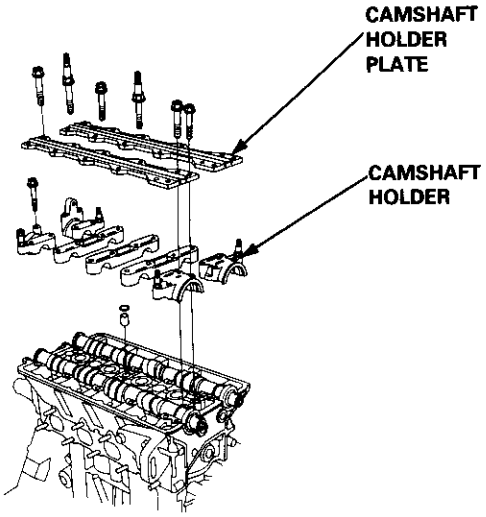

8. Tighten each bolt two turns at a time in the sequence shown below.
NOTE: Wipe off the excess liquid gasket from the No. 1 and No. 5 camshaft holders with a shop towel.
❶ - ❿: 8 x 1.25 mm 27 N·m (2.8 kgf·m, 20 lbf·ft)
Apply engine oil to the threads.
⓫ - ⓮: 6 x 1.0 mm 9.8 N·m (1.0 kgf·m, 7.2 lbf·ft)

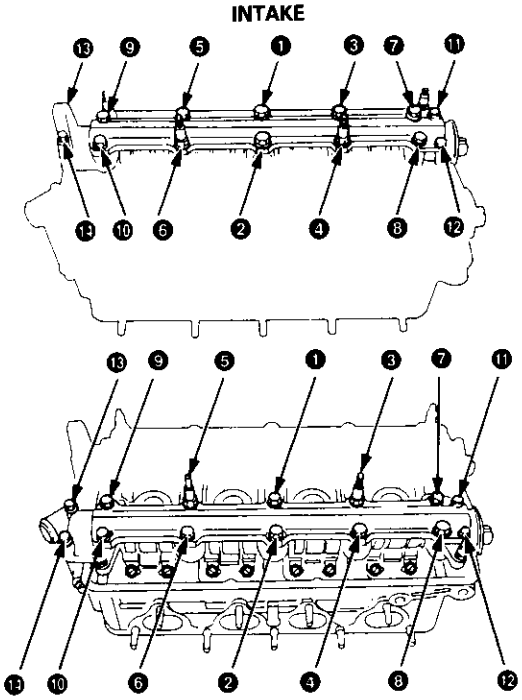

9. Install the back cover and camshaft pulleys.

(cont'd)

Installation (cont'd)

10. Align the marks on the cylinder head plug to the cylinder head upper surface, then install the cylinder head plug in the cylinder head.

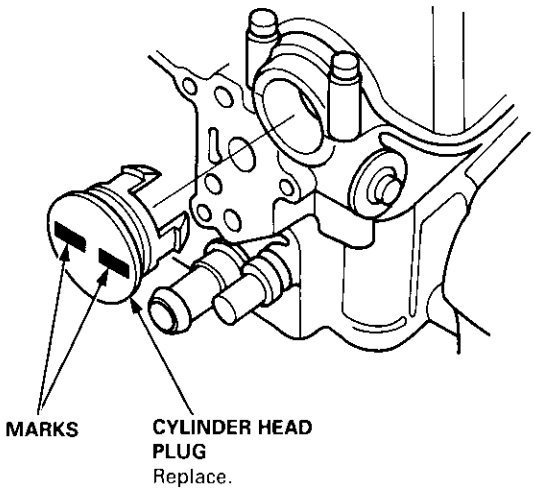

11. Install the timing belt (see page 6-63).

12. Adjust the valve clearance (see page 6-61).

13. Install the head cover gasket in the groove of the cylinder head cover. Seat the recesses for the camshaft first, then work it into the groove around the outside edges.

    NOTE:
    - Before installing the head cover gasket, thoroughly clean the head cover gasket and the groove.
    - When installing, make sure the head cover gasket is seated securely in the corners of the recesses with no gap.

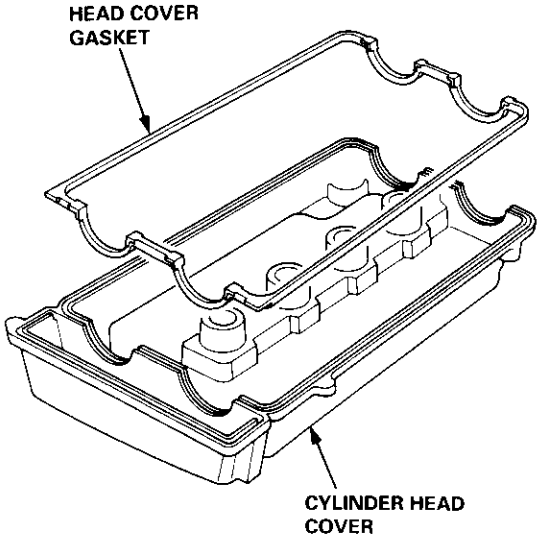

14. Apply liquid gasket to the head cover gasket at the eight corners of the recesses.

    NOTE:
    - Use liquid gasket, Part No. 08718 - 0001 or 08718 - 0003.
    - Check that the mating surfaces are clean and dry before applying liquid gasket.
    - Do not install the parts if five minutes or more have elapsed since applying liquid gasket. Instead, reapply liquid gasket after removing old residue.
    - After assembly, wait at least 30 minutes before filling the engine with oil.

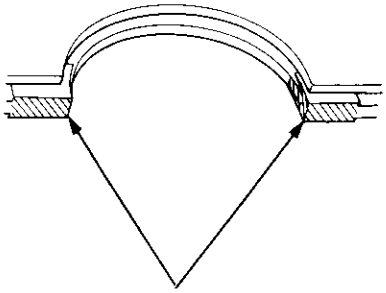

15. When installing the cylinder head cover, hold the head cover gasket in the groove by placing your fingers on the camshaft holder contacting surfaces (top of the semicircles).
Once the cylinder head cover is on the cylinder head, slide the cover slightly back and forth to seat the head cover gasket.

NOTE:
- Before installing the cylinder head cover, clean the cylinder head contacting surfaces using a shop towel.
- Do not touch the parts where liquid gasket was applied.
- Replace any washer taht is damaged or deteriorated.

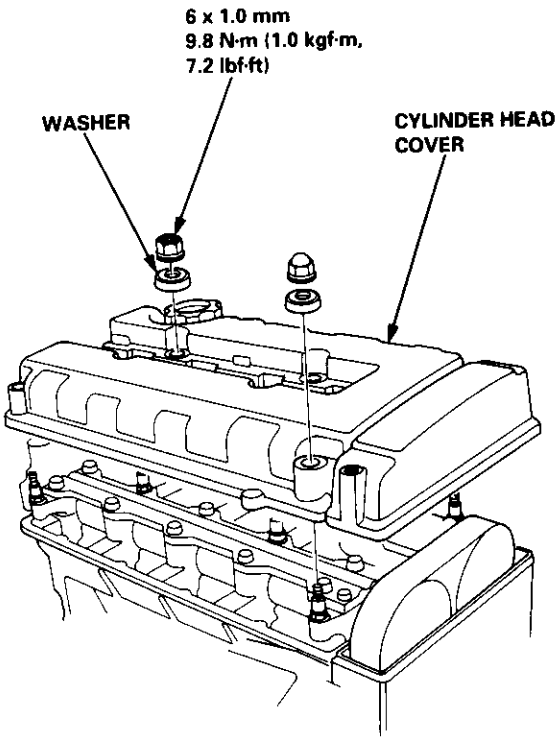

16. Tighten the nuts in two or three steps. In the final step, tighten all nuts, in sequence, to 9.8 N·m (1.0 kgf·m, 7.2 lbf·ft).

NOTE: After assembly, wait at least 30 minutes before filling the engine with oil.

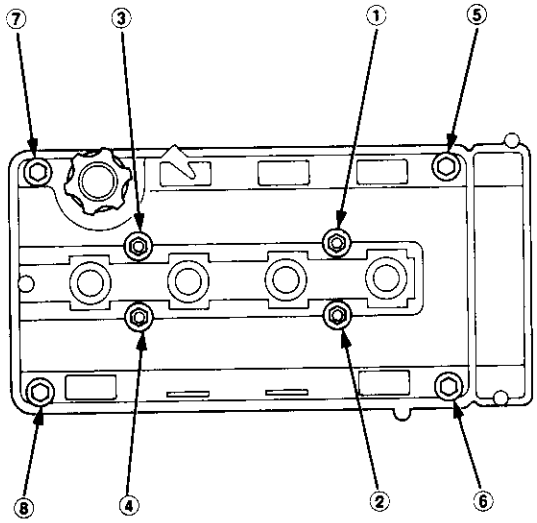

17. After installing, check that all tubes, hoses and connectors are installed correctly.

Engine Block

Special Tools 7-2
Illustrated Index 7-3
Flywheel and Drive Plate
  Replacement 7-7
Connecting Rod and Crankshaft
  End Play 7-8
Main Bearings
  Clearance 7-9
  Selection 7-10
Connecting Rod Bearings
  Clearance 7-11
  Selection 7-11
Pistons and Crankshaft
  Removal 7-12
Crankshaft
  Inspection 7-14
Pistons
  Inspection 7-15
  Installation 7-23
Cylinder Block
  Inspection 7-16
  Bore Honing 7-17
Piston Pins
  Removal 7-17
  Installation 7-18
  Inspection 7-19
Connecting Rods
  Selection 7-18
Piston Rings
  End Gap 7-20
  Replacement 7-20
  Ring-to-Groove Clearance 7-21
  Alignment 7-21
Crankshaft Oil Seal
  Installation 7-22
Crankshaft
  Installation 7-23
Oil Pan
  Installation 7-26
Oil Seals
  Installation 7-29

Special Tools

Ref. No.	Tool Number	Description	Qty	Page Reference
①	07LAB – PV00100	Ring Gear Holder	1	7-7
②	07749 – 0010000	Driver	1	7-22, 29
③	07947 – SB00200	Seal Driver	1	7-29
④	07948 – SB00101	Driver Attachment	1	7-22, 29
⑤	07973 – PE00200	Pilot Collar	1	7-17, 18
⑥	07973 – PE00310	Piston Pin Driver Shaft	1	7-17, 18
⑦	07973 – PE00320	Piston Pin Driver Head	1	7-17, 18
⑧	07973 – PE00400	Piston Pin Base Insert	1	7-17, 18
⑨	07973 – SB00100	Piston Base Head	1	7-17, 18
⑩	07973 – 6570500	Piston Base	1	7-17, 18
⑪	07973 – 6570600	Piston Base Spring	1	7-17, 18

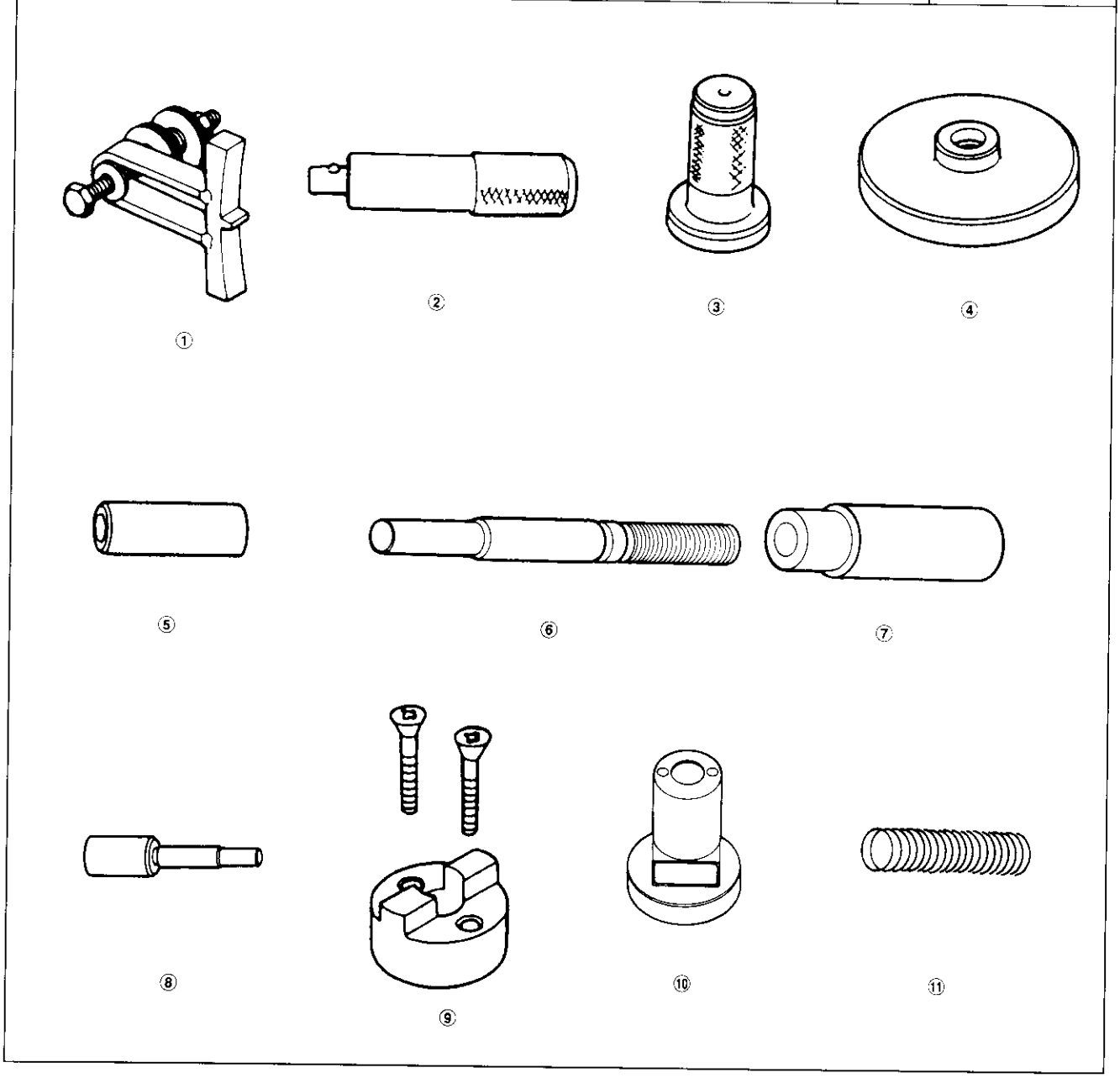

Lubricate all internal parts with engine oil during reassembly.

NOTE:
- Apply liquid gasket to the mating surfaces of the right side cover and oil pump case before installing them.
- Use liquid gasket, part No. 08718 – 0001 or 08718 – 0003.
- Clean the oil pan gasket mating surfaces before installing the oil pan.

B16A2 engine:

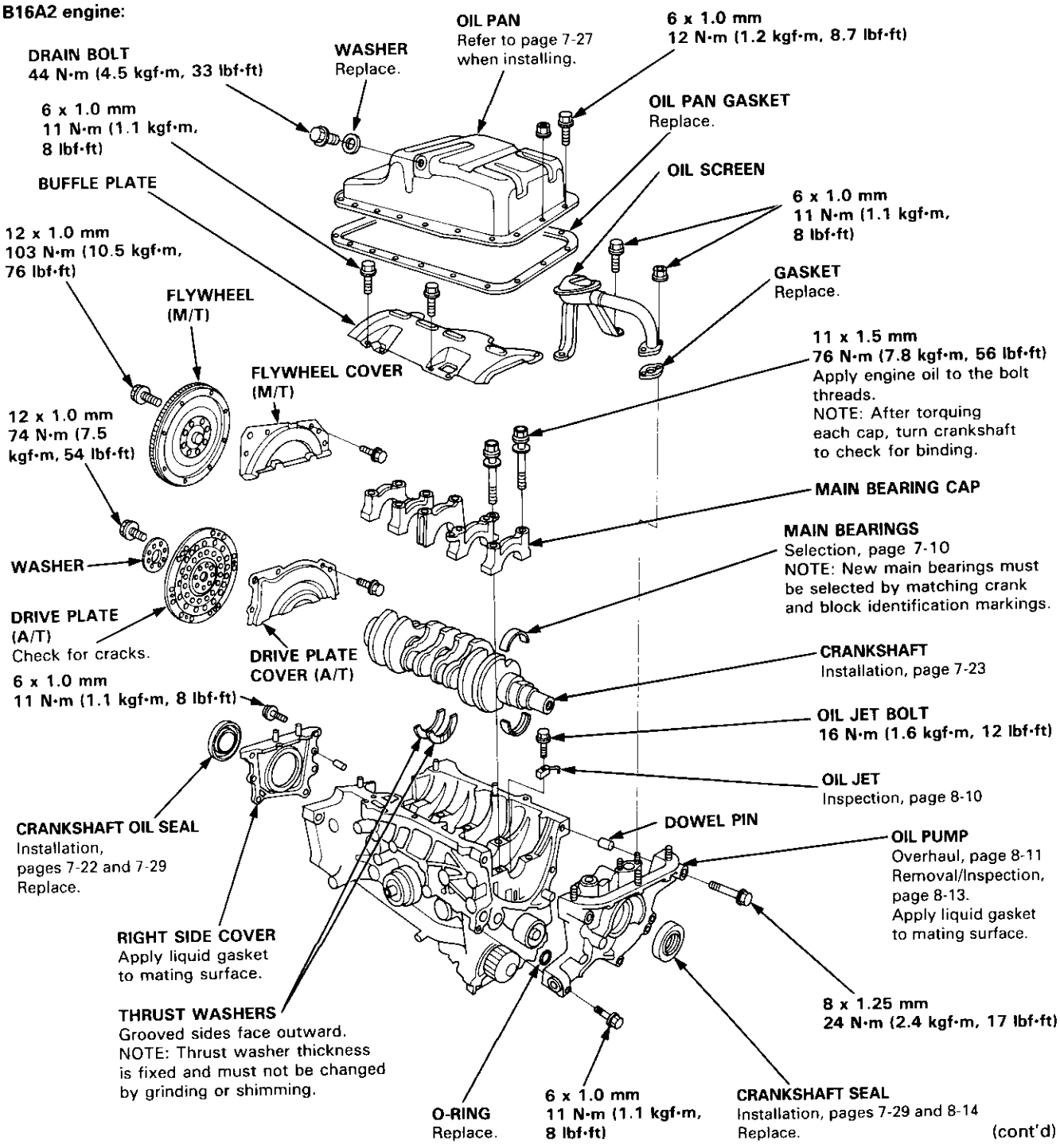

(cont'd)

(cont'd)

Lubricate all internal parts with engine oil during reassembly.

NOTE:
- Apply liquid gasket to the mating surfaces of the right side cover and oil pump case before installing them.
- Use liquid gasket, part No. 08718 – 0001 or 08718 – 0003.
- Clean the oil pan gasket mating surfaces before installing it.

D16Y7 engine:

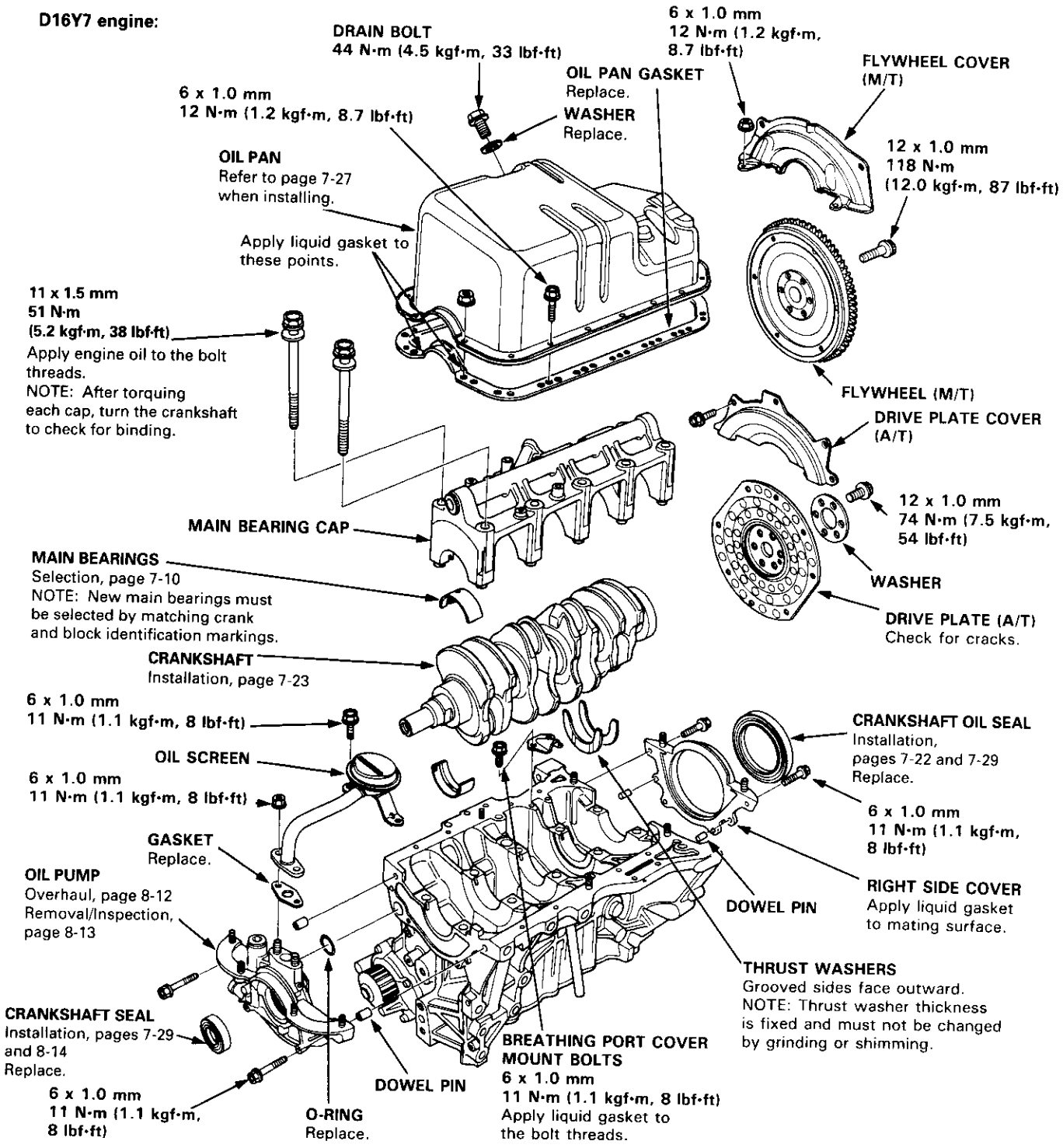

D16Y5, D16Y8 engines:

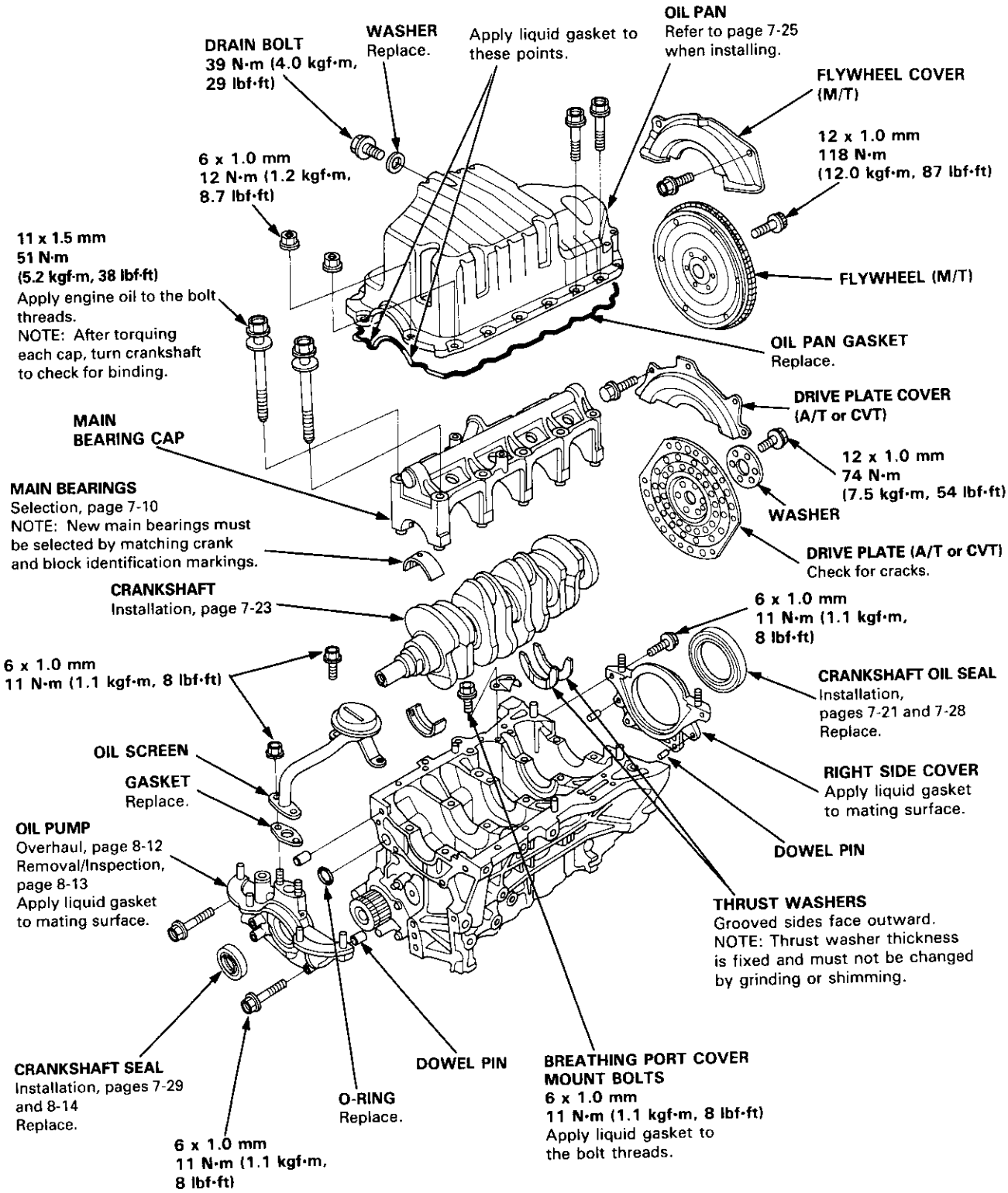

(cont'd)

(cont'd)

NOTE: New rod bearings must be selected by matching connecting rod assembly and crankshaft identification markings (see page 7-11).

OIL Lubricate all internal parts with engine oil during reassembly.

PISTON INSTALLATION DIRECTION:

EXHAUST

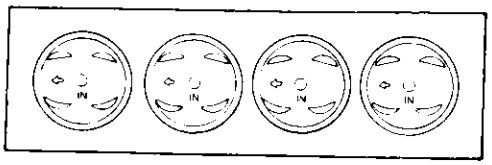

INTAKE

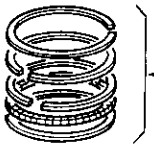

PISTON RINGS
Replacement, page 7-20
Measurement, pages 7-20 and 7-21
Alignment, page 7-21

PISTON PIN
Removal, page 7-17
Installation, page 7-18
Inspection, page 7-19

PISTON
Inspection, page 7-15
NOTE: Before removing the piston, inspect the top of the cylinder bore for carbon build-up or ridge. Remove ridge if necessary, page 7-13

CONNECTING ROD
End play, page 7-8
Selection, page 7-18

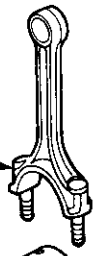

ENGINE BLOCK
Cylinder bore inspection, page 7-16
Warpage inspection, page 7-16
Cylinder bore honing, page 7-17

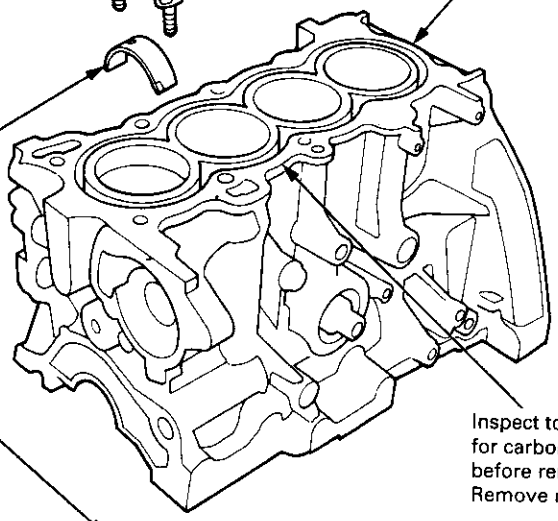

CONNECTING ROD BEARINGS
Clearance, page 7-11
Selection, page 7-11

Inspect top of each cylinder bore for carbon build-up or ridge before removing piston.
Remove ridge if necessary, page 7-13

CONNECTING ROD BEARING CAP
Installation, page 7-23
NOTE: Install caps so the bearing recess is on the same side as the recess in the rod.

CONNECTING ROD CAP NUT
B16A2 engine:
9 x 0.75 mm
40 N·m (4.1 kgf·m, 30 lbf·ft)
D16Y5, D16Y7, D16Y8 engines:
8 x 0.75 mm
31 N·m (3.2 kgf·m, 23 lbf·ft)
Apply engine oil to the bolt threads.
NOTE: After torquing each bearing cap, rotate crankshaft to check for binding.

Replacement

Manual Transmission:
B16A2 engine:
Remove the eight flywheel bolts, then separate the flywheel from the crankshaft flange. After installation, tighten the bolts in the sequence shown.

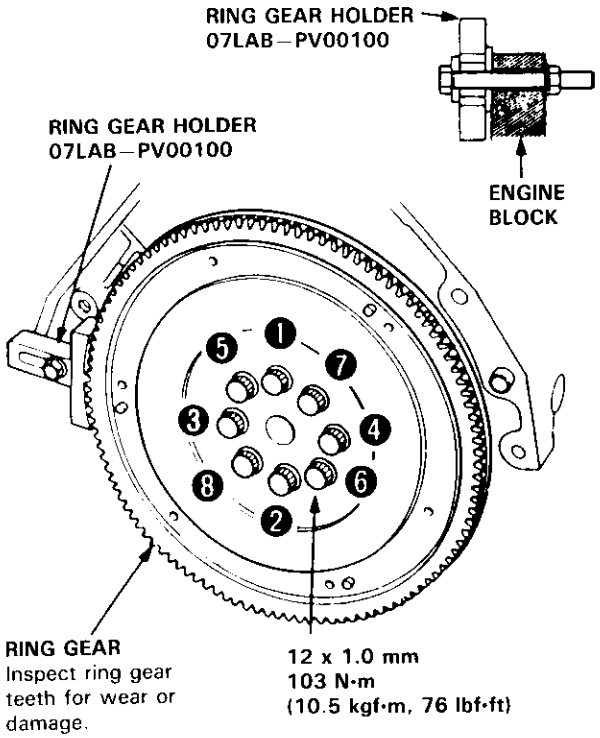

D16Y5, D16Y7, D16Y8 engines:
Remove the six flywheel bolts, then separate the flywheel from the crankshaft flange. After installation, tighten the bolts in a crisscross pattern.

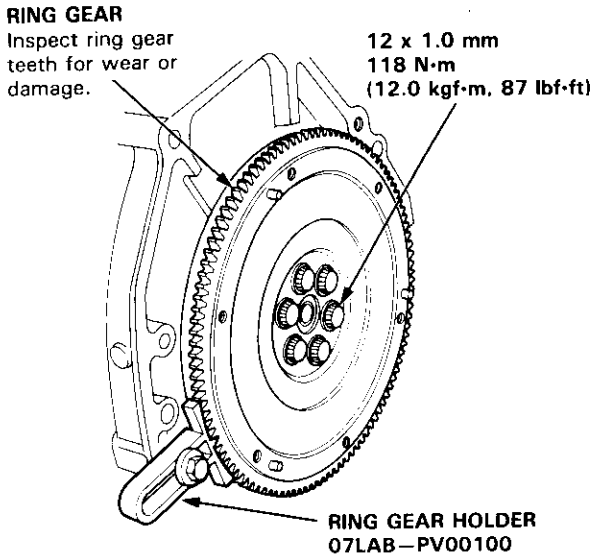

Automatic Transmission:
Remove the six drive plate bolts, then separate the drive plate from the crankshaft flange. After installation, tighten the bolts in a crisscross pattern.

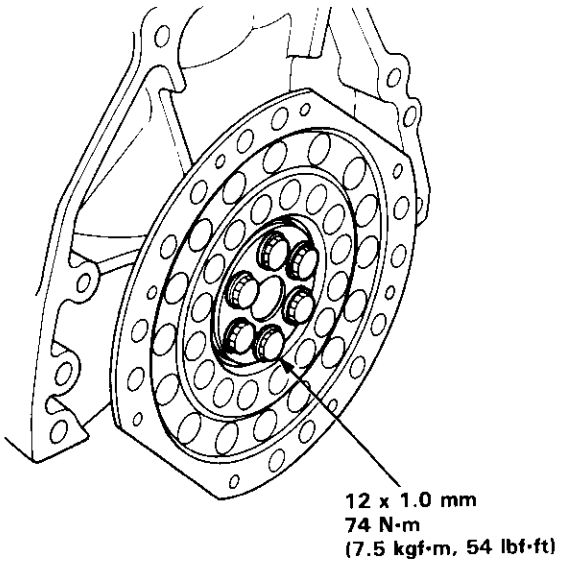

End Play

Connecting Rod End Play:
Standard (New): 0.15 – 0.30 mm (0.006 – 0.012 in)
Service Limit: 0.40 mm (0.016 in)

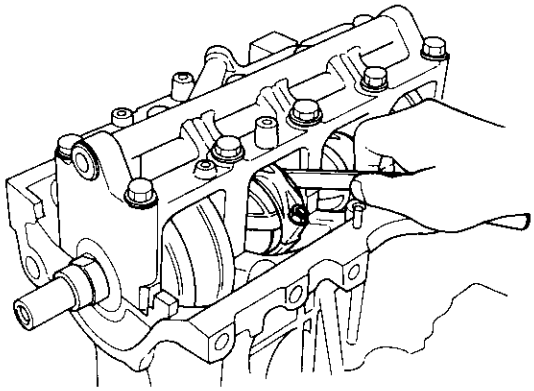

- If out-of-tolerance, install a new connecting rod.
- If still out-of-tolerance, replace the crankshaft (see pages 7-12 and 7-23).

Push the crankshaft firmly away from the dial indicator, and zero the dial against the end of the crankshaft. Then pull the crankshaft firmly back toward the indicator; dial reading should not exceed service limit.

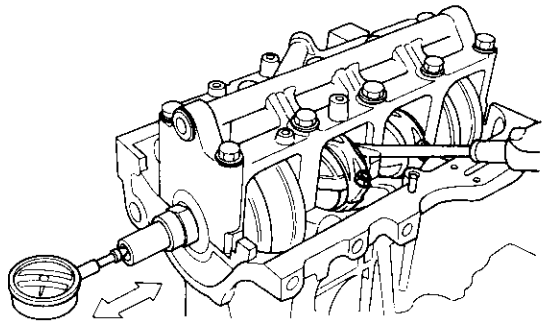

Crankshaft End Play:
Standard (New): 0.10 – 0.35 mm (0.004 – 0.014 in)
Service Limit: 0.45 mm (0.018 in)

- If end play is excessive, inspect the thrust washers and thrust surface on the crankshaft. Replace parts as necessary.

NOTE: Thrust washer thickness is fixed and must not be changed either by grinding or shimming.
Thrust washers are installed with grooved sides facing outward.

Clearance

1. To check main bearing-to-journal oil clearance, remove the main caps and bearing halves.

2. Clean each main journal and bearing half with a clean shop towel.

3. Place one strip of plastigage across each main journal.

   NOTE: If the engine is still in the car when you bolt the main cap down to check clearance, the weight of the crankshaft and flywheel will flatten the plastigage further than just the torque on the cap bolt, and give you an incorrect reading. For an accurate reading, support the crank with a jack under the counterweights and check only one bearing at a time.

4. Reinstall the bearings and caps, then torque the bolts.

   1st step: 25 N·m (2.5 kgf·m, 18 lbf·ft)
   Final step:
   B16A2 engine:
   76 N·m (7.8 kgf·m, 56 lbf·ft)
   D16Y5, D16Y7, D16Y8 engines:
   51 N·m (5.2 kgf·m, 38 lbf·ft)

   NOTE: Do not rotate the crankshaft during inspection.

5. Remove the cap and bearing again, and measure the widest part of the plastigage.

   Main Bearing-to-Journal Oil Clearance:
   B16A2 engine:
   Standard (New):
   No. 1, 2, 4, 5 Journals:
   0.024 – 0.042 mm (0.0009 – 0.0017 in)
   No. 3 Journals:
   0.030 – 0.048 mm (0.0012 – 0.0019 in)
   Service Limit: 0.06 mm (0.002 in)

   D16Y5, D16Y7, D16Y8 engines:
   Standard (New):
   No. 1, 5 Journals:
   0.018 – 0.036 mm (0.0007 – 0.0014 in)
   No. 2, 3, 4 Journals:
   0.024 – 0.042 mm (0.0009 – 0.0017 in)
   Service Limit: 0.05 mm (0.002 in)

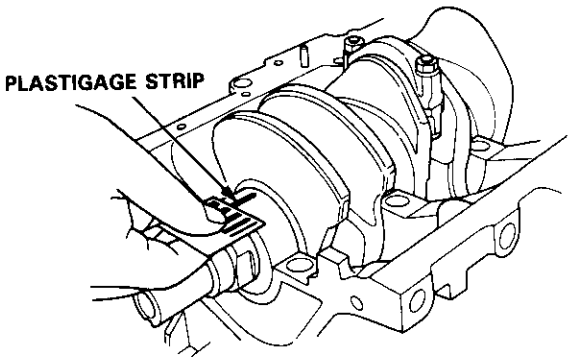

6. If the plastigage measures too wide or too narrow, (remove the engine if it's still in the car), remove the crankshaft, and remove the upper half of the bearing. Install a new, complete bearing with the same color code (select the color as shown on the next page), and recheck the clearance.

   CAUTION: Do not file, shim, or scrape the bearings or the caps to adjust clearance.

7. If the plastigage shows the clearance is still incorrect, try the next larger or smaller bearing (the color listed above or below that one), and check again.

   NOTE: If the proper clearance cannot be obtained by using the appropriate larger or smaller bearings, replace the crankshaft and start over.

Selection

CAUTION: If the codes are indecipherable because of an accumulation of dirt and dust, do not scrub them with a wire brush or scraper. Clean them only with solvent or detergent.

Crankshaft Bore Code Location

B16A2 engine:
Letters have been stamped on the end of the block as a code for the size of each of the 5 main journal bores.
Use them, and the numbers or bars stamped on the crank (codes for main journal size), to choose the correct bearings.

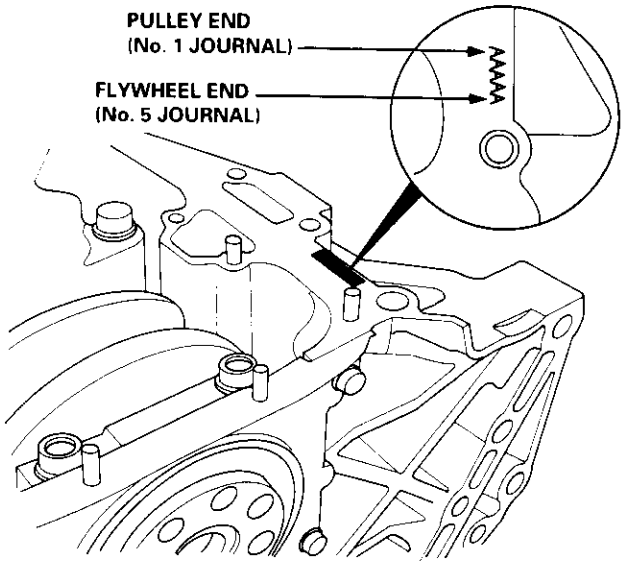

Main Journal Code Locations (Numbers or Bars)

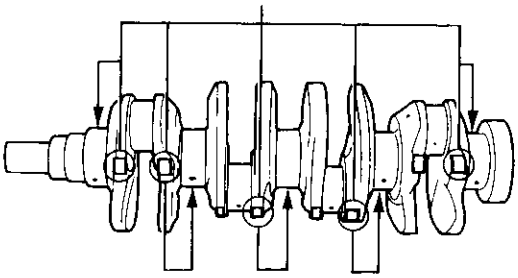

Bearing Identification
Color code is on the edge of the bearing.

Larger crank bore →

A	B	C	D

Smaller bearing (thicker) →

1 or I	Red	Pink	Yellow	Green
2 or II	Pink	Yellow	Green	Brown
3 or III	Yellow	Green	Brown	Black
4 or IIII	Green	Brown	Black	Blue

Smaller main journal ↓ Smaller bearing (thicker) ↓

D16Y5, D16Y7, D16Y8 engines:
Letters have been stamped on the end of the block as a code for the size of each of the 5 main journal bores.
Use them, and the numbers stamped on the crankshaft (codes for main journal size), to choose the correct bearings.

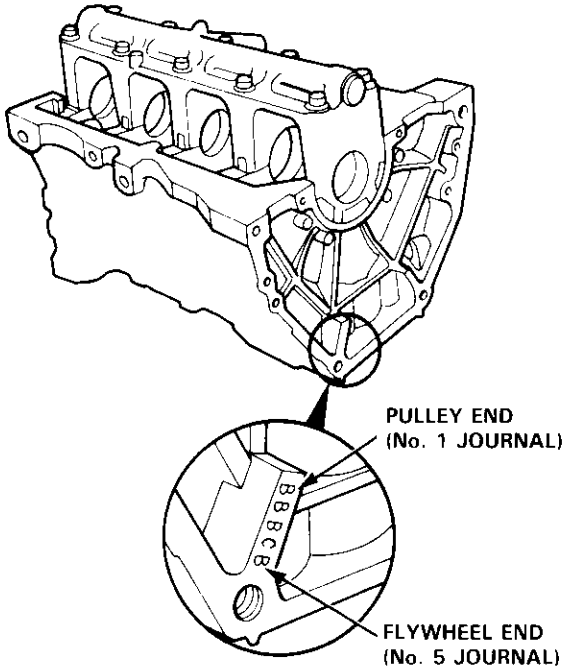

Main Journal Code Location (Numbers)

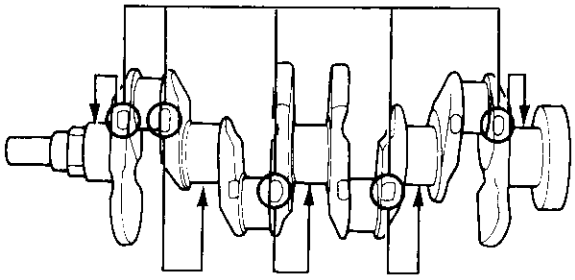

Bearing Identification
Color code is on the edge of the bearing.

Larger crank bore →

A	B	C	D

Smaller bearing (thicker) →

1	Red	Pink	Yellow	Green
2	Pink	Yellow	Green	Brown
3	Yellow	Green	Brown	Black
4	Green	Brown	Black	Blue

Smaller main journal ↓ Smaller bearing (thicker) ↓

Clearance

1. Remove the connecting rod cap and bearing half.

2. Clean the crankshaft rod journal and bearing half with a clean shop towel.

3. Place plastigage across the rod journal.

4. Reinstall the bearing half and cap, and torque the nuts.

   Torque
   B16A2 engine:
   40 N·m (4.1 kgf·m, 30 lbf·ft)
   D16Y5, D16Y7, D16Y8 engines:
   31 N·m (3.2 kgf·m, 23 lbf·ft)

   NOTE: Do not rotate the crankshaft during inspection.

5. Remove the rod cap and bearing half and measure the widest part of the plastigage.

   Connecting Rod Bearing-to-Journal Oil Clearance:
   B16A2 engine:
   Standard (New): 0.032 – 0.050 mm (0.0013 – 0.0020 in)
   Service Limit: 0.06 mm (0.002 in)
   D16Y5, D16Y7, D16Y8 engines:
   Standard (New): 0.020 – 0.038 mm (0.0008 – 0.0015 in)
   Service Limit: 0.05 mm (0.002 in)

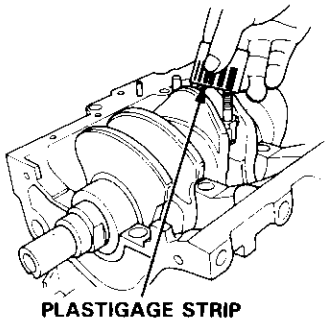

PLASTIGAGE STRIP

6. If the plastigage measures too wide or too narrow, remove the upper half of the bearing, install a new, complete bearing with the same color code (select the color as shown in the right column), and recheck the clearance.

   CAUTION: Do not file, shim, or scrape the bearings or the caps to adjust clearance.

7. If the plastigage shows the clearance is still incorrect, try the next larger or smaller bearing (the color listed above or below that one), and check clearance again.

   NOTE: If the proper clearance cannot be obtained by using the appropriate larger or smaller bearings, replace the crankshaft and start over.

Selection

CAUTION: If the codes are indecipherable because of an accumulation of dirt and dust, do not scrub them with a wire brush or scraper. Clean them only with solvent or detergent.

Connecting Rod Code Location

Numbers have been stamped on the side of each connecting rod as a code for the size of the big end. Use them, and the letters stamped on the crankshaft (codes for rod journal size), to choose the correct bearings.

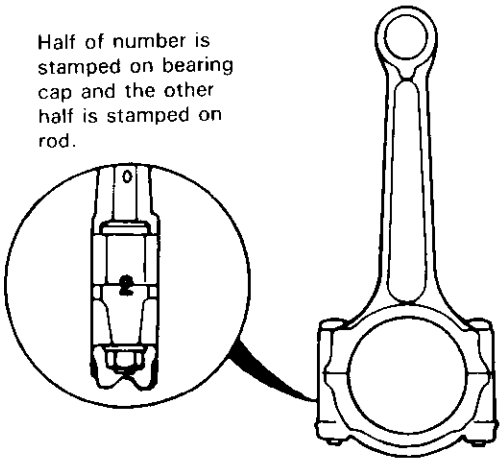

Connecting Rod Journal Code Locations (Letters)

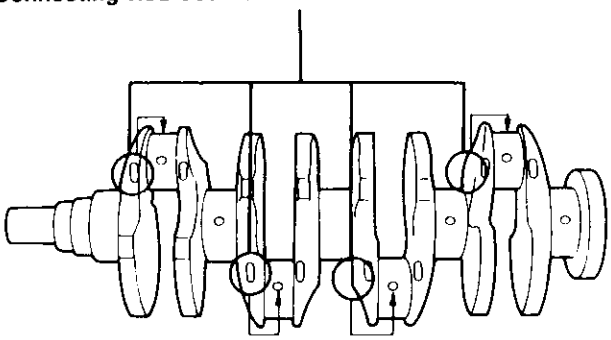

Bearing Identification

Color code is on the edge of the bearing. → Larger big end bore

1	2	3	4

→ Smaller bearing (thicker)

A or I
B or II
C or III
D or IIII

Smaller rod journal ↓ ↓ Smaller bearing (thicker)

Red	Pink	Yellow	Green
Pink	Yellow	Green	Brown
Yellow	Green	Brown	Black
Green	Brown	Black	Blue

Removal

1. Remove the oil pan assembly.
2. Remove the right side cover.

B16A2 engine

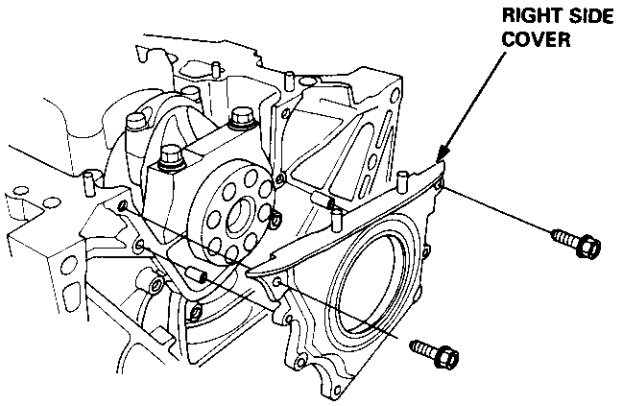

D16Y5, D16Y7, D16Y8 engines

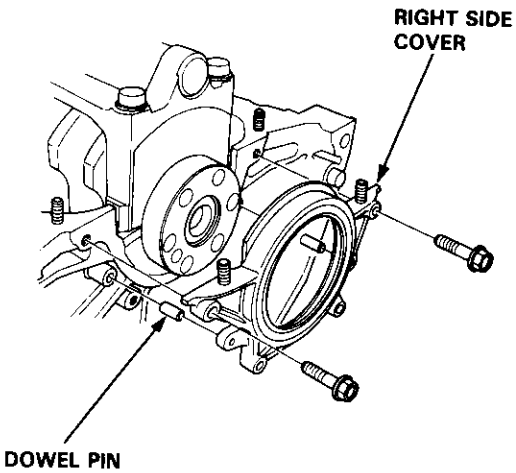

3. Remove the oil screen.
4. Remove the oil pump.

B16A2 engine

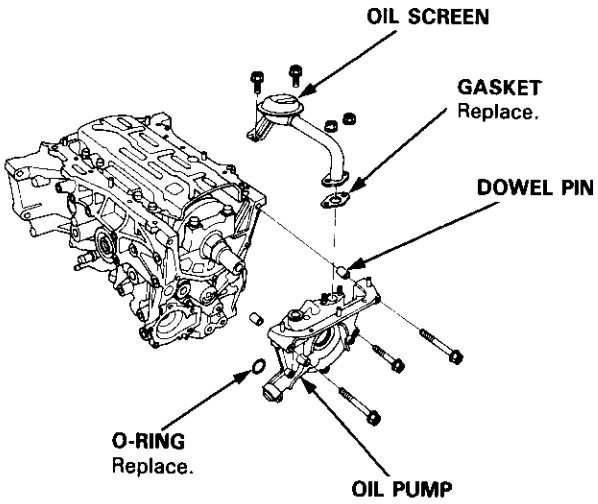

D16Y5, D16Y7, D16Y8 engines

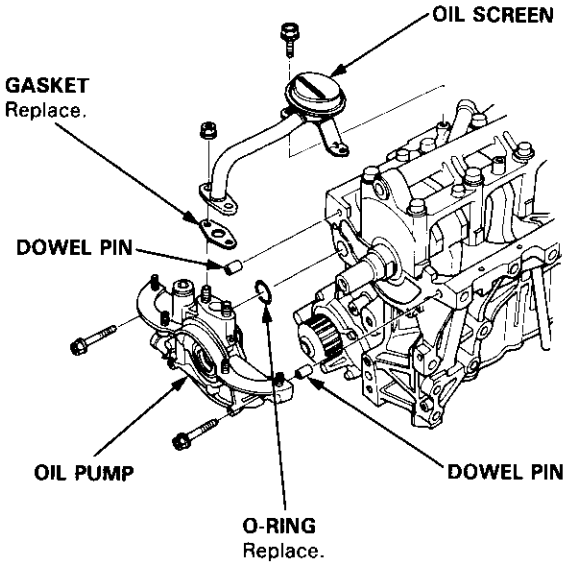

5. Remove the baffle plate (B16A2 engine).

6. Remove the bolts and the bearing caps.

CAUTION: To prevent warpage unscrew the bolts in sequence 1/3 turn at a time, repeat the sequence until all bolts are loosened.

MAIN BEARING CAP BOLTS LOOSENING SEQUENCE

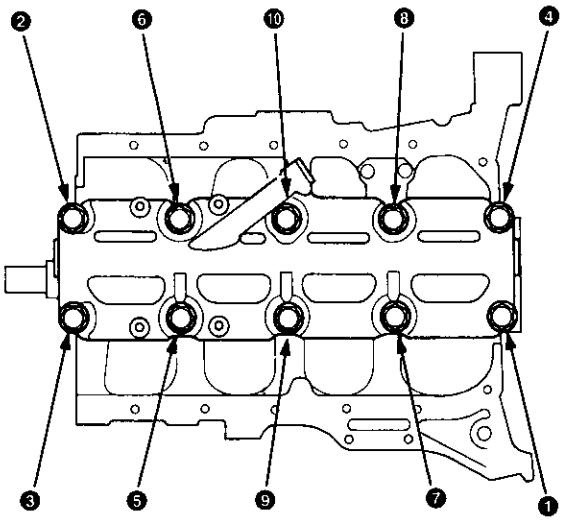

7. Remove the rod caps/bearings and main caps/bearings. Keep all caps/bearing in order.

8. Lift the crankshaft out of the engine, being careful not to damage journals.

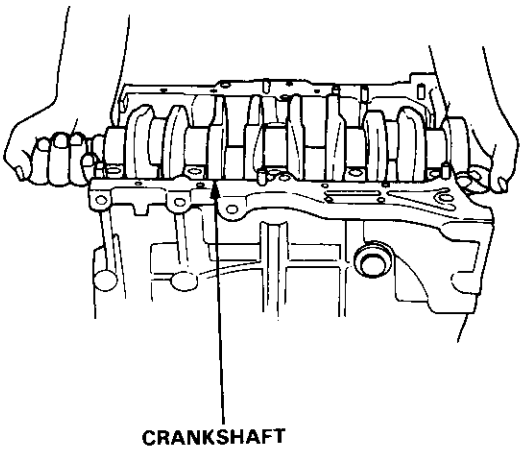

9. Remove the upper bearing halves from the connecting rods and set them aside with their respective caps.

10. Reinstall the main caps and bearings on the engine in proper order.

11. If you can feel ridge of metal or hard carbon around the top of each cylinder, remove it with a ridge reamer. Follow the reamer manufacturer's instructions.

CAUTION: If the ridge is not removed, it may damage the pistons as they are pushed out.

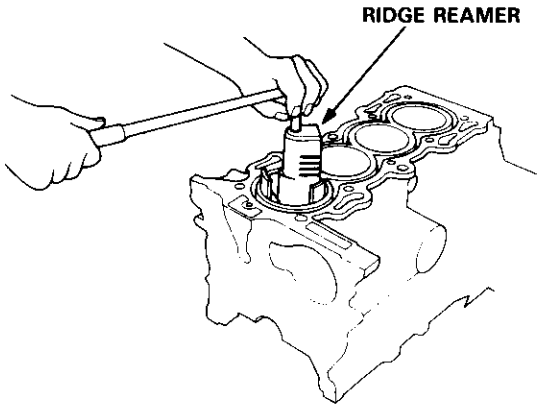

12. Use the wooden handle of a hammer to drive the pistons out.

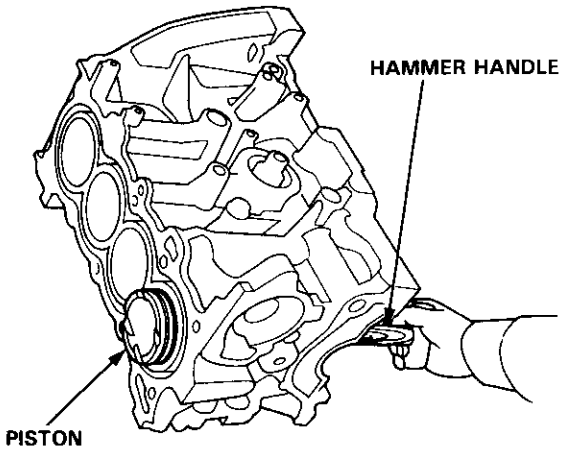

13. Reinstall the connecting rod bearings and caps after removing each piston/connecting rod assembly.

14. Mark each piston/connecting rod assembly with its cylinder number to avoid mixup on reassembly.

NOTE: The existing number on the connecting rod does not indicate its position in the engine, it indicates the rod bore size.

Inspection

- Clean the crankshaft oil passages with pipe cleaners or a suitable brush.
- Check the keyway and threads.

Alignment

- Measure runout on all main journals to make sure the crank is not bent.
- The difference between measurements on each journal must not be more than the service limit.

Crankshaft Total Indicated Runout:

B16A2 engine:
Standard (New): 0.020 mm (0.0008 in) max.
Service Limit: 0.030 mm (0.0012 in)
D16Y5, D16Y7, D16Y8 engines:
Standard (New): 0.03 mm (0.001 in) max.
Service Limit: 0.04 mm (0.002 in)

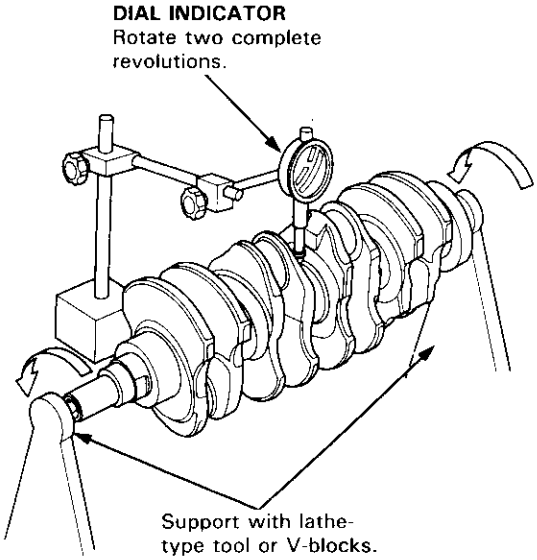

Out-of-Round and Taper

- Measure out-of-round at the middle of each rod and main journal in two places.
- The difference between measurements on each journal must not be more than the service limit.

Journal Out-of-Round:
B16A2 engine:
Standard (New): 0.0004 mm (0.0002 in) max.
Service Limit: 0.006 mm (0.0002 in)
D16Y5, D16Y7, D16Y8 engines:
Standard (New): 0.0025 mm (0.0001 in) max.
Service Limit: 0.005 mm (0.0002 in)

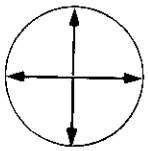

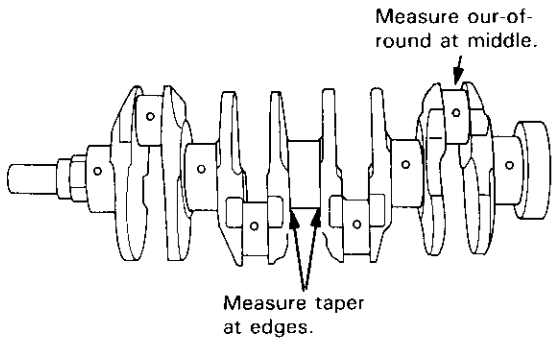

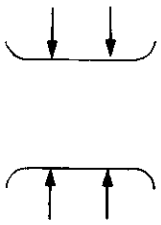

- Measure taper at the edges of each rod and main journal.
- The difference between measurements on each journal must not be more than the service limit.

Journal Taper:
B16A2 engine:
Standard (New): 0.005 mm (0.0002 in) max.
Service Limit: 0.010 mm (0.004 in)
D16Y5, D16Y7, D16Y8 engines:
Standard (New): 0.0025 mm (0.0001 in) max.
Service Limit: 0.005 mm (0.0002 in)

Inspection

1. Check the piston for distortion or cracks.

   NOTE: If a cylinder is bored, an oversized piston must be used.

2. Measure the piston diameter at a distance A from bottom of the skirt.

   B16A2 engine:
   A: 15 mm (0.6 in)
   D16Y5, D16Y7, D16Y8 engines:
   A: 5 mm (0.2 in)

   Piston Diameter:
   B16A2 engine:
   Standard (New): 80.980 – 80.990 mm (3.1882 – 3.1886 in)
   Service Limit: 80.970 mm (3.1878 in)
   D16Y5, D16Y7, D16Y8 engines:
   Standard (New): 74.980 – 74.990 mm (2.9520 – 2.9524 in)
   Service Limit: 74.970 mm (2.9516 in)

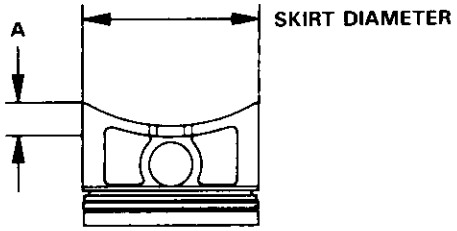

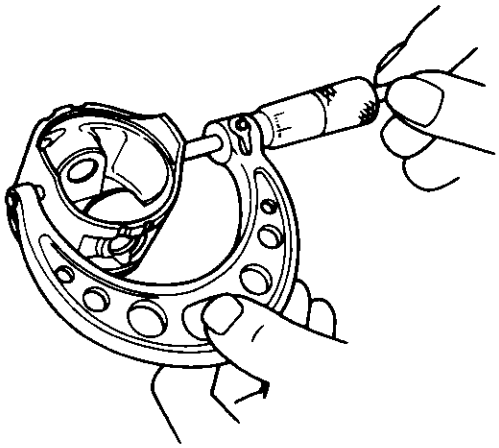

3. Calculate the difference between the cylinder bore diameter (see page 7-16) and the piston diameter.

   Piston-to-Cylinder Clearance
   Standard (New): 0.010 – 0.040 mm (0.0004 – 0.0016 in)
   Service Limit: 0.05 mm (0.002 in)

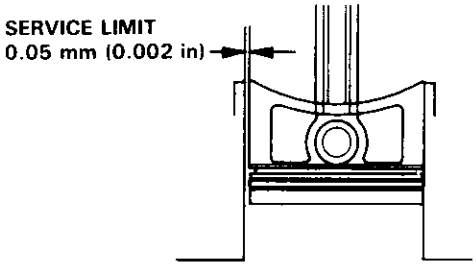

If the clearance is near or exceeds the service limit, inspect the piston and cylinder block for excessive wear.

Oversize Piston Diameter
B16A2 engine:
0.25: 81.23 – 81.24 mm (3.1980 – 3.1984 in)
D16Y5, D16Y7, D16Y8 engines:
0.25: 75.23 – 75.24 mm (2.9618 – 2.9622 in)
0.50: 75.48 – 75.49 mm (2.9716 – 2.9720 in)

Inspection

1. Measure wear and taper in directions X and Y at three levels in each cylinder as shown.

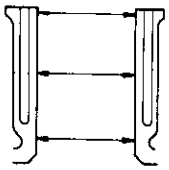

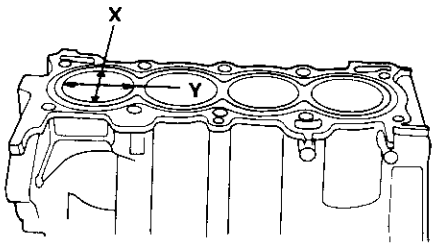

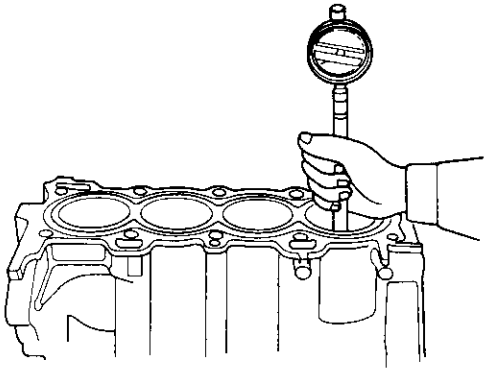

Cylinder Bore Size
B16A2 engine:
Standard (New): 81.00 – 81.02 mm (3.183 – 3.190 in)
Service Limit: 81.07 mm (3.192 in)
D16Y5, D16Y7, D16Y8 engines:
Standard (New): 75.00 – 75.02 mm (2.953 – 2.954 in)
Service Limit: 75.07 mm (2.956 in)

Oversize
B16A2 engine:
0.25: 81.25 – 81.27 mm (3.199 – 3.200 in)
D16Y5, D16Y7, D16Y8 engines:
0.25: 75.25 – 75.27 mm (2.9626 – 2.9634 in)
0.50: 75.50 – 75.52 mm (2.9724 – 2.9732 in)

Bore Taper
Limit: (Difference between first and third measurement) 0.05 mm (0.002 in)

- If the measurements in any cylinder are beyond the Oversize Bore Service Limit, replace the block.
- If the block is to be rebored, refer to Piston Clearance Inspection (see page 7-15) after reboring.

NOTE: Scored or scratched cylinder bores must be honed.

Reboring Limit:
B16A2 engine:
0.25 mm (0.01 in)
D16Y5, D16Y7, D16Y8 engines:
0.50 mm (0.02 in)

2. Check the top of the block for warpage.
Measure along the edges and across the center as shown.

SURFACES TO BE MEASURED

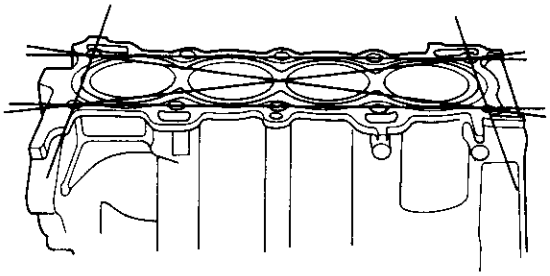

Engine Block Warpage:
B16A2 engine:
Standard (New): 0.05 mm (0.002 in) max.
Service Limit: 0.08 mm (0.003 in)
D16Y5, D16Y7, D16Y8 engines:
Standard (New): 0.07 mm (0.003 in) max.
Service Limit: 0.10 mm (0.004 in)

PRECISION STRAIGHT EDGE

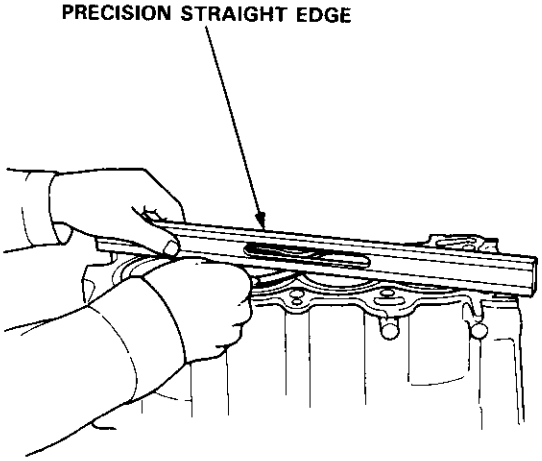

Bore Honing

1. Measure cylinder bores as shown on page 7-16. If the block is to be reused, hone the cylinders and remeasure the bores.

2. Hone cylinder bores with honing oil and a fine (400 grit) stone in a 60 degree cross-hatch pattern.

   NOTE:
   - Use only a rigid hone with 400 grit or finer stone such as Sunnen, Ammco, or equivalent.
   - Do not use stones that are worn or broken.

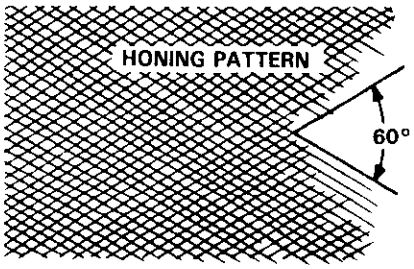

3. When honing is complete, thoroughly clean the engine block of all metal particles. Wash the cylinder bores with hot soapy water, then dry and oil immediately to prevent rusting.

   NOTE: Never use solvent, it will only redistribute the grit on the cylinder walls.

4. If scoring or scratches are still present in cylinder bores after honing to the service limit, rebore the cylinder block.

   NOTE: Some light vertical scoring and scratching is acceptable if it is not deep enough to catch your fingernail and does not run the full length of the bore.

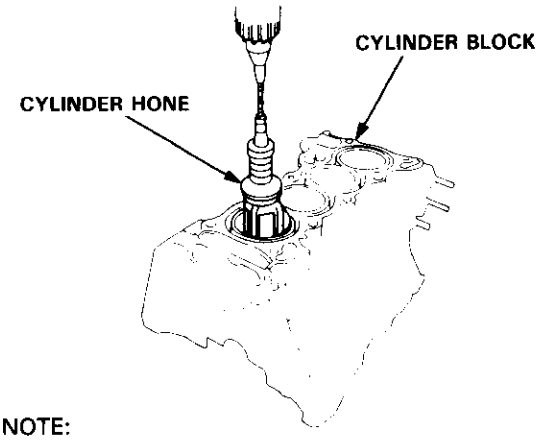

NOTE:
- After honing, clean the cylinder thoroughly with soapy water.
- Only a scored or scratched cylinder bore must be honed.

Removal

1. Assemble the special tool as shown.

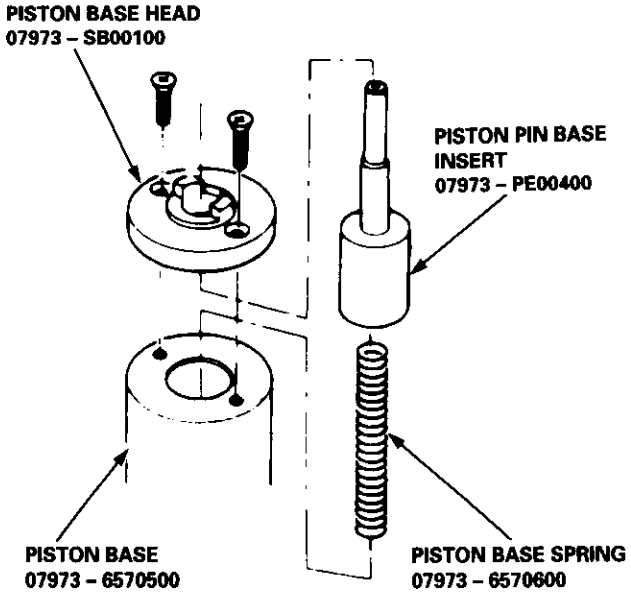

2. Assemble and adjust the length of the piston pin driver and shaft to 53 mm (2.1 in) as shown.

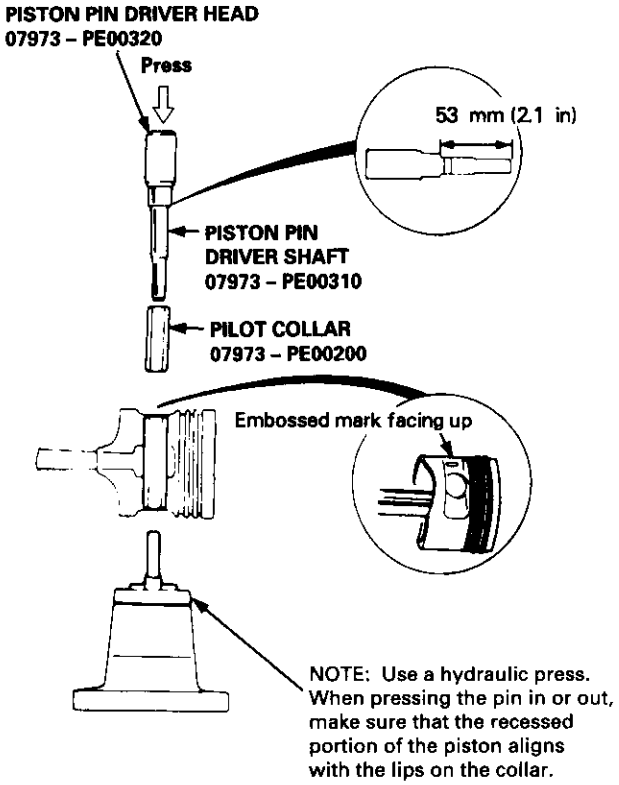

3. Place the piston on the special tool and press the pin out with the special tools and a hydraulic press.

Selection

Each rod falls into one of four tolerance ranges (from 0 to + 0.024 mm (0 to + 0.0009 in), in 0.006 mm (0.0002 in) increments) depending on the size of its big end bore. It's then stamped with a number (1, 2, 3, or 4) indicating the range.
You may find any combination of 1, 2, 3, or 4 in any engine.

Normal Bore Size: 48.0 mm (1.89 in)

NOTE:
- Reference numbers are for big end bore size and do NOT indicate the position of the rod in the engine.
- Inspect connecting rod for cracks and heat damage.

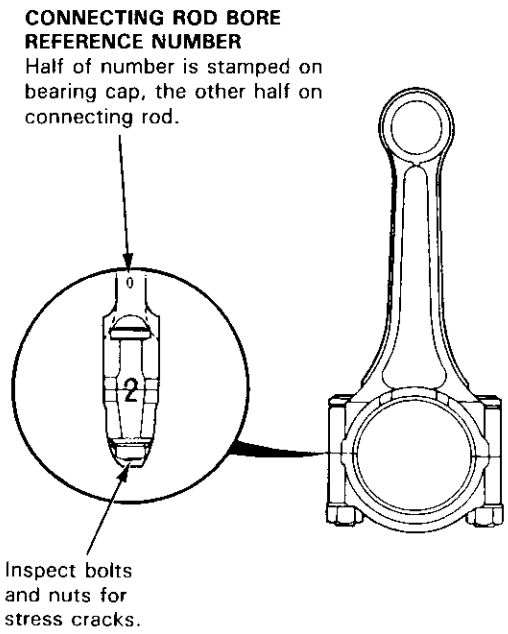

Installation

1. Use a hydraulic press for installation.
   - When pressing the pin in or out, be sure you position the recessed flat on the piston against the lugs on the base attachment.

B16A2 engine

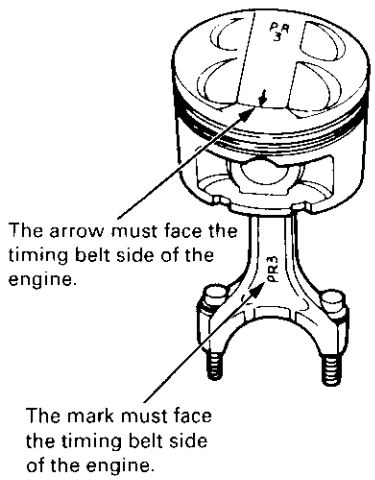

D16Y5, D16Y7, D16Y8 engines

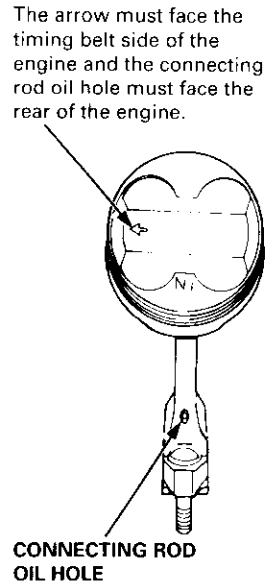

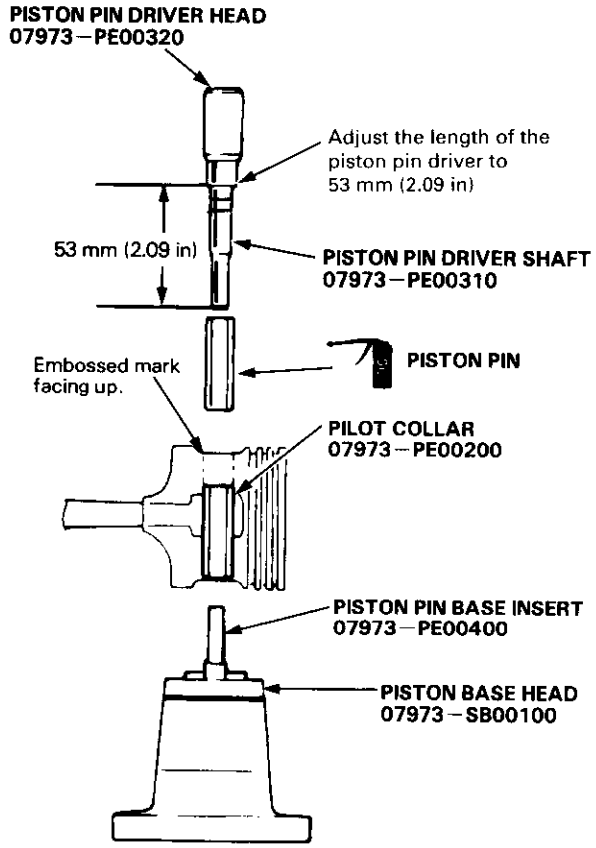

Inspection

1. Measure the diameter of the piston pin.

   Piston Pin Diameter:
   B16A2 engine:
   Standard (New): 20.994 – 21.000 mm
   (0.8265 – 0.8268 in)
   Oversize: 20.997 – 21.003
   (0.8267 – 0.8269 in)
   D16Y5, D16Y7, D16Y8 engines:
   Standard (New): 18.994 – 19.000 mm
   (0.7478 – 0.7480 in)
   Oversize: 18.997 – 19.003
   (0.7479 – 0.7481 in)

   NOTE: All replacement piston pins are oversize.

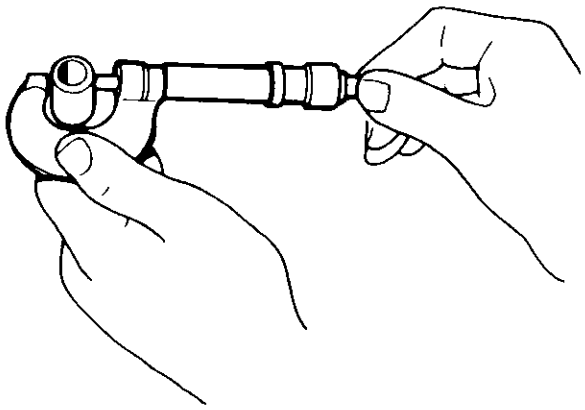

2. Zero the dial indicator to the piston pin diameter.

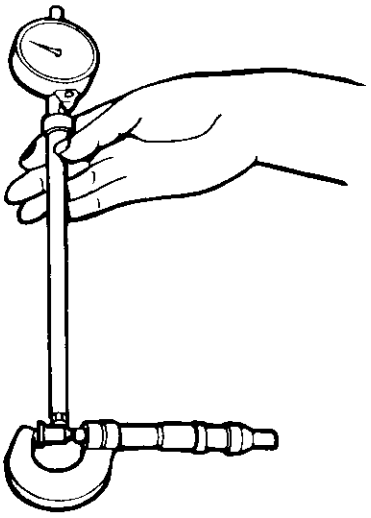

3. Measure the piston pin-to-piston clearance.

   NOTE: Check the piston for distortion or cracks.

   If the piston pin clearance is greater than 0.024 mm (0.0009 in), remeasure using an oversized piston pin.

   Piston Pin-to-Piston Clearance:
   Standard (New): 0.010 – 0.022 mm
   (0.0004 – 0.0009 in)

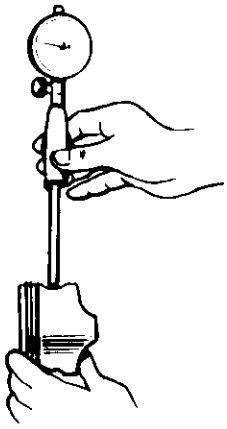

4. Check the difference between the piston pin diameter and the connecting rod small end diameter.

   Piston Pin-to-Connecting Rod Interference:
   B16A2 engine:
   Standard (New): 0.013 – 0.032 mm
   (0.0005 – 0.0013 in)
   D16Y5, D16Y7, D16Y8 engines:
   Standard (New): 0.014 – 0.040 mm
   (0.0006 – 0.0016 in)

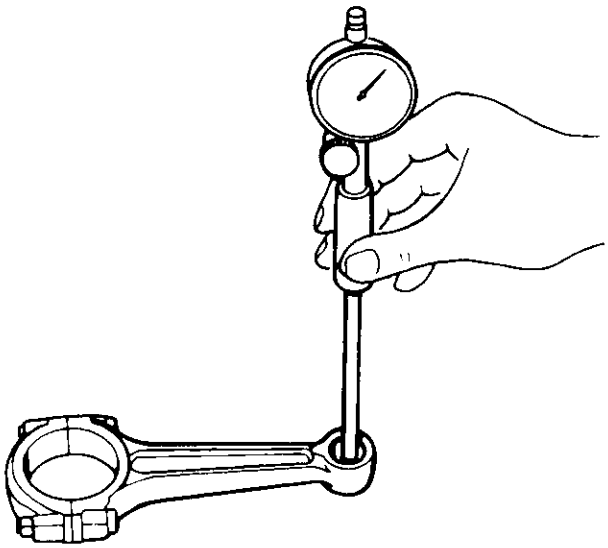

End Gap

1. Using a piston, push a new ring into the cylinder bore 15 – 20 mm (0.6 – 0.8 in) from the bottom.

2. Measure the piston ring end-gap with a feeler gauge:

   - If the gap is too small, check to see if you have the proper rings for your engine.
   - If the gap is too large, recheck the cylinder bore diameter against the wear limits on page 7-16. If the bore is over the service limit, the cylinder block must be rebored.

Piston Ring End-Gap:
Top Ring
B16A2 engine
Standard (New): 0.20 – 0.35 mm (0.008 – 0.014 in)
Service Limit: 0.60 mm (0.024 in)
D16Y5, D16Y7, D16Y8 engines
Standard (New): 0.15 – 0.30 mm (0.006 – 0.012 in)
Service Limit: 0.60 mm (0.024 in)

Second Ring
B16A2 engine
Standard (New): 0.40 – 0.55 mm (0.016 – 0.022 in)
Service Limit: 0.70 mm (0.028 in)
D16Y5, D16Y7, D16Y8 engines
Standard (New): 0.30 – 0.45 mm (0.012 – 0.018 in)
Service Limit: 0.70 mm (0.028 in)

Oil Ring
B16A2 engine
Standard (New): 0.20 – 0.50 mm (0.008 – 0.020 in)
Service Limit: 0.70 mm (0.028 in)
D16Y5, D16Y7, D16Y8 engines
Standard (New): 0.20 – 0.70 mm (0.008 – 0.028 in)
Service Limit: 0.80 mm (0.031 in)

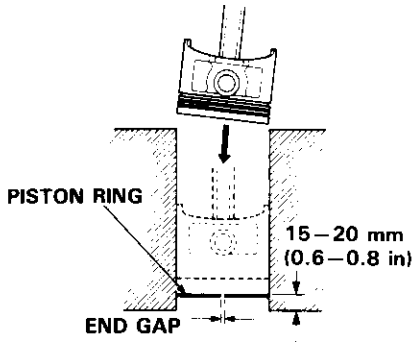

Replacement

1. Using a ring expander, remove the old piston rings.

2. Clean all ring grooves thoroughly.

   NOTE:
   - Use a squared-off broken ring or ring groove cleaner with blade to fit piston grooves.
   - Top ring groove is 1.0 mm (0.039 in) wide.
   - Second ring groove is 1.2 mm (0.047 in) wide.
   - Oil ring groove is 2.8 mm (0.11 in) wide.
   - File down the blade if necessary.

   CAUTION: Do not use a wire brush to clean ring lands, or cut ring lands deeper with cleaning tool.

   NOTE: If the piston is to be separated from the connecting rod, do not install new rings yet.

3. Install new rings in the proper sequence and position (see page 7-22).

   NOTE: Do not reuse old piston rings.

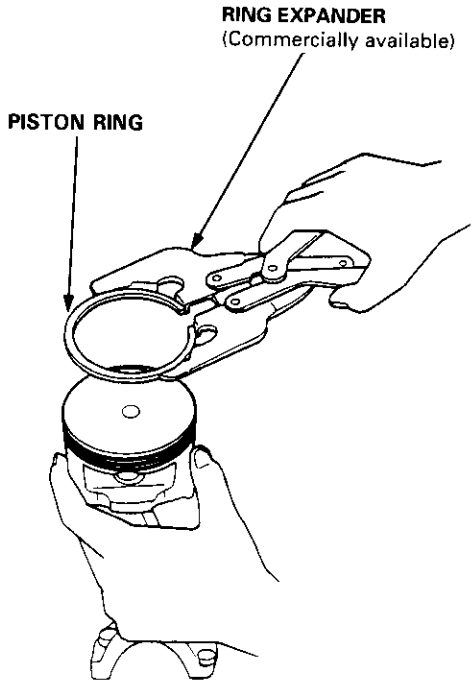

Ring-to-Groove Clearance

After installing a new set of rings, measure ring-to-groove clearances:

Top Ring Clearance
Standard (New):
B16A2 engine:
0.045 – 0.070 mm (0.0018 – 0.0028 in)
D16Y5, D16Y7, D16Y8 engines:
0.035 – 0.060 mm (0.0014 – 0.0024 in)
Service Limit: 0.13 mm (0.005 in)

Second Ring Clearance
Standard (New):
B16A2 engine:
0.040 – 0.065 mm (0.0016 – 0.0026 in)
D16Y5, D16Y7, D16Y8 engines:
0.030 – 0.055 mm (0.0012 – 0.0022 in)
Service Limit: 0.13 mm (0.005 in)

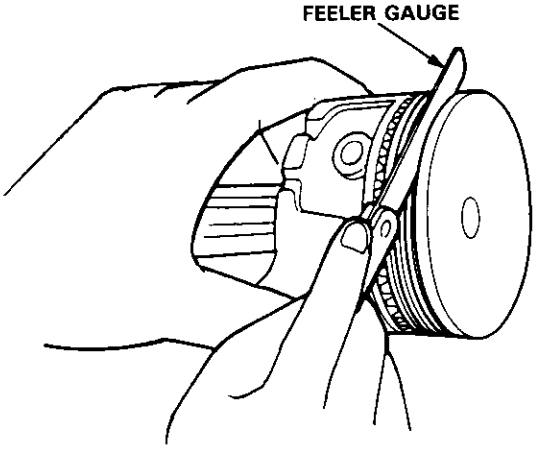

Alignment

1. Install the rings as shown.

   NOTE: The manufacturing marks must be facing upward.

TOP RING (Chrome)

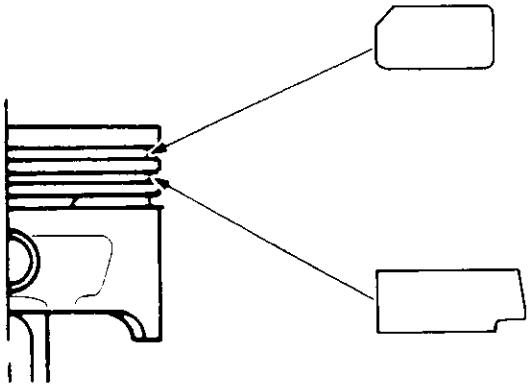

SECOND RING (Dark)

Piston Ring Dimensions:

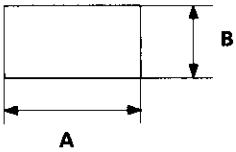

Top Ring (Standard) Unit mm (in)

	A	B
B16A2 engine	3.1 (0.12)	1.0 (0.04)
D16Y5, D16Y7, D16Y8 engines	2.6 (0.10)	1.0 (0.04)

Second Ring (Standard) Unit mm (in)

	A	B
B16A2 engine	3.3 (0.13)	1.2 (0.05)
D16Y5, D16Y7, D16Y8 engines	3.0 (0.12)	1.2 (0.05)

(cont'd)

Alignment (cont'd)

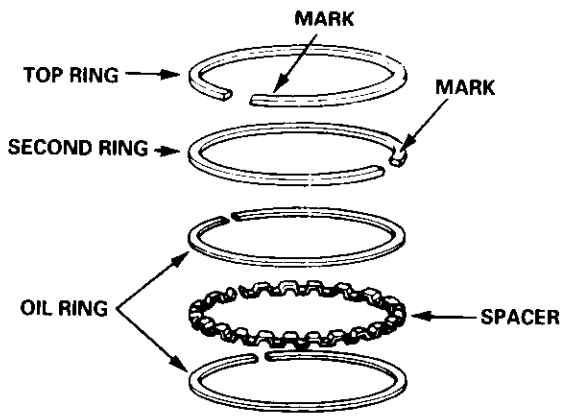

2. Rotate the rings in their grooves to make sure they do not bind.

3. Position the ring end gaps as shown:

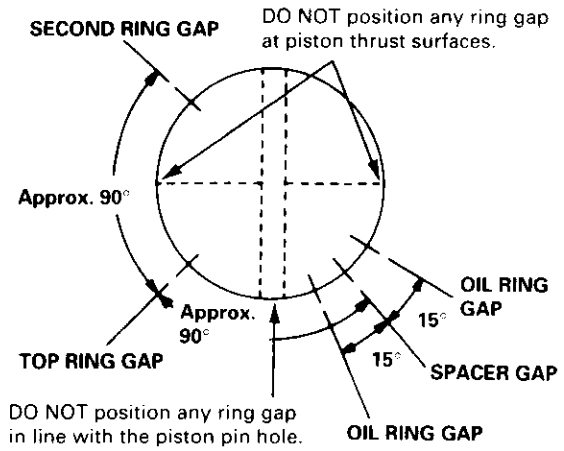

Installation

OIL The seal surface on the block should be dry. Apply a light coat of oil to the crankshaft and to the lip of the seal.

1. Drive the crankshaft oil seal squarely into the right side cover using the special tools.

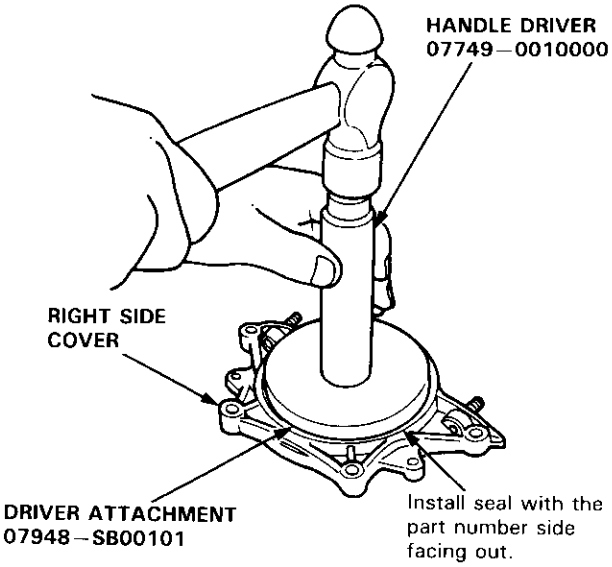

2. Confirm that the clearance is equal all the way around with a feeler gauge.

Clearance: 0.5 – 0.8 mm (0.02 – 0.03 in)

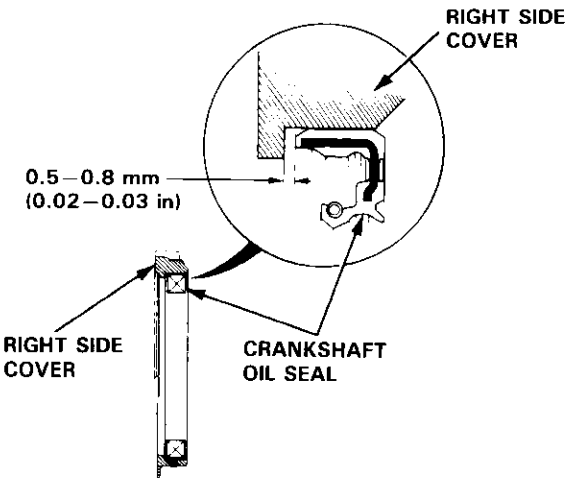

NOTE: Refer to page 8-14 for installation of the oil pump side crankshaft oil seal.

Installation

Before installing the pistons, apply a coat of engine oil to the ring grooves and cylinder bores.

1. If the crankshaft is already installed:
   - Set the crankshaft to BDC for each cylinder.
   - Remove the connecting rod caps, and slip short sections of rubber hose over the threaded ends of the connecting rod bolts.
   - Install the ring compressor, check that the bearing is securely in place, then position the piston in the cylinder, and tap it in using the wooden handle of a hammer.
   - Stop after the ring compressor pops free, and check the connecting rod-to-crank journal alignment before pushing the piston into place.
   - Apply engine oil to the bolt threads. Install the rod caps with bearings, and torque the nuts to:
     B16A2 engine:
     40 N·m (4.1 kgf·m, 30 lbf·ft)
     D16Y5, D16Y7, D16Y8 engines:
     31 N·m (3.2 kgf·m, 23 lbf·ft)

2. If the crankshaft is not installed:
   - Remove the rod caps and bearings, install the ring compressor, then position the piston in the cylinder, and tap it in using the wooden handle of a hammer.
   - Position all pistons at top dead center.

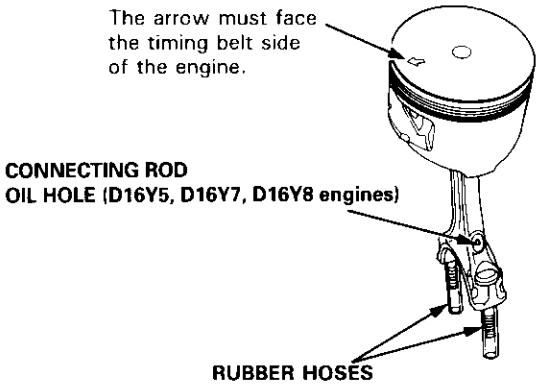

NOTE: Maintain downward force on the ring compressor to prevent the rings from expanding before entering the cylinder bore.

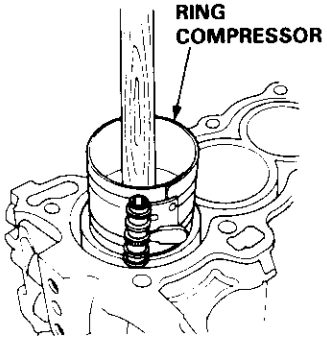

Installation

Before installing the crankshaft, apply a coat of engine oil to the main bearings and rod bearings.

1. Insert the bearing halves into the cylinder block and connecting rods.
2. Hold the crankshaft so the rod journals for cylinders No. 2 and No. 3 are straight down.
3. Lower the crankshaft into the block, seating the rod journals into connecting rods No. 2 and No. 3, and install the rod caps and nuts finger-tight.

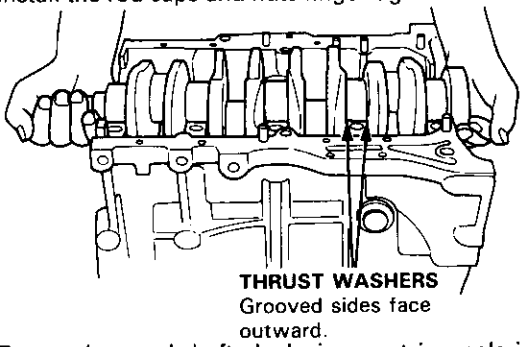

4. Rotate the crankshaft clockwise, seat journals into connecting rods No. 1 and No. 4, and install the rod caps and nuts finger-tight.

   NOTE: Install caps so the bearing recess is on the same side as the recess in the rod.

5. Check rod bearing clearance with plastigage (see page 7-11), then torque the capnuts. Apply engine oil to the bolt threads.

   Torque:
   B16A2 engine:
   40 N·m (4.1 kgf·m, 30 lbf·ft)
   D16Y5, D16Y7, D16Y8 engines:
   31 N·m (3.2 kgf·m, 23 lbf·ft)

   NOTE: Reference numbers on connecting rod are for big-end bore tolerance and do not indicate the position of piston in the engine.

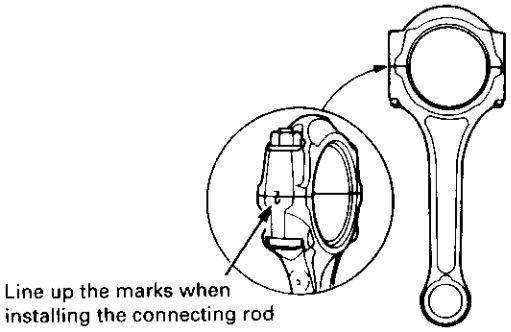

6. Install the thrust washers on the No. 4 journal. Oil the thrust washer surfaces. (cont'd)

Installation (cont'd)

7. Install the main bearing caps.
   Check clearance with plastigage (see page 7-9), then tighten the bearing cap bolts in 2 steps.

   First step: 25 N·m (2.5 kgf·m, 18 lbf·ft)
   Second step:
   B16A2 engine:
   76 N·m (7.8 kgf·m, 56 lbf·ft)
   D16Y5, D16Y7, D16Y8 engines:
   51 N·m (5.2 kgf·m, 38 lbf·ft)

   NOTE: Coat the thrust washer surfaces and bolt threads with oil.

MAIN BEARING CAP BOLTS TIGHTENING SEQUENCE

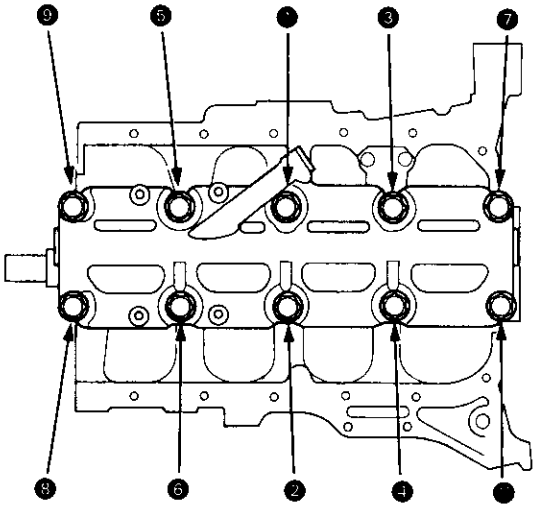

CAUTION: Whenever any crankshaft or connecting rod bearing is replaced, it is necessary after reassembly to run the engine at idling speed until it reaches normal operating temperature, then continue to run it for approximately 15 minutes.

NOTE:
- Use liquid gasket, part No. 08718 – 0001 or 08718 – 0003.
- Check that the mating surfaces are clean and dry before applying liquid gasket.
- Apply liquid gasket evenly, being careful to cover all the mating surface.
- To prevent oil leakage, apply liquid gasket to the inner threads of the bolt holes.
- Do not install the parts if five minutes or more have elapsed since applying the liquid gasket. Instead reapply liquid gasket after removing the old residue.
- After assembly, wait at least 30 minutes before filling the engine with oil.

8. Apply liquid gasket to the block mating surface of the right side cover, then install it on the cylinder block.

B16A2 engine:

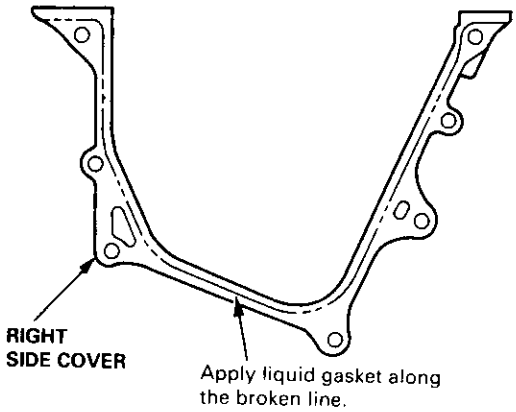

D16Y5, D16Y7, D16Y8 engines:

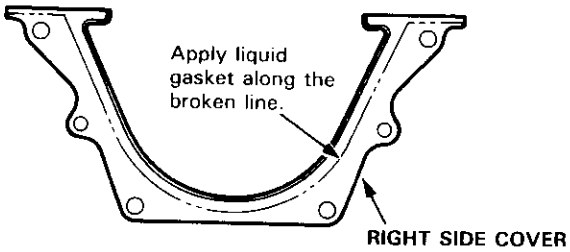

B16A2 engine:

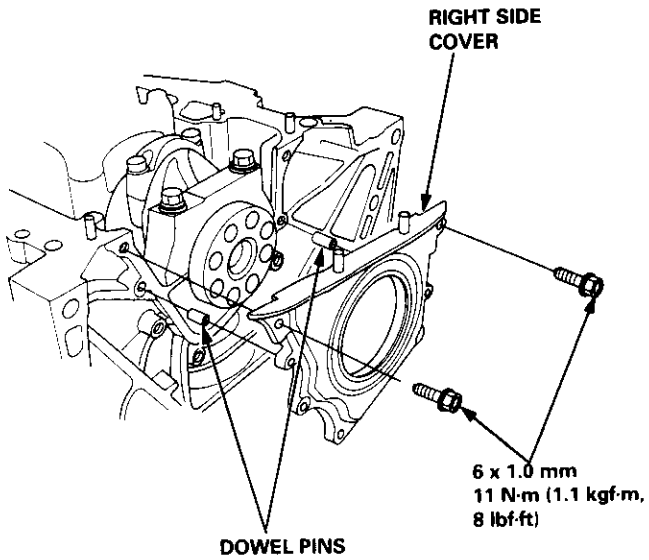

D16Y5, D16Y7, D16Y8 engines:

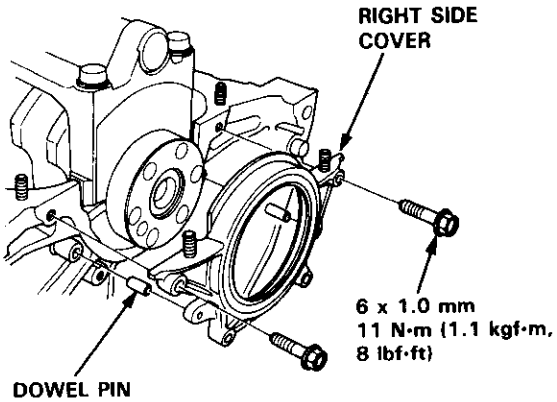

9. Apply liquid gasket to the oil pump mating surface of the block, then install the oil pump on the cylinder block.

   Apply grease to the lips of the oil seals.
   Then, align the inner rotor with the crankshaft and install the oil pump. When the pump is in place, clean any excess grease off the crankshaft. Check that the oil seal lips are not distorted.

B16A2 engine:

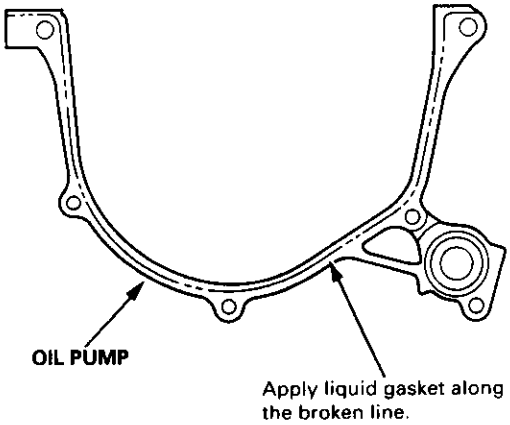

D16Y5, D16Y7, D16Y8 engines:

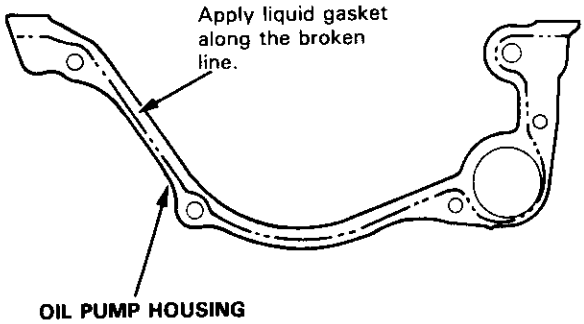

(cont'd)

Installation (cont'd)

NOTE:
- Apply a light coat of oil to the crankshaft and to the lip of seal.
- Use new O-rings and apply oil when installing them.

10. Install the oil screen.

B16A2 engine:

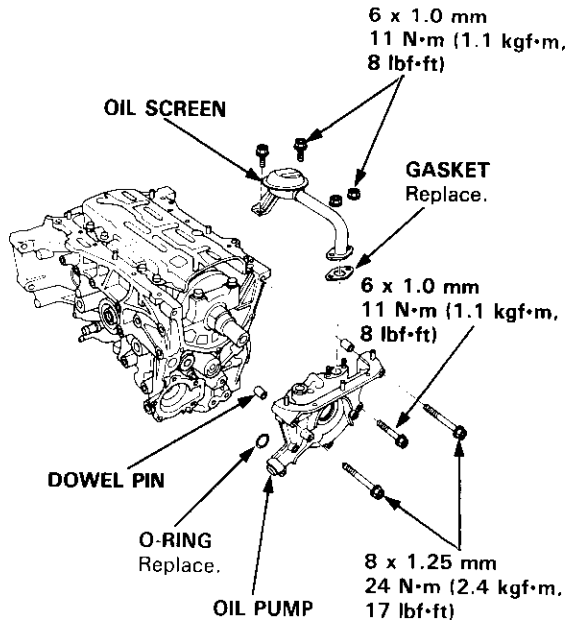

D16Y5, D16Y7, D16Y8 engines:

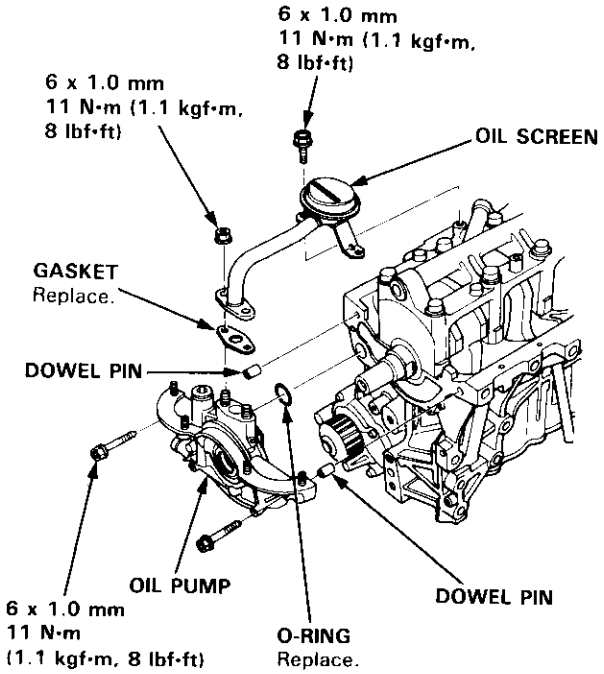

Installation

D16Y5, D16Y8 engines:

1. Install the oil pan gasket on the oil pan.

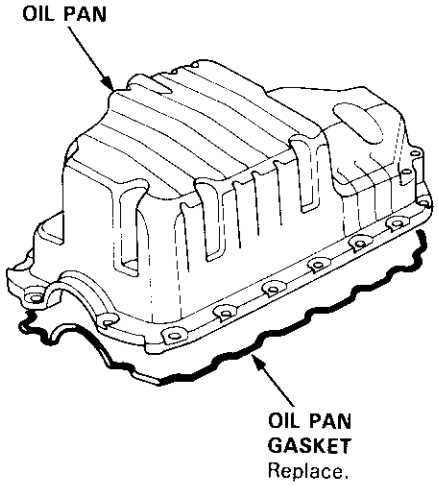

2. Apply liquid gasket to the block mating surfaces of the oil pan, then install it. Apply liquid gasket to the shaded areas.
   NOTE:
   - Use liquid gasket part No. 08718 - 0001 or 08718 - 0003.
   - Check that the mating surfaces are clean and dry before applying liquid gasket.
   - Apply liquid gasket as an even bead, centered between the edges of the mating surface.
   - To prevent leakage of oil, apply liquid gasket to the inner threads of the bolt holes.
   - Do not install the parts if five minutes or more have elapsed since applying the liquid gasket. Instead, reapply liquid gasket after removing the old residue.
   - After assembly, wait at least 30 minutes before filling the engine with oil.

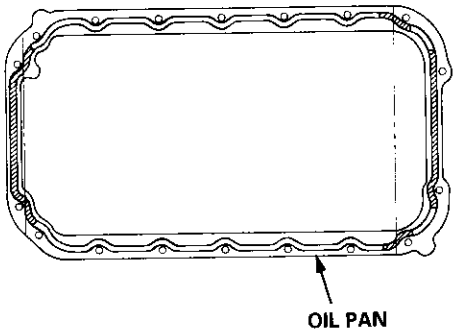

3. Tighten nuts finger-tight at six points as shown below.

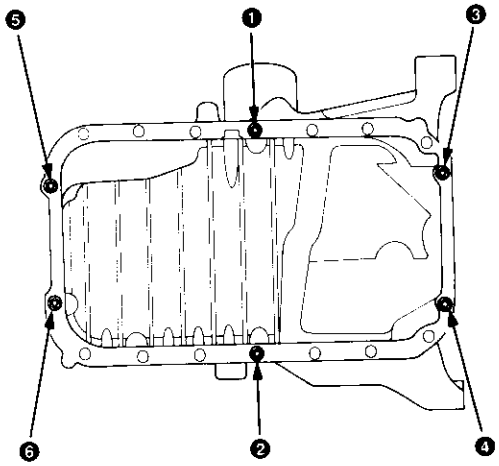

4. Tighten all bolts and nuts, starting from nut ①, clockwise in three steps.
   NOTE: Excessive tightening can cause distortion of the oil pan gasket and oil leakage.

   Torque: 12 N·m (1.2 kgf·m, 8.7 lbf·ft)

B16A2, D16Y7 engines:

1. Apply liquid gasket on the oil pump and right side cover mating areas as shown below.

   NOTE:
   - Use liquid gasket, part No. 08718 - 0001 or 08718 - 0003.
   - Check that the mating surfaces are clean and dry before applying liquid gasket.
   - Apply liquid gasket as an even bead, centered between the edges of the mating surface.
   - To prevent oil leakage, apply liquid gasket to the inner threads of the bolt holes.
   - Do not install the parts if five minutes or more have elapsed since applying the liquid gasket. Instead, reapply liquid gasket after removing the old residue.
   - After assembly, wait at least 30 minutes before filling the engine with oil.

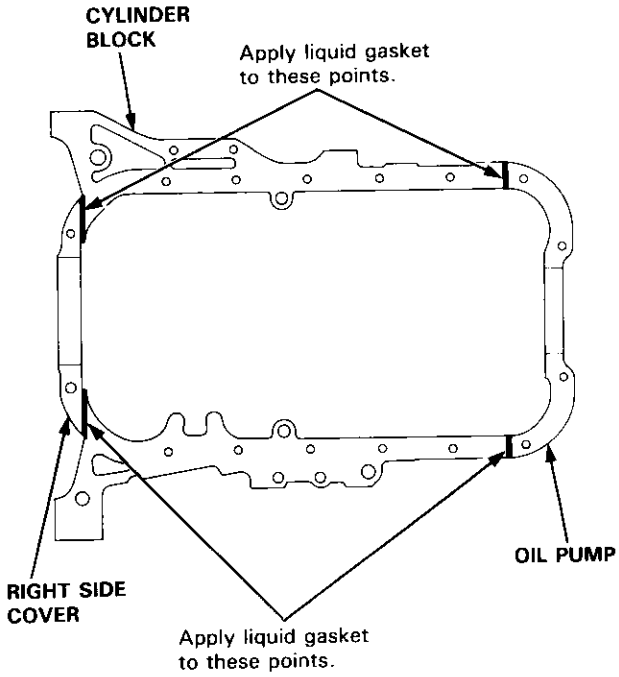

(cont'd)

Installation (cont'd)

2. Install the oil pan gasket and oil pan.

   NOTE:
   - Use a new oil pan gasket.
   - Install the oil pan no more than five minutes after applying liquid gasket.

   B16A2 engine:

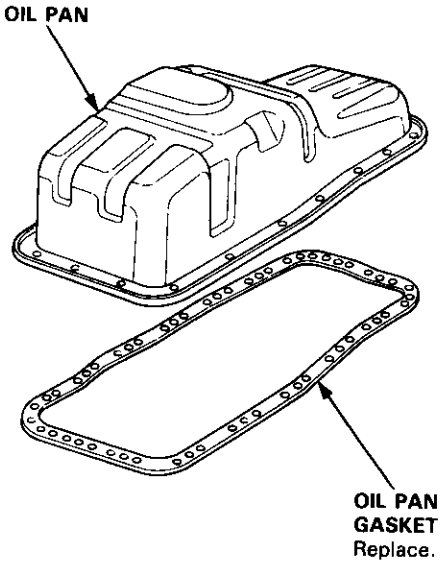

   D16Y7 engine:

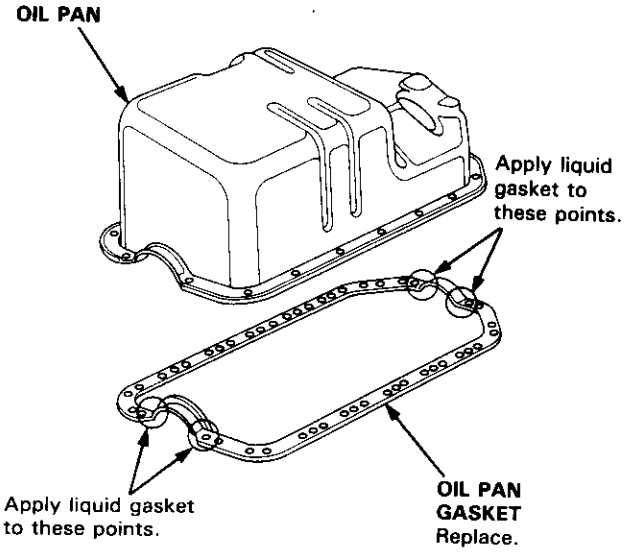

3. Tighten the bolts and nuts finger tight at six points as shown below.

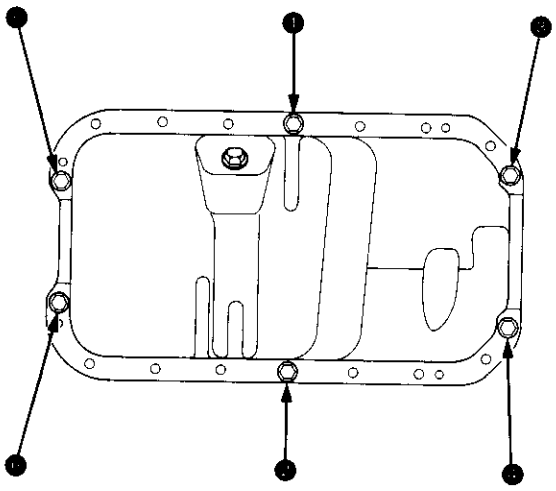

4. Tighten all bolts and nuts, starting from nut ①, clock wise in three steps.

   NOTE: Excessive tightening can cause distortion of the oil pan gasket and oil leakage.

   Torque: 12 N·m (1.2 kgf·m, 8.7 lbf·ft)

Installation

NOTE:
- Engine removal is not required.
- The crankshaft oil seal housing should be dry.
  Apply a light coat of grease to the crankshaft and to the lips of the seals.

1. Using the special tool, drive in the timing pulley-end seal until the driver bottoms against the oil pump.
   When the seal is in place, clean any excess grease off the crankshaft and check that the oil seal lip is not distorted.

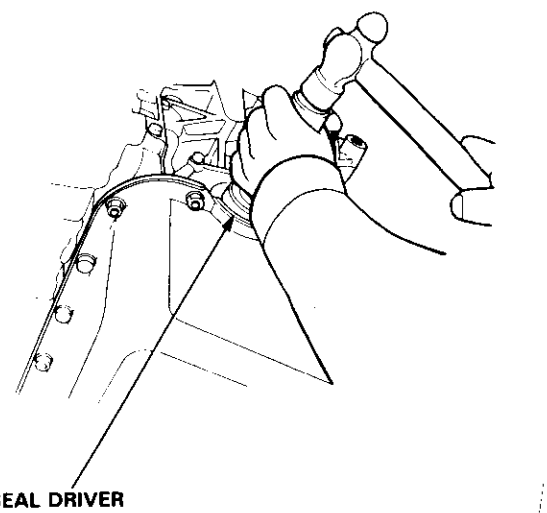

SEAL DRIVER
07947–SB00200
Install seal with the part number side facing out.

2. Measure the flywheel-end seal thickness and the oil seal housing depth. Using the special tool, drive the flywheel-end seal into the rear cover to the point where the clearance between the bottom of the oil seal and the right side cover is 0.5 – 0.8 mm (0.02 – 0.03 in) (see page 7-23).

   NOTE: Align the hole in the driver attachment with the pin on the crankshaft.

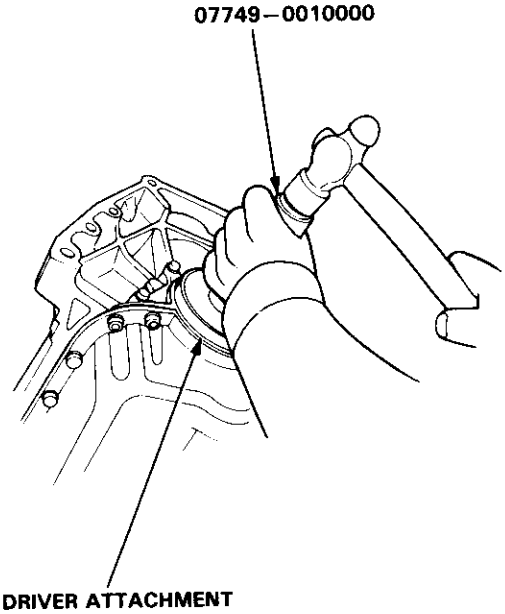

DRIVER ATTACHMENT
07948–SB00101
Install seal with the part number side facing out.

Engine Lubrication

Special Tools 8-2
Illustrated Index 8-3
Engine Oil
  Inspection 8-6
  Replacement 8-7
Oil Filter
  Replacement 8-8
Oil Pressure
  Testing 8-9
Oil Jet (B16A2 engine)
  Inspection 8-10
Oil Pump
  Overhaul 8-11
  Removal/Inspection/Installation 8-13

Special Tools

Ref. No.	Tool Number	Description	Qty	Page Reference
①	07746 – 0010400	Attachment, 52 x 55 mm	1	8-14
②	07749 – 0010000	Driver	1	8-14
③	07912 – 6110001	Oil Filter Wrench	1	8-8

①

②

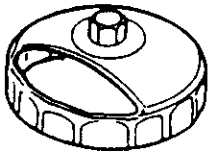

③

NOTE:
- Use new O-rings when reassembling.
- Apply oil to O-rings before installation.
- Use liquid gasket, Part No. 08718 – 0001 or 08718 – 0003.
- Clean the oil pan gasket mating surfaces before installing.

CAUTION: Do not overtighten the drain bolt.

B16A2 engine:

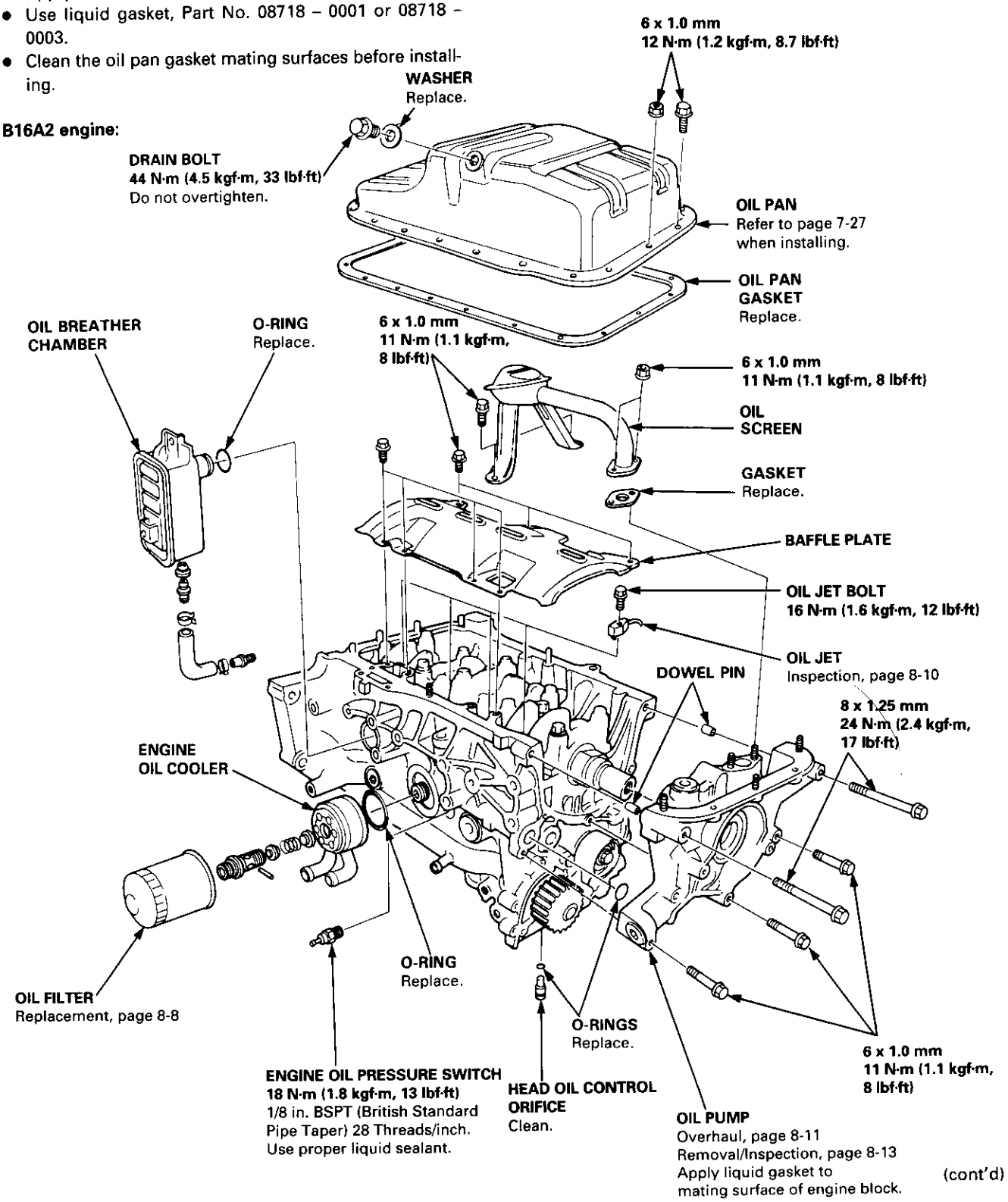

(cont'd)

(cont'd)

NOTE:
- Use new O-rings when reassembling.
- Apply oil to O-rings before installation.
- Use liquid gasket, Part No. 08718 – 0001 or 08718 – 0003.
- Clean the oil pan gasket mating surfaces before installing.
- Apply liquid gasket to the recesses of the oil pan gasket (see page 7-27).

CAUTION: Do not overtighten the drain bolt.

D16Y7 engine:

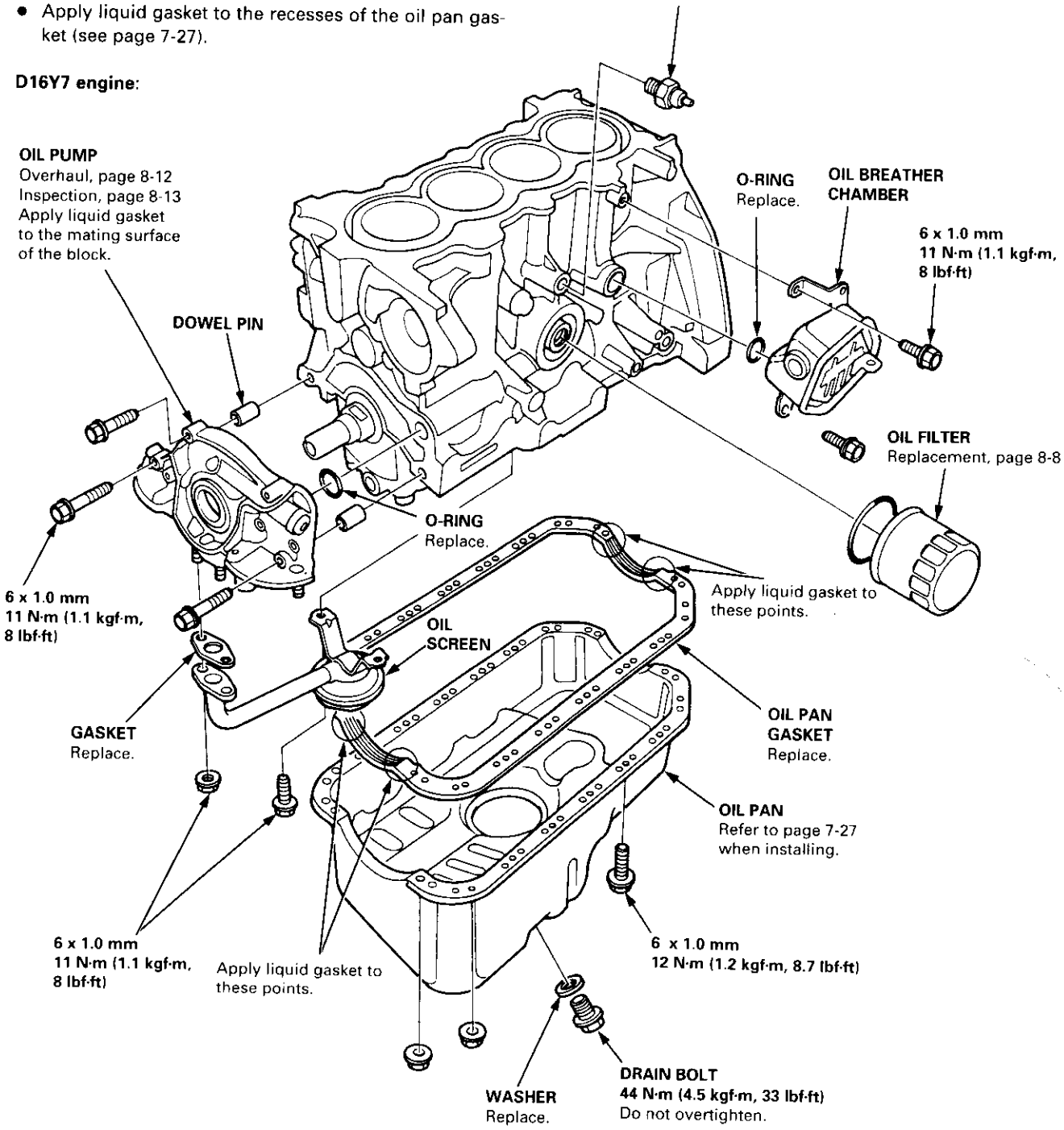

NOTE:
- Use new O-rings when reassembling.
- Apply oil to O-rings before installation.
- Use liquid gasket, Part No. 08718 – 0001 or 08718 – 0003.
- Clean the oil pan gasket mating surfaces before installing.

CAUTION: Do not overtighten the drain bolt.

D16Y5, D16Y8 engines:

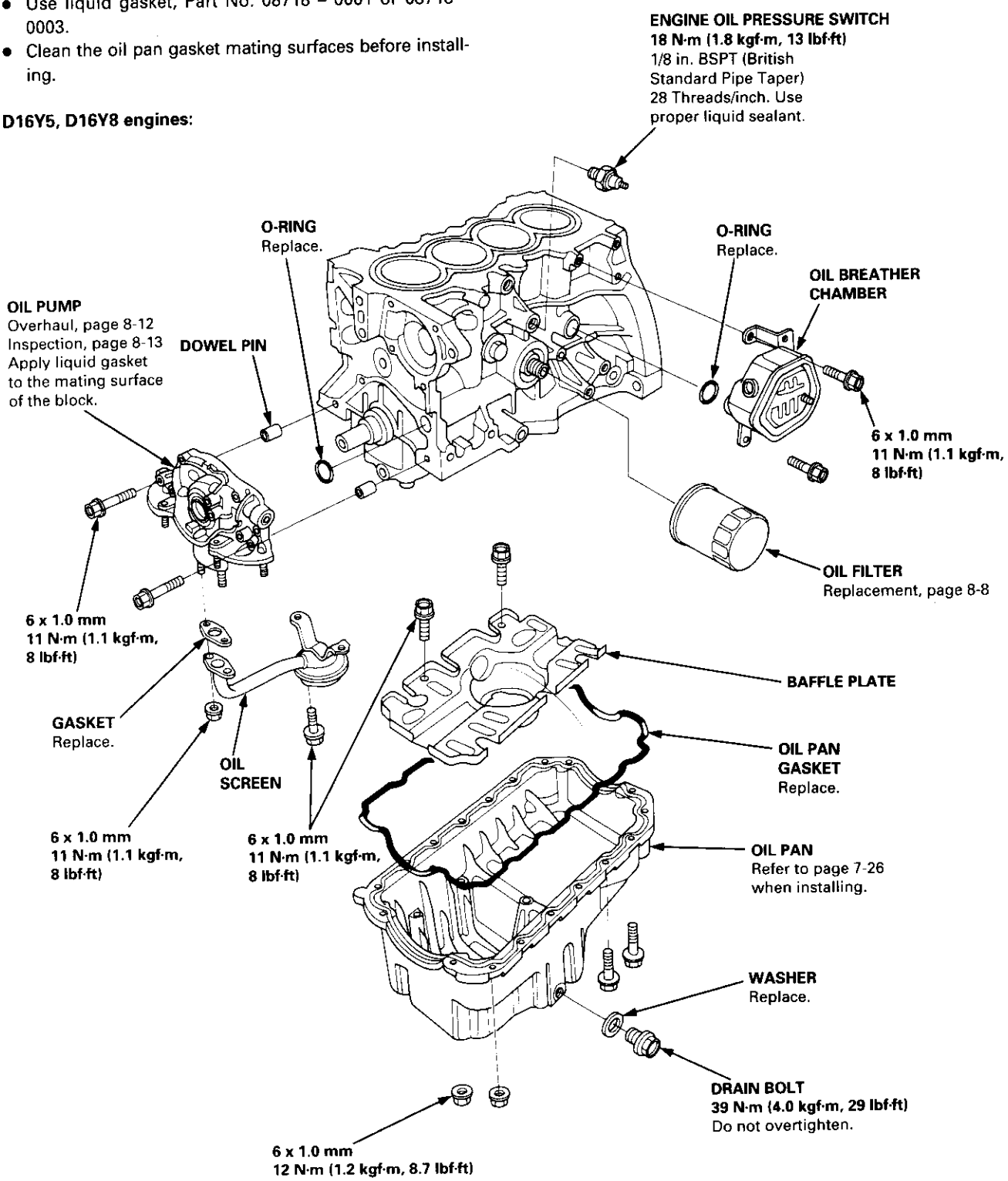

Inspection

1. Park the vehicle on level ground, and turn off the engine. Allow the oil a few minutes to drain back into the oil pan so the dipstick will show the actual level.

2. Make certain that the oil level indicated on the dipstick is between the upper and lower marks.

3. If the level has dropped close to the lower mark, add oil until it reaches the upper mark.

CAUTION: Insert the dipstick carefully to avoid bending it.

B16A2 engine:

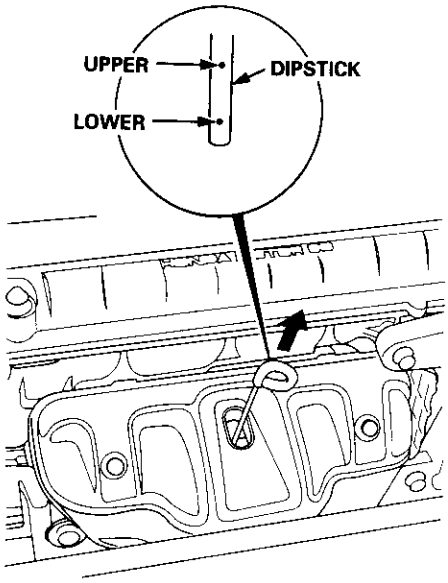

D16Y5, D16Y7, D16Y8 engines:

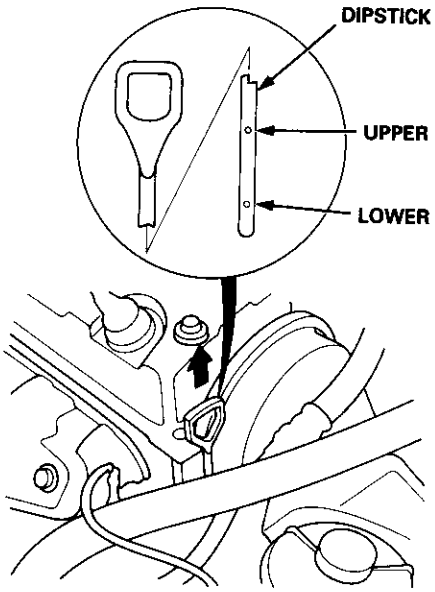

Replacement

CAUTION: Remove the drain bolt carefully while the engine is hot; the hot oil may cause scalding.

1. Warm up the engine.

2. Drain the engine oil.

B16A2, D16Y7 engines:

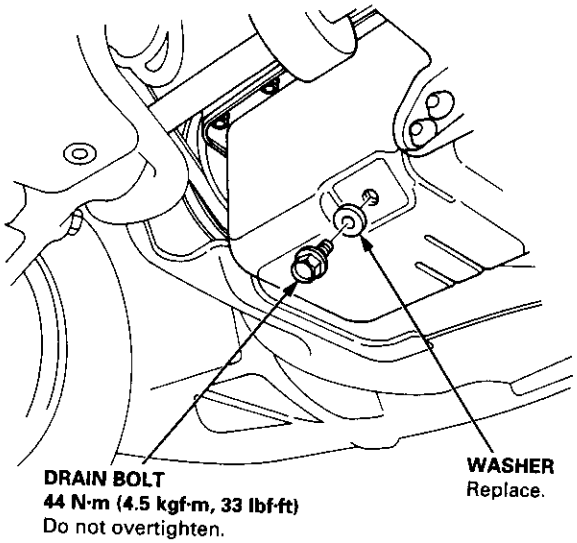

D16Y5, D16Y8 engines:

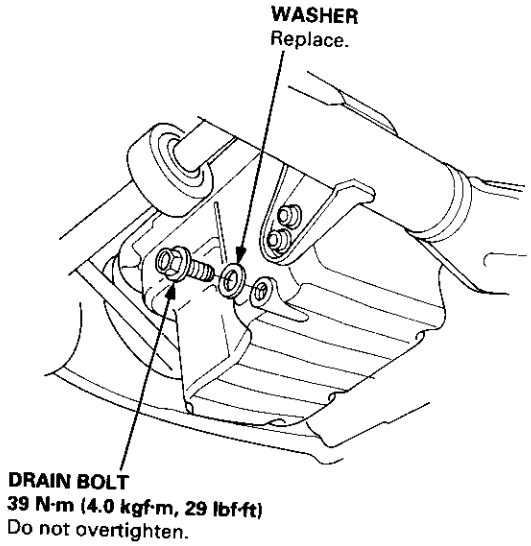

3. Reinstall the drain bolt with a new washer, and refill the engine with the recommended oil.

Requirement	API Service Grade: Use an "Energy Conserving" SJ grade oil or an "Energy Conserving II" SH grade oil, SAE 5W – 30 preferred. You can also use an oil that bears the API CERTIFICATION mark.
Capacity	B16A2 engine: 3.7 ℓ (3.9 US qt, 3.3 Imp qt) at oil change. 4.0 ℓ (4.2 US qt, 3.5 Imp qt) at oil change, including filter. 4.8 ℓ (5.1 US qt, 4.2 Imp qt) after engine overhaul. D16Y7 engine: 3.6 ℓ (3.8 US qt, 3.2 Imp qt) at change, including filter. 3.3 ℓ (3.5 US qt, 2.9 Imp qt) at change, without filter. 4.3 ℓ (4.5 US qt, 3.8 Imp qt) after engine overhaul. D16Y5, D16Y8 engines: 3.3 ℓ (3.5 US qt, 2.9 Imp qt) at change, including filter. 3.0 ℓ (3.2 US qt, 2.6 Imp qt) at change, without filter. 3.7 ℓ (3.9 US qt, 3.3 Imp qt) after engine overhaul.
Change	Every 7,500 miles (12,000 km) or 12 months (Normal Conditions). Every 3,750 miles (6,000 km) or 6 months (Severe Conditions).

NOTE: Under normal conditions, the oil filter should be replaced at every other oil change. Under severe conditions, the oil filter should be replaced at each oil change. The numbers in the middle of the API Service label tell you the oil's SAE viscosity or weight. Select the oil for your car according to this chart:

Ambient Temperature

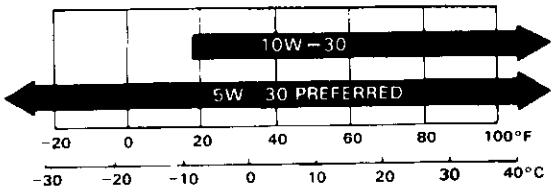

An oil with a viscosity of 5W – 30 is preferred for improved fuel economy and year-round protection in the car. You may use a 10W – 30 oil if the climate in your area is limited to the temperature range shown on the chart.

API CERTIFICATION MARK

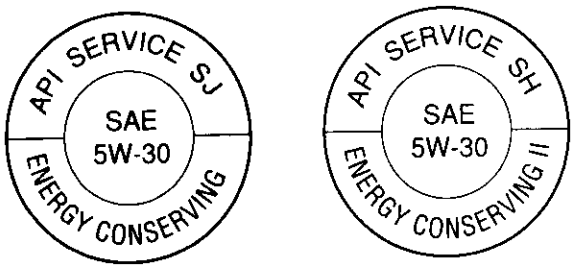

API SERVICE LABEL

4. Run the engine for more than three minutes, then check for oil leakage.

Replacement

⚠ WARNING

- **After the engine has been run, the exhaust pipe will be hot; be careful when working around the exhaust pipe.**
- **Be careful when loosening the drain bolt while the engine is hot. Burns can result because the oil temperature is very high.**

1. Remove the oil filter with the oil filter wrench.

2. Inspect the threads and rubber seal on the new filter. Wipe off the seat on the engine block, then apply a light coat of oil to the new filter's rubber seal.

   NOTE: Use only filters with a built-in bypass system.

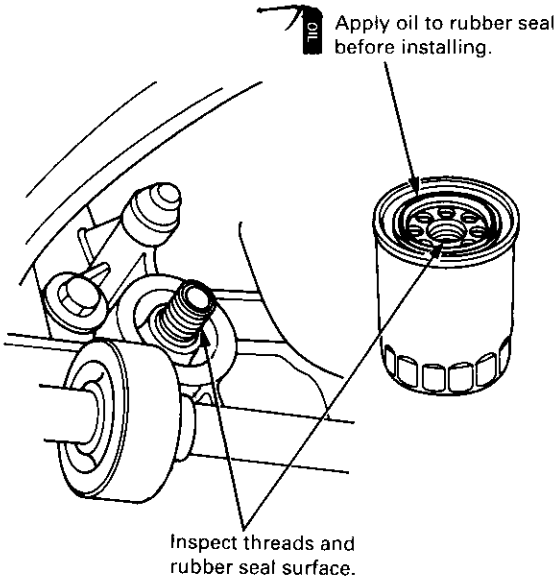

3. Install the oil filter by hand.

4. After the rubber seal seats, tighten the oil filter clockwise with the oil filter wrench.

   Tighten: 7/8 turn clockwise.
   Tightening torque: 22 N·m (2.2 kgf·m, 16 lbf·ft)

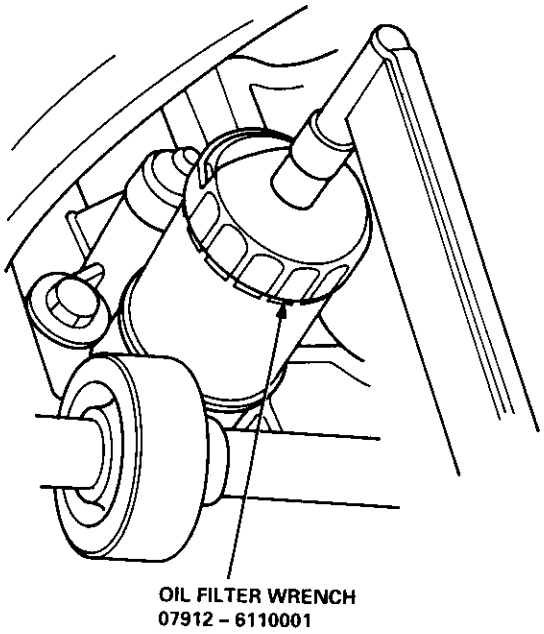

Use this procedure to tighten the filter if eight numbers (1 to 8) are printed on the surface of the filter.

1) Make a mark on the oil filter base under the number that shows at the bottom of the filter when the rubber seal is seated.

2) Tighten the filter by turning it clockwise seven numbers from the marked point. For example, if a mark is made under the number 2 when the rubber seal is seated, the filter should be tightened until the number 1 comes up to the marked point.

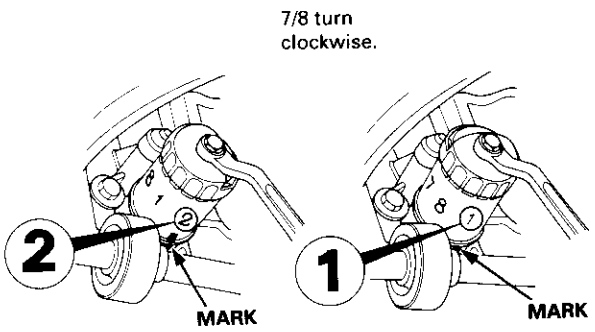

Number when rubber seal is seated.

Number after tightening.

Number when rubber seal is seated	1	2	3	4	5	6	7	8
Number after tightening	8	1	2	3	4	5	6	7

CAUTION: Using any procedure other than those shown could result in serious engine damage due to oil leakage.

5. After installation, fill the engine with oil up to the specified level, run the engine for more than three minutes, then check for oil leakage.

Testing

If the oil pressure warning light stays on with the engine running, check the engine oil level. If the oil level is correct:

1. Connect a tachometer.

2. Remove the engine oil pressure switch, and install an oil pressure gauge.

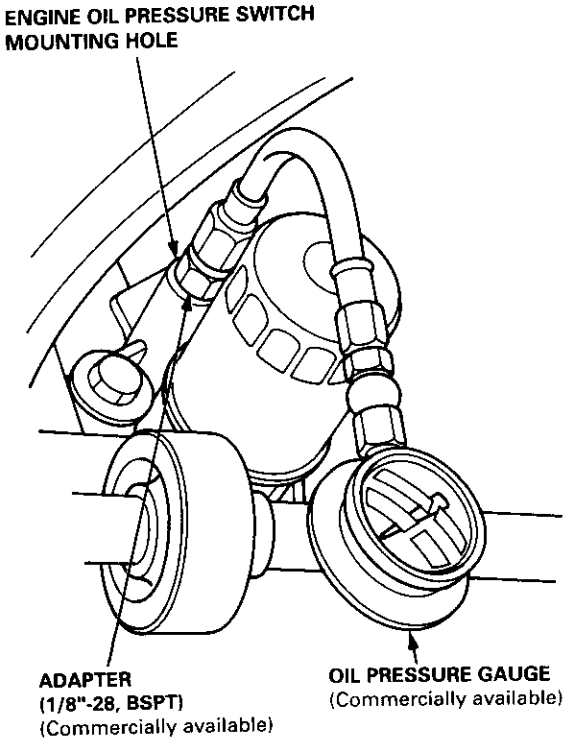

3. Start the engine. Shut it off immediately if the gauge registers no oil pressure. Repair the problem before continuing.

4. Allow the engine to reach operating temperature (fan comes on at least twice). The pressure should be:

Engine Oil Temperature: 176°F (80°C)
Engine Oil Pressure:
At Idle: 69 kPa (0.7 kgf/cm², 10 psi) minimum
At 3,000 rpm: 340 kPa (3.5 kgf/cm², 50 psi) minimum

- If the oil pressure is within specifications, replace the oil pressure switch and recheck.
- If the oil pressure is NOT within specifications, inspect the oil pump (see page 8-10).

Inspection

1. Remove the oil jet (see page 8-3) and inspect it as follows.

   - Make sure that a 1.1 mm (0.04 in) diameter drill will go through the nozzle hole (1.2 mm (0.05 in) diameter).
   - Insert the other end of the same 1.1 mm (0.04 in) drill into the oil intake (1.2 mm (0.05 in) diameter).
     Make sure the check ball moves smoothly and has a stroke of approximately 4.0 mm (0.16 in).
   - Check the oil jet operation with an air nozzle. It should take at least 200 kPa (2.0 kgf/cm^2, 28 psi) to unseat the check ball.

     NOTE: Replace the oil jet assembly if the nozzle is damaged or bent.

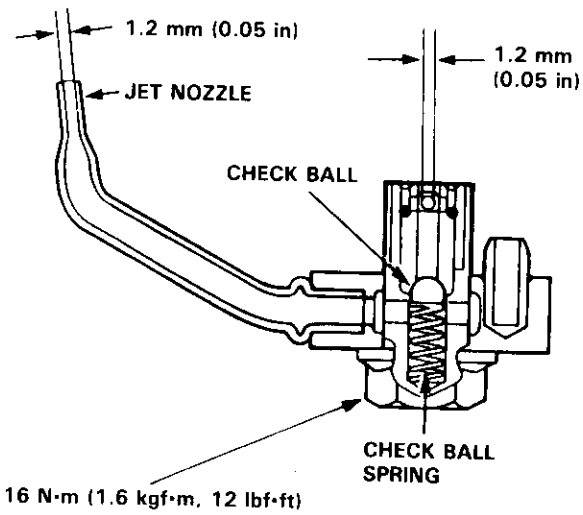

2. Mounting torque is critical. Be very precise when installing.

   Torque: 16 N·m (1.6 kgf·m, 12 lbf·ft)

Overhaul

NOTE:
- Use new O-rings when reassembling.
- Apply oil to O-rings before installation.
- Use liquid gasket, Part No. 08718 – 0001 or 08718 – 0003.
- The rotors must be installed to the same direction in order.
- After reassembly, check that the rotors move without binding.

B16A2 engine:

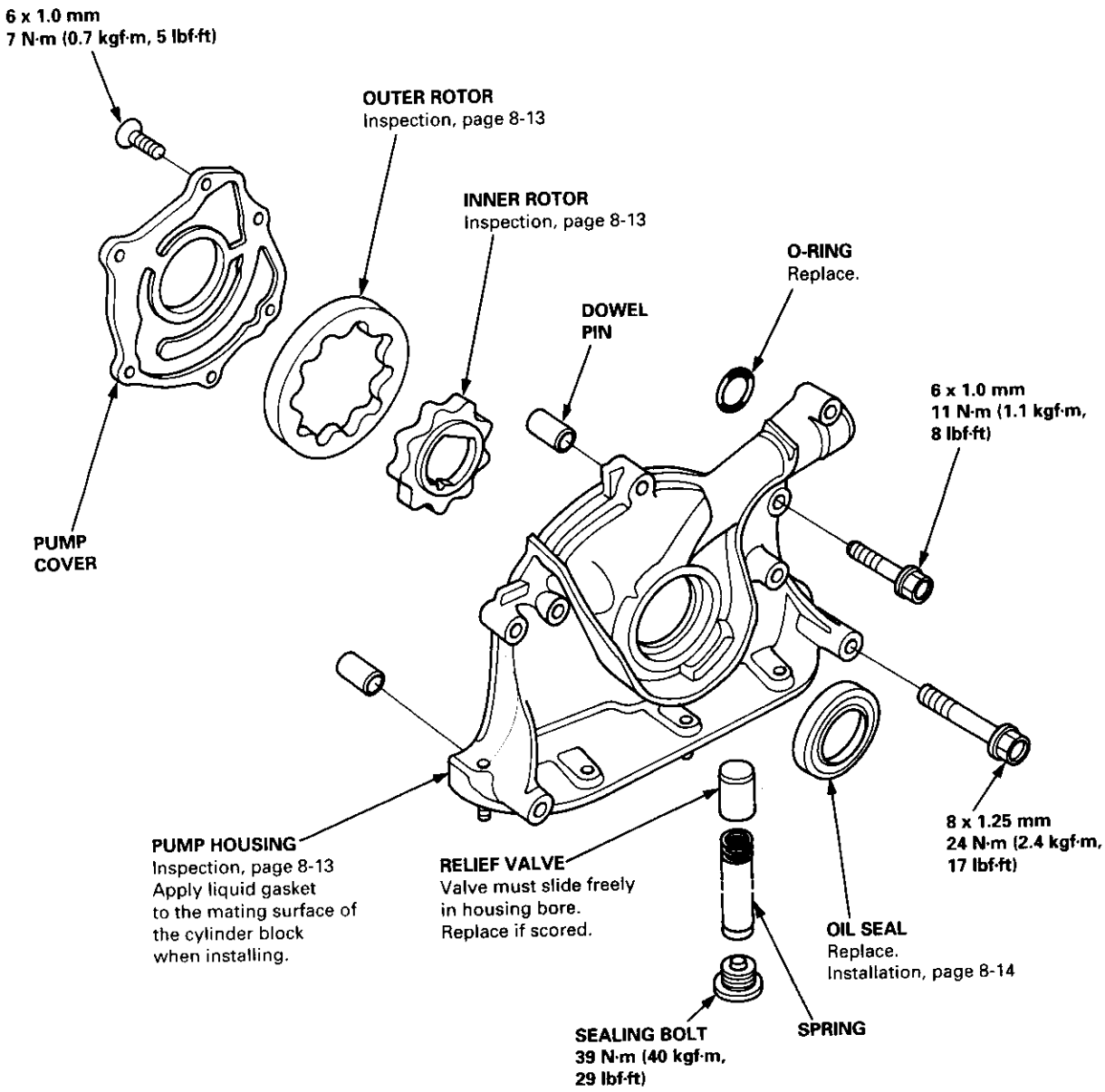

(cont'd)

Overhaul (cont'd)

NOTE:
- Use new O-rings when reassembling.
- Apply oil to O-rings before installation.
- Use liquid gasket, Part No. 08718 - 0001 or 08718 - 0003.
- The rotors must be installed to the same direction.
- After reassembly, check that the rotors move without binding.

D16Y5, D16Y7, D16Y8 engines:

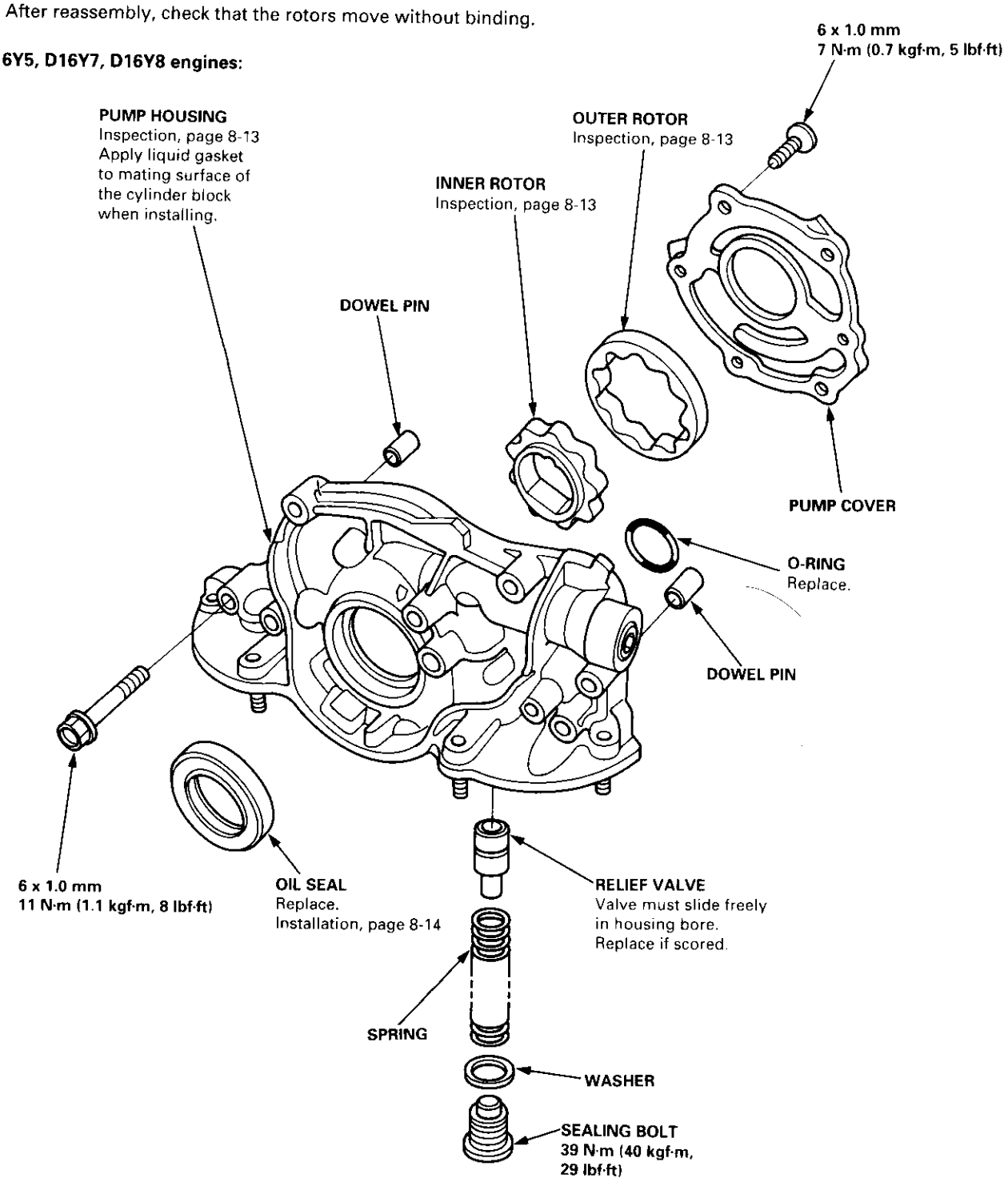

Removal/Inspection/Installation

1. Drain the engine oil.
2. Turn the crankshaft and align the white groove on the crankshaft pulley with the pointer on the lower cover.
3. Remove the cylinder head cover and upper cover.
4. Remove the power steering pump belt, air conditioner belt and the alternator belt.
5. Remove the crankshaft pulley and remove the lower cover.
6. Remove the timing belt.
7. Remove the drive pulley.
8. Remove the oil pan and oil screen.

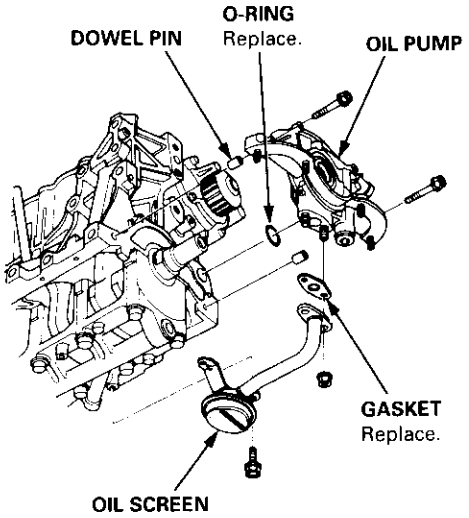

9. Remove the oil pump.
10. Remove the screws from the pump housing, then separate the housing and cover.
11. Check the inner-to-outer rotor radial clearance on the pump rotor. If the inner-to-outer rotor clearance exceeds the service limit, replace the inner and outer rotors.

Inner Rotor-to-Outer Rotor Radial Clearance
Standard (New): B16A2 engine 0.04 – 0.16 mm (0.002 – 0.006 in)
D16Y5, D16Y7, D16Y8 engines 0.02 – 0.14 mm (0.001 – 0.006 in)
Service Limit: 0.20 mm (0.008 in)

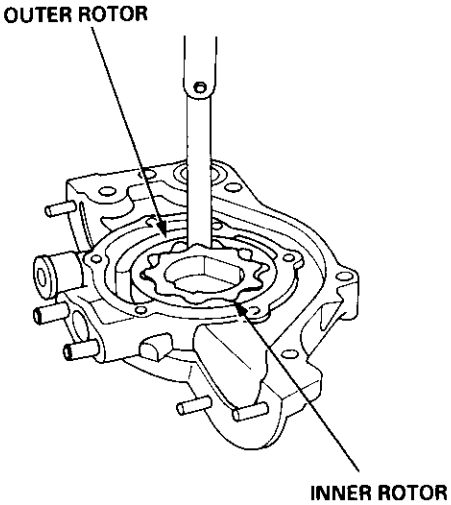

12. Check the housing-to-rotor axial clearance on the pump rotor. If the housing-to-rotor axial clearance exceeds the service limit, replace the set of inner and outer rotors and/or the pump housing.

Housing-to-Rotor Axial Clearance
Standard (New): B16A2 engine 0.02 – 0.07 mm (0.001 – 0.003 in)
D16Y5, D16Y7, D16Y8 engines 0.03 – 0.08 mm (0.001 – 0.003 in)
Service Limit: 0.15 mm (0.006 in)

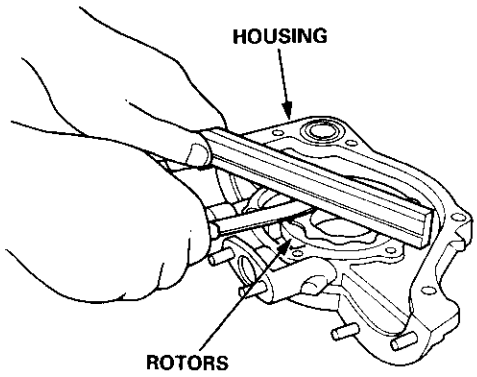

(cont'd)

Removal/Inspection/Installation (cont'd)

13. Check the housing-to-outer rotor radial clearance. If the housing-to-outer rotor radial clearance exceeds the service limit, replace the set of inner and outer rotors and/or the pump housing.

Housing-to-Outer Rotor Radial Clearance:
Standard (New): B16A2 engine 0.10 – 0.19 mm (0.004 – 0.007 in)
D16Y5, D16Y7, D16Y8 engines 0.10 – 0.18 mm (0.004 – 0.007 in)
Service Limit: 0.20 mm (0.008 in)

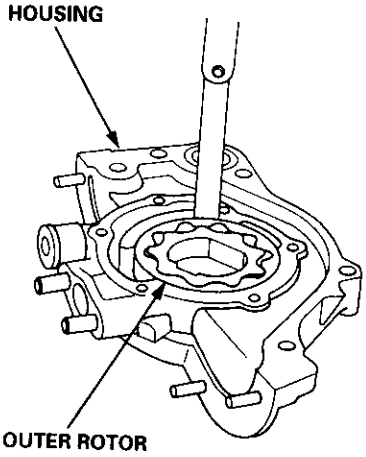

14. Inspect both rotors and pump housing for scoring or other damage. Replace parts if necessary.

15. Remove the old oil seal from the oil pump.

16. Using the special tool, gently tap in the new oil seal until the driver bottoms against the pump.

NOTE: The oil seal alone can be replaced without removing the oil pump.

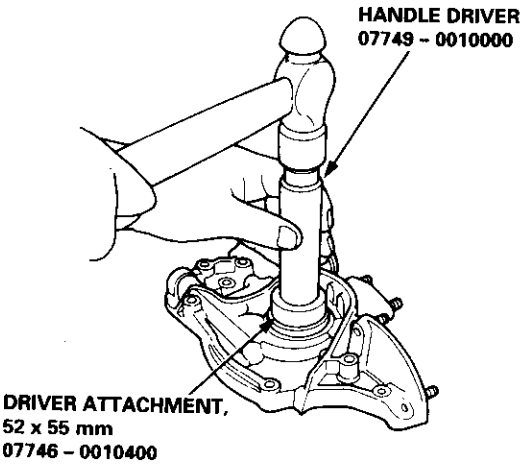

17. Reassemble the oil pump, applying thread lock to the pump housing screws.

18. Check that the oil pump turns freely.

19. Apply a light coat of oil to the seal lip.

20. Install the two dowel pins and new O-ring on the oil pump.

21. Apply liquid gasket to the cylinder block mating surface of the oil pump.

NOTE:
- Use liquid gasket, Part No. 08718 – 0001 or 08718 – 0003.
- Check that the mating surfaces are clean and dry before applying liquid gasket.
- Apply liquid gasket evenly, in a narrow bead centered on the mating surface.
- To prevent leakage of oil, apply liquid gasket to the inner threads of the bolt holes.
- Do not install the parts if five minutes or more have elapsed since applying liquid gasket. Instead, reapply liquid gasket after removing the old residue.
- After assembly, wait at least 30 minutes before filling the engine with oil.

B16A2 engine:

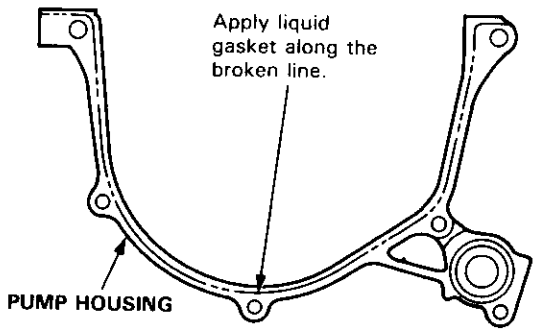

D16Y5, D16Y7, D16Y8 engines:

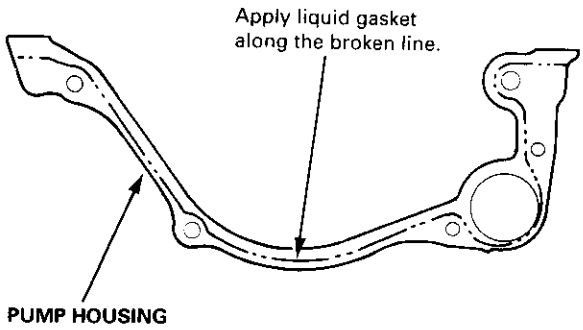

22. Install the oil pump on the cylinder block. Apply grease to the lip of the oil pump seal. Then, install the oil pump onto the crankshaft. When the pump is in place, clean any excess grease off the crankshaft and check that the oil seal lip is not distorted.

B16A2 engine:

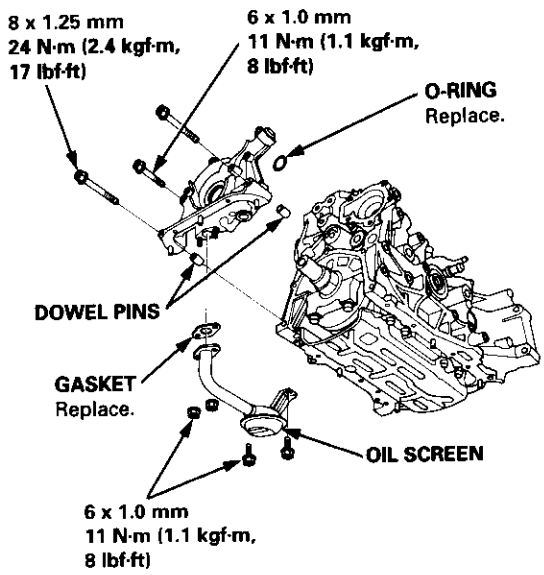

D16Y5, D16Y7, D16Y8 engines:

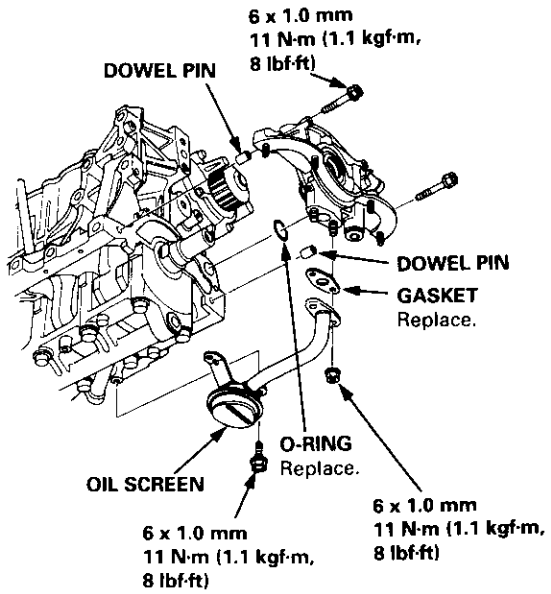

23. Install the oil screen.

24. Install the oil pan (see pages 7-26 or 7-27).

NOTE: Clean the oil pan gasket mating surfaces.

Intake Manifold/Exhaust System

Intake Manifold
Replacement 9-2
Exhaust Manifold
Replacement 9-6
Exhaust Pipe and Muffler
Replacement 9-9
Three Way Catalytic Converter (TWC)
Inspection 9-12
Heated Oxygen Sensor (HO2S)
Replacement 9-12

Replacement

NOTE: Use new O-rings and gaskets when reassembling.

CAUTION:
- **Check for folds or scratches on the surface of the gasket.**
- **Replace with a new gasket if damaged.**

D16Y7 engine:

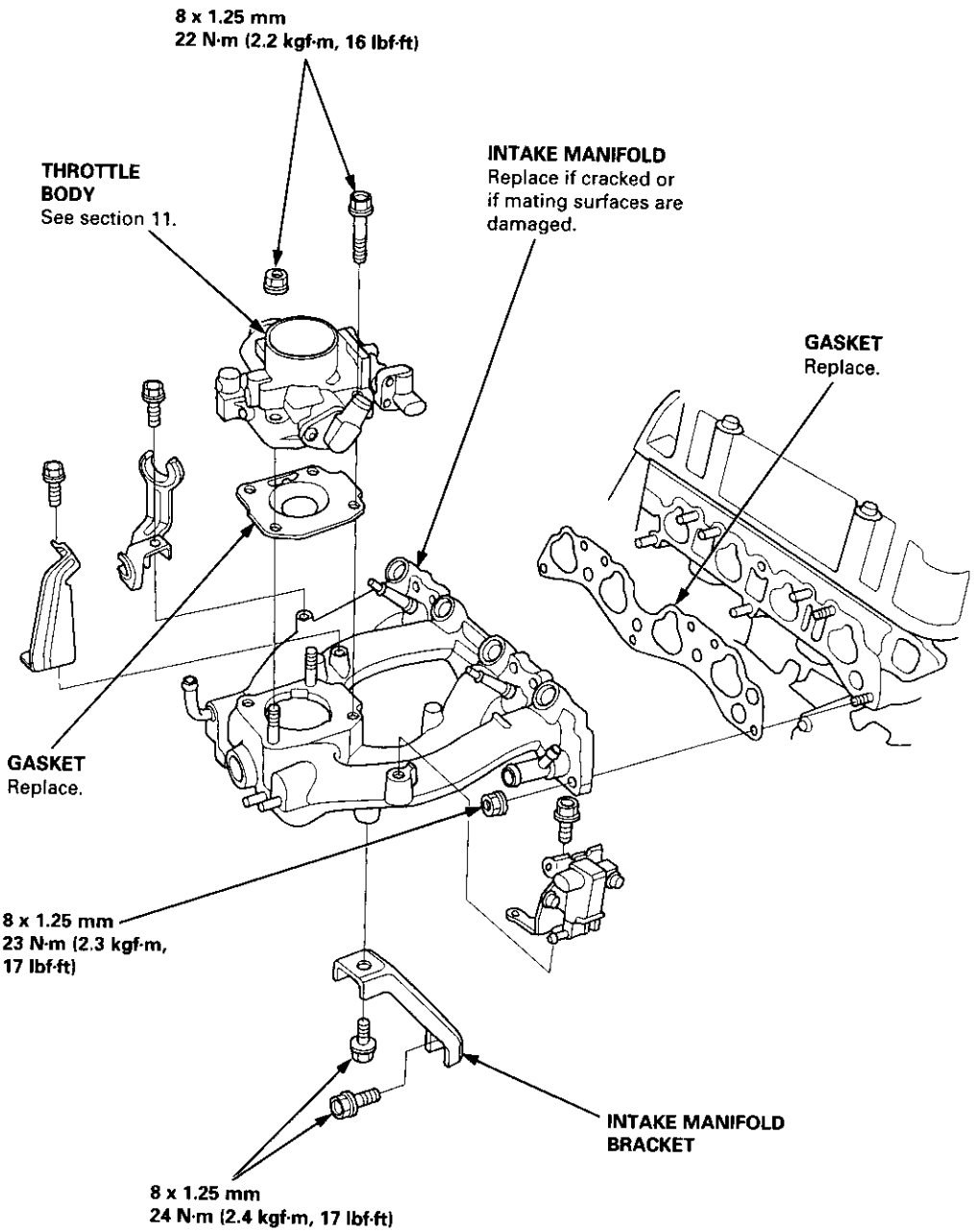

D16Y5 engine:

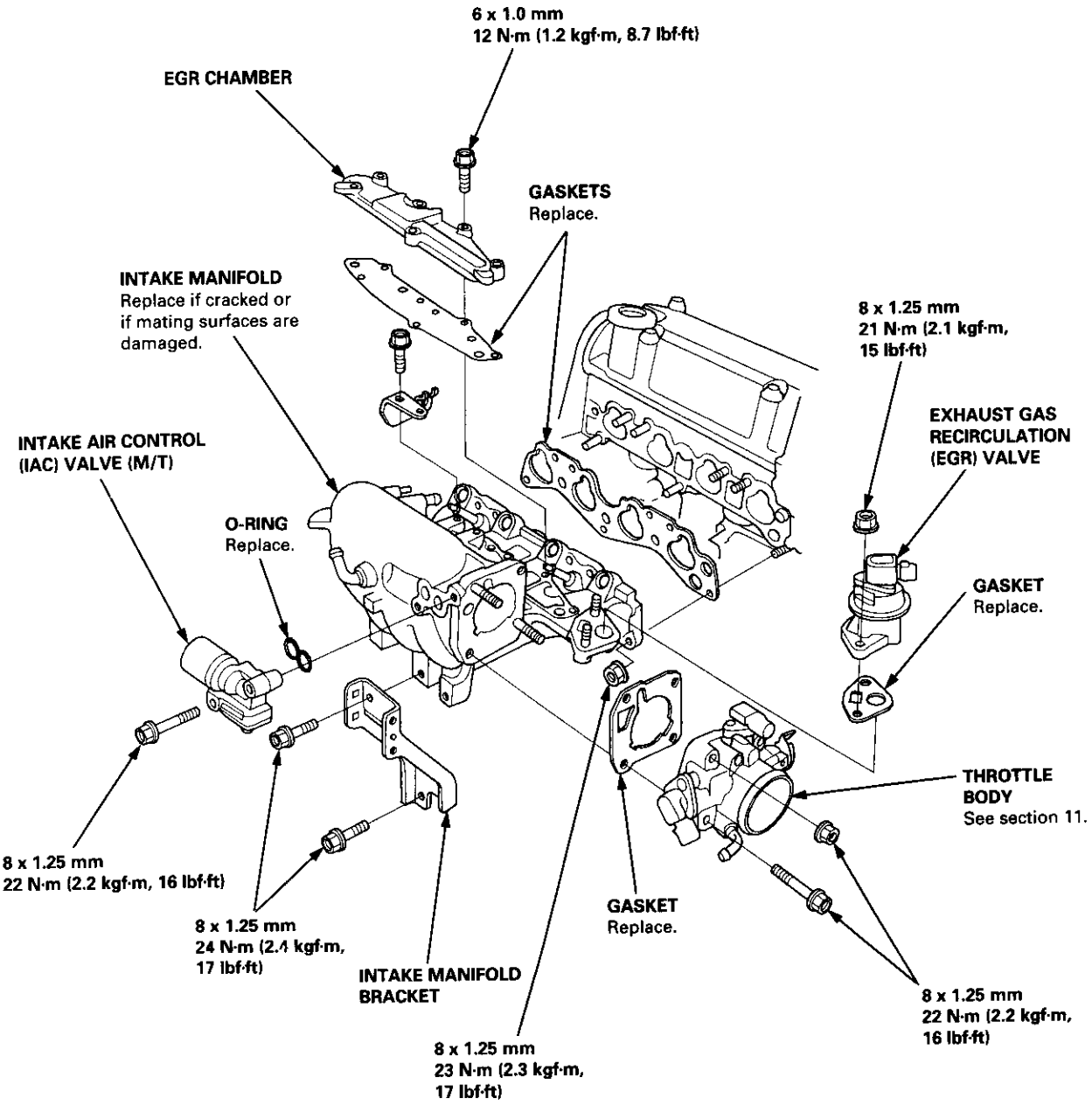

(cont'd)

Replacement (cont'd)

NOTE: Use new O-rings and gaskets when reassembling.

CAUTION:
- **Check for folds or scratches on the surface of the gasket.**
- **Replace with a new gasket if damaged.**

D16Y8 engine:

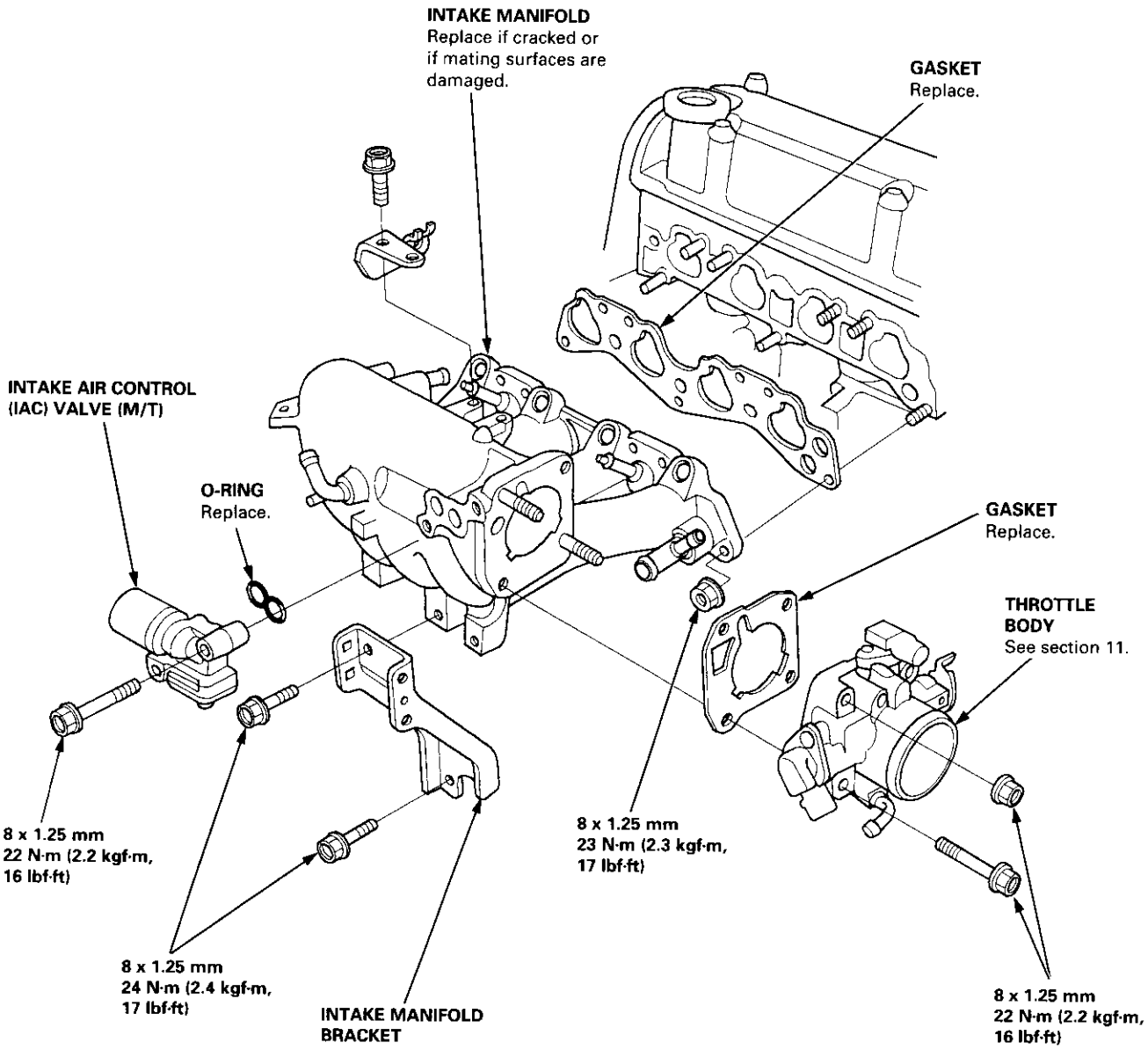

B16A2 engine:

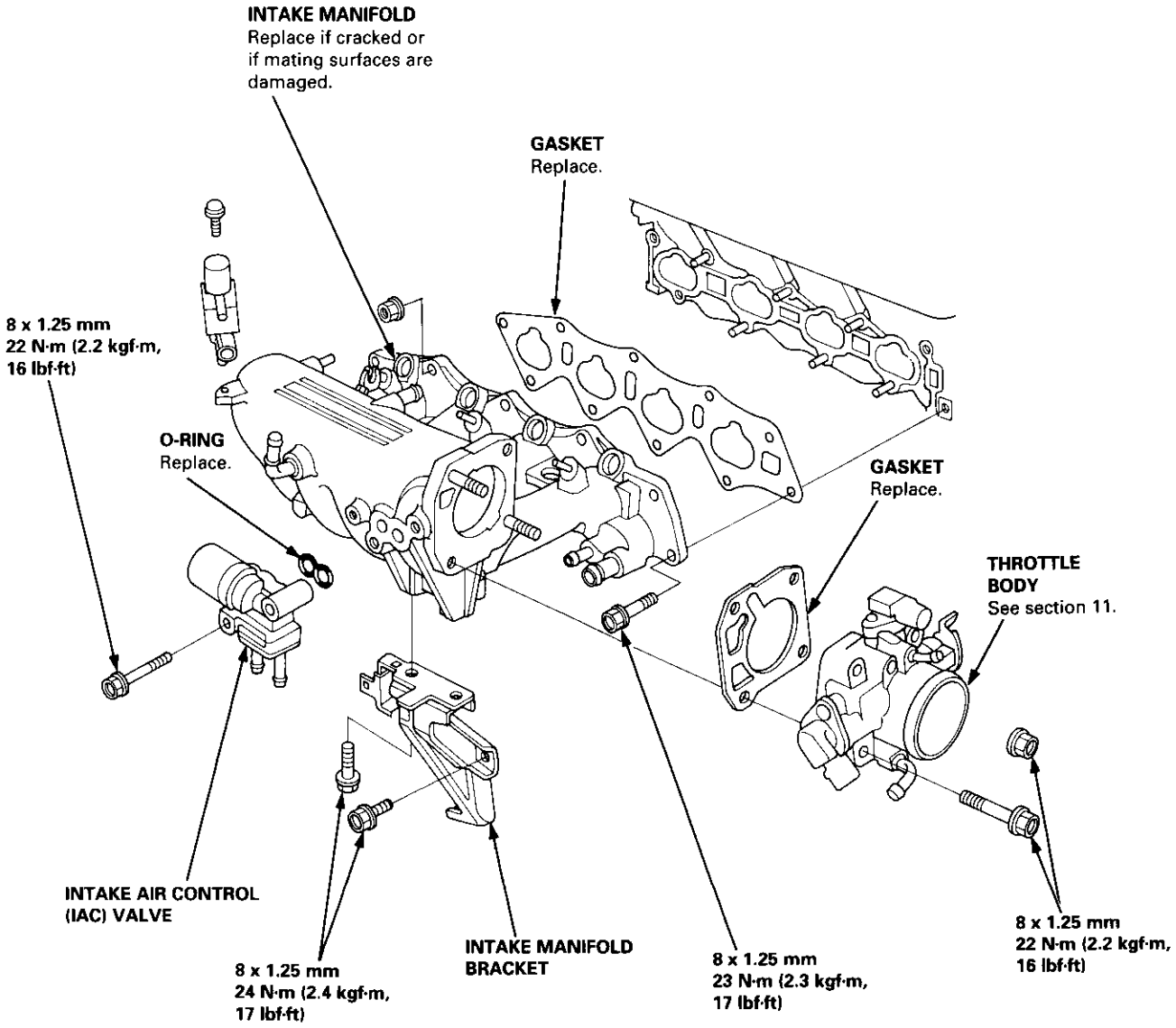

Replacement

NOTE: Use new gaskets and self-locking nuts when reassembling.

CAUTION:
- **Check for folds or scratches on the surface of the gasket.**
- **Replace with a new gasket if damaged.**

D16Y5, D16Y7 engines:

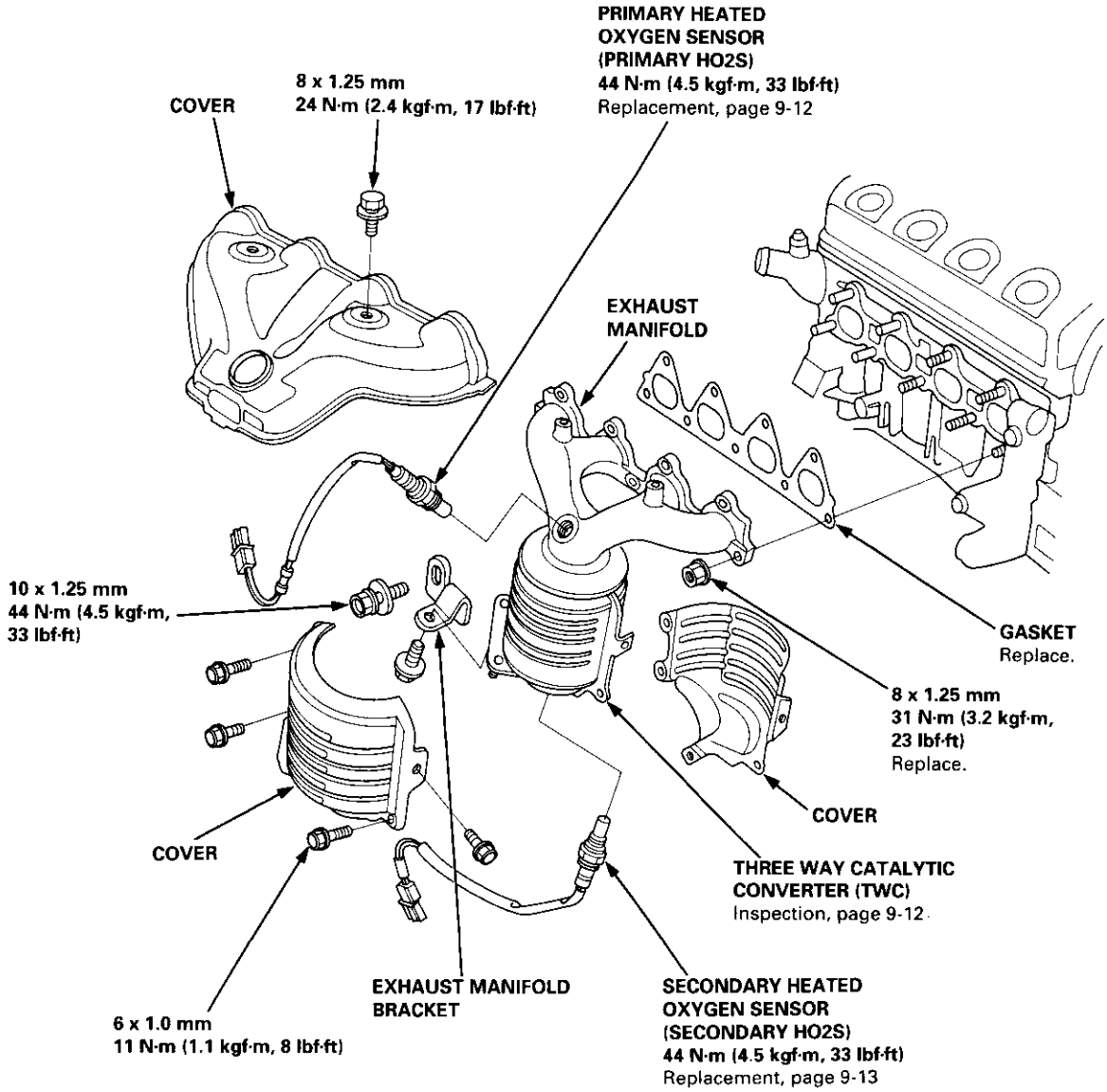

D16Y8 engine:

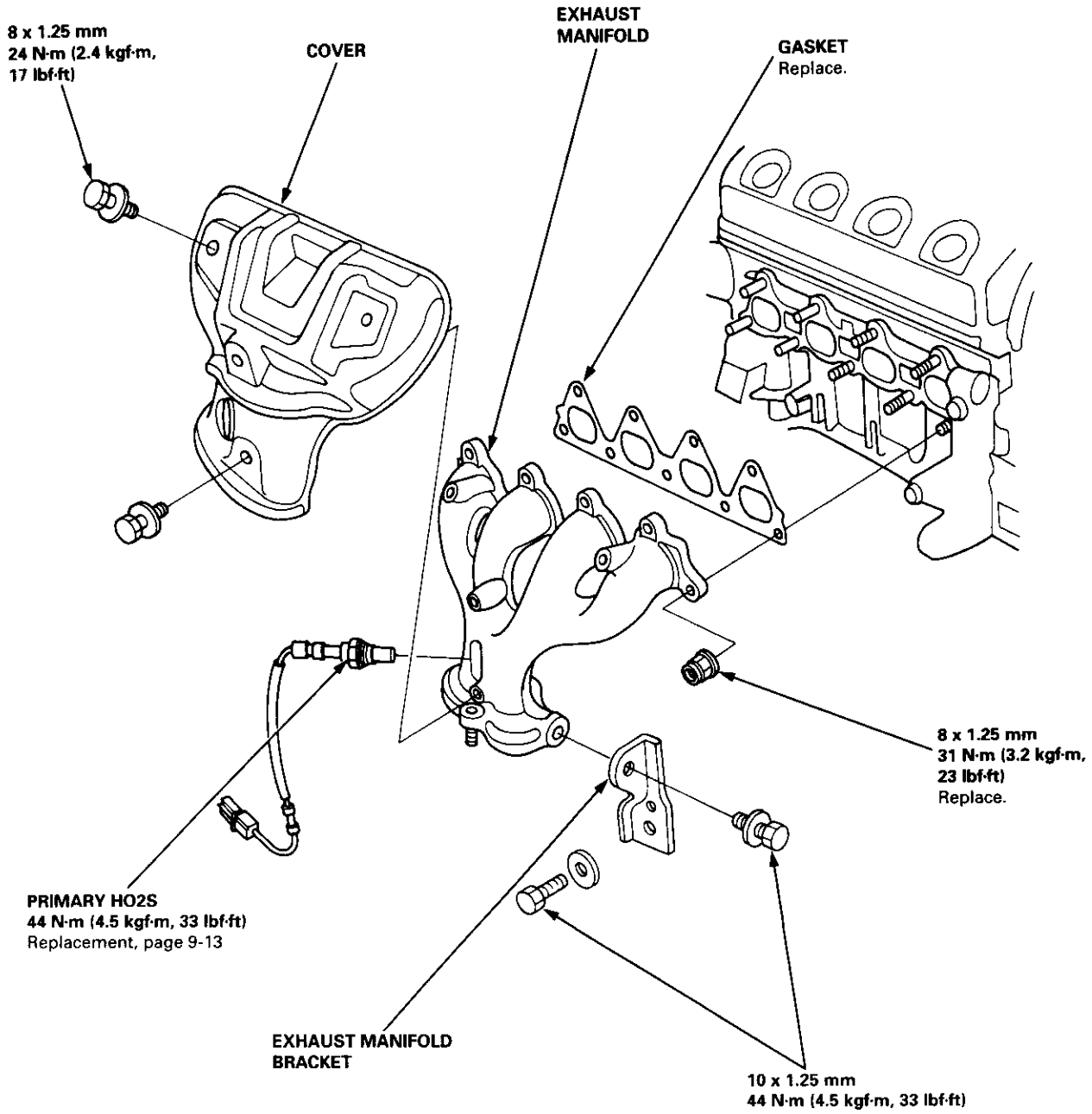

(cont'd)

Replacement (cont'd)

NOTE: Use new gaskets and self-locking nuts when reassembling.

CAUTION:
- **Check for folds or scratches on the surface of the gasket.**
- **Replace with a new gasket if damaged.**

B16A2 engine:

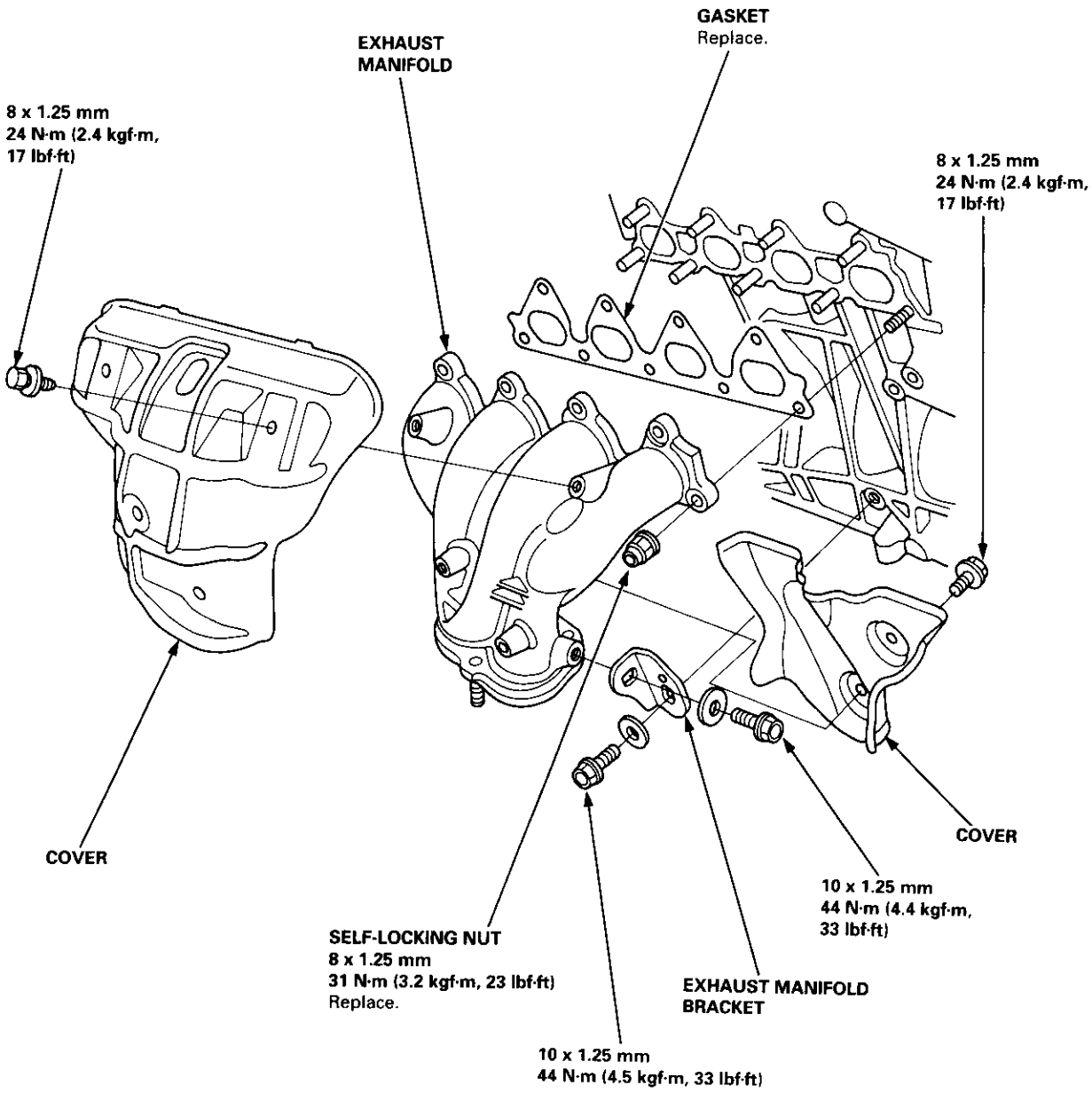

Replacement

NOTE: Use new gaskets and self-locking nuts when reassembling.

D16Y5, D16Y7 engines:

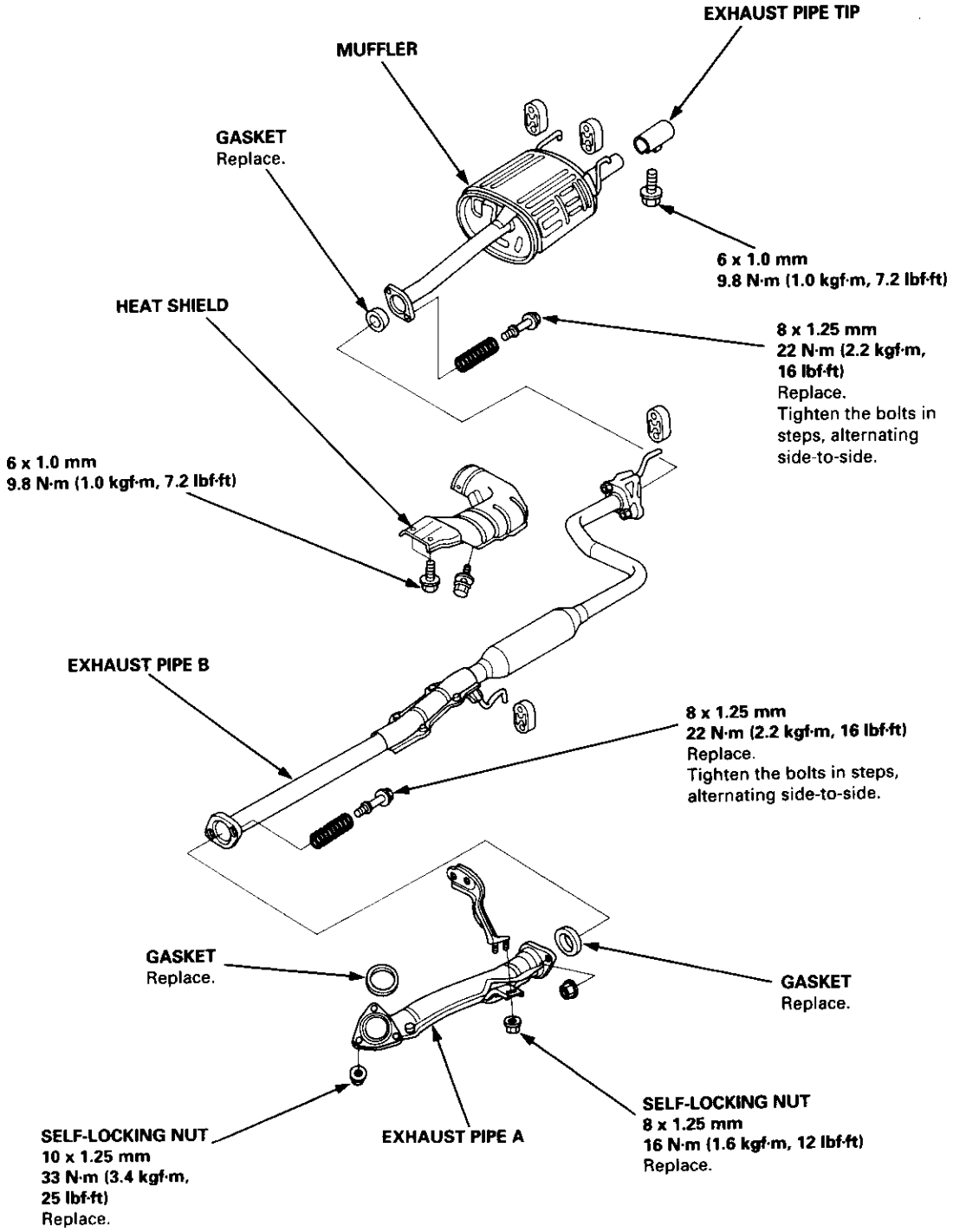

(cont'd)

Replacement (cont'd)

NOTE: Use new gaskets and self-locking nuts when reassembling.

D16Y8 engine:

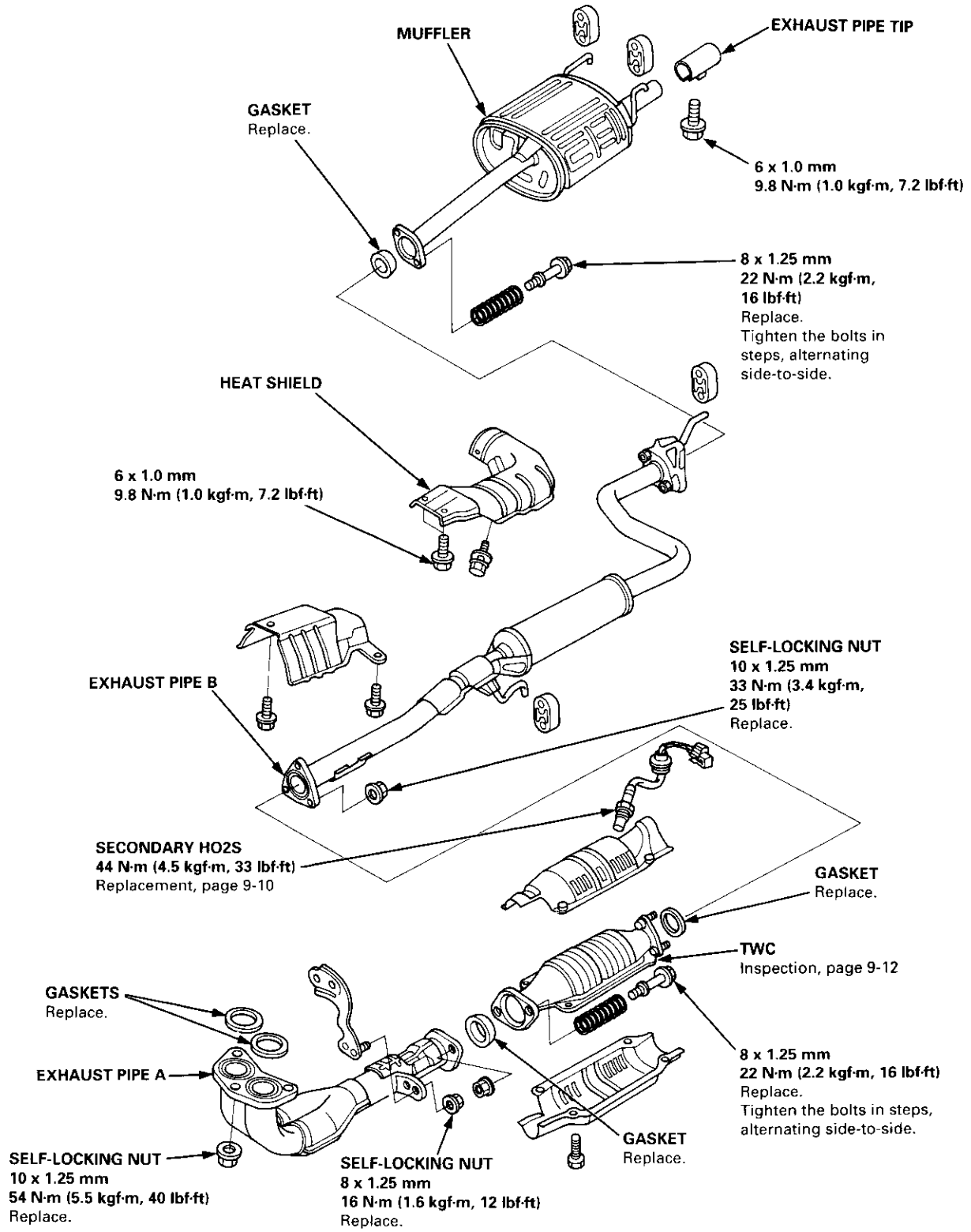

B16A2 engine:

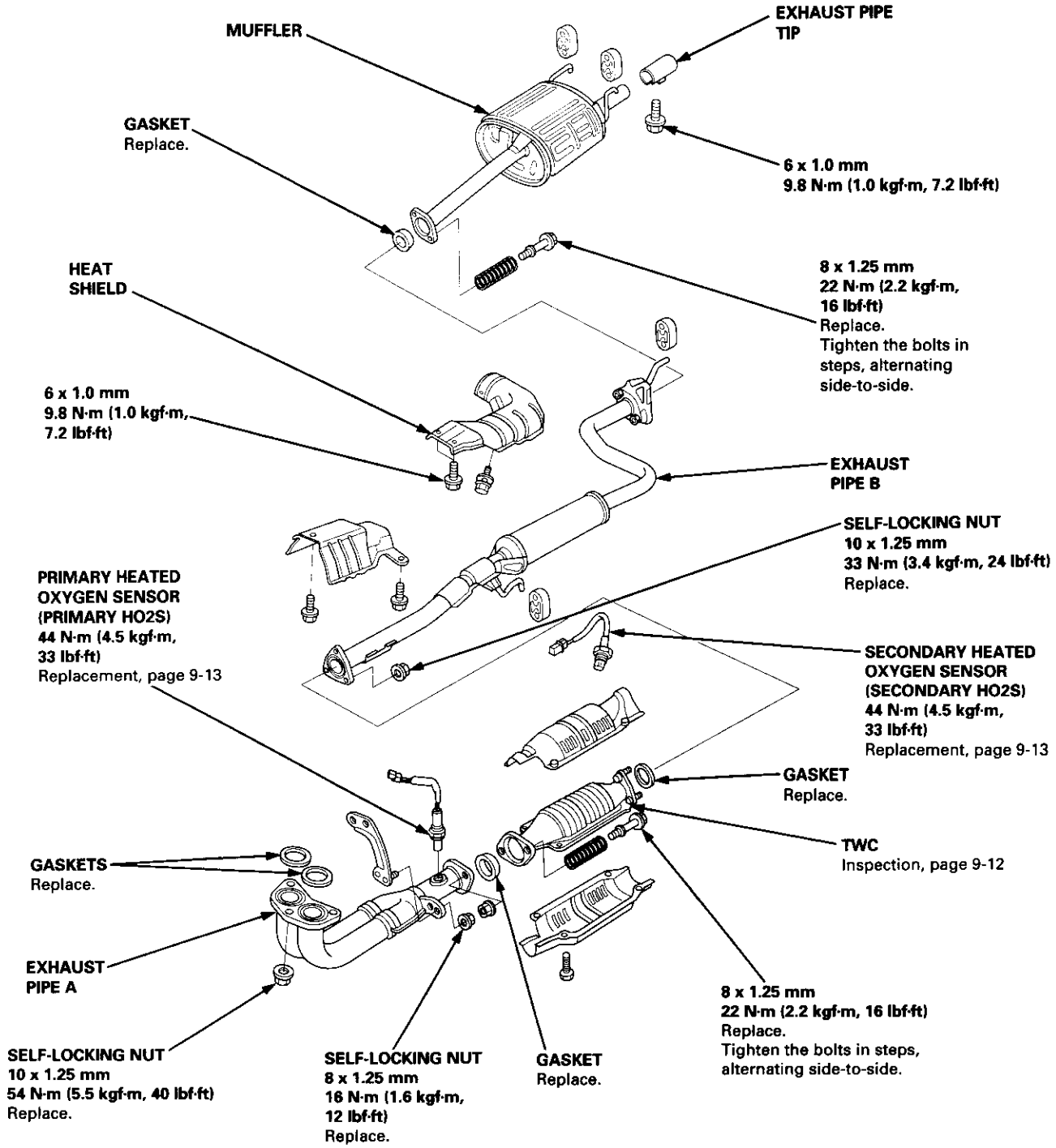

Inspection

1. Using a flashlight, make a visual check for plugging, melting and cracking of the catalyst.

D16Y5, D16Y7 engines:

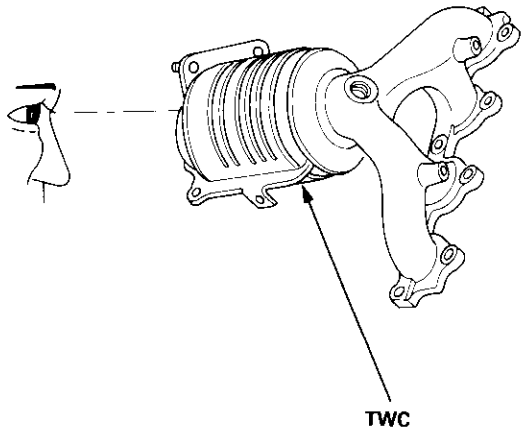

B16A2, D16Y8 engines:

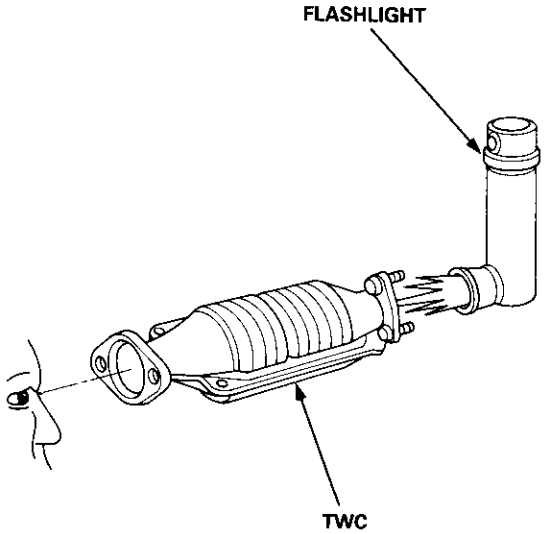

Replacement

Primary HO2S:

1. Remove the primary HO2S.

D16Y5, D16Y7 engines:

a. Disconnect the primary HO2S connector, then remove the cover.

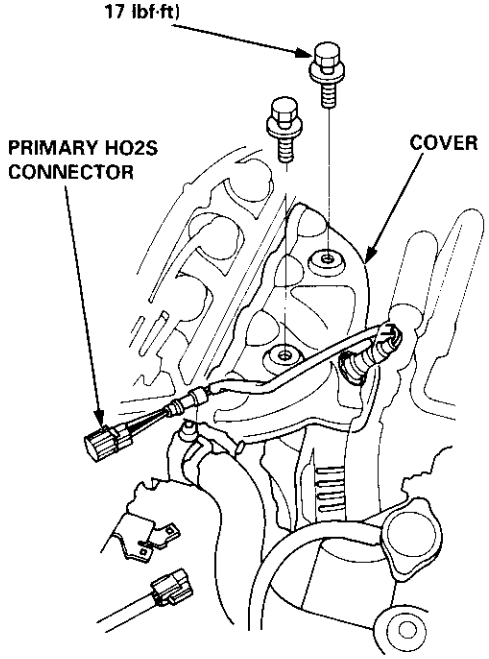

b. Remove the primary HO2S.

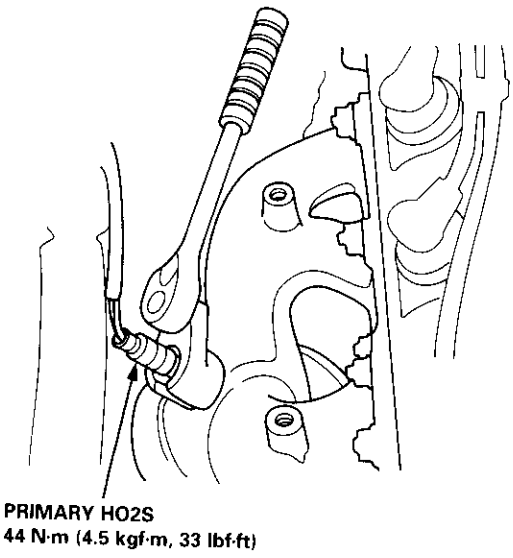

B16A2, D16Y8 engines:

a. Disconnect the primary HO2S connector then remove the primary HO2S.

B16A2 engine

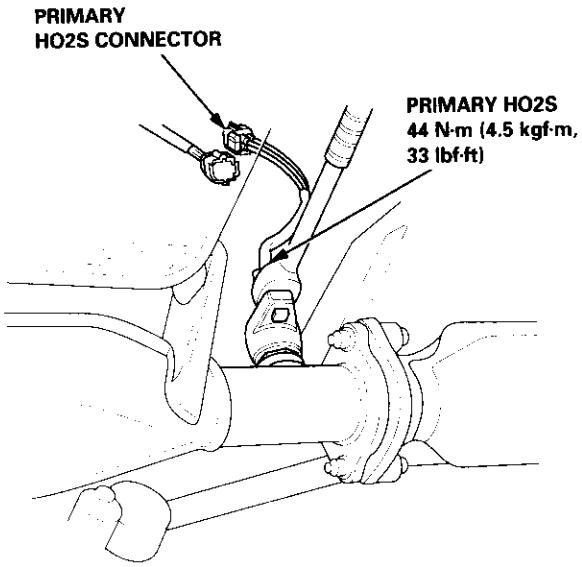

D16Y8 engine

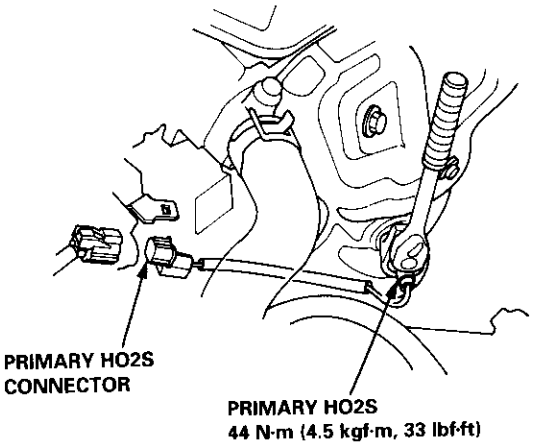

2. Install the primary HO2S in reverse order of removal.

Secondary HO2S:

1. Remove the secondary HO2S.

D16Y5, D16Y7 engines:

a. Disconnect the secondary HO2S connector, then remove the secondary HO2S.

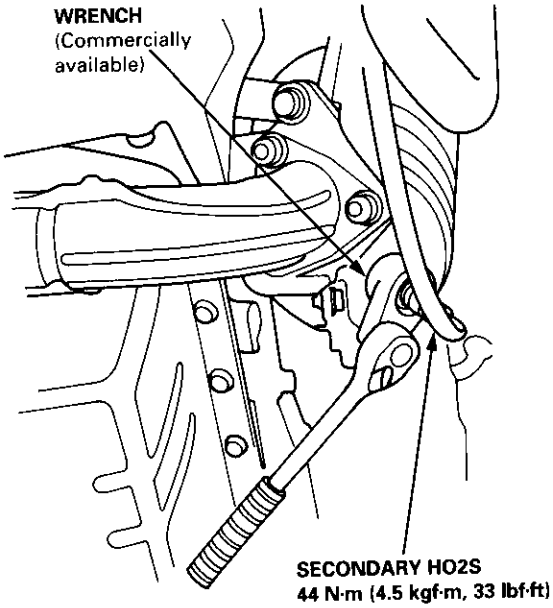

B16A2, D16Y8 engines:

a. Remove the grommet, and pull out the secondary HO2S connector, then disconnect the secondary HO2S connector.

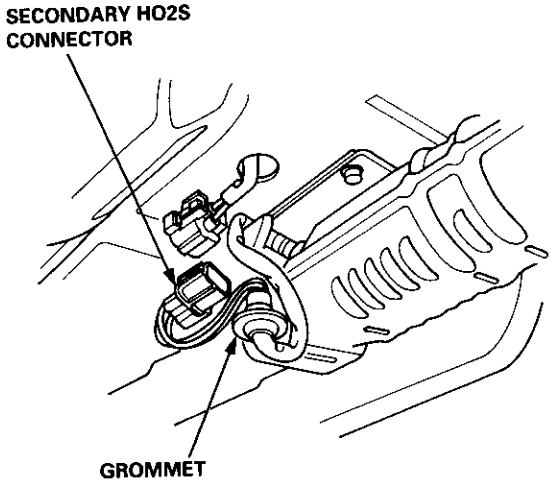

(cont'd)

Replacement (cont'd)

b. Remove the secondary HO2S.

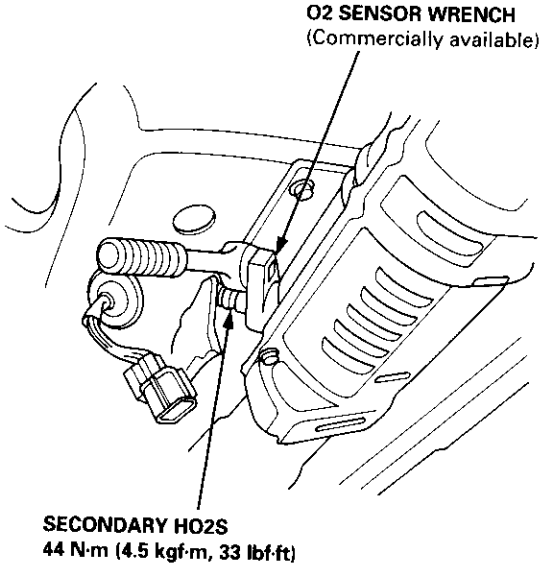

2. Install the secondary HO2S in reverse order of removal.

Cooling

Illustrated Index 10-2

Radiator

- Replacement 10-6
- Engine Coolant Refilling and Bleeding 10-7
- Cap Testing 10-9
- Testing 10-9

Thermostat

- Replacement 10-10
- Testing 10-10

Engine Coolant Temperature (ECT) Switch

- Testing 10-11

Water Pump

- Illustrated Index 10-12
- Inspection 10-14
- Replacement 10-14

⚠ WARNING System is under high pressure when the engine is hot. To avoid danger of releasing scalding engine coolant, remove the cap only when the engine is cool.

Total Cooling System Capacity [Including heater and reservoir (0.4 ℓ (0.42 US qt, 0.35 Imp qt))]:

M/T	4.2 ℓ (4.4 US qt, 3.7 Imp qt)*1 5.0 ℓ (5.3 US qt, 4.4 Imp qt)*2
A/T	4.1 ℓ (4.3 US qt, 3.6 Imp qt)*3 4.3 ℓ (4.5 US qt, 3.8 Imp qt)*4
CVT	4.3 ℓ (4.5 US qt, 3.8 Imp qt)

*1: D16Y5, D16Y7, D16Y8 engines
*2: B16A2 engine
*3: D16Y7 engine
*4: D16Y8 engine

CAUTION: If any engine coolant spills on painted portions of the body, rinse it off immediately.

NOTE:
- Check all cooling system hoses for damage, leaks or deterioration and replace if necessary.
- Check all hose clamps and retighten if necessary.
- Use new O-rings when reassembling.

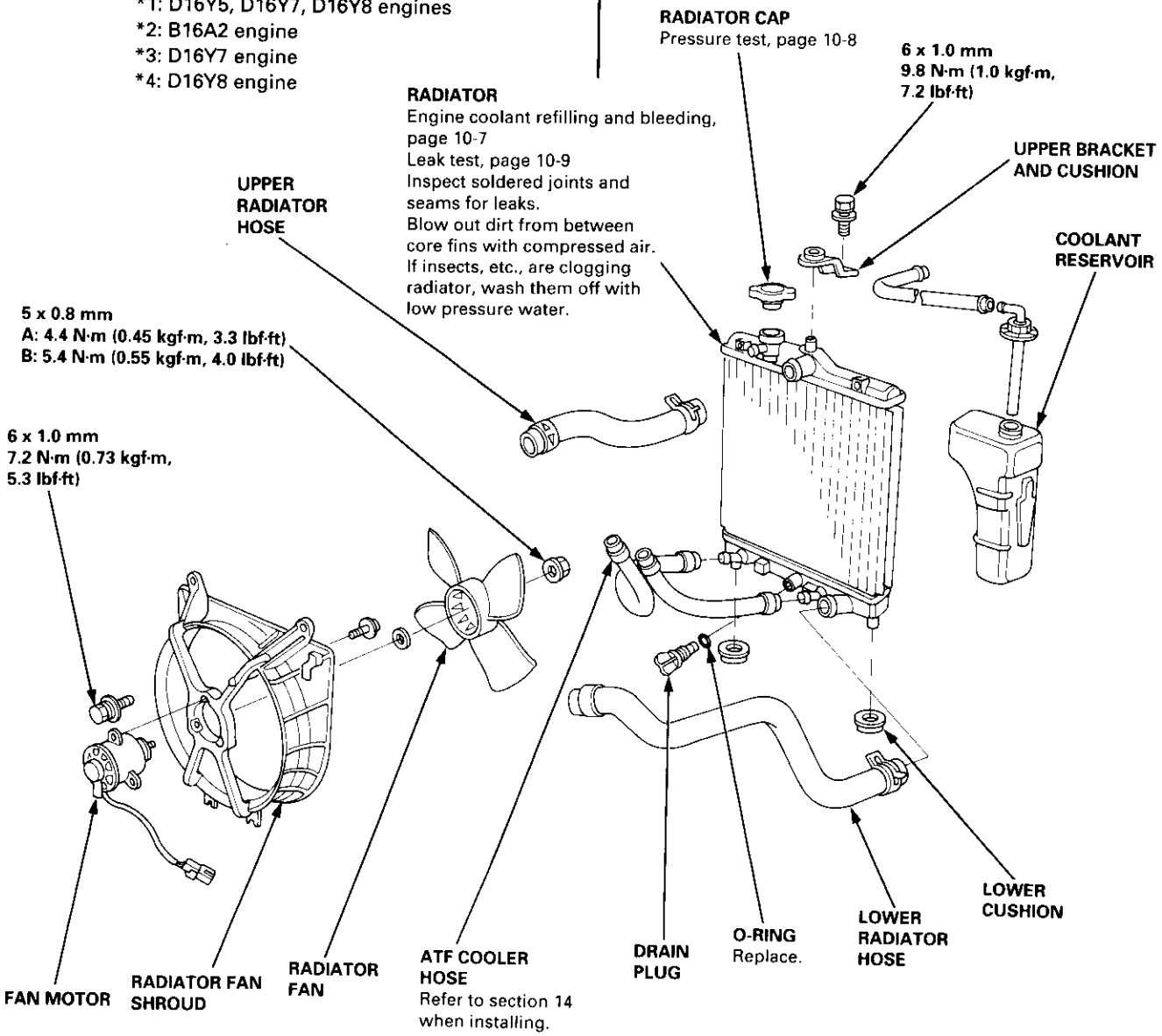

A: TOYO RADIATOR manufactured radiator
B: NIPPONDENSO manufacfared radiator

Engine Hose Connections:
D16Y7 engine:

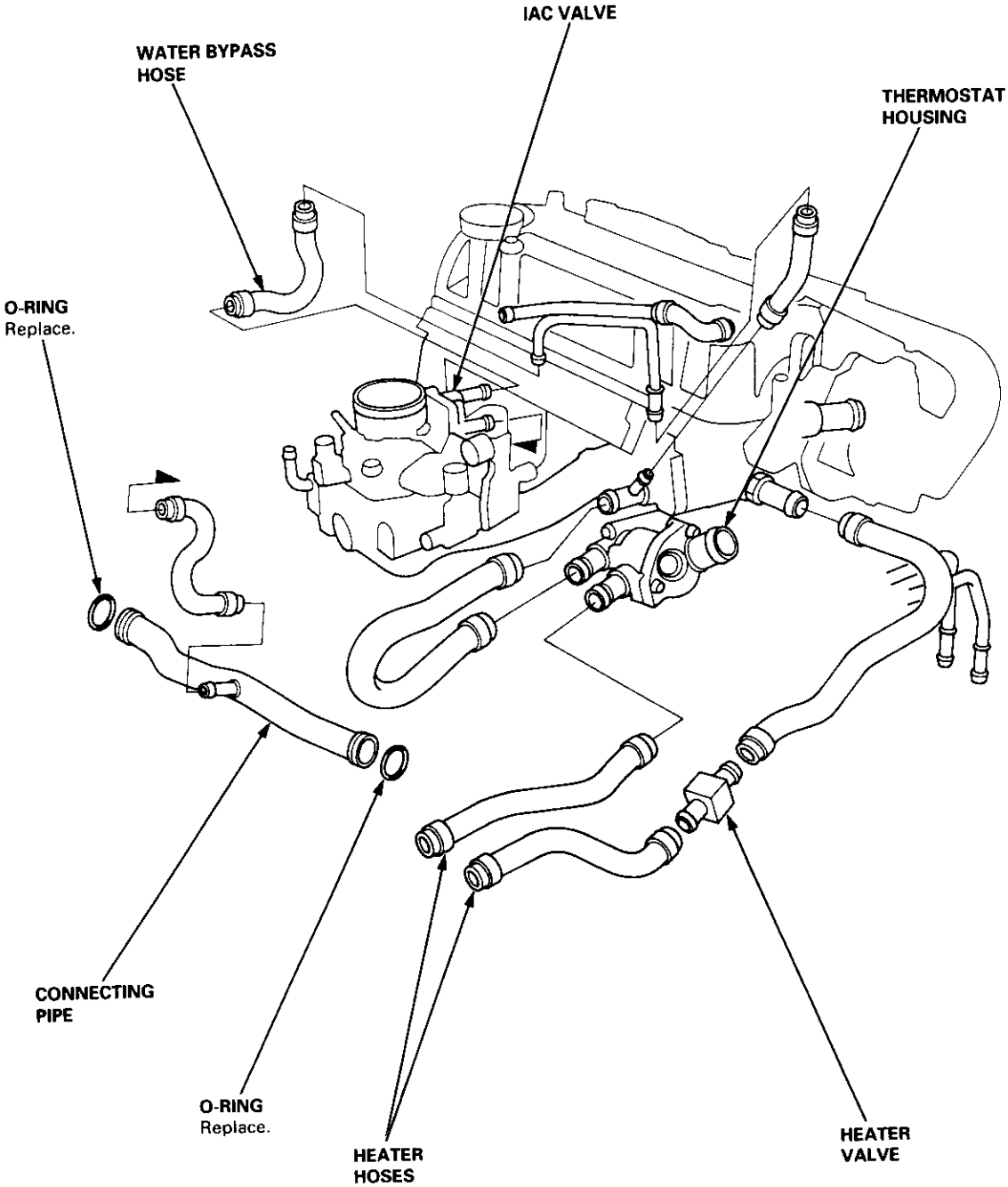

(cont'd)

(cont'd)

Engine Hose Connections:

D16Y5, D16Y8 engines:

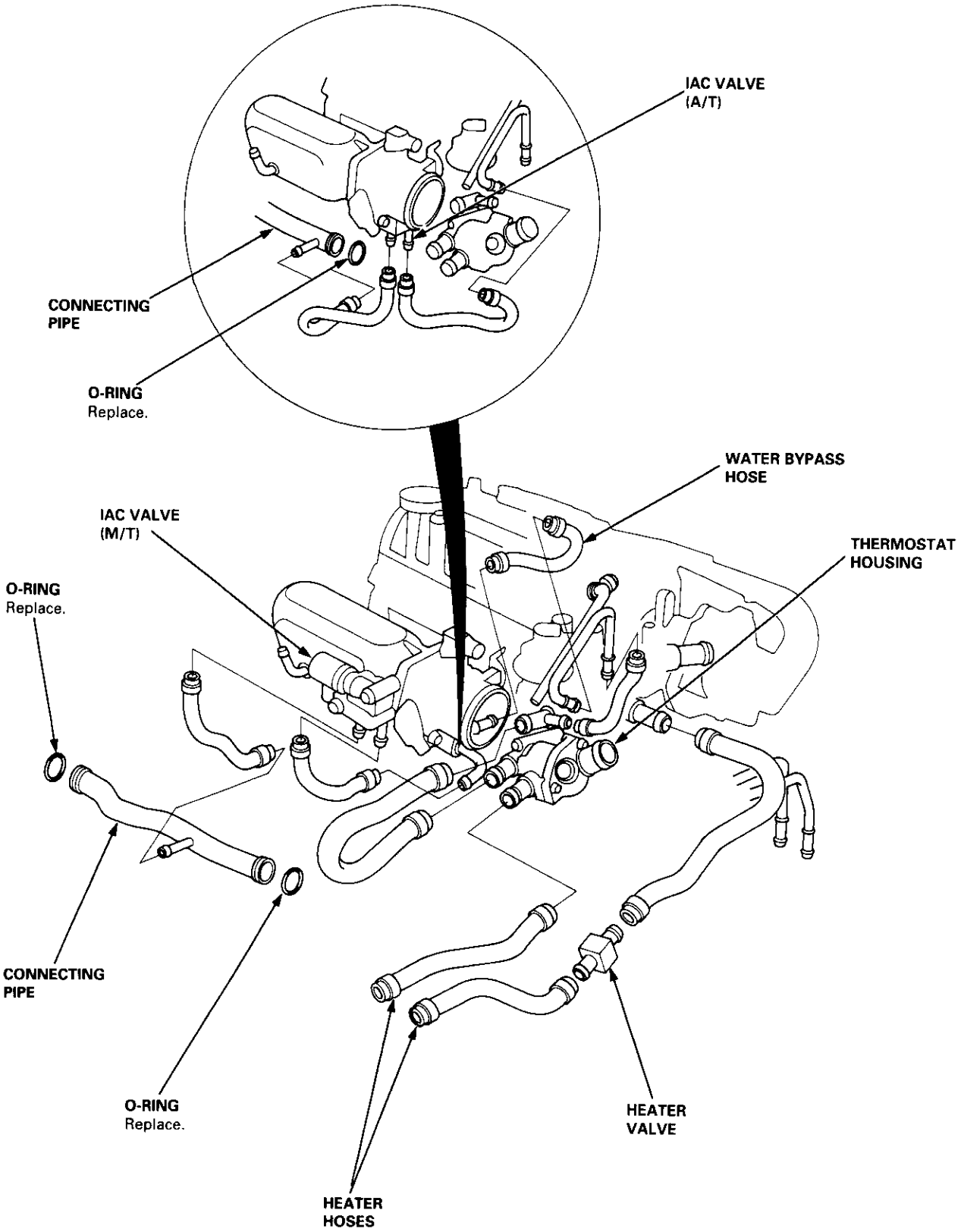

Engine Hose Connections:
B16A2 engine:

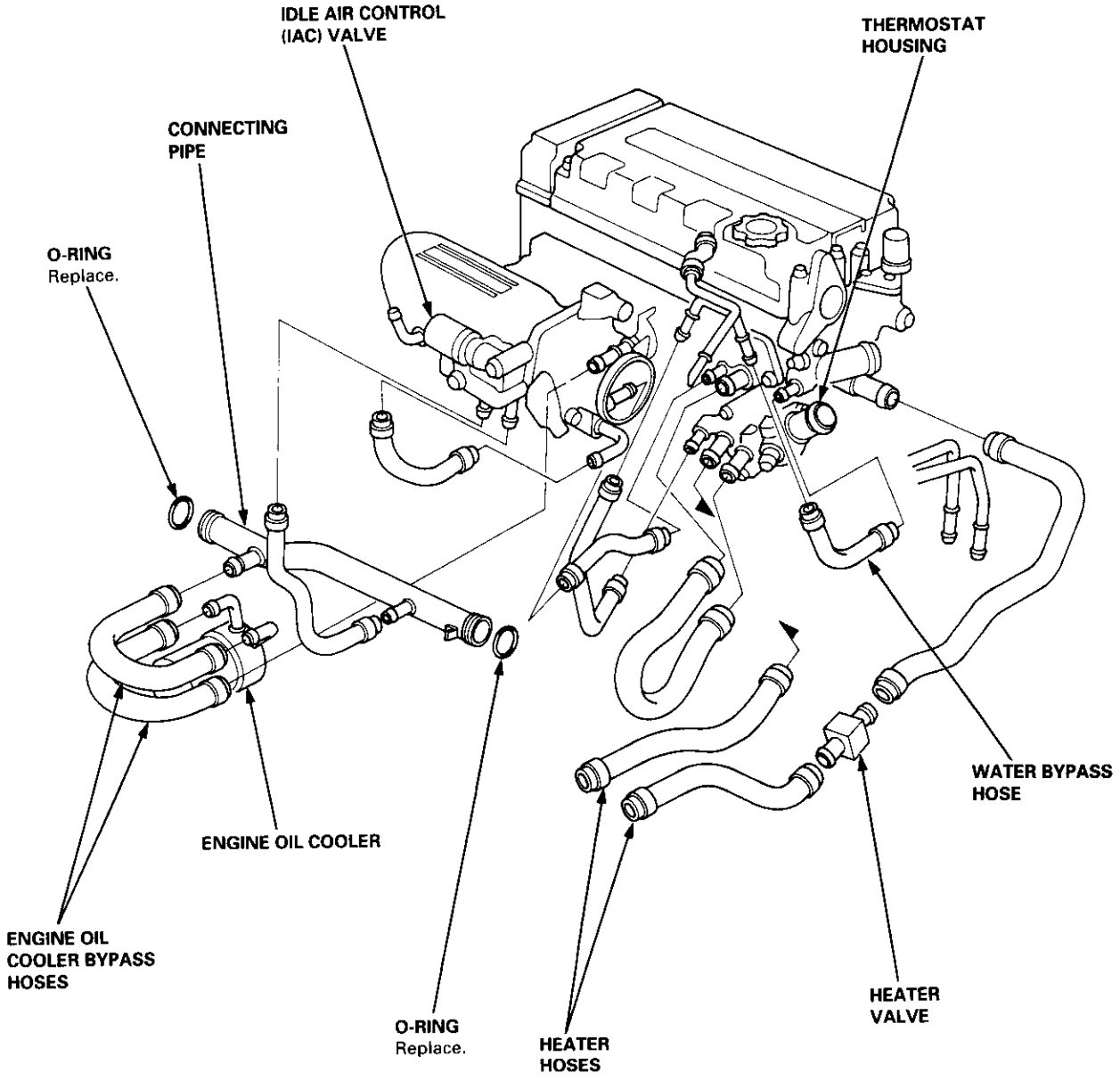

Replacement

1. Drain the engine coolant.
2. Remove the upper and lower radiator hoses, and ATF cooler hoses.
3. Disconnect the fan motor connector.
4. Remove the radiator upper bracket, then pull up the radiator.
5. Remove the fan shroud assemblies and other parts from the radiator.

Install the radiator in the reverse order of removal:

NOTE:
- Set the upper and lower cushions securely.
- Fill the radiator with engine coolant and bleed the air.

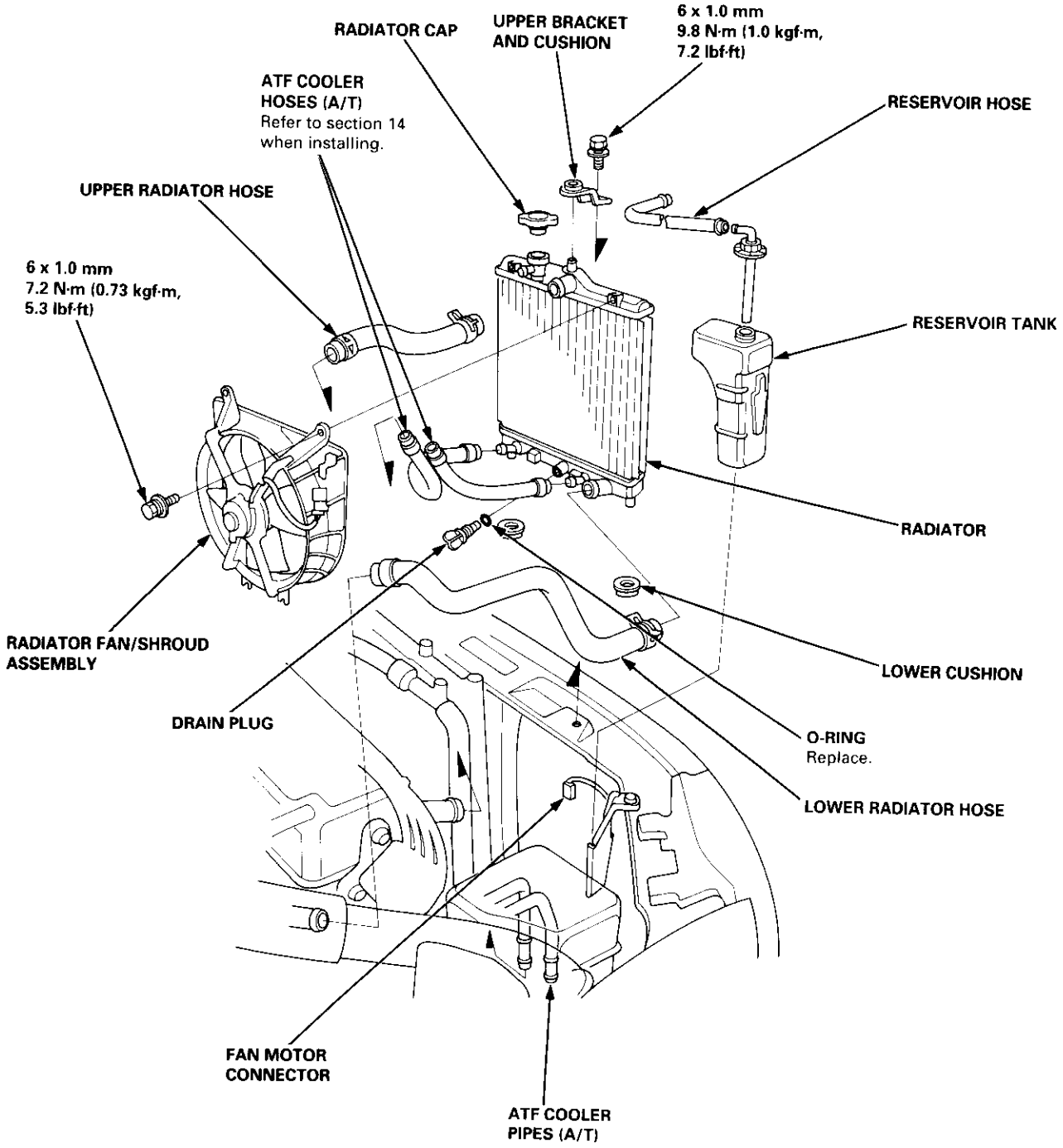

Engine Coolant Refilling and Bleeding

CAUTION: When pouring engine coolant, be sure to shut the relay box lid and not to let coolant spill on the electrical parts or the paint. If any coolant spills, rinse it off immediately.

1. Slide the heater temperature control lever to maximum heat. Make sure the engine and radiator are cool to the touch.

2. Remove the radiator cap.

3. Loosen the drain plug, and drain the coolant.

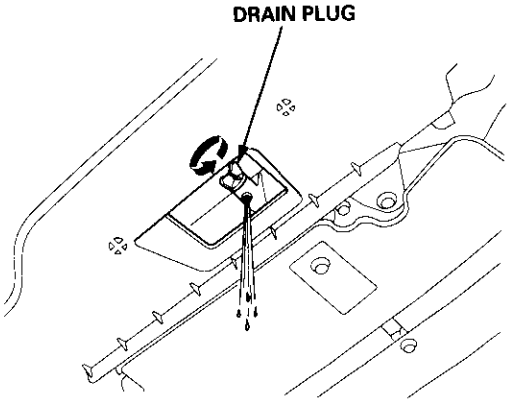

4. Remove the drain bolt from the cylinder block.

D16Y5, D16Y7, D16Y8 engines:

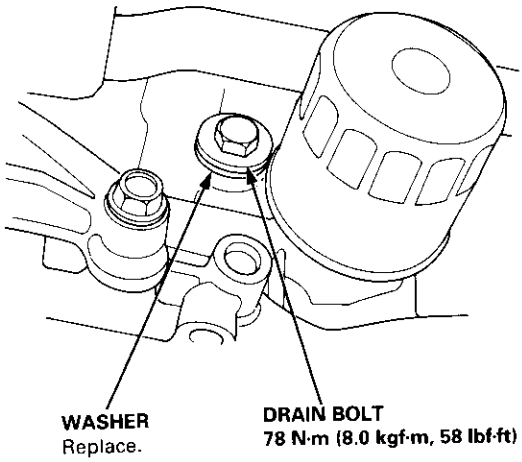

B16A2 engine:

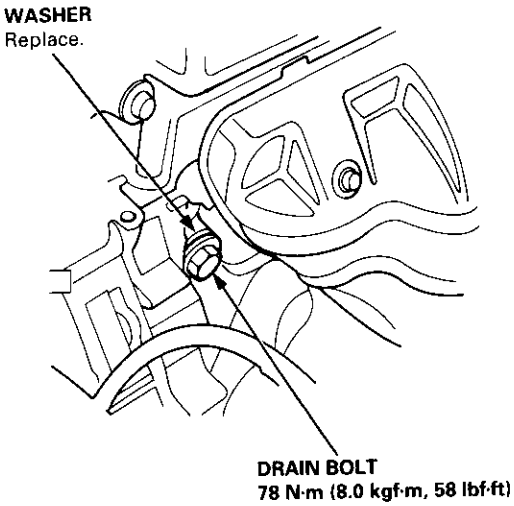

5. Apply liquid gasket to the drain bolt threads, then reinstall the bolt with a new washer and tighten it securely.

6. Tighten the radiator drain plug securely.

7. Remove, drain and reinstall the reservoir. Fill the tank halfway to the MAX mark with water, then up to the MAX mark with antifreeze.

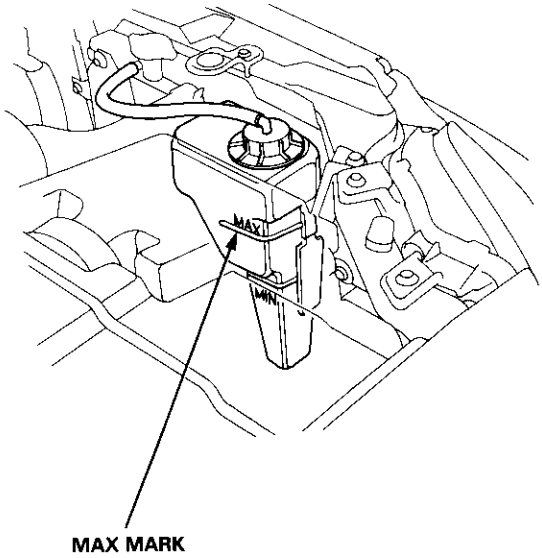

(cont'd)

Engine Coolant Refilling and Bleeding (cont'd)

8. Mix the recommended antifreeze with an equal amount of water in a clean container.

   NOTE:
   - Use only genuine Honda antifreeze/coolant.
   - For best corrosion protection, the coolant concentration must be maintained year-round at 50% minimum. Coolant concentrations less than 50% may not provide sufficient protection against corrosion or freezing.
   - Coolant concentrations greater than 60% will impair cooling efficiency and are not recommended.

   CAUTION:
   - **Do not mix different brands of antifreeze/coolants.**
   - **Do not use additional rust inhibitors or anti-rust products; they may not be compatible with the coolant.**

   Engine Coolant Refill Capacity [including reservoir (0.4 ℓ (0.42 US qt, 0.35 Imp qt))]:

M/T	3.8 ℓ (4.0 US qt, 3.3 Imp qt)*1 4.5 ℓ (4.8 US qt, 4.0 Imp qt)*2
A/T	3.7 ℓ (3.9 US qt, 3.3 Imp qt)*3 3.9 ℓ (4.1 US qt, 3.4 Imp qt)*4
CVT	3.9 ℓ (4.1 US qt, 3.4 Imp qt)

*1: D16Y5, D16Y7, D16Y8 engines
*2: B16A2 engine
*3: D16Y7 engine
*4: D16Y8 engine

9. Pour coolant into the radiator up to the base of the filler neck, and install the radiator cap loosely.

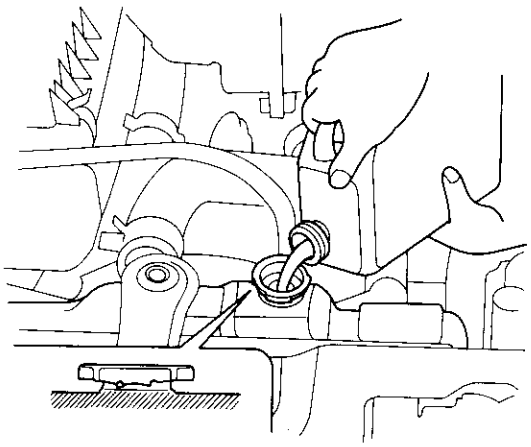

10. Start the engine and let it run until it warms up (the radiator fan comes on at least twice).

11. Turn off the engine. Check the level in the radiator, add coolant if needed.

12. Put the radiator cap on tightly, then run the engine again and check for leaks.

Cap Testing

1. Remove the radiator cap, wet its seal with engine coolant, then install it on the pressure tester.

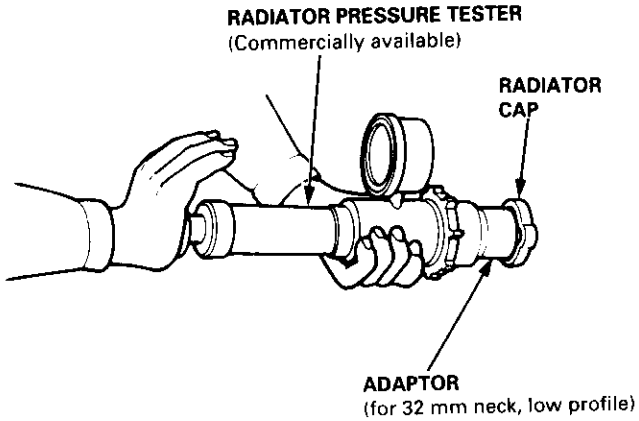

2. Apply a pressure of 93 – 123 kPa (0.95 – 1.25 kgf/cm², 14 – 18 psi).

3. Check for a drop in pressure.

4. If the pressure drops, replace the cap.

Testing

1. Wait until the engine is cool, then carefully remove the radiator cap and fill the radiator with engine coolant to the top of the filler neck.

2. Attach the pressure tester to the radiator and apply a pressure of 93 – 123 kPa (0.95 – 1.25 kgf/cm², 14 – 18 psi).

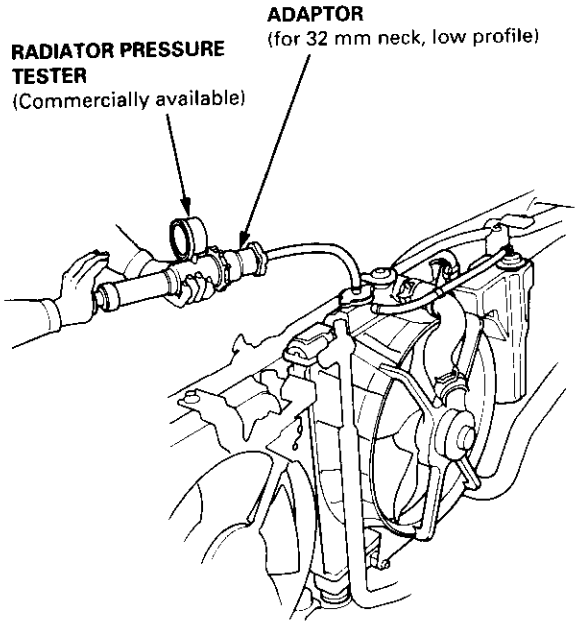

3. Inspect for engine coolant leaks and a drop in pressure.

4. Remove the tester and reinstall the radiator cap.

   NOTE: Check for engine oil in the coolant and/or coolant in the engine oil.

Thermostat

Replacement

NOTE: Use a new O-ring when reassembling.

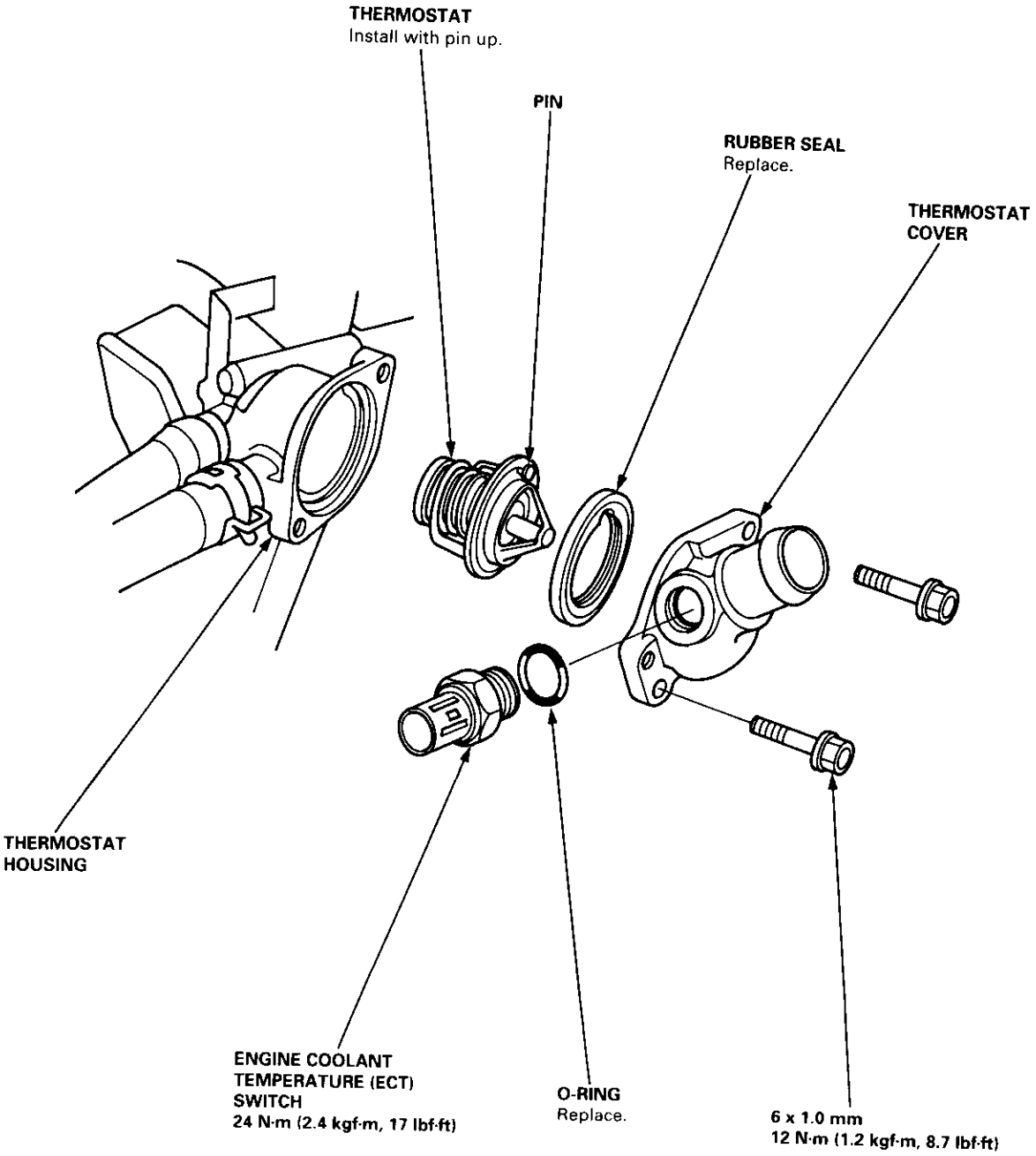

Testing

Replace the thermostat if it is open at room temperature.

To test a closed thermostat:

1. Suspend the thermostat in a container of water as shown.

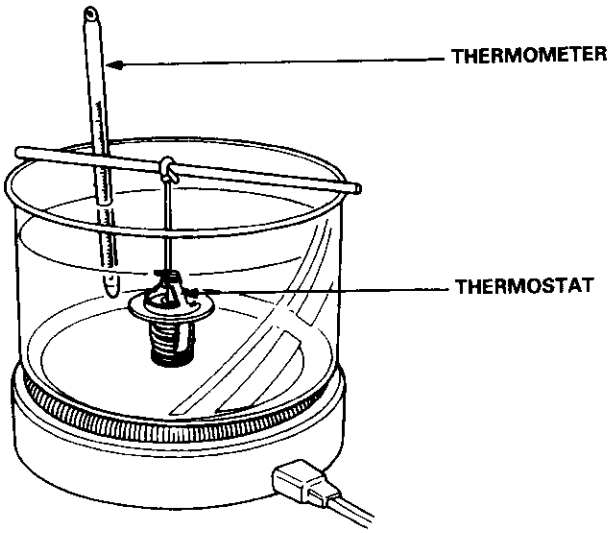

2. Heat the water, and check the temperature with a thermometer. Check the temperature at which the thermostat first opens, and at which it is fully open.

   CAUTION: Do not let the thermometer touch the bottom of the hot container.

3. Measure lift height of the thermostat when fully open.

   STANDARD THERMOSTAT
   Lift height: above 8.0 mm (0.31 in)
   Starts opening: 169° – 176°F (76° – 80°C)
   Fully open: 194°F (90°C)

Testing

⚠ WARNING Removing the ECT switch while the engine is hot can cause the coolant to spray out, seriously scalding you. Always let the engine and radiator cool down before removing the ECT switch.

NOTE: Bleed air from the cooling system after installing the ECT switch (see page 10-7).

1. Remove the ECT switch from the thermostat housing (see page 10-10).

2. Suspend the ECT switch in a container of water as shown.

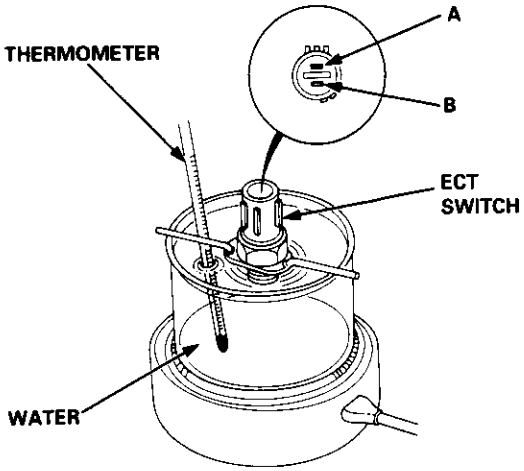

3. Heat the water, and check the temperature with a thermometer.

   CAUTION: Do not let the thermometer touch the bottom of the hot container.

4. Measure the resistance between the A and B terminals according to the table.

Operation		Temperature	Terminal A	Terminal B
SWITCH	ON	196° – 203°F (91° – 95°C)	○	○
	OFF	5° – 15°F (3° – 8°C) lower than the temperature when it goes on		

Illustrated Index

NOTE:
- Use new O-rings when reassembling.
- Use liquid gasket, Part No. 08718 – 0001 or 08718 – 0003.

D16Y5, D16Y7, D16Y8 engines:

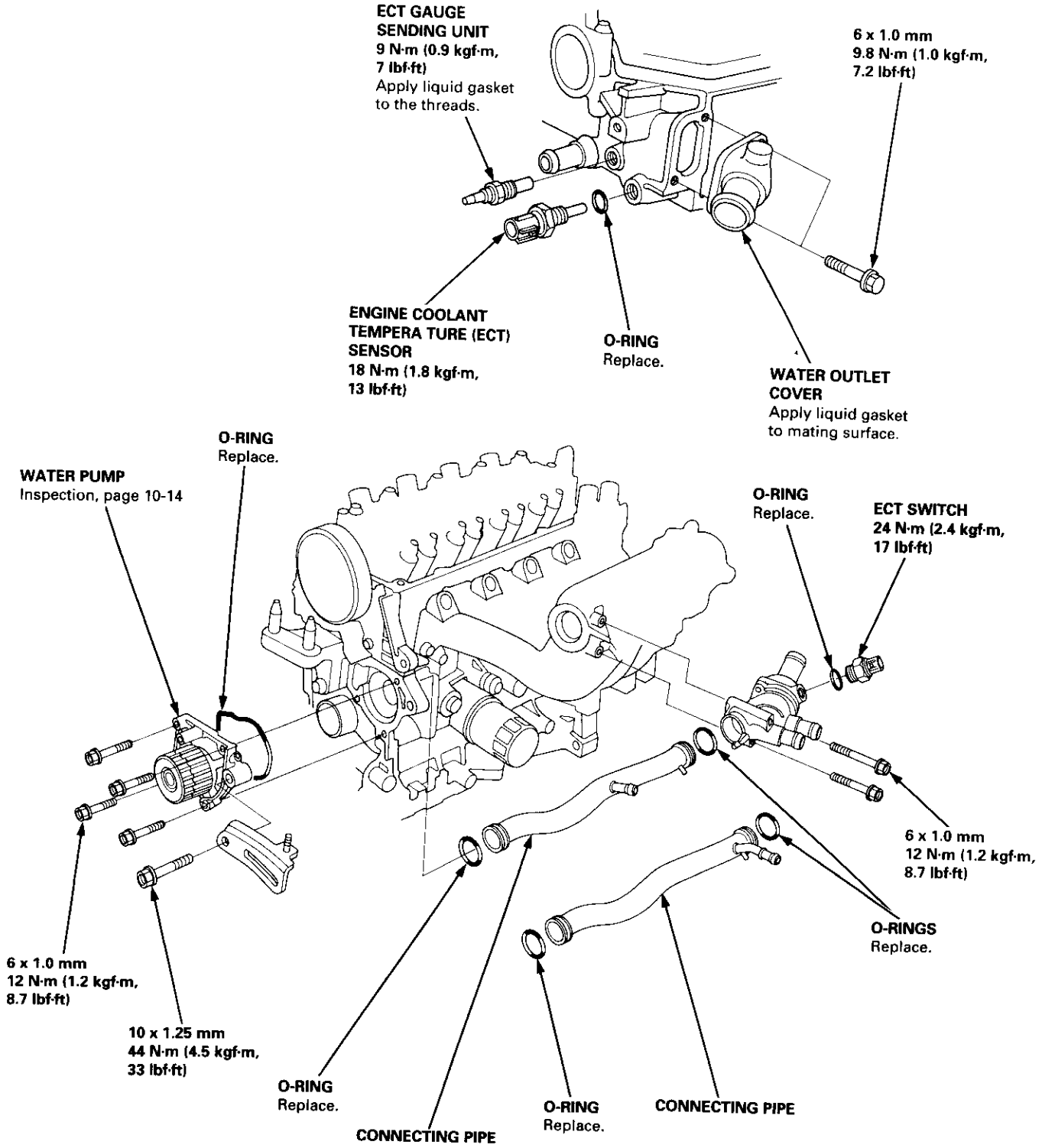

B16A2 engine:

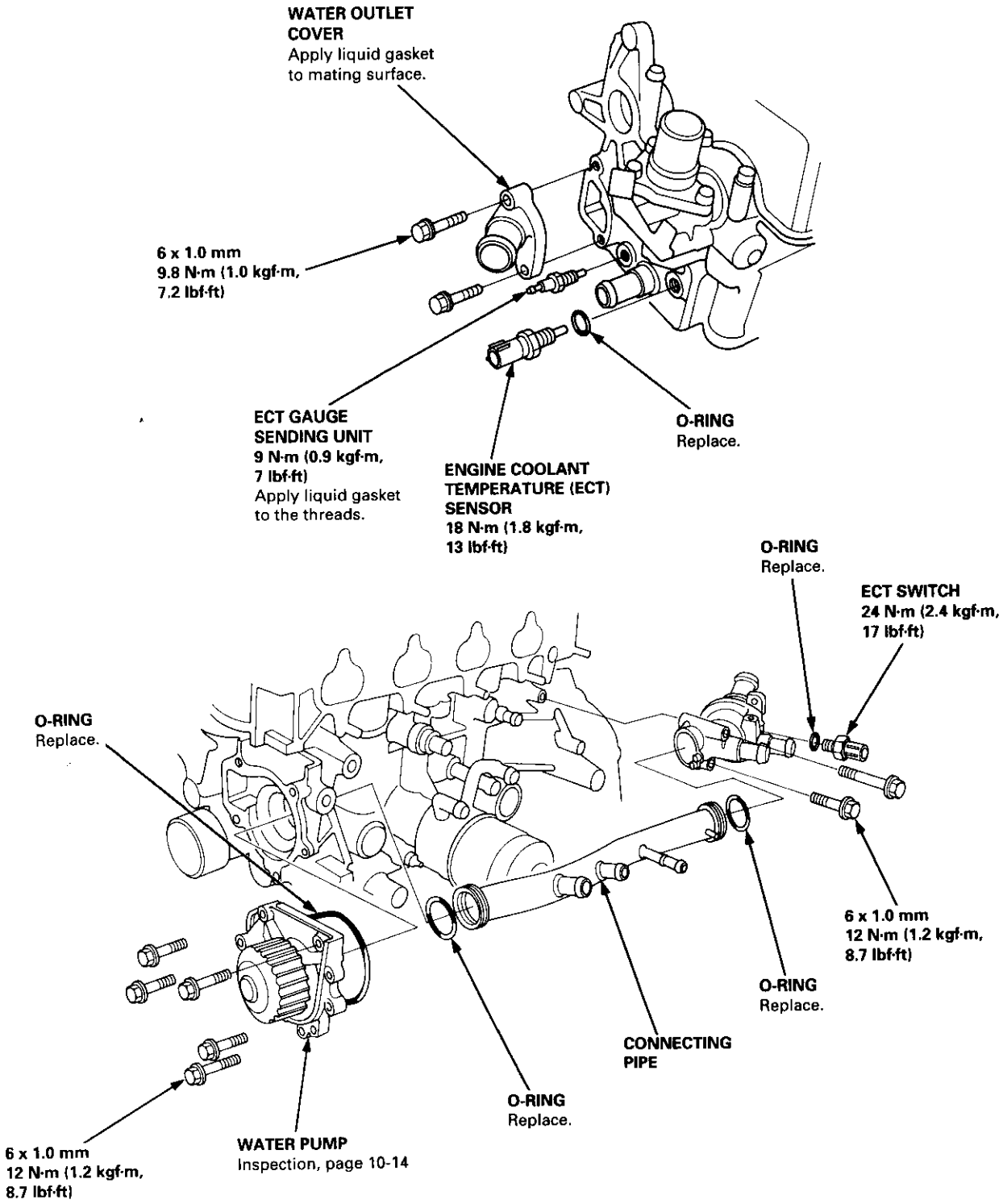

Inspection

1. Remove the timing belt (see section 6).
2. Turn the water pump pulley counterclockwise. Check that it tarns freely.
3. Check for signs of seal leakage.

   NOTE: A small amount of "weeping" from the bleed hole is normal.

D16Y5, D16Y7, D16Y8 engines:

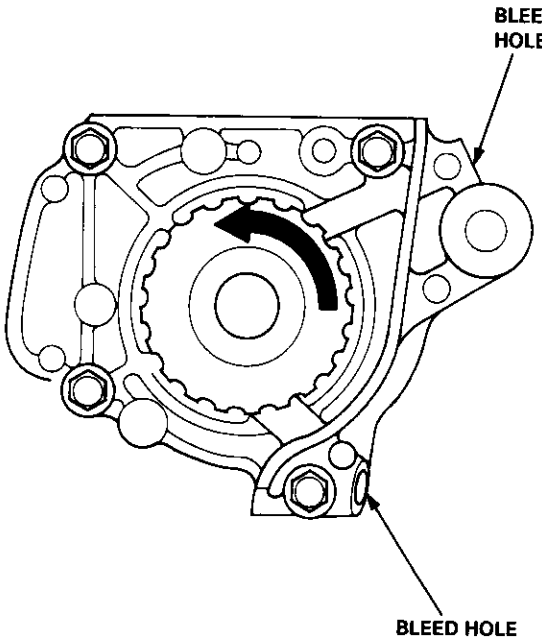

B16A2 engine:

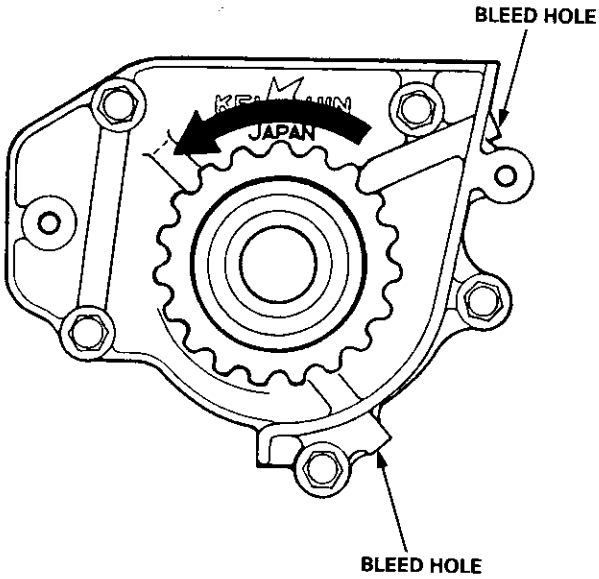

Replacement

1. Remove the timing belt (see section 6).
2. Remove the water pump by removing five bolts.

   NOTE: Inspect, repair and clean the O-ring groove and mating surface with the cylinder block.

D16Y5, D16Y7, D16Y8 engines:

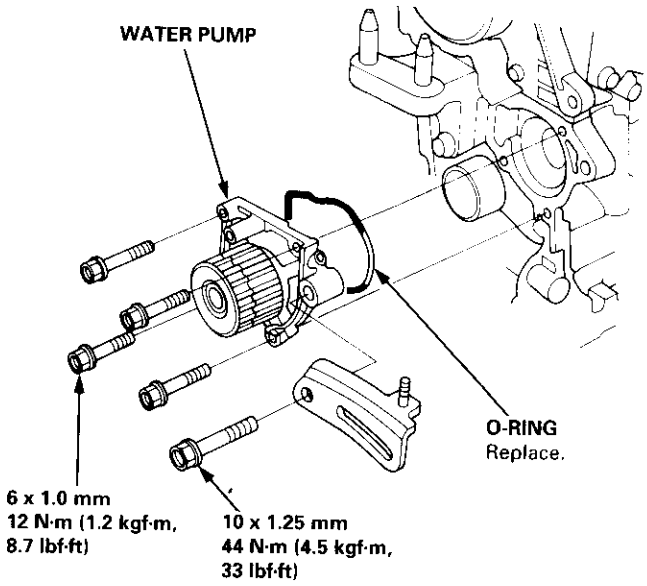

B16A2 engine:

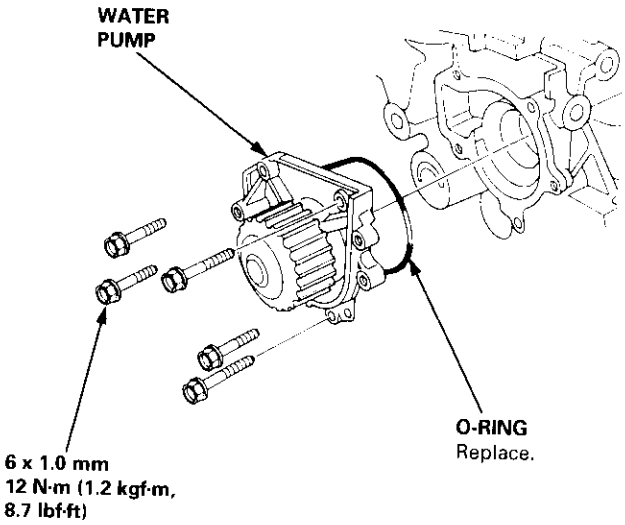

3. Install the water pump in the reverse order of removal.

   NOTE:
   - Keep the O-ring in position when installing.
   - Clean the spilled engine coolant.

Fuel and Emissions

Special Tools 11-2
Component Locations
Index 11-3
System Description
Vacuum Connections 11-12
Electrical Connections 11-29
System Connectors 11-51
Troubleshooting
Troubleshooting Procedures 11-81
Engine Control Module/Powertrain Control Module Terminal Arrangement 11-88
Diagnostic Trouble Code Chart 11-97
How to Read Flowcharts 11-103

PGM-FI System

System Description 11-104
Troubleshooting Flowcharts
Engine Control Module/Powertrain Control Module 11-107
Manifold Absolute Pressure Sensor 11-115
Intake Air Temperature Sensor 11-124
Engine Coolant Temperature Sensor 11-128
Throttle Position Sensor 11-132
Primary Heated Oxygen Sensor (Sensor 1) ... 11-139
Secondary Heated Oxygen Sensor (Sensor 2) 11-153
Heated Oxygen Sensor Heater 11-157
Fuel Supply System 11-164
Random Misfire 11-166
Misfire Detected in One Cylinder 11-167
Knock Sensor 11-170
CKP/TDC/CYP Sensor 11-172
Vehicle Speed Sensor 11-176
Barometric Pressure Sensor 11-178
Electrical Load Detector 11-179
CKF Sensor 11-183
ECM/PCM Internal Circuit 11-188
A/T Signal (TMA/TMB) 11-189

Idle Control System

System Description 11-190
Troubleshooting Flowcharts
Idle Control System 11-192
Idle Air Control Valve 11-194
Starter Switch Signal 11-202
Air Conditioning Signal 11-204
Alternator FR Signal 11-208
Brake Switch Signal 11-210
Power Steering Pressure Switch Signal 11-212
A/T Gear Position Signal 11-216
Clutch Switch Signal 11-218
Idle Speed Setting 11-220

Fuel Supply System

Fuel Lines 11-224
Fuel Tube/Quick-Connect Fittings 11-227
System Description 11-230
Fuel Pressure 11-230
Fuel Injectors 11-232
Fuel Pressure Regulator 11-234
Fuel Filter 11-235
Fuel Pump 11-236
PGM-FI Main Relay 11-237
Fuel Tank 11-241

Intake Air System

System Description 11-243
Air Cleaner 11-244
Throttle Cable 11-244
Throttle Body 11-247
Fuel Injection Air Control System 11-250

Emission Control System

System Description 11-252
Tailpipe Emission 11-252
Three Way Catalytic Converter 11-252
Exhaust Gas Recirculation System 11-254
Positive Crankcase Ventilation System 11-266
Evaporative Emission Controls 11-267

Special Tools

Ref. No.	Tool Number	Description	Qty	Page Reference
①	A973X – 041 – XXXXX	Vacuum Pump/Gauge, 0 – 30 in.Hg	1	11-251, 256, 257, 273, 274, 283, 284, 286, 288, 289, 291, 294, 296, 297
②	07JAZ – 001000B	Vacuum/Pressure Gauge, 0 – 4 in.Hg	1	11-294, 295
③	07PAZ – 0010100	SCS Service Connector	1	11-81
④	07SAZ – 001000A	Backprobe Set	2	11-83
⑤	07406 – 0040001	Fuel Pressure Gauge	1	11-230, 231, 234
⑥	07406 – 004030A	Fuel Pressure Adapter, 6 x 15 mm	1	11-230

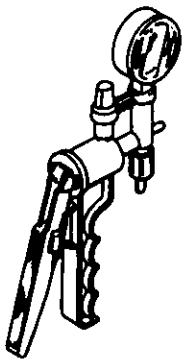

①

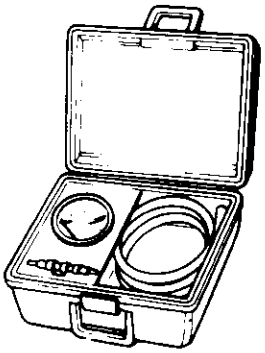

②

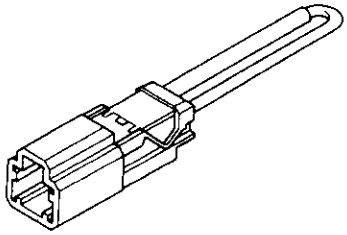

③

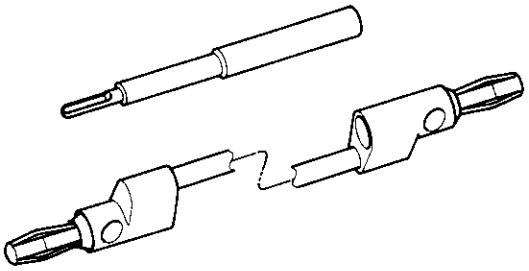

④

⑤

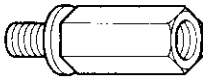

⑥

Index

D16Y5 engine:

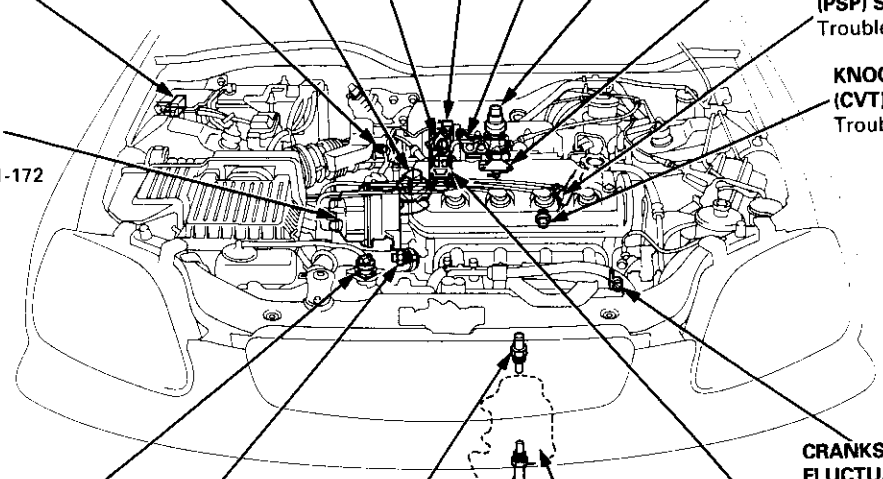

(cont'd)

Index (cont'd)

D16Y8 engine:

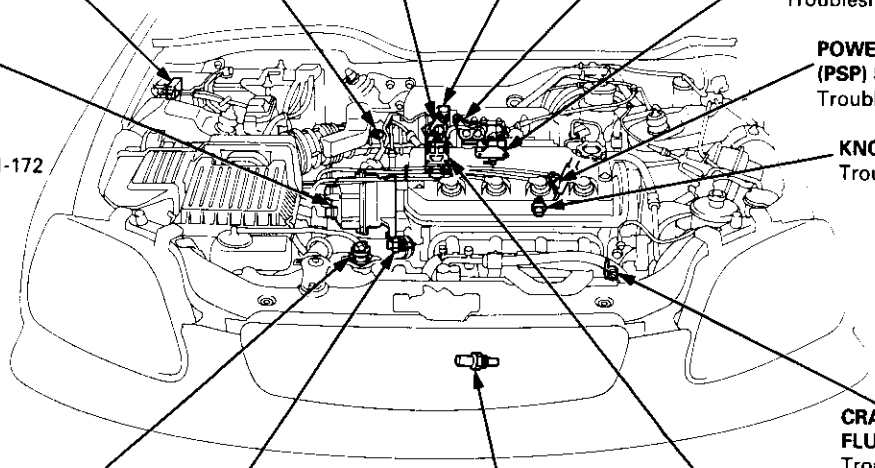

THROTTLE POSITION (TP) SENSOR
Troubleshooting, page 11-132

MANIFOLD ABSOLUTE PRESSURE (MAP) SENSOR
Troubleshooting, page 11-115

INTAKE AIR TEMPERATURE (IAT) SENSOR
Troubleshooting, page 11-124

IDLE AIR CONTROL (IAC) VALVE (M/T)
Troubleshooting, page 11-194

ELECTRICAL LOAD DETECTOR (ELD) (USA)
Troubleshooting, page 11-179

EVAPORATIVE EMISSION (EVAP) PURGE CONTROL SOLENOID VALVE
Troubleshooting, page 11-271, 283

CRANKSHAFT POSITION/ TOP DEAD CENTER/ CYLINDER POSITION (CKP/TDC/CYP) SENSOR
(Built into the distributor)
Troubleshooting, page 11-172

POWER STEERING PRESSURE (PSP) SWITCH (USA)
Troubleshooting, page 11-212

KNOCK SENSOR (KS)
Troubleshooting, page 11-170

CRANKSHAFT SPEED FLUCTUATION (CKF) SENSOR
Troubleshooting, page 11-183

VEHICLE SPEED SENSOR (VSS)
Troubleshooting, page 11-176

IDLE AIR CONTROL (IAC) VALVE (A/T)
Troubleshooting, page 11-198

ENGINE COOLANT TEMPERATURE (ECT) SENSOR
Troubleshooting, page 11-128

PRIMARY HEATED OXYGEN SENSOR (PRIMARY HO2S) (SENSOR 1) ('96 – 98 models)
Troubleshooting, page 11-139

'96 – 98 models:

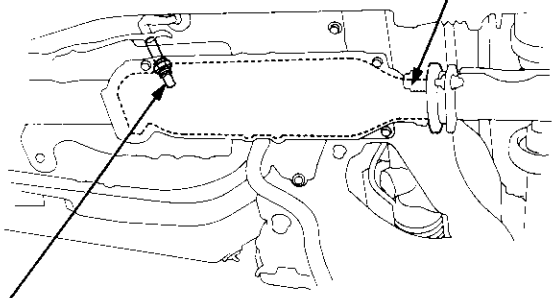

THREE WAY CATALYTIC CONVERTER (TWC)
Troubleshooting, page 11-252

SECONDARY HEATED OXYGEN SENSOR (SECONDARY HO2S) (SENSOR 2)
Troubleshooting, page 11-153

'99 – 00 models:

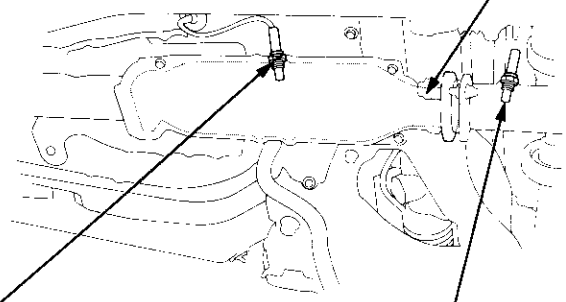

THREE WAY CATALYTIC CONVERTER (TWC)
Troubleshooting, page 11-252

SECONDARY HEATED OXYGEN SENSOR (SECONDARY HO2S) (SENSOR 2)
Troubleshooting, page 11-155

PRIMARY HEATED OXYGEN SENSOR (PRIMARY HO2S) (SENSOR 1)
Troubleshooting, page 11-141

D16Y7 engine:

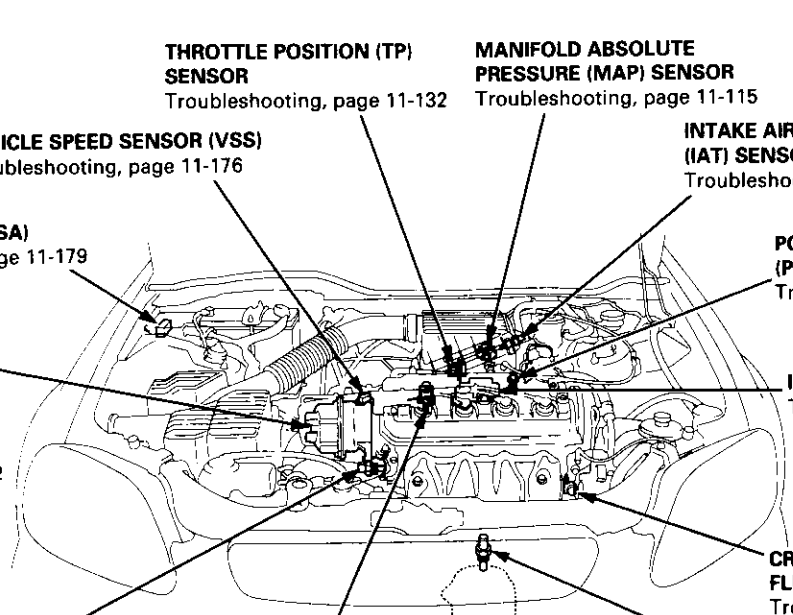

(cont'd)

Index (cont'd)

B16A2 engine:

INTAKE AIR TEMPERATURE (IAT) SENSOR
Troubleshooting, page 11-125

MANIFOLD ABSOLUTE PRESSURE (MAP) SENSOR
Troubleshooting, page 11-119

IDLE AIR CONTROL (IAC) VALVE
Troubleshooting, page 11-196

ELECTRICAL LOAD DETECTOR (ELD) (USA)
Troubleshooting, page 11-180

THROTTLE POSITION (TP) SENSOR
Troubleshooting, page 11-134

POWER STEERING PRESSURE (PSP) SWITCH (USA)
Troubleshooting, page 11-214

CRANKSHAFT POSITION/ TOP DEAD CENTER/ CYLINDER POSITION (CKP/TDC/CYP) SENSOR
(Built into the distributor)
Troubleshooting, page 11-174

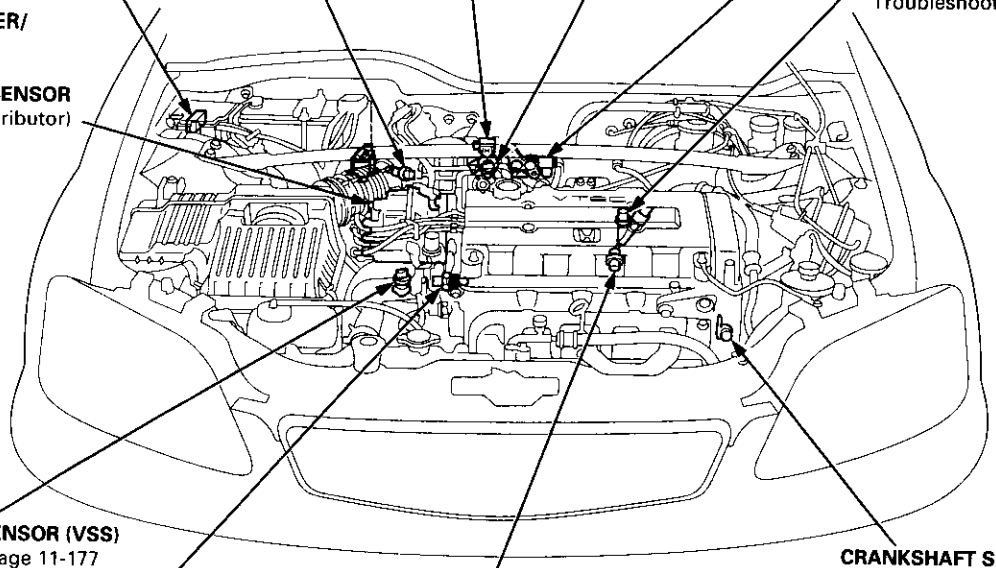

VEHICLE SPEED SENSOR (VSS)
Troubleshooting, page 11-177

ENGINE COOLANT TEMPERATURE (ECT) SENSOR
Troubleshooting, page 11-128

KNOCK SENSOR (KS)
Troubleshooting, page 11-171

CRANKSHAFT SPEED FLUCTUATION (CKF) SENSOR
Troubleshooting, page 11-185

THREE WAY CATALYTIC CONVERTER (TWC)
Troubleshooting, page 11-252

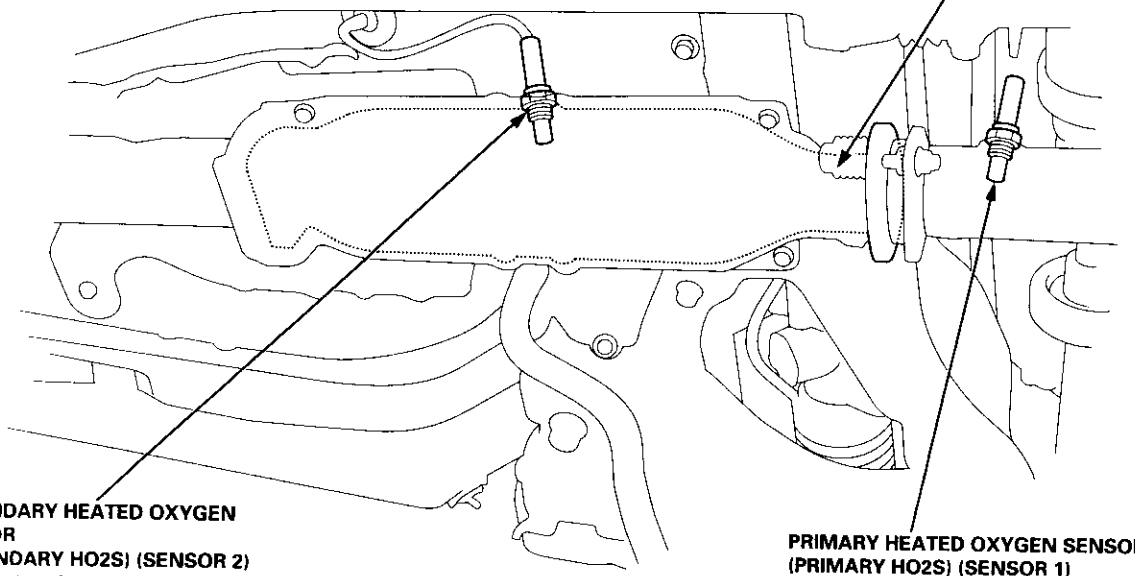

SECONDARY HEATED OXYGEN SENSOR
(SECONDARY HO2S) (SENSOR 2)
Troubleshooting, page 11-155

PRIMARY HEATED OXYGEN SENSOR (PRIMARY HO2S) (SENSOR 1)
Troubleshooting, page 11-141

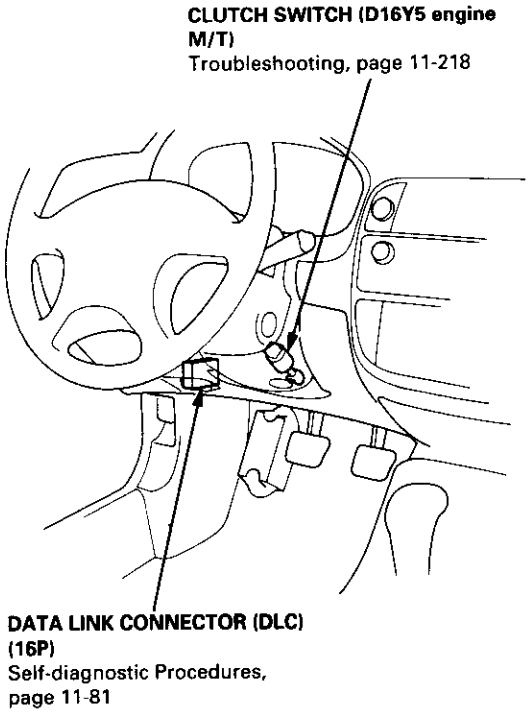

'96 – 98 models:

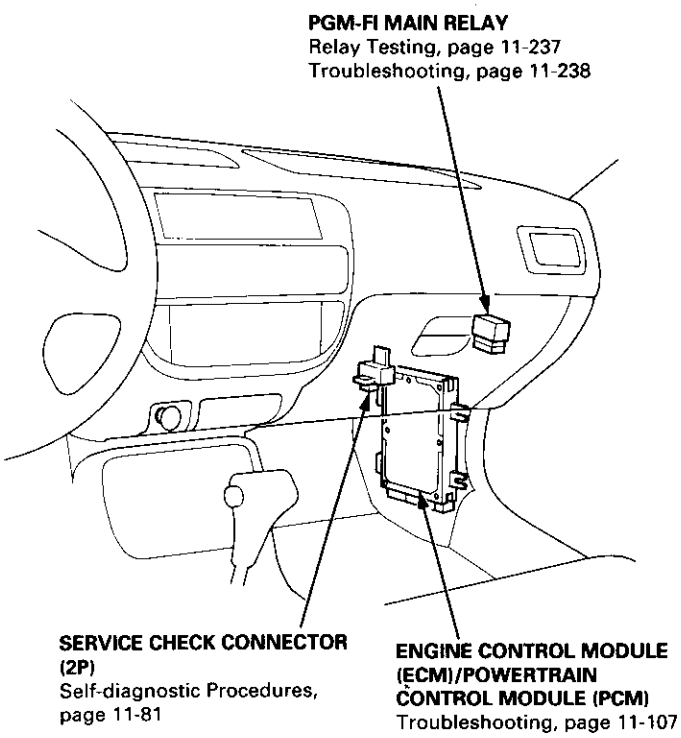

'99 – 00 models:

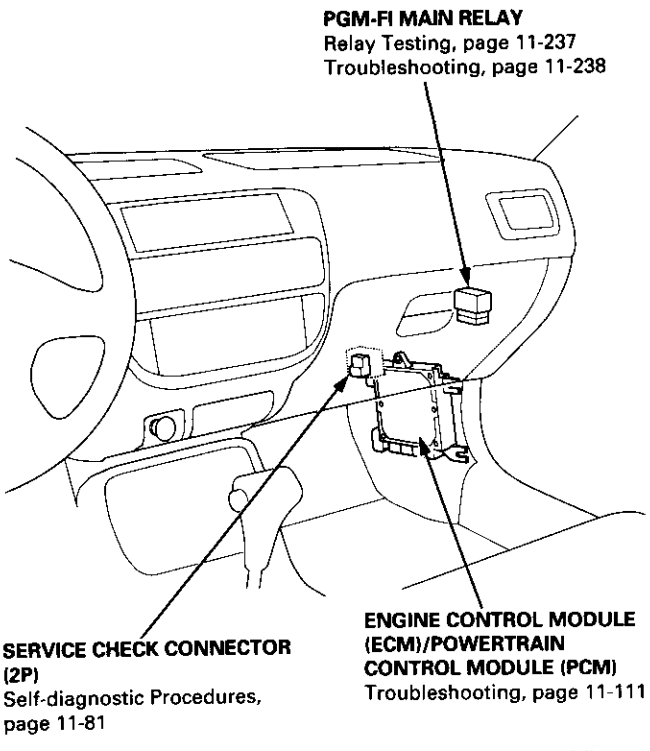

(cont'd)

Index (cont'd)

'96 D16Y8 engine (coupe),
'97 D16Y7 engine (coupe: KL model, sedan: KL (LX) model),
'97 D16Y8 engine (coupe: all models, sedan: KL model), '98-all models:

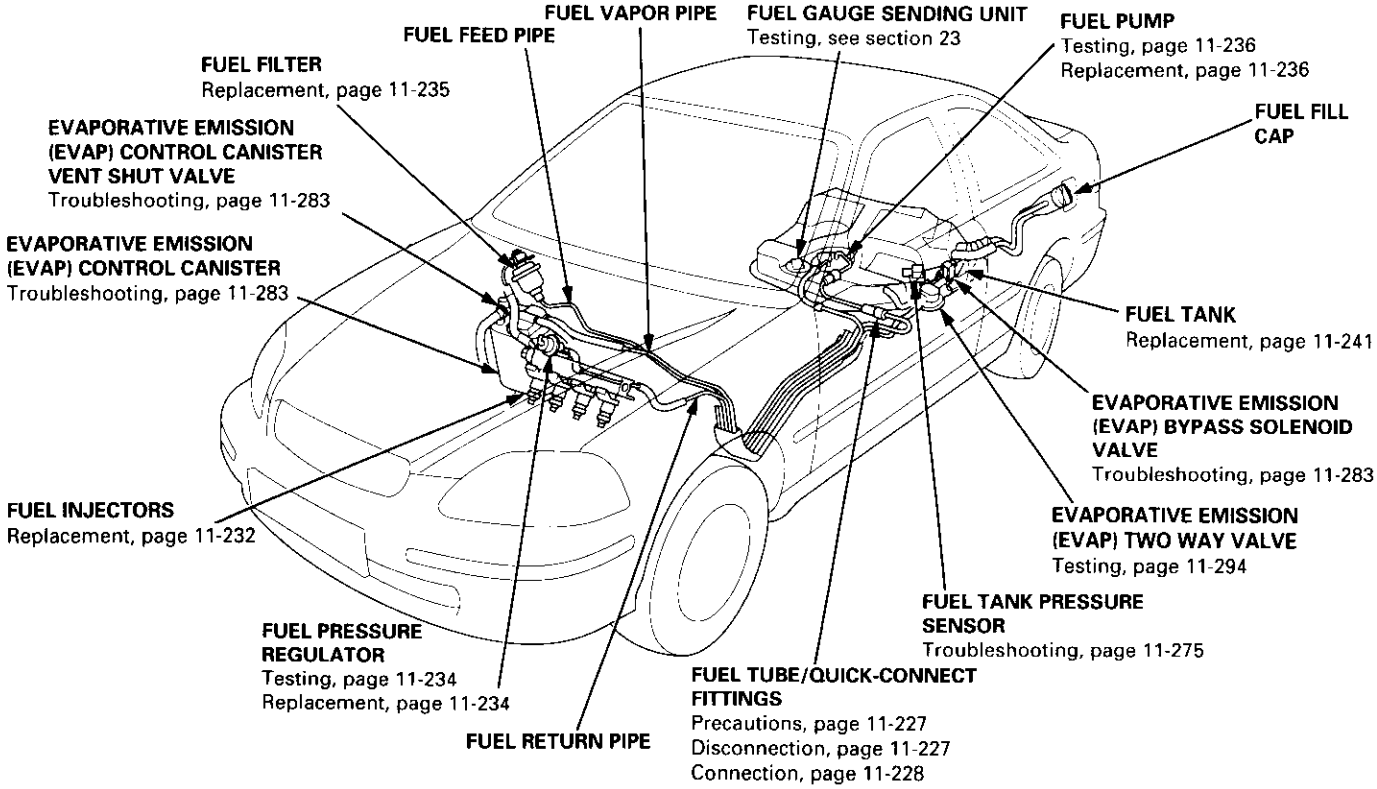

'96 D16Y5 engine, '96 D16Y7 engine, '96 D16Y8 engine (sedan),
'97 D16Y5 engine, '97 D16Y7 engine (coupe: KA, KC models,
sedan: KA, KC, KL (DX) models, hatchback: all models),
'97 D16Y8 engine (sedan: KA, KC models):

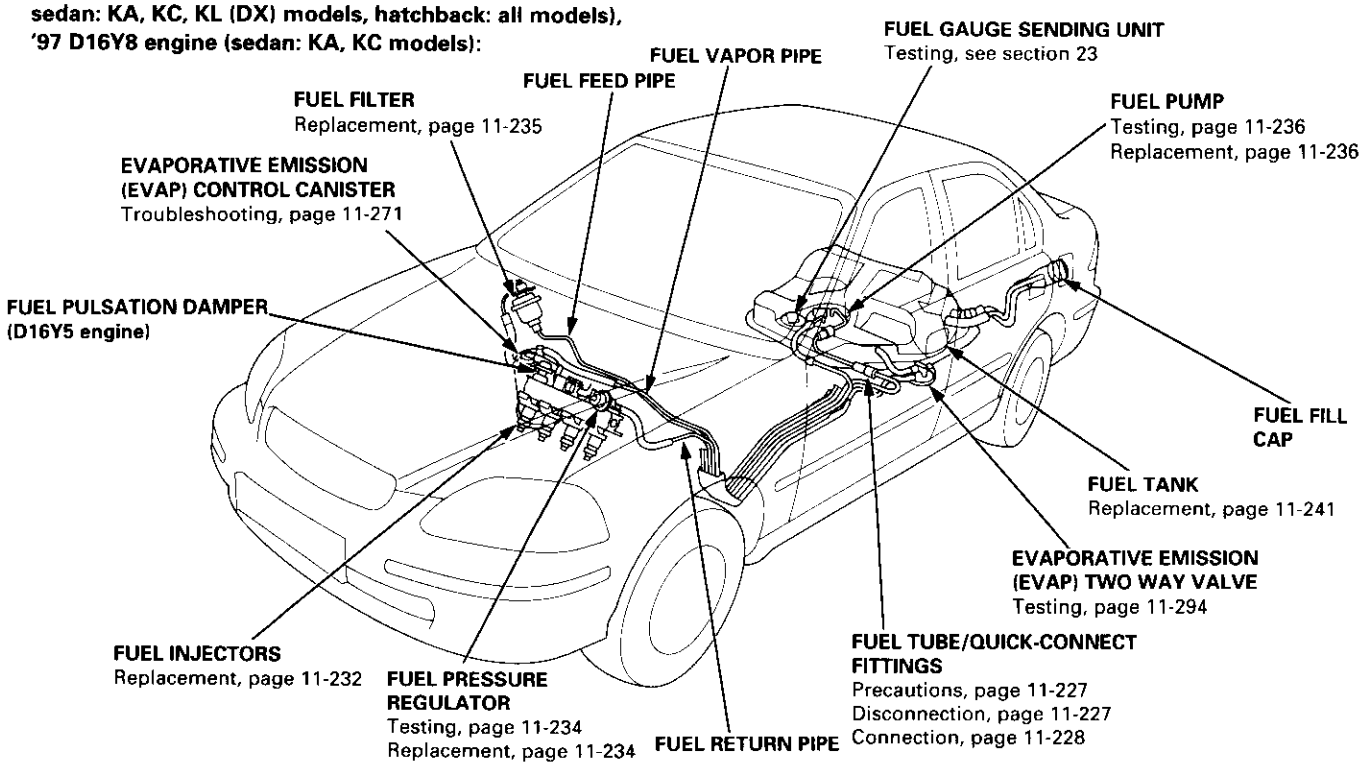

'99 – 00 models:

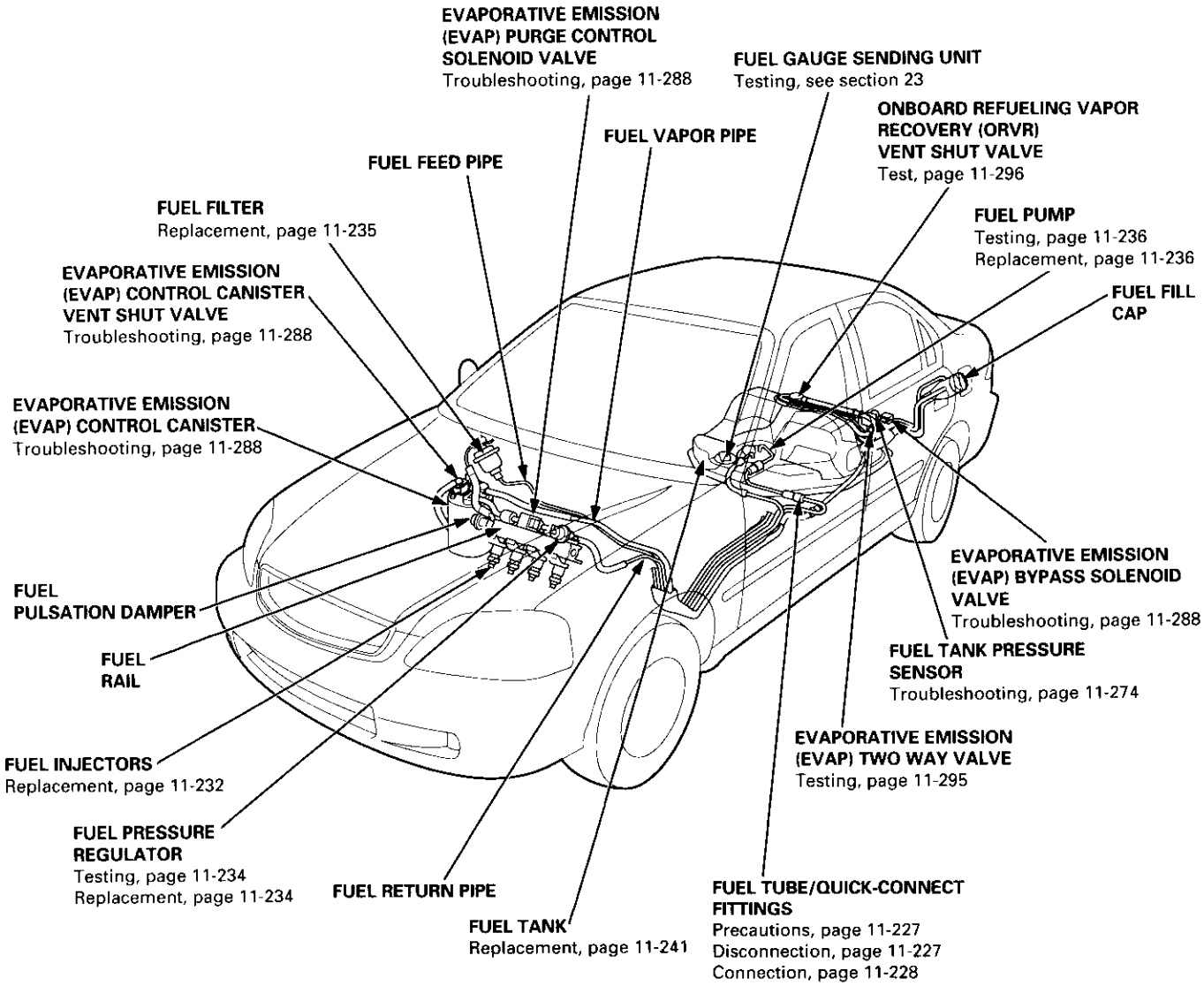

(cont'd)

Index (cont'd)

D16Y5, D16Y8 engine:

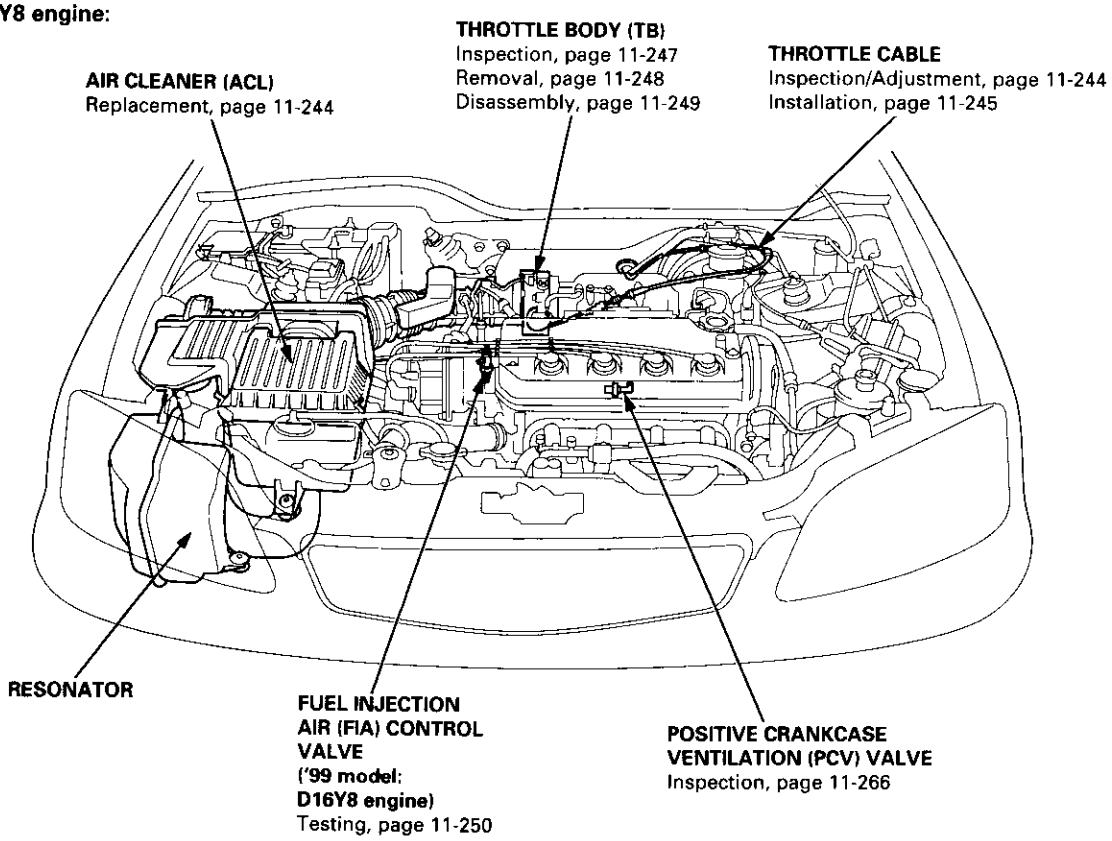

D16Y7 engine:

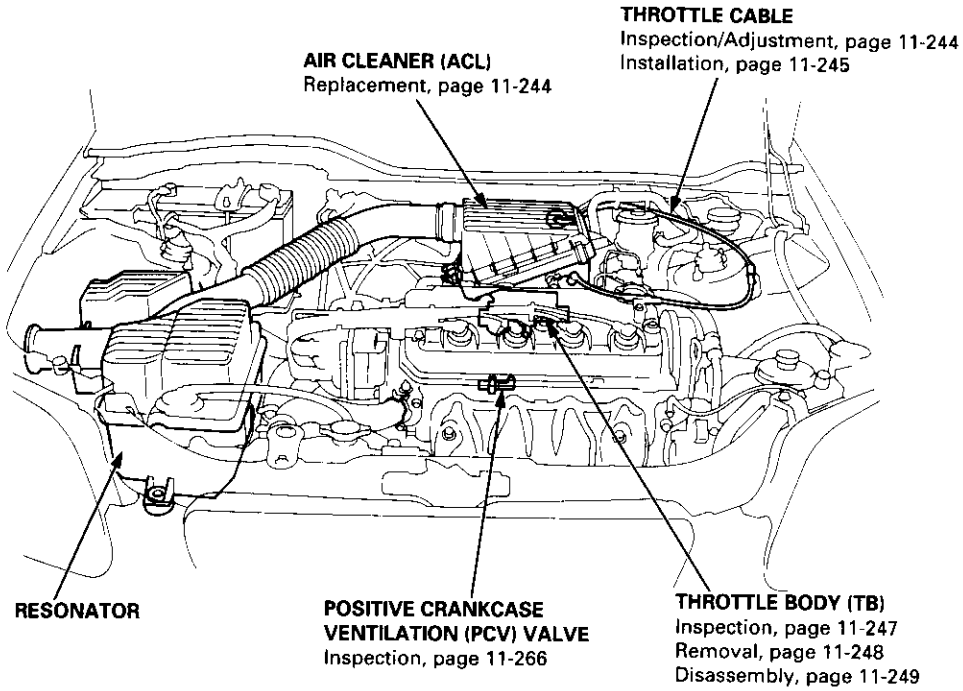

B16A2 engine:

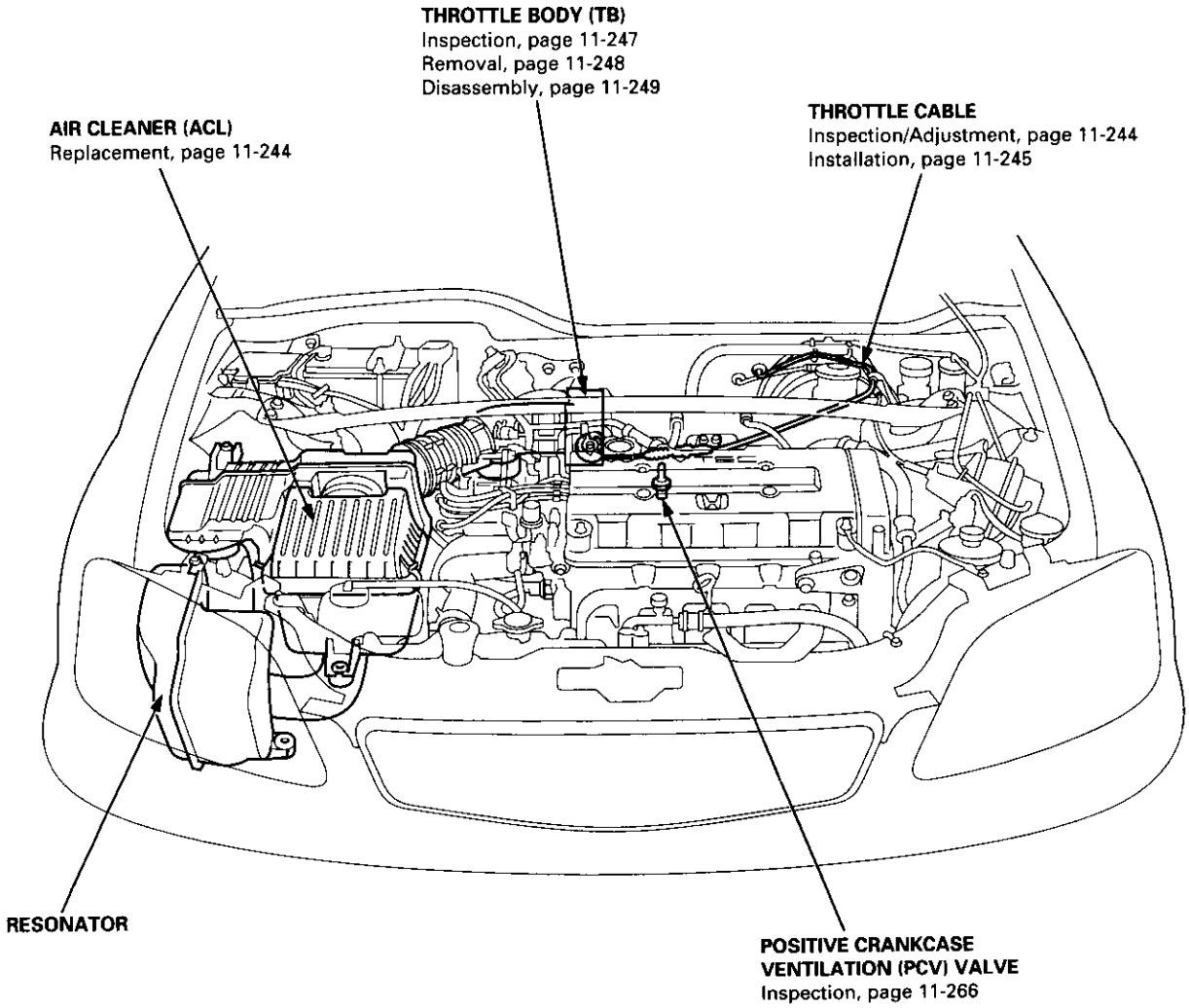

Vacuum Connections

D16Y5 engine ('96 – 97 models):

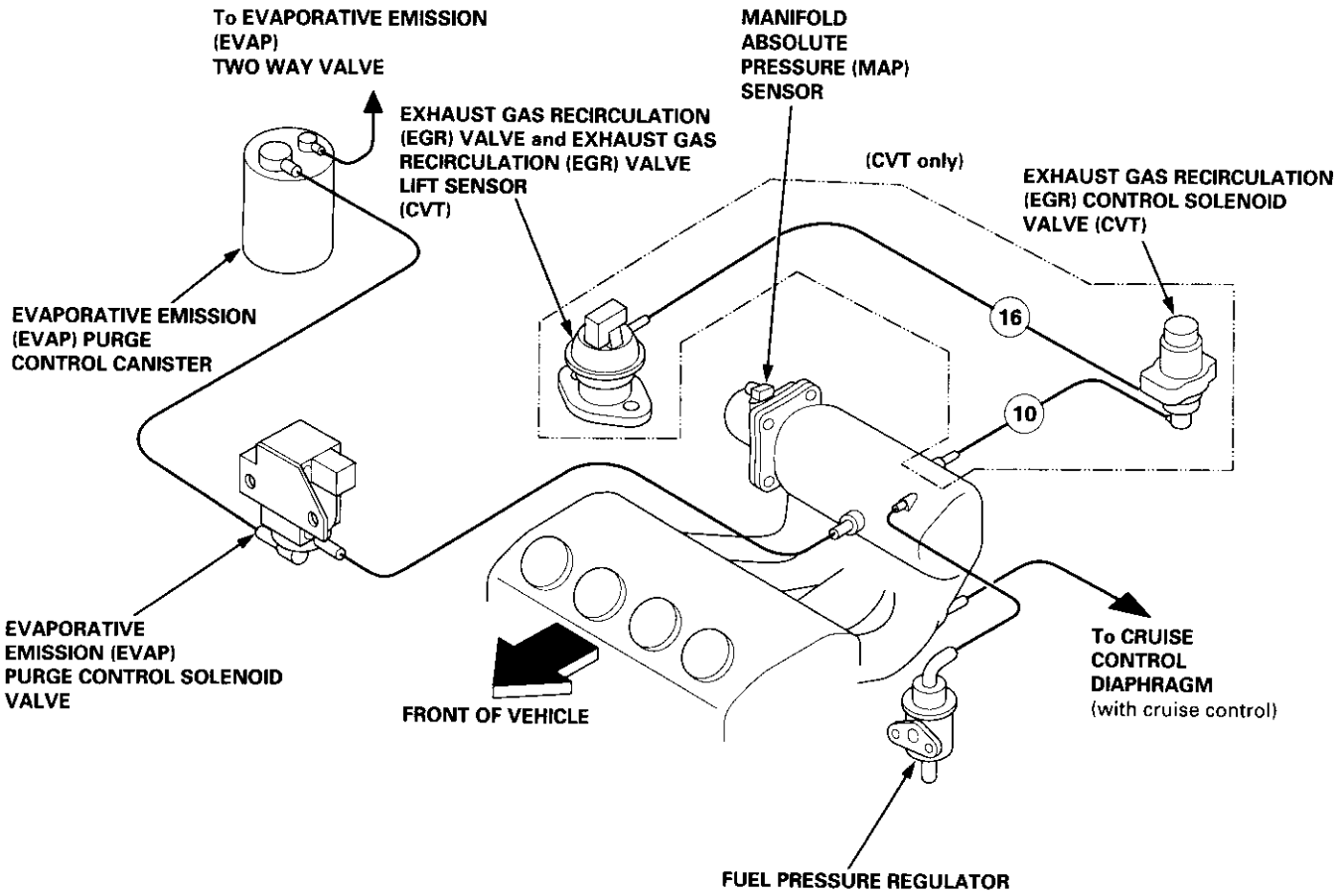

○: Vacuum hose No.

D16Y5 engine ('98 – 00 models):

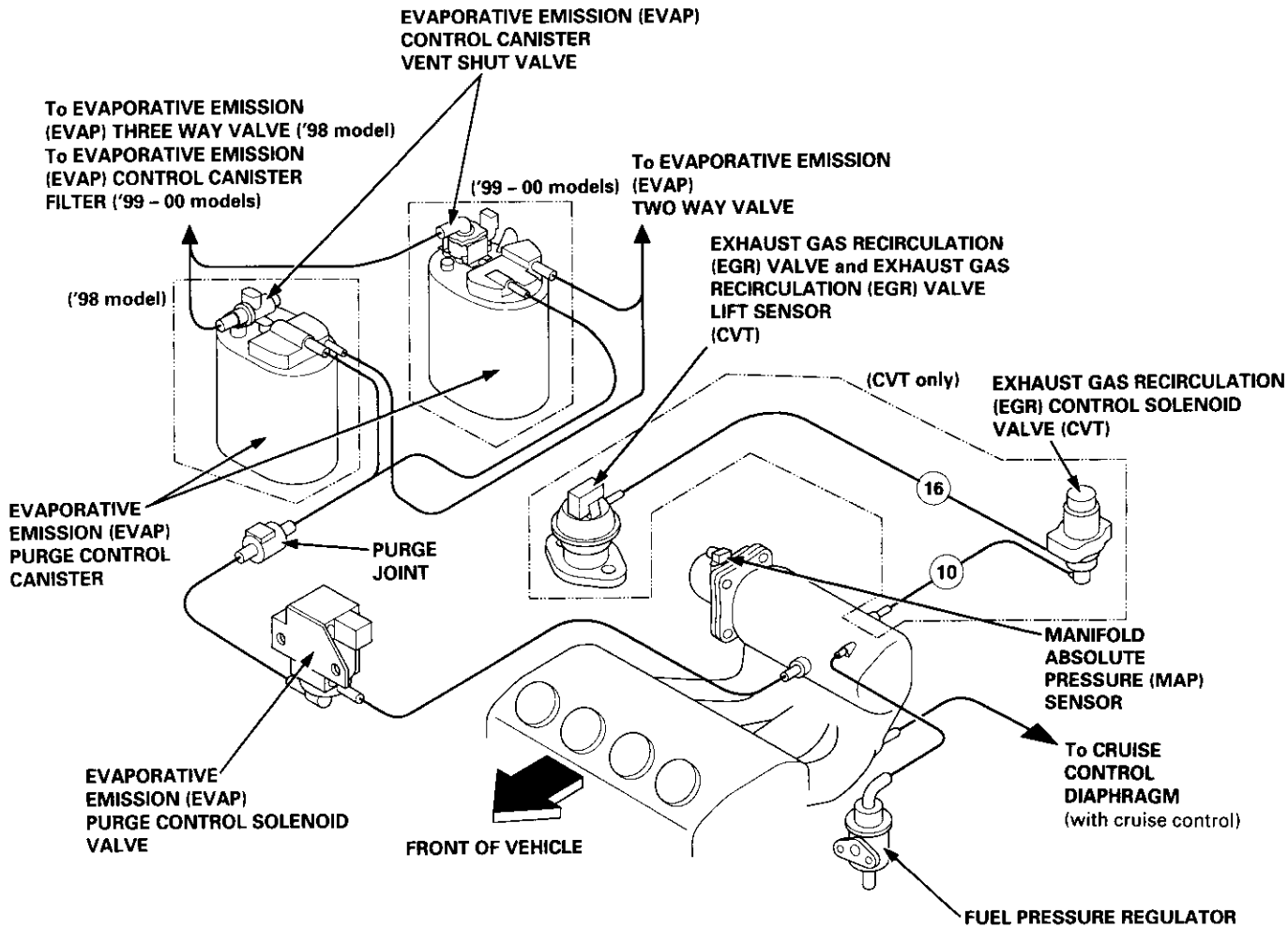

○: Vacuum hose No.

(cont'd)

Vacuum Connections (cont'd)

D16Y8 engine ('96 – 98 models):

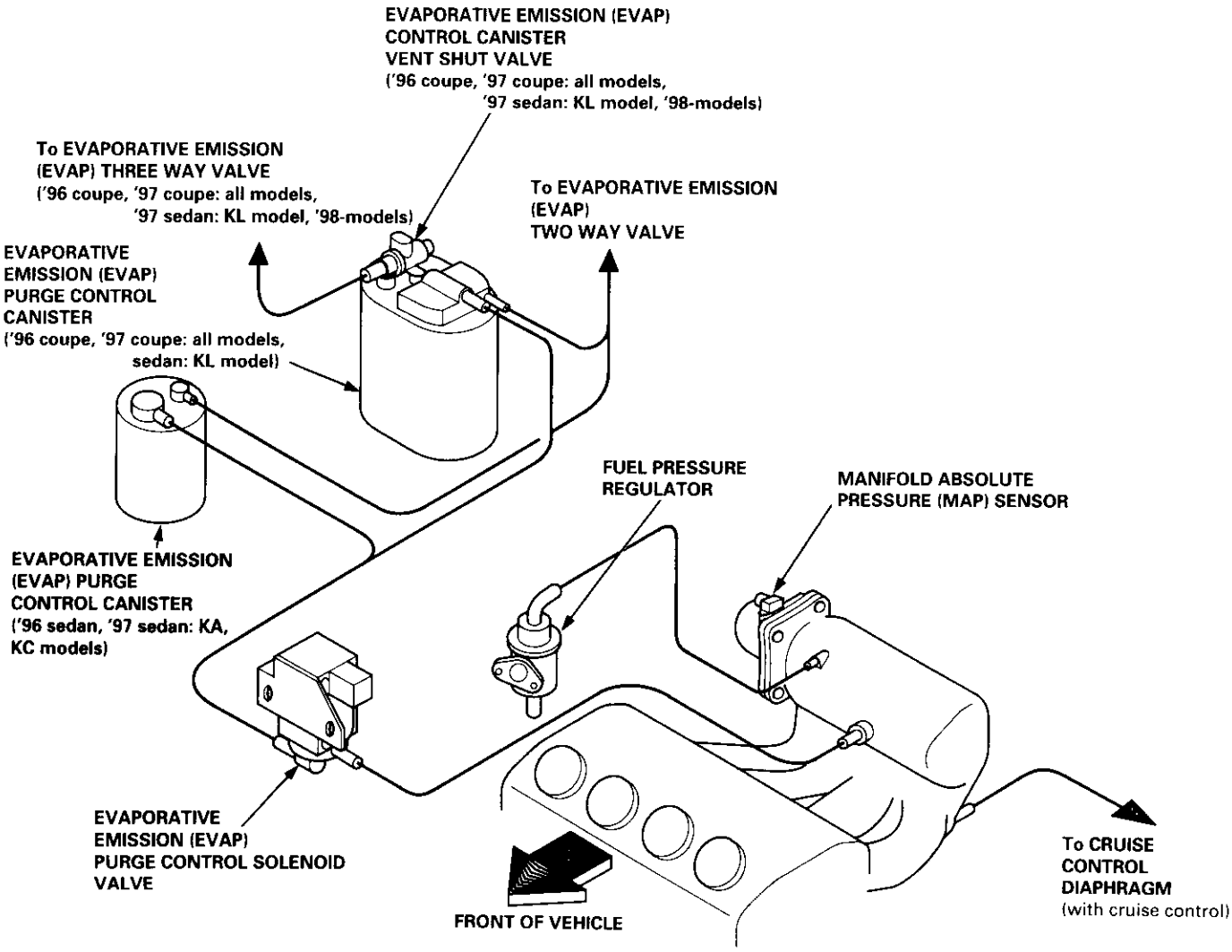

D16Y8 engine ('99 – 00 models):

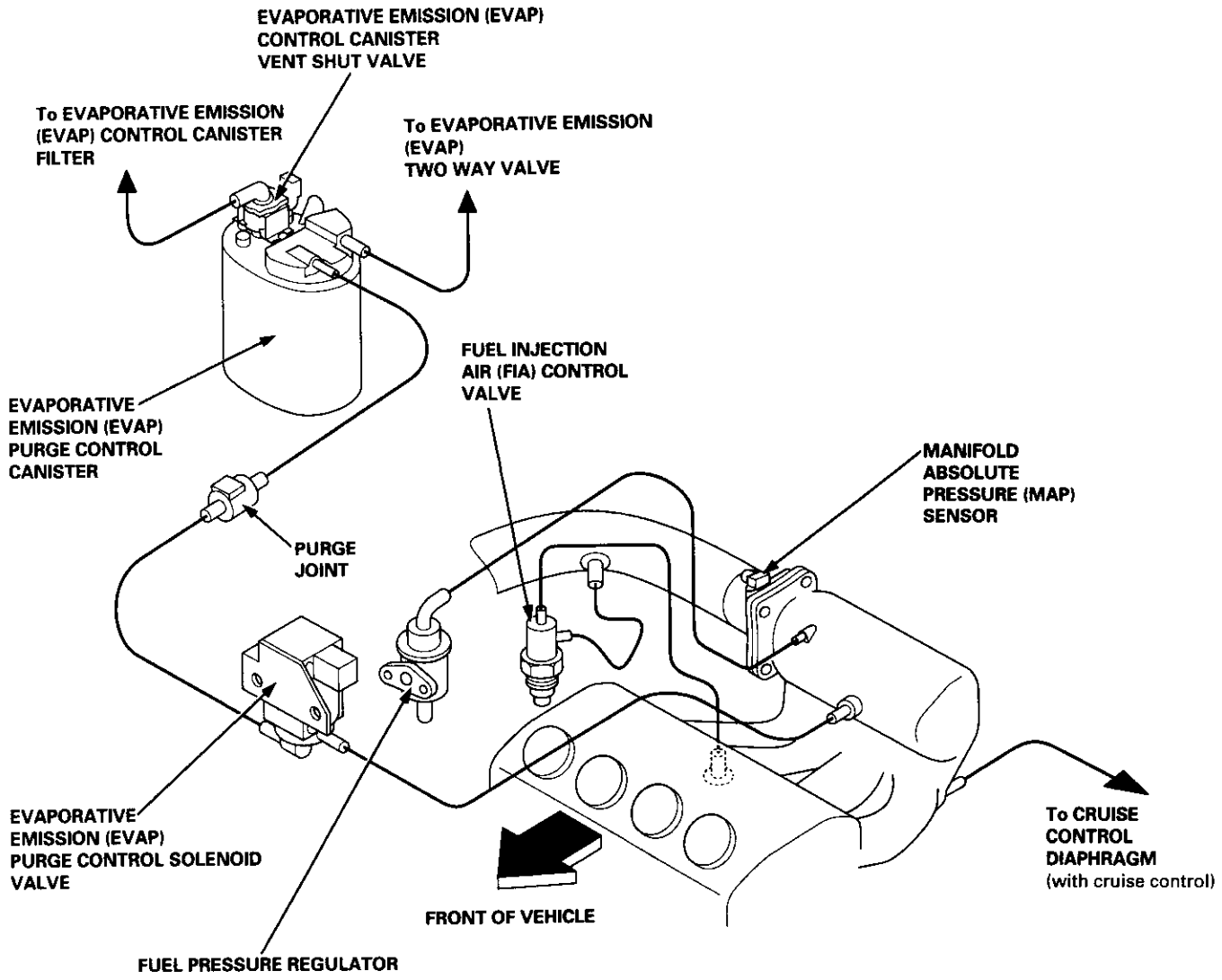

(cont'd)

Vacuum Connections (cont'd)

D16Y7 engine ('96 models, '97 coupe: KA, KC models, '97 sedan: KA, KC, KL (DX) models, '97 hatchback: all models):

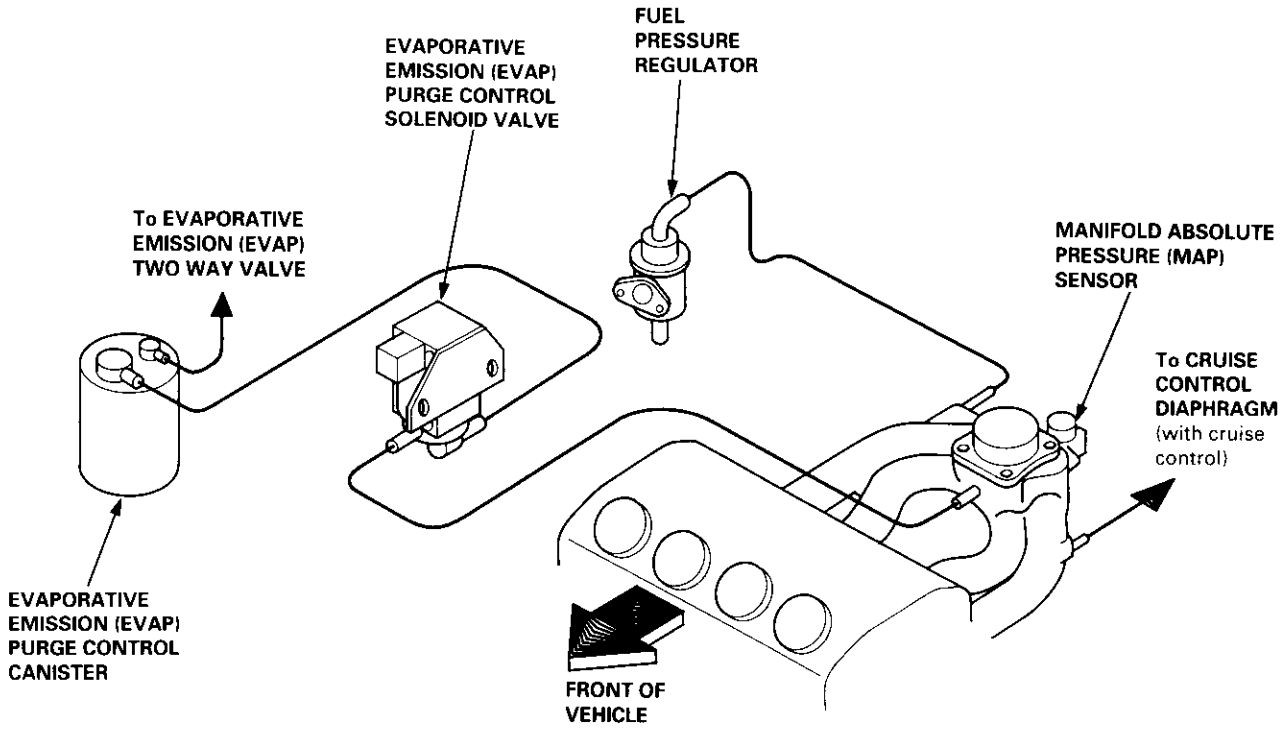

D16Y7 engine ('97 coupe: KL model, '97 sedan: KL (LX) model, '98 model, '99 model, '00 model):

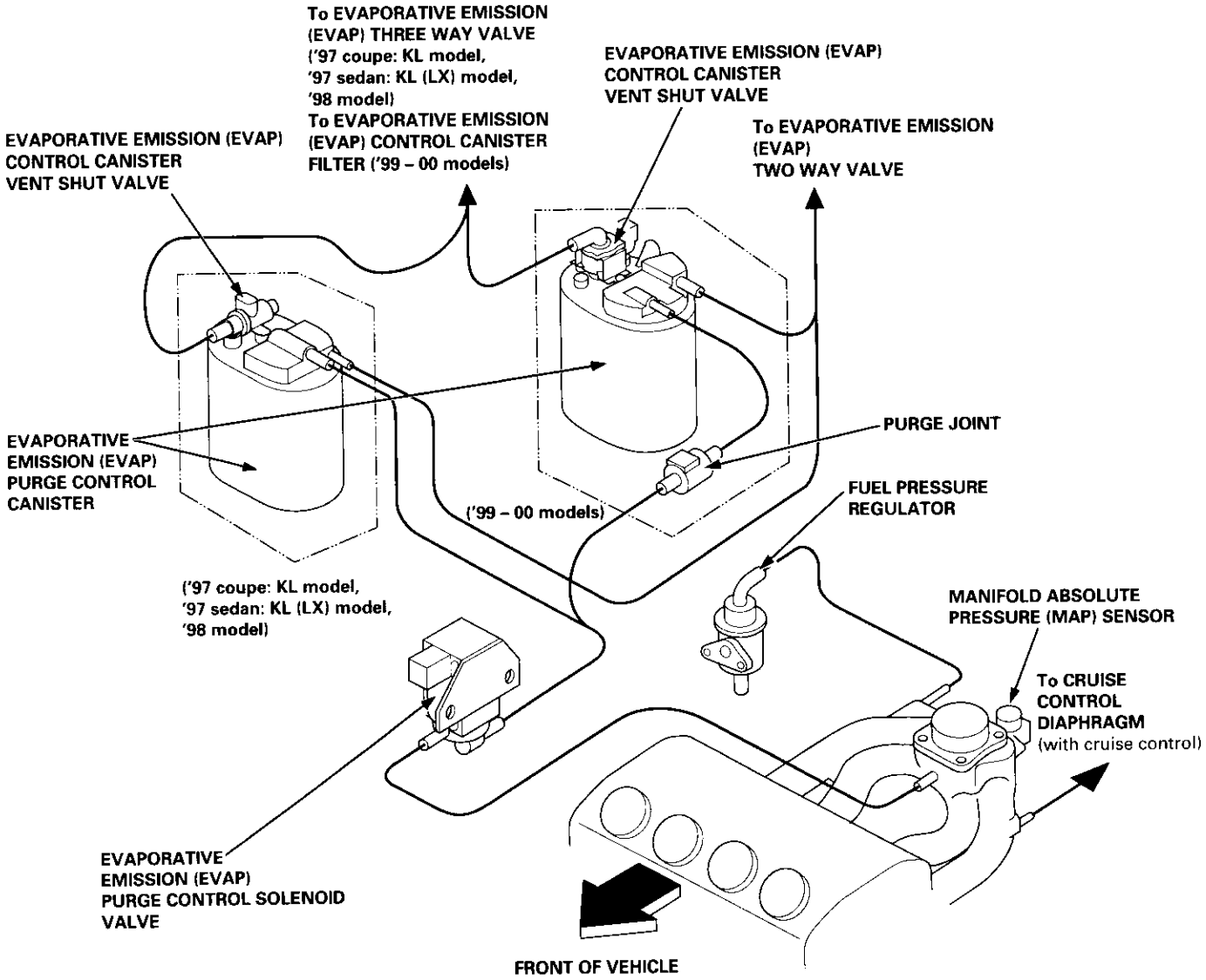

(cont'd)

Vacuum Connections (cont'd)

B16A2 engine:

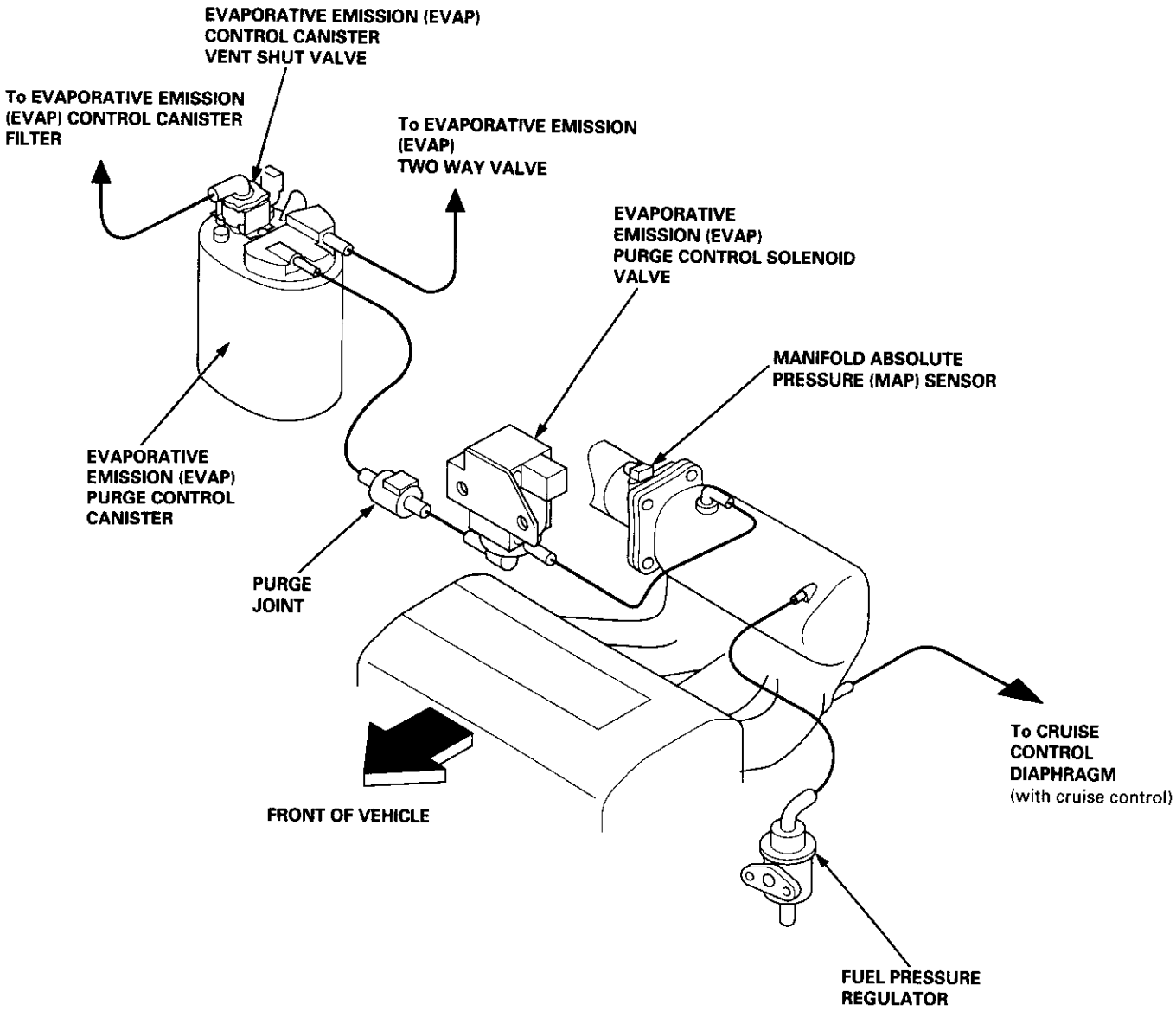

D16Y5 engine ('96 – 97 models):

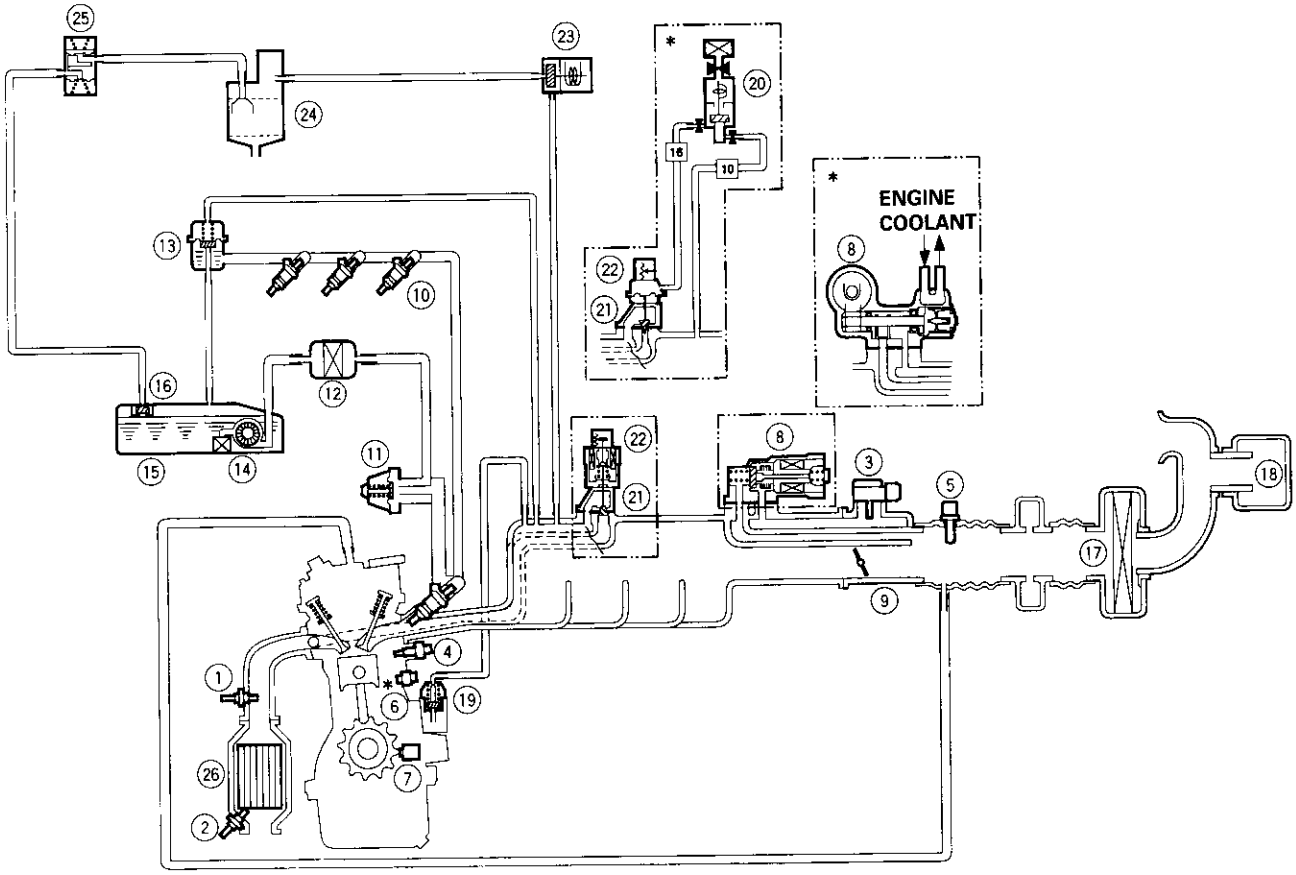

□: Vacuum hose No.
*: CVT only

① PRIMARY HEATED OXYGEN SENSOR (PRIMARY HO2S, SENSOR 1)
② SECONDARY HEATED OXYGEN SENSOR (SECONDARY HO2S, SENSOR 2)
③ MANIFOLD ABSOLUTE PRESSURE (MAP) SENSOR
④ ENGINE COOLANT TEMPERATURE (ECT) SENSOR
⑤ INTAKE AIR TEMPERATURE (IAT) SENSOR
⑥ KNOCK SENSOR (KS)
⑦ CRANKSHAFT SPEED FLUCTUATION (CKF) SENSOR
⑧ IDLE AIR CONTROL (IAC) VALVE
⑨ THROTTLE BODY (TB)
⑩ FUEL INJECTOR
⑪ FUEL PULSATION DAMPER
⑫ FUEL FILTER
⑬ FUEL PRESSURE REGULATOR
⑭ FUEL PUMP (FP)
⑮ FUEL TANK
⑯ FUEL TANK EVAPORATIVE EMISSION (EVAP) VALVE
⑰ AIR CLEANER
⑱ RESONATOR
⑲ POSITIVE CRANKCASE VENTILATION (PCV) VALVE
⑳ EXHAUST GAS RECIRCULATION (EGR) CONTROL SOLENOID VALVE
㉑ EXHAUST GAS RECIRCULATION (EGR) VALVE
㉒ EXHAUST GAS RECIRCULATION (EGR) VALVE LIFT SENSOR
㉓ EVAPORATIVE EMISSION (EVAP) PURGE CONTROL SOLENOID VALVE
㉔ EVAPORATIVE EMISSION (EVAP) CONTROL CANISTER
㉕ EVAPORATIVE EMISSION (EVAP) TWO WAY VALVE
㉖ THREE WAY CATALYTIC CONVERTER (TWC)

(cont'd)

Vacuum Connections (cont'd)

D16Y5 engine ('98 model):

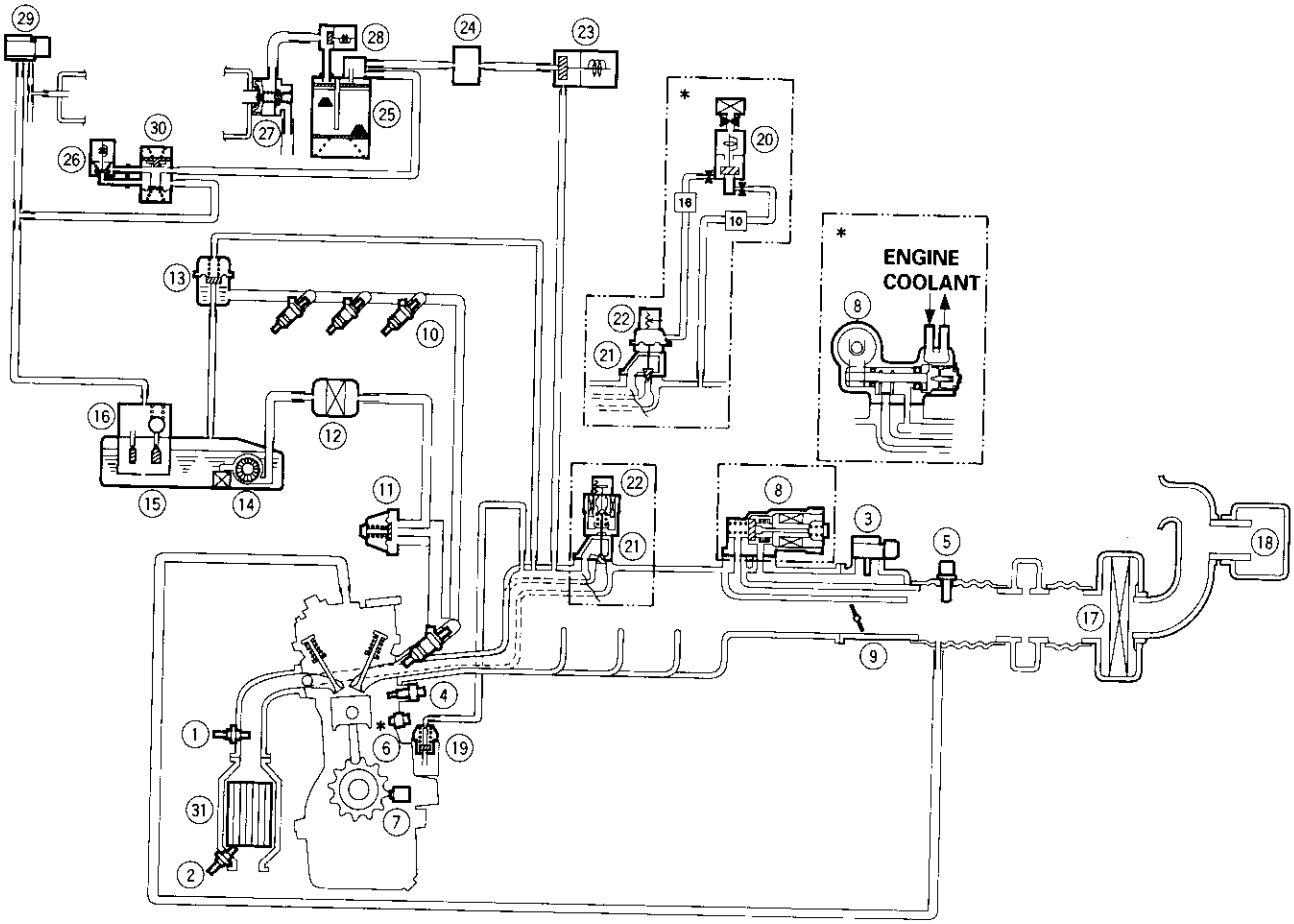

□: Vacuum hose No.
*: CVT only

① PRIMARY HEATED OXYGEN SENSOR (PRIMARY HO2S, SENSOR 1)
② SECONDARY HEATED OXYGEN SENSOR (SECONDARY HO2S, SENSOR 2)
③ MANIFOLD ABSOLUTE PRESSURE (MAP) SENSOR
④ ENGINE COOLANT TEMPERATURE (ECT) SENSOR
⑤ INTAKE AIR TEMPERATURE (IAT) SENSOR
⑥ KNOCK SENSOR (KS)
⑦ CRANKSHAFT SPEED FLUCTUATION (CKF) SENSOR
⑧ IDLE AIR CONTROL (IAC) VALVE
⑨ THROTTLE BODY (TB)
⑩ FUEL INJECTOR
⑪ FUEL PULSATION DAMPER
⑫ FUEL FILTER
⑬ FUEL PRESSURE REGULATOR
⑭ FUEL PUMP (FP)
⑮ FUEL TANK
⑯ FUEL TANK EVAPORATIVE EMISSION (EVAP) VALVE
⑰ AIR CLEANER
⑱ RESONATOR
⑲ POSITIVE CRANKCASE VENTILATION (PCV) VALVE
⑳ EXHAUST GAS RECIRCULATION (EGR) CONTROL SOLENOID VALVE
㉑ EXHAUST GAS RECIRCULATION (EGR) VALVE
㉒ EXHAUST GAS RECIRCULATION (EGR) VALVE LIFT SENSOR
㉓ EVAPORATIVE EMISSION (EVAP) PURGE CONTROL SOLENOID VALVE
㉔ PURGE JOINT
㉕ EVAPORATIVE EMISSION (EVAP) CONTROL CANISTER
㉖ EVAPORATIVE EMISSION (EVAP) BYPASS SOLENOID VALVE
㉗ EVAPORATIVE EMISSION (EVAP) THREE WAY VALVE
㉘ EVAPORATIVE EMISSION (EVAP) CONTROL CANISTER VENT SHUT VALVE
㉙ FUEL TANK PRESSURE SENSOR
㉚ EVAPORATIVE EMISSION (EVAP) TWO WAY VALVE
㉛ THREE WAY CATALYTIC CONVERTER (TWC)

D16Y5 engine ('99 – 00 models):

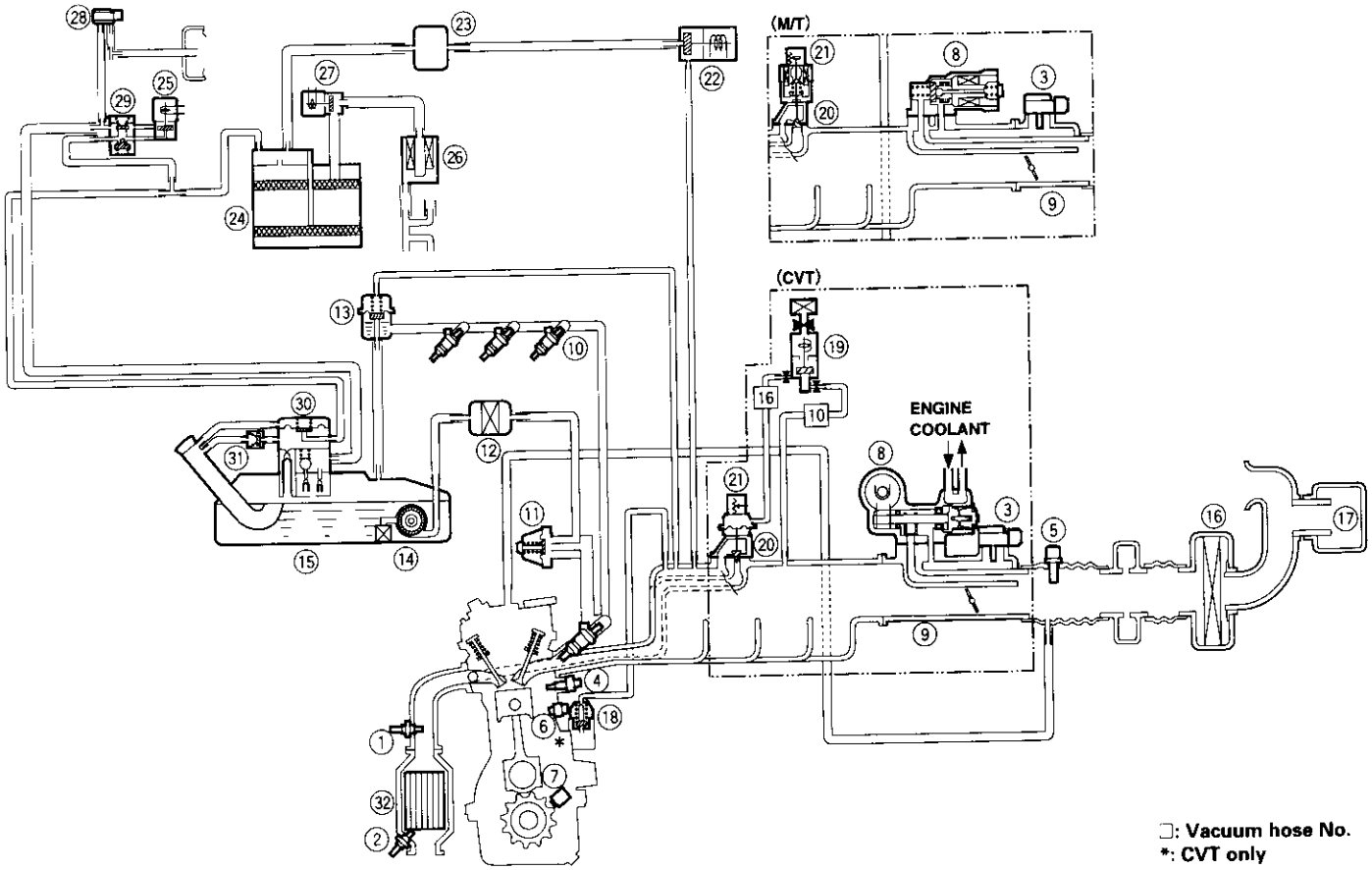

□: Vacuum hose No.
*: CVT only

① PRIMARY HEATED OXYGEN SENSOR (PRIMARY HO2S, SENSOR 1)
② SECONDARY HEATED OXYGEN SENSOR (SECONDARY HO2S, SENSOR 2)
③ MANIFOLD ABSOLUTE PRESSURE (MAP) SENSOR
④ ENGINE COOLANT TEMPERATURE (ECT) SENSOR
⑤ INTAKE AIR TEMPERATURE (IAT) SENSOR
⑥ KNOCK SENSOR (KS)
⑦ CRANKSHAFT SPEED FLUCTUATION (CKF) SENSOR
⑧ IDLE AIR CONTROL (IAC) VALVE
⑨ THROTTLE BODY (TB)
⑩ FUEL INJECTOR
⑪ FUEL PULSATION DAMPER
⑫ FUEL FILTER
⑬ FUEL PRESSURE REGULATOR
⑭ FUEL PUMP (FP)
⑮ FUEL TANK
⑯ AIR CLEANER
⑰ RESONATOR
⑱ POSITIVE CRANKCASE VENTILATION (PCV) VALVE
⑲ EXHAUST GAS RECIRCULATION (EGR) CONTROL SOLENOID VALVE
⑳ EXHAUST GAS RECIRCULATION (EGR) VALVE
㉑ EXHAUST GAS RECIRCULATION (EGR) VALVE LIFT SENSOR
㉒ EVAPORATIVE EMISSION (EVAP) PURGE CONTROL SOLENOID VALVE
㉓ PURGE JOINT
㉔ EVAPORATIVE EMISSION (EVAP) CONTROL CANISTER
㉕ EVAPORATIVE EMISSION (EVAP) BYPASS SOLENOID VALVE
㉖ EVAPORATIVE EMISSION (EVAP) CONTROL CANISTER FILTER
㉗ EVAPORATIVE EMISSION (EVAP) CONTROL CANISTER VENT SHUT VALVE
㉘ FUEL TANK PRESSURE SENSOR
㉙ EVAPORATIVE EMISSION (EVAP) TWO WAY VALVE
㉚ ONBOARD REFUELING VAPOR RECOVERY (ORVR) VENT SHUT VALVE
㉛ ONBOARD REFUELING VAPOR RECOVERY (ORVR) VAPOR RECIRCULATION VALVE
㉜ THREE WAY CATALYTIC CONVERTER (TWC)

(cont'd)

Vacuum Connections (cont'd)

D16Y8 engine ('96 sedan, '97 sedan: KA, KC models):

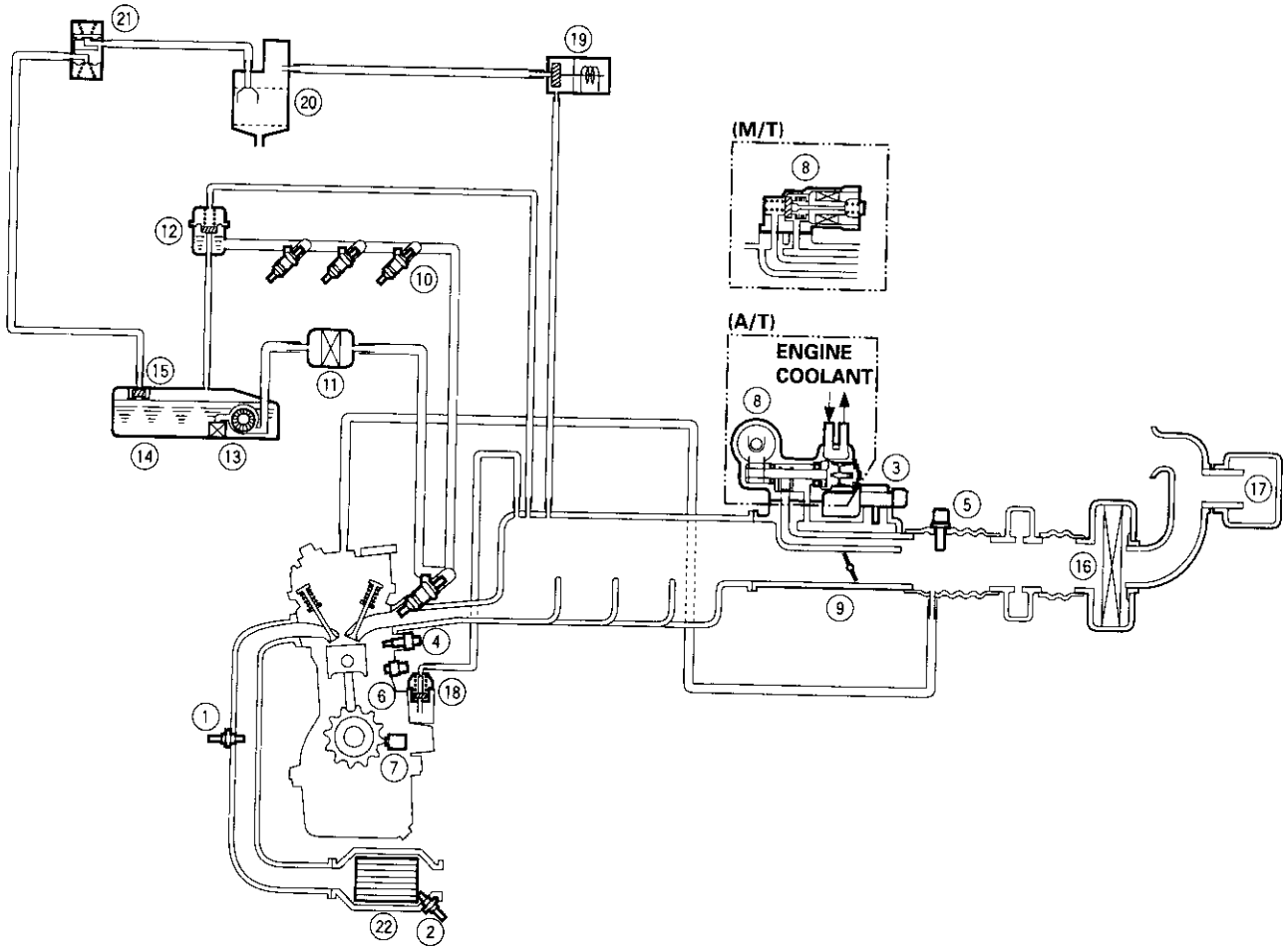

① PRIMARY HEATED OXYGEN SENSOR (PRIMARY HO2S, SENSOR 1)
② SECONDARY HEATED OXYGEN SENSOR (SECONDARY HO2S, SENSOR 2)
③ MANIFOLD ABSOLUTE PRESSURE (MAP) SENSOR
④ ENGINE COOLANT TEMPERATURE (ECT) SENSOR
⑤ INTAKE AIR TEMPERATURE (IAT) SENSOR
⑥ KNOCK SENSOR (KS)
⑦ CRANKSHAFT SPEED FLUCTUATION (CKF) SENSOR
⑧ IDLE AIR CONTROL (IAC) VALVE
⑨ THROTTLE BODY (TB)
⑩ FUEL INJECTOR
⑪ FUEL FILTER
⑫ FUEL PRESSURE REGULATOR
⑬ FUEL PUMP (FP)
⑭ FUEL TANK
⑮ FUEL TANK EVAPORATIVE EMISSION (EVAP) VALVE
⑯ AIR CLEANER
⑰ RESONATOR
⑱ POSITIVE CRANKCASE VENTILATION (PCV) VALVE
⑲ EVAPORATIVE EMISSION (EVAP) PURGE CONTROL SOLENOID VALVE
⑳ EVAPORATIVE EMISSION (EVAP) CONTROL CANISTER
㉑ EVAPORATIVE EMISSION (EVAP) TWO WAY VALVE
㉒ THREE WAY CATALYTIC CONVERTER (TWC)

D16Y8 engine ('96 coupe, '97 coupe: all models, '97 sedan: KL model, '98 model):

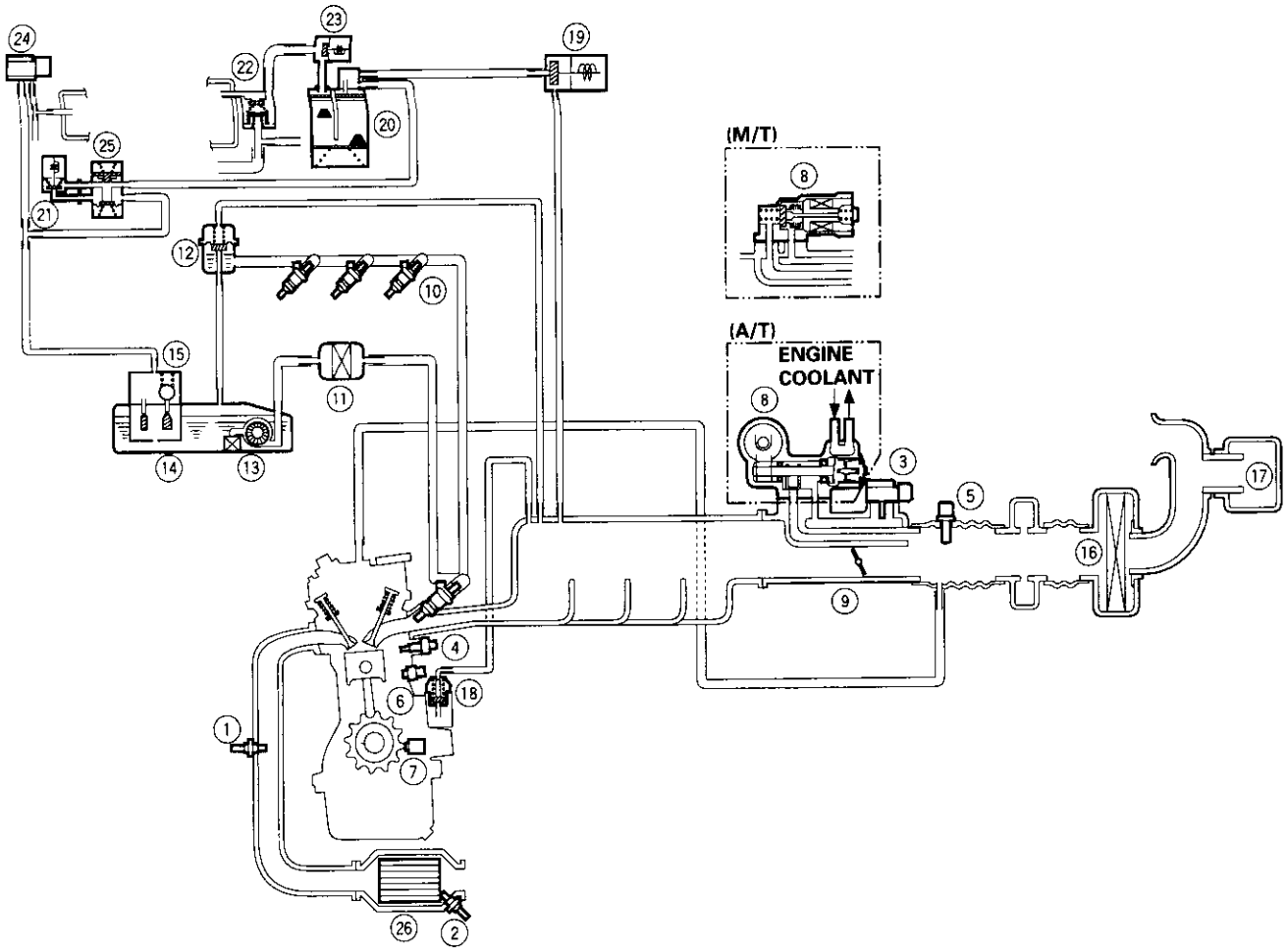

1. PRIMARY HEATED OXYGEN SENSOR (PRIMARY HO2S, SENSOR 1)
2. SECONDARY HEATED OXYGEN SENSOR (SECONDARY HO2S, SENSOR 2)
3. MANIFOLD ABSOLUTE PRESSURE (MAP) SENSOR
4. ENGINE COOLANT TEMPERATURE (ECT) SENSOR
5. INTAKE AIR TEMPERATURE (IAT) SENSOR
6. KNOCK SENSOR (KS)
7. CRANKSHAFT SPEED FLUCTUATION (CKF) SENSOR
8. IDLE AIR CONTROL (IAC) VALVE
9. THROTTLE BODY (TB)
10. FUEL INJECTOR
11. FUEL FILTER
12. FUEL PRESSURE REGULATOR
13. FUEL PUMP (FP)
14. FUEL TANK
15. FUEL TANK EVAPORATIVE EMISSION (EVAP) VALVE
16. AIR CLEANER
17. RESONATOR
18. POSITIVE CRANKCASE VENTILATION (PCV) VALVE
19. EVAPORATIVE EMISSION (EVAP) PURGE CONTROL SOLENOID VALVE
20. EVAPORATIVE EMISSION (EVAP) CONTROL CANISTER
21. EVAPORATIVE EMISSION (EVAP) BYPASS SOLENOID VALVE
22. EVAPORATIVE EMISSION (EVAP) THREE WAY VALVE
23. EVAPORATIVE EMISSION (EVAP) CONTROL CANISTER VENT SHUT VALVE
24. FUEL TANK PRESSURE SENSOR
25. EVAPORATIVE EMISSION (EVAP) TWO WAY VALVE
26. THREE WAY CATALYTIC CONVERTER (TWC)

(cont'd)

Vacuum Connections (cont'd)

D16Y8 engine ('99 – 00 models):

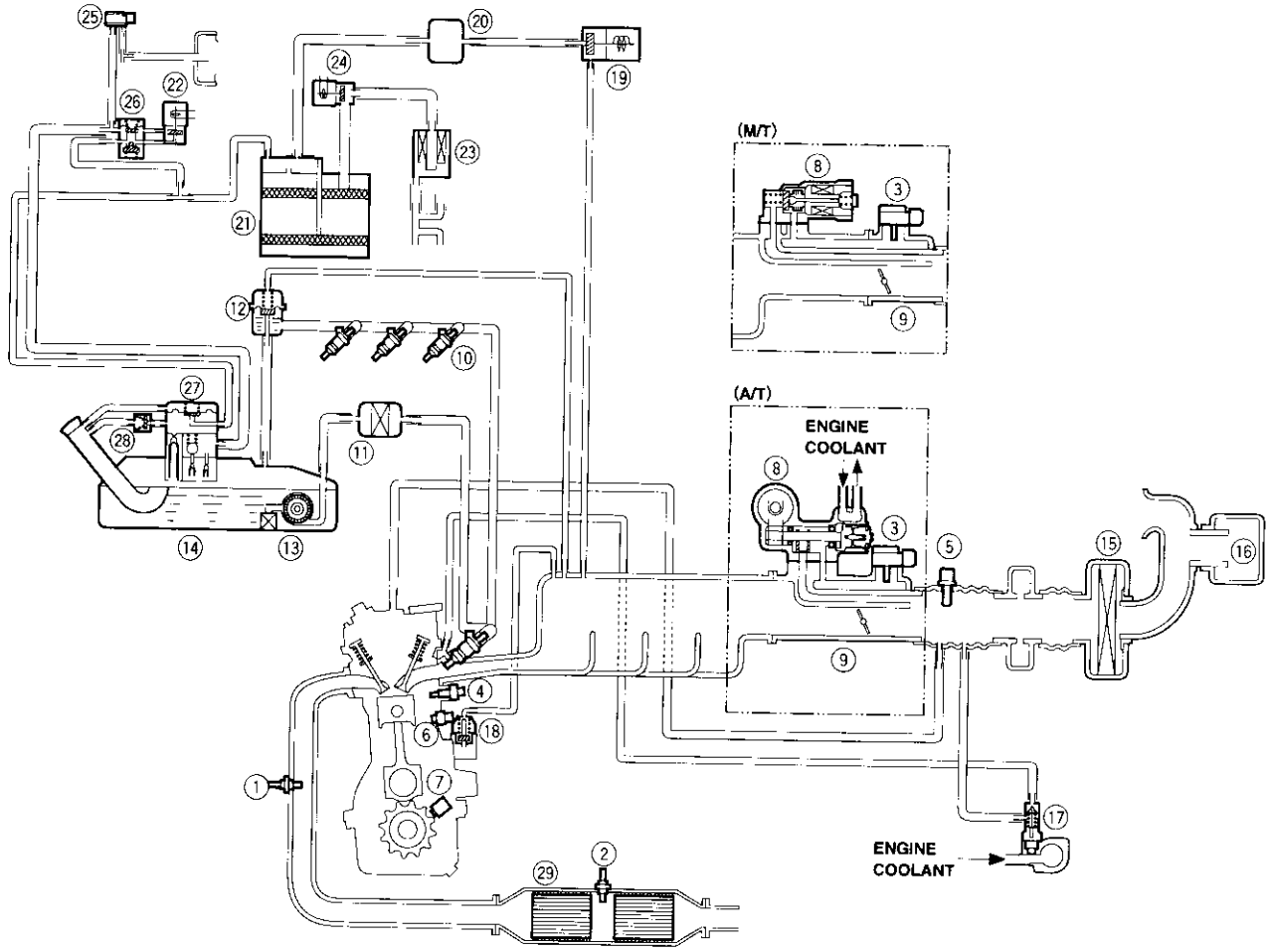

① PRIMARY HEATED OXYGEN SENSOR (PRIMARY HO2S, SENSOR 1)
② SECONDARY HEATED OXYGEN SENSOR (SECONDARY HO2S, SENSOR 2)
③ MANIFOLD ABSOLUTE PRESSURE (MAP) SENSOR
④ ENGINE COOLANT TEMPERATURE (ECT) SENSOR
⑤ INTAKE AIR TEMPERATURE (IAT) SENSOR
⑥ KNOCK SENSOR (KS)
⑦ CRANKSHAFT SPEED FLUCTUATION (CKF) SENSOR
⑧ IDLE AIR CONTROL (IAC) VALVE
⑨ THROTTLE BODY (TB)
⑩ FUEL INJECTOR
⑪ FUEL FILTER
⑫ FUEL PRESSURE REGULATOR
⑬ FUEL PUMP (FP)
⑭ FUEL TANK
⑮ AIR CLEANER
⑯ RESONATOR
⑰ FUEL INJECTION AIR (FIA) CONTROL VALVE
⑱ POSITIVE CRANKCASE VENTILATION (PCV) VALVE
⑲ EVAPORATIVE EMISSION (EVAP) PURGE CONTROL SOLENOID VALVE
⑳ PURGE JOINT
㉑ EVAPORATIVE EMISSION (EVAP) CONTROL CANISTER
㉒ EVAPORATIVE EMISSION (EVAP) BYPASS SOLENOID VALVE
㉓ EVAPORATIVE EMISSION (EVAP) CONTROL CANISTER FILTER
㉔ EVAPORATIVE EMISSION (EVAP) CONTROL CANISTER VENT SHUT VALVE
㉕ FUEL TANK PRESSURE SENSOR
㉖ EVAPORATIVE EMISSION (EVAP) TWO WAY VALVE
㉗ ONBOARD REFUELING VAPOR RECOVERY (ORVR) VENT SHUT VALVE
㉘ ONBOARD REFUELING VAPOR RECOVERY (ORVR) VAPOR RECIRCULATION VALVE
㉙ THREE WAY CATALYTIC CONVERTER (TWC)

D16Y7 engine ('96 model, '97 coupe: KA, KC models, '97 sedan: KA, KC, KL (DX) models, '97 hatchback: all models):

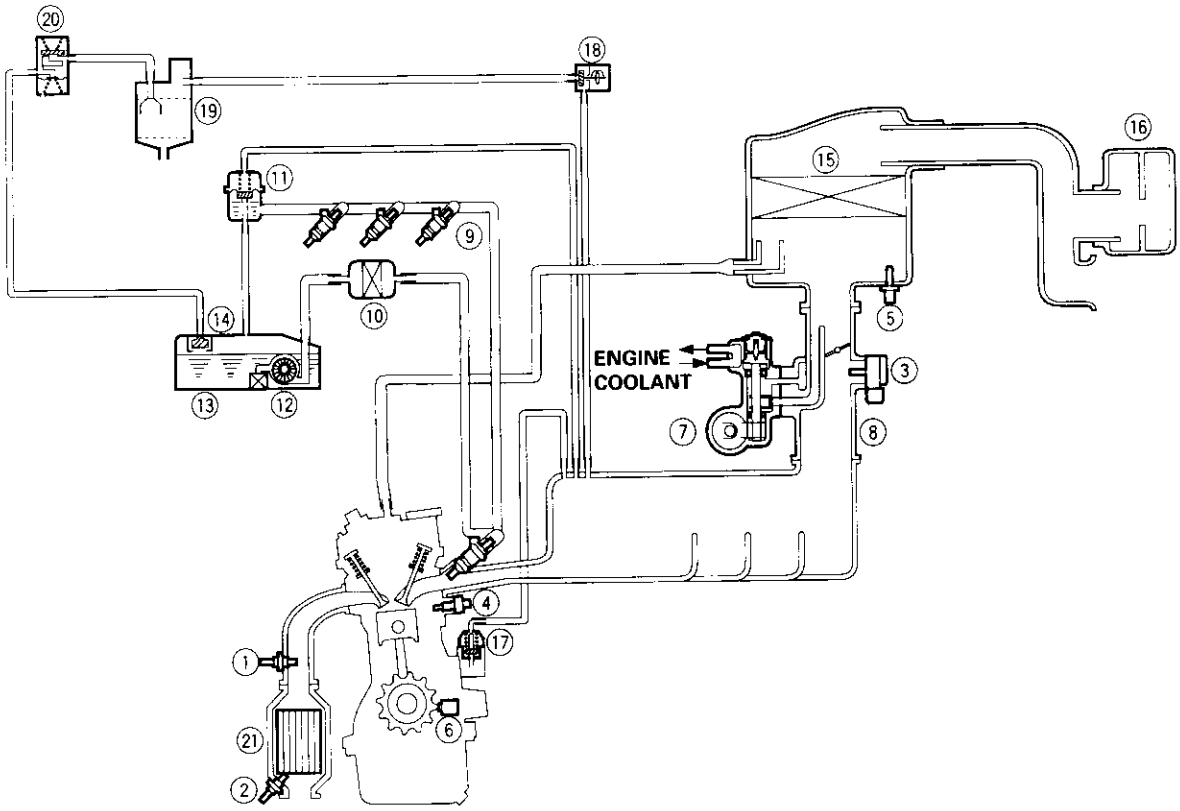

① PRIMARY HEATED OXYGEN SENSOR (PRIMARY HO2S, SENSOR 1)
② SECONDARY HEATED OXYGEN SENSOR (SECONDARY HO2S, SENSOR 2)
③ MANIFOLD ABSOLUTE PRESSURE (MAP) SENSOR
④ ENGINE COOLANT TEMPERATURE (ECT) SENSOR
⑤ INTAKE AIR TEMPERATURE (IAT) SENSOR
⑥ CRANKSHAFT SPEED FLUCTUATION (CKF) SENSOR
⑦ IDLE AIR CONTROL (IAC) VALVE
⑧ THROTTLE BODY (TB)
⑨ FUEL INJECTOR
⑩ FUEL FILTER
⑪ FUEL PRESSURE REGULATOR
⑫ FUEL PUMP (FP)
⑬ FUEL TANK
⑭ FUEL TANK EVAPORATIVE EMISSION (EVAP) VALVE
⑮ AIR CLEANER
⑯ RESONATOR
⑰ POSITIVE CRANKCASE VENTILATION (PCV) VALVE
⑱ EVAPORATIVE EMISSION (EVAP) PURGE CONTROL SOLENOID VALVE
⑲ EVAPORATIVE EMISSION (EVAP) CONTROL CANISTER
⑳ EVAPORATIVE EMISSION (EVAP) TWO WAY VALVE
㉑ THREE WAY CATALYTIC CONVERTER (TWC)

(cont'd)

Vacuum Connections (cont'd)

D16Y7 engine ('97 coupe: KL model, sedan: KL (LX) model, '98 model):

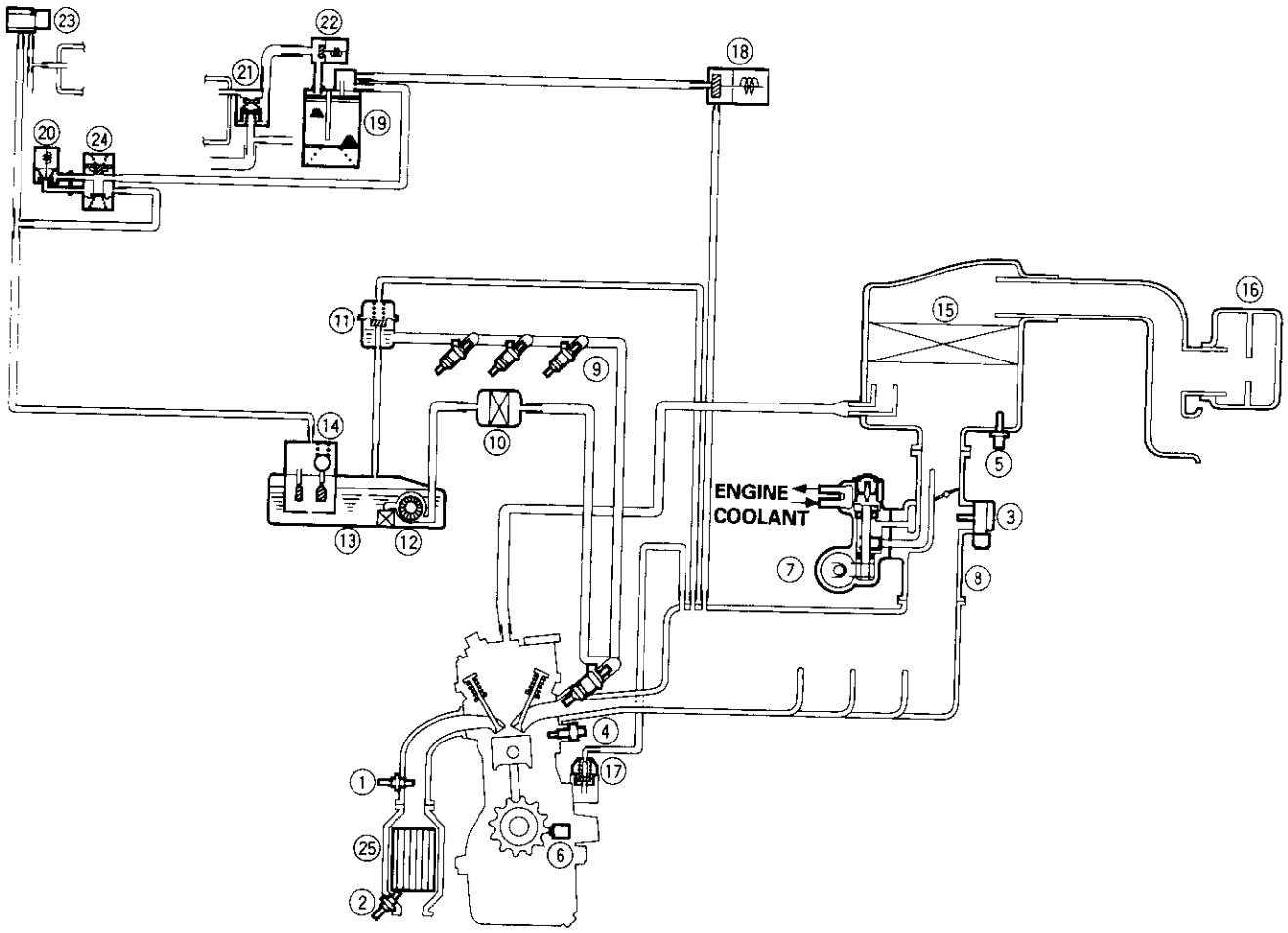

① PRIMARY HEATED OXYGEN SENSOR (PRIMARY HO2S, SENSOR 1)
② SECONDARY HEATED OXYGEN SENSOR (SECONDARY HO2S, SENSOR 2)
③ MANIFOLD ABSOLUTE PRESSURE (MAP) SENSOR
④ ENGINE COOLANT TEMPERATURE (ECT) SENSOR
⑤ INTAKE AIR TEMPERATURE (IAT) SENSOR
⑥ CRANKSHAFT SPEED FLUCTUATION (CKF) SENSOR
⑦ IDLE AIR CONTROL (IAC) VALVE
⑧ THROTTLE BODY (TB)
⑨ FUEL INJECTOR
⑩ FUEL FILTER
⑪ FUEL PRESSURE REGULATOR
⑫ FUEL PUMP (FP)
⑬ FUEL TANK
⑭ FUEL TANK EVAPORATIVE EMISSION (EVAP) VALVE
⑮ AIR CLEANER
⑯ RESONATOR
⑰ POSITIVE CRANKCASE VENTILATION (PCV) VALVE
⑱ EVAPORATIVE EMISSION (EVAP) PURGE CONTROL SOLENOID VALVE
⑲ EVAPORATIVE EMISSION (EVAP) CONTROL CANISTER
⑳ EVAPORATIVE EMISSION (EVAP) BYPASS SOLENOID VALVE
㉑ EVAPORATIVE EMISSION (EVAP) THREE WAY VALVE
㉒ EVAPORATIVE EMISSION (EVAP) CONTROL CANISTER VENT SHUT VALVE
㉓ FUEL TANK PRESSURE SENSOR
㉔ EVAPORATIVE EMISSION (EVAP) TWO WAY VALVE
㉕ THREE WAY CATALYTIC CONVERTER (TWC)

D16Y7 engine ('99 – 00 models):

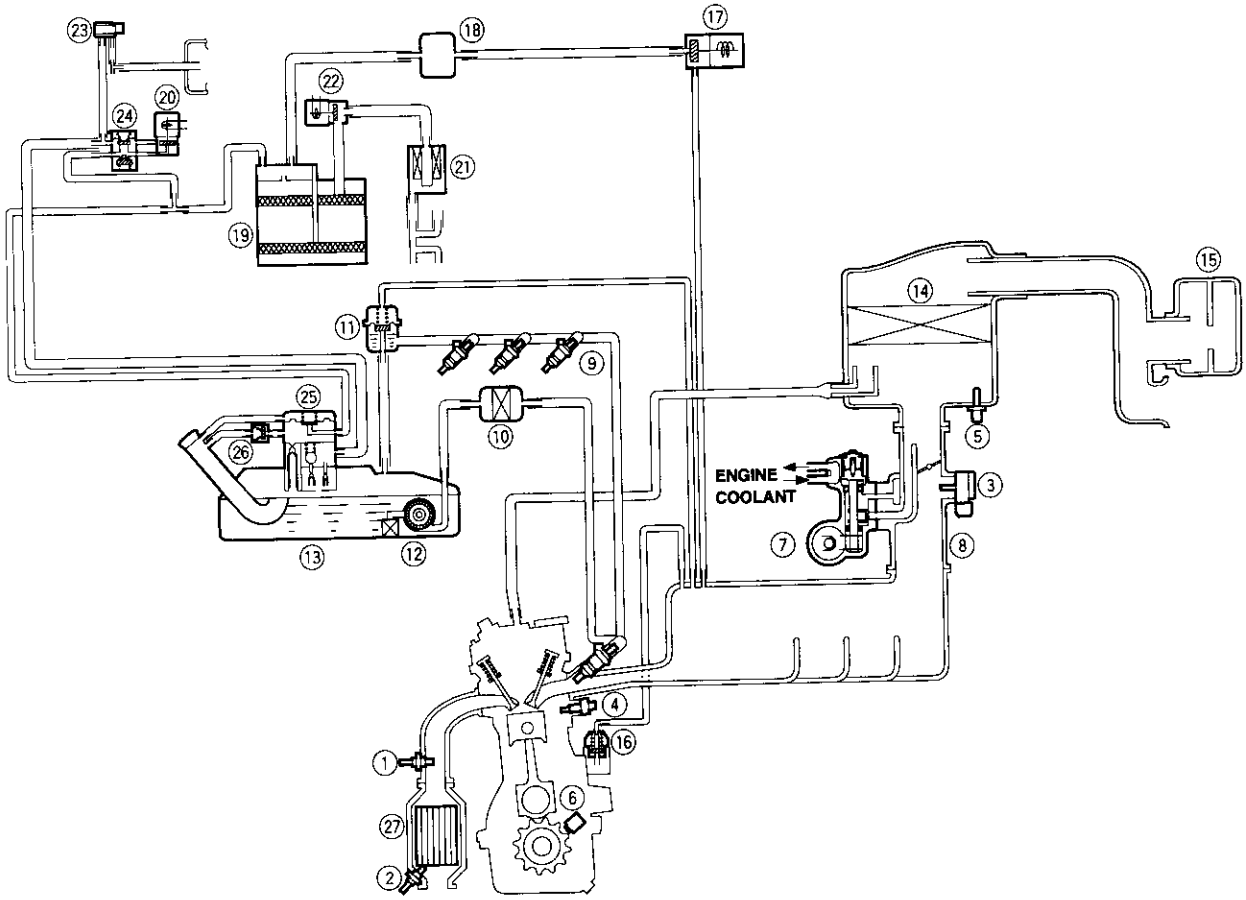

① PRIMARY HEATED OXYGEN SENSOR (PRIMARY HO2S, SENSOR 1)
② SECONDARY HEATED OXYGEN SENSOR (SECONDARY HO2S, SENSOR 2)
③ MANIFOLD ABSOLUTE PRESSURE (MAP) SENSOR
④ ENGINE COOLANT TEMPERATURE (ECT) SENSOR
⑤ INTAKE AIR TEMPERATURE (IAT) SENSOR
⑥ CRANKSHAFT SPEED FLUCTUATION (CKF) SENSOR
⑦ IDLE AIR CONTROL (IAC) VALVE
⑧ THROTTLE BODY (TB)
⑨ FUEL INJECTOR
⑩ FUEL FILTER
⑪ FUEL PRESSURE REGULATOR
⑫ FUEL PUMP (FP)
⑬ FUEL TANK
⑭ AIR CLEANER
⑮ RESONATOR
⑯ POSITIVE CRANKCASE VENTILATION (PCV) VALVE
⑰ EVAPORATIVE EMISSION (EVAP) PURGE CONTROL SOLENOID VALVE
⑱ PURGE JOINT
⑲ EVAPORATIVE EMISSION (EVAP) CONTROL CANISTER
⑳ EVAPORATIVE EMISSION (EVAP) BYPASS SOLENOID VALVE
㉑ EVAPORATIVE EMISSION (EVAP) CONTROL CANISTER FILTER
㉒ EVAPORATIVE EMISSION (EVAP) CONTROL CANISTER VENT SHUT VALVE
㉓ FUEL TANK PRESSURE SENSOR
㉔ EVAPORATIVE EMISSION (EVAP) TWO WAY VALVE
㉕ ONBOARD REFUELING VAPOR RECOVERY (ORVR) VENT SHUT VALVE
㉖ ONBOARD REFUELING VAPOR RECOVERY (ORVR) VAPOR RECIRCULATION VALVE
㉗ THREE WAY CATALYTIC CONVERTER (TWC)

(cont'd)

Vacuum Connections (cont'd)

B16A2 engine:

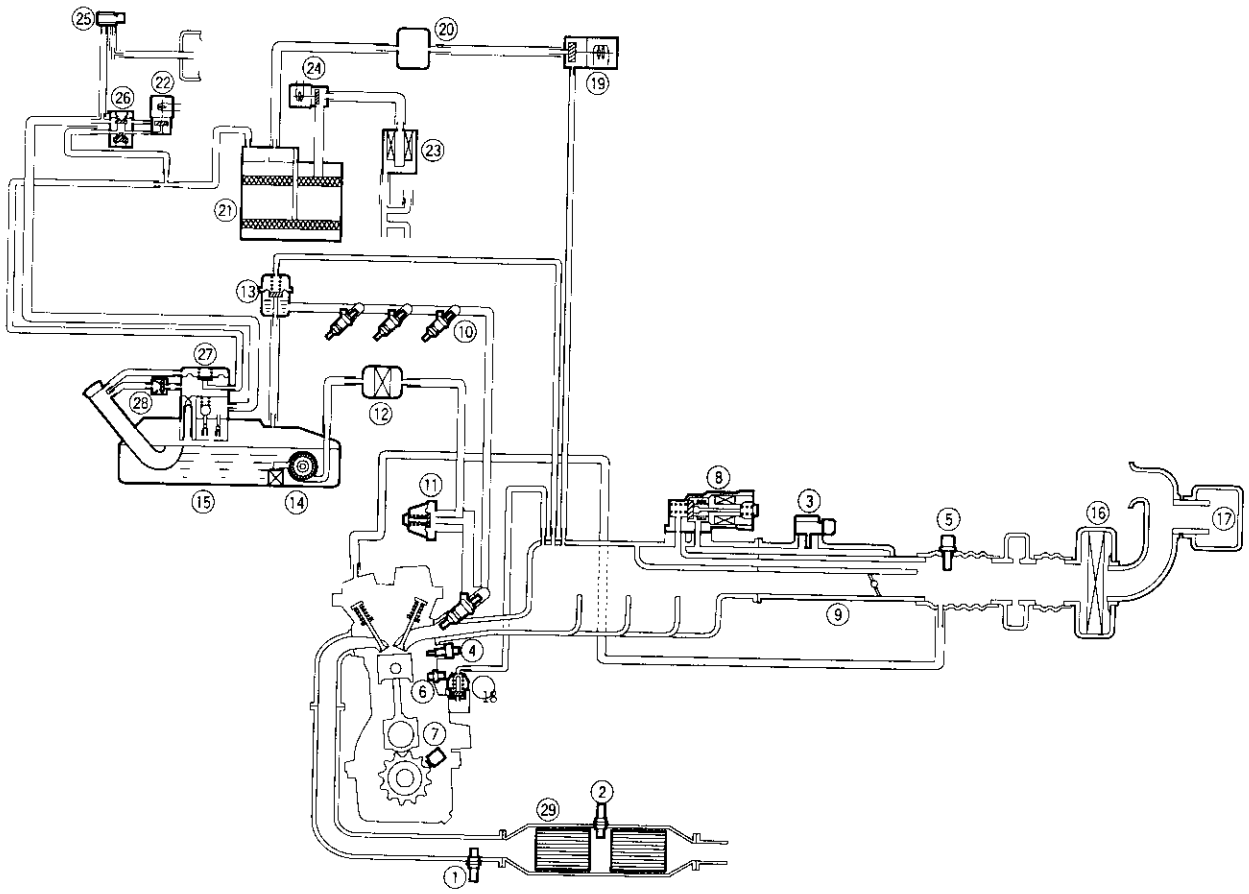

① PRIMARY HEATED OXYGEN SENSOR (PRIMARY HO2S, SENSOR 1)
② SECONDARY HEATED OXYGEN SENSOR (SECONDARY HO2S, SENSOR 2)
③ MANIFOLD ABSOLUTE PRESSURE (MAP) SENSOR
④ ENGINE COOLANT TEMPERATURE (ECT) SENSOR
⑤ INTAKE AIR TEMPERATURE (IAT) SENSOR
⑥ KNOCK SENSOR (KS)
⑦ CRANKSHAFT SPEED FLUCTUATION (CKF) SENSOR
⑧ IDLE AIR CONTROL (IAC) VALVE
⑨ THROTTLE BODY (TB)
⑩ FUEL INJECTOR
⑪ FUEL PULSATION DAMPER
⑫ FUEL FILTER
⑬ FUEL PRESSURE REGULATOR
⑭ FUEL PUMP (FP)
⑮ FUEL TANK
⑯ AIR CLEANER
⑰ RESONATOR
⑱ POSITIVE CRANKCASE VENTILATION (PCV) VALVE
⑲ EVAPORATIVE EMISSION (EVAP) PURGE CONTROL SOLENOID VALVE
⑳ PURGE JOINT
㉑ EVAPORATIVE EMISSION (EVAP) CONTROL CANISTER
㉒ EVAPORATIVE EMISSION (EVAP) BYPASS SOLENOID VALVE
㉓ EVAPORATIVE EMISSION (EVAP) CONTROL CANISTER FILTER
㉔ EVAPORATIVE EMISSION (EVAP) CONTROL CANISTER VENT SHUT VALVE
㉕ FUEL TANK PRESSURE SENSOR
㉖ EVAPORATIVE EMISSION (EVAP) TWO WAY VALVE
㉗ ONBOARD REFUELING VAPOR RECOVERY (ORVR) VENT SHUT VALVE
㉘ ONBOARD REFUELING VAPOR RECOVERY (ORVR) VAPOR RECIRCULATION VALVE
㉙ THREE WAY CATALYTIC CONVERTER (TWC)

Electrical Connections ('96 – 98 Models, '99 – 00 D16Y5 engine with M/T)

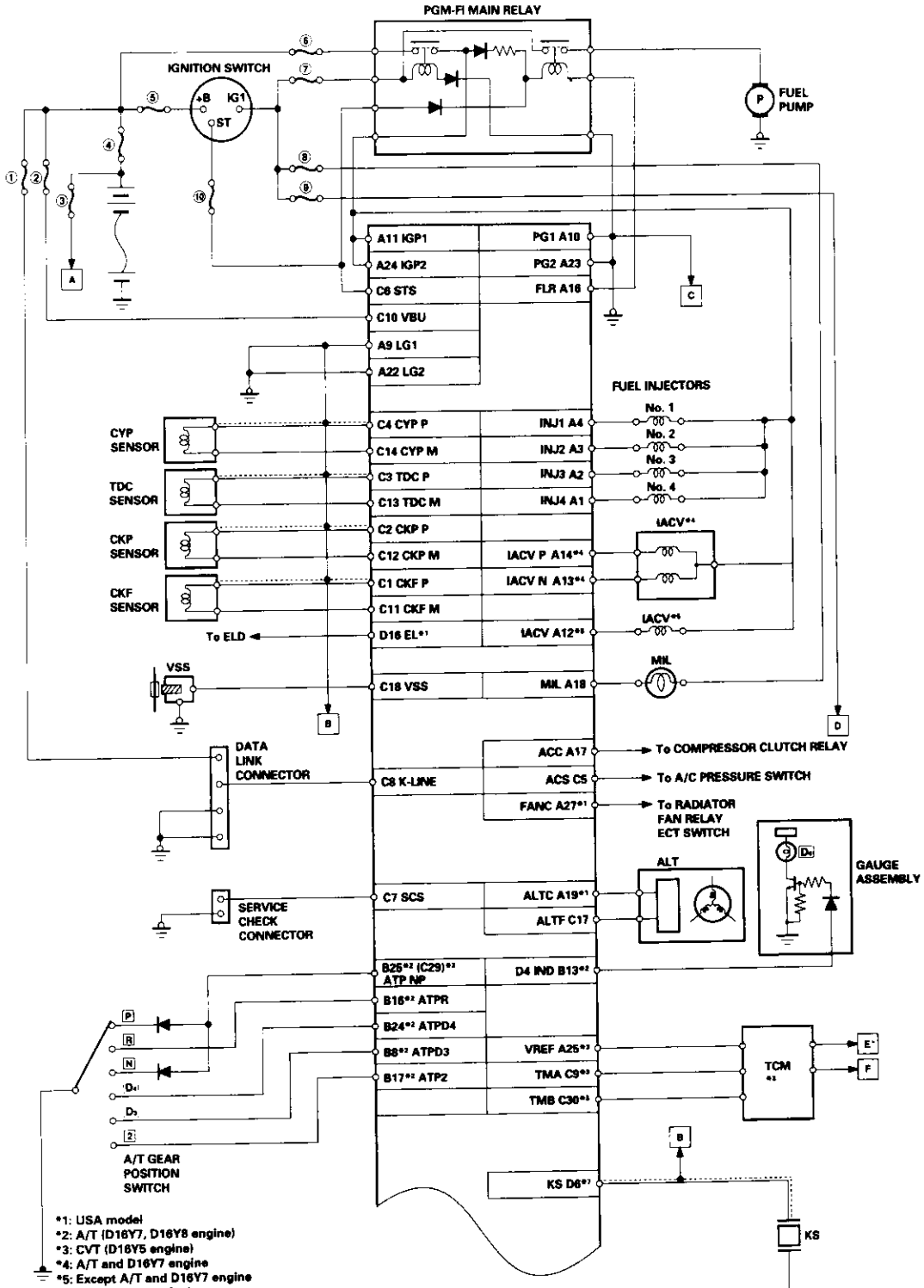

*1: USA model
*2: A/T (D16Y7, D16Y8 engine)
*3: CVT (D16Y5 engine)
*4: A/T and D16Y7 engine
*5: Except A/T and D16Y7 engine
*6: A/T (D16Y8 engine)
*7: CVT (D16Y5 engine) and D16Y8 engine
*8: '96 D16Y8 engine (coupe), '97 D16Y8 engine (coupe: all models, sedan: KL model), '98 D16Y5 engine, '98 D16Y8 engine
*9: D16Y5 engine
*10: M/T (D16Y5 engine)
*11: Except M/T (D16Y5 engine)
*12: D16Y5, D16Y8 engine
*13: D16Y8 engine
*14: D16Y7 engine
*15: '97 D16Y7 engine (coupe: KL model, sedan: KL (LX) model), '98 D16Y7 engine

FUSES:
① INTERIOR LIGHT (7.5 A)*
② BACK UP (7.5 A)*
③ HORN (15 A)*
④ BATTERY (80 A)*
⑤ IG1 (40 A)*
⑥ FI E/M (15 A)*
⑦ No. 13 FUEL PUMP (15 A)
⑧ No. 25 METER (7.5 A)
⑨ No. 15 ALTERNATOR SP SENSOR (7.5 A)
⑩ No. 31 STARTER SIGNAL (7.5 A)
*: In the under-hood fuse/relay box

(cont'd)

Electrical Connections ('96 – 98 Models, '99 – 00 D16Y5 engine with M/T) (cont'd)

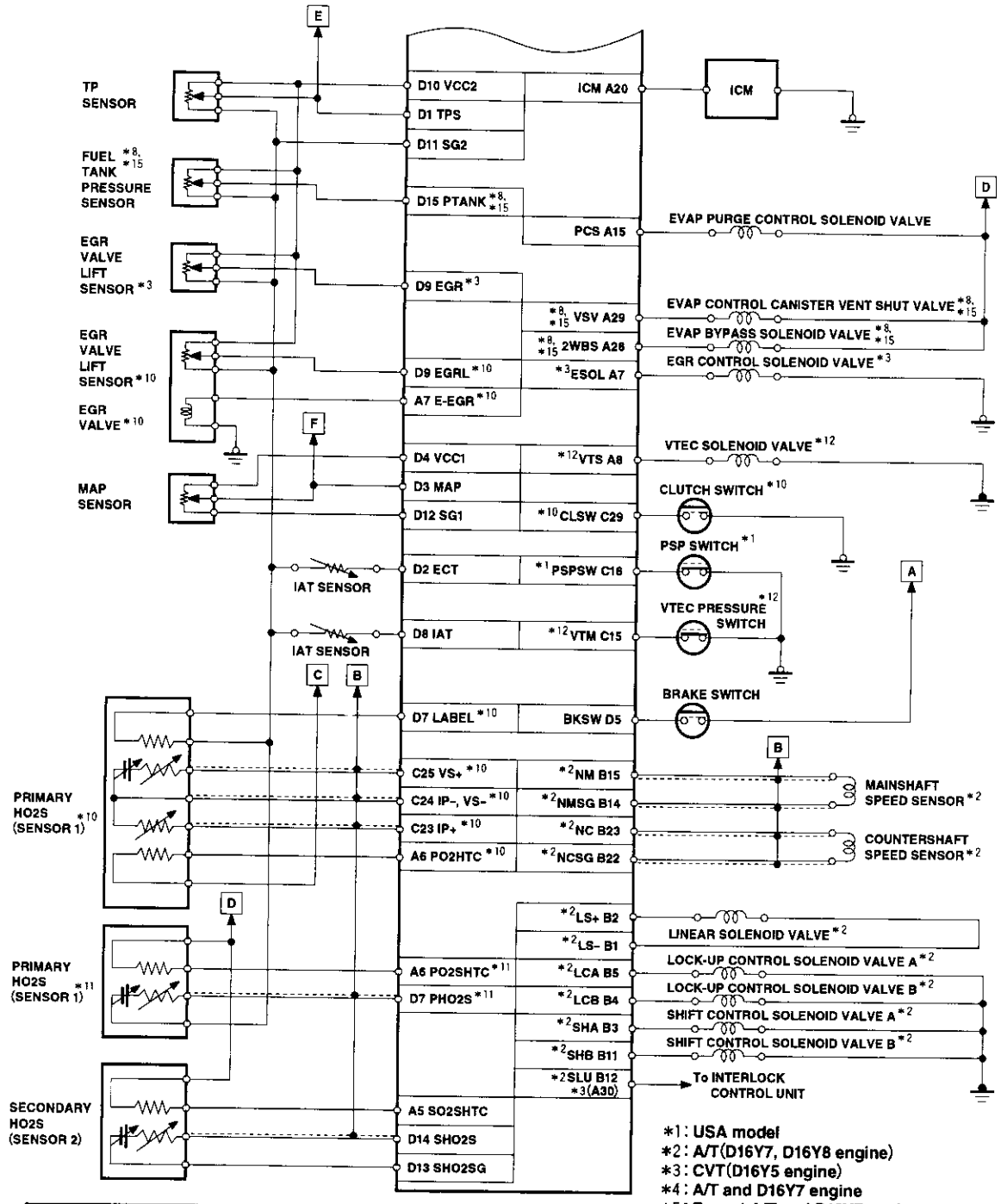

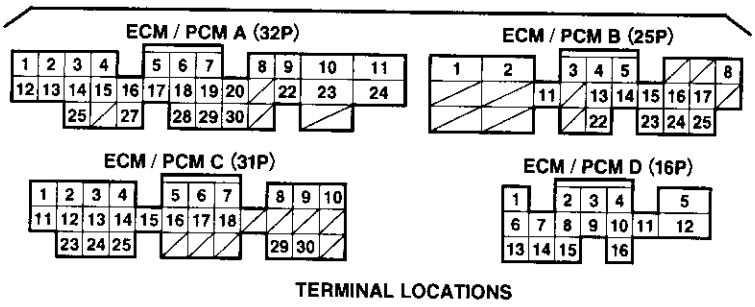

*1 : USA model
*2 : A/T(D16Y7, D16Y8 engine)
*3 : CVT(D16Y5 engine)
*4 : A/T and D16Y7 engine
*5 : Except A/T and D16Y7 engine
*6 : A/T(D16Y8 engine)
*7 : CVT(D16Y5 engine) and D16Y8 engine
*8 : '96 D16Y8 engine (coupe), '97 D16Y5 engine (coupe : all models, sedan : KL model), '98 D16Y5 engine, '98 D16Y8 engine
*9 : D16Y5 engine
*10 : M/T(D16Y5 engine)
*11 : Except M/T(D16Y5engine)
*12 : D16Y5, D16Y8 engine
*13 : D16Y8 engine
*14 : D16Y7 engine
*15 : '97 D16Y7 engine [coupe : KL model, sedan : KL(LX) model], '98D16Y7 engine

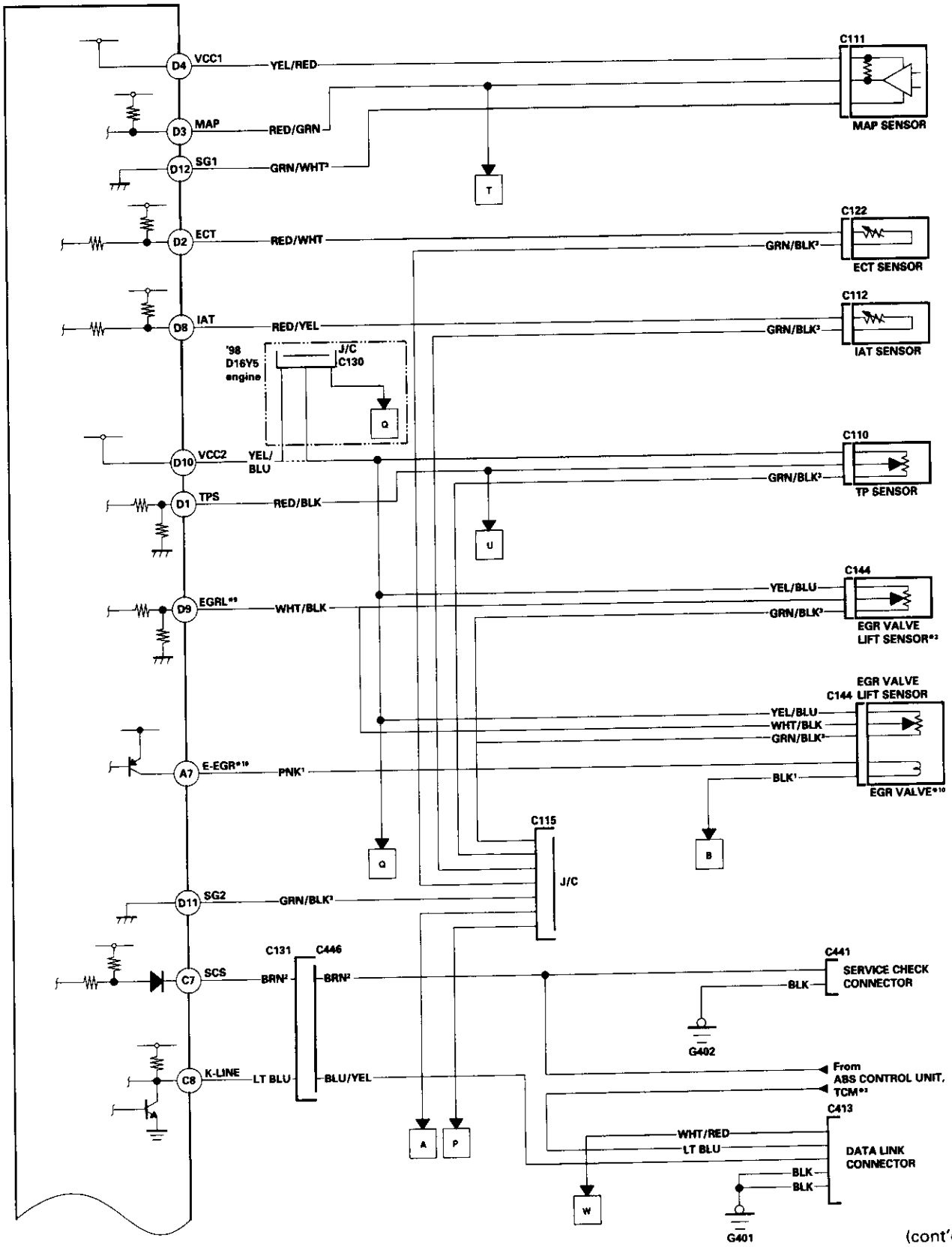
D4
VCC1
YEL/RED
C111
MAP SENSOR
D3
MAP
RED/GRN
D12
SG1
GRN/WHT[3]
T
D2
ECT
RED/WHT
GRN/BLK[3]
C122
ECT SENSOR
D8
IAT
RED/YEL
GRN/BLK[3]
C112
IAT SENSOR
'98
D16Y5
engine
J/C
C130
Q
D10
VCC2
YEL/
BLU
C110
GRN/BLK[3]
TP SENSOR
D1
TPS
RED/BLK
U
D9
EGRL*9
WHT/BLK
YEL/BLU
GRN/BLK[3]
C144
EGR VALVE
LIFT SENSOR*2
EGR VALVE
C144 LIFT SENSOR
YEL/BLU
WHT/BLK
GRN/BLK[3]
A7
E-EGR*10
PNK[1]
BLK[1]
EGR VALVE*10
C115
J/C
B
Q
D11
SG2
GRN/BLK[3]
C131
C446
C7
SCS
BRN[2]
BRN[2]
C441
SERVICE CHECK
CONNECTOR
BLK
G402
C8
K-LINE
LT BLU
BLU/YEL
From
ABS CONTROL UNIT,
TCM*2
C413
WHT/RED
LT BLU
DATA LINK
CONNECTOR
BLK
BLK
A
P
W
G401

(cont'd)

Electrical Connections ('96 – 98 Models, '99 – 00 D16Y5 engine with M/T) (cont'd)

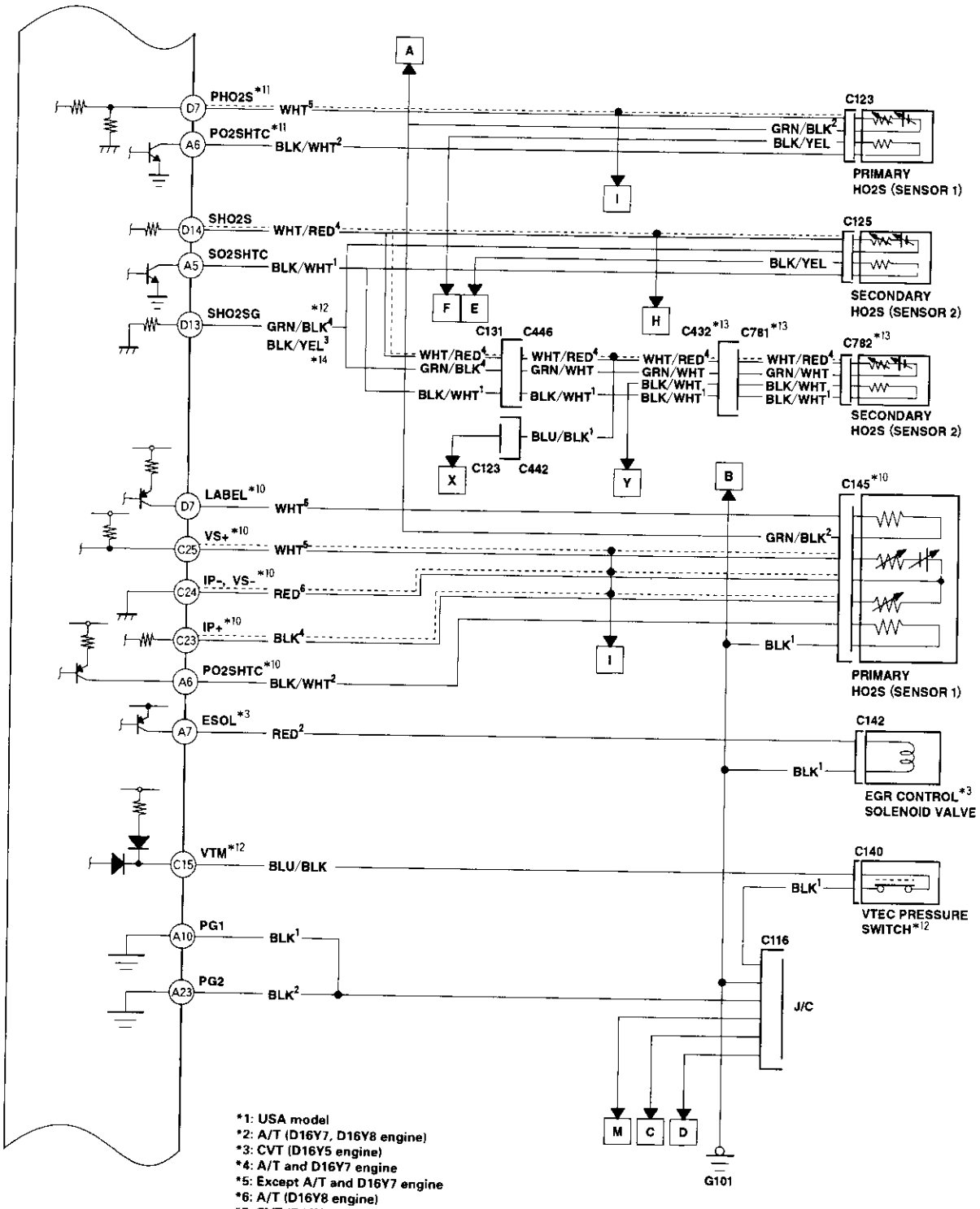

*1: USA model
*2: A/T (D16Y7, D16Y8 engine)
*3: CVT (D16Y5 engine)
*4: A/T and D16Y7 engine
*5: Except A/T and D16Y7 engine
*6: A/T (D16Y8 engine)
*7: CVT (D16Y5 engine) and D16Y8 engine
*8: '96 D16Y8 engine (coupe), '97 D16Y5 engine (coupe: all models, sedan: KL model), '98 D16Y5 engine, '98 D16Y8 engine, '99 – 00 D16Y5 (M/T) engine
*9: D16Y5 engine
*10: M/T (D16Y5 engine)
*11: Except M/T (D16Y5 engine)
*12: D16Y5, D16Y8 engine
*13: D16Y8 engine
*14: D16Y7 engine
*15: '97 D16Y7 engine (coupe: KL model, sedan: KL (LX) model), '98 D16Y7 engine

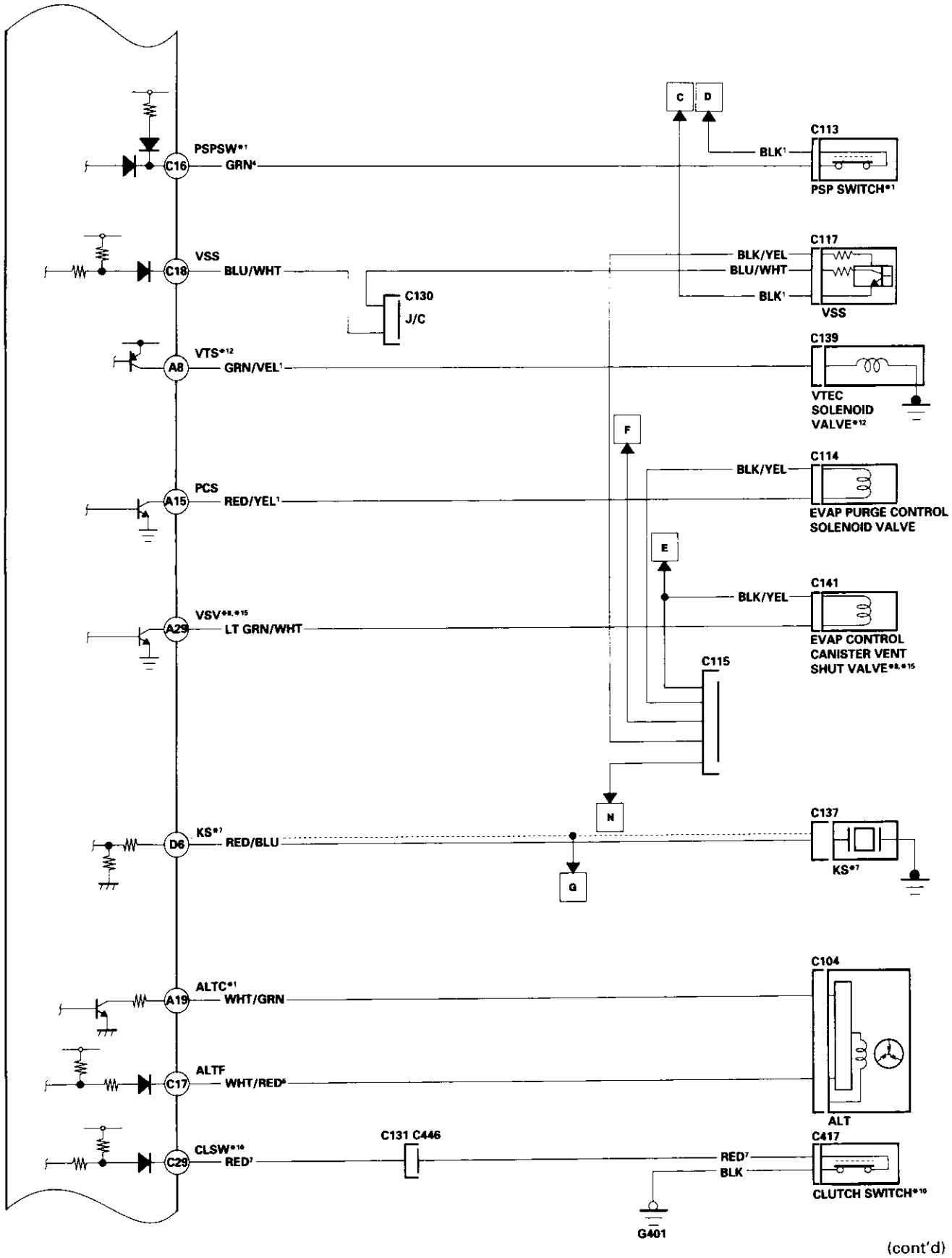
PSPSW*1
C16
GRN4
C
D
BLK1
C113
PSP SWITCH*1
VSS
C18
BLU/WHT
C130
J/C
BLK/YEL
BLU/WHT
BLK1
C117
VSS
VTS*12
A8
GRN/VEL1
C139
VTEC
SOLENOID
VALVE*12
F
BLK/YEL
C114
PCS
A15
RED/YEL1
EVAP PURGE CONTROL
SOLENOID VALVE
E
BLK/YEL
C141
VSV*8,*15
A29
LT GRN/WHT
EVAP CONTROL
CANISTER VENT
SHUT VALVE*8,*15
C115
N
KS*7
D6
RED/BLU
C137
KS*7
G
ALTC*1
A19
WHT/GRN
C104
ALTF
C17
WHT/RED5
ALT
CLSW*10
C29
RED7
C131 C446
RED7
BLK
C417
CLUTCH SWITCH*10
G401

(cont'd)

Electrical Connections ('96 – 98 Models, '99 – 00 D16Y5 engine with M/T) (cont'd)

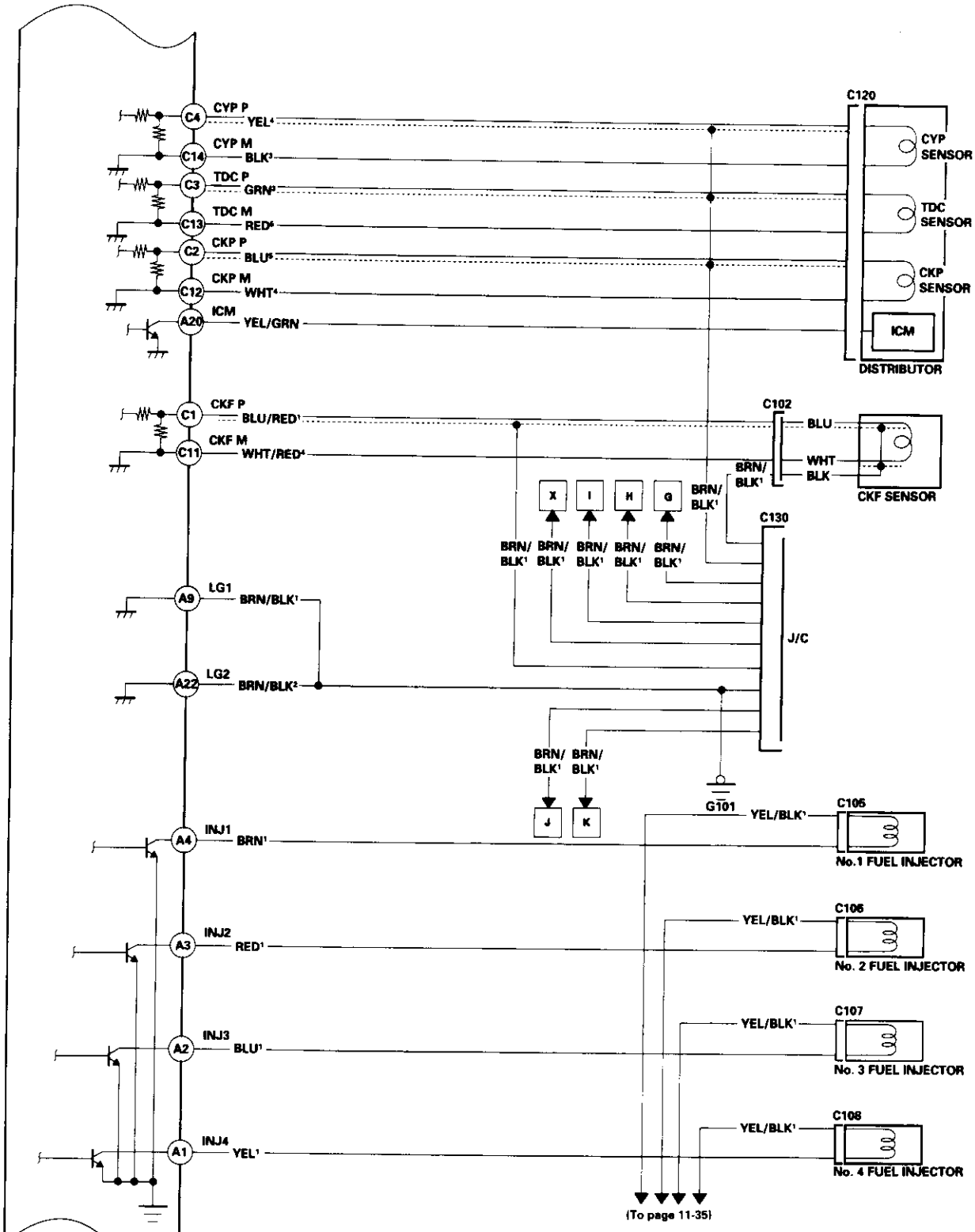

*1: USA model
*2: A/T (D16Y7, D16Y8 engine)
*3: CVT (D16Y5 engine)
*4: A/T and D16Y7 engine
*5: Except A/T and D16Y7 engine
*6: A/T (D16Y8 engine)
*7: CVT (D16Y5 engine) and D16Y8 engine
*8: '96 D16Y8 engine (coupe), '97 D16Y8 engine (coupe: all models, sedan: KL model), '98 D16Y5 engine, '98 D16Y8 engine, '99 – 00 D16Y5 (M/T) engine
*9: D16Y5 engine
*10: M/T (D16Y5 engine)
*11: Except M/T (D16Y5 engine)
*12: D16Y5, D16Y8 engine
*13: D16Y8 engine
*14: D16Y7 engine
*15: '97 D16Y7 engine (coupe: KL model, sedan: KL (LX) model), '98 D16Y7 engine

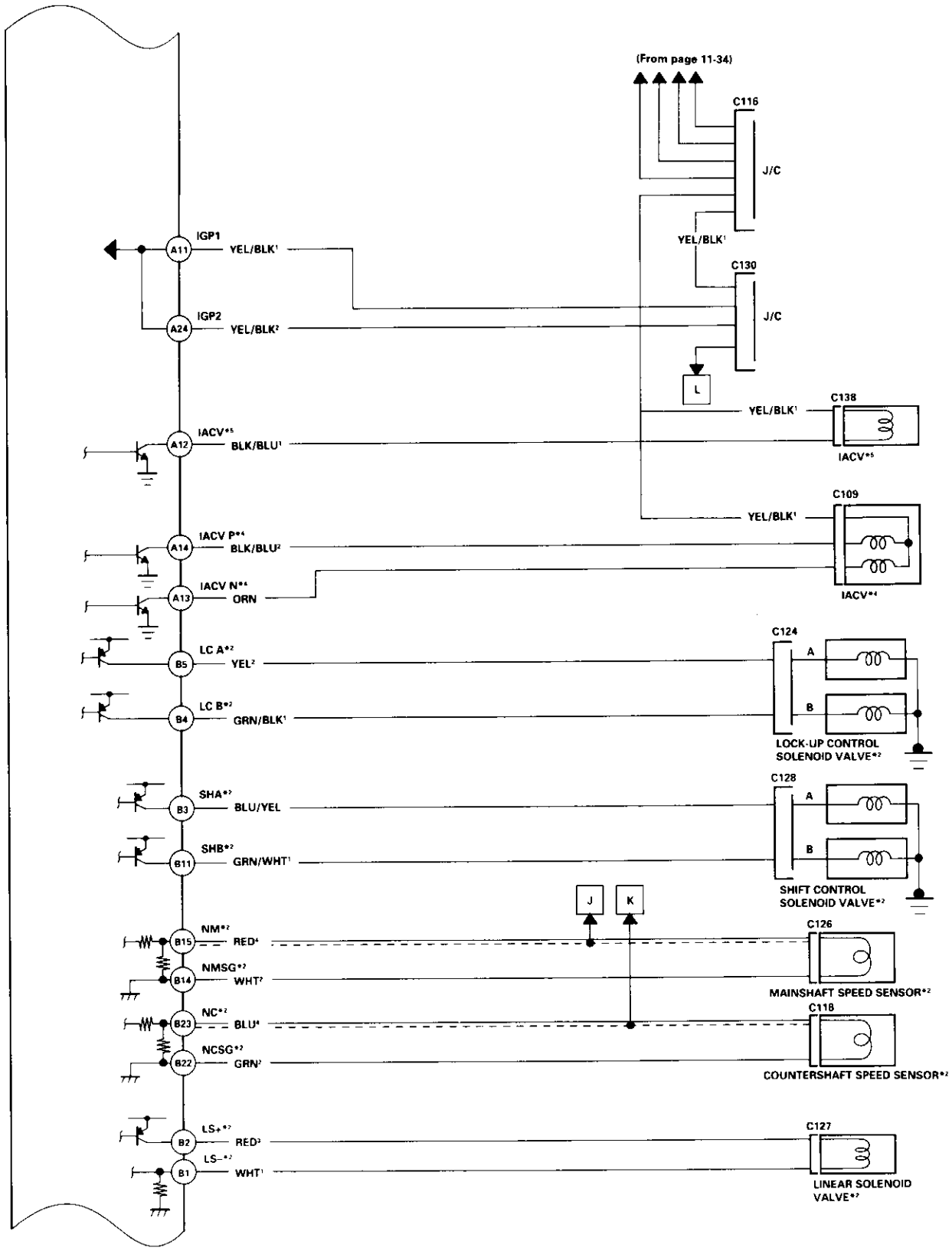
(From page 11-34)
C116
J/C
YEL/BLK¹
C130
J/C
L
IGP1
A11
YEL/BLK¹
IGP2
A24
YEL/BLK²
C138
YEL/BLK¹
IACV*5
A12
BLK/BLU¹
IACV*5
C109
YEL/BLK¹
IACV P*4
A14
BLK/BLU²
IACV N*4
A13
ORN
IACV*4
C124
LC A*2
B5
YEL²
A
LC B*2
B4
GRN/BLK¹
B
LOCK-UP CONTROL SOLENOID VALVE*2
C128
SHA*2
B3
BLU/YEL
A
SHB*2
B11
GRN/WHT¹
B
SHIFT CONTROL SOLENOID VALVE*2
J
K
C126
NM*2
B15
RED⁴
NMSG*2
B14
WHT²
MAINSHAFT SPEED SENSOR*2
C118
NC*2
B23
BLU⁴
NCSG*2
B22
GRN²
COUNTERSHAFT SPEED SENSOR*2
C127
LS+*2
B2
RED³
LS−*2
B1
WHT¹
LINEAR SOLENOID VALVE*2

(cont'd)

Electrical Connections ('96 – 98 Models, '99 – 00 D16Y5 engine with M/T) (cont'd)

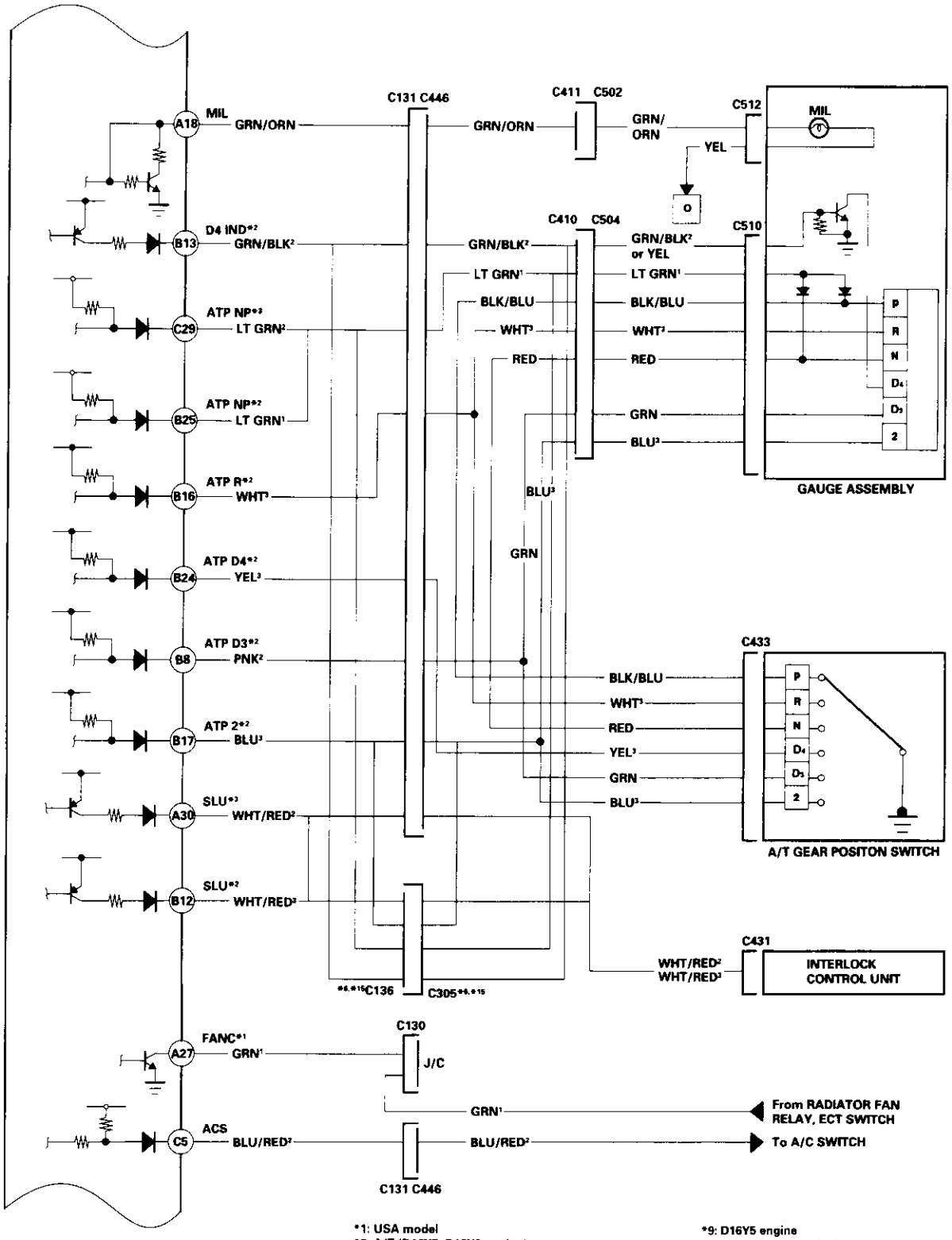

*1: USA model
*2: A/T (D16Y7, D16Y8 engine)
*3: CVT (D16Y5 engine)
*4: A/T and D16Y7 engine
*5: Except A/T and D16Y7 engine
*6: A/T (D16Y8 engine)
*7: CVT (D16Y5 engine) and D16Y8 engine
*8: '96 D16Y8 engine (coupe), '97 D16Y8 engine (coupe: all models, sedan: KL model), '98 D16Y5 engine, '98 D16Y8 engine, '99 – 00 D16Y5 (M/T) engine
*9: D16Y5 engine
*10: M/T (D16Y5 engine)
*11: Except M/T (D16Y5 engine)
*12: D16Y5, D16Y8 engine
*13: D16Y8 engine
*14: D16Y7 engine
*15: '97 D16Y7 engine (coupe: KL model, sedan: KL (LX) modell, '98 D16Y7 engine

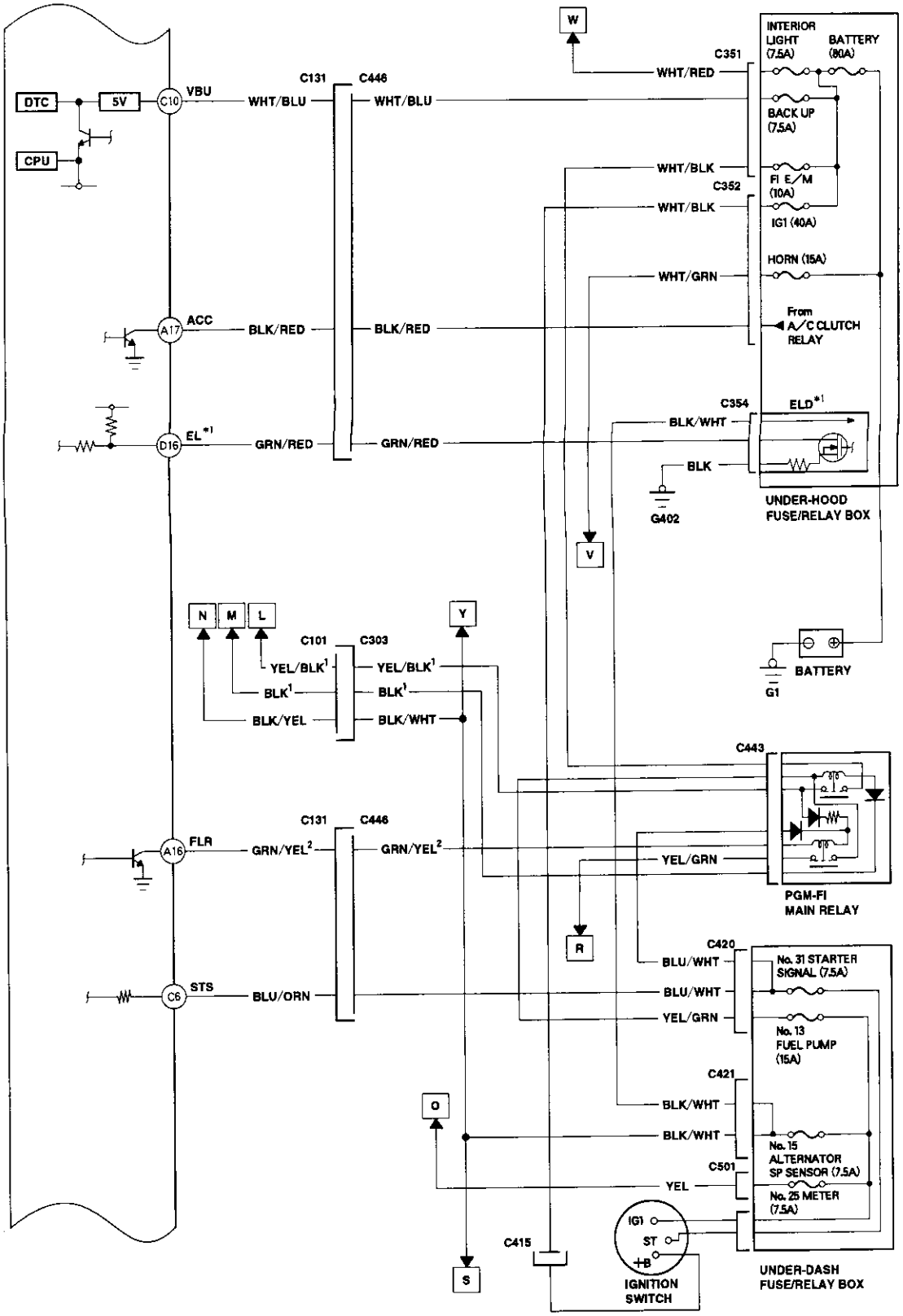
DTC
5V
CPU
C10
VBU
WHT/BLU
C131
C446
WHT/BLU
W
C351
WHT/RED
INTERIOR LIGHT (7.5A)
BATTERY (80A)
BACK UP (7.5A)
WHT/BLK
FI E/M (10A)
C352
WHT/BLK
IG1 (40A)
HORN (15A)
WHT/GRN
From A/C CLUTCH RELAY
A17
ACC
BLK/RED
BLK/RED
C354
ELD*1
BLK/WHT
D16
EL*1
GRN/RED
GRN/RED
BLK
G402
UNDER-HOOD FUSE/RELAY BOX
V
N
M
L
Y
C101
C303
YEL/BLK1
YEL/BLK1
BLK1
BLK1
BLK/YEL
BLK/WHT
BATTERY
G1
C443
A16
FLR
GRN/YEL2
GRN/YEL2
YEL/GRN
PGM-FI MAIN RELAY
R
C420
BLU/WHT
No. 31 STARTER SIGNAL (7.5A)
C6
STS
BLU/ORN
BLU/WHT
YEL/GRN
No. 13 FUEL PUMP (15A)
C421
O
BLK/WHT
BLK/WHT
No. 15 ALTERNATOR SP SENSOR (7.5A)
C501
YEL
No. 25 METER (7.5A)
IG1
ST
+B
C415
S
IGNITION SWITCH
UNDER-DASH FUSE/RELAY BOX

(cont'd)

Electrical Connections ('96 – 98 Models, '99 – 00 D16Y5 engine with M/T) (cont'd)

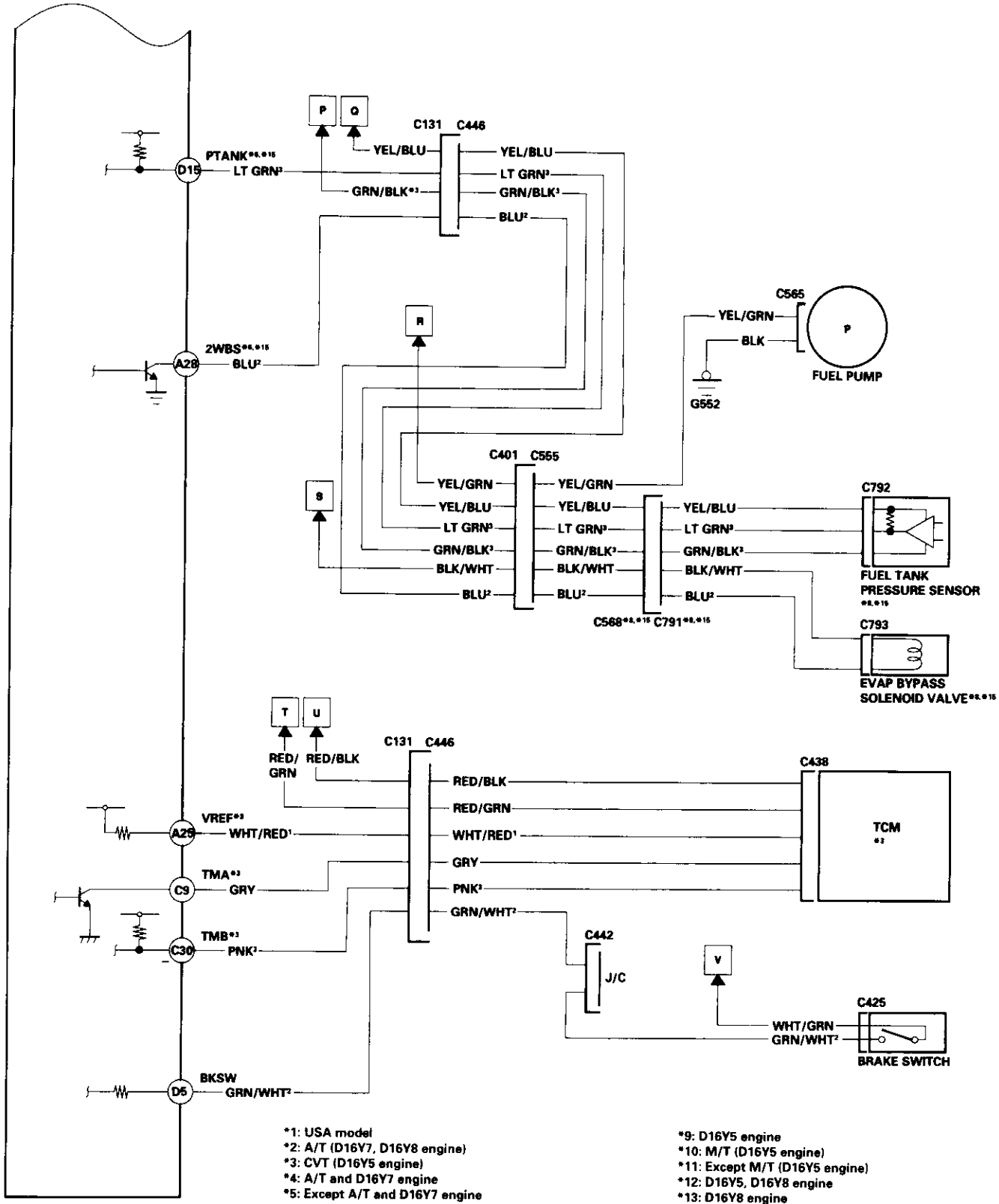

*1: USA model
*2: A/T (D16Y7, D16Y8 engine)
*3: CVT (D16Y5 engine)
*4: A/T and D16Y7 engine
*5: Except A/T and D16Y7 engine
*6: A/T (D16Y8 engine)
*7: CVT (D16Y5 engine) and D16Y8 engine
*8: '96 D16Y8 engine (coupe), '97 D16Y8 engine (coupe: all models, sedan: KL model), '98 D16Y5 engine, '98 D16Y8 engine, '99 – 00 D16Y5 (M/T) engine
*9: D16Y5 engine
*10: M/T (D16Y5 engine)
*11: Except M/T (D16Y5 engine)
*12: D16Y5, D16Y8 engine
*13: D16Y8 engine
*14: D16Y7 engine
*15: '97 D16Y7 engine (coupe: KL model, sedan: KL (LX) model), '98 D16Y7 engine

Electrical Connections ('99 – 00 Models except D16Y5 engine with M/T)

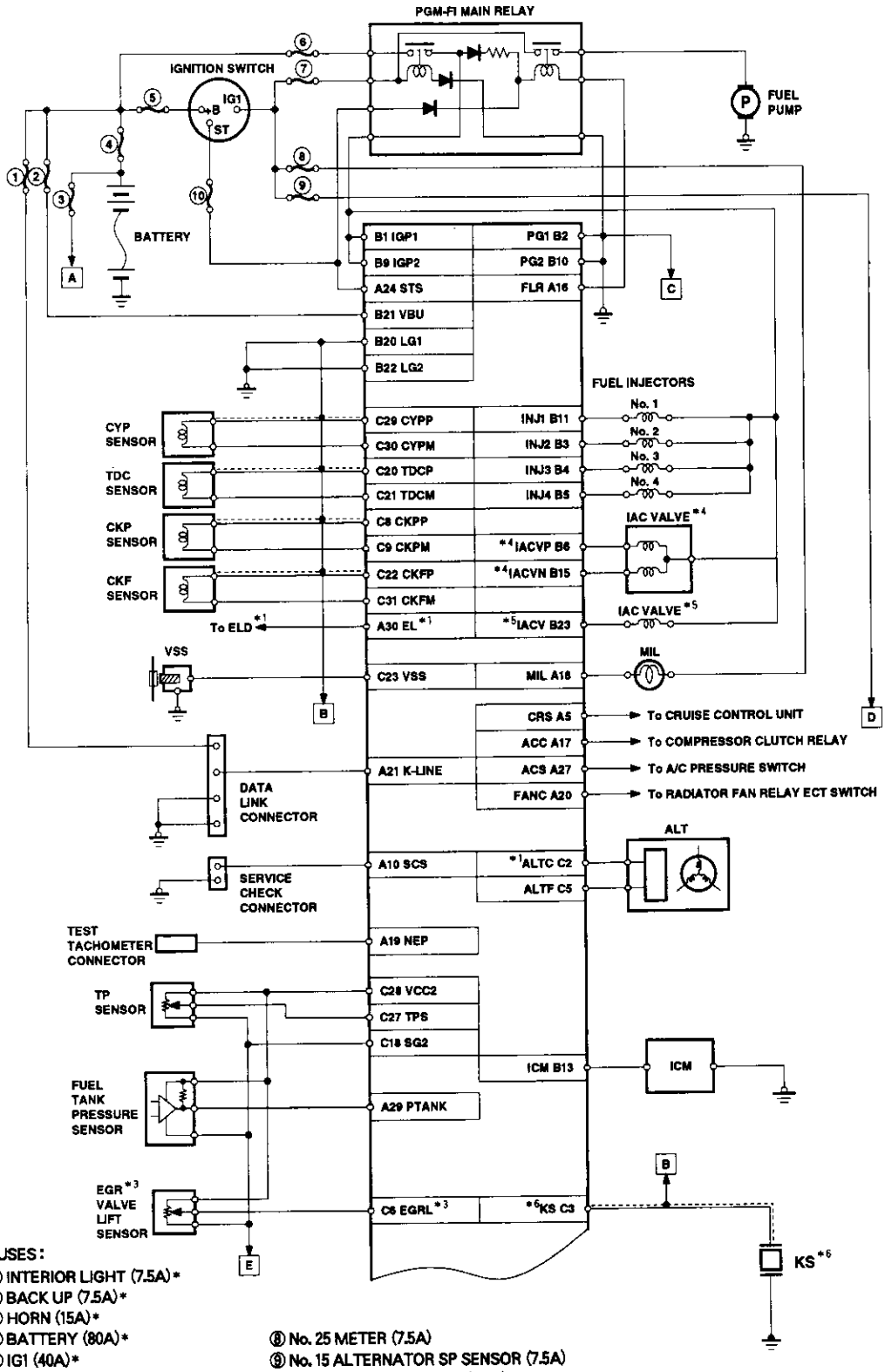

FUSES:

① INTERIOR LIGHT (7.5A)*
② BACK UP (7.5A)*
③ HORN (15A)*
④ BATTERY (80A)*
⑤ IG1 (40A)*
⑥ FI E/M (15A)*
⑦ No. 13 FUEL PUMP (15A)
⑧ No. 25 METER (7.5A)
⑨ No. 15 ALTERNATOR SP SENSOR (7.5A)
⑩ No. 31 STARTER SIGNAL (7.5A)
*: in the under-hood fuse/relay box

(cont'd)

Electrical Connections ('99 – 00 Models except D16Y5 engine with M/T) (cont'd)

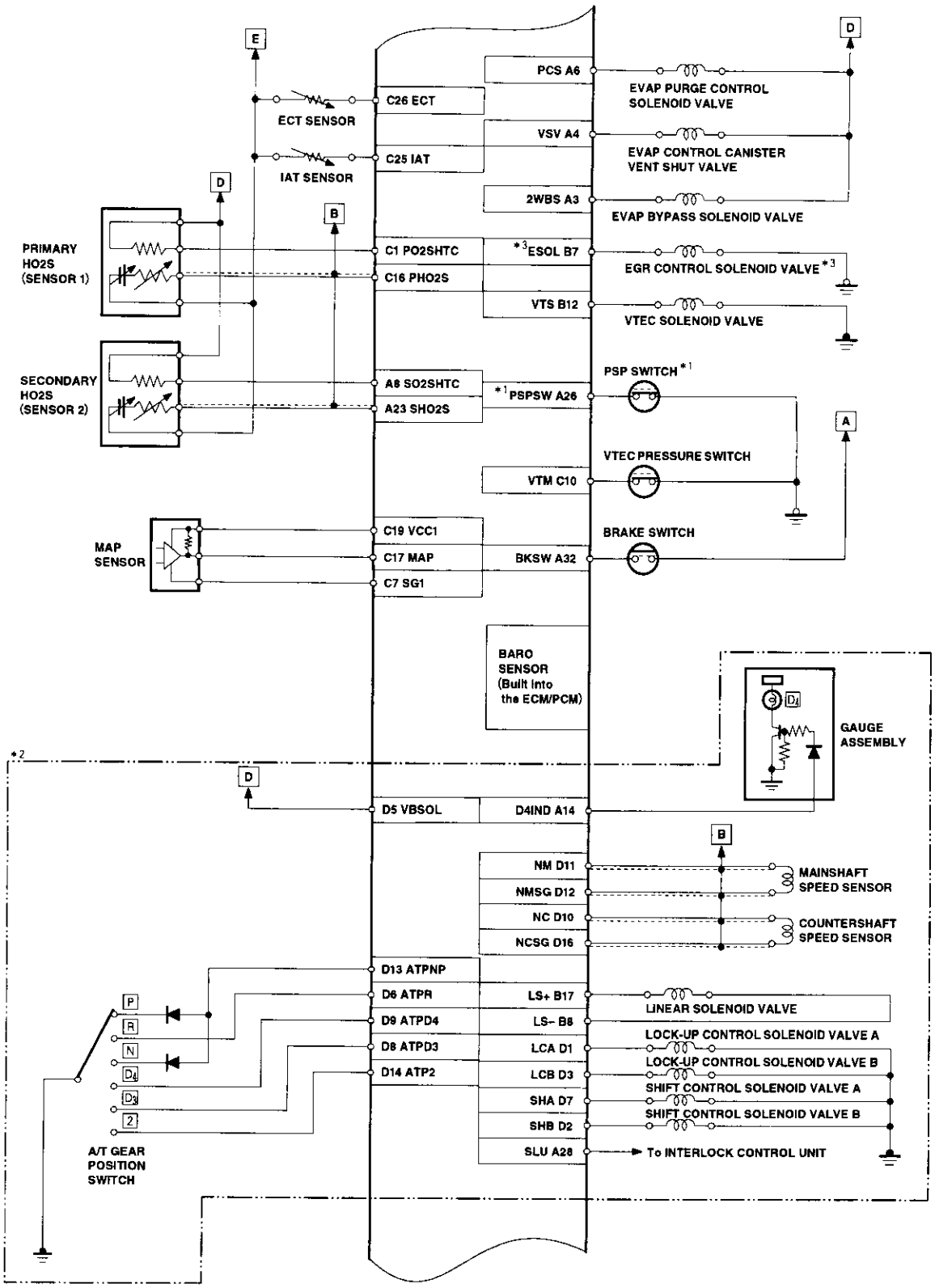

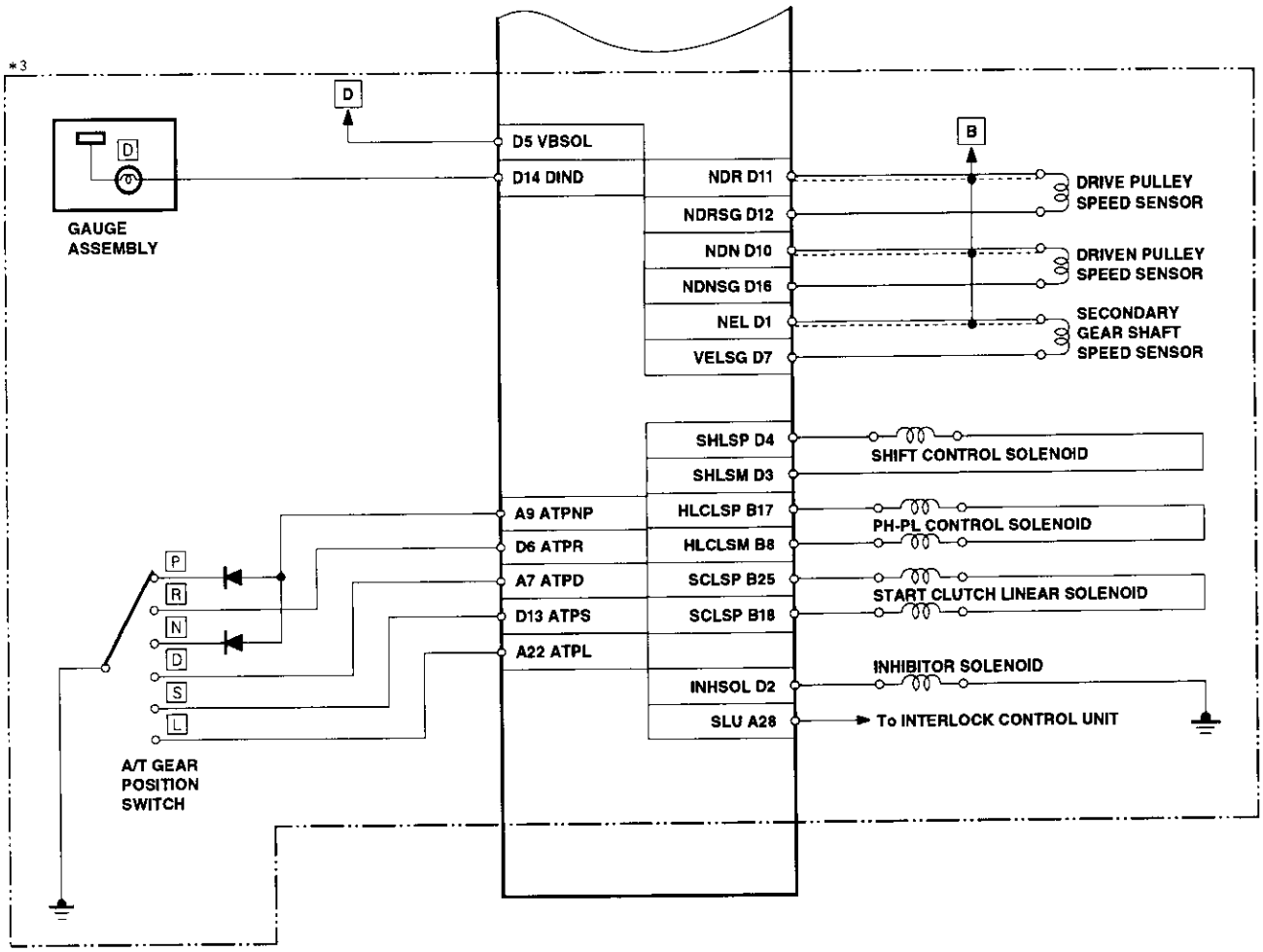

*1: USA model
*2: A/T(D16Y7, D16Y8 engine)
*3: CVT(D16Y5 engine)
*4: A/T and D16Y7 engine
*5: Except A/T and D16Y7 engine
*6: CVT(D16Y5 engine), D16Y8 engine and B16A2 engine

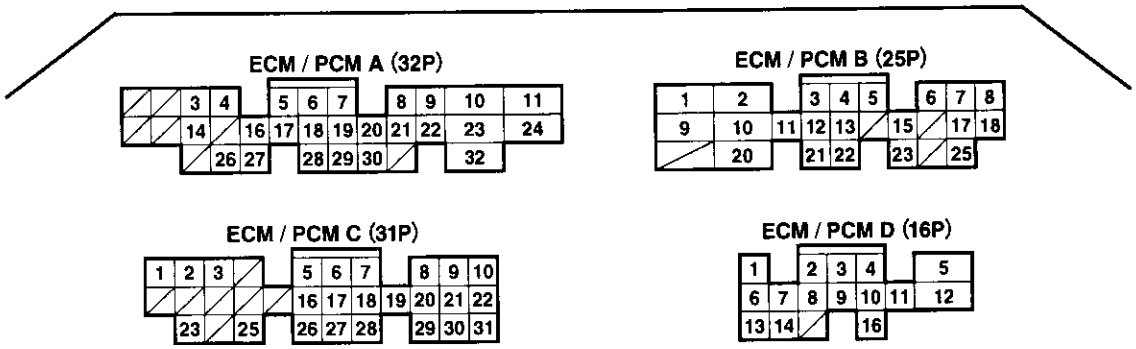

(cont'd)

TERMINAL LOCATIONS

Electrical Connections ('99 – 00 Models except D16Y5 engine with M/T) (cont'd)

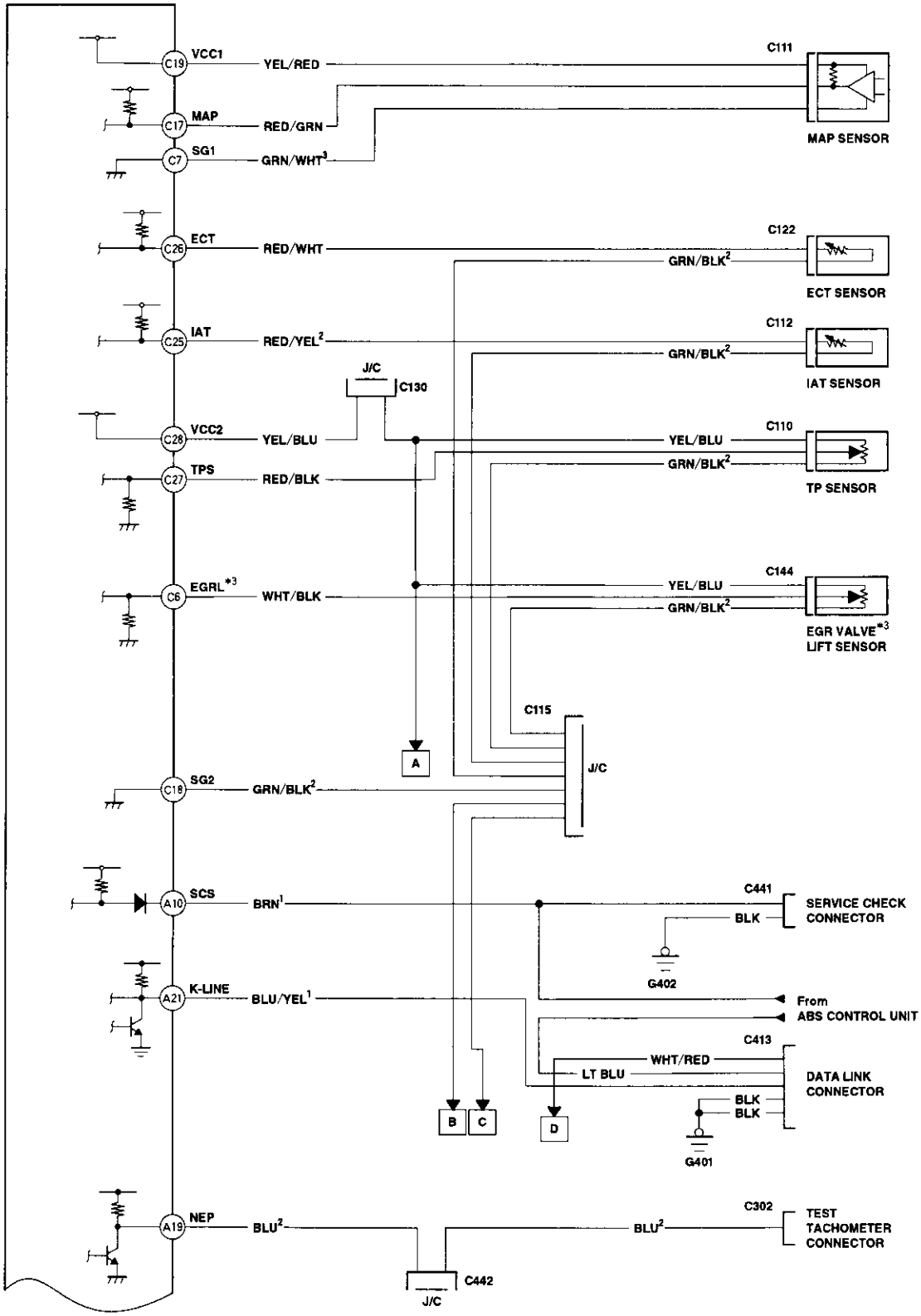

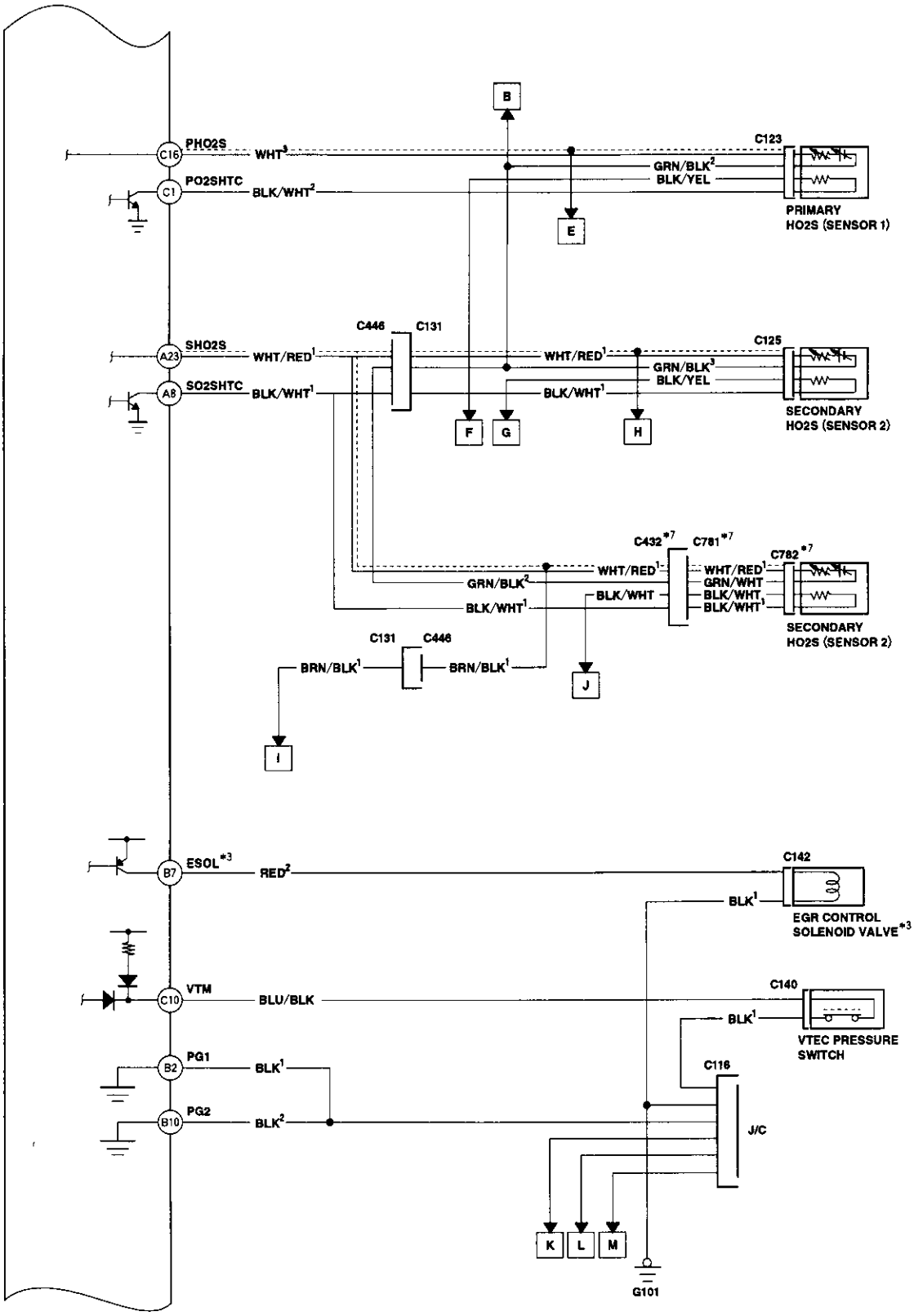
PHO2S
C16
WHT[3]
PO2SHTC
C1
BLK/WHT[2]
B
E
C123
GRN/BLK[2]
BLK/YEL
PRIMARY
HO2S (SENSOR 1)
C446
C131
SHO2S
A23
WHT/RED[1]
SO2SHTC
A8
BLK/WHT[1]
WHT/RED[1]
GRN/BLK[3]
BLK/YEL
BLK/WHT[1]
C125
SECONDARY
HO2S (SENSOR 2)
F
G
H
C432 *7
C781 *7
C782 *7
WHT/RED[1]
GRN/BLK[2]
BLK/WHT[1]
BLK/WHT
WHT/RED[1]
GRN/WHT
BLK/WHT
BLK/WHT[1]
SECONDARY
HO2S (SENSOR 2)
C131
C446
BRN/BLK[1]
BRN/BLK[1]
J
I
ESOL *3
B7
RED[2]
C142
BLK[1]
EGR CONTROL
SOLENOID VALVE *3
VTM
C10
BLU/BLK
C140
BLK[1]
VTEC PRESSURE
SWITCH
PG1
B2
BLK[1]
C116
PG2
B10
BLK[2]
J/C
K
L
M
G101

(cont'd)

Electrical Connections ('99 – 00 Models except D16Y5 engine with M/T) (cont'd)

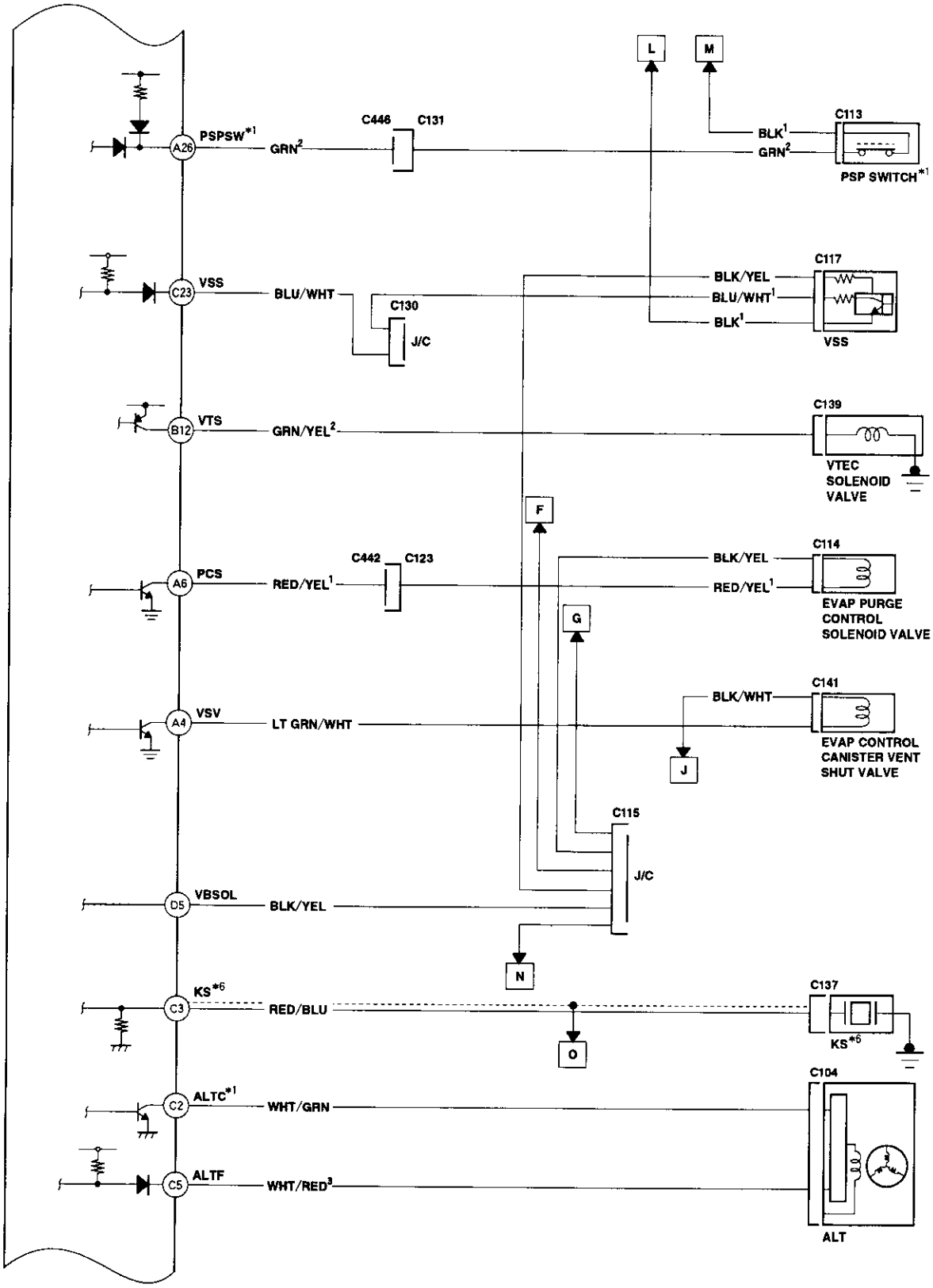

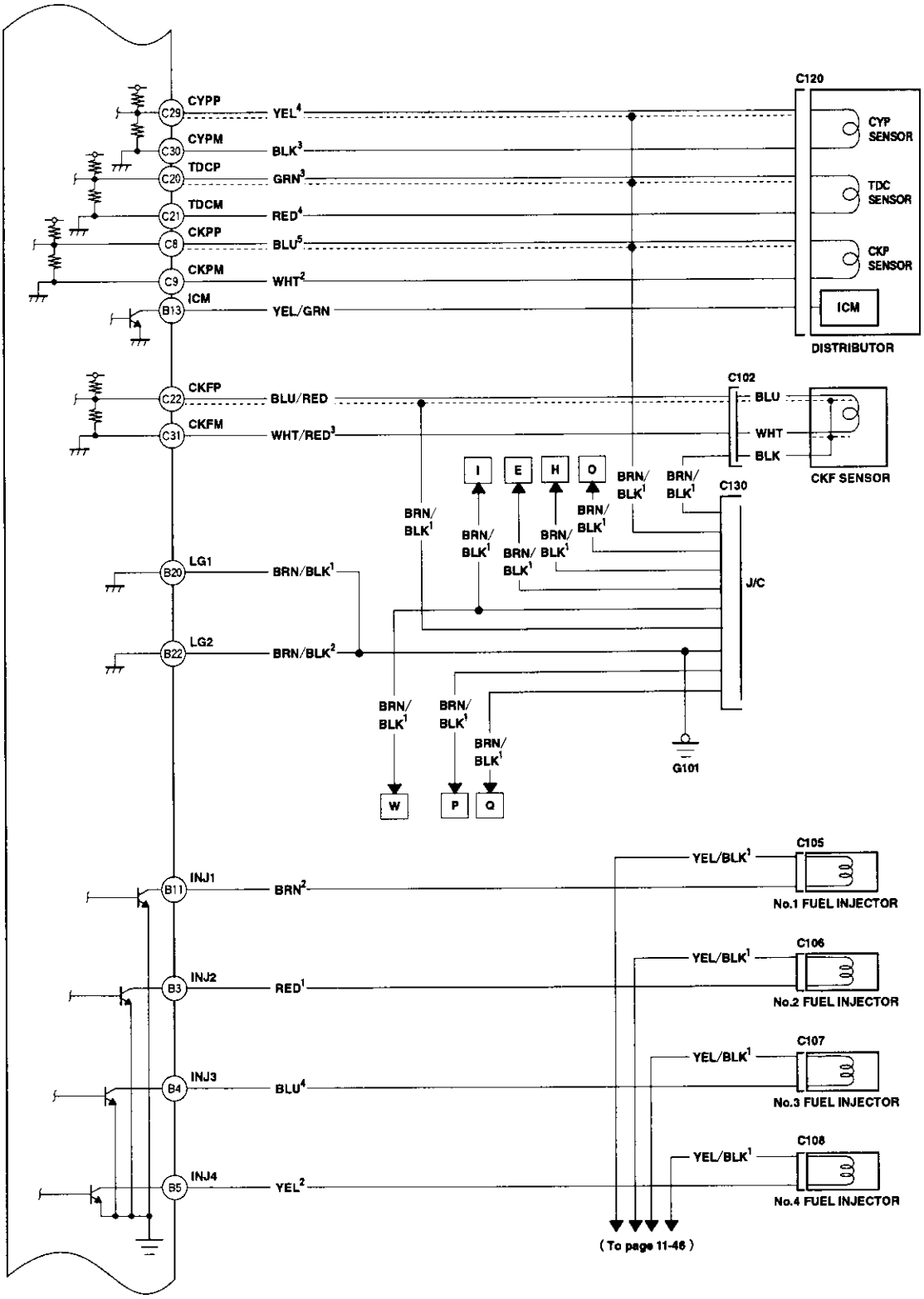
C120
CYP SENSOR
TDC SENSOR
CKP SENSOR
ICM
DISTRIBUTOR
CYPP
CYPM
TDCP
TDCM
CKPP
CKPM
ICM
C29
C30
C20
C21
C8
C9
B13
YEL4
BLK3
GRN3
RED4
BLU5
WHT2
YEL/GRN
C102
BLU
WHT
BLK
CKF SENSOR
CKFP
CKFM
C22
C31
BLU/RED
WHT/RED3
I
E
H
O
BRN/BLK1
C130
J/C
LG1
LG2
B20
B22
BRN/BLK1
BRN/BLK2
W
P
Q
G101
C105
C106
C107
C108
INJ1
INJ2
INJ3
INJ4
B11
B3
B4
B5
BRN2
RED1
BLU4
YEL2
YEL/BLK1
No.1 FUEL INJECTOR
No.2 FUEL INJECTOR
No.3 FUEL INJECTOR
No.4 FUEL INJECTOR
(To page 11-46)

(cont'd)

Electrical Connections ('99 – 00 Models except D16Y5 engine with M/T) (cont'd)

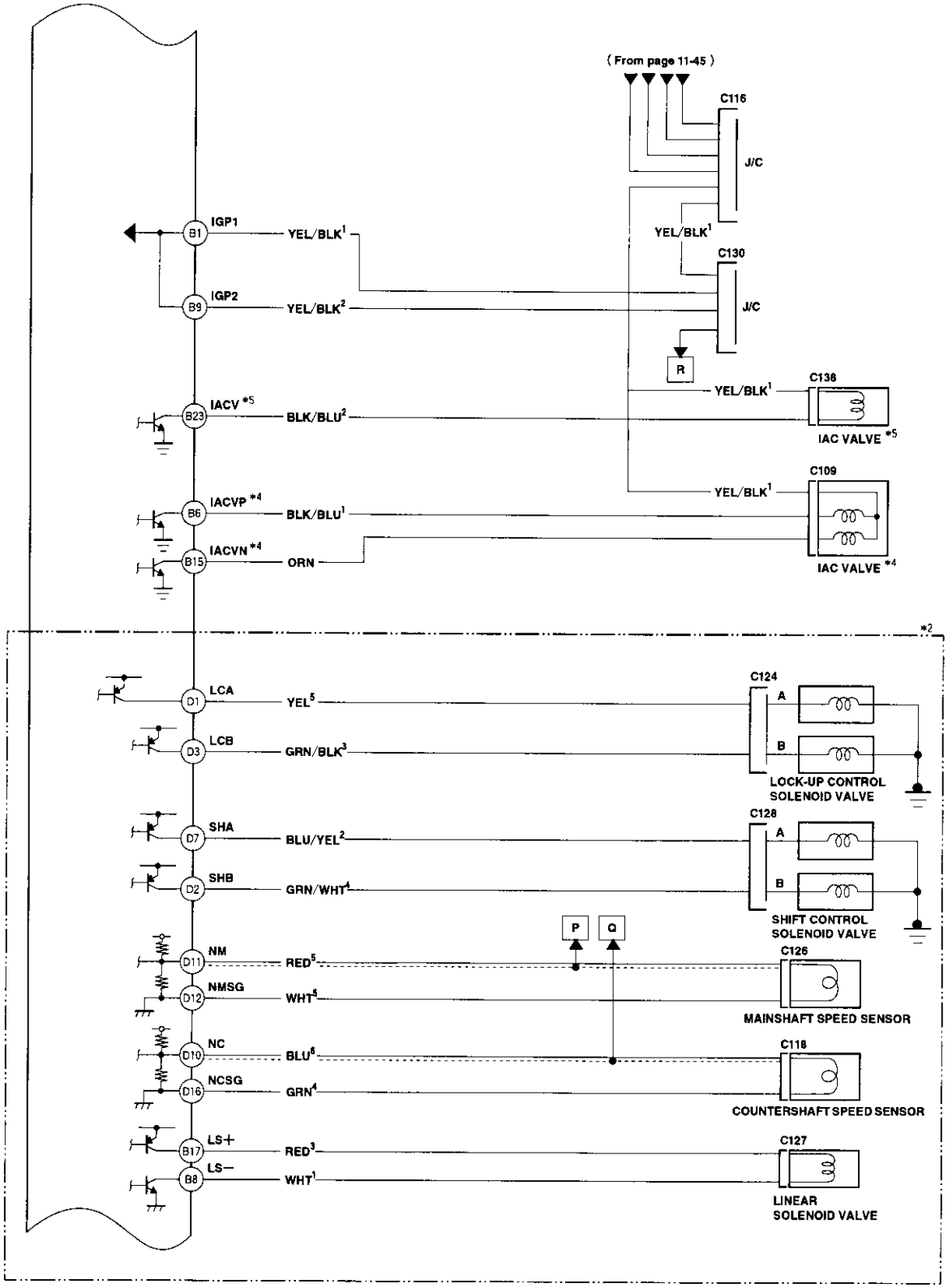

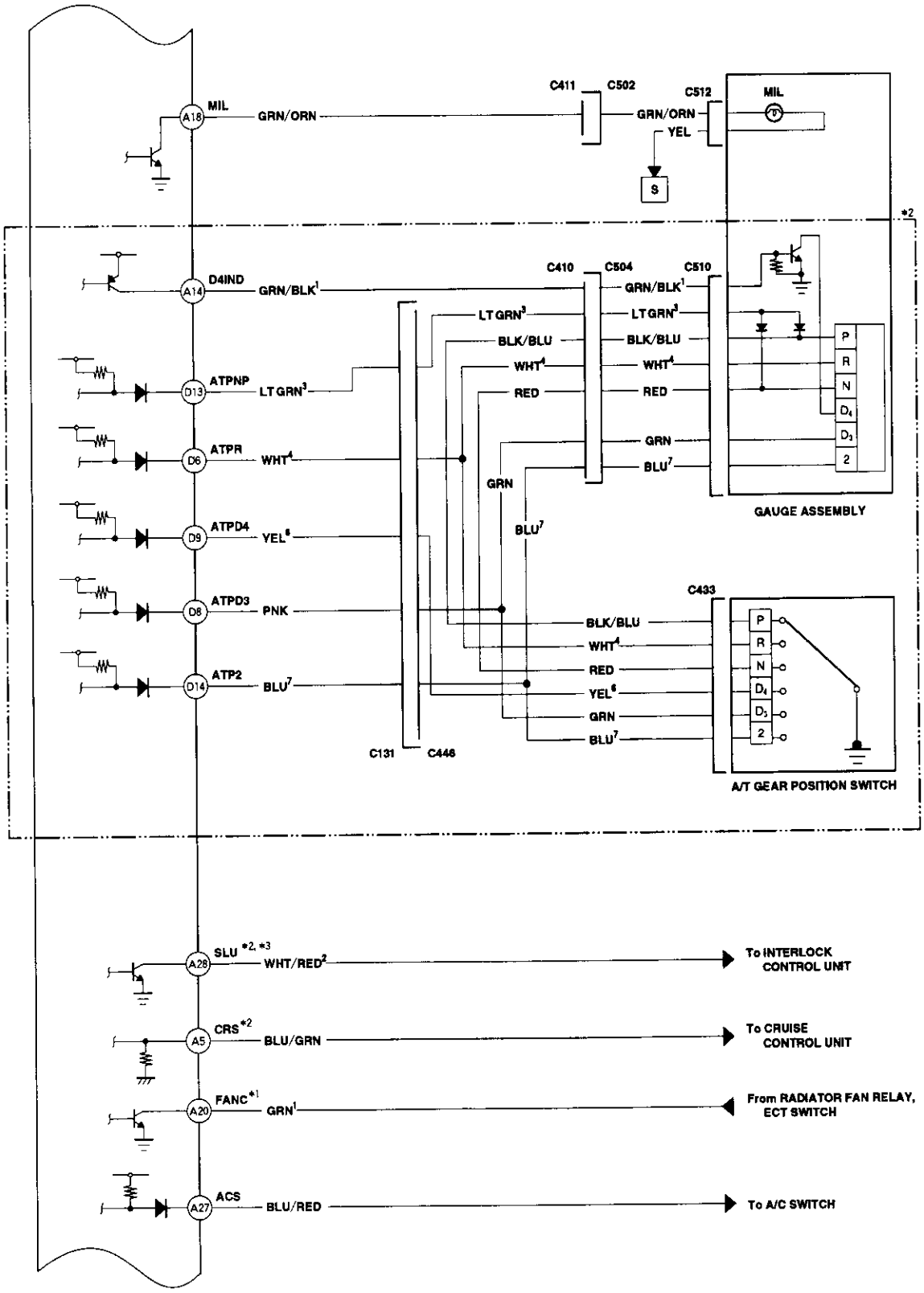
MIL
A18
GRN/ORN
C411
C502
C512
GRN/ORN
YEL
S
MIL
*2
D4IND
A14
GRN/BLK1
C410
C504
C510
GRN/BLK1
LT GRN3
BLK/BLU
WHT4
RED
GRN
BLU7
ATPNP
D13
LT GRN3
ATPR
D6
WHT4
ATPD4
D9
YEL6
ATPD3
D8
PNK
ATP2
D14
BLU7
P
R
N
D4
D3
2
GAUGE ASSEMBLY
C433
BLK/BLU
WHT4
RED
YEL6
GRN
BLU7
C131
C446
A/T GEAR POSITION SWITCH
SLU *2, *3
A28
WHT/RED2
To INTERLOCK CONTROL UNIT
CRS*2
A5
BLU/GRN
To CRUISE CONTROL UNIT
FANC*1
A20
GRN1
From RADIATOR FAN RELAY, ECT SWITCH
ACS
A27
BLU/RED
To A/C SWITCH

(cont'd)

Electrical Connections ('99 – 00 Models except D16Y5 engine with M/T) (cont'd)

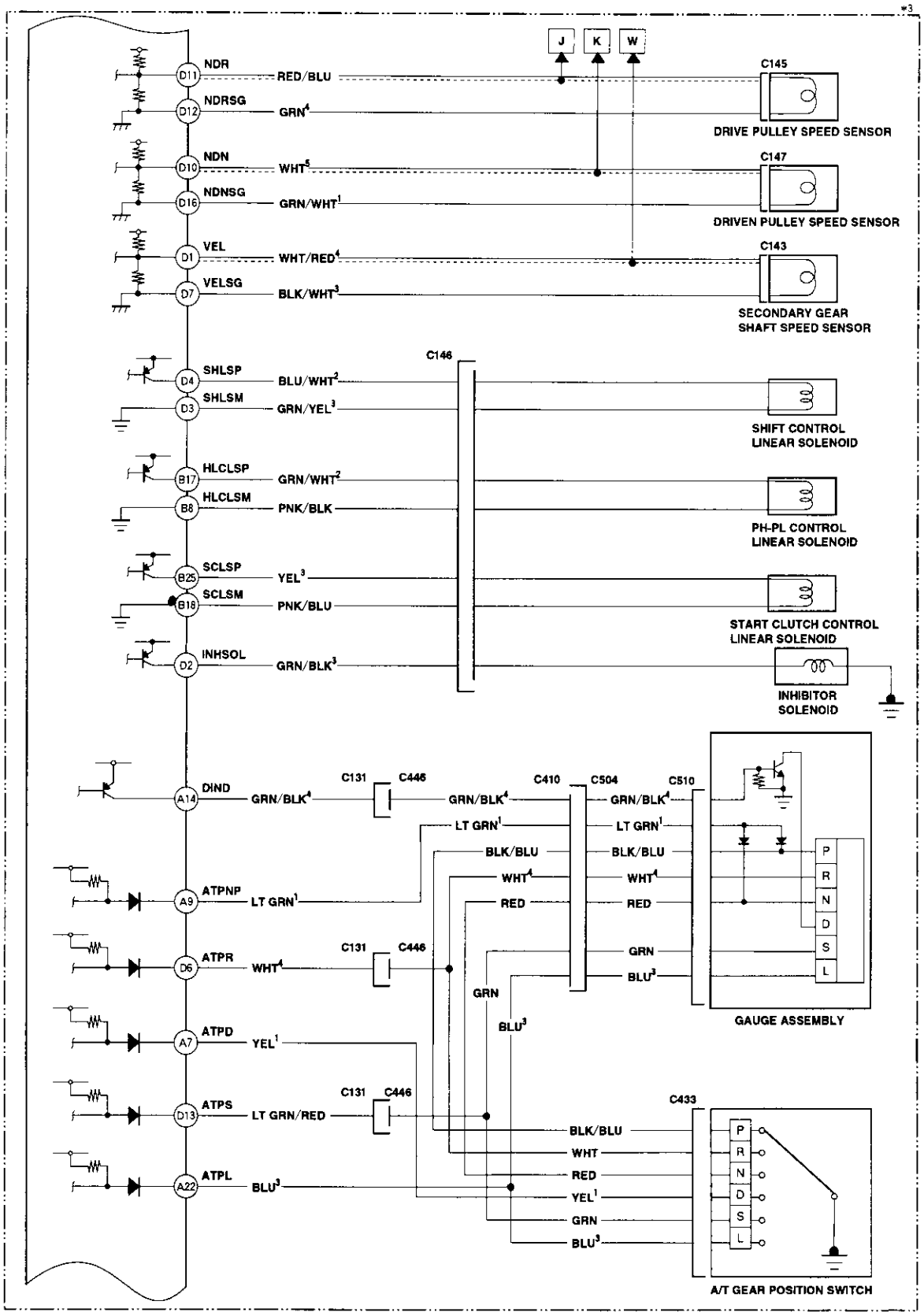

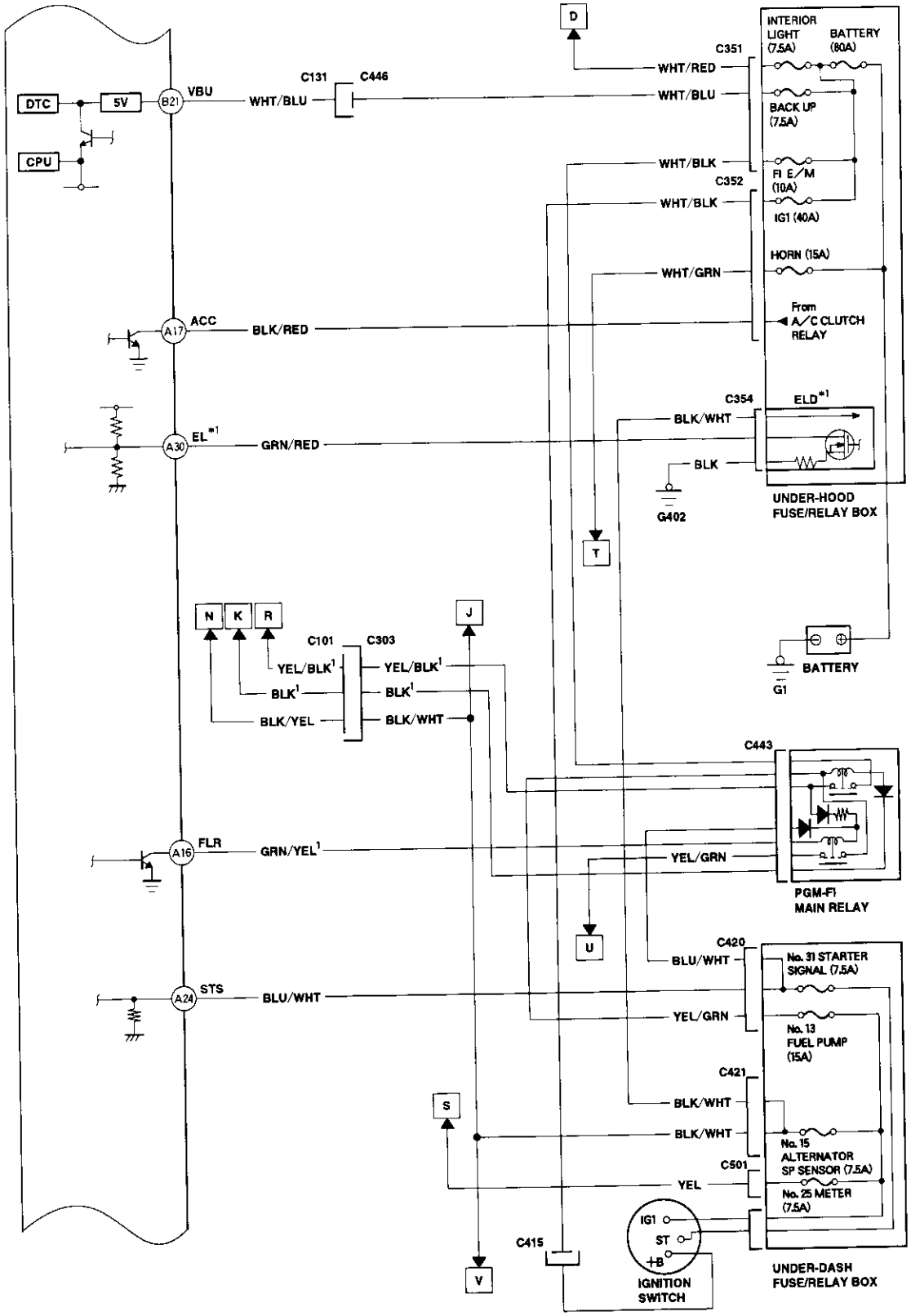
DTC
5V
CPU
B21
VBU
WHT/BLU
C131
C446
D
C351
WHT/RED
WHT/BLU
WHT/BLK
C352
WHT/BLK
WHT/GRN
INTERIOR LIGHT (7.5A)
BATTERY (80A)
BACK UP (7.5A)
FI E/M (10A)
IG1 (40A)
HORN (15A)
From A/C CLUTCH RELAY
A17
ACC
BLK/RED
C354
ELD*1
BLK/WHT
A30
EL*1
GRN/RED
BLK
G402
UNDER-HOOD FUSE/RELAY BOX
T
N
K
R
C101
C303
YEL/BLK1
BLK1
BLK/YEL
YEL/BLK1
BLK1
BLK/WHT
J
BATTERY
G1
C443
A16
FLR
GRN/YEL1
YEL/GRN
PGM-FI MAIN RELAY
U
C420
BLU/WHT
A24
STS
BLU/WHT
YEL/GRN
No. 31 STARTER SIGNAL (7.5A)
No. 13 FUEL PUMP (15A)
C421
BLK/WHT
BLK/WHT
S
No. 15 ALTERNATOR SP SENSOR (7.5A)
C501
YEL
No. 25 METER (7.5A)
IG1
ST
+B
IGNITION SWITCH
C415
V
UNDER-DASH FUSE/RELAY BOX

(cont'd)

Electrical Connections ('99 – 00 Models except D16Y5 engine with M/T) (cont'd)

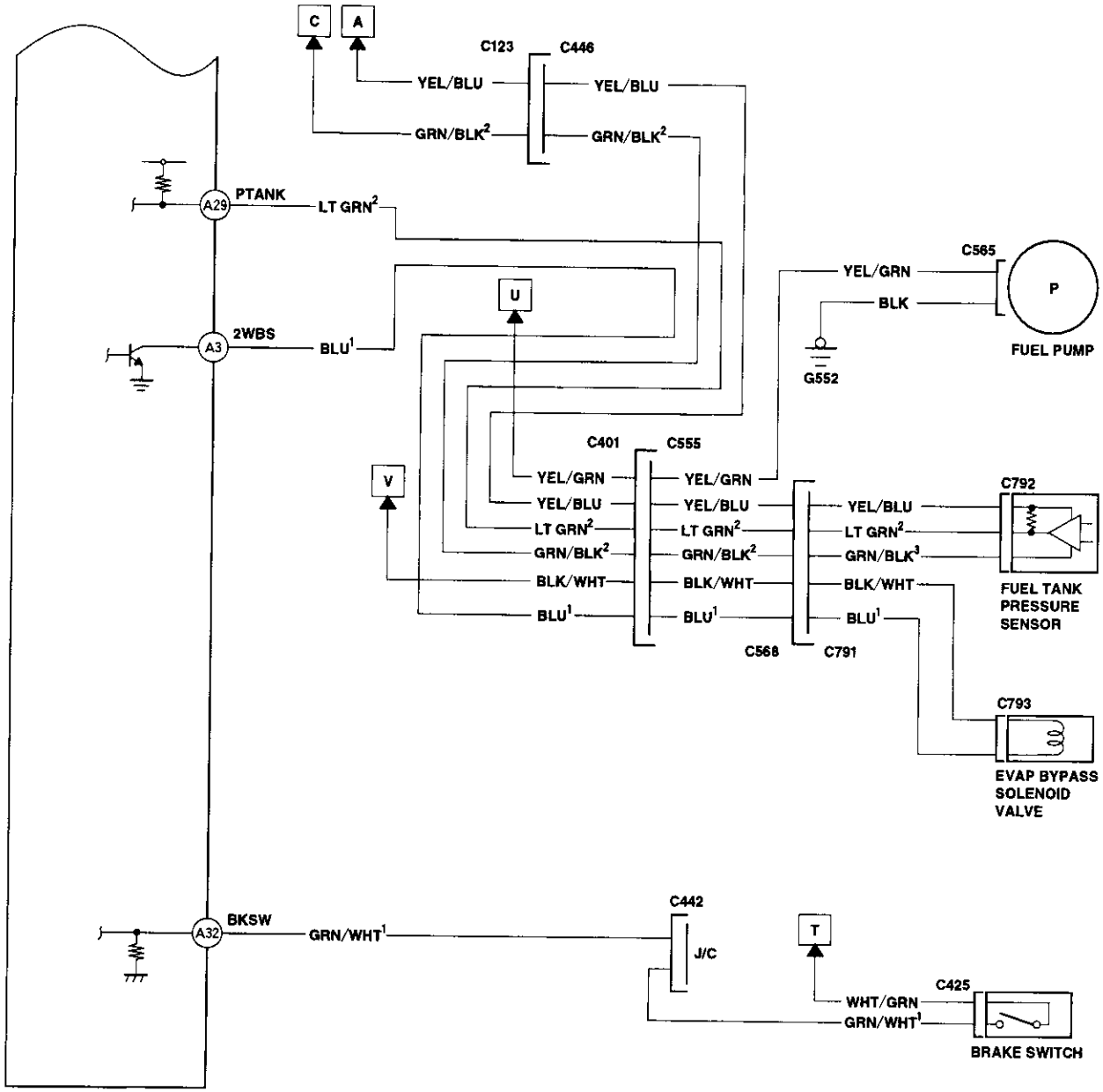

*1: USA model
*2: A/T(D16Y7, D16Y8 engine)
*3: CVT(D16Y5 engine)
*4: A/T and D16Y7 engine
*5: Except A/T and D16Y7 engine
*6: CVT(D16Y5 engine), D16Y8 engine and B16A2 engine
*7: D16Y8, B16A2 engine

System Connectors [Fuel Pump]

'96 – 98 models, '99 – 00 D16Y5 engine with M/T:

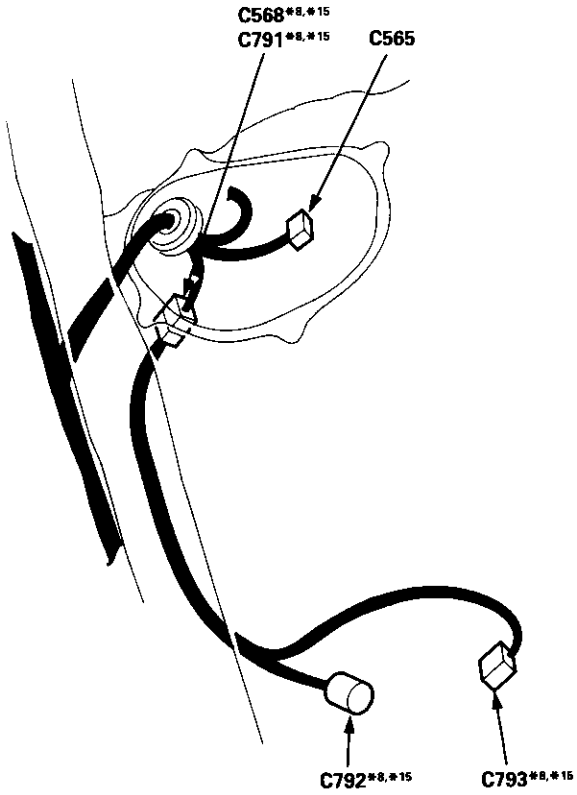

C565

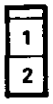

①	BLK
②	YEL/GRN

C568*8, *15

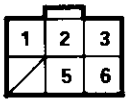

①	BLU[2]
②	LT GRN[3]
③	BLK/WHT
4	——
⑤	YEL/BLU
⑥	GRN/BLK[3]

C792*8,*15

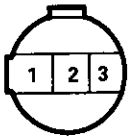

①	YEL/BLU
②	GRN/BLK[3]
③	LT GRN[3]

C793*8,*15

①	BLK/WHT
②	BLU[2]

***1: USA model**
***2: A/T (D16Y7, D16Y8 engine)**
***3: CVT (D16Y5 engine)**
***4: A/T and D16Y7 engine**
***5: Except A/T and D16Y7 engine**
***6: A/T (D16Y8 engine)**
***7: CVT (D16Y5 engine) and D16Y8 engine**
***8: '96 D16Y8 engine (coupe), '97 D16Y8 engine (coupe: all models, sedan: KL model), '98 D16Y5 engine, '98 D16Y7 engine, '99 – 00 D16Y5 (M/T) engine**
***9: D16Y5 engine**
***10: M/T (D16Y5 engine)**
***11: Except M/T (D16Y5 engine)**
***12: D16Y5, D16Y8 engine**
***13: D16Y8 engine**
***14: D16Y7 engine**
***15: '97 D16Y7 engine (coupe: KL model, sedan: KL (LX) model), '98 D16Y7 engine**

NOTE:
- Different wires with the same color have been given a number suffix to distinguish them (for example, YEL/BLK[1] and YEL/BLK[2] are not the same).
- ○: Related to Fuel and Emissions System.
- — Connector with male terminals (double outline): View from terminal side
  — Connector with female terminals (single outline): View from wire side

System Connectors [Engine Compartment]

'96 – '98 D16Y5, D16Y8 engine, '99 – 00 D16Y5 engine with M/T:

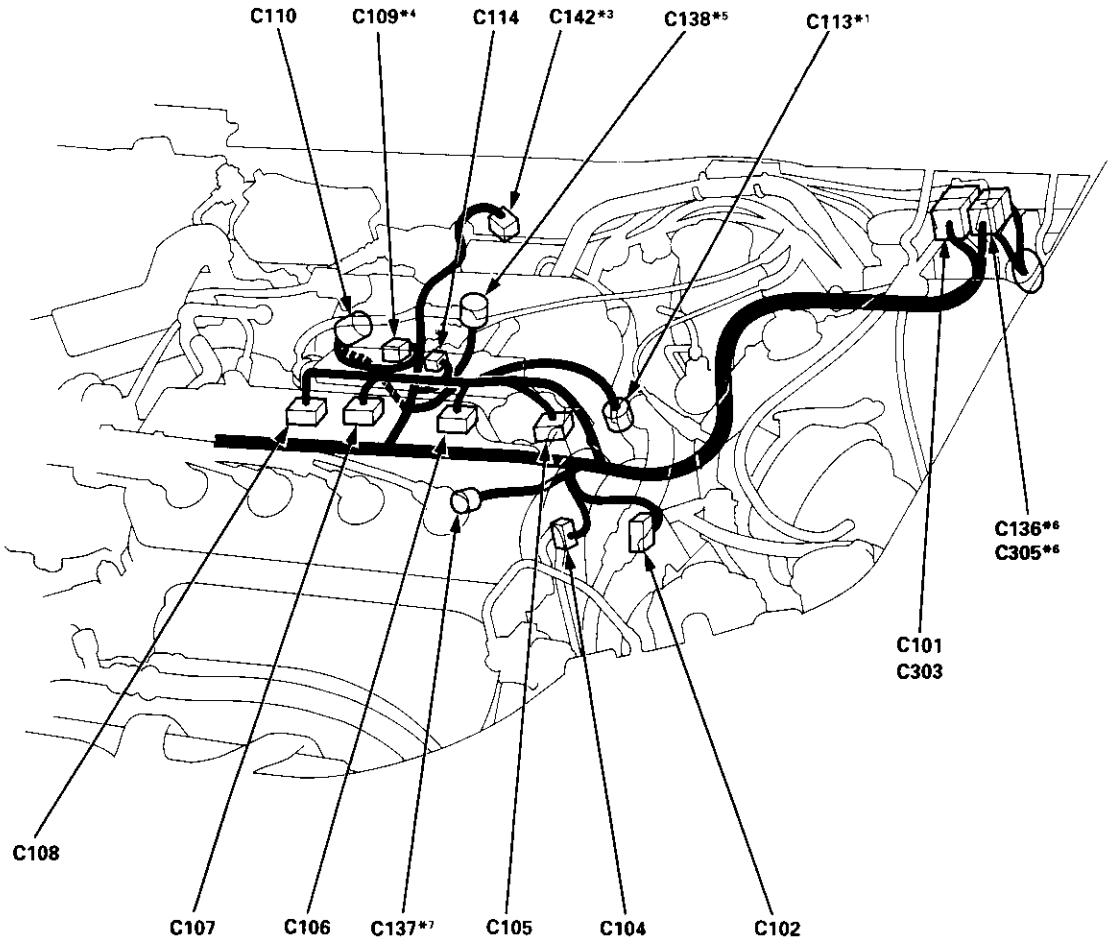

- - - - - - - -: M/T (D16Y5 engine)

C101

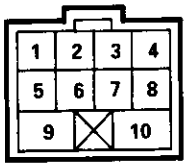

①	BLK/YEL	6	WHT/BLU
②	BLK[1]	7	YEL/GRN
3	YEL/RED	8	BLU
④	BRN/BLK[1]	9	BLK/WHT
⑤	YEL/BLK[1]	10	BLK/YEL

C102

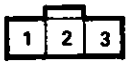

①	WHT/RED[4]
②	BRN/BLK[1]
③	BLU/RED[1]

C104 *1

1	BLK/YEL
②	WHT/GRN
3	WHT/BLU
④	WHT/RED[6]

C104 (Canada)

①	WHT/RED[6]
2	BLK/YEL
3	WHT/BLU

C105

①	YEL/BLK[1]
②	BRN[1]

C106

①	YEL/BLK[1]
②	RED[1]

C107

①	YEL/BLK[1]
②	BLU[1]

C108

①	YEL/BLK[1]
②	YEL[1]

C109*4

①	ORN
②	YEL/BLK[1]
③	BLK/BLU[2]

C110

①	GRN/BLK[3]
②	RED/BLK
③	YEL/BLU

C113*1

①	GRN[4]
②	BLK[1]

C114

①	BLK/YEL
②	RED/YEL[1]

C136*6

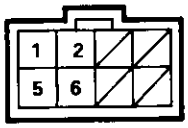

①	GRN/BLK[2]	⑤	LT GRN[2]
②	WHT/RED[3]	⑥	BLU[3]
3	——	7	——
4	——	8	——

C137*7

①	RED/BLU
2	——

C138*5

①	BLK/BLU[1]
②	YEL/BLK[1]

C142*3

①	BLK[1]
②	RED[2]

NOTE:
- Different wires with the same color have been given a number suffix to distinguish them (for example, YEL/BLK[1] and YEL/BLK[2] are not the same).
- ○: Related to Fuel and Emissions System.
- — Connector with male terminals (double outline): View from terminal side
  — Connector with female terminals (single outline): View from wire side

(cont'd)

System Connectors [Engine Compartment] (cont'd)

'96 – 98 D16Y5, D16Y8 engine, '99 – 00 D16Y5 engine with M/T:

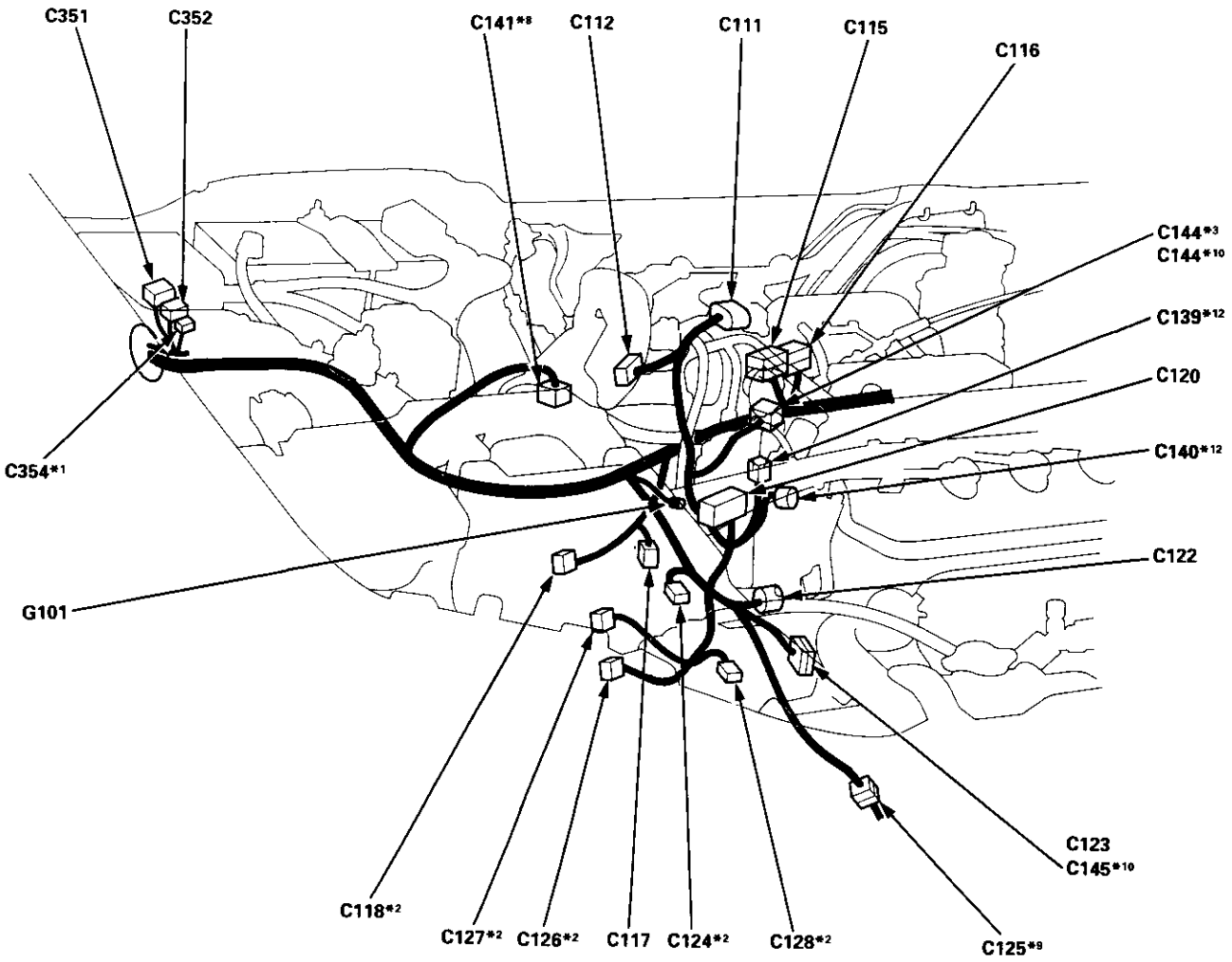

C111

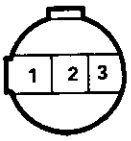

①	YEL/RED
②	GRN/WHT[3]
③	RED/GRN

C112

①	GRN/BLK[3]
②	RED/YEL[2]

C115

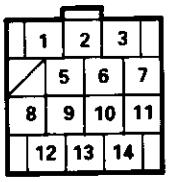

①	BLK/YEL	⑧	GRN/BLK[3]
2	BLK/YEL	⑨	GRN/BLK[3]
③	BLK/YEL	⑩	GRN/BLK[3]
4	——	⑪	GRN/BLK[3]
⑤	BLK/YEL	⑫	GRN/BLK[3]
⑥	BLK/YEL	⑬	GRN/BLK[3]
⑦	BLK/YEL	⑭	GRN/BLK[3]

C116

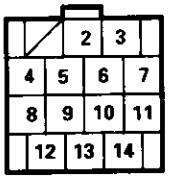

1	——	8	BLK
②	YEL/BLK[1]	⑨	BLK[1]
③	YEL/BLK[1]	⑩	BLK[1]
④	YEL/BLK[1]	⑪	BLK[1]
⑤	YEL/BLK[1]	⑫	BLK[1]
⑥	YEL/BLK[1]	⑬	BLK[1]
⑦	YEL/BLK[1]	⑭	BLK[1]

C117

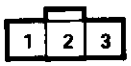

①	BLK[1]
②	BLK/YEL
③	BLU/WHT

C118*2

①	GRN[2]
②	BLU[4]

C120

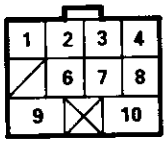

①	YEL/GRN	⑥	WHT[4]
②	BLU[5]	⑦	RED[5]
③	GRN[3]	⑧	BLK[3]
④	YEL[4]	9	BLU
5	——	10	BLK/YEL

C122

①	RED/WHT
②	GRN/BLK[3]

C123

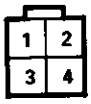

①	WHT[6]
②	GRN/BLK[3]
③	BLK/YEL
④	BLK/WHT[2]

C124*2

①	GRN/BLK[1]
②	YEL[2]

C125

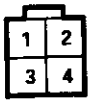

①	WHT/RED[5]
②	GRN/BLK[4]
③	BLK/YEL
④	BLK/WHT[1]

C126*2

①	WHT[2]
②	RED[4]

C127*2

①	RED[3]
②	WHT[1]

C128*2

①	BLU/YEL
②	GRN/WHT[1]

C139*12

①	GRN/YEL[1]

C140*12

①	BLK[1]
②	RED[2]

C141*8

①	LT GRN/WHT
②	BLK/YEL

C144 *3

①	WHT/BLK
②	GRN/BLK[3]
③	YEL/BLU

C144 *10

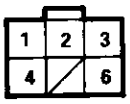

①	WHT/BLK
②	GRN/BLK[3]
③	YEL/BLU
④	BLK[1]
5	——
⑥	PNK[1]

C145*10

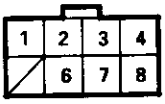

①	BLK/WHT[2]	5	——
②	BLK[1]	⑥	WHT[5]
③	GRN/BLK[3]	⑦	BLK[4]
④	WHT[6]	⑧	RED[6]

C351

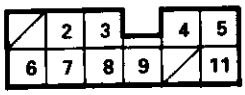

1	——	⑦	WHT/BLK
2	WHT/BLU	⑧	WHT/BLU
3	WHT/GRN	9	WHT/GRN
4	BLK	10	——
5	WHT/RED	11	BLU/WHT
⑥	WHT/RED		

C352

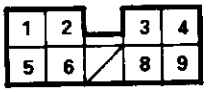

1	GRN	6	BLK/YEL
2	BLU/WHT	7	——
3	WHT/BLK	⑧	WHT/GRN
④	WHT/BLK	9	WHT
⑤	BLK/RED		

C354*1

①	BLK/WHT
②	BLK
③	GRN/RED

NOTE:
- Different wires with the same color have been given a number suffix to distinguish them (for example, YEL/BLK[1] and YEL/BLK[2] are not the same).
- ○: Related to Fuel and Emissions System.
- — Connector with male terminals (double outline): View from terminal side
  — Connector with female terminals (single outline): View from wire side

(cont'd)

System Connectors [Engine Compartment] (cont'd)

'96 – 98 D16Y7 engine:

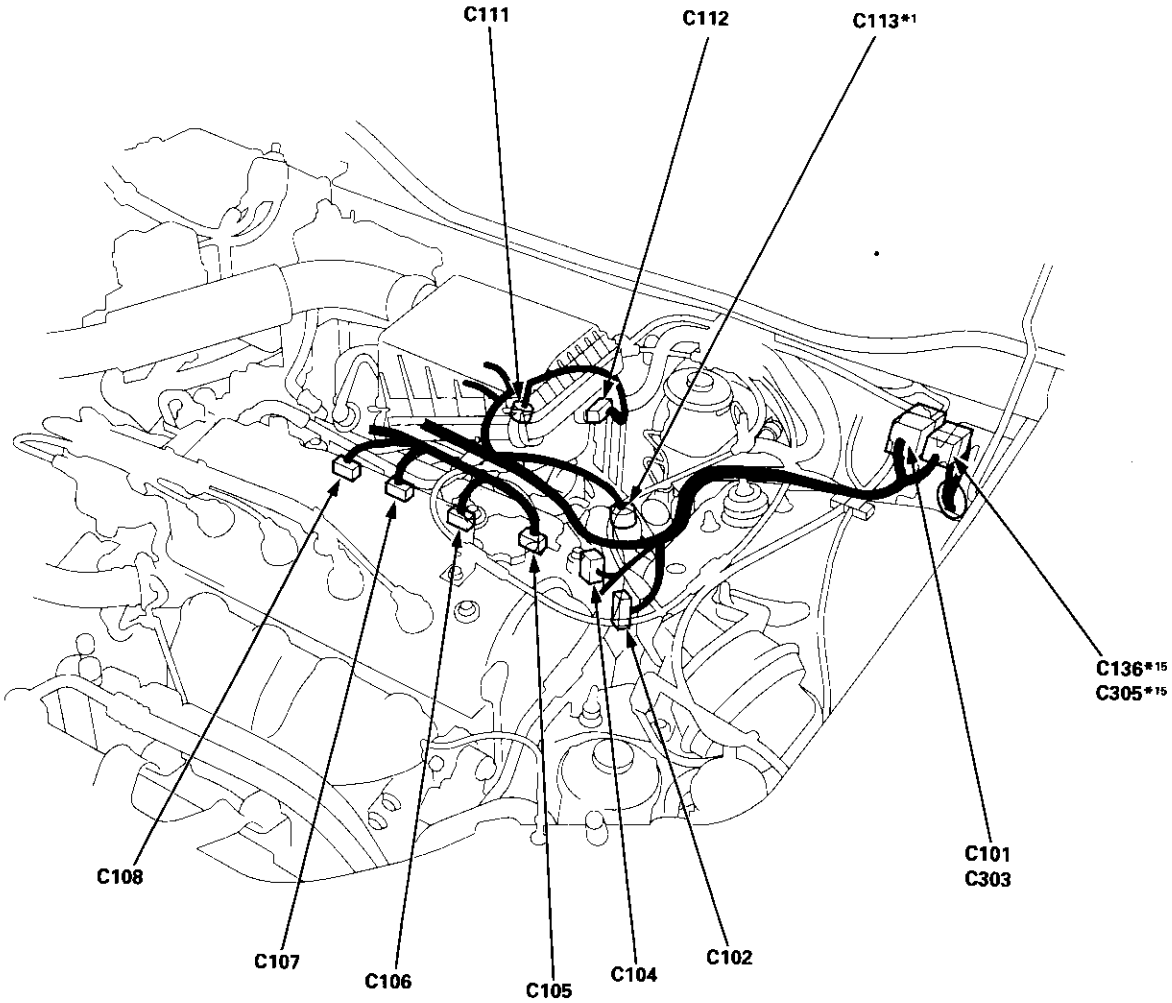

C101

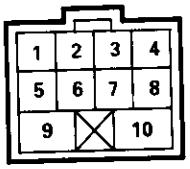

①	BLK/YEL	6	WHT/BLU
②	BLK[1]	7	YEL/GRN
3	YEL/RED	8	BLU
④	BRN/BLK[1]	9	BLK/WHT
⑤	YEL/BLK[1]	10	BLK/YEL

C102

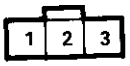

①	WHT/RED[4]
②	BRN/BLK[1]
③	BLU/RED[1]

C104 *1

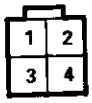

1	BLK/YEL
②	WHT/GRN
3	WHT/BLU
④	WHT/RED[6]

C104 (Canada)

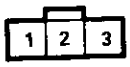

①	WHT/RED[6]
2	BLK/YEL
3	WHT/BLU

C105

①	YEL/BLK[1]
②	BRN[1]

C106

①	YEL/BLK[1]
②	RED[1]

C107

①	YEL/BLK[1]
②	BLU[1]

C108

①	YEL/BLK[1]
②	YEL[1]

C111

①	YEL/RED
②	GRN/WHT[3]
③	RED/GRN

C112

①	GRN/BLK[3]
②	RED/YEL[2]

C113*1

①	GRN[4]
②	BLK[1]

C136*15

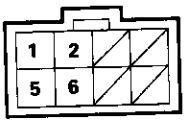

①	GRN/BLK[2]	⑤	WHT[2]
②	WHT/RED[2]	⑥	BLU[3]
3	——	7	——
4	——	8	——

NOTE:
- Different wires with the same color have been given a number suffix to distinguish them (for example, YEL/BLK[1] and YEL/BLK[2] are not the same).
- ○: Related to Fuel and Emissions System.
- — Connector with male terminals (double outline): View from terminal side
  — Connector with female terminals (single outline): View from wire side

(cont'd)

System Connectors [Engine Compartment] (cont'd)

'96 – 98 D16Y7 engine:

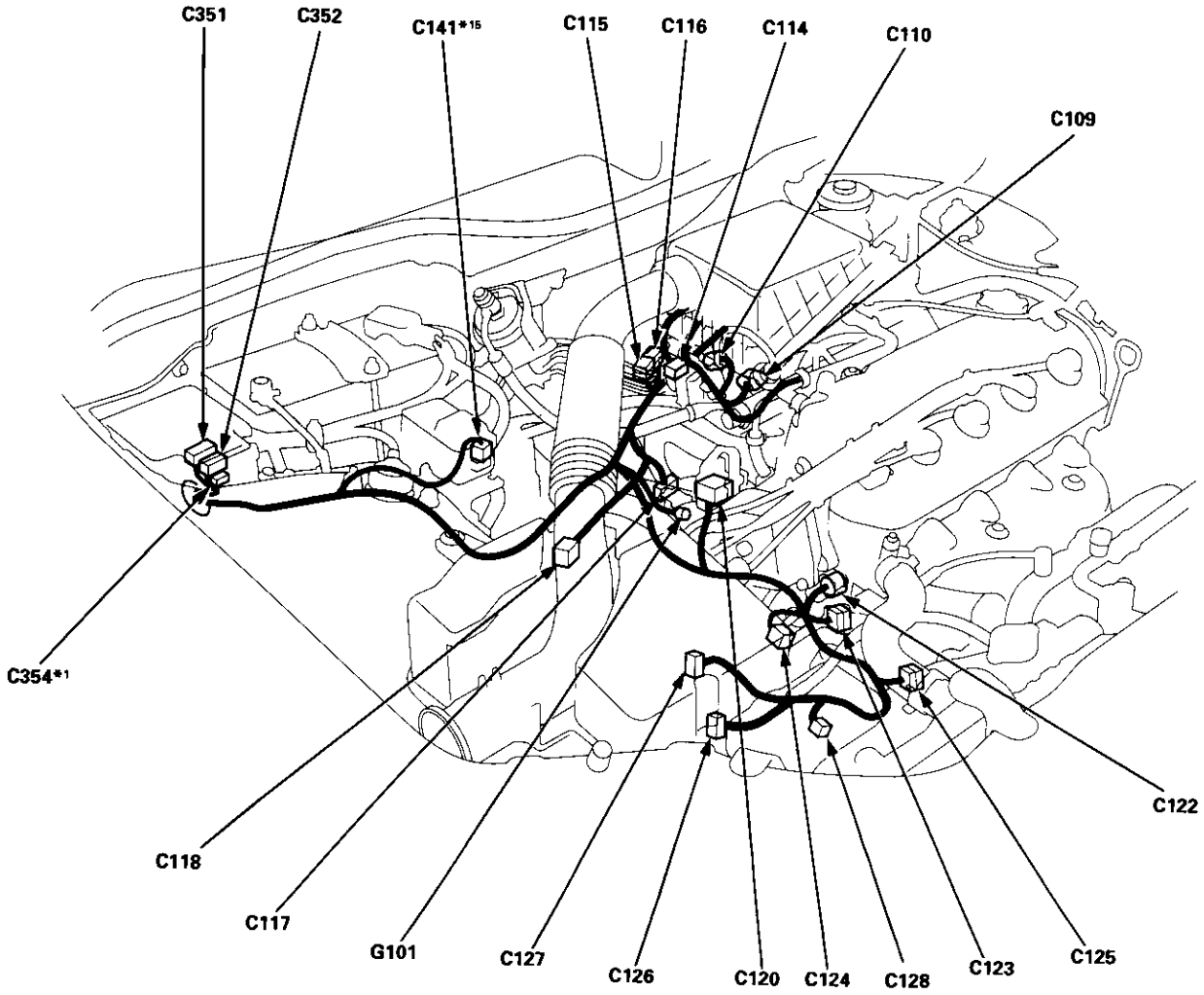

C109

①	ORN
②	YEL/BLK[1]
③	BLK/BLU[2]

C110

①	GRN/BLK[3]
②	RED/BLK
③	YEL/BLU

C114

①	BLK/YEL
②	RED/YEL[1]

C115

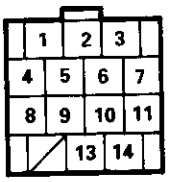

①	BLK/YEL	⑧	GRN/BLK[3]
2	BLK/YEL	⑨	GRN/BLK[3]
③	BLK/YEL	⑩	GRN/BLK[3]
④	BLK/YEL	⑪	GRN/BLK[3]
⑤	BLK/YEL	12	——
⑥	BLK/YEL	⑬	GRN/BLK[3]
⑦	BLK/YEL	⑭	GRN/BLK[3]

C116

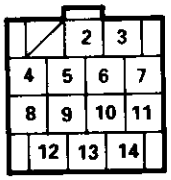

1	——	8	BLK
②	YEL/BLK[1]	⑨	BLK[1]
③	YEL/BLK[1]	⑩	BLK[1]
④	YEL/BLK[1]	⑪	BLK[1]
⑤	YEL/BLK[1]	⑫	BLK[1]
⑥	YEL/BLK[1]	⑬	BLK[1]
⑦	YEL/BLK[1]	⑭	BLK[1]

C117

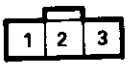

①	BLK[1]
②	BLK/YEL
③	BLU/WHT

C118 (A/T)

①	GRN[2]
②	BLU[4]

C120

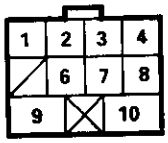

①	YEL/GRN	⑥	WHT[4]
②	BLU[5]	⑦	RED[5]
③	GRN[3]	⑧	BLK[3]
④	YEL[4]	9	BLU
5	——	10	BLK/YEL

C122

①	RED/WHT
②	GRN/BLK[3]

C123

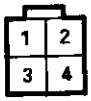

①	WHT[6]
②	GRN/BLK[3]
③	BLK/YEL
④	BLK/WHT[2]

C124 (A/T)

①	GRN/BLK[1]
②	YEL[2]

C125

①	WHT/RED[5]
②	RED/YEL[3]
③	BLK/YEL
④	BLK/WHT[1]

C126 (A/T)

①	WHT[2]
②	RED[4]

C127 (A/T)

①	WHT[1]
②	RED[3]

C128 (A/T)

①	BLU/YEL
②	GRN/WHT[1]

C141*[15]

①	LT GRN/WHT
②	BLK/YEL

C351

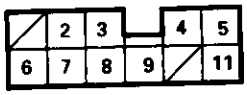

1	——	⑦	WHT/BLK
2	WHT/BLU	⑧	WHT/BLU
3	WHT/GRN	9	WHT/GRN
4	BLK	10	——
5	WHT/RED	11	BLU/WHT
⑥	WHT/RED		

C352

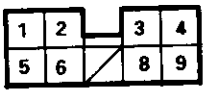

1	GRN	6	BLK/YEL
2	BLU/WHT	7	——
3	WHT/BLK	⑧	WHT/GRN
④	WHT/BLK	9	WHT
⑤	BLK/RED		

C354*[1]

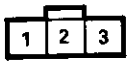

①	BLK/WHT
②	BLK
③	GRN/RED

NOTE:
- Different wires with the same color have been given a number suffix to distinguish them (for example, YEL/BLK[1] and YEL/BLK[2] are not the same).
- ○: Related to Fuel and Emissions System.
- — Connector with male terminals (double outline): View from terminal side
  — Connector with female terminals (single outline): View from wire side

System Connectors [Dash and Floor]

'96 – 98 models, '99 – 00 D16Y5 engine with M/T:

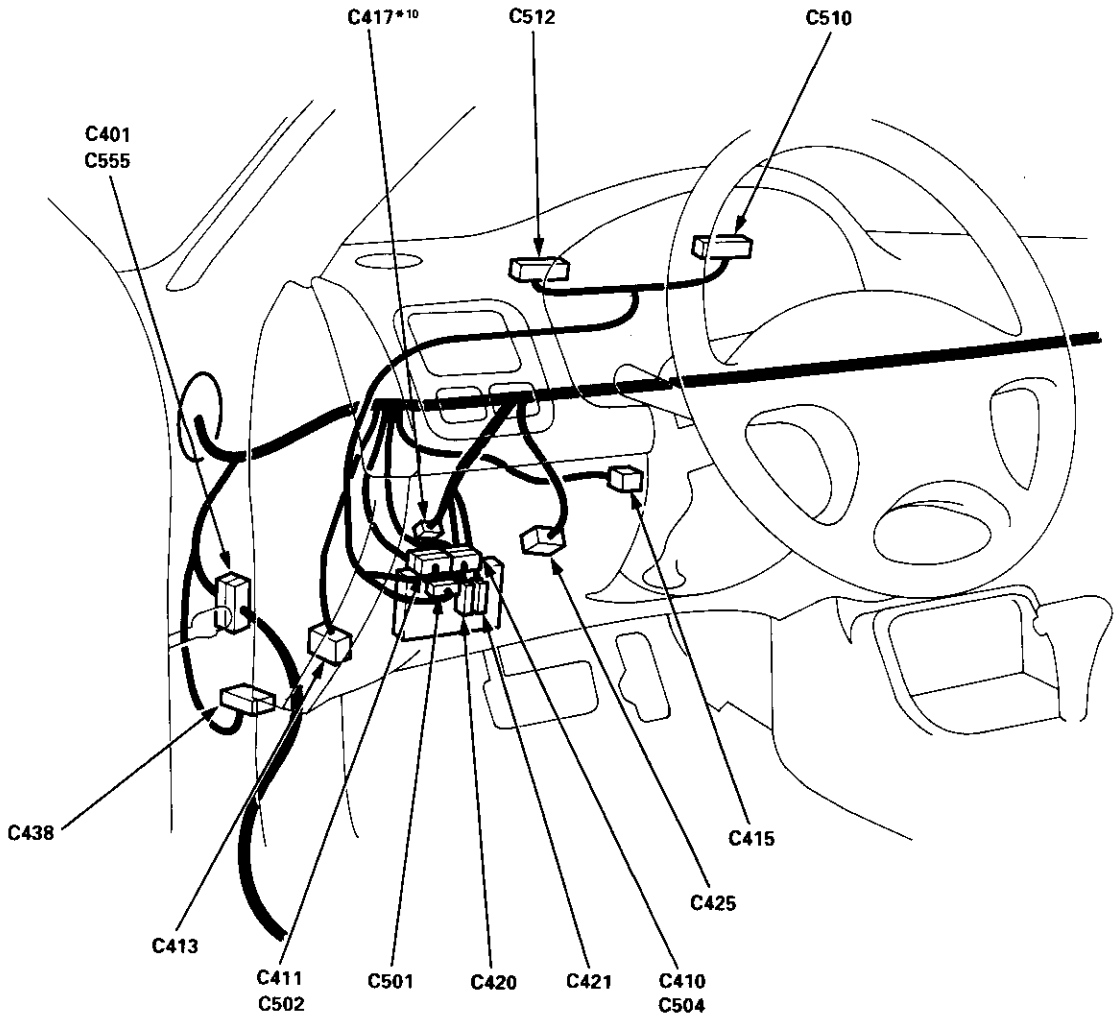

C410 (A/T)

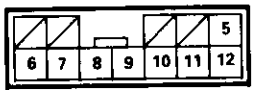

1	—	⑦	BLK/BLU
2	—	8	BRN
3	—	⑨	BLU[3*2]
4	—	⑩	GRN[*2]
⑤	WHT[3*2]	⑪	GRN/BLK[2*2]
⑥	RED	⑫	LT GRN[1/2]

C411

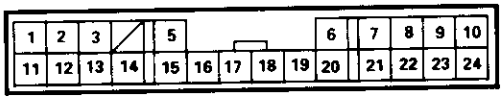

1	RED/GRN[*10]	13	LT GRN/RED
2	WHT*	14	LT GRN/BLK
3	YEL*	15	WHT/BLK
4	—	16	RED/YEL*
5	BLU (SRS)	17	RED/WHT*
6	GRY*	18	WHT/BLU
7	BLU/RED*	19	BLU
8	RED/BLU**	20	RED/BLU
9	LT GRN**	㉑	GRN/ORN
10	BLU/YEL (ABS)	22	BLU/WHT
11	YEL/GRN	23	YEL/RED
12	RED	24	BLU/RED (ABS)

*: Security Alarm System
**: Cruise Control

C413

1	—	9	—
2	—	10	—
3	—	11	—
4	—	⑫	BLK
5	—	⑬	BLK
⑥	LT BLU	14	—
7	—	⑮	BLU/YEL
⑧	WHT/RED	16	—

C415

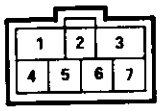

1	BLK/YEL*		
1	BLK/WHT		
2	BLU/RED		
③	WHT/BLK		
4	BLK		
5	WHT		
6	WHT/BLU		
7	WHT/GRN		

*: Security Alarm System

C417*10

①	RED[7]		
②	BLK		

C420

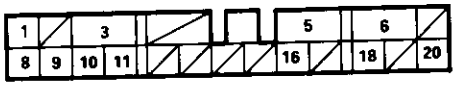

1	RED/BLU (Canada)	⑪	BLK/WHT
2	—	12	—
3	BLK	13	—
4	—	14	—
5	WHT/GRN	15	—
6	WHT/BLU	16	BLK/WHT (Canada)
7	—	17	—
⑧	YEL/GRN	18	WHT/GRN
9	BLK/YEL	19	—
⑩	BLK/WHT	20	WHT/RED

C421

1	RED/YEL	10	GRN/YEL
2	BLK/BLU (ABS)	11	—
3	RED/GRN	⑫	BLK/WHT
4	GRN/BLK	⑬	BLK/WHT
5	RED/BLU	14	GRN/RED
6	WHT/BLU	15	—
7	—	16	GRN/RED
8	—	17	RED/BLK
9	RED/WHT	18	RED/BLK

C425 (without cruise control)

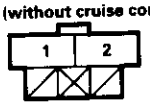

①	GRN/WHT[2]
②	WHT/GRN
3	—
4	—

C425 (with cruise control)

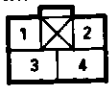

1	LT GRN
2	GRY
③	GRN/WHT[2]
④	WHT/GRN

C438*6

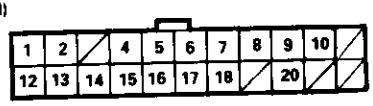

1	GRN/BLK	12	GRN/WHT
②	RED/GRN	13	LT BLU
3	—	14	BRN
④	RED/BLK	15	WHT/RED
5	BLU/WHT	16	ORN/BLU
⑥	PNK[3]	17	GRN
⑦	GRY	18	GRN/RED
8	RED/BLU	19	—
9	WHT	⑳	WHT/RED[1]
10	RED/BLU	21	—
11	—	22	—

C501

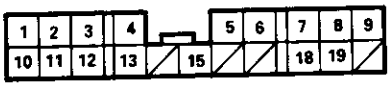

1	RED/GRN	11	YEL/BLK
2	BLK/BLU	12	BLK/YEL
3	WHT/BLU	13	YEL/GRN
4	BLK	14	—
5	GRN/WHT	15	RED/BLK
6	GRN/RED	16	—
7	GRN/ORN	17	—
8	BLU/YEL	18	BLK/WHT
9	GRN/YEL	19	YEL/RED
⑩	YEL	20	—

C510 (A/T)

1	YEL	8	BLK
2	RED/BLK	⑨	GRN/BLK[2]
3	RED	⑩	GRN
④	BLU[3]	⑪	RED
5	—	⑫	WHT[3]
6	—	⑬	BLK/BLU
7	—	⑭	LT GRN[1] (2)

C512

*2

1	YEL	8	BLK
2	RED/BLK	9	YEL
3	RED	10	GRN
4	BLU[1]	⑪	RED
5	—	12	WHT[3]
6	BRN	⑬	BLK/BLU
7	—	⑭	LT GRN

1	WHT/BLK	8	BLU
2	GRN/BLK	9	—
3	YEL/RED	10	—
④	YEL	11	—
⑤	GRN/ORN	12	—
6	RED/GRN	13	—
7	GRN/RED		

C555

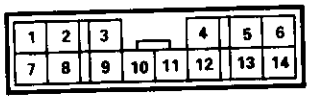

①	BLK/WHT[*8,*15]	⑧	LT GRN[3*8,*15]
2	LT GRN/BLK*	⑨	BLU[2*8,*15]
3	LT GRN*	10	GRN
④	YEL/BLU[*8,*15]	11	LT GRN/RED
⑤	GRN/BLK[3*8,*15]	12	GRN/BLK
6	RED/BLU	13	GRN/WHT
7	WHT/GRN	⑭	YEL/GRN

*: coupe

NOTE:
- Different wires with the same color have been given a number suffix to distinguish them (for example, YEL/BLK[1] and YEL/BLK[2] are not the same).
- ○: Related to Fuel and Emissions System.
- — Connector with male terminals (double outline): View from terminal side
  — Connector with female terminals (single outline): View from wire side

(cont'd)

System Connectors [Dash and Floor] (cont'd)

'96 – 98 models, '99 – 00 D16Y5 engine with M/T:

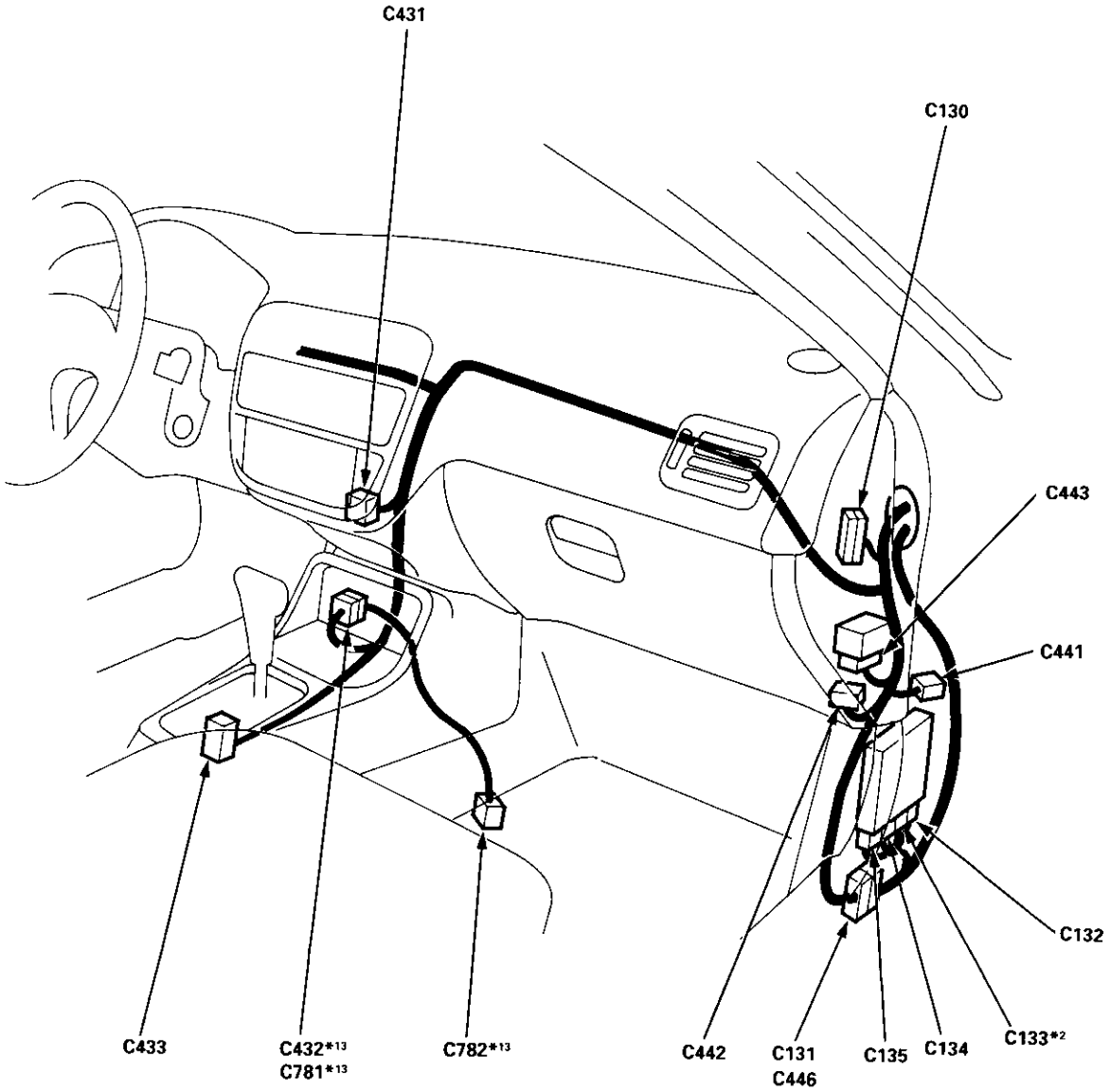

C130

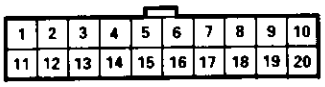

①	GRN[1]	10	BLU/WHT
①	YEL/BLU*	⑪	BRN/BLK[1]
②	GRN[1]	⑫	BRN/BLK[1]
②	YEL/BLU*	⑬	BRN/BLK[1]
3	GRN	⑭	BRN/BLK[1]
③	YEL/BLU*	⑮	BRN/BLK[1]
④	YEL/BLK[1]	⑯	BRN/BLK[1]
⑤	YEL/BLK[1]	⑰	BRN/BLK[1]
⑥	YEL/BLK[1]	⑱	BRN/BLK[1]
⑦	YEL/BLK[2]	⑲	BRN/BLK[1]
⑧	BLU/WHT	⑳	BRN/BLK[1]
⑨	BLU/WHT		

*: '98 D16Y5 engine

C131

(D16Y5, D16Y8 engines)

①	LT GRN[3] *8	⑩	WHT/BLU	18	BLU/WHT
②	GRN/BLK[1]*13	⑪	BLU[2]*8	⑲	BLK/RED
②	RED/BLK*6	⑫	BLK/WHT[1]*13	⑳	GRN/YEL[2]
③	WHT/RED[5]*13	⑫	WHT/RED[1]*8	㉑	LT BLU
④	LT GRN[1] (21)*	⑬	RED/GRN*6	㉒	BLU/ORN
④	RED[7] *10	⑬	GRN/BLK[3]*8		
⑤	WHT/RED[7]	⑭	YEL[3]*14		
⑤	YEL/BLU*8	⑭	PNK[3]*8		
6	GRN	⑮	PNK[2]*14		
⑦	BLU/RED[2]	⑮	GRY*8		
⑧	GRN/ORN	⑯	GRN/RED*1		
⑨	BRN[2]	⑰	GRN/WHT[2]		

*: A/T

(D16Y7 engine)

1	LT GRN[3]*15	⑫	BLU[3]*
②	GRN/BLK[2]*	⑬	GRN/BLK[3]*15
③	WHT[3]*	⑭	YEL[3]*
④	LT GRN[1]*	14	GRN/BLK**
⑤	WHT/RED[3]	⑮	PNK[2]*
⑤	YEL/BLU*15	15	YEL
6	GRN	⑯	GRN/RED*1
⑦	BLU/RED[2]	⑰	GRN/WHT[2]
⑧	GRN/ORN	18	BLU/WHT
⑨	BRN[2]	⑱	BLK/RED
⑩	WHT/BLU	⑲	GRN/YEL[2]
⑪	BLU[2]*15	㉑	LT BLU
12	——	㉒	BLU/ORN

*: A/T **: M/T

C132 (ECM/PCM-A)

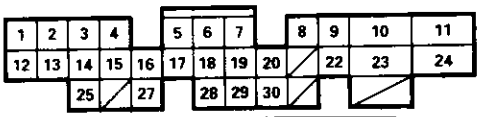

①	YEL[1]	⑬	ORN*4	㉕	WHT/RED[1]*6
②	BLU[1]	⑭	BLK/BLU[2]*4	26	——
③	RED[1]	⑮	RED/YEL[1]	㉗	GRN[1]
④	BRN[1]	⑯	GRN/YEL[2]	㉘	BLU[2]*8,*15
⑤	BLK/WHT[1]	⑰	BLK/RED	㉙	LT GRN/WHT[3]*8,*5
⑥	BLK/WHT[7]*10	⑱	GRN/ORN	㉚	WHT/RED[2]*9
⑦	RED[2]*6	⑲	WHT/GRN*1	31	——
⑦	PNK[1]*10	⑳	YEL/GRN	32	——
⑧	GRN/YEL[1]*12	㉑	——		
⑨	BRN/BLK[1]	㉒	BRN/BLK[2]		
⑩	BLK[1]	㉓	BLK[2]		
⑪	YEL/BLK[1]	㉔	YEL/BLK[2]		
⑫	BLK/BLU[1]*5				

C133*2 (PCM-B)

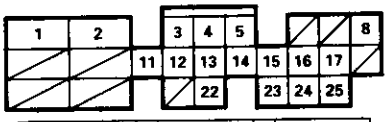

①	WHT[1]	⑪	GRN/WHT[1]	21	——
②	RED[3]	⑫	WHT/RED[3]	㉒	GRN[2]
③	BLU/YEL	⑬	GRN/BLK[2]	㉓	BLU[4]
④	GRN/BLK[1]	⑭	WHT[2]	㉔	YEL[3]
⑤	YEL[2]	⑮	RED[4]	㉕	LT GRN[1]
6	——	⑯	WHT[3]		
7	——	⑰	BLU[2]		
⑧	PNK[2]	18	——		
9	——	19	——		
10	——	20	——		

C134 (ECM/PCM-C)

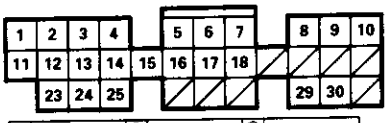

①	BLU/RED[1]	⑬	RED[5]	㉕	WHT[5]*10
②	BLU[5]	⑭	BLK[3]	26	——
③	GRN[3]	⑮	BLU/BLK*12	27	——
④	YEL[4]	⑯	GRN[4]*1	28	——
⑤	BLU/RED[2]	⑰	WHT/RED[4]	㉙	LT GRN[2]*3
⑥	BLU/ORN	⑱	BLU/WHT	㉚	RED[7]*10
⑦	BRN[2]	19	——	㉛	PNK[3]*4
⑧	LT BLU	20	——	31	——
⑨	GRY*8	21	——		
⑩	WHT/BLU	22	——		
⑪	WHT/RED[4]	㉓	BLK[4]*10		
⑫	WHT[4]	㉔	RED[4]*10		

C135 (ECM/PCM-D)

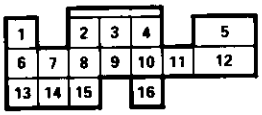

①	RED/BLK	⑨	WHT/BLK*9
②	RED/WHT	⑩	YEL/BLU
③	RED/GRN	⑪	GRN/BLK[3]
④	YEL/RED	⑫	GRN/WHT[3]
⑤	GRN/WHT[2]	⑬	GRN/BLK[4]*12 RED/YEL[3]*14
⑥	RED/BLU*7	⑭	WHT/RED[6]
⑦	WHT[5]*10	⑮	LT GRN[3]*8,*15
⑧	RED/YEL[2]	⑯	GRN/RED*1

C431

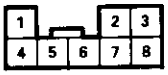

1	WHT/BLU
2	YEL
3	YEL/BLK
4	BLK
5	WHT
6	BLK/BLU
7	WHT/RED[2]*3
8	WHT/BLK

C432*13

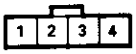

①	BLK/WHT
②	GRN/WHT
③	WHT/RED[5]
④	BLK/WHT[1]

C433

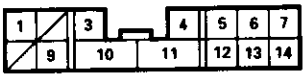

1	BLK	8	——
2	——	9	PNK*
3	YEL/RED	10	BLK/WHT
4	GRN/BLK	11	BLK/RED
⑤	BLU[3]*2	⑫	BLK/BLU
⑥	GRN*2	⑬	WHT[3]*2
⑦	YEL[3]*2	⑭	RED

*: Cruise control

C441

①	BRN[2]
②	BLK

C442

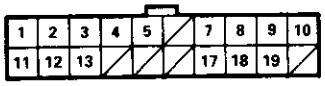

1	BRN/BLK	11	GRN/RED
2	BRN/BLK	12	GRN/RED
3	BRN/BLK	13	GRN/RED
4	BLU/WHT	14	——
5	BLU/WHT	15	——
6	BLU/WHT	16	——
7	GRN/WHT	17	BLU
⑧	GRN/WHT[2]	18	BLU
9	GRN/WHT	19	BLU
⑩	GRN/WHT[2]	20	BLU

C443

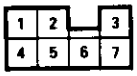

1	GRN/YEL[2]	5	YEL/GRN
2	BLU/WHT	6	YEL/BLK[1]
3	BLK[1]	7	WHT/BLK
4	YEL/GRN		

C782*13

①	WHT/RED[5]
②	GRN/WHT
③	BLK/WHT[1]
④	BLK/WHT

NOTE:
- Different wires with the same color have been given a number suffix to distinguish them (for example, YEL/BLK[1] and YEL/BLK[2] are not the same).
- ○: Related to Fuel and Emissions System.
- — Connector with male terminals (double outline): View from terminal side
  — Connector with female terminals (single outline): View from wire side

System Connectors [Engine Compartment]

'99 – 00 D16Y5 (CVT), D16Y8 engine:

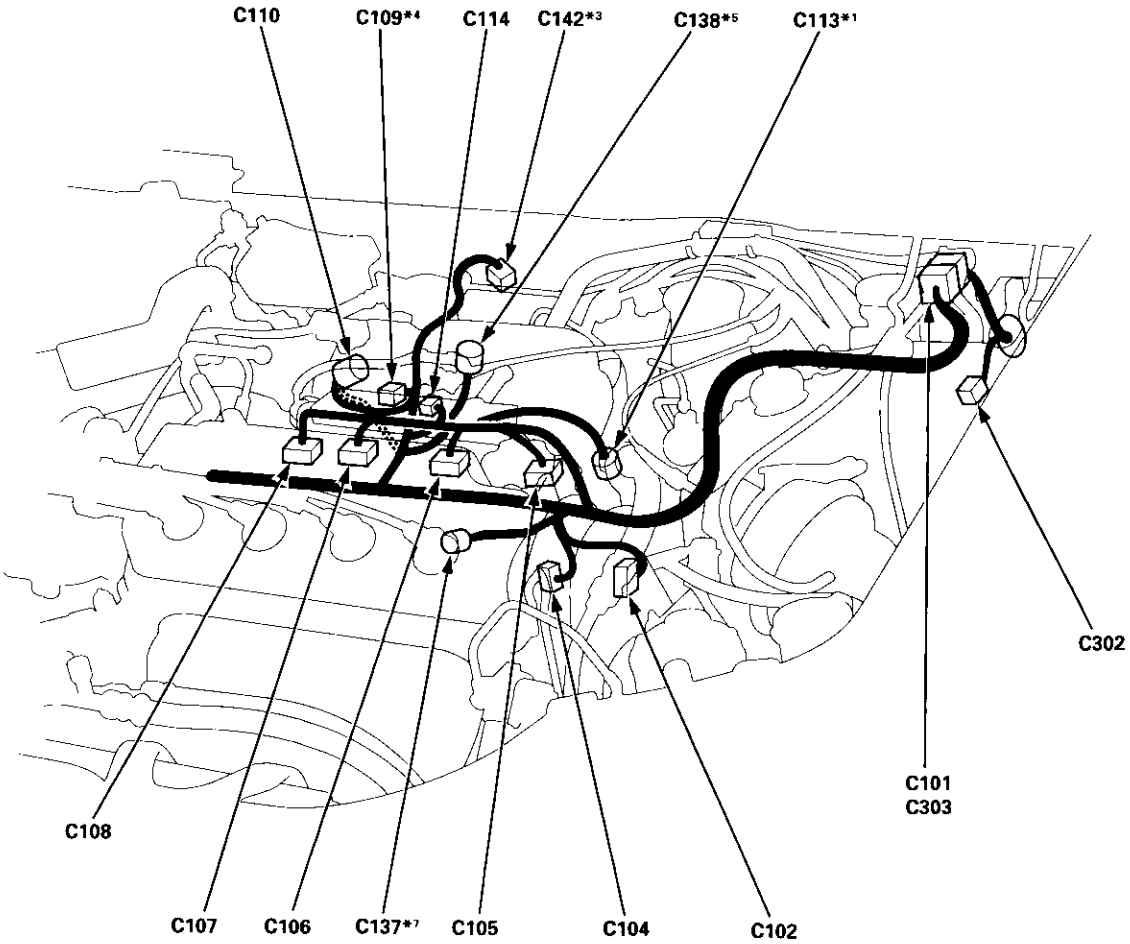

*1: USA model
*2: A/T (D16Y7, D16Y8 engine)
*3: CVT (D16Y5 engine)
*4: A/T and D16Y7 engine
*5: Except A/T and D16Y7 engine
*6: CVT (D16Y5 engine),
D16Y8 engine and
B16A2 engine
*7: D16Y8, B16A2 engine

C101

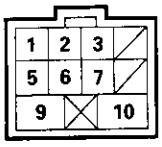

①	BLK/YEL	6	WHT/BLU
②	BLK[1]	7	YEL/GRN
3	YEL/RED	8	——
4	——	9	BLK/WHT
⑤	YEL/BLK[1]	10	BLK/YEL

C102

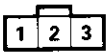

①	WHT/RED[3]
②	BRN/BLK[1]
③	BLU/RED

C104 *1

1	BLK/YEL
②	WHT/GRN
3	WHT/BLU
④	WHT/RED[3]

C104 (Canada)

①	WHT/RED[3]
2	BLK/YEL
3	WHT/BLU

C105

①	YEL/BLK[1]
②	BRN[2]

C106

①	YEL/BLK[1]
②	RED[1]

C107

①	YEL/BLK[1]
②	BLU[4]

C108

①	YEL/BLK[1]
②	YEL[2]

C109*4

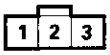

①	ORN
②	YEL/BLK[1]
③	BLK/BLU[1]

C110

①	GRN/BLK[2]
②	RED/BLK
③	YEL/BLU

C113*1

①	GRN[2]
②	BLK[1]

C114

①	BLK/YEL
②	RED/YEL[1]

C137*7

①	RED/BLU
2	——

C138*5

①	BLK/BLU[2]
②	YEL/BLK[1]

C142*3

①	BLK[1]
②	RED[2]

C302

1	——
②	BLU[2]

NOTE:
- Different wires with the same color have been given a number suffix to distinguish them (for example, YEL/BLK[1] and YEL/BLK[2] are not the same).
- ○: Related to Fuel and Emissions System.
- — Connector with male terminals (double outline): View from terminal side
  — Connector with female terminals (single outline): View from wire side

(cont'd)

System Connectors [Engine Compartment] (cont'd)

'99 – 00 D16Y5 (CVT), D16Y8 engine:

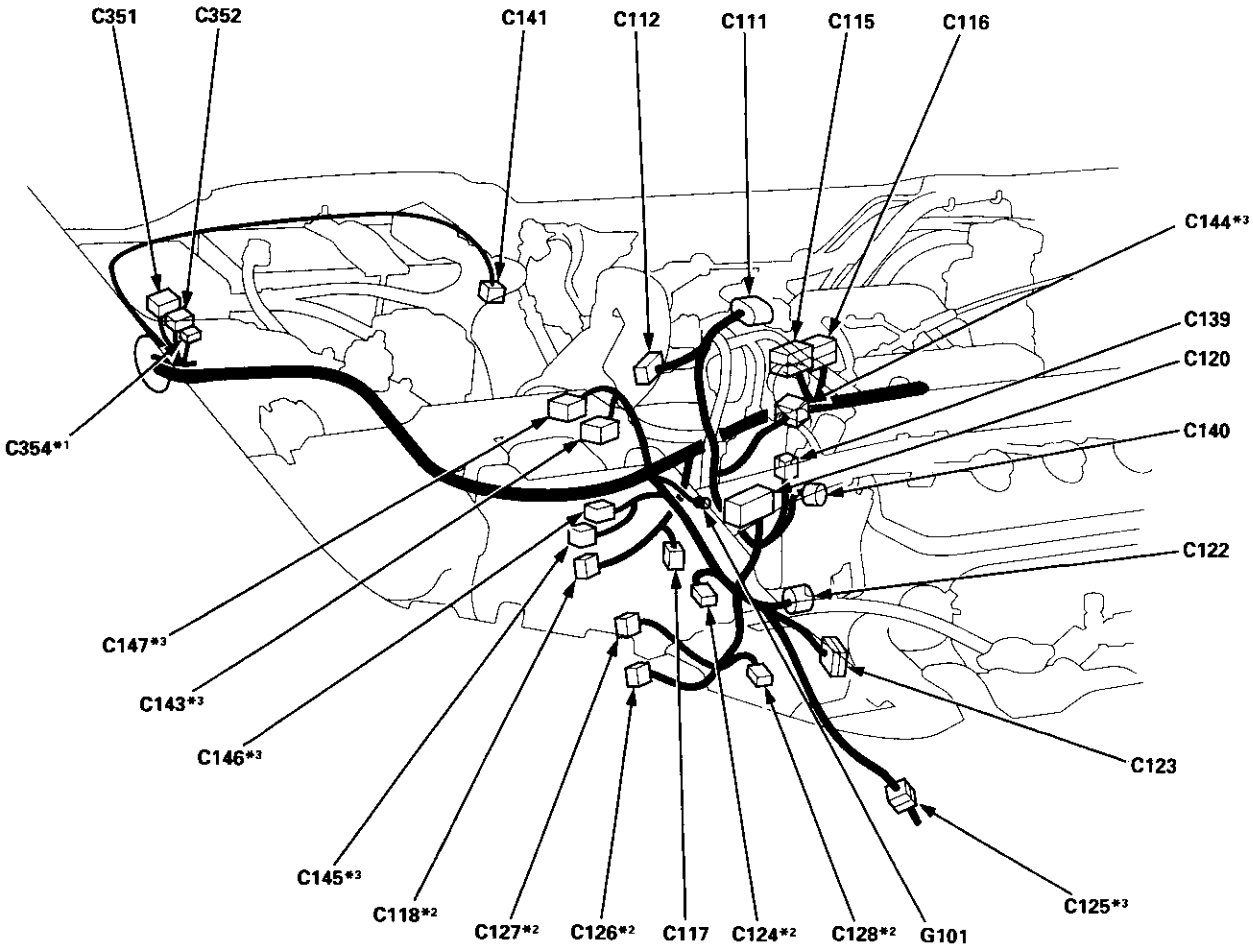

C111

①	YEL/RED
②	GRN/WHT[3]
③	RED/GRN

C112

①	GRN/BLK[2]
②	RED/YEL[2]

C115

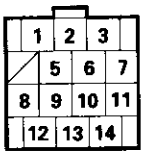

①	BLK/YEL	⑧	GRN/BLK[2]
2	BLK/YEL	⑨	GRN/BLK[2]
③	BLK/YEL	⑩	GRN/BLK[2]
4	——	⑪	GRN/BLK[2]
⑤	BLK/YEL	⑫	GRN/BLK[2]
⑥	BLK/YEL	⑬	GRN/BLK[2]
⑦	BLK/YEL	⑭	GRN/BLK[2]

C116

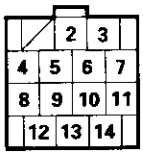

1	——	8	BLK
②	YEL/BLK[1]	⑨	BLK[1]
③	YEL/BLK[1]	⑩	BLK[1]
④	YEL/BLK[1]	⑪	BLK[1]
⑤	YEL/BLK[1]	⑫	BLK[1]
⑥	YEL/BLK[1]	⑬	BLK[1]
⑦	YEL/BLK[1]	⑭	BLK[1]

C117

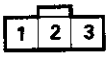

①	BLK[1]
②	BLK/YEL
③	BLU/WHT[1]

C118*2

①	GRN[4]
②	BLU[6]

C120

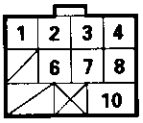

①	YEL/GRN	⑥	WHT[2]
②	BLU[5]	⑦	RED[4]
③	GRN[3]	⑧	BLK[3]
④	YEL[4]	9	——
5	——	10	BLK/YEL

C120*3

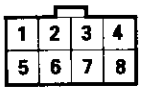

①	YEL/GRN	5	BLK/YEL
②	BLU[5]	⑥	WHT[2]
③	GRN[3]	⑦	RED[4]
④	YEL[4]	⑧	BLK[3]

C122

①	RED/WHT
②	GRN/BLK[2]

C123

①	WHT[3]
②	GRN/BLK[2]
③	BLK/YEL
④	BLK/WHT[2]

124*2

①	GRN/BLK[3]
②	YEL[5]

C125

①	WHT/RED[1]
②	GRN/BLK[2]
③	BLK/YEL
④	BLK/WHT[1]

C126*2

①	WHT[5]
②	RED[5]

C127*2

①	RED[3]
②	WHT[1]

C128*2

①	BLU/YEL[2]
②	GRN/WHT[4]

C139

①	GRN/YEL[2]

C140

①	BLU/BLK
②	BLK[1]

C141

①	LT GRN/WHT
②	BLK/YEL

C143*3

①	BLK/WHT[3]
②	WHT/RED[4]

C144*3

①	WHT/BLK
②	GRN/BLK[3]
③	YEL/BLU

C145*3

①	GRN[4]
②	RED/BLU

C146*3

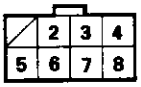

1	——	⑤	GRN/BLK[3]
②	GRN/WHT[2]	⑥	PNK/BLK
③	BLU/WHT[2]	⑦	GRN/YEL[3]
④	YEL[3]	⑧	PNK/BLU

C147*3

①	RED/WHT[5]
②	WHT[5]

C351

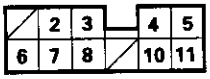

1	——	⑦	WHT/BLK
2	WHT/BLU	⑧	WHT/BLU
3	WHT/GRN	9	WHT/GRN
4	BLK	10	——
5	WHT/RED	11	BLU/WHT
⑥	WHT/RED		

C352

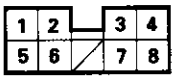

1	GRN	6	BLK/YEL
2	BLU/WHT	7	——
3	WHT/BLK	⑧	WHT/GRN
④	WHT/BLK	9	WHT
⑤	BLK/RED		

C354*1

①	BLK/WHT
②	BLK
③	GRN/RED

NOTE:
- Different wires with the same color have been given a number suffix to distinguish them (for example, YEL/BLK[1] and YEL/BLK[2] are not the same).
- ○: Related to Fuel and Emissions System.
- — Connector with male terminals (double outline): View from terminal side
  — Connector with female terminals (single outline): View from wire side

(cont'd)

System Connectors [Engine Compartment] (cont'd)

'99 – 00 D16Y7 engine:

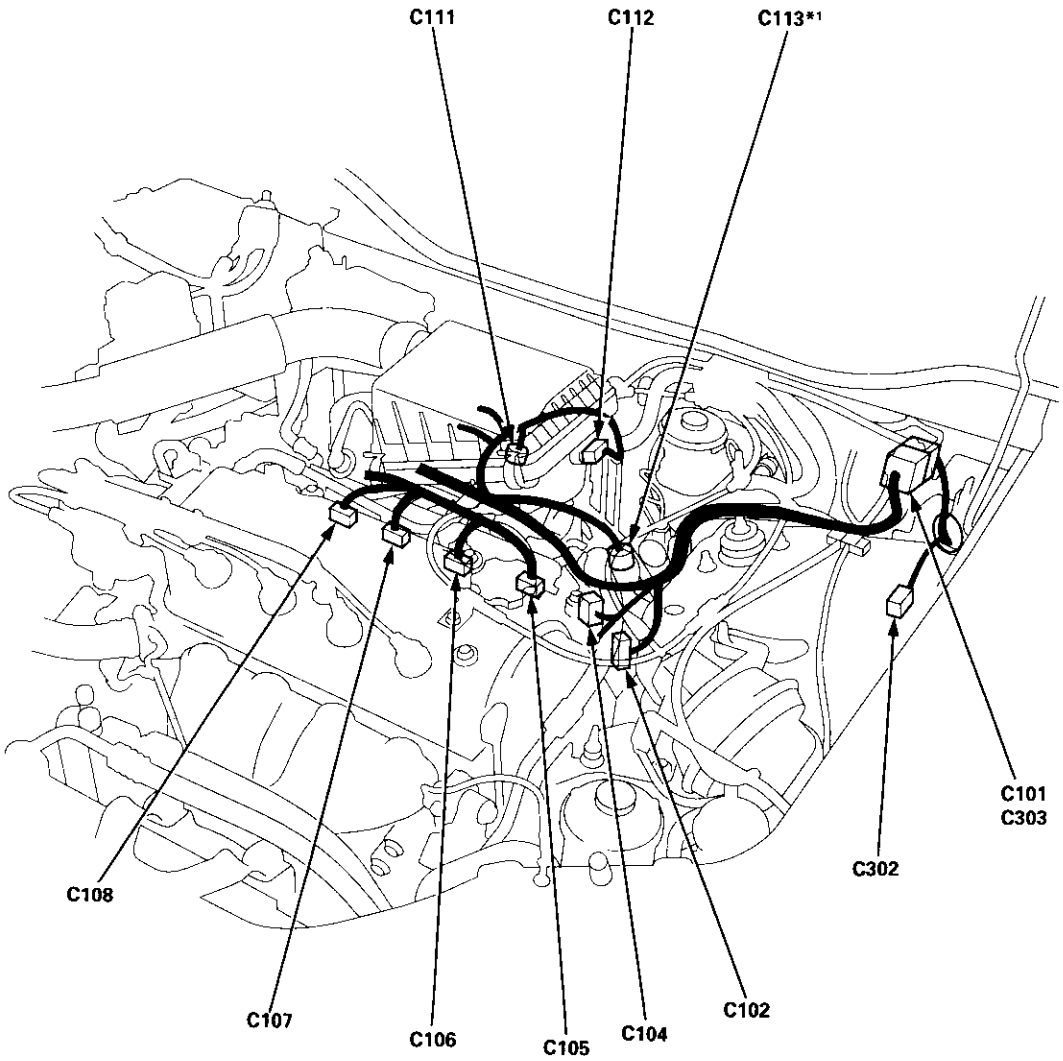

C101

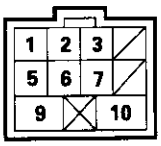

①	BLK/YEL	6	WHT/BLU
②	BLK[1]	7	YEL/GRN
3	YEL/RED	8	——
4	——	9	BLK/WHT
⑤	YEL/BLK[1]	10	BLK/YEL

C102

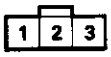

①	WHT/RED[3]
②	BRN/BLK[1]
③	BLU/RED

C104*[1]

1	BLK/YEL
②	WHT/GRN
3	WHT/BLU
④	WHT/RED[3]

C104 (Canada)

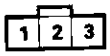

①	WHT/RED[3]
2	BLK/YEL
3	WHT/BLU

C105

①	YEL/BLK[1]
②	BRN[2]

C106

①	YEL/BLK[1]
②	RED[1]

C107

①	YEL/BLK[1]
②	BLU[4]

C108

①	YEL/BLK[1]
②	YEL[2]

C111

①	YEL/RED
②	GRN/WHT[3]
③	RED/GRN

C112

①	GRN/BLK[2]
②	RED/YEL[2]

C113*[1]

①	GRN[2]
②	BLK[2]

C302

	——
②	BLU[2]

NOTE:
- Different wires with the same color have been given a number suffix to distinguish them (for example, YEL/BLK[1] and YEL/BLK[2] are not the same).
- ○: Related to Fuel and Emissions System.
- — Connector with male terminals (double outline): View from terminal side
  — Connector with female terminals (single outline): View from wire side

(cont'd)

System Connectors [Engine Compartment] (cont'd)

'99 – 00 D16Y7 engine:

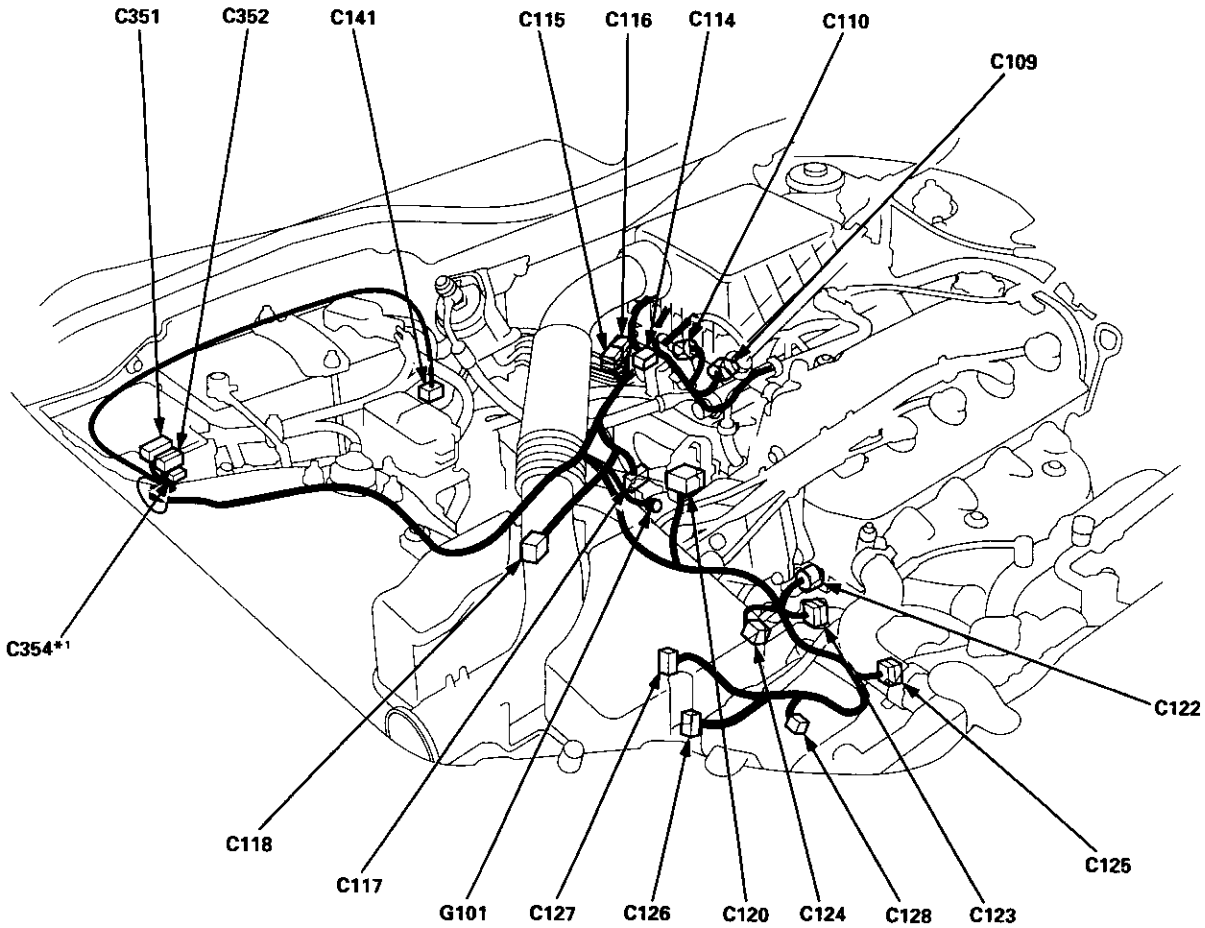

C109

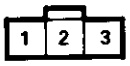

①	ORN
②	YEL/BLK[1]
③	BLK/BLU[1]

C110

①	GRN/BLK[2]
②	RED/BLK
③	YEL/BLU

C114

①	BLK/YEL
②	RED/YEL[1]

C115

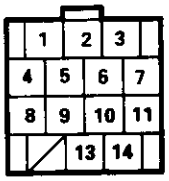

①	BLK/YEL	⑧	GRN/BLK[2]
2	BLK/YEL	⑨	GRN/BLK[2]
③	BLK/YEL	⑩	GRN/BLK[2]
④	BLK/YEL	⑪	GRN/BLK
⑤	BLK/YEL	12	——
⑥	BLK/YEL	⑬	GRN/BLK[2]
⑦	BLK/YEL	⑭	GRN/BLK[2]

C116

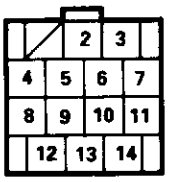

1	——	8	BLK
②	YEL/BLK[1]	⑨	BLK[1]
③	YEL/BLK[1]	⑩	BLK[1]
④	YEL/BLK[1]	⑪	BLK[1]
⑤	YEL/BLK[1]	⑫	BLK[1]
⑥	YEL/BLK[1]	⑬	BLK[1]
⑦	YEL/BLK[1]	⑭	BLK[1]

C117

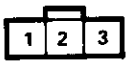

①	BLK[1]
②	BLK/YEL
③	BLU/WHT[1]

C118 (A/T)

①	GRN[4]
②	BLU[6]

C120

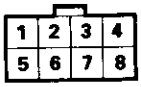

①	YEL/GRN	5	BLK/YEL
②	BLU[5]	⑥	WHT[2]
③	GRN[3]	⑦	RED[4]
④	YEL[4]	⑧	BLK[3]

C122

①	RED/WHT
②	GRN/BLK[2]

C123

①	WHT[3]
②	GRN/BLK[2]
③	BLK/YEL
④	BLK/WHT[2]

C124 (A/T)

①	GRN/BLK[3]
②	YEL[5]

C125

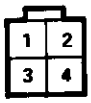

①	WHT/RED[1]
②	RED/YEL[2]
③	BLK/YEL
④	BLK/WHT[1]

C126 (A/T)

①	WHT[5]
②	RED[5]

C127 (A/T)

①	WHT[3]
②	RED[1]

C128 (A/T)

①	BLU/YEL[2]
②	GRN/WHT[4]

C141

①	LT GRN/WHT
②	BLK/YEL

C351

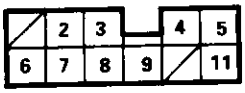

1	——	⑦	WHT/BLK
2	WHT/BLU	⑧	WHT/BLU
3	WHT/GRN	9	WHT/GRN
4	BLK	10	——
5	WHT/RED	11	BLU/WHT
⑥	WHT/RED		

C352

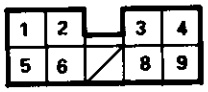

1	GRN	6	BLK/YEL
2	BLU/WHT	7	——
3	WHT/BLK	⑧	WHT/GRN
④	WHT/BLK	9	WHT
⑤	BLK/RED		

C354*[1]

①	BLK/WHT
②	BLK
③	GRN/RED

NOTE:
- Different wires with the same color have been given a number suffix to distinguish them (for example, YEL/BLK[1] and YEL/BLK[2] are not the same).
- ○: Related to Fuel and Emissions System.
- — Connector with male terminals (double outline): View from terminal side
  — Connector with female terminals (single outline): View from wire side

(cont'd)

System Connectors [Engine Compartment] (cont'd)

B16A2 engine:

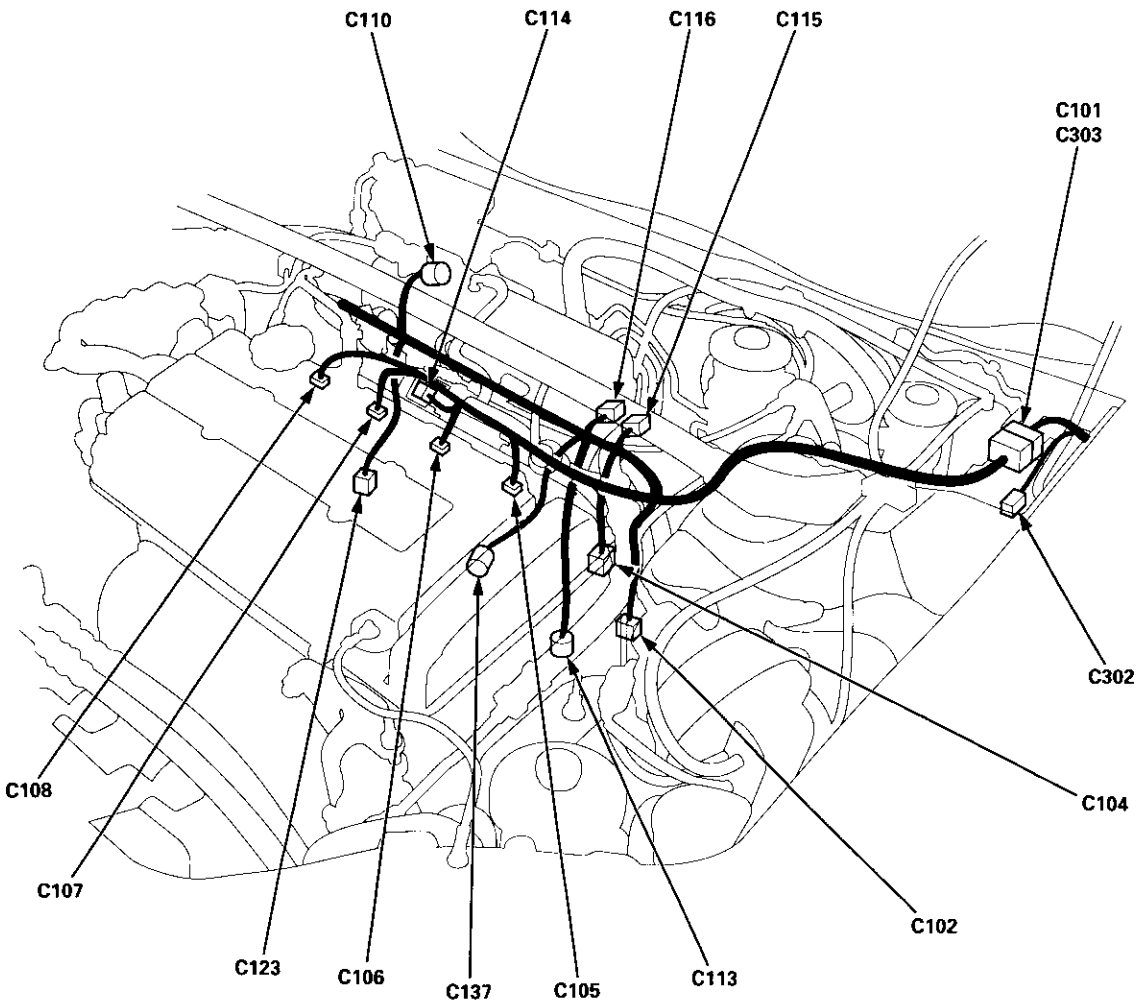

C101

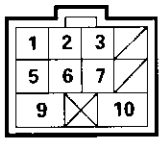

①	BLK/YEL	6	WHT/BLU
②	BLK[1]	7	YEL/GRN
3	YEL/RED	8	——
4	——	9	BLK/WHT
⑤	YEL/BLK[1]	10	BLK/YEL

C102

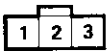

①	WHT/RED[3]
②	BRN/BLK[1]
③	BLU/RED

C104 *1

1	BLK/YEL
②	WHT/GRN
3	WHT/BLU
④	WHT/RED[3]

C104 (Canada)

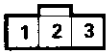

①	WHT/RED[3]
2	BLK/YEL
3	WHT/BLU

C105

①	YEL/BLK[1]
②	BRN[2]

C106

①	YEL/BLK[1]
②	RED[1]

C107

①	YEL/BLK[1]
②	BLU[4]

C108

①	YEL/BLK[1]
②	YEL[2]

C110

①	GRN/BLK[2]
②	RED/BLK
③	YEL/BLU

C113

①	GRN[2]
②	BLK[1]

C114

①	BLK/YEL
②	RED/YEL[1]

C115

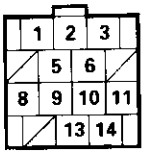

①	BLK/YEL	⑧	GRN/BLK[2]
2	BLK/YEL	⑨	GRN/BLK[2]
③	BLK/YEL	⑩	GRN/BLK[2]
4	——	⑪	GRN/BLK[2]
⑤	BLK/YEL	12	——
⑥	BLK/YEL	⑬	GRN/BLK[2]
7	——	⑭	GRN/BLK[2]

C116

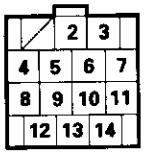

1	——	8	BLK
②	YEL/BLK[1]	⑨	BLK[1]
③	YEL/BLK[1]	⑩	BLK[1]
④	YEL/BLK[1]	⑪	BLK[1]
⑤	YEL/BLK[1]	⑫	BLK[1]
⑥	YEL/BLK[1]	⑬	BLK[1]
⑦	YEL/BLK[1]	⑭	BLK[1]

C123

①	WHT[3]
②	GRN/BLK[2]
③	BLK/YEL
④	BLK/WHT[2]

C137

①	RED/BLU
2	——

C138

①	BLK/BLU[1]
②	YEL/BLK[1]

C302

1	——
②	BLU[2]

NOTE:
- Different wires with the same color have been given a number suffix to distinguish them (for example, YEL/BLK[1] and YEL/BLK[2] are not the same).
- ○: Related to Fuel and Emissions System.
- — Connector with male terminals (double outline): View from terminal side
  — Connector with female terminals (single outline): View from wire side

(cont'd)

System Connectors [Engine Compartment] (cont'd)

B16A2 engine:

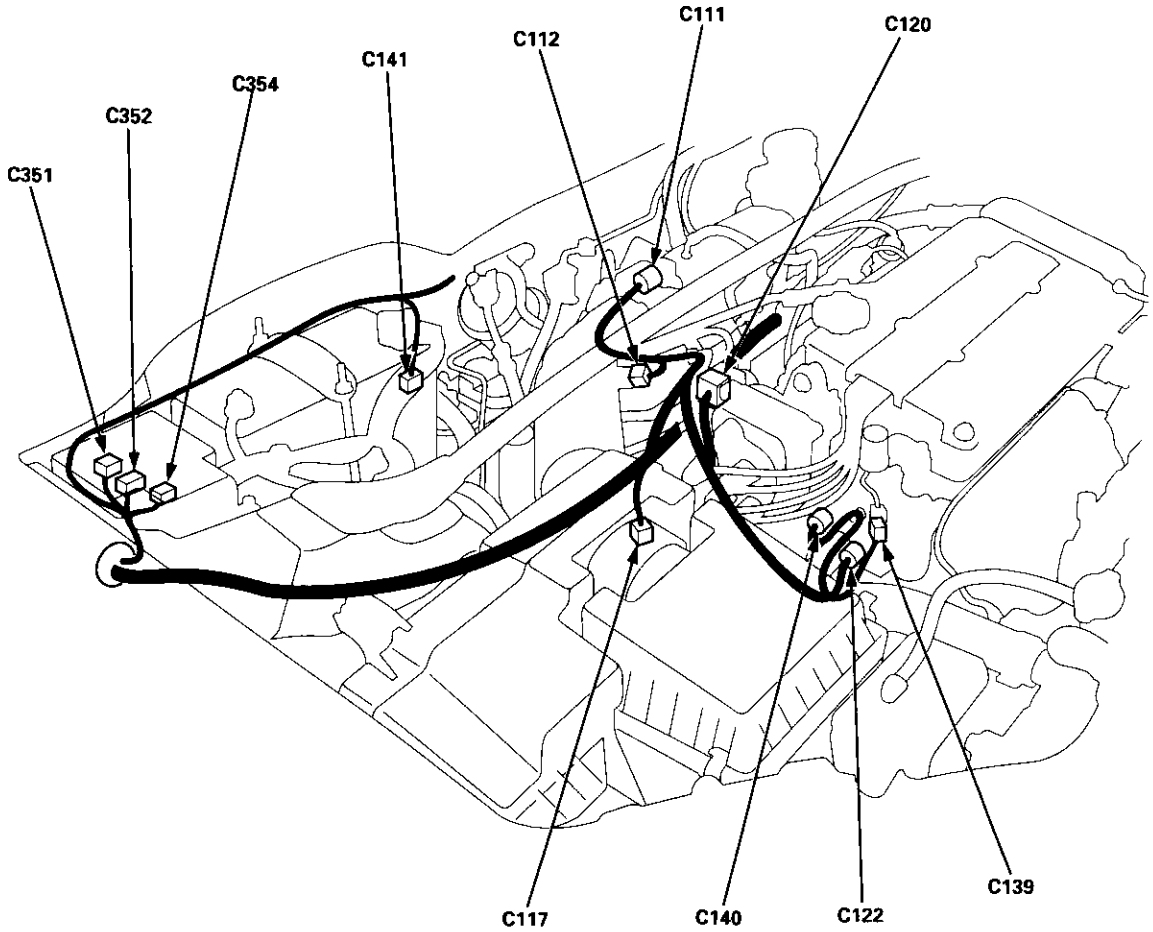

C111

①	YEL/RED
②	GRN/WHT[3]
③	RED/GRN

C112

①	GRN/BLK[2]
②	RED/YEL[2]

C117

①	BLK[1]
②	BLK/YEL
③	BLU/WHT[1]

C120

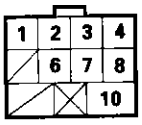

①	YEL/GRN	⑥	WHT[2]
②	BLU[5]	⑦	RED[4]
③	GRN[3]	⑧	BLK[3]
④	YEL[4]	9	——
5	——	10	BLK/YEL

C122

①	RED/WHT
②	GRN/BLK[2]

C139*[12]

①	GRN/YEL[2]

C140

①	BLU/BLK
②	BLK[1]

C141

①	LT GRN/WHT
②	BLK/YEL

C351

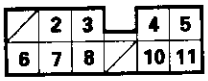

1	——	⑦	WHT/BLK
2	WHT/BLU	⑧	WHT/BLU
3	WHT/GRN	9	WHT/GRN
4	BLK	10	——
5	WHT/RED	11	BLU/WHT
⑥	WHT/RED		

C352

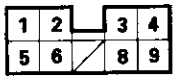

1	GRN	6	BLK/YEL
2	BLU/WHT	7	——
3	WHT/BLK	⑧	WHT/GRN
④	WHT/BLK	9	WHT
⑤	BLK/RED		

C354*[1]

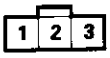

①	BLK/WHT
②	BLK
③	GRN/RED

NOTE:
- Different wires with the same color have been given a number suffix to distinguish them (for example, YEL/BLK[1] and YEL/BLK[2] are not the same).
- ○: Related to Fuel and Emissions System.
- — Connector with male terminals (double outline): View from terminal side
  — Connector with female terminals (single outline): View from wire side

System Connectors [Dash and Floor]

('99 – 00 models except D16Y5 engine with M/T)

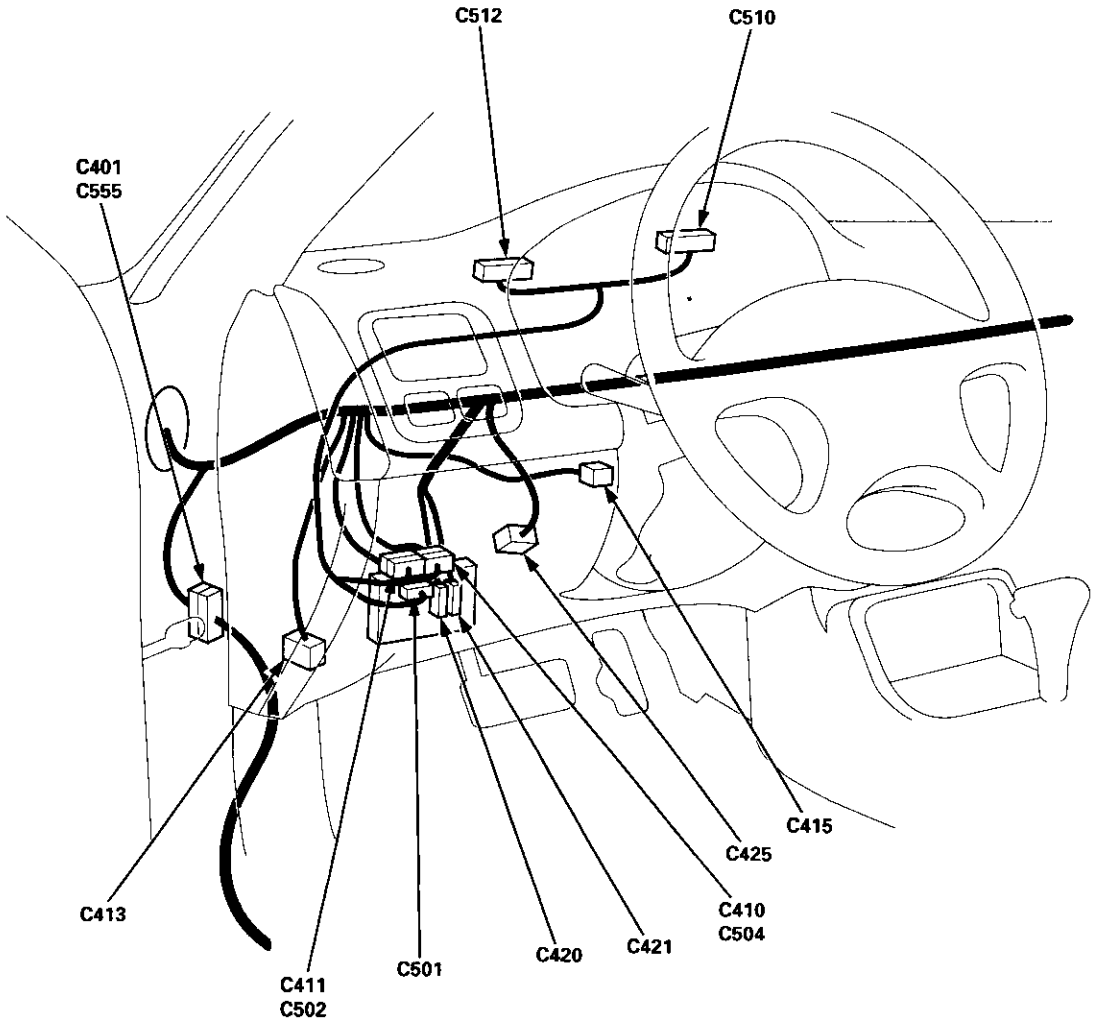

C410 (A/T)

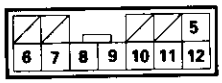

1	——	⑦	BLK/BLU
2	——	8	——
3	——	⑨	BLU[3,7]
4	——	⑩	GRN
⑤	WHT*	⑪	GRN/BLK[1,4]
⑥	RED	⑫	LT GRN[1,3]

C411

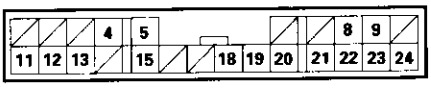

1	——	13	LT GRN/RED
2	——	14	——
3	——	15	WHT/BLK
4	BLU/YEL	16	——
5	BLU (SRS)	17	——
6	——	18	WHT/BLU
7	——	19	BLU
8	RED/BLU*	20	RED/BLU
9	LT GRN*	㉑	GRN/ORN
10	——	22	BLU/WHT
11	YEL/GRN	23	YEL/RED
12	RED	24	BLU/RED (ABS)

*: Cruise Control

C413

1	——	9	——
2	——	10	——
3	——	11	——
4	——	⑫	BLK
5	——	⑬	BLK
⑥	LT BLU	14	——
7	——	⑮	BLU/YEL[1]
⑧	WHT/RED	16	——

C415

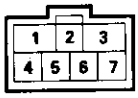

1	BLK/YEL*
1	BLK/WHT
2	BLU/RED
③	WHT/BLK
4	BLK
5	WHT
6	WHT/BLU
7	WHT/GRN

*: Security Alarm System

C420

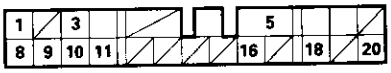

1	RED/BLU (Canada)	⑪	BLK/WHT
2	——	12	——
3	BLK	13	——
4	——	14	——
5	WHT/GRN	15	——
6	WHT/BLU	16	BLK/WHT (Canada)
7	——	17	——
⑧	YEL/GRN	18	WHT/GRN
9	BLK/YEL	19	——
⑩	BLK/WHT	20	WHT/RED

C421

1	RED/YEL	10	GRN/YEL
2	BLK/BLU (ABS)	11	——
3	RED/GRN	⑫	BLK/WHT
4	GRN/BLK	⑬	BLK/WHT
5	RED/BLU	14	GRN/RED
6	WHT/BLU	15	——
7	——	16	GRN/RED
8	——	17	RED/BLK
9	RED/WHT	18	RED/BLK

C425 (without cruise control)

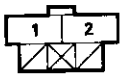

①	GRN/WHT[1]
②	WHT/GRN
3	——
4	——

C425 (with cruise control)

1	LT GRN
2	GRY
③	GRN/WHT[1]
④	WHT/GRN

C501

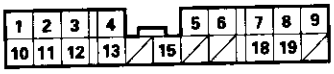

1	RED/GRN	11	YEL/BLK
2	BLK/BLU	12	BLK/YEL
3	WHT/BLU	13	YEL/GRN
4	BLK	14	——
5	GRN/WHT	15	RED/BLK
6	GRN/RED	16	——
7	GRN/ORN	17	——
8	BLU/YEL	18	BLK/WHT
9	GRN/YEL	19	YEL/RED
⑩	YEL	20	——

C510 (A/T)

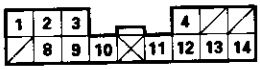

*2

1	YEL	8	BLK
2	RED/BLK	⑨	GRN/BLK[1]
3	RED	⑩	GRN
④	BLU[7]	⑪	RED
5	——	⑫	WHT[4]
6	BRN	⑬	BLK/BLU
7	——	⑭	LT GRN[3]

*3

1	YEL	8	BLK
2	RED/BLK	⑨	GRN/BLK[4]
3	RED	⑩	GRN
④	BLU[3]	⑪	RED
5	——	⑫	WHT[4]
6	——	⑬	BLK/BLU
7	——	⑭	LT GRN[1]

C512

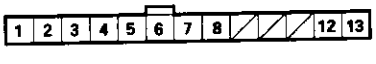

1	WHT/BLK	8	BLU
2	GRN/BLK	9	——
3	YEL/RED	10	——
④	YEL	11	——
⑤	GRN/ORN	12	RED
6	RED/GRN	13	RED/BLK
7	GRN/RED		

C555

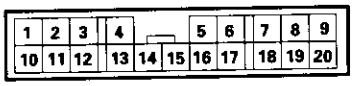

1	GRN/ORN	11	WHT/GRN
②	BLK/WHT	⑫	LT GRN[2]
3	GRN/WHT	⑬	BLU[1]
4	BLU/BLK	14	GRN
⑤	YEL/BLU	15	LT GRN/RED
⑥	GRN/BLK[2]	16	GRN/BLK
7	RED/BLU	17	GRN/WHT
8	WHT/RED	⑱	YEL/GRN
9	BLU/RED	19	YEL/RED
10	BLU/WHT	20	BLU/YEL

NOTE:
- Different wires with the same color have been given a number suffix to distinguish them (for example, YEL/BLK[1] and YEL/BLK[2] are not the same).
- ○: Related to Fuel and Emissions System.
- — Connector with male terminals (double outline): View from terminal side
  — Connector with female terminals (single outline): View from wire side

(cont'd)

System Connectors [Dash and Floor] (cont'd)

('99 – 00 models except D16Y5 engine with M/T)

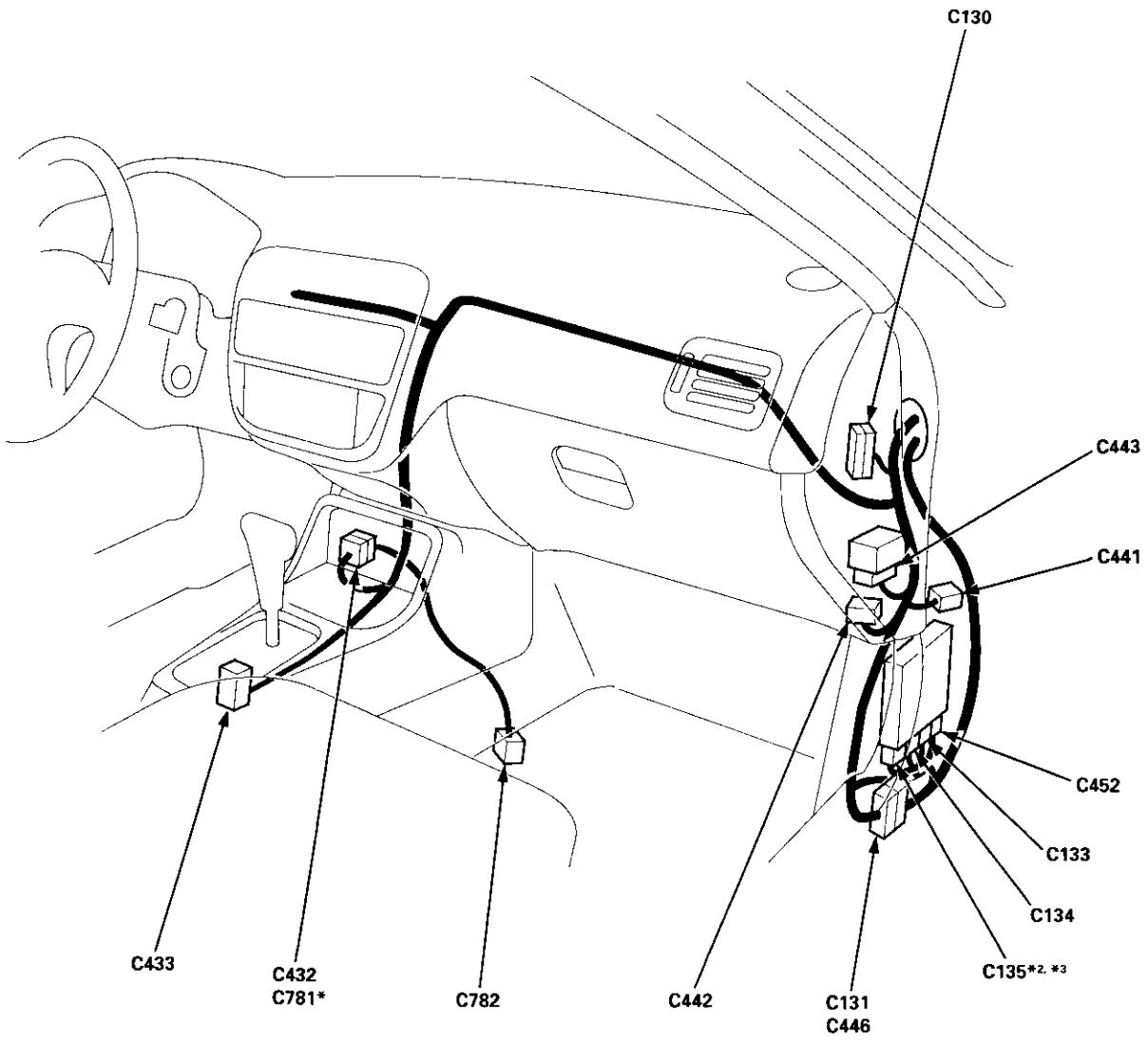

C130

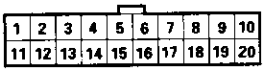

①	YEL/BLU	⑪	BRN/BLK[1]
②	YEL/BLU	⑫	BRN/BLK[1]
3	YEL/BLU	⑬	BRN/BLK[1]
④	YEL/BLK[1]	⑭	BRN/BLK[1]
⑤	YEL/BLK[1]	⑮	BRN/BLK[1]
⑥	YEL/BLK[1]	⑯	BRN/BLK[1]
⑦	YEL/BLK[2]	⑰	BRN/BLK[1]
⑧	BLU/WHT	⑱	BRN/BLK[1]
⑨	BLU/WHT	⑲	BRN/BLK[1]
10	BLU/WHT	⑳	BRN/BLK[1]

C131

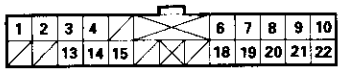

①	BLK/WHT[1]	⑬	BLU
②	WHT/RED[1]	⑭	YEL[1*2]
③	WHT[4]	⑮	GRN/BLK[4*3]
④	LT GRN[3]	⑯	PNK[*2]
5	——	⑰	LT GRN/RED[*3]
6	YEL	16	——
7	GRN	17	——
⑧	GRN/BLK[2]	18	GRN/BLK
⑨	GRN[2]	19	BLU/WHT
⑩	WHT/BLU	⑳	YEL/BLU
11	——	㉑	RED/YEL[1]
12	——	㉒	BRN/BLK[1]

C133 (ECM/PCM-B)

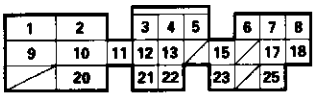

①	YEL/BLK[1]	⑩	BLK[2]	19	——
②	BLK[1]	⑪	BRN[2]	⑳	BRN/BLK[1]
③	RED[1]	⑫	GRN/YEL[3]	㉑	WHT/BLU
④	BLU[4]	⑬	YEL/GRN	㉒	BRN/BLK[2]
⑤	YEL[2]	14	——	㉓	BLK/BLU[2]
⑥	BLK/BLU[1]	⑮	ORN	24	——
⑦	RED[2*3]	16	——	㉕	YEL[1*3]
⑧	WHT[1]	⑰	RED[3]		
	PNK/BLK[*3]		GRN/WHT[2*3]		
⑨	YEL/BLK[2]	18	PNK/BLU[*3]		

C134 (ECM/PCM-C)

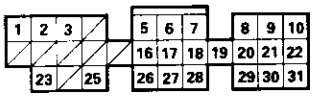

1	BLK/WHT[2]	13	——	㉕	RED/YEL[2]
2	WHT/GRN	14	——	㉖	RED/WHT
3	RED/BLU	15	——	㉗	RED/BLK
4	——	⑯	WHT[3]	㉘	YEL/BLU
5	WHT/RED[3]	⑰	RED/GRN	㉙	YEL[4]
⑥	WHT/BLK[*3]	⑱	GRN/BLK[2]	㉚	BLK[3]
7	GRN/WHT[3]	⑲	YEL/RED	㉛	WHT/RED[3]
8	BLU[5]	⑳	GRN[3]		
9	WHT[2]	㉑	RED[4]		
⑩	BLU/BLK	㉒	BLU/RED		
11	——	㉓	BLU/WHT[1]		
12	——	㉔	——		

C135 (PCM-D)[*2]

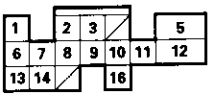

①	YEL[5]	⑨	YEL[6]
②	GRN/WHT[4]	⑩	BLU[6]
③	GRN/BLK[3]	⑪	RED[6]
4	——	⑫	WHT[5]
⑤	BLK/YEL	⑬	LT GRN[3]
⑥	WHT[4]	⑭	BLU[7]
⑦	BLU/YEL[2]	15	——
⑧	PNK	⑯	GRN[4]

C135 (PCM-D)[*3]

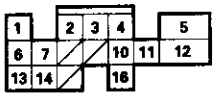

①	WHT/RED[4]	9	——
②	GRN/BLK[3]	⑩	WHT[5]
③	GRN/YEL[3]	⑪	RED/BLU
④	BLU/WHT[2]	⑫	GRN[4]
⑤	BLK/YEL	⑬	LT GRN/RED
⑥	WHT[4]	⑭	GRN/BLK[4]
⑦	BLK/WHT[3]	15	——
8	——	⑯	RED/WHT[6]

C432

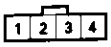

①	BLK/WHT
②	GRN/BLK[2]
③	WHT/RED[1]
④	BLK/WHT[2]

C433[*2, *3]

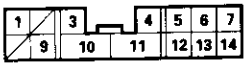

1	BLK	8	——
2	——	9	PNK[5]
3	YEL/RED	10	BLK/WHT
4	GRN/BLK	11	BLK/RED
5	BLU[7]	⑫	BLK/BLU
⑥	GRN	⑬	WHT[4]
⑦	YEL[6]	⑭	RED

*: Cruise control

C441

①	BRN[1]
②	BLK

C442

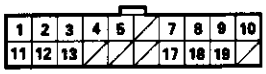

1	BRN/BLK	11	GRN/RED
2	BRN/BLK	12	GRN/RED
3	BRN/BLK	13	GRN/RED
4	BLU/WHT	14	——
5	BLU/WHT	15	——
6	BLU/WHT	16	——
7	GRN/WHT	17	BLU
⑧	GRN/WHT[1]	18	BLU
9	GRN/WHT	19	BLU
⑩	GRN/WHT[1]	20	BLU

C443

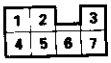

①	GRN/YEL[1]	⑤	YEL/GRN
②	BLU/WHT	⑥	YEL/BLK[1]
③	BLK[1]	⑦	WHT/BLK
④	YEL/GRN		

C452 (ECM/PCM-A)

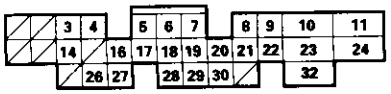

1	——	13	——	25	——
2	——	⑭	GRN/BLK[1]	㉖	GRN[2]
③	BLU[1]	15	——	㉗	BLU/RED
④	LT GRN/WHT	⑯	GRN/YEL[1]	㉘	WHT/RED[2]
⑤	BLU/GRN	⑰	BLK/RED	㉙	LT GRN[2]
⑥	RED/YEL[1]	⑱	GRN/ORN	㉚	GRN/RED
⑦	YEL[1*3]	⑲	BLU[2]	㉛	——
⑧	BLK/WHT[1]	⑳	GRN[1]	㉜	GRN/WHT[1]
⑨	LT GRN[1*3]	㉑	BLU/YEL[1]		
⑩	BRN[1]	㉒	BLU[3*3]		
11	——	㉓	WHT/RED[1]		
12	——	㉔	BLU/WHT		

C782

①	WHT/RED[1]
②	GRN/WHT
③	BLK/WHT[1]
④	BLK/WHT

NOTE:
- Different wires with the same color have been given a number suffix to distinguish them (for example, YEL/BLK[1] and YEL/BLK[2] are not the same).
- ○: Related to Fuel and Emissions System.
- — Connector with male terminals (double outline): View from terminal side
  — Connector with female terminals (single outline): View from wire side

System Connectors [Fuel Pump]

('99 – 00 models except D16Y5 engine with M/T)

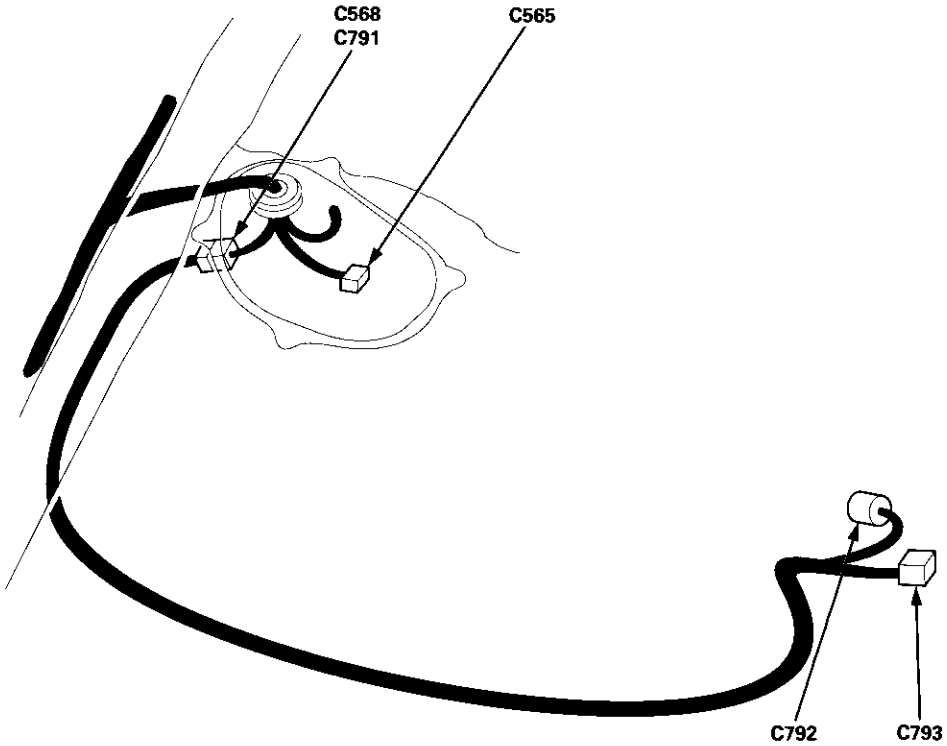

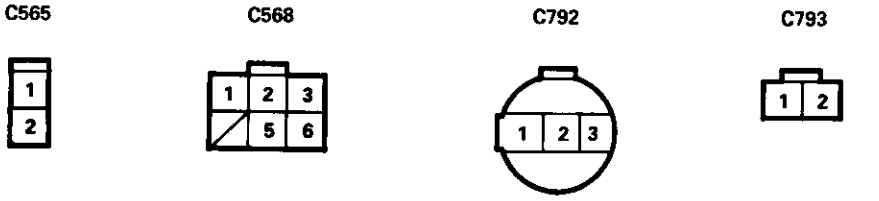

①	BLK
②	YEL/GRN

①	BLU[1]
②	LT GRN[2]
③	BLK/WHT
4	——
⑤	YEL/BLU
⑥	GRN/BLK[2]

①	YEL/BLU
②	GRN/BLK[2]
③	LT GRN[2]

①	BLK/WHT
②	BLU[1]

NOTE:
- Different wires with the same color have been given a number suffix to distinguish them (for example, YEL/BLK[1] and YEL/BLK[2] are not the same).
- ○: Related to Fuel and Emissions System.
- — Connector with male terminals (double outline): View from terminal side
  — Connector with female terminals (single outline): View from wire side

Troubleshooting Procedures

I. How To Begin Troubleshooting
When the Malfunction Indicator Lamp (MIL) has been reported on, or there is a driveability problem, use the appropriate procedure below to diagnose and repair the problem.

A. When the MIL has come on:

1. Connect the Honda PGM Tester or an OBD II scan tool to the 16P Data Link Connector (DLC) located near the left kick panel.

2. Turn the ignition switch ON (II).

3. Check the DTC and note it. Also check and note the freeze frame data.
Refer to the Diagnostic Trouble Code Chart and begin troubleshooting.

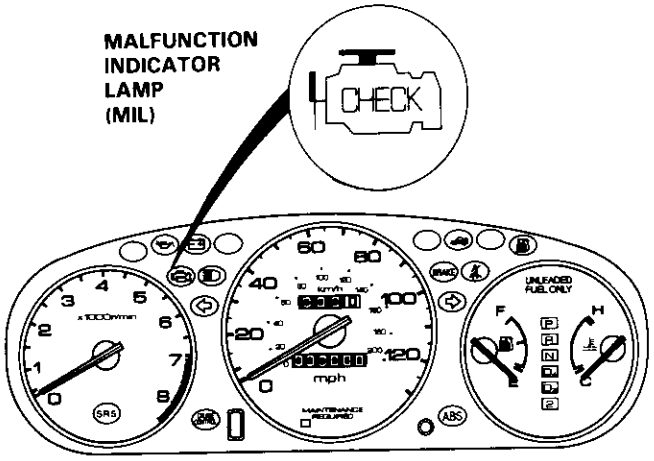

NOTE:
- See the OBD II scan tool or Honda PGM Tester user's manuals for specific operating instructions.
- The scan tool or tester can read the Diagnostic Trouble Codes (DTC), freeze frame data, current data, and other Engine Control Module (ECM)/Powertrain Control Module (PCM) data.
- Freeze frame data indicates the engine conditions when the first malfunction, misfire or fuel trim malfunction was detected. It can be useful information when troubleshooting.

B. When the MIL has not come on , but there is a driveability problem, refer to the Symptom Chart on page 11-84.

C. DTCs will be indicated by the blinking of the Malfunction Indicator Lamp (MIL) with the SCS service connector connected.
Connect the SCS service connector to Service Check Connector as shown. (The 2P Service Check Connector is located under the dash on the passenger's side of the vehicle.) Turn the ignition switch ON (II).

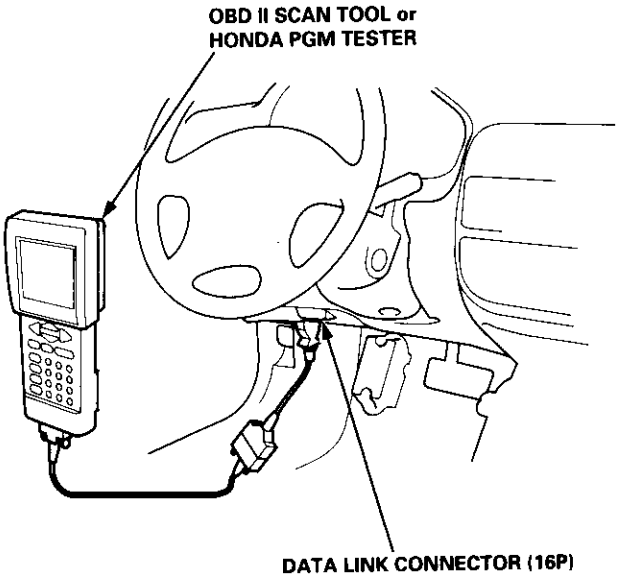

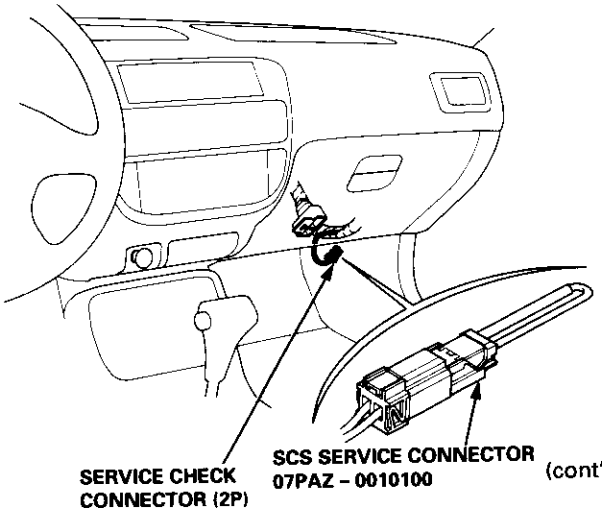

(cont'd)

Troubleshooting Procedures (cont'd)

II. Engine Control Module (ECM)/Powertrain Control Module (PCM) Reset Procedure

NOTE: Resetting the ECM/PCM will erase any stored DTCs and any freeze data. It will also restart all readiness code monitors.

Either of the following actions will reset the ECM/PCM.

- Use the OBD II scan tool or Honda PGM Tester to clear the ECM's/PCM's memory.

  NOTE: See the OBD II scan tool or Honda PGM Tester user's manuals for specific operating instructions.

- Turn the ignition switch OFF. Remove the BACK UP (7.5 A) fuse from the under-hood fuse/relay box for 10 seconds.

  NOTE: Removing the BACK UP (7.5 A) fuse cancels the clock and the radio presets. Make note of the customer's presets so you can reset them.

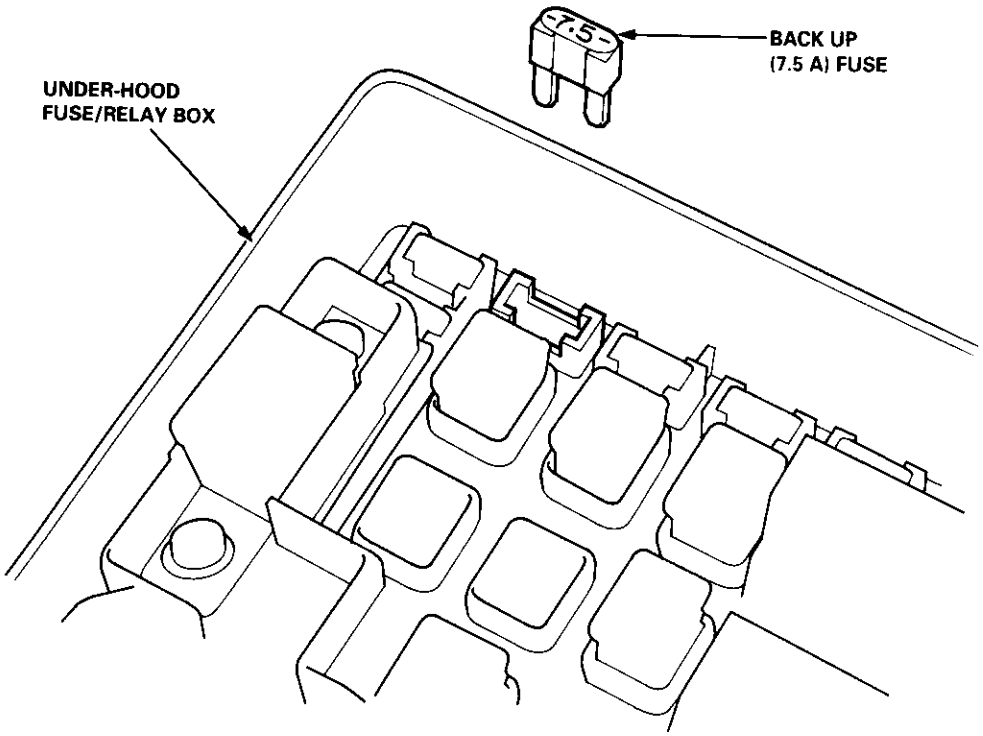

III. Final Procedure (this procedure must be done after any troubleshooting)

1. Remove the SCS Service Connector if it is connected.

   NOTE: If the SCS service connector is connected and there are no DTCs stored in the ECM/PCM, the MIL will stay on when the ignition switch is turned ON (II).

2. Do the ECM/PCM Reset Procedure.

3. Turn the ignition switch OFF.

If the inspection for a particular code requires voltage or resistance checks at the ECM/PCM connectors, remove the right kick panel. Pull the carpet back to expose the ECM/PCM. Remove the ABS control unit if so equipped. Unbolt the ECM/PCM bolt. Turn the ignition switch OFF, and connect the backprobe sets and a digital multimeter as described below. Check the system according to the procedure described for the appropriate code(s) listed on the following pages.

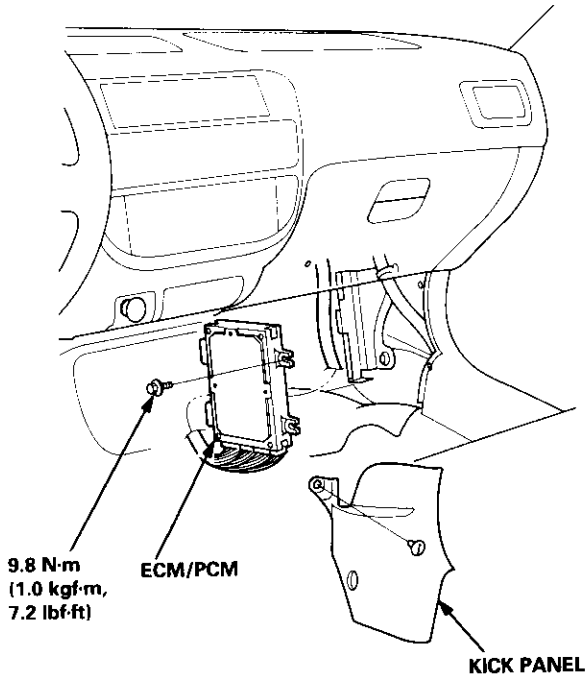

The illustration shows '96 – '98 models.

How to Use the Backprobe Sets

Connect the backprobe adapters to the stacking patch cords, and connect the cords to a multimeter. Using the wire insulation as a guide for the contoured tip of the backprobe adapter, gently slide the tip into the connector from the wire side until it comes in contact with terminal end of the wire.

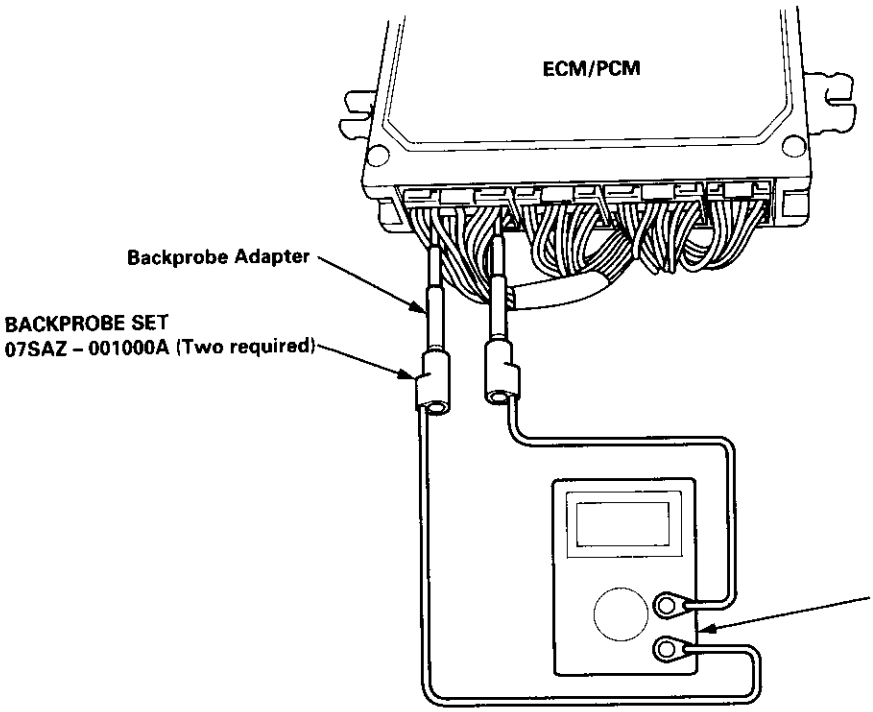

(cont'd)

Troubleshooting Procedures (cont'd)

CAUTION:
- **Puncturing the insulation on a wire can cause poor or intermittent electrical connections.**
- **Bring the tester probe into contact with the terminal from the terminal side of wire harness connectors in the engine compartment. For female connectors, just touch lightly with the tester probe and do not insert the probe.**

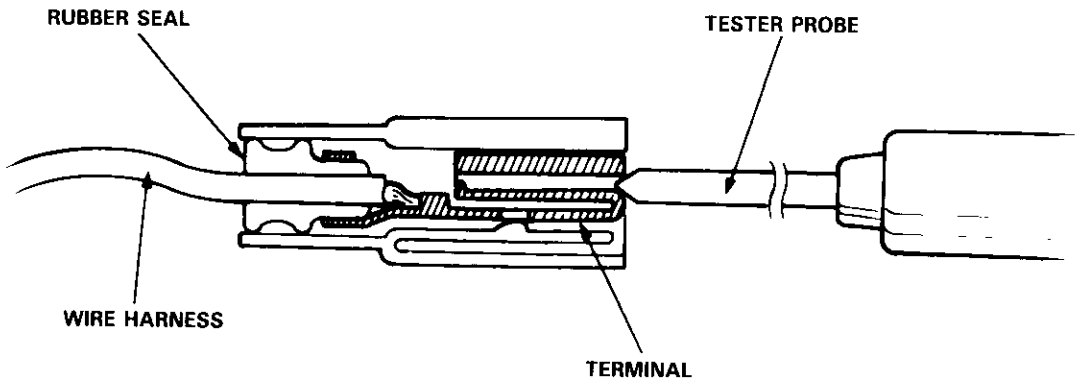

Symptom Chart
Listed below are symptoms and probable causes for problems that DO NOT cause the Malfunction indicator Lamp (MIL) to come on. If the MIL was reported on, go to page 11-81.
Troubleshoot each probable cause in the order listed (from left to right) until the symptom is eliminated.
The probable cause and troubleshooting page reference can be found below.

*: '99 – 00 models

SYMPTOM	PROBABLE CAUSE
Engine will not start	4, 2, 3, 5, 20, 14, 1
Hard starting	2, 4, 11, 16, 13, 19
Cold fast idle too low	7, 8, 6, 16
Cold fast idle too high	7, 8, 10, 9
Idle speed fluctuates	7, 8, 10, 9
Misfire or rough running	Troubleshoot for misfire on pages 11-166, 167
Low power	2, 9, 10, 12, 17, 16, 18, 20
Engine stalls	2, 4, 11, 7, 20, 8, 5, 15
Difficult to refuel*	19, 21
Fuel overflows during refueling*	19, 21

Other Probable Causes for an engine that will not start:
- Compression
- Intake air leakage
- Engine locked up
- Timing belt
- Starting system
- Overheating
- Battery

Probable Cause List (For the DTC Chart, see page 11-97)

*: '99 – 00 models

Probable Cause	Page	System
1	11-107	Engine Control Module (ECM)/Powertrain Control Module (PCM)
2	11-230, 231	Fuel pressure
3	11-237	PGM-FI main relay
4	Section 23	Ignition system
5	11-172, 183	Crankshaft Position/Top Dead Center/Cylinder Position sensor circuit, CKF sensor circuit
6	11-124	Intake Air Temperature (IAT) sensor circuit
7	11-194	Idle Air Control (IAC) Valve
8	11-220 – 223	Idle speed adjustment
9	11-247	Throttle body
10	11-244	Throttle cable
11	11-115	Manifold Absolute Pressure (MAP) sensor
12	11-132	Throttle Position (TP) sensor
13	11-178	Barometric pressure (BARO) sensor
14	Section 14, 11-218	A/T gear position signal (see page 11-216) or clutch switch signal
15	11-210	Brake switch signal
16	11-244	Air Cleaner
17	———	Intake air pipe
18	11-252	Three Way Catalytic Converter (TWC)
19	11-267	Evaporative emission (EVAP) control
20	———	Contaminated fuel
21*	11-296	ORVR vent shut valve

(cont'd)

Troubleshooting Procedures (cont'd)

ECM/PCM Data

By connecting the OBD II scan tool or the Honda PGM Tester to the 16P data link connector (DLC), various data can be retrieved from the ECM/PCM. The items listed in the table below conform to the SAE recommended practice.
The Honda PGM Tester also reads data beyond that recommended by SAE.
Understanding this data will help to find the causes of intermittent failures or engine problems.

NOTE:

- The "operating values" given below are approximate values and may be different depending on the environment and the individual vehicle.
- Unless noted otherwise, "at idle speed" means idling with the engine completely warmed up, A/T in position [P] or [N], M/T in neutral, and the A/C and all accessories turned off.

Data	Description	Operating Value	Freeze Data
Diagnostic Trouble Code (DTC)	If the ECM /PCM detects a problem, it will store it as a code consisting of one letter and four numbers. Depending on the problem, an SAE-defined code (P0xxx) or a Honda-defined code (P1xxx) will be output to the tester.	If no problem is detected, there is no output.	YES
Engine Speed	The ECM/PCM computes engine speed from the signals sent from the Crankshaft Position sensor. This data is used for determining the time and amount of fuel injection.	Nearly the same as tachometer indication.	YES
Vehicle Speed	The ECM/PCM converts pulse signals from the Vehicle Speed Sensor (VSS) into speed data.	Nearly the same as speedometer indication	YES
Manifold Absolute Pressure (MAP)	The absolute pressure caused in the intake manifold by engine load and speed.	With engine stopped: Nearly the same as atmospheric pressure At idle speed: 24 – 37 kPa (180 – 280 mmHg, 7.1 – 11.0 inHg)	YES
Engine Coolant Temperature (ECT)	The ECT sensor converts coolant temperature into voltage and signals the ECM/PCM. The sensor is a thermistor whose internal resistance changes with coolant temperature. The ECM/PCM uses the voltage signals from the ECT sensor to determine the amount of injected fuel.	With cold engine: Same as ambient temperature and IAT With engine warmed up: 176 – 194°F (80 – 90°C)	YES
Heated Oxygen Sensor (HO2S) (Primary, Sensor 1) (Secondary Sensor 2)	The Heated Oxygen Sensor detects the oxygen content in the exhaust gas and sends voltage signals to the ECM/PCM. Based on these signals, the ECM/PCM controls the air/fuel ratio. When the oxygen content is high (that is, when the ratio is leaner than the stoichiometric ratio), the voltage signal is lower. When the oxygen content is low (that is, when the ratio is richer than the stoichiometric ratio), the voltage signal is higher.	0.0 – 1.25 V At idle speed: about 0.1 – 0.9 V	NO (Sensor 1)

Data	Description	Operating Value	Freeze Data
HO2S Feedback Loop Status	Loop status is indicated as "open" or "closed". Closed: Based on the HO2S output, the ECM/PCM determines the air/fuel ratio and controls the amount of injected fuel. Open: Ignoring HO2S output, the ECM/PCM refers to signals from the TP, MAP, and ECT sensors to control the amount of injected fuel.	At idle speed: closed	YES
Short Term Fuel Trim	The air/fuel ratio correction coefficient for correcting the amount of injected fuel when HO2S feedback is in the closed loop status. When the signal from the HO2S is weak, short term fuel trim gets higher, and the ECM/PCM increases the amount of injected fuel. The air/fuel ratio gradually gets richer, causing a higher HO2S output. Consequently, the short term fuel trim is lowered, and the ECM/PCM reduces the amount of injected fuel. This cycle keeps the air/fuel ratio close to the stoichiometric ratio when in closed loop status.	± 20%	YES
Long Term Fuel Trim	Long term fuel trim is computed from short term fuel trim and indicates changes occurring in the fuel supply system over a long period. If long term fuel trim is higher than 1.00, the amount of injected fuel must be increased. If it is lower than 1.00, the amount of injected fuel must be reduced.	± 20%	YES
Intake Air Temperature (IAT)	The IAT sensor converts intake air temperature into voltage and signals the ECM/PCM. When intake air temperature is low, the internal resistance of the sensor increases, and the voltage signal is higher.	With cold engine: Same as ambient temperature and ECT	YES
Throttle Position	Based on the accelerator pedal position, the opening angle of the throttle valve is indicated.	At idle speed: approx. 10 %	YES
Ignition Timing	Ignition timing is the ignition advance angle set by the ECM/PCM. The ECM/PCM matches ignition timing to the driving conditions.	At idle speed: 12° ± 2° (B16A2 engine: 16° ± 2°) BTDC with the SCS service connector connected.	NO
Calculated Load Value (CLV)	CLV is the engine load calculated from the MAP data.	At idle speed: 15 – 35 % At 2,500 rpm with no load: 12 – 30%	YES

Engine/Powertrain Control Module Terminal Arrangement ('96 – 98 Models, '99 – 00 D16Y5 engine with M/T)

ECM/PCM CONNECTOR A (32P)

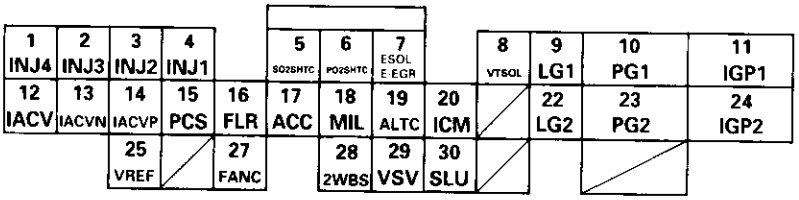

Wire side of female terminals

ECM/PCM CONNECTOR A (32P)

NOTE: Standard battery voltage is 12 V.

Terminal number	Wire color	Terminal name	Description	Signal
1	YEL	INJ4 (No. 4 FUEL INJECTOR)	Drives No. 4 fuel injector.	With engine running: duty controlled
2	BLU	INJ3 (No. 3 FUEL INJECTOR)	Drives No. 3 fuel injector.	
3	RED	INJ2 (No. 2 FUEL INJECTOR)	Drives No. 2 fuel injector.	
4	BRN	INJ1 (No. 1 FUEL INJECTOR)	Drives No. 1 fuel injector.	
5	BLK/WHT	SO2SHTC (SECONDARY HEATED OXYGEN SENSOR HEATER CONTROL)	Drives secondary heated oxygen sensor heater.	With ignition switch ON (II): battery voltage With fully warmed up engine running: duty controlled
6	BLK/WHT	PO2SHTC (PRIMARY HEATED OXYGEN SENSOR HEATER CONTROL)	Drives primary heated oxygen sensor heater.	With ignition switch ON (II): battery voltage With fully warmed up engine running: duty controlled
7	RED*3	ESOL (EGR CONTROL SOLENOID VALVE)	Drives EGR control solenoid valve.	With EGR operating during driving with fully warmed up engine: duty controlled With EGR not operating: 0 V
	PNK*10	E-EGR	Drives EGR valve.	With EGR operating during driving with fully warmed up engine: duty controlled. With EGR not operating: 0 V
8*12	GRN/YEL	VTS (VTEC SOLENOID VALVE)	Drives VTEC solenoid valve.	With engine at low engine speed: 0 V With engine at high engine speed: battery voltage
9	BRN/BLK	LG1 (LOGIC GROUND)	Ground for the ECM/PCM control circuit.	Less than 1.0 V at all times
10	BLK	PG1 (POWER GROUND)	Ground for the ECM/PCM power circuit.	
11	YEL/BLK	IGP1 (POWER SOURCE)	Power source for the ECM/PCM control circuit.	With ignition switch ON (II): battery voltage With ignition switch OFF: 0 V
12*5	BLK/BLU	IACV (IDLE AIR CONTROL VALVE)	Drives IACV.	With engine running: duty controlled
13*4	ORN	IACV N (IDLE AIR CONTROL VALVE NEGATIVE SIDE)	Drives the IAC valve (negative side).	
14*4	BLK/BLU	IACV P (IDLE AIR CONTROL VALVE POSITIVE SIDE)	Drives IAC valve (positive side).	
15	RED/YEL	PCS (EVAP PURGE CONTROL SOLENOID VALVE)	Drives EVAP purge control solenoid valve.	With engine running, engine coolant below 154°F (68°C): battery voltage With engine running, engine coolant above 154°F (68°C): duty controlled
16	GRN/YEL	FLR (FUEL PUMP RELAY)	Drives fuel pump relay.	0 V for two seconds after turning ignition switch ON (II), then battery voltage
17	BLK/RED	ACC (A/C CLUTCH RELAY)	Drives A/C clutch relay.	With compressor ON: 0 V With compressor OFF: battery voltage
18	GRN/ORN	MIL (MALFUNCTION INDICATOR LAMP)	Drives MIL.	With MIL turned ON: 0 V With MIL turned OFF: battery voltage
19*1	WHT/GRN	ALTC (ALTERNATOR CONTROL)	Sends alternator control signal.	With fully warmed-up engine running: battery voltage During driving with small electrical load: 0 V
20	YEL/GRN	ICM (IGNITION CONTROL MODULE)	Sends ignition pulse.	With ignition switch ON (II): battery voltage With engine running: about 10 V (depending on engine speed)
22	BRN/BLK	LG2 (LOGIC GROUND)	Ground for the ECM/PCM control circuit.	Less than 1.0 V at all times
23	BLK	PG2 (POWER GROUND)	Ground for the ECM/PCM power circuit.	
24	YEL/BLK	IGP2 (POWER SOURCE)	Power source for the ECM/PCM control circuit.	With ignition switch ON (II): battery voltage With ignition switch OFF: 0 V
25*6	WHT/RED	VREF (REFERENCE VOLTAGE)	Provides reference voltage to TCM.	With ignition switch ON (II): about 5 V With ignition switch OFF: 0 V
27*1	GRN	FANC (RADIATOR FAN CONTROL)	Drives radiator fan relay.	With radiator fan running: 0 V With radiator fan stopped: battery voltage
28*8, *15	BLU	2WBS (EVAP BYPASS SOLENOID VALVE)	Drives EVAP bypass solenoid valve.	With ignition switch ON (II): battery voltage
29*8, *15	LT GRN/WHT	VSV (EVAP CONTROL CANISTER VENT SHUT VALVE)	Drives EVAP control canister vent shut valve.	With ignition switch ON (II): battery voltage
30*3	WHT/RED	SLU (INTERLOCK CONTROL UNIT)	Detects interlock control unit signal.	With ignition switch ON (II) and brake pedal depressed: battery voltage

*1: USA model
*2: A/T (D16Y7, D16Y8 engine)
*3: CVT (D16Y5 engine)
*4: A/T and D16Y7 engine
*5: Except A/T and D16Y7 engine
*6: A/T (D16Y8 engine)
*7: CVT (D16Y5 engine) and D16Y8 engine
*8: '96 D16Y8 engine (coupe), '97 D16Y8 engine (coupe: all models, sedan: KL model), '98 D16Y5 engine, '98 D16Y8 engine, '99 – 00 D16Y5 (M/T) engine
*9: D16Y5 engine
*10: M/T (D16Y5 engine)
*11: Except M/T (D16Y5 engine)
*12: D16Y5, D16Y8 engine
*13: D16Y8 engine
*14: D16Y7 engine
*15: '97 D16Y7 engine (coupe: KL model, sedan: KL (LX) model), '98 D16Y7 engine

PCM CONNECTOR B (25P)

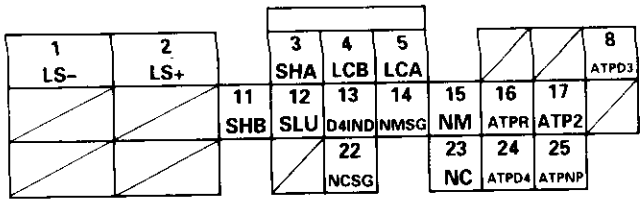

Wire side of female terminals

PCM CONNECTOR B (25P)*2

NOTE: Standard battery voltage is 12 V.

Terminal number	Wire color	Terminal name	Description	Signal
1	WHT	LS– (LINEAR SOLENOID VALVE – SIDE)	Ground for linear solenoid valve.	With ignition switch ON (II): pulses
2	RED	LS+ (LINEAR SOLENOID VALVE + SIDE)	Drives linear solenoid valve.	With ignition switch ON (II): pulses
3	BLU/YEL	SHA (SHIFT CONTROL SOLENOID VALVE A)	Drives shift control solenoid valve A.	With engine running in 2nd, 3rd gears: battery voltage With engine running in 1st, 4th gears: about 0 V
4	GRN/BLK	LC B (LOCK-UP CONTROL SOLENOID VALVE B)	Drives lock-up control solenoid valve B.	With lock-up ON: battery voltage With lock-up OFF: 0 V
5	YEL	LC A (LOCK-UP CONTROL SOLENOID VALVE A)	Drives lock-up control solenoid valve A.	With lock-up ON: battery voltage With lock-up OFF: 0 V
8	PNK	ATPD3 (A/T GEAR POSITION SWITCH)	Detects A/T gear position switch signal.	In D3 position: 0 V In any other position: battery voltage
11	GRN/WHT	SHB (SHIFT CONTROL SOLENOID VALVE B)	Drives shift control solenoid valve B.	With engine running in 1st, 2nd: battery voltage With engine running in 3rd, 4th: about 0 V
12	WHT/RED	SLU (INTERLOCK CONTROL UNIT)	Drives interlock control unit.	With ignition switch ON (II) and brake pedal depressed: 0 V
13	GRN/BLK	D4 IND (D4 INDICATOR LIGHT)	Drives D4 indicator light.	With D4 indicator light turned ON: battery voltage With D4 indicator light turned OFF: 0 V
14	WHT	NMSG (MAINSHAFT SPEED SENSOR GROUND)	Ground for mainshaft speed sensor.	
15	RED	NM (MAINSHAFT SPEED SENSOR)	Detects mainshaft speed sensor signal.	With engine running: pulses
16	WHT	ATPR (A/T GEAR POSITION SWITCH)	Detects A/T gear position switch signal	In R position: 0 V In any other position: battery voltage
17	BLU	ATP2 (A/T GEAR POSITION SWITCH)	Detects A/T gear position switch signal.	In 2 position: 0 V In any other position: battery voltage
22	GRN	NCSG (COUNTERSHAFT SPEED SENSOR GROUND)	Ground for countershaft speed sensor.	
23	BLU	NC (COUNTERSHAFT SPEED SENSOR)	Detects countershaft speed sensor signal.	With ignition switch ON (II), and front wheels rotating: pulses
24	YEL	ATPD4 (A/T GEAR POSITION SWITCH)	Detects A/T gear position switch signal.	In D4 position: 0 V In any other position: 5 V
25	LT GRN	ATPNP (A/T GEAR POSITION SWITCH)	Detects A/T gear position switch signal.	In N or P position: 0 V In any other position: battery voltage

*1: USA model
*2: A/T (D16Y7, D16Y8 engine)
*3: CVT (D16Y5 engine)
*4: A/T and D16Y7 engine
*5: Except A/T and D16Y7 engine
*6: A/T (D16Y8 engine)
*7: CVT (D16Y5 engine) and D16Y8 engine
*8: '96 D16Y8 engine (coupe), '97 D16Y8 engine (coupe: all models, sedan: KL model), '98 D16Y5 engine, '98 D16Y8 engine, '99 – 00 D16Y5 (M/T) engine
*9: D16Y5 engine
*10: M/T (D16Y5 engine)
*11: Except M/T (D16Y5 engine)
*12: D16Y5, D16Y8 engine
*13: D16Y8 engine
*14: D16Y7 engine
*15: '97 D16Y7 engine (coupe: KL model, sedan: KL (LX) model), '98D16Y7 engine

(cont'd)

Engine/Powertrain Control Module Terminal Arrangement ('96 – 98 Models '99 – 00 D16Y5 engine with M/T) (cont'd)

ECM/PCM CONNECTOR C (31P)

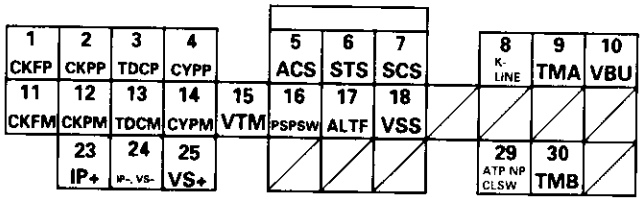

Wire side of female terminals

ECM/PCM CONNECTOR C (31P)

NOTE: Standard battery voltage is 12 V.

Terminal number	Wire color	Terminal name	Description	Signal
1	BLU/RED	CKFP (CKF SENSOR P SIDE)	Detects CKF sensor.	With engine running: pulses
2	BLU	CKPP (CKP SENSOR P SIDE)	Detects CKP sensor.	With engine running: pulses
3	GRN	TDCP (TDC SENSOR P SIDE)	Detects TDC sensor.	With engine running: pulses
4	YEL	CYPP (CYP SENSOR P SIDE)	Detects CYP sensor.	With engine running: pulses
5	BLU/RED	ACS (A/C SWITCH SIGNAL)	Detects A/C switch signal.	With A/C switch ON: 0 V With A/C switch OFF: battery voltage
6	BLU/ORN	STS (STARTER SWITCH SIGNAL)	Detects starter switch signal.	With starter switch ON (III): battery voltage With starter switch OFF: 0 V
7	BRN	SCS (SERVICE CHECK SIGNAL)	Detects service check connector signal (the signal causing a DTC indication)	With the connector connected: 0 V With the connector disconnected: about 5 V or battery voltage
8	LT BLU	K-LINE (DLC)	Sends and receives scan tool signal.	With ignition switch ON (II): about 5 V
9*3	GRY	TMA	Data communication with TCM: ECM control data output	With ignition switch ON (II): pulses
10	WHT/BLU	VBU (VOLTAGE BACK UP)	Power source for the ECM/PCM control circuit. Power source for the DTC memory	Battery voltage at all times
11	WHT/RED	CKFM (CKF SENSOR M SIDE)	Ground for CKF sensor signal.	
12	WHT	CKPM (CKP SENSOR M SIDE)	Ground for CKP sensor signal.	
13	RED	TDCM (TDC SENSOR M SIDE)	Ground for TDC sensor signal.	
14	BLK	CYPM (CKP SENSOR M SIDE)	Ground for CYP sensor signal.	
15*12	BLU/BLK	VTM (VTEC PRESSURE SWITCH)	Detects VTEC pressure switch signal.	With engine at low engine speed: 0 V With engine at high engine speed: battery voltage
16	GRN	PSPSW (P/S OIL PRESSURE SWITCH)	Detects PSP switch signal.	At idle with steering wheel in straight ahead position: 0 V At idle with steering wheel at full lock: battery voltage
17	WHT/RED	ALTF (ALTERNATOR FR SIGNAL)	Detects alternator FR signal.	With fully warmed up engine running: 0 V – battery voltage (depending on electrical load)
18	BLU/WHT	VSS (VEHICLE SPEED SENSOR)	Detects VSS signal.	With ignition switch ON (II) and front wheels rotating: cycles 0 V – 5 V
23*10	BLK	IP+ (HO2S PUMP CELL +)	Controls HO2S pump cell.	With ignition switch ON (II): about 0.5 – 5.3 V
24*10	RED	IP–, VS– (HO2S COMMON)	Reference voltage supply.	With fully warmed up engine at idle: about 2.6 – 2.8 V
25*10	WHT	VS+ (VS CELL VOLTAGE)	Detects VS cell voltage.	With ignition switch ON (II): about 7 V
29	LT GRN*3	ATPNP (A/T GEAR POSITION SWITCH)	Detects A/T gear position switch signal.	In N or P position: 0 V In any other position: battery voltage
	RED*10	CLSW (CLUTCH SWITCH)	Detects clutch switch signal.	With clutch pedal released: about 5 V With clutch pedal depressed: 0 V
30	PNK*3	TMB	Data communication with TCM: ECM control data input	With ignition switch ON (II): pulses

*1: USA model
*2: A/T (D16Y7, D16Y8 engine)
*3: CVT (D16Y5 engine)
*4: A/T and D16Y7 engine
*5: Except A/T and D16Y7 engine
*6: A/T (D16Y8 engine)
*7: CVT (D16Y5 engine) and D16Y8 engine
*8: '96 D16Y8 engine (coupe), '97 D16Y8 engine (coupe: all models, sedan: KL model), '98 D16Y5 engine, '98 D16Y8 engine, '99 – 00 D16Y5 (M/T) engine
*9: D16Y5 engine
*10: M/T (D16Y5 engine)
*11: Except M/T (16Y5 engine)
*12: D16Y5, D16Y8 engine
*13: D16Y8 engine
*14: D16Y7 engine
*15: '97 D16Y7 engine (coupe: KL model, sedan: KL (LX) model), '98D16Y7 engine

ECM/PCM CONNECTOR D (16P)

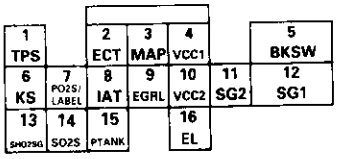

Wire side of female terminals

ECM/PCM CONNECTOR D (16P)

NOTE: Standard battery voltage is 12 V.

Terminal number	Wire color	Terminal name	Description	Signal
1	RED/BLK	TPS (THROTTLE POSITION SENSOR)	Detects TP sensor signal.	With throttle fully open: about 4.8 V With throttle fully closed: about 0.5 V
2	RED/WHT	ECT (ENGINE COOLANT TEMPERATURE SENSOR	Detects ECT sensor signal.	With ignition switch ON(II): about 0.1 – 4.8 V (depending on engine coolant temperature)
3	RED/GRN	MAP (MANIFOLD ABSOLUTE PRESSURE SENSOR)	Detects MAP sensor signal.	With ignition switch ON(II): about 3 V At idle: about 1.0 V (depending on engine speed)
4	YEL/RED	VCC1 (SENSOR VOLTAGE)	Power source for MAP sensor.	With ignition switch ON (II): about 5 V With ignition switch OFF: 0 V
5	GRN/WHT	BKSW (BRAKE SWITCH)	Detects brake switch signal.	With brake pedal released: 0 V With brake pedal depressed: battery voltage
6*7	RED/BLU	KS (KNOCK SENSOR)	Detects KS signal.	With engine knocking: pulses
7	WHT*11	PHO2S (PRIMARY HEATED OXYGEN SENSOR, SENSOR 1)	Detects primary heated oxygen sensor (sensor 1) signal.	With throttle fully opened from idle with fully warmed up engine: above 0.6 V With throttle quickly closed: below 0.4 V
	WHT*10	LABEL	Detects LABEL resistance.	With engine running: about 0.3 – 4.9 V
8	RED/YEL	IAT (INTAKE AIR TEMPERATURE SENSOR)	Detects IAT sensor signal.	With ignition switch ON (II): about 0.1 – 4.8 V (depending on intake air temperature)
9*3	WHT/BLK	EGRL (EGR VALVE LIFT SENSOR)	Detects EGR valve lift sensor signal.	At idle without vacuum: about 1.2 V With 27 kPa (200 mmHg, 8 in. Hg): about 4.3 V
10	YEL/BLU	VCC2 (SENSOR VOLTAGE)	Provides sensor voltage.	With ignition switch ON(II): about 5 V With ignition switch OFF: 0 V
11	GRN/BLK	SG2 (SENSOR GROUND)	Sensor ground.	Less than 1.0 V at all times
12	GRN/WHT	SG1 (SENSOR GROUND)	Ground for MAP sensor.	Less than 1.0 V at all times
13	GRN/BLK*12 RED/YEL*14	SHO2SG (SECONDARY HEATED OXYGEN SENSOR, SENSOR 2 GROUND)	Ground for secondary heated oxygen sensor (sensor 2).	
14	WHT/RED	SHO2S (SECONDARY HEATED OXYGEN SENSOR, SENSOR 2)	Detects secondary heated oxygen sensor (sensor 2) signal.	With throttle fully opened from idle with fully warmed up engine: above 0.6 V With throttle quickly closed: below 0.4 V
15*8, *15	LT GRN	PTANK (FUEL TANK PRESSURE SENSOR)	Detects fuel tank pressure sensor.	With fuel fill cap opened: about 2.5 V
16*1	GRN/RED	EL (ELD)	Detects ELD signal.	With parking lights turned on at idle: about 2.5 – 3.5 V With low beam headlights turned on at idle: about 1.5 – 2.5 V

*1: USA model
*2: A/T (D16Y7, D16Y8 engine)
*3: CVT (D16Y5 engine)
*4: A/T and D16Y7 engine
*5: Except A/T and D16Y7 engine
*6: A/T (D16Y8 engine)
*7: CVT (D16Y5 engine) and D16Y8 engine
*8: '96 D16Y8 engine (coupe), '97 D16Y8 engine (coupe: all models, sedan: KL model), '98 D16Y5 engine, '98 D16Y8 engine, '99 – 00 D16Y5 (M/T) engine
*9: D16Y5 engine
*10: M/T (D16Y5 engine)
*11: Except M/T (D16Y5 engine)
*12: D16Y5, D16Y8 engine
*13: D16Y8 engine
*14: D16Y7 engine
*15: '97 D16Y7 engine (coupe: KL model, sedan: KL (LX) model), '98D16Y7 engine:

(cont'd)

Engine/Powertrain Control Module Terminal Arrangement ('99 – 00 Models except D16Y5 engine with M/T)

ECM/PCM CONNECTOR A (32P)

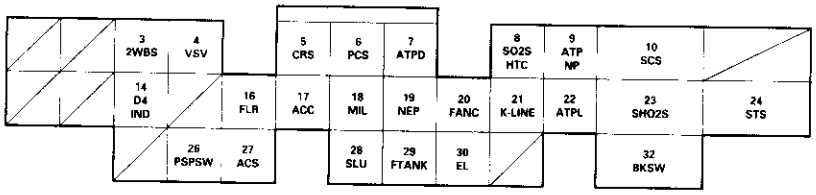

ECM/PCM CONNECTOR A (32P)

Wire side of female terminals

NOTE: Standard battery voltage is 12 V.

Terminal number	Wire color	Terminal name	Description	Signal
3	BLU	2WBS (EVAP BYPASS SOLENOID VALVE)	Drives EVAP bypass solenoid valve.	With ignition switch ON (II): battery voltage
4	LT GRN/WHT	VSV (EVAP CONTROL CANISTER VENT SHUT VALVE)	Drives EVAP control canister vent shut valve.	With ignition switch ON (II): battery voltage
5*1	BLU/GRN	CRS (CRUISE CONTROL SIGNAL)	Down shift signal input from cruise control unit.	When cruise control is used: pulses
6	RED/YEL	PCS (EVAP PURGE CONTROL SOLENOID VALVE)	Drives EVAP purge control solenoid valve.	With engine running, engine coolant, below 154°F (68°C): battery voltage With engine running, engine coolant, above 154°F (68°C): duty controlled
7*3	YEL	ATPD (AT GEAR POSITION SWITCH)	Detects A/T gear position switch signal.	In [O] position: 0 V In other than [O] position: Approx. 5 V
8	BLK/WHT	SO2SHTC (SECONDARY HEATED OXYGEN SENSOR HEATER CONTROL)	Drives secondary heated oxygen sensor heater.	With ignition switch ON (II): battery voltage With fully warmed up engine running: duty controlled
9*3	LT GRN	ATPNP (AT GEAR POSITION SWITCH)	Detects A/T gear position switch signal.	In park or neutral: 0 V In any other position Approx. 5 V
10	BRN	SCS (SERVICE CHECK SIGNAL)	Detects service check connector signal (the signal causing a DTC indication)	With the terminal connected: 0 V With the terminal disconnected: about 5 V or battery voltage
14*1	GRN/BLK	D4IND (D4 INDICATOR)	Drives D4 indicator light.	With D4 indicator light turned ON: 0 V With D4 indicator light turned OFF: battery voltage
16	GRN/YEL	FLR (FUEL PUMP RELAY)	Drives fuel pump relay.	0 V for two seconds after turning ignition switch ON (II), then battery voltage
17	BLK/RED	ACC (A/C CLUTCH RELAY)	Drives A/C clutch relay.	With compressor ON: 0 V With compressor OFF: battery voltage
18	GRN/ORN	MIL (MALFUNCTION INDICATOR LIGHT)	Drives MIL.	With MIL turned ON: 0 V With MIL turned OFF: battery voltage
19	BLU	NEP (ENGINE SPEED PULSE)	Outputs engine speed pulse.	With engine running: pulses
20	GRN	FANC (RADIATOR FAN CONTROL)	Drives radiator fan relay.	With radiator fan running: 0 V With radiator fan stopped: battery voltage
21	BLU/YEL	K-LINE	Sends and receives scan tool signal.	With ignition switch ON (II): pulses
22*3	BLU	ATP L (AT GEAR POSITION SWITCH)	Detects A/T gear position switch signal.	In [L] position: 0 V In other than [L] position: Approx. 5 V
23	WHT/RED	SHO2S (SECONDARY HEATED OXYGEN SENSOR, SENSOR 2)	Detects secondary heated oxygen sensor (sensor 2) signal.	With throttle fully opened from idle with fully warmed up engine: above 0.6 V With throttle quickly closed: below 0.4 V
24	BLU/WHT	STS (STARTER SWITCH SIGNAL)	Detects starter switch signal.	With starter switch ON (III): battery voltage With starter switch OFF: 0 V
26	GRN	PSPSW (P/S PRESSURE SWITCH SIGNAL)	Detects PSP switch signal.	At idle with steering wheel in straight ahead position: 0 V At idle with steering wheel at full lock: battery voltage
27	BLU/RED	ACS (A/C SWITCH SIGNAL)	Detects A/C switch signal.	With A/C switch ON: 0 V With A/C switch OFF: about 5 V
28*1,*3	WHT/RED	SLU (INTERLOCK CONTROL UNIT)	Drives interlock control unit.	With ignition switch ON (II) and brake pedal depressed: battery voltage
29	LT GRN	PTANK (FUEL TANK PRESSURE SENSOR)	Detects fuel tank pressure sensor signal.	With ignition switch ON (II) and fuel fill cap opened: about 2.5 V
30	GRN/RED	EL (ELD)	Detects ELD signal.	With parking lights turned on at idle: about 2.5 – 3.5 V With low beam headlights turned on at idle: about 1.5 – 2.5 V
32	GRN/WHT	BKSW (BRAKE SWITCH)	Detects brake switch signal.	With brake pedal released: 0 V With brake pedal depressed: battery voltage

*1: A/T (D16Y7, D16Y8 engine)
*2: M/T
*3: CVT (D16Y5 engine)

ECM/PCM CONNECTOR B (25P)

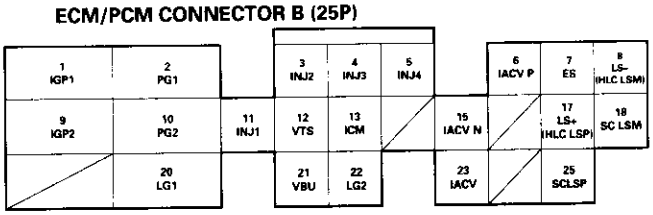

Wire side of female terminals

PCM CONNECTOR B (25P)

NOTE: Standard battery voltage is 12 V.

Terminal number	Wire color	Terminal name	Description	Signal
1	YEL/BLK	IGP1 (POWER SOURCE)	Power source for the ECM/PCM control circuit.	With ignition switch ON (II): battery voltage With ignition switch OFF: 0 V
2	BLK	PG1 (POWER GROUND)	Ground for the ECM/PCM control circuit.	Less than 1.0 V at all times
3	RED	INJ2 (No. 2 FUEL INJECTOR)	Drives No. 2 fuel injector.	With engine running: duty controlled
4	BLU	INJ3 (No. 3 FUEL INJECTOR)	Drives No. 3 fuel injector.	
5	YEL	INJ4 (No. 4 FUEL INJECTOR)	Drives No. 4 fuel injector.	
6	BLK/BLU	IACV P (IDLE AIR CONTROL VALVE POSITIVE SIDE)	Drives IAC valve (positive side).	With engine running: duty controlled
7*3	RED	ESOL (EGR CONTROL SOLENOID VALVE)	Drives EGR control solenoid valve.	With EGR operating during driving with fully warmed up engine: duty controlled With EGR not operating: 0 V
8*3	PNK/BLK	HLC LSM (PH-PL CONTROL LINEAR SOLENOID NEGATIVE SIDE)	Ground for PH-PL control linear solenoid	
8*1	WHT	LS – (A/T CLUTCH PRESSURE CONTROL SOLENOID VALVE – SIDE)	A/T clutch pressure control solenoid valve power supply negative electrode.	With ignition switch ON (II): duty controlled
9	YEL/BLK	IGP2 (POWER SOURCE)	Power source for the ECM/PCM control circuit.	With ignition switch ON (II): battery voltage With ignition switch OFF: 0 V
10	BLK	PG2 (POWER GROUND)	Ground for the ECM/PCM control circuit.	Less than at all times
11	BRN	INJ1 (No. 1 FUEL INJECTOR)	Drives No. 1 fuel injector.	With engine running: duty controlled
12*4	GRN/YEL	VTS (VTEC SOLENOID VALVE)	Drives VTEC solenoid valve.	With engine at low rpm: 0 V With engine at high rpm: battery voltage
13	YEL/GRN	ICM (IGNITION CONTROL MODULE)	Sends ignition pulse.	With ignition switch ON (II): battery voltage With engine running: pulses
15	ORN	IACV N (IDLE AIR CONTROL VALVE NEGATIVE SIDE)	Drives the IAC valve (negative side).	With engine running: duty controlled
17*1	RED	LS + (A/T CLUTCH PRESSURE CONTROL SOLENOID VALVE + SIDE)	A/T clutch pressure control solenoid valve power supply positive electrode	With ignition switch ON (II): duty controlled
17*3	GRN/WHT	HLC LSP (PH-PL CONTROL LINEAR SOLENOID POSITIVE SIDE)	Drives PH-PL control linear solenoid	With ignition switch ON (II): Pulsing signal
18*3	PNK/BLU	SC LSM (START CLUTCH LINEAR SOLENOID NEGATIVE SIDE)	Ground for start clutch control linear solenoid	
20	BRN/BLK	LG1 (LOGIC GROUND)	Ground for the ECM/PCM control circuit.	Less than 1.0 V at all times
21	WHT/BLU	VBU (VOLTAGE BACK UP)	Power source for the ECM/PCM control circuit. Power source for the DTC memory.	Battery voltage at this times
22	BRN/BLK	LG2 (LOGIC GROUND)	Ground for the ECM/PCM control circuit.	Less than 1.0 V at all times
23	BLK/BLU	IACV (IDLE AIR CONTROL VALVE)	Drives IAC valve.	With engine running: duty controlled
25*3	YEL	SC LSP (START CLUTCH LINEAR SOLENOID POSITIVE SIDE)	Drives start clutch control linear solenoid.	With ignition switch ON (II): Pulsing signal

*1: A/T (D16Y7, D16Y8 engine)
*2: M/T
*3: CVT (D16Y5 engine)
*4: D16Y5, D16Y8, B16A2 engine

(cont'd)

Engine/Powertrain Control Module Terminal Arrangement ('99 – 00 Models except D16Y5 engine with M/T) (cont'd)

ECM/PCM CONNECTOR C (31P)

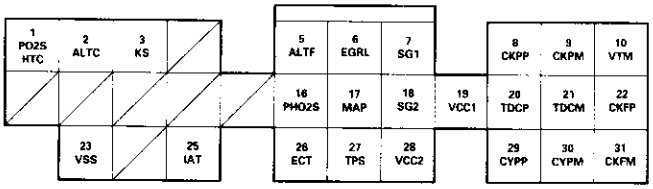

ECM/PCM CONNECTOR C (31P) Wire side of female terminals

NOTE: Standard battery voltage is 12 V.

Terminal number	Wire color	Terminal name	Description	Signal
1	BLK/WHT	PO2SHTC (PRIMARY HEATED OXYGEN SENSOR HEATER CONTROL)	Drives primary heated oxygen sensor heater.	With ignition switch ON (II): battery voltage With fully warmed up engine running: duty controlled
2	WHT/GRN	ALTC (ALTERNATOR CONTROL)	Sends alternator control signal.	With fully warmed – up engine running: battery voltage During driving with small electrical load: 0 V
3	RED/BLU	KS (KNOCK SENSOR)	Detects KS signal.	With engine knocking: pulses
5	WHT/RED	ALTF (ALTERNATOR FR SIGNAL)	Detects alternator FR signal.	With fully warmed up engine running: 0 V – battery voltage (depending on electrical load)
6*3	WHT/BLK	EGRL (EGR VALVE LIFT SENSOR)	Detects EGR valve lift sensor signal.	At idle: about 1.2 V
7	GRN/WHT	SG1 (SENSOR GROUND)	Ground for MAP sensor.	Less than 1.0 V at all times
8	BLU	CKPP (CKP SENSOR P SIDE)	Detects CKP sensor.	With engine running: pulses
9	WHT	CKPM (CKP SENSOR M SIDE)	Ground for CKP sensor.	
10*4	BLU/BLK	VTM (VTEC PRESSURE SWITCH SIGNAL)	Detects VTEC pressure switch signal.	With engine at low engine speed: 0 V With engine at high engine speed : battery voltage
16	WHT	PHO2S (PRIMARY HEATED OXYGEN SENSOR, SENSOR 1)	Detects primary heated oxygen sensor (sensor 1) signal.	With throttle fully opened from idle with fully, warmed up engine: above 0.6 V With throttle quickly closed: below 0.4 V
17	RED/GRN	MAP (MANIFOLD ABSOLUTE PRESSURE SENSOR)	Detects MAP sensor signal.	With ignition switch ON (II): about 3 V At idle: about 1.0 V (depending on engine speed)
18	GRN/BLK	SG2 (SENSOR GROUND)	Sensor ground.	Less than 1.0 V at all times
19	YEL/RED	VCC1 (SENSOR VOLTAGE)	Power source to MAP sensor.	With ignition switch ON (II): about 5 V With ignition switch OFF: 0 V
20	GRN	TDCP (TDC SENSOR P SIDE)	Detects TDC sensor.	With engine running: pulses
21	RED	TDCM (TDC SENSOR M SIDE)	Ground for TDC sensor.	
22	BLU/RED	CKFP (CKF SENSOR P SIDE)	Detects CKF sensor.	With engine running: pulses
23	BLU/WHT	VSS (VEHICLE SPEED SENSOR)	Detects VSS signal.	With ignition switch ON (II) and front wheel rotating: cycles 0 V – about 5 V or battery voltage
25	RED/YEL	IAT (INTAKE AIR TEMPERATURE SENSOR)	Detects IAT sensor signal.	With ignition switch ON (II): about 0.1 – 4.8 V (depending on intake air temperature)
26	RED/WHT	ECT (ENGINE COOLANT TEMPERATURE SENSOR)	Detects ECT sensor signal.	With ignition switch ON (II): about 0.1 – 4.8 V (depending on engine coolant temperature)
27	RED/BLK	TPS (THROTTLE POSITION SENSOR)	Detects TP sensor signal.	With throttle fully open: about 4.8 V With throttle fully closed: about 0.5 V
28	YEL/BLU	VCC2 (SENSOR VOLTAGE)	Provides sensor voltage.	With ignition switch ON (II): about 5 V With ignition switch OFF: 0 V
29	YEL	CYPP (CYP SENSOR P SIDE)	Detects CYP sensor.	With engine running: pluses
30	BLK	CYPM (CYP SENSOR M SIDE)	Ground for CYP sensor.	
31	WHT/RED	CKFM (CKF SENSOR M SIDE)	Ground for CKF sensor signal.	

*1: A/T (D16Y7, D16Y8 engine)
*2: M/T
*3: CVT (D16Y5 engine)
*4: D16Y5, D16Y8, B16A2 engine

ECM/PCM CONNECTOR D (16P)

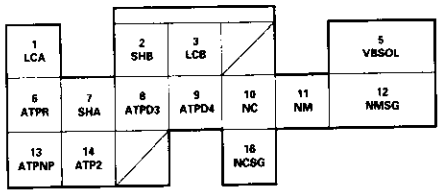

Wire side of female terminals

ECM/PCM CONNECTOR D (16P) (D16Y7, D16Y8 engine)

NOTE: Standard battery voltage is 12 V.

Terminal number	Wire color	Terminal name	Description	Signal
1*1	YEL	LCA (LOCK-UP CONTROL SOLENOID VALVE A)	Drives look-up control solenoid valve A.	With lock-up ON: battery voltage With lock-up OFF: 0 V
2*1	GRN/WHT	SHB (SHIFT CONTROL SOLENOID VALVE B)	Drives shift control solenoid valve B.	In 2 position, in 1st and 2nd gear in D4, D3 position: Battery voltage In 1 position, in 3rd gear in D4, D3 in 4th gear in D4 position: 0 V
3*1	GRN/BLK	LCB (LOCK UP CONTROL SOLENOID VALVE B)	Drives lock-up control solenoid valve B.	When full lock-up: Battery voltage With half lock-up: Pulsing signal
5*1	BLK/YEL	VBSOL (BATTERY VOLTAGE FOR SOLENOID VALVE)	Power source of solenoid valve.	With ignition switch ON (II): battery voltage With ignition switch OFF: 0 V
6*1	WHT	ATPR (AT GEAR POSITION SWITCH)	Detects A/T gear position switch signal.	In R position: 0 V In any other position: Approx. 10 V
7*1	BLU/YEL	SHA (SHIFT CONTROL SOLENOID VALVE A)	Drives shift control solenoid valve A.	In 1, 2 position, in 2nd and 3rd gear in D4, D3 position: Battery voltage In 1st gear in D4, D3 position, in 4th gear in D4 position: 0 V
8*1	PNK	ATPD3 (AT GEAR POSITION SWITCH)	Detects A/T gear position switch signal.	In D3 position: 0 V In any other position: Approx. 10 V
9*1	YEL	ATPD4 (AT GEAR POSITION SWITCH)	Detects A/T gear position switch signal.	In D4 position: 0 V In any other position: Approx. 5 V
10*1	BLU	NC (COUNTERSHAFT SPEED SENSOR)	Detects countershaft speed sensor signals.	Depending on vehicle speed: Pulsing signal When vehicle is stopped: 0 V
11*1	RED	NM (MAINSHAFT SPEED SENSOR)	Detects mainshaft speed sensor signals.	With engine running: pulses
12*1	WHT	NMSG (MAINSHAFT SPEED SENSOR GROUND)	Ground for mainshaft speed sensor.	
13*1	LT GRN	ATPNP (AT GEAR POSITION SWITCH)	Detects A/T gear position switch signal.	In park or neutral: 0 V In any other position: Approx. 10 V
14*1	BLU	ATP2 (AT GEAR POSITION SWITCH)	Detects A/T gear position switch signal.	In 2nd position: 0 V In any other position: Approx. 10 V
16*1	GRN	NCSG (COUNTERSHAFT SPEED SENSOR GROUND)	Ground for countershaft speed sensor.	

*1: A/T (D16Y7, D16Y8 engine)
*2: M/T

(cont'd)

Engine/Powertrain Control Module Terminal Arrangement ('99 – 00 Models except D16Y5 engine with M/T) (cont'd)

ECM/PCM Connector D (16P)

ECM/PCM CONNECTOR D (16P)

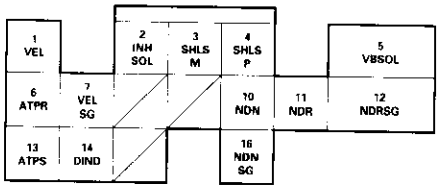

Wire side of female terminals

ECM/PCM CONNECTOR D (16P) (D16Y5 engine: CVT)

NOTE: Standard battery voltage is 12 V.

Terminal number	Wire color	Terminal name	Description	Signal
1*3	WHT/RED	VEL (SECONDARY GEAR SHAFT SPEED SENSOR)	Secondary gear shaft speed sensor.	Depending on vehicle speed: pulses When vehicle is stopped: 0 V
2*3	GRN/BLK	INHSOL (INHIBITOR SOLENOID CONTROL)	Inhibitor solenoid control.	With inhibitor solenoid ON: battery voltage With inhibitor solenoid OFF: 0 V
3*3	GRN/YEL	SHLSM (SHIFT CONTROL LINEAR SOLENOID NEGATIVE SIDE)	Ground for shift control linear solenoid.	
4*3	BLU/WHT	SHLSP (SHIFT CONTROL LINEAR SOLENOID POSITIVE SIDE)	Drives shift control linear solenoid power.	With ignition switch ON (II): pulses
5*3	BLK/YEL	VBSOL (BATTERY VOLTAGE FOR SOLENOID VALVE)	Power source of solenoid valve.	With ignition switch ON (II): battery voltage With ignition switch OFF: 0 V
6*3	WHT	ATPR (AT GEAR POSITION SWITCH)	Detects A/T gear position switch signal.	In R position: 0 V In any other position: Approx. 10 V
7*3	BLK/WHT	VELSG (SECONDARY GEAR SHAFT SPEED SENSOR GROUND)	Ground for secondary gear shaft speed sensor.	
10*3	WHT	NDN (DRIVEN PULLEY SPEED SENSOR)	Detects driven pulley speed sensor signal.	In other than Park or neutral: pulses
11*3	RED/BLU	NDR (DRIVE PULLEY SPEED SENSOR)	Detects drive pulley speed sensor signal.	In other than Park or neutral: pulses
12*3	GRN	NDRSG (DRIVE PULLEY SPEED SENSOR GROUND)	Ground for drive pulley speed sensor.	
13*3	LT GRN/RED	ATPS (AT GEAR POSITION SWITCH)	Detects A/T gear position switch signal.	In S position: 0 V In any other position: Approx. 10 V
14*3	GRN/BLK	DIND (D INDICATOR LIGHT)	Drives D indicator.	With D indicator turned ON: 5 V With D indicator turned OFF: 0 V
16*3	RED/WHT	NDNSG (DRIVEN PULLEY SPEED SENSOR GROUND)	Ground for driven pulley speed sensor.	

*3: CVT (D16Y5 engine)

Diagnostic Trouble Code (DTC) Chart

DTC (MIL indication*)	Detection Item	Probable Cause	Page
P0106*15 (5)	Manifold Absolute Pressure Circuit Range/Performance Problem	• Vacuum connection • MAP sensor	11-115
P0107 (3)	Manifold Absolute Pressure Circuit Low Input	• Open or short in MAP sensor circuit • MAP sensor • ECM/PCM • TCM*1	11-117
P0108 (3)	Manifold Absolute Pressure Circuit High Input	• Open in MAP sensor circuit • MAP sensor • ECM/PCM	11-121
P0111*14, *15 (10)	Intake Air Temperature Circuit Range/Performance Problem	• IAT sensor	11-124
P0112 (10)	Intake Air Temperature Circuit Low Input	• Short in IAT sensor circuit • IAT sensor • ECM/PCM	11-125
P0113 (10)	Intake Air Temperature Circuit High Input	• Open in IAT sensor circuit • IAT sensor • ECM/PCM	11-126
P0116 (86)	Engine Coolant Temperature Circuit Range/Performance Problem	• ECT sensor • Cooling system	11-128
P0117 (6)	Engine Coolant Temperature Circuit Low Input	• Short in ECT sensor circuit • ECT sensor • ECM/PCM	11-129
P0118 (6)	Engine Coolant Temperature Circuit High Input	• Open in ECT sensor circuit • ECT sensor • ECM/PCM	11-130
P0122 (7)	Throttle Position Circuit Low Input	• Open or short in TP sensor circuit • TP sensor • ECM/PCM • TCM*1	11-132
P0123 (7)	Throttle Position Circuit High Input	• Open in TP sensor circuit • TP sensor • ECM/PCM	11-136
P0131*2 (1)	Primary Heated Oxygen Sensor Circuit Low Voltage (Sensor 1)	• Short in Primary HO2S (Sensor1) circuit • Primary HO2S (Sensor 1) • Fuel supply system • ECM/PCM	11-139
P0132*2 (1)	Primary Heated Oxygen Sensor Circuit High Voltage (Sensor 1)	• Open in Primary HO2S (Sensor 1) circuit • Primary HO2S (Sensor 1) • ECM/PCM	11-143
P0133*2 (61)	Primary Heated Oxygen Sensor Slow Response (Sensor 1)	• Primary HO2S (Sensor1) • Exhaust system	11-145
P0135*2 (41)	Primary Heated Oxygen Sensor Heater Circuit Malfunction (Sensor 1)	• Open or short in Primary HO2S (Sensor 1) heater circuit • ECM	11-157

*: The DTCs in parenthesis will be indicated by the blinking of the Malfunction Indicator Lamp (MIL) when the SCS service connector is connected

*1: D16Y5 engine (CVT)

*2: Except D16Y5 engine (M/T)

*14: '97 model

*15: '96 model

*16: '98 model

(cont'd)

Diagnostic Trouble Code (DTC) Chart (cont'd)

DTC (MIL indication)	Detection Item	Probable Cause	Page
P0137 (63)	Secondary Heated Oxygen Sensor Circuit Low Voltage (Sensor 2)	• Short in Secondary HO2S (Sensor 2) circuit • Secondary HO2S (Sensor 2) • ECM/PCM	11-153
P0138 (63)	Secondary Heated Oxygen Sensor Circuit High Voltage (Sensor 2)	• Open in Secondary HO2S (Sensor 2) circuit • Secondary HO2S (Sensor 2) • ECM/PCM	11-154
P0139 (63)	Secondary Heated Oxygen Sensor Slow Response (Sensor 2)	• Secondary HO2S (Sensor 2)	11-156
P0141 (65)	Secondary Heated Oxygen Sensor Heater Circuit Malfunction (Sensor 2)	• Open or short in Secondary HO2S (Sensor 2) heater circuit • ECM/PCM	11-157
P0171 (45)	System Too Lean	• Fuel supply system • Primary HO2S (Sensor 1) • MAP sensor • Contaminated fuel • Valve clearance • Exhaust leakage	11-164
P0172 (45)	System Too Rich	• Fuel supply system • Primary HO2S (sensor 1) • MAP sensor • Contaminated fuel • Valve clearance	11-164
P0300*16, *17 and some of P0301 (71) P0302 (72) P0303 (73) P0304 (74)	Random Misfire	• Ignition system • Fuel supply system • MAP sensor • EGR system • IAC valve • Contaminated fuel • Lack of fuel	11-166
P0301 (71) P0302 (72) P0303 (73) P0304 (74)	— Cylinder 1 — Cylinder 2 — Cylinder 3 — Cylinder 4 Misfire Detected	• Fuel Injector • Fuel Injector circuit • Ignition system • Low compression • Valve clearance	11-167
P0325*3 (23)	Knock Sensor (KS) Circuit Malfunction	• Open or short in Knock Sensor (KS) circuit • Knock Sensor (KS) • ECM/PCM	11-170
P0335 (4)	Crankshaft Position Sensor Circuit Malfunction	• Crankshaft Position Sensor • Crankshaft Position Sensor circuit • ECM/PCM	11-172
P0336 (4)	Crankshaft Position Sensor Range/Performance	• Crankshaft Position Sensor • Timing belt skipped teeth	11-172
P0401*4 (80)	Exhaust Gas Recirculation Insufficient Flow Detected	• EGR valve • EGR line	11-255
P0420 (67)	Catalyst System Efficiency Below Threshold	• Three Way Catalytic converter • Secondary HO2S	11-253

*3: D16Y5 engine (CVT), D16Y8 engine and B16A2 engine
*4: D16Y5 engine
*16: '98 model
*17: '99 – 00 models

DTC (MIL indication)	Detection Item	Probable Cause	Page
P0441*5 (92)	Evaporative Emission Control System Insufficient Purge Flow	• EVAP Purge Control Solenoid Valve • Open or short in EVAP Purge Control Solenoid Valve circuit • EVAP Control Canister • Vacuum lines • ECM/PCM	11-271
P0451*17 (91)	Fuel Tank Pressure Sensor Circuit Range/Parformance	• Fuel Tank Pressure Sensor • ECM/PCM	11-274
P0452*6 (91)	Fuel Tank Pressure Sensor Circuit Low Input	• Short in Fuel Tank Pressure Sensor circuit • Fuel Tank Pressure Sensor • ECM/PCM	11-275
P0453*6 (91)	Fuel Tank Pressure Sensor Circuit High Input	• Open in Fuel Tank Pressure Sensor circuit • Fuel Tank Pressure Sensor • ECM/PCM	11-279
P0500*12 (17)	Vehicle Speed Sensor Circuit Malfunction	• Vehicle Speed Sensor • Vehicle Speed Sensor circuit • ECM	11-176
P0501*13 (17)	Vehicle Speed Sensor Circuit Range/Performance	• Vehicle Speed Sensor • Vehicle Speed Sensor circuit • PCM	11-176
P0505 (14)	Idle Control System Malfunction	• IAC valve • Throttle Body	11-192
P0700*13 and some of P0715 P0720 P0730 P0740 P0753 P0758 (70)*	Automatic Transaxle	——	Section 14
P0700*1 and P0725 (70)*	Automatic Transaxle	——	Section 14
P1106*14, *16, *17 (13)	Barometric Pressure Circuit Range/Performance Problem	• ECM/PCM (Baro sensor)	11-178
P1107 (13)	Barometric Pressure Circuit Low Input	• ECM/PCM (Baro sensor)	11-178
P1108 (13)	Barometric Pressure Circuit High Input	• ECM/PCM (Baro sensor)	11-178
P1121*14, *16, *17 (7)	Throttle Position Lower Than Expected	• TP sensor	11-138
P1122*14, *16, *17 (7)	Throttle Position Higher Than Expected	• TP sensor	11-138
P1128*14, *16, *17 (5)	Manifold Absolute Pressure Lower Than Expected	• MAP sensor	11-123
P1129*14, *16, *17 (5)	Manifold Absolute Pressure Higher Than Expected	• MAP sensor	11-123

*: The D4 indicator light and the Malfunction Indicator Lamp (MIL) may come on simultaneously.
*1: D16Y5 engine (CVT)
*5: '96 D16Y5 engine, D16Y7 engine, D16Y8 engine (sedan), '97 D16Y5 engine, D16Y7 engine (coupe: KA, KC models, sedan: KA, KC, KL (DX) models, hatchback: all models), D16Y8 engine (sedan: KA, KC models)
*6: '96 D16Y8 engine (coupe), '97 D16Y7 engine (coupe: KL model, sedan: KL (LX) model), '97 D16Y8 engine (coupe: all models, sedan: KL model), '98-all models, '99-all models, '00-all models
*12: Except A/T (D16Y7, D16Y8 engine)
*13: A/T (D16Y7, D16Y8 engine)
*14: '97 model
*16: '98 model
*17: '99 – 00 models

(cont'd)

Diagnostic Trouble Code (DTC) Chart (cont'd)

DTC (MIL indication)	Detection Item	Probable Cause	Page
P1162*7 (48)	Primary Heated Oxygen Sensor (Sensor 1) Circuit Malfunction	• Open or short in Primary HO2S (Sensor 1) • Primary HO2S (Sensor 1)	11-146
P1163*7 (61)	Primary Heated Oxygen Sensor (Sensor 1) Circuit Slow Response	• Primary HO2S (Sensor 1)	11-145
P1164*7 (61)	Primary Heated Oxygen Sensor (Sensor 1) Circuit Range/ Performance Problem	• Primary HO2S (Sensor 1)	11-150
P1165*7 (61)	Primary Heated Oxygen Sensor (Sensor 1) Circuit Range/ Performance Problem	• Primary HO2S (Sensor 1)	11-150
P1166*7 (41)	Primary Heated Oxygen Sensor (Sensor 1) Heater System Electrical Problem	• Open or short in Primary HO2S (Sensor 1) heater circuit • Primary HO2S (Sensor 1) • ECM/PCM	11-161
P1167*7 (41)	Primary Heated Oxygen Sensor (Sensor 1) Heater System Malfunction	• Open in Primary HO2S (Sensor 1) VS+ circuit • Primary HO2S (Sensor 1) Heater • Primary HO2S (Sensor 1)	11-163
P1168*7 (48)	Primary Heated Oxygen Sensor (Sensor 1) LABEL Low Input	• Short in Primary HO2S (Sensor 1) LABEL circuit	11-151
P1169*7 (48)	Primary Heated Oxygen Sensor (Sensor 1) LABEL High Input	• Open in Primary HO2S (Sensor 1) LABEL circuit • Short in ground circuit	11-152
P1259*8 (22)	VTEC System Malfunction	• VTEC Solenoid Valve • Open or short in VTEC Solenoid Valve circuit • VTEC Pressure Switch • Open or short in VTEC Pressure Switch circuit • ECM/PCM	Section 6
P1297*9 (20)	Electrical Load Detector Circuit Low Input	• Electrical Load Detector • Electrical Load Detector circuit • ECM/PCM	11-179
P1298*9 (20)	Electrical Load Detector Circuit High Input	• Electrical Load Detector • Electrical Load Detector circuit • ECM/PCM	11-181
P1300 *14, *15 and some of P0301 (71) P0302 (72) P0303 (73) P0304 (74)	Random Misfire	• Ignition system • Fuel supply system • MAP sensor • EGR system • IAC valve • Contaminated fuel • Lack of fuel	11-166

*7: D16Y5 engine (M/T)
*8: D16Y5, D16Y8 engine
*9: USA model
*14: '97 model
*15: '96 model

DTC (MIL indication)	Detection Item	Probable Cause	Page
P1336 (54)	Crankshaft Speed Fluctuation Sensor Intermittent Interruption	• CKF sensor	11-183
P1337 (54)	Crankshaft Speed Fluctuation Sensor No Signal	• CKF sensor • CKF sensor circuit • ECM/PCM	11-183
P1359 (8)	Crankshaft Position/Top Dead Center Sensor Disconnected	• CKP/TDC sensor circuit	11-187
P1361 (8)	Top Dead Center Sensor Intermittent Interruption	• TDC sensor	11-172
P1362 (8)	Top Dead Center Sensor No Signal	• TDC sensor • TDC sensor circuit • ECM/PCM	11-172
P1381 (9)	Cylinder Position Sensor Intermittent Interruption	• CYP sensor	11-172
P1382 (9)	Cylinder Position Sensor No Signal	• CYP sensor • CYP sensor circuit • ECM/PCM	11-172
P1456*6 (90)	Evaporative Emission Control System Leak Detected (Fuel Tank Area)	• Fuel fill cap • Vacuum connection • Fuel tank • Fuel tank pressure sensor • EVAP bypass solenoid valve • EVAP two way valve • EVAP control canister vent shut valve • EVAP control canister • EVAP purge control solenoid valve	11-283
P1457*6 (90)	Evaporative Emission Control System Leak Detected (EVAP Control Canister Area)	• Vacuum connection • EVAP control canister • Fuel tank pressure sensor • EVAP bypass solenoid valve • EVAP two way valve • EVAP control canister vent shut valve • Fuel Tank • EVAP purge control solenoid valve	11-283

*6: '96 D16Y8 engine (coupe), '97 D16Y7 engine (coupe: KL model, sedan: KL (LX) model), '97 D16Y8 engine (coupe: all models, sedan: KL model), '98-all models, '99-all models, '00-all models.

(cont'd)

Diagnostic Trouble Code (DTC) Chart (cont'd)

DTC (MIL indication)	Detection Item	Probable Cause	Page
P1491*4 (12)	EGR Valve Lift Insufficient Detected	• EGR valve (with lift sensor) • EGR valve lift sensor circuit • EGR control solenoid valve (A/T) • EGR control solenoid valve circuit • EGR line • EGR valve circuit (M/T) • ECM	11-256
P1498*4 (12)	EGR Valve Lift Sensor High Voltage	• EGR valve (with lift sensor) • EGR valve lift sensor circuit • ECM	11-265
P1508*10 (14)	Idle Air Control Valve Circuit Failure	• IAC valve • IAC valve circuit • ECM	11-194
P1509*11 (14)	Idle Air Control Valve Circuit Failure	• Open or short in IAC valve circuit • IAC valve • ECM/PCM	11-198
P1607 (–)	Engine Control Module/Powertrain Control Module Internal Circuit Failure A	• ECM/PCM	11-188
P1655*1 (30)	TMA/TMB Signal Line Failure	• Open or short in TMA/TMB circuit	11-189
P1705 P1706 P1753 P1758 P1768 P1785 P1790 P1791 P1793 (70)* P1870 P1873 P1879 P1885 P1886 P1888 P1890 P1891	Automatic Transaxle	——	Section 14

*: The D4 indicator light and the Malfunction Indicator Lamp (MIL) may come on simultaneously.
*4: D16Y5 engine (M/T)
*10: Except A/T and D16Y7 engine
*11: A/T and D16Y7 engine
*18: D16Y5 engine (CVT) (except '99 – 00 models)

How to Read Flowcharts

A flowchart is designed to be used from start to final repair. It's like a map showing you the shortest distance. But beware: If you go off the "map" anywhere but a "stop" symbol, you can easily get lost.

START (bold type)	Describes the conditions or situation to start a troubleshooting flowchart.
ACTION	Asks you to do something; perform a test, set up a condition etc.
DECISION	Asks you about the result of an action, then sends you in the appropriate troubleshooting direction.
STOP (bold type)	The end of a series of actions and decisions, describes a final repair action and sometimes directs you to an earlier part of the flowchart to confirm your repair.

NOTE:

- The term "Intermittent Failure" is used in these charts. It simply means a system may have had a failure, but it checks out OK at this time. If the Malfunction Indicator Lamp (MIL) on the dash does not come on, check for poor connections or loose wires at all connectors related to the circuit that you are troubleshooting (see illustration below).
- Most of the troubleshooting flowcharts have you reset the Engine Control Module (ECM)/Powertrain Control Module (PCM) and try to duplicate the Diagnostic Trouble Code (DTC). If the problem is intermittent and you can't duplicate the code, do not continue though the flowchart. To do so will only result in confusion and, possibly, a needlessly replaced ECM/PCM.
- "Open" and "Short" are common electrical terms. An open is a break in a wire or at a connection. A short is an accidental connection of a wire to ground or to another wire. In simple electronics, this usually means something won't work at all. In complex electronics (like ECM's/PCM's), this can sometimes mean something works, but not the way it's supposed to.

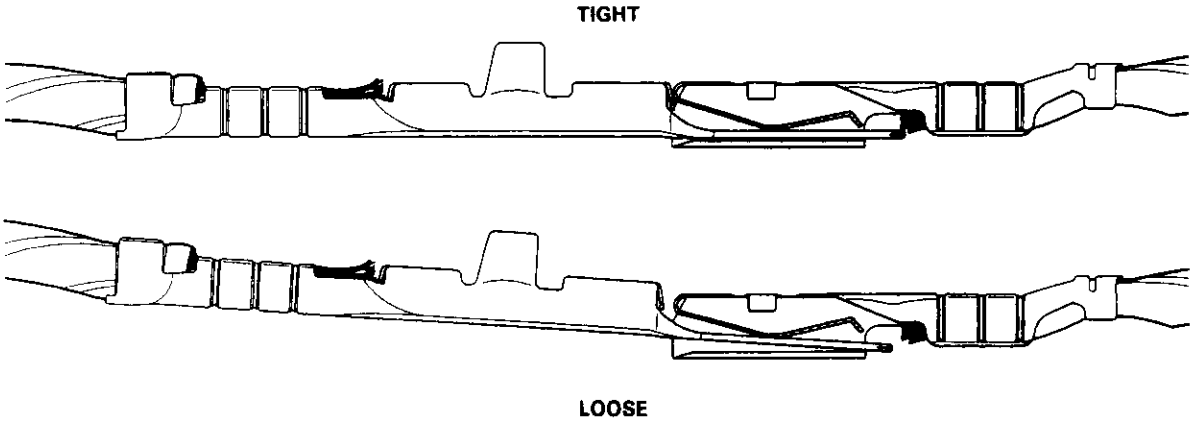

System Description

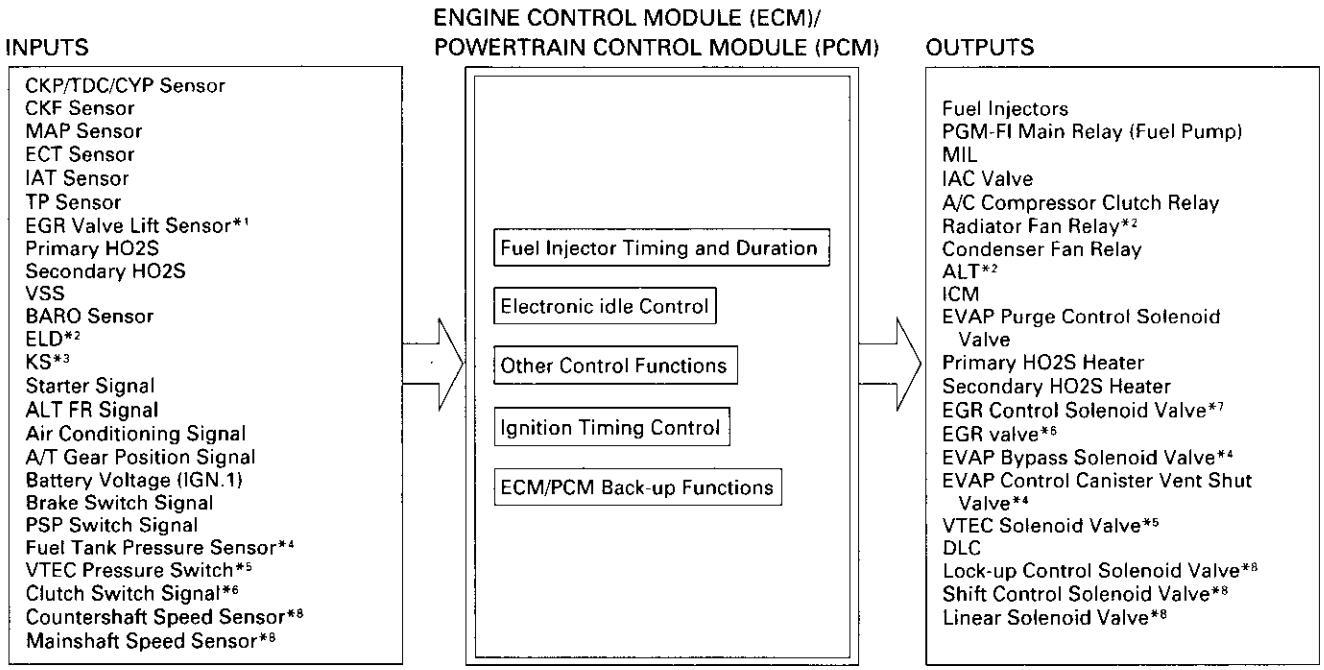

*1: D16Y5 engine
*2: USA model
*3: CVT (D16Y5 engine), D16Y8 engine and B16A2 engine
*4: '96 D16Y8 engine (coupe), '97 D16Y7 engine (coupe: KL model, sedan: KL (LX) model), '97 D16Y8 engine (coupe: all models, sedan: KL model), '98-all models, '99-all models, '00-all models
*5: D16Y5, D16Y8, B16A2 engine
*6: M/T (D16Y5 engine)
*7: CVT (D16Y5 engine)
*8: A/T (D16Y7, D16Y8 engine)
*9: '96 D16Y5 engine, '96 D16Y7 engine, '96 D16Y8 engine (sedan), '97 D16Y5 engine, '97 D16Y7 engine (coupe: KA, KC models, sedan: KA, KC, KL (LX) models, hatchback: all models), '97 D16Y8 engine (sedan: KA, KC models)

PGM-FI System

The PGM-FI system on this model is a sequential multiport fuel injection system.

Fuel injector Timing and Duration

The ECM/PCM contains memories for the basic discharge durations at various engine speeds and manifold air flow rates. The basic discharge duration, after being read out from the memory, is further modified by signals sent from various sensors to obtain the final discharge duration.

Idle Air Control

Idle Air Control Valve (IAC Valve)

When the engine is cold, the A/C compressor is on, the transmission is in gear, the brake pedal is depressed, the P/S load is high, or the alternator is charging, the ECM/PCM controls current to the IAC Valve to maintain the correct idle speed.

Ignition Timing Control

- The ECM/PCM contains memories for basic ignition timing at various engine speeds and manifold air flow rates. Ignition timing is also adjusted for engine coolant temperature.
- A knock control system was adopted which sets the ideal ignition timing for the octane rating of the gasoline used.*3

Other Control Functions

1. Starting Control
   When the engine is started, the ECM/PCM provides a rich mixture by increasing fuel injector duration.
2. Fuel Pump Control
   - When the ignition switch is initially turned on, the ECM/PCM supplies ground to the PGM-FI main relay that supplies current to the fuel pump for two seconds to pressurize the fuel system.
   - When the engine is running, the ECM/PCM supplies ground to the PGM-FI main relay that supplies current to the fuel pump.
   - When the engine is not running and the ignition is on, the ECM/PCM cuts ground to the PGM-FI main relay which cuts current to the fuel pump.

3. Fuel Cut-off Control
   - During deceleration with the throttle valve closed, current to the fuel injectors is cut off to improve fuel economy at speeds over the following rpm:
     - D16Y5 engine (M/T): 850 rpm
     - D16Y5 engine (CVT), D16Y8 engine (USA M/T): 920 rpm
     - D16Y8 engine (USA A/T), D16Y7 engine (USA A/T): 910 rpm
     - D16Y8 engine (Canada M/T), D16Y7 engine (Canada): 990 rpm
     - D16Y8 engine (Canada M/T): 1,000 rpm
     - B16A2 engine: 970 rpm
   - Fuel cut-off action also takes place when engine speed exceeds 6,900 rpm (D16Y5, D16Y7 engine; D16Y8 engine: 7,000 rpm, B16A2 engine: 8,100 rpm), regardless of the position of the throttle valve, to protect the engine from over-revving. With '99 D16Y7 engine (A/T) and '99 D16Y8 engine (A/T), the PCM cuts the fuel at engine speeds over 5,000 rpm when the vehicle is not moving.
4. A/C Compressor Clutch Relay
   When the ECM/PCM receives a demand for cooling from the air conditioning system, it delays the compressor from being energized, and enriches the mixture to assure smooth transition to the A/C mode.
5. Evaporative Emission (EVAP) Purge Control Solenoid Valve*[9]
   When the engine coolant temperature is above 154°F (68°C), the ECM/PCM controls the EVAP purge control solenoid valve which controls vacuum to the EVAP purge control canister.
   Evaporative Emission (EVAP) Purge Control Solenoid Valve*[4]
   When the engine coolant temperature above 154°F (68°C), intake air temperature above 32°F (0°C) and vehicle speed above 0 mile (0 km/h) or [A/C compressor clutch on and intake air temperature above 160°F (41°C)], the ECM/PCM controls the EVAP purge control solenoid valve which controls vacuum to the EVAP purge control canister.
6. Exhaust Gas Recirculation (EGR) Control Solenoid Valve*[7]
   When EGR is required for control of oxides of nitrogen (NOx) emissions, the ECM controls the EGR control solenoid valve which supplies regulated vacuum to the EGR valve.
7. Alternator Control
   The system controls the voltage generated at the alternator in accordance with the electrical load and driving mode, which reduces the engine load to improve the fuel economy.

ECM/PCM Fail-safe/Back-up Functions

1. Fail-safe Function
   When an abnormality occurs in a signal from a sensor, the ECM/PCM ignores that signal and assumes a pre-programmed value for that sensor that allows the engine to continue to run.
2. Back-up Function
   When an abnormality occurs in the ECM/PCM itself, the fuel injectors are controlled by a back-up circuit independent of the system in order to permit minimal driving.
3. Self-diagnosis Function [Malfunction Indicator Lamp (MIL)]
   When an abnormality occurs in a signal from a sensor, the ECM/PCM supplies ground for the MIL and stores the DTC in erasable memory. When the ignition is initially turned on, the ECM/PCM supplies ground for the MIL for two seconds to check the MIL bulb condition.
4. Two Trip Detection Method
   To prevent false indications, the Two Trip Detection Method is used for the HO2S, fuel metering-related, idle control system, ECT sensor, EGR system and EVAP control system self-diagnostic functions. When an abnormality occurs, the ECM/PCM stores it in its memory. When the same abnormality recurs after the ignition switch is turned OFF and ON (II) again, the ECM/PCM informs the driver by lighting the MIL. However, to ease troubleshooting, this function is cancelled when you jump the service check connector. The MIL will then blink immediately when an abnormality occurs.
5. Two (or Three) Driving Cycle Detection Method
   A "Driving Cycle" consists of starting the engine, beginning closed loop operation, and stopping the engine. If misfiring that increases emissions is detected during two consecutive driving cycles, or TWC deterioration is detected during three consecutive driving cycles, the ECM/PCM turns the MIL on. However, to ease troubleshooting, this function is cancelled when you jump the service check connector. The MIL will then blink immediately when an abnormality occurs.

(cont'd)

System Description (cont'd)

Lean Burn Control (D16Y5 engine: CVT)

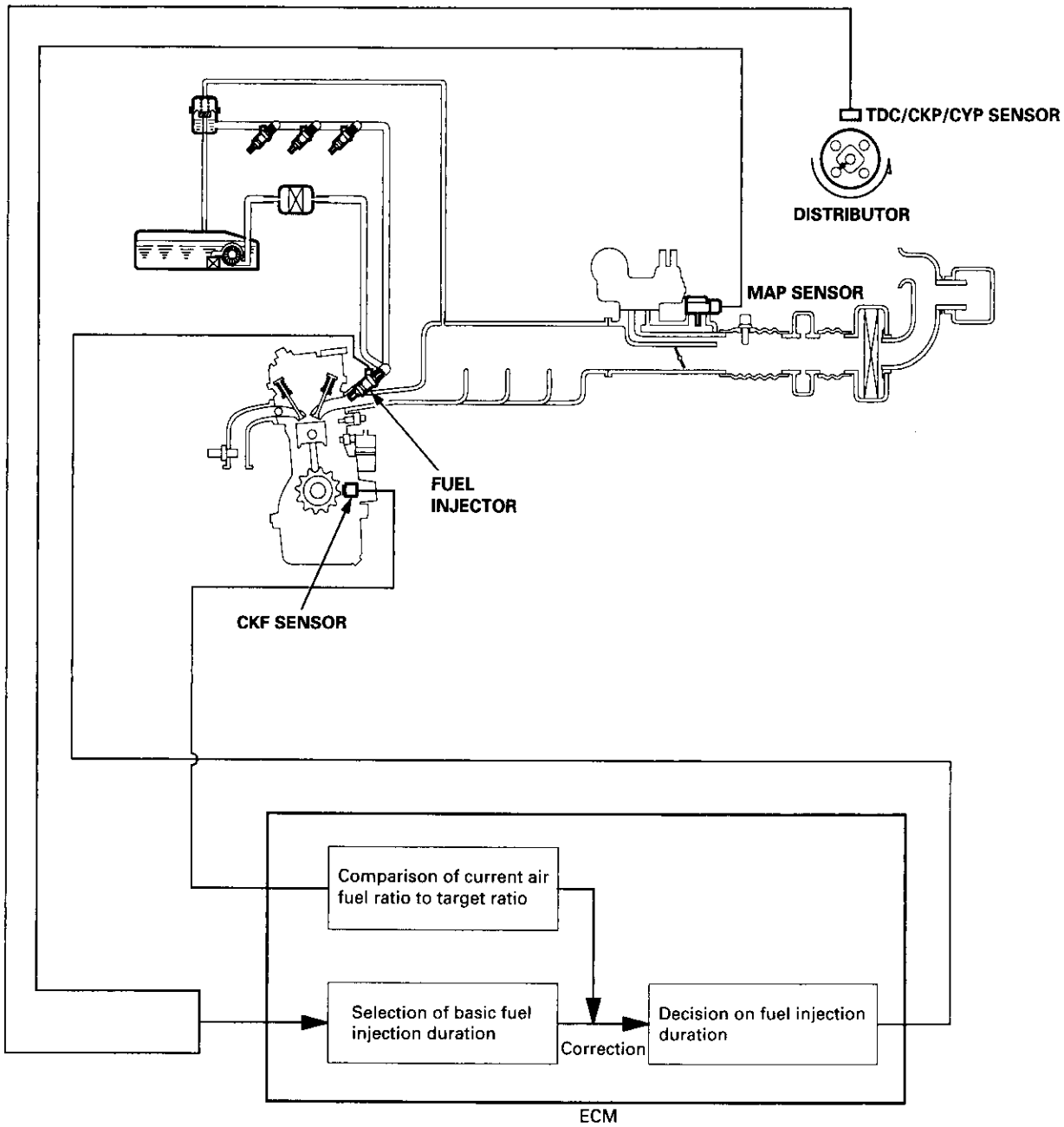

The lean burn control system is based on the characteristic increase in crankshaft angular acceleration which occurs in when the air-fuel ratio gets leaner.
The CKF sensor, which is mounted on the crankshaft, monitors engine speed. If crankshaft angular acceleration falls below a certain level (target air-fuel ratio level), the amount of injected fuel is reduced.
If crankshaft angular acceleration exceeds this level, the amount of fuel is increased.
This system improves fuel economy and driveability by controlling the amount of injected fuel in the lean burn range immediately before combustion starts to deteriorate.

Engine Control Module/Powertrain Control Module (ECM/PCM) ('96 – 98 Models, '99 – 00 D16Y5 engine with M/T)

NOTE: If this symptom is intermittent, check for a loose fuse No. 25 (METER 7.5 A) in the under-dash fuse/relay box, a poor connection at ECM/PCM terminal A18, or an intermittent open in the GRN/ORN wire between the ECM/PCM (A18) and the gauge assembly.

The Malfunction Indicator Lamp (MIL) never comes on (even for two seconds) after ignition is turned on.

Turn the ignition switch ON (II).

Is the low oil pressure light on?

NO

- **Repair short or open in the wire between No. 25 (METER) (7.5 A) fuse and gauge assembly.**
- **Replace No. 25 (METER) (7.5 A) fuse.**

YES

Try to start the engine.

Does the engine start?

NO

Check for an open in the wires (PG lines):
1. Turn the ignition switch ON (II).
2. Measure voltage between body ground and ECM/PCM connector terminals A10 and A23 individually.

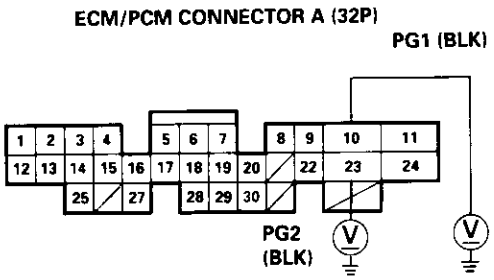

Wire side of female terminals

Is there less than 1.0 V?

NO

Repair open in the wire(s) between ECM/PCM and G101 (located at the thermostat housing) that had more than 1.0 V.

YES

Substitute a known-good ECM/PCM and recheck. If symptom/indication goes away, replace the original ECM/PCM.

YES

Check for an open in the wire or bulb (MIL line):
1. Turn the ignition switch OFF.
2. Connect the ECM/PCM connector terminal A18 to body ground with a jumper wire.
3. Turn the ignition switch ON (II).

Is the MIL on?

NO

- **Repair open in the wires between ECM/PCM (A18) and gauge assembly.**
- **Replace the MIL bulb.**

YES

Substitute a known-good ECM/PCM and recheck. If symptom/indication goes away, replace the original ECM/PCM.

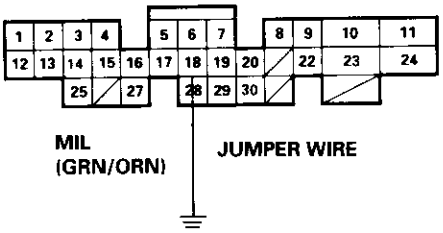

Wire side of female terminals

(cont'd)

Engine Control Module/Powertrain Control Module (ECM/PCM) ('96 – 98 Models, '99 – 00 D16Y5 engine with M/T) (cont'd)

The Malfunction Indicator Lamp (MIL) stays on or comes on after two seconds.

NOTE:
- When there is no Diagnostic Trouble Code (DTC) stored, the MIL will stay on if the SCS service connector is connected and the ignition switch is on.
- If this symptom is intermittent, check for:
  - — A loose FI E/M (15 A) fuse in the under-hood fuse/relay box
  - — A loose No. 13 FUEL PUMP fuse (15 A) in the under-dash fuse/relay box
  - — An intermittent short in the wire between the ECM/PCM (C7) and the service check connector
  - — An intermittent short in the wire between the ECM/PCM (A18) and the gauge assembly
  - — An intermittent short in the wire between the ECM/PCM (D4) and the MAP sensor
  - — An intermittent short in the wire between the ECM/PCM (D10), the TP sensor, the EGR valve lift sensor (D16Y5 engine) and/or the Fuel tank pressure sensor ('96 D16Y8 engine (coupe), '97 D16Y7 engine (coupe: KL model, sedan: KL (LX) model), '97 D16Y8 engine (coupe: all models, sedan: KL model), '98-all models)
  - — PGM-FI main relay
- See the OBD II scan tool or Honda PGM Tester user's manuals for specific operating instructions.

Check the Diagnostic Trouble Code (DTC):
1. Connect a scan tool or Honda PGM Tester.
2. Turn the ignition switch ON (II).
3. Read the DTC with the scan tool or Honda PGM Tester.

Are any DTC(s) indicated?
- YES → **Go to troubleshooting procedures (see page 11-81).**
- NO ↓

Check the DTC by MIL indication:
1. Turn the ignition switch OFF.
2. Connect the SCS service connector to the service check connector.
3. Turn the ignition switch ON (II).

Does the MIL indicate any DTC?
- YES → **— Repair open or short in wire between the ECM/PCM (C8) and Data Link Connector. — Go to troubleshooting procedure (see page 11-81).**
- NO ↓

Try to start the engine.

Does the engine start?
- NO → A → (To page 11-109)
- YES ↓

Check for a short in the wire (SCS line):
1. Disconnect the SCS service connector.
2. Stop the engine and turn the ignition switch ON (II).
3. Measure voltage between the ECM/PCM connector terminal C7 and body ground.

Is there approx. 5 V?
- NO → **Repair short to body ground in the wire between ECM/PCM (C7) and service check connector.**
- YES ↓

(To page 11-109)

ECM/PCM CONNECTOR C (31P)

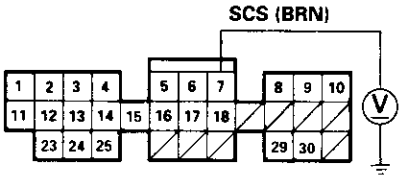

Wire side of female terminals

(From page 11-108)

Check for a short in the wire (MIL line):
1. Turn the ignition switch OFF.
2. Disconnect the ECM/PCM connector A (32P).
3. Turn the ignition switch ON (II).

Is the MIL ON?

YES → **Repair short to body ground in the wire between the ECM/PCM (A18) and MIL.**

NO → **Substitute a known-good ECM/PCM and recheck. If symptom/indication goes away, replace the original ECM/PCM.**

(From page 11-108)

A

Inspect FI E/M (10 A) fuse in the under-hood fuse/relay box.

Is the fuse OK?

NO →
- **Repair short in the wire between FI E/M (15 A) fuse and PGM-FI main relay.**
- **Replace FI E/M (15 A) fuse.**

YES

Inspect No. 13 FUEL PUMP (15 A) fuse in the under-dash fuse/relay box.

Is the fuse OK?

NO →
- **Repair short in the wire between No. 13 FUEL PUMP (15 A) fuse and PGM-FI main relay.**
- **Replace No. 13 FUEL PUMP (15 A) fuse.**

YES

Check for a short in a sensor:
1. Turn the ignition switch ON (II).
2. Disconnect the 3P connector from each sensor one at time:
   - MAP sensor
   - TP sensor
   - EGR valve lift sensor (D16Y5 engine)
   - Fuel tank pressure sensor ('96 D16Y8 engine (coupe), '97 D16Y7 engine (coupe: KL model, sedan: KL (LX) model), '97 D16Y8 engine (coupe: all models, sedan: KL model, '98-all models)

(To page 11-110)

(cont'd)

Engine Control Module/Powertrain Control Module (ECM/PCM) ('96 – 98 Models, '99 – 00 D16Y5 engine with M/T) (cont'd)

(From page 11-109)

Does the MIL go OFF?

YES → **Replace the sensor that caused the light to go out.**

NO

Check for a short in the wires (VCC lines):
1. Turn the ignition switch OFF.
2. Disconnect the ECM/PCM connector D (16P).
3. Check for continuity between body ground and ECM/PCM connector terminals D4 and D10 individually.

Is there continuity?

YES →
- **Repair short to body ground in the wire between ECM/PCM (D4) and MAP sensor.**
- **Repair short to body ground in the wire between ECM/PCM (D10), the TP sensor, the EGR valve lift sensor (D16Y5 engine) and/or the Fuel tank pressure sensor ('96 D16Y8 engine (coupe), '97 D16Y7 engine (coupe: KL model, sedan: KL (LX) model), '97 D16Y8 engine (coupe: all models, sedan: KL model, '98- all models).**

NO

Check for an open in the wires (IGP lines):
1. Disconnect the fuel injectors and IAC valve connectors.
2. Turn the ignition switch ON (II).
3. Measure voltage between body ground and ECM/PCM connector terminals A11 and A24 individually.

Is there battery voltage?

NO →
- **Repair open in the wire(s) between ECM/PCM (A11, A24) and PGM-FI main relay.**
- **Check for poor connections or loose wires at the PGM-FI main relay.**
- **Test the PGM-FI main relay (see page 11-237).**

YES

Check for an open in the wires (LG lines):
1. Reconnect all sensor connectors.
2. Reconnect the ECM/PCM connector D (16P).
3. Turn the ignition switch ON (II).
4. Measure voltage between body ground and ECM/PCM connector terminals A9 and A22 individually.

Is there less than 1.0 V?

NO → **Repair open in the wire(s) between ECM/PCM (A9, A22) and G101 that had more than 1.0 V.**

YES

Substitute a known-good ECM/PCM and recheck. If symptom/indication goes away, replace the original ECM/PCM.

ECM/PCM CONNECTOR D (16P)

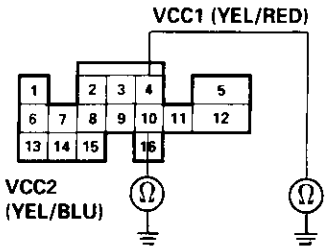

Wire side of female terminals

ECM/PCM CONNECTOR A (32P)

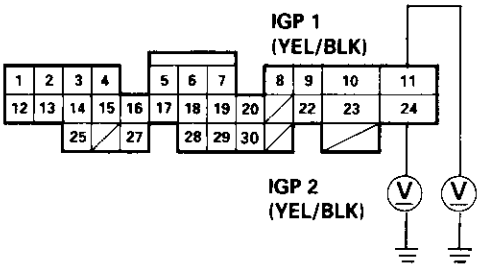

Wire side of female terminals

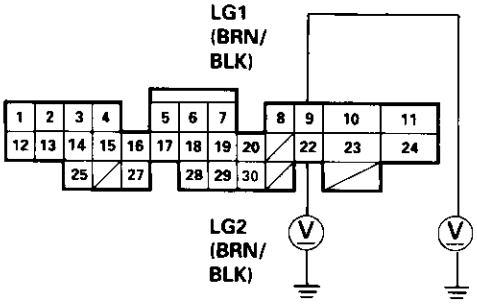

Engine Control Module/Powertrain Control Module (ECM/PCM) ('99 – 00 Models except D16Y5 engine with M/T)

NOTE:
- When there is no Diagnostic Trouble Code (DTC) stored, the MIL will stay on if the SCS service connector is connected and the ignition switch is on.
- If this symptom is intermittent, check for:
  - — A loose No. 25 (METER) (7.5 A) fuse in the under-dash fuse/relay box
  - — A loose FI E/M (15 A) fuse in the under-hood fuse/relay box
  - — A loose No. 13 FUEL PUMP fuse (15 A) in the under-dash fuse/relay box
  - — An intermittent short in the wire between the ECM/PCM (A18) and the gauge assembly
  - — An intermittent short in the wire between the ECM/PCM (C19) and the MAP sensor
  - — An intermittent short in the wire between the ECM/PCM (C28), the TP sensor, the EGR valve lift sensor (D16Y5 engine) and/or the Fuel tank pressure sensor ('96 D16Y8 engine (coupe), '97 D16Y7 engine (coupe: KL model, sedan: KL (LX) model), '97 D16Y8 engine (coupe: all models, sedan: KL model), '98-all models, '99-all models, '00-all models.
  - — PGM-FI main relay
- See the OBD II scan tool or Honda PGM Tester user's manuals for specific operating instructions.

The Malfunction Indicator Lamp (MIL) never comes on (even for two seconds) after ignition is turned ON (II).

Turn the ignition switch ON (II).

Is the low oil pressure light on?

NO →
- **— Repair short or open in the wire between No. 25 (METER) (7.5 A) fuse and gauge assembly.**
- **— Replace No. 25 (METER) (7.5 A) fuse.**

YES ↓

Try to start the engine.

Does the engine start?

YES →

Check for an open in the wire or bulb (MIL line):
1. Turn the ignition switch OFF.
2. Connect the ECM/PCM connector terminal A18 to body ground with a jumper wire.
3. Turn the ignition switch ON (II).

ECM/PCM CONNECTOR A (32P)

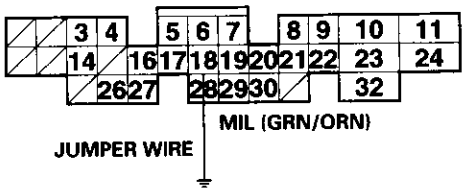

Wire side of female terminals

Is the MIL on?

NO →
- **— Repair open in the wires between ECM/PCM (A18) and gauge assembly.**
- **— Replace the MIL bulb.**

YES ↓

Substitute a known-good ECM/PCM and recheck. If symptom/indication goes away, replace the original ECM/PCM.

NO ↓

1. Turn the ignition switch OFF.
2. Inspect FI E/M (15 A) fuse in the under-hood fuse/relay box.

Is the fuse OK?

NO →
- **— Repair short in the wire between FI E/M (15 A) fuse and PGM-FI main relay.**
- **— Replace FI E/M (15 A) fuse.**

YES ↓

Inspect No. 13 FUEL PUMP (15 A) fuse in the under-dash fuse/relay box.

Is the fuse OK?

NO →
- **— Repair short in the wire between No. 13 FUEL PUMP (15 A) fuse and PGM-FI main relay.**
- **— Replace No. 13 FUEL PUMP (15 A) fuse.**

YES ↓

(To page 11-112)

(cont'd)

Engine Control Module/Powertrain Control Module (ECM/PCM) ('99 – 00 Model except D16Y5 (M/T) engine) (cont'd)

(From page 11-111)

Check for an open in the wires (IGP lines):
1. Disconnect the fuel injector and IAC valve connectors.
2. Turn the ignition switch ON (II).
3. Measure voltage between body ground and ECM/PCM connector terminals B1 and B9 individually.

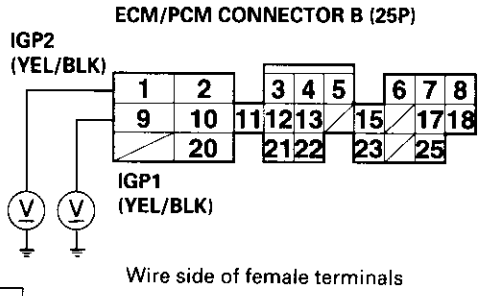

Is there battery voltage?

NO
- **Repair open in the wire(s) between ECM/PCM (B1, B9) and PGM-FI main relay.**
- **Check for poor connections or loose wires at the PGM-FI main relay.**
- **Test the PGM-FI main relay (see page 11-237).**

YES

Check for an open in the wires (PG, LG lines):
1. Reconnect the fuel injector and IAC valve connectors.
2. Measure voltage between body ground and ECM/PCM connector terminals B2, B10, B20 and B22 individually.

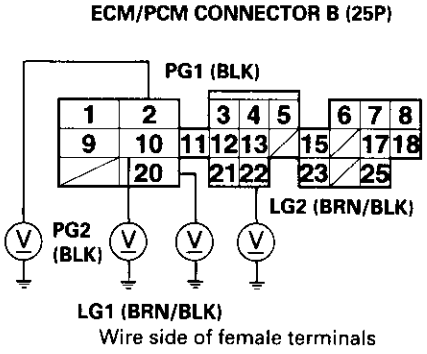

Is there less than 1.0 V?

NO
Repair open in the wire(s) between ECM/PCM and G101 (located at the left side of the intake manifold) that had more than 1.0 V.

YES

Check for a short in the wires (VCC1, VCC2 lines):
Measure voltage between body ground and ECM/PCM connector terminals C19 and C28 individually.

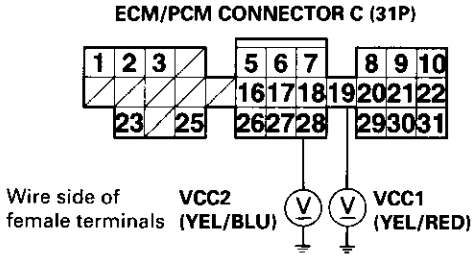

Is there approx. 5 V?

NO
Check for a short in a sensor:
While measuring voltage between body ground and ECM/PCM connector terminals C19 and C28 individually, disconnect the 3P connector of each sensor one at time:
- MAP sensor
- TP sensor
- EGR valve
- Fuel tank pressure sensor

Is there approx. 5 V?

NO
Repair short in the wire between MAP sensor, TP sensor, EGR valve, Fuel tank pressure sensor and ECM/PCM (C19, C28).

YES
Replace the sensor that had approx. 5 V.

YES
Substitute a known-good ECM/PCM and recheck. If symptom/indication goes away, replace the original ECM/PCM.

NOTE:
- When there is no Diagnostic Trouble Code (DTC) stored, the MIL will stay on if the SCS service connector is connected and the ignition switch is ON (II).
- If this symptom is intermittent, check for:
  - An intermittent short in the wire between the ECM/PCM (A10) and the service check connector
  - An intermittent short in the wire between the ECM/PCM (A18) and the gauge assembly
- See the OBD II scan tool or Honda PGM Tester user's manuals for specific operating instructions.

The Malfunction Indicator Lamp (MIL) stays on or comes on after two seconds.

Check the Diagnostic Trouble Code (DTC):
1. Connect a scan tool or Honda PGM Tester.
2. Turn the ignition switch ON (II).
3. Read the DTC with the scan tool or Honda PGM Tester.

Are any DTC(s) indicated?

YES → **Go to troubleshooting procedures (see page 11-81).**

NO

Check the DTC by MIL indication:
1. Turn the ignition switch OFF.
2. Connect the SCS service connector to the service check connector.
3. Turn the ignition switch ON (II).

Does the MIL indicate any DTC?

YES → **— Repair open or short in wire between the ECM/PCM (A21) and Data Link Connector.**
— Go to troubleshooting procedures (see page 11-81).

NO

Try to start the engine.

Does the engine start?

NO → **Substitute a known-good ECM/PCM and recheck. If symptom/indication goes away, replace the original ECM/PCM.**

YES

Check for a short in the wire (SCS line):
1. Turn the ignition switch OFF and turn the ignition switch ON (II).
2. Measure voltage between body ground and the ECM/PCM connector terminal A10.

ECM/PCM CONNECTOR A (32P)

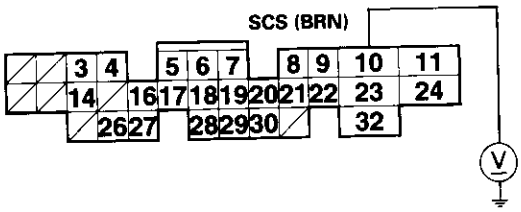

Wire side of female terminals

Is there battery voltage?

NO → **Repair short to body ground in the wire between ECM/PCM (A10) and service check connector.**

YES

(To page 11-114)

(cont'd)

Engine Control Module/Powertrain Control Module (ECM/PCM) ('99 – 00 Models except D16Y5 engine with M/T) (cont'd)

(From page 11-113)

Check for a short in the wire (MIL line):
1. Turn the ignition switch OFF.
2. Disconnect the ECM/PCM connector A (32P).
3. Turn the ignition switch ON (II).

Is the MIL ON?

YES → **Repair short to body ground in the wire between the ECM/PCM (A18) and MIL.**

NO → **Substitute a known-good ECM/PCM and recheck. If symptom/indication goes away, replace the original ECM/PCM.**

Manifold Absolute Pressure (MAP) Sensor ('96 Models)

P0106 The scan tool indicates Diagnostic Trouble Code (DTC) P0106: A mechanical problem (vacuum leak) in the Manifold Absolute Pressure (MAP) Sensor system.

The MAP sensor converts manifold absolute pressure into electrical signals and inputs the ECM/PCM.

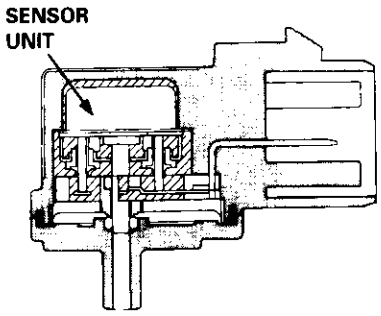

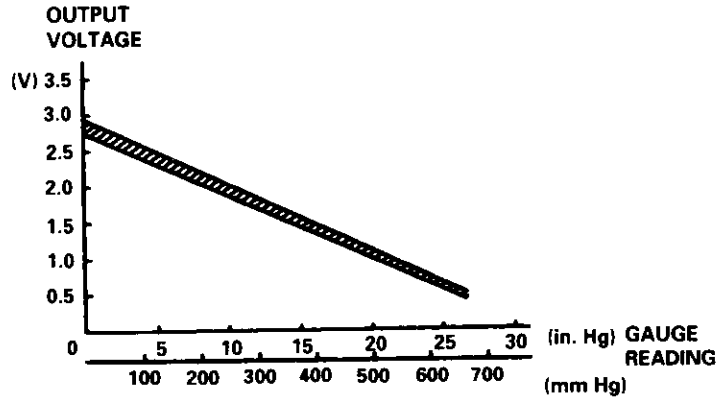

— The MIL has been reported on.
— DTC P0106 is stored.
— Or from Probable Cause List.

Problem verification:
1. Do the ECM/PCM Reset Procedure.
2. Start the engine and keep engine speed at 1,000 rpm for one minute with the transmission in [P] or [N] position (M/T in neutral).

Is DTC P0106 indicated?

YES → Check for vacuum leakage or blockage between the MAP sensor and throttle body.

Is there leakage or blockage?

YES → **Repair the vacuum leakage or blockage.**

NO →

Check the MAP sensor output:
1. Stop the engine.
2. Turn the ignition switch ON (II).
3. Check the MAP with the scan tool.

Does it indicate atmospheric pressure?

NO → **Replace the MAP sensor.**

YES → (B) (To page 11-116)

NO → **Replace the MAP sensor.**

NO →

Check the MAP sensor output:
1. Turn the ignition switch OFF.
2. Turn the ignition switch ON (II).
3. Check the MAP with the scan tool.

Does it indicate atmospheric pressure?

YES → (A) (To page 11-116)

(cont'd)

Manifold Absolute Pressure (MAP) Sensor ('96 Models) (cont'd)

(From page 11-115)

A

Check for poor response:
1. Start the engine. Hold the engine at 3,000 rpm with A/T in N or P position, M/T in neutral until the radiator fan comes on, then turn the ignition switch OFF.
2. Start the engine.
3. Check the MAP with the scan tool.

Is a MAP of 40.0 kPa (300 mmHg, 12.0 in.Hg) or less indicated within one second after starting the engine?

NO → **Replace the MAP sensor.**

YES → **The MAP sensor is OK at this time.**

(From page 11-115)

B

Check for poor response:
1. Start the engine. Hold the engine at 3,000 rpm with A/T in N or P position, M/T in neutral until the radiator fan comes on, then turn the ignition switch OFF.
2. Start the engine.
3. Check the MAP with the scan tool.

Is a MAP of 40.0 kPa (300 mmHg, 12.0 in.Hg) or less indicated within one second after starting the engine?

NO → **Replace the MAP sensor.**

YES → **Substitute a known-good ECM/PCM and recheck. If symptom/indication goes away, replace the original ECM/PCM.**

Manifold Absolute Pressure (MAP) Sensor ('96 – 98 Models, '99 – 00 D16Y5 engine with M/T)

P0107 The scan tool indicates Diagnostic Trouble Code (DTC) P0107: A low voltage (high vacuum) problem in the Manifold Absolute Pressure (MAP) sensor.

— The MIL has been reported on.
— DTC P0107 is stored.

Problem verification:
1. Turn the ignition switch ON (II).
2. Check the MAP with the scan tool.

Is approx. 101 kPa (760 mmHg, 30 in.Hg) indicated?

YES → **Intermittent failure, system is OK at this time. Check for poor connections or loose wires at C111 (MAP sensor) and ECM/PCM.**

NO ↓

Check for an open in wire (VCC1 line):
1. Turn the ignition switch OFF.
2. Disconnect the MAP sensor connector.
3. Turn the ignition switch ON (II).
4. Measure voltage between the MAP sensor connector No. 1 terminal and No. 2 terminal.

Is there approx. 5 V?

NO → **Repair open in the wire between ECM/PCM (D4) and MAP sensor.**

YES ↓

Check for an open or short in the MAP sensor:
Check the MAP with the scan tool.

Is approx. 2 kPa (15 mmHg, 0.6 in.Hg) or less indicated?

NO → **Replace the MAP sensor.**

YES ↓

(D16Y5 engine (with CVT))

Check for a short in the TCM:
1. Turn the ignition switch OFF.
2. Disconnect the 22P connector from the TCM.
3. Turn the ignition switch ON (II).
4. Check the MAP with the scan tool.

(To page 11-118)

MAP SENSOR 3P CONNECTOR (C111)

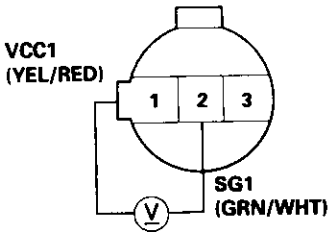

Wire side of female terminals

(cont'd)

Manifold Absolute Pressure (MAP) Sensor ('96 – 98 Models, '99 – 00 D16Y5 engine with M/T) (cont'd)

(From page 11-117)

Is approx. 2 kPa (15 mmHg, 0.6 in.Hg) or less indicated?

NO → **Replace the TCM.**

YES

Check for a short in the wire (MAP line):

1. Turn the ignition switch OFF.
2. Disconnect the ECM/PCM connector D (16P).
3. Check for continuity between the MAP sensor connector No. 3 terminal and body ground.

Is there continuity?

YES → **Repair short in the wire between ECM/PCM (D3) and MAP sensor.**

NO → **Substitute a known-good ECM/PCM, and recheck. If normal MAP is indicated, replace the original ECM/PCM.**

MAP SENSOR 3P CONNECTOR (C111)

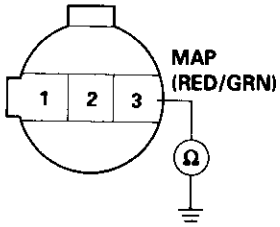

Wire side of female terminals

Manifold Absolute Pressure (MAP) Sensor ('99 – 00 Models except D16Y5 engine with M/T)

P0107 The scan tool indicates Diagnostic Trouble Code (DTC) P0107: A low input (high vacuum) problem in the Manifold Absolute Pressure (MAP) sensor.

The MAP sensor converts manifold absolute pressure into electrical signals and inputs the ECM/PCM.

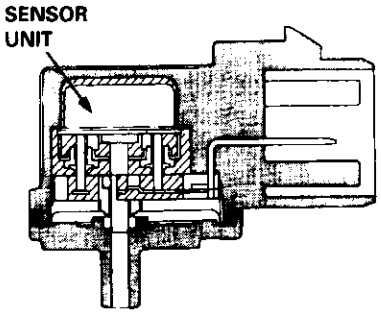

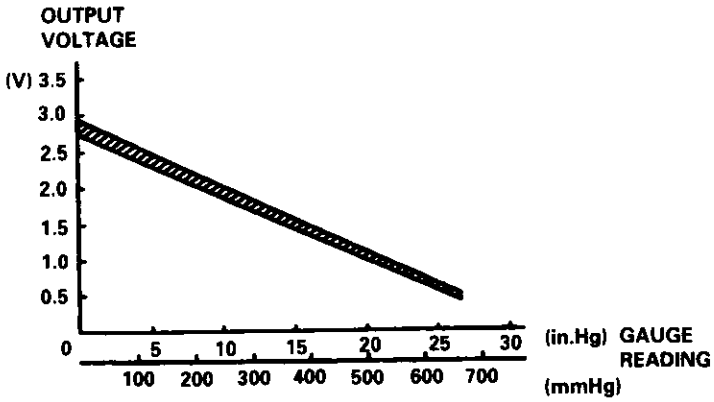

— The MIL has been reported on.
— DTC P0107 is stored.

Problem verification:
1. Turn the ignition switch ON (II).
2. Check the MAP with the scan tool.

Is approx. 101 kPa (760 mmHg, 30 in.Hg) indicated?

YES → **Intermittent failure, system is OK at this time. Check for poor connections or loose wires at C111 (MAP sensor) and ECM/PCM.**

NO

Check for an open in wire (VCC1 line):
1. Turn the ignition switch OFF.
2. Disconnect the MAP sensor connector.
3. Turn the ignition switch ON (II).
4. Measure voltage between the MAP sensor connector No. 1 terminal and No. 2 terminal.

Is there approx. 5 V?

NO → **Repair open in the wire between ECM/PCM (C19) and MAP sensor.**

YES

(To page 11-120)

MAP SENSOR 3P CONNECTOR (C114)

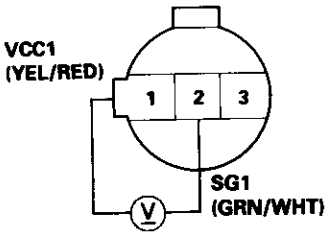

Wire side of female terminals

(cont'd)

Manifold Absolute Pressure (MAP) Sensor ('99 – 00 Models except D16Y5 engine with M/T) (cont'd)

(From page 11-119)

Check for an open or short in the MAP sensor:
Check the MAP with the scan tool.

Is approx. 2 kPa (15 mmHg, 0.6 in.Hg) or less indicated?

NO → **Replace the MAP sensor.**

YES

Check for a short in the wire (MAP line):
1. Turn the ignition switch OFF.
2. Disconnect the ECM/PCM connector C (31P).
3. Check for continuity between the MAP sensor connector No. 3 terminal and body ground.

Is there continuity?

YES → **Repair short in the wire between ECM/PCM (C17) and MAP sensor.**

NO

Substitute a known-good ECM/PCM and recheck. If normal MAP is indicated, replace the original ECM/PCM.

MAP SENSOR 3P CONNECTOR (C114)

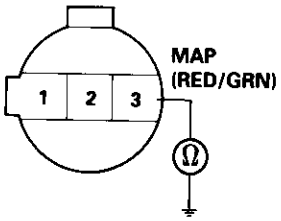

Wire side of female terminals

Manifold Absolute Pressure (MAP) Sensor ('96 – 98 Models, '99 – 00 D16Y5 engine with M/T)

P0108 The scan tool indicates Diagnostic Trouble Code (DTC) P0108: A high voltage (low vacuum) problem in the Manifold Absolute Pressure (MAP) sensor.

— The MIL has been reported on.
— DTC P0108 is stored.

Problem verification:
1. Start the engine. Hold the engine at 3,000 rpm with no load (in Park or neutral) until the radiator fan comes on, then let it idle.
2. Check the MAP with the scan tool.

Is 101 kPa (760 mmHg, 30.0 in.Hg) or higher indicated?

NO → **Intermittent failure, system is OK at this time. Check for poor connections or loose wires at C111 (MAP sensor) and ECM/PCM.**

YES

Check for an open in the MAP sensor:
1. Turn the ignition switch OFF.
2. Disconnect the MAP sensor 3P connector.
3. Install a jumper wire between the MAP sensor 3P connector terminals No. 3 and No. 2.
4. Turn the ignition switch ON (II).
5. Check the MAP with the scan tool.

Is 101 kPa (760 mmHg, 30.0 in.Hg) or higher indicated?

NO → **Replace the MAP sensor.**

YES

Check for an open in wire (SG1 line):
1. Remove the jumper wire.
2. Measure voltage between the MAP sensor 3P connector terminals No. 1 and No. 2.

Is there approx. 5 V?

NO → **Repair open in the wire between ECM/PCM (D12) and MAP sensor.**

YES

Check for an open in the wire (MAP line):
1. Turn the ignition switch OFF.
2. Connect the ECM/PCM connector terminals D3 and D12 with a jumper wire.
3. Turn the ignition switch ON (II).
4. Check the MAP with the scan tool.

Is 101 kPa (760 mmHg, 30.0 in.Hg) or higher indicated?

NO → **Repair open in the wires between ECM/PCM (D3) and MAP sensor.**

YES

Substitute a known-good ECM/PCM and recheck. If normal MAP is indicated, replace the original ECM/PCM.

MAP SENSOR 3P CONNECTOR (C111)

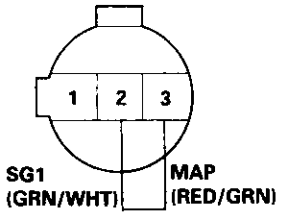

JUMPER WIRE

Wire side of female terminals

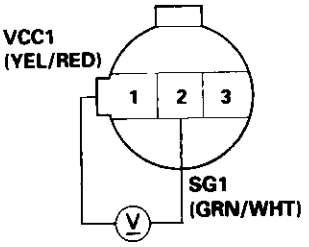

ECM/PCM CONNECTOR D (16P)

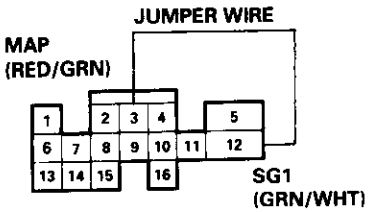

Wire side of female terminals

(cont'd)

Manifold Absolute Pressure (MAP) Sensor ('99 – 00 Models except D16Y5 engine with M/T) (cont'd)

P0108 The scan tool indicates Diagnostic Trouble Code (DTC) P0108: A high voltage (low vacuum) problem in the Manifold Absolute Pressure (MAP) sensor.

— The MIL has been reported on.
— DTC P0108 is stored.

Problem verification:
1. Start the engine. Hold the engine at 3,000 rpm with no load (in Park or neutral) until the radiator fan comes on, then let it idle.
2. Check the MAP with the scan tool.

Is 101 kPa (760 mmHg, 30 in.Hg) or higher indicated?

NO → **Intermittent failure, system is OK at this time. Check for poor connections or loose wires at C111 (MAP sensor) and the ECM/PCM.**

YES

Check for an open in the MAP sensor:
1. Turn the ignition switch OFF.
2. Disconnect the MAP sensor 3P connector.
3. Install a jumper wire between the MAP sensor 3P connector terminals No. 3 and No. 2.
4. Turn the ignition switch ON (II).
5. Check the MAP with the scan tool.

Is 101 kPa (760 mmHg, 30 in.Hg) or higher indicated?

NO → **Replace the MAP sensor.**

YES

Check for an open in wire (SG1 line):
1. Remove the jumper wire.
2. Measure voltage between the MAP sensor 3P connector terminals No. 1 and No. 2.

Is there approx. 5 V?

NO → **Repair open in the wire between the ECM/PCM (C7) and the MAP sensor.**

YES

Check for an open in the wire (MAP line):
1. Turn the ignition switch OFF.
2. Install a jumper wire on the ECM/PCM connectors between C7 and C17.
3. Turn the ignition switch ON (II).
4. Check the MAP with the scan tool.

Is 101 kPa (760 mmHg, 30 in.Hg) or higher indicated?

NO → **Repair open in the wires between the ECM/PCM (C17) and the MAP sensor.**

YES

Substitute a known-good ECM/PCM and recheck. If normal MAP is indicated, replace the original ECM/PCM.

MAP SENSOR 3P CONNECTOR (C111)

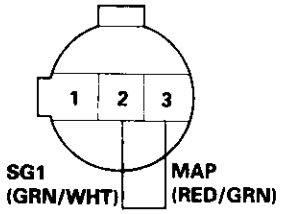

Wire side of female terminals

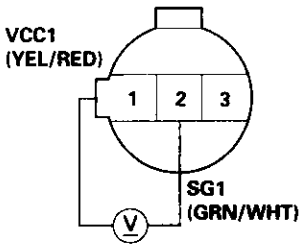

ECM/PCM CONNECTOR C (31P)

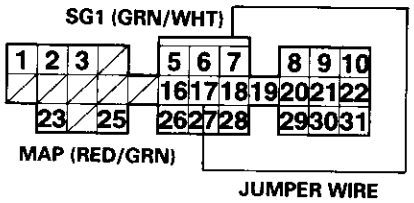

Wire side of female terminals

Manifold Absolute Pressure (MAP) Sensor (cont'd)

P1128 The scan tool indicates Diagnostic Trouble Code (DTC) P1128: Manifold Absolute Pressure (MAP) lower than expected.

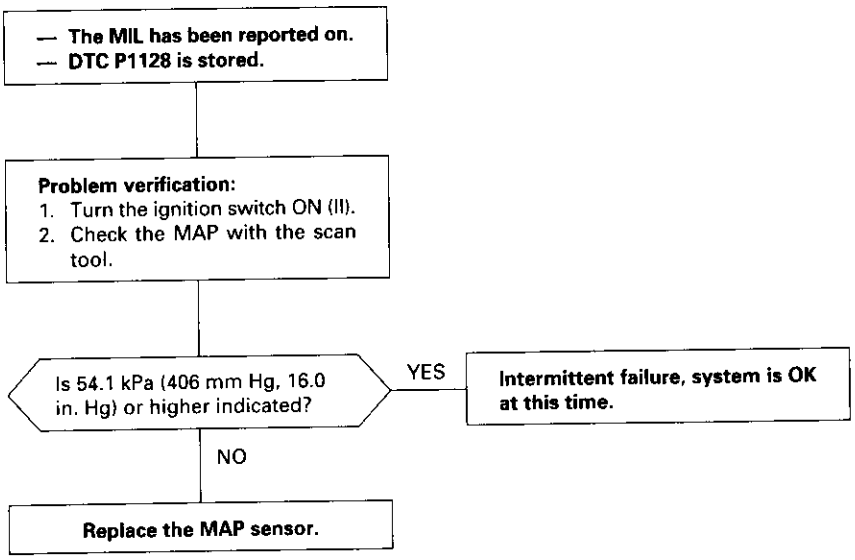

P1129 The scan tool indicates Diagnostic Trouble Code (DTC) P1129: Manifold Absolute Pressure (MAP) higher than expected.

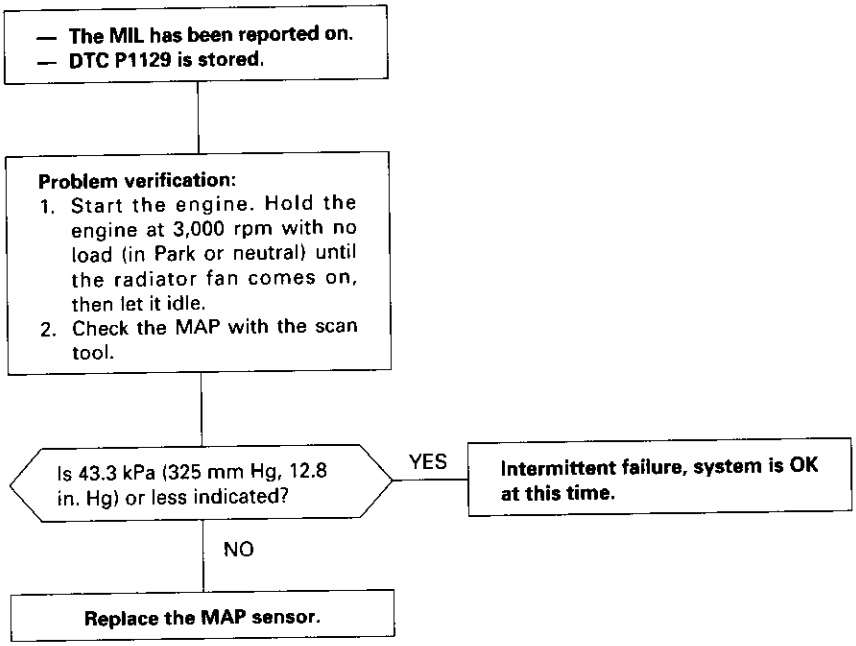

Intake Air Temperature (IAT) Sensor ('96 – 97 Models)

P0111 The scan tool indicates Diagnostic Trouble Code (DTC) P0111: A range/performance problem in the Intake Air Temperature (IAT) Sensor circuit.

The IAT Sensor is a temperature dependant resistor (thermistor). The resistance of the thermistor decreases as the intake air temperature increases as shown below.

— The MIL has been reported on.
— DTC P0111 is stored.
— Or from Probable Cause List.

Problem verification:
1. Turn the ignition switch OFF.
2. Disconnect the IAT sensor 2P connector.
3. Remove the IAT sensor.
4. Reconnect the IAT sensor 2P connector.
5. Leave the IAT sensor exposed to ambient temperature.
6. Turn the ignition switch ON (II).
7. Check the IAT with the scan tool.

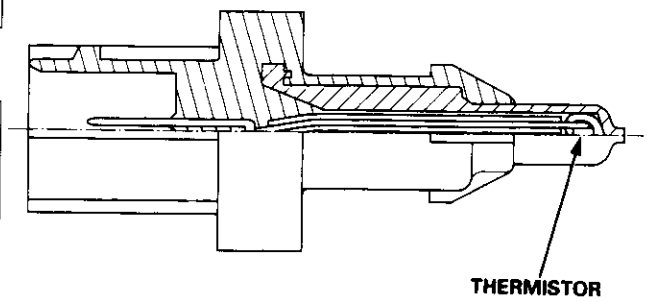

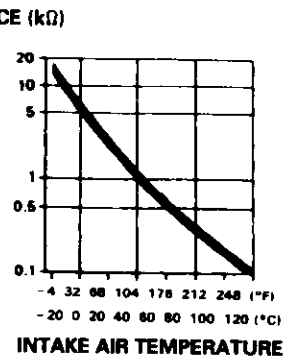

Is ambient temperature indicated?
- NO → **Replace the IAT sensor.**
- YES ↓

Check the IAT sensor output:
1. Warm the IAT sensor with a hair dryer.
2. Check the IAT with the scan tool.

Did the IAT rise 2°F (1°C) or more from the ambient temperature?
- YES → **Intermittent failure, system is OK at this time.**
- NO ↓

Replace the IAT sensor.

Intake Air Temperature (IAT) Sensor

P0112 The scan tool indicates Diagnostic Trouble Code (DTC) P0112: A low voltage (high temperature) problem in the Intake Air Temperature (IAT) sensor circuit.

— The MIL has been reported on.
— DTC P0112 is stored.

Problem verification:
1. Turn the ignition switch ON (II).
2. Check the IAT with the scan tool.

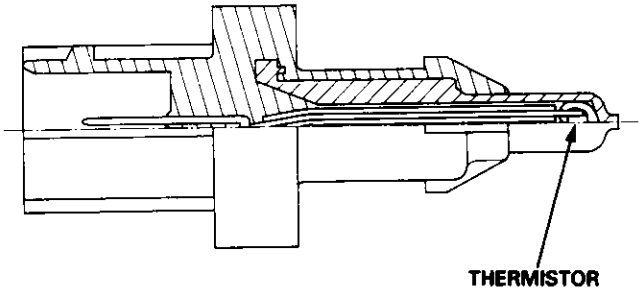

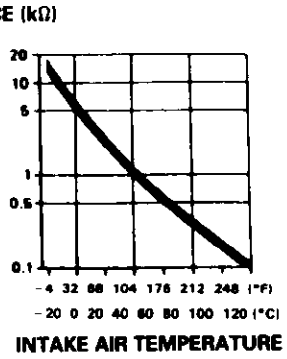

Is 302°F (150°C) or higher (or H-Limit in Honda mode of PGM Tester) or 0 V indicated?

NO → Is the correct ambient temperature indicated*2?

NO → **Replace the IAT sensor.**

*2: If the engine is warm, it will be higher than ambient temperature.

YES → **Intermittent failure, system is OK at this time. Check for poor connections or loose wires at C112 (IAT sensor) and ECM/PCM.**

YES →

Check for a short in the IAT sensor:
1. Disconnect the IAT sensor connector.
2. Check the IAT with the scan tool.

Is 302°F (150°C) or higher (or H-Limit in Honda mode of PGM Tester) or 0 V indicated?

NO → **Replace the IAT sensor.**

YES →

Check for a short in the wire (IAT line):
1. Turn the ignition switch OFF.
2. Disconnect the ECM/PCM connector D (16P) (C (31P))*1.
3. Check for continuity between the IAT sensor 2P connector terminal No. 2 and body ground.

IAT SENSOR 2P CONNECTOR (C112)

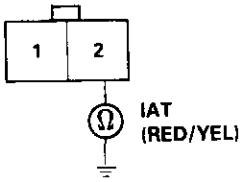

Wire side of female terminals

Is there continuity?

YES → **Repair short in the wire between ECM/PCM (D8 (C25)*1) and IAT sensor.**

NO → **Substitute a known-good ECM/PCM and recheck. If normal IAT is indicated, replace the original ECM/PCM.**

*1: '99 – 00 models except D16Y5 engine with M/T.

Intake Air Temperature (IAT) Sensor ('96 – 98 Models, '99 – 00 D16Y5 engine with M/T)

P0113 The scan tool indicates Diagnostic Trouble Code (DTC) P0113: A high voltage (low temperature) problem in the Intake Air Temperature (IAT) sensor circuit.

— The MIL has been reported on.
— DTC P0113 is stored.

Problem verification:
1. Turn the ignition switch ON (II).
2. Check the IAT with the scan tool.

Is –4°F (–20°C) or less (or L-Limit in Honda mode of PGM Tester) or 5 V indicated?

NO → **Intermittent failure, system is OK at this time. Check for poor connections or loose wires at C112 (IAT sensor) and ECM/PCM.**

YES

Check for an open in the IAT sensor:
1. Disconnect the IAT sensor 2P connector.
2. Connect the IAT sensor 2P connector terminals No. 1 and No. 2 with a jumper wire.
3. Check the intake air temperature with the scan tool.

Is –4°F (–20°C) or less (or L-Limit in Honda mode of PGM Tester) or 5 V indicated?

NO → **Replace the IAT sensor.**

YES

Check for an open in the wires (IAT, SG2 lines):
1. Turn the ignition switch OFF.
2. Connect ECM/PCM connector terminals D8 and D11 with a jumper wire.
3. Turn the ignition switch ON (II).
4. Check the IAT with the scan tool.

Is –4°F (–20°C) or less (or L-Limit in Honda mode of PGM Tester) or 5 V indicated?

NO → **Repair open in the wires between ECM/PCM (D8, D11) and IAT sensor.**

YES

Substitute a known-good ECM/PCM and recheck. If normal IAT is indicated, replace the original ECM/PCM.

IAT SENSOR 2P CONNECTOR (C112)

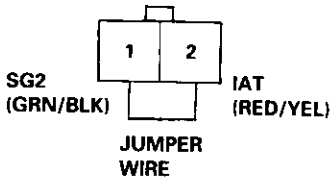

Wire side of female terminals

ECM/PCM CONNECTOR D (16P)

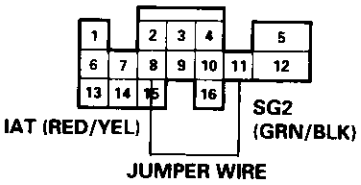

Wire side of female terminals

Intake Air Temperature (IAT) Sensor ('99 – 00 Models except D16Y5 engine with M/T)

P0113 The scan tool indicates Diagnostic Trouble Code (DTC) P0113: A high voltage (low temperature) problem in the Intake Air Temperature (IAT) sensor circuit.

— The MIL has been reported on.
— DTC P0113 is stored.

Problem verification:
1. Turn the ignition switch ON (II).
2. Check the IAT with the scan tool.

Is –4°F (–20°C) or less (or L-Limit in Honda mode of PGM Tester) or 5 V indicated?

NO → **Intermittent failure, system is OK at this time. Check for poor connections or loose wires at C112 (IAT sensor) and ECM/PCM.**

YES

Check for an open in the IAT sensor:
1. Disconnect the IAT sensor 2P connector.
2. Connect the IAT sensor 2P connector terminals No. 1 and No. 2 with a jumper wire.
3. Check the intake air temperature with the scan tool.

Is –4°F (–20°C) or less (or L-Limit in Honda mode of PGM Tester) or 5 V indicated?

NO → **Replace the IAT sensor.**

YES

Check for an open in the wires (IAT, SG2 lines):
1. Turn the ignition switch OFF.
2. Connect ECM/PCM connector terminals C18 and C25 with a jumper wire.
3. Turn the ignition switch ON (II).
4. Check the IAT with the scan tool.

Is –4°F (–20°C) or less (or L-Limit in Honda mode of PGM Tester) or 5 V indicated?

NO → **Repair open in the wires between ECM/PCM (C18, C25) and IAT sensor.**

YES

Substitute a known-good ECM/PCM and recheck. If normal IAT is indicated, replace the original ECM/PCM.

IAT SENSOR 2P CONNECTOR (C112)

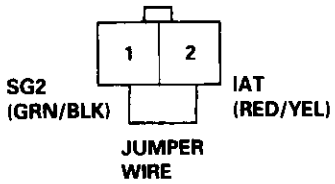

Wire side of female terminals

ECM/PCM CONNECTOR C (31P)

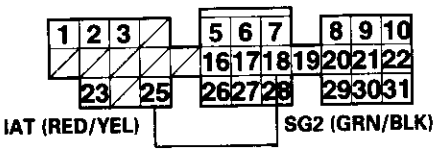

Wire side of female terminals

Engine Coolant Temperature (ECT) Sensor

P0116 The scan tool indicates Diagnostic Trouble Code (DTC) P0116: A range/performance problem in the Engine Coolant Temperature (ECT) Sensor circuit.

The ECT Sensor is a temperature dependant resistor (thermistor). The resistance of the thermistor decreases as the engine coolant temperature increases as shown below.

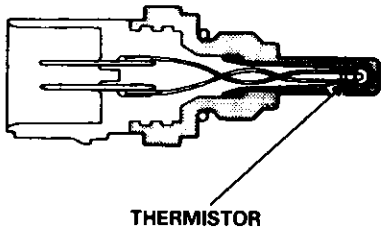

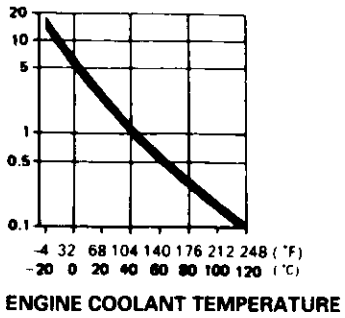

NOTE: If DTC P0117 and/or P0118 are stored at the same time as DTC P0116, troubleshoot those DTCs first, then recheck for DTC P0116.

Possible Cause

- ECT sensor deterioration
- Malfunction in the thermostat and cooling system

Troubleshooting Flowchart

— The MIL has been reported on.
— DTC P0116 is stored.

Problem verification:
1. Start the engine. Hold the engine at 3,000 rpm with no load (in Park or neutral) until the radiator fan comes on, then let it idle.
2. With the scan tool, check the ECT.

Is 176 – 200°F (80 – 93°C) or 0.4 – 0.7 V indicated?

YES → **Intermittent failure, system is OK at this time. Check the thermostat and the cooling system.**

NO → **Check the thermostat and the cooling system. If they are OK, replace the ECT sensor.**

P0117 The scan tool indicates Diagnostic Trouble Code (DTC) P0117: A low voltage (high temperature) problem in the Engine Coolant Temperature (ECT) sensor circuit.

— The MIL has been reported on.
— DTC P0117 is stored.

Problem verification:
1. Turn the ignition switch ON (II).
2. Check the ECT with the scan tool.

Is 302°F (150°C) or higher (or H-Limit in Honda mode of PGM Tester) or 0 V indicated?

NO → **Intermittent failure, system is OK at this time. Check for poor connections or loose wires at C122 (ECT sensor) and ECM/PCM.**

YES

Check for a short in the ECT sensor:
1. Disconnect the ECT sensor 2P connector.
2. Check the ECT with the scan tool.

Is 302°F (150°C) or higher (or H-Limit in Honda mode of PGM Tester) or 0 V indicated?

NO → **Replace the ECT sensor.**

YES

Check for a short in the wire (ECT line):
1. Turn the ignition switch OFF.
2. Disconnect the ECM/PCM connector D (16P) (C (31P))*.
3. Check for continuity between the ECT sensor 2P connector terminal No. 1 and body ground.

Is there continuity?

YES → **Repair short in the wire between ECM/PCM (D2 (C26)*) and ECT sensor.**

NO

Substitute a known-good ECM/PCM and recheck. If normal ECT is indicated, replace the original ECM/PCM.

*: '99 – 00 models except D16Y5 engine with M/T.

ECT SENSOR 2P CONNECTOR (C122)

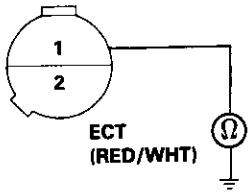

Wire side of female terminals

(cont'd)

Engine Coolant Temperature (ECT) Sensor ('96 – 98 Models, '99 – 00 D16Y5 engine with M/T) (cont'd)

P0118 The scan tool indicates Diagnostic Trouble Code (DTC) P0118: A high voltage (low temperature) problem in the Engine Coolant Temperature (ECT) sensor circuit.

— The MIL has been reported on.
— DTC P0118 is stored.

Problem verification:
1. Turn the ignition switch ON (II).
2. Check the ECT with the scan tool.

Is –4°F (–20°C) or less (or L-Limit in Honda mode of PGM Tester) or 5 V indicated?

NO → **Intermittent failure, system is OK at this time. Check for poor connections or loose wires at C122 (ECT sensor) and ECM/PCM.**

YES

Check for an open in the ECT sensor:
1. Disconnect the ECT sensor 2P connector.
2. Connect the ECT sensor 2P connector terminals No. 1 and No. 2 with a jumper wire.
3. Check the ECT with the scan tool.

Is –4°F (–20°C) or less (or L-Limit in Honda mode of PGM Tester) or 5 V indicated?

NO → **Replace the ECT sensor.**

YES

Check for an open in the wires (ECT, SG2 lines):
1. Turn the ignition switch OFF.
2. Connect ECM/PCM connector terminals D2 and D11 with a jumper wire.
3. Turn the ignition switch ON (II).
4. Check the ECT with the scan tool.

Is –4°F (–20°C) or less (or L-Limit in Honda mode of PGM Tester) or 5 V indicated?

NO → **Repair open in the wires between ECM/PCM (D2, D11) and ECT sensor.**

YES

Substitute a known-good ECM/PCM and recheck. If normal ECT is indicated, replace the original ECM/PCM.

ECT SENSOR 2P CONNECTOR (C122)

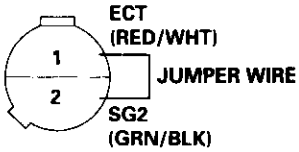

Wire side of female terminals

ECM/PCM CONNECTOR D (16P)

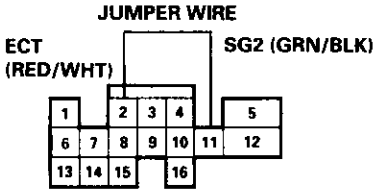

Wire side of female terminals

Engine Coolant Temperature (ECT) Sensor ('99 – 00 Models except D16Y5 engine with M/T)

P0118 The scan tool indicates Diagnostic Trouble Code (DTC) P0118: A high voltage (low temperature) problem in the Engine Coolant Temperature (ECT) sensor circuit.

— The MIL has been reported on.
— DTC P0118 is stored.

Problem verification:
1. Turn the ignition switch ON (II).
2. Check the ECT with the scan tool.

Is –4°F (–20°C) or less (or L-Limit in Honda mode of PGM Tester) or 5 V indicated?

NO → **Intermittent failure, system is OK at this time. Check for poor connections or loose wires at C122 (ECT sensor) and ECM/PCM.**

YES

Check for an open in the ECT sensor:
1. Disconnect the ECT sensor 2P connector.
2. Connect the ECT sensor 2P connector terminals No. 1 and No. 2 with a jumper wire.
3. Check the ECT with the scan tool.

Is –4°F (–20°C) or less (or L-Limit in Honda mode of PGM Tester) or 5 V indicated?

NO → **Replace the ECT sensor.**

YES

Check for an open in the wires (ECT, SG2 lines):
1. Turn the ignition switch OFF.
2. Connect ECM/PCM connector terminals C18 and C26 with a jumper wire.
3. Turn the ignition switch ON (II).
4. Check the ECT with the scan tool.

Is –4°F (–20°C) or less (or L-Limit in Honda mode of PGM Tester) or 5 V indicated?

NO → **Repair open in the wires between ECM/PCM (C18, C26) and ECT sensor.**

YES

Substitute a known-good ECM/PCM and recheck. If normal ECT is indicated, replace the original ECM/PCM.

ECT SENSOR 2P CONNECTOR (C122)

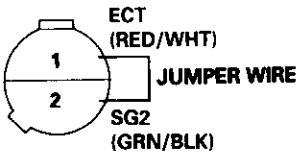

Wire side of female terminals

ECM/PCM CONNECTOR C (31P)

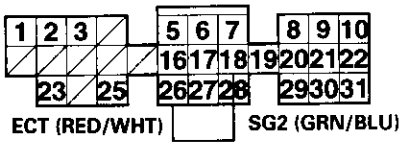

JUMPER WIRE

Wire side of female terminals

Throttle Position (TP) Sensor ('96 – 98 Models, '99 – 00 D16Y5 engine with M/T)

P0122 The scan tool indicates Diagnostic Trouble Code (DTC) P0122: A low voltage problem in the Throttle Position (TP) sensor circuit.

The TP Sensor is a potentiometer. It is connected to the throttle valve shaft. As the throttle position changes, the throttle position sensor varies the voltage signal to the ECM/PCM.

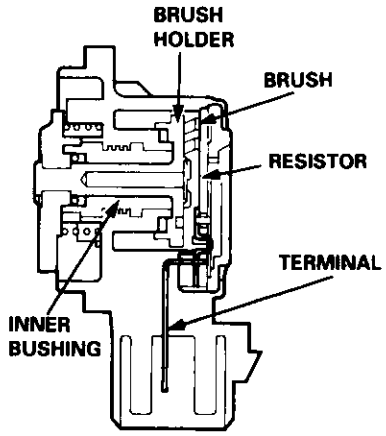

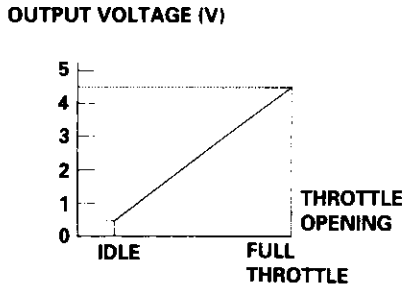

— The MIL has been reported on.
— DTC P0122 is stored.

Problem verification:
1. Turn the ignition switch ON (II).
2. Check the throttle position with the scan tool.

Is there approx. .49 V when the throttle is fully closed and approx. 4.5 V when the throttle is fully opened?

YES → **Intermittent failure, system is OK at this time. Check for poor connections or loose wires at C110 (TP sensor) and ECM/PCM.**

NO

Check for an open in the wire (VCC2 line):
1. Turn the ignition switch OFF.
2. Disconnect the TP sensor 3P connector.
3. Turn the ignition switch ON (II).
4. Measure voltage between the TP sensor 3P connector terminals No. 1 and No. 3.

Is there approx. 5 V?

NO → **Check for an open in wire (VCC2 line):** Measure voltage between ECM/PCM connector terminals D10 and D11.

Is there approx. 5 V?

YES → **Repair open in the wire between ECM/PCM (D10) and TP sensor.**

NO → **Substitute a known-good ECM/PCM and recheck. If prescribed voltage is now available, replace the original ECM/PCM.**

YES

Check for an open or short in TP sensor:
1. Turn the ignition switch OFF.
2. At the sensor side, measure resistance between the TP sensor terminals No. 1 and No. 2 with the throttle fully closed.

(To page 11-133)

TP SENSOR 3P CONNECTOR (C110)

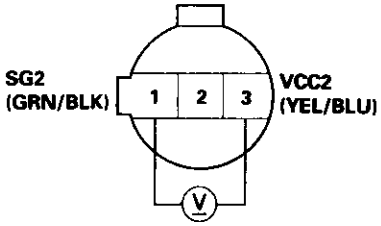

Wire side of female terminals

ECM/PCM CONNECTOR D (16P)

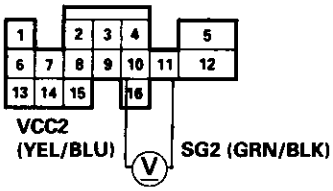

Wire side of female terminals

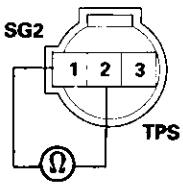

Terminal side of male terminals

(From page 11-132)

Is there approx. 0.5 – 0.9 kΩ?

NO → **Replace the throttle body.**

YES

Check for an open or short in the TP sensor:
Measure resistance between the TP sensor terminal No. 2 and No. 3 with the throttle fully closed.

Is there approx. 3.6 – 5.4 kΩ?

NO → **Replace the throttle body.**

YES

Check for an open in the ECM/PCM (TPS line):
1. Reconnect the TP sensor 3P connector.
2. Turn the ignition switch ON (II).
3. Measure voltage between ECM/PCM connector terminals D1 and D11.

Is there approx. 0.5 V when the throttle is fully closed and approx. 4.5 V when the throttle is fully opened?

YES → **Substitute a known-good ECM/PCM and recheck. If prescribed voltage is now available, replace the original ECM/PCM.**

NO

(D16Y5 engine (CVT))

Check for a short in the TCM:
1. Turn the ignition switch OFF.
2. Disconnect the 22P connector from the TCM.
3. Turn the ignition switch ON (II).
4. Measure voltage between ECM connector terminals D1 and D11.

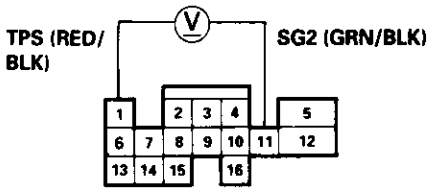

Is there approx. 0.5 V when the throttle is fully closed and approx. 4.5 V when the throttle is fully opened?

YES → **Replace the TCM.**

NO

Repair short in the wire between ECM/PCM (D1), TCM and TP sensor.

TP SENSOR 3P CONNECTOR

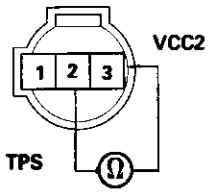

Terminal side of male terminals

ECM/PCM CONNECTOR D (16P)

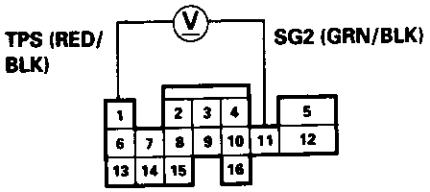

Wire side of female terminals

Throttle Position (TP) Sensor ('99 – 00 Models except D16Y5 engine with M/T)

P0122 The scan tool indicates Diagnostic Trouble Code (DTC) P0122: A low voltage problem in the Throttle Position (TP) sensor circuit.

The TP Sensor is a potentiometer. It is connected to the throttle valve shaft. As the throttle position changes, the throttle position sensor varies the voltage signal to the ECM/PCM.

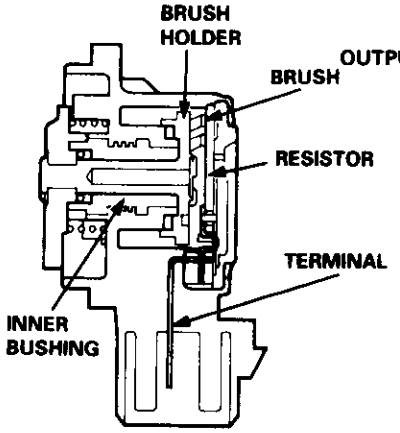

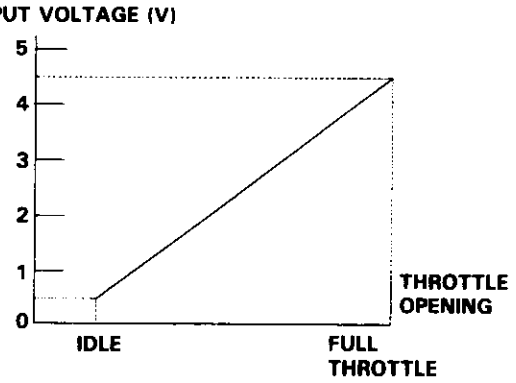

— The MIL has been reported on.
— DTC P0122 is stored.

Problem verification:
1. Start the engine. Hold the engine at 3,000 rpm with no load (in Park or neutral) until the radiator fan comes on, then turn the ignition switch OFF.
2. Turn the ignition switch ON (II).
3. Check the throttle position with the scan tool.

Is there approx. .49 V when the throttle is fully closed and approx. 4.5 V when the throttle is fully opened?

YES → **Intermittent failure, system is OK at this time. Check for poor connections or loose wires at C110 (TP sensor) and ECM/PCM.**

NO

Check for an open or short in the wire (VCC2 line):
1. Turn the ignition switch OFF.
2. Disconnect the TP sensor 3P connector.
3. Turn the ignition switch ON (II).
4. Measure voltage between the TP sensor 3P connector terminals No. 1 and No. 3.

Is there approx. 5 V?

NO → **Check for an open in wire (VCC2 line):** Measure voltage between ECM/PCM connector terminals C18 and C28.

YES

Check for an open or short in TP sensor:
1. Turn the ignition switch OFF.
2. At the sensor side, measure resistance between the TP sensor 3P connector terminals No. 1 and No. 2 with the throttle fully closed.

(To page 11-135)

Is there approx. 5 V?

YES → **Repair open in the wire between ECM/PCM (C28) and TP sensor.**

NO → **Substitute a known-good ECM/PCM and recheck. If prescribed voltage is now available, replace the original ECM/PCM.**

TP SENSOR 3P CONNECTOR (C110)

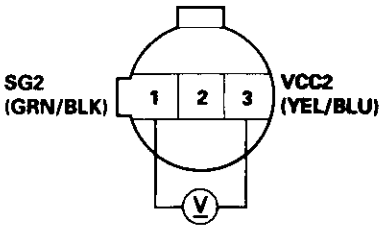

Wire side of female terminals

ECM/PCM CONNECTOR C (31P)

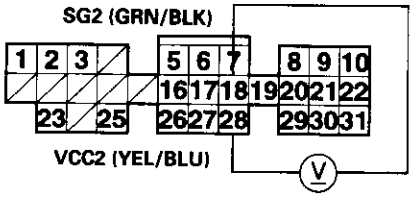

Wire side of female terminals

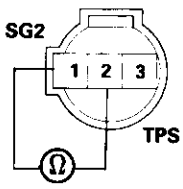

Terminal side of male terminals

(From page 11-134)

Is there approx. 0.5 – 0.9 kΩ?

NO → **Replace the throttle body.**

YES

Check for an open or short in the TP sensor:
Measure resistance between the TP sensor 3P connector terminals No. 2 and No. 3 with the throttle fully closed.

Is there approx. 4.5 kΩ?

NO → **Replace the throttle body.**

YES

Check for an open in the ECM/PCM (TPS line):
1. Reconnect the TP sensor connector.
2. Turn the ignition switch ON (II).
3. Measure voltage between C18 terminal and C27 terminal on the ECM/PCM connector.

Is there approx. 0.5 V when the throttle is fully closed and approx. 4.5 V when the throttle is fully opened?

YES → **Substitute a known-good ECM/PCM and recheck. If prescribed voltage is now available, replace the original ECM/PCM.**

NO

Repair short in the wire between ECM/PCM (C18) and TP sensor.

TP SENSOR 3P CONNECTOR

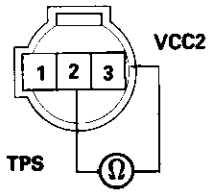

Terminal side of male terminals

ECM/PCM CONNECTOR C (31P)

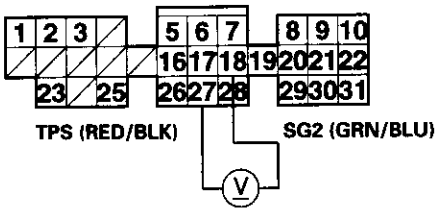

Wire side of female terminals

Throttle Position (TP) Sensor ('96 – 98 Models, '99 – 00 D16Y5 engine with M/T)

P0123 The scan tool indicates Diagnostic Trouble Code (DTC) P0123: A high voltage problem in the Throttle Position (TP) sensor circuit.

— The MIL has been reported on.
— DTC P0123 is stored.

Problem verification:
1. Turn the ignition switch ON (II).
2. Check the throttle position with the scan tool.

Is there approx. 10% when the throttle is fully closed and approx. 90% when the throttle is fully opened?

YES → **Intermittent failure, system is OK at this time. Check for poor connections or loose wires at C110 (TP sensor) and ECM/PCM.**

NO

Check for an open in the TP sensor:
1. Turn the ignition switch OFF.
2. Disconnect the TP sensor 3P connector.
3. Turn the ignition switch ON (II).
4. At the harness side, measure voltage between the TP sensor 3P connecter terminals No. 1 and No. 3.

Is there approx. 5 V?

YES → **Replace the throttle body.**

NO

Check for an open in the wire (SG2 line):
Measure voltage between ECM/PCM connector terminals D10 and D11.

Is there approx. 5 V?

YES → **Repair open in the wire between ECM/PCM (D11) and TP sensor.**

NO

Substitute a known-good ECM/PCM and recheck. If prescribed voltage is now available, replace the original ECM/PCM.

TP SENSOR 3P CONNECTOR (C110)

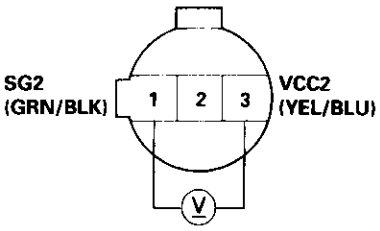

Wire side of female terminals

ECM/PCM CONNECTOR D (16P)

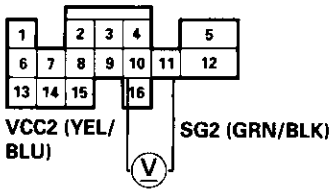

Wire side of female terminals

Throttle Position (TP) Sensor ('99 – 00 Models except D16Y5 engine with M/T)

P0123 The scan tool indicates Diagnostic Trouble Code (DTC) P0123: A high voltage problem in the Throttle Position (TP) sensor circuit.

— The MIL has been reported on.
— DTC P0123 is stored.

Problem verification:
1. Start the engine. Hold the engine at 3,000 rpm with no load (in Park or neutral) until the radiator fan comes on, then turn the ignition switch OFF.
2. Turn the ignition switch ON (II).
3. Check the throttle position with the scan tool.

Is there approx. 10% when the throttle is fully closed and approx. 90% when the throttle is fully opened?

YES → **Intermittent failure, system is OK at this time. Check for poor connections or loose wires at C110 (TP sensor) and ECM/PCM.**

NO

Check for an open in the TP sensor:
1. Turn the ignition switch OFF.
2. Disconnect the TP sensor 3P connector.
3. Turn the ignition switch ON (II).
4. At the wire harness side, measure voltage between the TP sensor 3P connector terminals No. 1 and No. 3.

Is there approx. 5 V?

YES → **Replace the throttle body.**

NO

Check for an open in the wire (SG2 line):
Measure voltage between ECM/PCM connector C (31P) terminals C18 and C28.

Is there approx. 5 V?

YES → **Repair open in the wire between ECM/PCM (C18) and TP sensor.**

NO

Substitute a known-good ECM/PCM and recheck. If prescribed voltage is now available, replace the original ECM/PCM.

TP SENSOR 3P CONNECTOR (C110)

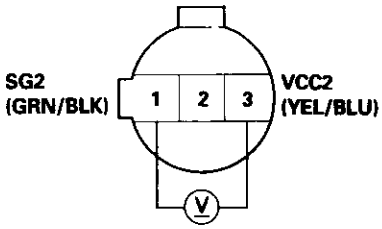

Wire side of female terminals

ECM/PCM CONNECTOR C (31P)

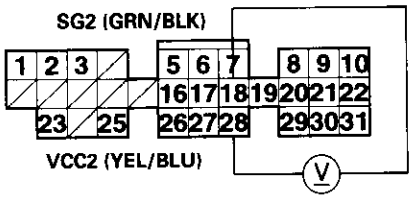

Wire side of female terminals

(cont'd)

Throttle Position (TP) Sensor (cont'd)

P1121 The scan tool indicates Diagnostic Trouble Code (DTC) P1121: Throttle Position (TP) lower than expected.

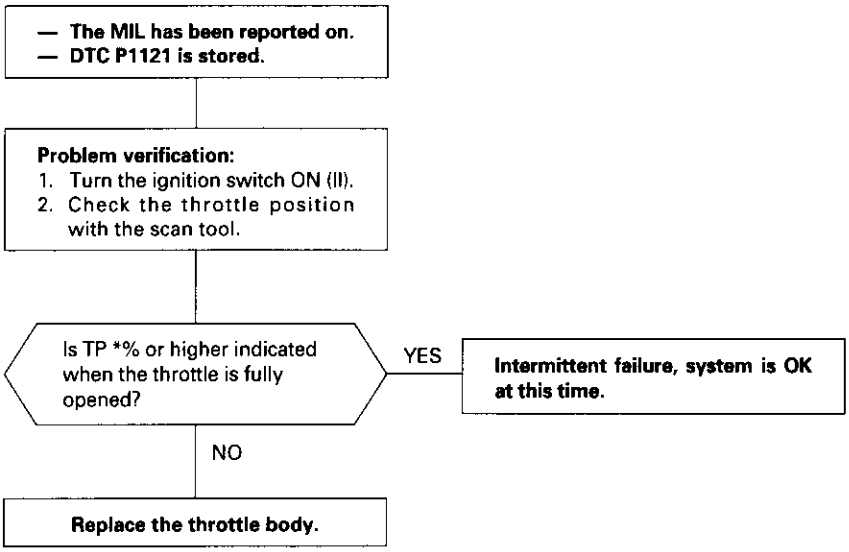

*: 11.8 (D16Y5 engine)
12.9 (D16Y7 engine)
12.2 (D16Y8 engine)
13.7 (B16A2 engine)

P1122 The scan tool indicates Diagnostic Trouble Code (DTC) P1122: Throttle Position (TP) higher than expected.

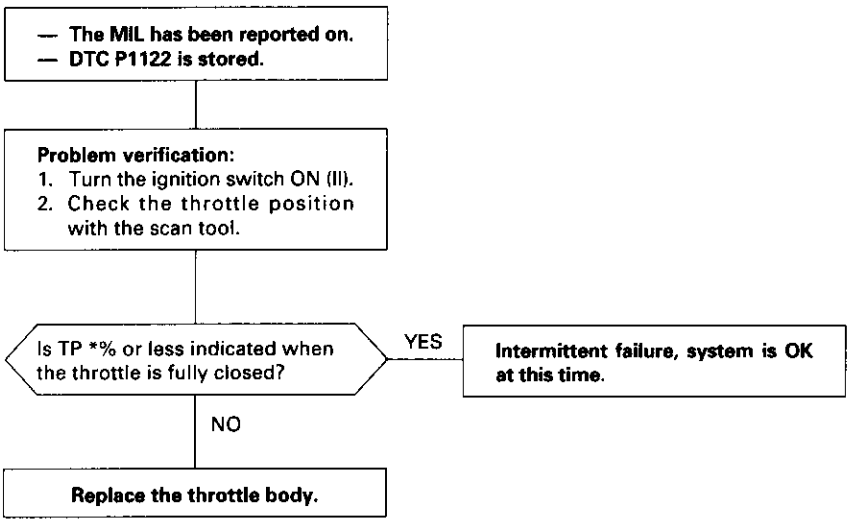

*: 16.5 (D16Y5, D16Y8 engine)
16.9 (D16Y7 engine)
16.5 (B16A2 engine)

Primary Heated Oxygen Sensor (Primary HO2S) (Sensor 1) ('96 – 98 Models except D16Y5 engine with M/T)

The Heated Oxygen Sensor (HO2S) detects the oxygen content in the exhaust gas and signals the ECM/PCM. In operation, the ECM/PCM receives the signals from the sensor and varies the duration during which fuel is injected. To stabilize the sensor's output, the sensor has an internal heater. The Primary HO2S (Sensor 1) is installed in the exhaust manifold.

HO2S:

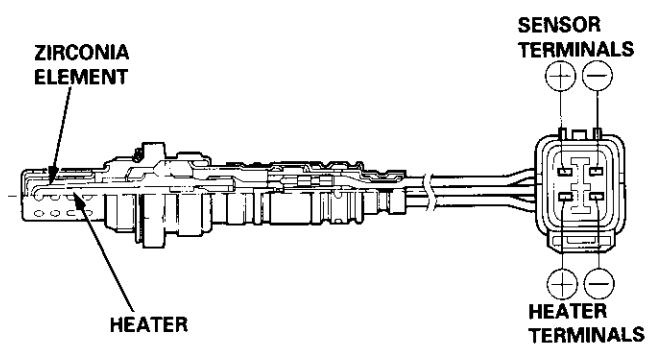

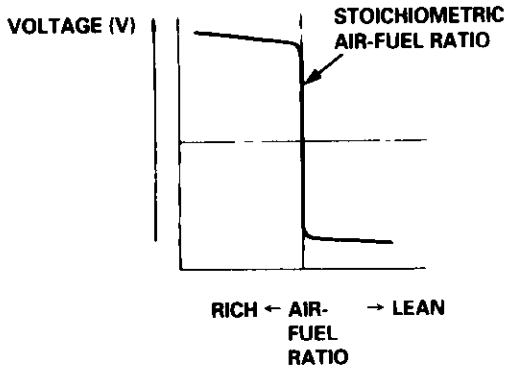

P0131 The scan tool indicates Diagnostic Trouble Code (DTC) P0131: A low voltage problem in the Primary Heated Oxygen Sensor (HO2S) (Sensor 1) circuit.

— The MIL has been reported on.
— DTC P0131 is stored.

Problem verification:
1. Do the ECM/PCM Reset Procedure.
2. Start the engine. Hold the engine at 3,000 rpm with no load (in Park or neutral) until the radiator fan comes on.
3. Test-drive with the A/T in [2] position (M/T in 4th gear)
4. Check the Primary HO2S (Sensor 1) output voltage with the scan tool during acceleration using wide open throttle.

Does the voltage stay at 0.1 V or less?

NO → **Intermittent failure, system is OK at this time. Check for poor connections or loose wires at C123 (Primary HO2S, sensor 1) and ECM/PCM.**

YES

Check the fuel pressure.

Is it normal?

NO → **Repair fuel supply system.**

YES

(To page 11-140)

(cont'd)

Primary Heated Oxygen Sensor (Primary HO2S) (Sensor 1) ('96 – 98 Models except D16Y5 engine with M/T) (cont'd)

(From page 11-139)

Check for a short in the HO2S:
1. Turn the ignition switch OFF.
2. Disconnect the Primary HO2S (Sensor 1) 4P connector.
3. Start the engine and let it idle.
4. Check the Primary HO2S (Sensor 1) output voltage with the scan tool.

Does it stay at 0.1 V or less?

NO → **Replace the HO2S.**

YES ↓

Check for a short in the wire (PHO2S line):
1. Turn the ignition switch OFF.
2. Disconnect the ECM/PCM connector D (16P).
3. Check for continuity between the Primary HO2S (Sensor 1) 4P connector terminal No. 1 and body ground.

Is there continuity?

YES → **Repair short in the wire between ECM/PCM (D7) and Primary HO2S (Sensor 1).**

NO ↓

Substitute a known-good ECM/PCM and recheck. If symptom/indication goes away, replace the original ECM/PCM.

PRIMARY HO2S (Sensor 1) 4P CONNECTOR (C123)

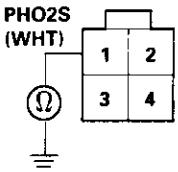

Wire side of female terminals

Primary Heated Oxygen Sensor (Primary HO2S) (Sensor 1) ('99 – 00 Models except D16Y5 engine with M/T)

The Heated Oxygen Sensors (HO2S) detect the oxygen content in the exhaust gas and signals the ECM/PCM. In operation, the ECM/PCM receives the signals from the sensor and varies the duration during which fuel is injected. To stabilize the sensor's output, the sensor has an internal heater. The Primary HO2S (Sensor 1) is installed in exhaust manifold (D16Y8, B16A2 engine: exhaust pipe A).

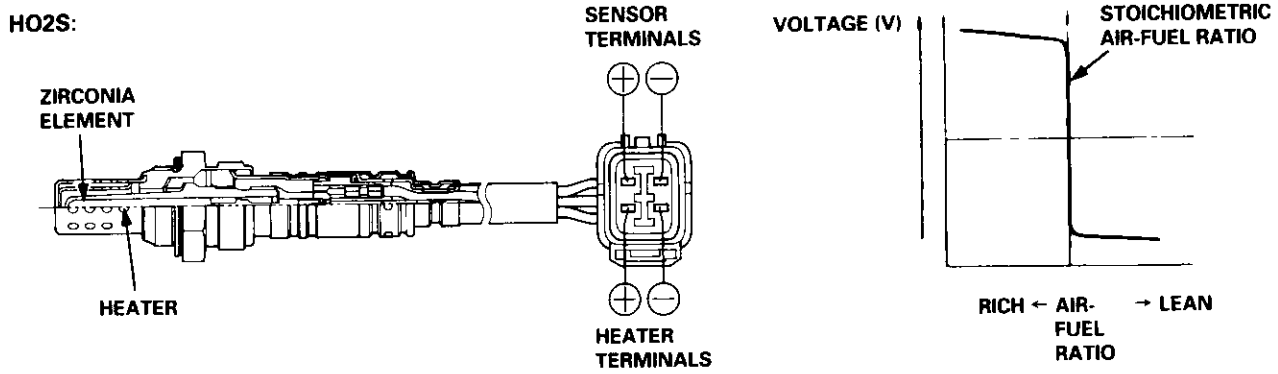

P0131 The scan tool indicates Diagnostic Trouble Code (DTC) P0131: A low voltage problem in the Primary Heated Oxygen Sensor (HO2S) (Sensor 1) circuit.

— The MIL has been reported on.
— DTC P0131 is stored.

Problem verification:
1. Do the ECM/PCM Reset Procedure.
2. Start the engine. Hold the engine at 3,000 rpm with no load (in Park or neutral) until the radiator fan comes on.
3. Check the Primary HO2S (Sensor 1) output voltage with the scan tool during acceleration using wide open throttle.

Does the voltage stay at 0.5 V or less?

NO → **Intermittent failure, system is OK at this time. Check for poor connections or loose wires at C123 (Primary HO2S, Sensor 1) and ECM/PCM.**

YES

Check the fuel pressure (see page 11-109).

Is it normal?

NO → **Repair fuel supply system.**

YES

(To page 11-142)

(cont'd)

Primary Heated Oxygen Sensor (Primary HO2S) (Sensor 1) ('99 – 00 Models except D16Y5 engine with M/T) (cont'd)

(From page 11-141)

Check for a short in the HO2S:
1. Turn the ignition switch OFF.
2. Disconnect the Primary HO2S (Sensor 1) 4P connector.
3. Start the engine and let it idle.
4. Check the Primary HO2S (Sensor 1) output voltage with the scan tool.

Does it stay at 0.5 V or less?

NO → **Replace the HO2S (Sensor 1).**

YES

Check for a short in the wire (PHO2S line):
1. Turn the ignition switch OFF.
2. Disconnect the ECM/PCM connector C (31P).
3. Check for continuity between the Primary HO2S (Sensor 1) 4P connector terminal No. 1 and body ground.

Is there continuity?

YES → **Repair short in the wire between ECM/PCM (C16) and Primary HO2S (Sensor 1).**

NO

Substitute a known-good ECM/PCM and recheck. If symptom/indication goes away, replace the original ECM/PCM.

PRIMARY HO2S (Sensor 1) 4P CONNECTOR (C123)

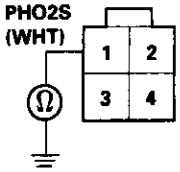

Wire side of female terminals

Primary Heated Oxygen Sensor (Primary HO2S) (Sensor 1) ('96 – 98 Models except D16Y5 engine with M/T)

P0132 The scan tool indicates Diagnostic Trouble Code (DTC) P0132: A high voltage problem in the Primary Heated Oxygen Sensor (Primary HO2S) (Sensor 1) circuit.

— The MIL has been reported on.
— DTC P0132 is stored.

Problem verification:
1. Do the ECM/PCM Reset Procedure.
2. Start the engine. Hold the engine at 3,000 rpm with no load (in Park or neutral) until the radiator fan comes on.
3. Test-drive with the A/T in [2] position (M/T in 4th gear).
4. Check the Primary HO2S (Sensor 1) output voltage with the scan tool during deceleration using completely closed throttle.

Does the voltage stay at 1.0 V or more?

NO → **Intermittent failure, system is OK at this time. Check for poor connections or loose wires at C123 (Primary HO2S, Sensor 1) and ECM/PCM.**

YES

Check for an open in the Primary HO2S:
1. Turn the ignition switch OFF.
2. Disconnect the Primary HO2S (Sensor 1) 4P connector.
3. Connect the Primary HO2S (Sensor 1) 4P connector terminals No. 1 and No. 2 with a jumper wire.
4. Turn the ignition switch ON (II).
5. Check the Primary HO2S (Sensor 1) output voltage with the scan tool.

Is there 1.0 V or more?

NO → **Replace the Primary HO2S.**

YES

Check for an open in the wire (PHO2S line):
1. Turn the ignition switch OFF.
2. Connect ECM/PCM connector terminals D7 and D11 with a jumper wire.
3. Turn the ignition switch ON (II).
4. Check the Primary HO2S (Sensor 1) output voltage with the scan tool.

Is there 1.0 V or more?

NO → **Repair open in the wire between ECM/PCM (D7) and Primary HO2S (Sensor 1).**

YES

Substitute a known-good ECM/PCM and recheck. If symptom/indication goes away, replace the original ECM/PCM.

PRIMARY HO2S (Sensor 1) 4P CONNECTOR (C123)

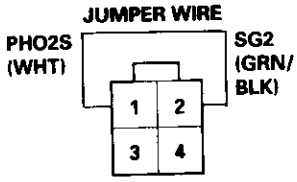

Wire side of female terminals

ECM/PCM CONNECTOR D (16P)

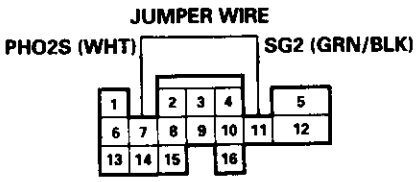

Wire side of female terminals

Primary Heated Oxygen Sensor (Primary HO2S) (Sensor 1) ('99 – 00 Models except D16Y5 engine with M/T)

P0132 The scan tool indicates Diagnostic Trouble Code (DTC) P0132: A high voltage problem in the Primary Heated Oxygen Sensor (Primary HO2S) (Sensor 1) circuit.

— The MIL has been reported on.
— DTC P0132 is stored.

Problem verification:
1. Do the ECM/PCM Reset Procedure.
2. Start the engine. Hold the engine at 3,000 rpm with no load (in Park or neutral) until the radiator fan comes on.
3. Check the Primary HO2S (Sensor 1) output voltage with the scan tool during deceleration using completely closed throttle.

Does the voltage stay at 1.5 V or more?

NO → **Intermittent failure, system is OK at this time. Check for poor connections or loose wires at C123 (Primary HO2S, Sensor 1) and ECM/PCM.**

YES

Check for an open in the Primary HO2S:
1. Turn the ignition switch OFF.
2. Disconnect the Primary HO2S (Sensor 1) connector.
3. Connect the Primary HO2S (Sensor 1) 4P connector terminals No. 1 and No. 2 with a jumper wire.
4. Turn the ignition switch ON (II).
5. Check the Primary HO2S (Sensor 1) output voltage with the scan tool.

Is there 1.5 V or more?

NO → **Replace the Primary HO2S.**

YES

Check for an open in the wire (PHO2S line):
1. Turn the ignition switch OFF.
2. Connect ECM/PCM connector terminals C16 and C18 with a jumper wire.
3. Turn the ignition switch ON (II).
4. Check the Primary HO2S (Sensor 1) output voltage with the scan tool.

Is there 1.5 V or more?

YES → **Repair open in the wire between ECM/PCM (C16) and Primary HO2S (Sensor 1).**

NO

Substitute a known-good ECM/PCM and recheck. If symptom/indication goes away, replace the original ECM/PCM.

PRIMARY HO2S (Sensor 1) 4P CONNECTOR (C123)

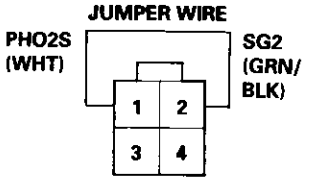

Wire side of female terminals

ECM/PCM CONNECTOR C (31P)

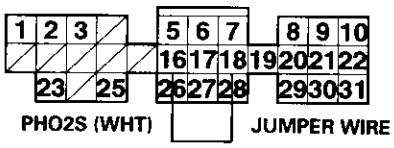

SG2 (GRN/BLK)

Wire side of female terminals

Primary Heated Oxygen Sensor (Primary HO2S) (Sensor 1)

P0133 The scan tool indicates Diagnostic Trouble Code (DTC) P0133: A slow response problem in the Primary Heated Oxygen Sensor (Primary HO2S) (Sensor 1) circuit.

* **P1163** The scan tool indicates Diagnostic Trouble Code (DTC) P1163: A slow response problem in the Primary Heated Oxygen Sensor (Primary HO2S) (Sensor 1) circuit.

Description

By controlling the air/fuel ratio with a Primary HO2S (Sensor 1) and a Secondary HO2S (Sensor 2), the deterioration of the Primary HO2S (Sensor 1) can be evaluated by its feedback period. When the feedback period of the HO2S exceeds a certain value during stable driving conditions, the sensor will be judged as deteriorated.
When deterioration has been detected during two consecutive trips, the MIL comes on and DTC P0133 or P1163* will be stored.

NOTE: If DTC P0131, P0132 and/or P0135 are stored at the same time as DTC P0133, troubleshoot those DTCs first, then troubleshoot DTC P0133. If DTC P1162, P1168 and/or P1169 are stored at the same time as DTC P1163, troubleshoot those DTCs first, then recheck for DTC P1163.

Possible Cause

- Primary HO2S (Sensor 1) Deterioration
- Primary HO2S Heater (Sensor 1) Deterioration
- Exhaust system leakage

Troubleshooting Flowchart

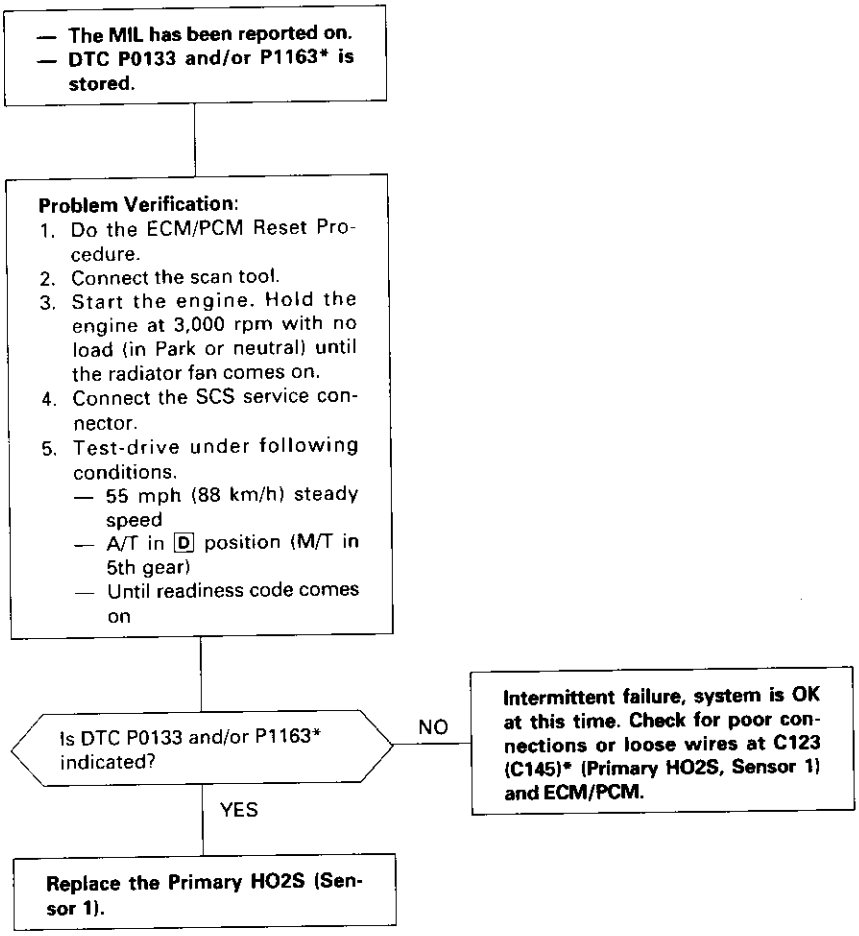

*: P1163 (D16Y5 engine with M/T)

Primary Heated Oxygen Sensor (Primary HO2S) (Sensor 1) (D16Y5 engine with M/T)

P1162 The scan tool indicates Diagnostic Trouble Code (DTC) P1162: A malfunction in the Primary Heated Oxygen Sensor (Primary HO2S) (Sensor 1) circuit.

Description

The Primary Heated Oxygen Sensor (Primary HO2S) (Sensor 1) operates over a wide air/fuel range. The Primary HO2S (Sensor 1) is installed in the exhaust manifold.

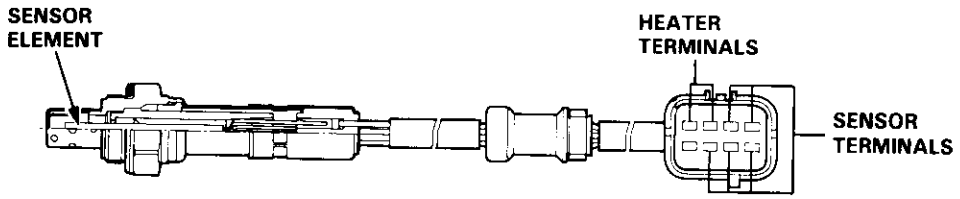

NOTE: If DTC P1162 is stored at the same time as DTC P1167, troubleshoot DTC P1162 first, then recheck for DTC P1167.

— The MIL has been reported on.
— DTC P1162 is stored.

Problem verification:
1. Do the ECM Reset Procedure.
2. Start the engine.
3. Wait at least two minutes.

Is DTC P1162 indicated?

NO → Test-drive for several miles with the transmission in 3rd gear. Hold the engine speed at 1,500 rpm.

Is DTC P1162 indicated?

NO → **Intermittent failure, system is OK at this time. Check for poor connections or loose wires at C145 (Primary HO2S, Sensor 1) and ECM.**

YES → **Check for an open in the wire (IP+ line):**
1. Turn the ignition switch OFF.
2. Disconnect ECM connector C (31P) from the ECM.
3. Disconnect the 8P connector from the Primary HO2S (Sensor 1).
4. Check for continuity between the Primary HO2S (Sensor 1) 8P connector terminal No. 7 and ECM connector terminal C23.

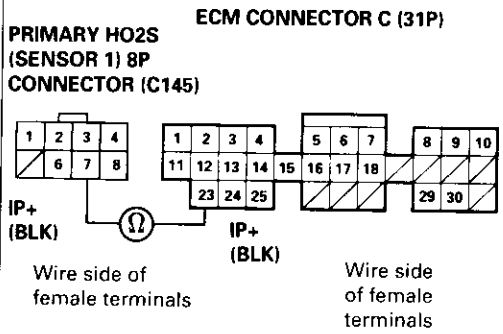

Is there continuity?

NO → **Repair open in the wire between ECM (C23) and Primary HO2S (Sensor 1).**

YES → **Inspect for poor terminal to terminal contact at the Primary HO2S (Sensor 1) connector and ECM. If terminal contact is OK, replace the Primary HO2S (Sensor 1).**

(To page 11-147)

(From page 11-146)

Check the ECM input voltage (IP–/VS– line):
1. Turn the ignition switch OFF.
2. Turn the ignition switch ON (II).
3. Measure voltage between ECM connector terminals C24 and D11.

ECM CONNECTORS

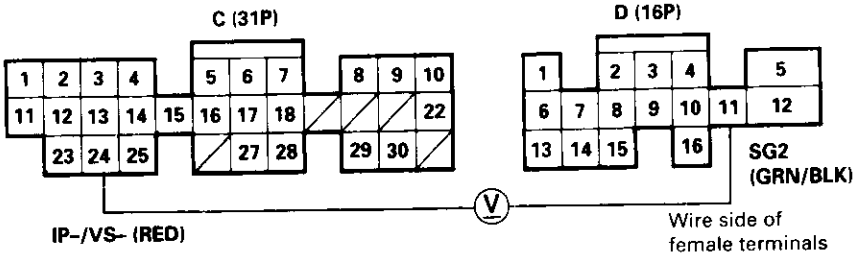

Is there more than 0.5 V?

NO →

Check the ECM:
1. Turn the ignition switch OFF.
2. Disconnect ECM connector C (31P) from the ECM.
3. Check for continuity between body ground and ECM connector terminal C24.

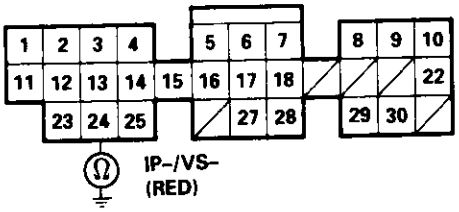

Is there continuity?

NO →

— Repair open in the wire between ECM (C24) and Primary HO2S (Sensor 1).
— Substitute a known-good ECM and recheck. If symptom/indication goes away, replace the original ECM.

YES ↓

Check for a short in the wire (IP–/VS– line):
1. Disconnect the 8P connector from the Primary HO2S (Sensor 1).
2. Check for continuity between body ground and ECM connector terminal C24.

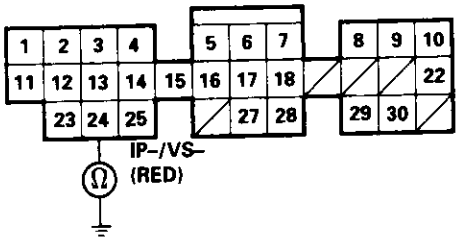

Is there continuity?

YES →

Repair short in the wire between the Primary HO2S (Sensor 1) and ECM (C24).

NO ↓

Replace the Primary HO2S (Sensor 1).

YES ↓

Check the ECM output voltage (VS+ line):
Measure voltage between ECM connector terminals C25 and D11.

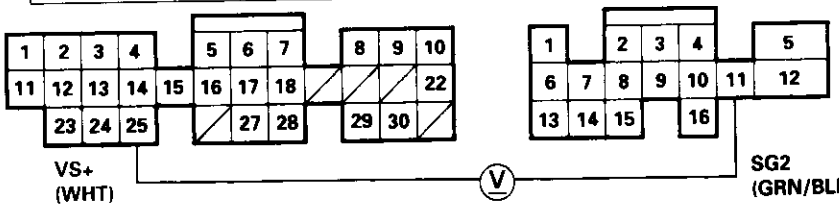

Is there more than 0.5 V?

NO →

Check for a short in the wire (VS+ line):
1. Turn the ignition switch OFF.
2. Disconnect ECM connector C (31P) from the ECM.
3. Check for continuity between body ground and ECM connector terminal C25.

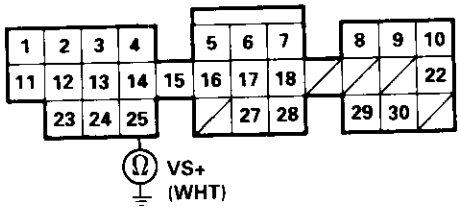

YES ↓

A

(To page 11-148)

B

(To page 11-148)

(cont'd)

Primary Heated Oxygen Sensor (Primary HO2S) (Sensor 1) (D16Y5 engine with M/T) (cont'd)

(From page 11-147)

(From page 11-147)

A

B

Is there continuity?

NO → **Substitute a known-good ECM and recheck. If symptom/indication goes away, replace the original ECM.**

YES

Check for a short in the wire (IP+ line):
1. Disconnect the 8P connector from the Primary HO2S (Sensor 1).
2. Check for continuity between body ground and ECM connector terminal C25.

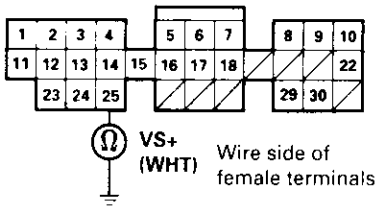

Is there continuity?

YES → **Repair short in the wire between the Primary HO2S (Sensor 1) and ECM (C25).**

NO

Replace the Primary HO2S (Sensor 1).

Is there more than 5.0 V?

NO → **Check the ECM:**
1. Turn the ignition switch OFF.
2. Disconnect the 8P connector from the Primary HO2S (Sensor 1).
3. Turn the ignition switch ON (II).
4. Measure voltage between ECM connector C25 and D11.

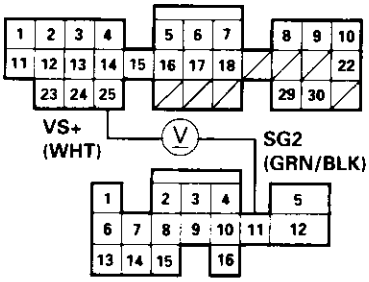

YES

Is there more than 5.0 V?

YES → **Replace the Primary HO2S (Sensor 1).**

NO

Substitute a known-good ECM and recheck. If symptom/indication goes away, replace the original ECM.

Check the ECM input voltage (IP–/VS– line):
1. Start the engine. Hold the engine at 3,000 rpm with no load (transmission in neutral) until the radiator fan comes on, then let it idle.
2. Measure voltage between ECM connector terminals C24 and D11.

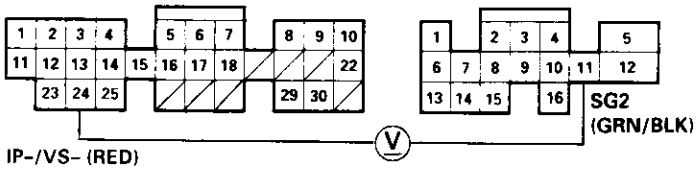

Is there 2.6 – 2.8 V?

NO → **Check the ECM output voltage (VS+ line):**
Measure voltage between ECM connector terminals C25 and D11.

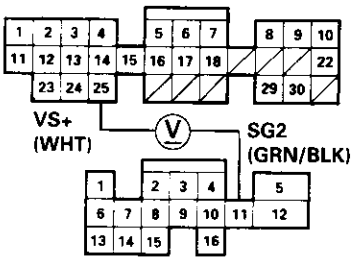

YES

A

(To page 11-149)

B

(To page 11-149)

(From page 11-148)

A

Check the ECM output voltage (IP+ line):
Measure voltage between ECM connector terminals C23 and D11.

Is there more than 0.4 V?

YES → **Substitute a known-good ECM and recheck. If symptom/indication goes away, replace the original ECM.**

NO

Check the ECM:
1. Turn the ignition switch OFF.
2. Disconnect ECM connector C (31P) from the ECM.
3. Check for continuity between body ground and ECM connector terminal C23.

Is there continuity?

NO → **Check for an open in the wire (IP+ line):**
1. Turn the ignition switch OFF.
2. Disconnect the 8P connector from the Primary HO2S (Sensor 1).
3. Check for continuity between the Primary HO2S (Sensor 1) 8P connector terminal No. 7 and ECM connector terminal C23.

Is there continuity?

NO → **Repair open in the wire between ECM (C23) and Primary HO2S (Sensor 1).**

YES → **Substitute a known-good ECM and recheck. If symptom/indication goes away, replace the original ECM.**

YES

Check for a short in the wire (IP+ line):
1. Disconnect the 8P connector from the Primary HO2S (Sensor 1).
2. Check for continuity between body ground and ECM connector terminal C23.

Is there continuity?

YES → **Repair short in the wire between the Primary HO2S (Sensor 1) and ECM (C23).**

NO → **Replace the Primary HO2S (Sensor 1).**

(From page 11-148)

B

Is there less than 2.8 V?

YES → **Replace the Primary HO2S (Sensor 1).**

NO → **Substitute a known-good ECM and recheck. If symptom/indication goes away, replace the original ECM.**

ECM CONNECTORS

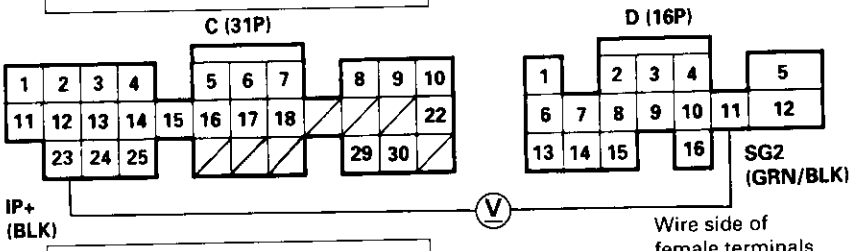

Wire side of female terminals

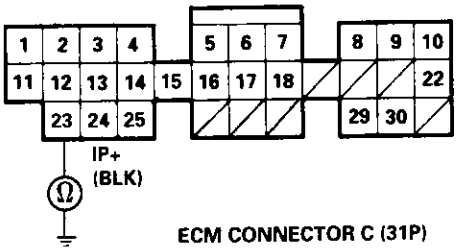

ECM CONNECTOR C (31P)

PRIMARY HO2S (SENSOR 1) 8P CONNECTOR (C145)

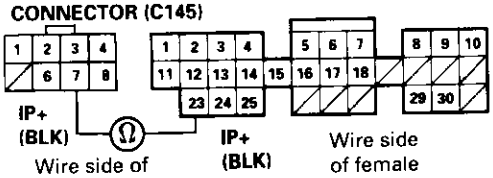

Wire side of female terminals

Wire side of female terminals

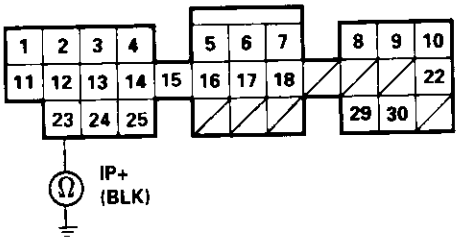

(cont'd)

Primary Heated Oxygen Sensor (Primary HO2S) (Sensor 1) (D16Y5 engine with M/T) (cont'd)

P1164 The scan tool indicates Diagnostic Trouble Code (DTC) P1164: A range/performance problem in the Primary Heated Oxygen Sensor (Primary HO2S) (Sensor 1) circuit.

— The MIL has been reported on.
— DTC P1164 is stored.

Problem Verification:
1. Do the ECM Reset Procedure.
2. Start the engine. Hold the engine at 3,000 rpm with no load (transmission in neutral) until the radiator fan comes on.
3. Connect the SCS service connector.
4. Test-drive in 4th gear. Starting at 1,600 rpm, accelerate using wide open throttle for at least 5 seconds. Then decelerate for at least 5 seconds with the throttle completely closed.

Is DTC P1164 indicated?

NO → **Intermittent failure, system is OK at this time. Check for poor connections or loose wires at C145 (Primary HO2S, Sensor 1) and ECM.**

YES → **Replace the Primary HO2S (Sensor 1).**

P1165 The scan tool indicates Diagnostic Trouble Code (DTC) P1165: A range/performance problem the Primary Heated Oxygen Sensor (Primary HO2S) (Sensor 1) circuit.

— The MIL has been reported on.
— DTC P1165 is stored.

Problem Verification:
1. Do the ECM Reset Procedure.
2. Start the engine. Hold the engine at 3,000 rpm with no load (transmission in neutral) until the radiator fan comes on.
3. Connect the SCS service connector.
4. Test-drive under following conditions.
   — 55 mph steady speed
   — Transmission in 5th gear
   — Until readiness code comes on

Is DTC P1165 indicated?

NO → **Intermittent failure, system is OK at this time. Check for poor connections or loose wires at C145 (Primary HO2S, Sensor 1) and ECM.**

YES → **Replace the Primary HO2S (Sensor 1).**

P1168 The scan tool indicates Diagnostic Trouble Code (DTC) P1168: A low voltage problem in the Primary Heated Oxygen Sensor (Primary HO2S) (Sensor 1) LABEL circuit.

— The MIL has been reported on.
— DTC P1168 is stored.

Problem verification:
1. Do the ECM Reset Procedure.
2. Start the engine.
3. Wait at least two minutes.

Is DTC P1168 indicated?

NO → **Intermittent failure, system is OK at this time. Check for poor connections or loose wires at C145 (Primary HO2S, Sensor 1) and ECM.**

YES

Check the ECM:
1. Turn the ignition switch OFF.
2. Disconnect the ECM connector D (16P).
3. Check for continuity between ECM connector terminal D7 and body ground.

Is there continuity?

NO → **Substitute a known-good ECM and recheck. If symptom/indication goes away, replace the original ECM.**

YES

Check for a short in the wires (LABEL line):
1. Disconnect the Primary HO2S (Sensor 1) 8P connector.
2. Check for continuity between ECM connector terminal D7 and body ground.

Is there continuity?

NO → **Replace the Primary HO2S (Sensor 1).**

YES

Repair short in the wires between the Primary HO2S (Sensor 1) and ECM (D7).

ECM CONNECTOR D (16P)

LABEL (WHT)

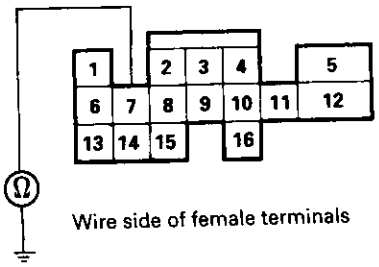

Wire side of female terminals

LABEL (WHT)

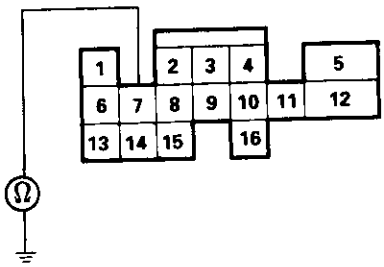

(cont'd)

Primary Heated Oxygen Sensor (Primary HO2S) (Sensor 1) (D16Y5 engine with M/T) (cont'd)

P1169 The scan tool indicates Diagnostic Trouble Code (DTC) P1169: A high voltage problem in the Primary Heated Oxygen Sensor (Primary HO2S) (Sensor 1) LABEL circuit.

— The MIL has been reported on.
— DTC P1169 is stored.

Problem verification:
1. Do the ECM Reset Procedure.
2. Start the engine.
3. Wait at least two minutes.

Is DTC P1169 indicated?

NO → **Intermittent failure, system is OK at this time. Check for poor connections or loose wires at C145 (Primary HO2S, Sensor 1) and ECM.**

YES

Check for an open in the wire (LABEL line):
1. Turn the ignition switch OFF.
2. Disconnect the Primary HO2S (Sensor 1) 8P connector.
3. Turn the ignition switch ON (II).
4. Measure voltage between Primary HO2S (Sensor 1) 8P connector No. 4 terminal and body ground.

Is there approx. 5 V?

YES → **Check for an open in the wire (SG2 line):**
1. Turn the ignition switch OFF.
2. Disconnect ECM connector D (16P) from the ECM.
3. Check for continuity between ECM connector terminal D11 and Primary HO2S (Sensor 1) 8P connector terminal No. 3.

NO → **Repair open in the wires between the Primary HO2S (Sensor 1) and ECM (D7).**

Is there continuity?

NO → **Repair open in the wire between the Primary HO2S (Sensor 1) and ECM (D11).**

YES → **Replace the Primary HO2S (Sensor 1).**

PRIMARY HO2S (SENSOR 1) 8P CONNECTOR (145)

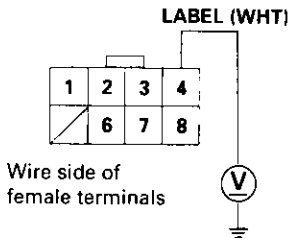

ECM CONNECTOR D (16P)

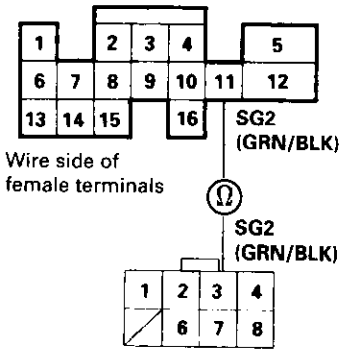

Secondary Heated Oxygen Sensor (Secondary HO2S) (Sensor 2)

P0137 The scan tool indicates Diagnostic Trouble Code (DTC) P0137: A low voltage problem in the Secondary Heated Oxygen Sensor (Secondary HO2S) (Sensor 2) circuit.

— The MIL has been reported on.
— DTC P0137 is stored.

Problem verification:
1. Do the ECM/PCM Reset Procedure.
2. Start the engine. Hold the engine at 3,000 rpm with no load (in Park or neutral) until the radiator fan comes on.
3. With the scan tool, check the Secondary HO2S (Sensor 2) output voltage at 3,000 rpm.

Does the voltage stay at 0.3 V or less?

NO → **Intermittent failure, system is OK at this time. Check for poor connections or loose wires at C131* (located under right side of dash), C432* (located under middle of dash), C125 (C782)* (Secondary HO2S) (Sensor 2) and ECM/PCM.**

YES ↓

Check for a short in the Secondary HO2S:
1. Turn the ignition switch OFF.
2. Disconnect the Secondary HO2S (Sensor 2) 4P connector.
3. Start the engine.
4. Check the Secondary HO2S (Sensor 2) output with the scan tool.

Does the voltage stay at 0.3 V or less?

NO → **Replace the Secondary HO2S.**

YES ↓

Check for a short in the wire (SHO2S line):
1. Turn the ignition switch OFF.
2. Disconnect the ECM/PCM connector D (16P) (A (32P))*2.
3. Check for continuity between the Secondary HO2S (Sensor 2) 4P connector terminal No. 1 and body ground.

Is there continuity?

YES → **Repair short in the wire between ECM/PCM (D14 (A23)*2) and Secondary HO2S (Sensor 2).**

NO ↓

Substitute a known-good ECM/PCM and recheck. If symptom/indication goes away, replace the original ECM/PCM.

SECONDARY HO2S (Sensor 2) 4P CONNECTOR (C125, C782*)

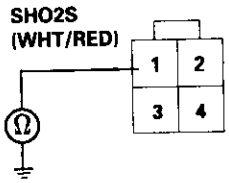

Wire side of female terminals

*1: D16Y8 engine
*2: '99 – 00 models except D16Y5 engine with M/T

(cont'd)

Secondary Heated Oxygen Sensor (Secondary HO2S) (Sensor 2) ('96 – 98 Models; '99 – 00 D16Y5 engine with M/T)

P0138 The scan tool indicates Diagnostic Trouble Code (DTC) P0138: A high voltage problem in the Secondary Heated Oxygen Sensor (Secondary HO2S) (Sensor 2) circuit.

— The MIL has been reported on.
— DTC P0138 is stored.

Problem verification:
1. Do the ECM/PCM Reset Procedure.
2. Start the engine. Hold the engine at 3,000 rpm with no load (in Park or neutral) until the radiator fan comes on.
3. With the scan tool, check the Secondary HO2S (Sensor 2) output voltage at 3,000 rpm.

Does the voltage stay at 0.6 V or more?

NO → **Intermittent failure, system is OK at this time. Check for poor connections or loose wires at C131* (located under right side of dash), C432* (located under middle of dash), C125 (C782)* (Secondary HO2S Sensor 2) and ECM/PCM.**

YES

Check for an open in the Secondary HO2S:
1. Turn the ignition switch OFF.
2. Disconnect the Secondary HO2S (Sensor 2) 4P connector.
3. Connect the Secondary HO2S (Sensor 2) 4P connector terminals No. 1 and No. 2 with a jumper wire.
4. Turn the ignition switch ON (II).
5. Check the Secondary HO2S (Sensor 2) output voltage with the scan tool.

Is there 0.6 V or more?

NO → **Replace the Secondary HO2S (Sensor 2).**

YES

Check for an open in the wire (SHO2S line):
1. Turn the ignition switch OFF.
2. Connect ECM/PCM connector terminals D14 and D13 with a jumper wire.
3. Turn the ignition switch ON (II).
4. Check the Secondary HO2S (Sensor 2) output voltage with the scan tool.

Is there 0.6 V or more?

NO → **Repair open in the wire between ECM/PCM (D13 and/or D14) and Secondary HO2S (Sensor 2).**

YES

Substitute a known-good ECM/PCM and recheck. If symptom/indication goes away, replace the original ECM/PCM.

SECONDARY HO2S (Sensor 2) 4P CONNECTOR C125 (C782)*

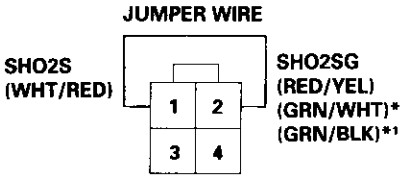

Wire side of female terminals

ECM/PCM CONNECTOR D (16P)

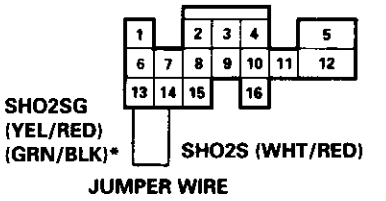

Wire side of female terminals

*: D16Y8 engine
*1: D16Y5 engine

Secondary Heated Oxygen Sensor (Secondary HO2S) (Sensor 2) ('99 – 00 Models except D16Y5 engine with M/T)

P0138 The scan tool indicates Diagnostic Trouble Code (DTC) P0138: A high voltage problem in the Secondary Heated Oxygen Sensor (Secondary HO2S) (Sensor 2) circuit.

— The MIL has been reported on.
— DTC P0138 is stored.

Problem verification:
1. Do the ECM/PCM Reset Procedure.
2. Start the engine. Hold the engine at 3,000 rpm with no load (in Park or neutral) until the radiator fan comes on.
3. Check the Secondary HO2S (Sensor 2) output voltage at 3,000 rpm with the scan tool.

Does the voltage stay at 0.6 V or more?

NO → **Intermittent failure, system is OK at this time. Check for poor connections or loose wires at C131* (located under right side of dash), C432* (located under middle of dash), C125 (C782)* (Secondary HO2S Sensor 2) and ECM/PCM.**

YES

Check for an open in the Secondary HO2S:
1. Turn the ignition switch OFF.
2. Disconnect the Secondary HO2S (Sensor 2) 4P connector.
3. Connect the Secondary HO2S (Sensor 2) 4P connector terminals No. 1 and No. 2 with a jumper wire.
4. Turn the ignition switch ON (II).
5. Check the Secondary HO2S (Sensor 2) output voltage with the scan tool.

Is there 0.6 V or more?

NO → **Replace the Secondary HO2S (Sensor 2).**

YES

Check for an open in the wire (SHO2S line):
1. Turn the ignition switch OFF.
2. Connect ECM/PCM connector terminals A23 and C18 with a jumper wire.
3. Turn the ignition switch ON (II).
4. Check the Secondary HO2S (Sensor 2) output voltage with the scan tool.

Is there 0.6 V or more?

NO → **Repair open in the wire between ECM/PCM (A23) and Secondary HO2S (Sensor 2).**

YES

Substitute a known-good ECM/PCM and recheck. If symptom/indication goes away, replace the original ECM/PCM.

SECONDARY HO2S (Sensor 2) 4P CONNECTOR C125 (C782)*

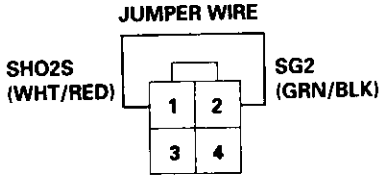

Wire side of female terminals

ECM/PCM CONNECTORS

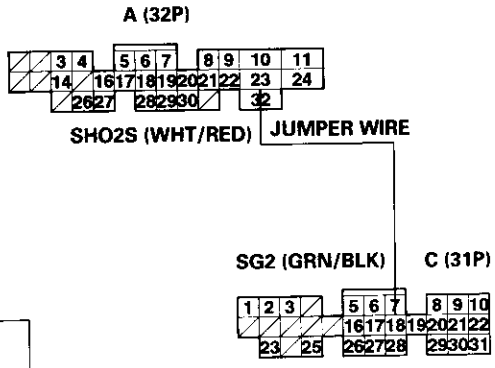

Wire side of female terminals

*: D16Y8 engine

Secondary Heated Oxygen Sensor (Secondary HO2S) (Sensor 2)

P0139 The scan tool indicates Diagnostic Trouble Code (DTC) P0139: A slow response problem in the Secondary Heated Oxygen Sensor (HO2S) (Sensor 2) circuit.

— The MIL has been reported on.
— DTC P0139 is stored.

Problem verification:
1. Do the ECM/PCM Reset Procedure.
2. Start the engine. Hold the engine at 3,000 rpm with no load (in Park or neutral) until the radiator fan comes on.
3. With the scan tool, check the Secondary HO2S (Sensor 2) output at 3,000 rpm.

Does the voltage stay within 0.3 – 0.6 V for two minutes?

NO → **Intermittent failure, system is OK at this time. Check for poor connections or loose wires at C131* (located under right side of dash), C432* (located under middle of dash) C125 (C782)* (Secondary HO2S) (Sensor 2) and ECM/PCM.**

YES → **Replace the Secondary HO2S (Sensor 2).**

*: D16Y8 engine

Heated Oxygen Sensor (HO2S) Heater ('96 – 98 Models, '99 – 00 D16Y5 engine with M/T)

P0135 The scan tool indicates Diagnostic Trouble Code (DTC) P0135: An electrical problem in the Primary Heated Oxygen Sensor (Primary HO2S) (Sensor 1) Heater system (Except D16Y5 engine with M/T).

P0141 The scan tool indicates Diagnostic Trouble Code (DTC) P0141: A problem in the Secondary Heated Oxygen Sensor (Secondary HO2S) (Sensor 2) Heater circuit.

— The MIL has been reported on.
— DTC P0135, and/or P0141 are stored.

Problem verification:
1. Do the ECM/PCM Reset Procedure.
2. Start the engine.

Is DTC P0135 or P0141 indicated?

NO → **Intermittent failure, system is OK at this time. Check for poor connections or loose wires at C131** (located under right side of dash), C432** (located under middle of dash), C123 (Primary HO2S, Sensor 1) C125 (C782)** (Secondary HO2S, Sensor 2)* and ECM/PCM.**

YES

Check for an open or short in the HO2S:
1. Turn the ignition switch OFF.
2. Disconnect the HO2S (Primary or Secondary*) (Sensor 1 or Sensor 2) 4P connector.
3. At the HO2S side, measure resistance between the HO2S 4P connector terminals No. 3 and No. 4.

Is there 10 – 40 Ω?

NO → **Replace the HO2S (Primary or Secondary*).**

YES

Check for continuity between body ground and the HO2S 4P connector terminals No. 3 and No. 4 individually.

Is there continuity?

YES → **Replace the HO2S (Primary or Secondary*).**

NO

Check for an open or short in the wire (PO2SHTC, SO2SHTC* line):
1. Turn the ignition switch ON (II).
2. Measure voltage between the HO2S 4P connector terminals No. 3 and No. 4.

Is there battery voltage?

YES → B → (To page 11-158)

NO → A → (To page 11-158)

PRIMARY HO2S (Sensor 1) 4P CONNECTOR
SECONDARY HO2S (Sensor 2) 4P CONNECTOR*

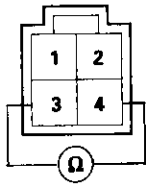

Terminal side of male terminals

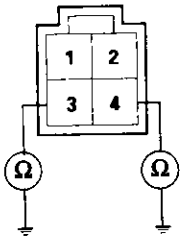

PRIMARY HO2S (SENSOR 1) 4P CONNECTOR (C123)
SECONDARY HO2S (SENSOR 2) 4P CONNECTOR (C125)*

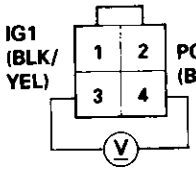

Wire side of female terminals

SECONDARY HO2S (SENSOR 2) 4P CONNECTOR (C782)**

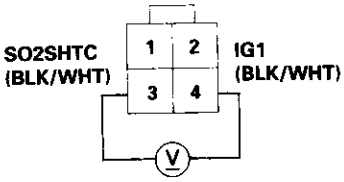

Wire side of female terminals

*: P0141
**: D16Y8 engine

(cont'd)

Heated Oxygen Sensor (HO2S) Heater ('96 – 98 Models, '99 – 00 D16Y5 engine with M/T) (cont'd)

(From page 11-157)

A

Check for an open or short in the wire (IG1 line):
Measure voltage between the HO2S 4P connector terminals No. 3 (D16Y8 engine: No. 4) and body ground.

Is there battery voltage?

NO →
- **Repair open or short in the wire between Primary HO2S (Sensor 1), (No. 15 ALTERNATOR SP SENSOR) (7.5 A) fuse and Secondary HO2S, Sensor 2)*.**
- **Replace the No. 15 ALTERNATOR SP SENSOR (7.5 A) fuse.**

YES ↓

Check for an open in the wire (PO2SHTC, SO2SHTC* line):
1. Turn the ignition switch OFF.
2. Reconnect the HO2S 4P connector.
3. Disconnect the ECM/PCM connector A (32P).
4. Turn the ignition switch ON (II).
5. Measure voltage between the ECM/PCM connector terminals A6 and A10 (A5 and A10)*.

Is there 0.1 V or less?

YES → **Repair open in the wire between ECM/PCM (A6, A5)* and HO2S (Primary, Secondary*).**

NO ↓

Substitute a known-good ECM/PCM and recheck. If symptom/indication goes away, replace the original ECM/PCM.

PRIMARY HO2S (SENSOR 1) 4P CONNECTOR (C123)
SECONDARY HO2S (SENSOR 2) 4P CONNECTOR (C125)*

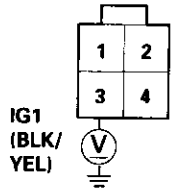

Wire side of female terminals

SECONDARY HO2S (SENSOR 2) 4P CONNECTOR (C782)**

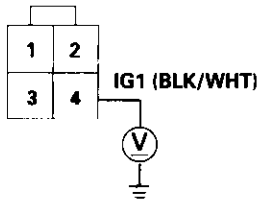

Wire side of female terminals

ECM/PCM CONNECTOR A (32P)

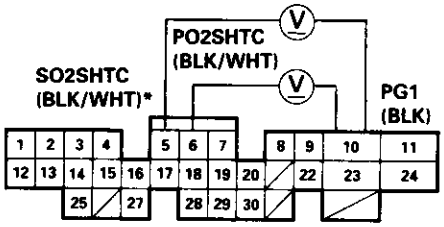

Wire side of female terminals

(From page 11-157)

B

Check for a short in the wire (PO2SHTC, SO2SHTC* line):
1. Turn the ignition switch OFF.
2. Disconnect the ECM/PCM connector A (32P).
3. Check for continuity between the ECM/PCM connector terminal A6 (A5)* and body ground.

Is there continuity?

YES → **Repair short in the wire between ECM/PCM (A6, A5*) and HO2S (Primary, Secondary*).**

NO ↓

Substitute a known-good ECM/PCM and recheck. If symptom/indication goes away, replace the original ECM/PCM.

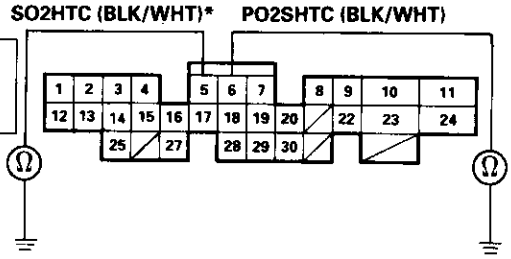

*: P0141
**: D16Y8 engine

Heated Oxygen Sensor (HO2S) Heater ('99 – 00 Models except D16Y5 engine with M/T)

P0135 The scan tool indicates Diagnostic Trouble Code (DTC) P0135: An electrical problem in the Primary Heated Oxygen Sensor (Primary HO2S) (Sensor 1) Heater system (Except D16Y5 engine with M/T).

P0141 The scan tool indicates Diagnostic Trouble Code (DTC) P0141: A problem in the Secondary Heated Oxygen Sensor (Secondary HO2S) (Sensor 2) Heater circuit.

— The MIL has been reported on.
— DTC P0135, and/or P0141 are stored.

Problem verification:
1. Do the ECM/PCM Reset Procedure.
2. Start the engine.

Is DTC P0135 or P0141 indicated?

NO → **Intermittent failure, system is OK at this time. Check for poor connections or loose wires at C131** (located under right side of dash), C432** (located under middle of dash), C123 (Primary HO2S, Sensor 1) C125 (C782)** (Secondary HO2S, Sensor 2)* and ECM/PCM.**

YES

Check for an open or short in the HO2S:
1. Turn the ignition switch OFF.
2. Disconnect the HO2S (Primary or Secondary*) (Sensor 1 or Sensor 2) 4P connector.
3. At the HO2S side, measure resistance between the HO2S 4P connector terminals No. 3 and No. 4.

Is there 10 – 40 Ω?

NO → **Replace the HO2S (Primary or Secondary*).**

YES

Check for continuity between body ground and the HO2S 4P connector terminals No. 3 and No. 4 individually.

Is there continuity?

YES → **Replace the HO2S (Primary or Secondary*).**

NO

Check for an open or short in the wire (PO2SHTC, SO2SHTC* line):
1. Turn the ignition switch ON (II).
2. Measure voltage between the HO2S 4P connector terminals No. 3 and No. 4.

Is there battery voltage?

YES → (B) (To page 11-160)

NO → (A) (To page 11-160)

PRIMARY HO2S (Sensor 1) 4P CONNECTOR
SECONDARY HO2S (Sensor 2) 4P CONNECTOR*

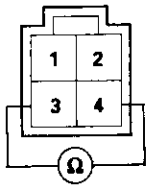

Terminal side of male terminals

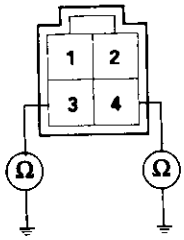

PRIMARY HO2S (SENSOR 1) 4P CONNECTOR (C123)
SECONDARY HO2S (SENSOR 2) 4P CONNECTOR (C125)*

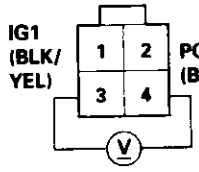

Wire side of female terminals

SECONDARY HO2S (SENSOR 2) 4P CONNECTOR (C782)**

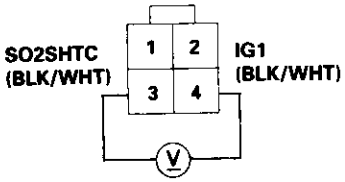

Wire side of female terminals

*: P0141
**: D16Y8 engine

(cont'd)

Heated Oxygen Sensor (HO2S) Heater ('99 – 00 Models except D16Y5 engine with M/T) (cont'd)

(From page 11-159)

A

Check for an open in the wires (IG1* line):
Measure voltage between the primary HO2S 4P connector terminal No. 3 (D16Y8 engine: No. 4) and body ground.

Is there battery voltage?

NO

- **Repair open or short in the wire between Primary HO2S (Sensor 1), (No. 15 ALTERNATOR SP SENSOR) (7.5 A) fuse and Secondary HO2S, Sensor 2)*.**
- **Replace the No. 15 ALTERNATOR SP SENSOR (7.5 A) fuse.**

YES

Check for an open in the wires (PO2SHTC, SO2SHTC* line):
1. Turn the ignition switch OFF.
2. Reconnect the HO2S 4P connector.
3. Disconnect the ECM/PCM connector C (31P) (ECM/PCM connector A (32P))*.
4. Turn the ignition switch ON (II).
5. Measure voltage between the ECM/PCM connector terminals B2 and C1 (B2 and A8)*.

Is there 0.1 V or less?

YES

Repair open in the wire between ECM/PCM (C1, A8*) and HO2S (Primary, Secondary*).

NO

Substitute a known-good ECM/PCM and recheck. If symptom/indication goes away, replace the original ECM/PCM.

(From page 11-159)

B

Check for a short in the wires (PO2SHTC, SO2SHTC* line):
1. Turn the ignition switch OFF.
2. Disconnect the ECM/PCM connector C (31P) (ECM/PCM connector A (32P))*.
3. Check for continuity between the ECM/PCM connector terminal C1 (A8)* and body ground.

Is there continuity?

YES

Repair short in the wire between ECM/PCM (C1, A8*) and HO2S (Primary, Secondary*).

NO

Substitute a known-good ECM/PCM and recheck. If symptom/indication goes away, replace the original ECM/PCM.

*: P0141
**: D16Y8 engine

PRIMARY HO2S (SENSOR 1) 4P CONNECTOR (C123)
SECONDARY HO2S (SENSOR 2) 4P CONNECTOR (C125)*

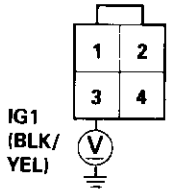

Wire side of female terminals

SECONDARY HO2S (SENSOR 2) 4P CONNECTOR (C782)**

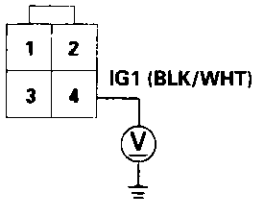

Wire side of female terminals

ECM/PCM CONNECTORS

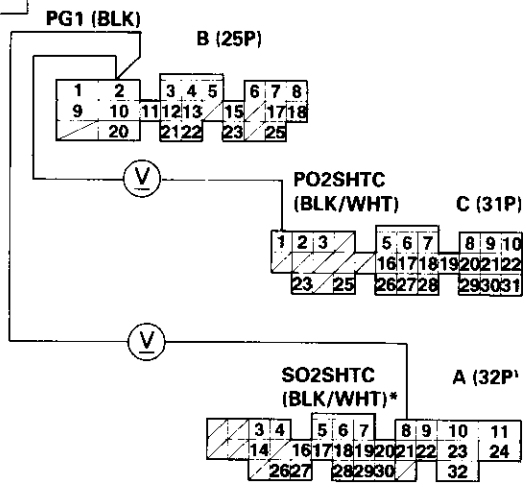

Wire side of female terminals

ECM/PCM CONNECTORS

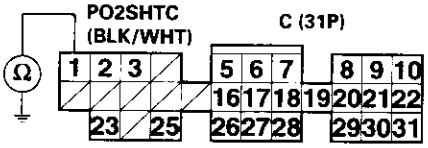

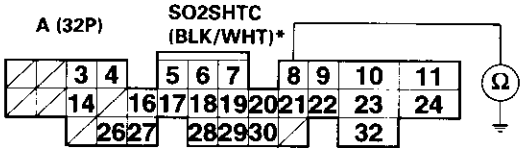

Wire side of female terminals

Heated Oxygen Sensor (HO2S) Heater (D16Y5 engine with M/T)

P1166 The scan tool indicates Diagnostic Trouble Code (DTC) P1166: An electrical problem in the Primary Heated Oxygen Sensor (Primary HO2S) Heater system.

— The MIL has been reported on.
— DTC P1166 is stored.

Problem verification:
1. Do the ECM Reset Procedure.
2. Start the engine.

Is DTC P1166 indicated?

NO → **Intermittent failure, system is OK at this time (test drive may be necessary). Check for poor connections or loose wires between C145 (Primary HO2S, Sensor 1) and ECM.**

YES

Check the Primary HO2S (Sensor 1) resistance:
1. Turn the ignition switch OFF.
2. Disconnect the Primary HO2S (Sensor 1) 8P connector.
3. At the Primary HO2S (Sensor 1), measure resistance between No. 1 and No. 2 terminal.

Is there 2 – 13 Ω?

NO → **Replace the Primary HO2S (Sensor 1).**

YES

Check for a shorted Primary HO2S (Sensor 1):
Check for continuity between body ground and each terminal.

Is there continuity?

YES → **Replace the Primary HO2S (Sensor 1).**

NO

Check for a shorted Primary HO2S (Sensor 1):
Check for continuity between terminal No. 1 and terminals No. 3, 4, 6, 7 and 8 individually.

Is there continuity?

YES → **Replace the Primary HO2S (Sensor 1).**

NO

(To page 11-162)

PRIMARY HO2S (SENSOR 1) 8P CONNECTOR

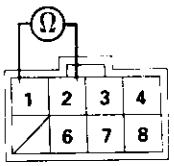

Terminal side of male terminals

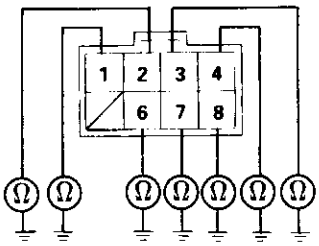

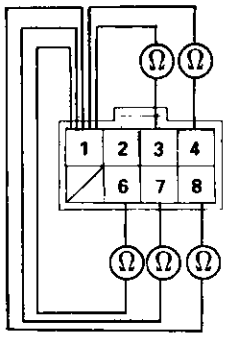

(cont'd)

Heated Oxygen Sensor (HO2S) Heater (D16Y5 engine with M/T) (cont'd)

(From page 11-161)

Check the PO2SHTC circuit:
1. Start engine and keep engine rpm at idle.
2. At the engine wire harness, measure voltage between Primary HO2S (Sensor 1) 8P connector terminal No. 1 terminal and body ground.

PRIMARY HO2S (SENSOR 1) 8P CONNECTOR (C145)

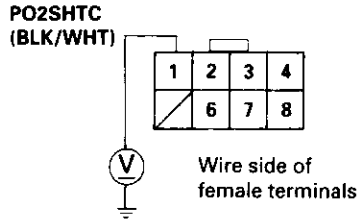

Is there more than 5 V?

YES

Check for an open in the wire (PG line):
Measure voltage between Primary HO2S (Sensor 1) 8P connector terminals No. 1 and No. 2.

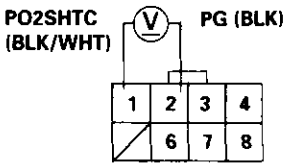

Is there more than 5 V?

NO

Repair open in the wire between the HO2S and G101 (located at thermostat housing).

YES

Substitute a known-good ECM and recheck. If symptom/indication goes away, replace the original ECM.

NO

Check for a short in the wire (PO2SHTC line):
1. Turn the ignition switch OFF.
2. Disconnect ECM connector A (32P) from the ECM.
3. Check for continuity between ECM connector terminal A6 and body ground.

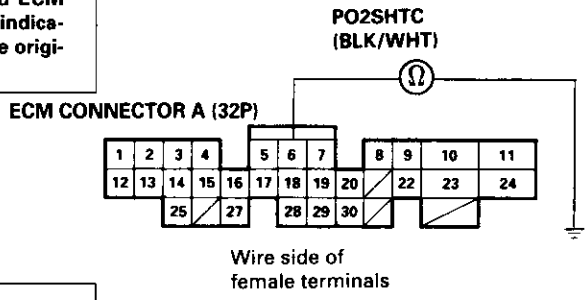

Is there continuity?

YES

Repair short in the wire between the ECM (A6) and the Primary HO2S (Sensor 1).

NO

Check for an open in the wire (PO2SHTC line):
Check for continuity between ECM connector terminal A6 and the Primary HO2S (Sensor 1) 8P connector terminal No. 1.

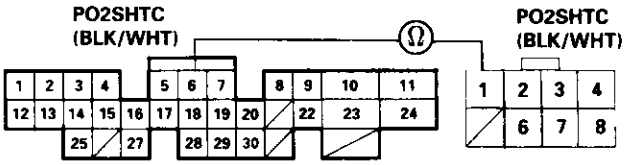

Is there continuity?

NO

Repair open in the wire between ECM (A6) and the Primary HO2S (Sensor 1).

YES

Substitute a known-good ECM and recheck. If symptom/indication goes away, replace the original ECM.

P1167 The scan tool indicates Diagnostic Trouble Code (DTC) P1167: A system malfunction in the Primary Heated Oxygen Sensor (Primary HO2S) (Sensor 1) Heater circuit.

— The MIL has been reported on.
— DTC P1167 is stored.

Problem Verification:
1. Do the ECM Reset Procedure.
2. Start the engine. Hold the engine at 3,000 rpm with no load (transmission in neutral) until the radiator fan comes on.

Is DTC1167 indicated?

NO → **Intermittent failure, system is OK at this time. Check for poor connections or loose wires at C145 (Primary HO2S, Sensor 1) and ECM.**

YES

Check for an open in the wire (VS+ line):
1. Turn the ignition switch OFF.
2. Disconnect the Primary HO2S (Sensor 1) 8P connector.
3. Turn the ignition switch ON (II).
4. Measure voltage between the Primary HO2S (Sensor 1) 8P connector terminal No. 6 and body ground.

Is there more than 5 V?

NO → **Check the ECM:** Measure voltage between the ECM connector terminal C25 and body ground.

YES → **Replace the Primary HO2S (Sensor 1).**

Is there more than 5 V?

YES → **Repair open in the wire ECM (C25) and Primary HO2S (Sensor 1).**

NO → **Substitute a known-good ECM and recheck. If symptom/indication goes away, replace the original ECM.**

PRIMARY HO2S (SENSOR 1) 8P CONNECTOR (C145)

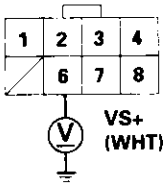

ECM CONNECTOR C (31P)

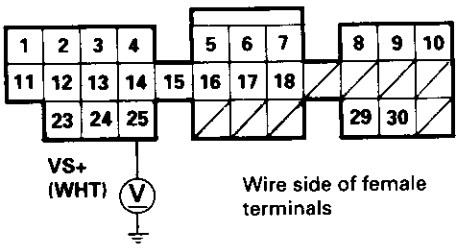

Fuel Supply System

P0171 The scan tool indicates Diagnostic Trouble Code (DTC) P0171: The fuel system is too lean.

P0172 The scan tool indicates Diagnostic Trouble Code (DTC) P0172: The fuel system is too rich.

Description

By monitoring the Long Term Fuel Trim, long term malfunctions in the fuel system will be detected.
If a malfunction has been detected during two consecutive trips, the MIL will come on and DTC P0171 and/or P0172 will be stored.

NOTE: If some of the DTCs listed below are stored at the same time as DTC P0171 and/or P0172, troubleshoot those DTCs first, then recheck for DTC P0171 and/or P0172.

P0106-8, P1128*3, *5, P1129*3, *5: MAP Sensor
P0135: Primary HO2S Heater
P0137, P0138: Secondary HO2S
P0141: Secondary HO2S Heater
P0401: EGR Flow Insufficient*1
P0441: EVAP System Insufficient Purge Flow*6
P1259: VTEC System*2
P1491: EGR Valve Lift Insufficient*1
P1498: EGR Valve Lift Sensor High Voltage*1

*1: D16Y5 engines
*2: D16Y5, D16Y8, B16A2 engine
*3: '97 models
*4: '96 models
*5: '98 – 00 models
*6: '96 D16Y5 engine, '96 D16Y7 engine, '96 D16Y8 engine (sedan), '97 D16Y5 engine, '97 D16Y7 engine (coupe: KA, KC models, sedan KA, KC, KL (DX) models, hatchback: all models), '97 D16Y8 engine (sedan: KA, KC models)

Possible Cause

DTC P0171
System too lean

- Fuel Pump insufficient flow/pressure
- Fuel Feed Line clogged, leaking
- Fuel Pressure Regulator stuck open
- Fuel Filter clogged
- Fuel Injector clogged, air inclusion
- Gasoline doesn't meet Owner's Manual spec.
- Primary HO2S (Sensor 1) deteriorated
- MAP Sensor range/performance*4
- EGR System malfunction (too much flow)*1
- Valve Clearance
- Exhaust leak

DTC P0172
System too rich

- Fuel Pressure Regulator clogged, stuck closed
- Fuel Return Pipe clogged
- Fuel Injector leaking
- Gasoline doesn't meet Owner's Manual spec.
- Primary HO2S (Sensor 1) deteriorated
- MAP Sensor range/performance*4
- EGR System insufficient flow*1
- EVAP Purge Control Solenoid Valve leaking, stuck opened
- Valve Clearance

Troubleshooting Flowchart

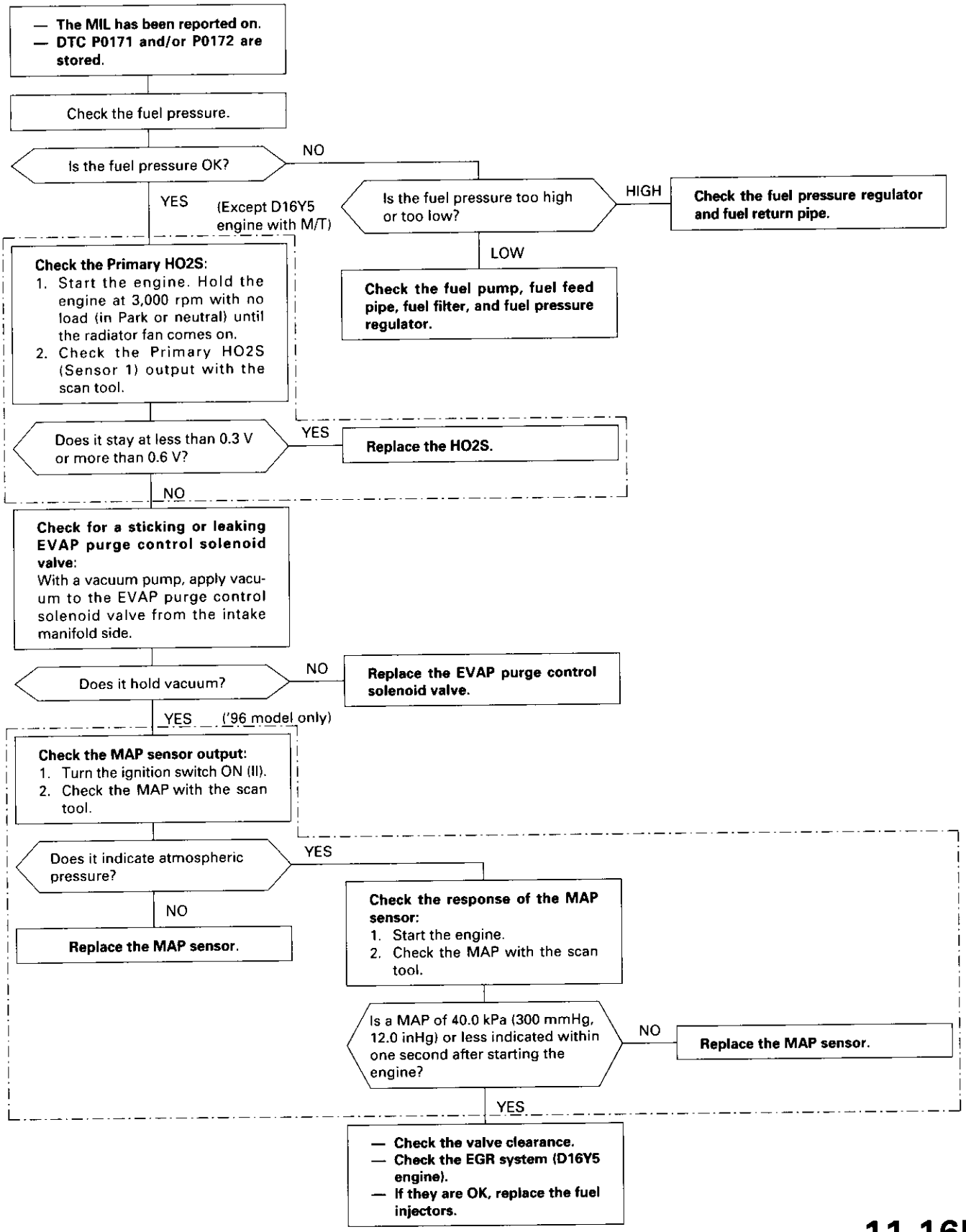

Random Misfire

P0300 *5 or **P1300** *3, *4 and **P0301 through P0304**

The scan tool indicates Diagnostic Trouble Code (DTC) P0300*5 or P1300*3, *4 and some of P0301 – P0304: Random misfire.

Description

Misfire detection is accomplished by monitoring the crankshaft speed with the crankshaft speed fluctuation (CKF) sensor which is attached to the crankshaft.

If misfiring strong enough to damage the catalyst is detected, the MIL will blink during the time of its occurrence, and DTC P0300*5 or P1300*3, *4 and some of DTCs P0301 through P0304 will be stored. Then, after misfire has ceased, the MIL will come on.

If misfiring that increases emissions is detected during two consecutive driving cycles, the MIL will come on, and DTC P0300*5 or P1300*3, *4 and some of DTCs P0301 through P0304 will be stored.

NOTE: If some of the DTCs listed below are stored at the same time as a misfire DTC, troubleshoot those DTCs first, then recheck for the misfire DTC.

P0106*4, P0107, P0108, P1128*3, *5, P1129*3, *5: MAP sensor
P0131, P0132: HO2S
P0171, P0172: Fuel metering
P0401, P1491, P1498: EGR system*1
P0505: Idle Control System
P1253: VTEC System*2
P1361, P1362: TDC sensor
P1381, P1382: CYP sensor
P1508: IAC valve

Possible Cause

- Fuel pump insufficient fuel pressure, amount of flow
- Fuel line clogging, blockage, leakage
- Fuel filter clogging
- Fuel pressure regulator stuck open
- EGR system malfunction*1
- Distributor malfunction
- Ignition coil wire open, leakage
- Ignition control module malfunction
- MAP sensor range/performance, poor response*4
- Valves carbon deposit
- Compression low
- IAC valve malfunction*4
- VTEC system malfunction*2
- Fuel does not meet Owner's Manual spec., lack of fuel
- HO2S
- HO2S circuit

*1: D16Y5 engine
*2: D16Y5, D16Y8, B16A2 engine
*3: '97 models
*4: '96 models
*5: '98 – 00 models

Troubleshooting

By test-driving, determine the conditions during which misfire occurs. Depending on these conditions, test in the order described in the table below.

*4

Possible cause / Page / Condition	EGR*1 system	Crankshaft position (CKP) sensor	Fuel pressure	Distributor and Ignition wires	ICM	Valve Clearance	IAC Valve	MAP sensor
	11-255	section 6	11-230, 231	section 23	section 23	section 6	11-194	11-115
Only low rpm and load	③	⑤	④			⑤	①	②
Only accelerating			②	①	③			④
Only high rpm and load		⑤	①	②	③	⑤		④
Not specific		⑤	①	②	④	⑤		③

NOTE: If misfire doesn't recur, some possible causes are fuel that doesn't meet owner's manual spec, lack of fuel, carbon deposits on spark plug, etc.

Misfire Detected in One Cylinder

P0301 The scan tool indicates Diagnostic Trouble Code (DTC) P0301: Cylinder 1 misfire detected.

P0302 The scan tool indicates Diagnostic Trouble Code (DTC) P0302: Cylinder 2 misfire detected.

P0303 The scan tool indicates Diagnostic Trouble Code (DTC) P0303: Cylinder 3 misfire detected.

P0304 The scan tool indicates Diagnostic Trouble Code (DTC) P0304: Cylinder 4 misfire detected.

Description

Misfire detection is accomplished by monitoring the crankshaft speed with the crankshaft speed fluctuation (CKF) sensor which is attached to the crankshaft.

If misfiring strong enough to damage the catalyst is detected, the MIL will blink during the time of its occurrence, and DTC P0301, P0302, P0303 or P0304 will be stored. Then, after the misfire has ceased, the MIL will come on.

If misfiring that increases emissions is detected during two consecutive driving cycles, the MIL will come on, and DTC P0301, P0302, P0303 or P0304 will be stored.

NOTE: If some of the DTCs listed below are stored at the same time as a misfire DTC, troubleshoot those DTCs first, then recheck for the misfire DTC.

P0106*4, P0107, P0108, P1128*3, *5, P1129*3, *5: MAP sensor
P0131, P0132: HO2S
P0171, P0172: Fuel supply system
P0335, P0336: CKF sensor
P0401, P1491, P1498: EGR system
P0441: EVAP system Insufficient purge flow*6
P1359, P1361, P1362: TDC sensor
P1381, P1382: CYP sensor
*4: '96 models
*6: '96 D16Y5 engine, '96 D16Y7 engine, '96 D16Y8 engine (sedan), '97 D16Y5 engine, '97 D16Y7 engine (coupe: KA, KC models, sedan KA, KC, KL (DX) models, hatchback: all models), '97 D16Y8 engine (sedan: KA, KC models)

Possible Cause

- Fuel injector clogging, fuel leakage, air leakage
- Fuel injector circuit open or shorted
- Spark plug carbon deposits, fouling, malfunction
- Ignition wires open, leaking
- Distributor malfunction
- Compression low
- Valve clearance out of spec
- VTEC system malfunction (D16Y5, D16Y8, B16A2 engine)
- HO2S
- HO2S circuit

(cont'd)

Misfire in Detected One Cylinder (cont'd)

Troubleshooting Flowchart

— The MIL has been reported on.
— DTC P0301, P0302, P0303, or P0304 is indicated.

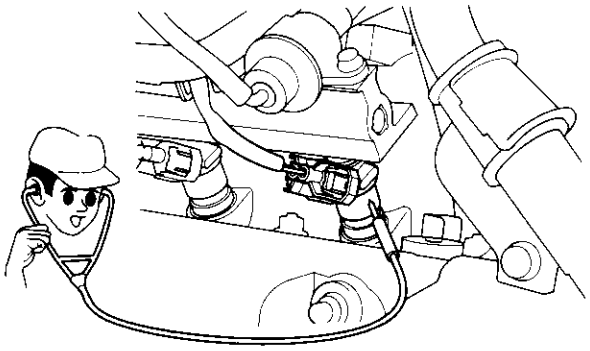

Check the fuel injector function:
Start the engine, and listen for a clicking sound at the fuel injector in the problem cylinder.

Does it click?

NO

Check for an open or short in the harness between ECM/PCM and the fuel injector.

Are the wires OK?

NO

Repair open or short in the wire.

YES

— Replace the fuel injector.
— Substitute a known-good ECM/PCM and recheck. If symptom/indication goes away, replace the original ECM/PCM.

YES

Problem verification:
1. After checking and recording the freeze data, do the ECM/PCM Reset Procedure.
2. Exchange the spark plug from the problem cylinder with one from another cylinder.
3. Connect the SCS service connector.
4. Test-drive the vehicle several times in the range of the freeze data.

NOTE:
- If there is no freeze data of misfiring, just clear the DTC.
- If there is no freeze data of misfiring, test drives under various conditions are necessary.

(To page 11-169)

(From page 11-168)

Is DTC P0301, P0302, P0303, or P0304 indicated?

NO → **Intermittent misfire due to spark plug fouling, etc. (firing is OK at this time).**

YES ↓

Does the misfire occur in the other cylinder?

YES → **Replace the faulty spark plug.**

NO ↓

Check for fuel injector malfunction:

1. Exchange the fuel injector from the problem cylinder with one from another cylinder.
2. Let the engine idle for two minutes.
3. Test-drive the vehicle several times in the range of the freeze data.

NOTE: If there is no freeze data of misfiring, test drives under various conditions are necessary.

Is DTC P0301, P0302, P0303, or P0304 indicated?

NO → **Intermittent misfire due to bad contact in the fuel injector connector (firing is OK at this time).**

YES ↓

Does the misfire occur in the other cylinder?

YES → **Replace the faulty fuel injector.**

NO ↓

Check the following items:

- **Cylinder leak-down**
- **Compression**
- **Crankshaft speed fluctuation (CKF) sensor**

Knock Sensor (KS) ('96 – 98 D16Y5 engine with CVT and '96 – 98 D16Y8 engine)

P0325 The scan tool indicates Diagnostic Trouble Code (DTC) P0325: A malfunction in the circuit of the Knock Sensor (KS).

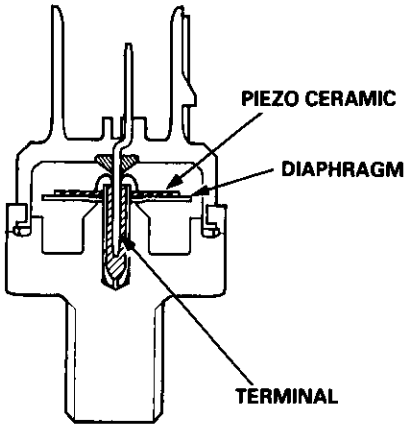

— The MIL has been reported on.
— DTC P0325 is stored.

Problem verification:
1. Do the ECM/PCM Reset Procedure.
2. Start the engine. Hold the engine at 3,000 rpm with no load (in Park or neutral) until the radiator fan comes on, then let it idle.
3. Hold the engine at 3,000 – 4,000 rpm for at least 60 seconds.

Is DTC P0325 indicated?

NO → **Intermittent failure, system is OK at this time (test drive may be necessary). Check for poor connections or loose wires between C137 (knock sensor (KS)) and ECM/PCM.**

YES

Check for a short in the wire (KS line):
1. Turn the ignition switch OFF.
2. Disconnect the knock sensor 2P connector.
3. Disconnect the ECM/PCM connector D (16P).
4. Check for continuity between ECM/PCM connector terminals D6 and body ground.

Is there continuity?

YES → **Repair short in the wire between ECM/PCM (D6) and knock sensor.**

NO

ECM/PCM CONNECTOR D (16P)

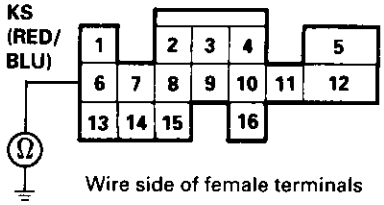

Check for an open in the wire (KS line):
Check for continuity between ECM/PCM connector terminal D6 and knock sensor 2P connector terminal No. 1.

Is there continuity?

NO → **Repair open in the wire between ECM/PCM (D6) and knock sensor.**

YES

KS 2P CONNECTOR (C137)

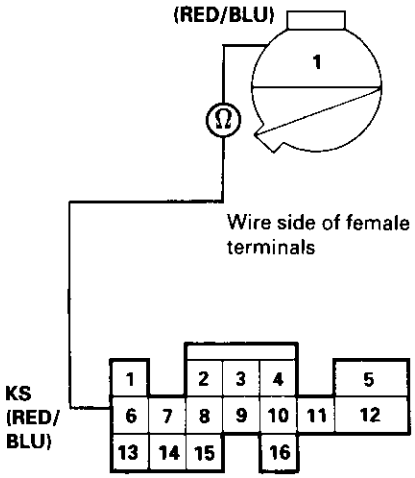

Substitute a known-good knock sensor and recheck.

Is DTC P0325 indicated?

NO → **Replace the original knock sensor.**

YES

Substitute a known-good ECM/PCM and recheck. If symptom/indication goes away, replace the original ECM/PCM.

Knock Sensor (KS) ('99 – 00 D16Y5 engine with CVT, '99 – 00 D16Y8 engine and B16A2 engine

P0325 The scan tool indicates Diagnostic Trouble Code (DTC) P0325: A malfunction in the circuit of the Knock Sensor (KS).

— The MIL has been reported on.
— DTC P0325 is stored.

Problem verification:
1. Do the ECM/PCM Reset Procedure.
2. Start the engine. Hold the engine at 3,000 rpm with no load (in Park or neutral) until the radiator fan comes on, then let it idle.
3. Hold the engine at 3,000 – 4,000 rpm for at least 60 seconds.

Is DTC P0325 indicated?

NO → **Intermittent failure, system is OK at this time (test drive may be necessary).**
Check for poor connections or loose wires at C137 (knock sensor (KS)) and ECM/PCM.

YES

Check for a short in the wire (KS line):
1. Turn the ignition switch OFF.
2. Disconnect the knock sensor 1P connector.
3. Check for continuity between ECM/PCM connector terminals C3 and body ground.

Is there continuity?

YES → **Repair short in the wire between ECM/PCM (C3) and knock sensor.**

NO

Check for an open in the wire (KS line):
Check for continuity between ECM/PCM connector terminal C3 and knock sensor connector terminal No. 1.

Is there continuity?

NO → **Repair open in the wire between ECM/PCM (C3) and knock sensor.**

YES

Substitute a known-good knock sensor and recheck.

Is DTC P0325 indicated?

NO → **Replace the original knock sensor.**

YES

Substitute a known-good ECM/PCM and recheck. If symptom/indication goes away, replace the original ECM/PCM.

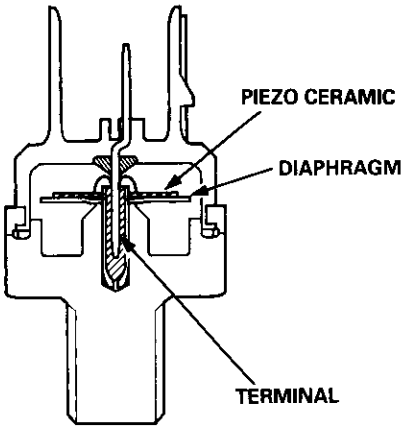

ECM/PCM CONNECTOR C (31P)

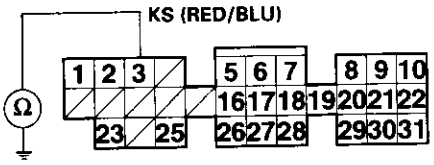

Wire side of female terminals

KS 2P CONNECTOR (C137)

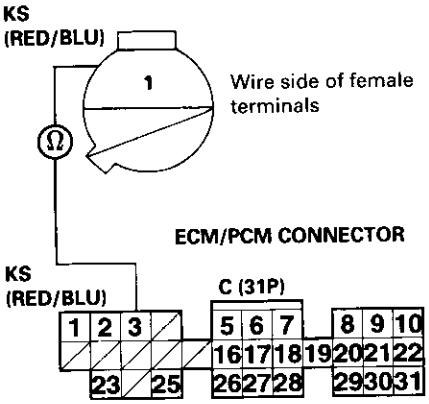

Wire side of female terminals

Wire side of female terminals

Crankshaft Position/Top Dead Center/Cylinder Position (CKP/TDC/CYP) Sensor ('96 – 98 Models, '99 – 00 D16Y5 engine with M/T)

P0335 The scan tool indicates Diagnostic Trouble Code (DTC) P0335: A malfunction in the Crankshaft Position (CKP) sensor circuit.

P0336 The scan tool indicates Diagnostic Trouble Code (DTC) P0336: A range/performance problem in the Crankshaft Position (CKP) sensor circuit.

P1361 The scan tool indicates Diagnostic Trouble Code (DTC) P1361: Intermittent interruption in the Top Dead Center (TDC) sensor circuit.

P1362 The scan tool indicates Diagnostic Trouble Code (DTC) P1362: No signal in the Top Dead Center (TDC) sensor circuit.

P1381 The scan tool indicates Diagnostic Trouble Code (DTC) P1381: Intermittent interruption in the Cylinder Position (CYP) sensor circuit.

P1382 The scan tool indicates Diagnostic Trouble Code (DTC) P1382: No signal in the Cylinder Position (CYP) sensor circuit.

Description

The CKP Sensor determines timing for fuel injection and ignition of each cylinder and also detects engine speed. The TDC Sensor determines ignition timing at start-up (cranking) and when crank angle is abnormal. The CYP Sensor detects the position of No. 1 cylinder for sequential fuel injection to each cylinder. The CKP/TDC/CYP Sensor is built into the distributor.

NOTE: If DTC P1359 is stored at the same time as DTC P0335, P0336, P1361, P1362, P1381 and/or P1382, troubleshoot DTC P1359 first, then recheck for those DTCs.

D16Y5 engine:

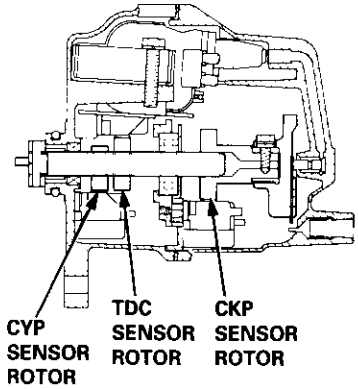

D16Y7, D16Y8 engines:

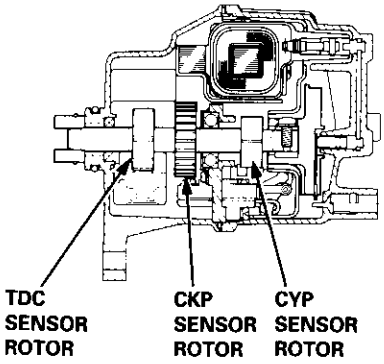

— The MIL has been reported on.
— DTC P0335, P0336, P1361, P1362, P1381 and/or P1382 are stored.

Problem verification:
1. Do the ECM/PCM Reset Procedure.
2. Start the engine.

Is DTC P0335, P0336, P1361, P1362, P1381 and/or P1382 indicated?

NO → **Intermittent failure, system is OK at this time. Check for poor connections or loose wires at C120 (distributor) and ECM/PCM.**

YES

Check for an open in the CKP/TDC/CYP sensor:
1. Turn the ignition switch OFF.
2. Disconnect the distributor 10P connector.
3. Measure resistance between the terminals of the indicated sensor (*see table).

Is there 350 – 700 Ω?

NO → **Replace the distributor ignition housing (see section 23).**

YES

(To page 11-173)

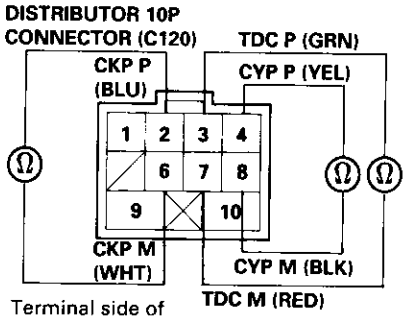

Terminal side of male terminals

SENSOR	DTC	SENSOR TERMINAL	ECM/PCM TERMINAL	WIRE COLOR
CKP	P0335	2	C2	BLU
	P0336	6	C12	WHT
TDC	P1361	3	C3	GRN
	P1362	7	C13	RED
CYP	P1381	4	C4	YEL
	P1382	8	C14	BLK

(From page 11-172)

Check for a short in the CKP/TDC/CYP sensor:
Check for continuity to body ground on both terminals of the indicated sensor individually (*see table).

Is there continuity?

YES → **Replace the distributor ignition housing (see section 23).**

NO

Check for an open in the wires (CKP/TDC/CYP lines):
1. Reconnect the distributor 10P connector.
2. Disconnect the ECM/PCM connector C (31P).
3. Measure resistance between the terminals of the indicated sensor on the ECM/PCM connector (*see table).

Is there 350 – 700 Ω?

NO → **Repair open in the indicated sensor wires (*see table).**

YES

Check for a short in the wires (CKP/TDC/CYP lines):
Check for continuity between body ground and ECM/PCM connector terminals C2, C3 and/or C4 individually.

Is there continuity?

YES → **Repair short in the indicated sensor wires (*see table).**

NO

Substitute a known-good ECM/PCM, and recheck. If symptom/indication goes away, replace the original ECM/PCM.

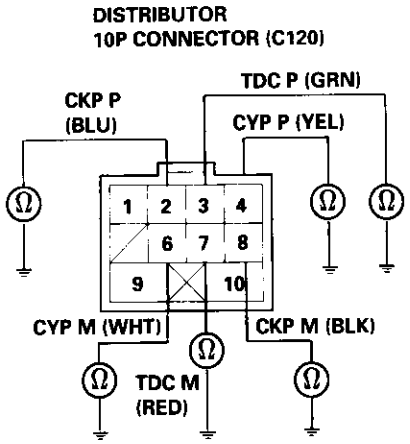

Terminal side of male terminals

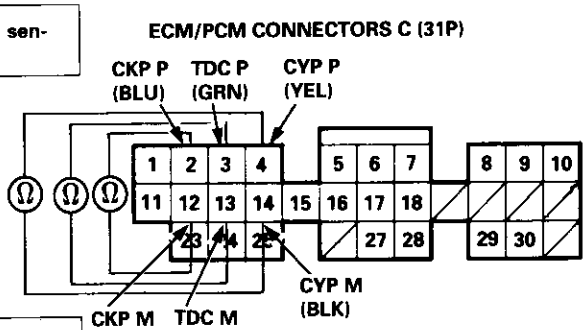

Wire side of female terminals

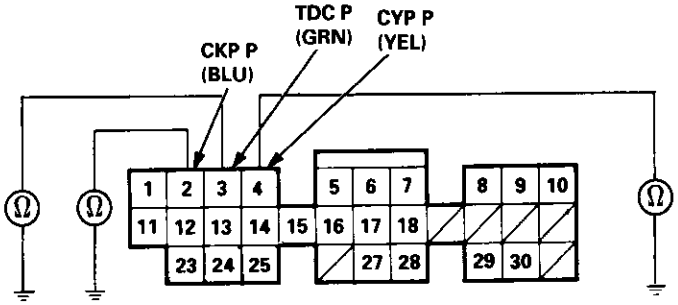

Crankshaft Position/Top Dead Center/Cylinder Position (CKP/TDC/CYP) Sensor ('99 – 00 Models except D16Y5 engine with M/T)

P0335 The scan tool indicates Diagnostic Trouble Code (DTC) P0335: A malfunction in the Crankshaft Position (CKP) sensor circuit.

P0336 The scan tool indicates Diagnostic Trouble Code (DTC) P0336: A range/performance problem in the Crankshaft Position (CKP) sensor circuit.

P1361 The scan tool indicates Diagnostic Trouble Code (DTC) P1361: Intermittent interruption in the Top Dead Center (TDC) sensor circuit.

P1362 The scan tool indicates Diagnostic Trouble Code (DTC) P1362: No signal in the Top Dead Center (TDC) sensor circuit.

P1381 The scan tool indicates Diagnostic Trouble Code (DTC) P1381: Intermittent interruption in the Cylinder Position (CYP) sensor circuit.

P1382 The scan tool indicates Diagnostic Trouble Code (DTC) P1382: No signal in the Cylinder Position (CYP) sensor circuit.

Description

The CKP Sensor determines timing for fuel injection and ignition of each cylinder and also detects engine speed. The TDC Sensor determines ignition timing at start-up (cranking) and when crank angle is abnormal. The CYP Sensor detects the position of No. 1 cylinder for sequential fuel injection to each cylinder. The CKP/TDC/CYP Sensor is built into the distributor.

NOTE: If DTC P1359 is stored at the same time as DTC P0335, P0336, P1361, P1362, P1381 and/or P1382, troubleshoot DTC P1359 first, then recheck for those DTCs.

D16Y5 engine:

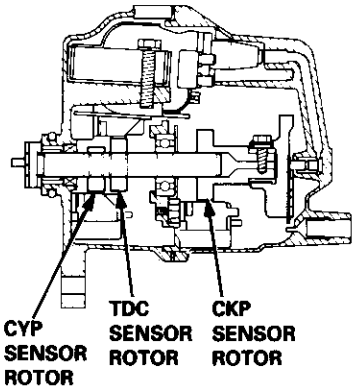

D16Y7, D16Y8, B16A2 engines:

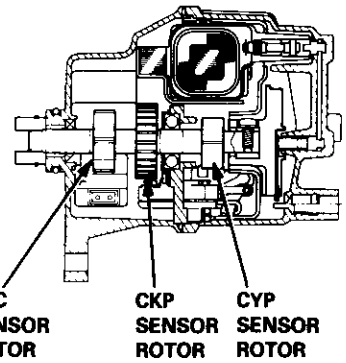

— The MIL has been reported on.
— DTC P0335, P0336, P1361, P1362, P1381 and/or P1382 are stored.

Problem verification:
1. Do the ECM/PCM Reset Procedure.
2. Start the engine.

Is DTC P0335, P0336, P1361, P1362, P1381 and/or P1382 indicated?

NO → **Intermittent failure, system is OK at this time. Check for poor connections or loose wires at C120 (distributor) and ECM/PCM.**

YES

Check for an open in the CKP/TDC/CYP sensor:
1. Turn the ignition switch OFF.
2. Disconnect the distributor 10P connector.
3. Measure resistance between the terminals of the indicated sensor (*see table).

Is there 350 – 700 Ω?

NO → **Replace the distributor ignition housing (see section 23).**

YES

(To page 11-175)

D16Y5, B16A2 engine:

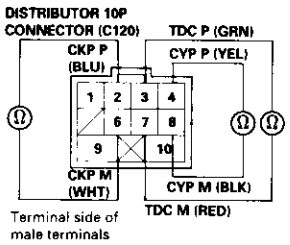

D16Y7, D16Y8 engine:

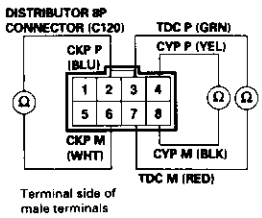

*:

SENSOR	DTC	SENSOR TERMINAL	ECM/PCM TERMINAL	WIRE COLOR
CKP	P0335	2	C8	BLU
	P0336	6	C9	WHT
TDC	P1361	3	C20	GRN
	P1362	7	C21	RED
CYP	P1381	4	C29	YEL
	P1382	8	C30	BLK

(From page 11-174)

Check for a short in the CKP/TDC sensor:
Check for continuity to body ground on both terminals of the indicated sensor individually.

Is there continuity?
- YES → **Replace the CKP/TDC sensor.**
- NO ↓

Check for an open in the wires (CKP/TDC lines):
1. Reconnect the CKP/TDC sensor 4P connector.
2. Disconnect the ECM/PCM connector C (31P).
3. Measure resistance between the terminals of the indicated sensor on the ECM/PCM connector (*see table).

Is there 350 – 700 Ω?
- NO → **Repair open in the indicated sensor wires (*see table).**
- YES ↓

Check for a short in the wires (CKP/TDC lines):
Check for continuity between body ground and ECM/PCM connector terminals C8, C20 and/or C29 individually.

Is there continuity?
- YES → **Repair short in the indicated sensor wires (*see table).**
- NO ↓

Substitute a known-good ECM/PCM and recheck. If symptom/indication goes away, replace the original ECM/PCM.

D16Y5, B16A2 engine:

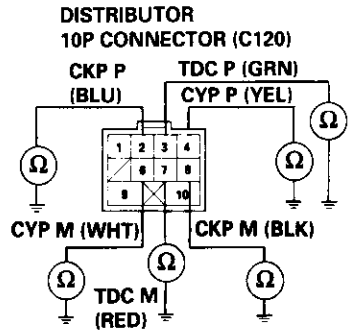

Terminal side of male terminals

D16Y7, D16Y8 engine:

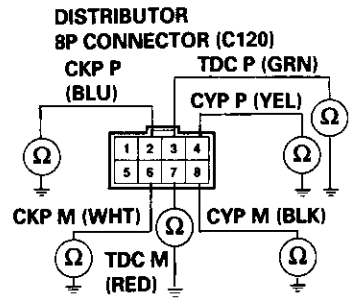

Terminal side of male terminals

ECM/PCM CONNECTOR C (31P)

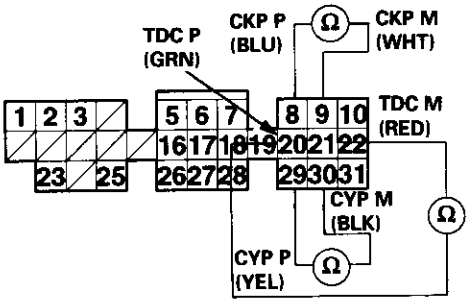

Wire side of female terminals

ECM/PCM CONNECTOR C (31P)

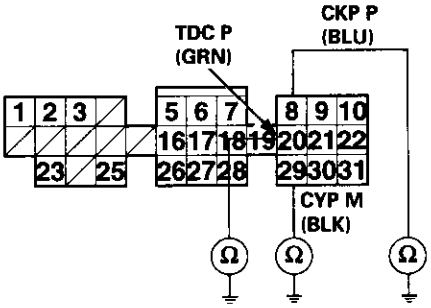

Wire side of female terminals

Vehicle Speed Sensor (VSS) ('96 – 98 Models, '99 – 00 D16Y5 engine with M/T)

P0500 The scan tool indicates Diagnostic Trouble Code (DTC) P0500: A malfunction problem in the Vehicle Speed Sensor (VSS) circuit [except A/T (D16Y7, D16Y8 engine)].

P0501 The scan tool indicates Diagnostic Trouble Code (DTC) P0501: A range/performance problem in the Vehicle Speed Sensor (VSS) circuit [A/T (D16Y7, D16Y8 engine)].

— The MIL has been reported on.
— DTC P0500 or P0501 is stored.

Problem verification:
1. Test-drive the vehicle.
2. Check the vehicle speed with the scan tool.

Is the correct speed indicated?

YES → **Intermittent failure, system is OK at this time. Check for poor connections or loose wires at C117 (VSS) and ECM/PCM.**

NO

Check for an open in the ECM/PCM:
1. Turn the ignition switch OFF.
2. Block the rear wheels and set the parking brake.
3. Jack up the front of the vehicle and support it with safety stands.
4. Turn the ignition switch ON (II).
5. Block the right front wheel and slowly rotate the left front wheel.
6. Measure voltage between the ECM/PCM connector terminals C18 and A9.

Does the voltage pulse 0 V and 5 V?

YES → **Substitute a known-good ECM/PCM and recheck. If symptom/indication goes away, replace the original ECM/PCM.**

NO

Check for a short in the ECM/PCM:
1. Turn the ignition switch OFF.
2. Disconnect the ECM/PCM connector C (31P).
3. Turn the ignition switch ON (II).
4. Block the right front wheel and slowly rotate the left front wheel.
5. Measure voltage between the ECM/PCM connector terminals C18 and A9.

Does the voltage pulse 0 V and 5 V?

YES → **Substitute a known-good ECM/PCM and recheck. If symptom/indication goes away, replace the original ECM/PCM.**

NO

— Repair short in the wire between ECM/PCM (C18) and VSS, TCM.
— Repair open in the wire between ECM/PCM (C18) and VSS.
— If wire is OK, test the VSS (see section 23).

ECM/PCM CONNECTORS

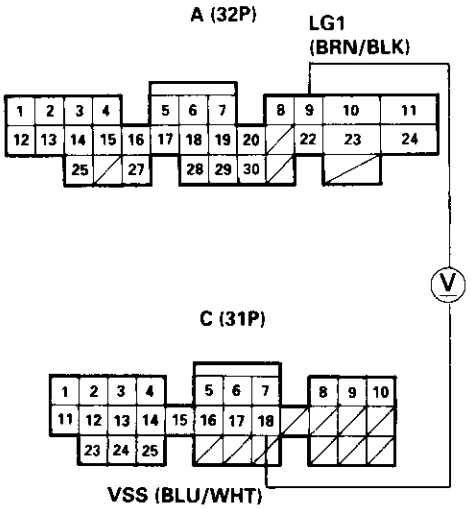

Wire side of female terminals

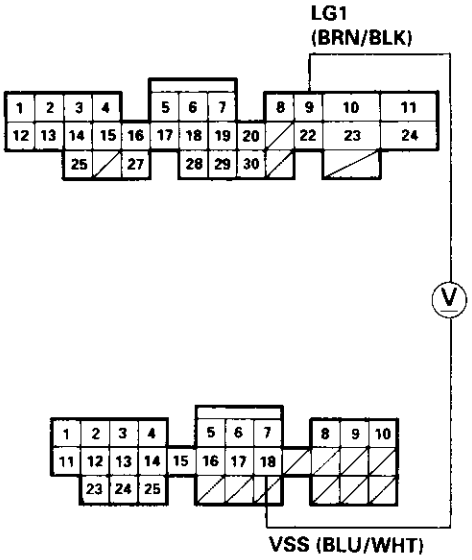

Vehicle Speed Sensor (VSS) ('99 – 00 Models except D16Y5 engine with M/T)

P0500 The scan tool indicates Diagnostic Trouble Code (DTC) P0500: A malfunction problem in the Vehicle Speed Sensor (VSS) circuit [except A/T (D16Y7, D16Y8 engine)].

P0501 The scan tool indicates Diagnostic Trouble Code (DTC) P0501: A range/performance problem in the Vehicle Speed Sensor (VSS) circuit [A/T (D16Y7, D16Y8 engine)].

— The MIL has been reported on.
— DTC P0500 or P0501 is stored.

Problem verification:
1. Test-drive the vehicle.
2. Check the vehicle speed with the scan tool.

Is the correct speed indicated?

YES → **Intermittent failure, system is OK at this time. Check for poor connections or loose wires at C117 (VSS) and ECM/PCM.**

NO →

Check for an open in the ECM/PCM:
1. Turn the ignition switch OFF.
2. Block the rear wheels and set the parking brake.
3. Jack up the front of the vehicle and support it with safety stands.
4. Turn the ignition switch ON (II).
5. Block the right front wheel and slowly rotate the left front wheel.
6. Measure voltage between the ECM/PCM connector terminals C23 and B20.

Does the voltage pulse 0 V and 5 V or battery voltage?

YES → **Substitute a known-good ECM/PCM and recheck. If symptom/indication goes away, replace the original ECM/PCM.**

NO →

Check for a short in the ECM/PCM:
1. Turn the ignition switch OFF.
2. Disconnect the ECM/PCM connector C (31P).
3. Turn the ignition switch ON (II).
4. Block the right front wheel and slowly rotate the left front wheel.
5. Measure voltage between the ECM/PCM connector terminals C23 and B20.

Does the voltage pulse 0 V and 5 V or battery voltage?

YES → **Substitute a known-good ECM/PCM and recheck. If symptom/indication goes away, replace the original ECM/PCM.**

NO →

— Repair short in the wire between ECM/PCM (C23) and VSS, TCM.
— Repair open in the wire between ECM/PCM (C23) and VSS.
— If wire is OK, test the VSS (see section 23).

ECM/PCM CONNECTORS

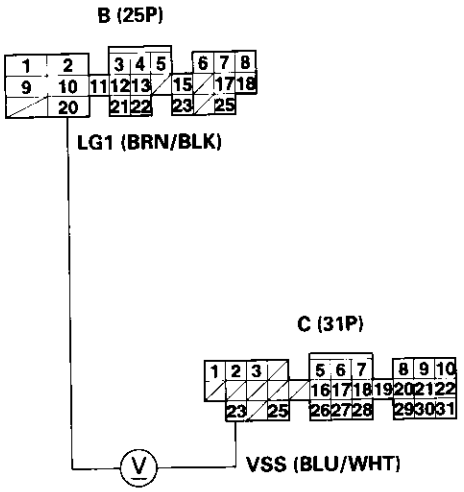

Wire side of female terminals

ECM/PCM CONNECTORS

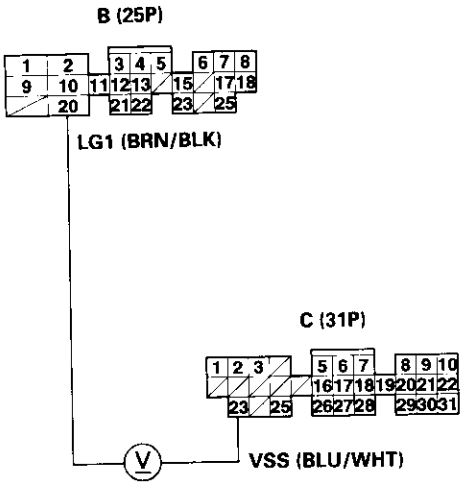

Wire side of female terminals

Barometric Pressure (BARO) Sensor

P1106 The scan tool indicates Diagnostic Trouble Code (DTC) P1106: A range/performance problem in the Barometric Pressure (BARO) Sensor circuit.

— The MIL has been reported on.
— DTC P1106 is stored.

Problem verification:
1. Do the ECM/PCM reset procedure.
2. Start the engine. Hold the engine at 3,000 rpm with no load (in Park or neutral) until the radiator fan comes on, then let it idle.
3. Connect the SCS service connector.
4. Test-drive with the A/T in [2] position, M/T in 4th gear.
5. Accelerate for five seconds using wide open throttle.

Is DTC P1106 indicated?

NO → **Intermittent failure, system is OK at this time.**

YES → **Substitute a known-good ECM/PCM and recheck. If symptom/indication goes away, replace the original ECM/PCM.**

P1107 The scan tool indicates Diagnostic Trouble Code (DTC) P1107: A low voltage problem in the Baro sensor circuit.

P1108 The scan tool indicates Diagnostic Trouble Code (DTC) P1108: A high voltage problem in the Baro sensor circuit.

— The MIL has been reported on.
— DTC P1107 or P1108 is stored.

Problem verification:
1. Do the ECM/PCM Reset Procedure.
2. Turn the ignition switch ON (II).

Is DTC P1107 or P1108 indicated?

NO → **Intermittent failure, system is OK at this time.**

YES → **Substitute a known-good ECM/PCM and recheck. If symptom/indication goes away, replace the original ECM/PCM.**

Electrical Load Detector (ELD) ('96 – 98 Models, '99 – 00 D16Y5 engine with M/T)

P1297 The scan tool indicates Diagnostic Trouble Code (DTC) P1297: A low voltage problem in the Electrical Load Detector (ELD) circuit.

— DTC P1297 is stored.

Problem verification:
1. Do the ECM/PCM Reset Procedure.
2. Start the engine.
3. Turn on headlights.

Is DTC P1297 indicated?

NO → **Intermittent failure, system is OK at this time. Check for poor connections or loose wires at C131 (located under right side of dash), C354 (ELD) and ECM/PCM.**

YES

Check for short in the ELD:
Measure voltage between body ground and the ELD 3P connector terminal No. 3.

Is there approx. 4.5 V?

YES → **Replace the ELD.**

NO

Check for a short in the wire (EL line):
1. Turn the ignition switch OFF.
2. Disconnect the ECM/PCM connector D (16P).
3. Check for continuity between body ground and ECM/PCM connector terminal D16.

Is there continuity?

YES → **Repair short in the wire between ECM/PCM (D16) and ELD.**

NO

Substitute a known-good ECM/PCM and recheck. If symptom/indication goes away, replace the original ECM/PCM.

ELD 3P CONNECTOR (C354)

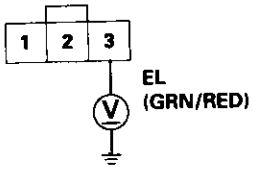

ECM/PCM CONNECTOR D (16P)

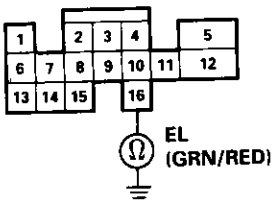

Wire side of female terminals

Electrical Load Detector (ELD) ('99 – 00 Models except D16Y5 engine with M/T)

P1297 The scan tool indicates Diagnostic Trouble Code (DTC) P1297: A low voltage problem in the Electrical Load Detector (ELD) circuit.

— DTC P1297 is stored.

Problem verification:
1. Do the ECM/PCM Reset Procedure.
2. Start the engine.
3. Turn on headlights.

Is DTC P1297 indicated?

NO → **Intermittent failure, system is OK at this time. Check for poor connections or loose wires at C131 (located under right side of dash), C354 (ELD) and ECM/PCM.**

YES

Check for short in the ELD:
Measure voltage between body ground and the ELD 3P connector terminal No. 3.

Is there approx. 4.5 V?

YES → **Replace the ELD.**

NO

Check for a short in the wire (EL line):
1. Turn the ignition switch OFF.
2. Disconnect the ECM/PCM connector A (32P).
3. Check for continuity between body ground and ECM/PCM connector terminal A30.

Is there continuity?

YES → **Repair short in the wire between ECM/PCM (A30) and ELD.**

NO

Substitute a known-good ECM/PCM and recheck. If symptom/indication goes away, replace the original ECM/PCM.

ELD 3P CONNECTOR (C354)

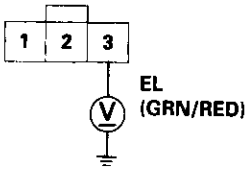

ECM/PCM CONNECTOR A (32P)

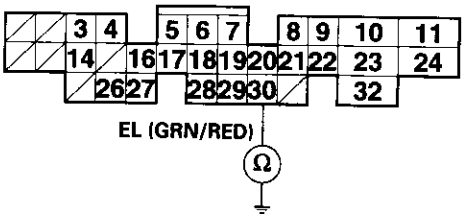

Wire side of female terminals

Electrical Load Detector (ELD) ('96 – 98 Models, '99 – 00 D16Y5 engine with M/T)

P1298 The scan tool indicates Diagnostic Trouble Code (DTC) P1298: A high voltage problem in the Electrical Load Detector (ELD) circuit.

— DTC P1298 is stored.

Problem verification:
1. Do the ECM/PCM Reset Procedure.
2. Start the engine.
3. Turn on headlights.

Is DTC P1298 indicated?

NO → **Intermittent failure, system is OK at this time. Check for poor connections or loose wires at C131 (located under right side of dash), C354 (ELD) and ECM/PCM.**

YES

Check for an open in the wire (IG1 line):
1. Turn the ignition and headlights OFF.
2. Disconnect the ELD 3P connector.
3. Turn the ignition switch ON (II).
4. Measure voltage between body ground and the ELD 3P connector terminal No. 1.

Is there battery voltage?

NO → **Repair open in the wire between No. 15 ALTERNATOR SP SENSOR (7.5 A) fuse in the under-dash fuse/relay box and ELD.**

YES

Check for an open in the wire (GND line):
1. Turn the ignition switch and headlights OFF.
2. Disconnect the ELD 3P connector.
3. Check for continuity between body ground and the ELD 3P connector terminal No. 2.

Is there continuity?

NO → **Repair open in the wire between ELD connector and G402.**

YES

Check for an open in the wire (EL line):
Check for continuity between the ELD 3P connector terminal No. 3 and ECM/PCM connector terminal D16.

Is there continuity?

NO → **Repair open in the wire between ECM/PCM (D16) and the ELD.**

YES

Check for a malfunction in the ELD:
1. Reconnect the ELD 3P connector.
2. Start the engine and allow it to idle.
3. While measuring voltage between ECM/PCM connector terminals D16 and A9, turn the headlights on (low).

Does the voltage drop?

NO → **Replace the ELD.**

YES

Substitute a known-good ECM/PCM and recheck. If symptom/indication goes away, replace the original ECM/PCM.

ELD 3P CONNECTOR (C354)

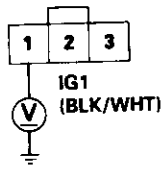

Wire side of female terminals

ELD 3P CONNECTOR (C354)

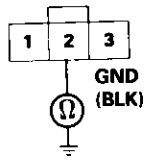

Wire side of female terminals

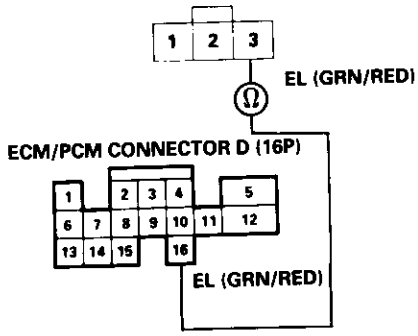

Wire side of female terminals

ECM/PCM CONNECTORS

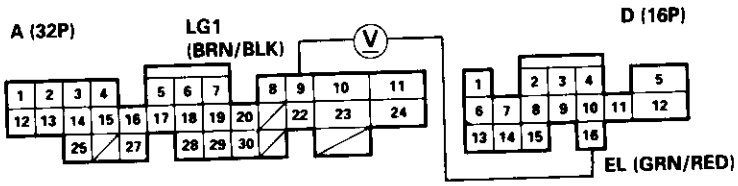

Wire side of female terminals

Electrical Load Detector (ELD) ('99 – 00 Models except D16Y5 engine with M/T)

P1298 The scan tool indicates Diagnostic Trouble Code (DTC) P1298: A high voltage problem in the Electrical Load Detector (ELD) circuit.

— DTC P1298 is stored.

Problem verification:
1. Do the ECM/PCM Reset Procedure.
2. Start the engine.
3. Turn on headlights.

Is DTC P1298 indicated?

NO → **Intermittent failure, system is OK at this time. Check for poor connections or loose wires at C131 (located under right side of dash), C354 (ELD) and ECM/PCM.**

YES

Check for an open in the wire (IG1 line):
1. Turn the ignition and headlights OFF.
2. Disconnect the ELD 3P connector.
3. Turn the ignition switch ON (II).
4. Measure voltage between body ground and the ELD 3P connector terminal No. 1.

Is there battery voltage?

NO → **Repair open in the wire between No. 15 ALTERNATOR SP SENSOR (7.5 A) fuse in the under-dash fuse/relay box and ELD.**

YES

Check for an open in the wire (GND line):
1. Turn the ignition switch and headlights OFF.
2. Disconnect the ELD 3P connector.
3. Check for continuity between body ground and the ELD 3P connector terminal No. 2.

Is there continuity?

NO → **Repair open in the wire between ELD connector and G402.**

YES

Check for an open in the wire (EL line):
1. Disconnect the ECM/PCM connector A (32P).
2. Check for continuity between the ELD 3P connector terminal No. 3 and ECM/PCM connector terminal A30.

Is there continuity?

YES → **Check for a malfunction in the ELD:**
1. Reconnect the ELD connector and ECM/PCM connector A (32P).
2. Start the engine and allow it to idle.
3. While measuring voltage between ECM/PCM connector terminals A30 and B20, turn the headlights on (low).

Does the voltage drop?

YES → **Substitute a known-good ECM/PCM and recheck. If symptom/indication goes away, replace the original ECM/PCM.**

NO → **Replace the ELD.**

NO → **Repair open in the wire between ELD connector and ECM/PCM.**

ELD 3P CONNECTOR (C354)

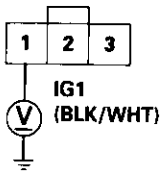

Wire side of female terminals

ELD 3P CONNECTOR (C354)

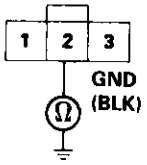

Wire side of female terminals

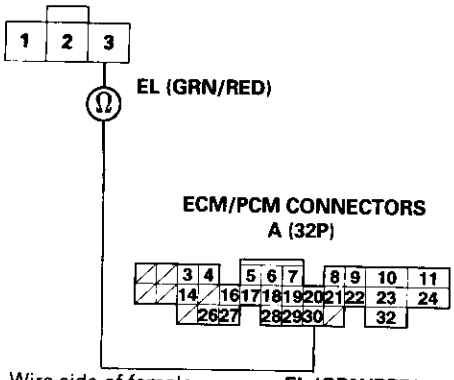

ECM/PCM CONNECTORS
A (32P)

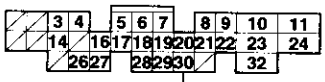

EL (GRN/RED)

B (25P)

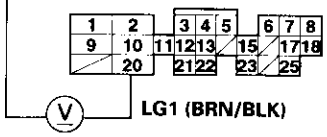

Wire side of female terminals

Crankshaft Speed Fluctuation (CKF) Sensor ('96 – 98 Models, '99 – 00 D16Y5 engine with M/T)

P1336 The scan tool indicates Diagnostic Trouble Code (DTC) P1336: Intermittent interruption in the Crankshaft Speed Fluctuation (CKF) sensor circuit.

P1337 The scan tool indicates Diagnostic Trouble Code (DTC) P1337: No signal in the Crankshaft Speed Fluctuation (CKF) sensor circuit.

Description

The diagnostic system has a pulser rotor on the crankshaft and a pulse pick-up sensor on the engine block. The ECM/PCM monitors the crankshaft speed fluctuation based on the CKF sensor signal, and judges that an engine misfire occurred if the fluctuation goes beyond a predetermined limit.

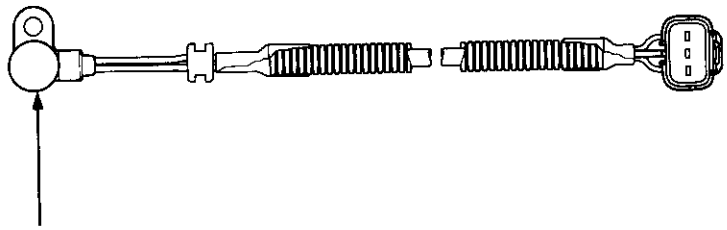

— The MIL has been reported on.
— DTC P1336 and/or P1337 are stored.

Problem verification:
1. Do the ECM/PCM Reset Procedure.
2. Start the engine.

Is DTC P1336 and/or P1337 indicated?

NO → **Intermittent failure, system is OK at this time. Check for poor connections or loose wires at C102 (CKF sensor) and ECM/PCM, and make sure CKF sensor mounting bolt is tight.**

YES

Check for an open in the CKF sensor:
1. Turn the ignition switch OFF.
2. Disconnect the CKF sensor 3P connector.
3. Measure the resistance between the CKF sensor 3P connector terminals No. 1 and No. 3.

Is there 1.6 – 3.2 kΩ?

NO → **Replace the CKF sensor (see section 6).**

YES

Check for a short in the CKF sensor:
Check for continuity between body ground and the CKF sensor 3P connector terminals No. 1 and No. 3 individually.

Is there continuity?

YES → **Replace the CKF sensor (see section 6).**

NO

(To page 11-184)

CKF SENSOR 3P CONNECTOR

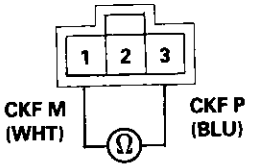

Terminal side of male terminals

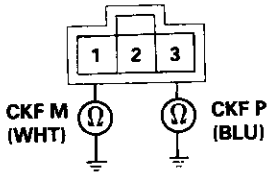

(cont'd)

Crankshaft Speed Fluctuation (CKF) Sensor ('96 – 98 Models, '99 – 00 D16Y5 engine with M/T) (cont'd)

(From page 11-183)

Check for an open in the wires (CKF lines):
1. Reconnect the CKF sensor 3P connector.
2. Disconnect the ECM/PCM connector C (31P).
3. Measure resistance between ECM/PCM connector terminals C1 and C11.

Is there 1.6 – 3.2 kΩ?

NO → **Repair open in the wire between ECM/PCM (C1, C11) and the CKF sensor.**

YES

Check for a short in the wire (CKF line):
Check for continuity between body ground and ECM/PCM connector terminal C1.

Is there continuity?

YES → **Repair short in the wire between ECM/PCM (C1) and the CKF sensor.**

NO → **Substitute a known-good ECM/PCM, and recheck. If symptom/indication goes away, replace the original ECM/PCM.**

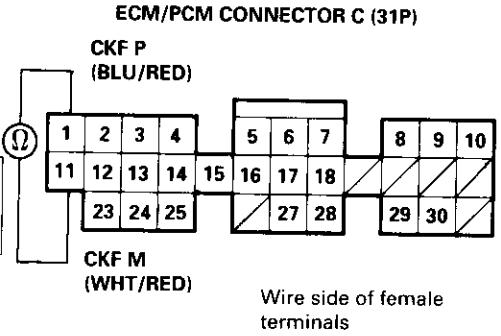

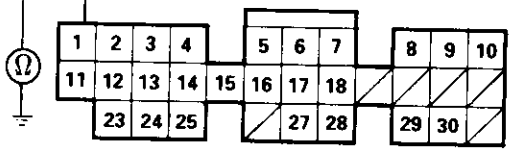

Crankshaft Speed Fluctuation (CKF) Sensor ('99 – 00 Models except D16Y5 engine with M/T)

P1336 The scan tool indicates Diagnostic Trouble Code (DTC) P1336: Intermittent interruption in the Crankshaft Speed Fluctuation (CKF) sensor circuit.

P1337 The scan tool indicates Diagnostic Trouble Code (DTC) P1337: No signal in the Crankshaft Speed Fluctuation (CKF) sensor circuit.

Description

The diagnostic system has a pulser rotor on the crankshaft and a pulse pick-up sensor on the engine block. The ECM/PCM monitors the crankshaft speed fluctuation based on the CKF sensor signal, and judges that an engine misfire occurred if the fluctuation goes beyond a predetermined limit.

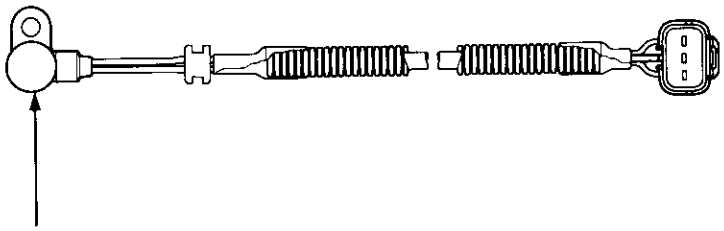

CKF SENSOR

— The MIL has been reported on.
— DTC P1336 and/or P1337 are stored.

Problem verification:
1. Do the ECM/PCM Reset Procedure.
2. Start the engine.

Is DTC P1336 and/or P1337 indicated?

NO → **Intermittent failure, system is OK at this time. Check for poor connections or loose wires at C102 (CKF sensor) and ECM/PCM, and make sure CKF sensor mounting bolt is tight.**

YES

Check for an open in the CKF sensor:
1. Turn the ignition switch OFF.
2. Disconnect the CKF sensor 3P connector.
3. Measure the resistance between the CKF sensor 3P connector terminals No. 1 and No. 3.

Is there 1.6 – 3.2 kΩ?

NO → **Replace the CKF sensor (see section 6).**

YES

Check for a short in the CKF sensor:
Check for continuity between body ground and the CKF sensor 3P connector terminals No. 1 and No. 3 individually.

Is there continuity?

YES → **Replace the CKF sensor (see section 6).**

NO

(To page 11-186)

CKF SENSOR 3P CONNECTOR

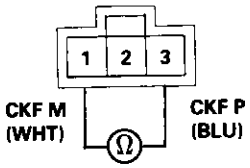

Terminal side of male terminals

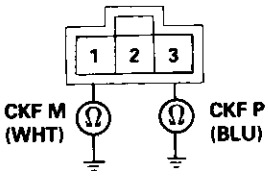

(cont'd)

Crankshaft Speed Fluctuation (CKF) Sensor ('99 – 00 Models except D16Y5 engine with M/T) (cont'd)

(From page 11-185)

Check for an open in the wires (CKF lines):
1. Reconnect the CKF sensor 3P connector.
2. Disconnect the ECM/PCM connector C (31P).
3. Measure resistance between ECM/PCM connector terminals C22 and C31.

Is there 1.6 – 3.2 kΩ?

NO → **Repair open in the wire between ECM/PCM (C22, C31) and the CKF sensor.**

YES

Check for a short in the wire (CKF line):
Check for continuity between body ground and ECM/PCM connector terminal C22.

Is there continuity?

YES → **Repair short in the wire between ECM/PCM (C22) and the CKF sensor.**

NO

Substitute a known-good ECM/PCM, and recheck. If symptom/indication goes away, replace the original ECM/PCM.

ECM/PCM CONNECTOR C (31P)

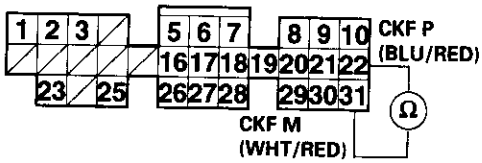

Wire side of female terminals

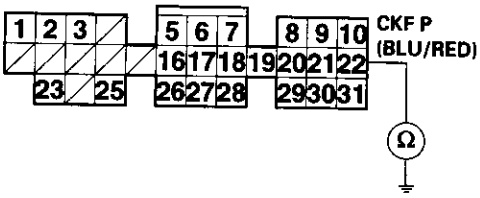

Crankshaft Position/Top Dead Center/Cylinder Position (CKP/TDC/CYP) Sensor

P1359 The scan tool indicates Diagnostic Trouble Code (DTC) P1359: A problem in the Crankshaft Position/Top Dead Center/Cylinder Position (CKP/TDC/CYP) sensor circuit.

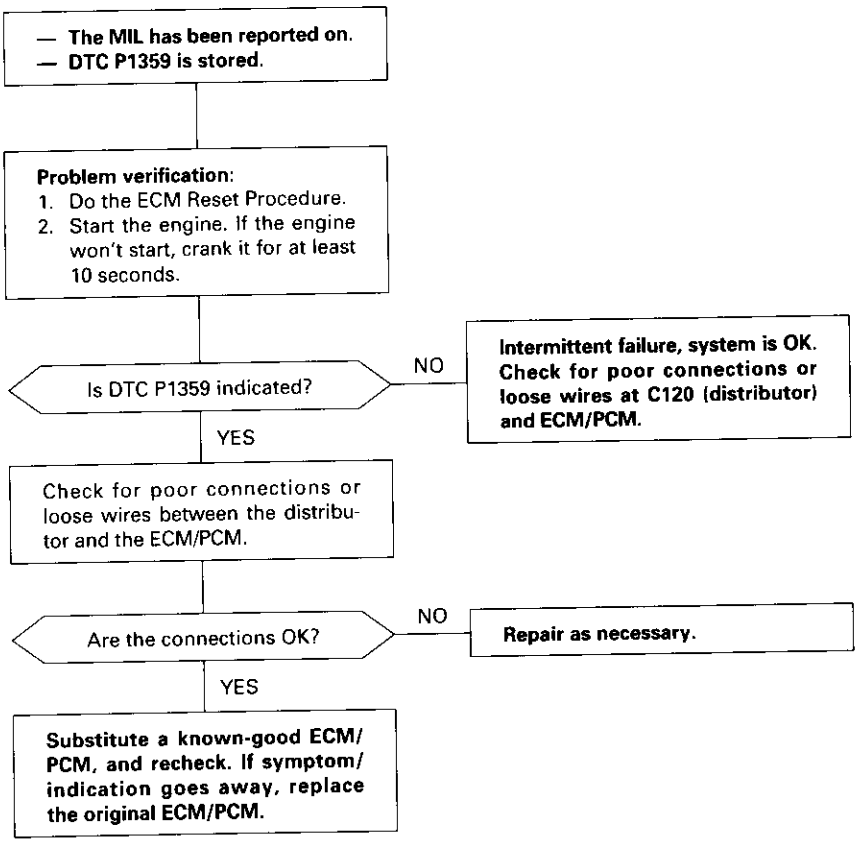

ECM/PCM Internal Circuit

P1607 The scan tool indicates Diagnostic Trouble Code (DTC) P1607: An ECM/PCM Internal Circuit Problem.

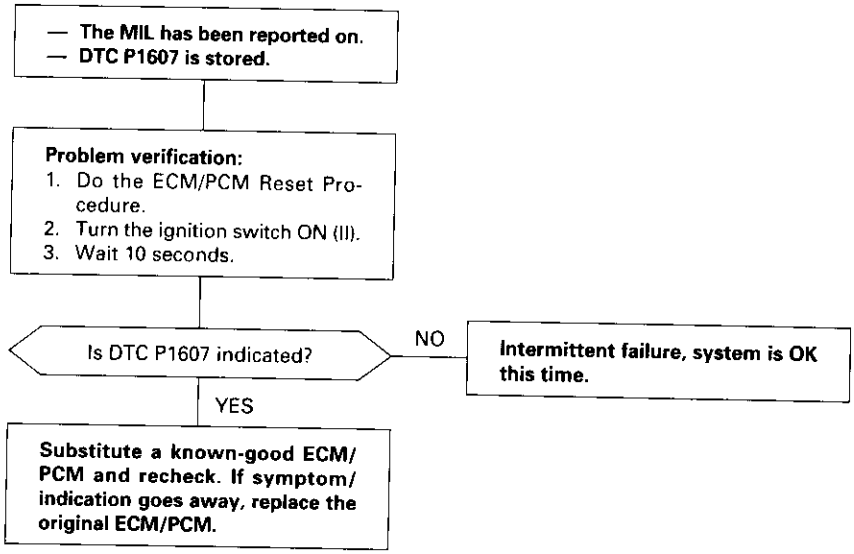

A/T Signal (TMA/TMB) ('96 – 98 D16Y5 engine with CVT)

P1655 The scan tool indicates Diagnostic Trouble Code (DTC) P1681: TMA/TMB signal line failure.

— DTC P1655 is stored.

Problem verification:
1. Do the ECM Reset Procedure.
2. Drive the vehicle for several miles at varying speeds.

Is DTC P1655 indicated?

NO → **Intermittent failure, system is OK at this time. Check for poor connections or loose wires at C131 (located under right side of dash), C438 (TCM) and ECM.**

YES

Check for an open in the wire (TMA line):
1. Turn the ignition switch OFF.
2. Disconnect ECM connector C (31P) from the ECM.
3. Turn the ignition switch ON (II).
4. Measure voltage between ECM connector terminal C9 and body ground.

Is there battery voltage?

NO → **Check for a short in the wire (TMA line):** Measure voltage between TCM 22P connector terminal No. 7 and body ground.

Is there battery voltage?

NO → **Repair short in the wire between the ECM (C9) and the TCM.**

YES → **Repair open in the wire between the ECM (C9) and the TCM.**

YES

Check for an open in the wire (TMB line):
1. Turn the ignition switch OFF.
2. Reconnect ECM connector C (31P).
3. Disconnect the 22P connector from TCM.
4. Turn the ignition switch ON (II).
5. Measure voltage between TCM 22P connector terminal No. 6 and body ground.

Is there battery voltage?

NO → **Check for a short in the wire (TMB line):** Measure voltage between ECM connector terminal C30 and body ground.

Is there battery voltage?

NO → **Repair short in the wire between the ECM (C30) and the TCM.**

YES → **Repair open in the wire between the ECM (C30) and the TCM.**

YES

Substitute a known-good ECM and recheck. If symptom/indication goes away, replace the original ECM.

ECM CONNECTOR C (31P)

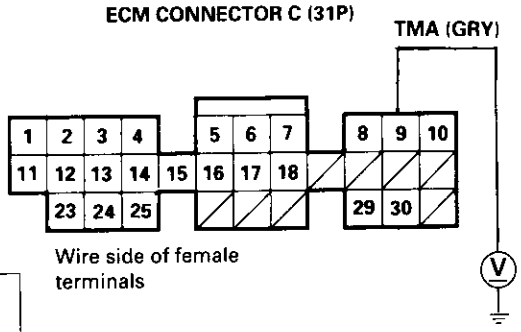

TCM 22P CONNECTOR

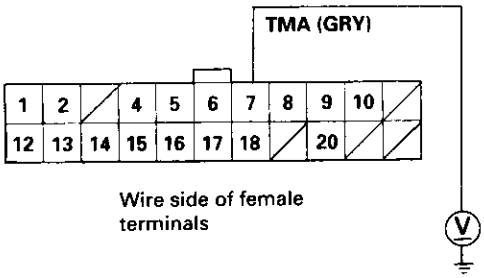

TCM 22P CONNECTOR

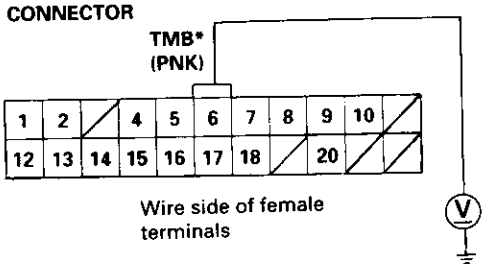

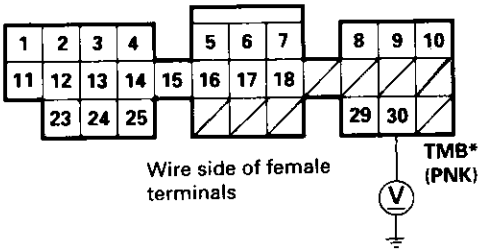

Idle Control System

System Description

The idle speed of the engine is controlled by the Idle Air Control (IAC) Valve.
The valve changes the amount of air bypassing into the intake manifold in response to electric current controlled by the ECM/PCM. When the IAC Valve is activated, the valve opens to maintain the proper idle speed.

D16Y5, D16Y8, B16A2 engine (M/T):

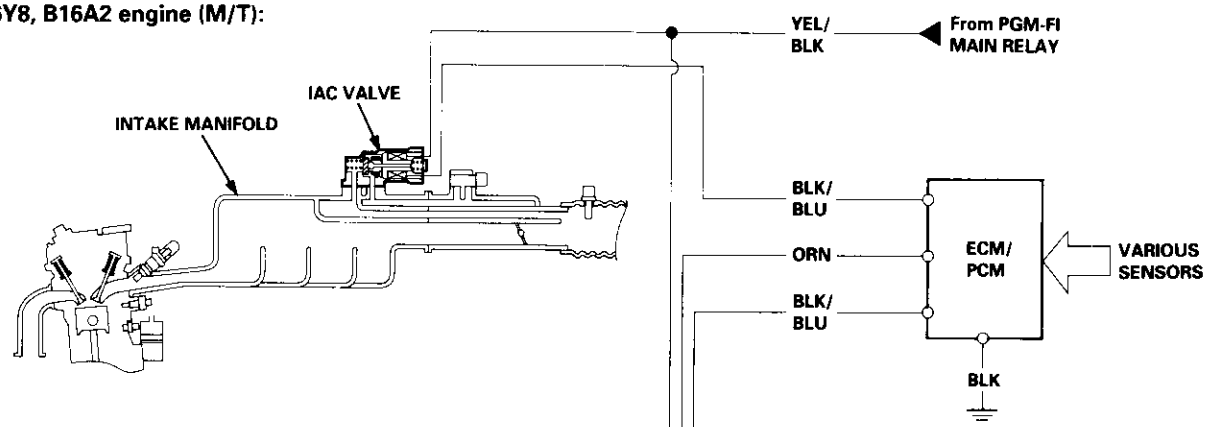

D16Y5 (CVT), D16Y8 engine (A/T):

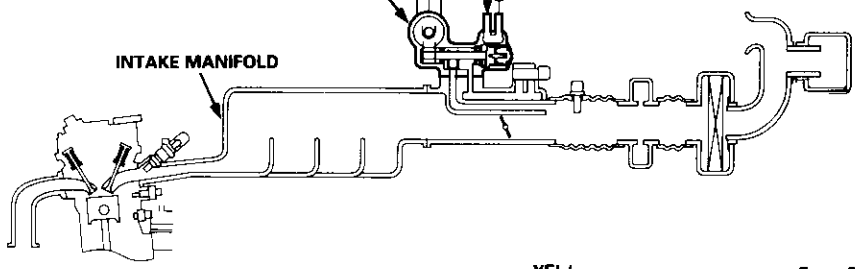

D16Y7 engine:

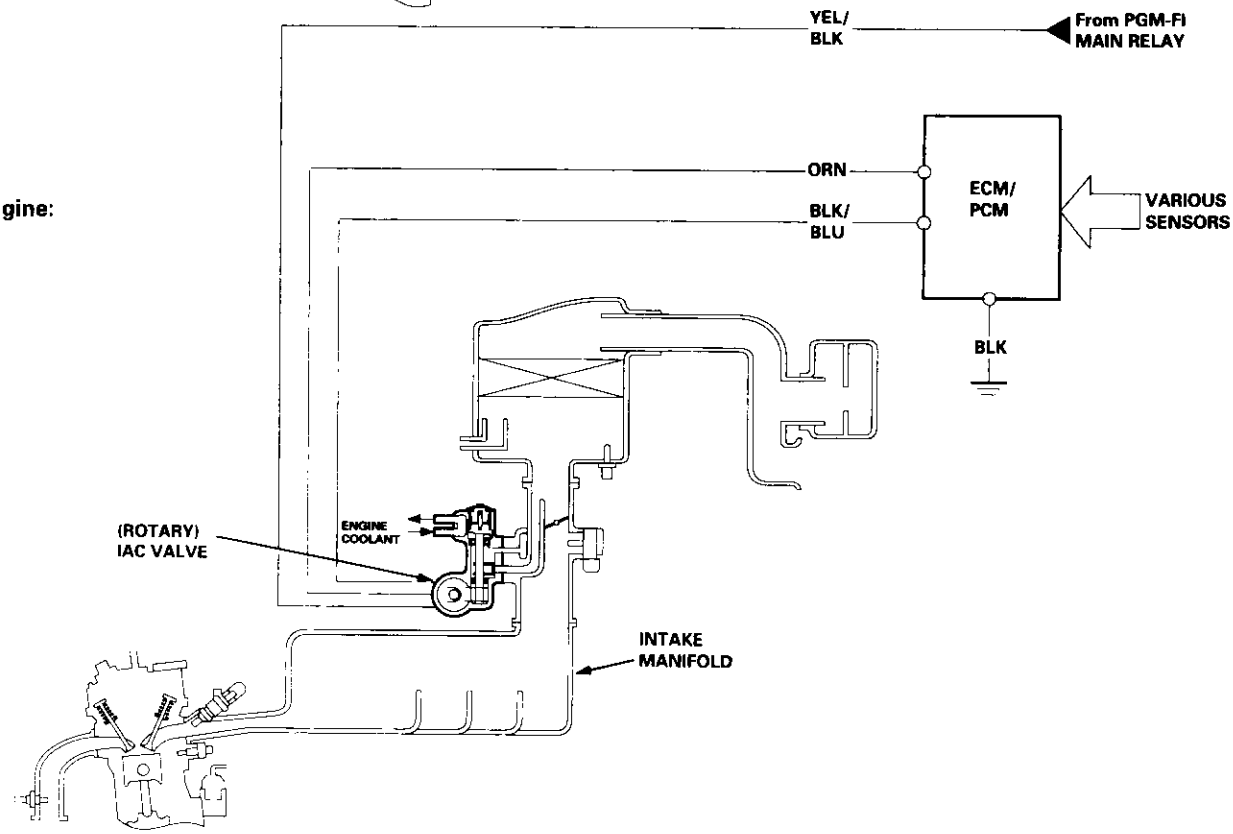

1. After the engine starts, the IAC valve opens for a certain time. The amount of air is increased to raise the idle speed about 150 – 300 rpm.

2. When the coolant temperature is low, the IAC valve is opened to obtain the proper fast idle speed. The amount of bypassed air is thus controlled in relation to the engine coolant temperature.

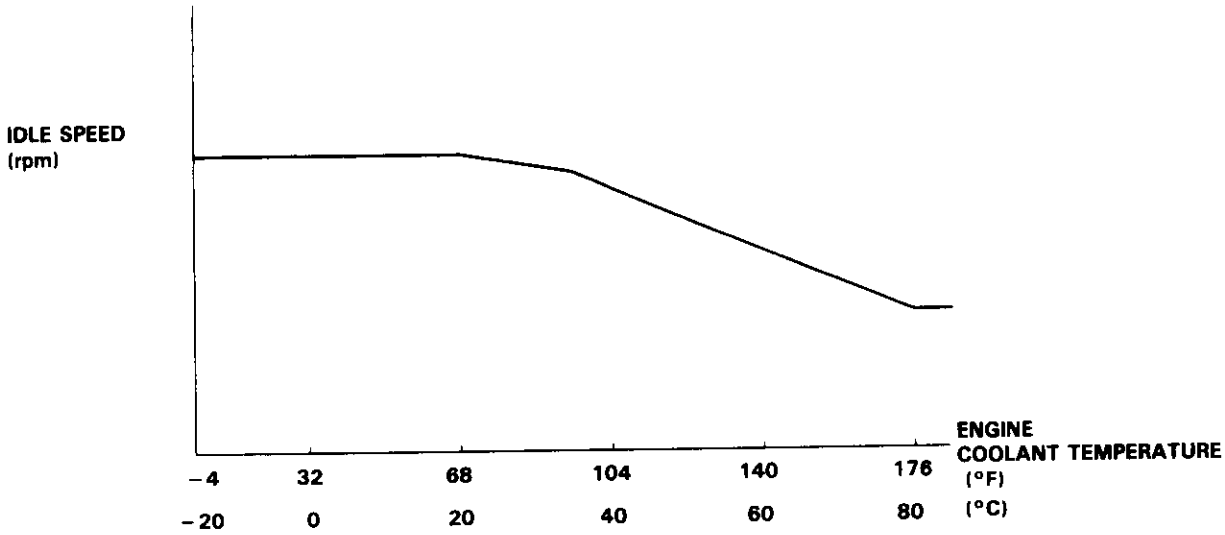

1. When the idle speed is out of specification and the scan tool does not indicate Diagnostic Trouble Code (DTC) P0505 or P1508, check the following items:
   - Adjust the idle speed (see page 11-220)
   - Starter switch signal (see page 11-202)
   - Air conditioning signal (see page 11-204)
   - ALT FR signal (see page 11-208)
   - Brake switch signal (see page 11-210)
   - PSP switch signal (except Canada model) (see page 11-212)
   - A/T gear position signal (see section 14, D16Y5 engine (CVT): page 11-216)
   - Clutch switch signal (D16Y5 engine with M/T) (see page 11-218)
   - Hoses and connections
   - IAC valve and its mounting O-rings

2. If the above items are normal, substitute a known-good IAC valve and readjust the idle speed (see page 11-220).

   If the idle speed still cannot be adjusted to specification (and the scan tool does not indicate DTC P0505 or P1508) after IAC valve replacement, substitute a known-good ECM/PCM and recheck. If symptom goes away, replace the original ECM/PCM.

Idle Control System

P0505 The scan tool indicates Diagnostic Trouble Code (DTC) P0505: Idle control system malfunction.

NOTE: If DTC P1508 or P1509 is stored at the same time as DTC P0505, troubleshoot DTC P1508 or P1509 first, then recheck for DTC P0505.

Possible Cause

- IAC valve mechanical malfunction
- Throttle body clogged port, improper adjustment
- Intake manifold gasket leakage
- Intake air hose loose leakage
- Vacuum leak
- ECT sensor incorrect output
- Throttle Position sensor incorrect output*1

Troubleshooting Flowchart

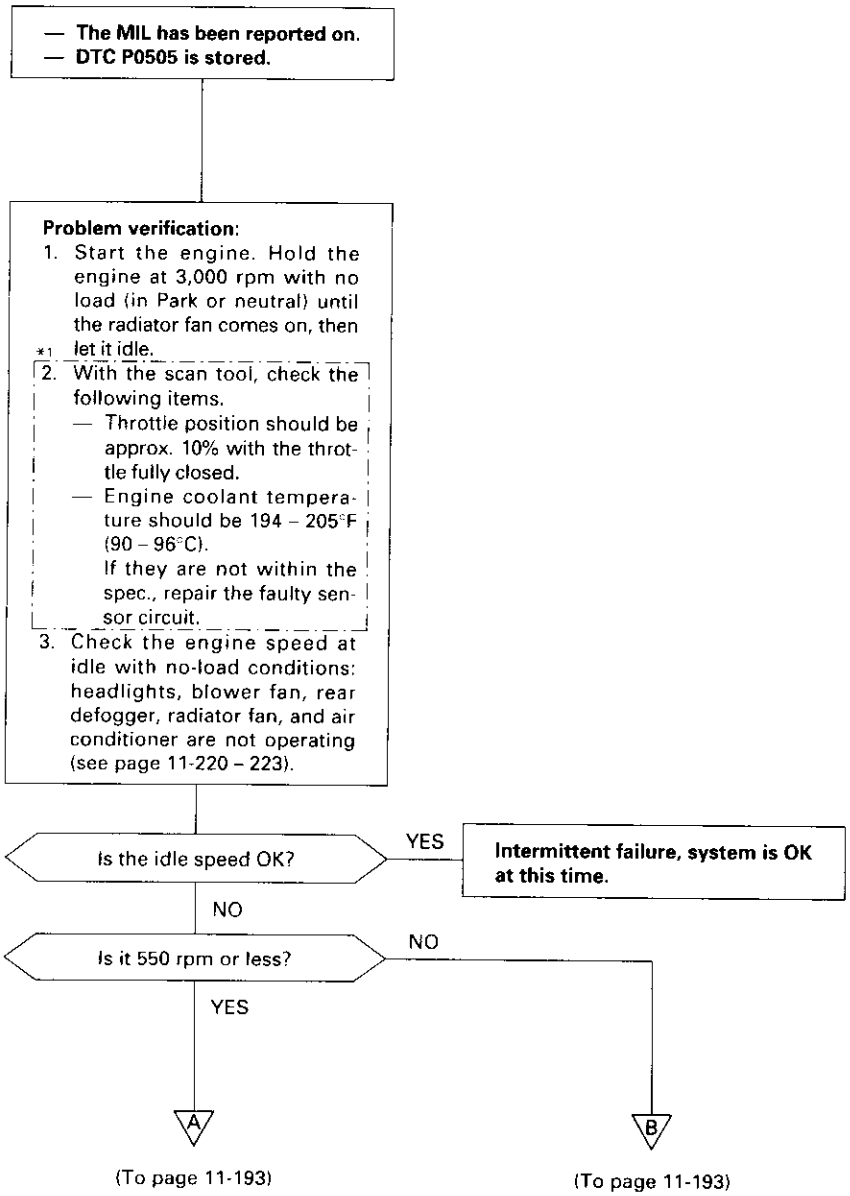

*1: '96 models only

(From page 11-192)

A

(A/T and D16Y7 engine)

Check the IAC valve:
Disconnect the 3P connector from the IAC valve.

Does the engine speed increase?

NO → **Replace the IAC valve.**

YES

(D16Y5, D16Y8 engine with M/T B16A2 engine)

Check the IAC valve:
Disconnect the 2P connector from the IAC valve.

Does the engine speed drop or the engine stall?

NO → **Replace the IAC valve.**

YES

Adjust the (base) idle speed (see page 11-220 – 223). If it's impossible, clean the ports in the throttle body.

D16Y5, D16Y8, B16A2 engine:

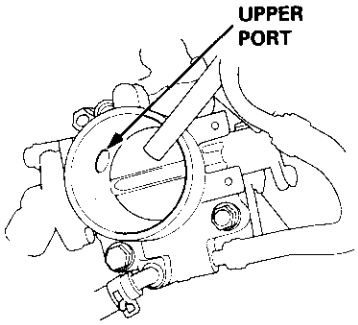

(From page 11-192)

B

Check for vacuum leaks:
1. Turn the ignition switch OFF.
2. Remove the intake air duct from the throttle body.
3. Start the engine and let it idle.
4. Put your finger on the lower port in the throttle body.

Does the engine speed drop?

NO → **Check for vacuum leaks, make sure the throttle valve is completely closed, and repair as necessary.**

YES

Adjust the idle speed (see page 11-220 – 223). If it's impossible, replace the IAC valve.

D16Y7 engine:

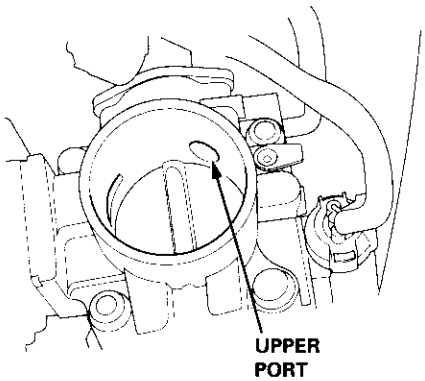

Idle Air Control (IAC) Valve ('96 – 98 D16Y5, D16Y8 engine with M/T)

P1508 The scan tool indicates Diagnostic Trouble Code (DTC) P1508: A problem in the Idle Air Control (IAC) valve circuit.

The IAC Valve changes the amount of air bypassing the throttle body in response to a current signal from the ECM in order to maintain the proper idle speed.

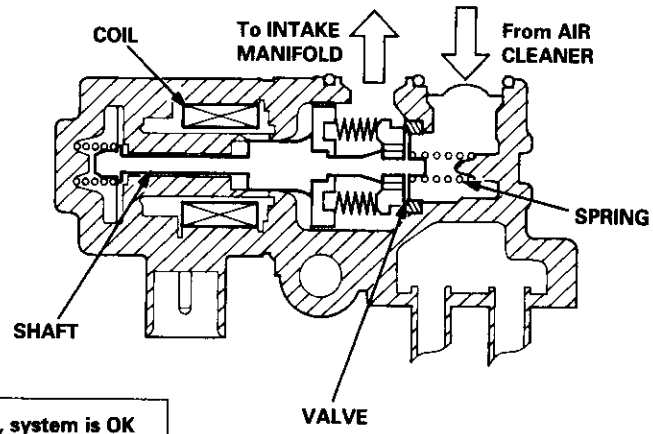

— The MIL has been reported on.
— DTC P1508 is stored.

Problem verification:
1. Do the ECM/PCM Reset Procedure.
2. Start the engine, and warm it up to normal operating temperature.

Is DTC P1508 indicated?

NO → **Intermittent failure, system is OK at this time. Check for poor connections or loose wires at C138 (IAC valve) and ECM.**

YES

Check for an open in the wire (IGP1 line):
1. Turn the ignition switch OFF.
2. Disconnect the IAC valve 2P connector.
3. Turn the ignition switch ON (II).
4. Measure voltage between body ground and the IAC valve 2P connector terminal No. 2.

IAC VALVE 2P CONNECTOR (C138)

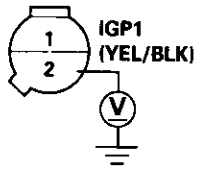

Wire side of female terminals

Is there battery voltage?

NO → **Repair open in the wire between IAC valve and PGM-FI main relay.**

YES

Check for an open or short in the wire (IACV line):
1. Turn the ignition switch OFF and reconnect the IAC valve connector.
2. Disconnect the ECM connector A (32P).
3. Turn the ignition switch ON (II).
4. Measure voltage between body ground and ECM connector terminal A12.

ECM CONNECTOR A (32P)

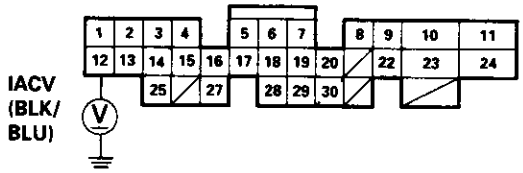

Wire side of female terminals

(To page 11-195)

(From page 11-194)

Is there battery voltage?

NO → **Repair open or short in the wire between ECM (A12) and IAC valve.**

YES

Check the IAC valve function: Momentarily connect ECM connector terminals A12 and A10 with a jumper wire several times.

Does the IAC valve click?

NO → **Replace the IAC valve.**

YES

Substitute a known-good ECM and recheck. If symptom/indication goes away, replace the original ECM.

ECM CONNECTOR A (32P)

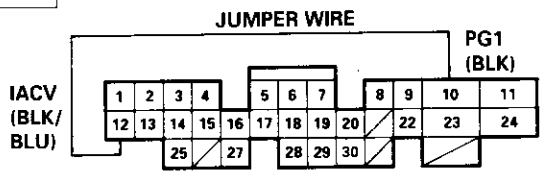

Wire side of female terminals

Idle Air Control (IAC) Valve ('99 – 00 D16Y8 engine with M/T, B16A2 engine)

P1508 The scan tool indicates Diagnostic Trouble Code (DTC) P1508: A problem in the Idle Air Control (IAC) valve circuit.

The IAC Valve changes the amount of air bypassing the throttle body in response to a current signal from the ECM in order to maintain the proper idle speed.

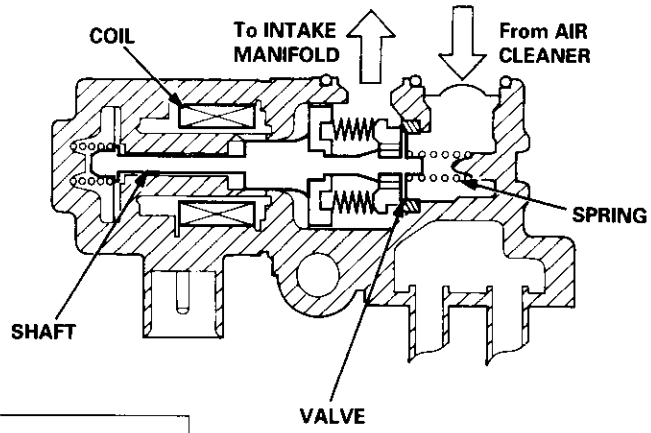

— The MIL has been reported on.
— DTC P1508 is stored.

Problem verification:
1. Do the ECM/PCM Reset Procedure.
2. Start the engine, and warm it up to normal operating temperature.

Is DTC P1508 indicated?

NO → **Intermittent failure, system is OK at this time. Check for poor connections or loose wires at C138 (IAC valve) and ECM.**

YES

Check for an open in the wire (IGP1 line):
1. Turn the ignition switch OFF.
2. Disconnect the IAC valve 2P connector.
3. Turn the ignition switch ON (II).
4. Measure voltage between body ground and the IAC valve 2P connector terminal No. 2.

IAC VALVE 2P CONNECTOR (C138)

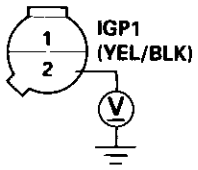

Wire side of female terminals

Is there battery voltage?

NO → **Repair open in the wire between IAC valve and PGM-FI main relay.**

YES

Check for an open or short in the wire (IACV line):
1. Turn the ignition switch OFF and reconnect the IAC valve connector.
2. Disconnect the ECM connector B (25P).
3. Turn the ignition switch ON (II).
4. Measure voltage between body ground and ECM connector terminal B23.

ECM CONNECTOR B (25P)

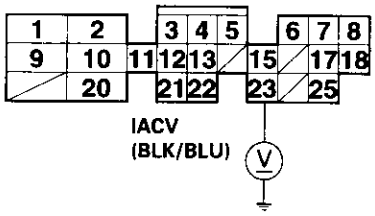

Wire side of female terminals

(To page 11-197)

(From page 11-196)

Is there battery voltage?

NO → **Repair open or short in the wire between ECM (B23) and IAC valve.**

YES

Check the IAC valve function: Momentarily connect ECM connector terminals B23 and B2 with a jumper wire several times.

Does the IAC valve click?

NO → **Replace the IAC valve.**

YES

Substitute a known-good ECM and recheck. If symptom/indication goes away, replace the original ECM.

ECM CONNECTOR B (25P)

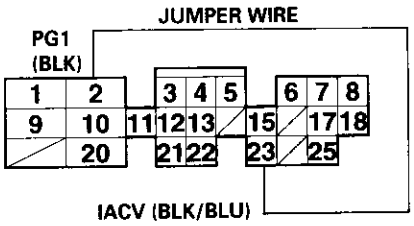

Wire side of female terminals

Idle Air Control (IAC) Valve ('96 – 98 A/T and D16Y7 engine)

P1509 The scan tool indicates Diagnostic Trouble Code (DTC) P1509: A problem in the idle Air Control (IAC) valve circuit.

The (Rotary) IAC Valve changes the amount of air bypassing the throttle body in response to a current signal from the ECM/PCM in order to maintain the proper idle speed.

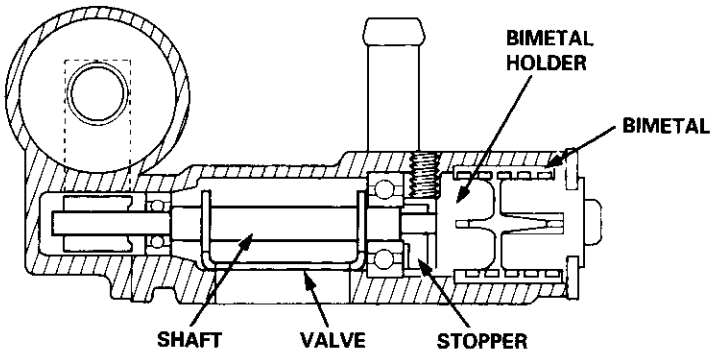

— The MIL has been reported on.
— DTC P1509 is stored.

Problem verification:
1. Do the ECM/PCM Reset Procedure.
2. Turn the ignition switch ON (II).

Is DTC P1509 indicated?

NO → **Intermittent failure, system is OK at this time. Check for poor connections or loose wires at C109 (IAC valve) and ECM/PCM.**

YES

Check for an open in the wires (PG lines):
Measure voltage between body ground and ECM/PCM connector terminals A10 and A23 individually.

Is there more than 1.0 V?

YES → **Repair open in the wires between ECM/PCM and G101 (located at the thermostat housing).**

NO

Check the ECM/PCM input voltage:
1. Turn the ignition switch OFF.
2. Disconnect ECM/PCM connector A (32P) from the ECM/PCM.
3. Turn the ignition switch ON (II).
4. Measure voltage between body ground and ECM/PCM connector terminals A14 and A13* individually.

Is there battery voltage?

NO → A (To page 11-199)

YES

Check the IAC valve:
1. Turn the ignition switch OFF.
2. Disconnect the IAC valve 3P connector.
3. Measure resistance between IAC valve 3P connector terminal No. 2 and terminals No. 1 and 3 individually.

Is there 16 – 28 Ω?

NO → **Replace the IAC valve.**

YES

Substitute a known-good ECM/PCM and recheck. If symptom/indication goes away, replace the original ECM/PCM.

*: IACV N line

ECM/PCM CONNECTOR A (32P)

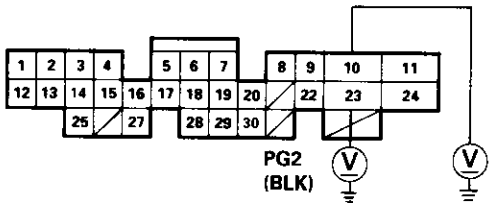

Wire side of female terminals

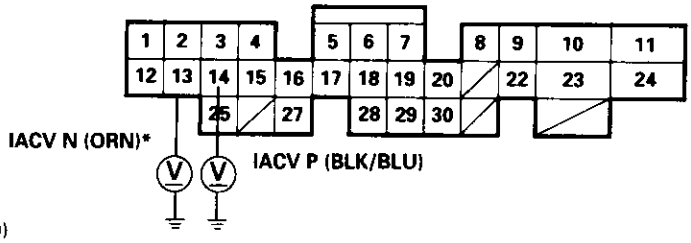

IAC VALVE 3P CONNECTOR

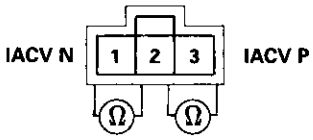

IGP
Terminal side of male terminals

(From page 11-198)

A

Check for an open in the wire (IGP line):
1. Turn the ignition switch OFF.
2. Disconnect the IAC valve 3P connector.
3. Turn the ignition switch ON (II).
4. At the wire harness, measure voltage between IAC valve 3P connector terminal No. 2 and body ground.

IAC VALVE 3P CONNECTOR (C109)

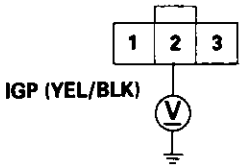

Wire side of female terminals

Is there battery voltage?

NO → **Repair open in the wire between the IAC valve and PGM-FI main relay.**

YES

Check for an open in the wires (IACV P, IACV N* lines):
1. Turn the ignition switch OFF.
2. Disconnect the ECM/PCM connector A (32P).
3. Check for continuity between IAC valve 3P connector terminal No. 3 and ECM/PCM connector terminal A14 (and between IAC valve 3P connector terminal No. 1 and ECM/PCM connector terminal A13)*.

Is there continuity?

NO → **Repair open in the wire between the IAC valve and ECM or PCM (A14, A13*).**

YES

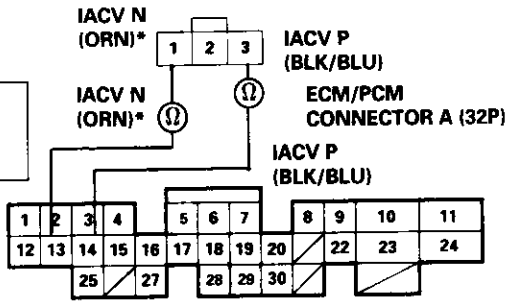

Wire side of female terminals

Check for a short in the wires (IACV P, IACV N* lines):
Check for continuity between body ground and ECM/PCM connector terminals A14 and A13* individually.

Is there continuity?

YES → **Repair short in the wire between the IAC valve and ECM/PCM (A14, A13*).**

NO

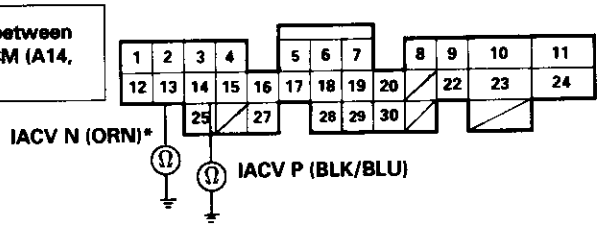

Check the IAC Valve:
1. Disconnect the IAC Valve 3P connector.
3. Measure resistance between IAC Valve 3P connector terminal No. 2 and terminals No. 1 and No. 3 individually.

IAC VALVE 3P CONNECTOR

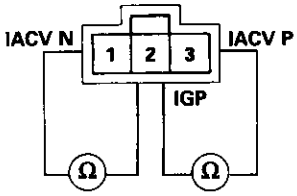

Terminal side of male terminals

Is there 16 – 28 Ω?

NO → **Replace the IAC Valve.**

YES

Substitute a known-good ECM/PCM and recheck. If symptom/indication goes away, replace the original ECM/PCM.

*: IACV N line

Idle Air Control (IAC) Valve ('99 – 00 A/T and D16Y7 engine)

P1509 The scan tool indicates Diagnostic Trouble Code (DTC) P1509: A problem in the idle Air Control (IAC) valve circuit.

The (Rotary) IAC Valve changes the amount of air bypassing the throttle body in response to a current signal from the ECM/PCM in order to maintain the proper idle speed.

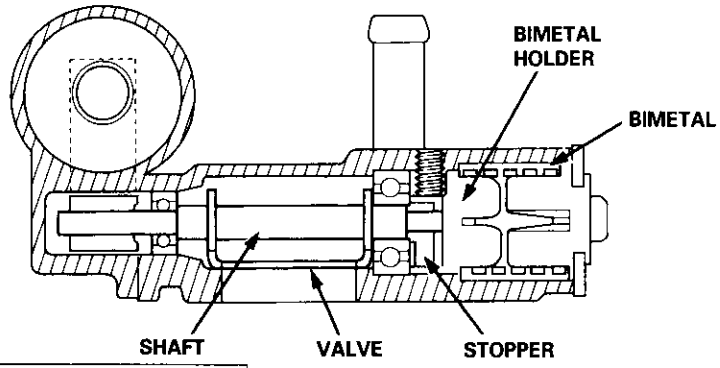

— The MIL has been reported on.
— DTC P1509 is stored.

Problem verification:
1. Do the ECM/PCM Reset Procedure.
2. Turn the ignition switch ON (II).

Is DTC P1509 indicated?

NO → **Intermittent failure, system is OK at this time. Check for poor connections or loose wires at C109 (IAC valve) and ECM/PCM.**

YES

Check for an open in the wires (PG lines):
Measure voltage between body ground and ECM/PCM connector terminals B2 and B10 individually.

Is there more than 1.0 V?

YES → **Repair open in the wires between ECM/PCM and G101 (located at the thermostat housing).**

NO

Check the ECM/PCM input voltage:
1. Turn the ignition switch OFF.
2. Disconnect ECM/PCM connector A (32P) from the ECM/PCM.
3. Turn the ignition switch ON (II).
4. Measure voltage between body ground and ECM/PCM connector terminals B6 and B15* individually.

Is there battery voltage?

NO → A (To page 11-201)

YES

Check the IAC valve:
1. Turn the ignition switch OFF.
2. Disconnect the IAC valve 3P connector.
3. Measure resistance between IAC valve 3P connector terminal No. 2 and terminals No. 1 and 3 individually.

Is there 16 – 28 Ω?

NO → **Replace the IAC valve.**

YES

Substitute a known-good ECM/PCM and recheck. If symptom/indication goes away, replace the original ECM/PCM.

*: IACV N line

ECM/PCM CONNECTOR B (25P)

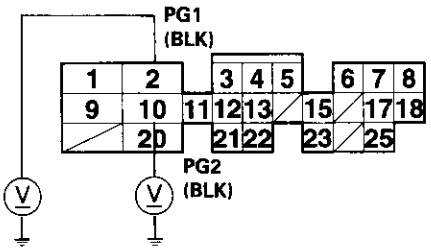

Wire side of female terminals

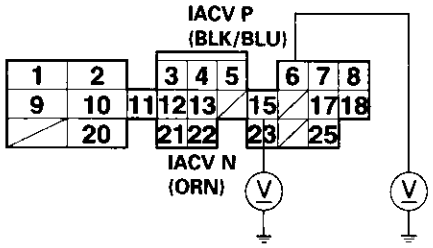

IAC VALVE 3P CONNECTOR

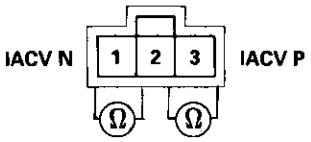

IGP
Terminal side of male terminals

(From page 11-200)

A

Check for an open in the wire (IGP line):
1. Turn the ignition switch OFF.
2. Disconnect the IAC valve 3P connector.
3. Turn the ignition switch ON (II).
4. At the wire harness, measure voltage between IAC valve 3P connector terminal No. 2 and body ground.

IAC VALVE 3P CONNECTOR (C109)

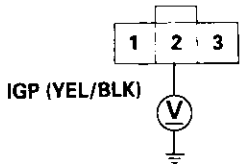

Wire side of female terminals

Is there battery voltage?

NO → **Repair open in the wire between the IAC valve and PGM-FI main relay.**

YES

Check for an open in the wires (IACV P, IACV N* lines):
1. Turn the ignition switch OFF.
2. Disconnect the ECM/PCM connector A (32P).
3. Check for continuity between IAC valve 3P connector terminal No. 3 and ECM/PCM connector terminal B6 (and between IAC valve 3P connector terminal No. 1 and ECM/PCM connector terminal B15)*.

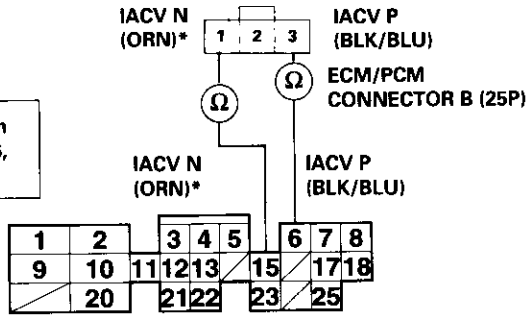

Wire side of female terminals

Is there continuity?

NO → **Repair open in the wire between the IAC valve and ECM/PCM (B6, B15*).**

YES

Check for a short in the wires (IACV P, IACV N* lines):
Check for continuity between body ground and ECM/PCM connector terminals B6 and B15* individually.

Is there continuity?

YES → **Repair short in the wire between the IAC valve and ECM/PCM (B6, B15*).**

NO

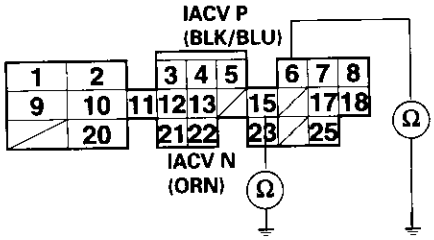

Check the IAC Valve:
1. Disconnect the IAC Valve 3P connector.
2. Measure resistance between IAC Valve 3P connector terminal No. 2 and terminals No. 1 and No. 3 individually.

Is there 16 – 28 Ω?

NO → **Replace the IAC Valve.**

YES

Substitute a known-good ECM/PCM and recheck. If symptom/indication goes away, replace the original ECM/PCM.

IAC VALVE 3P CONNECTOR

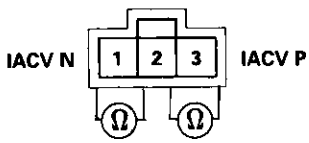

IGP
Terminal side of male terminals

*: IACV N line

Starter Switch Signal ('96 – 98 Models, '99 – 00 D16Y5 engine with M/T)

This signals the ECM/PCM when the engine is cranking.

Inspection of Starter Switch Signal.

NOTE:
- A/T: Transmission in [N] or [P] position.
- M/T: in neutral

Check for an open or short in the wire (STS line):
Measure voltage between ECM/PCM connector terminals A9 and C6 with the ignition switch in the start (III) position.

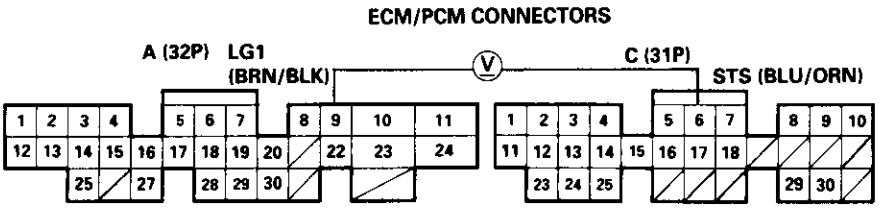

Is there battery voltage?

NO → Inspect the No. 31 STARTER SIGNAL (7.5 A) fuse in the under-dash fuse/relay box.

YES → **Starter switch signal is OK.**

Is the fuse OK?

NO →
- **Repair short in the wire between the ECM (C6) and the No. 31 STARTER SIGNAL (7.5 A) fuse or the PGM-FI main relay.**
- **Replace the No. 31 STARTER SIGNAL (7.5 A) fuse.**

YES → **Repair open in the wire between the ECM/PCM (C6) and the No. 31 STARTER SIGNAL (7.5 A) fuse.**

Starter Switch Signal ('99 – 00 Models except D16Y5 engine with M/T)

This signals the ECM/PCM when the engine is cranking.

Inspection of Starter Switch Signal.

NOTE:
- M/T: Clutch pedal must be depressed.
- A/T: Transmission in [N] or [P] position.

Check for an open or short in the wire (STS line):
Measure voltage between ECM/PCM connector terminals A24 and B20 with the ignition switch in the start position (III).

ECM/PCM CONNECTORS

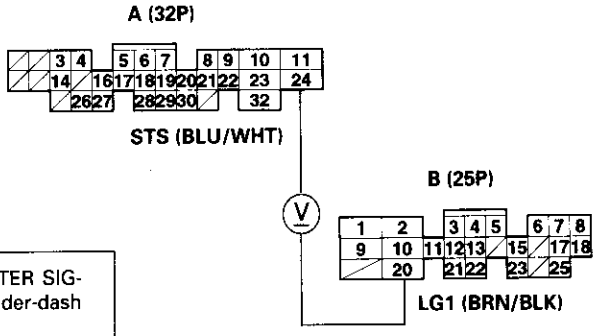

Is there battery voltage?

NO → Inspect the No. 31 STARTER SIGNAL (7.5 A) fuse in the under-dash fuse/relay box.

YES → **Starter switch signal is OK.**

Is the fuse OK?

NO →
- **Repair short in the wire between the ECM/PCM (A24) and the No. 31 STARTER SIGNAL (7.5 A) fuse or the PGM-FI main relay.**
- **Replace the No. 31 STARTER SIGNAL (7.5 A) fuse.**

YES → **Repair open in the wire between the ECM/PCM (A24) and the No. 31 STARTER SIGNAL (7.5 A) fuse.**

Air Conditioning Signal ('96 – 98 Models, '99 – 00 D16Y5 engine with M/T)

This signals the ECM/PCM when there is a demand for cooling from the air conditioning system.

Inspection of Air Conditioning Signal.

Check for a short in the wire (ACS line):
1. Turn the ignition switch OFF.
2. Disconnect the A/C pressure switch 2P connector (see section 22).
3. Turn the ignition switch ON (II).
4. Measure voltage between ECM/PCM connector terminals C5 and A9.

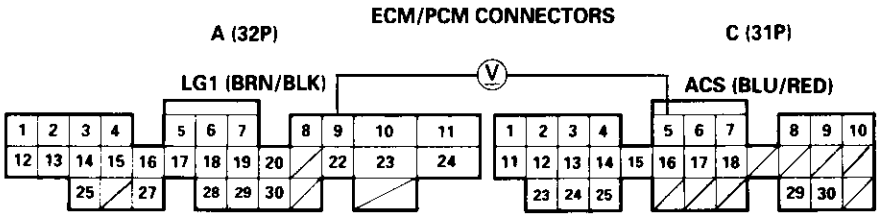

Wire side of female terminals

Is there approx. 5 V?

NO

Check for a short in the wire (ACS line):
1. Turn the ignition switch OFF.
2. Disconnect the ECM/PCM connector C (31P).
3. Check for continuity between body ground and ECM/PCM connector terminal C5.

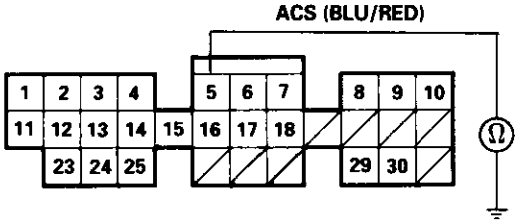

YES

Is there continuity?

YES

Repair short in the wire between the ECM/PCM (C5) and the A/C pressure switch.

NO

— **Substitute a known-good ECM/PCM and recheck. If prescribed voltage is now available, replace the original ECM/PCM.**
— **See the air conditioner inspection (see section 22).**

Check for an open in the wire (ACC line):
1. Turn the ignition switch OFF.
2. Reconnect the A/C pressure switch 2P connector.
3. Turn the ignition switch ON (II).
4. Momentarily connect ECM/PCM connector terminals A9 and A17 with a jumper wire several times.

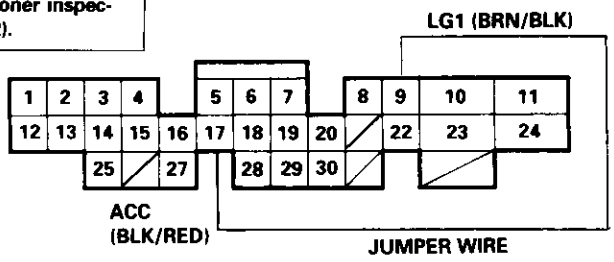

(To page 11-205)

(From page 11-204)

Is there a clicking noise from the A/C compressor clutch?

NO → **Check for an open in the wire (ACC line):** Momentarily connect under-hood fuse/relay box 9P connector terminal No. 5 to body ground with a jumper wire several times.

YES ↓

UNDER-HOOD FUSE/RELAY BOX 9P CONNECTOR (C352)

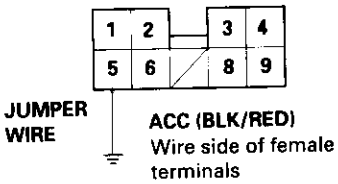

Is there a clicking noise from the A/C compressor clutch?

NO → **See air conditioner inspection (see section 22).**

YES ↓

Repair open in the wire between the ECM/PCM (A17) and the under-hood fuse/relay box 9P connector (C352).

Check for the operation of the A/C:
1. Start the engine.
2. Turn the blower switch ON.
3. Turn the A/C switch ON.

ECM/PCM CONNECTORS

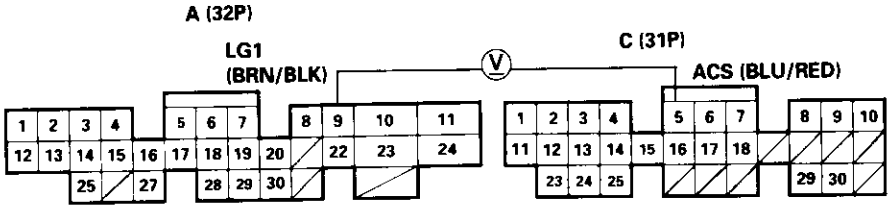

Wire side of female terminals

Does the A/C operate?

NO → **Check for an open in the wire (ACS line):** Measure voltage between ECM/PCM connector terminals A9 and C5.

YES ↓

Air conditioning signal is OK.

Is there less than 1.0 V?

NO → **Repair open in the wire between the ECM/PCM (C5) and the A/C switch.**

YES ↓

- **Substitute a known-good ECM/PCM and recheck. If symptom/indication goes away, replace the original ECM/PCM.**
- **See the air conditioner inspection (see section 22).**

Air Conditioning Signal ('99 – 00 Models except D16Y5 engine with M/T)

This signals the ECM/PCM when there is a demand for cooling from the air conditioning system.

Inspection of Air Conditioning Signal.

Check for a short in the wire (ACS line):
1. Turn the ignition switch OFF.
2. Disconnect the A/C pressure switch 2P connector.
3. Turn the ignition switch ON (II).
4. Measure voltage between ECM/PCM connector terminals A27 and B20.

ECM/PCM CONNECTORS

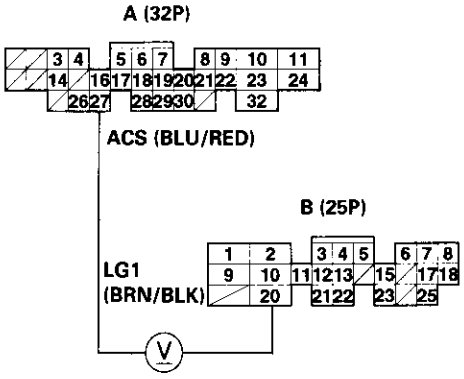

Is there battery voltage?

NO

Check for a short in the wire (ACS line):
1. Turn the ignition switch OFF.
2. Disconnect the ECM/PCM connector A (32P).
3. Check for continuity between body ground and ECM/PCM connector terminal A27.

ECM/PCM CONNECTOR A (32P)

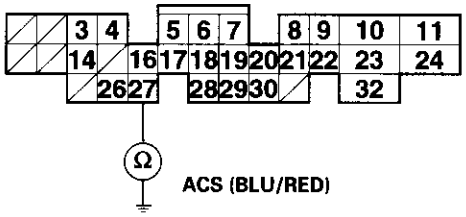

Wire side of female terminals

Is there continuity?

YES

Repair short in the wire between the ECM/PCM (A27) and the A/C pressure switch.

NO

— **Substitute a known-good ECM/PCM and recheck. If prescribed voltage is now available, replace the original ECM/PCM.**
— **See the air conditioner inspection (see section 22).**

YES

Check for an open in the wire (ACC line):
1. Turn the ignition switch OFF.
2. Reconnect the A/C pressure switch 2P connector.
3. Turn the ignition switch ON (II).
4. Momentarily connect ECM/PCM connector terminals A17 and B20 with a jumper wire several times.

(To page 11-207)

ECM/PCM CONNECTORS

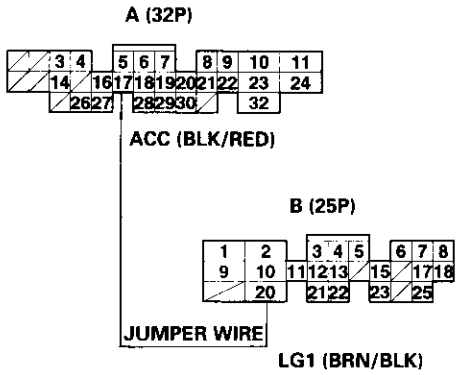

(From page 11-206)

Is there a clicking noise from the A/C compressor clutch?

NO → **Check for an open in the wire (ACC line):** Momentarily connect under-hood fuse/relay box 9P connector terminal No. 5 to body ground with a jumper wire several times.

YES ↓

UNDER-HOOD FUSE/RELAY BOX 9P CONNECTOR (C352)

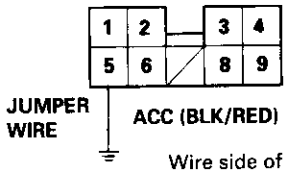

Wire side of female terminals

Is there a clicking noise from the A/C compressor clutch?

NO → **See air conditioner inspection (see section 22).**

YES ↓

Repair open in the wire between the ECM/PCM (A17) and the A/C clutch relay.

Check for the operation of the A/C:
1. Start the engine.
2. Turn the blower switch ON.
3. Turn the A/C switch ON.

ECM/PCM CONNECTORS

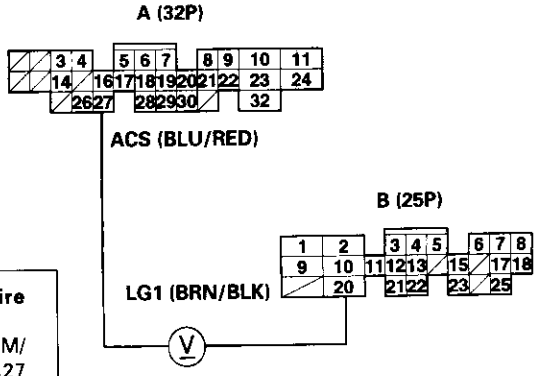

Wire side of female terminals

Does the A/C operate?

NO → **Check for an open in the wire (ACS line):** Measure voltage between ECM/PCM connector terminals A27 and B20.

YES ↓

Air conditioning signal is OK.

Is voltage less than 1.0 V?

NO → **Repair open in the wire between the ECM/PCM (A27) and the A/C switch.**

YES ↓

- **Substitute a known-good ECM/PCM and recheck. If symptom/indication goes away, replace the original ECM/PCM.**
- **See the air conditioner inspection (see section 22).**

Alternator (ALT) FR Signal ('96 – 98 Models, '99 – 00 D16Y5 engine with M/T)

This signals the ECM/PCM when the Alternator (ALT) is charging.

Inspection of ALT FR Signal.

Check for a short in the wire (ALT F line):
1. Disconnect the 4P (3P)* connector from the ALT.
2. Turn the ignition switch ON (II).
3. Measure voltage between ECM/PCM connector terminals C17 and A9.

ECM/PCM CONNECTORS

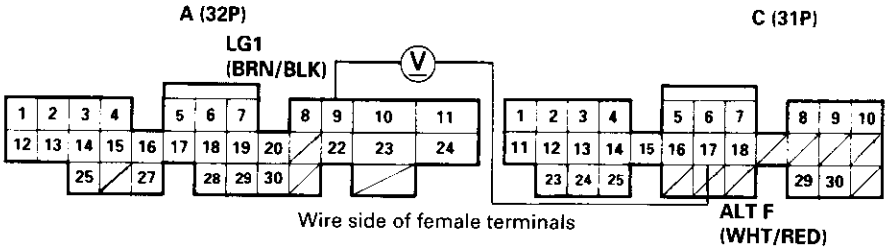

Is there approx. 5 V?

NO

Check for a short in the wire (ALT F line):
1. Turn the ignition switch OFF.
2. Disconnect the negative battery cable from the battery.
3. Disconnect the ECM/PCM connector C (31P).
4. Check for continuity between body ground and ECM/PCM connector terminal C17.

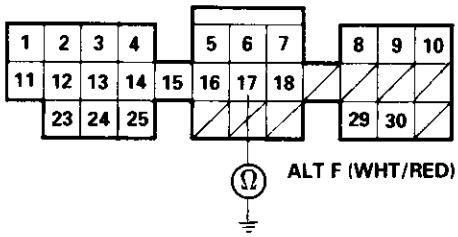

Is there continuity?

YES

Repair short in the wire between the ECM/PCM (C17) and the ALT.

NO

Substitute a known-good ECM/PCM and recheck. If prescribed voltage is now available, replace the original ECM/PCM.

YES

Check the operation of the ALT:
1. Turn the ignition switch OFF.
2. Reconnect the ALT 4P (3P)* connector to the ALT.
3. Start the engine. Hold the engine at 3,000 rpm with no load (in Park or neutral) until the radiator fan comes on, then let it idle.
4. Measure voltage between ECM/PCM connector terminals C17 and A9.

Does the voltage decrease when headlights and rear defogger are turned on?

YES

ALT FR signal is OK.

NO

Check for an open in the wire (ALT F line):
1. Turn the ignition switch OFF.
2. Disconnect the negative battery cable from the battery.
3. Disconnect the ECM/PCM connector C (31P).
4. Disconnect the 4P (3P)* connector from the ALT.
5. Connect the ALT 4P (3P)* connector terminal No. 4 (No. 1)* to body ground with a jumper wire.
6. Check for continuity between body ground and ECM/PCM connector terminal C17.

ALT CONNECTORS (C104)

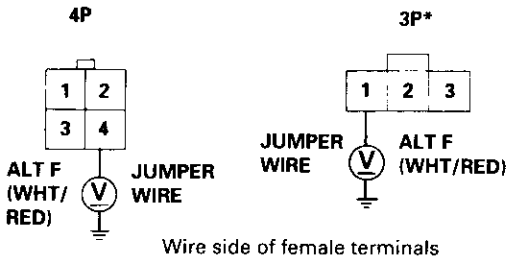

Is there continuity?

NO

Repair open wire between the ECM/PCM (C17) and the ALT.

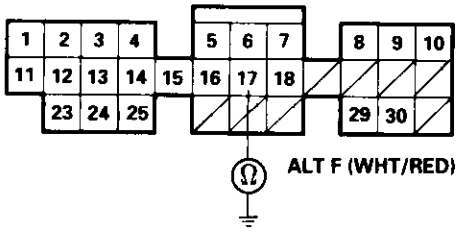

YES

See the ALT inspection (see section 4).

*: Canada model

Alternator (ALT) FR Signal ('99 – 00 Models except D16Y5 engine with M/T)

This signals the ECM/PCM when the Alternator (ALT) is charging.

Inspection of ALT FR Signal.

Check for a short in the wire (ALT F line):
1. Disconnect the 4P (3P)* connector from the ALT.
2. Turn the ignition switch ON (II).
3. Measure voltage between ECM/PCM connector terminals C5 and B20.

Is there approx. 5 V?

NO →

Check for a short in the wire (ALT F line):
1. Turn the ignition switch OFF.
2. Disconnect the negative battery cable from the battery.
3. Disconnect the ECM/PCM connector C (31P).
4. Check for continuity between body ground and ECM/PCM connector terminal C5.

Is there continuity?

YES → **Repair short in the wire between the ECM/PCM (C5) and the ALT.**

NO → **Substitute a known-good ECM/PCM and recheck. If prescribed voltage is now available, replace the original ECM/PCM.**

YES ↓

Check the operation of the ALT:
1. Turn the ignition switch OFF.
2. Reconnect the ALT 4P (3P)* connector to the ALT.
3. Start the engine. Hold the engine at 3,000 rpm with no load (in Park or neutral) until the radiator fan comes on, then let it idle.
4. Measure voltage between ECM/PCM connector terminals C5 and B20.

Does the voltage decrease when headlights and rear defogger are turned on?

YES → **ALT FR signal is OK.**

NO ↓

Check for an open in the wire (ALT F line):
1. Turn the ignition switch OFF.
2. Disconnect the negative battery cable from the battery.
3. Disconnect the ECM/PCM connector C (31P).
4. Disconnect the 4P (3P)* connector from the ALT.
5. Connect the ALT 4P (3P)* connector terminal No. 4 (No. 1)* to body ground with a jumper wire.
6. Check for continuity between body ground and ECM/PCM connector terminal C5.

Is there continuity?

NO → **Repair open wire between the ECM/PCM (C5) and the ALT.**

YES ↓

See the ALT inspection (see section 4).

*: Canada model

ECM/PCM CONNECTORS

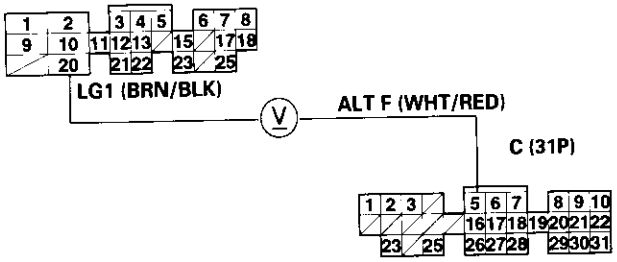

Wire side of female terminals

ECM/PCM CONNECTOR C (31P)

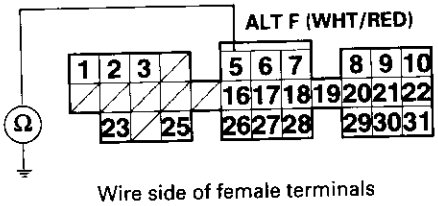

Wire side of female terminals

ALT CONNECTORS (C104)

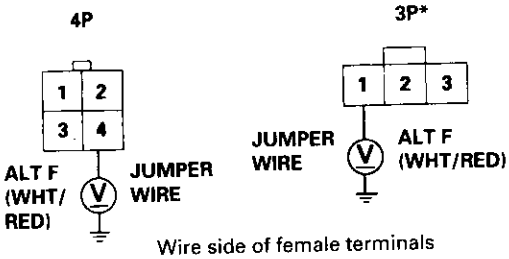

Wire side of female terminals

ECM/PCM CONNECTOR C (31P)

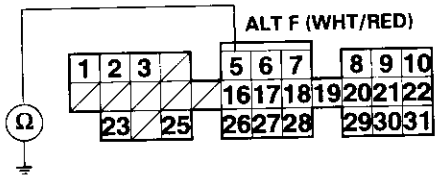

Wire side of female terminals

Brake Switch Signal ('96 – 98 Models, '99 – 00 D16Y5 engine with M/T)

This signals the ECM/PCM when the brake pedal is depressed.

Inspection of Brake Switch Signal.

Are the brake lights on without depressing the brake pedal?

YES → **Inspect the brake switch (see section 19).**

NO

Depress the brake pedal.

Do the brake lights come on?

NO → Inspect the HORN (15 A) fuse in the under-hood fuse/ relay box.

Is the fuse OK?

NO →
- **Repair short in the wire between the brake switch and the HORN (15 A) fuse.**
- **Replace the HORN (7.5 A) fuse.**

YES →
- **Repair open in the wire between the brake switch and the HORN (15 A) fuse.**
- **Inspect the brake switch (see section 19).**

YES

Check for an open in the wire (BKSW line):
1. Depress the brake pedal.
2. Measure voltage between ECM/PCM connector terminals A9 and D5 with the brake pedal depressed.

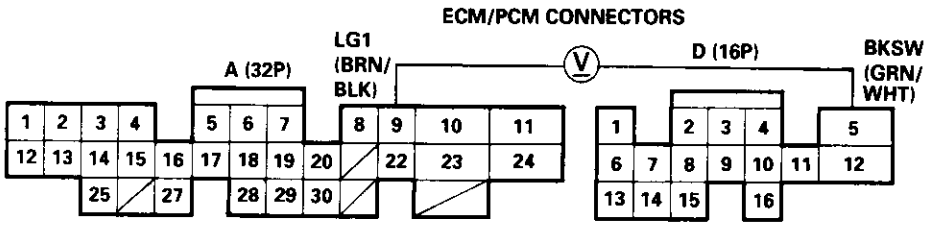

Wire side of female terminals

Is there battery voltage?

NO → **Repair open in the wire between the ECM/PCM (D5) and the brake switch.**

YES

Brake switch signal is OK.

Brake Switch Signal ('99 – 00 Models except D16Y5 engine with M/T)

This signals the ECM/PCM when the brake pedal is depressed.

Inspection of Brake Switch Signal.

Are the brake lights on without depressing the brake pedal?

YES → **Inspect the brake switch (see section 19).**

NO

Depress the brake pedal.

Do the brake lights come on?

NO → Inspect the HORN (15 A) fuse in the under-hood fuse/ relay box.

Is the fuse OK?

NO → **— Repair short in the wire between the brake switch and the HORN (15 A) fuse.**
— Replace the HORN (15 A) fuse.

YES → **— Repair open in the wire between the brake switch and the HORN (15 A) fuse.**
— Inspect the brake switch (see section 19).

YES

Check for an open in the wire (BKSW line):
1. Depress the brake pedal.
2. Measure voltage between ECM/PCM connector terminals A32 and B20 with the brake pedal depressed.

Is there battery voltage?

NO → **Repair open in the wire between the ECM/PCM (A32) and the brake switch.**

YES

Brake switch signal is OK.

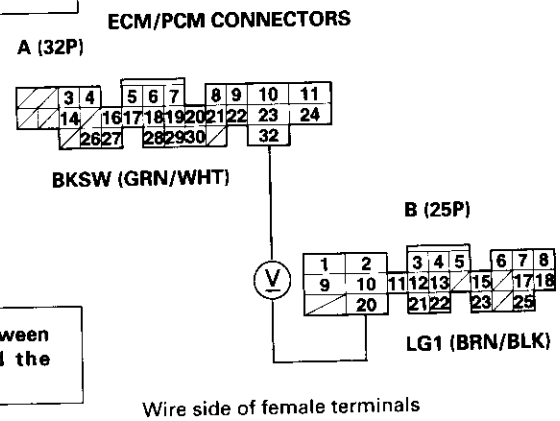

Power Steering Pressure (PSP) Switch Signal ('96 – 98 Models, '99 – 00 D16Y5 engine with M/T) (USA)

This signals the ECM/ PCM when the power steering load is high.

Inspection of PSP switch signal.

Check for an open in the wire (PSP SW line):
1. Turn the ignition switch ON (II).
2. Measure voltage between ECM/PCM connector terminals A9 and C16.

Is there less than 1.0 V?

NO → **Check for an open in the wire (PSP SW line):**
1. Turn the ignition switch OFF.
2. Disconnect the PSP switch 2P connector.
3. Turn the ignition switch ON (II).
4. At the harness side, connect the PSP switch 2P connector terminals No. 1 and No. 2 with a jumper wire.
5. Measure voltage between ECM/PCM connector terminals A9 and C16.

Is there less than 1.0 V?

NO → **— Repair open in the wire between the ECM/PCM (C16) and the PSP switch.**
— Repair open in BLK wire between the PSP switch and G101.

YES → **Replace the PSP switch.**

YES → **Check the operation of the PSP switch:**
1. Start the engine
2. Turn steering wheel to full lock.
3. Measure voltage between ECM/PCM connector terminals A9 and C16.

Is there battery voltage?

NO → (To page 11-213)

YES → **PSP switch signal is OK.**

ECM/PCM CONNECTORS

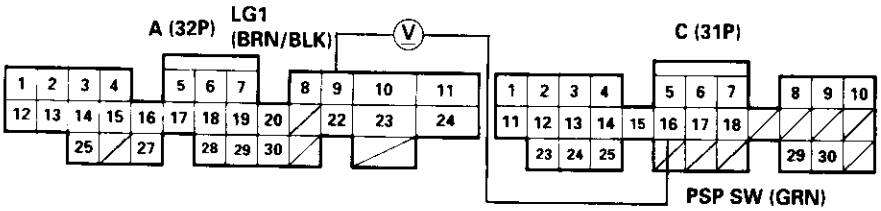

Wire side of female terminals

PSP SWITCH 2P CONNECTOR

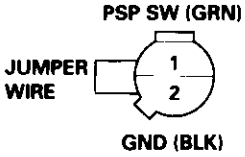

Wire side of female terminals

(From page 11-212)

Check for a short in the PSP switch:
1. Turn the ignition switch OFF.
2. Disconnect the 2P connector from the PSP switch.
3. Turn the ignition switch ON (II).
4. Measure voltage between ECM/PCM connector terminals A9 and C16.

ECM/PCM CONNECTORS

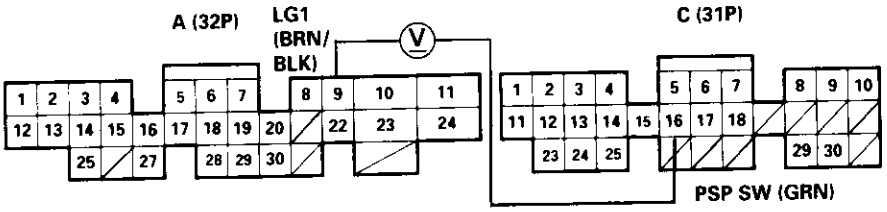

Wire side of female terminals

Is there battery voltage?

YES → **Replace the PSP switch.**

NO → **Check for a short in the wire (PSP SW line):**
1. Turn the ignition switch OFF.
2. Disconnect the ECM/PCM connector C (31P).
3. Check for continuity between body ground and ECM/PCM connector terminal C16.

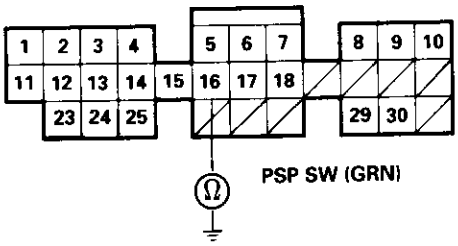

Is there continuity?

YES → **Repair short in the wire between the ECM/PCM (C16) and the PSP switch.**

NO → **Substitute a known-good ECM/PCM and recheck. If prescribed voltage is now available, replace the original ECM/PCM.**

Power Steering Pressure (PSP) Switch Signal ('99 – 00 Models except D16Y5 engine with M/T) (USA)

This signals the ECM/PCM when the power steering load is high.

Inspection of PSP switch signal.

Check for an open in the wire (PSP SW line):
1. Turn the ignition switch ON (II).
2. Measure voltage between ECM/PCM connector terminals A26 and B20.

Is there less than 1.0 V?

NO

Check for an open in the wire (PSP SW line):
1. Turn the ignition switch OFF.
2. Disconnect the PSP switch 2P connector.
3. Turn the ignition switch ON (II).
4. At the wire side, connect the PSP switch 2P connector terminals No. 1 and No. 2 with a jumper wire.
5. Measure voltage between ECM/PCM connector terminals A26 and B20.

Is there less than 1.0 V?

NO

- **Repair open in the wire between the ECM/PCM (A26) and the PSP switch.**
- **Repair open in BLK wire between the PSP switch and G101.**

YES

Replace the PSP switch.

YES

Check the operation of the PSP switch:
1. Start the engine
2. Turn steering wheel slowly.
3. Measure voltage between ECM/PCM connector terminals A26 and B20.

Is there battery voltage?

NO

(To page 11-215)

YES

PSP switch signal is OK.

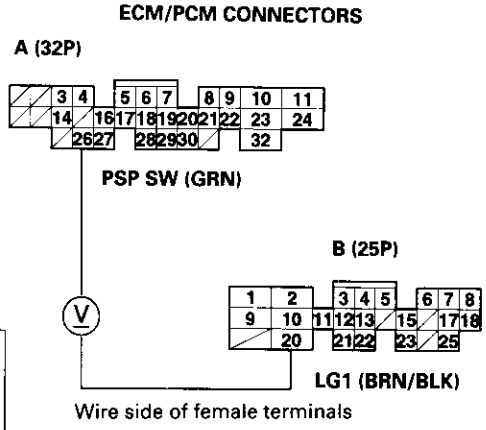

(From page 11-214)

Check for a short in the PSP switch:
1. Turn the ignition switch OFF.
2. Disconnect the 2P connector from the PSP switch.
3. Turn the ignition switch ON (II).
4. Measure voltage between ECM/PCM connector terminals A26 and B20.

ECM/PCM CONNECTORS

A (32P)

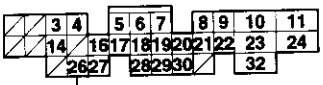

PSP SW (GRN)

B (25P)

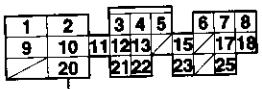

LG1 (BRN/BLK)

Wire side of female terminals

Is there battery voltage?

YES → **Replace the PSP switch.**

NO →

Check for a short in the wire (PSP SW line):
1. Turn the ignition switch OFF.
2. Disconnect the ECM/PCM connector A (32P).
3. Check for continuity between body ground and ECM/PCM connector terminal A26.

ECM/PCM CONNECTOR A (32P)

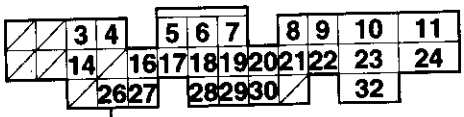

PSP SW (GRN)

Wire side of female terminals

Is there continuity?

YES → **Repair short in the wire between the ECM/PCM (A26) and the PSP switch.**

NO → **Substitute a known-good ECM/PCM and recheck. If prescribed voltage is now available, replace the original ECM/PCM.**

Automatic Transaxle (CVT) Gear Position Signal ('96 – 98 D16Y5 engine with CVT)

This signals the ECM when the transmission is in [N] or [P] position.

Inspection of A/T Gear Position Signal.

Check the operation of the A/T gear position switch:
1. Turn the ignition switch ON (II).
2. Observe the A/T shift position indicator and select each position separately.

Does the indicator light properly?

NO → **See the A/T gear position indicator inspection (see section 14).**

YES

Check for a short in the wire (ATP NP line):
1. Turn the ignition switch OFF.
2. Disconnect the 14P connector from the gauge assembly.
3. Disconnect the 26P connector from the TCM.
4. Turn the ignition switch ON (II).
5. Measure voltage between ECM connector terminals A9 and C29.

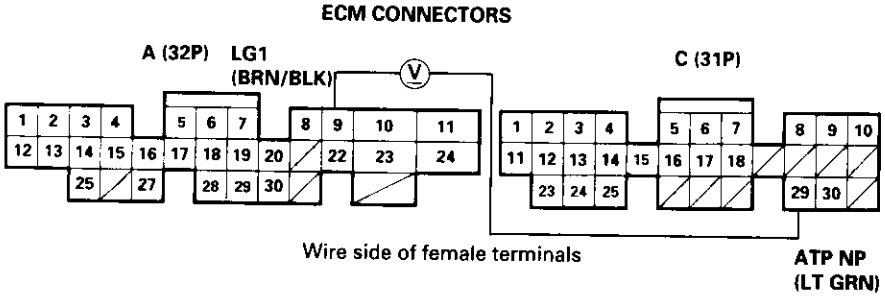

Is there approx. 5 V?

NO → **Check for a short in the wire (ATP NP line):**
1. Turn the ignition switch OFF.
2. Disconnect the ECM connector C (31P).
3. Check for continuity between body ground and ECM connector terminal C29.

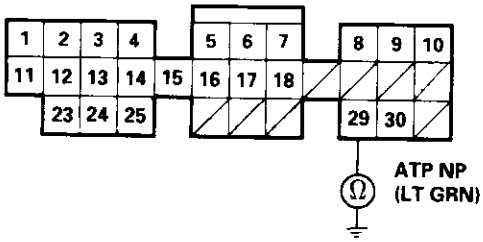

Is there continuity?

YES → **Repair short in the wire between the ECM (C29) and the gauge assembly.**

NO → **Substitute a known-good ECM and recheck. If prescribed voltage is now available, replace the original ECM.**

YES

Check for an open in the wire (ATP NP line):
1. Turn the ignition switch OFF.
2. Reconnect the 14P connector to the gauge assembly.
3. Reconnect the 26P connector to the TCM.
4. Start the engine.
5. Measure voltage between ECM connector terminals A9 and C29 with the transmission in [N] and [P] position.

(To page 11-217)

(From page 11-216)

Is there less than 1.0 V?

NO →
- **Repair open in the wire between the ECM (C29) and the gauge assembly.**
- **Repair open in the wire between the gauge assembly and the A/T gear position switch.**

YES ↓

Check for a short in the wire (ATP NP line):
Measure voltage between ECM connector terminals A9 and C29 with the transmission in gear.

Is there battery voltage?

NO → **Repair short in the wire between ECM (C29) and gauge assembly.**

YES ↓

A/T gear position signal is OK.

ECM CONNECTORS

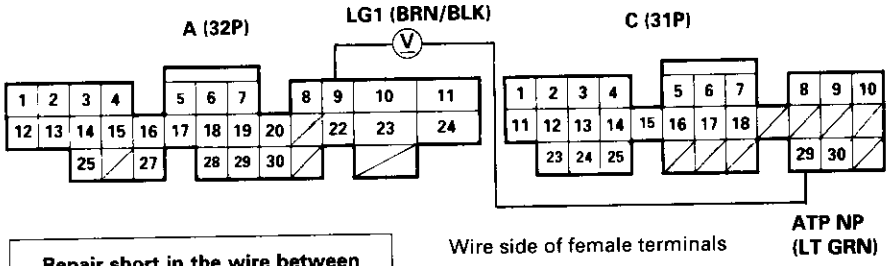

Clutch Switch Signal (D16Y5 engine with M/T)

This signals the ECM when the clutch is engaged.

Inspection of clutch switch signal.

Check for an open in the wire (CLSW line):
1. Turn the ignition switch ON (II).
2. Measure voltage between ECM connector terminals C29 and A9.

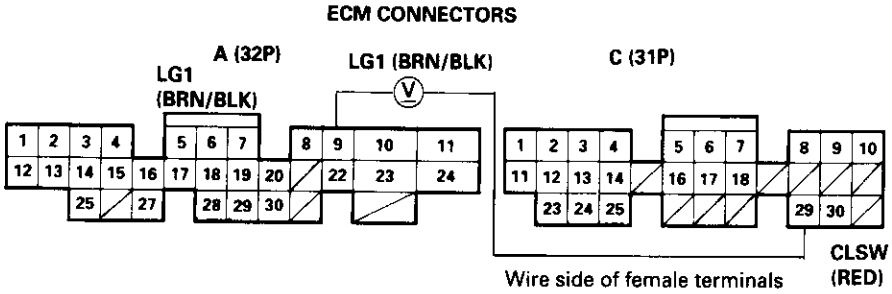

Is there approx. 5 V?

NO

Check the clutch switch:
1. Turn the ignition switch OFF.
2. Disconnect the 2P connector from the clutch switch.
3. Turn the ignition switch ON (II).
4. Measure voltage between ECM connector terminals C29 and A9.

Is there approx. 5 V?

YES

Replace the clutch switch.

NO

Check for a short in the wire (CLSW line):
1. Turn the ignition switch OFF.
2. Disconnect the ECM connector C (31P) from the ECM.
3. Check for continuity between ECM connector terminal C29 and body ground.

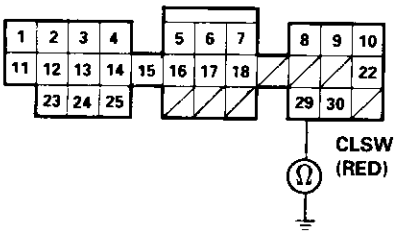

Is there continuity?

YES

Repair short in the wire between the ECM (C29) and the clutch switch.

NO

Substitute a known-good ECM and recheck. If prescribed voltage is now available, replace the original ECM.

YES

Check for an open in the wire (CLSW line):
1. Depress the clutch pedal.
2. Measure voltage between ECM connector terminals C29 and A9.

(To page 11-219)

(From page 11-218)

Is voltage less than 1.0 V?

NO

Check the clutch switch:
1. Turn the ignition switch OFF.
2. Disconnect the 2P connector from the clutch switch.
3. Check for continuity between the clutch switch connector terminals No. 1 and No. 2 with the clutch pedal depressed.

CLUTCH SWITCH 2P CONNECTOR

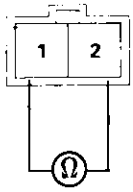

Terminal side of male terminals

Is there continuity?

NO

— Adjust the clutch switch.
— Replace the clutch switch.

YES

CLUTCH SWITCH 2P CONNECTOR (C417)

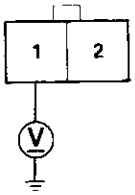

Wire side of female terminals

Check for an open in the wire:
1. Turn the ignition switch ON (II).
2. Measure voltage between the clutch switch connector terminal No. 1 and body ground with the clutch pedal depressed.

Is there approx. 5 V?

NO

Repair open in the wire between the ECM (C29) and the clutch switch.

YES

Repair open in BLK wire between the clutch switch and G401.

YES

Clutch switch signal is OK.

Idle Speed Setting

Inspection/Adjustment

'96, '97 D16Y5, '96 – 00 D16Y8 engine with M/T

NOTE:
- Before setting the idle speed, check the following items:
  - — The MIL has not been reported on.
  - — Ignition timing
  - — Spark plugs
  - — Air cleaner
  - — PCV system
- (Canada) Pull the parking brake lever up. Start the engine, then check that the headlights are off.

1. Start the engine. Hold the engine at 3,000 rpm with no load (transmission in neutral) until the radiator fan comes on, then let it idle.

2. Connect a tachometer.

3. Disconnect the IAC valve connector.

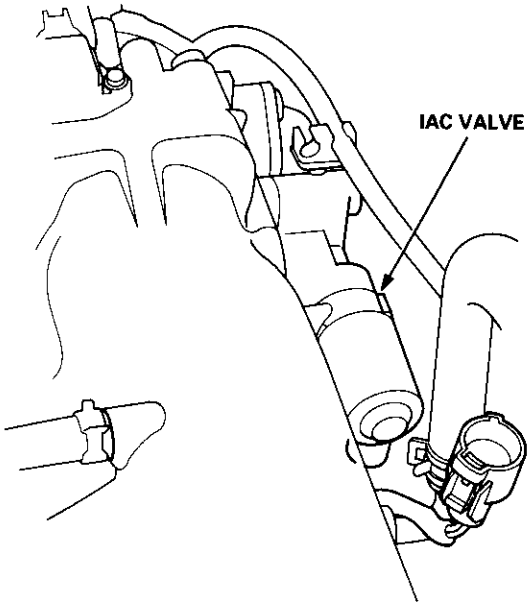

4. If the engine stalls, restart the engine with the accelerator pedal slightly depressed. Stabilize the rpm at 1,000, then slowly release the pedal until the engine idles.

5. Check idling in no-load conditions: headlights, blower fan, rear defogger, radiator fan, and air conditioner are not operating.

   Idle speed should be:
   450 ± 50 rpm

   Adjust the idle speed, if necessary, by removing the cap and turning the idle adjusting screw.

   NOTE: After adjusting the idle speed in this step, recheck the ignition timing (see section 23).
   If it is out of spec, go back to step 4.

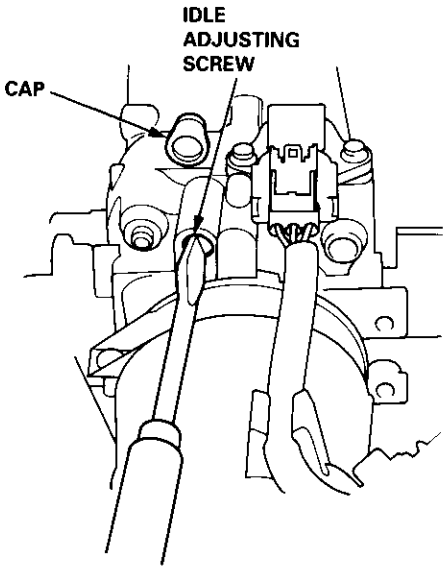

6. Turn the ignition switch OFF.

7. Reconnect the 2P connector on the IAC valve, then do the ECM reset procedure.

8. Restart and idle the engine with no-load conditions for one minute, then check the idle speed.

   NOTE: (Canada) Pull the parking brake lever up. Start the engine, then check that the headlights are off.

   Idle speed should be:
   670 ± 50 rpm (USA)
   750 ± 50 rpm (Canada)

9. Idle the engine for one minute with headlights (Low) ON, and check the idle speed.

   Idle speed should be:
   750 ± 50 rpm

10. Turn the headlights off. Idle the engine for one minute with heater fan switch at HI and air conditioner on, then check the idle speed.

    Idle speed should be:
    810 ± 50 rpm

    NOTE: If the idle speed is not within specification, see Symptom Chart on page 11-84.

'96, '97 D16Y5 engine with CVT, '96 – 00 D16Y8 engine with A/T and '96 – 00 D16Y7 engine

Adjust the idle speed using a Honda PGM Tester if possible. If not, use the following procedure:

NOTE:
- Leave the IAC valve connected.
- Before setting the idle speed, check the following items:
  — The MIL has not been reported on.
  — Ignition timing
  — Spark plugs
  — Air cleaner
  — PCV system

1. Connect a tachometer.

2. Start the engine. Hold the engine at 3,000 rpm with no load (in Park or neutral) until the radiator fan comes on, then let it idle.

3. Check the idle speed with no-load conditions: headlights, blower fan, rear defogger, radiator fan, and air conditioner are not operating.

   Idle speed should be:

   USA:

   D16Y5 engine with CVT, D16Y7 engine with A/T, D16Y8 engine with A/T:
   700 ± 50 rpm (in [N] or [P] position)
   D16Y7 engine with M/T:
   670 ± 50 rpm

   Canada:

   D16Y8 engine, D16Y7 engine:

M/T	750 ± 50 rpm
A/T	750 ± 50 rpm (in [N] or [P] position)

4. Adjust the idle speed, if necessary, by removing the cap and turning the idle adjusting screw 1/2-turn clockwise or counterclockwise.

D16Y5, D16Y8 engine:

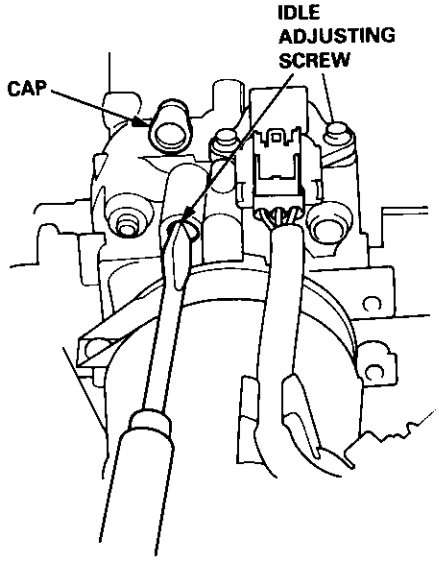

D16Y7 engine:
NOTE: When you remove the ACL housing, do not disconnect the IAT sensor connector.

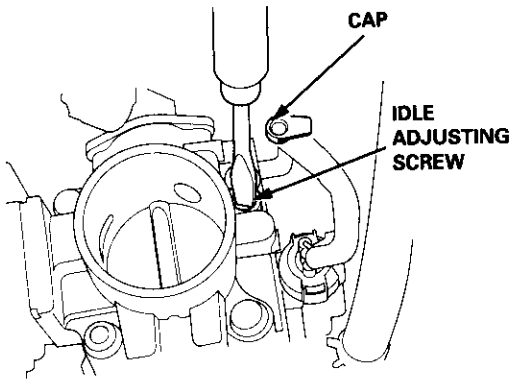

5. After turning the idle adjusting screw 1/2-turn, check the idle speed again. If it is out of spec, turn the idle adjusting screw 1/2-turn again.
   NOTE: Do not turn the idle adjusting screw more than 1/2-turn without checking the idle speed.
6. Idle the engine for one minute with heater fan switch at HI and air conditioner on, then check the idle speed.

   Idle speed should be:

M/T	810 ± 50 rpm
A/T, CVT	810 ± 50 rpm (in [N] or [P] position)

NOTE:
- Do not turn the idle adjusting screw when the air conditioner is on.
- If the idle speed is not within specification, see Symptom Chart on page 11-84.

(cont'd)

Idle Speed Setting (cont'd)

Inspection/Adjustment

'98 D16Y5 engine with M/T, '99 - 00 B16A2 engine

NOTE: Before setting the idle speed, check the following items:
— The MIL has not been reported on.
— Ignition timing
— Spark plugs
— Air cleaner
— PCV system

1. Start the engine. Hold the engine at 3,000 rpm with no load (transmission in neutral) until the radiator fan comes on, then let it idle.

2. Connect a tachometer.

3. Disconnect the IAC valve 2P connector and the EVAP purge control solenoid valve 2P connector.

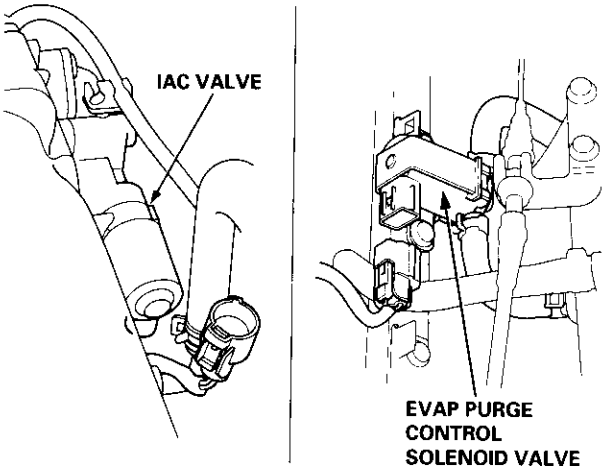

4. If the engine stalls, restart the engine with the accelerator pedal slightly depressed. Stabilize the rpm at 1,000, then slowly release the pedal until the engine idles.

5. Check idling in no-load conditions: headlights, blower fan, rear defogger, radiator fan, and air conditioner are not operating.

   Idle speed should be:
   450 ± 50 rpm

   If necessary, adjust the idle speed, by removing the cap and turning the idle adjusting screw.
   After adjusting the idle speed recheck the ignition timing (see section 23). If it is out of spec, go back to step 4.

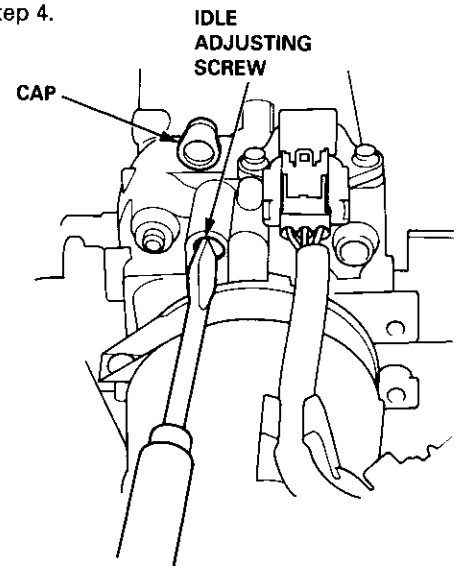

6. Turn the ignition switch OFF.

7. Reconnect the 2P connectors to the IAC valve and the EVAP purge control solenoid valve, then do the ECM reset procedure.

8. Restart and idle the engine with no-load conditions for one minute, then check the idle speed.
   Idle speed should be:
   USA:
   D16Y5 engine: 670 ± 50 rpm
   B16A2 engine: 700 ± 50 rpm
   Canada:
   B16A2 engine: 750 ± 50 rpm

   NOTE: If the idle speed increases to 810 ± 50 rpm, this means the EVAP system is purging the canister. To stop the purging temporarily, raise the engine speed above 1,000 rpm with the accelerator pedal, then slowly release the pedal.

9. Idle the engine for one minute with headlights (Low) ON, and check the idle speed.
   Idle speed should be:
   750 ± 50 rpm

10. Turn the headlights off. Idle the engine for one minute with heater fan switch at HI and air conditioner on, then check the idle speed.
    Idle speed should be:
    810 ± 50 rpm
    If the idle speed is not within specification, see Symptom Chart on page 11-84.

'98 – 00 D16Y5 engine with CVT

Adjust the idle speed using a Honda PGM Tester if possible. If not, use the following procedure:

NOTE:
- Leave the IAC valve connected.
- Before setting the idle speed, check the following items:
  — The MIL has not been reported on.
  — Ignition timing
  — Spark plugs
  — Air cleaner
  — PCV system

1. Connect a tachometer.

2. Start the engine. Hold the engine at 3,000 rpm with no load (transmission in N or P position) until the radiator fan comes on, then let it idle.

3. Check the idle speed under no-load conditions: head lights, blower fan, rear defogger, radiator fan, and air conditioner are not operating.

   Idle speed should be: 700 ± 50 rpm

   - If the idle speed is within the specification, the procedure is complete.
   - If the idle speed is out of specification, go to step 4.

4. If the idle speed is 810 ± 50 rpm, this means the EVAP system is purging the canister. To stop the purging temporarily, raise the engine speed above 1,000 rpm with the accelerator pedal. Slowly release the pedal, and recheck the idle speed.
   - If the idle speed is within the specification, the procedure is complete.
   - If the idle speed is out of specification, go to step 5.

5. Disconnect the EVAP purge control solenoid valve 2P connector.

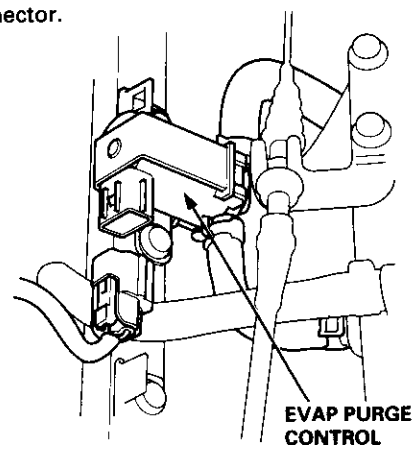

6. Remove the cap and turn the idle adjusting screw 1/2-turn clockwise or counterclockwise.

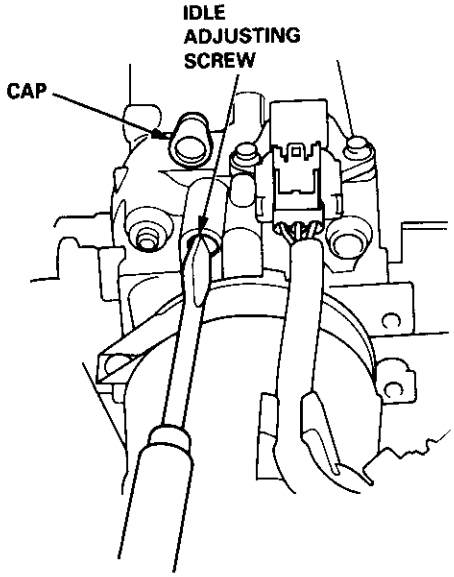

7. After turning the idle adjusting screw 1/2-turn, check the idle speed again. If it is out of spec, turn the idle adjusting screw 1/2-turn again.

   NOTE: Do not turn the idle adjusting screw more than 1/2-turn without checking the idle speed.

8. Turn the ignition switch OFF. Reconnect the EVAP purge control solenoid valve 2P connector, then do the ECM reset procedure.

9. Start the engine. Idle the engine for one minute with heater fan switch at HI and air conditioner on, then check the idle speed.

   Idle speed should be:
   810 ± 50 rpm (in N or P position)

   If the idle speed is not within specification, see Symptom Chart on page 11-84.

Fuel Lines

NOTE: Check fuel system lines, hoses, fuel filter, and other components for damage, leaks and deterioration, and replace if necessary.

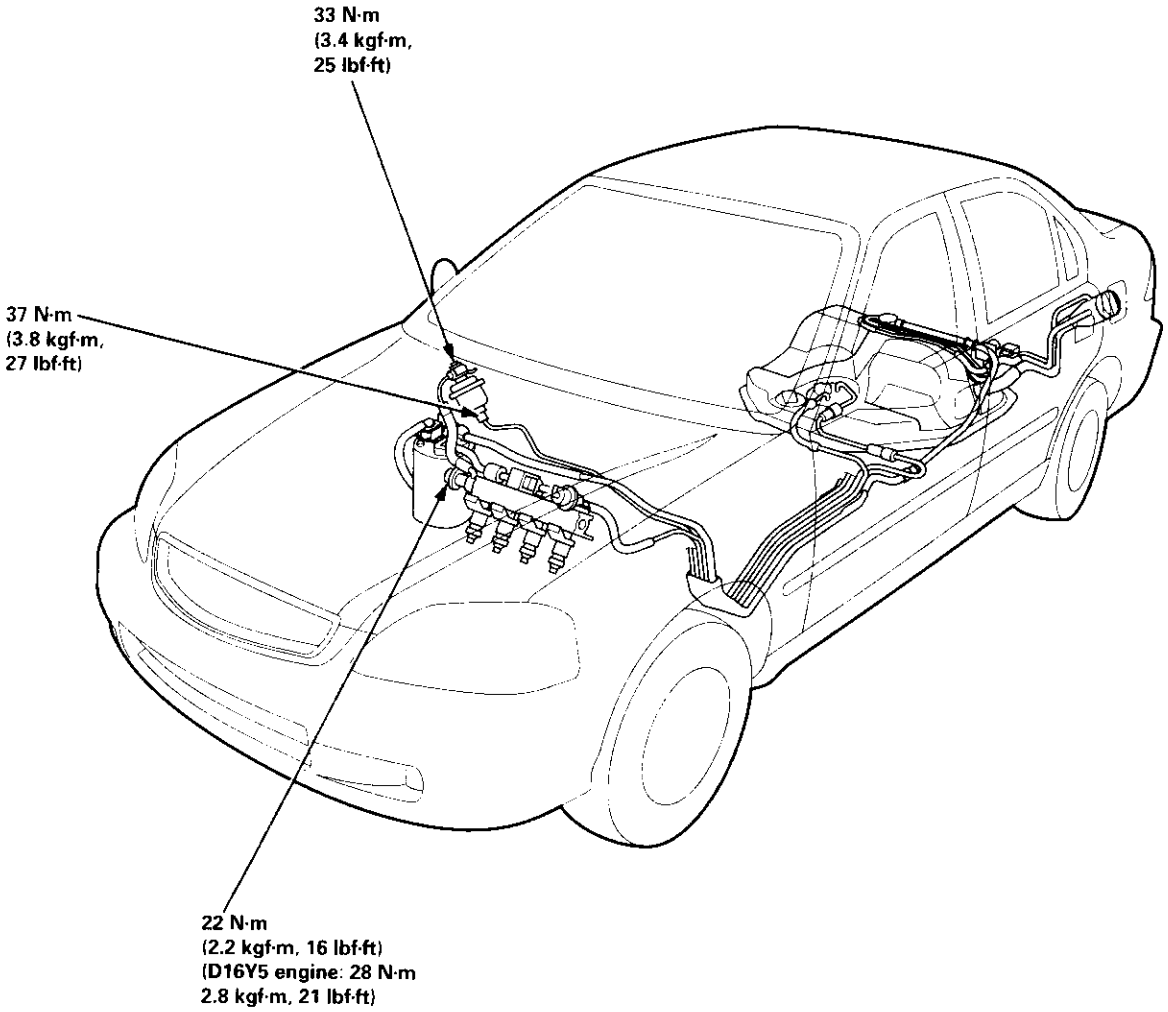

The illustration shows '99 – 00 models.

'96 – 98 models:

NOTE: Check all hose clamps and retighten if necessary.

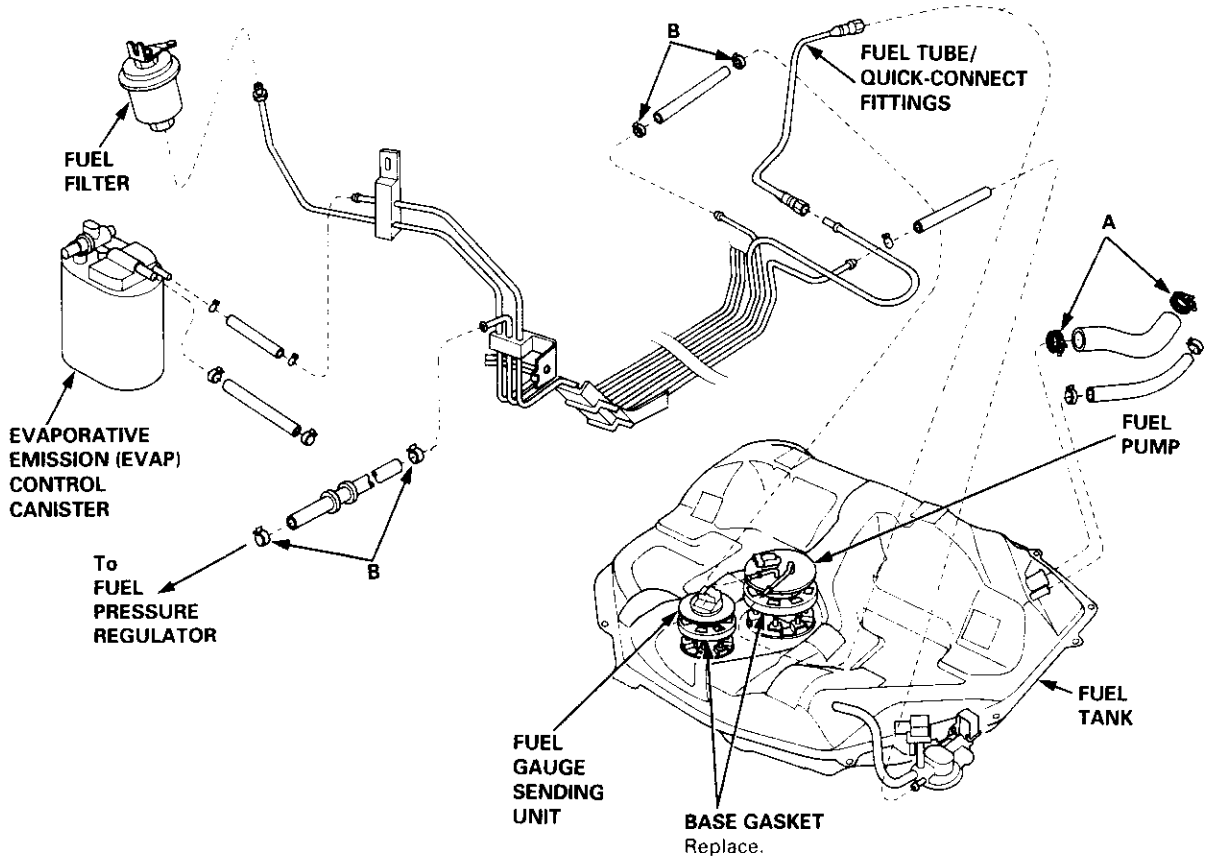

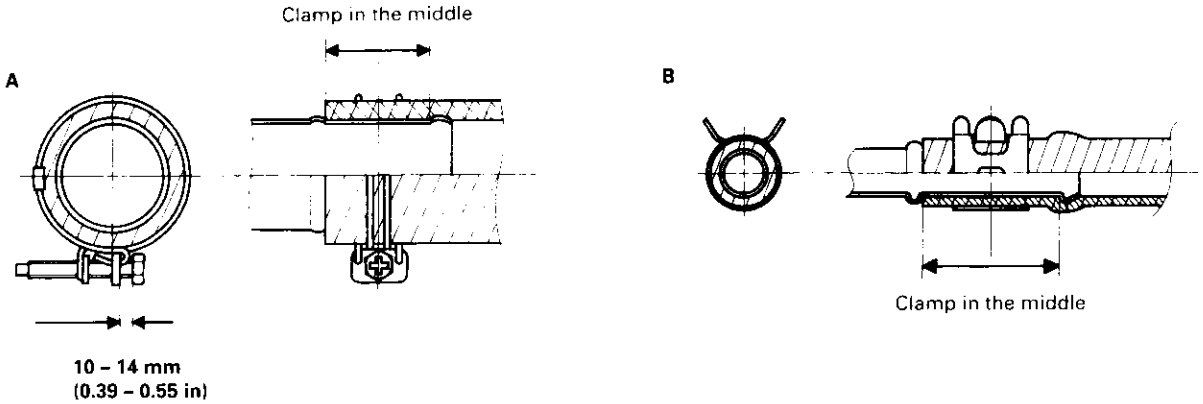

(cont'd)

Fuel Lines (cont'd)

'99 – 00 models:

NOTE: Check all hose clamps and retighten if necessary.

▲: Do not disconnect the hose from the pipe.

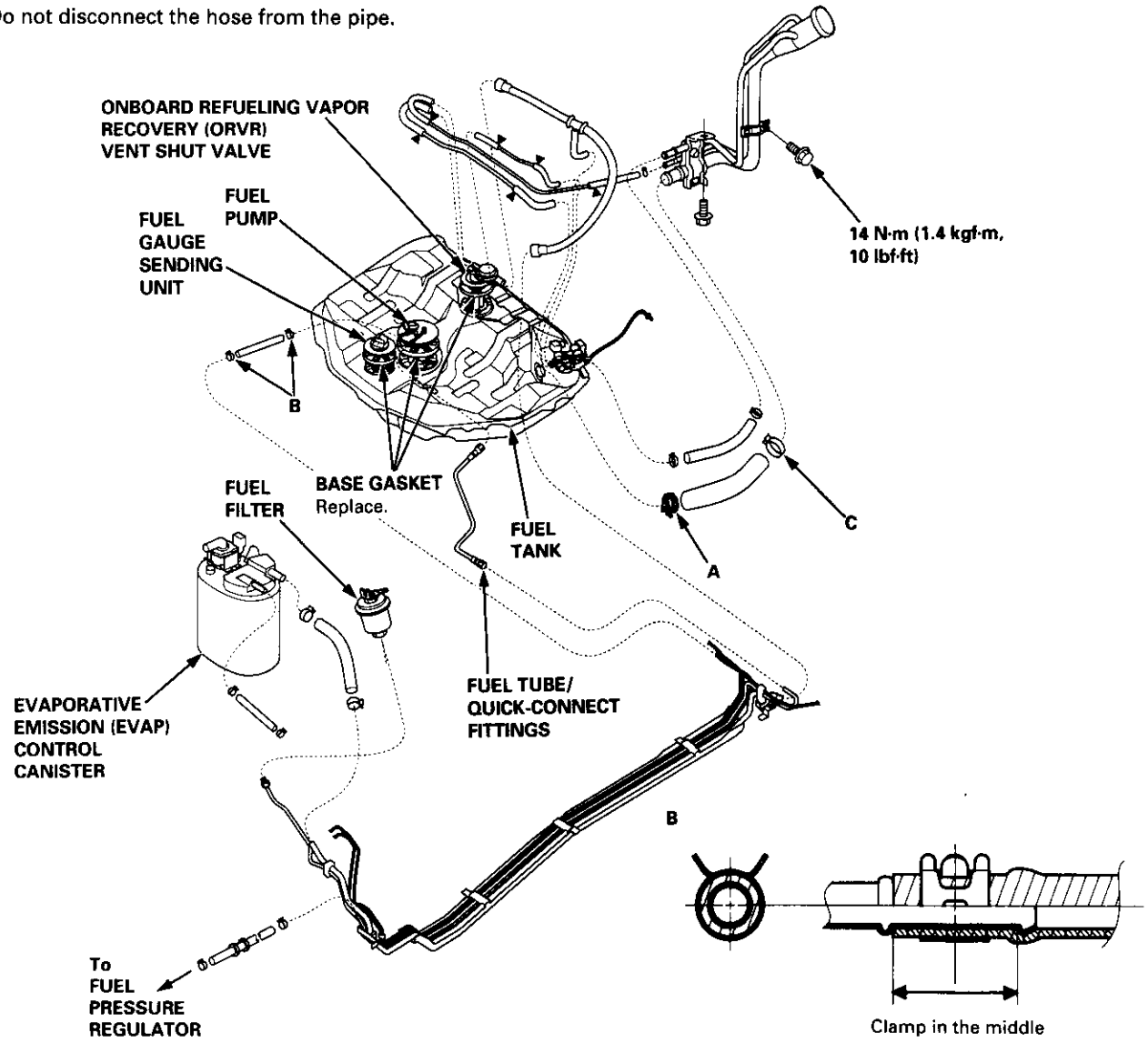

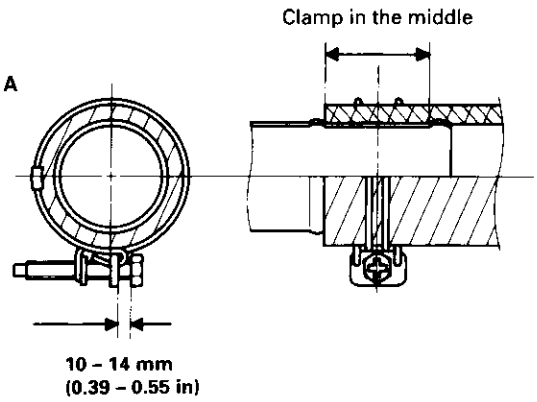

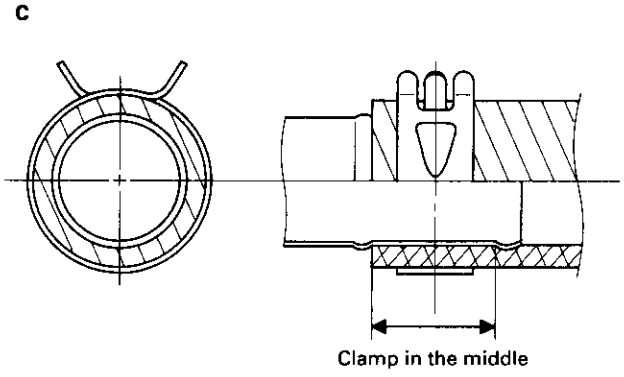

Fuel Tube/Quick-Connect Fittings

Precautions

⚠WARNING Do not smoke while working on the fuel system. Keep open flames away from your work area.

The fuel tube/quick-connect fittings assembly connects the in-tank fuel pump with the fuel feed pipe. For removing or installing the fuel pump and fuel tank, it is necessary to disconnect or connect the quick-connect fittings. Pay attention to following:

- The fuel tube/quick-connect fittings assembly is not heat-resistant; be careful not to damage it during welding or other heat-generating procedures.
- The fuel tube/quick-connect fittings assembly is not acid-proof; do not touch it with a shop towel which was used for wiping battery electrolyte. Replace the fuel tube/quick-connect fittings assembly if it came into contact with electrolyte or something similar.
- When connecting or disconnecting the fuel tube/quick-connect fittings assembly, be careful not to bend or twist it excessively. Replace it if damaged.

A disconnected quick-connect fitting can be reconnected, but the retainer on the mating pipe cannot be reused once it has been removed from the pipe. Replace the retainer when
- Replacing the fuel pump.
- Replacing the fuel feed pipe.
- It has been removed from the pipe.
- It is damaged.

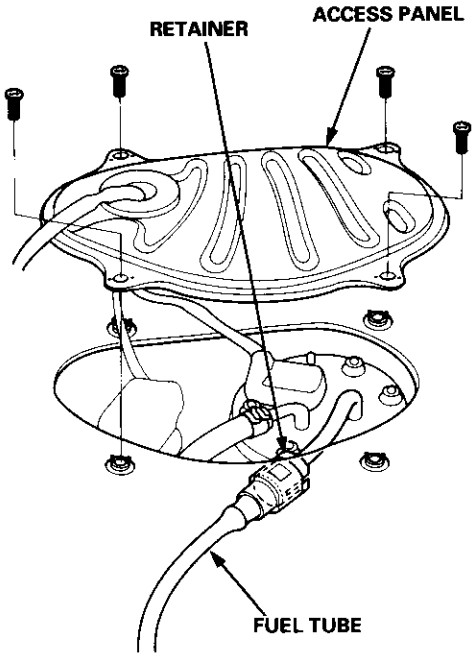

Disconnection

⚠WARNING Do not smoke while working on the fuel system. Keep open flames away from your work area.

1. Relieve fuel pressure (see pages 11-230, 231).
2. Check the fuel quick-connect fittings for dirt, and clean if necessary.
3. Hold the connector with one hand and press down the retainer tabs with the other hand, then pull the connector off.

   NOTE:
   - Be careful not to damage the pipe or other parts. Do not use tools.
   - If the connector does not move, keep the retainer tabs pressed down, and alternately pull and push the connector until it comes off easily.
   - Do not remove the retainer from the pipe; once removed, the retainer must be replaced with a new one.

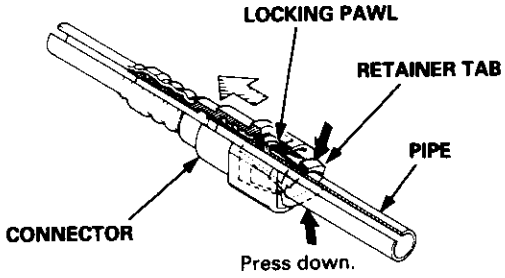

4. Check the contact area of the pipe for dirt and damage.
   - If the surface is dirty, clean it.
   - If the surface is rusty or damaged, replace the fuel pump or fuel feed pipe.

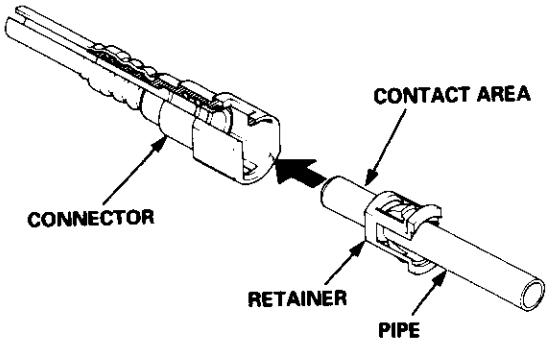

(cont'd)

Fuel Tube/Quick-Connect Fittings (cont'd)

5. To prevent damage and keep out foreign matter, cover the disconnected connector and pipe end with plastic bags.

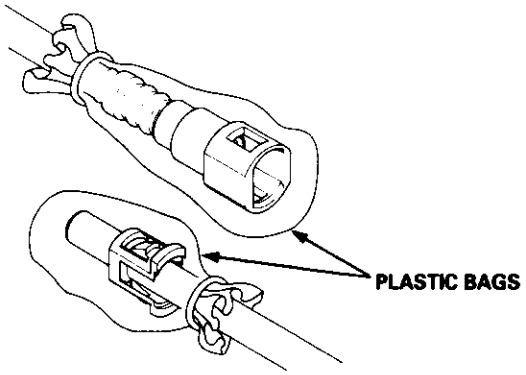

Connection

⚠ WARNING Do not smoke while working on the fuel system. Keep open flames away from your work area.

1. Check the pipe contact area for dirt and damage, and clean if necessary.

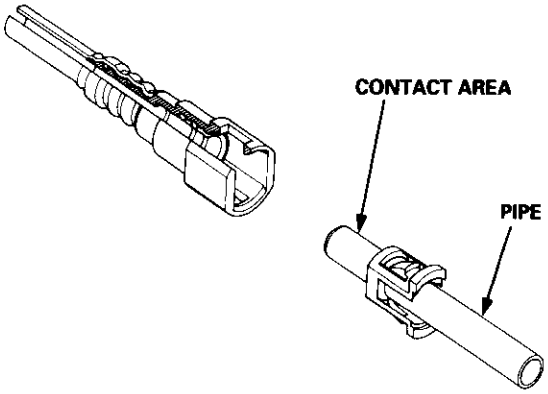

2. Insert a new retainer into the connector if the retainer is damaged, or after
   - replacing the fuel pump.
   - replacing the fuel feed pipe.
   - removing the retainer from the pipe.

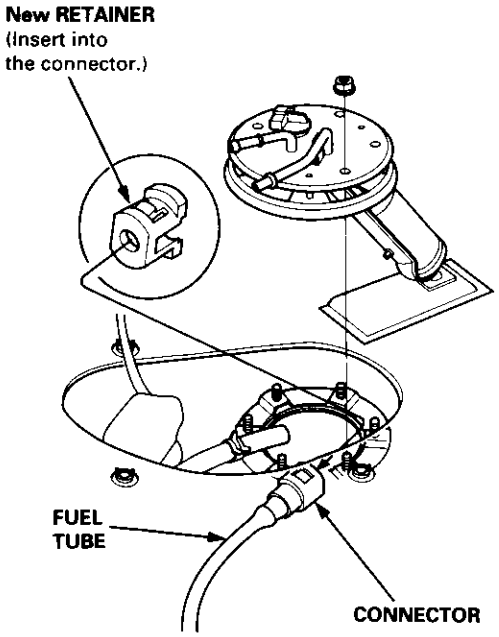

Before connecting a new fuel tube/quick-connect fitting assembly, remove the old retainer from the mating pipe.

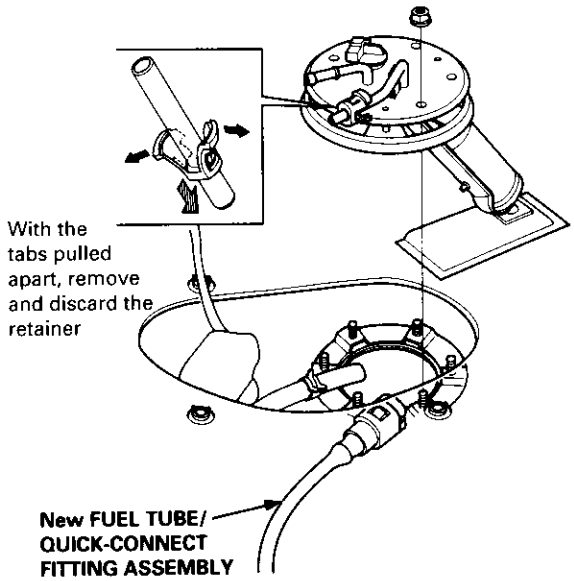

3. Align the quick-connect fittings with the pipe, and align the retainer locking pawls with the connector grooves. Then press the quick-connect fittings onto the pipe until both retainer pawls lock with a clicking sound.

   NOTE: If it is hard to connect, put a small amount of new engine oil on the pipe end.

Connection with new retainer:

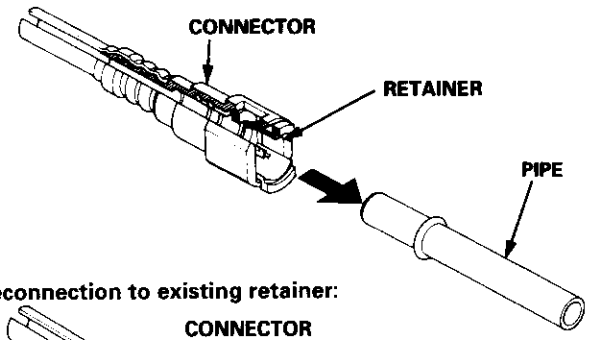

Reconnection to existing retainer:

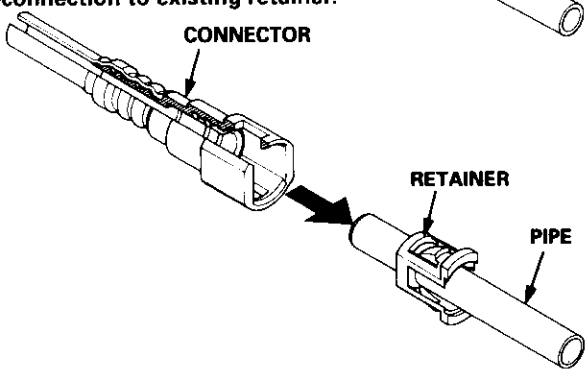

4. Make sure the connection is secure and the pawls are firmly locked into place; check visually and by pulling the connector.

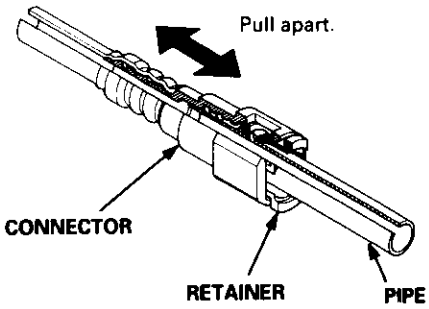

5. Reconnect the battery negative cable, and turn the ignition switch ON (II). The fuel pump will run for about two seconds, and fuel pressure will rise. Repeat two or three times, and check that there is no leakage in the fuel supply system.

System Description

The fuel supply system consists of a fuel tank, in-tank high pressure fuel pump, PGM-FI main relay, fuel filter, fuel pressure regulator, fuel injectors, and fuel delivery and return lines. This system delivers pressure-regulated fuel to the fuel injectors and cuts the fuel delivery when the engine is not running.

Fuel Pressure ('96 Models)

Relieving

Before disconnecting fuel pipes or hoses, release pressure from the system by loosening the 6 mm service bolt on top of the fuel filter.

⚠ WARNING

- **Do not smoke while working on the fuel system. Keep open flames or sparks away from your work area.**
- **Be sure to relieve fuel pressure while the ignition switch is off.**

1. Write down the frequencies for the radio's preset buttons.
2. Disconnect the battery negative cable from the battery negative terminal.
3. Remove the fuel fill cap.
4. Use a box end wrench on the 6 mm service bolt at the fuel filter while holding the special banjo bolt with another wrench.
5. Place a rag or shop towel over the 6 mm service bolt.
6. Slowly loosen the 6 mm service bolt one complete turn.

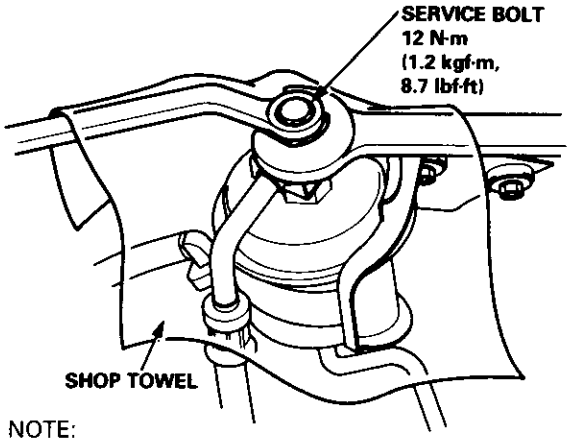

NOTE:

- A fuel pressure gauge can be attached at the 6 mm service bolt hole.
- Always replace the washer between the service bolt and the special banjo bolt whenever the service bolt is loosened.
- Replace all washers whenever the bolts are removed.

Inspection

1. Relieve fuel pressure.
2. Remove the service bolt on the fuel filter while holding the banjo bolt with another wrench. Attach the special tool.

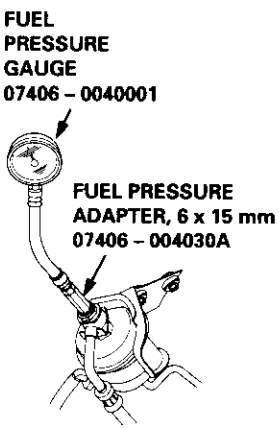

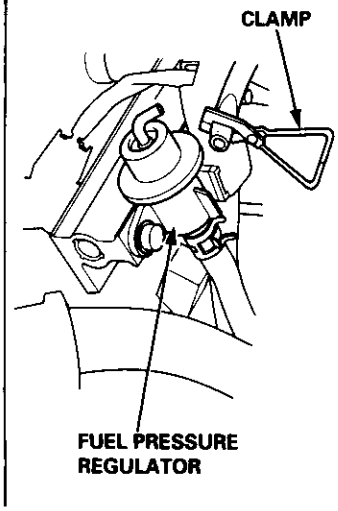

3. Start the engine. Measure the fuel pressure with the engine idling and the vacuum hose of the fuel pressure regulator disconnected from the fuel pressure regulator and pinched. If the engine will not start, turn the ignition switch ON (II), wait for two seconds, turn it off, then back on again and read the fuel pressure.

   Pressure should be:
   260 – 310 kPa (2.7 – 3.2 kgf/cm², 38 – 46 psi)

4. Reconnect vacuum hose to the fuel pressure regulator.

   Pressure should be:
   200 – 250 kPa (2.0 – 2.5 kgf/cm², 28 – 36 psi)

   If the fuel pressure is not as specified, first check the fuel pump (see page 11-236). If the fuel pump is OK, check the following:

   - If the fuel pressure is higher than specified, inspect for:
     — Pinched or clogged fuel return hose or line.
     — Faulty fuel pressure regulator (see page 11-234).
   - If the fuel pressure is lower than specified, inspect for:
     — Clogged fuel filter.
     — Faulty fuel pressure regulator (see page 11-234).
     — Fuel line leakage.

Fuel Pressure ('97 and later Models)

Relieving

Before disconnecting fuel pipes or hoses, release pressure from the system by loosening the 12 mm banjo bolt on top of the fuel filter.

⚠ WARNING

- **Do not smoke while working on the fuel system. Keep open flames or sparks away from your work area.**
- **Be sure to relieve fuel pressure while the ignition switch is off.**

1. Write down the frequencies for the radio's preset buttons.
2. Disconnect the battery negative cable from the battery negative terminal.
3. Remove the fuel fill cap.
4. Use a box end wrench on the 12 mm banjo bolt at the fuel filter while holding the fuel filter with another wrench.
5. Place a rag or shop towel over the 12 mm banjo bolt.
6. Slowly loosen the 12 mm banjo bolt one complete turn.

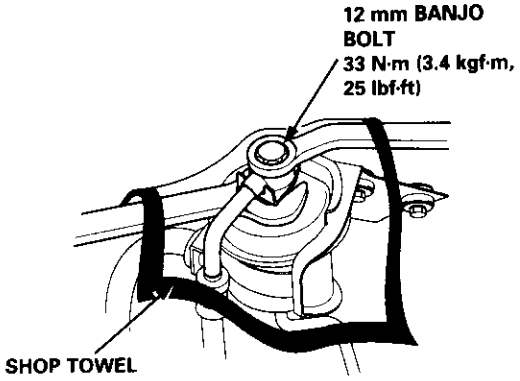

NOTE: Replace all the washers whenever the 12 mm banjo bolt is loosened or removed.

Inspection

1. Relieve fuel pressure.
2. Remove the 12 mm banjo bolt from the fuel filter while holding the fuel filter with another wrench. Attach the special tools.

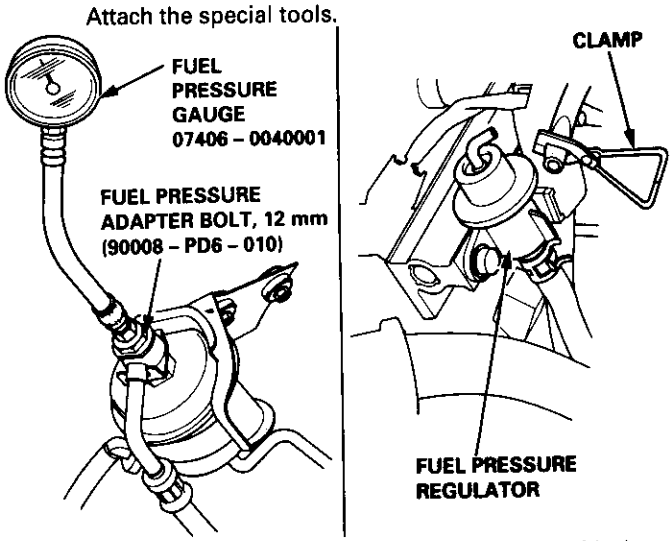

3. Start the engine. Measure the fuel pressure with the engine idling and the vacuum hose of the fuel pressure regulator disconnected from the fuel pressure regulator and pinched. If the engine will not start, turn the ignition switch ON (II), wait for two seconds, turn it off, then back on again and read the fuel pressure.
   Pressure should be:
   except B16A2 engine:
   260 – 310 kPa (2.7 – 3.2 kgf/cm², 38 – 46 psi)
   B16A2 engine:
   270 – 320 kPa (2.8 – 3.3 kgf/cm², 40 – 47 psi)
4. Reconnect vacuum hose to the fuel pressure regulator.
   Pressure should be:
   except B16A2 engine:
   200 – 250 kPa (2.0 – 2.5 kgf/cm², 28 – 36 psi)
   B16A2 engine:
   210 – 260 kPa (2.1 – 2.6 kgf/cm², 30 – 37 psi)
   If the fuel pressure is not as specified, first check the fuel pump (see page 11-236). If the fuel pump is OK, check the following:
   - If the fuel pressure is higher than specified, inspect for:
     — Pinched or clogged fuel return hose or line.
     — Faulty fuel pressure regulator (see page 11-234).
   - If the fuel pressure is lower than specified, inspect for:
     — Clogged fuel filter.
     — Faulty fuel pressure regulator (see page 11-234).
     — Fuel line leakage.

Fuel Injectors

Replacement

⚠ WARNING Do not smoke when working on the fuel system. Keep open flames away from your work area.

1. Relieve the fuel pressure (see pages 11-230, 231).
2. Disconnect the connectors from the fuel injectors (D16Y7 engine: Remove the air cleaner).
3. Disconnect the vacuum hoses from the fuel pressure regulator. Place a shop towel over the fuel return hose, then disconnect it from the fuel pressure regulator. Disconnect the vacuum hoses and 2P connector from the EVAP purge control solenoid valve.
4. Remove the retainer nuts on the fuel rail.
5. Disconnect the fuel rail.
6. Remove the fuel injectors from the intake manifold.

D16Y5, D16Y8 engine:

NOTE: Illustration shows D16Y8 engine.
D16Y5 engine is similar.

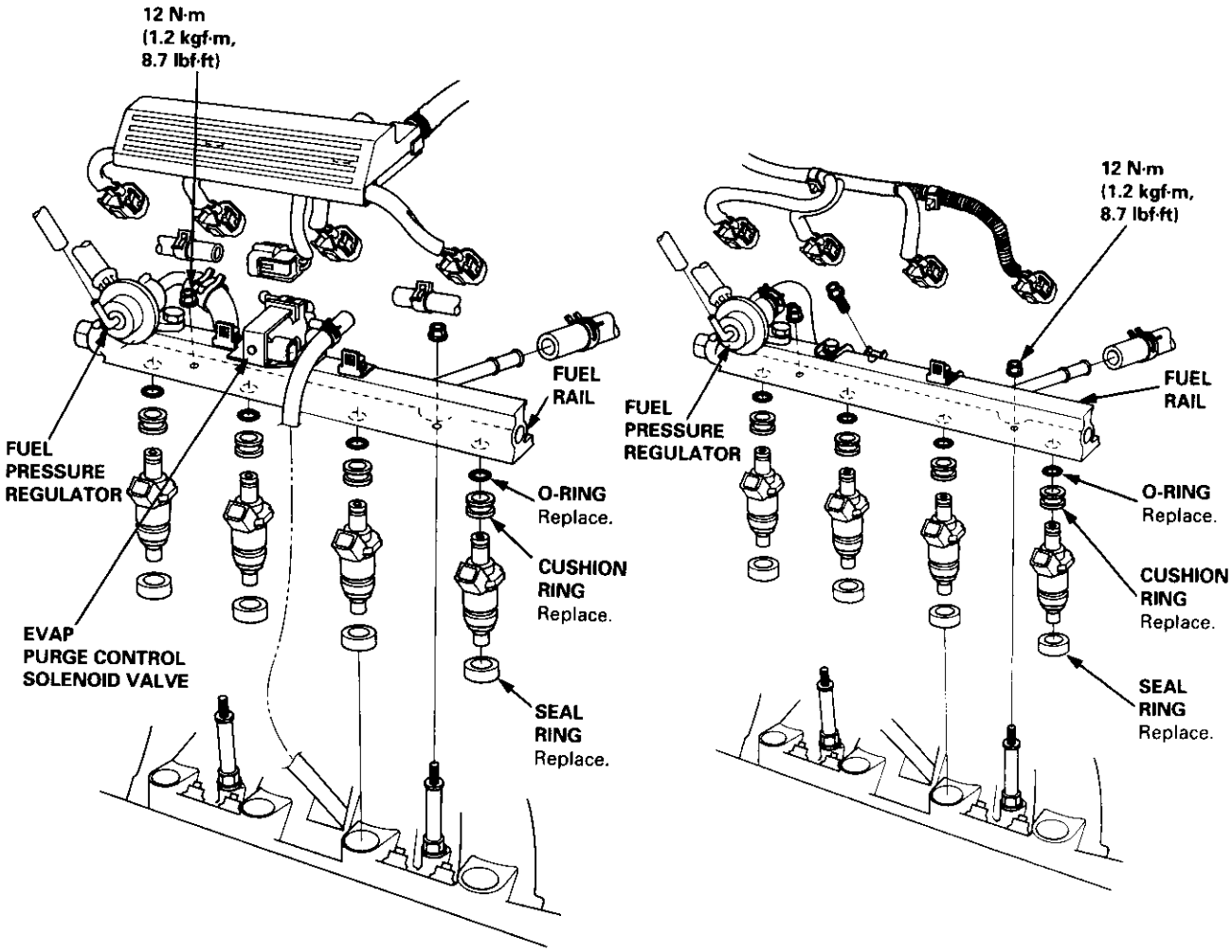

B16A2 engine:

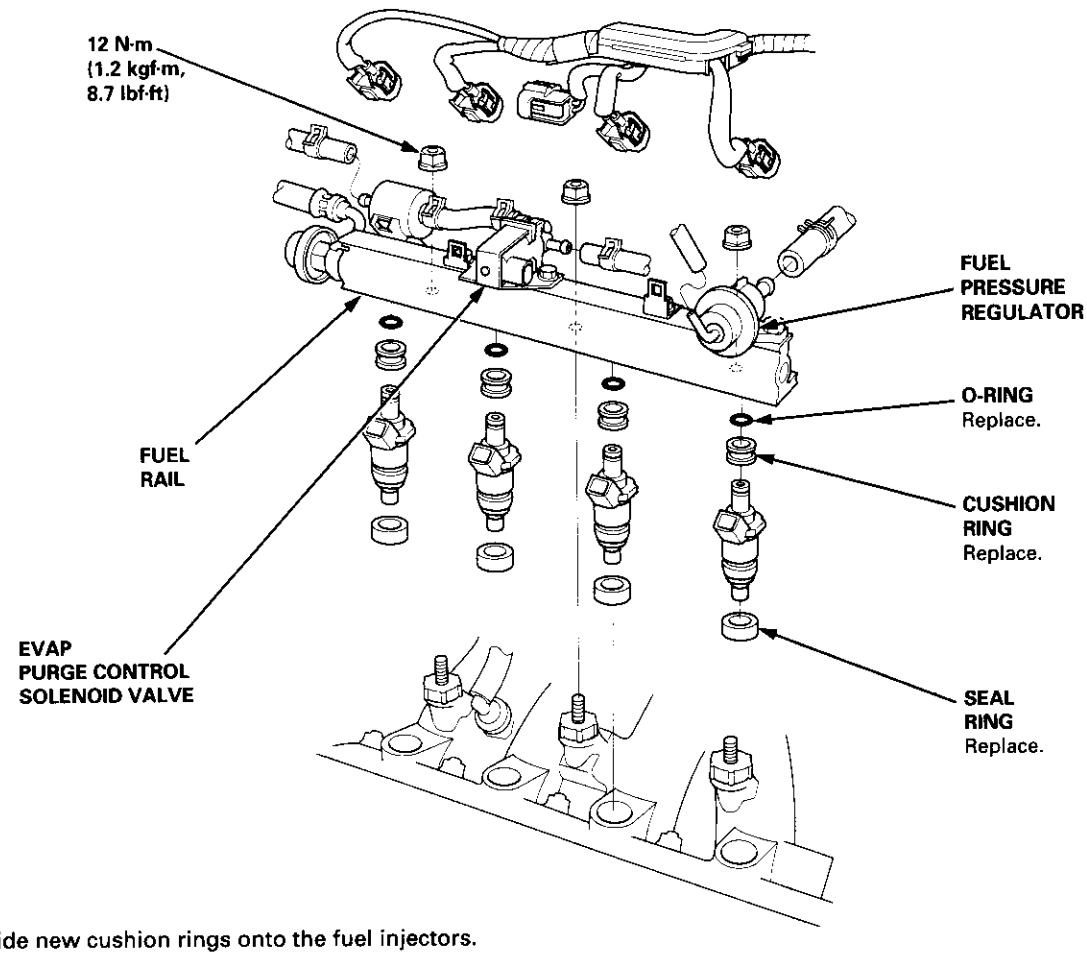

7. Slide new cushion rings onto the fuel injectors.
8. Coat new O-rings with clean engine oil, and put them on the fuel injectors.
9. Insert the fuel injectors into the fuel rail first.
10. Coat new seal rings with clean engine oil, and press them into the intake manifold.
11. To prevent damage to the O-rings, install the fuel injectors in the fuel rail first, then install them in the intake manifold.

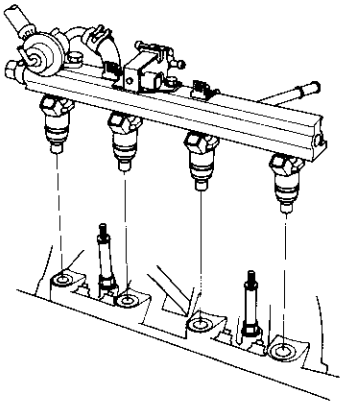

12. Install and tighten the retainer nuts.
13. Connect the vacuum hoses and fuel return hose to the fuel pressure regulator. Connect the vacuum hoses and 2P connector to the EVAP purge control solenoid valve.
14. Install the connectors on the fuel injectors (D16Y7 engine: Install the air cleaner).
15. Turn the ignition switch ON (II), but do not operate the starter. After the fuel pump runs for approximately two seconds, the fuel pressure in the fuel line rises. Repeat this two or three times, then check whether there is any fuel leakage.

Fuel Pressure Regulator

Testing

⚠WARNING Do not smoke during the test. Keep open flames away from your work area.

1. Attach the special tool(s) to the service port on the fuel filter (see pages 11-230, 231).

   Pressure should be:
   except B16A2 engine
   260 – 310 kPa (2.7 – 3.2 kgf/cm², 38 – 46 psi)
   B16A2 engine:
   270 – 320 kPa (2.8 – 3.3 kgf/cm², 40 – 47 psi)
   (with the fuel pressure regulator vacuum hose disconnected and pinched)

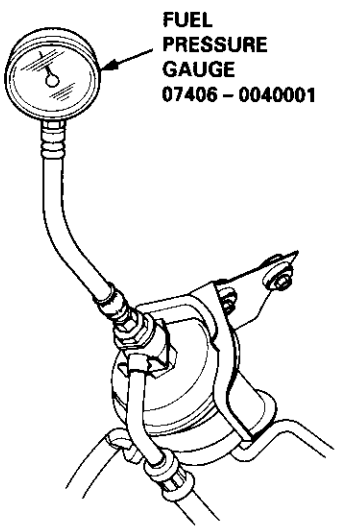

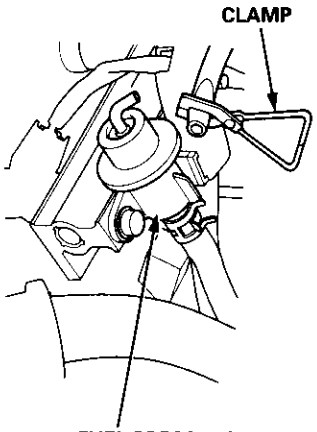

2. Reconnect the vacuum hose to the fuel pressure regulator.

3. Check that the fuel pressure rises when the vacuum hose from the fuel pressure regulator is disconnected again.

   If the fuel pressure did not rise, replace the fuel pressure regulator.

Replacement

⚠WARNING Do not smoke while working on fuel system. Keep open flame away from your work area.

1. Place a shop towel under the fuel pressure regulator, then relieve fuel pressure (see pages 11-230, 231).

2. Disconnect the vacuum hose and fuel return hose.

3. Remove the two 6 mm retainer bolts and the fuel pressure regulator.

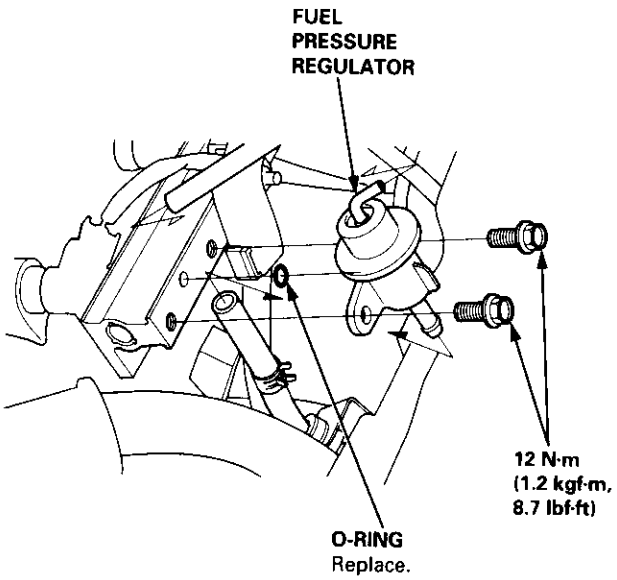

4. Apply clean engine oil to a new O-ring, and carefully install it into its proper position.

5. Install the fuel pressure regulator in the reverse order of removal.

Fuel Filter

Replacement

⚠ WARNING

- **Do not smoke while working on fuel system. Keep open flame away from your work area.**
- **While replacing the fuel filter, be careful to keep a safe distance between battery terminals and any tools.**

The fuel filter should be replaced whenever the fuel pressure drops below the specified value [260 – 310 kPa (2.7 – 3.2 kgf/cm², 38 – 46 psi), (270 – 320 kPa (2.8 – 3.3 kgf/cm², 40 – 47 psi))* with the fuel pressure regulator vacuum hose disconnected and pinched] after making sure that the fuel pump and the fuel pressure regulator are OK. *: B16A2 engine

1. Place a shop towel under and around the fuel filter.
2. Relieve fuel pressure (see pages 11-230, 231).
3. Remove the 12 mm banjo bolt and the fuel feed pipe from the fuel filter, while supporting it with the another wrench, as shown.
4. Remove the fuel filter clamp and fuel filter.
5. Install the new fuel filter in the reverse order removal, and note these items:
   - When assembling, use new washers as shown.
   - Clean the flared joint of high pressure hoses thoroughly before reconnecting them.

'96 MODELS:

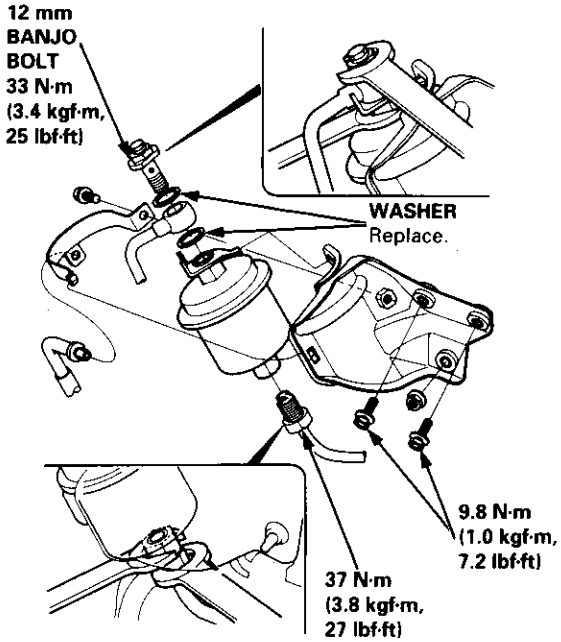

'97 AND LATER MODELS:

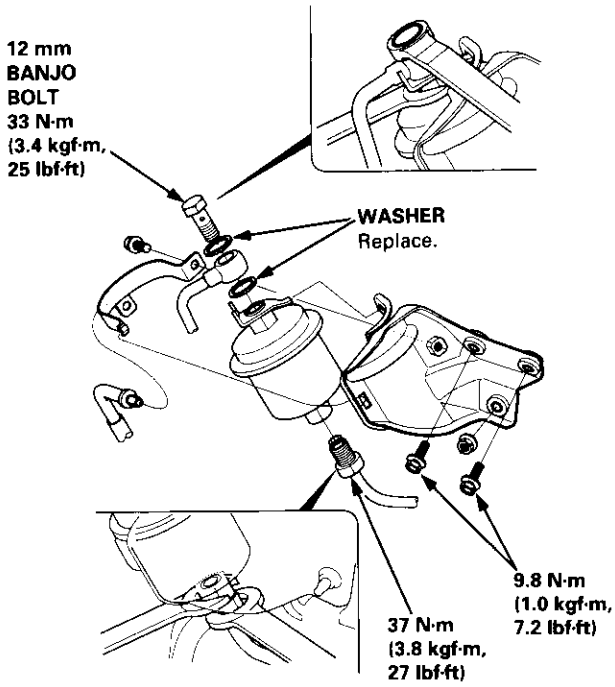

Fuel Pump

Testing

⚠WARNING Do not smoke during the test. Keep open flame away from your work area.

If you suspect a problem with the fuel pump, check that the fuel pump actually runs; when it is ON (II), you will hear some noise if you hold your ear to the fuel fill port with the fuel fill cap removed. The fuel pump should run for two seconds when ignition switch is first turned ON (II). If the fuel pump does not make noise, check it as follows:

1. Remove the seat cushion (see section 20).
2. Remove the access panel from the floor.
3. Make sure the ignition switch is OFF, then disconnect the fuel tank 2P connector.
4. Connect the PGM-FI main relay 7P connector terminal No. 4 and No. 5 with a jumper wire.

PGM-FI MAIN RELAY 7P CONNECTOR (C443)

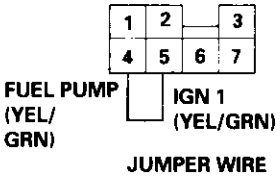

Wire side of female terminals

5. Check that battery voltage is available between the fuel pump connector terminal No. 1 and body ground when the ignition switch is turned ON (II).

2P CONNECTOR (C565)

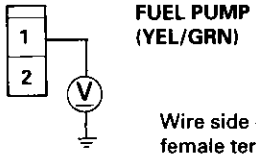

- If battery voltage is available, check the fuel pump ground. If the ground is OK, replace the fuel pump.
- If there is no voltage, check the wire harness (see page 11-238).

Replacement

⚠WARNING Do not smoke while working on fuel system. Keep open flames away from your work area.

1. Remove the seat cushion (see section 20).
2. Remove the access panel from the floor.

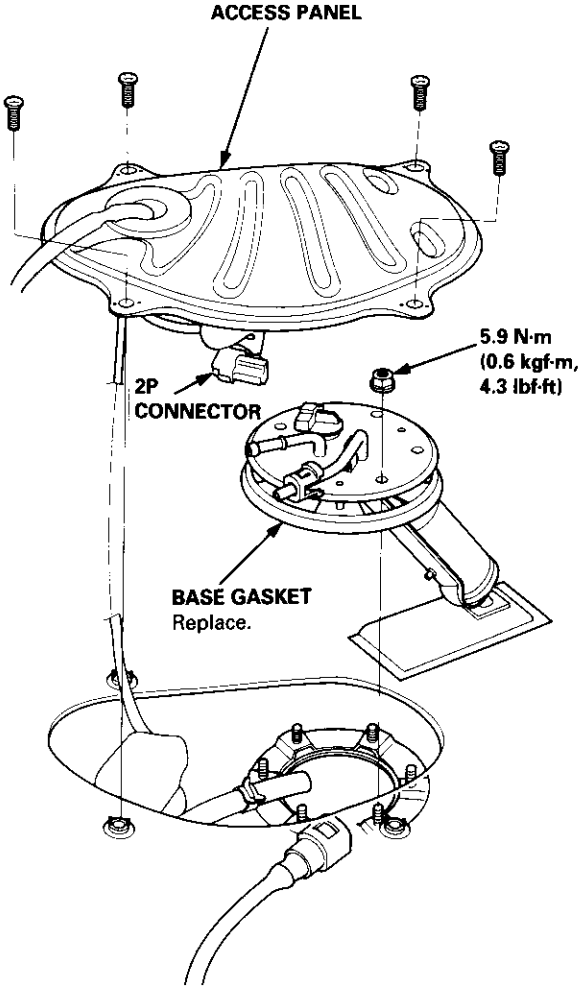

3. Disconnect the 2P connector from the fuel pump.
4. Remove the fuel pump mounting nuts.
5. Remove the fuel pump from the fuel tank.
6. Install parts in the reverse order of removal.

PGM-FI Main Relay

Description

The PGM-FI main relay actually contains two individual relays. This relay is located at the right side of the cowl. One relay is energized whenever the ignition is on which supplies the battery voltage to the ECM/PCM, power to the fuel injectors, and power for the second relay. The second relay is energized for two seconds when the ignition is switched ON (II), and when the engine is running, to supply power to the fuel pump.

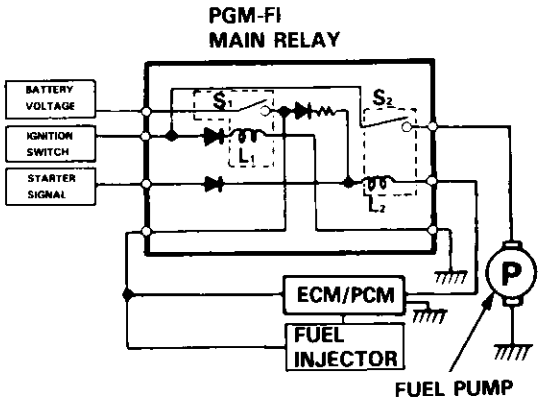

Relay Testing

NOTE:
- If the engine starts and continues to run, the PGM-FI main relay is OK.
- Use the terminal numbers below; ignore the terminal numbers molded into the relay.

1. Remove the PGM-FI main relay.
2. Attach the battery positive terminal to the No. 2 terminal and the battery negative terminal to the No. 1 terminal of the PGM-FI main relay. Then check for continuity between the No. 5 terminal and No. 4 terminal of the PGM-FI main relay.
   - If there is continuity, go on to step 3.
   - If there is no continuity, replace the PGM-FI main relay and retest.

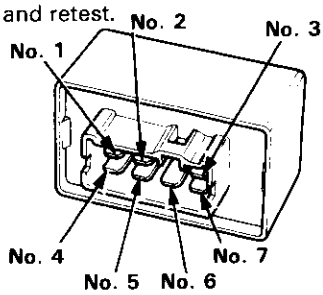

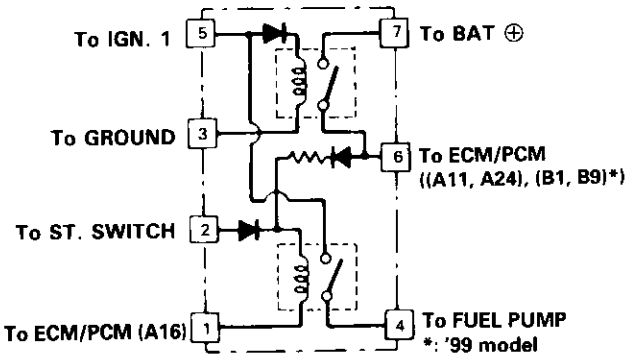

3. Attach the battery positive terminal to the No. 5 terminal and the battery negative terminal to the No. 3 terminal of the PGM-FI main relay. Then check that there is continuity between the No. 7 terminal and No. 6 terminal of the PGM-FI main relay.
   - If there is continuity, go on to step 4.
   - If there is no continuity, replace the PGM-FI main relay and retest.
4. Attach the battery positive terminal to the No. 6 terminal and the battery negative terminal to the No. 1 terminal of the PGM-FI main relay. Then check that there is continuity between the No. 5 terminal and No. 4 terminal of the PGM-Fi main relay.
   - If there is continuity, the PGM-FI main relay is OK. If the fuel pump still does not work, go to Harness Testing on the next page.
   - If there is no continuity, replace the PGM-FI main relay and retest.

(cont'd)

PGM-FI Main Relay (cont'd)

Circuit Troubleshooting

— Engine will not start.
— Inspection of PGM-FI main relay and relay harness.

Check for an open in the wire (GND line):
1. Turn the ignition switch OFF.
2. Disconnect the PGM-FI main relay 7P connector.
3. Check for continuity between the PGM-FI main relay 7P connector terminal No. 3 and body ground.

Is there continuity?

NO → **Repair open in the wire between the PGM-FI main relay and G101.**

YES

Check for an open or short in the wire (BAT line):
Measure voltage between the PGM-FI main relay 7P connector terminal No. 7 and body ground.

Is there battery voltage?

NO → **— Repair open or short in the wire between the PGM-FI main relay and the FI E/M (15 A) fuse.**
— Replace the FI E/M (15 A) fuse in the under-hood fuse/relay box.

YES

Check for an open or short in the wire (IG1 line):
1. Turn the ignition switch ON (II).
2. Measure the voltage between the PGM-FI main relay 7P connector terminal No. 5 and body ground.

Is there battery voltage?

NO → **— Repair open or short in the wire between the PGM-FI main relay and the No. 13 FUEL PUMP (15 A) fuse.**
— Replace the No. 13 FUEL PUMP (15 A) fuse in the under-dash fuse/relay box.

YES

Check for an open or short in the wire (STS line):
1. Turn the ignition switch to the START (III) position.
   NOTE:
   - M/T: Clutch pedal must be depressed.
   - A/T: Transmission in [N] or [P] position.
2. Measure the voltage between the PGM-FI main relay 7P connector terminal No. 2 and body ground.

'96 – 98 models: (To page 11-239)
'99 – 00 models: (To page 11-240)

PGM-FI MAIN RELAY 7P CONNECTOR (C443)

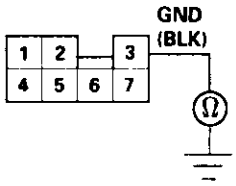

Wire side of female terminals

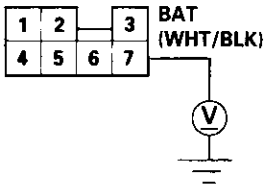

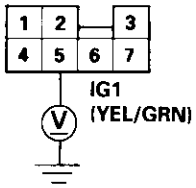

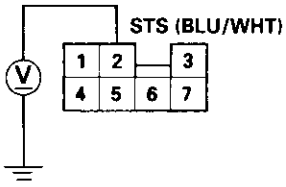

(From page 11-238)

('96 – 98 models)

Is there battery voltage?

NO → **— Repair open or short in the wire between the PGM-FI main relay and the No. 31 STARTER SIGNAL (7.5 A) fuse.**
— Replace the No. 31 STARTER SIGNAL (7.5 A) fuse in the under-dash fuse/relay box.

YES ↓

Check for an open in the wire (FLR line):
1. Turn the ignition switch OFF.
2. Disconnect the ECM/PCM connector A (32P).
3. Check for continuity between the PGM-FI main relay 7P connector terminal No. 1 and ECM/PCM connector terminal A16.

PGM-FI MAIN RELAY 7P CONNECTOR (C443)

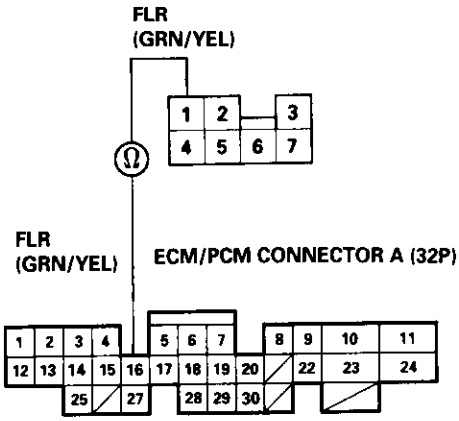

Wire side of female terminals

Is there continuity?

NO → **Repair open in the wire between the ECM/PCM (A16) and the PGM-FI main relay.**

YES ↓

Check for an open in the wires (IGP1, IGP2 lines):
1. Reconnect the ECM/PCM connector A (32P).
2. Reconnect the PGM-FI main relay connector.
3. Turn the ignition switch ON (II).
4. Measure voltage between ECM/PCM connector terminals A11 and A10, and between A24 and A10.

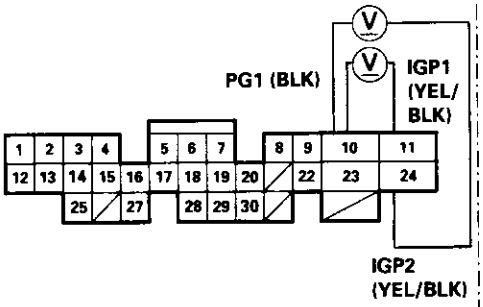

Is there battery voltage?

NO → **— Repair open in the wire between the ECM/PCM (A11, A24) and the PGM-FI main relay.**
— Replace the PGM-FI main relay.

YES ↓

Check for an open in the ECM/PCM:
1. Turn the ignition switch OFF.
2. Measure voltage between ECM/PCM connector terminals A16 and A10 when the ignition switch is first turned ON (II) for two seconds.

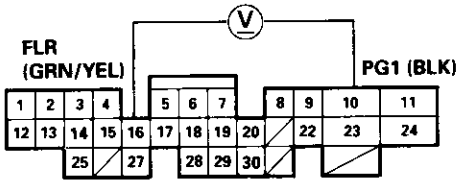

Is there 1.0 V or less?

NO → **Substitute a known-good ECM/PCM and recheck. If prescribed voltage is now available, replace the original ECM/PCM.**

YES ↓

Check the PGM-FI main relay (see page 11-237).

(cont'd)

PGM-FI Main Relay (cont'd)

(From page 11-238)

('99 – 00 models)

Is there battery voltage?

NO

— Repair open or short in the wire between the PGM-FI main relay and the No. 31 STARTER SIGNAL (7.5 A) fuse.
— Replace the No. 31 STARTER SIGNAL (7.5 A) fuse in the under-dash fuse/relay box.

YES

Check for an open in the wire (FLR line):
1. Turn the ignition switch OFF.
2. Disconnect the ECM/PCM connector A (32P).
3. Check for continuity between the PGM-FI main relay 7P connector terminal No. 1 and ECM/PCM connector terminal A16.

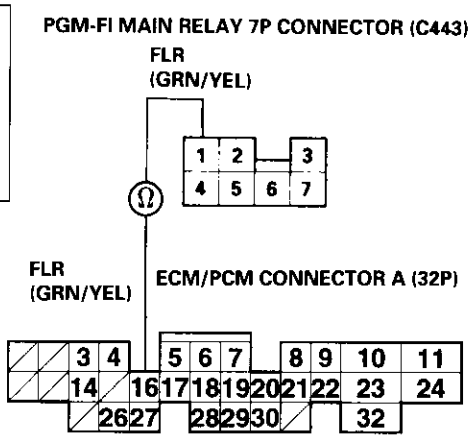

Is there continuity?

NO

Repair open in the wire between the ECM/PCM (A16) and the PGM-FI main relay.

YES

Check for an open in the wires (IGP1, IGP2 lines):
1. Reconnect the ECM/PCM connector A (32P).
2. Reconnect the PGM-FI main relay connector.
3. Turn the ignition switch ON (II).
4. Measure voltage between ECM/PCM connector terminals B1 and B20, and between B9 and B20.

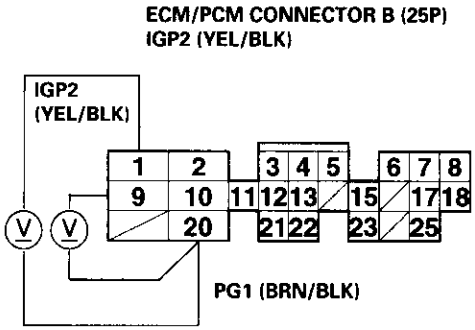

Is there battery voltage?

NO

— Repair open in the wire between the ECM/PCM (B1, B9) and the PGM-FI main relay.
— Replace the PGM-FI main relay.

YES

Check for an open in the ECM/PCM:
1. Turn the ignition switch OFF.
2. Measure voltage between ECM/PCM connector terminals A16 and B2 when the ignition switch is first turned ON (II) for two seconds.

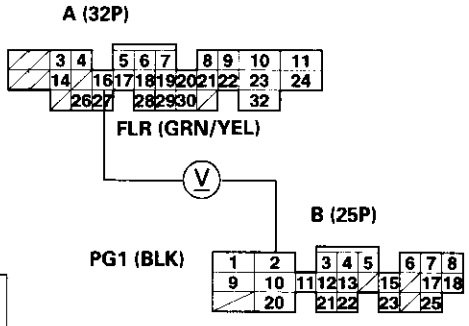

Is there 1.0 V or less?

NO

Substitute a known-good ECM/PCM and recheck. If prescribed voltage is now available, replace the original ECM/PCM.

YES

Check the PGM-FI main relay (see page 11-237).

Fuel Tank

'96 – 98 models:

Replacement

⚠ WARNING Do not smoke while working on fuel system. Keep open flame away from your work area.

1. Relieve the fuel pressure (see pages 11-230, 231).
2. Remove the seat cushion (see section 20).
3. Remove the access panel from the floor.
4. Disconnect the 2P (C565) and 3P (C564) connectors ('96 D16Y8 engine (coupe) '97 D16Y7 engine(coupe: KL model, sedan: KL (LX) model), '97 D16Y8 engine (coupe: all models, sedan: KL model '98-all models): and 6P (C568) connector).
5. Disconnect the hose and quick-connect fittings (see pages 11-225, 227).
6. Jack up the vehicle, and support it with jackstands.
7. Remove the fuel tank cover ('96, '97 model) or the fuel hose joint protector.
8. Remove the drain bolt, and drain the fuel into an approved container.
9. Disconnect the hoses (see page 11-225). Slide back the clamps, then twist hoses as you pull, to avoid damaging them.
10. Place a jack, or other support, under the tank.
11. Remove the strap nuts, and let the straps fall free.
12. Remove the fuel tank. If it sticks on the undercoat applied to its mount, carefully pry it off the mount.
13. Install the drain bolt with a new washer, then coat the drain bolt with Noxrust 124B, Allow the Noxrust dry for 20 minutes.
14. Install the remaining parts in the reverse order of removal.

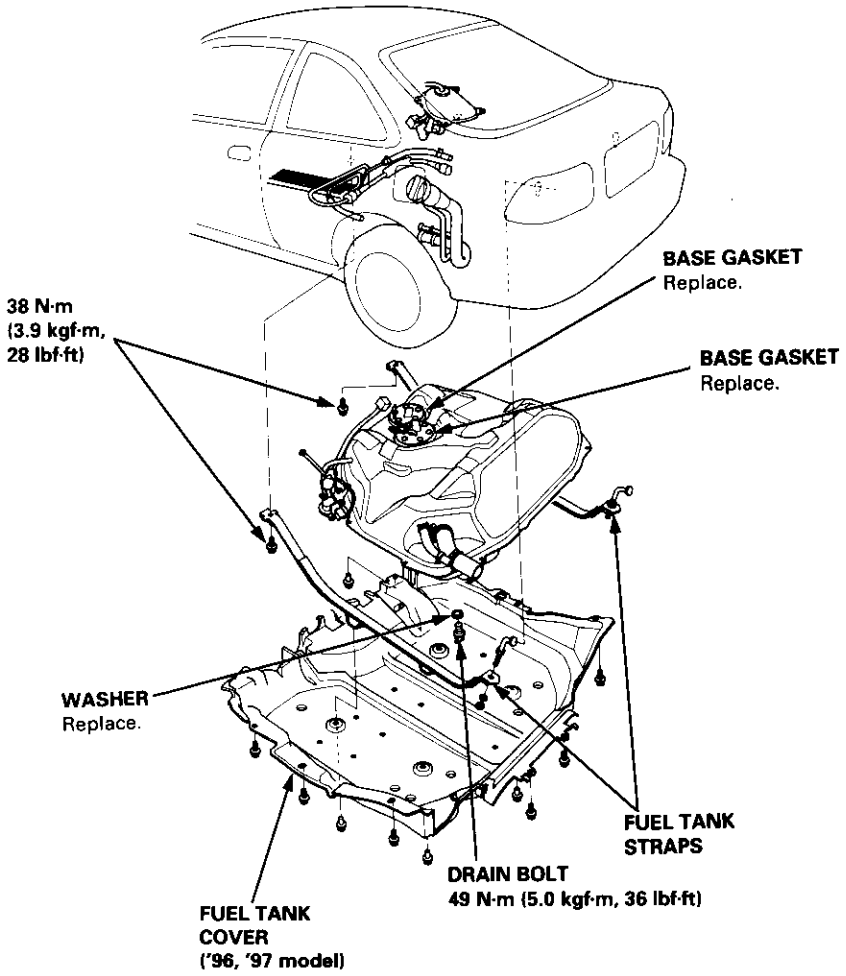

(cont'd)

Fuel Tank (cont'd)

'99 – 00 models:

Replacement

⚠ WARNING Do not smoke while working on fuel system. Keep open flame away from your work area.

1. Relieve the fuel pressure (see pages 11-230, 231).
2. Remove the seat cushion (see section 20).
3. Remove the access panel from the floor.
4. Disconnect the 2P (C565) and 3P (C564) connectors and 6P (C568) connector.
5. Disconnect the hose and quick-connect fittings (see pages 11-226, 227).
6. Jack up the vehicle, and support it with jackstands.
7. Remove the fuel hose joint protector and heat shield.
8. Remove the drain bolt, and drain the fuel into an approved container.
9. Disconnect the hoses (see page 11-226). Slide back the clamps, then twist hoses as you pull, to avoid damaging them.
10. Place a jack, or other support, under the tank.
11. Remove the strap nuts, and let the straps fall free.
12. Remove the fuel tank. If it sticks on the undercoat applied to its mount, carefully pry it off the mount.
13. Install the drain bolt with a new washer, then coat the drain bolt with Noxrust 124B, Allow the Noxrust dry for 20 minutes.
14. Install the remaining parts in the reverse order of removal.

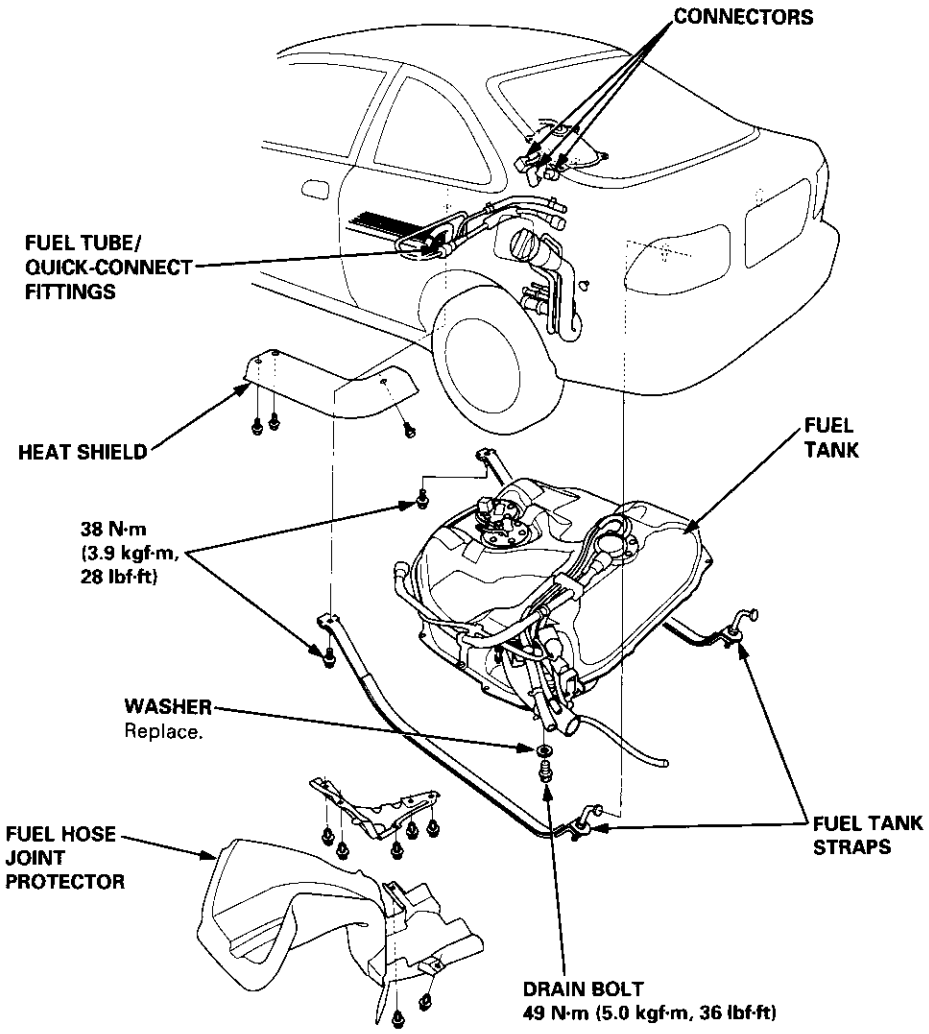

System Description

The system supplies air for all engine needs. It consists of the intake air pipe, Air Cleaner (ACL), intake air duct, Throttle Body (TB), Idle Air Control (IAC) Valve and intake manifold. A resonator in the intake air pipe provides additional silencing as air is drawn into the system.

D16Y5, D16Y8, B16A2 engine (M/T)

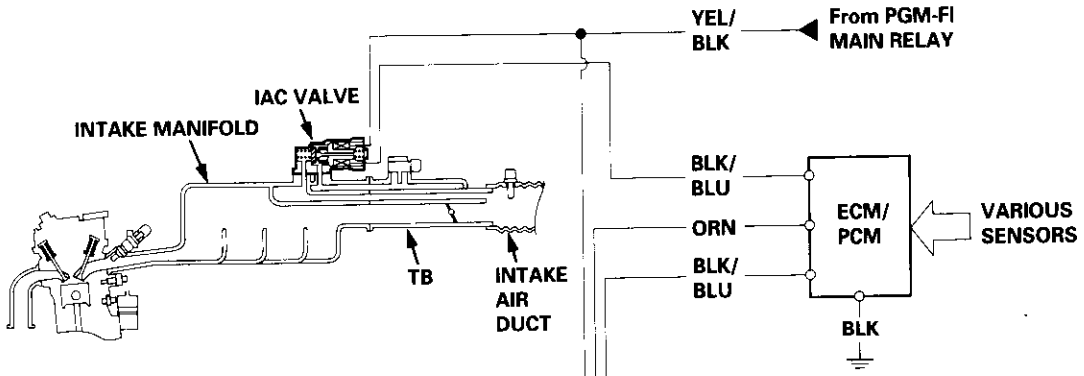

D16Y5 engine (CVT), D16Y8 engine (A/T):

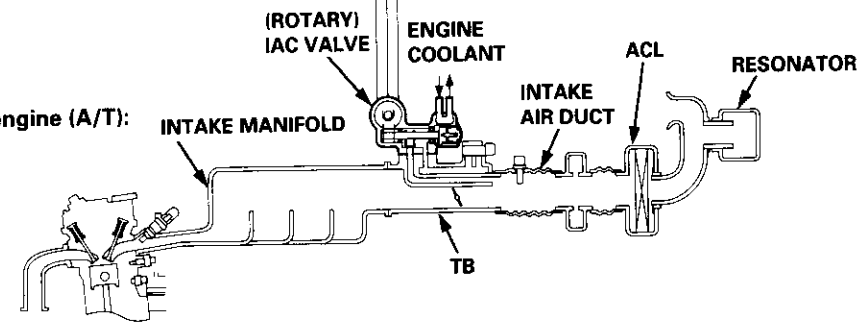

D16Y7 engine:

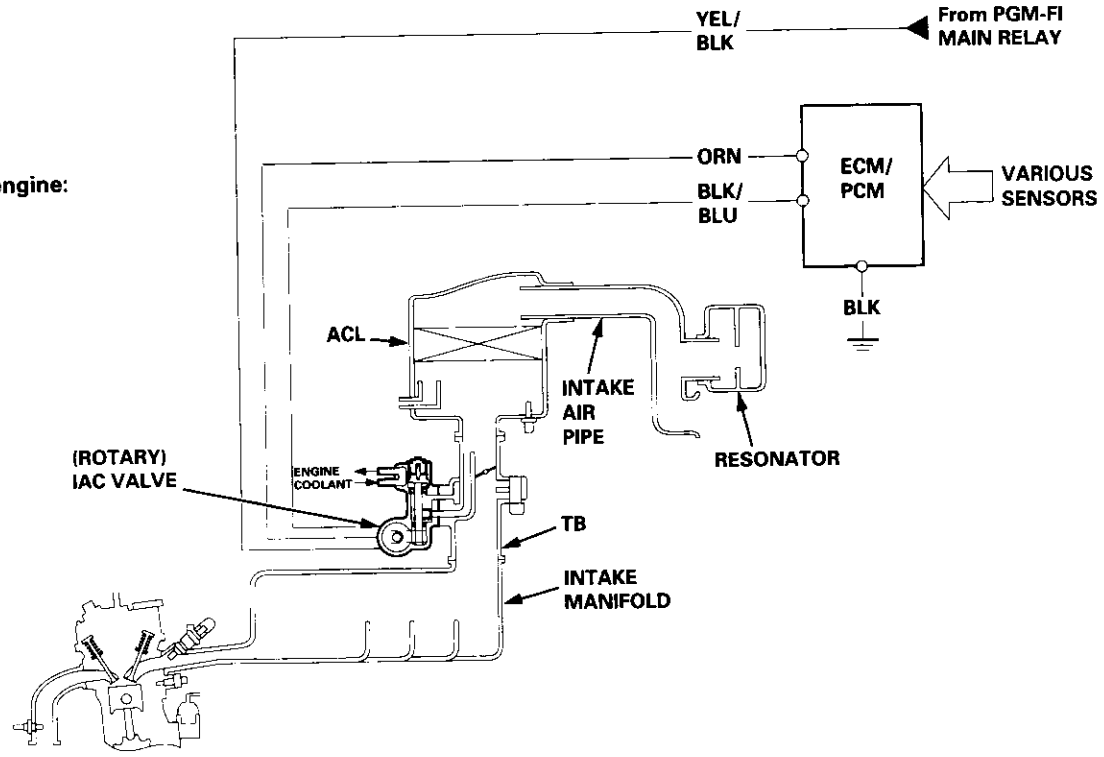

Air Cleaner (ACL)

NOTE: Do not clean the ACL element it with compressed air (except dry type).

D16Y5, D16Y8, B16A2 engine:

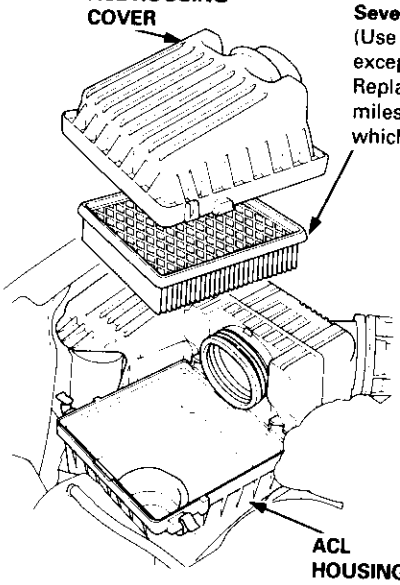

D16Y7 engine:

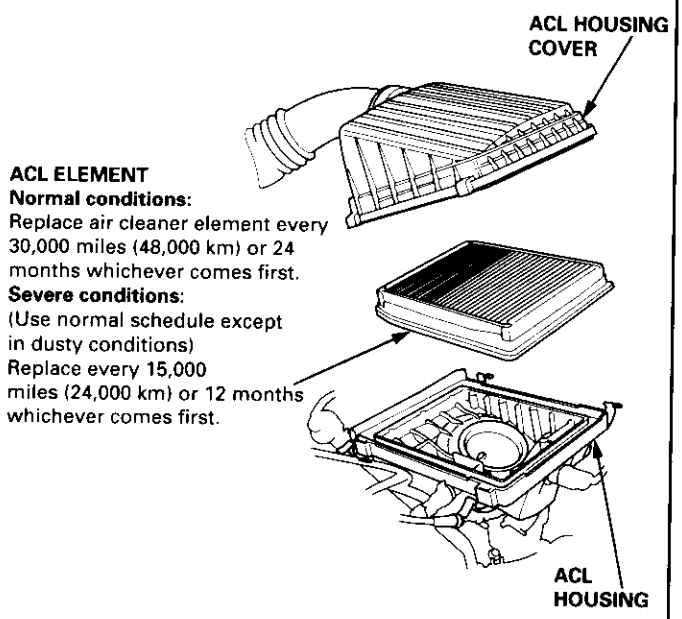

Throttle Cable

Inspection/Adjustment

1. Start the engine. Hold the engine at 3,000 rpm with no load (in Park or neutral) until the radiator fan comes on, then let it idle.
2. Check that the throttle cable operates smoothly with no binding or sticking. Repair as necessary.
3. Check cable free play at the throttle linkage. Cable deflection should be 10 – 12 mm (3/8 – 1/2 in.).

D16Y5, D16Y8 engine:

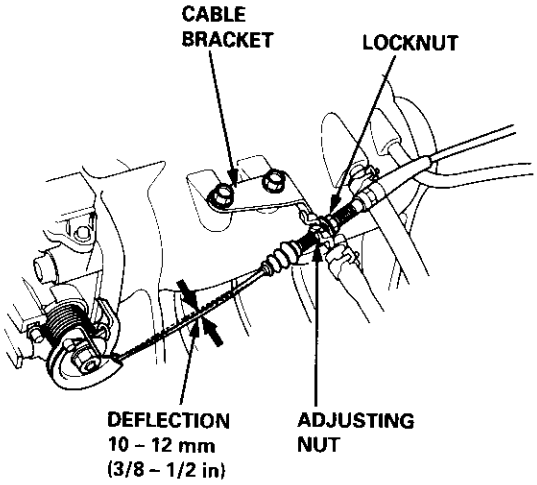

D16Y7 engine:

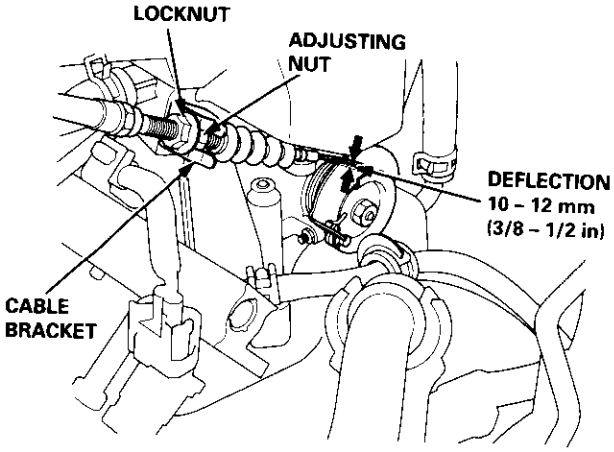

B16A2 engine:

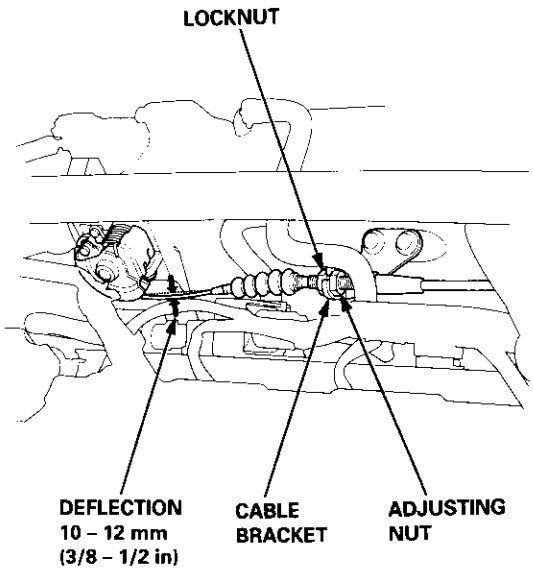

4. If deflection is not within specs, loosen the locknut, turn the adjusting nut until the deflection is as specified, then retighten the locknut.

5. With the cable properly adjusted, check the throttle valve to be sure it opens fully when you push the accelerator pedal to the floor. Also check the throttle valve to be sure it returns to the idle position whenever you release the accelerator pedal.

Installation

D16Y5, D16Y8, D16Y7 engine:

1. Open the throttle valve fully, then install the throttle cable in the throttle linkage, and install the cable housing in the cable bracket.

D16Y5, D16Y8 engine:

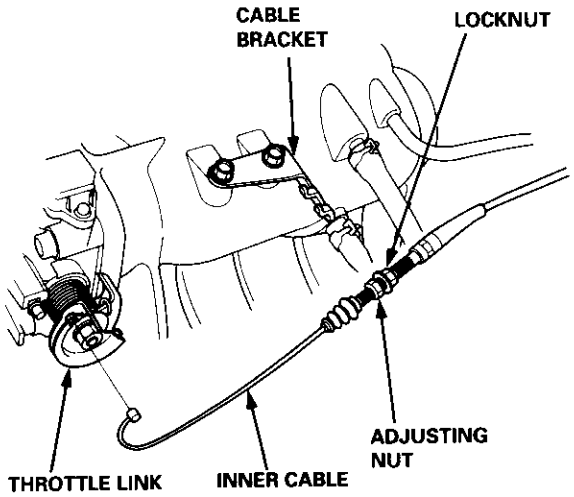

D16Y7 engine:

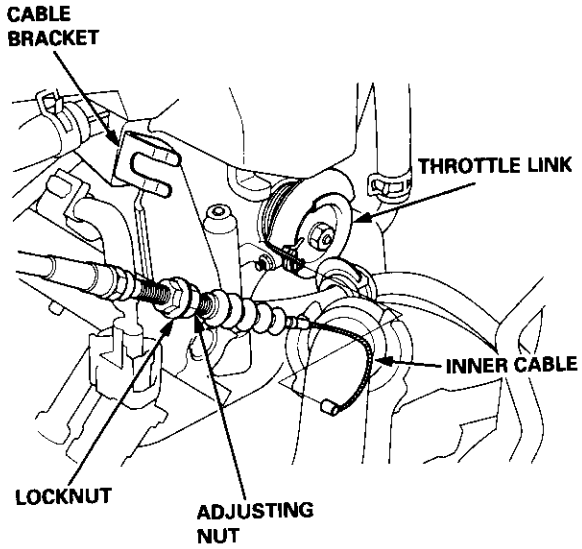

2. Start the engine. Hold the engine at 3,000 rpm with no load (in Park or neutral) until the radiator fan comes on, then let it idle.

3. Hold the cable sheath, removing all slack from the cable.

(cont'd)

Throttle Cable (cont'd)

4. Set the locknut on the cable bracket. Adjust the adjusting nut so that its free play is 0 mm.

5. Remove the cable sheath from the throttle bracket, reset the adjusting nut and tighten the locknut.

D16Y5, D16Y8 engine:

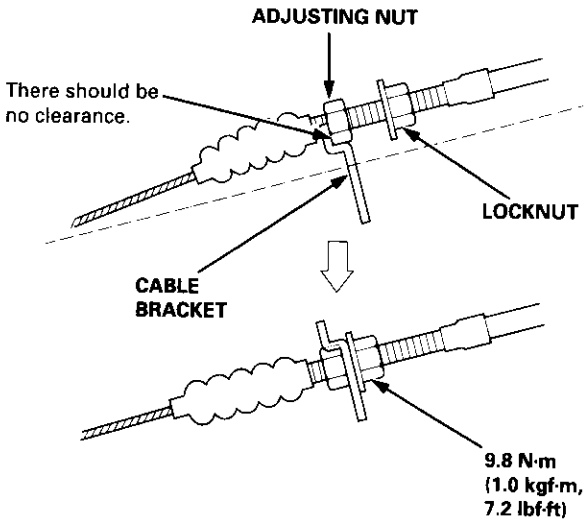

D16Y7 engine:

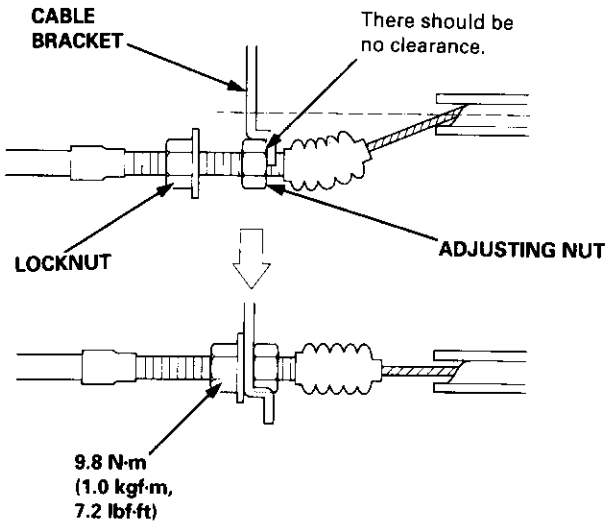

B16A2 engine:

1. Open the throttle valve fully, then install the throttle cable in the throttle linkage, and install the cable housing in the cable bracket.

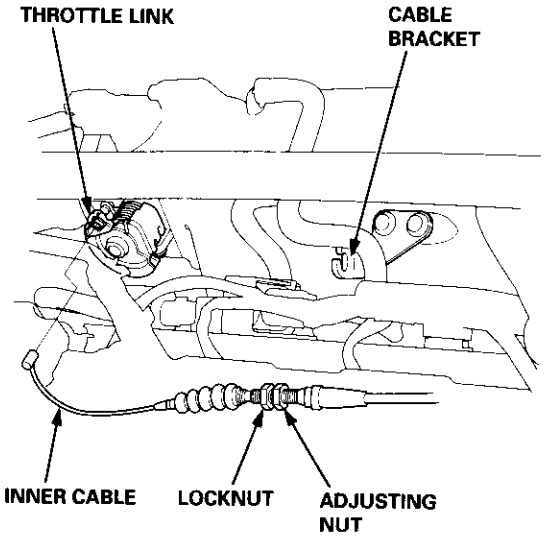

2. Start the engine. Hold the engine at 3,000 rpm with no load (in Park or neutral) until the radiator fan comes on, then let it idle.

3. Hold the throttle link to the throttle lever; there should be no clearance.

4. Hold the cable sheath, removing all slack from the cable.

5. Turn the adjusting nut until it is 3 mm (1/8 in.) away from the cable bracket.

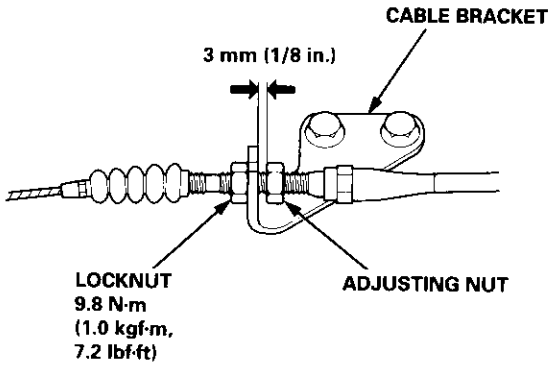

6. Tighten the locknut. The cable deflection should now be 10 – 12 mm (3/8 – 1/2 in.). If not, see Inspection/Adjustment.

Throttle Body

Description

The throttle body is either a single-barrel side-draft type (D16Y5, D16Y8, B16A2 engine) or a down-draft type (D16Y7 engine). The lower portion of the throttle valve is heated by engine coolant from the cylinder head. The idle adjusting screw which regulates the bypass air is located on the top of the throttle body.

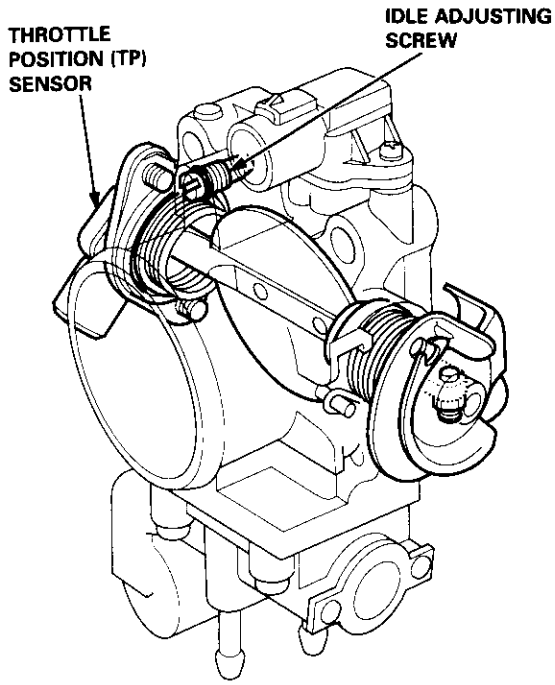

Inspection

1. Check that the throttle cable operates smoothly without binding or sticking.
   If there are any abnormalities, check for:
   - Excessive wear or play in the throttle valve shaft.
   - Sticky or binding throttle lever at the fully closed position.
   - Clearance between throttle stop screw and throttle lever at the fully closed position.

D16Y5, D16Y8 engine:

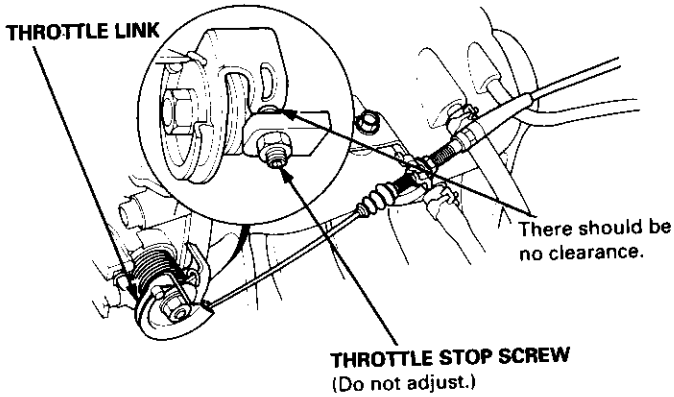

D16Y7 engine:

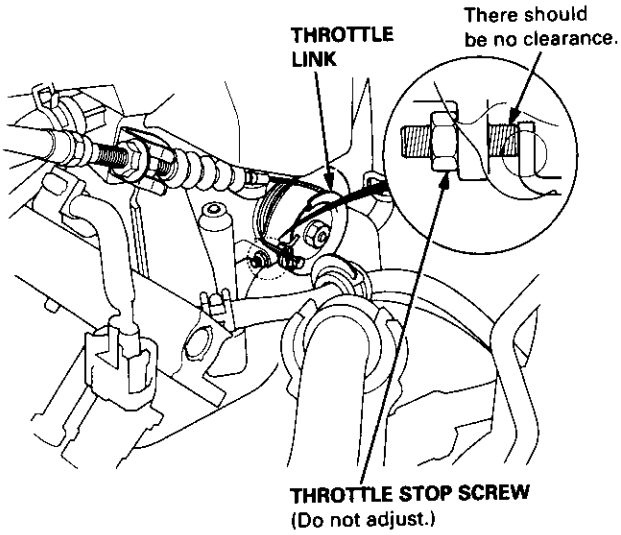

B16A2 engine:

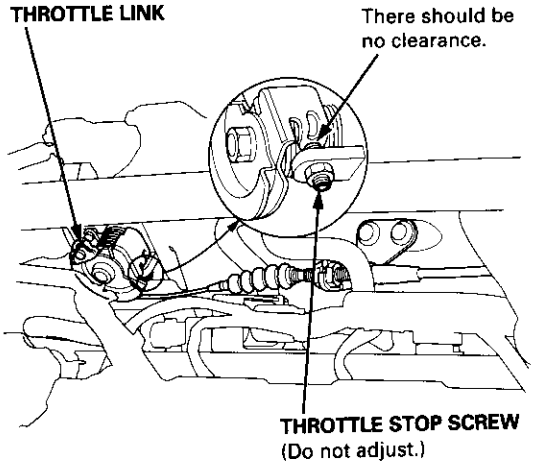

Replace the throttle body if there is excessive play in the throttle valve shaft or if the shaft is binding or sticking.

(cont'd)

Throttle Body (cont'd)

Removal

D16Y5, D16Y8, B16A2 engine:

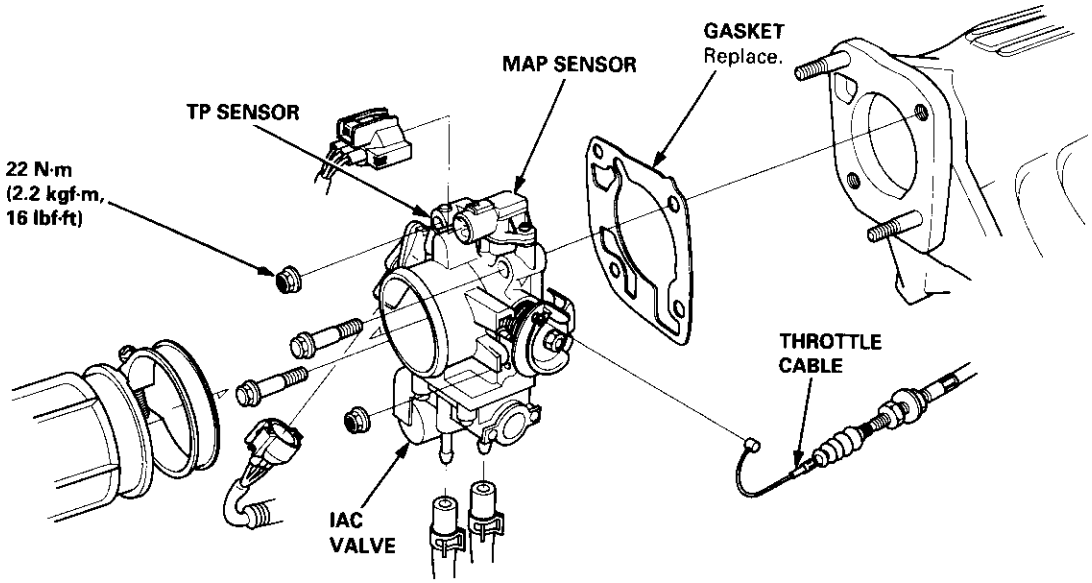

D16Y7 engine:

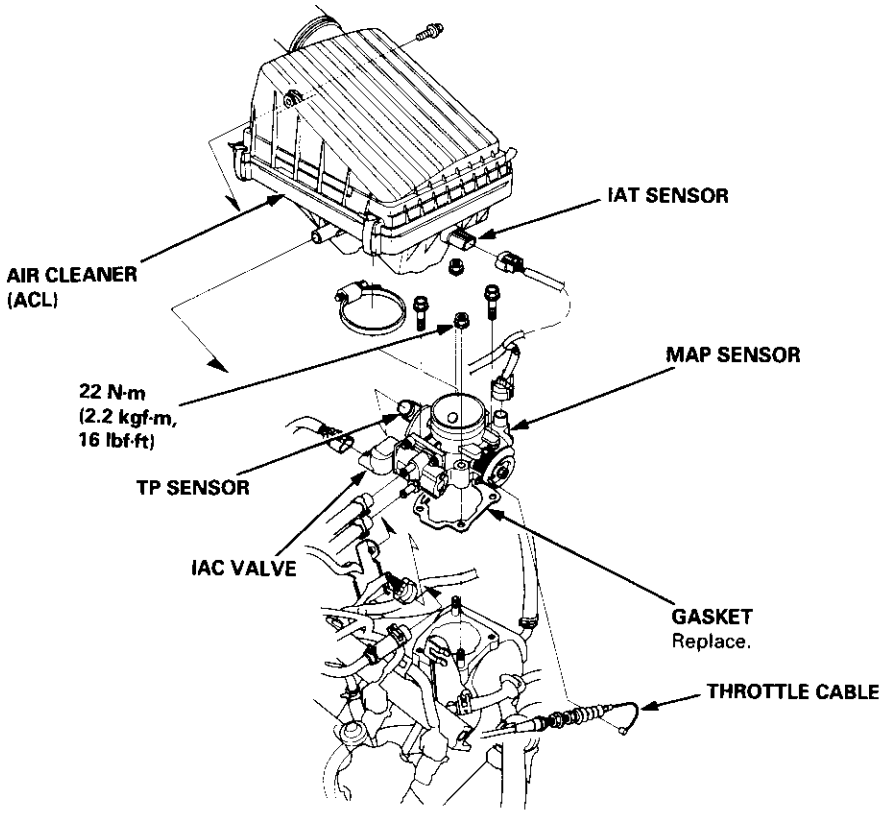

NOTE:
- Do not adjust the throttle stop screw.
- After reassembly, adjust the throttle cable (see page 11-244).
- The TP sensor is not removable.

Disassembly

D16Y5, D16Y8 engine:

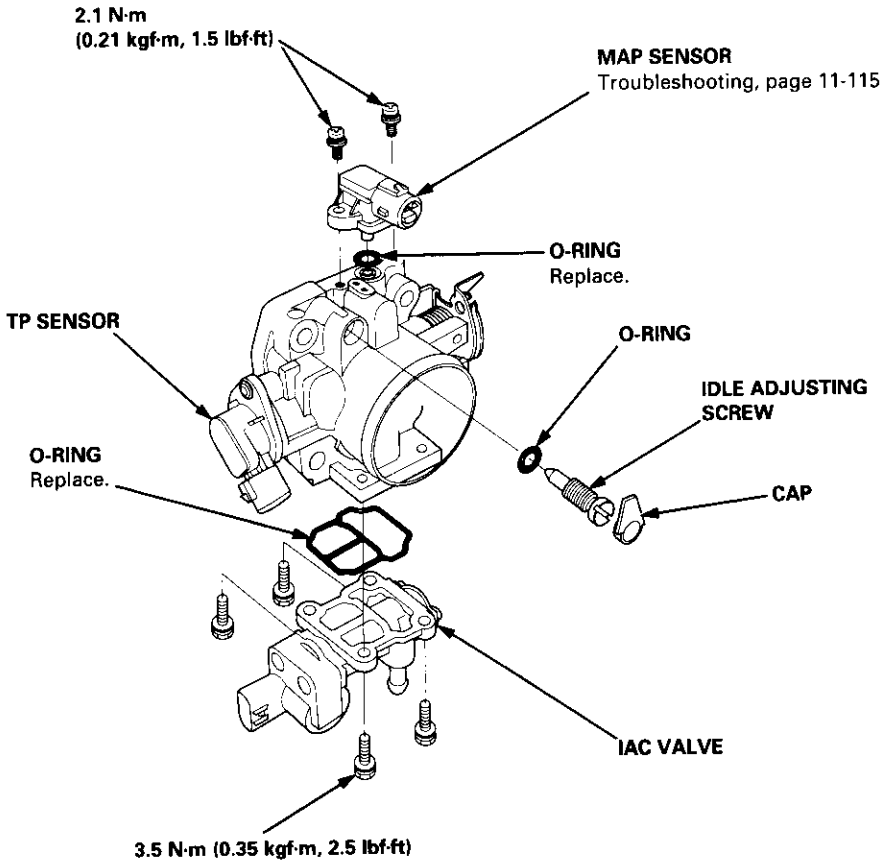

D16Y7 engine:

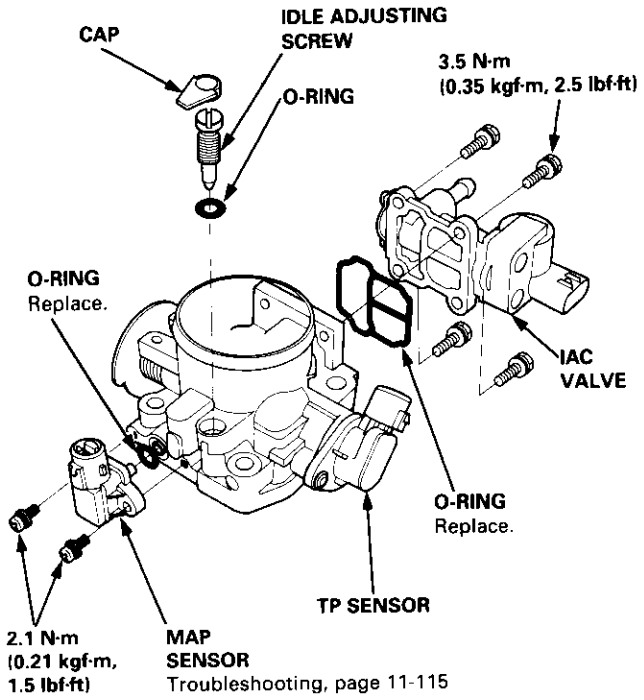

B16A2 engine:

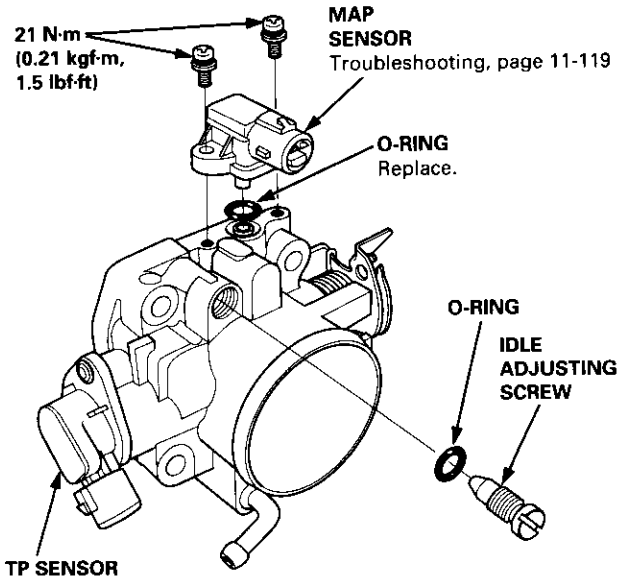

Fuel Injection Air (FIA) Control System ['99 – 00 D16Y8 engine]

Description

When the engine running [engine coolant below 149°F (65°C)], the fuel Injection Air (FIA) Control Valve sends intake air to the fuel injectors.

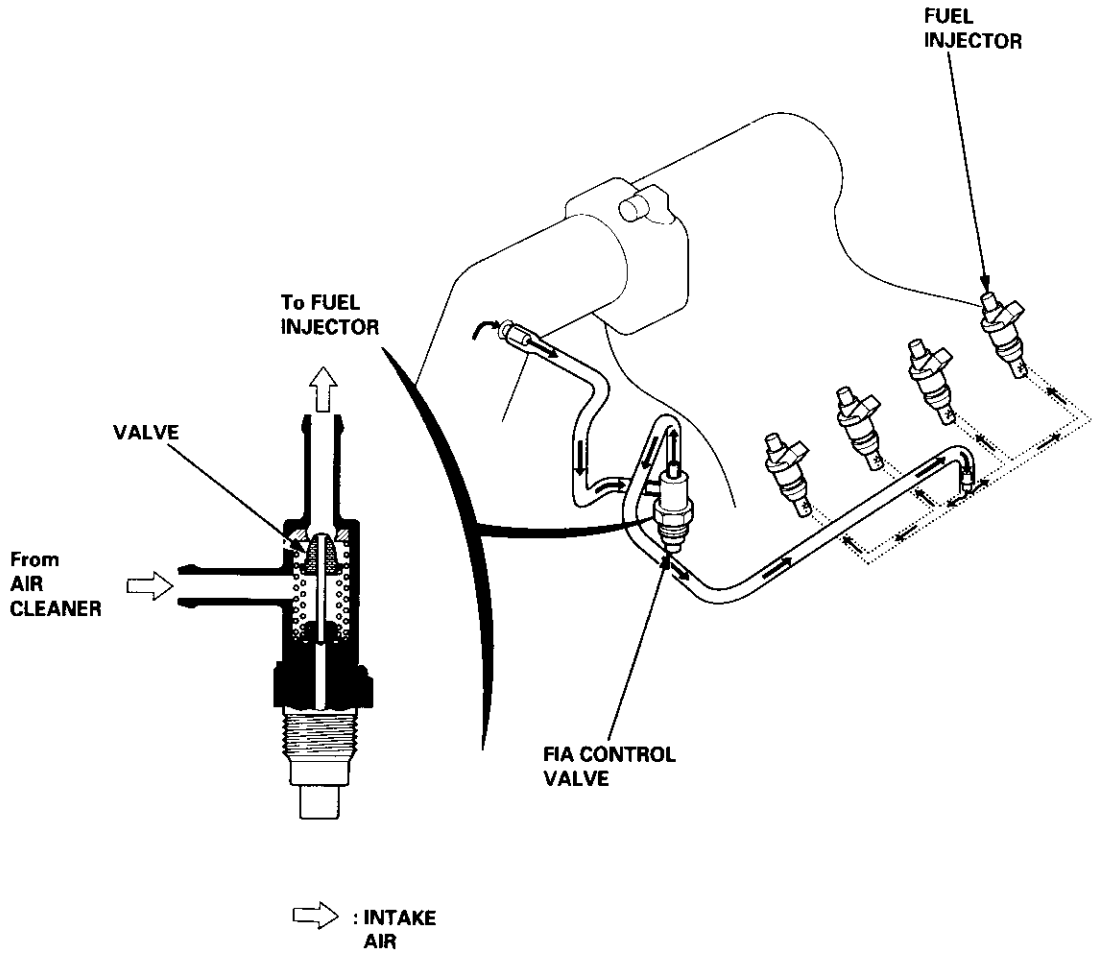

Fuel Injection Air (FIA) Control Valve Testing

1. Start the engine.

2. Remove the vacuum hose from the fitting on the intake air duct, and connect a vacuum gauge to the hose.
   NOTE: Engine coolant temperature must be below 149°F (65°C).

   VACUUM PUMP/GAUGE,
   0 – 30 in.Hg.
   A973X – 041 –XXXXX

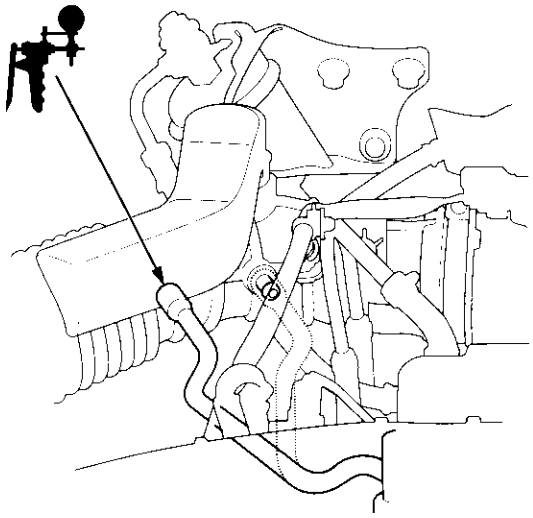

3. Raise and lower the engine speed, and make sure the vacuum gauge reading changes as the engine speed changes.

   If vacuum reading does not change check these items:
   - The vacuum lines of FIA system for misrouting, leakage, breakage and clogging.
   - The FIA control valve for cracks or damage.
   - The cooling system (see section 10).

4. Hold the engine at 3,000 rpm with no load (in Park or neutral) until the radiator fan comes on, then let it idle and recheck.

   If vacuum reading changes check these items:
   - The FIA control valve for cracks or damage.
   - The cooling system (see section 10).

System Description

The emission control system includes a Three Way Catalytic Converter (TWC), Exhaust Gas Recirculation (EGR) system*, Positive Crankcase Ventilation (PCV) system and Evaporative Emission (EVAP) Control system. The emission control system is designed to meet federal and state emission standards.

*: D16Y5 engine

Tailpipe Emission

Inspection

⚠ WARNING Do not smoke during this procedure. Keep any open flame away from your work area.

1. Start the engine. Hold the engine at 3,000 rpm with no load (in Park or neutral) until the radiator fan comes on, then let it idle.
2. Connect a tachometer.
3. Check and, if necessary, adjust the idle speed (see page 11-220 – 223).
4. Warm up and calibrate the CO meter according to the meter manufacturer's instructions.
5. Check idle CO with the headlights, heater blower, rear window defogger, cooling fan, and air conditioner off.

   NOTE: (Canada) Pull the parking brake lever up. Start the engine, then check that the headlights are off.

   CO meter should indicate 0.1% maximum.

   NOTE: '98 D16Y5 engine – If the idle speed increases to 810 ± 50 rpm, this means the EVAP system is purging the canister. To stop the purging temporarily, raise the engine speed above 1,000 rpm with the accelerator pedal, then slowly release the pedal.

Three Way Catalytic Converter (TWC)

Description

The Three Way Catalytic Converter (TWC) is used to convert hydrocarbons (HC), carbon monoxide (CO), and oxides of nitrogen (NOx) in the exhaust gas to carbon dioxide (CO_2), dinitrogen (N_2) and water vapor.

D16Y5, D16Y7 engine:

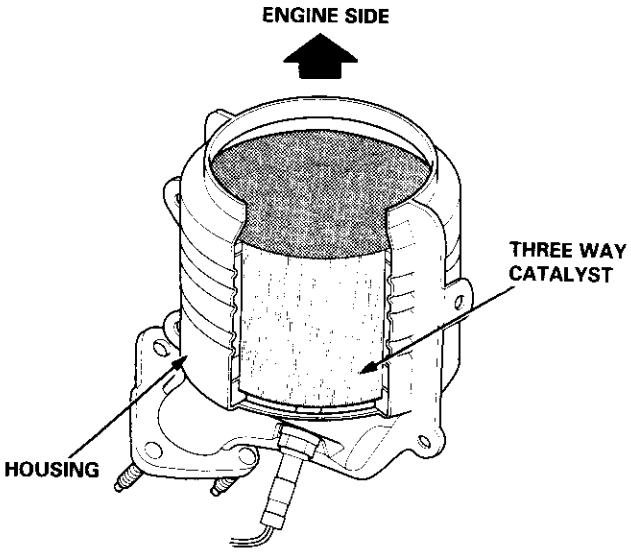

'96 – 98 D16Y8 engine:

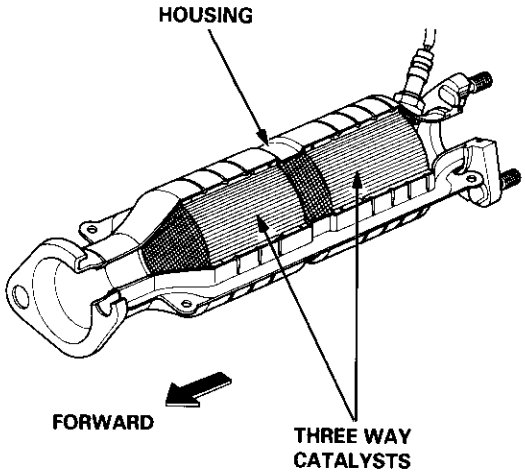

'99 – 00 D16Y8, B16A2 engine:

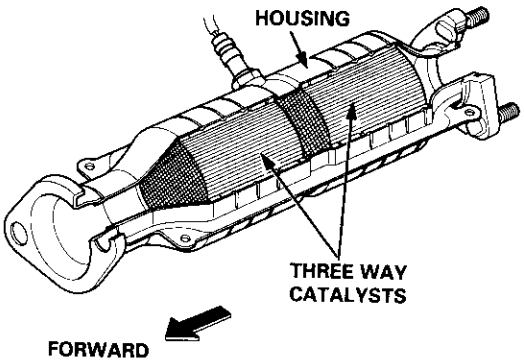

P0420 The scan tool indicates Diagnostic Trouble Code (DTC) P0420: Catalyst system efficiency below threshold.

Description

This system evaluates the catalyst's capacity by means of the HO2S (Primary and Secondary) output during stable driving conditions. If deterioration has been detected during two consecutive driving cycles, the MIL comes on and DTC P0420 will be stored.

NOTE: If some of the DTCs listed below are stored at the same time as DTC P0420, troubleshoot those DTCs first, then recheck for DTC P0420.

P0137, P0138: Secondary HO2S (Sensor 2)
P0141: Secondary HO2S (Sensor 2) Heater

Possible Cause

- TWC Deterioration
- Exhaust system leakage

Troubleshooting Flowchart

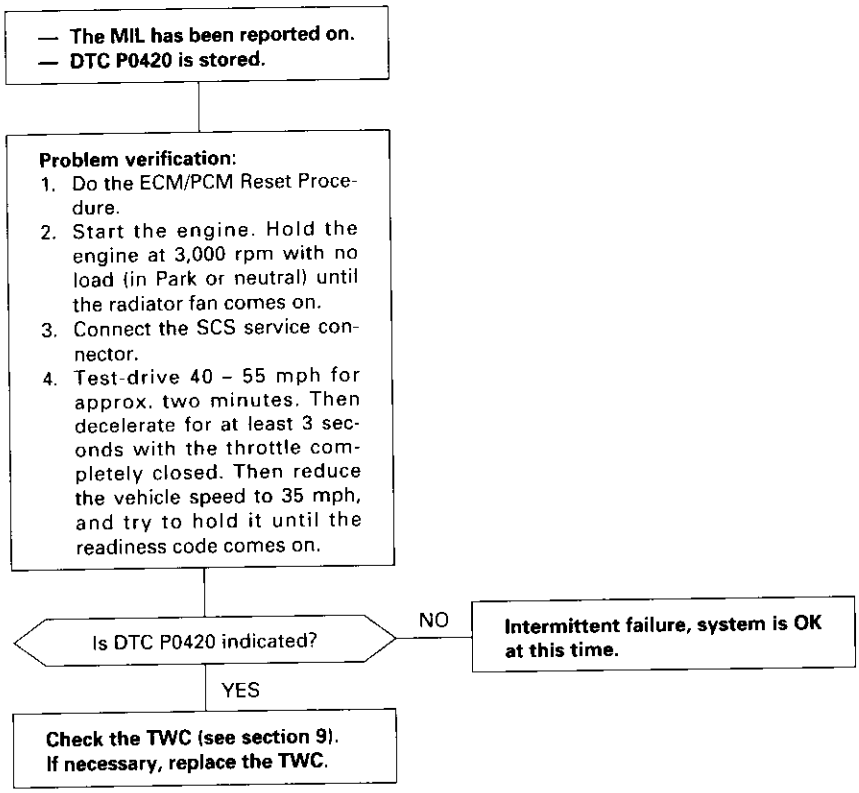

Exhaust Gas Recirculation (EGR) System (D16Y5 engine)

Description

The EGR system is designed to reduce oxides of nitrogen emissions (NOx) by recirculating exhaust gas through the EGR valve and the intake manifold into the combustion chambers. It is composed of the EGR valve, EGR vacuum control valve, EGR control solenoid valve, ECM and various sensors.
The ECM contains memories for ideal EGR valve lifts for varying operating conditions. The EGR valve lift sensor detects the amount of EGR valve lift and sends the information to the ECM. The ECM then compares it with the ideal EGR valve lift which is determined by signals sent from the other sensors. If there is any difference between the two, the ECM cuts current to the EGR control solenoid valve to reduce vacuum applied to the EGR valve.

CVT:

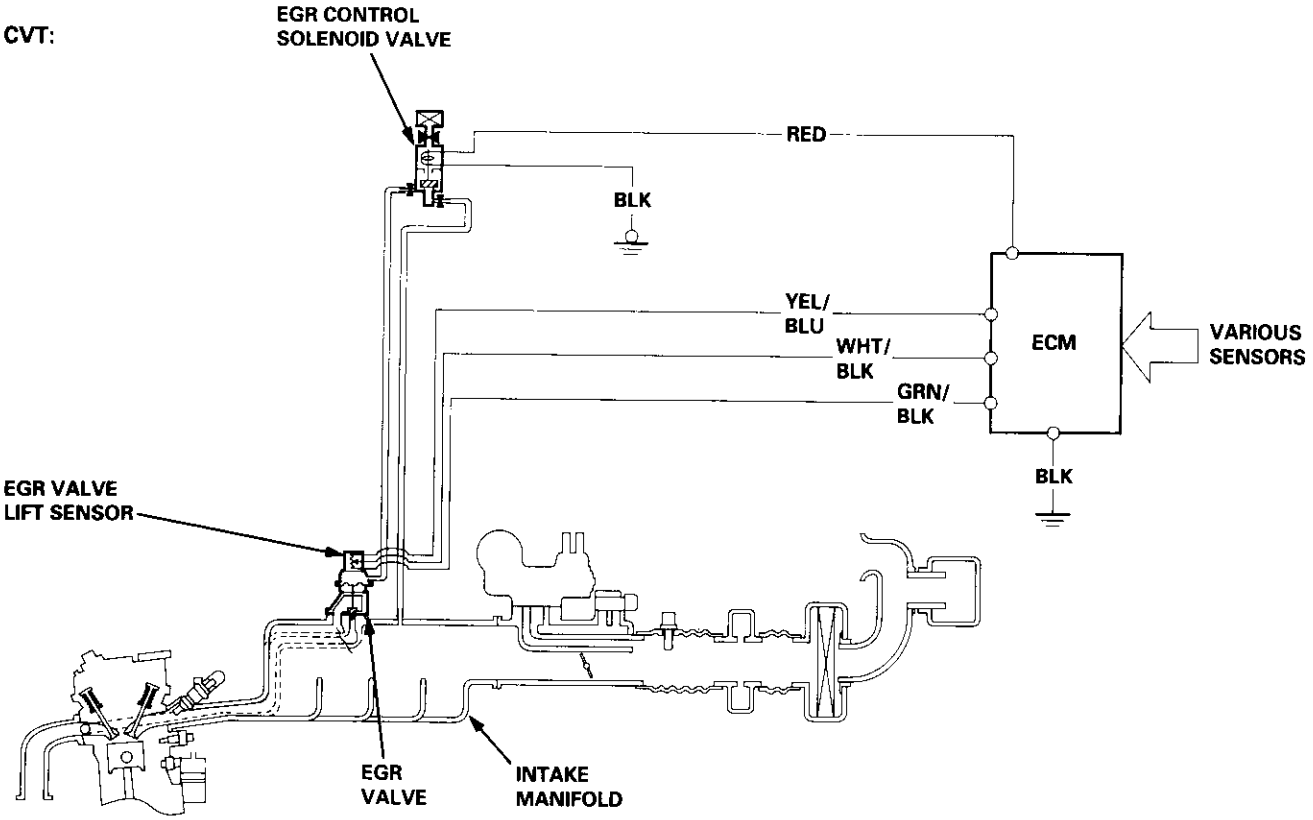

M/T:

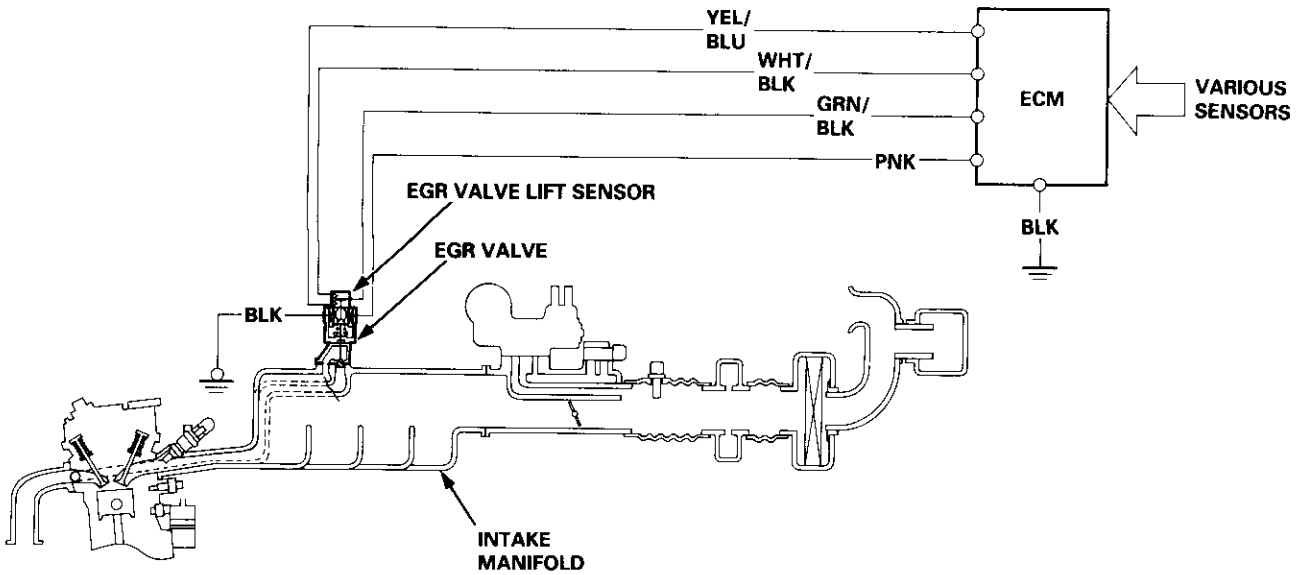

P0401 The scan tool indicates Diagnostic Trouble Code (DTC) P0401: Insufficient flow in the Exhaust Gas Recirculation (EGR) system.

Description

Deterioration (clogging, leakage, etc.) in the EGR line or EGR valve is detected by means of the changes in MAP before and after the operation of the EGR valve.

If deterioration has been detected during two consecutive driving cycles, the MIL will come on and DTC P0401 will be stored.

Possible Causes

- Clogging, leakage in the EGR line
- Faulty EGR valve

Troubleshooting Flowchart

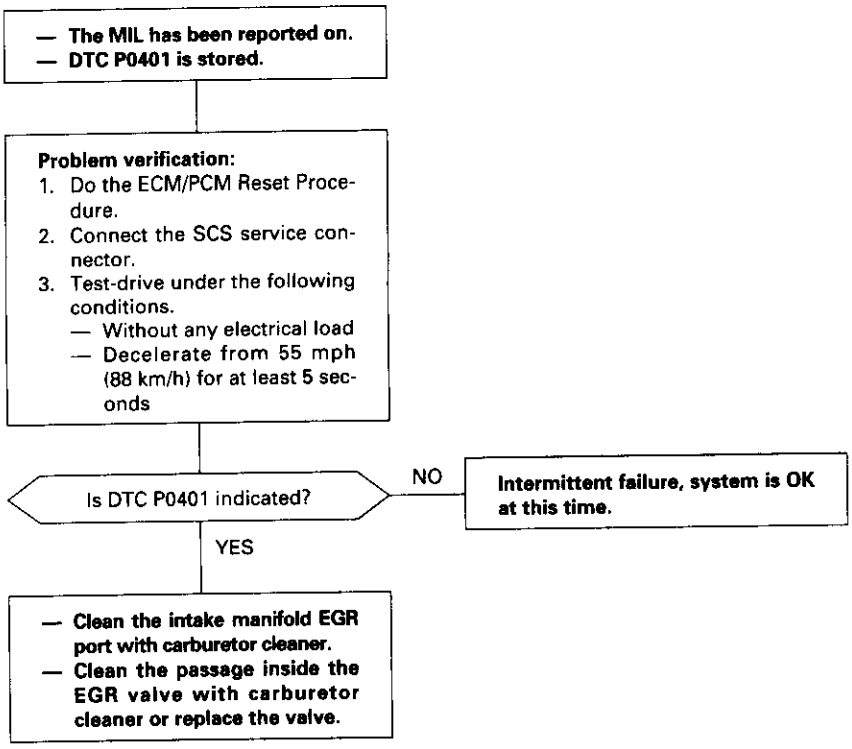

Exhaust Gas Recirculation (EGR) System (D16Y5 engine with CVT) (cont'd)

P1491 The scan tool indicates Diagnostic Trouble Code (DTC) P1491: A malfunction in the Exhaust Gas Recirculation (EGR) system.

CVT (M/T see page 11-261):

— The MIL has been reported on.
— DTC P1491 is stored.

Problem verification:
1. Do the ECM/PCM Reset Procedure.
2. Connect the SCS service connector.
3. Start the engine. Hold the engine at 3,000 rpm with no load (in Park or neutral) until the radiator fan comes on.
4. Drive the vehicle on the road for approx. 10 minutes. Try to keep the engine speed in the 1,700 – 2,500 rpm range.

Is DTC P1491 indicated?

NO → **Intermittent failure, system is OK at this time. Check for poor connections or loose wires at, C144 (EGR valve) and ECM/PCM.**

YES

Check for vacuum to the EGR valve:
1. Disconnect the No. 16 hose from the EGR valve.
2. Connect a vacuum pump/gauge to the hose.
3. Start the engine and let it idle.

Is there any vacuum?

NO → A (To page 11-257)

YES

Check for a malfunction in the EGR control solenoid valve:
1. Disconnect the EGR control solenoid valve 2P connector.
2. Recheck the No. 16 hose for vacuum.

Is there any vacuum?

YES → **Check vacuum hose routing of the entire EGR system. If hose routing is OK, replace the EGR control solenoid valve.**

NO

Substitute a known-good ECM/PCM and recheck. If symptom/indication goes away, replace the original ECM/PCM.

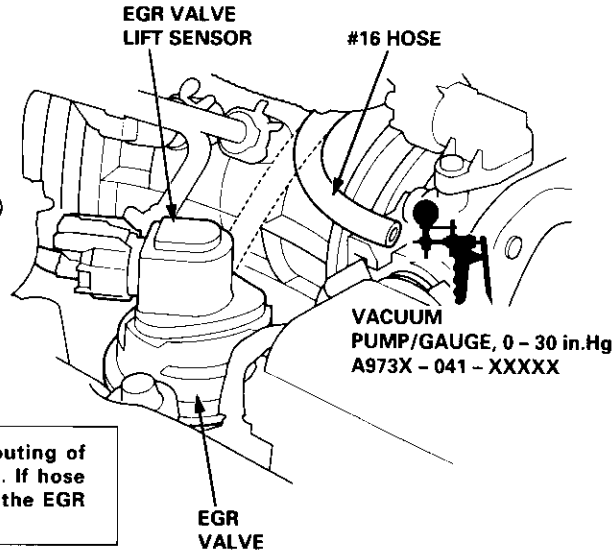

(From page 11-256)

A

Check for a malfunction in the EGR valve:
1. Move the vacuum pump/gauge to the EGR valve.
2. With the engine at idle, apply 26.7 kPa (200 mmHg, 8.0 in.Hg) of vacuum to the EGR valve.

Does the engine stall or run rough and does the EGR valve hold vacuum?

NO → **Replace the EGR valve.**

YES

Check for an open in the wire (VCC2 line):
1. Turn the ignition switch OFF.
2. Disconnect the EGR valve lift sensor 3P connector.
3. Turn the ignition switch ON (II).
4. Measure voltage between the EGR valve lift sensor 3P connector terminals No. 3 and No. 2.

Is there approx. 5 V?

NO

YES

(To page 11-258)

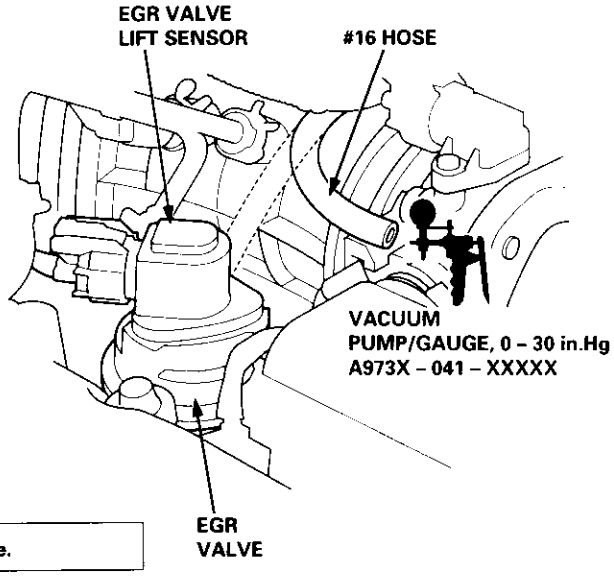

EGR VALVE LIFT SENSOR 3P CONNECTOR (C144)

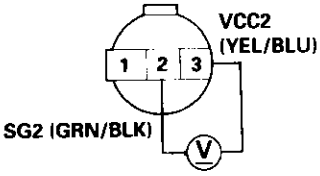

ECM CONNECTOR D (16P)

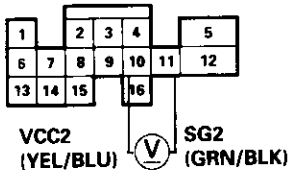

Wire side of female terminals

PCM CONNECTORS C (31P)*

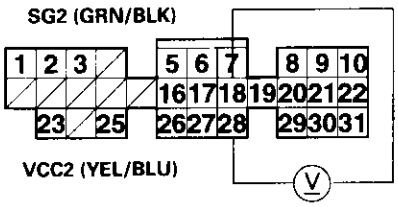

Wire side of female terminals

Check for an open in the wire (VCC2 line):
Measure voltage between the ECM/PCM connector terminals D10 and D11 (C18 and C28)*.

Is there approx. 5 V?

YES → **Repair open in the wire between the EGR valve and ECM/PCM (D10 (C28)*).**

NO → **Substitute a known-good ECM/PCM and recheck. If symptom/indication goes away, replace the original ECM/PCM.**

(cont'd)

*: '99 – 00 models

Exhaust Gas Recirculation (EGR) System (D16Y5 engine with CVT) (cont'd)

(From page 11-257)

Check for an open or short in the EGR valve lift sensor:
1. Turn the ignition switch OFF.
2. At the sensor side, measure resistance between the EGR valve lift sensor 3P connector terminals No. 1 and No. 2.

Is there continuity or resistance of 100 kΩ or higher?

YES → **Replace the EGR valve.**

NO

Check for an open or short in the EGR valve lift sensor:
Measure resistance between the EGR valve lift sensor 3P connector terminals No. 1 and No. 3.

Is there 100 kΩ or higher?

NO → **Replace the EGR valve.**

YES

Check for an open or short in the wire (EGRL line):
1. Reconnect the EGR valve lift sensor 3P connector.
2. Turn the ignition switch ON (II).
3. Measure voltage between the ECM/PCM connector terminals D9 and D11 (C6 and C18)*.

*: '99 – 00 models

Is there approx. 1.2 V?

YES → (B)

NO → (A)

(To page 11-259)

(To page 11-259)

EGR VALVE LIFT SENSOR 3P CONNECTOR (C125)

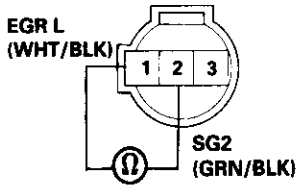

Terminal side of male terminal

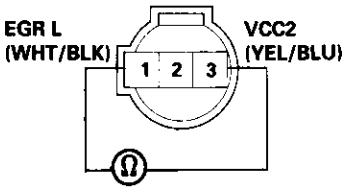

ECM CONNECTOR D (16P)

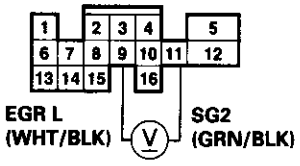

Wire side of female terminals

PCM CONNECTORS C (31P)*

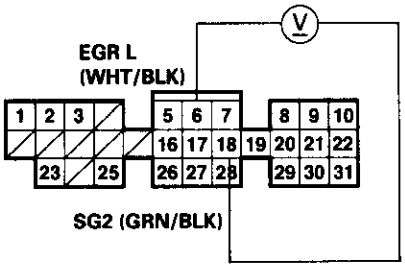

Wire side of female terminals

(From page 11-258)

A

Check for a short in the wire (EGRL line):
Check for continuity between ECM/PCM connector terminal D9 (C6)* and the body ground.

Is there continuity?

NO → **Repair open in the wire between the EGR valve and the ECM/PCM (D9 (C6)*).**

YES → **Repair short in the wire between the EGR valve and ECM/PCM (D9 (C6)*).**

*: '99 – 00 models

ECM CONNECTOR D (16P)

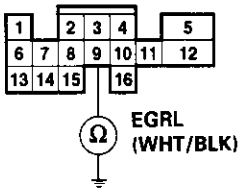

Wire side of female terminals

PCM CONNECTORS C (31P)*

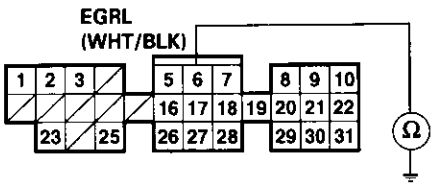

Wire side of female terminals

(From page 11-258)

B

Check the vacuum routing:
1. Reconnect the vacuum pump/gauge to the No. 16 hose.
2. Start the engine and let it idle.
3. At the EGR control solenoid valve side, connect the battery positive terminal to the EGR control solenoid valve connector terminal No. 1.
4. While watching the vacuum gauge, connect the battery negative terminal to the EGR control solenoid valve 2P connector terminal No. 2.

Is there approx. 26.7 kPa (200 mmHg, 8.0 in.Hg) of vacuum within 1 second?

YES → (To page 11-260)

NO →

Check the vacuum hoses:
1. Turn the ignition switch OFF.
2. Inspect the No. 16 and No. 10 hoses for leaks, restrictions or misrouting.

Are the hoses OK?

NO → **Correct as necessary.**

YES → **Replace the EGR control solenoid valve.**

EGR CONTROL SOLENOID VALVE 2P CONNECTOR

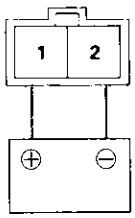

Terminal side of male terminals

(cont'd)

Exhaust Gas Recirculation (EGR) System (D16Y5 engine with CVT) (cont'd)

(From page 11-259)

Check for an open in the wire (E SOL line):
1. Turn the ignition switch OFF.
2. Disconnect the 2P connector from the EGR control solenoid valve.
3. Disconnect the ECM/PCM connector A (32P) (B (25P))* from the ECM/PCM.
4. Check for continuity between ECM/PCM connector terminal A7 (B6)* and the EGR control solenoid valve 2P connector terminal No. 2.

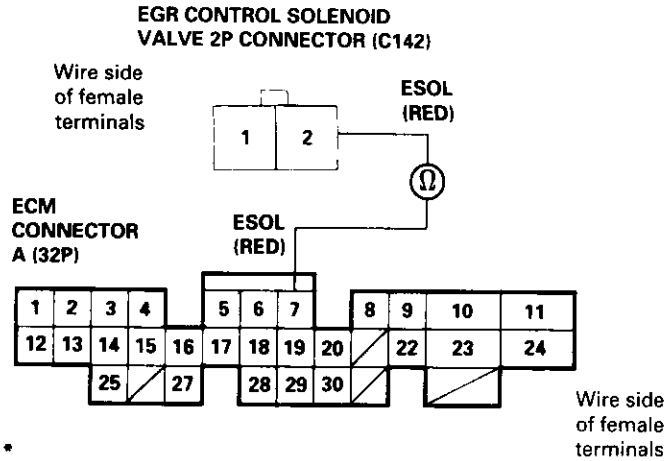

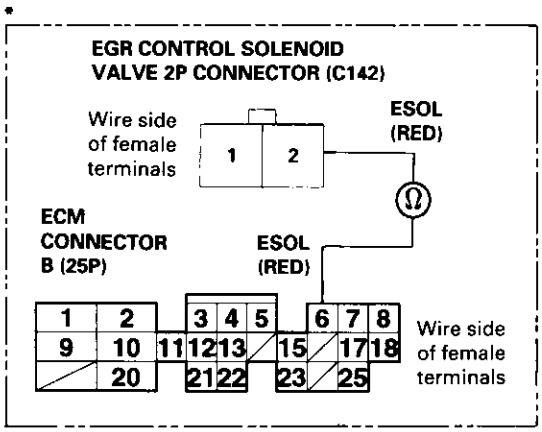

Is there continuity?

NO → **Repair open in the wire between the EGR control solenoid valve and the ECM/PCM (A7 (B6)*).**

YES

Check for a short in the wire (ESOL line):
Check for continuity between the EGR control solenoid valve 2P connector terminal No. 2 and body ground.

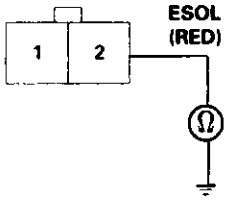

Is there continuity?

YES → **Repair short in the wire between the EGR control solenoid valve and the ECM/PCM (A7 (B6)*).**

NO

Check for an open in the wire (GND line):
Check for continuity between the EGR control solenoid valve 2P connector terminal No. 1 and body ground.

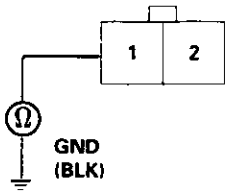

Is there continuity?

NO → **Repair open in the wire between the EGR control solenoid valve and G101.**

YES

Substitute a known-good ECM/PCM and recheck. If symptom/indication goes away, replace the original ECM/PCM.

*: '99 – 00 models

Exhaust Gas Recirculation System (D16Y5 engine with M/T)

M/T:

— The MIL has been reported on.
— DTC P1491 is stored.

Problem verification:
1. Do the ECM Reset Procedure.
2. Connect the SCS service connector.
3. Start the engine. Hold the engine at 3,000 rpm with no load (transmission in neutral) until the radiator fan comes on.
4. Drive the vehicle on the road for approx. 10 minutes. Try to keep the engine speed in the 1,700 – 2,500 rpm range.

Is DTC P1491 indicated?

NO → **Intermittent failure, system is OK at this time. Check for poor connections or loose wires at C144 (EGR valve) and ECM.**

YES

Check for a malfunction in the EGR valve:
1. Turn the ignition switch OFF.
2. Disconnect the EGR valve 6P connector.
3. Start the engine and let it idle.
4. Measure voltage between the EGR valve 6P connector terminals No. 4 and No.6.

Is there battery voltage?

NO → **Check the EGR valve:**
1. Turn the ignition switch OFF.
2. Turn the ignition switch ON (II).
3. Measure voltage between the EGR valve 6P connector terminals No. 2 and No. 3.

YES → **Substitute a known-good ECM and recheck. If symptom/indication goes away, replace the original ECM.**

Is there approx. 5 V?

NO → **Replace the EGR valve.**

YES

(To page 11-262)

EGR VALVE 6P CONNECTOR (C144)

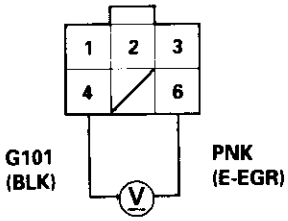

Wire side of male terminals

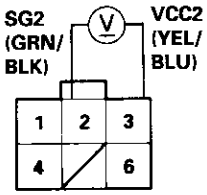

(cont'd)

Exhaust Gas Recirculation System (D16Y5 engine with M/T) (cont'd)

(From page 11-261)

Check for open in the wire (SG2 line):
Measure voltage between the ECM connector terminals D10 and D11.

Is there approx. 5 V?
- YES → **Repair open in the wire between ECM (D11) and EGR valve.**
- NO ↓

Check the EGR valve:
1. Turn the ignition switch OFF.
2. At the sensor side, measure resistance between the EGR valve 6P connector terminals No. 1 and No. 2.

Is there continuity or resistance of 100 kΩ or higher?
- YES → **Replace the EGR valve.**
- NO ↓

Check the EGR valve:
Measure resistance between the EGR valve 6P connector terminals No. 1 and No. 3.

Is there 100 kΩ or higher?
- NO → **Replace the EGR valve.**
- YES ↓

(To page 11-263)

ECM CONNECTOR D (16P)

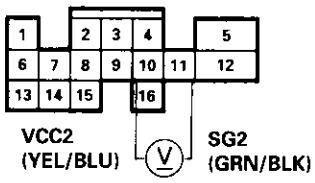

Wire side of female terminals

EGR VALVE 6P CONNECTOR

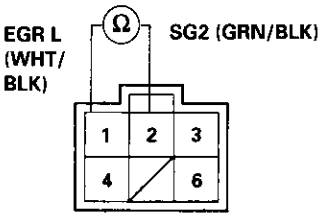

Terminal side of male terminals

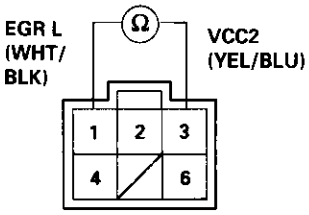

(From page 11-262)

Check for an open in the wire (EGR L line):
1. Reconnect the EGR valve connector.
2. Turn the ignition switch ON (II).
3. Measure voltage between the PCM connector terminals D9 and D11.

ECM CONNECTOR D (16P)

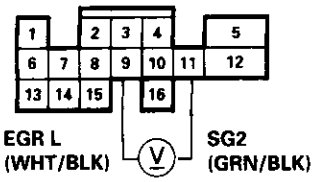

Wire side of female terminals

Is there approx. 1.2 V?

NO → **Check for the wire (EGR L line):** Check for continuity between ECM connector terminal D9 and body ground.

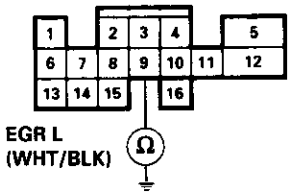

Is there continuity?

NO → **Repair open in the wire between the EGR valve and the ECM (D9).**

YES → **Repair short in the wire between the EGR valve and the ECM (D9).**

YES

Check the EGR valve:
1. Turn the ignition switch OFF.
2. Disconnect the EGR valve 6P connector.
3. Connect the battery positive terminal to EGR valve 6P connector terminal No. 6.
4. Start the engine and let it idle, then connect the battery negative terminal to EGR valve 6P connector terminal No. 4.

EGR VALVE 6P CONNECTOR

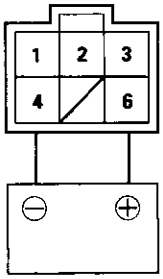

Wire side of female terminals

Does the engine stall or run rough?

NO → **Replace the EGR valve.**

YES

(To page 11-264)

(cont'd)

Exhaust Gas Recirculation System (D16Y5 engine with M/T) (cont'd)

(From page 11-263)

Check for an open in the wire (E-EGR line):
1. Turn the ignition switch OFF.
2. Disconnect the ECM connector, A (32P) from the ECM.
3. Check for continuity between ECM connector terminal A7 and the EGR valve 6P connector terminal No. 6.

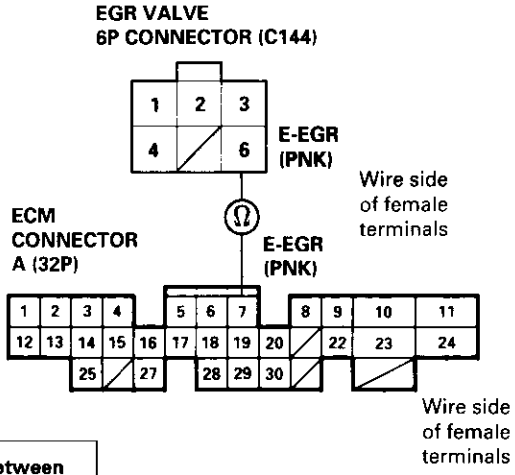

Is there continuity?

NO → **Repair open in the wire between the EGR valve and the ECM (A7).**

YES

Check for a short in the wire (E-EGR line):
Check for continuity between ECM connector terminal A7 and body ground.

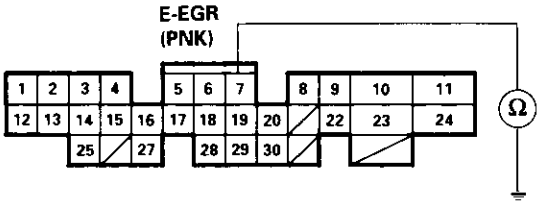

Is there continuity?

YES → **Repair short in the wire between the EGR valve and the ECM (A7).**

NO

Check for an open in the wire (GND line):
Check for continuity between the EGR valve 6P connector terminal No. 4 and body ground.

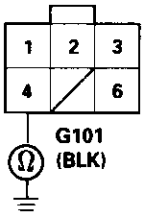

Is there continuity?

NO → **Repair open in the wire between the EGR control solenoid valve and G101.**

YES

Substitute a known-good ECM and recheck. If symptom/indication goes away, replace the original ECM.

Exhaust Gas Recirculation System (D16Y5 engine)

P1498 The scan tool indicates Diagnostic Trouble Code (DTC) P1498: A high voltage problem in the Exhaust Gas Recirculation (EGR) valve lift sensor circuit.

— The MIL has been reported on.
— DTC P1498 is stored.

Problem verification:
1. Do the ECM/PCM Reset Procedure.
2. Start the engine.

Is DTC P1498 indicated?

NO → **Intermittent failure, system is OK at this time. Check for poor connections or loose wires at C144 (EGR valve) and ECM/PCM.**

YES

Check for an open in the EGR valve lift sensor:
1. Turn the ignition switch OFF.
2. Disconnect the EGR valve lift sensor 3P (M/T: 6P) connector.
3. Turn the ignition switch ON (II).
4. Measure voltage between the EGR valve lift sensor 3P (M/T: 6P) connector terminals No. 3 and No. 2.

Is there approx. 5 V?

YES → **Replace the EGR valve.**

NO

Check for open in the wire (SG2 line):
Measure voltage between ECM/PCM connector terminals D10 and D11 (C18 and C28)*.

Is there approx. 5 V?

YES → **Repair open in the wire between ECM/PCM (D11 (C18)*) and EGR valve lift sensor.**

NO

Substitute a known-good ECM/PCM and recheck. If symptom/indication goes away, replace the original ECM/PCM.

*: '99 – 00 D16Y5 engine with CVT

EGR VALVE LIFT SENSOR 3P (M/T: 6P) CONNECTOR (C144)

CVT:

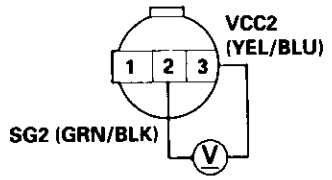

M/T:

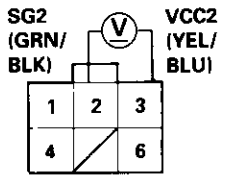

Wire side of female terminals

ECM CONNECTOR D (16P)

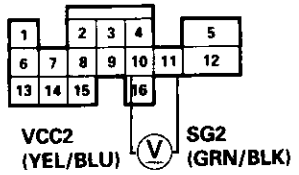

Wire side of female terminals

PCM CONNECTORS C (31P)*

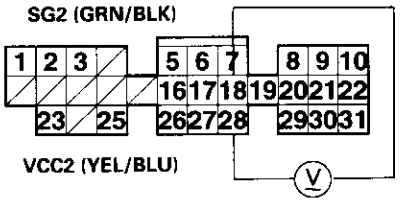

Wire side of female terminals

Positive Crankcase Ventilation (PCV) System

Description

The Positive Crankcase Ventilation (PCV) system is designed to prevent blow-by gas from escaping to the atmosphere. The PCV valve contains a spring-loaded plunger. When the engine starts, the plunger in the PCV valve is lifted in proportion to intake manifold vacuum and the blow-by gas is drawn directly into the intake manifold.

D16Y5, D16Y8, B16A2 engine:

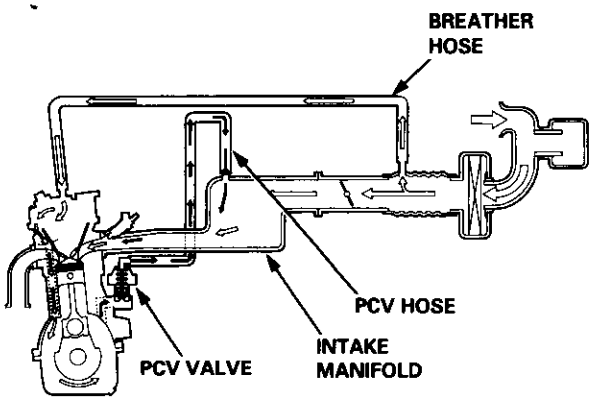

D16Y7 engine:

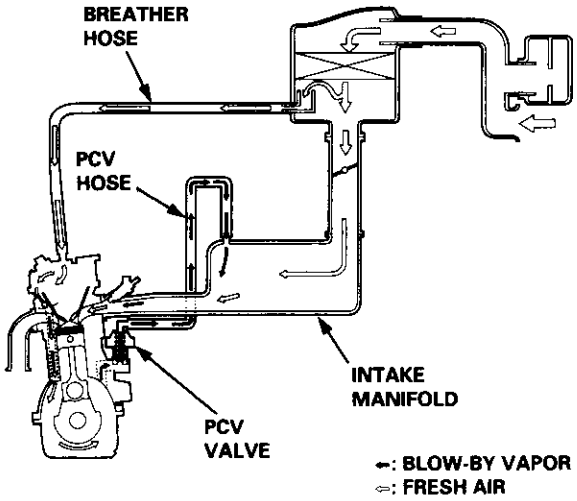

Inspection

1. Check the PCV hoses and connections for leaks and clogging.
2. At idle, make sure there is a clicking sound from the PCV valve when the hose between the PCV valve and the intake manifold is lightly pinched with your fingers or pliers.

D16Y5, D16Y8 engine:

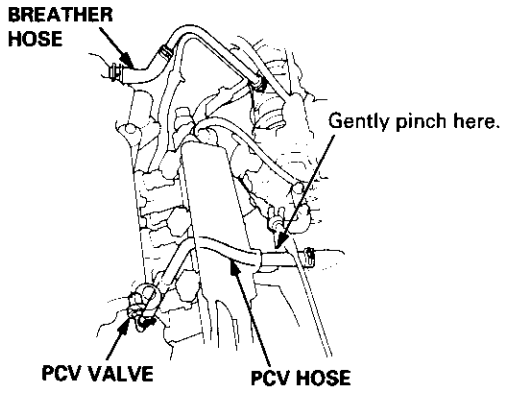

D16Y7 engine:

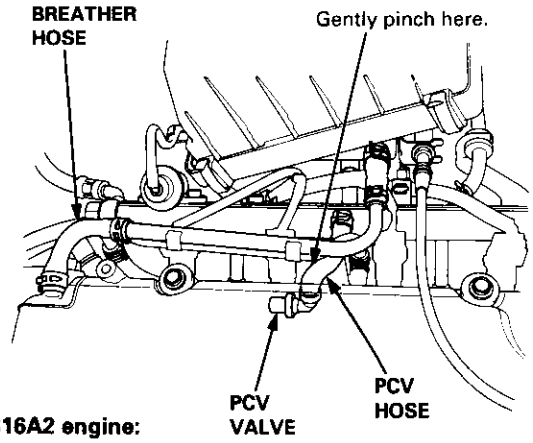

B16A2 engine:

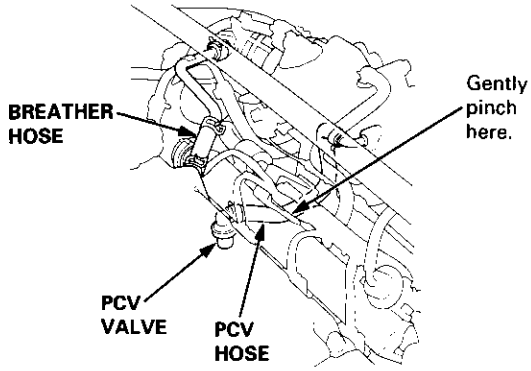

If there is no clicking sound, check the PCV valve grommet for cracks and damage. If the grommet is OK, replace the PCV valve and recheck.

Evaporative Emission (EVAP) Controls

Description

The evaporative emission controls are designed to minimize the amount of fuel vapor escaping to the atmosphere. The system consists of the following components:

A. Evaporative Emission (EVAP) Control Canister
An EVAP control canister is used for the temporary storage of fuel vapor until the fuel vapor can be purged from the EVAP control canister into the engine and burned.

B. Vapor Purge Control System
EVAP control canister purging is accomplished by drawing fresh air through the EVAP control canister and into a port on the intake manifold. The purging vacuum is controlled by the EVAP purge control solenoid valve.

EVAP PURGE CONTROL SOLENOID VALVE DUTY CONTROLLED AFTER STARTING ENGINE

['96 D16Y5 engine, '96 D16Y7 engine, '96 D16Y8 engine (sedan), '97 D16Y5 engine, '97 D16Y7 engine (coupe: KA, KC models, sedan: KA, KC, KL (DX) models, hatchback: all models), '97 D16Y8 engine (sedan: KA, KC models)]

ENGINE COOLANT TEMPERATURE ABOVE 154°F (68°C)

['96 D16Y8 engine (coupe), '97 D16Y7 engine (coupe: KL model, sedan: KL (LX) model), '97 D16Y8 engine (coupe: all models, sedan: KL model) '98-all models, '99-all models, '00-all models]

ENGINE COOLANT TEMPERATURE ABOVE 154°F (68°C)
INTAKE AIR TEMPERATURE ABOVE 32°F (0°C)
and
VEHICLE SPEED ABOVE 0 MILE (0 km/h)

or

A/C COMPRESSOR CLUTCH ON
and
INTAKE AIR TEMPERATURE ABOVE 160°F (41°C)

C. Fuel Tank Vapor Control System
When fuel vapor pressure in the fuel tank is higher than the set value of the EVAP two way valve, the valve opens and regulates the flow of fuel vapor to the EVAP control canister.

D. Onboard Refueling Vapor Recovery (ORVR) System ('99 – 00 models)
During refueling, the ORVR (Onboard Refueling Vapor Recovery) vent shut valve opens with the pressure in the fuel tank, and feeds the fuel vapor to the EVAP control canister.

(cont'd)

Evaporative Emission (EVAP) Controls (cont'd)

'96 D16Y8 engine (coupe), '97 D16Y8 engine (coupe: all models, sedan: KL model), '98 D16Y5 engine (all models), '98 D16Y8 engine (all models):

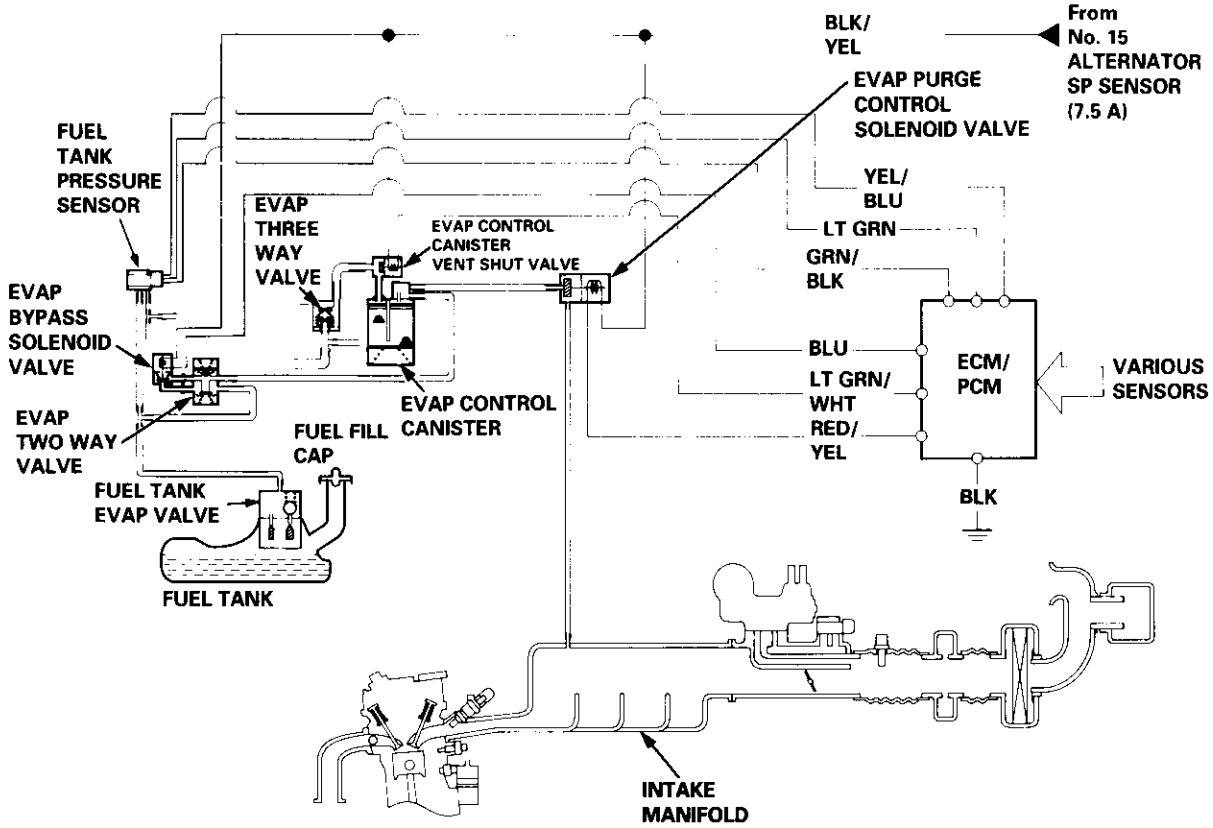

'97 D16Y7 engine (coupe: KL model, sedan: KL (LX) model), '98 D16Y7 engine:

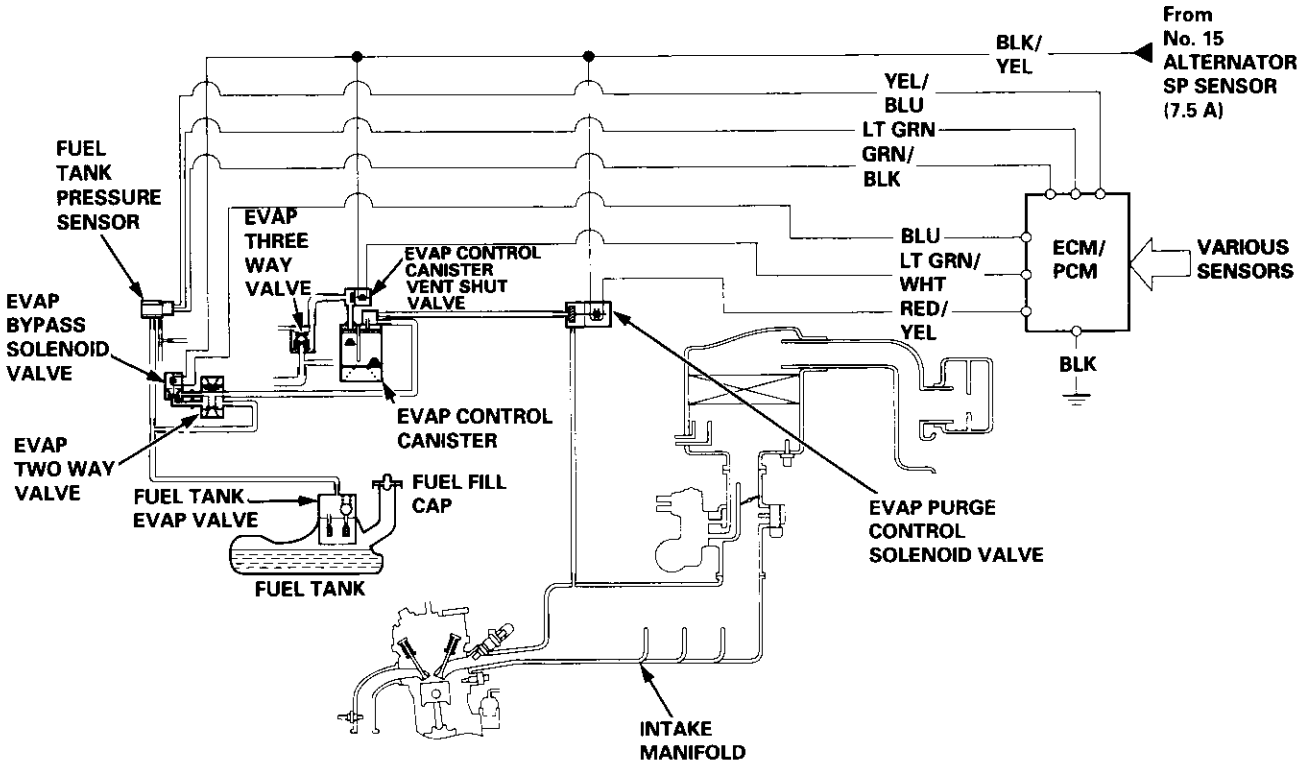

'96 D16Y5 engine, '96 D16Y8 engine (sedan), '97 D16Y5 engine, '97 D16Y8 engine (sedan: KA, KC models):

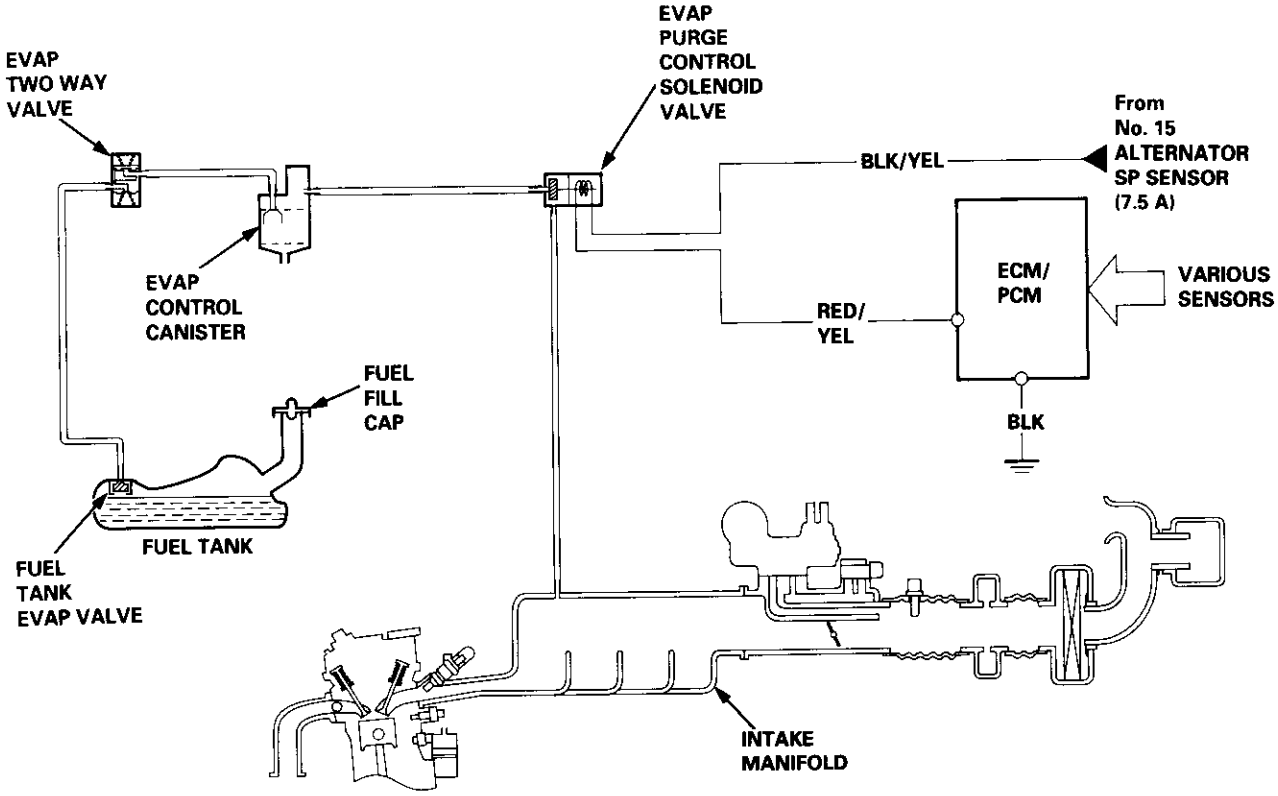

'96 D16Y7 engine, '97 D16Y7 engine (coupe: KA, KC models, sedan: KA, KC, KL (DX) models, hatchback: all models):

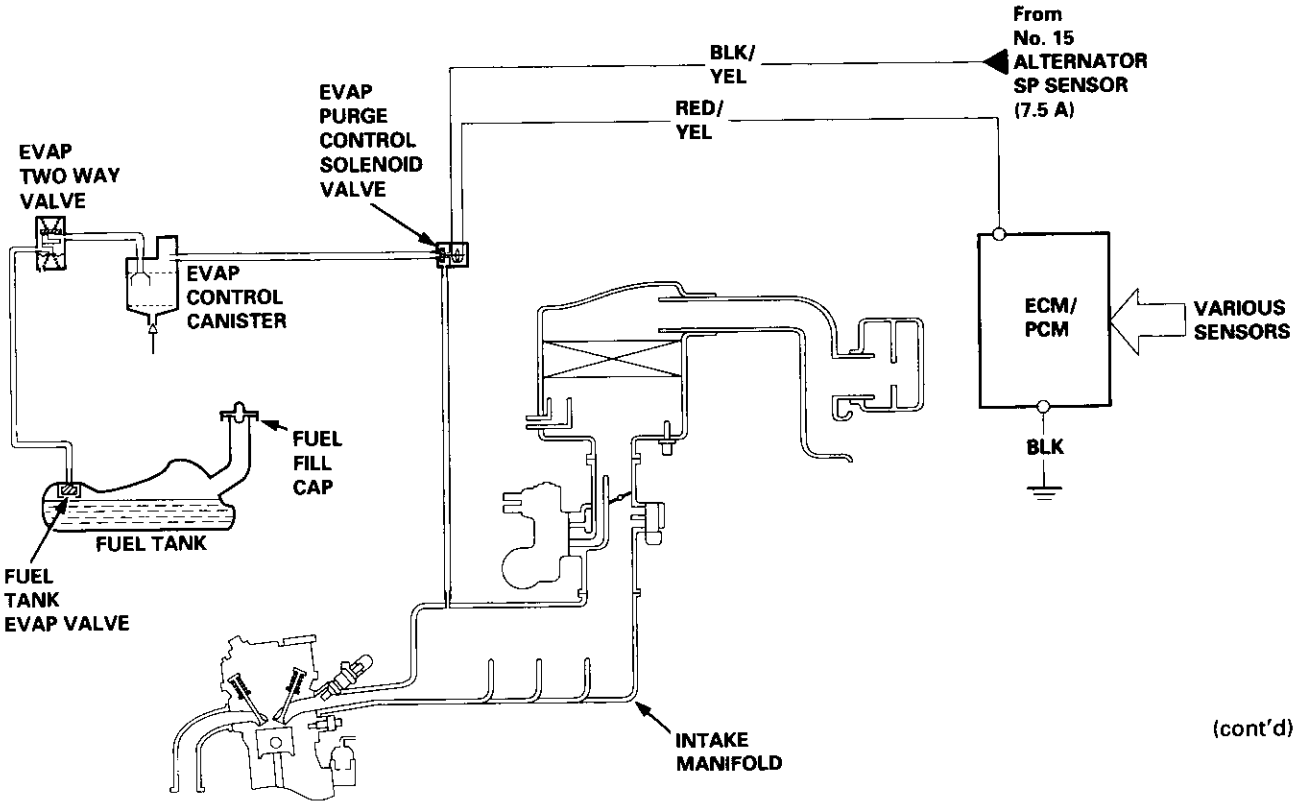

(cont'd)

Evaporative Emission (EVAP) Controls (cont'd)

'99 – 00 D16Y8 engine, '99 – 00 D16Y5 engine, '99 – 00 B16A2 engine:

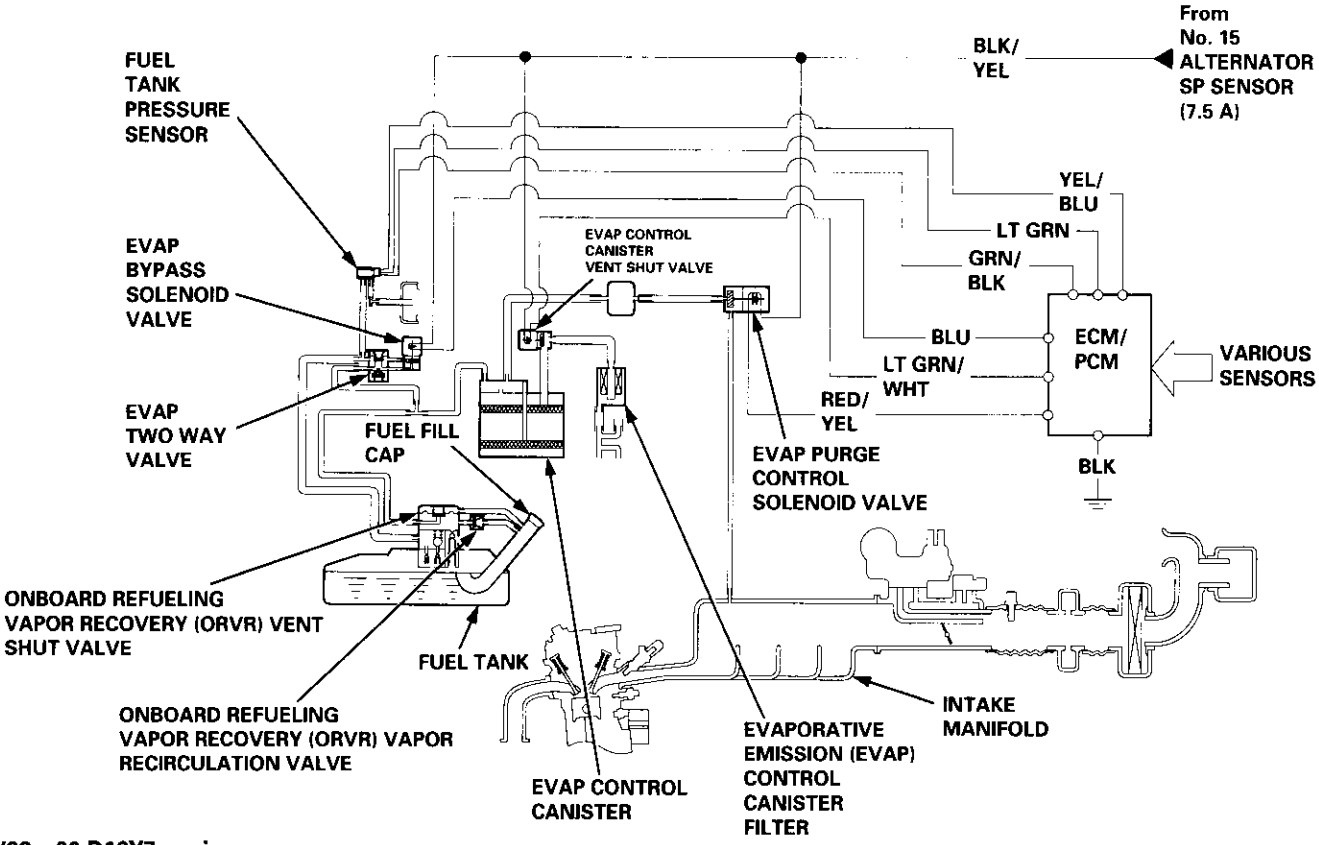

'99 – 00 D16Y7 engine:

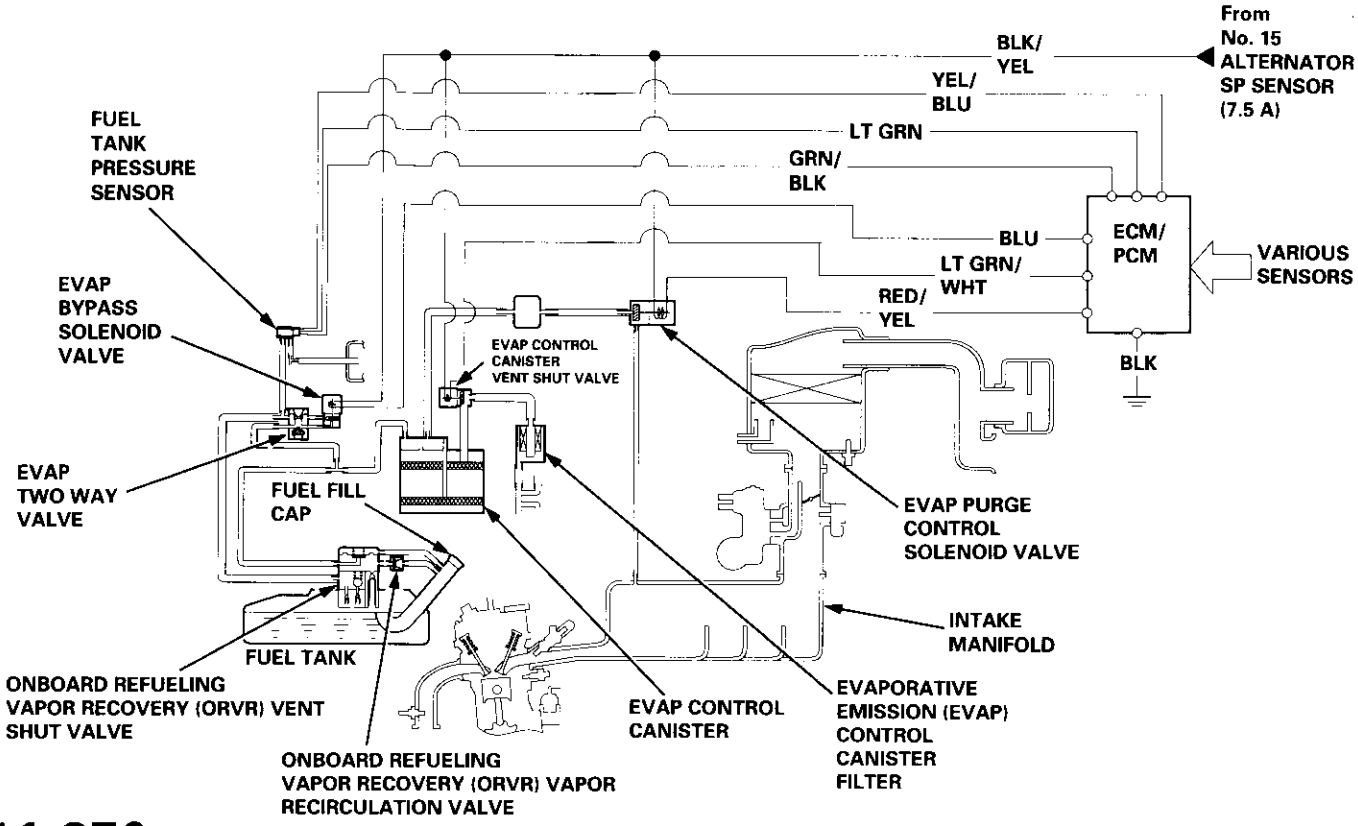

'96 D16Y5 engine, '96 D16Y7 engine, '96 D16Y8 engine (sedan), '97 D16Y5 engine, '97 D16Y7 engine (coupe: KA, KC models, sedan: KA, KC, KL (DX) models, hatchback: all models), '97 D16Y8 engine (sedan: KA, KC models):

P0441 The scan tool indicates Diagnostic Trouble Code (DTC) P0441: Evaporative Emission (EVAP) control system insufficient purge flow.

Description

By monitoring the purge line vacuum with the MAP sensor, the ECM/PCM can detect insufficient EVAP control system purge flow.

Possible Cause

- EVAP Purge Control Solenoid Valve
- EVAP Purge Control Solenoid Valve Circuit
- EVAP Control Canister
- Vacuum Lines
- ECM/PCM

Troubleshooting Flowchart

— The MIL has been reported on.
— DTC P0441 is stored.

Problem verification:
1. Start the engine. Hold the engine at 3,000 rpm with no load (in Park or neutral) until the radiator fan comes on.
2. Do the ECM/PCM Reset Procedure.
3. Connect the SCS service connector.
4. Test-drive under following conditions on the road.
   — Without any electrical load
   — A/T in D3 or D4 position (M/T in 3rd-5th gear)
   — Engine speed between 1,200 – 2,400 rpm.
   — Decelerate from 50 mph (80 km/h) to 15 mph (24 km/h)

Is DTC P0441 indicated?

NO → **Intermittent failure, system is OK at this time. Check for poor connections or loose wires at C144 (EVAP purge control solenoid valve) and ECM/PCM.**

YES

Check for an open in the wire (IG1 line):
1. Turn the ignition switch OFF.
2. Disconnect the EVAP purge control solenoid valve 2P connector.
3. Turn the ignition switch ON (II).
4. Measure voltage between body ground and the EVAP purge control solenoid valve 2P connector terminal No. 1.

Is there battery voltage?

NO → **Repair open in the wires between the EVAP purge control solenoid valve and the No. 15 ALTERNATOR SP SENSOR (7.5 A) fuse.**

YES

(To page 11-272)

EVAP PURGE CONTROL SOLENOID VALVE 2P CONNECTOR (C114)

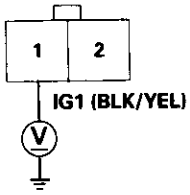

Wire side of female terminals

(cont'd)

Evaporative Emission (EVAP) Controls (cont'd)

(From page 11-271)

Check the EVAP purge control solenoid valve:
1. Reconnect the EVAP purge control solenoid valve 2P connector.
2. Connect ECM/PCM connector terminals A15 and A10 with a jumper wire.

ECM/PCM CONNECTOR D (32P)

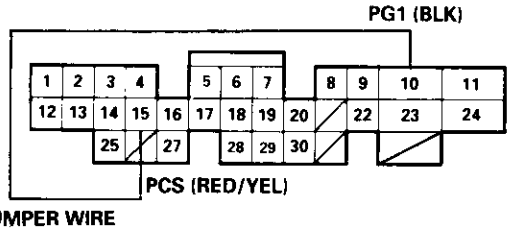

Wire side of female terminals

Does the solenoid valve click when the jumper is connected?

NO → **Check for an open or short in the wire (PCS line):** Measure voltage between ECM/PCM connector terminal A15 and body ground.

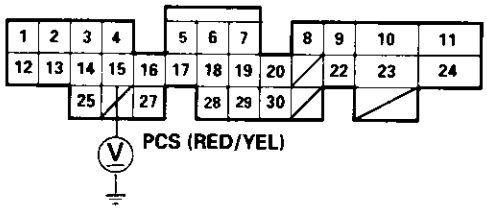

Is there battery voltage?

NO → **Check for a short in the wire (PCS line):**
1. Turn the ignition switch OFF.
2. Disconnect the ECM/PCM connector A (32P).
3. Disconnect the EVAP purge control solenoid valve 2P connector.
4. Check for continuity between body ground and ECM/PCM connector terminal A15.

YES → **Replace the EVAP purge control solenoid valve.**

Is there continuity?

YES → **Repair short in the wires between the EVAP purge control solenoid valve and ECM/PCM (A15).**

NO → **Repair open in the wires between the EVAP purge control solenoid valve and ECM/PCM (A15).**

YES

Check the vacuum lines: Check the vacuum lines of EVAP system for misrouting, leakage, breakage and clogging.

Are the vacuum lines OK?

NO → **Repair or replace vacuum lines as necessary.**

YES

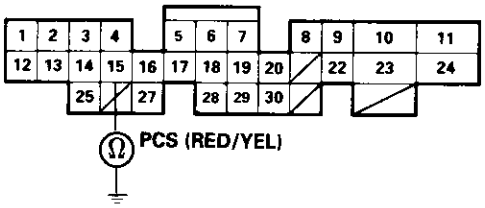

(To page 11-273)

(From page 11-272)

Check the EVAP purge control solenoid valve:
1. Disconnect the vacuum hose from the EVAP control canister.
2. Connect the vacuum pump to the hose and apply vacuum.

Does it hold vacuum?

NO → **Replace the EVAP purge control solenoid valve.**

YES

D16Y5 engine: **D16Y7, D16Y8 engine**

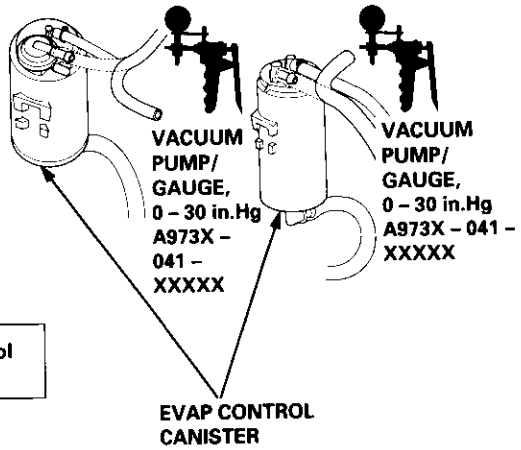

Check the EVAP control canister:
1. Reconnect the vacuum hose to the EVAP control canister.
2. Connect the vacuum/pressure gauge to the purge air hose.
3. Connect ECM/PCM connector terminals A15 and A10 with a jumper wire.
4. Start the engine.
5. Check the vacuum.

ECM/PCM CONNECTOR D (32P)

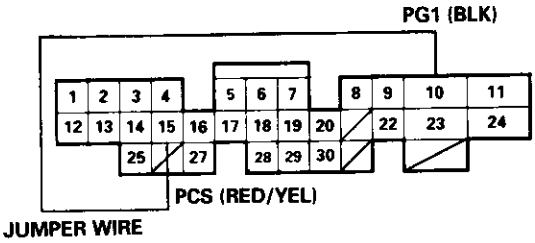

Wire side of female terminals

Does vacuum appear on the gauge?

NO → **Replace the EVAP control canister.**

YES

Check the EVAP two way valve (see page 11-193).

Does the EVAP two way valve work properly?

NO → **Replace the EVAP two way valve.**

YES

D16Y7, D16Y8 engine:

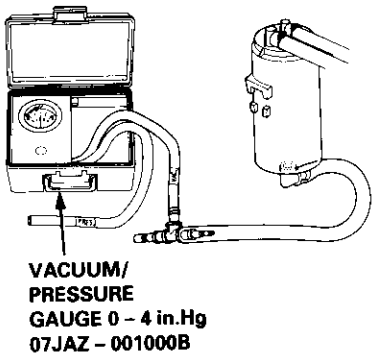

D16Y5 engine:

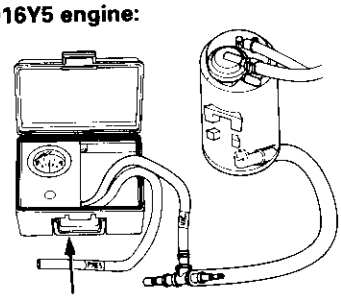

Substitute a known-good ECM/PCM and recheck. If symptom/indication goes away, replace the original ECM/PCM.

(cont'd)

Evaporative Emission (EVAP) Controls (cont'd)

'99 – 00 models only:

P0451 The scan tool indicates Diagnostic Trouble Code (DTC) P0451: The Fuel Tank Pressure sensor circuit range/performance problem.

— The MIL has been reported on.
— DTC P0451 is stored.

Check the fuel tank pressure sensor:
1. Do the ECM/PCM Reset Procedure.
2. Remove the fuel fill cap.
3. Turn the ignition switch ON (II).
4. Monitor the FTP Sensor voltage with the Honda PGM Tester, or measure voltage between body ground and ECM/PCM connector terminals A29 and C18.

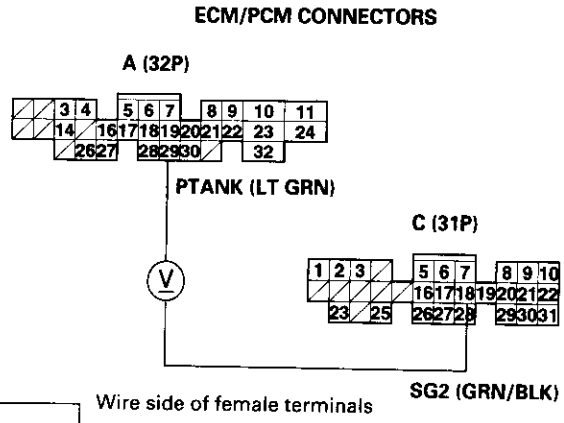

Is there approx. 2.5 V?

YES → **Replace the fuel tank pressure sensor.**

NO

Check the fuel tank pressure sensor:
1. Remove the fuel tank (see page 11-242).
2. Remove the fuel tank pressure sensor assembly from the fuel tank.
3. Connect the fuel tank Pressure Sensor sub-harness 6P connector to the access panel side connector.
4. Disconnect the hose between the EVAP two way valve and the fuel tank pressure sensor at the EVAP two way valve end.
5. Connect a vacuum pump to the open end of that hose.
6. Turn the ignition switch ON (II).
7. Monitor the FTP Sensor voltage with the Honda PGM Tester, or measure voltage between ECM/PCM connector terminals A29 and C18, and carefully pump vacuum on the hose one stroke at a time.
8. The voltage should smoothly drop from the starting approx. 2.5 V down to approx. 1.5 V. STOP applying vacuum when the voltage drops to approx. 1.5 V or damage to the fuel tank pressure sensor may occur.

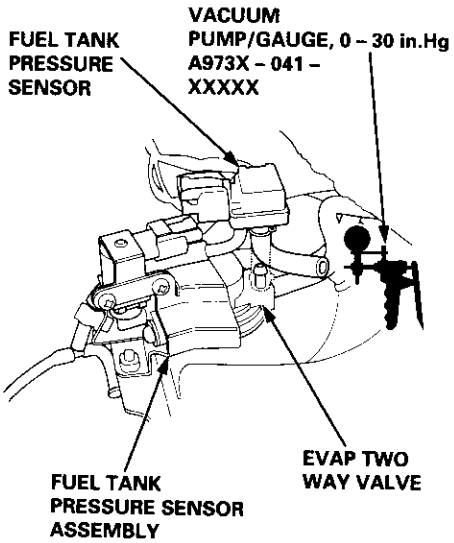

Does the voltage drop to approx. 1.5 V and hold?

NO → **Replace the fuel tank pressure sensor.**

YES

Substitute a known-good ECM/PCM and recheck. If symptom/indication goes away, replace the original ECM/PCM.

Fuel Tank Pressure Sensor ['96 D16Y8 engine (coupe), '97 D16Y7 engine (coupe: KL model, sedan: KL (LX) model), '97 D16Y8 engine (coupe: all models, sedan: KL model, '98-all models) '99 – 00 D16Y5 engine with M/T]:

P0452 The scan tool indicates Diagnostic Trouble Code (DTC) P0452: A low voltage problem in the Fuel Tank Pressure sensor.

The fuel tank pressure sensor converts fuel tank absolute pressure into electrical signals and inputs the ECM/PCM.

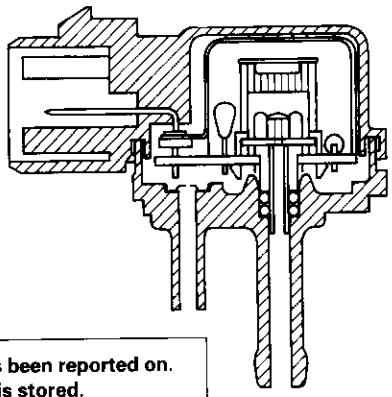

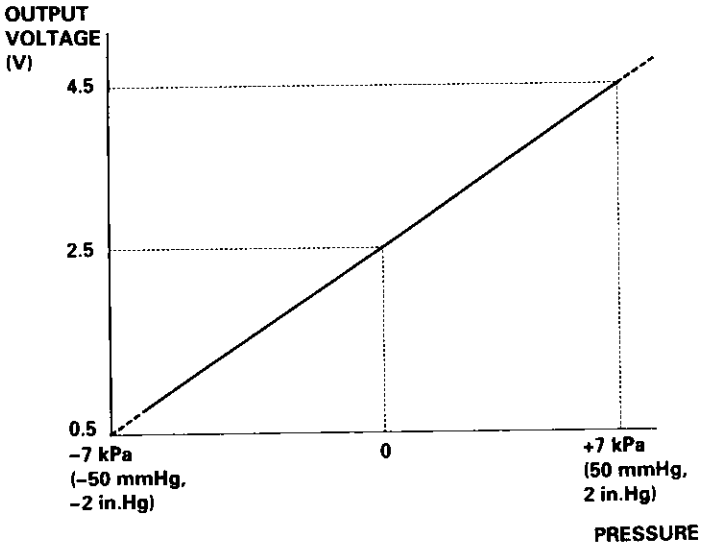

— The MIL has been reported on.
— DTC P0452 is stored.

Check the vacuum lines:
Check the vacuum lines of the fuel tank pressure sensor for misrouting, leakage, breakage and clogging.

Are the vacuum lines OK?

NO → **Repair or replace vacuum lines as necessary.**

YES

Problem verification:
1. Do the ECM/PCM Reset Procedure.
2. Remove the fuel fill cap.
3. Turn the ignition switch ON (II).
4. Monitor the FTP Sensor voltage with the Honda PGM Tester, or measure voltage between body ground and ECM/PCM terminal D15.

Is there approx. 2.5 V?

YES → **Intermittent failure, system is OK at this time. Check for poor connections or loose wires at C131 (located under right side of dash), C401 (located above under-dash fuse/relay box), C574 (C568)* (located under access panel), C792 (fuel tank pressure sensor) and ECM/PCM.**

*: coupe

NO

Check for an open in wire (VCC2 line):
1. Turn the ignition switch OFF.
2. Reinstall the fuel fill cap.
3. Disconnect the fuel tank pressure sensor 3P connector.
4. Turn the ignition switch ON (II).
5. Measure voltage between the fuel tank pressure sensor 3P connector No. 1 terminal and No. 2 terminal.

Is there approx. 5 V?

NO → **Repair open in the wire between the fuel tank pressure sensor and the ECM/PCM (D10).**

YES

(To page 11-276)

ECM/PCM CONNECTOR D (16P)

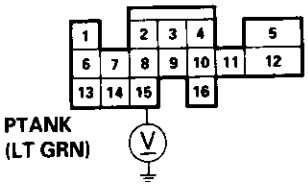

Wire side of female terminals

FUEL TANK PRESSURE SENSOR 3P CONNECTOR (C792)

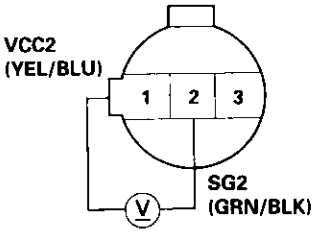

Wire side of female terminals

(cont'd)

Evaporative Emission (EVAP) Controls (cont'd)

(From page 11-275)

Check for a short in the wire (PTANK line):
Measure voltage between the fuel tank pressure sensor 3P connector No. 3 terminal and No. 2 terminal.

Is there approx. 5 V?

YES → **Replace the fuel tank pressure sensor.**

NO

Check for a Short in the wire (PTANK line):
1. Turn the ignition switch OFF.
2. Disconnect the ECM/PCM connector D (16P).
3. Check for continuity between the fuel tank pressure sensor 3P connector No. 3 terminals and body ground.

Is there continuity?

YES → **Repair short in the wire between the fuel tank pressure sensor and ECM/PCM (D15).**

NO

Substitute a known-good ECM/PCM and recheck. If symptom/indication goes away, replace the original ECM/PCM.

FUEL TANK PRESSURE SENSOR 3P CONNECTOR (C792)

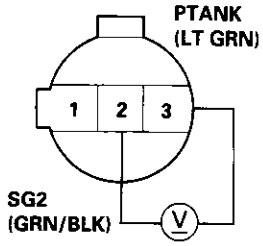

Wire side of female terminals

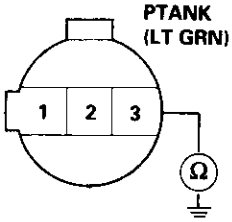

'99 - 00 models except D16Y5 engine with M/T:

P0452 The scan tool indicates Diagnostic Trouble Code (DTC) P0452: A low voltage problem in the Fuel Tank Pressure sensor.

The fuel tank pressure sensor converts fuel tank absolute pressure into electrical signals and inputs the ECM/PCM.

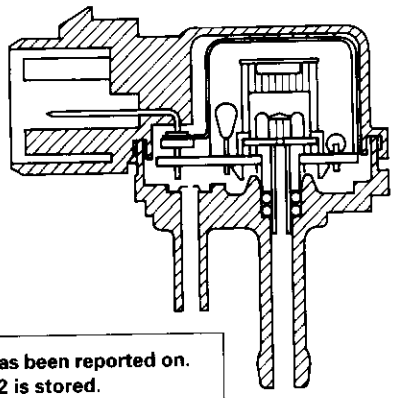

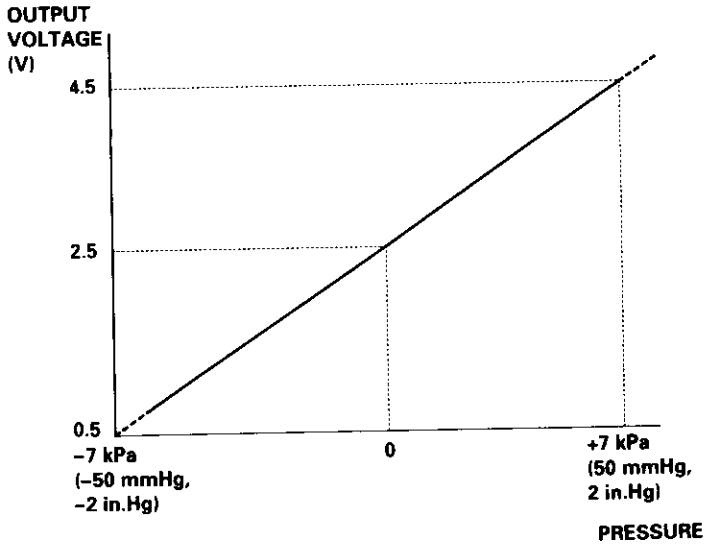

— The MIL has been reported on.
— DTC P0452 is stored.

Check the vacuum lines:
Check the vacuum lines of the fuel tank pressure sensor for misrouting, leakage, breakage and clogging.

Are the vacuum lines OK?

NO → **Repair or replace vacuum lines as necessary.**

YES

Problem verification:
1. Do the ECM/PCM Reset Procedure.
2. Remove the fuel fill cap.
3. Turn the ignition switch ON (II).
4. Monitor the FTP Sensor voltage with the Honda PGM Tester, or measure voltage between body ground and ECM/PCM connector terminal A29.

Is there approx. 2.5 V?

YES → **Intermittent failure, system is OK at this time. Check for poor connections or loose wires at C131 (located under right side of dash), C401 (located above under-dash fuse/relay box), C574 (C568)* (located under access panel), C792 (fuel tank pressure sensor) and ECM/PCM.**

NO

Check for an open in wire (VCC2 line):
1. Turn the ignition switch OFF.
2. Reinstall the fuel fill cap.
3. Remove the access panel from the floor.
4. Disconnect the fuel tank pressure sensor sub-harness 6P connector.
5. Turn the ignition switch ON (II).
6. At the access panel side, measure voltage between the fuel tank pressure sensor sub-harness 6P connector No. 5 terminal and No. 6 terminal.

Is there approx. 5 V?

NO → **Repair open in the wire between the fuel tank pressure sensor and the ECM/PCM (C28).**

YES

(To page 11-278)

*: coupe

ECM/PCM CONNECTOR A (32P)

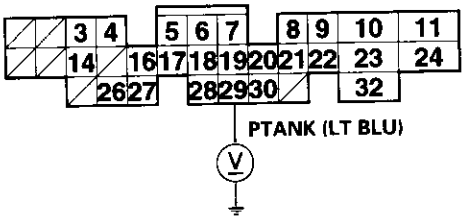

Wire side of female terminals

FUEL TANK PRESSURE SENSOR SUB-HARNESS 6P CONNECTOR (C574 (C568)*)

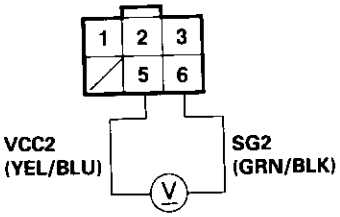

Wire side of female terminals

(cont'd)

Evaporative Emission (EVAP) Controls (cont'd)

(From page 11-277)

Check for a short in the wire (PTANK line):
At the access panel side, measure voltage between the fuel tank pressure sensor sub-harness 6P connector No. 2 terminal and No. 6 terminal.

Is there approx. 5 V?

YES → **Replace the fuel tank pressure sensor.**

NO

Check for a Short in the wire (PTANK line):
1. Turn the ignition switch OFF.
2. Disconnect the ECM/PCM connector A (32P).
3. Check for continuity between the fuel tank pressure sensor sub-harness 6P connector No. 2 terminals and body ground.

Is there continuity?

YES → **Repair short in the wire between the fuel tank pressure sensor and ECM/PCM (A29).**

NO

Substitute a known-good ECM/PCM and recheck. If symptom/indication goes away, replace the original ECM/PCM.

FUEL TANK PRESSURE SENSOR SUB-HARNESS 6P CONNECTOR (C574 (C568)*)

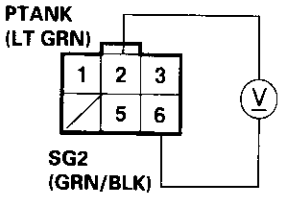

Wire side of female terminals

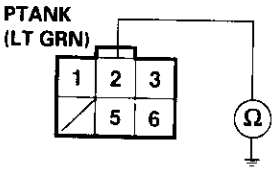

Fuel Tank Pressure Sensor ['96 D16Y8 engine (coupe), '97 D16Y7 engine (coupe: KL model, sedan: KL (LX) model), '97 D16Y8 engine (coupe: all models, sedan: KL model, '98-all models) '99 – 00 D16Y5 engine with M/T]:

P0453 The scan tool indicates Diagnostic Trouble Code (DTC) P0453: A high voltage problem in the Fuel Tank Pressure sensor.

— The MIL has been reported on.
— DTC P0453 is stored.

Check the vacuum lines:
Check the vacuum lines of the fuel tank pressure sensor for misrouting, leakage, breakage and clogging.

Are the vacuum lines OK?
- NO → **Repair or replace vacuum lines as necessary.**
- YES ↓

Problem verification:
1. Do the ECM/PCM Reset Procedure.
2. Remove the fuel fill cap.
3. Turn the ignition switch ON (II).
4. Monitor the FTP Sensor voltage with the Honda PGM Tester, or measure voltage between body ground and ECM/PCM connector terminal D15.

Is there approx. 2.5 V?
- YES → **Intermittent failure, system is OK at this time. Check for poor connections or loose wires at C131 (located under right side of dash), C401 (located above under-dash fuse/relay box), C574 (C568)* (located under access panel), C792 (fuel tank pressure sensor) and ECM/PCM.**

*: coupe

- NO ↓

Check for an open in the wire (SG2 line):
1. Turn the ignition switch OFF.
2. Reinstall the fuel fill cap.
3. Disconnect the fuel tank pressure sensor 3P connector.
4. Turn the ignition switch ON (II).
5. Measure voltage between the fuel tank pressure sensor 3P connector terminals No. 1 and No. 2.

Is there approx. 5 V?
- NO → **Repair open in the wire between the fuel tank pressure sensor and ECM/PCM (D11).**
- YES ↓

Check for an open in the wire (PTANK line):
Measure voltage between the fuel tank pressure sensor 3P connector No. 3 terminal and No. 2 terminal.

Is there approx. 5 V?
- YES → **Replace the fuel tank pressure sensor.**
- NO ↓

(To page 11-280)

ECM/PCM CONNECTOR D (16P)

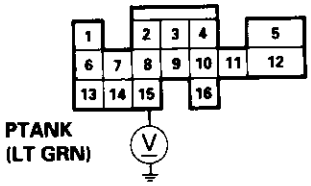

Wire side of female terminals

FUEL TANK PRESSURE SENSOR 3P CONNECTOR (C792)

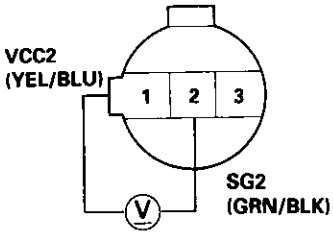

Wire side of female terminals

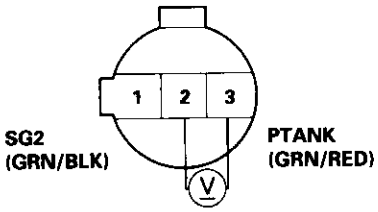

(cont'd)

Evaporative Emission (EVAP) Controls (cont'd)

(From page 11-279)

Check for an open in the wire (PTANK line):
Measure voltage between ECM/PCM connector terminals D15 and D11.

Is there approx. 5 V?

YES → **Repair open in the wire between ECM/PCM (D15) and fuel tank pressure sensor.**

NO → **Substitute a known-good ECM/PCM and recheck. If symptom/indication goes away, replace the original ECM/PCM.**

ECM/PCM CONNECTOR D (16P)

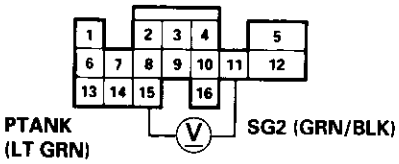

Wire side of female terminals

'99 – 00 models except D16Y5 engine with M/T:

P0453 The scan tool indicates Diagnostic Trouble Code (DTC) P0453: A high voltage problem in the Fuel Tank Pressure sensor.

— The MIL has been reported on.
— DTC P0453 is stored.

Check the vacuum lines:
Check the vacuum lines of the fuel tank pressure sensor for misrouting, leakage, breakage and clogging.

Are the vacuum lines OK?

NO → **Repair or replace vacuum lines as necessary.**

YES

Problem verification:
1. Do the ECM/PCM Reset Procedure.
2. Remove the fuel fill cap.
3. Turn the ignition switch ON (II).
4. Monitor the FTP Sensor voltage with the Honda PGM Tester, or measure voltage between body ground and ECM/PCM connector terminal A29.

Is there approx. 2.5 V?

YES → **Intermittent failure, system is OK at this time. Check for poor connections or loose wires at C131 (located under right side of dash), C401 (located above under-dash fuse/relay box), C574 (C568)* (located under access panel), C792 (fuel tank pressure sensor) and ECM/PCM.**

NO

Check for an open in the wire (SG2 line):
1. Turn the ignition switch OFF.
2. Reinstall the fuel fill cap.
3. Remove the access panel from the floor.
4. Disconnect the fuel tank pressure sensor sub-harness 6P connector.
5. Turn the ignition switch ON (II).
6. At the access panel side, measure voltage between the fuel tank pressure sensor sub-harness 6P connector terminals No. 5 and No. 6.

Is there approx. 5 V?

NO → **Repair open in the wire between the fuel tank pressure sensor and ECM/PCM (C18).**

YES

Check for an open in the wire (PTANK line):
At the access panel side, measure voltage between the fuel tank pressure sensor sub-harness 6P connector No. 2 terminal and No. 6 terminal.

Is there approx. 5 V?

YES → **Replace the fuel tank pressure sensor.**

NO

*: coupe

(To page 11-282)

ECM/PCM CONNECTOR A (32P)

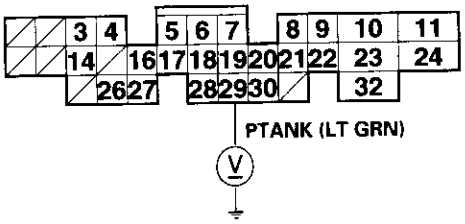

Wire side of female terminals

FUEL TANK PRESSURE SENSOR SUB-HARNESS 6P CONNECTOR (C574 (C568)*)

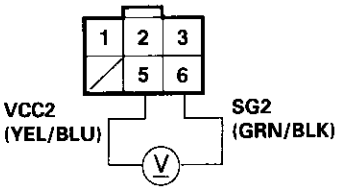

Wire side of female terminals

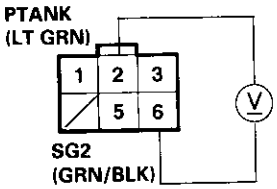

(cont'd)

Evaporative Emission (EVAP) Controls (cont'd)

(From page 11-281)

Check for an open in the wire (PTANK line):
Measure voltage between ECM/PCM connector terminals A29 and C18.

Is there approx. 5 V?

YES → **Repair open in the wire between ECM/PCM (A29) and fuel tank pressure sensor.**

NO → **Substitute a known-good ECM/PCM and recheck. If symptom/indication goes away, replace the original ECM/PCM.**

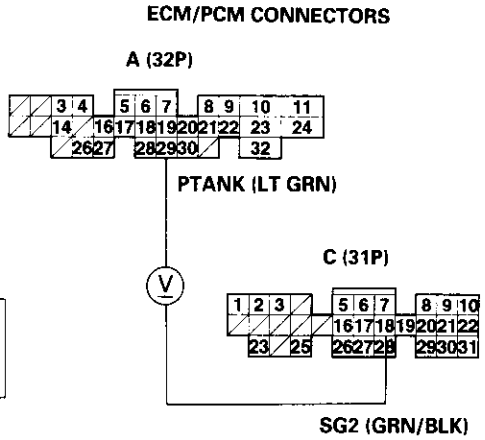

Wire side of female terminals

['96 D16Y8 engine (coupe), '97 D16Y7 engine (coupe: KL model, sedan: KL (LX) model), '97 D16Y8 engine (coupe: all models, sedan: KL model, '98-all models) '99 – 00 D16Y5 engine with M/T]:

P1456 The scan tool indicates Diagnostic Trouble Code (DTC) P1456: Evaporative Emission (EVAP) control system leak detected (fuel tank system).

P1457 The scan tool indicates Diagnostic Trouble Code (DTC) P1457: Evaporative Emission (EVAP) control system leak detected (EVAP control canister system).

Possible Cause

- Fuel fill cap
- Vacuum Connections
- Fuel Tank
- EVAP Control Canister Vent Shut Valve
- EVAP Control Canister Vent Shut Valve Circuit
- EVAP Purge Control Solenoid Valve
- EVAP Purge Control Solenoid Valve Circuit
- EVAP Bypass Solenoid Valve
- EVAP Bypass Solenoid Valve Circuit
- Fuel Tank Pressure Sensor
- Fuel Tank Pressure Sensor Circuit
- EVAP Control Canister
- Throttle Body

Troubleshooting Flowchart

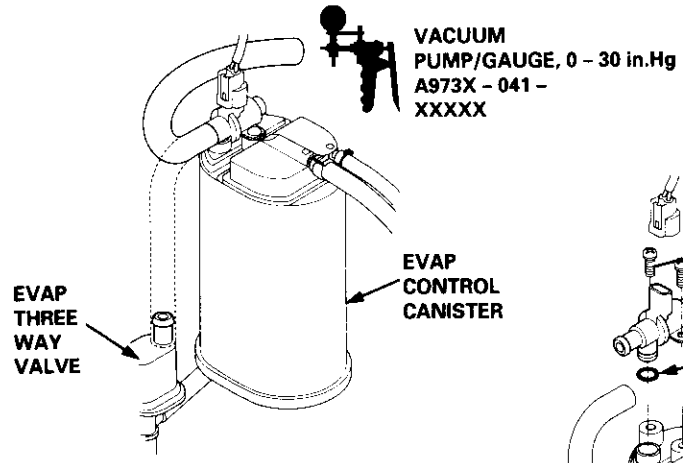

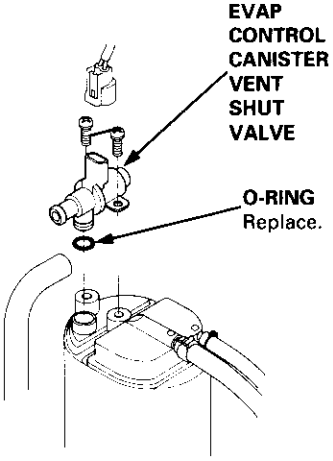

— The MIL has been reported on.
— DTC P1456 or P1457 is stored.

Check the EVAP control canister vent shut valve:
1. Disconnect the vacuum hose from the EVAP three way valve and connect a vacuum pump to the hose.
2. Remove the EVAP control canister vent shut valve from the canister.
3. Turn the ignition switch ON (II).
4. Apply vacuum to the hose.

Does the valve hold vacuum?

YES → **Check for a short in the wire (VSV line):** Disconnect the 2P connector from the EVAP control canister vent shut valve.

Does the valve hold vacuum?

NO → **Repair short in the wire between the EVAP control canister vent shut valve and the ECM/PCM (A29).**

YES → **Replace the EVAP control canister vent shut valve.**

NO

Check the EVAP control canister vent shut valve:
1. Turn the ignition switch OFF.
2. Connect ECM/PCM connector terminal A29 to body ground with a jumper wire.
3. Turn the ignition switch ON (II).
4. Apply vacuum to the hose.

Does the valve hold vacuum?

YES → A → (To page 11-284)

NO → B → (To page 11-284)

ECM/PCM CONNECTOR A (32P)

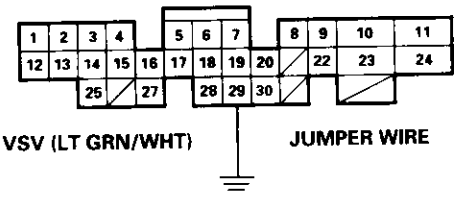

Wire side of female terminals

(cont'd)

Evaporative Emission (EVAP) Controls (cont'd)

(From page 11-283)

A

Check the vacuum when cold:
1. Disconnect the vacuum hose shown from the EVAP control canister and connect a vacuum gauge to the hose.
2. Start the engine and allow it to idle.
   NOTE: Engine coolant temperature must be below 154°F (68°C) or A/C switch OFF.
3. Quickly raise the engine speed to 3,000 rpm.

(To page 11-285)

(From page 11-283)

B

Check for an open in the wire (IG1 line):
1. Turn the ignition switch OFF.
2. Disconnect the 2P connector from the EVAP control canister vent shut valve.
3. Turn the ignition switch ON (II).
4. Measure voltage between the EVAP control canister vent shut valve 2P connector terminal No. 2 and body ground.

EVAP CONTROL CANISTER VENT SHUT VALVE 2P CONNECTOR (C141)

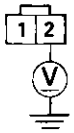

IG1 (BLK/YEL)

Wire side of female terminals

Is there battery voltage?

NO → **Repair open in the wire between the EVAP control canister vent shut valve and the No. 15 ALTERNATOR SP SENSOR (7.5 A) fuse.**

YES

Check for an open in the wire (VSV line):
1. Turn the ignition switch OFF.
2. Reconnect the 2P connector to the EVAP control canister vent shut valve.
3. Turn the ignition switch ON (II).
4. Measure voltage between ECM/PCM connector terminals A29 and A10.

ECM/PCM CONNECTOR A (32P)

PG1 (BLK)

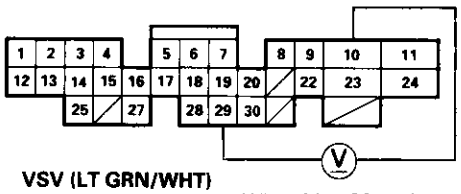

VSV (LT GRN/WHT)

Wire side of female terminals

Is there battery voltage?

NO → **Repair open in the wire between the EVAP control canister vent shut valve and the ECM/PCM (A29).**

YES

Replace the EVAP control canister vent shut valve.

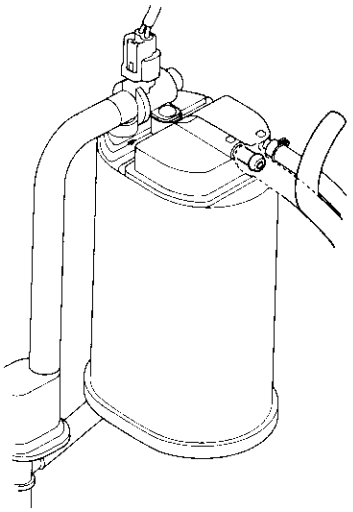

VACUUM PUMP/ GAUGE, 0 – 30 in.Hg A973X – 041 – XXXXX

(From page 11-284)

Is there vacuum?

YES →

Check the EVAP purge control solenoid valve:
1. Disconnect the 2P connector from the EVAP purge control solenoid valve.
2. Quickly raise the engine speed to 3,000 rpm.

Is there vacuum?

YES → **Inspect vacuum hose routing. If OK, replace the EVAP purge control solenoid valve.**

NO →

Check for a short in the wire (PCS line):
1. Turn the ignition switch OFF.
2. Disconnect ECM/PCM connector A (32P).
3. Check for continuity between the EVAP purge control solenoid valve 2P connector terminal No. 2 and body ground.

EVAP PURGE CONTROL SOLENOID VALVE 2P CONNECTOR (C114)

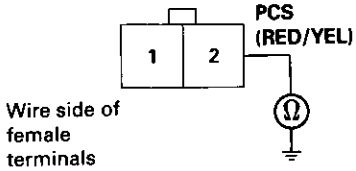

Is there continuity?

YES → **Repair short in the wire between the EVAP purge control solenoid valve and the ECM/PCM (A15).**

NO →

Substitute a known-good ECM/PCM and recheck. If symptom/indication goes away, replace the original ECM/PCM.

NO →

Check the vacuum when hot:
1. Turn the ignition switch OFF.
2. Block the rear wheels and set the parking brake.
3. Jack up the front of the vehicle and support it with safety stands.
4. Start the engine. Hold the engine at 3,000 rpm with no load (in Park or neutral) until the radiator fan comes on, then let it idle.
5. Check for vacuum at the vacuum hose with transmission in gear (A/T in 2 position, M/T in 1st gear) after starting the engine.
6. Quickly raise the engine speed to 3,000 rpm.

Is there vacuum?

NO →

Check the EVAP purge control solenoid valve:
1. Turn the ignition switch OFF.
2. Disconnect the 2P connector from the EVAP purge control solenoid valve and warm it up to normal operating temperature again if necessary.
3. Start the engine.
4. At the harness side, measure voltage between the EVAP purge control solenoid valve 2P connector terminal No. 1 and No. 2 with the transmission in gear (A/T in 2 position, M/T in 1st gear).

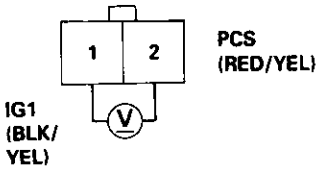

Is there battery voltage?

YES → **Inspect vacuum hose routing. If OK, replace EVAP purge control solenoid valve.**

NO →

Check for an open in the wire (IG1 line):
At the harness side, measure voltage between the EVAP purge control solenoid valve 2P connector terminal No. 1 and body ground.

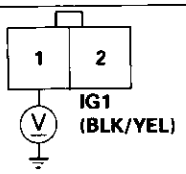

Is there battery voltage?

NO → **Repair open in the wire between EVAP purge control solenoid valve and the No. 15 ALTERNATOR SP SENSOR (7.5 A) fuse.**

YES →

A

(To page 11-286)

B

(To page 11-286)

(cont'd)

Evaporative Emission (EVAP) Controls (cont'd)

(From page 11-285)

A

Check the EVAP two way valve:
See EVAP two way valve test (see page 11-294).

Is it OK?

NO → **Replace the EVAP two way valve.**

YES

Check the EVAP bypass solenoid valve:
1. Disconnect the vacuum hose from the EVAP two way valve and connect a vacuum pump to the hose.
2. Turn the ignition switch ON (II).
3. Apply vacuum to the hose.

Does the valve hold vacuum?

NO → **Check for a short in the wire (2WBS line):** Disconnect the 2P connector from the EVAP bypass solenoid valve.

YES

(To page 11-287)

(From page 11-285)

B

Check for an open in the wire (PCS line):
1. Turn the ignition switch OFF.
2. Reconnect the 2P connector to the EVAP purge control solenoid valve.
3. Turn the ignition switch ON (II).
4. Measure voltage between ECM/PCM connector terminals A15 and A10.

Is there battery voltage?

NO → **Repair open in the wire between the EVAP purge control solenoid valve and the ECM/PCM (A15).**

YES

Substitute a known-good ECM/PCM and retest. If symptom/indication goes away, replace the original ECM/PCM.

ECM/PCM CONNECTOR A (32P)

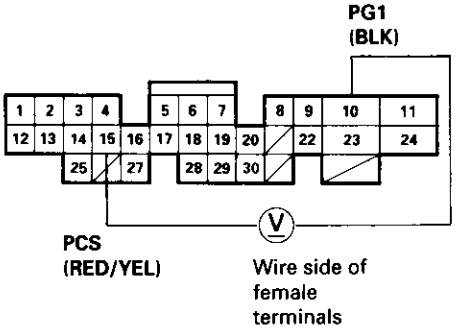

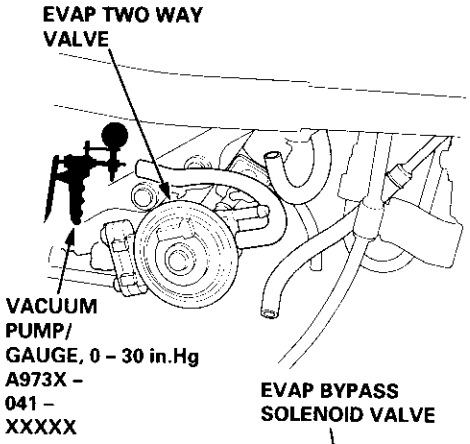

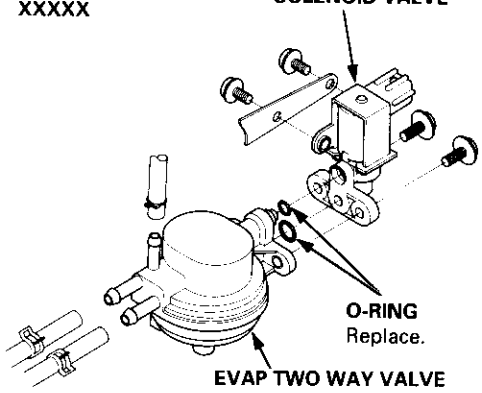

Does the valve hold vacuum?

YES → **Repair short in the wire between EVAP bypass solenoid valve and the ECM/PCM (A28).**

NO

Replace the EVAP bypass solenoid valve.

(From page 11-286)

Check the EVAP bypass solenoid valve:
1. Turn the ignition switch OFF.
2. Connect ECM/PCM connector terminal A28 and body ground with a jumper wire.
3. Turn the ignition switch ON (II).

Does valve hold vacuum?

YES

Check for an open in the wire (IG1 line):
1. Turn the ignition switch OFF.
2. Disconnect the 2P connector from the EVAP bypass solenoid valve.
3. Turn the ignition switch ON (II).
4. Measure voltage between the EVAP bypass solenoid valve 2P connector terminal No. 1 and body ground.

ECM/PCM CONNECTOR A (32P)

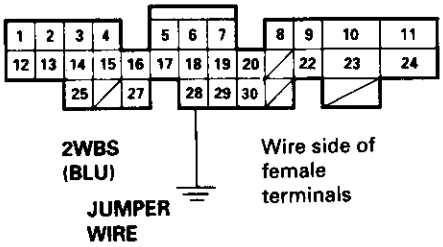

EVAP BYPASS SOLENOID VALVE 2P CONNECTOR (C793)

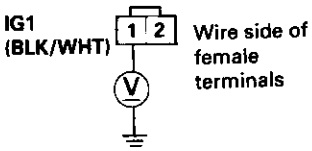

Is there battery voltage?

NO

Repair open in the wire between EVAP purge control solenoid valve and the No. 15 ALTERNATOR SP SENSOR (7.5 A) fuse.

YES

Check for an open in the wire (2WBS line):
1. Turn the ignition switch OFF.
2. Reconnect the 2P connector to the EVAP bypass solenoid valve.
3. Turn the ignition switch ON (II).
4. Measure voltage between ECM/PCM connector terminals A28 and A10.

ECM/PCM CONNECTOR A (32P)

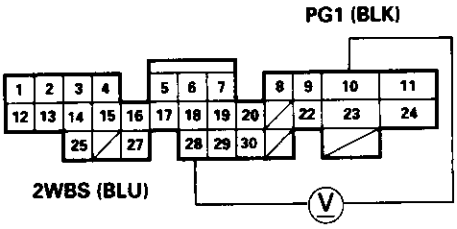

Is there battery voltage?

NO

Repair open in the wire between the EVAP bypass solenoid valve and the ECM/PCM (A28).

YES

Replace the EVAP bypass solenoid valve.

NO

Check the following parts for leakage to atmosphere, and repair or replace if necessary:
- **fuel fill cap**
- **fuel tank**
- **fuel vapor pipe**
- **EVAP two way valve**
- **EVAP bypass solenoid valve**
- **fuel tank pressure sensor**
- **EVAP control canister**
- **EVAP control canister vent shut valve**
- **EVAP purge control solenoid valve**
- **vacuum hoses and connections**

(cont'd)

Evaporative Emission (EVAP) Controls (cont'd)

'99 – 00 models except D16Y5 engine with M/T:

P1456 The scan tool indicates Diagnostic Trouble Code (DTC) P1456: Evaporative Emission (EVAP) control system leak detected (fuel tank system).

P1457 The scan tool indicates Diagnostic Trouble Code (DTC) P1457: Evaporative Emission (EVAP) control system leak detected (EVAP control canister system).

Possible Cause

- Fuel fill cap
- Vacuum Connections
- Fuel Tank
- EVAP Control Canister Vent Shut Valve
- EVAP Control Canister Vent Shut Valve Circuit
- EVAP Purge Control Solenoid Valve
- EVAP Purge Control Solenoid Valve Circuit
- EVAP Bypass Solenoid Valve
- EVAP Bypass Solenoid Valve Circuit
- Fuel Tank Pressure Sensor
- Fuel Tank Pressure Sensor Circuit
- EVAP Control Canister
- ORVR vent shut valve
- ORVR vapor recirculation valve
- Throttle Body

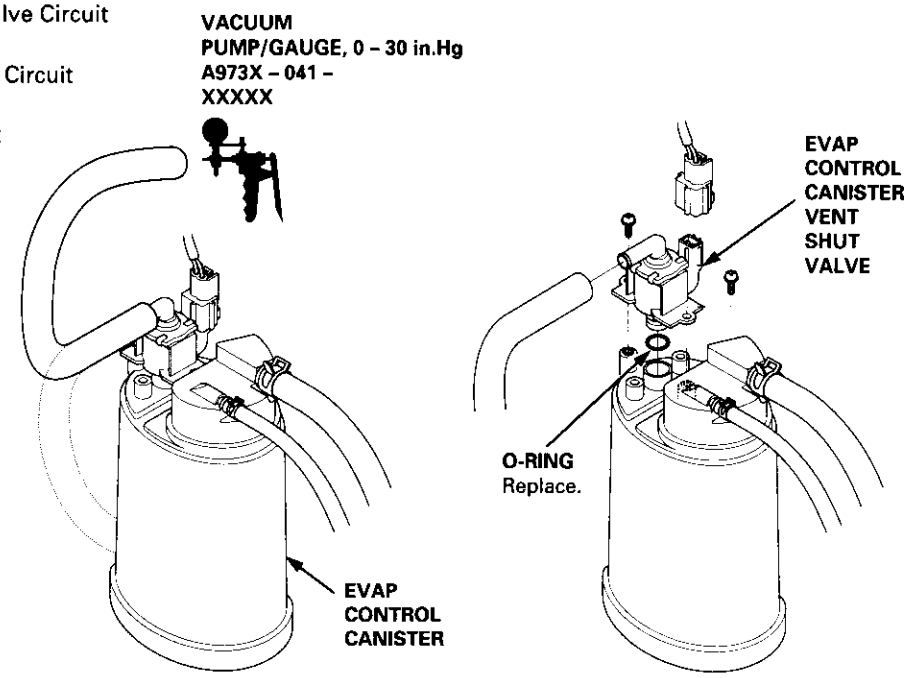

Troubleshooting Flowchart

— The MIL has been reported on.
— DTC P1456 or P1457 is stored.

Check the EVAP control canister vent shut valve:
1. Disconnect the vacuum hose from the EVAP three way valve and connect a vacuum pump to the hose.
2. Remove the EVAP control canister vent shut valve from the canister.
3. Turn the ignition switch ON (II).
4. Apply vacuum to the hose.

Does the valve hold vacuum?

YES → **Check for a short in the wire (VSV line):** Disconnect the 2P connector from the EVAP control canister vent shut valve.

Does the valve hold vacuum?

NO → **Repair short in the wire between the EVAP control canister vent shut valve and the ECM/PCM (A4).**

YES → **Replace the EVAP control canister vent shut valve.**

NO

Check the EVAP control canister vent shut valve:
1. Turn the ignition switch OFF.
2. Connect ECM/PCM connector terminal A4 to body ground with a jumper wire.
3. Turn the ignition switch ON (II).
4. Apply vacuum to the hose.

Does the valve hold vacuum?

YES → A → (To page 11-289)

NO → B → (To page 11-289)

ECM/PCM CONNECTOR A (32P)

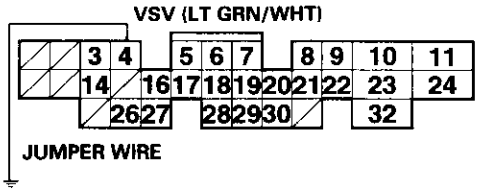

Wire side of female terminals

(From page 11-288)

A

Check the vacuum when cold:
1. Disconnect the vacuum hose shown from the EVAP control canister and connect a vacuum gauge to the hose.
2. Start the engine and allow it to idle.
   NOTE: Engine coolant temperature must be below 154°F (68°C) or A/C switch OFF.
3. Quickly raise the engine speed to 3,000 rpm.

(To page 11-290)

(From page 11-288)

B

Check for an open in the wire (IG1 line):
1. Turn the ignition switch OFF.
2. Disconnect the 2P connector from the EVAP control canister vent shut valve.
3. Turn the ignition switch ON (II).
4. Measure voltage between the EVAP control canister vent shut valve 2P connector terminal No. 2 and body ground.

EVAP CONTROL CANISTER VENT SHUT VALVE 2P CONNECTOR (C141)

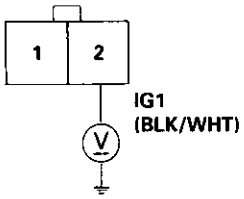

Wire side of female terminals

Is there battery voltage?

NO → **Repair open in the wire between the EVAP control canister vent shut valve and the No. 15 ALTERNATOR SP SENSOR (7.5 A) fuse.**

YES

Check for an open in the wire (VSV line):
1. Turn the ignition switch OFF.
2. Reconnect the 2P connector to the EVAP control canister vent shut valve.
3. Turn the ignition switch ON (II).
4. Measure voltage between ECM/PCM connector terminals A4 and B2.

ECM/PCM CONNECTORS

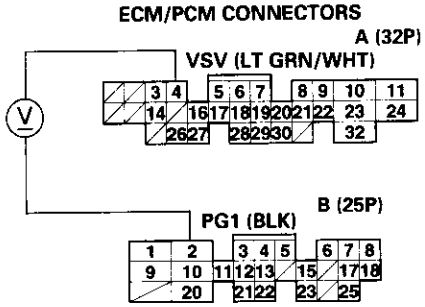

Wire side of female terminals

Is there battery voltage?

NO → **Repair open in the wire between the EVAP control canister vent shut valve and the ECM/PCM (A4).**

YES

Replace the EVAP control canister vent shut valve.

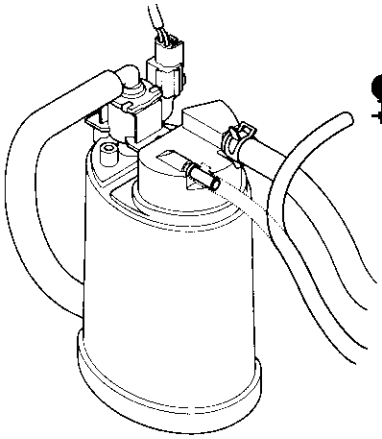

VACUUM PUMP/ GAUGE, 0 – 30 in.Hg A973X – 041 – XXXXX

(cont'd)

Evaporative Emission (EVAP) Controls (cont'd)

(From page 11-289)

Is there vacuum?

YES →

Check the EVAP purge control solenoid valve:
1. Disconnect the 2P connector from the EVAP purge control solenoid valve.
2. Quickly raise the engine speed to 3,000 rpm.

Is there vacuum?

YES → **Inspect vacuum hose routing. If OK, replace the EVAP purge control solenoid valve.**

NO →

Check for a short in the wire (PCS line):
1. Turn the ignition switch OFF.
2. Disconnect ECM/PCM connector A (32P).
3. Check for continuity between the EVAP purge control solenoid valve 2P connector terminal No. 2 and body ground.

EVAP PURGE CONTROL SOLENOID VALVE 2P CONNECTOR (C114)

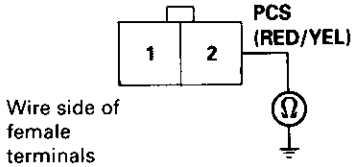

Is there continuity?

YES → **Repair short in the wire between the EVAP purge control solenoid valve and the ECM/PCM (A6).**

NO →

Substitute a known-good ECM/PCM and recheck. If symptom/indication goes away, replace the original ECM/PCM.

NO →

Check the vacuum when hot:
1. Turn the ignition switch OFF.
2. Block the rear wheels and set the parking brake.
3. Jack up the front of the vehicle and support it with safety stands.
4. Start the engine. Hold the engine at 3,000 rpm with no load (in Park or neutral) until the radiator fan comes on, then let it idle.
5. Check for vacuum at the vacuum hose with transmission in gear (A/T in 2 position, M/T in 1st gear) after starting the engine.
6. Quickly raise the engine speed to 3,000 rpm.

Is there vacuum?

YES →

Check the EVAP purge control solenoid valve:
1. Turn the ignition switch OFF.
2. Disconnect the 2P connector from the EVAP purge control solenoid valve and warm it up to normal operating temperature again if necessary.
3. Start the engine.
4. At the harness side, measure voltage between the EVAP purge control solenoid valve 2P connector terminal No. 1 and No. 2 with the transmission in gear (A/T in 2 position, M/T in 1st gear).

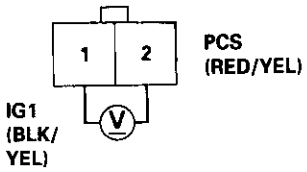

Is there battery voltage?

YES → **Inspect vacuum hose routing. If OK, replace EVAP purge control solenoid valve.**

NO →

Check for an open in the wire (IG1 line):
At the harness side, measure voltage between the EVAP purge control solenoid valve 2P connector terminal No. 1 and body ground.

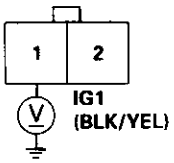

Is there battery voltage?

NO → **Repair open in the wire between EVAP purge control solenoid valve and the No. 15 ALTERNATOR SP SENSOR (7.5 A) fuse.**

YES →

A

(To page 11-291)

B

(To page 11-291)

(From page 11-290)

A

Check the EVAP two way valve:
See EVAP two way valve test (see page 11-295).

Is it OK?

NO → **Replace the EVAP two way valve.**

YES

Check the EVAP bypass solenoid valve:
1. Remove the fuel tank (see page 11-242).
2. Lift up the fuel tank with a transmission jack, and connect the fuel tank pressure sensor sub-harness 6P connector to the access panel side connector.
3. Disconnect the vacuum hose from the EVAP two way valve and connect a vacuum pump to the hose.
4. Turn the ignition switch ON (II).
5. Apply vacuum to the hose.

(To page 11-292)

(From page 11-290)

B

Check for an open in the wire (PCS line):
1. Turn the ignition switch OFF.
2. Reconnect the 2P connector to the EVAP purge control solenoid valve.
3. Turn the ignition switch ON (II).
4. Measure voltage between ECM/PCM connector terminals A6 and B2.

Is there battery voltage?

NO → **Repair open in the wire between the EVAP purge control solenoid valve and the ECM/PCM (A6).**

YES

Substitute a known-good ECM/PCM and retest. If symptom/indication goes away, replace the original ECM/PCM.

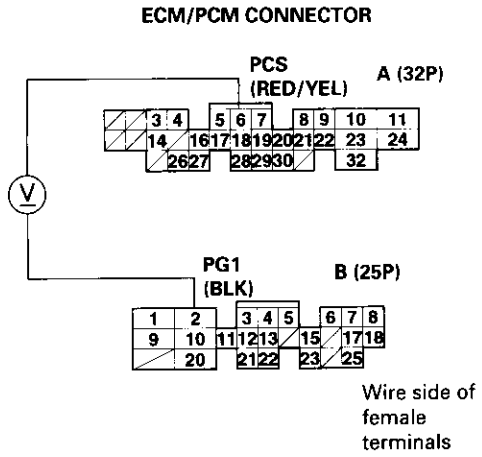

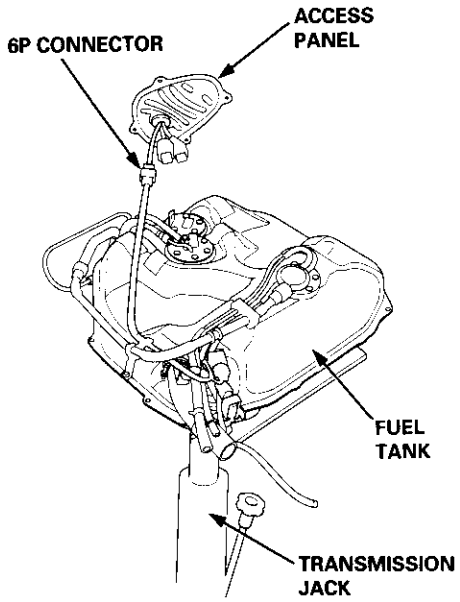

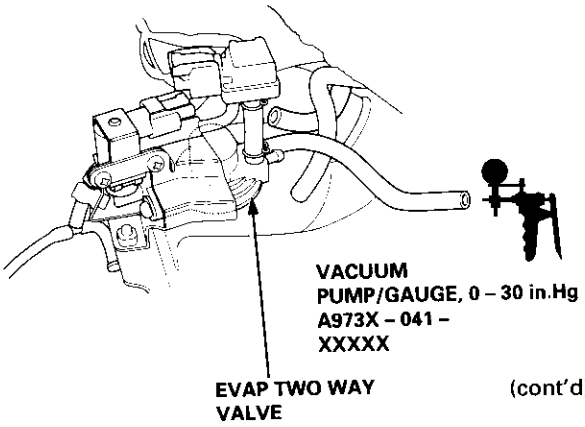

(cont'd)

Evaporative Emission (EVAP) Controls (cont'd)

(From page 11-291)

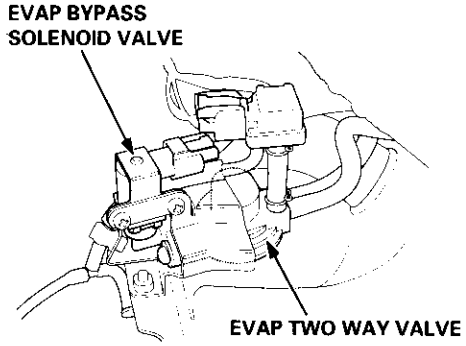

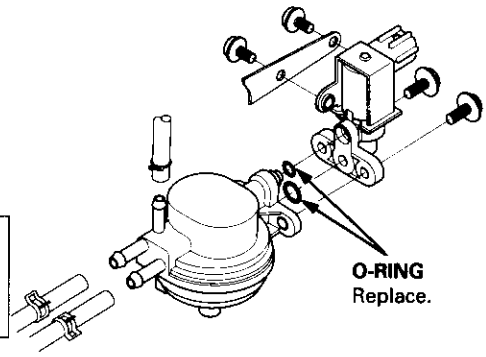

Does the valve hold vacuum?

NO → **Check for a short in the wire (2WBS line):** Disconnect the 2P connector from the EVAP bypass solenoid valve.

Does the valve hold vacuum?

YES → **Repair short in the wire between EVAP bypass solenoid valve and the ECM/PCM (A3).**

NO → **Replace the EVAP bypass solenoid valve.**

YES

Check the EVAP bypass solenoid valve:
1. Turn the ignition switch OFF.
2. Connect ECM/PCM connector terminal A3 and body ground with a jumper wire.
3. Turn the ignition switch ON (II).

Does the valve hold vacuum?

YES → **Check for an open in the wire (IG1 line):**
1. Turn the ignition switch OFF.
2. Disconnect the 2P connector from the EVAP bypass solenoid valve.
3. Turn the ignition switch ON (II).
4. Measure voltage between the EVAP bypass solenoid valve 2P connector terminal No. 1 and body ground.

NO

ECM/PCM CONNECTOR A (32P)

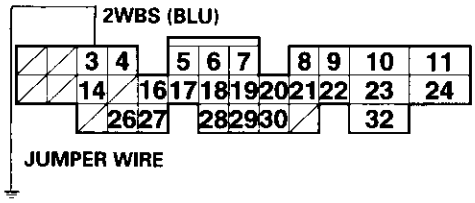

Wire side of female terminals

EVAP BYPASS SOLENOID VALVE 2P CONNECTOR (C793)

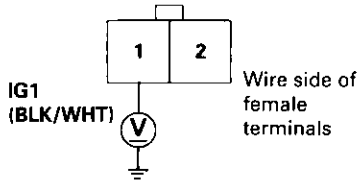

Is there battery voltage?

NO → **Repair open in the wire between EVAP purge control solenoid valve and the No. 15 ALTERNATOR SP SENSOR (7.5 A) fuse.**

YES

A

(To page 11-293)

B

(To page 11-293)

(From page 11-292)

A

Check the following parts for leakage to atmosphere, and repair or replace if necessary:
- **fuel fill cap**
- **fuel tank**
- **fuel vapor pipe**
- **EVAP two way valve**
- **EVAP bypass solenoid valve**
- **fuel tank pressure sensor**
- **EVAP control canister**
- **EVAP control canister vent shut valve**
- **EVAP purge control solenoid valve**
- **ORVR vent shut valve**
- **ORVR vapor recirculation valve**
- **vacuum hoses and connections**

(From page 11-292)

B

Check for an open in the wire (2WBS line):
1. Turn the ignition switch OFF.
2. Reconnect the 2P connector to the EVAP bypass solenoid valve.
3. Turn the ignition switch ON (II).
4. Measure voltage between ECM/PCM connector terminals A3 and B2.

Is there battery voltage?

NO → **Repair open in the wire between the EVAP bypass solenoid valve and the ECM/PCM (A3).**

YES → **Replace the EVAP bypass solenoid valve.**

ECM/PCM CONNECTORS

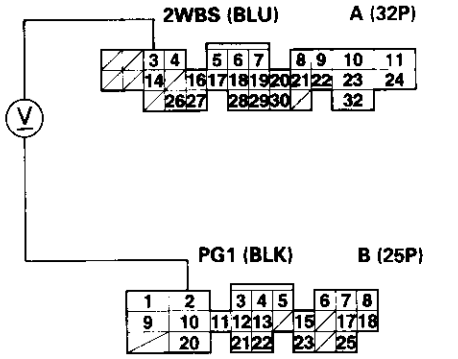

Wire side of female terminals

(cont'd)

Evaporative Emission (EVAP) Controls (cont'd)

Evaporative Emission (EVAP) Two Way Valve Testing ['96 D16Y8 engine (coupe), '97 D16Y7 engine (coupe: KL model, sedan: KL (LX) model), '97 D16Y8 engine (coupe: all models, sedan: KL model, '98-all models)]:

1. Remove the fuel fill cap.

2. Remove the vapor line from the EVAP two way valve, and connect it to a T-fitting from a vacuum gauge and a vacuum pump as shown.

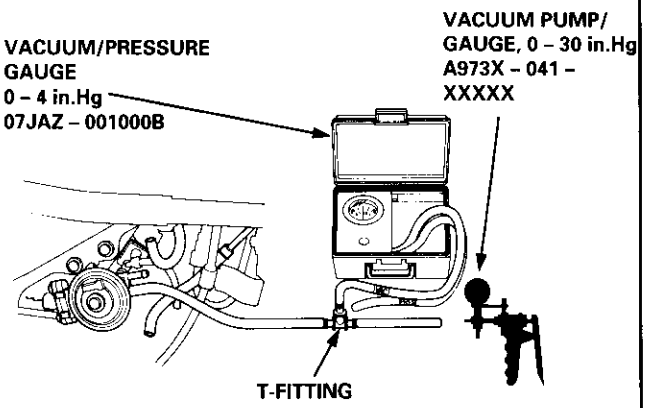

3. Apply vacuum slowly and continuously while watching the gauge. The vacuum should stabilize momentarily at 0.8 – 2.1 kPa (6 – 16 mmHg, 0.2 – 0.6 in.Hg).
   If the vacuum stabilizes (valve opens) below 0.8 kPa (6 mmHg, 0.2 in.Hg) or above 2.1 kPa (16 mmHg, 0.6 in.Hg), install a new valve and retest.

4. Move the vacuum pump hose from the vacuum fitting to the pressure fitting, and move the vacuum gauge hose from the vacuum side to the pressure side as shown.

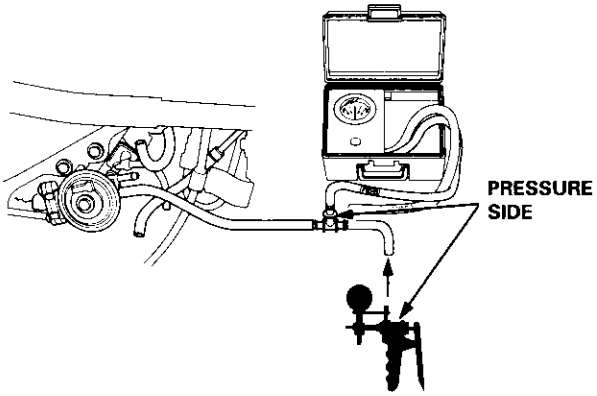

5. Slowly pressurize the vapor line while watching the gauge. The pressure should be stabilize momentarily above 1.0 kPa (8 mmHg, 0.3 in.Hg).
   - If the pressure momentarily stabilizes (valve opens) above 1.0 kPa (8 mmHg, 0.3 in.Hg), the valve is OK.
   - If the pressure stabilizes below 1.0 kPa (8 mmHg, 0.3 in.Hg), install a new valve and retest.

['96 D16Y5 engine, '96 D16Y7 engine, '96 D16Y8 engine (sedan), '97 D16Y5 engine, '97 D16Y7 engine (coupe: KA, KC models, sedan: KA, KC, KL (DX) models, hatchback: all models), '97 D16Y8 engine (sedan: KA, KC models)]:

1. Remove the fuel fill cap.

2. Remove the vapor line from the EVAP two way valve on the fuel tank, and connect it to a T-fitting from a vacuum gauge and a vacuum pump as shown.

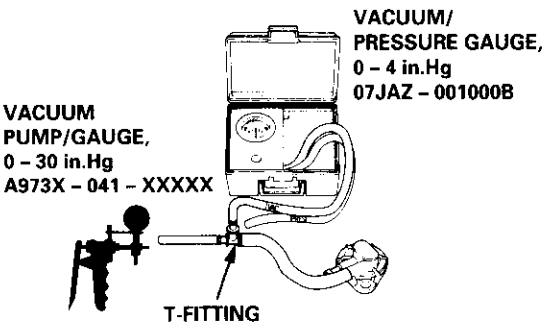

3. Apply vacuum slowly and continuously while watching the gauge. The vacuum should stabilize momentarily at 0.7 – 2.0 kPa (5 – 15 mmHg, 0.2 – 0.6 in.Hg).
   If the vacuum stabilizes (valve opens) below 0.7 kPa (5 mmHg, 0.2 in.Hg) or above 2.0 kPa (15 mmHg, 0.6 in.Hg), install a new valve and retest.

4. Move the vacuum pump hose from the vacuum fitting to the pressure fitting, and move the vacuum gauge hose from the vacuum side to the pressure side as shown.

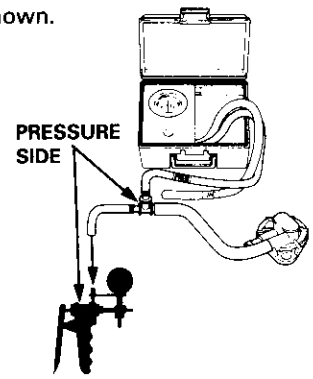

5. Slowly pressurize the vapor line while watching the gauge. The pressure should stabilize at 1.3 – 4.7 kPa (0 – 35 mmHg, 0.4 – 1.4 in.Hg).
   - If the pressure momentarily stabilizes (valve opens) at 1.3 – 4.7 kPa (10 – 35 mmHg, 0.4 – 1.4 in. Hg), the valve is OK.
   - If the pressure stabilizes below 1.3 kPa (10 mmHg, 0.4 in.Hg) or above 4.7 kPa (35 mmHg, 1.4 in.Hg), install a new valve and retest.

Evaporative Emission (EVAP) Two Way Valve Testing

'99 – 00 models:

1. Remove the fuel tank (see page 11-242).

2. Remove the vapor line from the EVAP two way valve (located above the EVAP control canister), and connect it to a T-fitting from vacuum gauge and vacuum pump as shown.

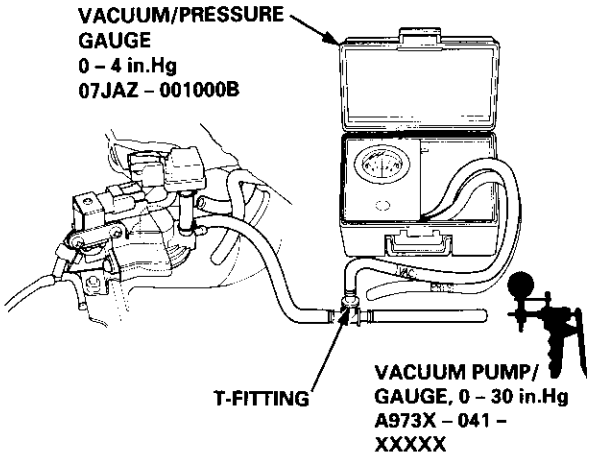

3. Apply vacuum slowly and continuously while watching the gauge.
   The vacuum should stabilize momentarily at 0.8 – 2.1 kPa (6 – 16 mmHg, 0.2 – 0.6 in.Hg).
   If the vacuum stabilizes (valve opens) below 0.8 kPa (6 mmHg, 0.2 in.Hg) or above 2.1 kPa (16 mmHg, 0.6 in.Hg), install a new valve and retest.

4. Move the vacuum pump hose from the vacuum fitting to the pressure fitting, and move the vacuum gauge hose from the vacuum side to the pressure side as shown.

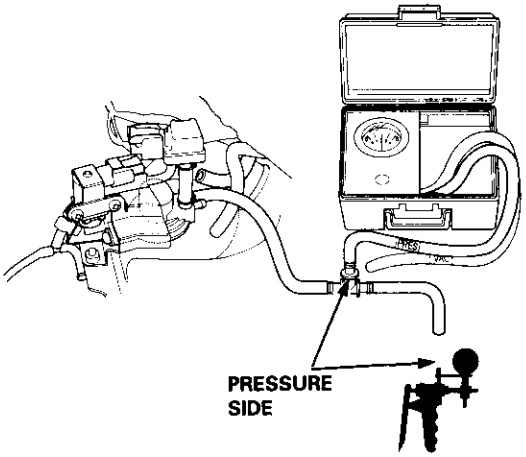

5. Slowly pressurize the vapor line while watching the gauge.
   The pressure should be stabilize momentarily above 1.0 kPa (8 mmHg, 0.3 in.Hg).
   - If the pressure momentarily stabilizes (valve opens) above 1.0 kPa (8 mmHg, 0.3 in.Hg), the valve is OK.
   - If the pressure stabilizes below 1.0 kPa (8 mmHg, 0.3 in.Hg), install a new valve and retest.

(cont'd)

Evaporative Emission (EVAP) Controls (cont'd)

ORVR Vent Shut Valve Test

Float Test

1. Make sure the fuel tank is less than half full.
2. Remove the fuel fill cap to relieve the fuel tank pressure, then reinstall the cap.
3. Remove the fuel hose joint protector. Disconnect the ORVR vapor recirculation hose, and connect a vacuum pump to the vapor recirculation hose.

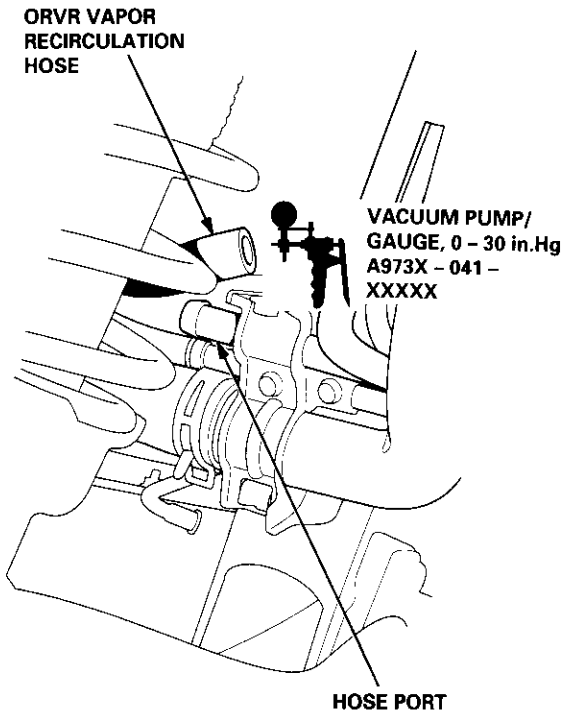

4. Plug the hose port.
5. Apply vacuum to the ORVR vapor recirculation hose.
   - If the vacuum holds, replace the ORVR vent shut valve (see page 11-297).
   - If the vacuum does not hold, the float is OK.

Valve Test

1. Make sure the fuel tank is less than half full.
2. Remove the fuel fill cap.
3. Remove the fuel hose joint protector. Disconnect the ORVR signal hose.

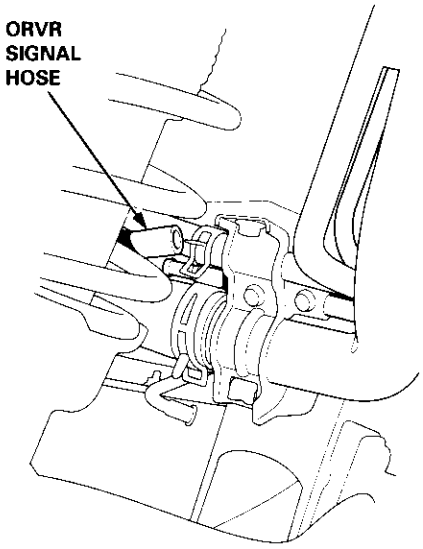

4. Disconnect the vacuum hose from the EVAP control canister, and then plug the port with a plug.

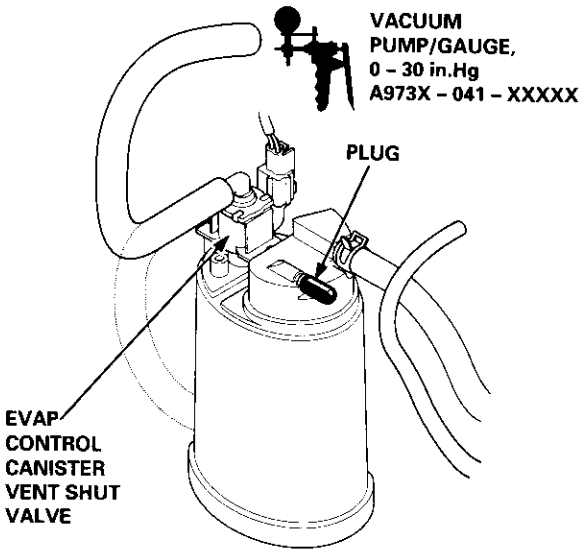

5. Disconnect the vacuum hose from the EVAP control canister vent shut valve, and connect a vacuum pump to the vacuum hose.
6. Pump the vacuum pump 80 times.
   - If the vacuum holds, go to step 7.
   - If the vacuum does not hold, go to step 9.

7. Connect a second vacuum pump to the ORVR signal hose.

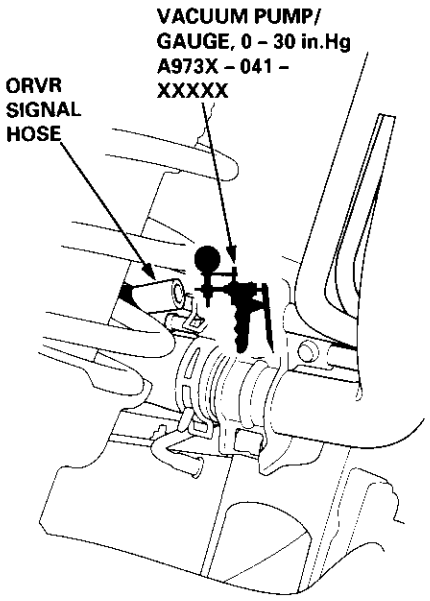

8. Apply vacuum (1 pump) to the ORVR signal hose, then check the vacuum on the pump in step 6.
   - If the vacuum holds, replace the ORVR vent shut valve.
   - If the vacuum is released, the ORVR vent shut valve is OK.

9. Disconnect the ORVR quick disconnect from the EVAP canister, then plug the port on the canister.
   Reapply vacuum (80 pumps).
   - If the vacuum holds, replace the ORVR vent shut valve.
   - If the vacuum does not hold, inspect the EVAP canister vent shut valve O-ring. If the O-ring is OK, replace the EVAP canister and repeat step 4.

ORVR Vent Shut Valve Replacement

1. Remove the fuel tank (see page 11-242).
2. Remove the ORVR vent shut valve from the fuel tank.
3. Install parts in the reverse order of removal.

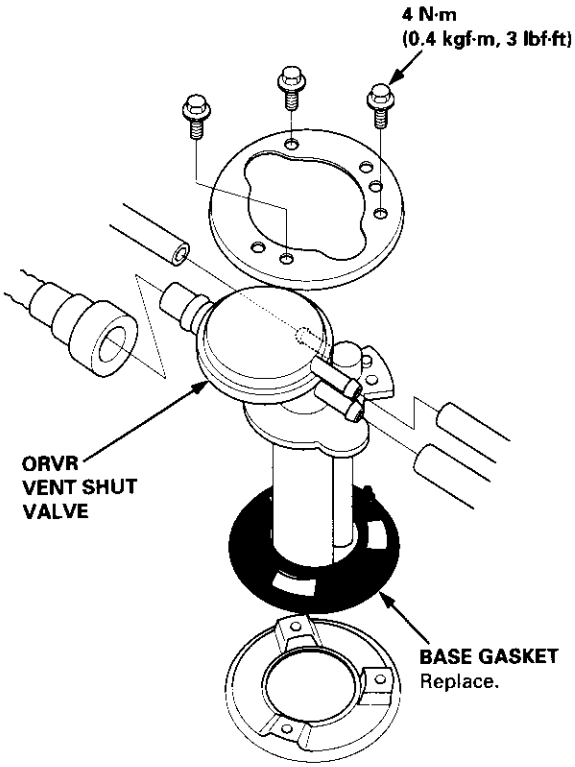

Transaxle

Clutch 12-1
Manual Transmission 13-1
Automatic Transmission 14-1
Differential 15-1
Driveshafts 16-1

Clutch

Special Tools 12-2
Illustrated Index 12-3
Clutch Pedal
  Adjustment 12-4
Clutch Master Cylinder
  Removal/Installation 12-5
Slave Cylinder
  Removal/Installation 12-6
Pressure Plate
  Removal/Inspection 12-7
Clutch Disc
  Removal/Inspection 12-8
Flywheel
  Inspection 12-9
  Replacement 12-9
Clutch Disc, Pressure Plate
  Installation 12-10
Release Bearing
  Removal/Inspection 12-11
  Installation 12-12

Special Tools

Ref. No.	Tool Number	Description	Qty	Page Reference
①	07JAF – PM7011A	Clutch Alignment Disc	1	12-7
②	07JAF – PM7012A	Clutch Alignment Shaft	1	12-7, 8, 10, 11
③	07LAB – PV00100 or 07924 – PD20003	Ring Gear Holder	1	12-7, 9, 10, 11
④	07746 – 0010100	Attachment, 32 x 35 mm	1	12-10
⑤	07749 – 0010000	Driver	1	12-10
⑥	07936 – 3710100	Handle	1	12-7, 8, 10, 11

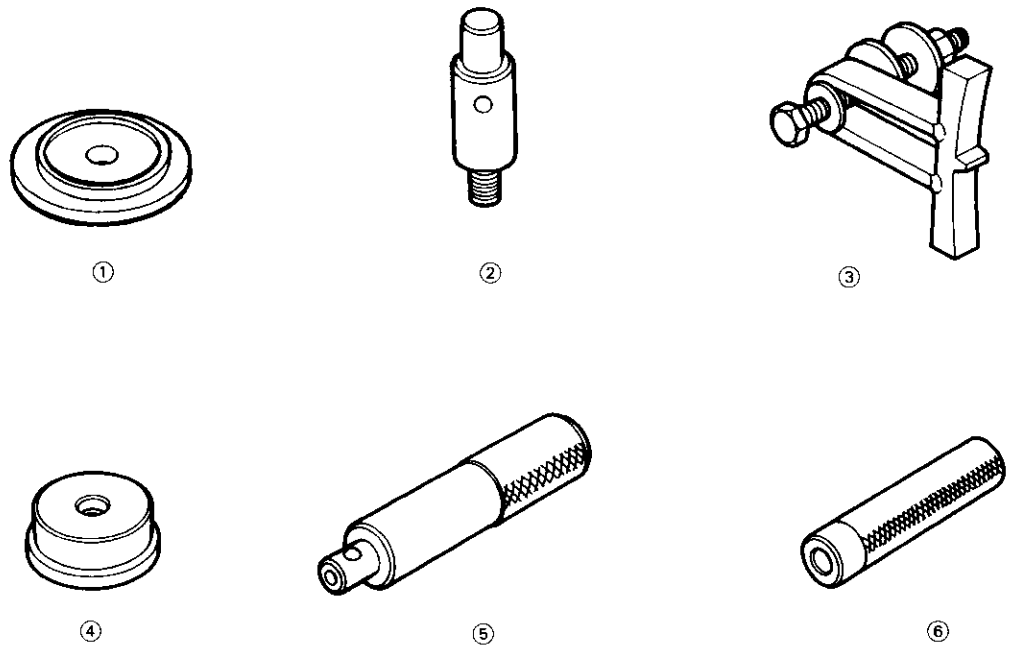

NOTE:
- Whenever the transmission is removed, clean and grease the release bearing sliding surface.
- If the parts marked with an asterisk (*) are removed, the clutch hydraulic system must be bled (see page 12-6).
- Inspect the hoses for damage, leaks, interference, and twisting.

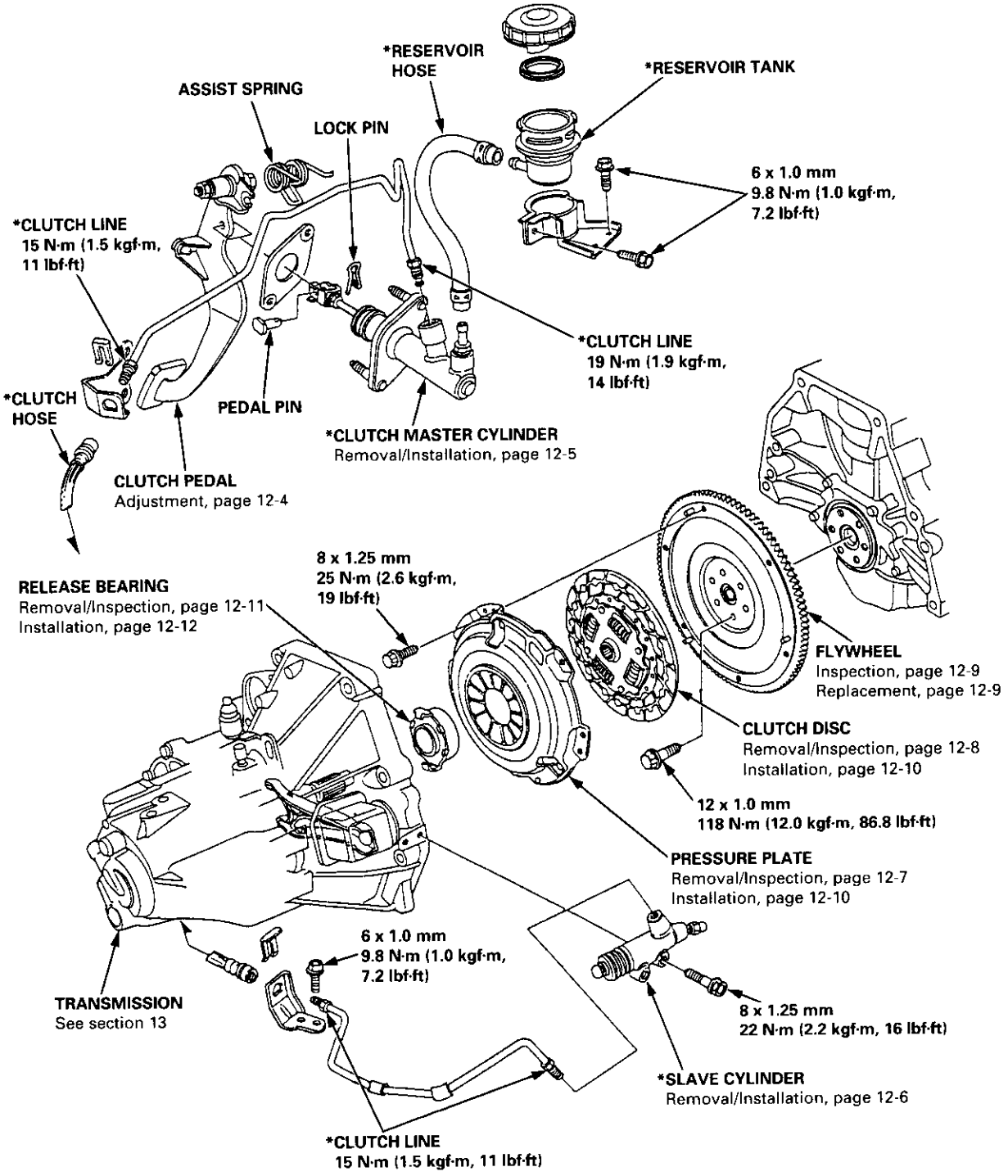

Adjustment

NOTE:
- To check the clutch interlock switch and clutch switch, see section 23.
- The clutch is self-adjusting to compensate for wear.

CAUTION: If there is no clearance between the master cylinder piston and push rod, the release bearing is held against the diaphragm spring, which can result in clutch slippage or other clutch problems.

1. Loosen locknut A, and back off the clutch switch (or adjusting bolt) until it no longer touches the clutch pedal.
2. Loosen locknut C, and turn the push rod in or out to get the specified stroke (Ⓐ) and height (Ⓒ) at the clutch pedal.
3. Tighten locknut C.
4. Thread in the clutch switch (or adjusting bolt) until it contacts the clutch pedal.
5. Turn the clutch switch (or adjusting bolt) in an additional 3/4 to 1 full turn.
6. Tighten locknut A.
7. Loosen locknut B on the clutch interlock switch.
8. Measure the clearance between the floor board and clutch pedal with the clutch pedal fully depressed.
9. Release the clutch pedal 15 - 20 mm (0.59 - 0.79 in) from the fully depressed position and hold it there. Adjust the position of the clutch interlock switch so that the engine will start with the clutch pedal in this position.
10. Thread the clutch interlock switch an additional in 3/4 to 1 full turn.
11. Tighten locknut B.

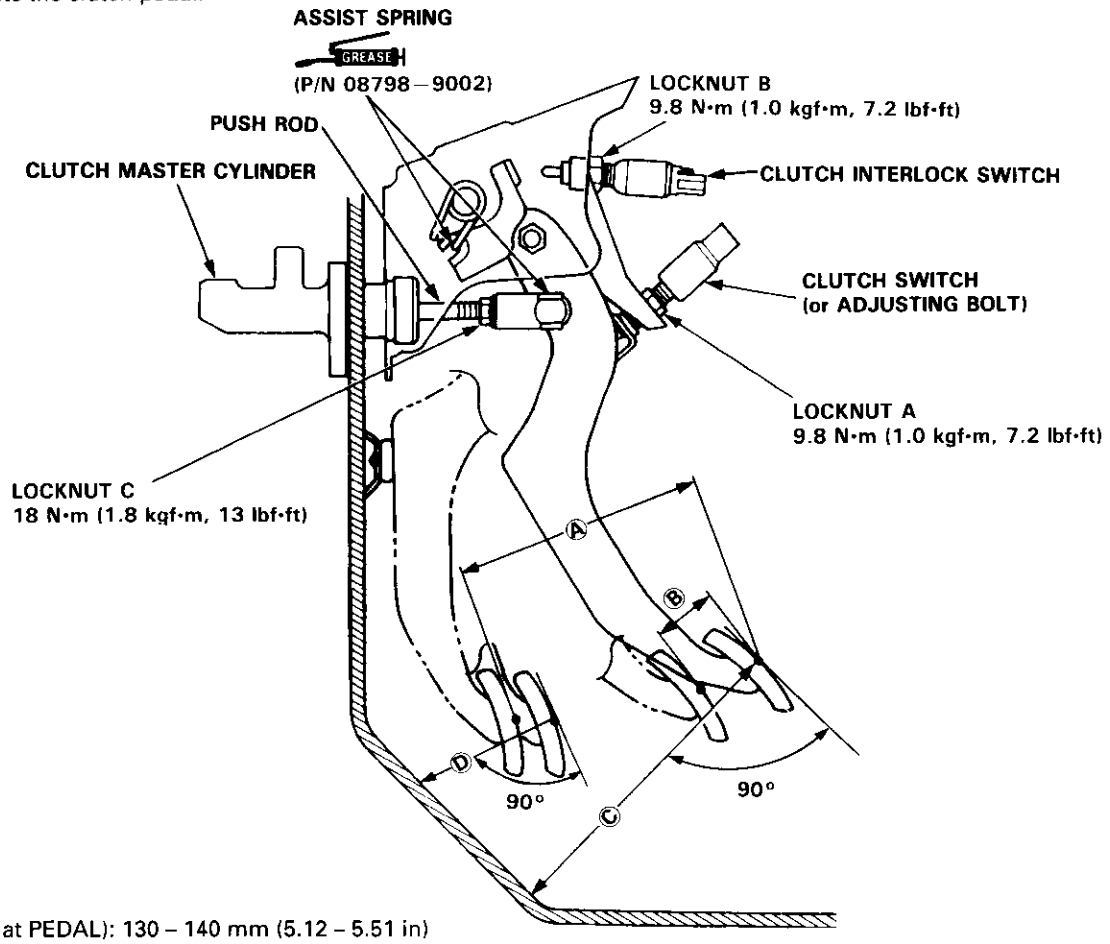

Ⓐ (STROKE at PEDAL): 130 - 140 mm (5.12 - 5.51 in)
Ⓑ (TOTAL CLUTCH PEDAL FREE PLAY): 12 - 21 mm (0.47 - 0.83 in) include the pedal play 1 - 10 mm (0.04 - 0.39 in)
Ⓒ (CLUTCH PEDAL HEIGHT): 165 mm (6.50 in) to the floor
Ⓓ (CLUTCH PEDAL DISENGAGEMENT HEIGHT): 83 mm (3.27 in) minimum to the floor

Removal/Installation

CAUTION:

- **Do not spill brake fluid on the vehicle; it may damage the paint; if brake fluid does contact the paint, wash it off immediately with water.**
- **Plug the end of the clutch line and reservoir hose with a shop towel to prevent brake fluid from coming out.**

1. The brake fluid can be removed from the clutch master cylinder reservoir with a syringe.

2. Disconnect the clutch line and reservoir hose from the clutch master cylinder.

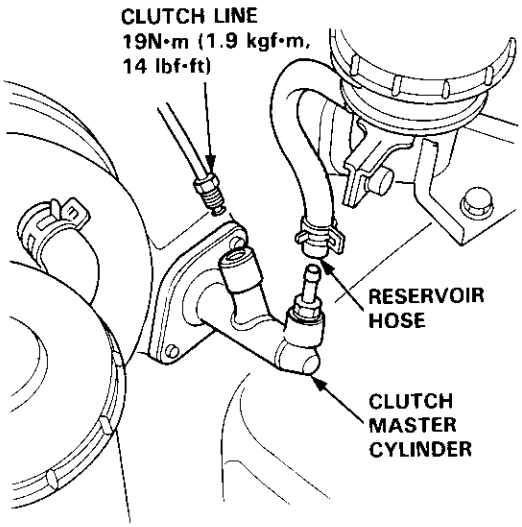

3. Pry out the lock pin, and pull the pedal pin out of the yoke. Remove the nuts.

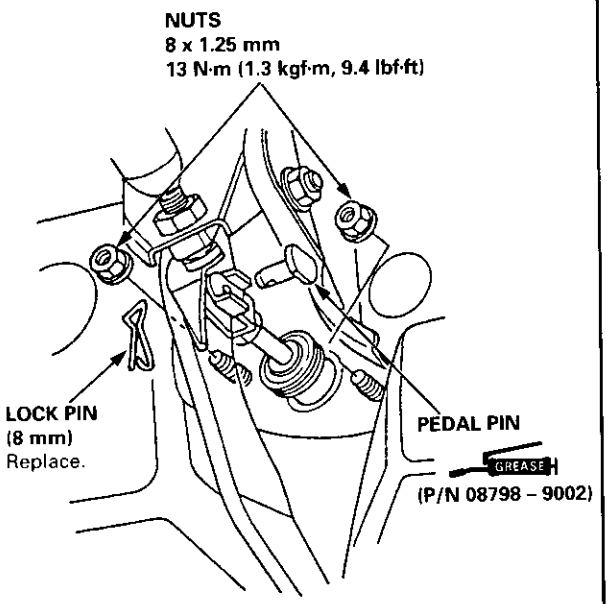

4. Remove the clutch master cylinder.

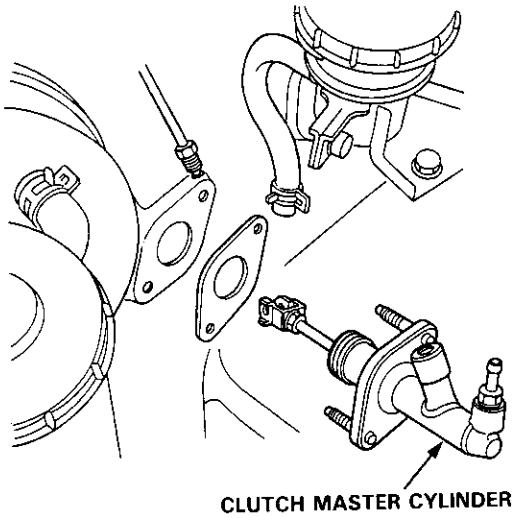

5. Install the clutch master cylinder in the reverse order of removal.

   NOTE: Bleed the clutch hydraulic system (see page 12-6).

Slave Cylinder

Removal/Installation

CAUTION:
- **Do not spill brake fluid on the vehicle; it may damage the paint; if brake fluid does contact the paint, wash it off immediately with water.**
- **Plug the end of the clutch line with a shop towel to prevent brake fluid from coming out.**

GREASE: Super High Temp Urea Grease (P/N 08798 - 9002).
GREASE: Brake Assembly Lube or equivalent rubber grease.

1. Disconnect the clutch line from the slave cylinder.

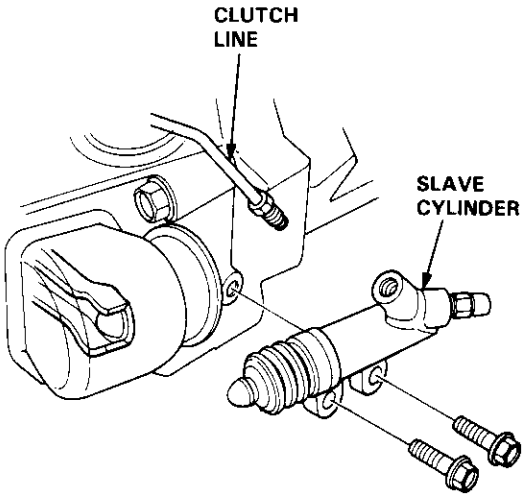

2. Remove the slave cylinder from the clutch housing.

3. Install the slave cylinder in the reverse order of removal.

NOTE: Make sure the boot is installed on the slave cylinder.

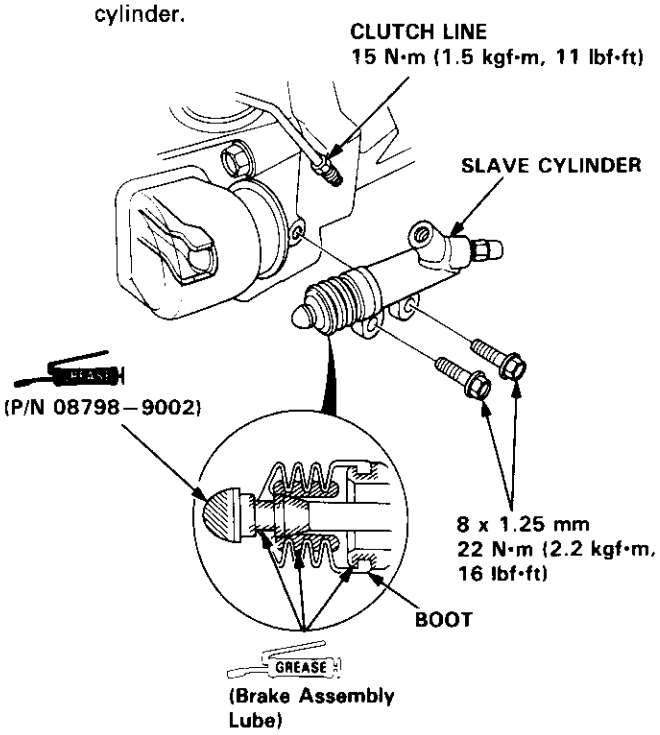

4. Bleed the clutch hydraulic system.

- Attach a hose to the bleeder screw, and suspend the hose in a container of brake fluid.
- Make sure there is an adequate supply of fluid at the clutch master cylinder, then slowly pump the clutch pedal until no more bubbles appear at the bleeder hose.
- Refill the clutch master cylinder with fluid when done.
- Always use Genuine Honda DOT 3 Brake Fluid. Using a non-Honda brake fluid can cause corrosion and decrease the life of the system.
- Confirm clutch operation, and check for leaking fluid.

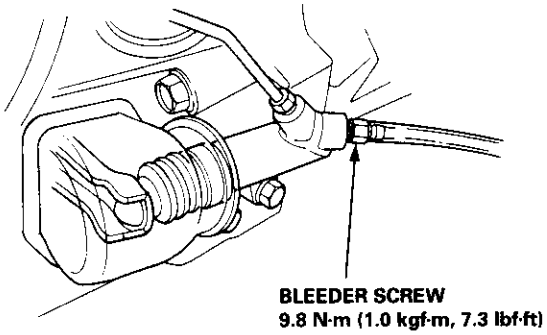

Removal/Inspection

1. Inspect the fingers of the diaphragm spring for wear at the release bearing contact area.

2. Check the diaphragm spring fingers for height using the special tools and a feeler gauge.

   Standard (New): 0.6 mm (0.02 in) max.
   Service Limit: 1.0 mm (0.04 in)

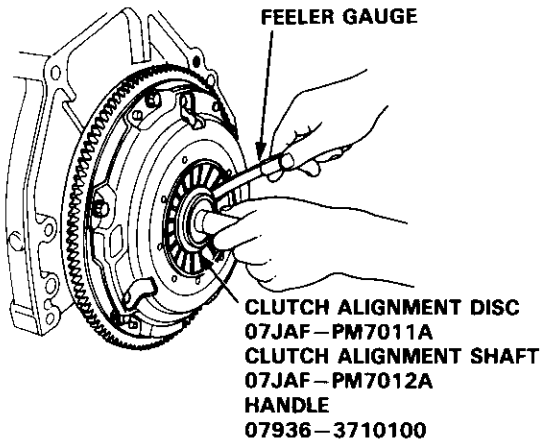

   If the height exceeds the service limit, replace the pressure plate.

3. Install the special tools.

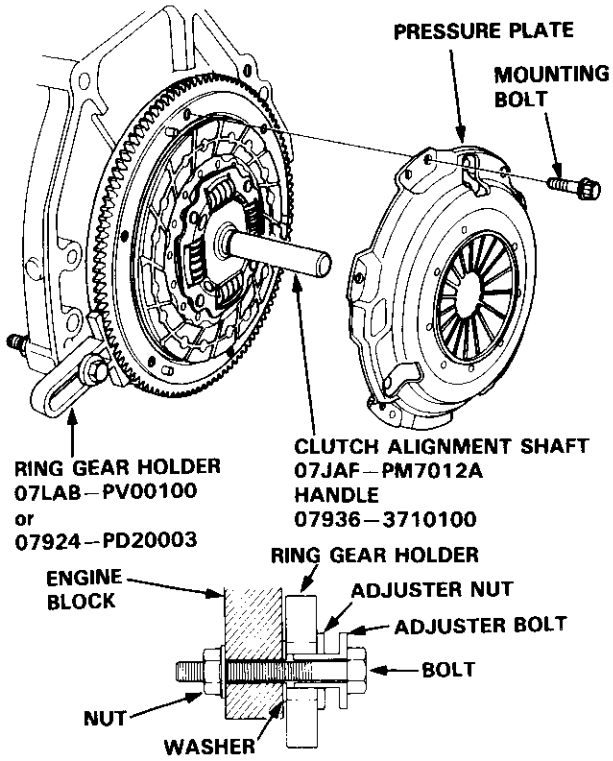

4. To prevent warping, unscrew the pressure plate mounting bolts in a crisscross pattern in several steps, then remove the pressure plate.

5. Inspect the pressure plate surface for wear, cracks, and burning.

6. Inspect for warpage using a straight edge and feeler gauge.

   NOTE: Measure across the pressure plate at three points.

   Standard (New): 0.03 mm (0.001 in) max.
   Service Limit: 0.15 mm (0.006 in)

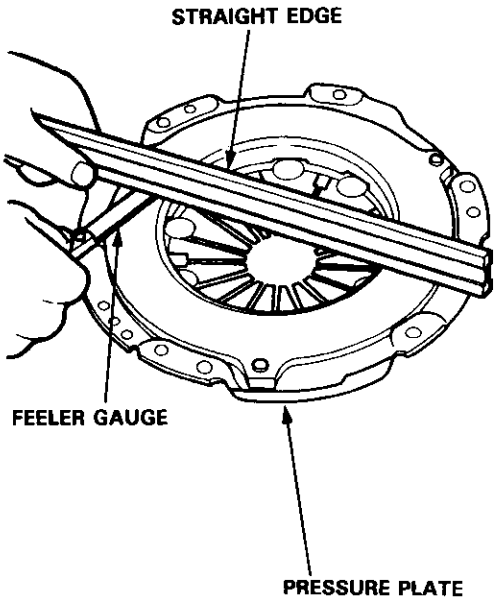

   If the warpage exceeds the service limit, replace the pressure plate.

Removal/Inspection

1. Remove the clutch disc and special tools.

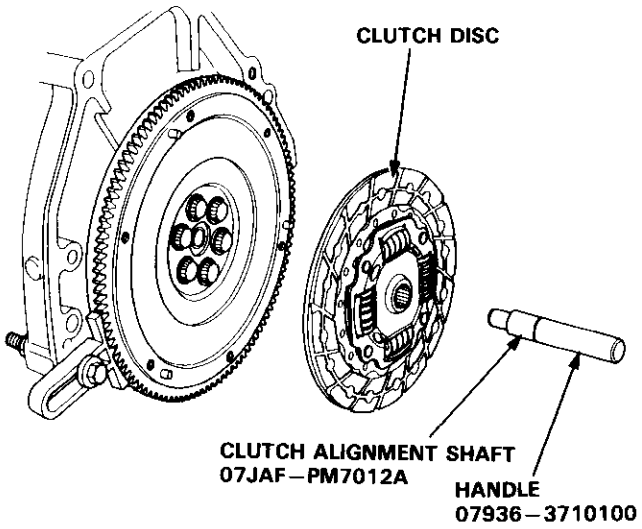

2. Inspect lining of the clutch disc for signs of slipping or oil. If it is burned black or oil soaked, replace it.

3. Measure the clutch disc thickness.

Clutch Disc Thickness:
Standard (New): 8.5 – 9.1 mm (0.33 – 0.36 in)
Service Limit: 5.5 mm (0.22 in)

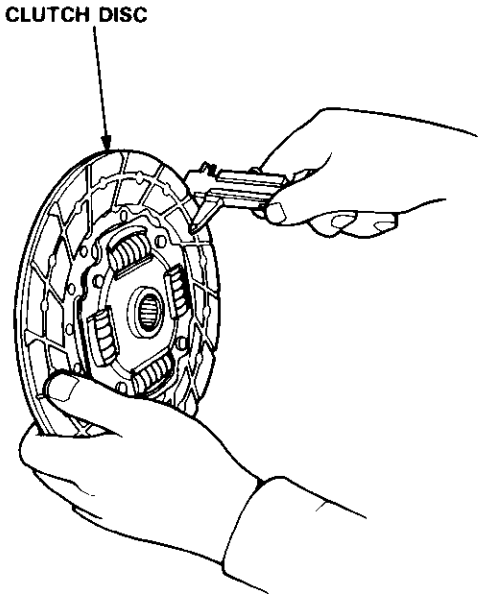

If the thickness is less than the service limit, replace the clutch disc.

4. Measure the depth from the lining surface to the rivets, on both sides.

Rivet Depth:
Standard (New): 1.3 – 1.9 mm (0.05 – 0.07 in) min.
Service Limit: 0.2 mm (0.01 in)

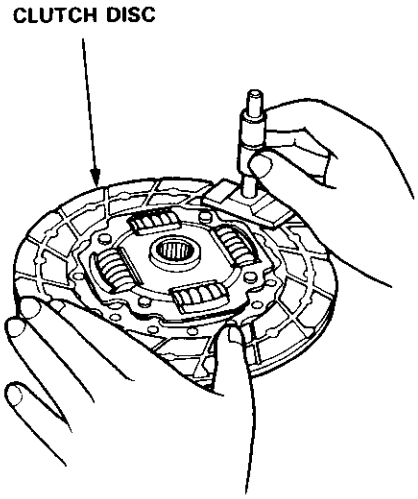

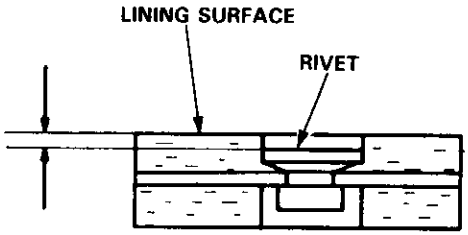

If the depth is less than the service limit, replace the clutch disc.

Inspection

1. Inspect the ring gear teeth for wear and damage.

2. Inspect the clutch disc mating surface on the flywheel for wear, cracks, and burning.

3. Measure the flywheel runout using a dial indicator through at least two full turns. Push against the flywheel each time you turn it to take up the crankshaft thrust washer clearance.

   NOTE: The runout can be measured with engine installed.

   Standard (New): 0.05 mm (0.002 in) max.
   Service Limit: 0.15 mm (0.006 in)

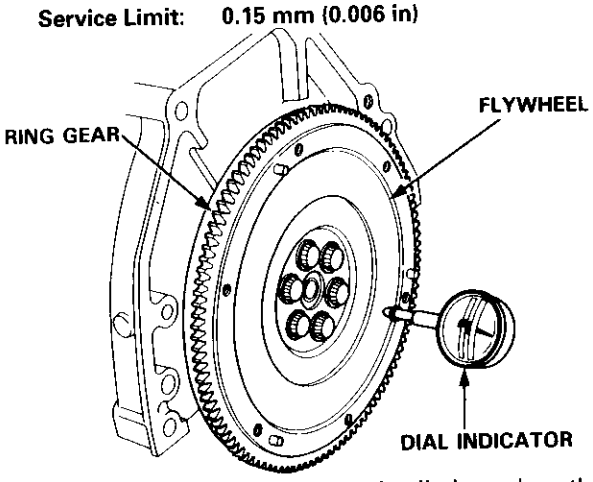

   If the runout exceeds the service limit, replace the flywheel.

4. Turn the inner race of the ball bearing with your finger. The ball bearing should turn smoothly and quietly. If the inner race does not turn smoothly and quietly, replace the bearing. Check that the ball bearing outer race fits tightly in the flywheel. If it is loose, replace the ball bearing.

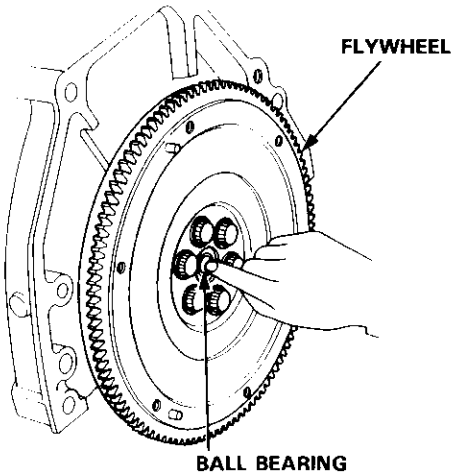

Replacement

1. Install the special tool.

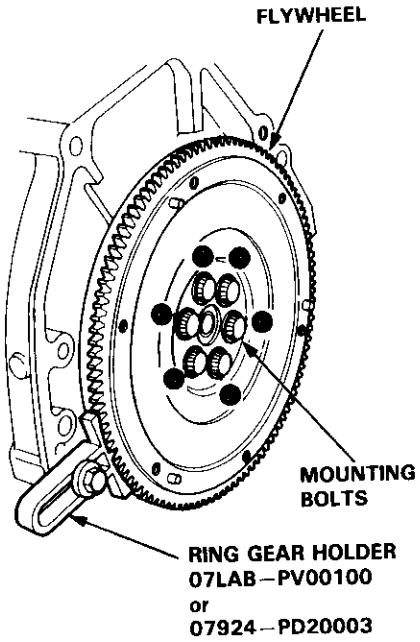

2. Remove the flywheel mounting bolts in a crisscross pattern in several steps as shown, and remove the flywheel.

3. Remove the ball bearing from the flywheel.

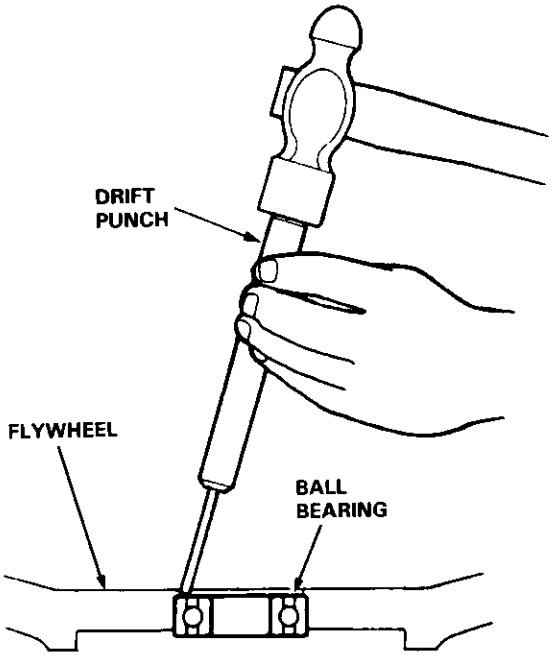

(cont'd)

Replacement (cont'd)

4. Drive the new ball bearing into the flywheel using the special tools as shown.

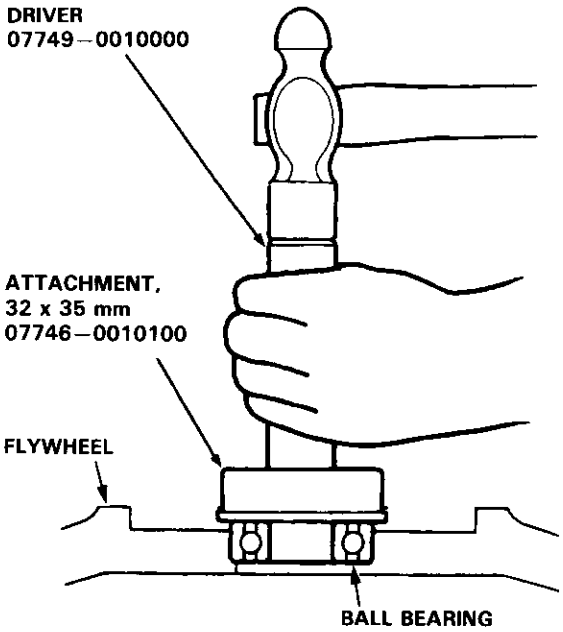

5. Align the hole in the flywheel with the crankshaft dowel pin and install the flywheel. Install the mounting bolts finger-tight.

6. Install special tool, then torque the flywheel mounting bolts in a crisscross pattern in several steps as shown.

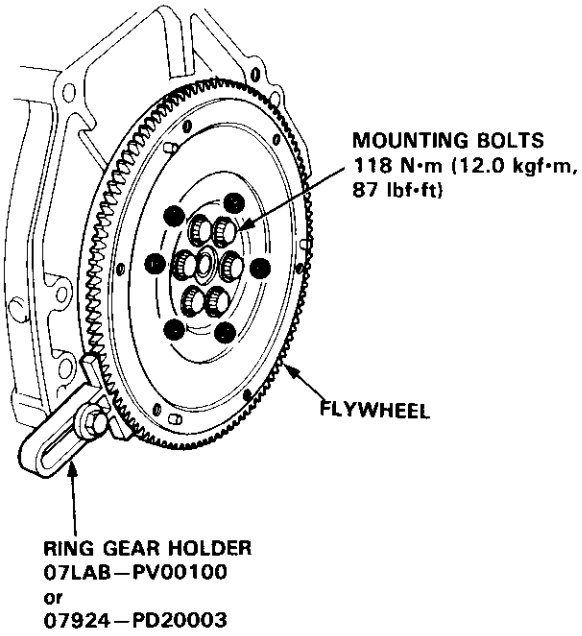

Installation

1. Install the special tool.

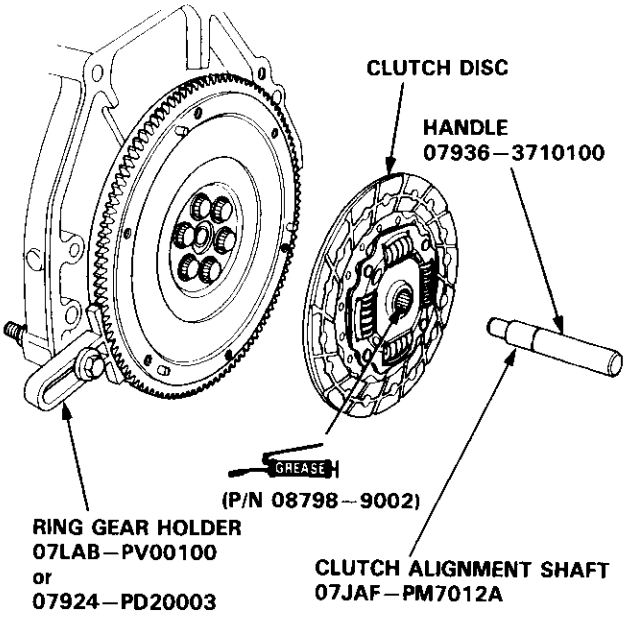

2. Install the clutch disc using the special tools.

3. Install the pressure plate.

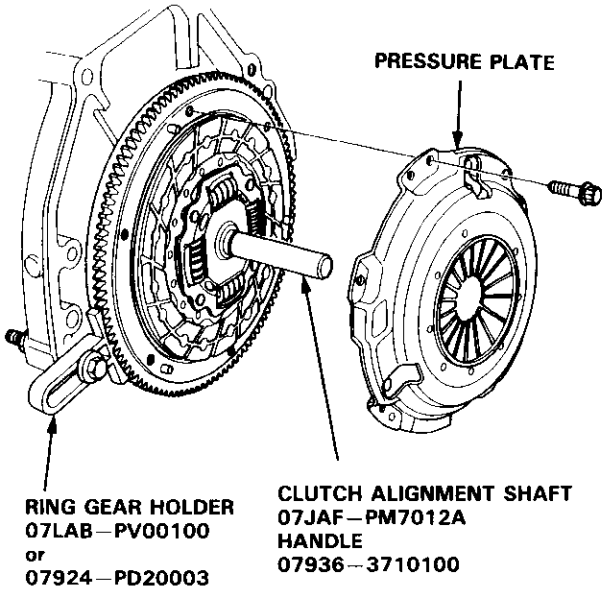

4. Torque the mounting bolts in a crisscross pattern as shown. Tighten them in several steps to prevent warping the diaphragm spring.

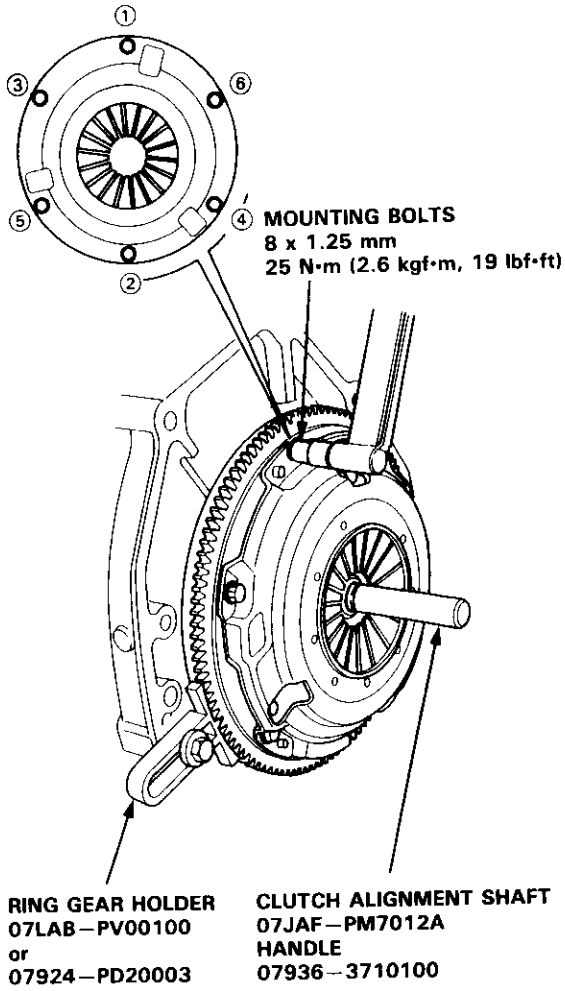

Removal/Inspection

1. Remove the release fork boot from the clutch housing.

2. Remove the release fork from the clutch housing by squeezing the release fork set spring with pliers. Remove the release bearing.

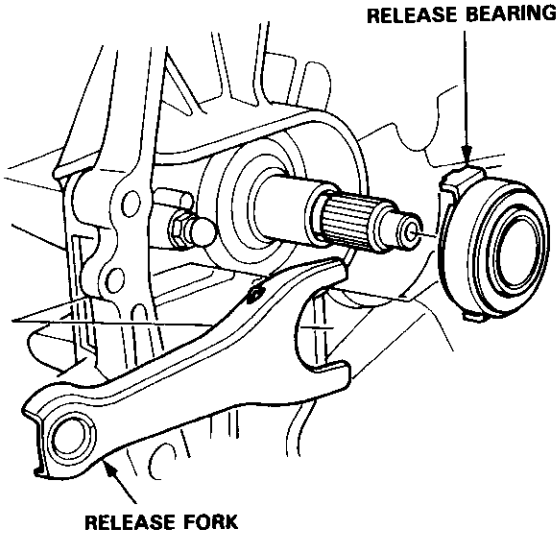

3. Check the release bearing for play by spinning it by hand.

CAUTION: The release bearing is packed with grease. Do not wash it in solvent.

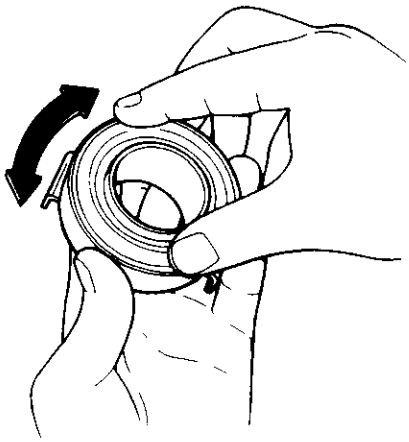

If there is excessive play, replace the release bearing with a new one.

Installation

NOTE: Use only Super High Temp Urea Grease (P/N 08798 - 9002).

1. With the release fork slid between the release bearing pawls, install the release bearing on the mainshaft while inserting the release fork through the hole in the clutch housing.

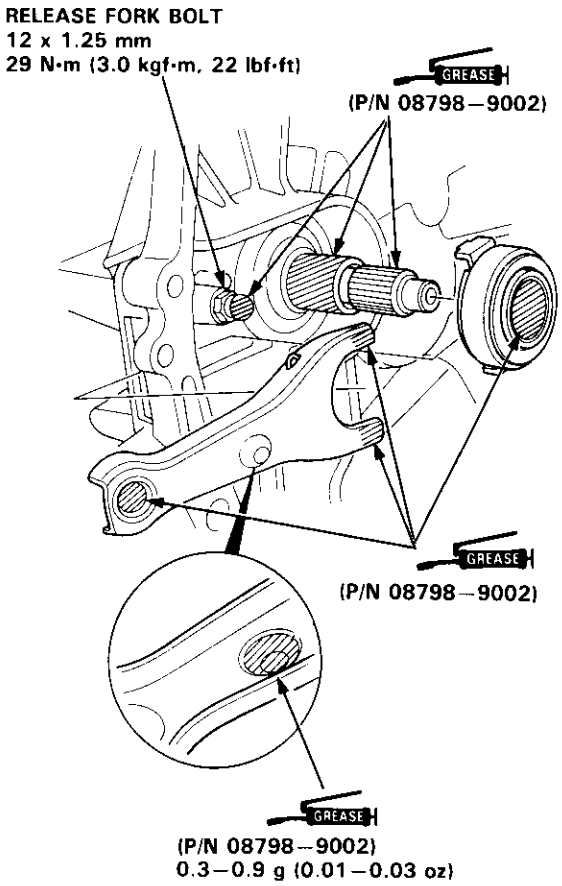

2. Align the detent of the release fork with the release fork bolt, then press the release fork over the release fork bolt sequarely.

3. Move the release fork right and left to make sure that it fits properly against the release bearing, and that the release bearing slides smoothly.

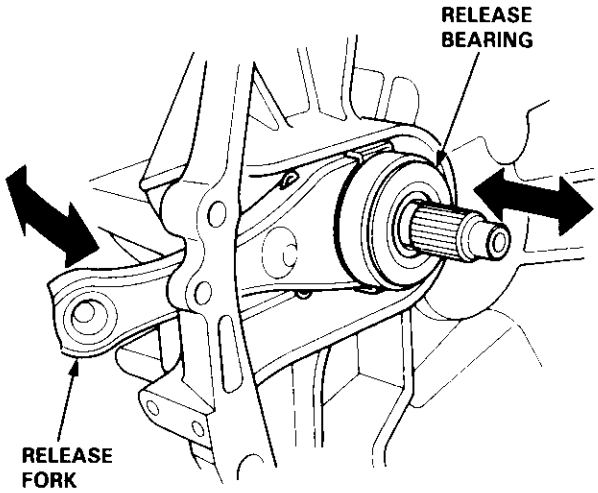

4. Install the release fork boot; make sure the boot seals around the release fork and clutch housing.

Manual Transmission

S40 Model
(All except '99 – 00 2-door Si, SiR)
Manual Transmission 13-1
S4C Model ('99 – 00 2-door Si, SiR)
Manual Transmission 13-45

S40 Model (All except '99 – 00 2-door Si, SiR) Manual Transmission

Special Tools 13-2
Maintenance
  Transmission Oil 13-3
Back-up Light Switch
  Replacement 13-3
Troubleshooting 13-4
Transmission Assembly
  Removal 13-5
  Installation 13-8
Illustrated Index 13-10
Transmission Housing
  Removal 13-12
Reverse Shift Holder
  Clearance Inspection 13-13
Reverse Idler Gear
  Removal 13-14
Mainshaft, Countershaft, Shift Fork
  Disassembly 13-14
Mainshaft Assembly
  Index 13-15
  Clearance Inspection 13-16
  Disassembly 13-17
  Inspection 13-18
  Reassembly 13-19
Countershaft Assembly
  Index 13-20
  Clearance Inspection 13-21
  Disassembly 13-22
  Inspection 13-23
  Reassembly 13-23
Shift Fork Assembly
  Index 13-25
  Clearance Inspection 13-26
  MBS Shift Piece Inspection 13-27
Synchro Sleeve, Synchro Hub
  Inspection/Installation 13-27
Synchro Ring, Gear
  Inspection 13-28
Shift Rod
  Removal 13-29
Differential
  Index 13-30
  Backlash Inspection 13-30
  Bearing Replacement 13-31
  Final Driven Gear Replacement 13-31
  Thrust Shim Adjustment 13-32
Clutch Housing Bearing
  Replacement 13-34
Mainshaft Thrust Shim
  Adjustment 13-36
Transmission
  Reassembly 13-39
Oil Seals
  Replacement 13-43
Gearshift Mechanism
  Overhaul 13-44

Special Tools

Ref. No.	Tool Number	Description	Qty	Page Reference
①	07GAJ – PG20110	Mainshaft Holder	1	13-38
②	07GAJ – PG20120	Collar	1	13-37
③	07GAJ – PG20130	Mainshaft Base	1	13-37
*④	07736 – A01000A	Adjustable Bearing Puller, 25 – 40 mm	1	13-34, 35
⑤	07746 – 0010300	Attachment, 42 x 47 mm	1	13-34, 35
⑥	07746 – 0010400	Attachment, 52 x 55 mm	1	13-34, 35
⑦	07746 – 0030100	Driver, 40 mm I.D.	1	13-19, 24 31, 32
⑧	07746 – 0030300	Attachment, 30 mm I.D.	1	13-19, 24
⑨	07746 – 0030400	Attachment, 35 mm I.D.	1	13-19, 24
⑩	07749 – 0010000	Driver	1	13-34, 35, 43
⑪	07JAD – PH80101	Driver Attachment	1	13-43
⑫	07JAD – PH80200	Pilot, 26 x 30 mm	1	13-43
⑬	07947 – 6110501 or 07947 – 6110500	Seal Driver Attachment	1	13-43

* Must be used with commercially-available 3/8"-16 Slide Hammer.

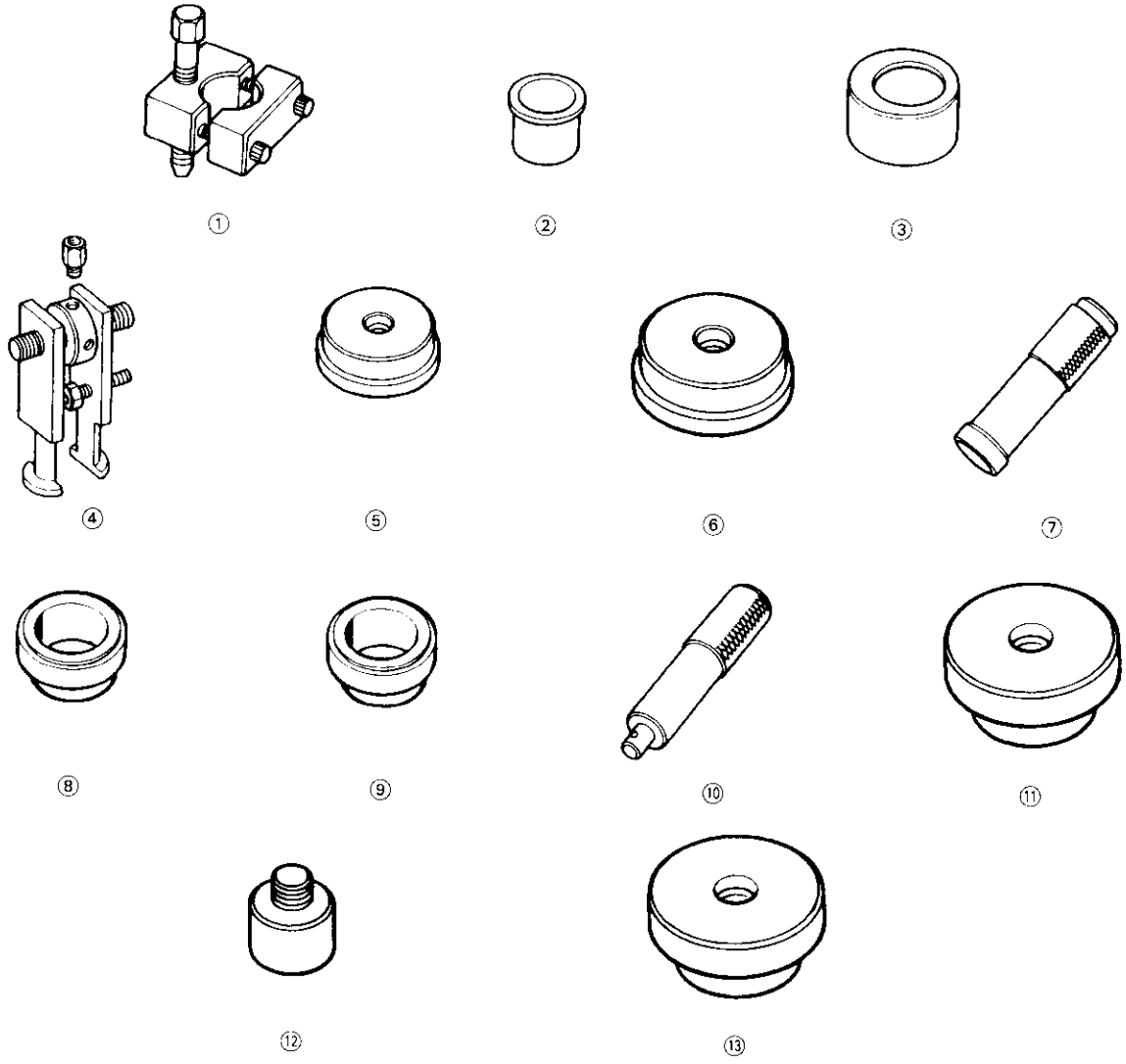

Transmission Oil

NOTE: Check the transmission oil with the engine OFF and the vehicle on level ground.

1. Remove the oil filler plug, then check the level and condition of the oil.

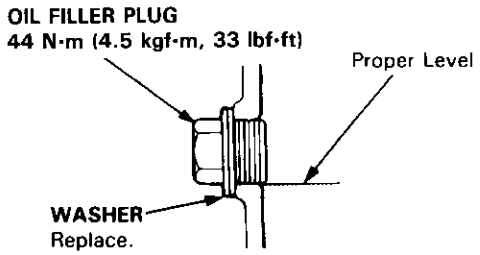

2. The oil level must be up to the filler hole. If it is below the hole, add oil until it runs out, then reinstall the oil filler plug with a new washer.

3. If the transmission oil is dirty, remove the drain plug and drain the oil.

4. Reinstall the drain plug with a new washer, and refill the transmission with the recommended oil to the proper level.

   NOTE: The drain plug washer should be replaced at every oil change.

5. Reinstall the oil filler plug with a new washer.

   Oil Capacity
   1.8 ℓ (1.9 US qt, 1.6 Imp qt) at oil change
   1.9 ℓ (2.0 US qt, 1.7 Imp qt) at overhaul

   Always use Genuine Honda Manual Transmission Fluid (MTF). Using motor oil can cause stiffer shifting because it does not contain the proper additives.

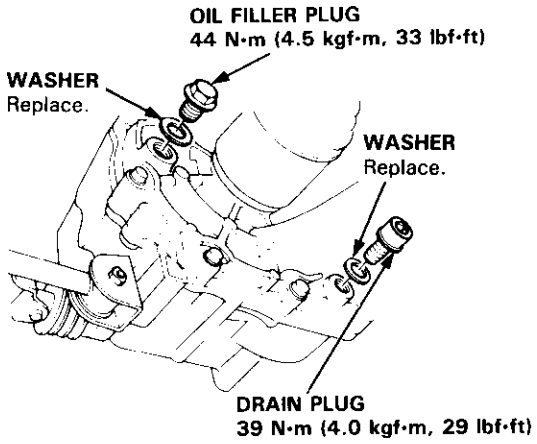

Replacement

NOTE: To test the back-up light switch, see section 23.

1. Disconnect the connector, then remove the back-up light switch connector from the connector clamp.

2. Remove the back-up light switch.

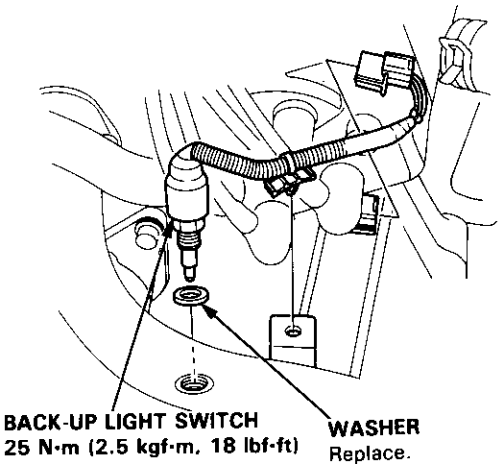

3. Install the new washer and back-up light switch.

4. Connect the back-up light switch connector.

Reverse Gear Noise Reduction System

Whenever the clutch pedal is depressed to shift into reverse, the mainshaft continues to rotate because of its inertia.
The resulting speed difference between mainshaft and reverse idler gear produces gear noise.
The reverse gear noise reduction system employs a cam plate which was added to the reverse shift holder. When shifting into reverse, the 5th/reverse shift piece, connected to the shift lever, rotates the cam plate. This causes the 5th synchro set to stop the rotating mainshaft. As there is no speed difference between mainshaft and reverse idler gear, there will be less gear noise.

NOTE: This system is not a fully-synchronized gear noise reduction system.
Therefore, you may hear gear noise when
① you shift into reverse with the vehicle not yet completely stopped.
② you shift quickly into reverse during fast idling.

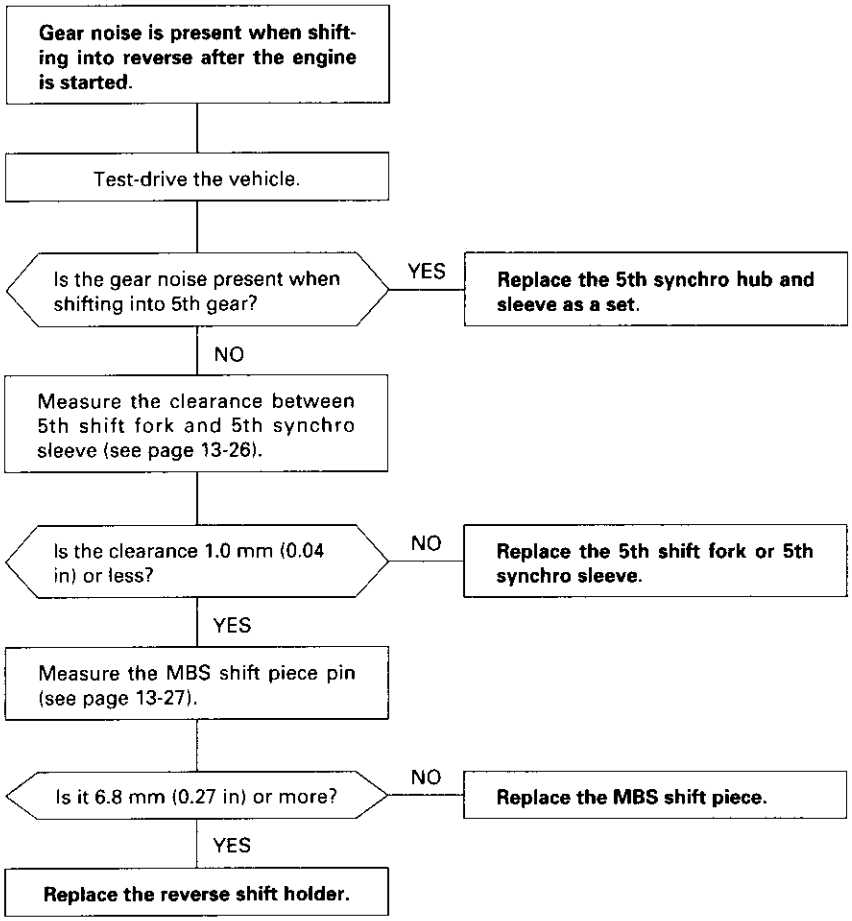

Removal

⚠ WARNING

- **Make sure jacks and safety stands are placed properly, and hoist brackets are attached to correct position on the engine.**
- **Apply parking brake and block rear wheels so car will not roll off stands and fall on you while working under it.**

CAUTION: Use fender covers to avoid damaging painted surfaces.

1. Disconnect the negative (–) cable first, then the positive (+) cable from the battery.

2. Drain transmission oil (see page 13-3).

3. Remove the intake air tube, intake air duct and air cleaner housing assembly (see section 5).

4. Disconnect the starter motor cables, transmission ground wire and back-up light switch connector.

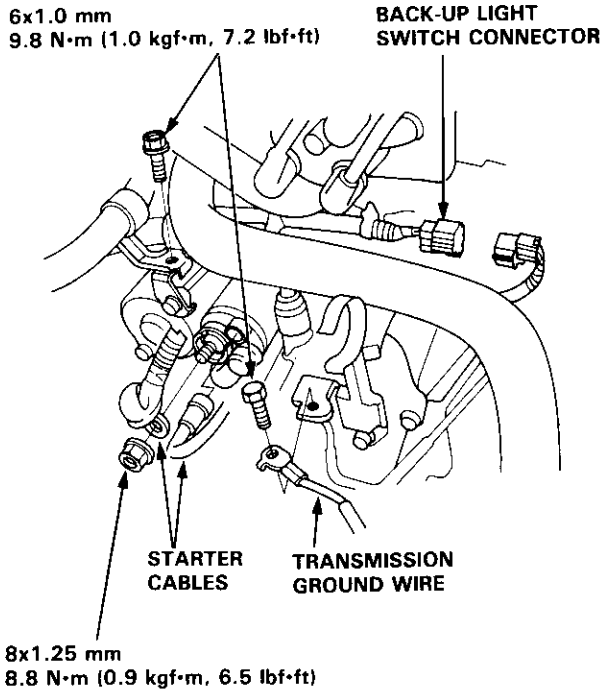

5. Remove the wire harness clamps.

6. Disconnect the vehicle speed sensor (VSS) connector.

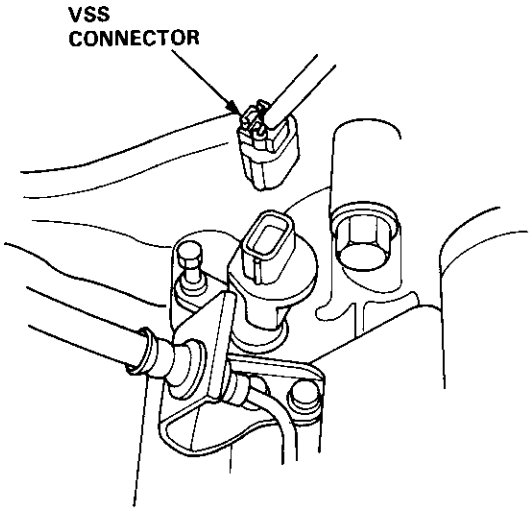

7. Remove the clutch line bracket, clutch line clamp, and slave cylinder.

CAUTION:

- **Do not operate the clutch pedal once the slave cylinder has been removed.**
- **Take care not to bend the clutch line.**

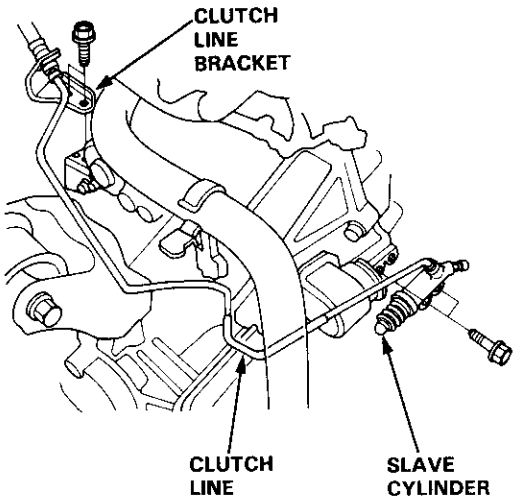

(cont'd)

Removal (cont'd)

8. Remove the driveshafts (see section 16).

   NOTE: Coat all the precision finished surfaces with clean engine oil or grease. Tie plastic bags over the driveshaft ends.

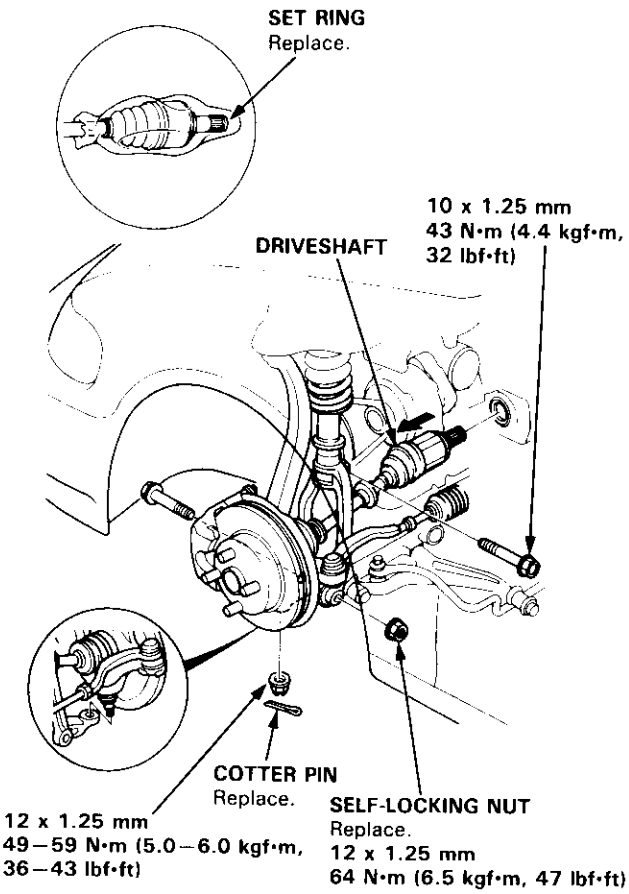

9. Remove exhaust pipe A.

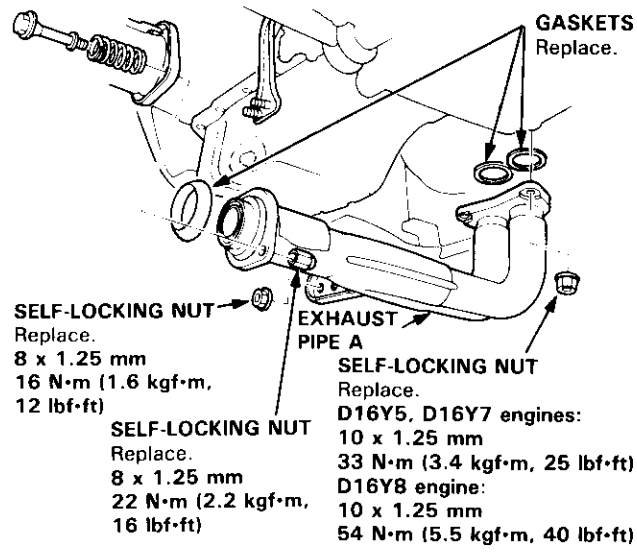

10. Remove the shift rod and extension rod.

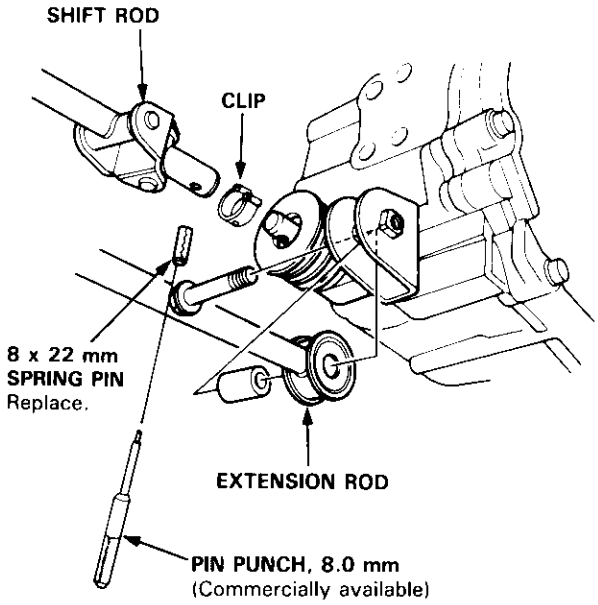

11. Remove the engine stiffeners and clutch cover.

D16Y5, D16Y8 engines:

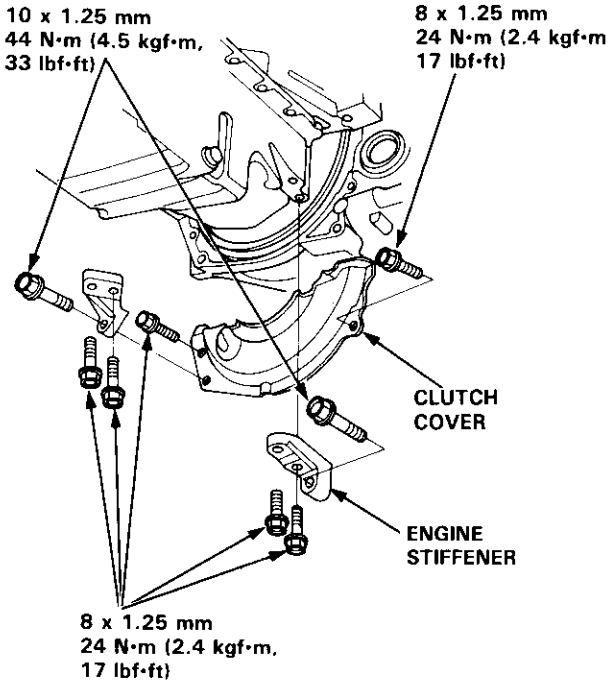

D16Y7 engine:

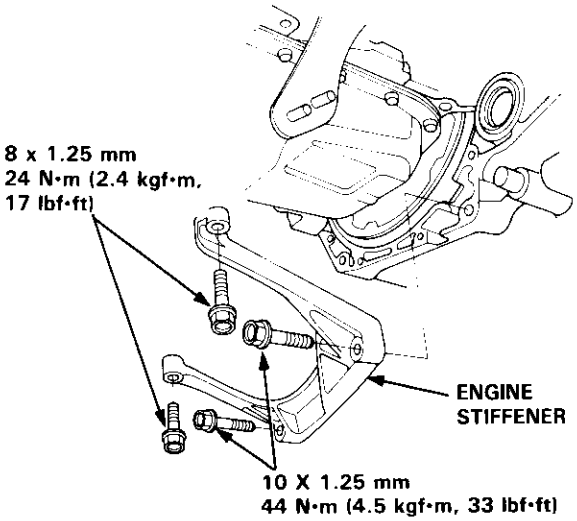

12. Install the bolts in the cylinder head and attach a chain hoist to the bolts, then lift the engine slightly to unload the engine and transmission mounts.

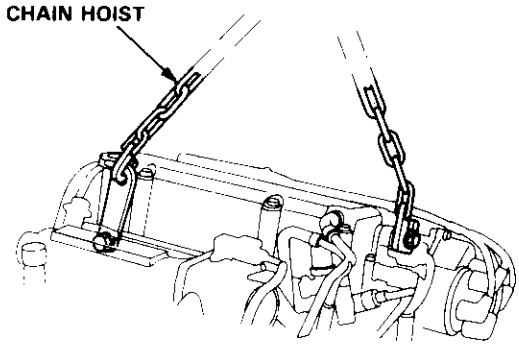

13. Remove the splash shield.

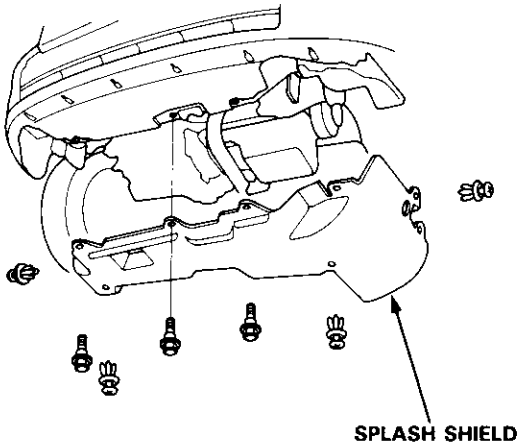

14. Remove the right front mount/bracket.

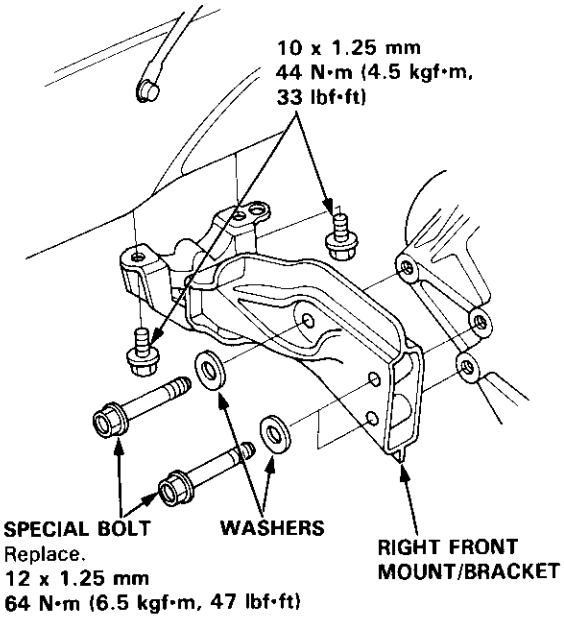

15. Place a jack under the transmission.

16. Remove the transmission mount bracket and mount.

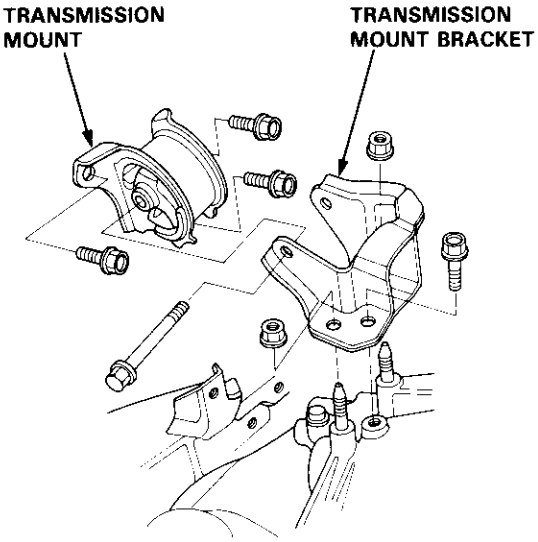

(cont'd)

Removal (cont'd)

17. Remove the three upper transmission mounting bolts and the lower starter mounting bolt.

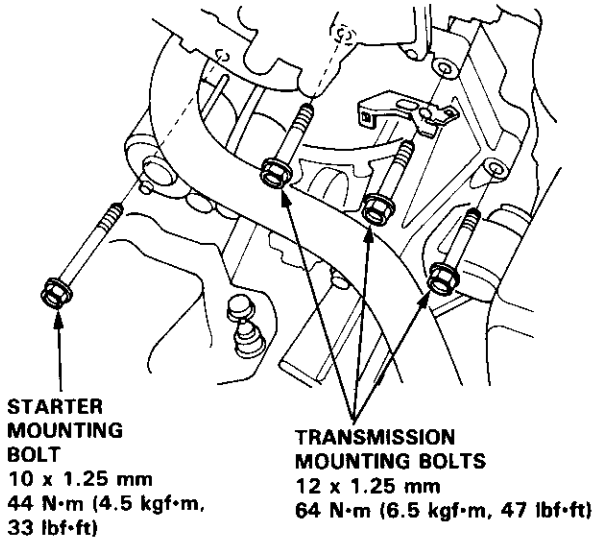

18. Remove the rear mount bracket bolts and transmission mounting bolts.

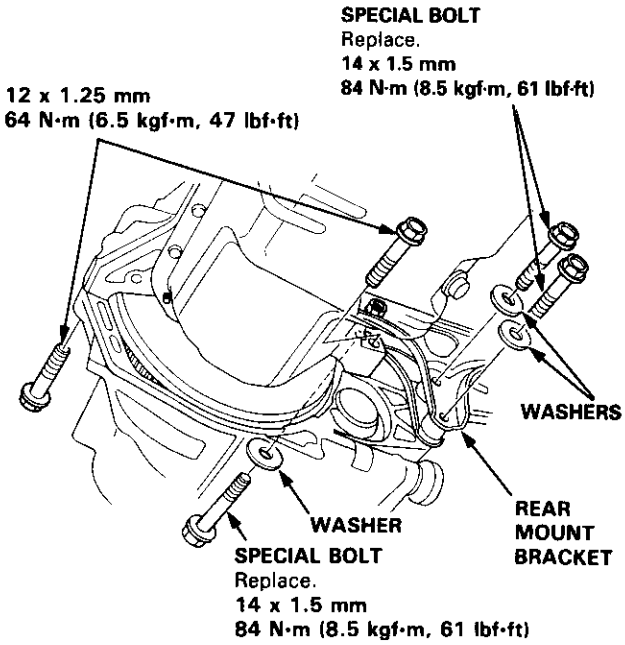

19. Pull the transmission away from the engine until it clears the mainshaft, then lower it on the transmission jack.

CAUTION: Take care not to bend the clutch line.

Installation

Install the transmission assembly in the reverse order of removal.

- Before installing, check that the two dowel pins are installed in the clutch housing.
- When installing the starter cable, make sure that the crimped side of the ring terminal is facing out (see section 23).
- Apply grease to the parts as shown, then install the release fork and release bearing.

NOTE: Use only Super High Temp Urea Grease (P/N 08798 - 9002).

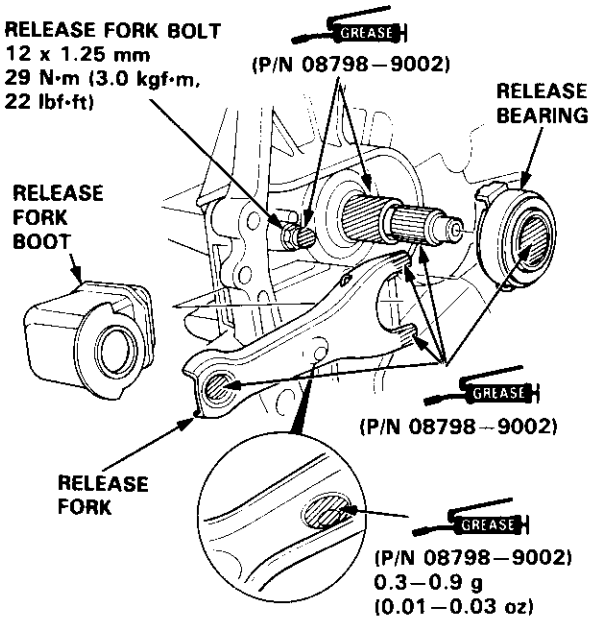

- Torque the mounting bolt and nuts in the sequence shown.

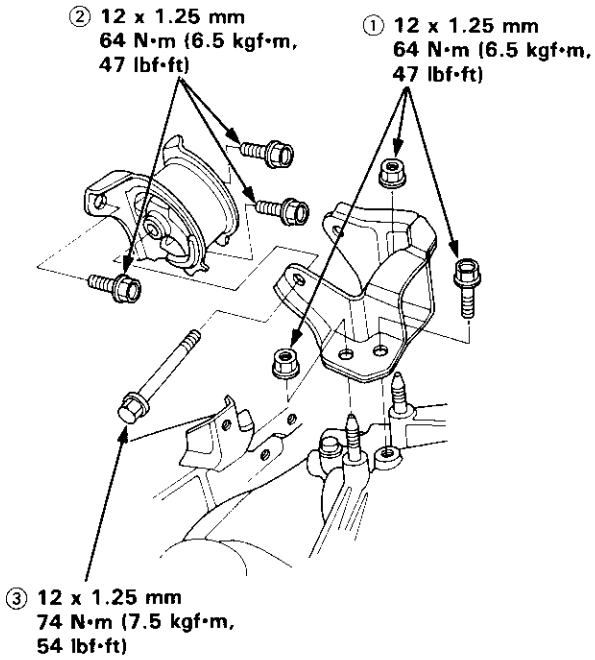

- Check that the bushings are not twisted or offset.
- Install the clip as shown.

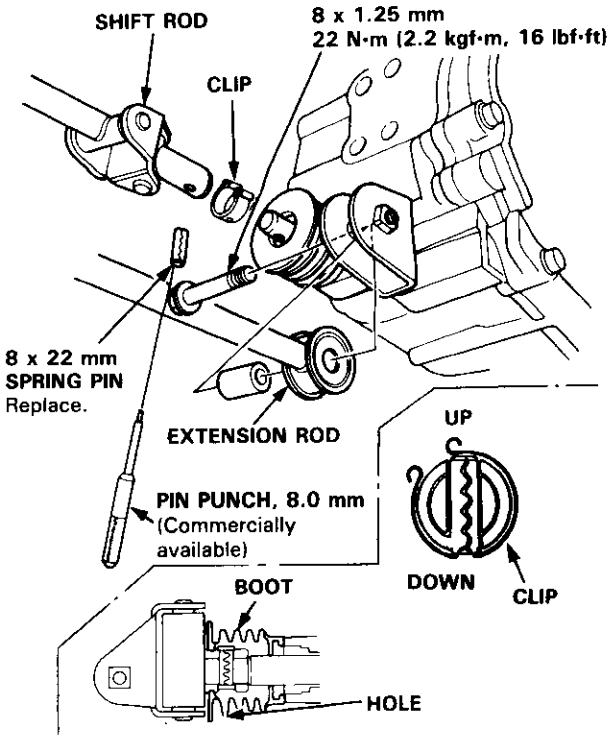

- Turn the boot so the hole is facing down.
- Make sure the boot is installed on the shift rod.

- Apply grease to the slave cylinder push rod.

NOTE: Use only Super High Temp Urea Grease (P/N 08798 – 9002).

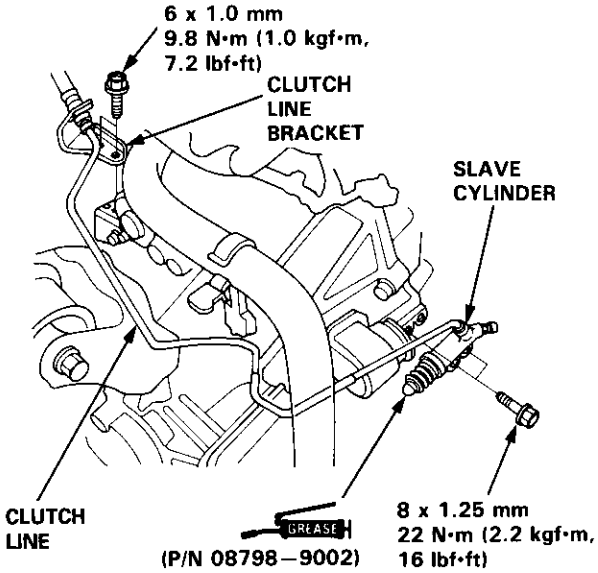

- Turn the breather cap so that the "F" mark points at the front of the car as shown.

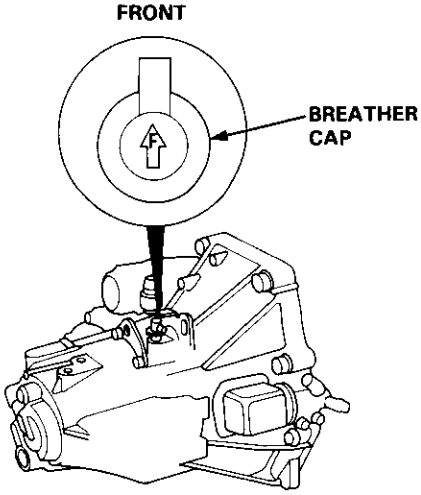

- Refill the transmission with the recommended oil (see page 13-3).
- Connect the positive (+) cable first, then the negative (–) cable to the battery.
- Check the clutch operation.
- Shift the transmission and check for smooth operation.
- Check the front wheel alignment (see section 18).

Refer to the drawing below for transmission disassembly/reassembly.
Clean all the parts thoroughly in solvent and dry with compressed air.

OIL Lubricate all the parts with oil before reassembly.

NOTE:

- This transmission uses no gaskets between the major housings; use liquid gasket (P/N 08718 – 0001 or 08718 – 0003) (see page 13-41).
- Always clean the magnet (66) whenever the transmission housing is disassembled.
- Inspect all the bearings for wear and operation.

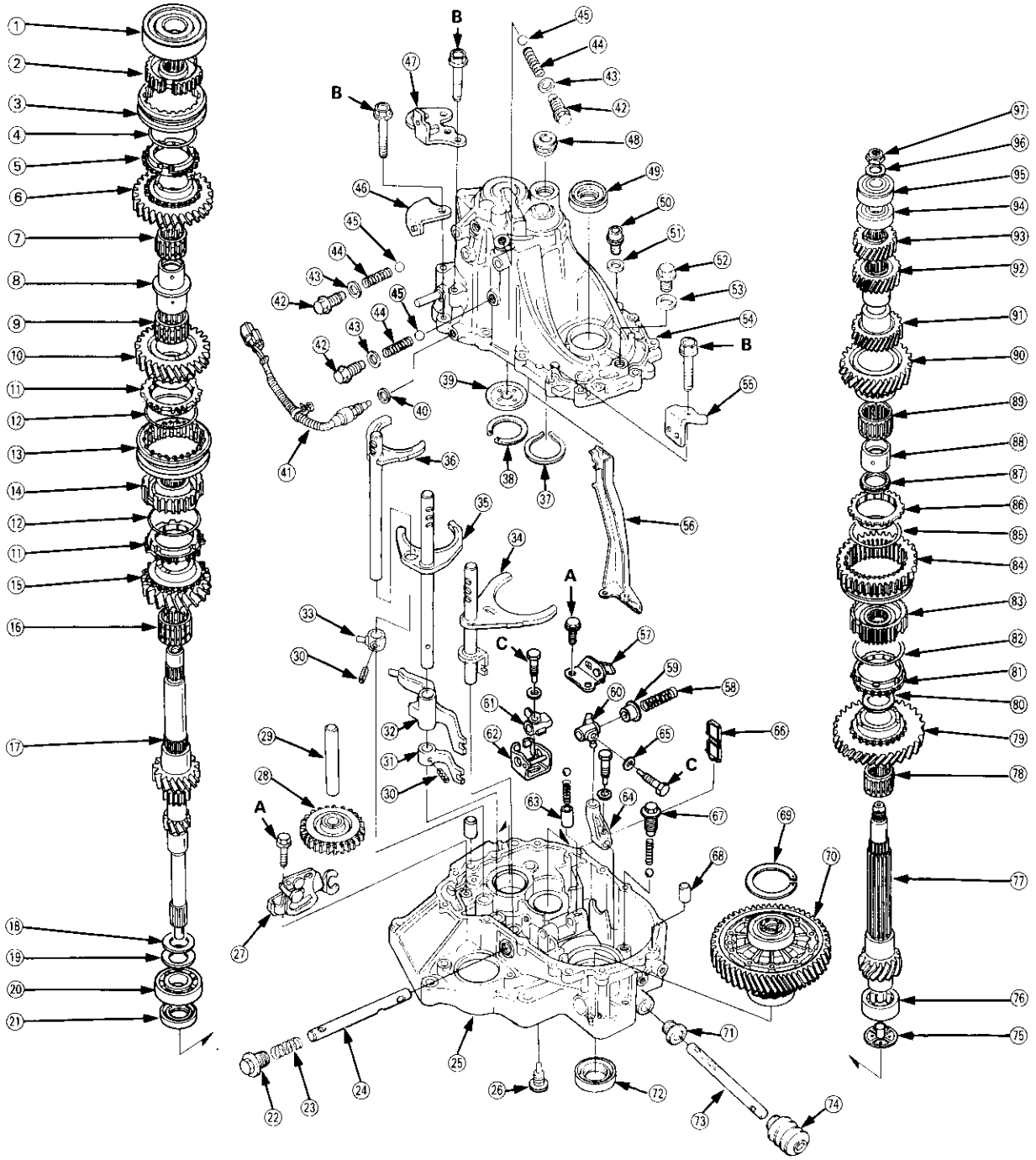

Torque Value
A - 15 N·m (1.5 kgf·m, 11 lbf·ft)
B – 27 N·m (2.8 kgf·m, 20 lbf·ft)
C – 31 N·m (3.2 kgf·m, 23 lbf·ft)

① **BALL BEARING (*1)**
ANGULAR
BALL BEARING (*2)
② **5TH SYNCHRO HUB**
③ **5TH SYNCHRO SLEEVE**
④ **SYNCHRO SPRING**
⑤ **SYNCHRO RING**
⑥ **5TH GEAR**
⑦ **32 x 37 x 23.5 mm**
NEEDLE BEARING
⑧ **SPACER COLLAR**
⑨ **34 x 39 x 23 mm**
NEEDLE BEARING
⑩ **4TH GEAR**
⑪ **SYNCHRO RING**
⑫ **SYNCHRO SPRING**
⑬ **3RD/4TH SYNCHRO SLEEVE**
⑭ **3RD/4TH SYNCHRO HUB**
⑮ **3RD GEAR**
⑯ **34 x 39 x 27.5 mm**
NEEDLE BEARING
⑰ **MAINSHAFT**
⑱ **WASHER**
⑲ **SPRING WASHER**
⑳ **BALL BEARING**
Check for wear and operation.
㉑ **26 x 42 x 7 mm OIL SEAL**
Replace.
㉒ **28 mm PLUG BOLT**
54 N·m (5.5 kgf·m, 40 lbf·ft)
㉓ **1ST/2ND SELECT SPRING**
L. 36.26 mm (1.428 in)
㉔ **SHIFT ARM SHAFT**
㉕ **CLUTCH HOUSING**
㉖ **INTERLOCK GUIDE BOLT**
39 N·m (4.0 kgf·m, 29 lbf·ft)
㉗ **REVERSE SHIFT HOLDER**
㉘ **REVERSE IDLER GEAR**
㉙ **REVERSE IDLER GEAR SHAFT**
㉚ **5 x 22 mm SPRING PIN**
Replace.
㉛ **3RD/4TH SHIFT PIECE**
㉜ **5TH/REVERSE SHIFT PIECE**
㉝ **MBS SHIFT PIECE**
㉞ **1ST/2ND SHIFT FORK**
㉟ **3RD/4TH SHIFT FORK**
㊱ **5TH/REVERSE SHIFT FORK**
㊲ **52 mm SNAP RING**
㊳ **65 mm THRUST SHIM (*1)**
70 mm THRUST SHIM (*2)
Selection, page 13-36
㊴ **OIL GUIDE PLATE**
㊵ **WASHER** Replace.
㊶ **BACK-UP LIGHT SWITCH**
25 N·m (2.5 kgf·m, 18 lbf·ft)
㊷ **SET SCREW**
22 N·m (2.2 kgf·m, 16 lbf·ft)
㊸ **WASHER** Replace.
㊹ **SPRING L. 31.6 mm (1.24 in)**
㊺ **STEEL BALL (5/16 in)**
㊻ **BACK-UP LIGHT**
SWITCH HARNESS BRACKET
㊼ **TRANSMISSION HANGER**
㊽ **32 mm SEALING BOLT**
25 N·m (2.5 kgf·m, 18 lbf·ft)
㊾ **OIL SEAL**
Replace.
㊿ **OIL DRAIN PLUG**
39 N·m (4.0 kgf·m, 29 lbf·ft)
(51) **WASHER** Replace.
(52) **OIL FILLER PLUG**
44 N·m (4.5 kgf·m, 33 lbf·ft)
(53) **WASHER** Replace.
(54) **TRANSMISSION HOUSING**
(55) **CLUTCH LINE BRACKET**
(56) **OIL GUTTER PLATE**
(57) **REVERSE LOCK CAM**
(58) **REVERSE SELECT SPRING**
L. 63.4 mm (2.496 in)
(59) **REVERSE SELECT RETAINER**
(60) **SHIFT ARM C**
(61) **SHIFT ARM B**
(62) **INTERLOCK**
(63) **COLLAR**
(64) **SHIFT ARM A**
(65) **SPRING WASHER**
(66) **MAGNET**
(67) **SET BALL SPRING BOLT**
22 N·m (2.2 kgf·m, 16 lbf·ft)
(68) **14 x 20 mm DOWEL PIN**
(69) **72 mm THRUST SHIM (*1)**
80 mm THRUST SHIM (*2)
Selection, page 13-33
(70) **DIFFERENTIAL ASSEMBLY**
See page 13-30
(71) **14 x 25 x 17.5 mm OIL SEAL**
Replace.
(72) **35 x 56 x 8 mm OIL SEAL**
Replace.
(73) **SHIFT ROD**
(74) **BOOT**
(75) **OIL GUIDE PLATE**
(76) **30 x 47 x 21 mm**
NEEDLE BEARING (*1)
30 x 55 x 21 mm
NEEDLE BEARING (*2)
(77) **COUNTERSHAFT**
(78) **36 x 41 x 25.5 mm**
NEEDLE BEARING
Check for wear and operation.
(79) **1ST GEAR**
(80) **FRICTION DAMPER**
(81) **SYNCHRO RING**
(82) **SYNCHRO SPRING**
(83) **1ST/2ND SYNCHRO HUB**
(84) **REVERSE GEAR**
(85) **SYNCHRO SPRING**
(86) **SYNCHRO RING**
(87) **FRICTION DAMPER**
(88) **SPACER**
(89) **39 x 44 x 27 mm**
NEEDLE BEARING
(90) **2ND GEAR**
(91) **3RD GEAR**
(92) **4TH GEAR**
(93) **5TH GEAR**
(94) **BALL BEARING (*1)**
NEEDLE BEARING (*2)
(95) **BALL BEARING**
(96) **SPRING WASHER**
(97) **LOCKNUT** Replace.
108 → 0 → 108 N·m
{11.0 → 0 → 11.0 kgf·m, 79.6 → 0 → 79.6 lbf·ft}

***1: D16Y7 engine**
***2: D16Y5, D16Y8 engines**

Transmission Housing

Removal

NOTE: Place the clutch housing on two pieces of wood thick enough to keep the mainshaft from hitting the workbench.

1. Remove the back-up light switch.

2. Remove transmission hanger.

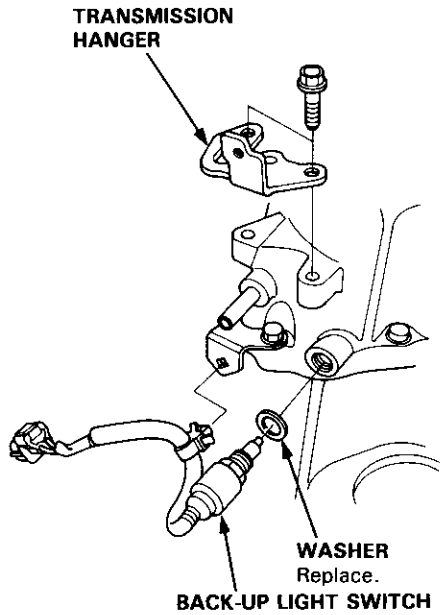

3. Remove the setting screws, washers, springs, and steel balls.

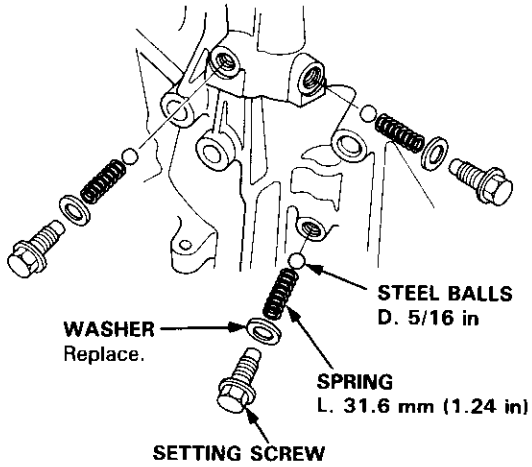

4. Loosen the transmission housing attaching bolts in a crisscross pattern in several steps, then remove them.

5. Remove the 32 mm sealing bolt.

6. Expand the snap ring on the countershaft ball bearing, and remove it from the groove using a pair of snap ring pliers.

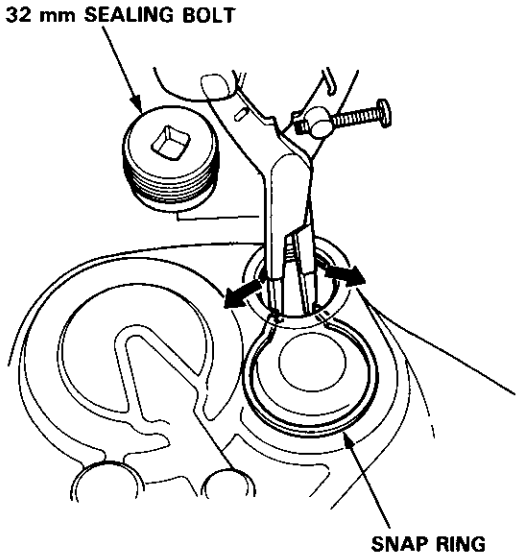

7. Separate the transmission housing from the clutch housing, and wipe it clean of the sealant.

8. Remove the thrust shim, oil guide plate, and oil gutter plate from the transmission housing.

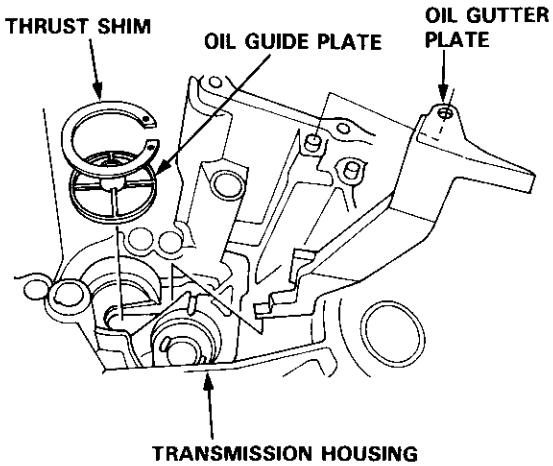

Clearance Inspection

1. Measure the clearance between the reverse shift fork and 5th/reverse shift piece pin.

   Standard: 0.05 – 0.35 mm (0.002 – 0.014 in)
   Service Limit: 0.5 mm (0.02 in)

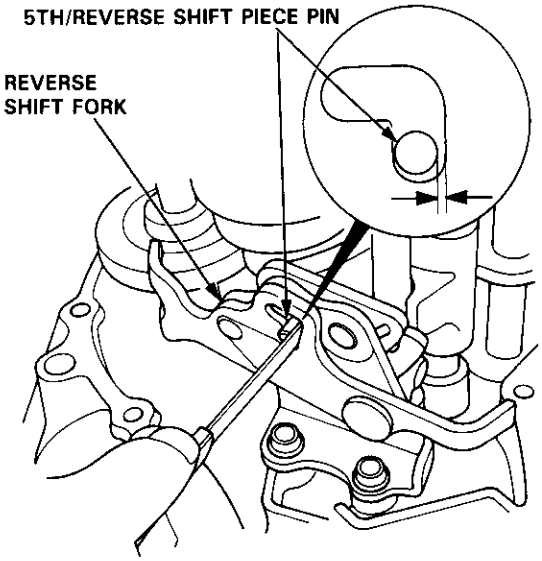

2. If the clearances are more than the service limit, measure the widths of the groove in the reverse shift fork.

   Standard: 7.05 – 7.25 mm (0.278 – 0.285 in)

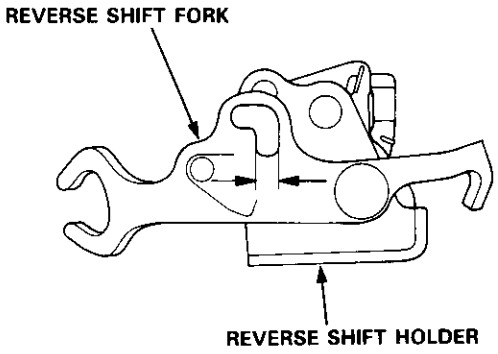

- If the widths of the grooves are not within the standard, replace the reverse shift holder with a new one.
- If the width of the grooves are within the standard, replace the 5th/reverse shift piece with a new one.

3. Measure the clearance between the reverse idler gear and the reverse shift fork.

   Standard: 0.5 – 1.1 mm (0.02 – 0.04 in)
   Service Limit: 1.8 mm (0.07 in)

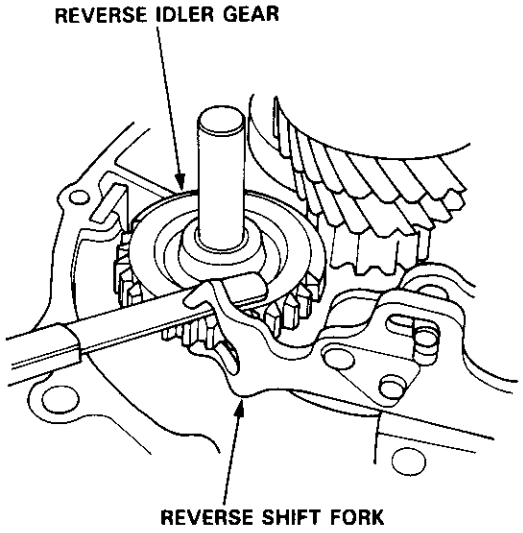

4. If the clearances is more than the service limit, measure the width of the reverse shift fork.

   Standard: 12.7 – 13.0 mm (0.500 – 0.512 in)

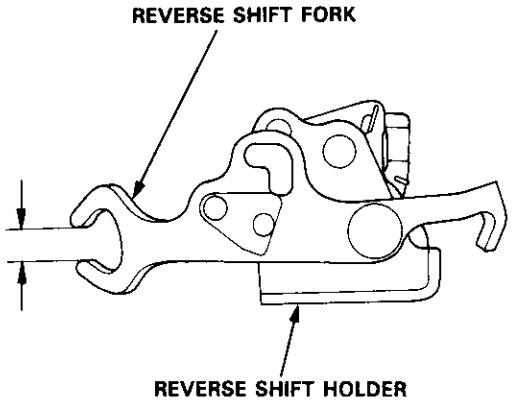

- If the width is not within the standard, replace the reverse shift holder with a new one.
- If the width is within the standard, replace the reverse idler gear with a new one.

Removal

1. Remove the reverse shift holder.

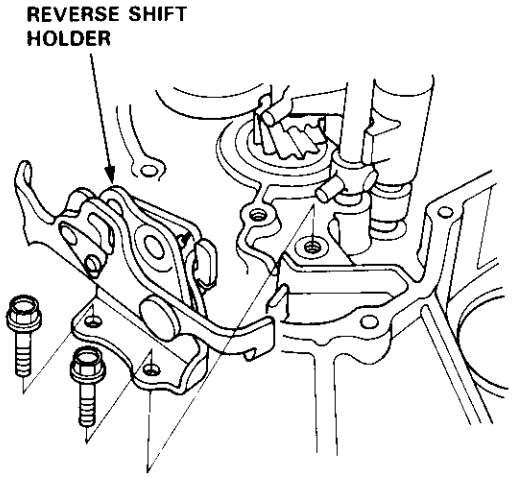

2. Remove the reverse idler gear shaft and reverse idler gear.

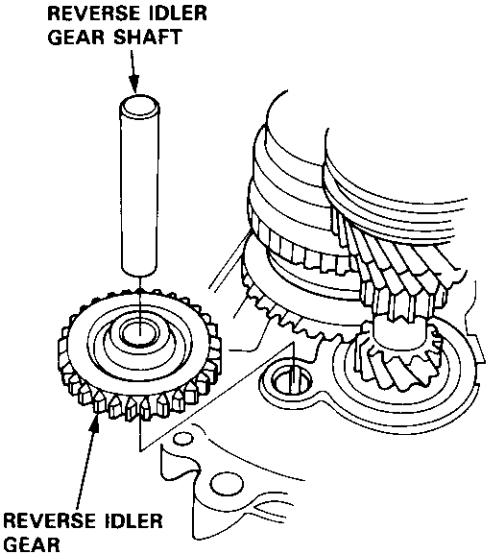

Disassembly

1. Remove the interlock guide bolt from under the clutch housing.

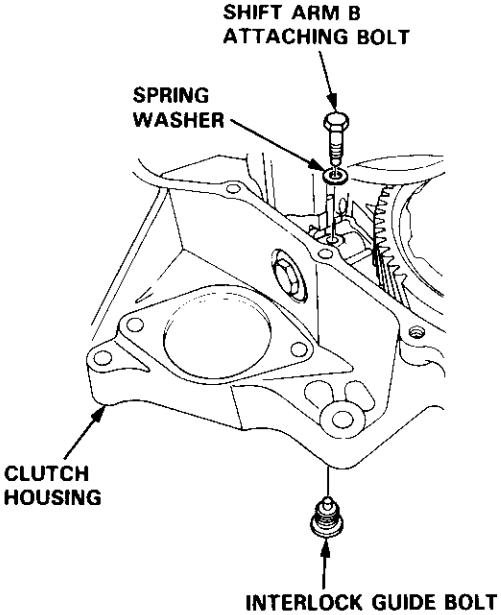

2. Remove the shift arm B attaching bolt.

3. Remove the mainshaft and countershaft assemblies with the shift fork from the clutch housing.

   NOTE: Before removing the mainshaft and countershaft assemblies, tape the mainshaft splines to protect the seal.

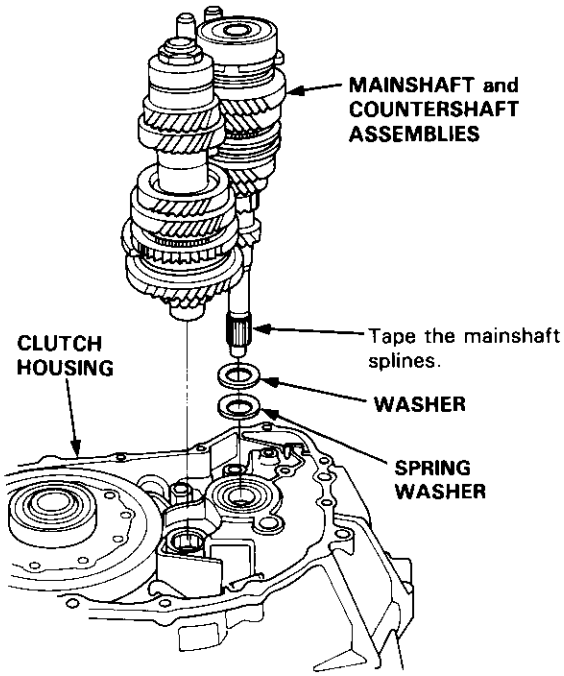

Index

Note the following during reassembly:

- The 3rd/4th and 5th synchro hubs are installed with a press.
- Install the angular ball bearing with the thin-edge outer race facing the 5th synchro hub.
- Install the ball bearing with the ball cage facing up.

OIL Prior to reassembling, clean all the parts in solvent, dry them and apply lubricant to all contact surfaces the 3rd/4th and 5th synchro hubs.

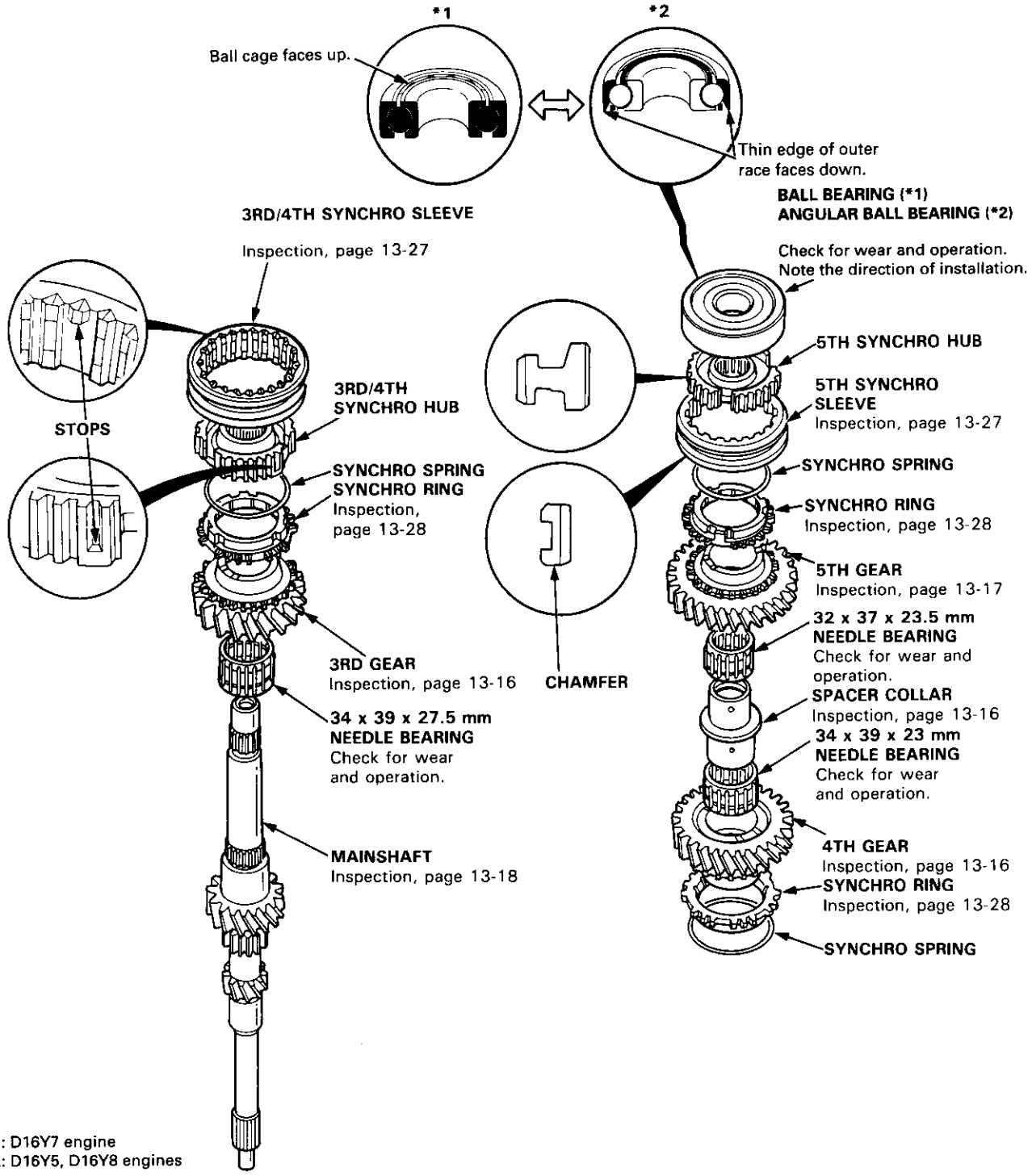

*1: D16Y7 engine
*2: D16Y5, D16Y8 engines

Clearance Inspection

NOTE: If replacement is required, always replace the synchro sleeve and hub as a set.

1. Measure the clearance between 2nd and 3rd gears.

   Standard: 0.06 – 0.21 mm (0.002 – 0.008 in)
   Service Limit: 0.33 mm (0.013 in)

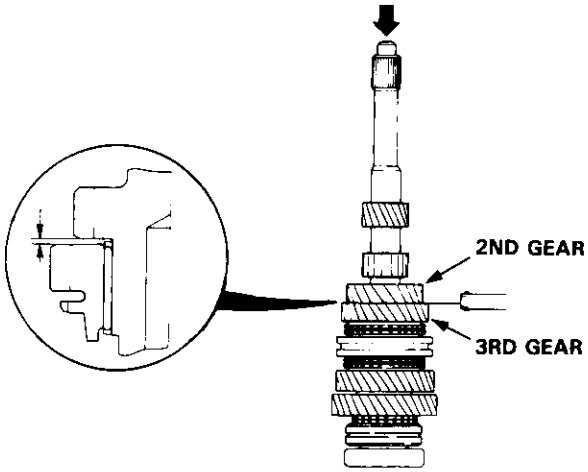

2. If the clearance is more than the service limit, measure the thickness of 3rd gear.

   Standard: 30.22 – 30.27 mm (1.190 – 1.192 in)
   Service Limit: 30.15 mm (1.187 in)

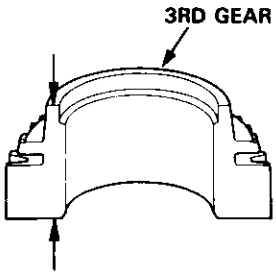

- If the thickness of 3rd gear is less than the service limit, replace 3rd gear with a new one.
- If the thickness of 3rd gear is within the service limit, replace the 3rd/4th synchro hub with a new one.

3. Measure the clearance between 4th gear and the spacer collar.

   Standard: 0.06 – 0.19 mm (0.002 – 0.007 in)
   Service Limit: 0.31 mm (0.012 in)

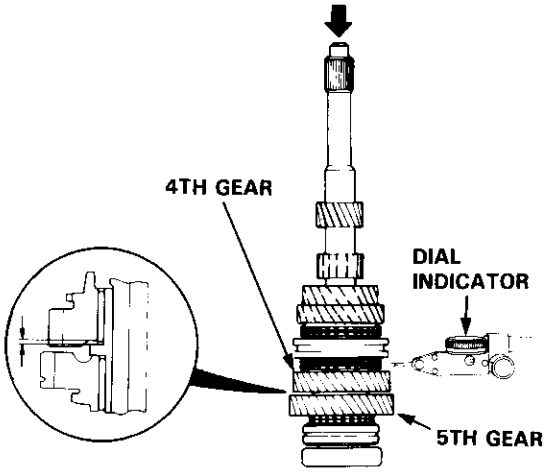

4. If the clearance is more than the service limit, measure distance Ⓐ on the spacer collar.

   Standard: 22.82 – 22.86 mm (0.898 – 0.900 in)
   Service Limit: 22.81 mm (0.898 in)

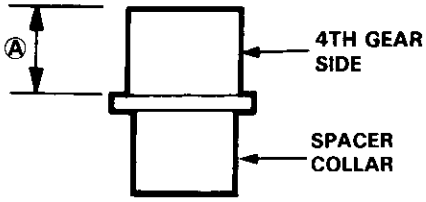

5. If distance Ⓐ is less than the service limit, replace the spacer collar with a new one.
   If distance Ⓐ is within the service limit, measure the thickness of 4th gear.

   Standard: 30.12 – 30.17 mm (1.186 – 1.188 in)
   Service Limit: 30.05 mm (1.183 in)

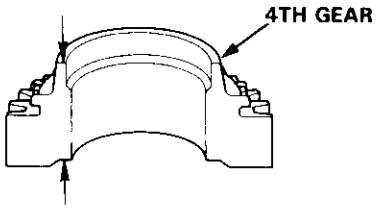

- If the thickness of 4th gear is less than the service limit, replace 4th gear with a new one.
- If the thickness of 4th gear is within the service limit, replace the 3rd/4th synchro hub with a new one.

6. Measure the clearance between the spacer collar and 5th gear.

Standard: **0.06 – 0.19 mm (0.002 – 0.007 in)**
Service Limit: **0.31 mm (0.012 in)**

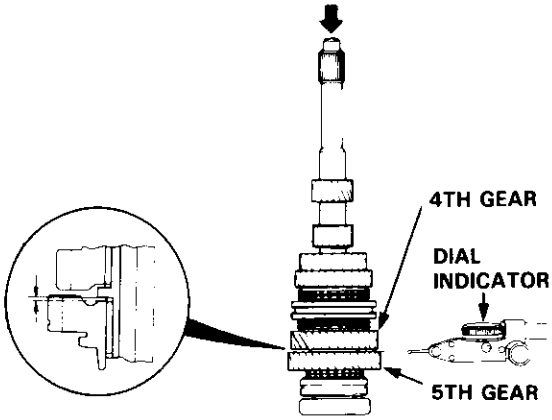

7. If the clearance is more than the service limit, measure distance Ⓑ on the spacer collar.

Standard: **23.53 – 23.56 mm (0.926 – 0.928 in)**
Service Limit: **23.51 mm (0.926 in)**

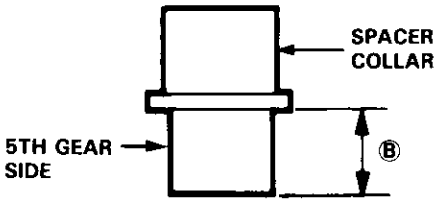

8. If distance Ⓑ is less than the service limit, replace the spacer collar with a new one.
If distance Ⓑ is within the service limit, measure thickness of 5th gear.

Standard: **28.42 – 28.47 mm (1.119 – 1.121 in)**
Service Limit: **28.35 mm (1.116 in)**

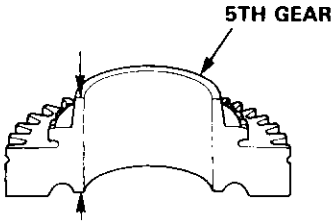

- If the thickness of 5th gear is less than the service limit, replace 5th gear with a new one.
- If the thickness of 5th gear is within the service limit, replace the 5th synchro hub with a new one.

Disassembly

1. Remove the ball bearing using a bearing puller as shown.

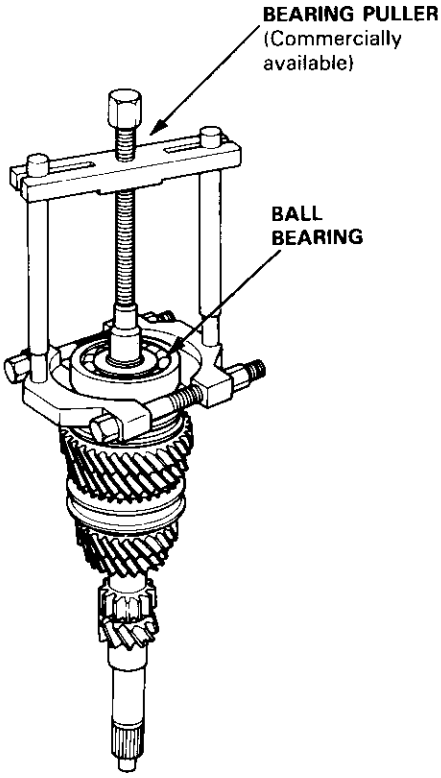

CAUTION: Remove the synchro hubs using a press and steel blocks as shown. Use of a jaw-type puller can cause damage to the gear teeth.

2. Support 4th gear on steel blocks, and press the mainshaft out of the 5th synchro hub as shown.

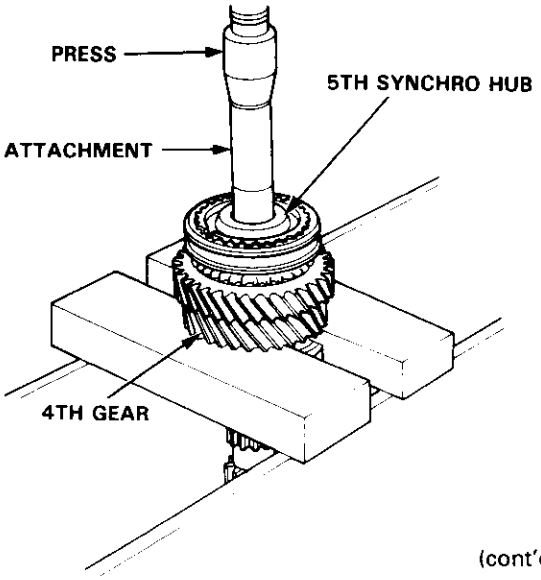

(cont'd)

Disassembly (cont'd)

3. Support the 3rd gear on steel blocks, and press the mainshaft out of the 3rd/4th synchro hub as shown.

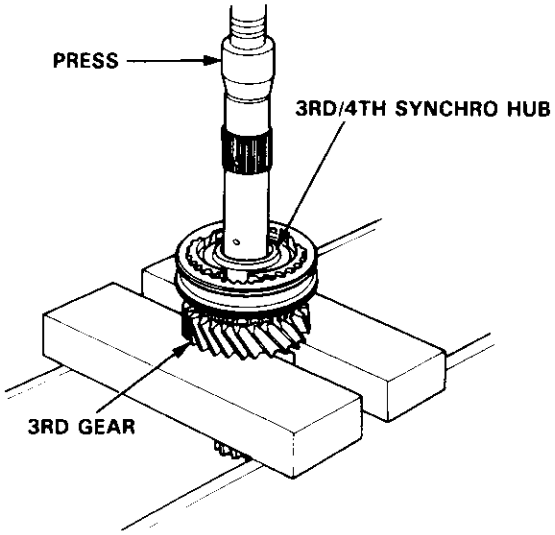

Inspection

1. Inspect the gear surface and bearing surface for wear and damage, then measure the mainshaft at points A, B, C, and D.

Standard: **A: 21.987 – 22.000 mm (0.8656 – 0.8661 in)**
B: 26.980 – 26.993 mm (1.0622 – 1.0627 in)
C: 33.984 – 34.000 mm (1.3380 – 1.3386 in)
D: 25.977 – 25.990 mm (1.0227 – 1.0232 in)
Service Limit: A: 21.930 mm (0.8634 in)
B: 26.930 mm (1.0602 in)
C: 33.930 mm (1.3358 in)
D: 25.920 mm (1.0205 in)

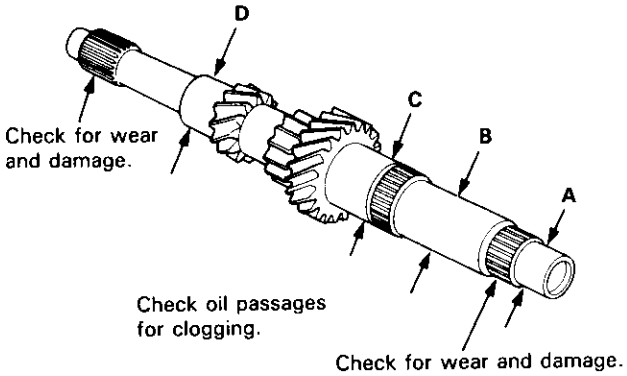

If any part of the mainshaft is less than the service limit, replace it with a new one.

2. Inspect for runout.

Standard: **0.02 mm (0.001 in) max.**
Service Limit: 0.05 mm (0.002 in)

NOTE: Support the mainshaft at both ends as shown.

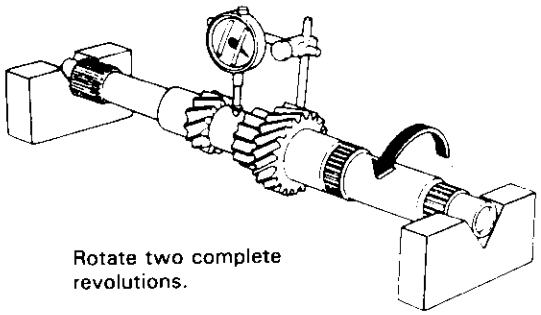

If the runout is more than the service limit, replace the mainshaft with a new one.

Reassembly

CAUTION: When installing the 3rd/4th and 5th synchro hubs, support the shaft on steel blocks, and install the synchro hubs using a press.

NOTE: Refer to page 13-15 for reassembly sequence.

1. Support 2nd gear on steel blocks, then install the 3rd/4th synchro hub using the special tools and a press.

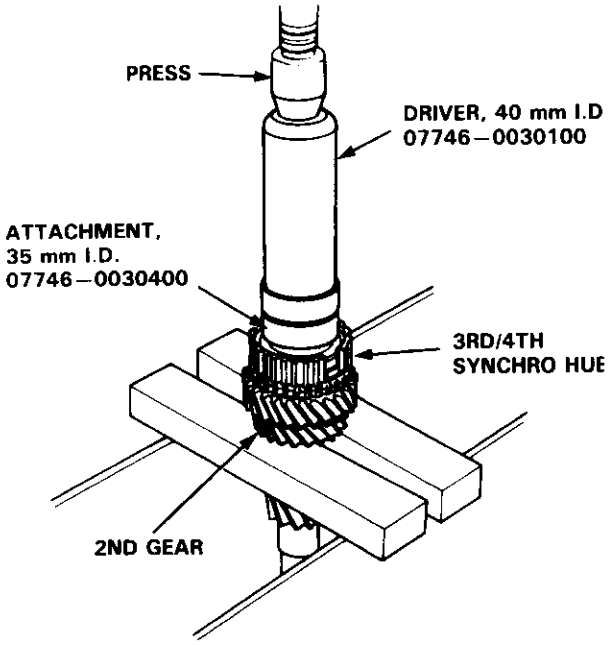

2. Install the 3rd/4th synchro sleeve by aligning the stops of the 3rd/4th synchro sleeve and hub.

   NOTE: After installing, check the operation of the 3rd/4th synchro hub set.

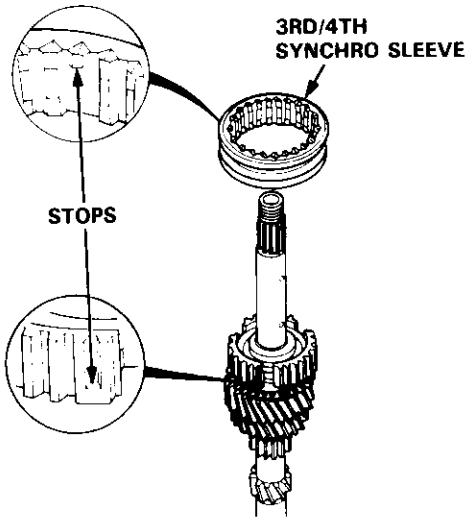

3. Install the 5th synchro hub using the special tools and a press.

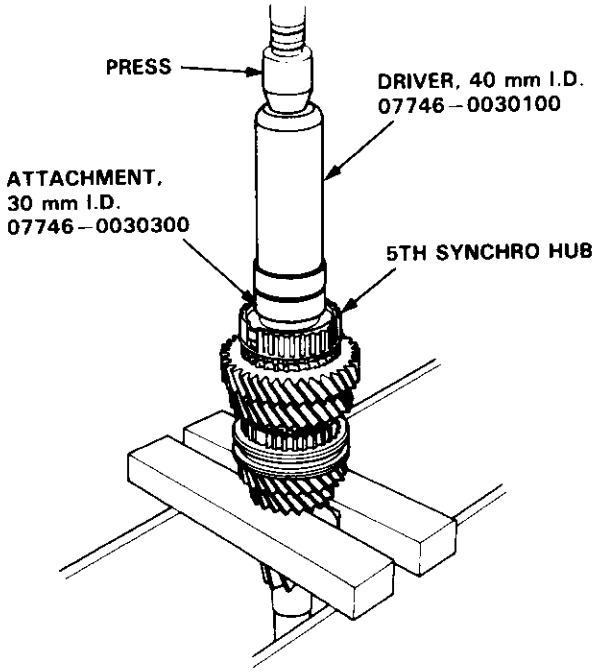

4. Install the ball bearing in the direction shown using the special tools and a press.

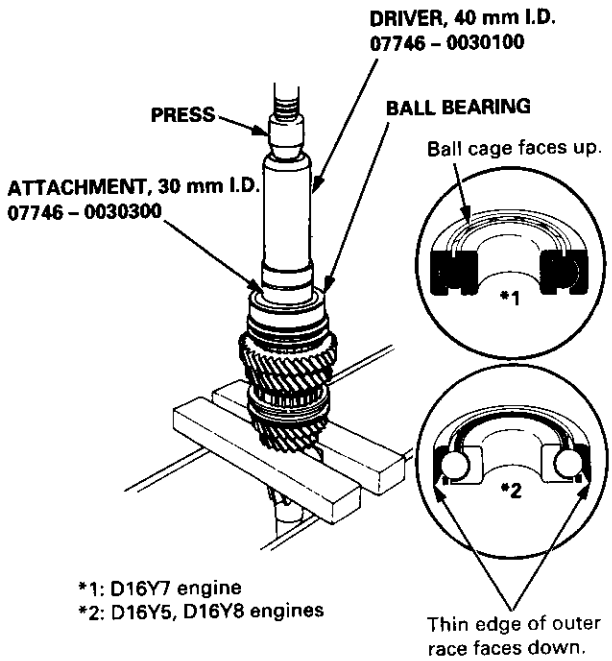

Countershaft Assembly

Index

NOTE: The 3rd, 4th, and 5th gears are installed with a press.

OIL Prior to reassembling, clean all the parts in solvent, dry them and apply lubricant to all contact surfaces except the 3rd, 4th, and 5th gears.

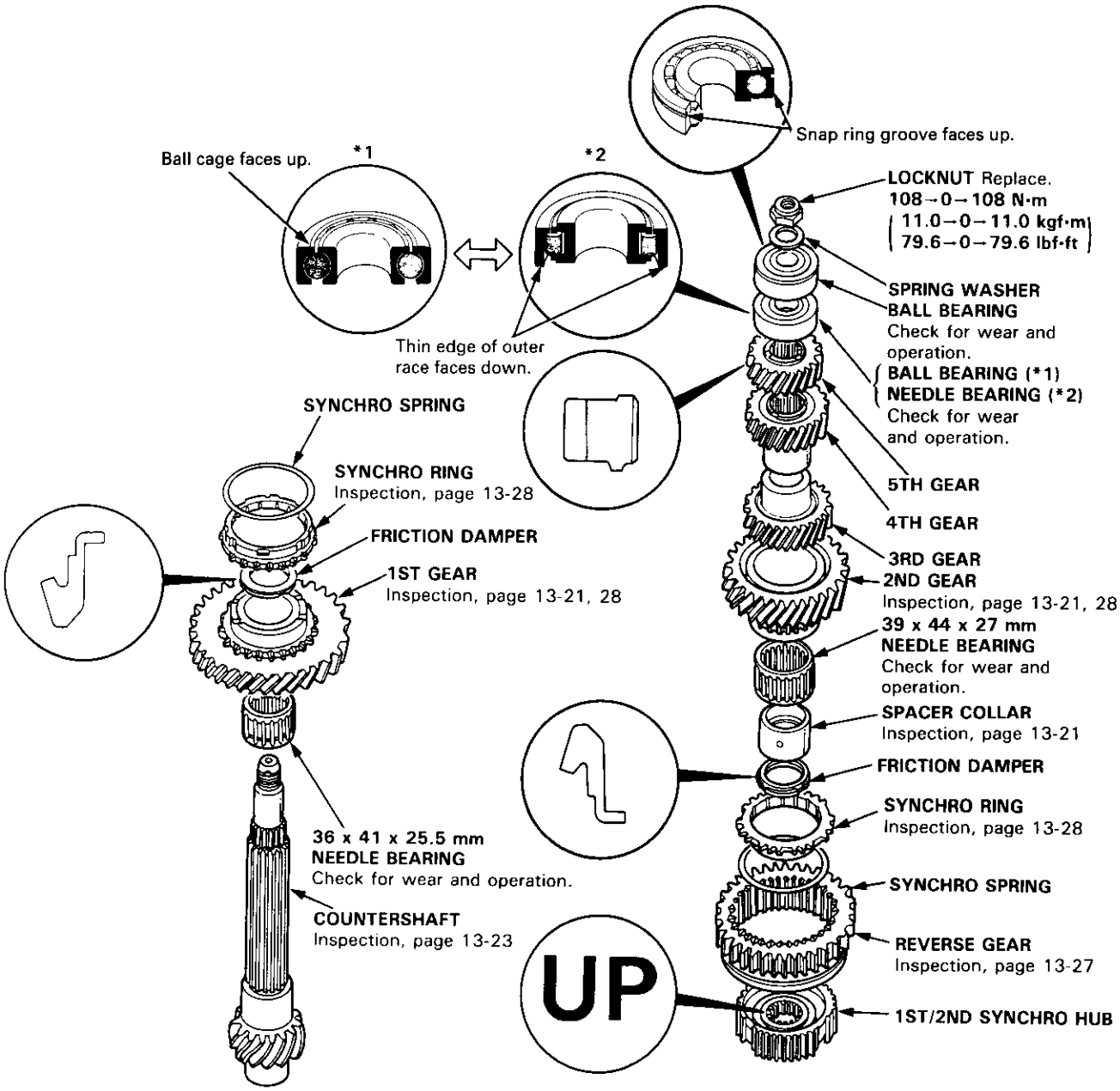

*1: D16Y7 engine
*2: D16Y5, D16Y8 engines

Clearance Inspection

NOTE: If replacement is required, always replace the synchro sleeve and hub as a set.

1. Measure the clearance between the countershaft and 1st gear.

   Standard: 0.03 – 0.10 mm (0.001 – 0.004 in)
   Service Limit: 0.22 mm (0.009 in)

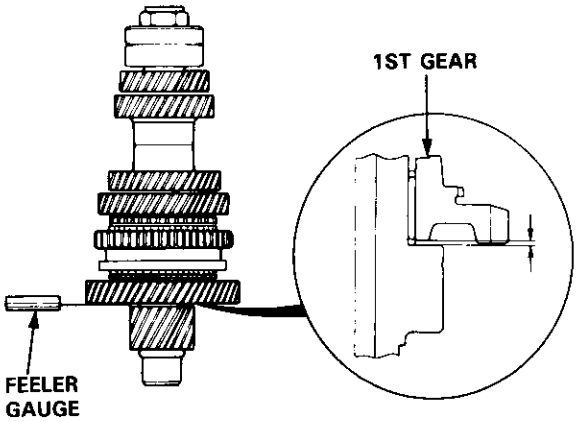

2. If the clearance is more than the service limit, measure the thickness of 1st gear.

   Standard: 30.41 – 30.44 mm (1.197 – 1.198 in)
   Service Limit: 30.36 mm (1.195 in)

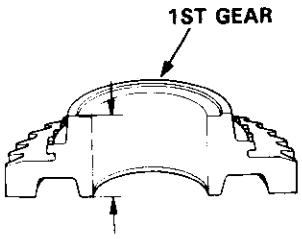

- If the thickness of 1st gear is less than the service limit, replace 1st gear with a new one.
- If the thickness of 1st gear is within the service limit, replace the 1st/2nd synchro hub with a new one.

3. Measure the clearance between 2nd and 3rd gears.

   Standard: 0.04 – 0.12 mm (0.002 – 0.005 in)
   Service Limit: 0.24 mm (0.009 in)

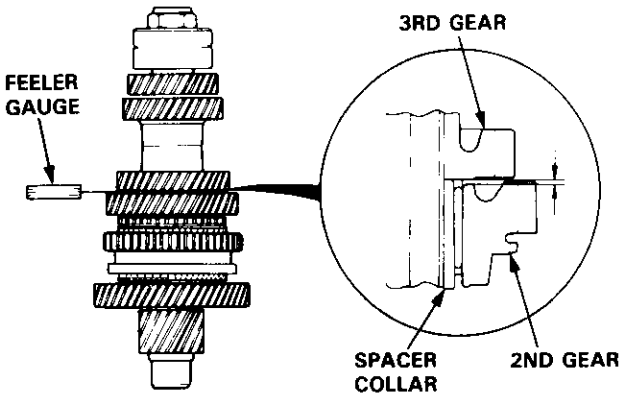

4. If the clearance is more than the service limit, measure the thickness of the spacer collar.

   Standard: 32.03 – 32.06 mm (1.261 – 1.262 in)
   Service Limit: 32.01 mm (1.260 in)

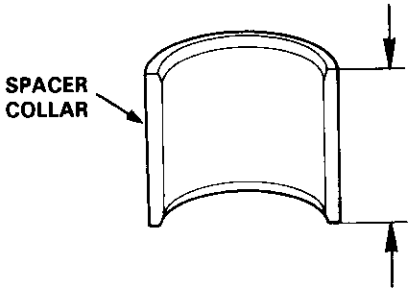

5. If the thickness is less than the service limit, replace the spacer collar with a new one.
   If the thickness is within the service limit, measure the thickness of 2nd gear.

   Standard: 31.91 – 31.96 mm (1.256 – 1.258 in)
   Service Limit: 31.85 mm (1.254 in)

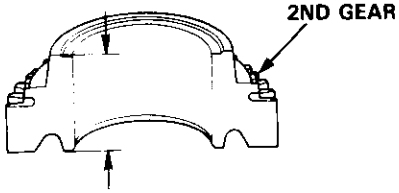

- If the thickness of 2nd gear is less than the service limit, replace 2nd gear with a new one.
- If the thickness of 2nd gear is within the service limit, replace the 1st/2nd synchro hub with a new one.

Countershaft Assembly

Disassembly

CAUTION: Remove the gears using a press and steel blocks as shown. Use of a jaw-type puller can damage the gear teeth.

1. Securely clamp the countershaft assembly in a bench vise with wood blocks.

2. Raise the locknut tab from the groove of the countershaft, then remove the locknut and the spring washer.

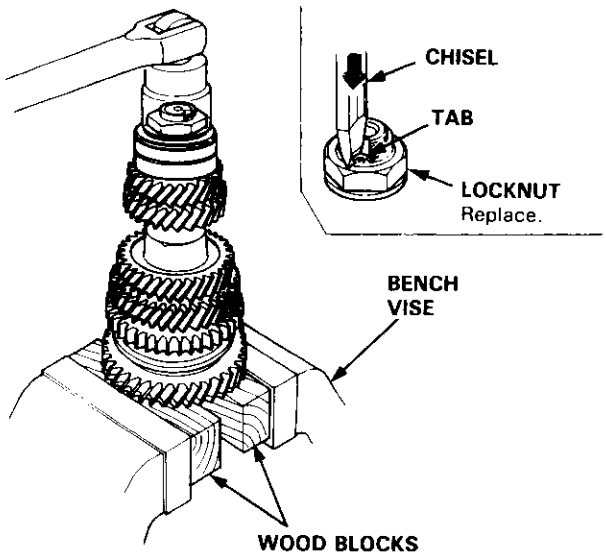

3. Remove the bearings using a bearing puller as shown.

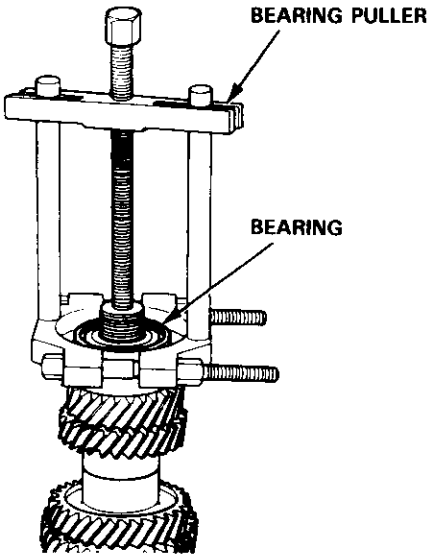

4. Support 4th gear on steel blocks, and press the countershaft out of 5th and 4th gears as shown.

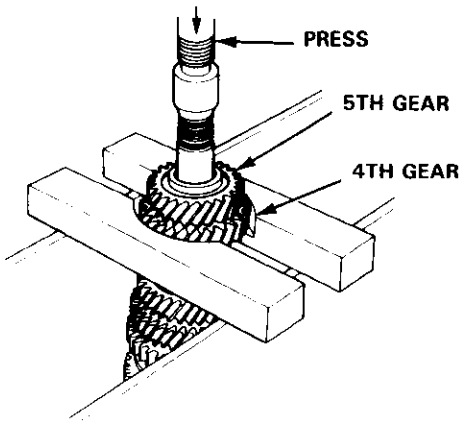

5. Support 1st gear on steel blocks, and press the countershaft out of 3rd gear as shown.

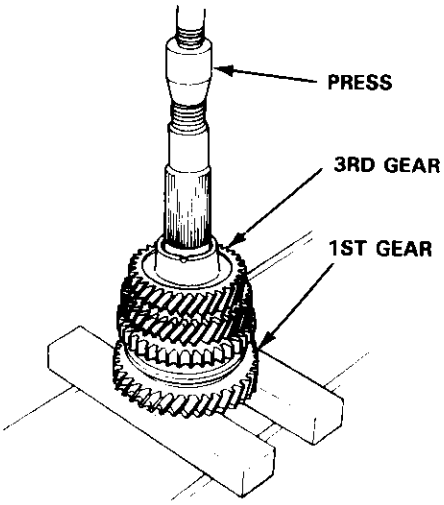

Inspection

1. Inspect the gear surfaces and bearing surfaces for wear and damage, then measure the countershaft at points A, B, and C.

   Standard: **A: 30.000 – 30.015 mm (1.1811 – 1.1817 in)**
   B: 35.984 – 36.000 mm (1.4167 – 1.4173 in)
   C: 24.980 – 24.993 mm (0.9835 – 0.9840 in)
   Service Limit: A: 29.950 mm (1.1791 in)
   B: 35.930 mm (1.4146 in)
   C: 24.930 mm (0.9815 in)

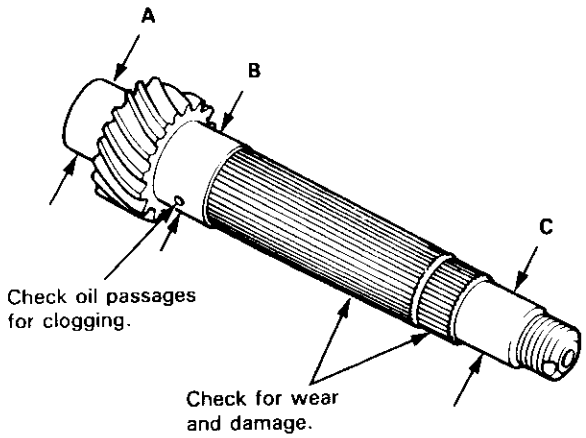

   - If any part of the countershaft is less than the service limit, replace it with a new one.

2. Inspect for runout.

   Standard: **0.02 mm (0.001 in) max.**
   Service Limit: 0.05 mm (0.002 in)

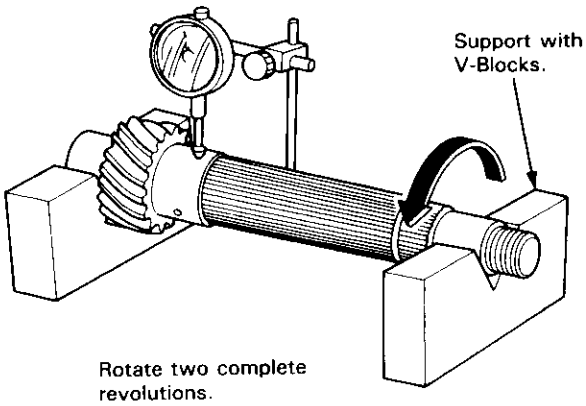

   - If the runout is more than the service limit, replace the countershaft with a new one.

Reassembly

CAUTION:
- **Press the 3rd, 4th, and 5th gears on the countershaft without lubrication.**
- **When installing the 3rd, 4th, and 5th gears, support the shaft on steel blocks and install the gears using a press.**

NOTE: Refer to page 13-20 for reassembly sequence.

1. Install the needle bearing on the countershaft.

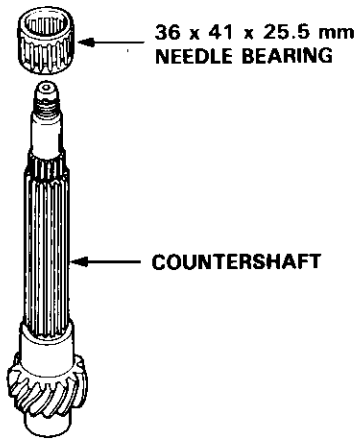

2. Assemble the parts below as shown.

   NOTE: Check that the fingers of the friction damper are securely set in the grooves of the 1st/2nd synchro hub.

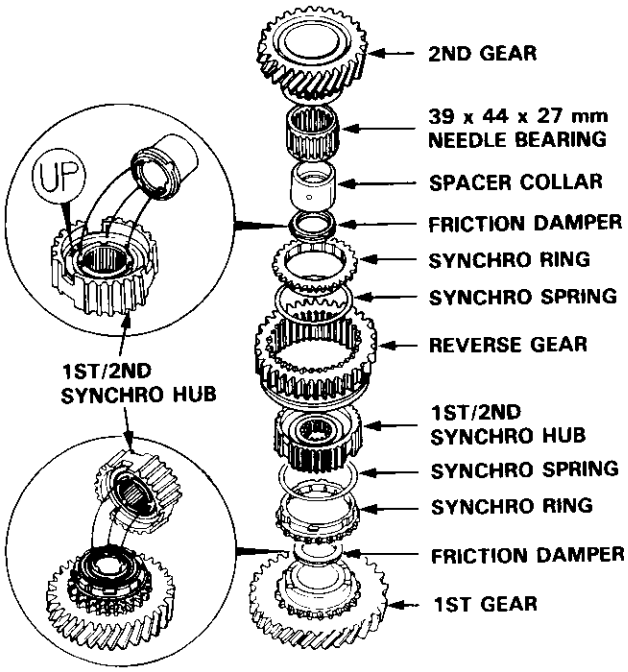

3. Install the parts on the countershaft.

(cont'd)

Reassembly (cont'd)

4. Support the countershaft on a steel block as shown and install 3rd gear using the special tools and a press.

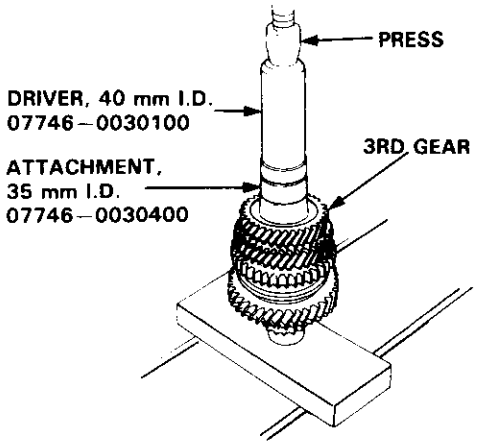

5. Install 4th gear using the special tools and a press.

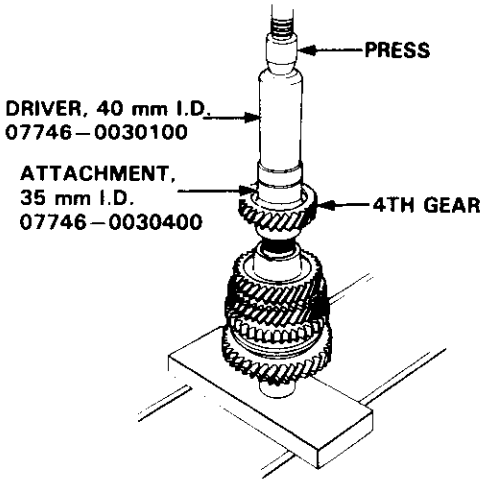

6. Install 5th gear using the special tools and a press.

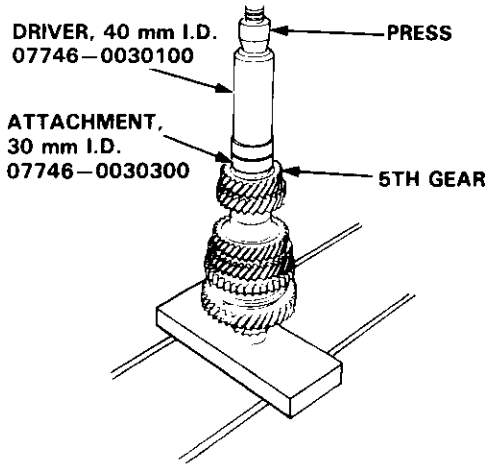

7. Install the bearings in the direction shown using the special tools and a press.

CAUTION: Install the bearings with a maximum pressure of 7.8 kN (800 kgf, 5,786 lbf).

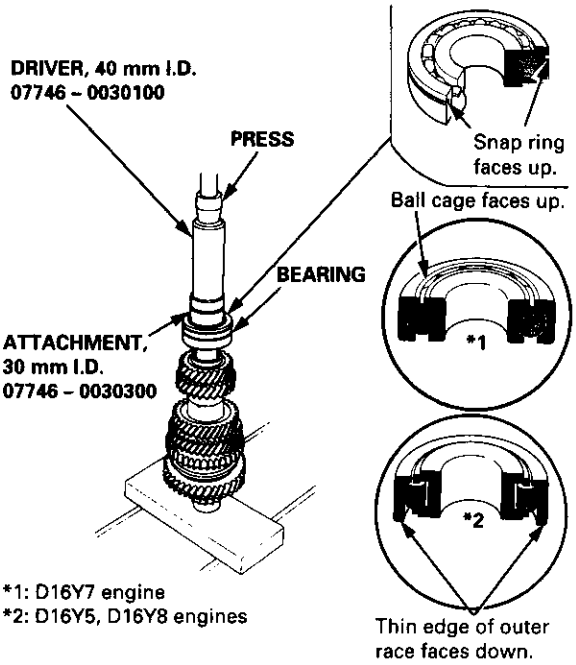

*1: D16Y7 engine
*2: D16Y5, D16Y8 engines

8. Securely clamp the countershaft assembly in a bench vise with wood blocks.

LOCKNUT
108 → 0 → 108 N·m
(11.0 → 0 → 11.0 kgf·m, 79.6 → 0 → 79.6 lbf·ft)

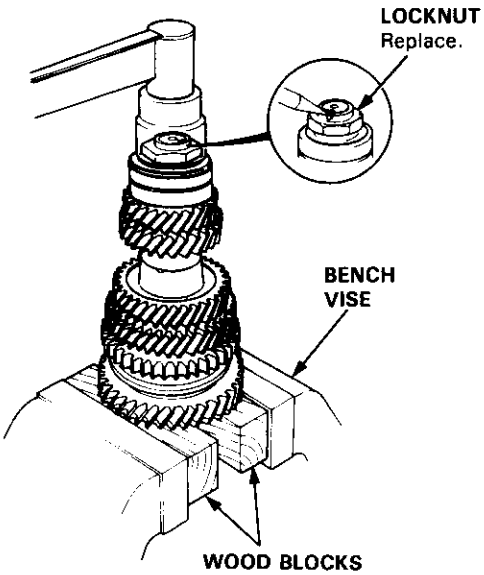

9. Install the spring washer, tighten the locknut, then stake the locknut tab into groove.

Index

Prior to reassembling, clean all the parts in solvent, dry them, and apply lubricant to any contact parts.

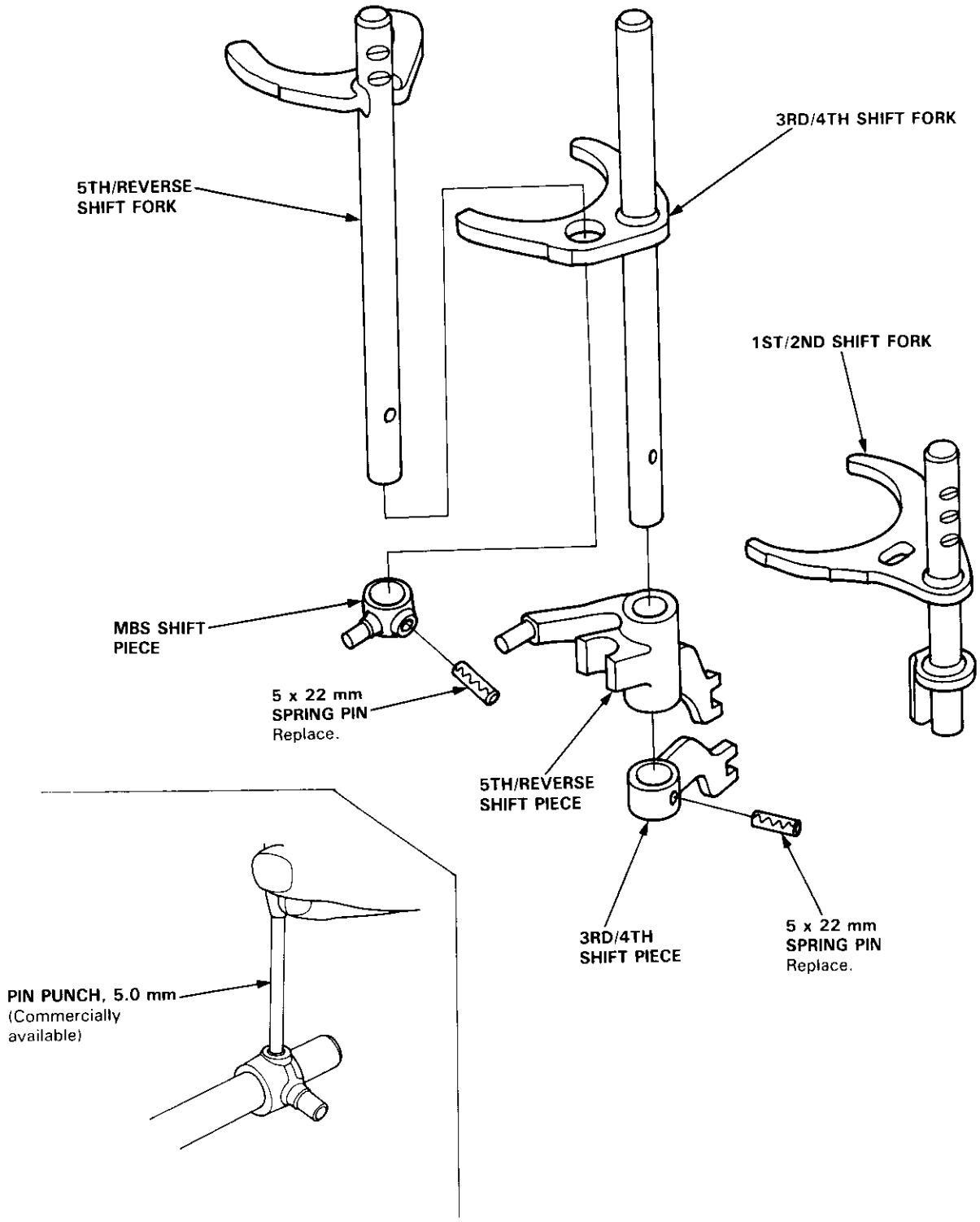

Shift Fork Assembly

Clearance Inspection

NOTE: The synchro sleeve and the synchro hub should be replaced as a set.

1. Measure the clearance between each shift fork and its matching synchro sleeve.

   Standard: 0.35 – 0.65 mm (0.014 – 0.026 in)
   Service Limit: 1.0 mm (0.04 in)

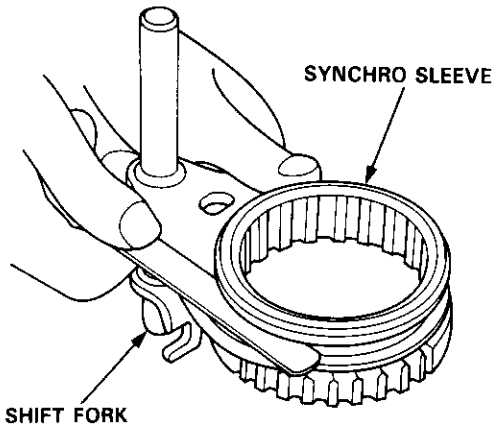

2. If the clearance is more than the service limit, measure the thickness of the shift fork fingers.

   Standard:
   3rd/4th: 7.4 – 7.6 mm (0.291 – 0.299 in)
   1st/2nd, 5th: 6.2 – 6.4 mm (0.244 – 0.252 in)

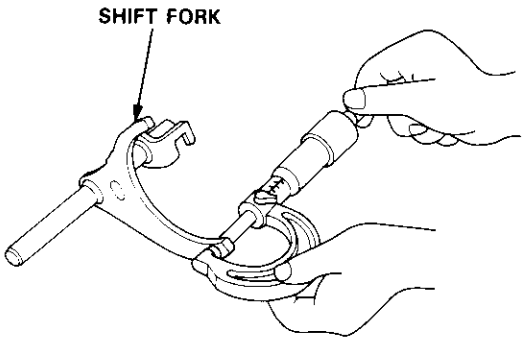

- If the thickness of the shift fork fingers is not within the standard, replace the shift fork with a new one.
- If the thickness of the shift fork fingers is within the standard, replace the synchro sleeve with a new one.

3. Measure the clearance between the shift piece or shift fork and the shift arm B.

   Standard: 0.2 – 0.5 mm (0.008 – 0.02 in)
   Service Limit: 0.62 mm (0.0244 in)

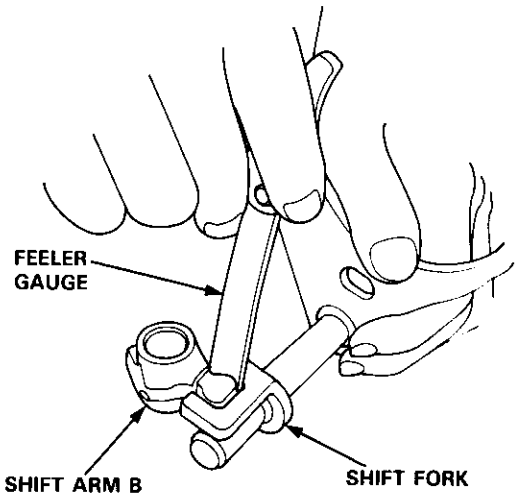

4. If the clearance is more than the service limit, measure the groove of the shift piece or shift fork.

   Standard: 13.2 – 13.4 mm (0.520 – 0.528 in)

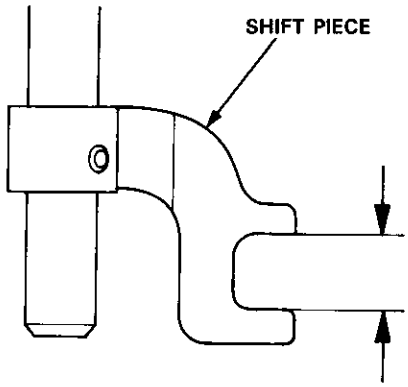

- If the groove of the shift piece or shift fork is not within the standard, replace the shift piece or shift fork with a new one.
- If the groove of the shift piece or shift fork is within the standard, replace the shift arm B with a new one.

MBS Shift Piece Inspection

1. Measure the width of the MBS shift piece.

   Standard: 6.9 – 7.1 mm (0.272 – 0.280 in)
   Service Limit: 6.8 mm (0.268 in)

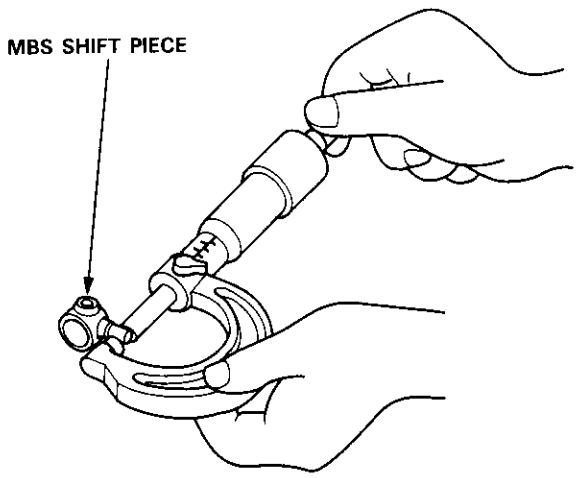

If the width of the MBS shift piece is less than the service limit, replace the MBS shift piece.

Inspection/Installation

1. Inspect gear teeth on all synchro hubs and synchro sleeves for rounded off corners, which indicate wear.

2. Install each synchro hub in its mating synchro sleeve, and check for freedom of movement.

   NOTE: If replacement is required, always replace the synchro sleeve and synchro hub as a set.

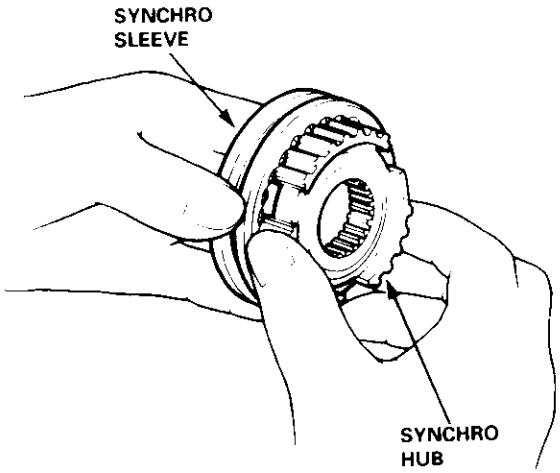

3. When assembling the synchro sleeve and synchro hub, be sure to match the three sets of longer teeth (120 degrees apart) on the synchro sleeve with the three sets of deeper grooves in the synchro Hub.

   CAUTION: Do not install the synchro sleeve with its longer teeth in the synchro hub slots because it will damage the spring ring.

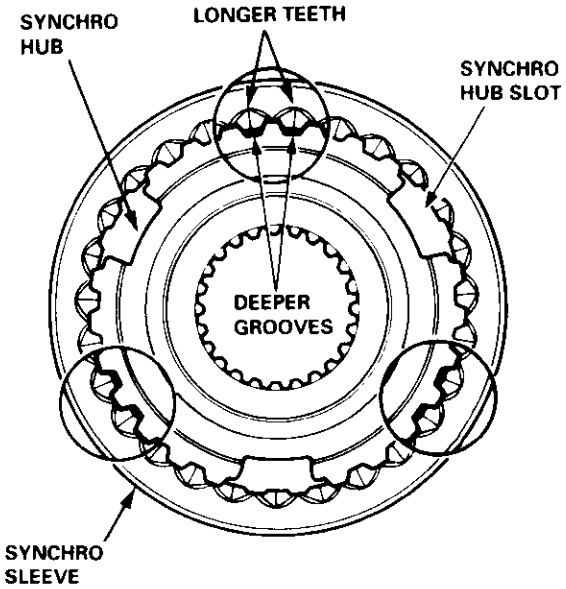

Synchro Ring, Gear

Inspection

1. Inspect the synchro ring and gear.

   A: Inspect the inside of the synchro ring for wear.

   B: Inspect the synchro sleeve teeth and matching teeth on the synchro ring for wear (rounded off).

   C: Inspect the synchro sleeve teeth and matching teeth on the gear for wear (rounded off).

   D: Inspect the gear hub thrust surface for wear.

   E: Inspect the cone surface for wear and roughness.

   F: Inspect the teeth on all gears for uneven wear, scoring, galling, and cracks.

2. Coat the cone surface of the gear with oil, and place the synchro ring on the matching gear. Rotate the synchro ring, making sure that it does not slip.

   Measure the clearance between the synchro ring and gear all the way around.

   NOTE: Hold the synchro ring against the gear evenly while measuring the clearance.

   Synchro Ring-to-Gear Clearance
   Standard: 0.73 – 1.18 mm (0.029 – 0.046 in)
   Service Limit: 0.4 mm (0.02 in)

   If the clearance is less than the service limit, replace the synchro ring and synchro cone.

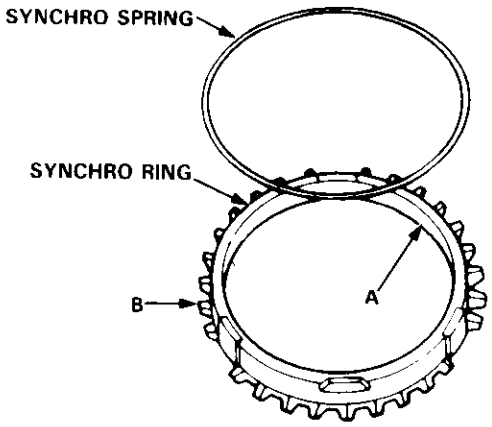

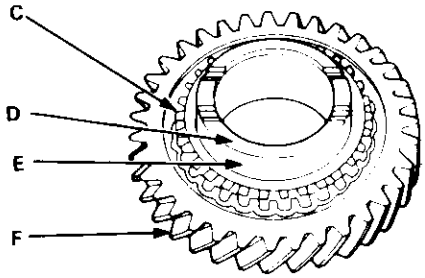

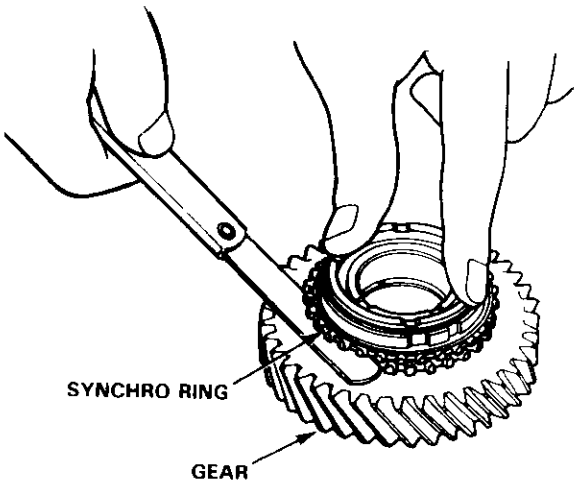

Shift Rod

Removal

NOTE: The steel balls are all of the same size (5/16 in).

1. Remove the differential assembly.
2. Remove the 28 mm plug bolt and 1st/2nd select spring.
3. Remove the shift arm C attaching bolt.
4. Remove the shift arm shaft.

   NOTE: Be careful not to lose the steel ball.

5. Remove the steel ball, spring, and collar.
6. Remove shift arms C and B, and the interlock, then remove the reverse select spring and retainer.
7. Remove the shift arm A attaching bolt, the set ball spring bolt, set spring, and steel ball.
8. Remove the shift rod, then remove the shift arm A.
9. Remove the reverse lock cam.
10. Remove the magnet.

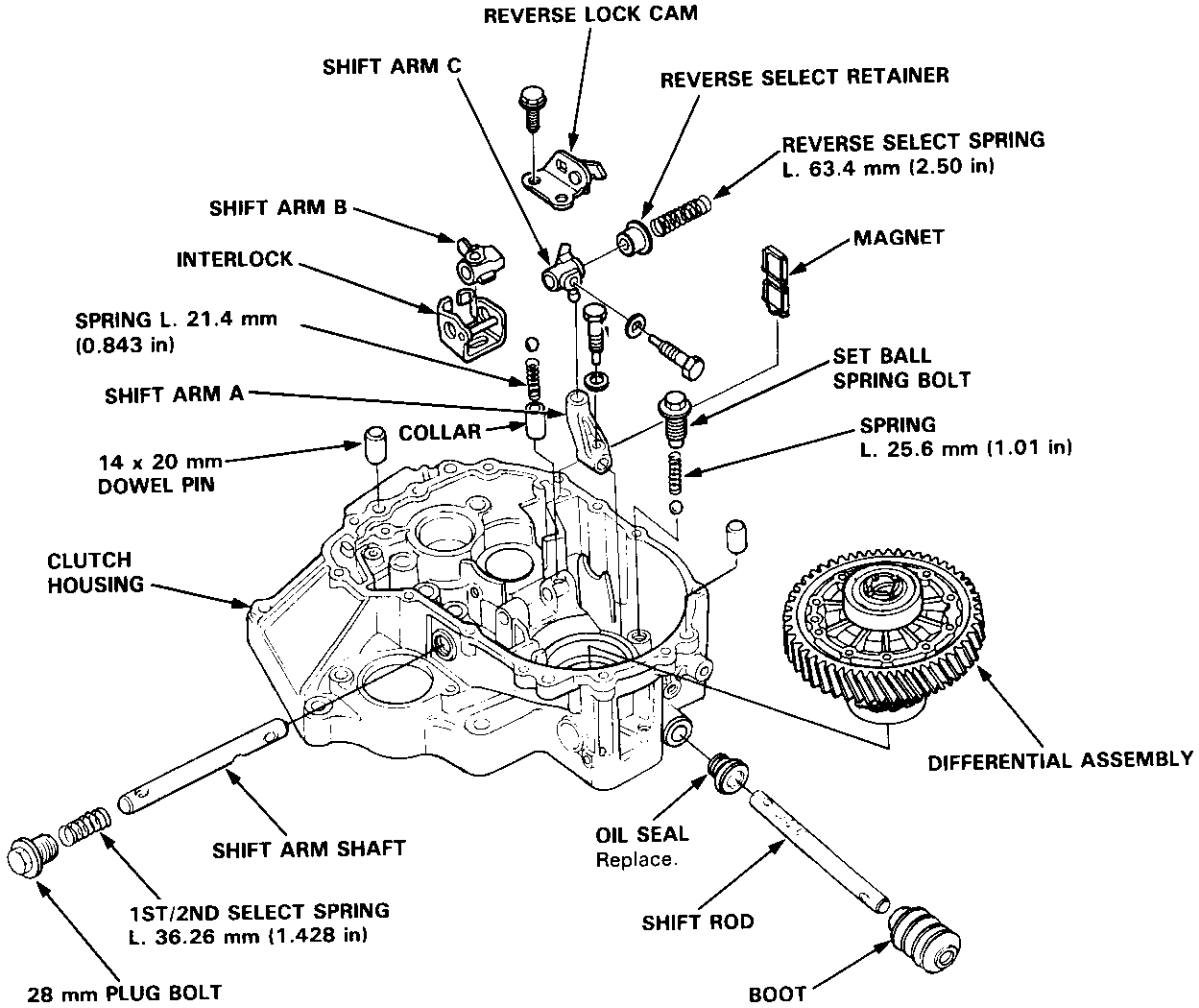

Index

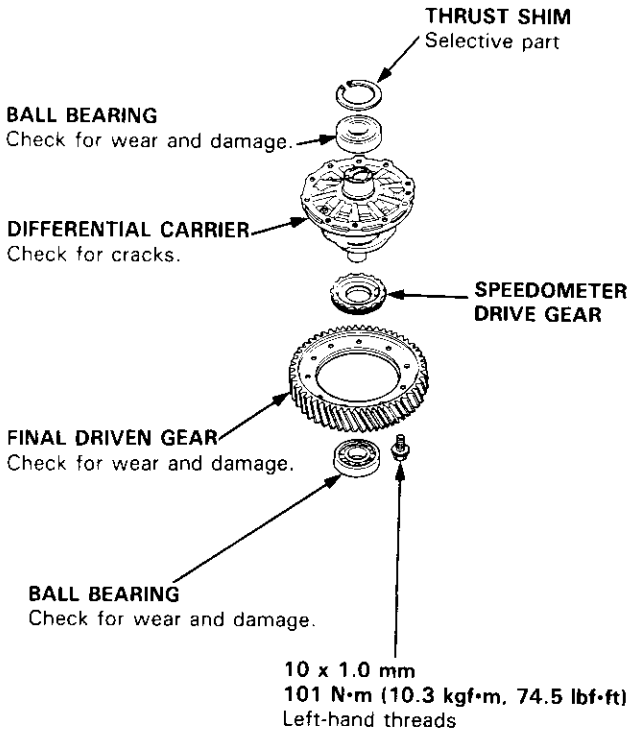

Backlash Inspection

1. Place differential assembly on V-blocks, and install both driveshafts.

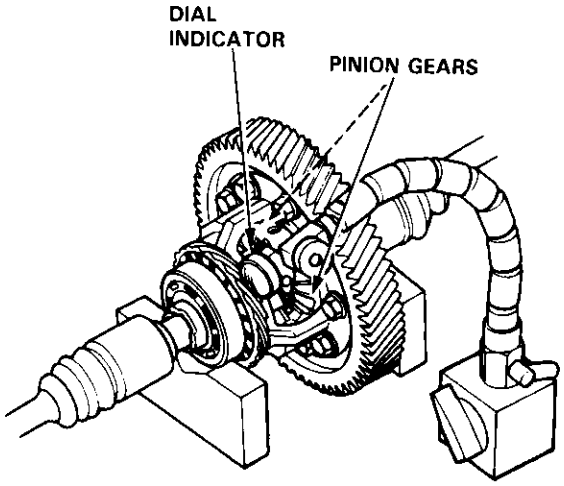

2. Measure backlash of both pinion gears.

   Standard (New): 0.05 – 0.15 mm (0.002 – 0.006 in)

3. If the backlash is not within the standard, replace the differential carrier.

Bearing Replacement

NOTE: Check bearings for wear and rough rotation. If the bearings are OK, removal is not necessary.

1. Remove the ball bearings using a bearing puller as shown.

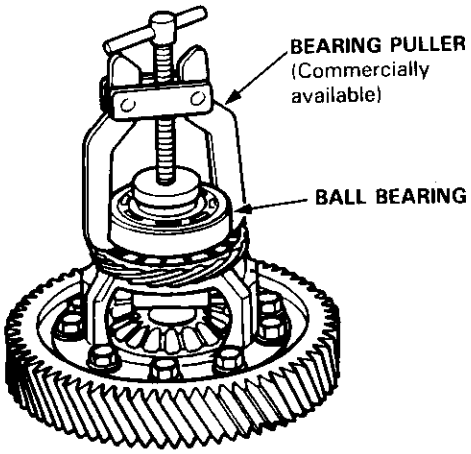

2. Install new ball bearings using the special tool as shown.

   NOTE: Drive the bearings squarely until they bottom against the carrier.

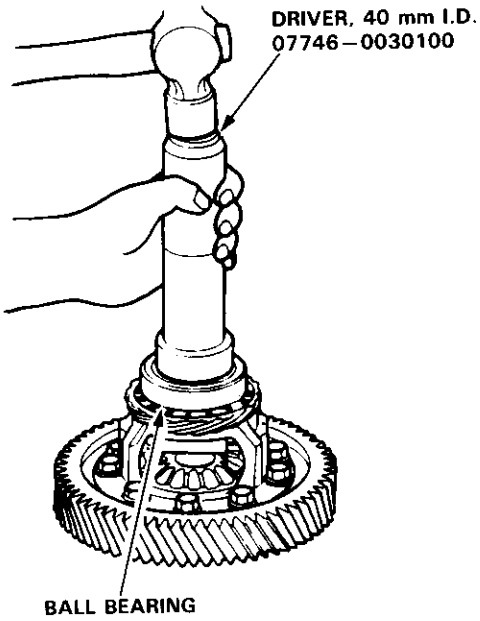

Final Driven Gear Replacement

1. Remove the bolts in a crisscross pattern in several steps, then remove the final driven gear from the differential carrier.

   NOTE: The final driven gear bolts have left-hand threads.

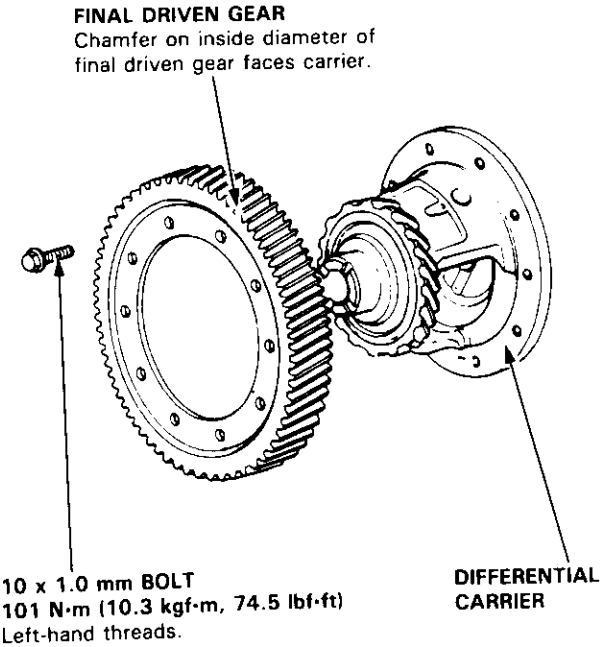

2. Install the final driven gear by tightening the bolts in a crisscross pattern in several steps.

Thrust Shim Adjustment

1. Install the differential assembly, making sure it bottoms in the clutch housing, using the special tool as shown.

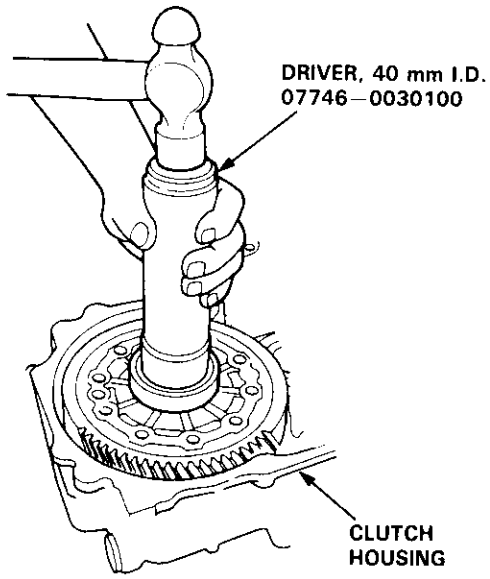

2. Install the thrust shim.

   NOTE: Install the same size thrust shim that was removed.

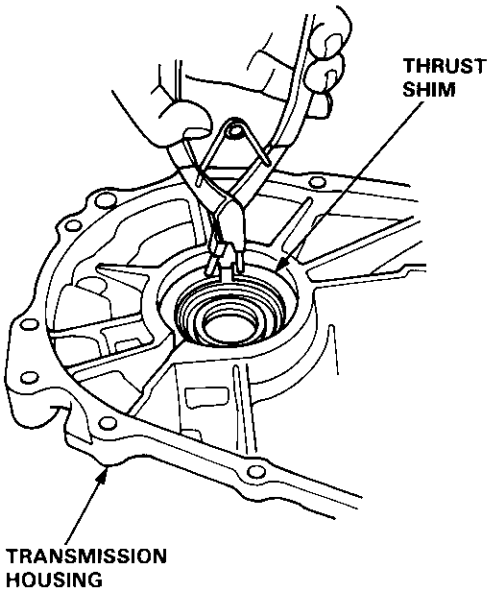

3. Install the transmission housing (see page 13-41).

   NOTE: Do not apply liquid gasket to the mating surface of the clutch housing.

4. Tighten the transmission housing attaching bolts (see page 13-42).

   8 x 1.25 mm
   27 N·m (2.8 kgf·m, 20 lbf·ft)

5. Use the special tool to bottom the differential assembly in the clutch housing.

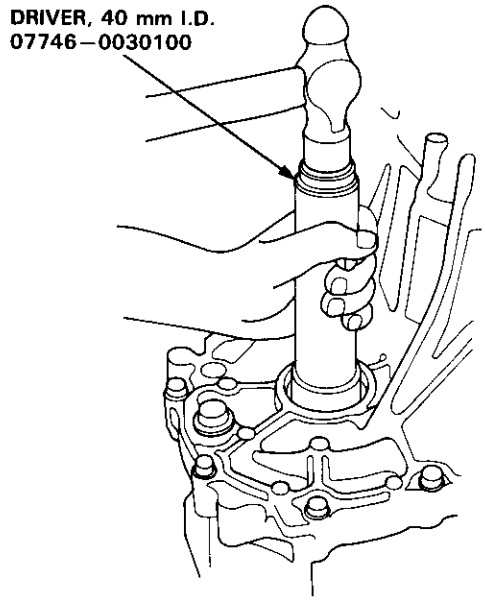

6. Measure clearance between thrust shim and bearing outer race in transmission housing.

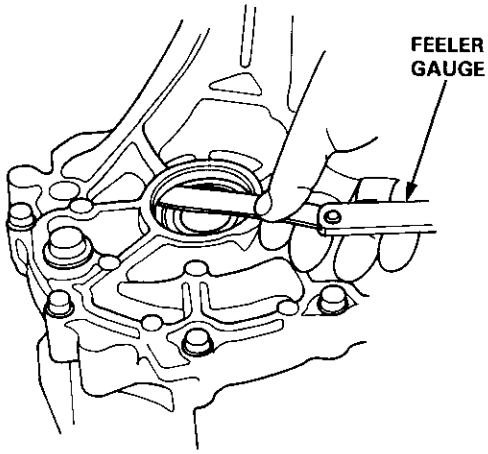

7. If the clearance is more than the standard, select a new thrust shim from the following table.

NOTE: If the clearance measured in step 6 is within the standard, go to step 10.

Standard: 0 – 0.10 mm (0 – 0.004 in)

72 mm THRUST SHIM: D16Y7 engine

Part Number	Thickness
41441 – PL3 – A00	1.0 mm (0.0394 in)
41442 – PL3 – A00	1.1 mm (0.0433 in)
41443 – PL3 – A00	1.2 mm (0.0472 in)
41444 – PL3 – A00	1.3 mm (0.0512 in)
41445 – PL3 – A00	1.4 mm (0.0551 in)
41446 – PL3 – A00	1.5 mm (0.0591 in)
41447 – PL3 – A00	1.6 mm (0.0630 in)
41448 – PL3 – A00	1.7 mm (0.0669 in)
41449 – PL3 – A00	1.8 mm (0.0709 in)
41450 – PL3 – A00	1.05 mm (0.0413 in)
41451 – PL3 – A00	1.15 mm (0.0453 in)
41452 – PL3 – A00	1.25 mm (0.0492 in)
41453 – PL3 – A00	1.35 mm (0.0532 in)
41454 – PL3 – A00	1.45 mm (0.0571 in)
41455 – PL3 – A00	1.55 mm (0.0610 in)
41456 – PL3 – A00	1.65 mm (0.0650 in)
41457 – PL3 – A00	1.75 mm (0.0689 in)

80 mm THRUST SHIM: D16Y5, D16Y8 engines

Part Number	Thickness
41441 – PL3 – B00	1.0 mm (0.0394 in)
41442 – PL3 – B00	1.1 mm (0.0433 in)
41443 – PL3 – B00	1.2 mm (0.0472 in)
41444 – PL3 – B00	1.3 mm (0.0512 in)
41445 – PL3 – B00	1.4 mm (0.0551 in)
41446 – PL3 – B00	1.5 mm (0.0591 in)
41447 – PL3 – B00	1.6 mm (0.0630 in)
41448 – PL3 – B00	1.7 mm (0.0669 in)
41449 – PL3 – B00	1.8 mm (0.0709 in)
41450 – PL3 – B00	1.05 mm (0.0413 in)
41451 – PL3 – B00	1.15 mm (0.0453 in)
41452 – PL3 – B00	1.25 mm (0.0492 in)
41453 – PL3 – B00	1.35 mm (0.0532 in)
41454 – PL3 – B00	1.45 mm (0.0571 in)
41455 – PL3 – B00	1.55 mm (0.0610 in)
41456 – PL3 – B00	1.65 mm (0.0650 in)
41457 – PL3 – B00	1.75 mm (0.0689 in)

8. Remove the bolts and transmission housing.

9. Replace the thrust shim selected in step 7, then recheck the clearance.

10. Remove the bolts and transmission housing. Apply liquid gasket to the surface of the transmission housing and reassemble.

Replacement

Mainshaft

1. Remove the ball bearing using the special tool as shown.

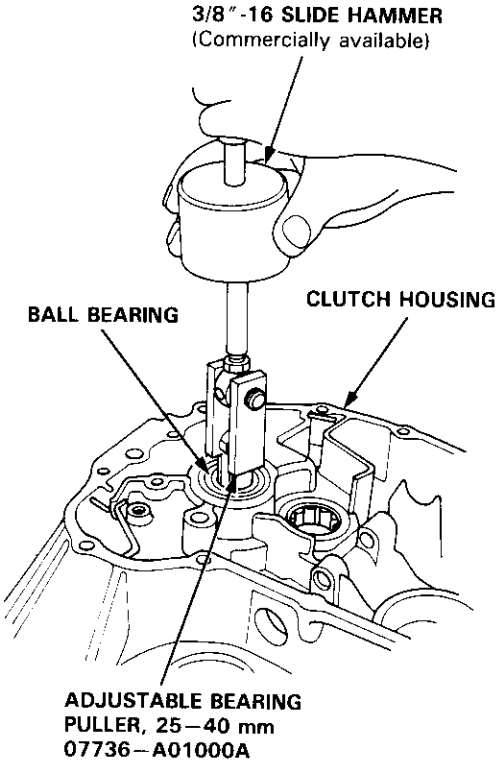

2. Remove the oil seal from the clutch housing.

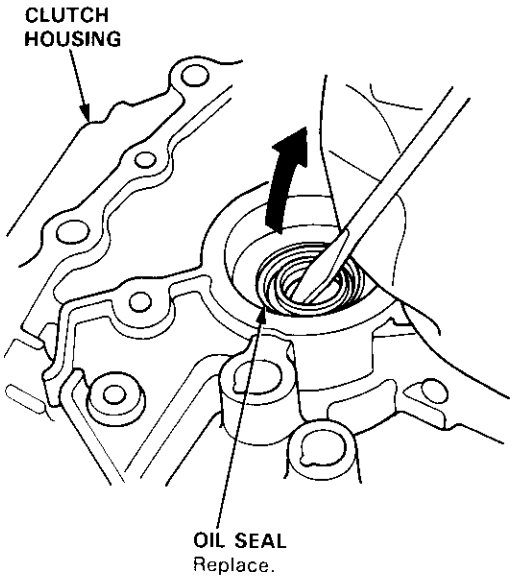

3. Drive the new oil seal into the clutch housing using the special tools as shown.

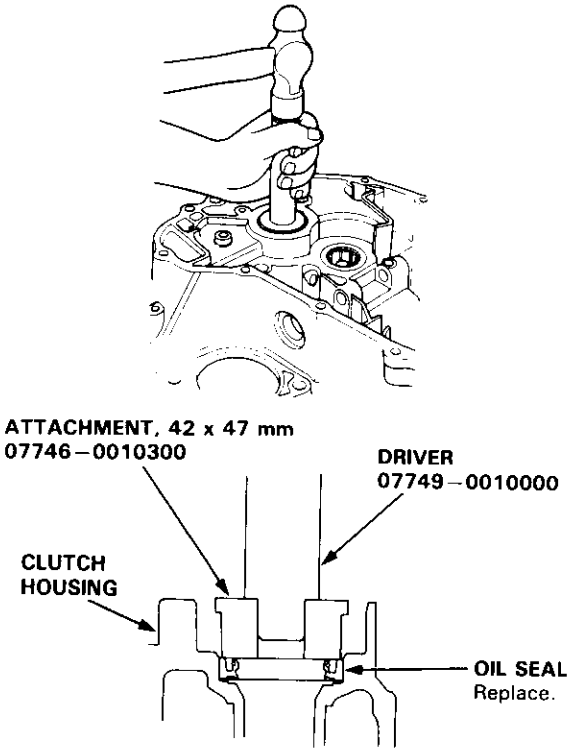

4. Drive the ball bearing into the clutch housing using the special tools as shown.

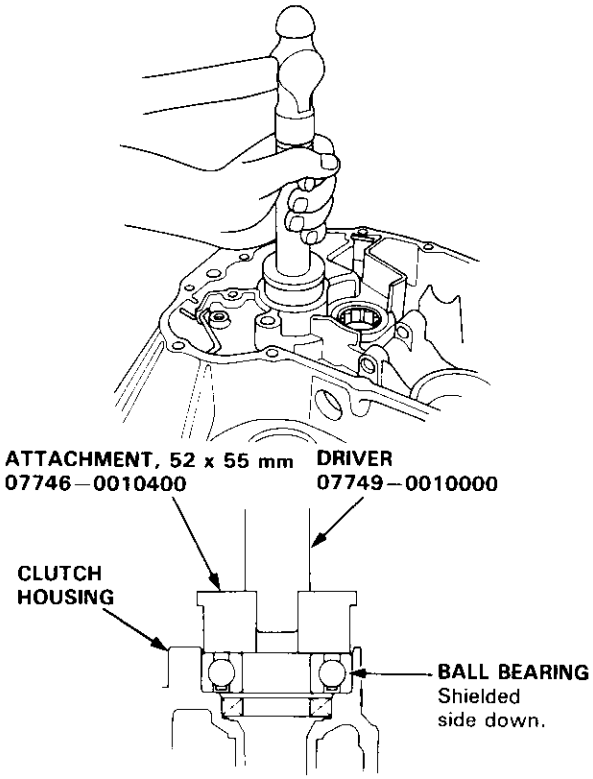

Countershaft

1. Remove the needle bearing using the special tool as shown, then remove the oil guide plate.

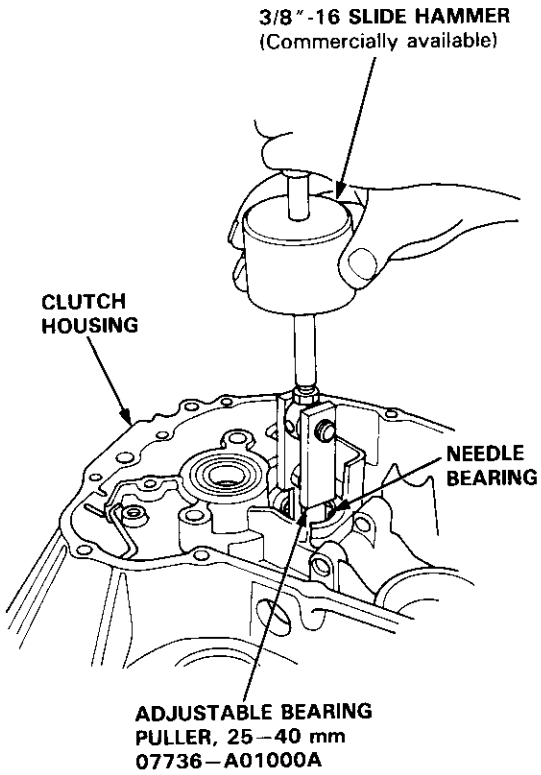

2. Install the oil guide plate, then drive the needle bearing into the clutch housing using the special tools as shown.

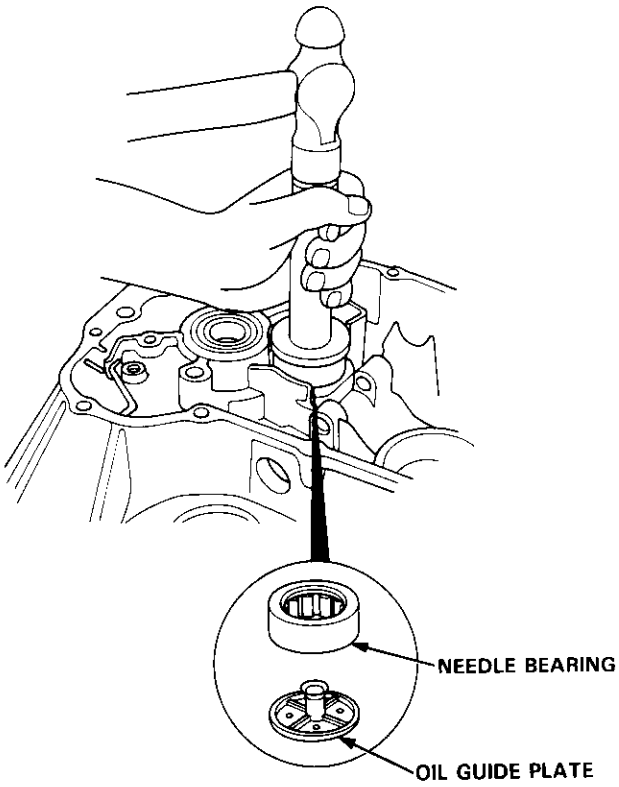

*1: ATTACHMENT, 42 x 47 mm
07746–0010300
*2: ATTACHMENT, 52 x 55 mm
07746–0010400

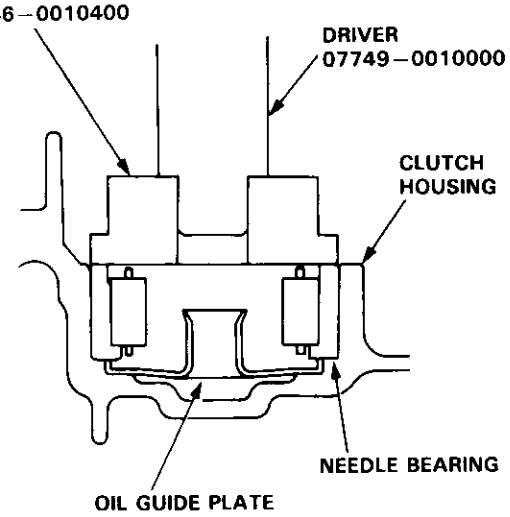

*1: D16Y7 engine
*2: D16Y5, D16Y8 engines

Mainshaft Thrust Shim

Adjustment

1. Remove the thrust shim and oil guide plate from the transmission housing.

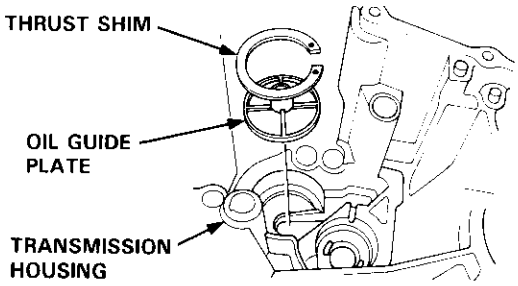

2. Install the 3rd/4th synchro hub, spacer collar, 5th synchro hub, ball bearing, and thrust washer on the mainshaft. Install the assembly in the transmission housing.

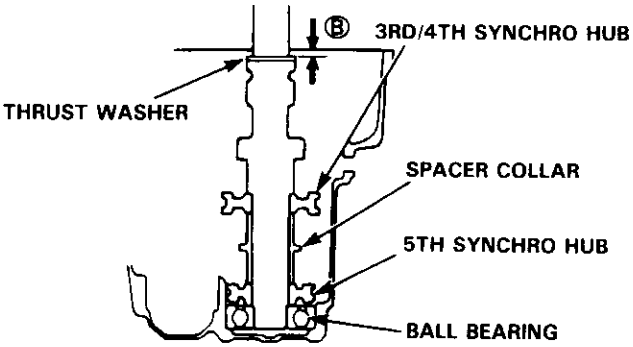

3. Measure the distance Ⓑ between the end of the transmission housing and thrust washer.

   NOTE:
   - Use a straight edge and vernier caliper.
   - Measure at three locations and average the readings.

4. Measure the distance Ⓒ between the surfaces of the clutch housing and bearing inner race.

   NOTE:
   - Use a straight edge and depth gauge.
   - Measure at three locations and average the readings.

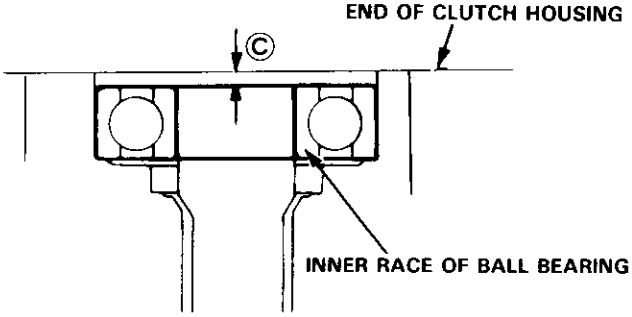

5. Select the proper shim on the basis of the following calculations:

   NOTE: Use only one thrust shim.

   (Basic Formula)
   (B) + (C) – 0.95 = shim thickness

   Example of calculation:
   Distance Ⓑ (2.00 mm) + Distance Ⓒ (0.09 mm) = 2.09 mm
   subtract the spring washer height (0.95 mm) = the required thrust shim (1.14 mm)

65 mm THRUST SHIM: D16Y7 engine:

	Part Number	Thickness
A	23931 – PL3 – A10	0.60 mm (0.0236 in)
B	23932 – PL3 – A10	0.63 mm (0.0284 in)
C	23933 – PL3 – A10	0.66 mm (0.0260 in)
D	23934 – PL3 – A10	0.69 mm (0.0272 in)
E	23935 – PL3 – A10	0.72 mm (0.0283 in)
F	23936 – PL3 – A10	0.75 mm (0.0295 in)
G	23937 – PL3 – A10	0.78 mm (0.0307 in)
H	23938 – PL3 – A10	0.81 mm (0.0319 in)
I	23939 – PL3 – A10	0.84 mm (0.0331 in)
J	23940 – PL3 – A10	0.87 mm (0.0343 in)
K	23941 – PL3 – A10	0.90 mm (0.0354 in)
L	23942 – PL3 – A10	0.93 mm (0.0366 in)
M	23943 – PL3 – A10	0.96 mm (0.0378 in)
N	23944 – PL3 – A10	0.99 mm (0.0390 in)
O	23945 – PL3 – A10	1.02 mm (0.0402 in)
P	23946 – PL3 – A10	1.05 mm (0.0413 in)
Q	23947 – PL3 – A10	1.08 mm (0.0425 in)
R	23948 – PL3 – A10	1.11 mm (0.0437 in)
S	23949 – PL3 – A10	1.14 mm (0.0449 in)
T	23950 – PL3 – A10	1.17 mm (0.0461 in)
U	23951 – PL3 – A10	1.20 mm (0.0472 in)
V	23952 – PL3 – A10	1.23 mm (0.0484 in)
W	23953 – PL3 – A10	1.26 mm (0.0496 in)
X	23954 – PL3 – A10	1.29 mm (0.0508 in)
Y	23955 – PL3 – A10	1.32 mm (0.0520 in)
Z	23956 – PL3 – A10	1.35 mm (0.0531 in)
AA	23957 – PL3 – A10	1.38 mm (0.0543 in)
AB	23958 – PL3 – A10	1.41 mm (0.0555 in)
AC	23959 – PL3 – A10	1.44 mm (0.0567 in)
AD	23960 – PL3 – A10	1.47 mm (0.0579 in)
AE	23961 – PL3 – A10	1.50 mm (0.0591 in)
AF	23962 – PL3 – A10	1.53 mm (0.0602 in)
AG	23963 – PL3 – A10	1.56 mm (0.0614 in)
AH	23964 – PL3 – A10	1.59 mm (0.0626 in)
AI	23965 – PL3 – A10	1.62 mm (0.0638 in)
AJ	23966 – PL3 – A10	1.65 mm (0.0650 in)
AK	23967 – PL3 – A10	1.68 mm (0.0661 in)
AL	23968 – PL3 – A10	1.71 mm (0.0673 in)
AM	23969 – PL3 – A10	1.74 mm (0.0685 in)
AN	23970 – PL3 – A10	1.77 mm (0.0697 in)
AO	23971 – PL3 – A10	1.80 mm (0.0709 in)

70 mm THRUST SHIM: D16Y5, D16Y8 engines

	Part Number	Thickness
A	23931 – PL3 – B00	0.60 mm (0.0236 in)
B	23932 – PL3 – B00	0.63 mm (0.0284 in)
C	23933 – PL3 – B00	0.66 mm (0.0260 in)
D	23934 – PL3 – B00	0.69 mm (0.0272 in)
E	23935 – PL3 – B00	0.72 mm (0.0283 in)
F	23936 – PL3 – B00	0.75 mm (0.0295 in)
G	23937 – PL3 – B00	0.78 mm (0.0307 in)
H	23938 – PL3 – B00	0.81 mm (0.0319 in)
I	23939 – PL3 – B00	0.84 mm (0.0331 in)
J	23940 – PL3 – B00	0.87 mm (0.0343 in)
K	23941 – PL3 – B00	0.90 mm (0.0354 in)
L	23942 – PL3 – B00	0.93 mm (0.0366 in)
M	23943 – PL3 – B00	0.96 mm (0.0378 in)
N	23944 – PL3 – B00	0.99 mm (0.0390 in)
O	23945 – PL3 – B00	1.02 mm (0.0402 in)
P	23946 – PL3 – B00	1.05 mm (0.0413 in)
Q	23947 – PL3 – B00	1.08 mm (0.0425 in)
R	23948 – PL3 – B00	1.11 mm (0.0437 in)
S	23949 – PL3 – B00	1.14 mm (0.0449 in)
T	23950 – PL3 – B00	1.17 mm (0.0461 in)
U	23951 – PL3 – B00	1.20 mm (0.0472 in)
V	23952 – PL3 – B00	1.23 mm (0.0484 in)
W	23953 – PL3 – B00	1.26 mm (0.0496 in)
X	23954 – PL3 – B00	1.29 mm (0.0508 in)
Y	23955 – PL3 – B00	1.32 mm (0.0520 in)
Z	23956 – PL3 – B00	1.35 mm (0.0531 in)
AA	23957 – PL3 – B00	1.38 mm (0.0543 in)
AB	23958 – PL3 – B00	1.41 mm (0.0555 in)
AC	23959 – PL3 – B00	1.44 mm (0.0567 in)
AD	23960 – PL3 – B00	1.47 mm (0.0579 in)
AE	23961 – PL3 – B00	1.50 mm (0.0591 in)
AF	23962 – PL3 – B00	1.53 mm (0.0602 in)
AG	23963 – PL3 – B00	1.56 mm (0.0614 in)
AH	23964 – PL3 – B00	1.59 mm (0.0626 in)
AI	23965 – PL3 – B00	1.62 mm (0.0638 in)
AJ	23966 – PL3 – B00	1.65 mm (0.0650 in)
AK	23967 – PL3 – B00	1.68 mm (0.0661 in)
AL	23968 – PL3 – B00	1.71 mm (0.0673 in)
AM	23969 – PL3 – B00	1.74 mm (0.0685 in)
AN	23970 – PL3 – B00	1.77 mm (0.0697 in)
AO	23971 – PL3 – B00	1.80 mm (0.0709 in)

6. Install the oil guide plate and selected thrust shim in the transmission housing.
   NOTE:
   - Clean the thrust washer, spring washer and thrust shim thoroughly before installation.
   - Install the thrust washer, spring washer and thrust shim properly.

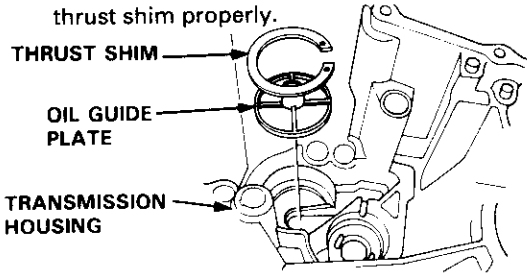

7. Install the thrust washer and spring washer in the mainshaft.

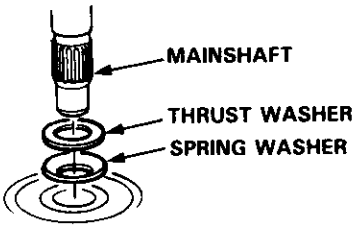

8. Install the mainshaft in the clutch housing.

9. Place the transmission housing over the mainshaft and onto the clutch housing.

10. Tighten the clutch and transmission housings with several 8 mm bolts.

    NOTE: It is not necessary to use sealing agent between the housings.

    8 x 1.25 mm
    27 N·m (2.8 kgf·m, 20 lbf·ft)

11. Tap the mainshaft with a plastic hammer.

12. Check the thrust clearance in the manner described below.

    CAUTION: Measurement should be made at room temperature.

    a. Slide the mainshaft base and the collar over the mainshaft.

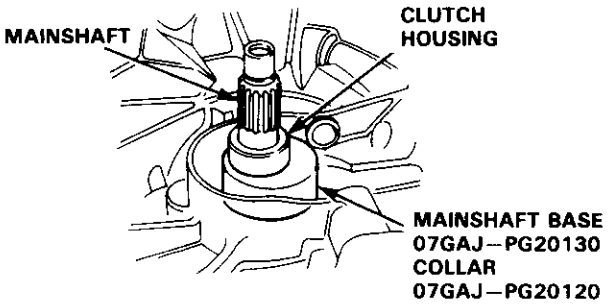

(cont'd)

Adjustment (cont'd)

b. Attach the mainshaft holder to the mainshaft as follows:

NOTE:
- Back-out the mainshaft holder bolt and loosen the two hex bolts.
- Fit the holder over the mainshaft so its lip is toward the transmission.
- Align the mainshaft holder's lip around the groove at the inside of the mainshaft splines, then tighten the hex bolts.

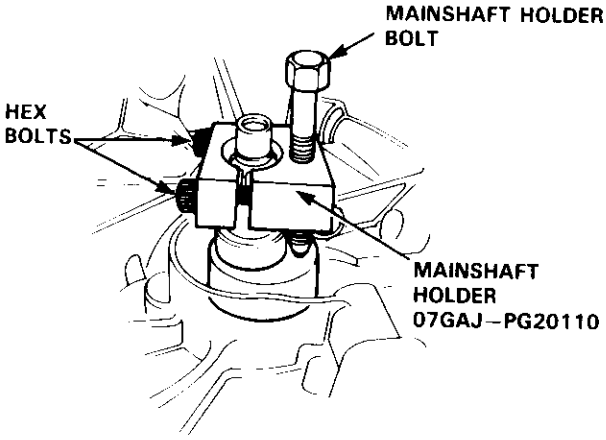

c. Seat the mainshaft fully by tapping on the end with a plastic hammer.

d. Thread the mainshaft holder bolt in until it just contacts the wide surface of the mainshaft base.

e. Zero a dial gauge on the end of the mainshaft.

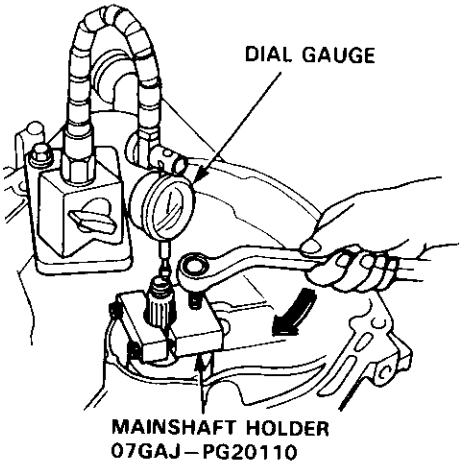

f. Turn the mainshaft holder bolt clockwise: stop turning when the dial gange has reached its maximum movement. The reading on the dial gauge is the amount of mainshaft end play.

CAUTION: Turning the mainshaft holder bolt more than 60 degrees after the needle of the dial gauge stops moving may damage the transmission.

g. If the reading is within the standard, the clearance is correct.
If the reading is not within the standard, recheck the shim thickness.

Standard: 0.11 – 0.18 mm (0.004 – 0.007 in)

Reassembly

NOTE: The steel balls are all of the same size (5/16 in).

1. Install the magnet and reverse lock cam.
2. Set shift arm A on the clutch housing, then install the shift rod.
3. Install the spring washer and shift arm A attaching bolt.
4. Install the steel ball, spring, and set ball spring bolt.
5. Install shift arm B in the interlock, then set it on the clutch housing.
6. Insert shift arm shaft in the clutch housing.
7. Install the collar, spring, and steel ball into the case. Compress the ball and insert the shift arm shaft.
8. Install shift arm C in shift arm A, then insert the shift arm shaft.
9. Install the reverse select retainer and reverse select spring onto shift arm shaft.
10. Install the differential assembly.

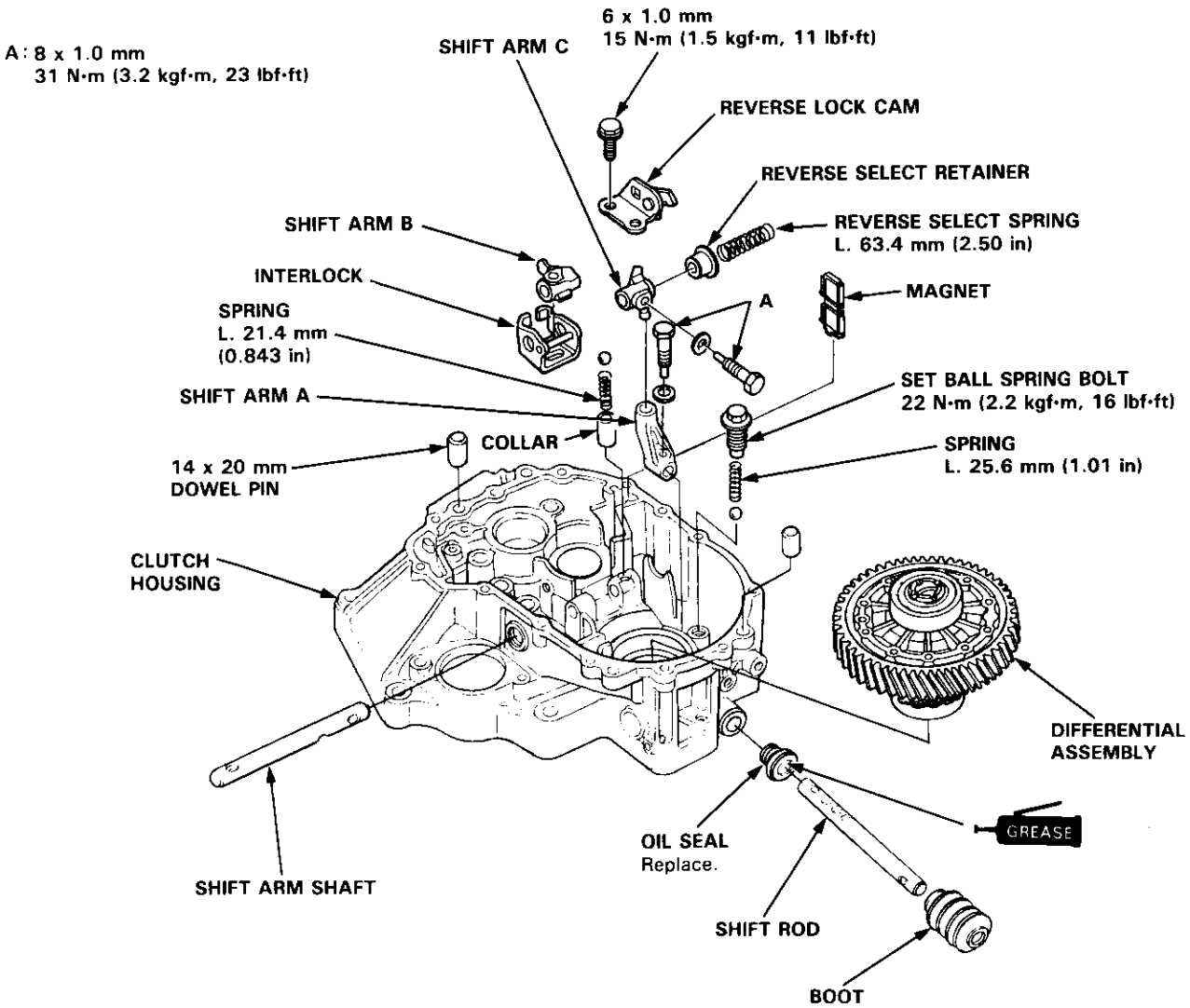

(cont'd)

Reassembly (cont'd)

11. Position the 36 mm spring washer and washer onto the mainshaft bearing.

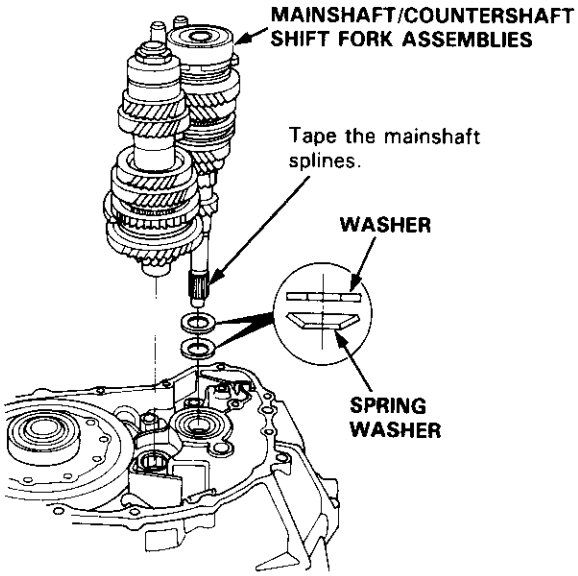

12. Install the mainshaft, countershaft, and shift fork assemblies.

    NOTE: Align the finger of the interlock with the groove in the shift fork shaft.

13. Install the spring washer and shift arm B attaching bolt.

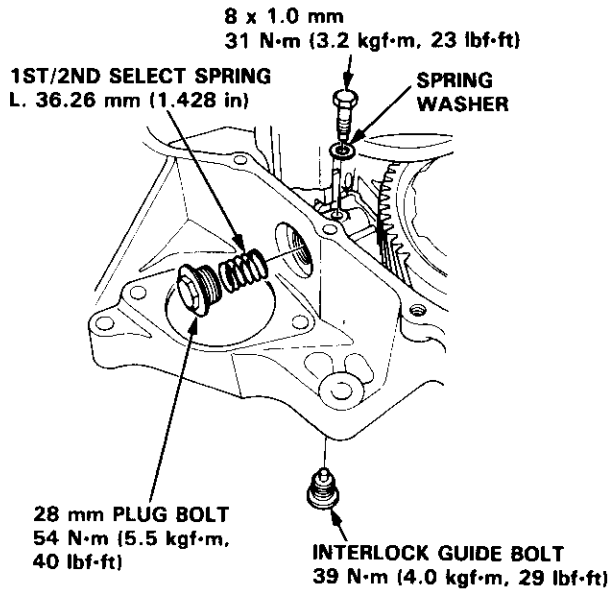

14. Install the 1st/2nd select spring, 28 mm plug bolt, and interlock guide bolt.

    NOTE: Apply liquid gasket (P/N 08718 – 0001 or 08718 – 0003) to the threads of the 28 mm plug bolt and interlock guide bolt.

15. Install the reverse idler gear and reverse idler gear shaft.

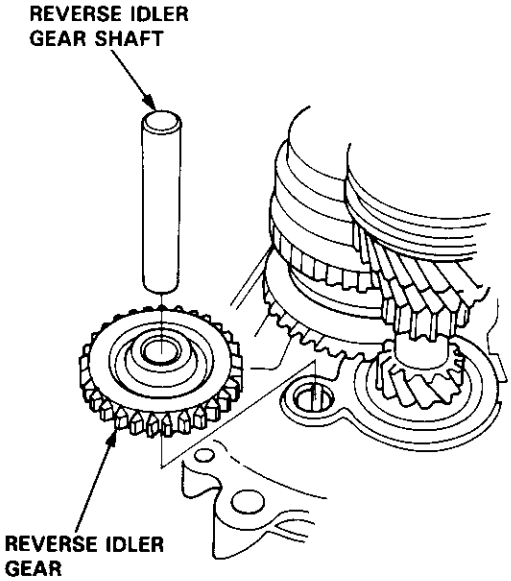

16. Install the reverse shift holder.

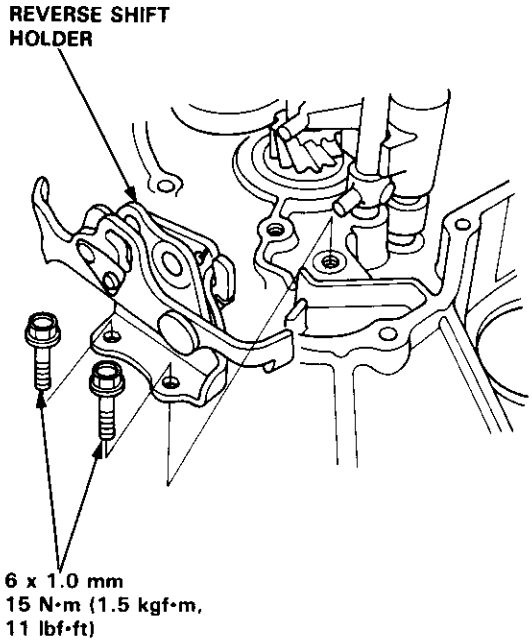

17. Install the oil gutter plate.

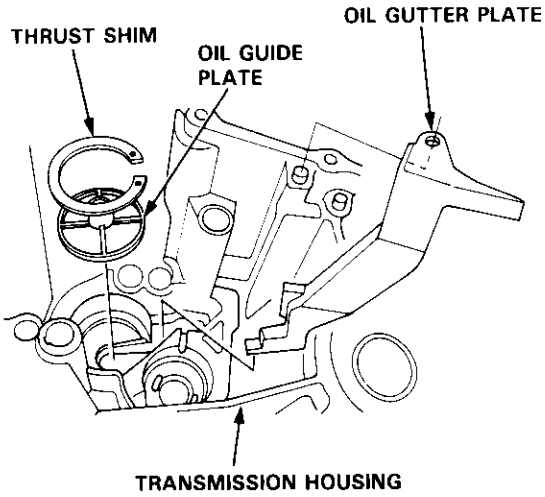

18. Install the oil guide plate and thrust shim on the transmission housing.

19. Apply liquid gasket to the surface of the transmission housing mating with the clutch housing as shown.

NOTE:
- Use liquid gasket (P/N 08718 - 0001 or 08718 - 0003).
- Remove the dirty oil from the sealing surface.
- If 5 minutes have passed after applying liquid gasket, reapply it and assemble the housings.
- Allow it to cure at least 20 minutes after assembly before filling the transmission with oil.

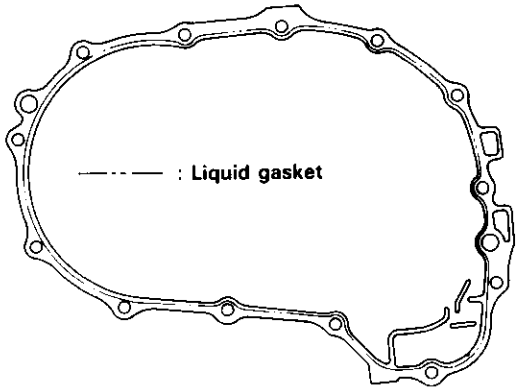

20. Install the dowel pins and the transmission housing.

21. Lower the transmission housing with the snap ring pliers, and set the snap ring into the groove of the countershaft bearing.

NOTE: Check that the snap ring is securely seated in the groove of the countershaft bearing.

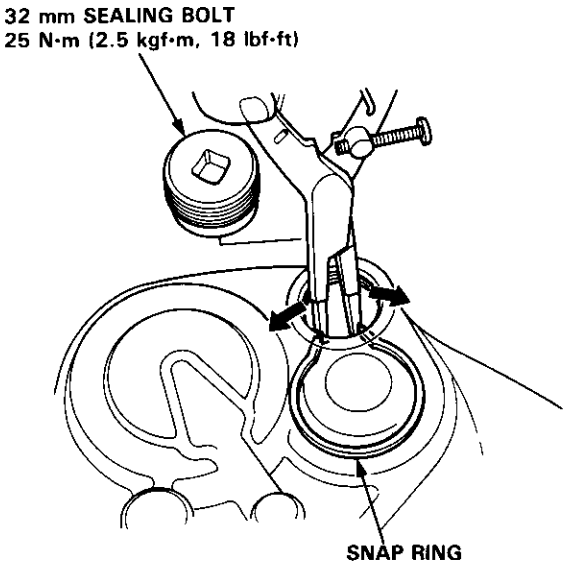

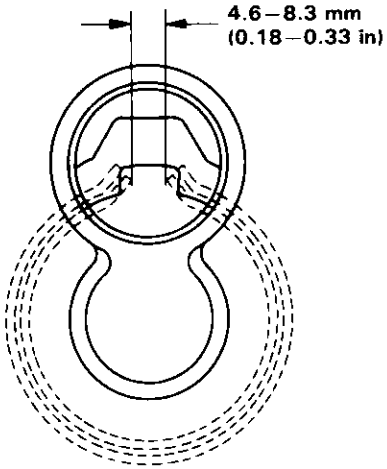

22. Install the 32 mm sealing bolt.

NOTE: Apply liquid gasket (P/N 08718 - 0001 or 08718 - 0003) to the threads.

(cont'd)

Reassembly (cont'd)

23. Tighten the transmission housing attaching bolts in the numbered sequence in several steps shown below.

    8 x 1.25 mm
    Torque: 27 N·m (2.8 kgf·m, 20 lbf·ft)

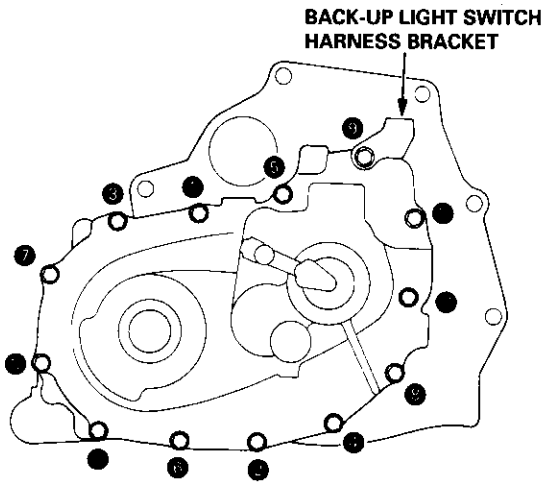

24. Install the steel balls, springs, and set screws.

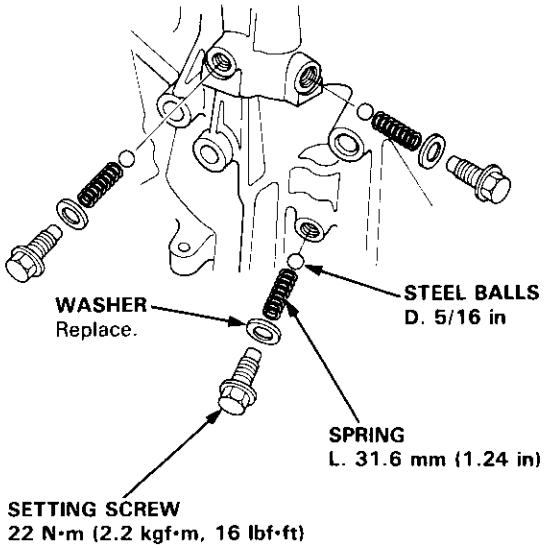

25. Install the back-up light switch and transmission hanger.

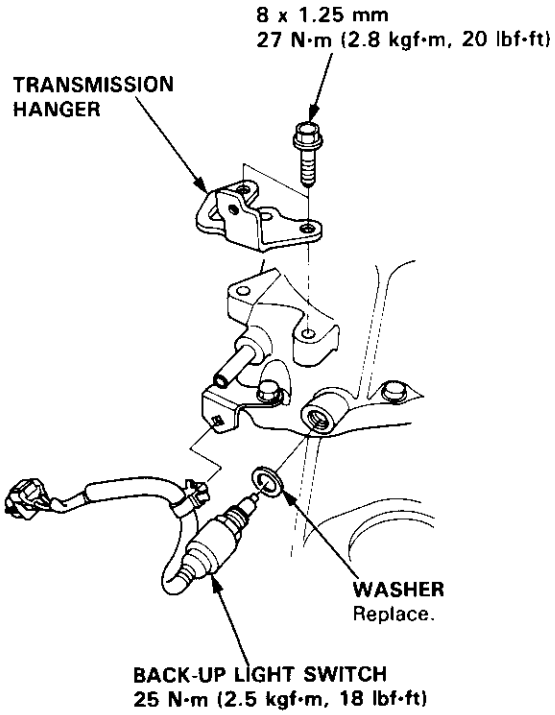

Replacement

Transmission Housing:

1. Remove the oil seal from the transmission housing.

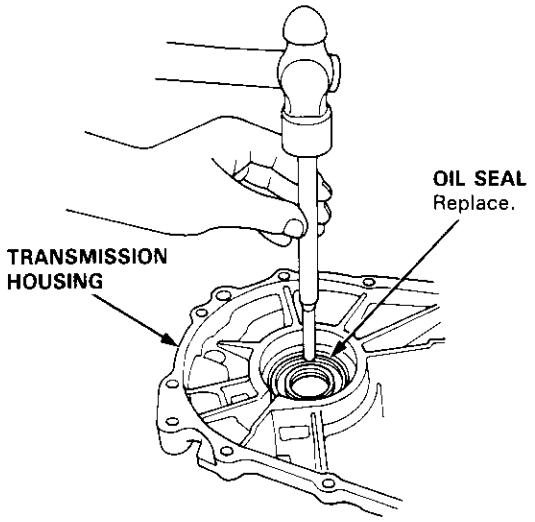

2. Install the oil seal into the transmission housing using the special tools as shown.

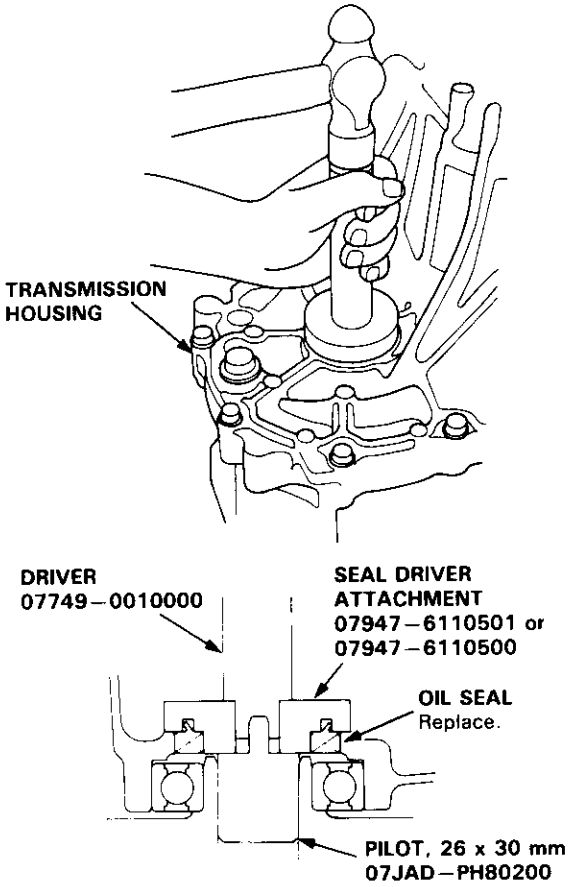

Clutch Housing:

1. Remove the oil seal from the clutch housing.

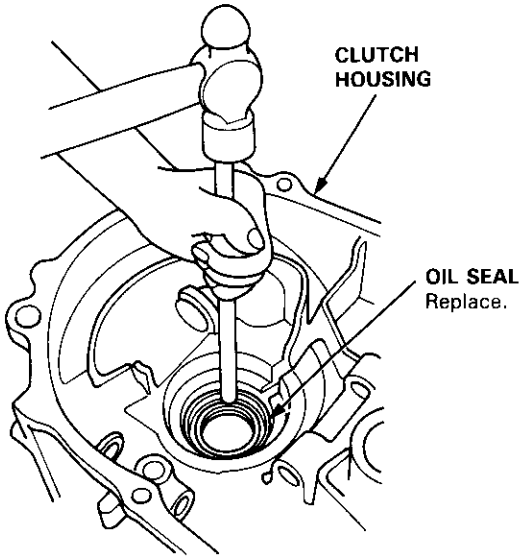

2. Install the oil seal into the clutch housing using the special tools as shown.

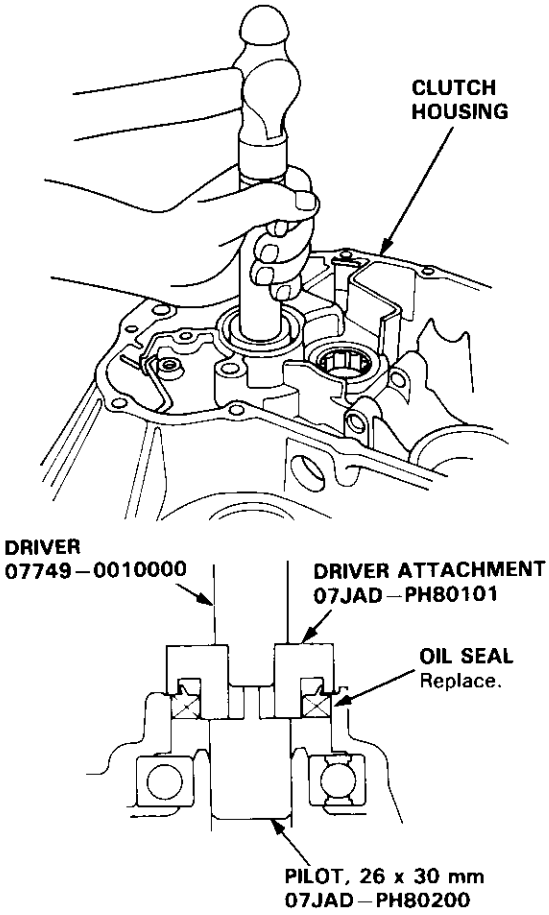

Overhaul

NOTE:
- Inspect rubber parts for wear and damage when disassembling; replace any worn or damaged parts.
- Install the clip as shown.
- Turn the boot so the hole is facing down as shown.
- Make sure the boot is installed on the shift rod.

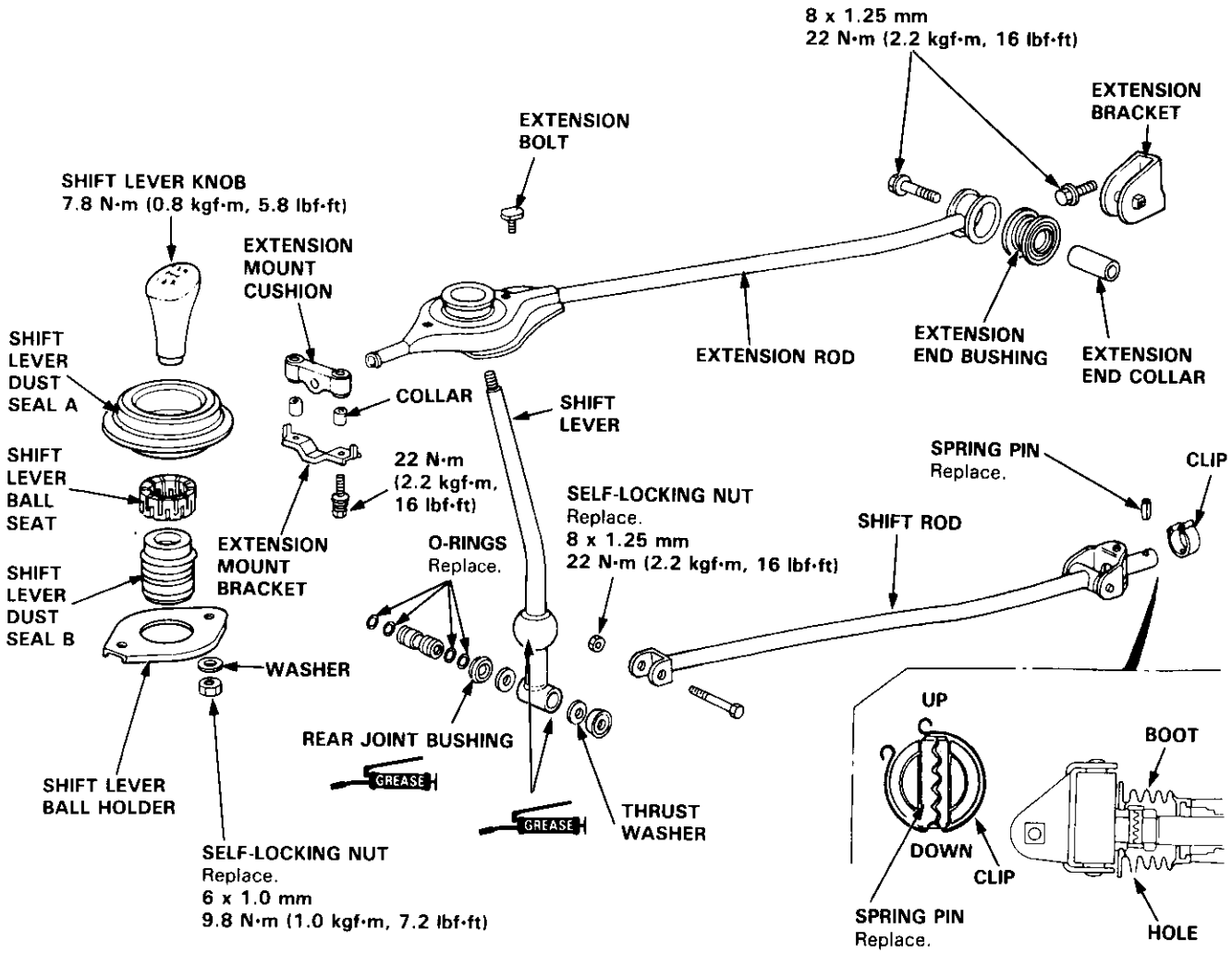

S4C Model ('99 – 00 2-door Si, SiR) Manual Transmission

Special Tools 13-46
Maintenance
  Transmission Oil 13-47
Back-up Light Switch
  Replacement 13-47
Transmission Assembly
  Removal 13-48
  Installation 13-52
Illustrated Index 13-54
Transmission Housing
  Removal 13-56
Reverse Shift Holder, Reverse Idler Gear
  Clearance Inspection 13-57
  Removal 13-58
Change Holder Assembly
  Clearance Inspection 13-59
  Removal 13-61
  Disassembly/Reassembly 13-62
Mainshaft, Countershaft, Shift Fork
  Removal 13-63
Shift Rod
  Removal 13-64
Shift Fork Assembly
  Index 13-65
  Clearance Inspection 13-66
Mainshaft Assembly
  Index 13-67
  Clearance Inspection 13-68
  Disassembly 13-71
  Inspection 13-72
  Reassembly 13-73
Countershaft Assembly
  Index 13-74
  Clearance Inspection 13-75
  Disassembly 13-76
  Inspection 13-77
  Reassembly 13-78
Synchro Sleeve, Synchro Hub
  Inspection 13-80
  Installation 13-80
Synchro Ring, Gear
  Inspection 13-81
Differential
  Index 13-82
  Backlash Inspection 13-82
  Final Driven Gear Replacement 13-83
  Bearing Replacement 13-83
  Thrust Shim Adjustment 13-84
Clutch Housing Bearing
  Replacement 13-86
Mainshaft Thrust Clearance
  Adjustment 13-88
Transmission
  Reassembly 13-91
Oil Seals
  Replacement 13-96
Gearshift Mechanism
  Overhaul 13-97

Special Tools

Ref. No.	Tool Number	Description	Qty	Remark
①	07GAJ – PG20110	Mainshaft Holder	1	13-90
②	07GAJ – PG20130	Mainshaft Base	1	13-90
③	07JAD – PH80101	Driver Attachment	1	13-96
*④	07736 – A01000A	Adjustable Bearing Puller, 25 – 40 mm	1	13-86, 87
⑤	07746 – 0010300	Attachment, 42 x 47 mm	1	13-86
⑥	07746 – 0010400	Attachment, 52 x 55 mm	1	13-86, 87
⑦	07746 – 0030100	Driver, 40 mm I.D.	1	13-73, 79, 83, 84
⑧	07746 – 0030300	Attachment, 30 mm I.D.	1	13-73, 79
⑨	07746 – 0030400	Attachment, 35 mm I.D.	1	13-73, 79
⑩	07746 – 0041100	Pilot, 28 mm	1	13-86
⑪	07749 – 0010000	Handle	1	13-86, 87, 96
⑫	07947 – SD90200	Driver Attachment	1	13-96

* Must be used with commercially-available 3/8"-16 Slide Hammer.

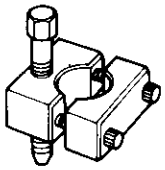
①

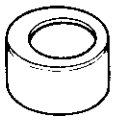
②

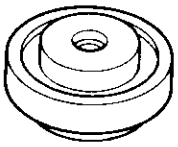
③

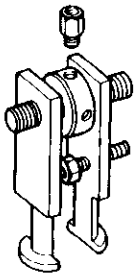
④

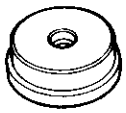
⑤

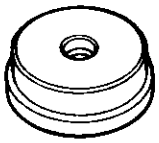
⑥

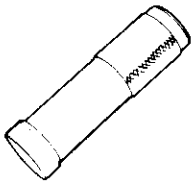
⑦

⑧

⑨

⑩

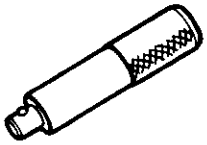
⑪

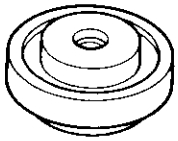
⑫

Transmission Oil

NOTE: Check the oil with the engine OFF, and the vehicle on level ground.

1. Remove the oil filler plug, then check the level and condition of the oil.

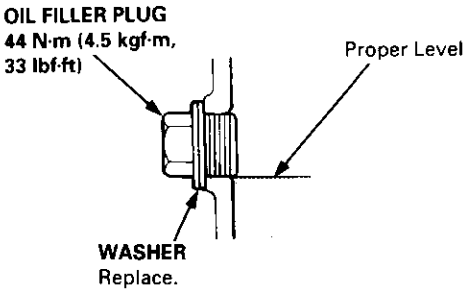

2. The oil level must be up to the filler hole. If it is below the hole, add oil until it runs out, then reinstall the oil filler plug.

3. If the transmission oil is dirty, remove the drain plug and drain the oil.

4. Reinstall the drain plug with a new washer, and refill the transmission oil to the proper level.

   NOTE: The drain plug washer should be replaced at every oil change.

5. Reinstall the oil filler plug with a new washer.

   Oil Capacity
   2.2 ℓ (2.3 US. qt, 1.9 Imp. qt) at oil change.
   2.3 ℓ (2.4 US. qt, 2.0 Imp. qt) at overhaul.

   Always use Genuine Honda Manual Transmission Fluid (MTF). Using motor oil can cause stiffer shifting because it does not contain the proper additives.

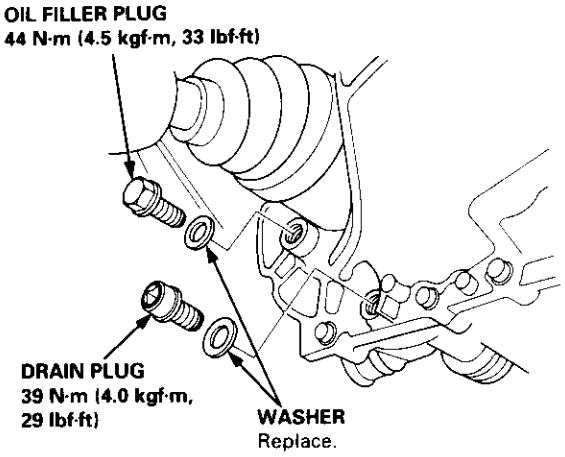

Replacement

NOTE: To check the back-up light switch, see section 23.

1. Disconnect the connector, then remove the back-up light switch connector from the connector clamp.

2. Remove the back-up light switch.

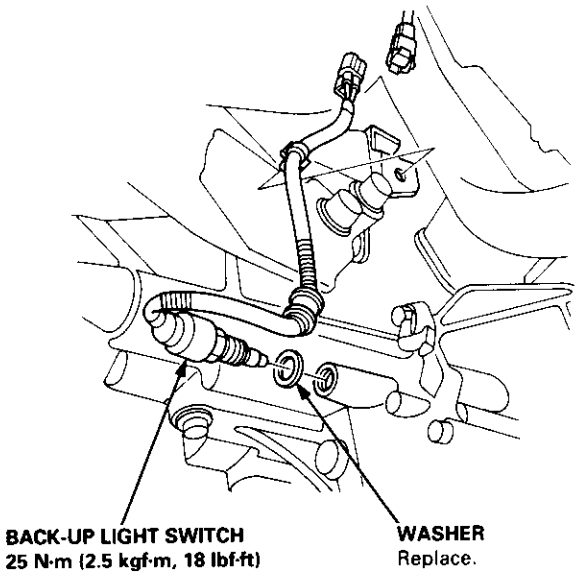

3. Install the new washer and the back-up light switch.

4. Check the transmission oil level.

Transmission Assembly

Removal

⚠ WARNING

- **Make sure jacks and safety stands are placed properly (see section 1).**
- **Apply parking brake and block rear wheels so car will not roll off stands and fall on you while working under it.**

CAUTION: Use fender covers to avoid damaging painted surfaces.

1. Disconnect the negative (–) cable from the battery, then the positive (+) cable.

2. Drain the transmission oil, then reinstall the drain plug with a new washer (see page 13-47).

3. Remove the intake air duct and the air cleaner housing assembly (see section 5).

4. Disconnect the back-up light switch connector and the transmission ground wire.

5. Remove the lower radiator hose clamp from the transmission hanger B.

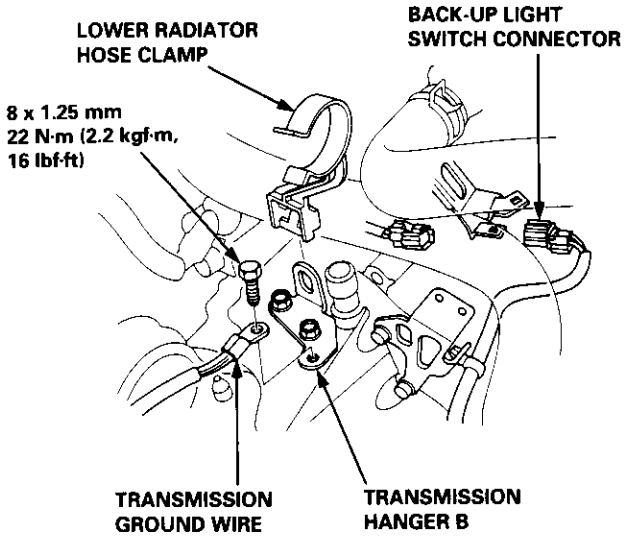

6. Remove the wire harness clamps.

7. Disconnect the starter motor cables and the vehicle speed sensor (VSS) connector.

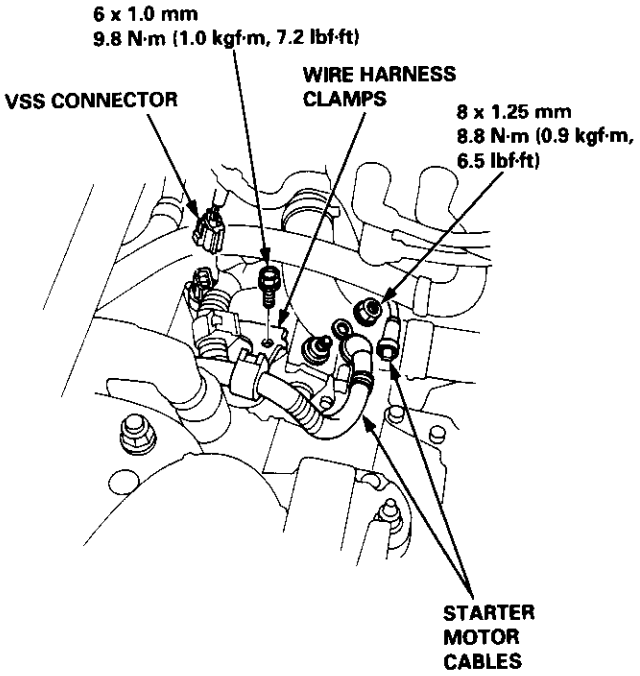

8. Remove the clutch line bracket and the slave cylinder.

   NOTE: Do not operate the clutch pedal once the slave cylinder has been removed.

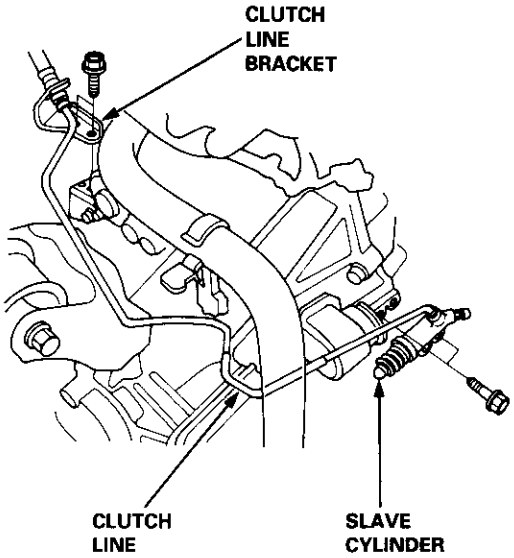

9. Remove the three upper transmission mounting bolts and lower starter motor mounting bolt.

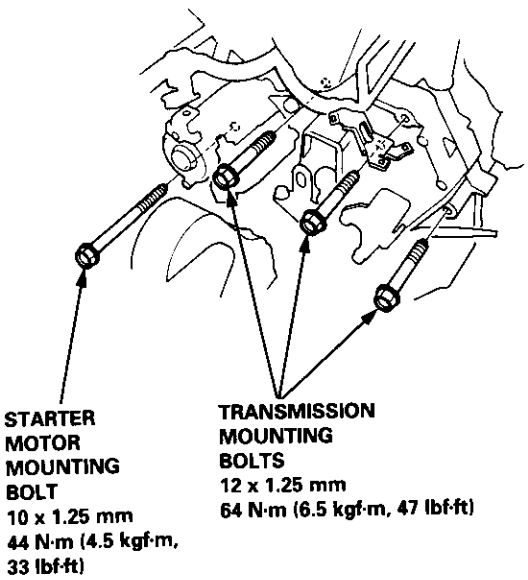

10. Remove the engine splash shield.

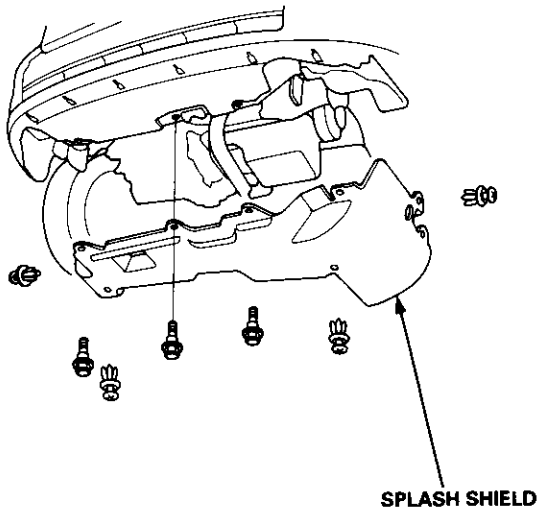

11. Disconnect the heated oxygen sensor (HO2S) connector, then remove exhaust pipe A.

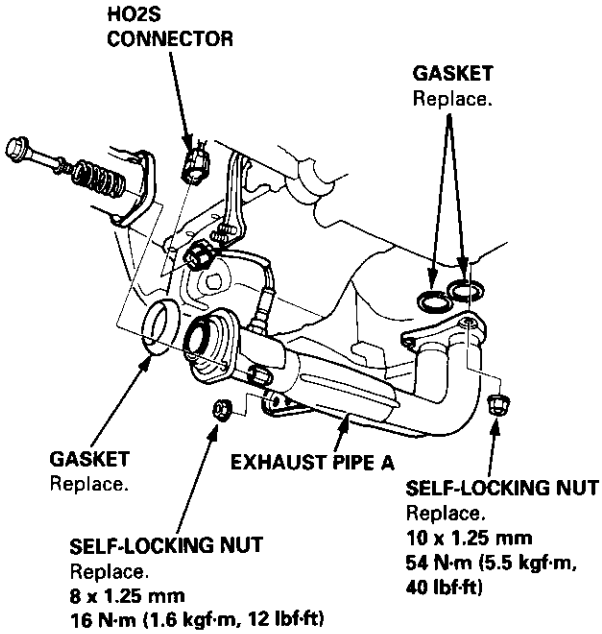

12. Remove the cotter pins and loosen the castle nuts, then separate the ball joints from the lower arm (see section 18).

13. Remove the right damper fork.

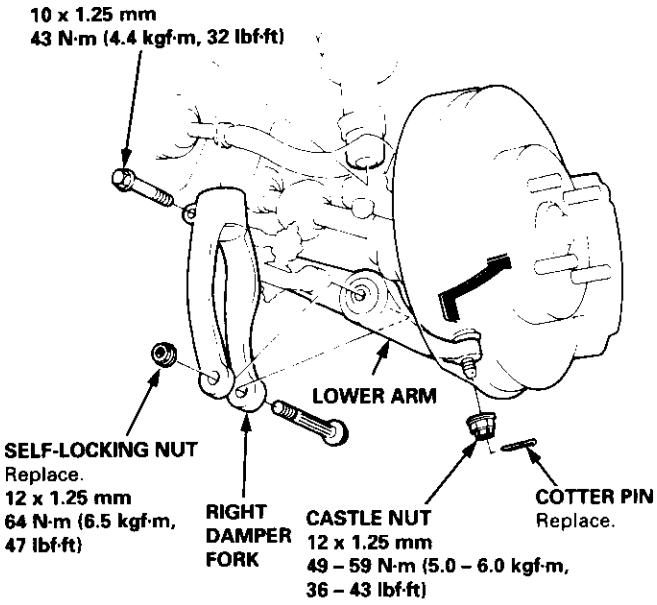

(cont'd)

Removal (cont'd)

14. Remove the driveshafts and the intermediate shaft (see section 16).

    NOTE: Coat all precision the finished surfaces with clean engine oil or grease. Tie plastic bags over the driveshaft ends.

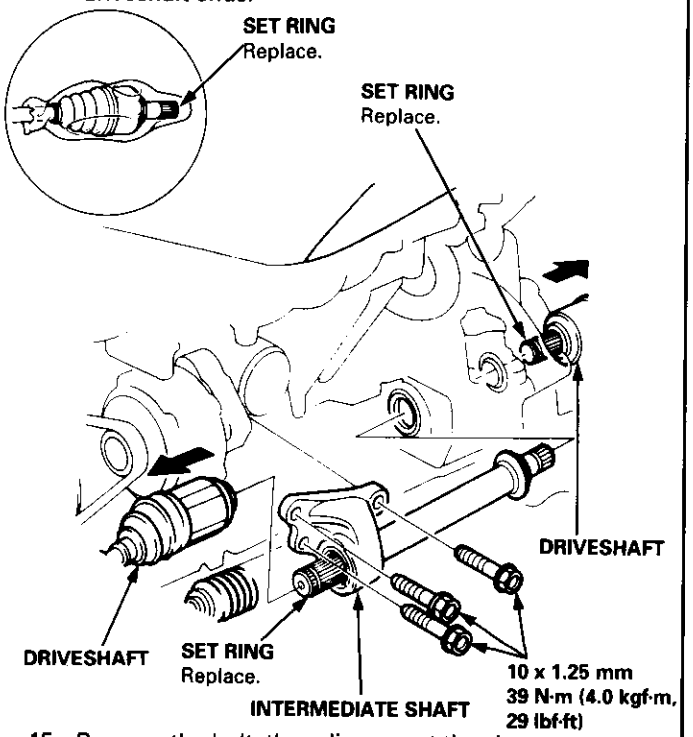

15. Remove the bolt, then disconnect the change extension.

16. Remove the clip and the spring pin, then disconnect the change rod.

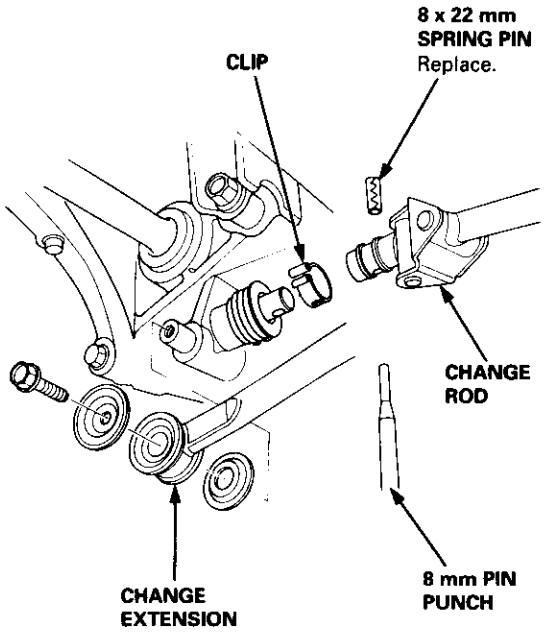

17. Remove the front and the rear engine stiffeners.

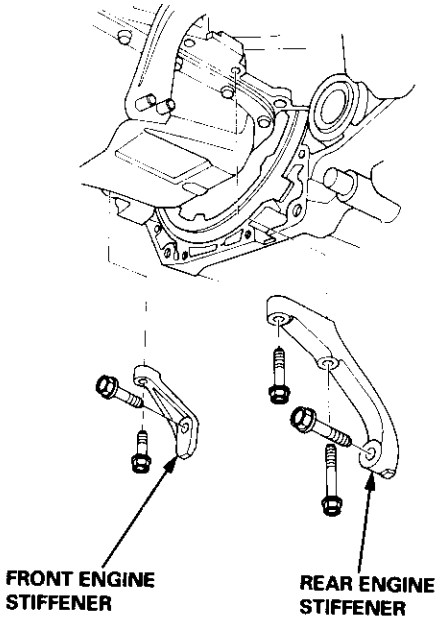

18. Remove the clutch cover.

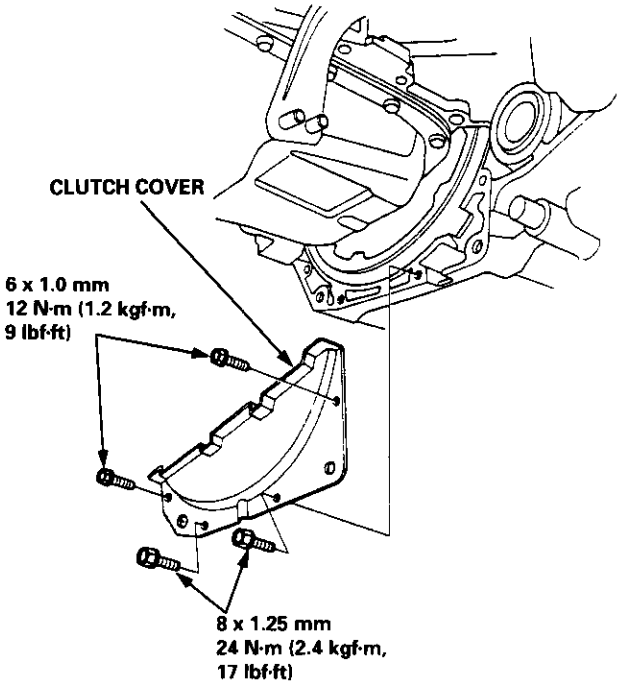

19. Remove the right front mount/bracket.

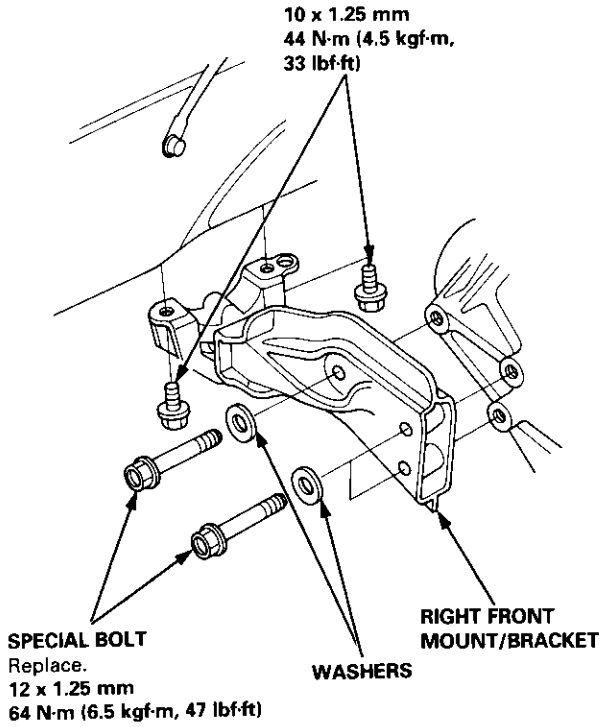

20. Place a transmission jack under the transmission and a jack stand under the engine.

21. Remove the transmission mount.

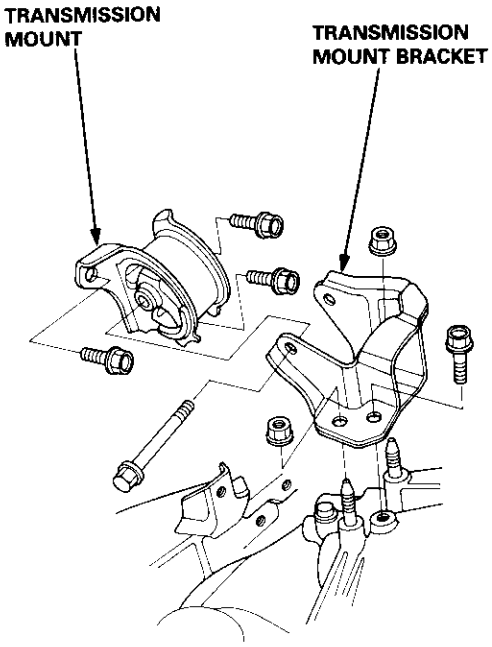

22. Remove the rear mount bracket bolts and the transmission mounting bolts.

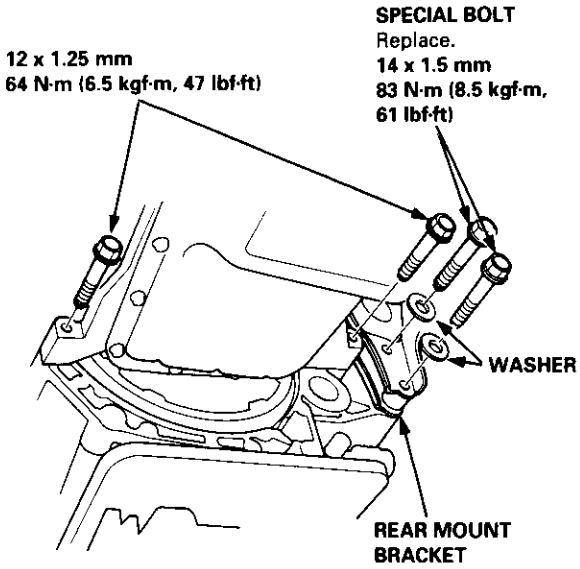

23. Pull the transmission away from the engine until it clears the mainshaft, then lower it on the transmission jack.

Installation

Install the transmission assembly in the reverse order of removal.

- Before installing, check that the two dowel pins are installed in the clutch housing.
- When installing the starter cable, make sure that the crimped side of the ring terminal is facing out (see section 23).
- Apply grease to the parts as shown, then install the release fork and release bearing.

NOTE: Use only Super High Temp Urea Grease (P/N 08798 - 9002).

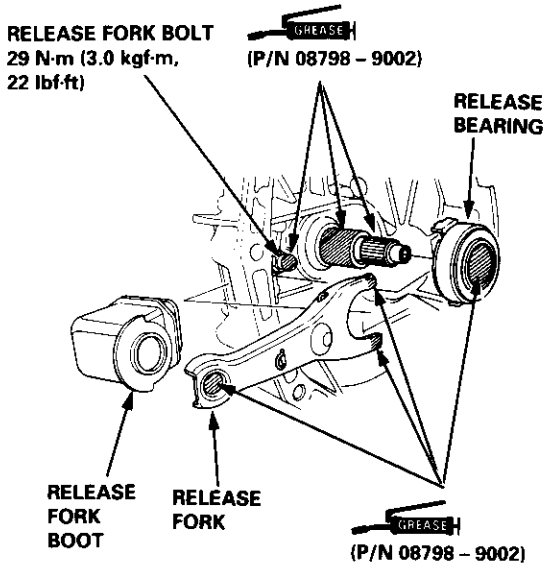

- Torque the mounting bolt and nuts in the sequence shown.
- Check that the busings are not twisted or offset.

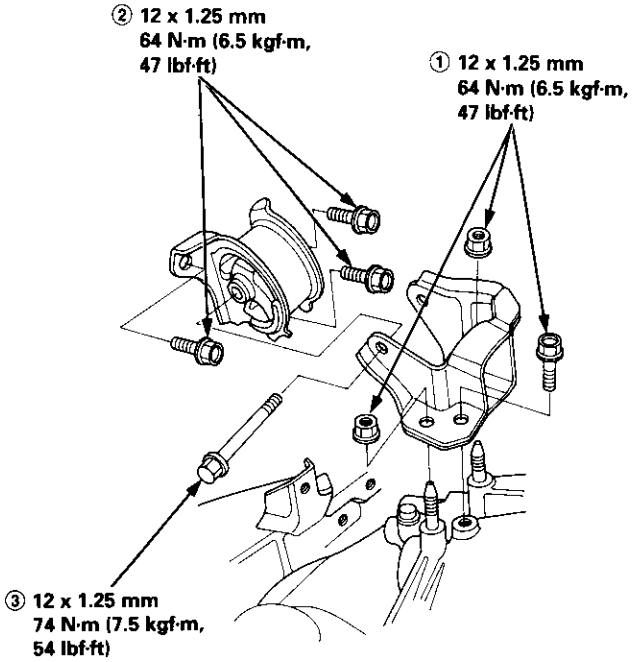

- Install the clip and the spring pin on the change joint as shown.
- Turn the shift rod boot so the hole is facing down as shown.
- Make sure the shift rod boot is installed on the change rod.

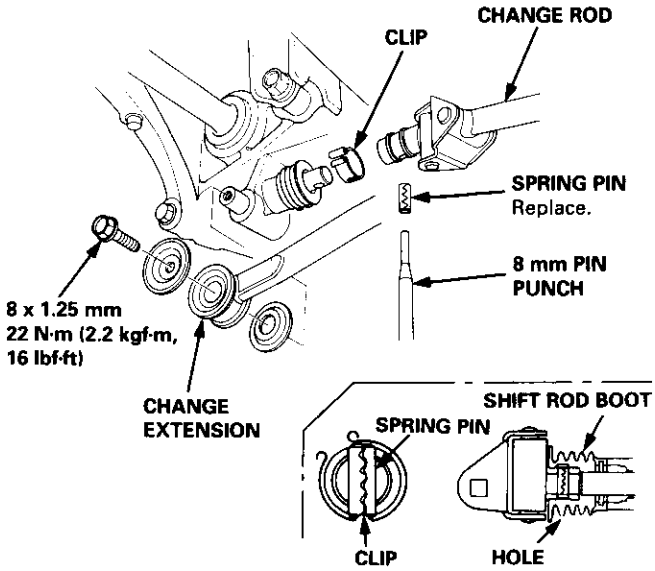

- Apply grease to the slave cylinder push rod.

  NOTE: Use only Super High Temp Urea Grease (P/N 08798 – 9002).

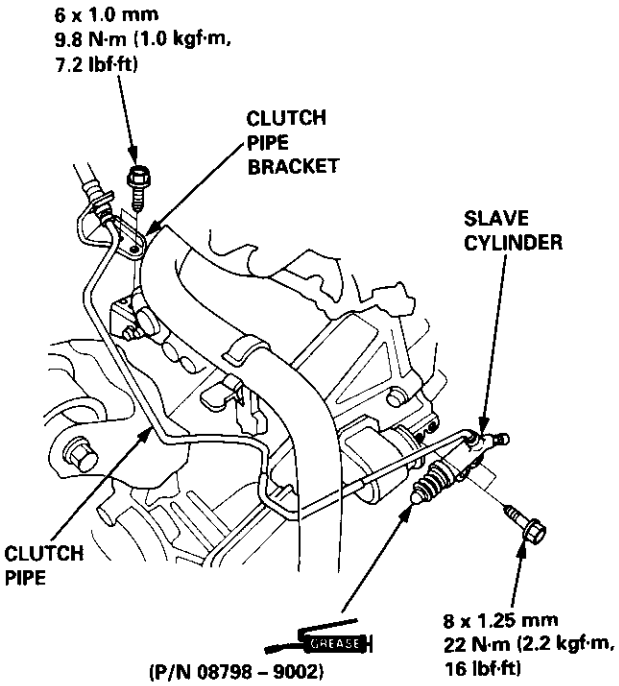

- Refill the transmission with oil (see page 13-47).
- Connect the positive (+) cable first, then the negative (–) cable to the battery.
- Check the clutch operation.
- Shift the transmission, and check for smooth operation.
- Check the front wheel alignment (see section 18).

Refer to the drawing below for transmission disassembly/reassembly.
Clean all the parts thoroughly in solvent and dry with compressed air.

OIL Lubricate all the parts with oil before reassembly.

NOTE:

- This transmission uses no gaskets between the major housings; use liquid gasket (P/N 08718 – 0001 or 08718 – 0003) (see page 13-93).
- Always clean the magnet ⑬ whenever the transmission housing is disassembled.
- Inspect all the bearings for wear and operation.

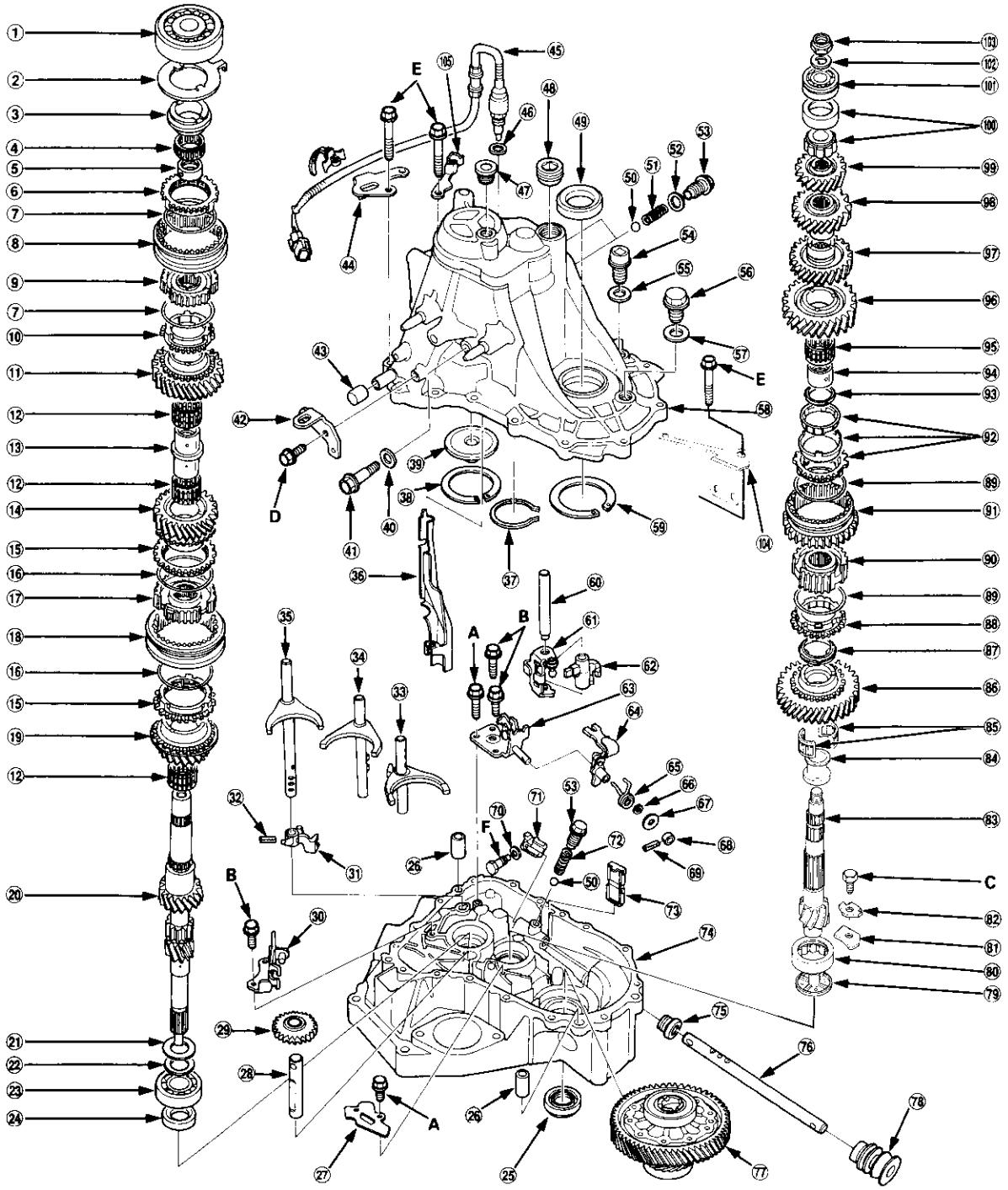

	Bolt Size	Torque Value
A	6 x 1.0 mm	12 N·m (1.2 kgf·m, 8 lbf·ft)
B	6 x 1.0 mm	15 N·m (1.5 kgf·m, 11 lbf·ft)
C	8 x 1.0 mm	15 N·m (1.5 kgf·m, 11 lbf·ft)
D	8 x 1.25 mm	24 N·m (2.4 kgf·m, 17 lbf·ft)
E	8 x 1.25 mm	27 N·m (2.8 kgf·m, 20 lbf·ft)
F	8 x 1.0 mm	30 N·m (3.1 kgf·m, 22 lbf·ft)

1. ANGULAR BALL BEARING
2. STOP RING
3. TAPER RING
4. NEEDLE BEARING
5. SPACER
6. SYNCHRO RING
7. SYNCHRO SPRING
8. 5TH/REVERSE SYNCHRO SLEEVE
9. 5TH/REVERSE SYNCHRO HUB
10. SYNCHRO RING
11. 5TH GEAR
12. 38 x 43 x 26 mm NEEDLE BEARING
13. SPACER COLLAR
14. 4TH GEAR
15. SYNCHRO RING
16. SYNCHRO SPRING
17. 3RD/4TH SYNCHRO HUB
18. 3RD/4TH SYNCHRO SLEEVE
19. 3RD GEAR
20. MAINSHAFT
21. WASHER
22. SPRING WASHER
23. BALL BEARING
24. 28 x 41 x 7 mm OIL SEAL Replace.
25. 35 x 56 x 8 mm OIL SEAL Replace.
26. 14 x 20 mm DOWEL PIN
27. OIL CHAMBER PLATE
28. REVERSE IDLER GEAR SHAFT
29. REVERSE IDLER GEAR
30. REVERSE SHIFT HOLDER
31. 5TH/REVERSE SHIFT PIECE
32. 5 x 22 mm SPRING PIN Replace.
33. 1ST/2ND SHIFT FORK
34. 3RD/4TH SHIFT FORK
35. 5TH/REVERSE SHIFT FORK
36. OIL GUTTER PLATE
37. SNAP RING
38. 72 mm THRUST SHIM
39. OIL GUIDE PLATE
40. 10 mm WASHER Replace.
41. REVERSE IDLER GEAR SHAFT BOLT
    54 N·m (5.5 kgf·m, 40 lbf·ft)
42. TRANSMISSION HANGER B
43. BREATHER CAP
44. TRANSMISSION HANGER A
45. BACK-UP LIGHT SWITCH
    25 N·m (2.5 kgf·m, 18 lbf·ft)
46. 14 mm WASHER Replace.
47. 16 mm SEALING BOLT
    29 N·m (3.0 kgf·m, 22 lbf·ft)
48. 32 mm SEALING BOLT
    25 N·m (2.5 kgf·m, 18 lbf·ft)
49. 40 x 62 x 9 mm OIL SEAL Replace.
50. STEEL BALL D. 5/16 in
51. SPRING L. 30 mm (1.2 in)
52. 12 mm WASHER Replace.
53. SET SCREW
    22 N·m (2.2 kgf·m, 16 lbf·ft)
54. OIL DRAIN PLUG
    39 N·m (4.0 kgf·m, 29 lbf·ft)
55. WASHER Replace.
56. OIL FILLER PLUG
    44 N·m (4.5 kgf·m, 33 lbf·ft)
57. WASHER Replace.
58. TRANSMISSION HOUSING
59. 80 mm SHIM
60. SHIFT PIECE SHAFT
61. INTERLOCK
62. SHIFT PIECE
63. SHIFT ARM HOLDER
64. SELECT ARM
65. SELECT RETURN SPRING
66. 10 mm SHIM
67. 10 mm WASHER
68. LOCK COLLAR
69. 3 x 16 mm SPRING PIN Replace.
70. 8 mm SPRING WASHER
71. CHANGE PIECE
72. SPRING L. 25.6 mm (1.01 in)
73. MAGNET
74. CLUTCH HOUSING
75. 14 x 25 x 16 mm OIL SEAL Replace.
76. SHIFT ROD
77. DIFFERENTIAL ASSEMBLY
    See section 15
78. SHIFT ROD BOOT
79. OIL GUIDE PLATE
80. 33 x 60 x 20 mm NEEDLE BEARING
81. BEARING RETAINER PLATE
82. LOCK WASHER Replace.
83. COUNTERSHAFT
84. DISTANCE COLLAR
85. 42 x 47 x 22 mm NEEDLE BEARING
86. 1ST GEAR
87. FRICTION DAMPER
88. SYNCHRO RING
89. SYNCHRO SPRING
90. 1ST/2ND SYNCHRO HUB
91. REVERSE GEAR
92. DOUBLE CONE SYNCHRO
93. FRICTION DAMPER
94. SPACER
95. 42 x 47 x 24 mm NEEDLE BEARING
96. 2ND GEAR
97. 3RD GEAR
98. 4TH GEAR
99. 5TH GEAR
100. NEEDLE BEARING
101. BALL BEARING
102. SPRING WASHER
103. LOCKNUT Replace.
     108 → 0 → 108 N·m
     (11.0 → 0 → 11.0 kgf·m,
     80 → 0 → 80 lbf·ft)
104. CLUTCH LINE BRACKET
105. BACK-UP LIGHT SWITCH HARNESS BRACKET

Transmission Housing

Removal

NOTE: Place the clutch housing on two pieces of wood thick enough to keep the mainshaft from hitting the workbench.

1. Remove the back-up light switch.
2. Remove transmission hanger B.
3. Remove the set screws, the springs, and the steel balls.

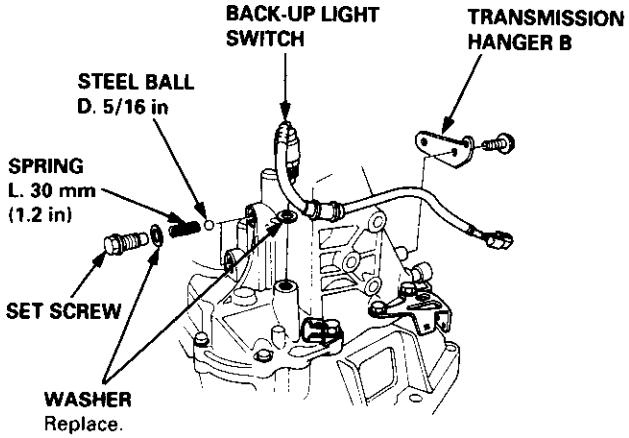

4. Remove the reverse idler gear shaft bolt.

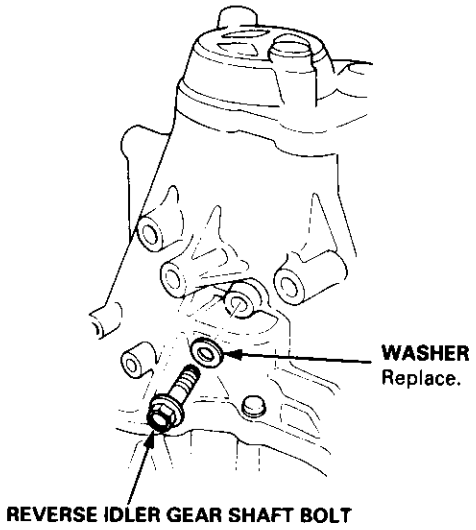

5. Loosen the transmission housing attaching bolts in a crisscross pattern in several steps, then remove them.

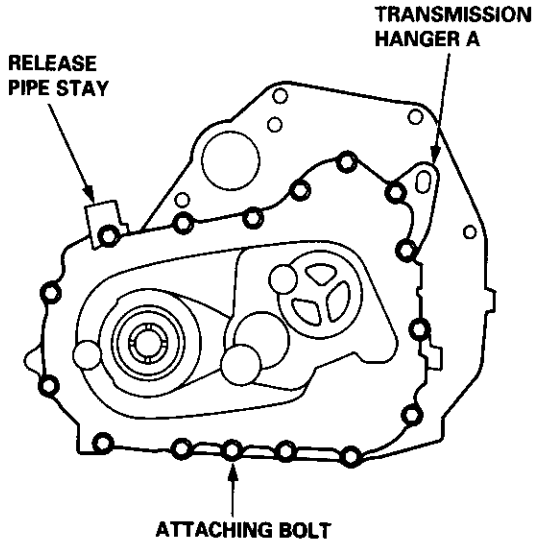

6. Remove the 32 mm sealing bolt.
7. Expand the snap ring on the countershaft ball bearing, and remove it from the groove using a pair of snap ring pliers.

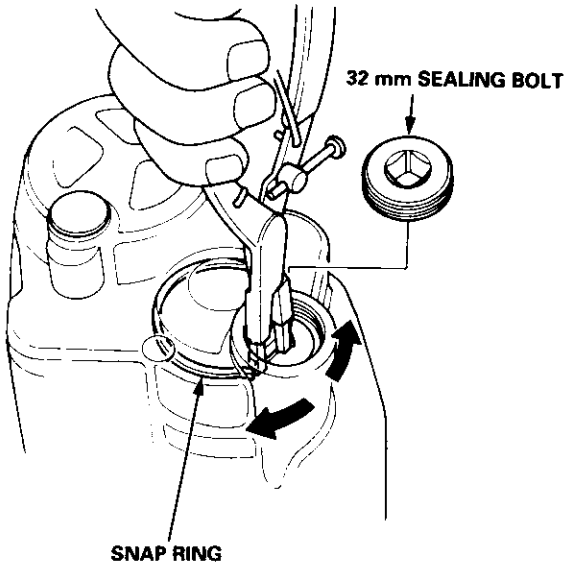

8. Separate the transmission housing from the clutch housing, and wipe it clean of the sealant.

9. Remove the 72 mm thrust shim and the oil guide plate from the transmission housing.

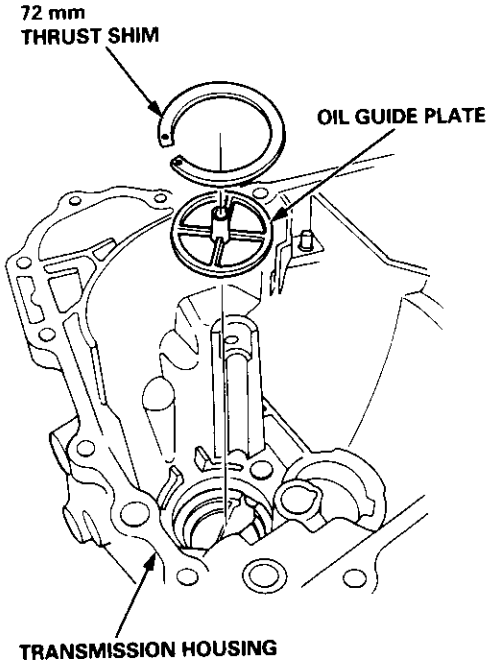

10. Remove the 16 mm sealing bolt and the oil gutter plate.

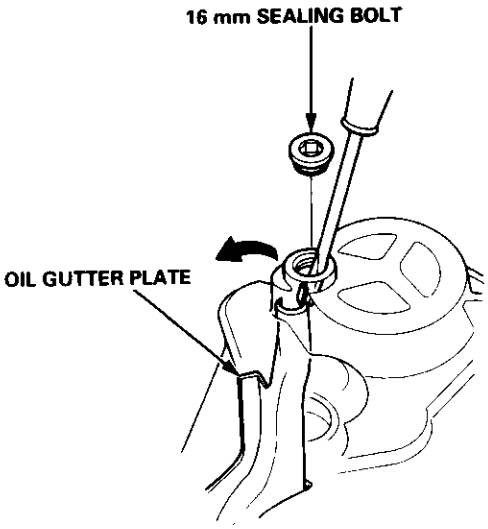

Clearance Inspection

1. Measure the clearance between the reverse shift holder and the 5th/reverse shift piece pin.

Standard:
Reverse Side: 0.05 – 0.45 mm (0.002 – 0.018 in)
5th Side: 0.4 – 0.9 mm (0.02 – 0.04 in)

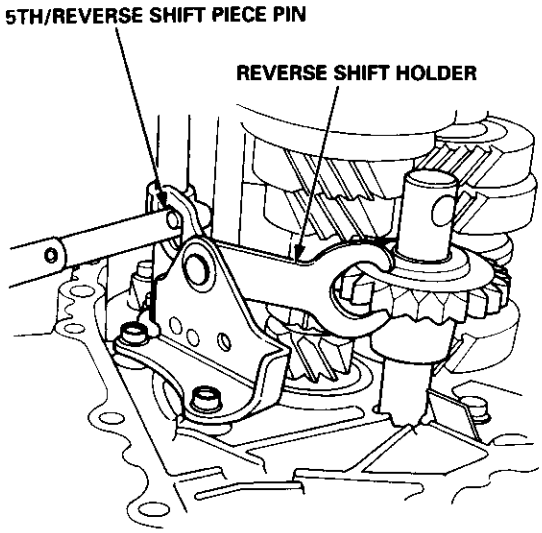

2. If the clearance are not within the standard, measure the width of the grooves in the reverse shift holder.

Standard:
Reverse Side: 7.05 – 7.25 mm (0.278 – 0.285 in)
5th Side: 7.4 – 7.7 mm (0.29 – 0.30 in)

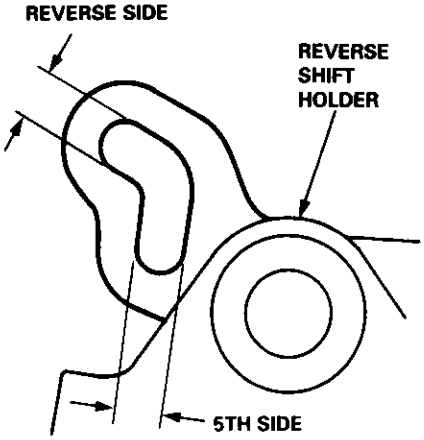

- If the width of the grooves are not within the standard, replace the reverse shift holder with a new one.
- If the width of the grooves are within the standard, replace the 5th/reverse shift piece with a new one.

(cont'd)

Clearance Inspection (cont'd)

3. Measure the clearance between the reverse idler gear and the reverse shift holder.

   Standard: 0.5 – 1.0 mm (0.02 – 0.04 in)
   Service Limit: 1.8 mm (0.07 in)

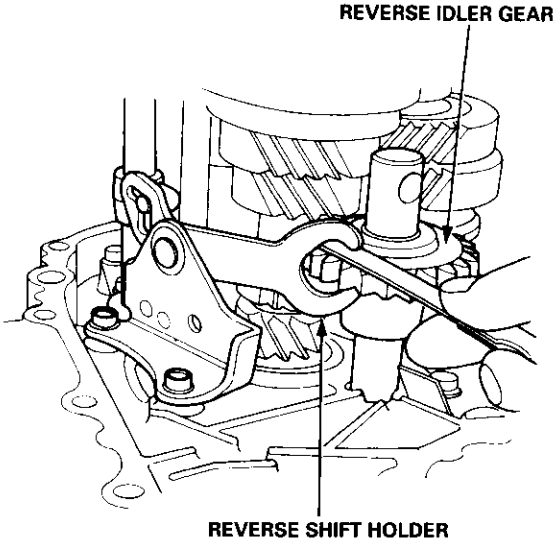

4. If the clearance is more than the service limit, measure the width of the reverse shift holder.

   Standard: 13.0 – 13.3 mm (0.512 – 0.524 in)

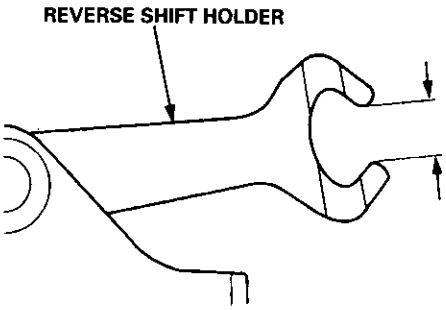

- If the width is not within the standard, replace the reverse shift holder with a new one.
- If the width is within the standard, replace the reverse idler gear with a new one.

Removal

1. Remove the reverse shift holder.

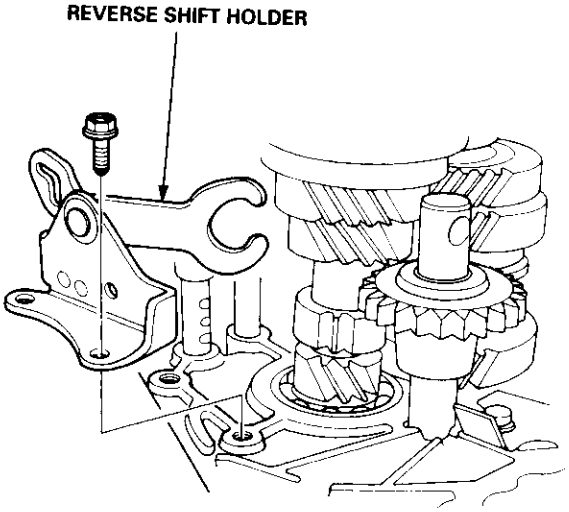

2. Remove the reverse idler gear and the reverse idler gear shaft.

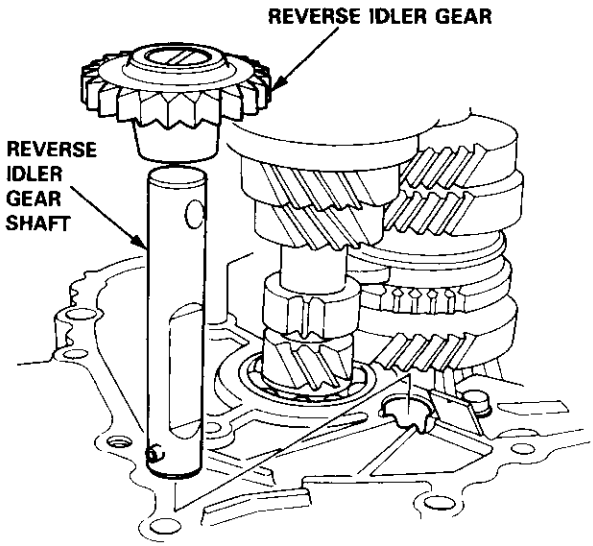

Clearance Inspection

1. Measure the clearance between the shift piece and the shift arm holder.

   Standard: 0.1 – 0.3 mm (0.004 – 0.012 in)
   Service Limit: 0.6 mm (0.02 in)

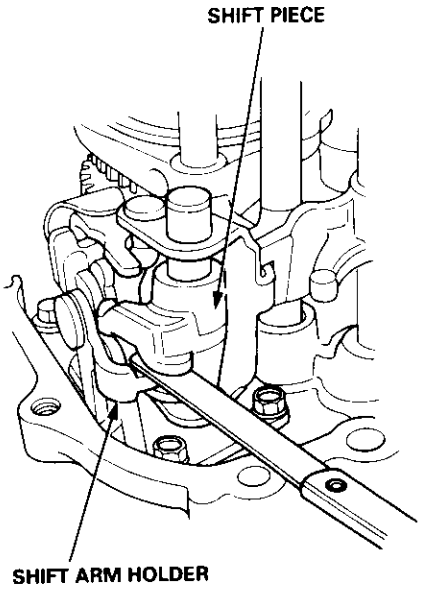

2. If the clearance is more than the service limit, measure the width of the groove in the shift piece.

   Standard: 8.1 – 8.2 mm (0.319 – 0.323 in)

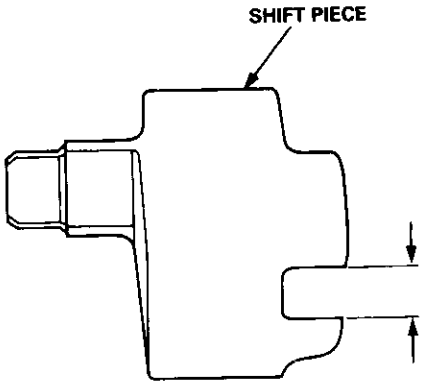

- If the width of the groove is not within the standard, replace the shift piece with a new one.
- If the width of the groove is within the standard, replace the shift arm holder with a new one.

3. Measure the clearance between the select arm and the interlock.

   Standard: 0.05 – 0.20 (0.002 – 0.008 in)
   Service Limit: 0.45 mm (0.018 in)

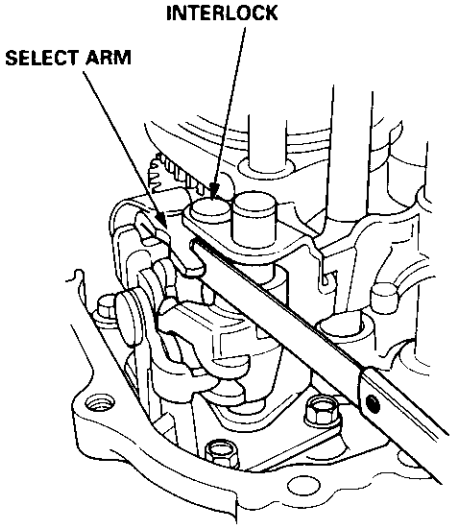

4. If the clearance is more than the service limit, measure the width of the interlock.

   Standard: 9.9 – 10.0 mm (0.390 – 0.394 in)

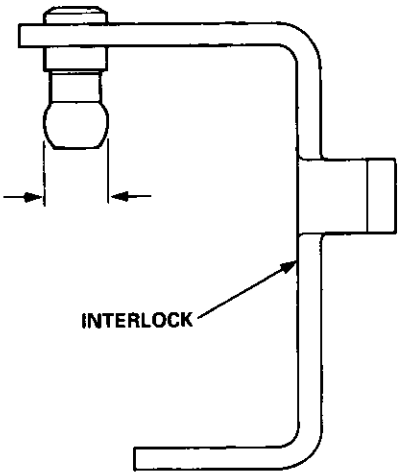

- If the width is not within the standard, replace the interlock with a new one.
- If the width is within the standard, replace the select arm with a new one.

(cont'd)

Clearance Inspection (cont'd)

7. Measure the clearance between the select arm and the 10 mm shim.

   Standard: 0.01 – 0.2 mm (0.0004 – 0.008 in)

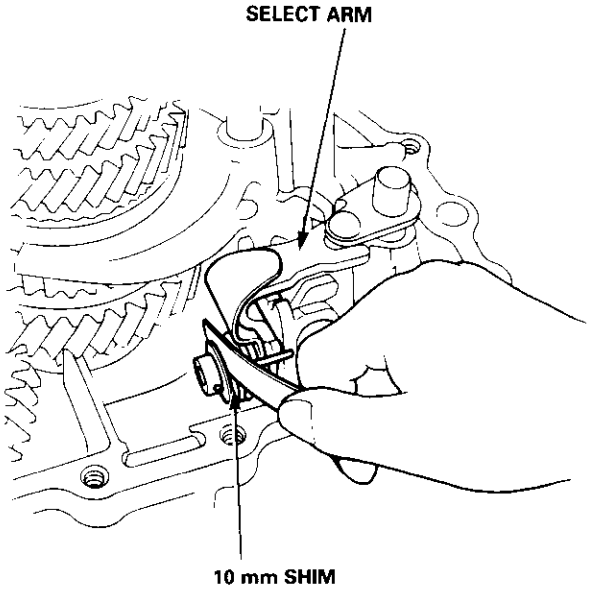

8. If the clearance is not within the standard, select and install the appropriate 10 mm shim for the correct clearance from the chart below.

10 mm Shim

	Part Number	Thickness
A	24435 – 689 – 000	0.8 mm (0.031 in)
B	24436 – 689 – 000	1.0 mm (0.039 in)
C	24437 – 689 – 000	1.2 mm (0.047 in)
D	24438 – 689 – 000	1.4 mm (0.055 in)
E	24439 – 689 – 000	1.6 mm (0.063 in)

9. Measure the clearance between the shift arm holder and the change piece.

   Standard: 0.05 – 0.35 (0.002 – 0.014 in)
   Service Limit: 0.8 mm (0.03 in)

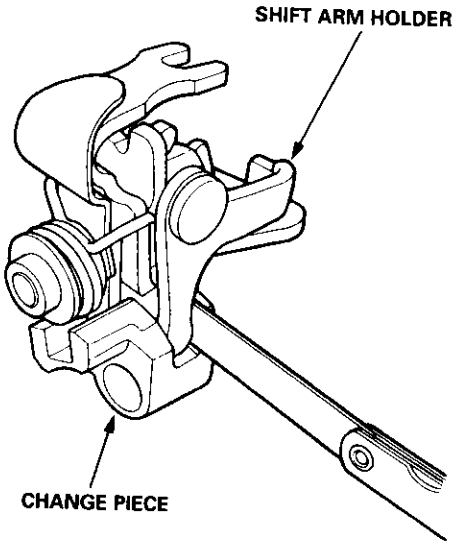

10. If the clearance is more than the service limit, measure the groove of the change piece.

    Standard: 12.05 – 12.15 mm (0.4744 – 0.4783 in)

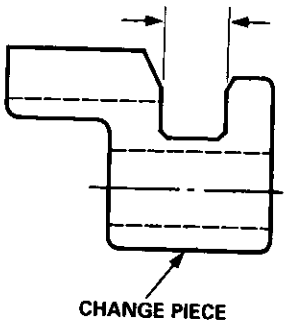

- If the groove is not within the standard, replace the change piece with a new one.
- If the groove is within the standard, replace the shift arm holder with a new one.

11. Measure the clearance between the select arm and the change piece.

Standard: 0.05 – 0.25 mm (0.002 – 0.010 in)
Service Limit: 0.5 mm (0.02 in)

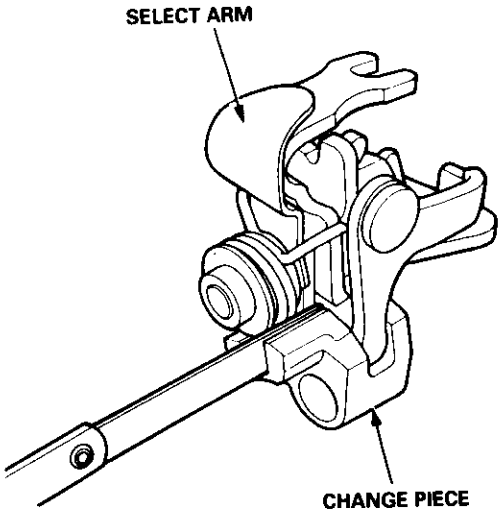

12. If the clearance is more than the service limit, measure the width of the change piece.

Standard: 12.05 – 12.15 mm (0.4744 – 0.4783 in)

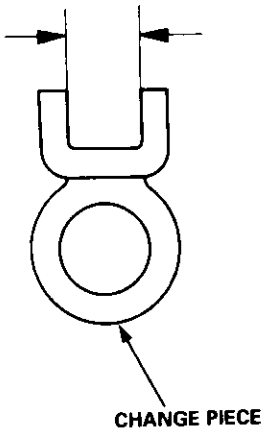

- If the width is not within the standard, replace the change piece with a new one.
- If the width is within the standard, replace the select arm with a new one.

Removal

1. Remove the shift piece shaft, then remove the shift piece and the interlock.

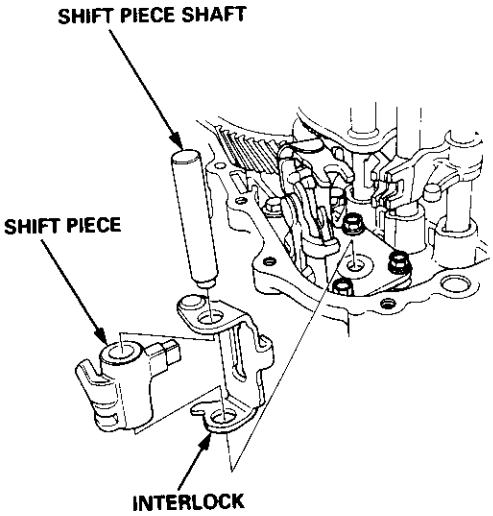

2. Remove the change holder assembly.

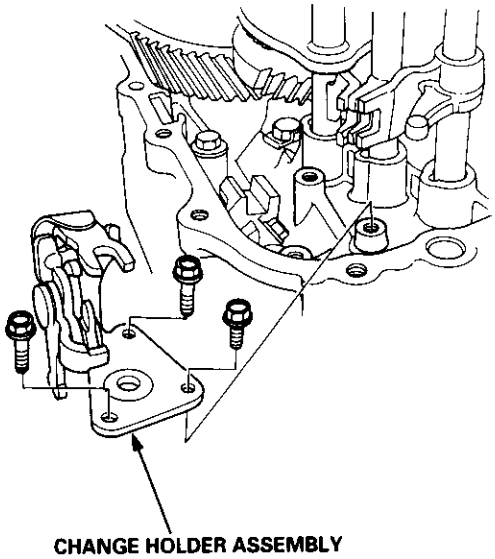

Change Holder Assembly

Disassembly/Reassembly

Prior to reassembling, clean all the parts in solvent, dry them and apply lubricant to any contact surfaces.

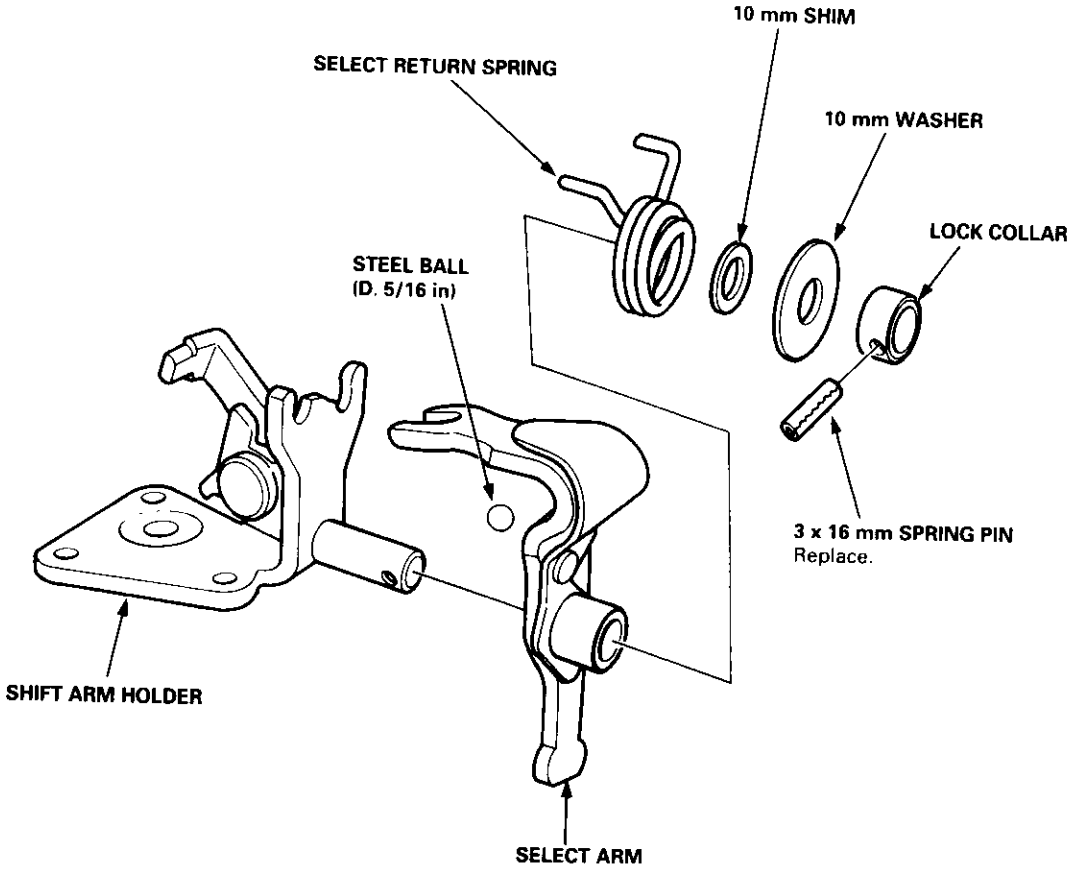

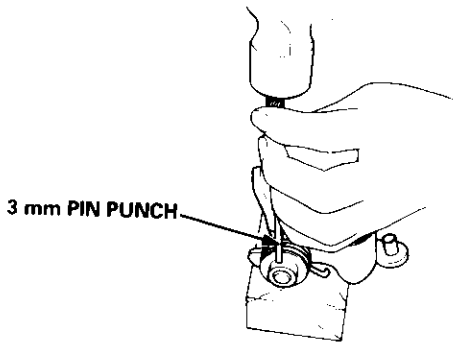

Removal

1. Remove the mainshaft and the countershaft assemblies with the shift forks from the clutch housing.

   NOTE: Tape the mainshaft spline before removing the mainshaft and the countershaft assemblies.

2. Remove the spring washer and the washer.

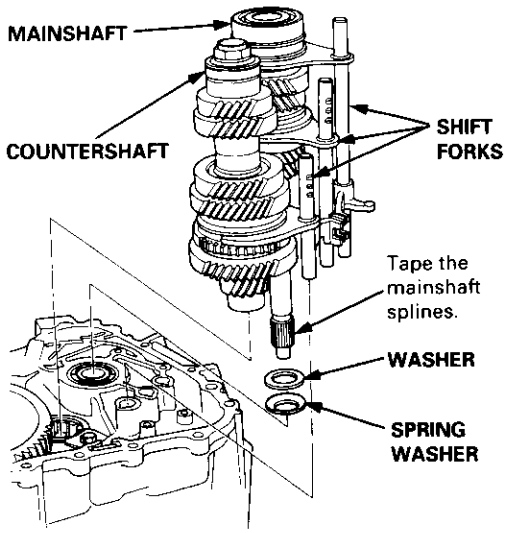

3. Remove the differential assembly from the clutch housing.

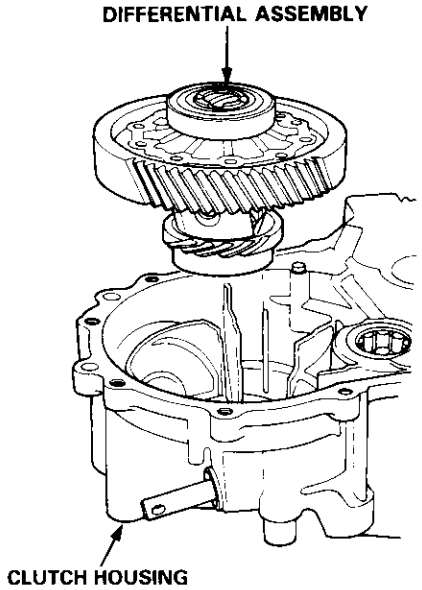

4. Remove the chamber plate.

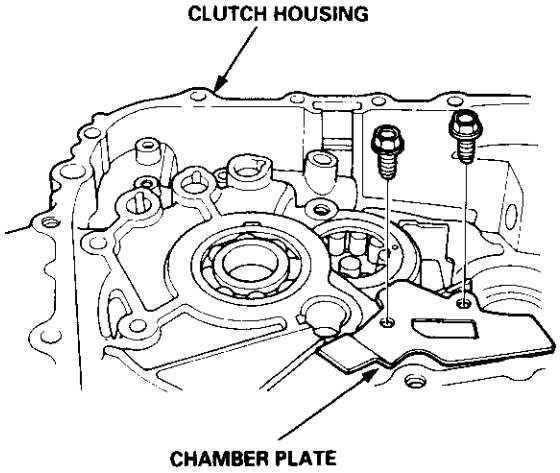

Shift Rod

Removal

1. Remove the shift rod boots.
2. Remove the change piece attaching bolt and the spring washer.
3. Remove the set screw, then remove the spring and the steel ball.
4. Remove the shift rod, then remove the change piece.
5. Remove the oil seal.

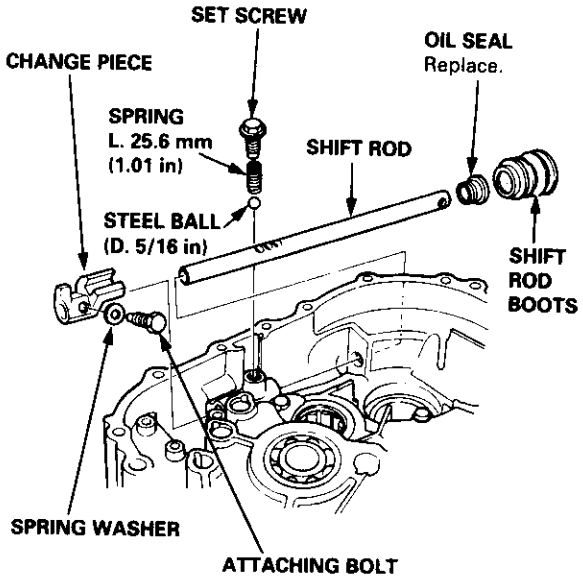

Shift Fork Assembly

Index

OIL Prior to reassembling, clean all the parts in solvent, dry them and apply lubricant to any contact parts.

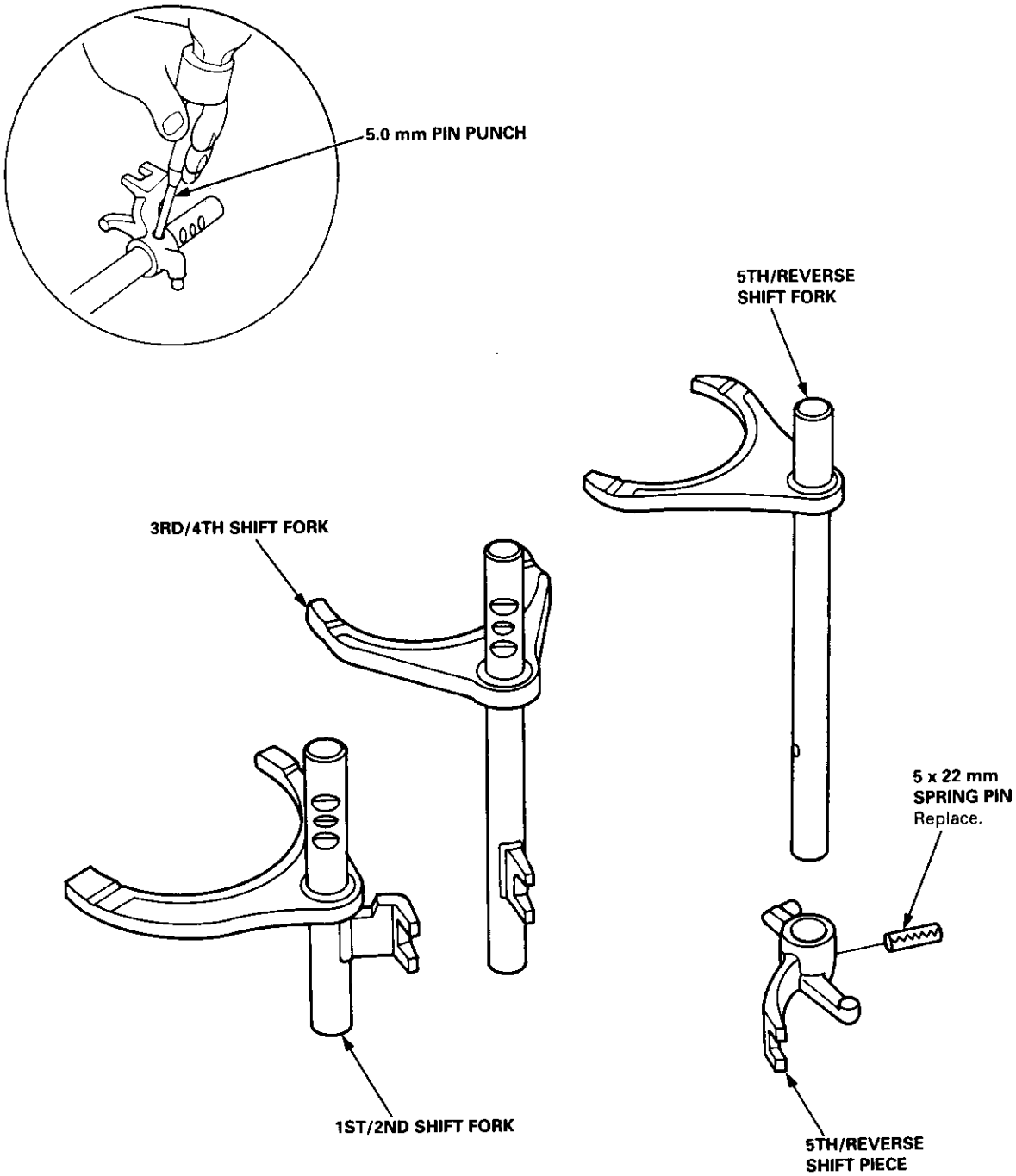

Clearance Inspection

NOTE: The synchro sleeve and the synchro hub should be replaced as a set.

1. Measure the clearance between each shift fork and its matching synchro sleeve.

   Standard: 0.35 – 0.65 mm (0.014 – 0.026 in)
   Service Limit: 1.0 mm (0.04 in)

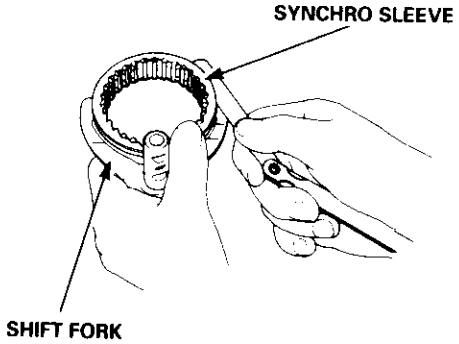

2. If the clearance is more than the service limit, measure the thickness of the shift fork fingers.

   Standard: 7.4 – 7.6 mm (0.291 – 0.299 in)

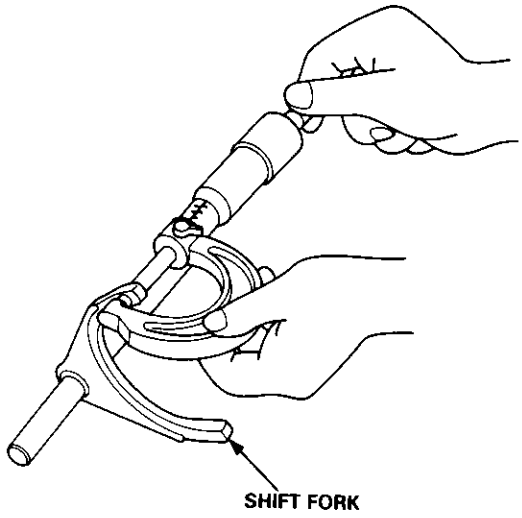

- If the thickness of the shift fork fingers is not within the standard, replace the shift fork with a new one.
- If the thickness of the shift fork fingers is within the standard, replace the synchro sleeve with a new one.

3. Measure the clearance between the shift piece and the shift fork shafts.

   Standard: 0.2 – 0.5 mm (0.008 – 0.02 in)
   Service Limit: 0.8 mm (0.03 in)

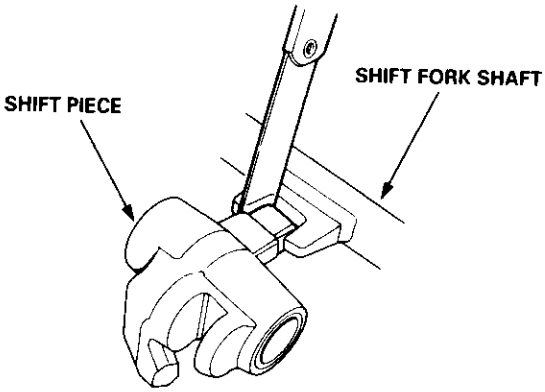

4. If the clearance is more than the service limit, measure the width of the shift piece.

   Standard: 11.9 – 12.0 mm (0.469 – 0.472 in)

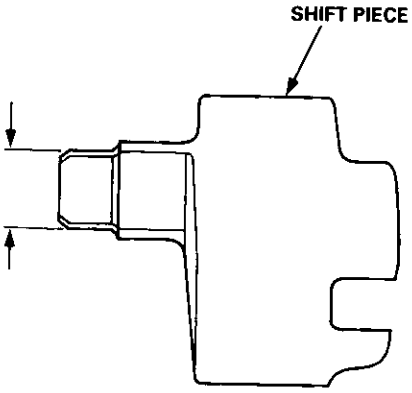

- If the width of the shift piece is not within the standard, replace the shift piece with a new one.
- If the width of the shift piece is within the standard, replace the shift fork with a new one.

Index

Note the follow
- The 3rd/4th and the 5th synchro hubs are installed with a press.
- Install the angular ballbearing with the thin-edged cuter race facing the stop ring.

OIL Prior to reassembling, clean all the parts in solvent, dry them, and apply lubricant to any contact surfaces. The 3rd/4th and the 5th synchro hubs, however, should be installed with a press before lubricating them.

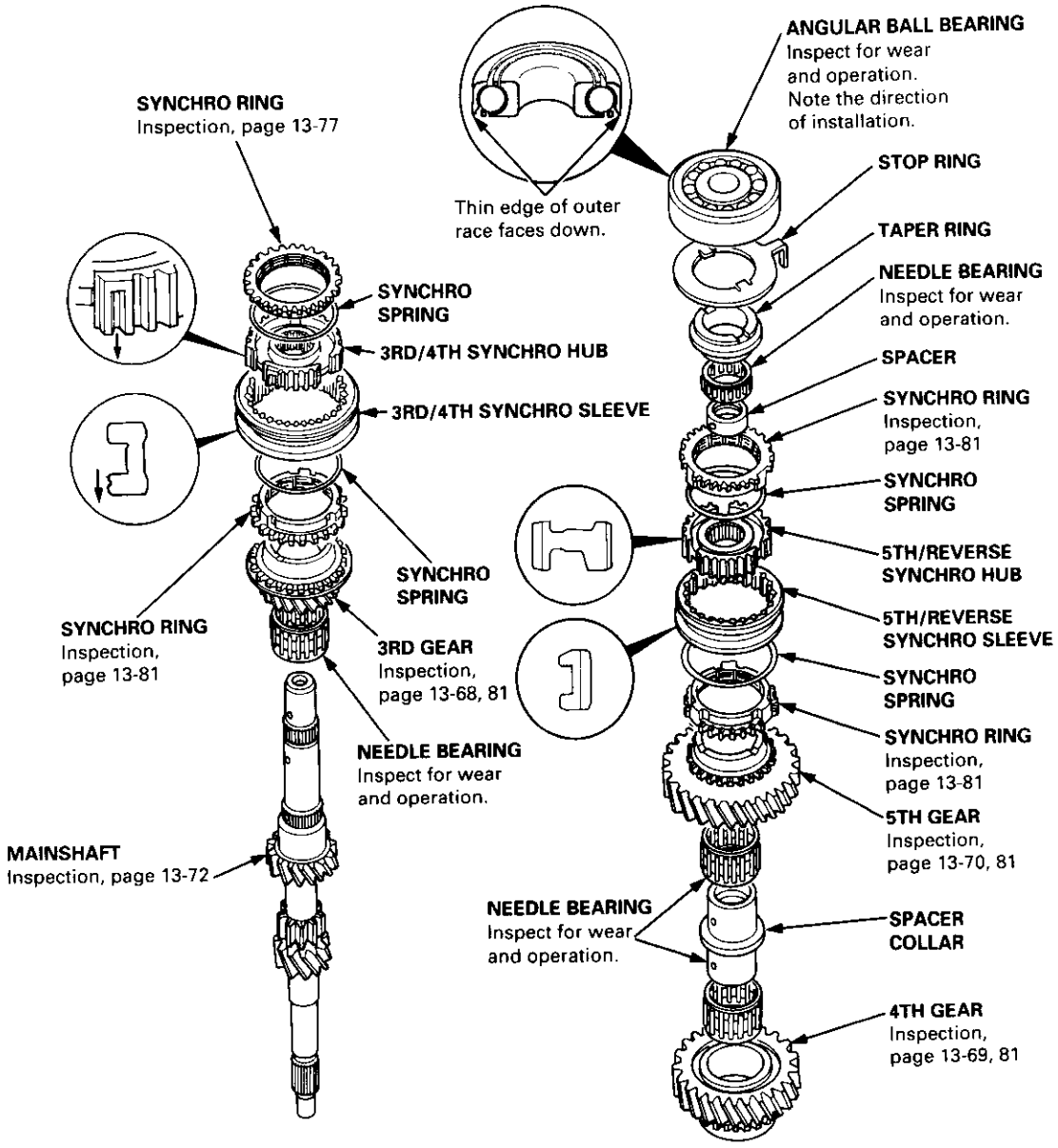

Clearance Inspection

NOTE: If replacement is required, always replace the synchro sleeve and the synchro hub as a set.

1. Measure the clearance between 2nd and 3rd gears.

   Standard: 0.06 – 0.21 mm (0.002 – 0.008 in)
   Service Limit: 0.3 mm (0.01 in)

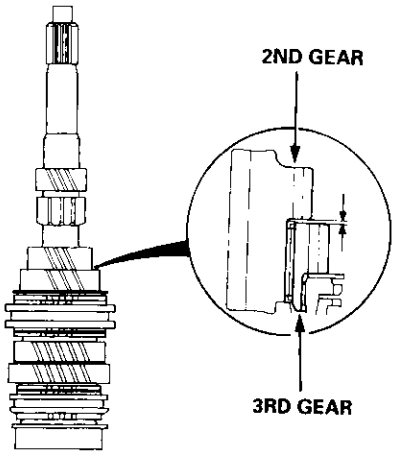

2. If the clearance is more than the service limit, measure the thickness of 3rd gear.

   Standard: 34.92 – 34.97 mm (1.375 – 1.377 in)
   Service Limit: 34.3 mm (1.350 in)

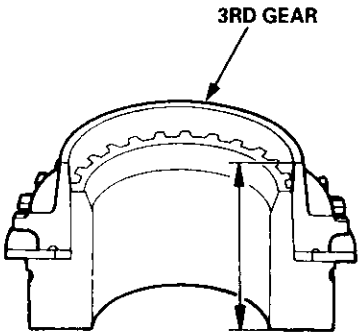

- If the thickness of 3rd gear is less than the service limit, replace 3rd gear with a new one.
- If the thickness of 3rd gear is within the service limit, replace the 3rd/4th synchro hub with a new one.

3. Measure the clearance between 4th gear and the spacer collar.

Standard: 0.06 – 0.21 mm (0.002 – 0.008 in)
Service Limit: 0.3 mm (0.01 in)

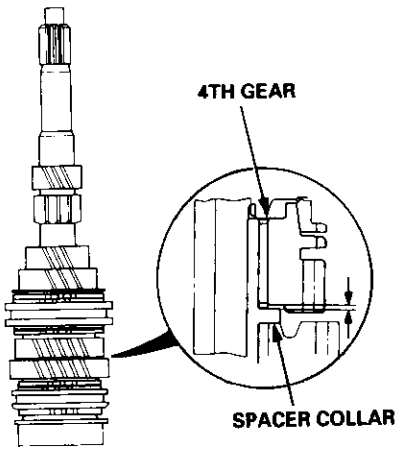

4. If the clearance is more than the service limit, measure distance Ⓐ on the spacer collar.

Standard: 26.03 – 26.08 mm (1.025 – 1.027 in)

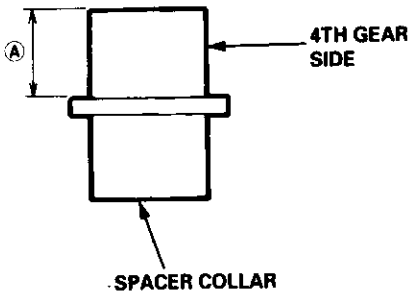

5. If distance Ⓐ is not within the standard, replace the spacer collar with a new one. If distance Ⓐ is within the standard, measure the thickness of 4th gear.

Standard: 31.42 – 31.47 mm (1.237 – 1.239 in)
Service Limit: 31.3 mm (1.232 in)

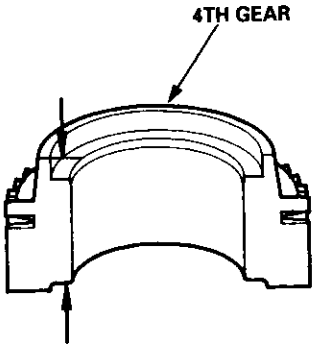

- If the thickness of 4th gear is less than the service limit, replace 4th gear with a new one.
- If the thickness of 4th gear is within the service limit, replace the 3rd/4th synchro hub with a new one.

(cont'd)

Clearance Inspection (cont'd)

6. Measure the clearance between 5th gear and the spacer collar.

   Standard: 0.06 – 0.21 mm (0.002 – 0.008 in)
   Service limit: 0.3 mm (0.012 in)

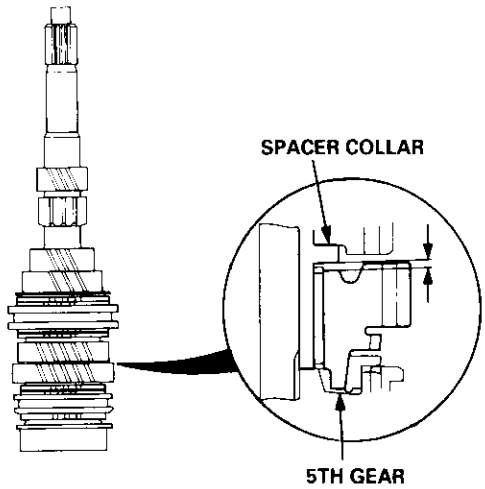

7. If the clearance is more than the service limit, measure distance Ⓑ on the spacer collar.

   Standard: 26.03 – 26.08 mm (1.025 – 1.027 in)

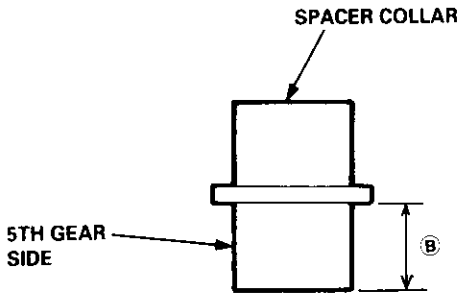

8. If distance Ⓑ is not within the standard, replace the spacer collar with a new one.
   If distance Ⓑ is within the standard, measure the thickness of 5th gear.

   Standard: 31.42 – 31.47 mm (1.237 – 1.239 in)
   Service Limit: 31.3 mm (1.232 in)

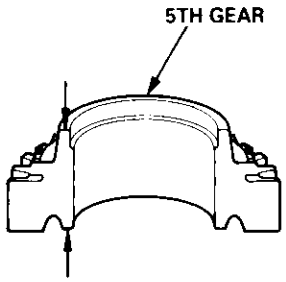

- If the thickness of 5th gear is less than the service limit, replace 5th gear with a new one.
- If the thickness of 5th gear is within the service limit, replace the 5th synchro hub with a new one.

Disassembly

1. Remove the ball bearing using a bearing puller as shown.

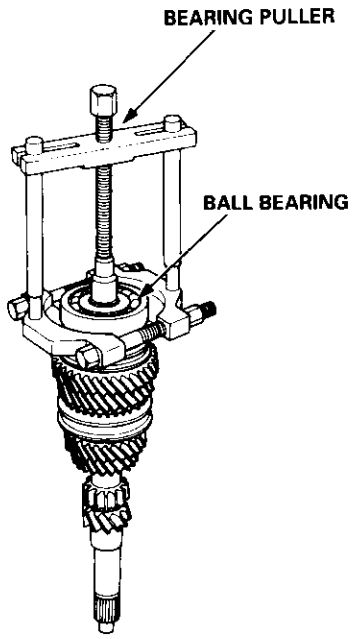

CAUTION: Remove the synchro hubs using a press and the steel blocks as shown. Use of a jaw-type puller can cause damage to the gear teeth.

2. Support 5th gear on steel blocks, and press the mainshaft out of the 5th synchro hub, as shown.

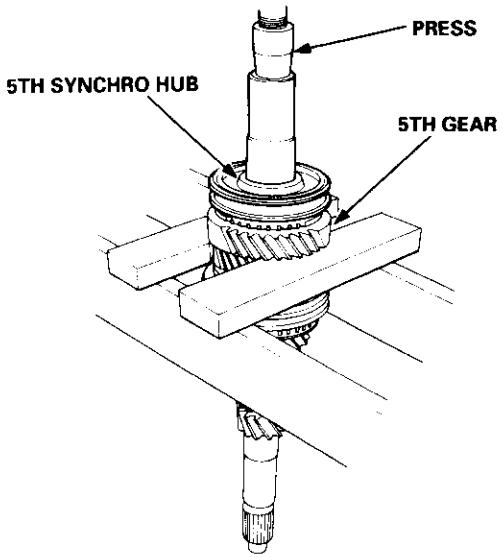

3. Support 3rd gear on steel blocks, and press the mainshaft out of the 3rd/4th synchro hub, as shown.

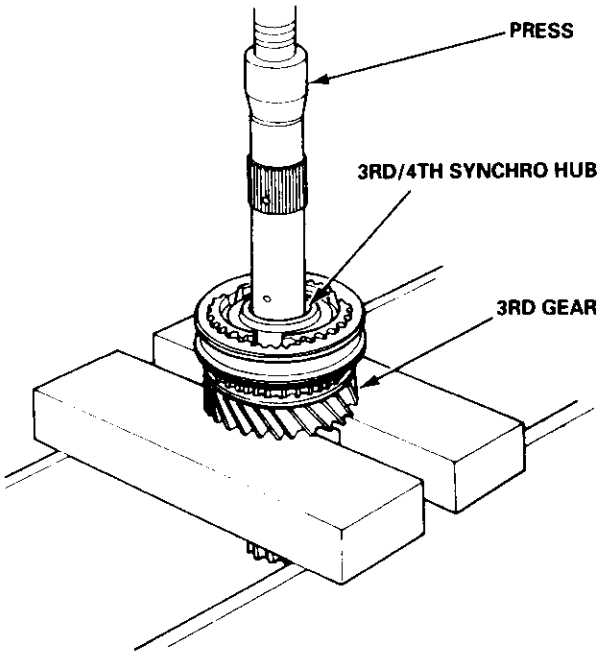

Inspection

1. Inspect the gear surfaces and the bearing surfaces for wear and damage, then measure the mainshaft at points A, B, and C. If any parts of the mainshaft are less than the service limit, replace mainshaft with a new one.

   Standard:
   A: 27.987 – 28.000 mm (1.1018 – 1.1024 in)
   B: 37.984 – 38.000 mm (1.4954 – 1.4960 in)
   C: 27.977 – 27.990 mm (1.1015 – 1.1020 in)

   Service Limit:
   A: 27.940 mm (1.1000 in)
   B: 37.930 mm (1.4933 in)
   C: 27.930 mm (1.0996 in)

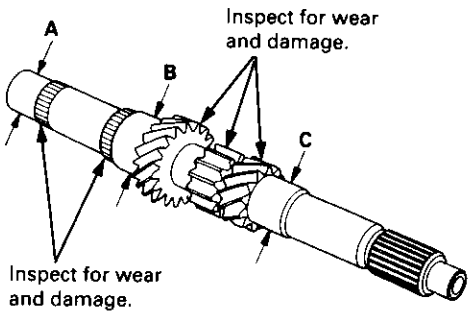

Inspect oil passages for clogging.

2. Inspect for runout. If the runout is more than the service limit, replace the mainshaft with a new one.

   Standard: 0.02 mm (0.0008 in) max.
   Service Limit: 0.05 mm (0.002 in)

   NOTE: Support the mainshaft at both ends as shown.

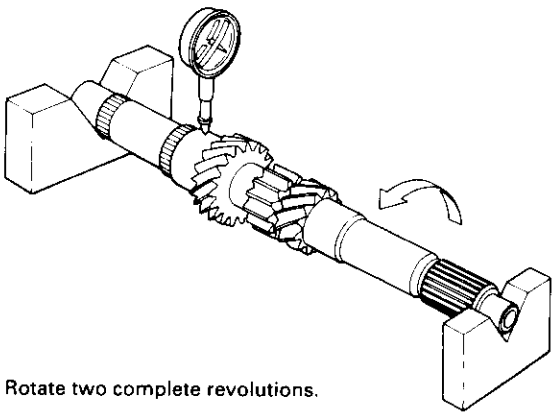

Rotate two complete revolutions.

Reassembly

CAUTION:

- **Press the 3rd/4th and the 5th synchro hubs on the mainshaft without lubrication.**
- **When installing the 3rd/4th and the 5th synchro hubs, support the mainshaft on steel blocks, and install the synchro hubs using a press.**
- **Install the 3rd/4th and the 5th synchro hubs with a maximum pressure of 19.6 kN (2,000 kg, 14,466 lb).**

NOTE: Refer to page 13-67 for reassembly sequence.

1. Support 2nd gear on steel blocks, then install the 3rd/4th synchro hub using the special tools and a press, as shown.

   NOTE:
   - After installing, check the operation of the 3rd/4th synchro sleeve and hub.
   - Assemble the 3rd/4th synchro hub and sleeve together before installing them on the mainshaft.

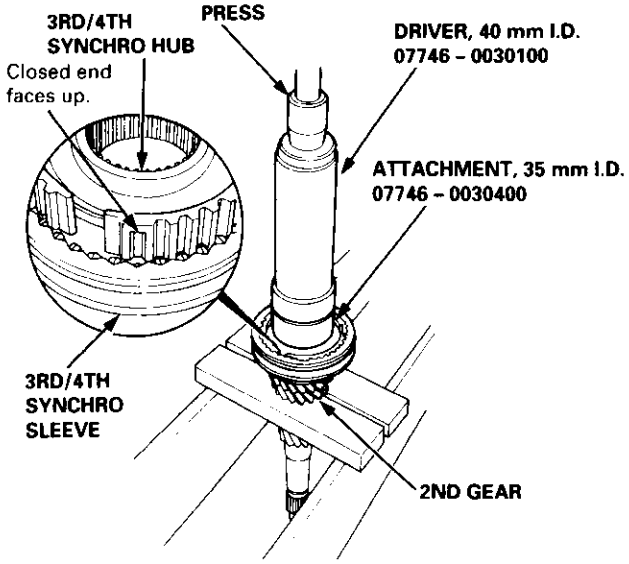

2. Install the 5th synchro hub using the special tools and a press as shown.

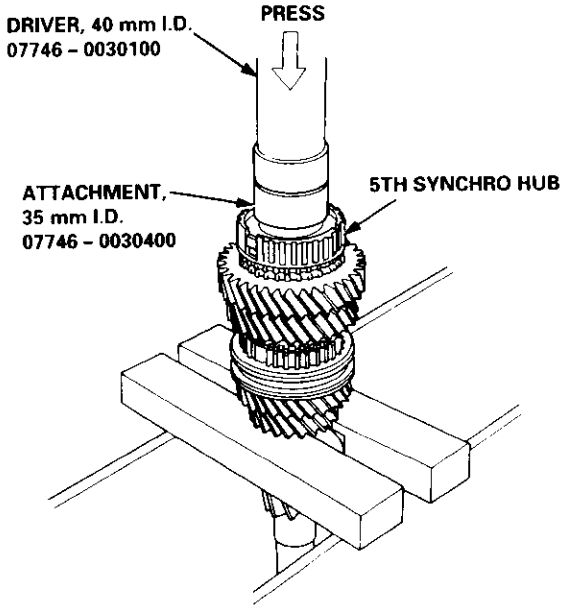

3. Install the angular ball bearing using the special tools and a press as shown.

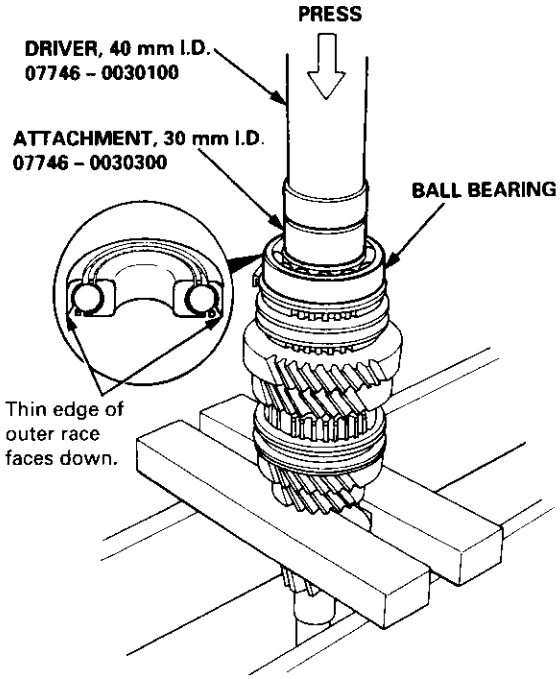

Countershaft Assembly

Index

NOTE: The 4th and 5th gears are installed with a press.

OIL Prior to reassembling, clean all the parts in solvent, dry them and apply lubricant to any contact surfaces. The 4th and 5th gears, however, should be installed with a press before lubricating them.

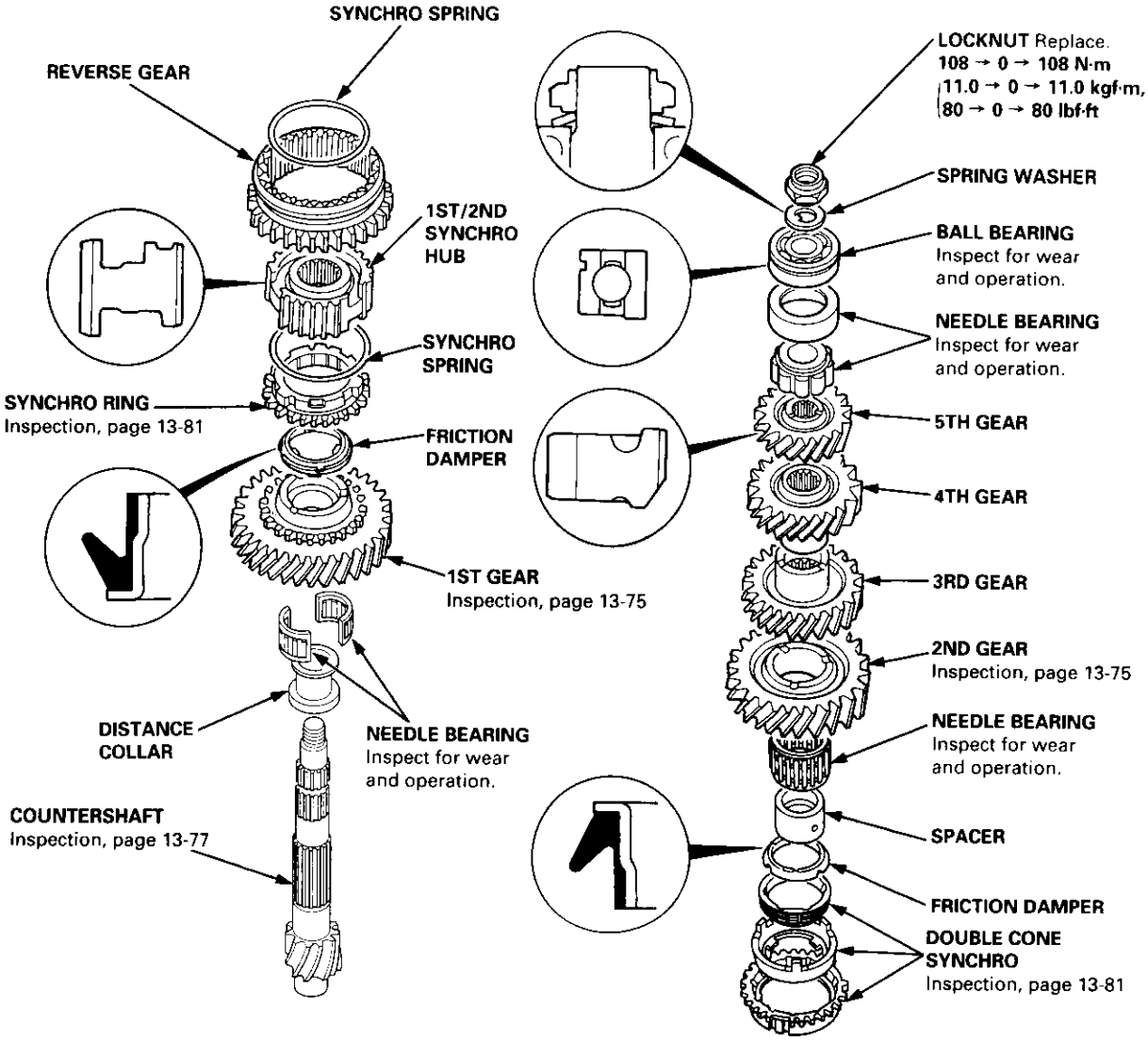

Clearance Inspection

1. Measure the clearance between the 1st gear and distance collar.
   Standard: **0.045 – 0.205 mm (0.002 – 0.008 in)**
   Service Limit: 0.25 mm (0.01 in)

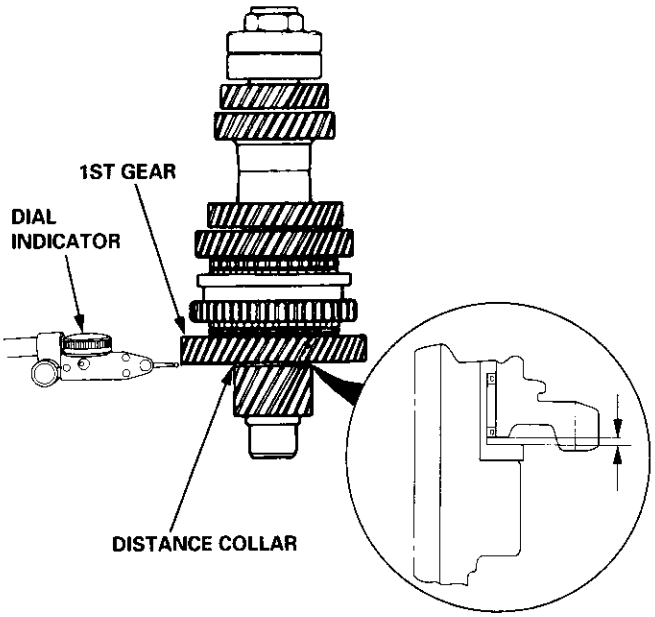

2. If the clearance exceeds the service limit, measure the thicknesses of 1st gear.
   1ST GEAR
   Standard: 29.45 – 29.50 mm (1.159 – 1.161 in)

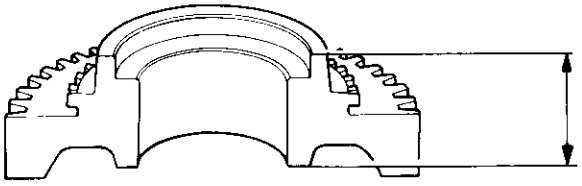

   DISTANCE COLLAR
   Standard: Ⓐ 36.5 mm (1.44 in)
   Ⓑ 42.0 mm (1.65 in)
   Ⓒ 30.0 mm (1.18 in)

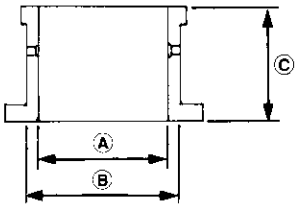

- If the thicknesses of 1st gear and distance collar are less than the standard, replace with a new one.
- If the thicknesses of 1st gear and distance collar are within the standard, replace the 1st/2nd synchro hub with a new one.

3. Measure the clearance between the 2nd and 3rd gears.
   Standard: **0.07 – 0.14 mm (0.003 – 0.006 in)**
   Service Limit: 0.24 mm (0.009 in)

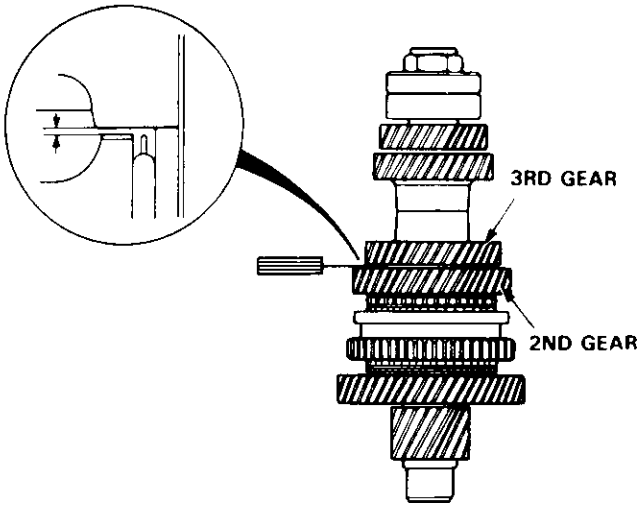

4. If the clearance exceeds the service limit, measure the thicknesses of 2nd gear and spacer.
   2ND GEAR
   Standard: 28.92 – 28.97 mm (1.139 – 1.141 in)

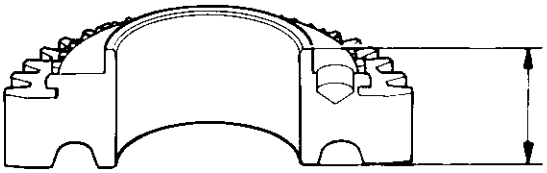

   SPACER COLLAR
   Standard: 29.07 – 29.09 mm (1.144 – 1.145 in)

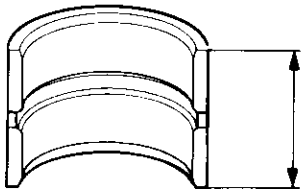

- If the thicknesses of 2nd gear and spacer are less than the standard, replace with a new one.
- If the thicknesses of 2nd gear and spacer are within the standard, replace the 1st/2nd synchro hub with a new one.

Disassembly

1. Securely clamp the countershaft assembly in a bench vise with wood blocks.

2. Raise the locknut tab from the groove in the countershaft, then remove the locknut and the spring washer.

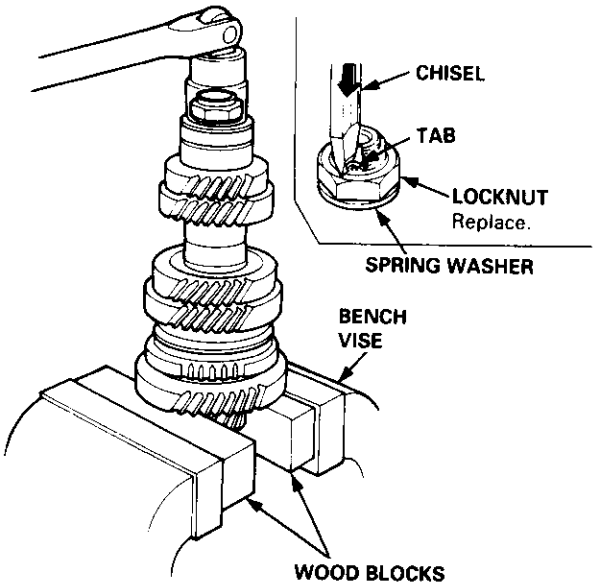

3. Remove the ball bearing using a bearing puller as shown.

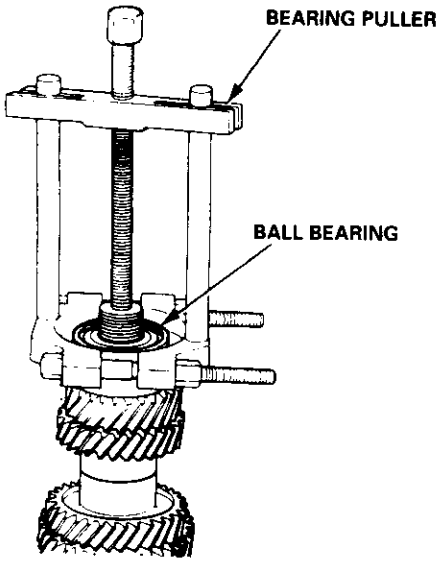

4. Remove the bearing outer race, then remove the needle bearing using a bearing puller as shown.

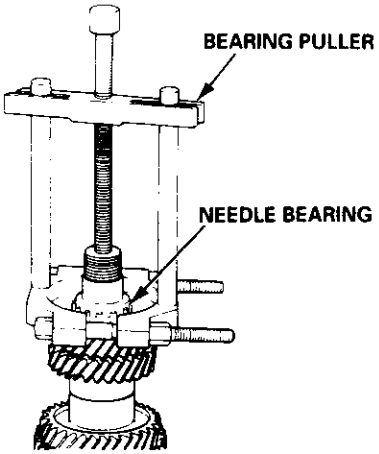

CAUTION: Remove the gears using a press and the steel blocks as shown. Use of a jaw-type puller can cause damage to the gear teeth.

5. Support 4th gear on steel blocks, and press the countershaft out of 5th and 4th gears, as shown.

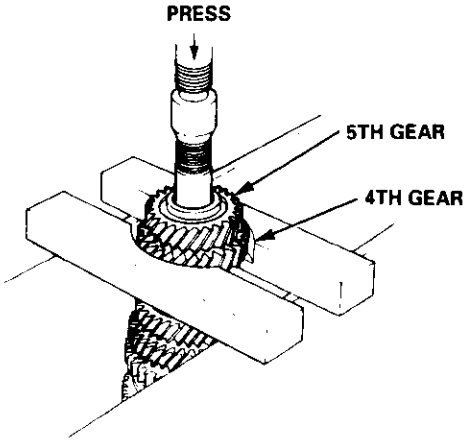

Inspection

1. Inspect the gear surfaces and the bearing surfaces for wear and damage, then measure the countershaft at points A, B, and C. If any parts of the countershaft are less than the service limit, replace countershaft with a new one.

   Standard:
   A: 24.980 – 24.993 mm (0.9835 – 0.9840 in)
   B: 36.984 – 37.000 mm (1.4561 – 1.4567 in)
   C: 33.000 – 33.015 mm (1.2992 – 1.2998 in)
   Service Limit:
   A: 24.940 mm (0.9819 in)
   B: 36.930 mm (1.4539 in)
   C: 32.950 mm (1.2972 in)

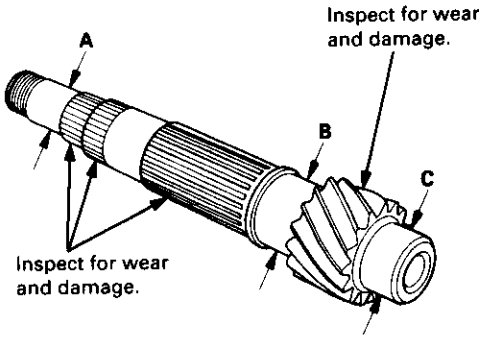

Inspect oil passage for clogging.

2. Inspect for runout. If the runout is more than the service limit, replace the countershaft with a new one.

   Standard: 0.02 mm (0.0008 in) max.
   Service Limit: 0.05 mm (0.002 in)

   NOTE: Support the countershaft at both ends as shown.

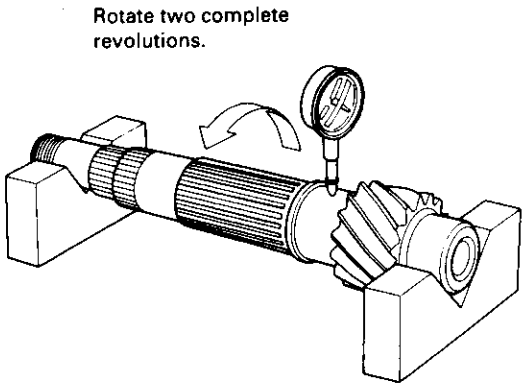

Reassembly

CAUTION:
- **Press 4th and 5th gears on the countershaft without lubrication.**
- **When installing 4th and 5th gears, support the shaft on steel blocks, and install the gears using a press.**
- **Install 4th and 5th gear with a maximum pressure of 25.5 kN (2,600 kgf, 18,806 lbf).**

NOTE: Refer to page 13-74 for reassembly sequence.

1. Install the distance collar and the needle bearings on the countershaft.

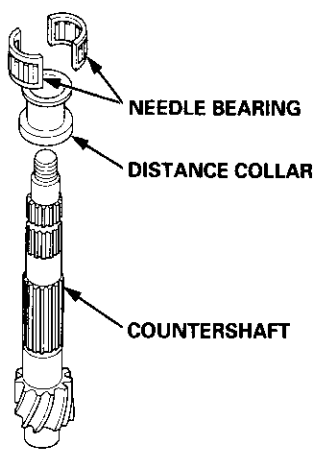

2. Install the friction damper, the synchro ring, and the synchro spring on 1st gear.

3. Install the 1st/2nd synchro hub by aligning the fingers on the friction damper and the grooves in the 1st/2nd synchro hub, as shown.

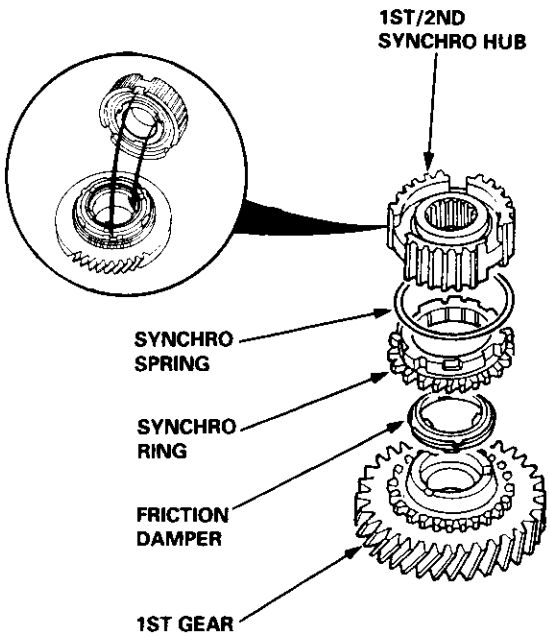

4. Install the reverse gear.

5. Install the synchro spring, and the double cone synchro as shown.

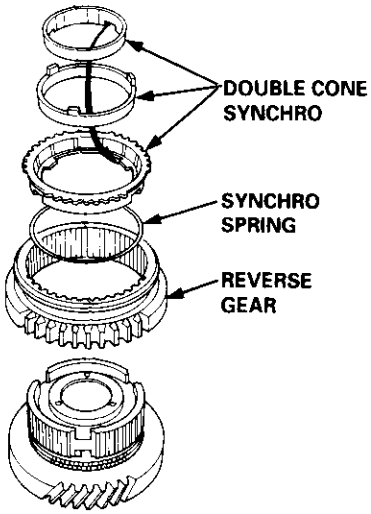

6. Assemble the friction damper, the needle bearing, and 2nd gear, then install them by aligning the fingers on the friction damper and the grooves in the 1st/2nd synchro hub with the fingers of the double cone synchro and the grooves on 2nd gear, as shown.

7. Install the spacer.

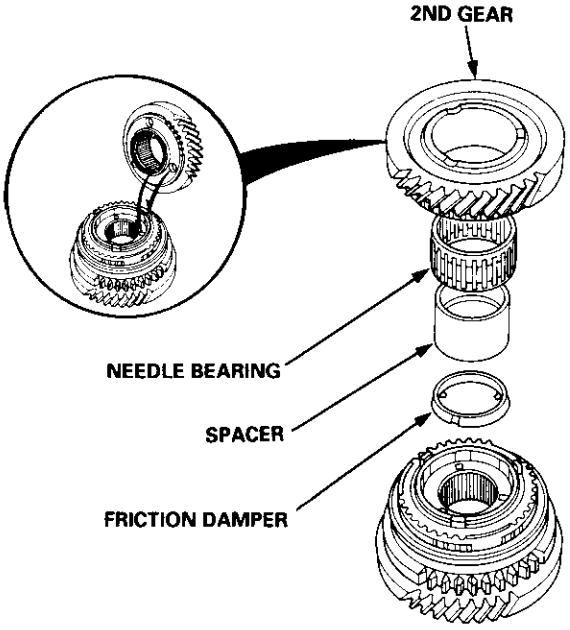

8. Install the parts assembled in steps 2 – 6 on the countershaft.

9. Support the countershaft on a steel block, and install 4th gear using the special tools and a press, as shown.

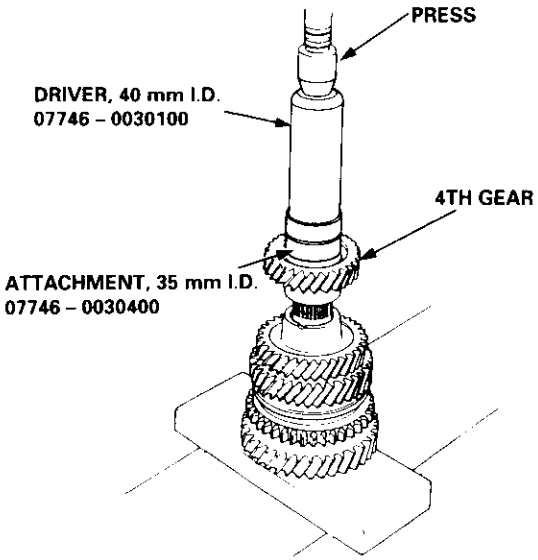

10. Support the countershaft on a steel block, and install 5th gear using the special tools and a press, as shown.

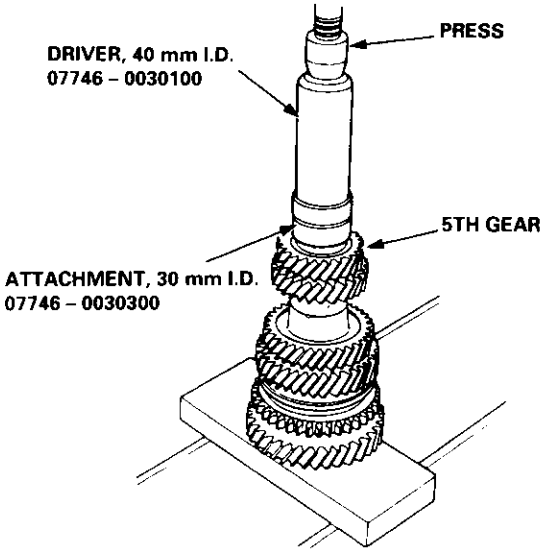

11. Install the needle bearing, then install the ball bearing using the special tools and a press as shown.

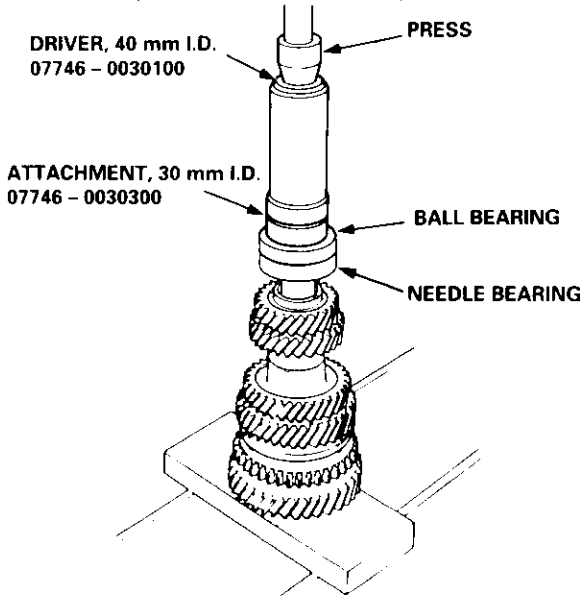

12. Securely clamp the countershaft assembly in a bench vise with wood blocks.

13. Install the spring washer, tighten the locknut, then stake the locknut tab into the groove.

LOCKNUT
108 → 0 → 108 N·m (11.0 → 0 → 11.0 kgf·m, 80 → 0 → 80 lbf·ft)

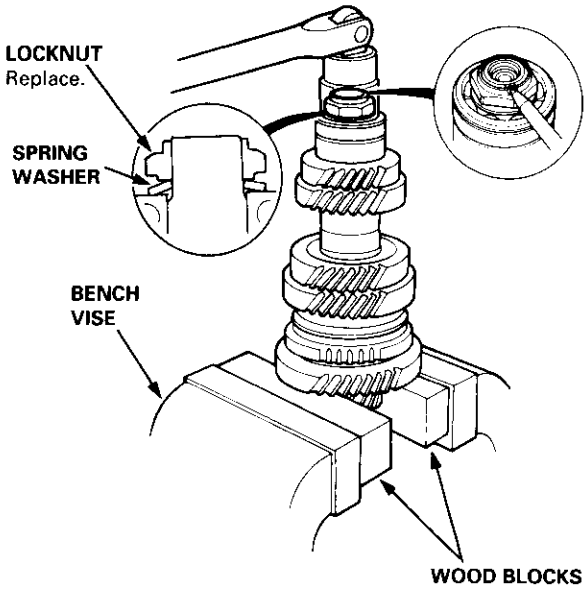

Inspection

1. Inspect gear teeth on all synchro hubs and synchro sleeves for rounded off corners, which indicates wear.

2. Install each synchro hub in its mating synchro sleeve and check for freedom of movement.

   NOTE: If replacement is required, always replace the synchro sleeve and synchro hub as a set.

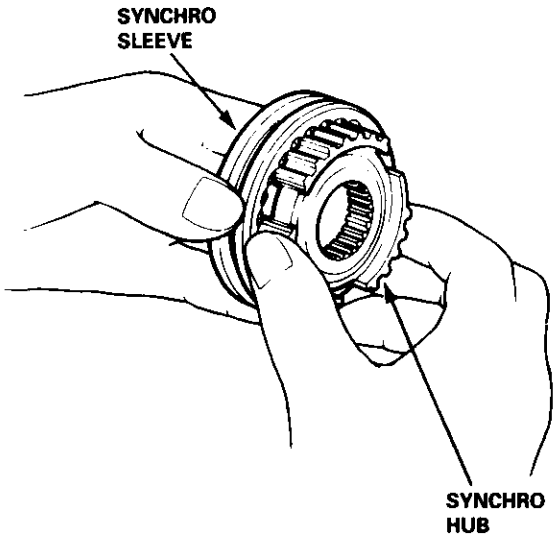

Installation

When assembling the synchro sleeve and synchro hub, be sure to match the three sets of longer teeth (120 degrees apart) on the synchro sleeve with the three sets of deeper grooves in the synchro hub.

CAUTION: Do not install the synchro sleeve with its longer teeth in the synchro hub slots, because it will damage the spring ring.

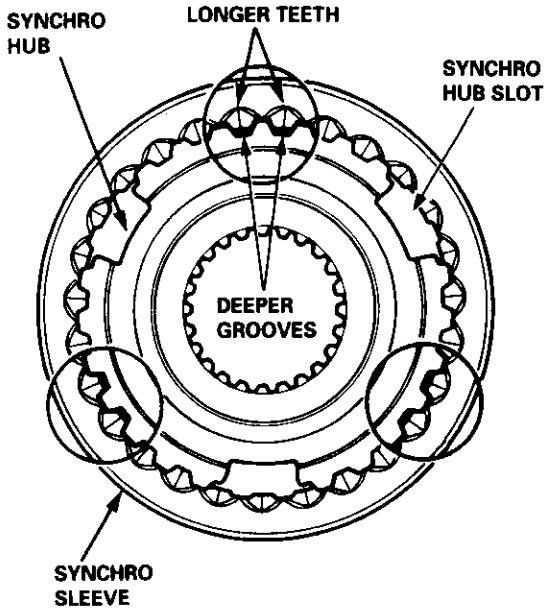

Inspection

1. Inspect the synchro ring and gear.

   A: Inspect the inside of the synchro ring for wear.

   B: Inspect the synchro sleeve teeth and matching teeth on the synchro ring for wear (rounded off).

   GOOD WORN

   C: Inspect the synchro sleeve teeth and matching teeth on the gear for wear (rounded off).

   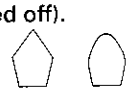
   GOOD WORN

   D: Inspect the gear hub thrust surface for wear.

   E: Inspect the cone surface for wear and roughness.

   F: Inspect the teeth on all gears for uneven wear, scoring, galling, and cracks.

2. Coat the cone surface of the gear with oil, and place the synchro ring on the matching gear. Rotate the ring, making sure that it does not slip.

   Measure the clearance between the synchro ring and gear all the way around.

   NOTE: Hold the synchro ring against the gear evenly while measuring the clearance.

   Synchro Ring-to-Gear Clearance
   Standard: 0.73 – 1.18 mm (0.029 – 0.046 in)
   Service Limit: 0.4 mm (0.02 in)

   Double Cone Synchro-to-Gear Clearance
   Standard:
   Ⓐ: (Outer Synchro Ring to Synchro Cone) 0.5 – 1.0 mm (0.02 – 0.04 in)
   Ⓑ: (Synchro Cone to Gear) 0.5 – 1.0 mm (0.02 – 0.04 in)
   Ⓒ: (Outer Synchro Ring to Gear) 0.95 – 1.68 mm (0.037 – 0.066 in)
   Service Limit:
   Ⓐ: 0.3 mm (0.01 in)
   Ⓑ: 0.3 mm (0.01 in)
   Ⓒ: 0.6 mm (0.02 in)

   If the clearance is less than the service limit, replace the synchro ring and synchro cone.

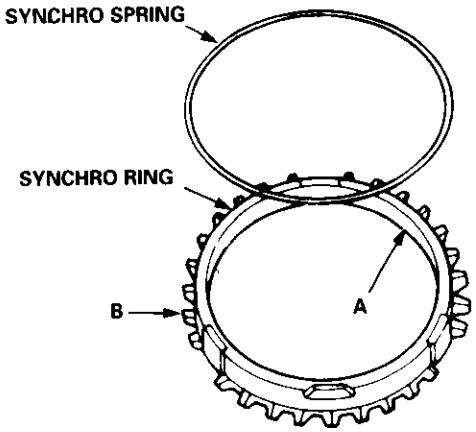

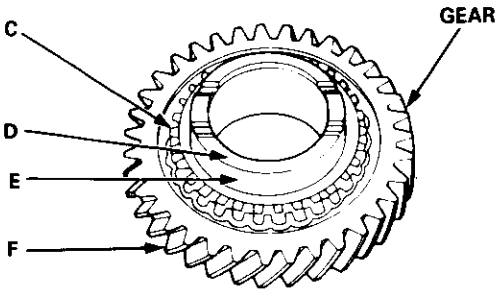

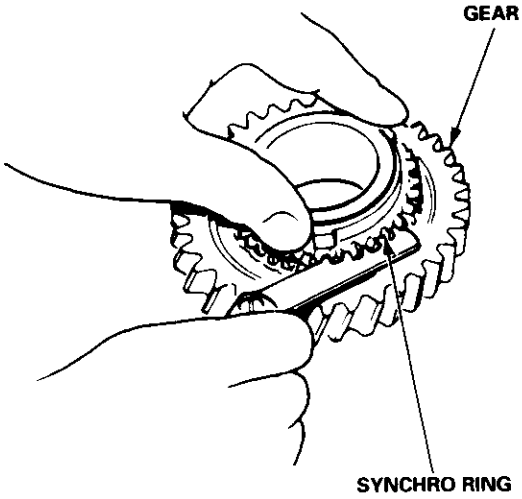

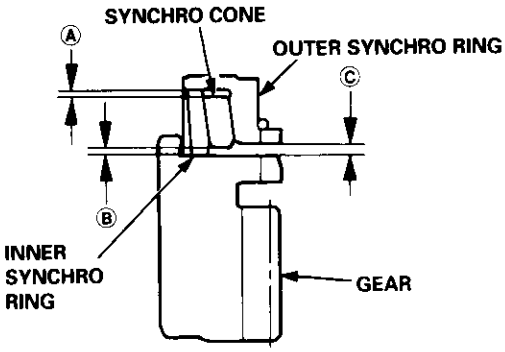

Index

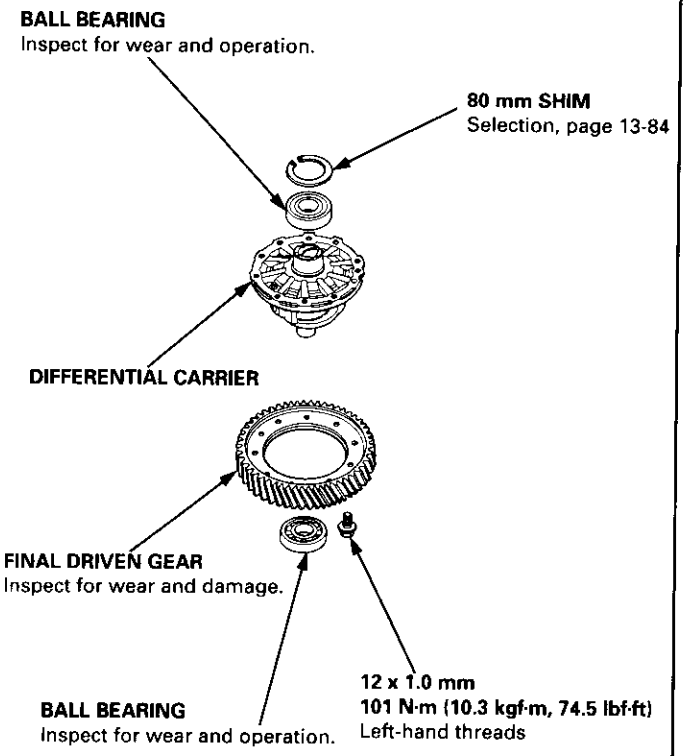

Backlash Inspection

1. Place the differential assembly on V-blocks and install both axles.

2. Measure the backlash of both pinion gears. If the backlash is not within the standard, replace the differential carrier.

   Standard (New): 0.05 – 0.15 mm (0.002 – 0.006 in)

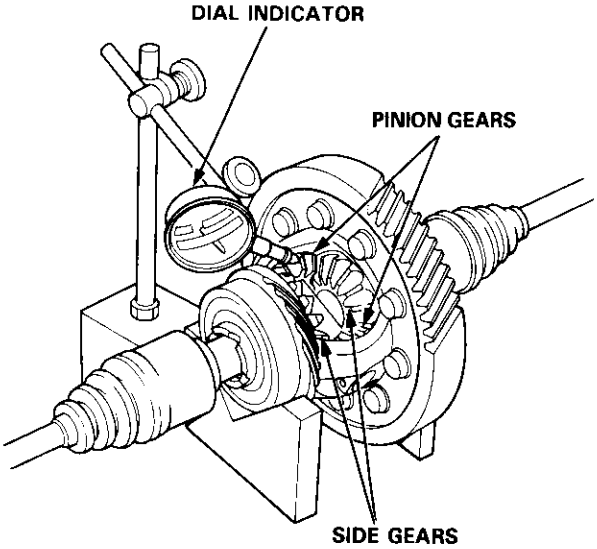

Final Driven Gear Replacement

1. Remove the bolts in a crisscross pattern in several steps, and remove the final driven gear from the differential carrier.

   NOTE: The final driven gear bolts have left-hand threads.

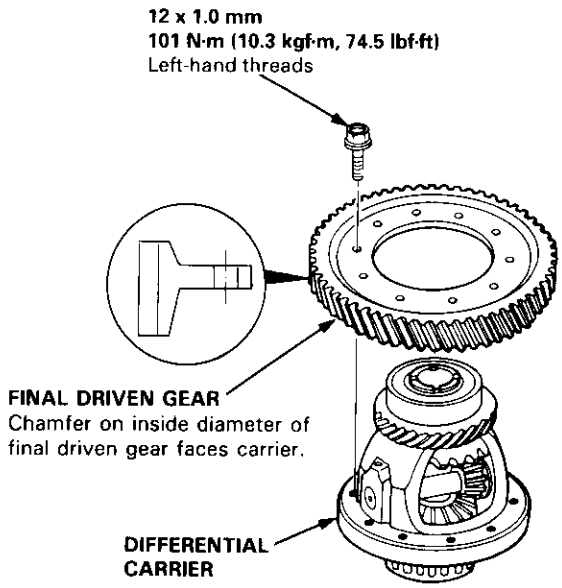

2. Install the final driven gear by tightening the bolts in a crisscross pattern in several steps.

Bearing Replacement

NOTE: Check the ball bearings for wear and rough rotation. If bearings are OK, removal is not necessary.

1. Remove the ball bearings using a standard bearing puller and bearing separator as shown.

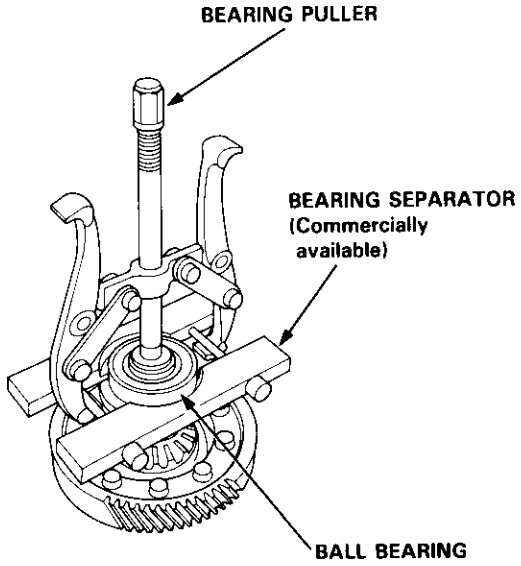

2. Install new ball bearings using the special tool as shown.

   NOTE: Drive the bearings squarely until they bottom against the carrier.

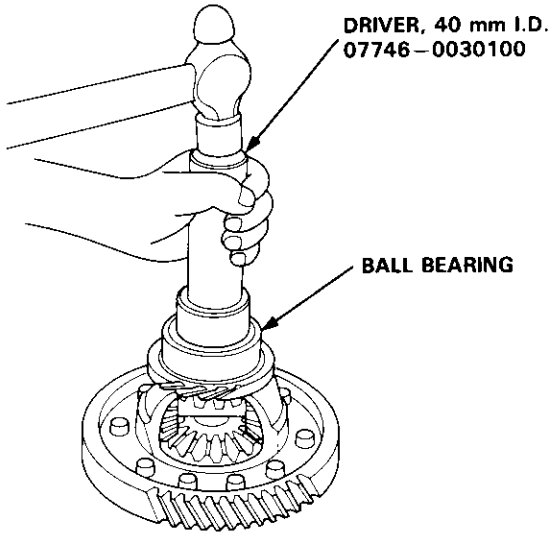

Thrust Shim Adjustment

1. Install the differential assembly, making sure it bottoms in the clutch housing, using the special tool as shown.

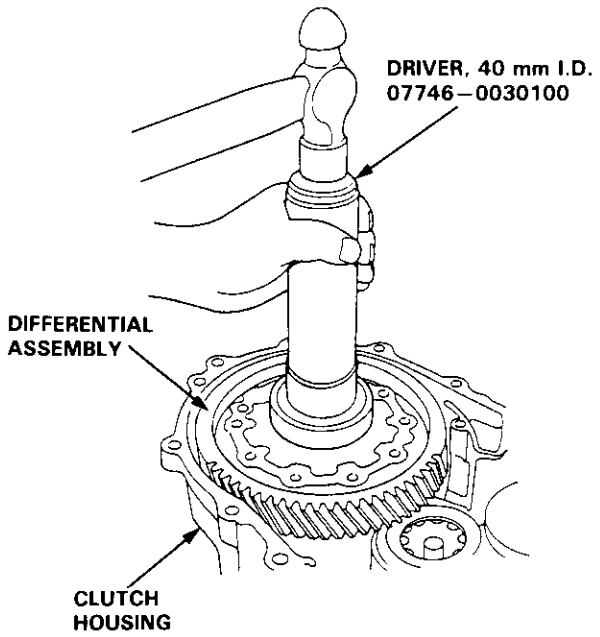

2. Install the 80 mm shim.

   NOTE: Install the 80 mm shim that was removed.

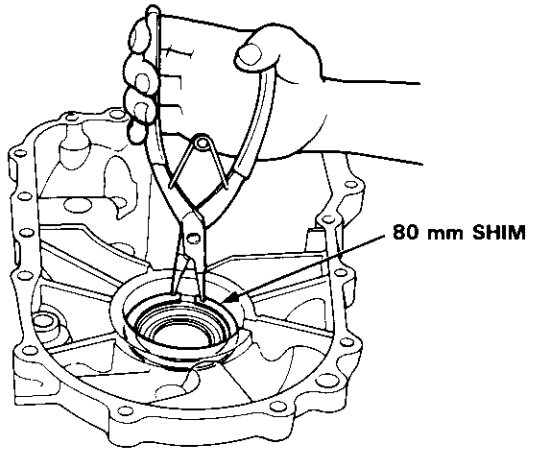

3. Install the transmission housing (see page 13-94).

   NOTE: Do not apply liquid gasket to the mating surface of the clutch housing.

4. Tighten the transmission housing attaching bolts (see page 13-94).

   8 x 1.25 mm
   27 N·m (2.8 kgf·m, 20 lbf·ft)

5. Use the special tool to bottom the differential assembly in the clutch housing.

6. Measure clearance between the 80 mm shim and bearing outer race in the transmission housing.

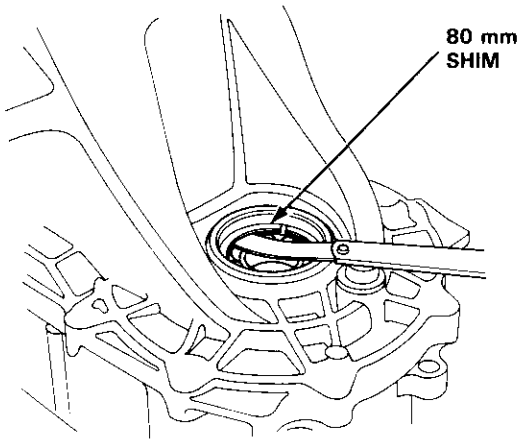

7. If the clearance is not within the standard, select a new 80 mm shim from the following table.

Standard: 0 – 0.10 mm (0 – 0.004 in)

80 mm Shim

	Part Number	Thickness
A	41441 – PL3 – B00	1.0 mm (0.0394 in)
B	41442 – PL3 – B00	1.1 mm (0.0433 in)
C	41443 – PL3 – B00	1.2 mm (0.0472 in)
D	41444 – PL3 – B00	1.3 mm (0.0512 in)
E	41445 – PL3 – B00	1.4 mm (0.0551 in)
F	41446 – PL3 – B00	1.5 mm (0.0591 in)
G	41447 – PL3 – B00	1.6 mm (0.0630 in)
H	41448 – PL3 – B00	1.7 mm (0.0669 in)
J	41449 – PL3 – B00	1.8 mm (0.0709 in)
K	41450 – PL3 – B00	1.05 mm (0.0413 in)
L	41451 – PL3 – B00	1.15 mm (0.0453 in)
M	41452 – PL3 – B00	1.25 mm (0.0492 in)
N	41453 – PL3 – B00	1.35 mm (0.0532 in)
P	41454 – PL3 – B00	1.45 mm (0.0571 in)
Q	41455 – PL3 – B00	1.55 mm (0.0610 in)
R	41456 – PL3 – B00	1.65 mm (0.0650 in)
S	41457 – PL3 – B00	1.75 mm (0.0689 in)

NOTE: If the clearance measured in step 6 is within the standard, it is not necessary to go to step 9.

8. Remove the bolts and transmission housing.

9. Replace the 80 mm shim selected in step 7, then recheck the clearance.

10. Reassemble the transmission and install the transmission housing.

Replacement

Mainshaft:

1. Remove the ball bearing using the special tools as shown.

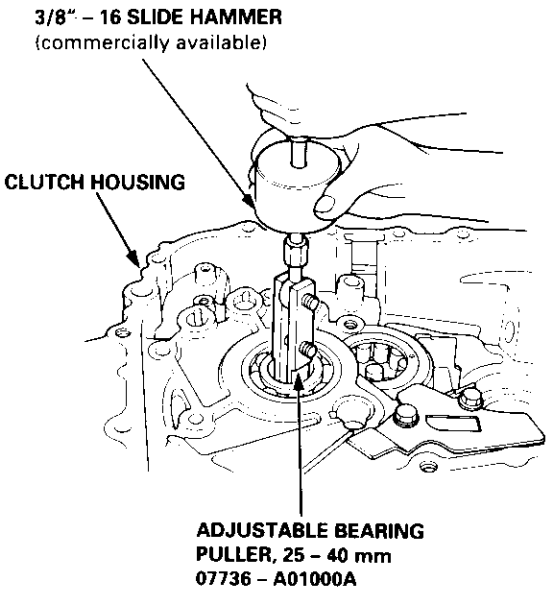

2. Remove the oil seal from the clutch housing.

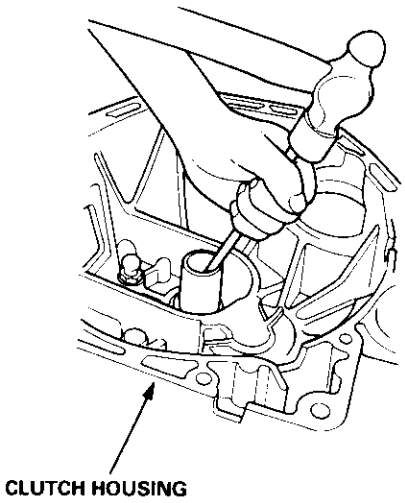

3. Drive the new oil seal into the clutch housing using the special tools as shown.

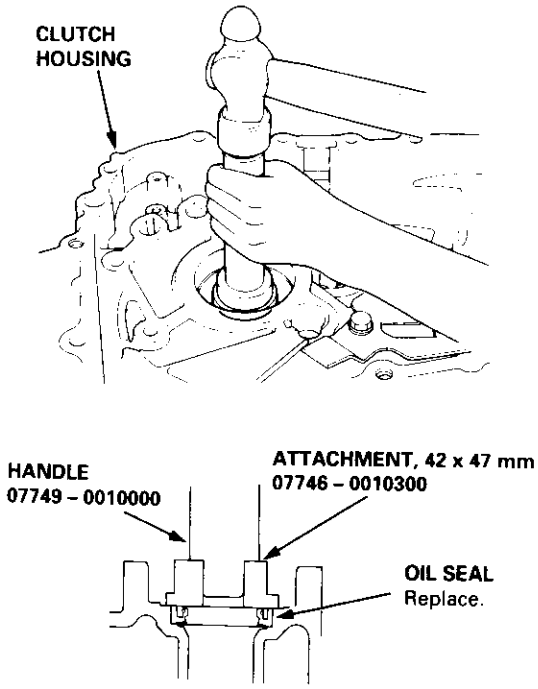

4. Drive the ball bearing into the clutch housing using the special tools as shown.

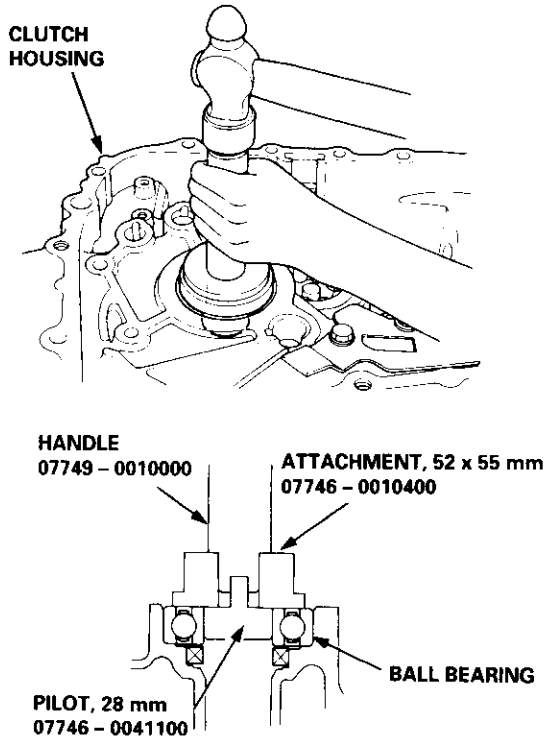

Countershaft:

1. Bend the tab on the lock washer down, then remove the bolt and bearing retainer plate.

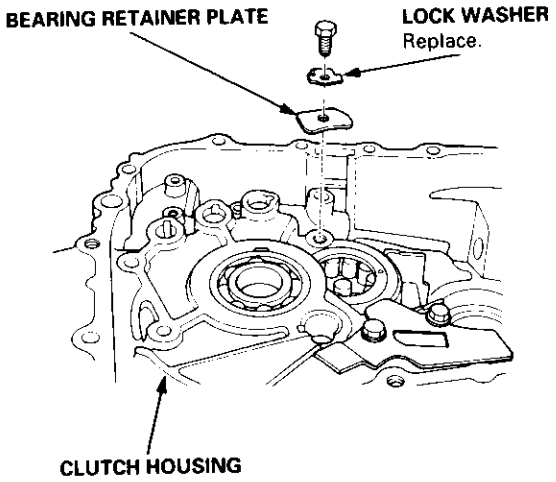

2. Remove the needle bearing using the special tools as shown, then remove the oil guide plate.

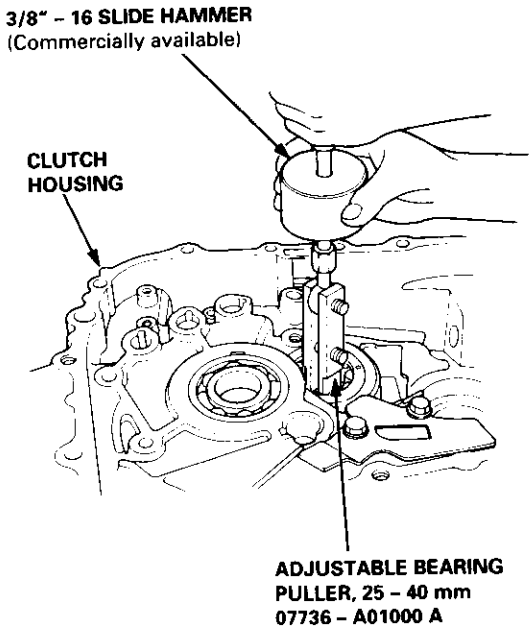

3. Position the oil guide plate and new needle bearing in the bore of the clutch housing, then drive in the needle bearing using the special tools as shown.

   NOTE: Position the needle bearing with the oil hole facing up.

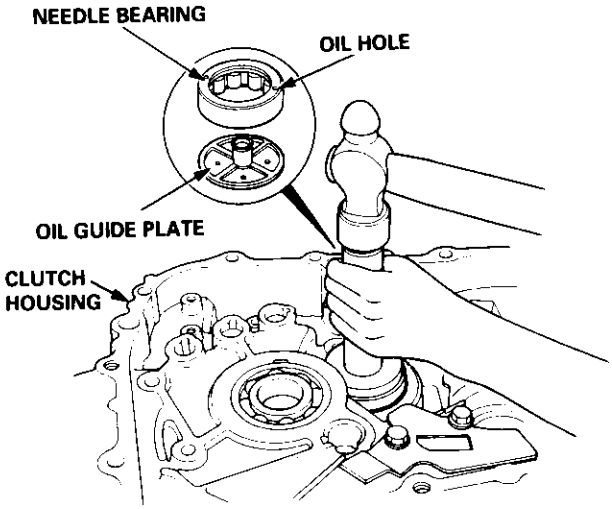

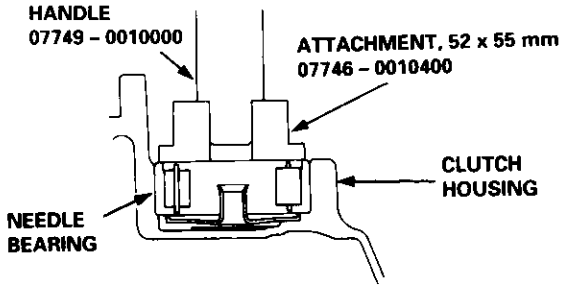

4. Install the bearing retainer plate and new lock washer, then bend the tab against the bolt head.

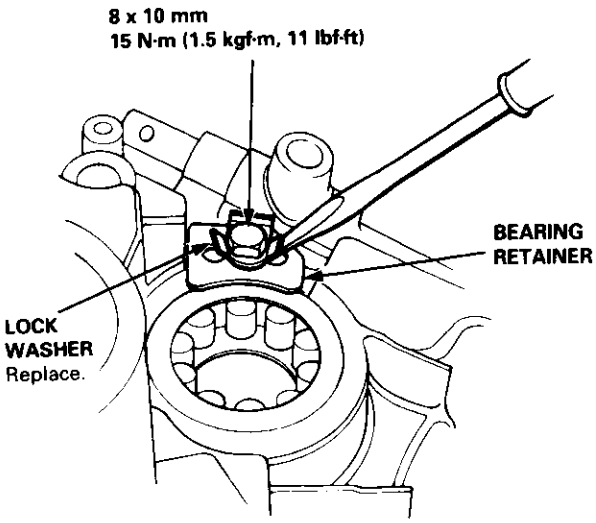

Mainshaft Thrust Clearance

Adjustment

1. Remove the 72 mm thrust shim and oil guide plate from the transmission housing.

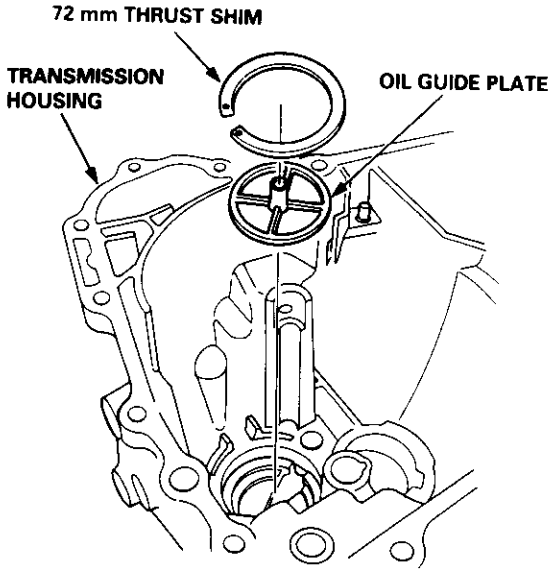

2. Install the 3rd/4th synchro hub, spacer collar, 5th synchro hub, spacer, and ball bearing on the mainshaft, then install the above assembly in the transmission housing.

3. Install the washer on the mainshaft.

4. Measure distance Ⓑ between the end of the transmission housing and washer.

   NOTE:
   - Use a straight edge and vernier caliper.
   - Measure at three locations and average the reading.

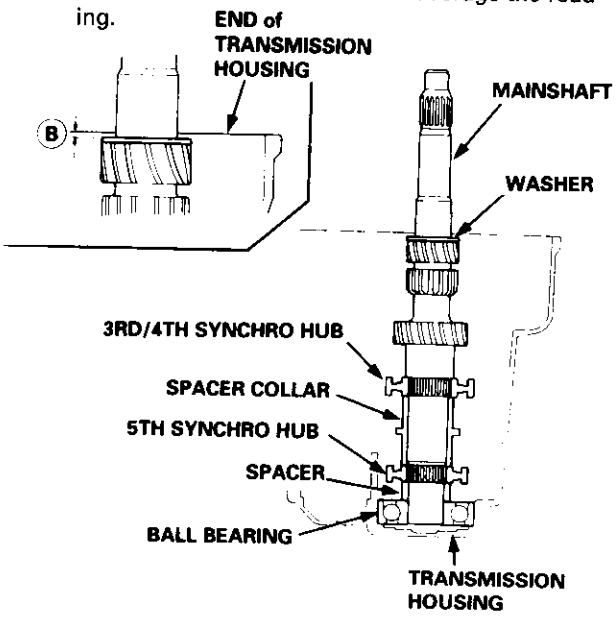

5. Measure distance Ⓒ between the end of the clutch housing and bearing inner race.

   NOTE:
   - Use a straight edge and depth gauge.
   - Measure at three locations and average the readings.

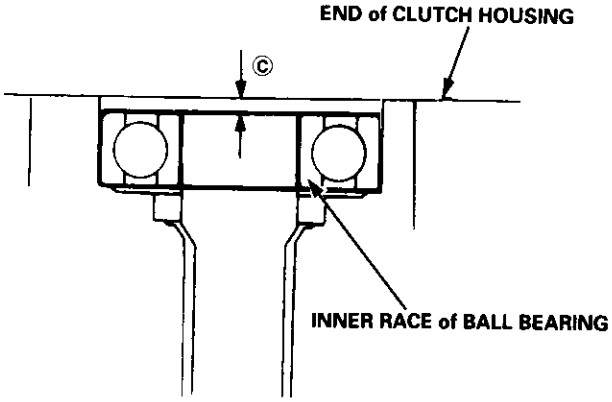

6. Select the proper 72 mm thrust shim from the chart by using the formula below.

   NOTE: Use only one 72 mm thrust shim.

   Shim Selection Formula:

   From the measurements you made in steps 4 and 5:
   - Add distance Ⓒ (step 5) to distance Ⓑ (step 4).
   - From this number, subtract 0.93 (which is the midpoint of the flex range of the clutch housing bearing spring washer).
   - Take this number and compare it to the available shim sizes in the chart.

   (For example)

B: 2.39	2.61
+ C: 0.22	− 0.93
= 2.61	= 1.68

   - Try the 1.68 mm (0.0661 in) shim.

72 mm Thrust Shim

	Part Number	Thickness
A	23931 – P21 – 000	0.60 mm (0.0236 in)
B	23932 – P21 – 000	0.63 mm (0.0248 in)
C	23933 – P21 – 000	0.66 mm (0.0260 in)
D	23934 – P21 – 000	0.69 mm (0.0272 in)
E	23935 – P21 – 000	0.72 mm (0.0283 in)
F	23936 – P21 – 000	0.75 mm (0.0295 in)
G	23937 – P21 – 000	0.78 mm (0.0307 in)
H	23938 – P21 – 000	0.81 mm (0.0319 in)
I	23939 – P21 – 000	0.84 mm (0.0331 in)
J	23940 – P21 – 000	0.87 mm (0.0343 in)
K	23941 – P21 – 000	0.90 mm (0.0354 in)
L	23942 – P21 – 000	0.93 mm (0.0366 in)
M	23943 – P21 – 000	0.96 mm (0.0378 in)
N	23944 – P21 – 000	0.99 mm (0.0390 in)
O	23945 – P21 – 000	1.02 mm (0.0402 in)
P	23946 – P21 – 000	1.05 mm (0.0413 in)
Q	23947 – P21 – 000	1.08 mm (0.0425 in)
R	23948 – P21 – 000	1.11 mm (0.0437 in)
S	23949 – P21 – 000	1.14 mm (0.0449 in)
T	23950 – P21 – 000	1.17 mm (0.0461 in)
U	23951 – P21 – 000	1.20 mm (0.0472 in)
V	23952 – P21 – 000	1.23 mm (0.0484 in)
W	23953 – P21 – 000	1.26 mm (0.0496 in)
X	23954 – P21 – 000	1.29 mm (0.0508 in)
Y	23955 – P21 – 000	1.32 mm (0.0520 in)
Z	23956 – P21 – 000	1.35 mm (0.0531 in)
AA	23957 – P21 – 000	1.38 mm (0.0543 in)
AB	23958 – P21 – 000	1.41 mm (0.0555 in)
AC	23959 – P21 – 000	1.44 mm (0.0567 in)
AD	23960 – P21 – 000	1.47 mm (0.0579 in)
AE	23961 – P21 – 000	1.50 mm (0.0591 in)
AF	23962 – P21 – 000	1.53 mm (0.0602 in)
AG	23963 – P21 – 000	1.56 mm (0.0614 in)
AH	23964 – P21 – 000	1.59 mm (0.0626 in)
AI	23965 – P21 – 000	1.62 mm (0.0638 in)
AJ	23966 – P21 – 000	1.65 mm (0.0650 in)
AK	23967 – P21 – 000	1.68 mm (0.0661 in)
AL	23968 – P21 – 000	1.71 mm (0.0673 in)
AM	23969 – P21 – 000	1.74 mm (0.0685 in)
AN	23970 – P21 – 000	1.77 mm (0.0697 in)
AO	23971 – P21 – 000	1.80 mm (0.0709 in)

7. Install the thrust shim selected and oil guide plate in the transmission housing.

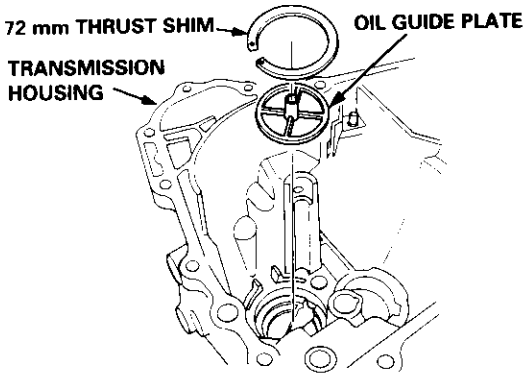

8. Install the spring washer and washer on the ball bearing.

   NOTE:
   - Clean the spring washer, washer and thrust shim throughly before installation.
   - Install the spring washer, washer and thrust shim properly.

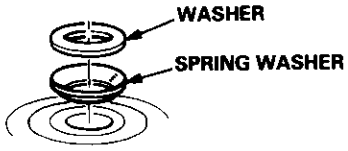

9. Install the mainshaft in the clutch housing.

10. Place the transmission housing over the mainshaft and onto the clutch housing.

11. Tighten the clutch and transmission housings with several 8 mm bolts.

    NOTE: It is not necessary to use sealing agent between the housings.

    8 x 1.25 mm
    27 N·m (2.8 kgf·m, 20 lbf·ft)

12. Tap the mainshaft with a plastic hammer.

(cont'd)

Adjustment (cont'd)

13. Check the thrust clearance in the manner described below.

CAUTION: Measurement should be made at room temperature.

a. Slide the mainshaft base over the mainshaft.

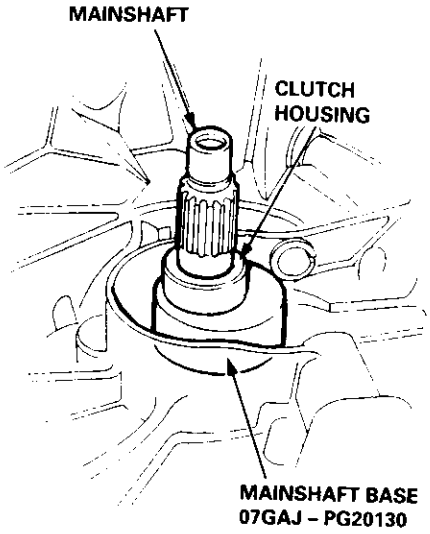

b. Attach the mainshaft holder to the mainshaft as follows:

NOTE:
- Back-out the mainshaft holder bolt and loosen the two hex bolts.
- Fit the holder over the mainshaft so its lip is towards the transmission.
- Align the mainshaft holder's lip around the groove at the inside of the mainshaft splines, then tighten the hex bolts.

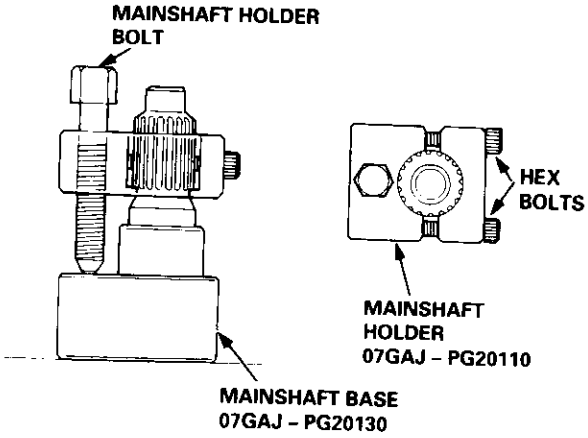

c. Seat the mainshaft fully by tapping its end with a plastic hammer.

d. Thread the mainshaft holder bolt in until it just contacts the wide surface of the mainshaft base.

e. Zero a dial gauge on the end of the mainshaft.

f. Turn the mainshaft holder bolt clockwise; stop turning when the dial gauge has reached its maximum movement. The reading on the dial gauge is the amount of mainshaft end play.

CAUTION: Turning the mainshaft holder bolt more than 60 degrees after the needle of the dial gauge stops moving may damage the transmission.

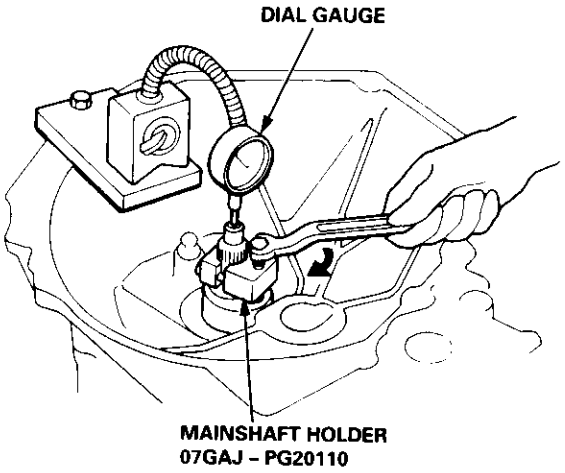

g. If the reading is within the standard, the clearance is correct.
If the reading is not within the standard, recheck the shim thickness.

Standard: 0.11 – 0.18 mm (0.004 – 0.007 in)

Reassembly

1. Install the new oil seal.
2. Set the change piece.
3. Install the shift rod.
4. Install the steel ball, the spring, and the set screw.
5. Install the spring washer and change piece attaching bolt.
6. Install the shift rod boots.

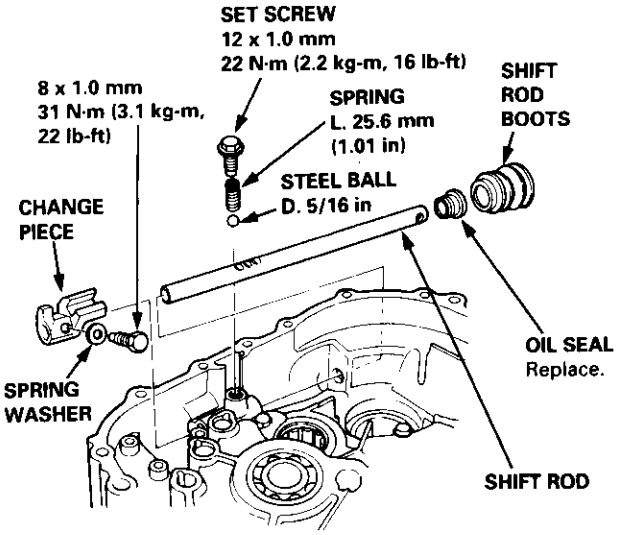

7. Install the oil chamber plate.

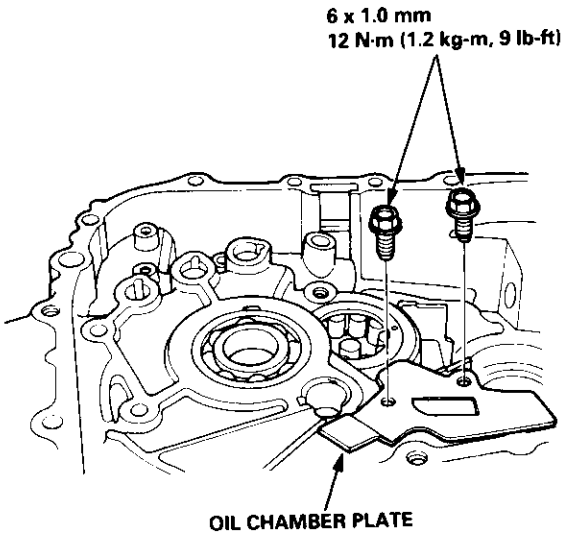

8. Install the differential assembly.

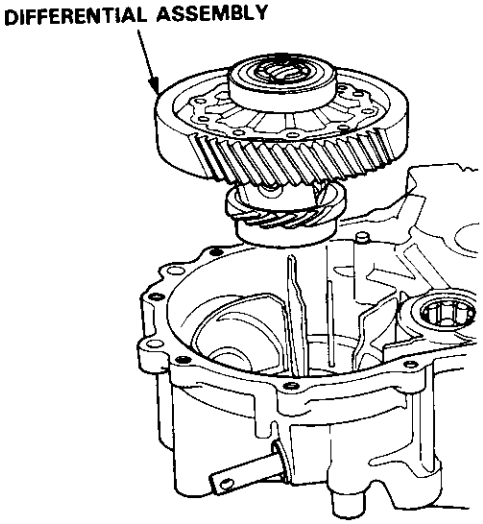

9. Set the spring washer and the washer.
10. Install the mainshaft, the countershaft, and the shift fork assemblies.

    NOTE: Align the finger of the interlock with the groove in the shift fork shaft.

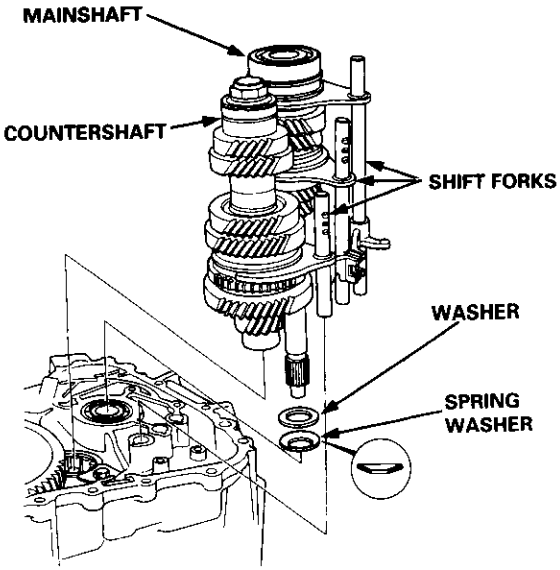

(cont'd)

Reassembly (cont'd)

11. Install the change holder assembly.

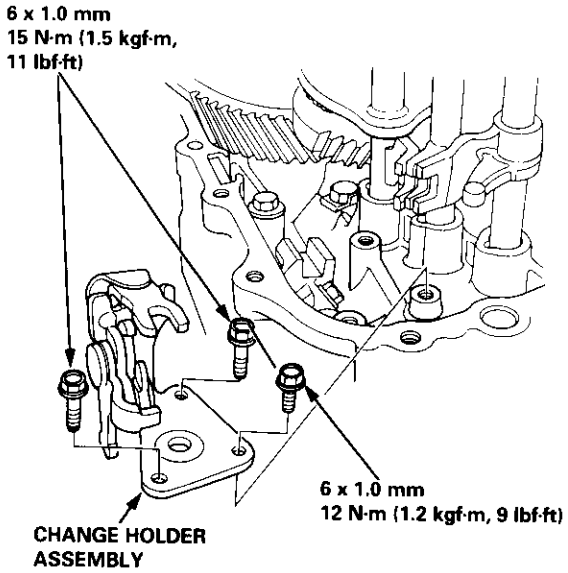

12. Install the shift piece and the interlock, then install the shift piece shaft.

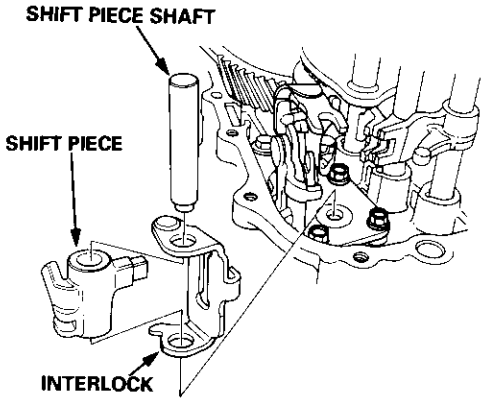

13. Measure the distance Ⓐ after mounting the shift piece shaft. If it's incorrect, check the installation.

Distance Ⓐ: 11.9 – 12.3 mm (0.47 – 0.48 in)

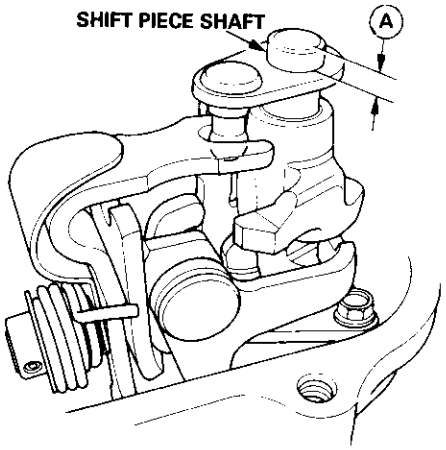

14. Install the reverse idler gear and the reverse idler gear shaft.

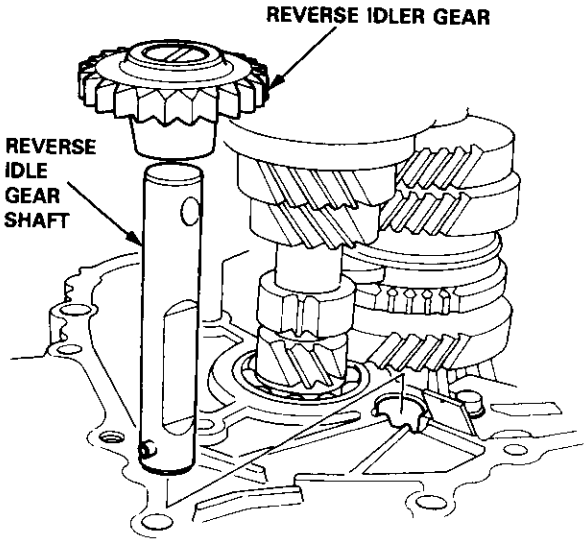

15. Install the reverse change holder.

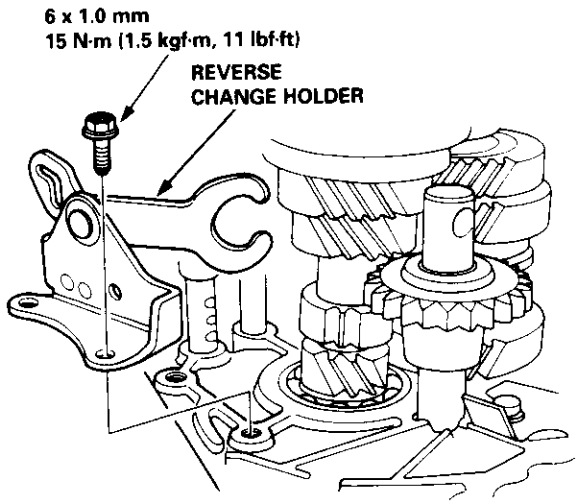

16. Install the oil guide plate and the 72 mm thrust shim into the transmission housing.

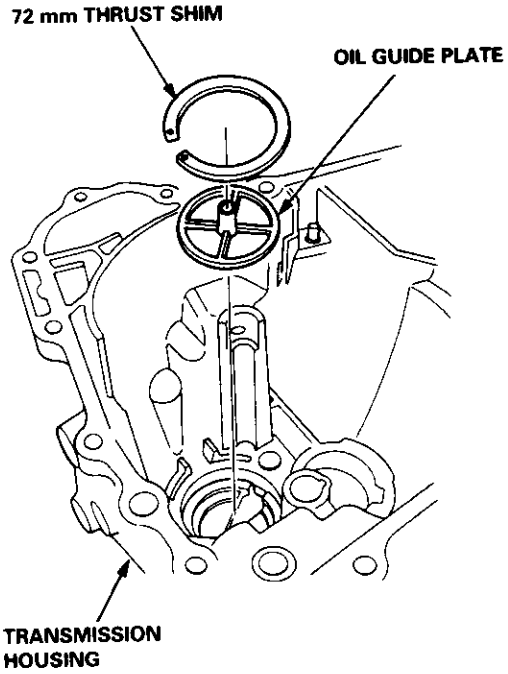

17. Install the oil gutter plate.

18. Bend the hook of the oil gutter plate, then install the 16 mm sealing bolt.

NOTE: Apply liquid gasket (P/N 08718 - 0001 or 08718 - 0003) to the threads.

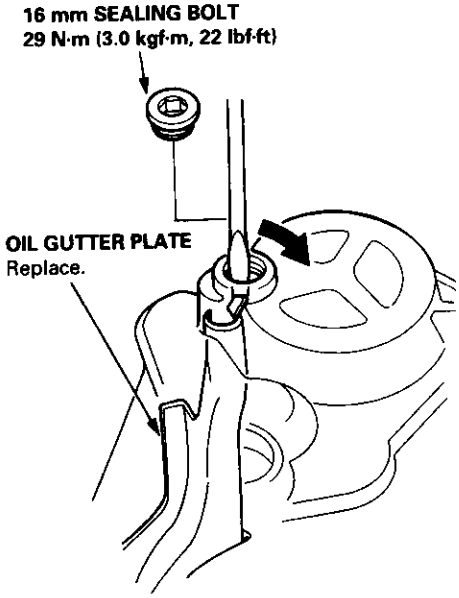

19. Apply liquid gasket to the surface of the transmission housing as shown.

NOTE:
- Use liquid gasket (P/N 08718 - 0001 or 08718 - 0003).
- Remove the dirty oil from the sealing surface.
- If 5 minutes have passed after applying liquid gasket, reapply it and assemble the housings.
- Allow it to cure at least 20 minutes after assembly before filling the transmission with oil.

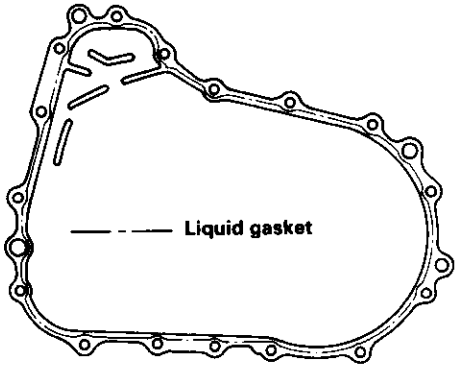

(cont'd)

Reassembly (cont'd)

20. Install the dowel pins.

21. Install the transmission housing by aligning the groove in the housing with the finger on the stop ring.

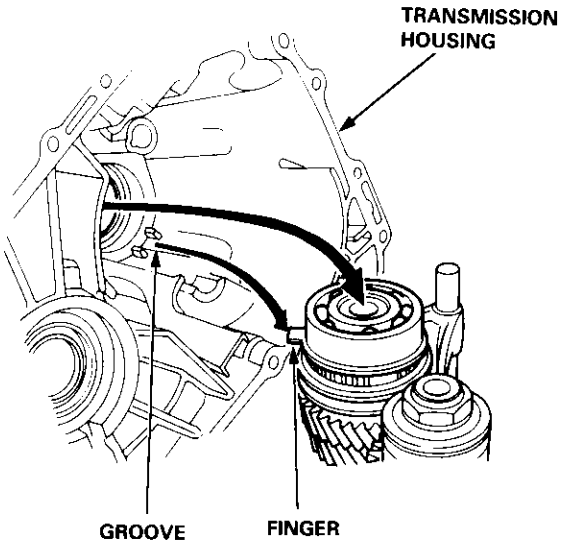

22. Lower the transmission housing with the snap ring pliers, and set the snap ring in the groove of the countershaft bearing.

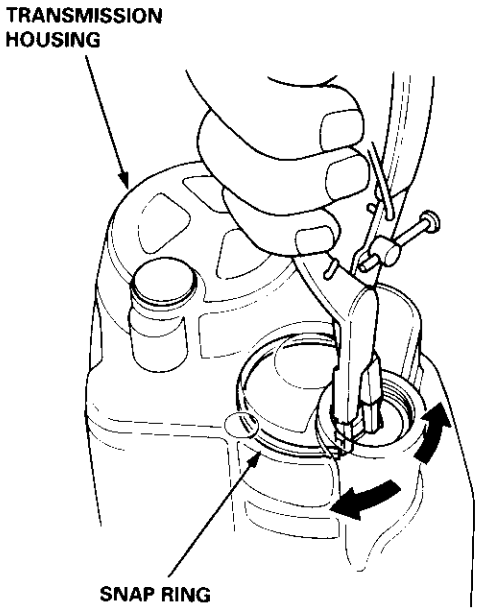

23. Check that the snap ring is securely seated in the groove of the countershaft bearing.

Dimension Ⓐ as installed: 4.6 – 8.3 mm (0.181 – 0.327 in)

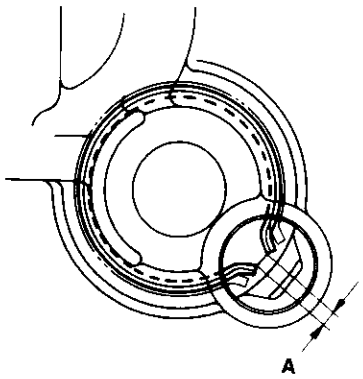

24. Install the clutch line bracket, transmission hanger A and back-up light switch clamp, then tighten the transmission housing attaching bolts in the numbered sequence shown below.

ATTACHING BOLTS
8 x 1.25 mm
27 N·m (2.8 kgf·m, 20 lbf·ft)

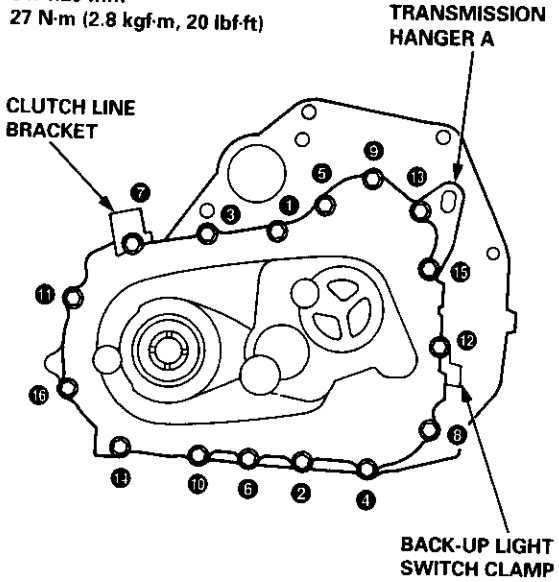

25. Install the 32 mm sealing bolt.

NOTE: Apply liquid gasket (P/N 08718 – 0001 or 08718 – 0003) to the threads.

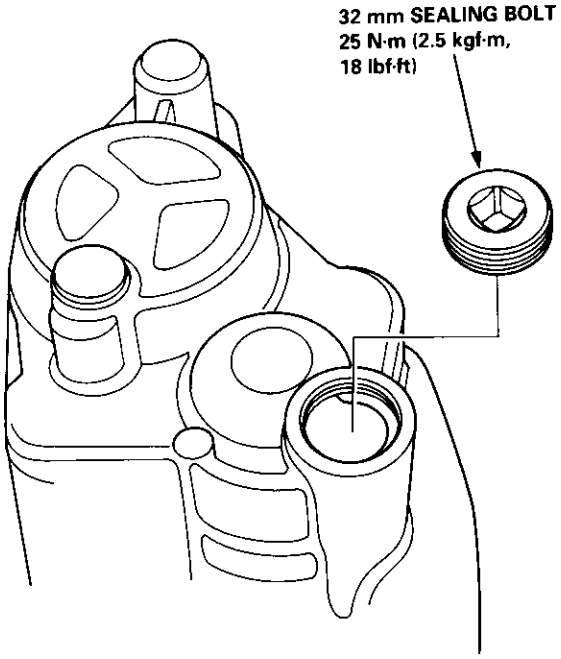

26. Tighten the reverse idler gear shaft bolt.

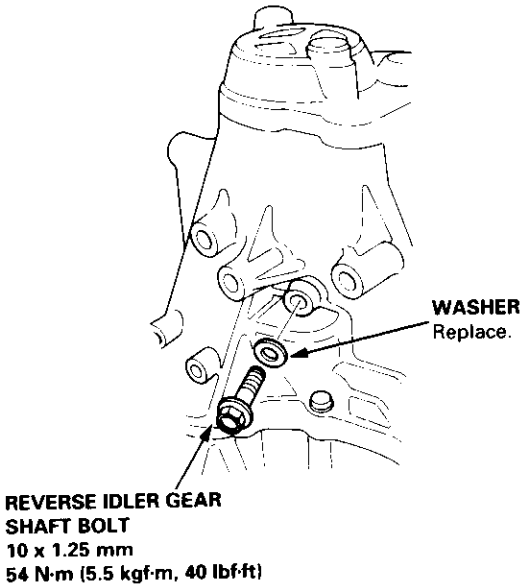

27. Install the steel balls, the springs, and the set screws.

28. Install the back-up light switch and the transmission hanger B.

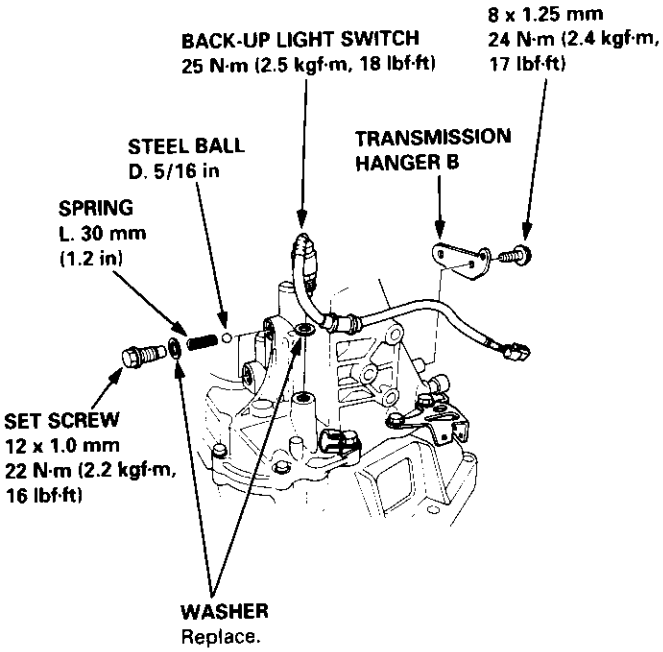

Replacement

Transmission Housing:

1. Remove the oil seal from the transmission housing.

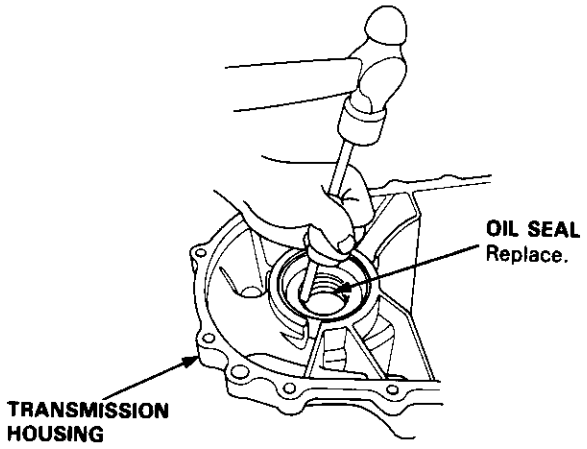

2. Install the oil seal into the transmission housing using the special tools as shown.

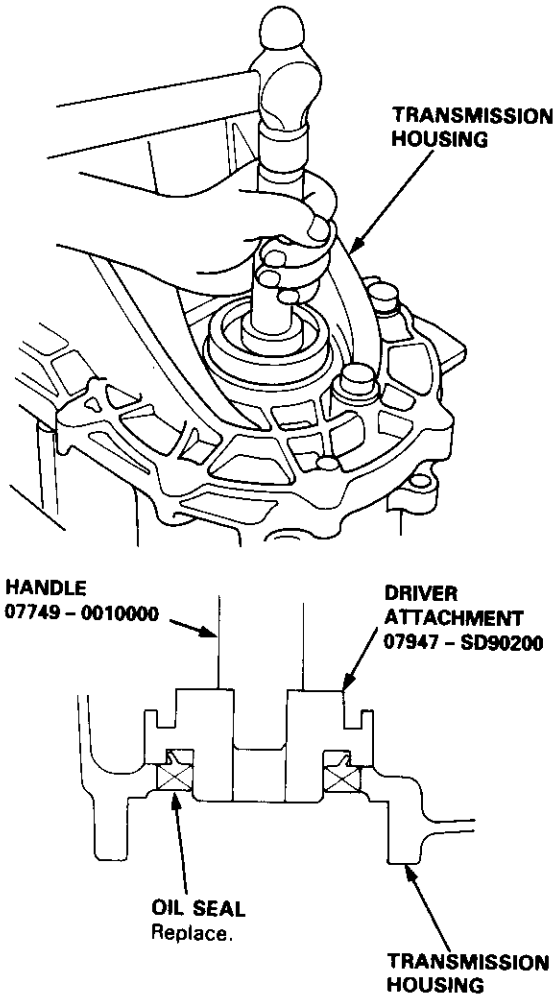

Clutch Housing:

1. Remove the oil seal from the clutch housing.

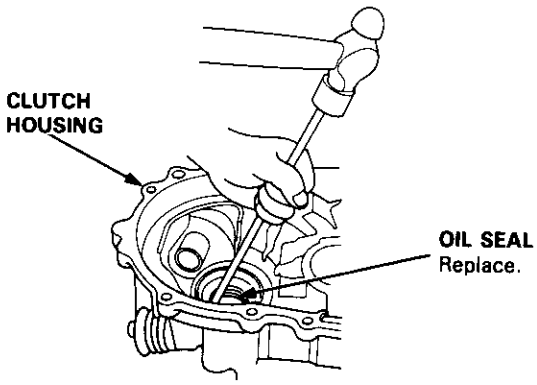

2. Install the oil seal into the clutch housing using the special tools as shown.

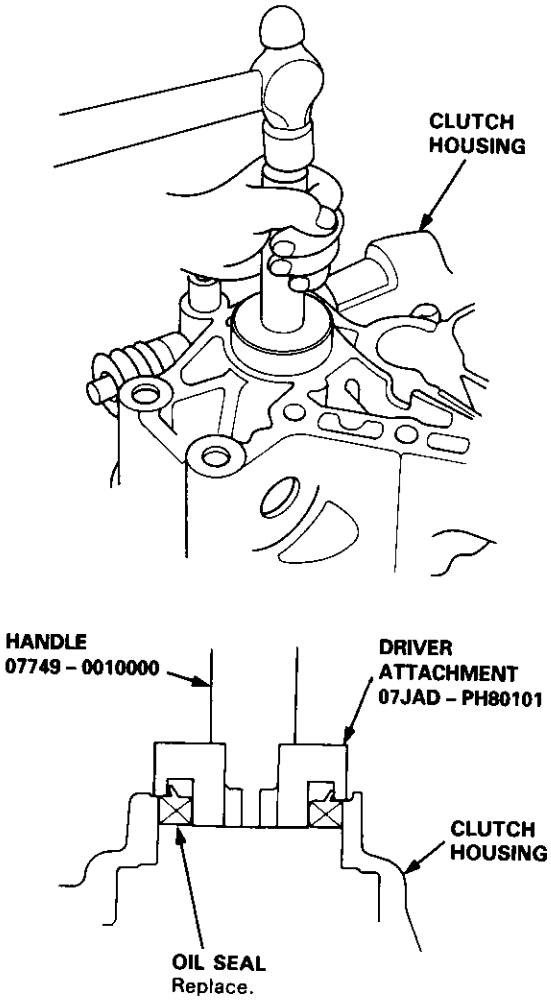

Overhaul

NOTE:
- Inspect rubber parts for wear and damage when disassembling; replace any worn or damaged parts.
- Install the spring pin and the clip on the change joint as shown.
- Turn the shift rod boot so the hole is facing down as shown.
- Make sure the shift rod boot is installed on the shift rod.

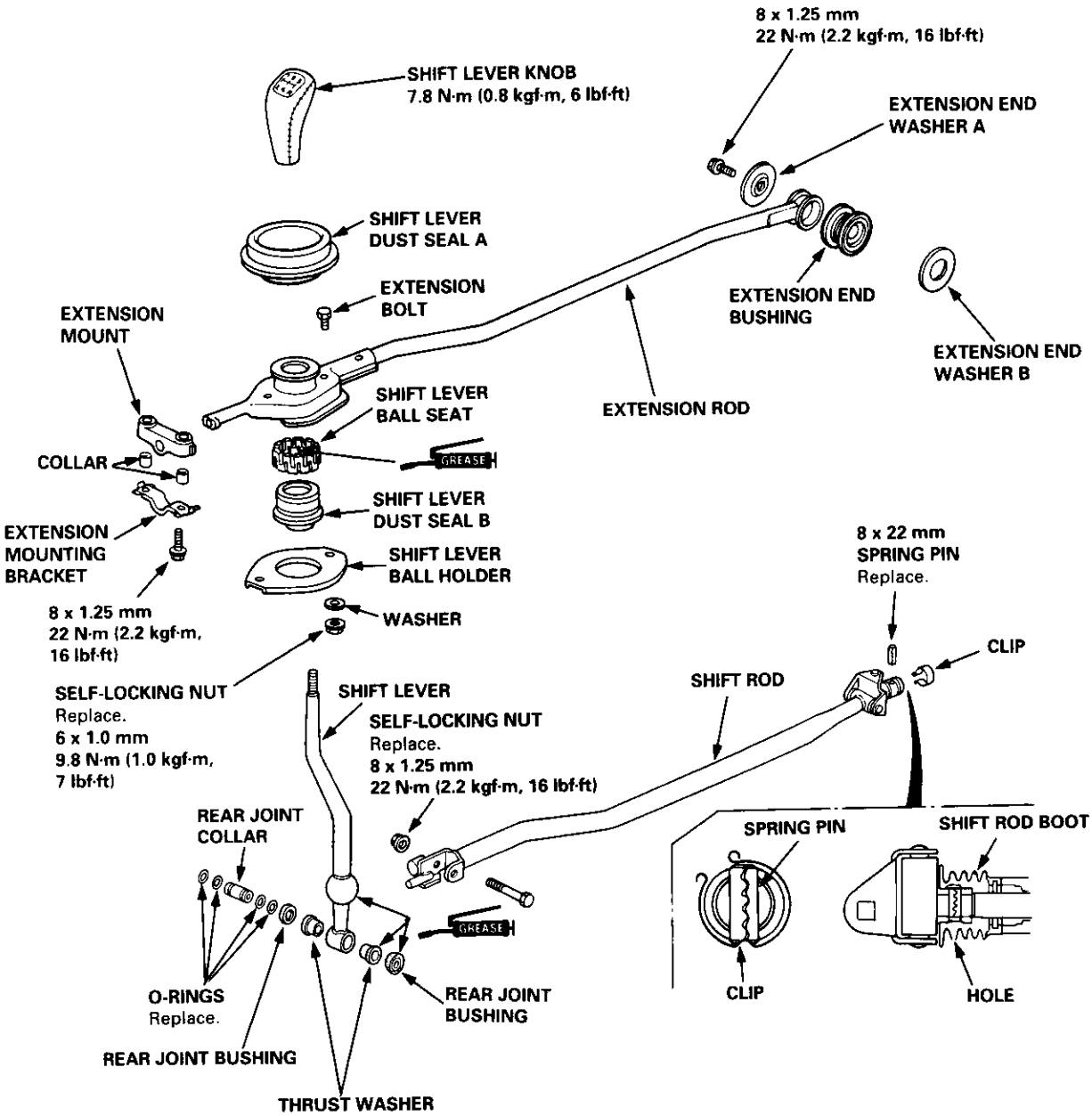

Automatic Transmission

Automatic Transmission 14-1
Continuously Variable Transmission (CVT) 14-193

Automatic Transmission

Special Tools 14-2
Description 14-3
Power Flow 14-6
Electronic Control System 14-13
Hydraulic Control 14-19
Hydraulic Flow 14-24
Lock-up System 14-33
Electrical System
Component Locations 14-39
PCM Circuit Diagram
(A/T Control System: '96 – 98 Models) 14-40
PCM Terminal Voltage/Measuring Conditions
('96 – 98 Models)
A/T Control System 14-42
PCM Circuit Diagram
(A/T Control System: '99 – 00 Models) 14-44
PCM Terminal Voltage/Measuring Conditions
('99 – 00 Models)
A/T Control System 14-46
Troubleshooting Procedures 14-48
Symptom-to-Component Chart
Electrical System — '96 – 98 Models 14-52
Electrical System — '99 – 00 Models 14-54
Electrical Troubleshooting ('96 – 98 Models)
Troubleshooting Flowcharts 14-56
Electrical Troubleshooting ('99 – 00 Models)
Troubleshooting Flowcharts 14-80
Lock-up Control Solenoid Valve A/B Assembly
Test 14-105
Replacement 14-105
Shift Control Solenoid Valve A/B Assembly
Test 14-106
Replacement 14-106
Linear Solenoid Assembly
Test 14-107
Replacement 14-108
Mainshaft/Countershaft Speed Sensors
Replacement 14-108
Hydraulic System
Symptom-to-Component Chart
Hydraulic System 14-109
Road Test 14-113
Stall Speed
Test 14-116
Fluid Level
Checking 14-117
Changing 14-118
Pressure Testing 14-119
Transmission
Transmission
Removal 14-122
Illustrated Index
Transmission/End Cover 14-126
Transmission Housing 14-128
Torque Converter Housing/Valve Body 14-130
End Cover
Removal 14-132
Transmission Housing
Removal 14-134
Torque Converter Housing/Valve Body
Removal 14-136
Valve Caps
Description 14-138
Valve Body
Repair 14-139
Valve
Assembly 14-140
ATF Pump
Inspection 14-141
Main Valve Body
Disassembly/Inspection/Reassembly 14-142
Secondary Valve Body
Disassembly/Inspection/Reassembly 14-144
Regulator Valve Body
Disassembly/Inspection/Reassembly 14-145
Servo Body
Disassembly/Inspection/Reassembly 14-146
Lock-up Valve Body
Disassembly/Inspection/Reassembly 14-147
Mainshaft
Disassembly/Inspection Reassembly 14-148
Inspection 14-149
Countershaft
Disassembly/Inspection/Reassembly 14-151
Disassembly/Reassembly 14-152
Inspection 14-153
One-way Clutch
Disassembly/Inspection/Reassembly 14-155
Clutch
Illustrated Index (A4RA, B4RA Transmission) ... 14-156
Illustrated Index (M4RA Transmission) 14-158
Disassembly 14-160
Reassembly 14-162
Differential
Illustrated Index 14-166
Backlash Inspection 14-167
Bearing Replacement 14-167
Differential Carrier Replacement 14-168
Oil Seal Removal 14-169
Oil Seal Installation/Side Clearance 14-169
Torque Converter Housing Bearings
Mainshaft Bearing/Oil Seal Replacement 14-172
Countershaft Bearing Replacement 14-173
Transmission Housing Bearings
Mainshaft/Countershaft Bearings
Replacement 14-174
Reverse Idler Gear
Installation 14-175
Park Stop
Inspection/Adjustment 14-175
Transmission
Reassembly 14-176
Torque Converter/Drive Plate 14-182
Transmission
Installation 14-183
Cooler Flushing 14-187
Shift Cable
Removal/Installation 14-189
Adjustment 14-190
Shift Lever 14-191
Shift Indicator Panel
Adjustment 14-192
ATF Cooler Hoses
Connection 14-192

Special Tools

Ref. No.	Tool Number	Description	Qty	Page Reference
①	07GAB – PF50101	Mainshaft Holder	1	14-133, 180
②	07GAE – PG40200 or 07GAE – PG4020A	Clutch Spring Compressor Bolt Assembly	1	14-160, 163
③	07HAC – PK4010A	Housing Puller	1	14-135
④	07JAD – PH80101	Driver Attachment	1	14-171
⑤	07JAD – PH80200	Pilot, 26 x 30 mm	1	14-171
⑥*	07LAE – PX40100	Clutch Spring Compressor Attachment	2	14-160, 163
⑦	07PAZ – 0010100	SCS Service Connector	1	14-49
⑧	07SAZ – 001000A	Backprobe Set	2	14-50, 113
⑨	07MAJ – PY4011A	A/T Oil Pressure Hose, 2210 mm	4	14-119
⑩	07MAJ – PY40120	A/T Oil Pressure Hose, Adapter	4	14-119
⑪	07406 – 0020400	A/T Oil Pressure Gauge Set w/panel	1	14-119
⑫	07406 – 0070300	A/T Low Pressure Gauge w/panel	1	14-119
⑬**	07736 – A01000A	Adjustable Bearing Puller, 25 – 40 mm	1	14-172, 173
⑭	07746 – 0010500	Attachment, 62 x 68 mm	1	14-172, 173, 174
⑮	07746 – 0010600	Attachment, 72 x 75 mm	1	14-172, 174
⑯	07746 – 0030100	Driver 40 mm I.D.	1	14-153, 167, 169, 170
⑰	07749 – 0010000	Driver	1	14-171, 172, 173, 174
⑱	07947 – 611501	Driver Attachment, 68 mm	1	14-171

*07HAE – PL50101 can be used as a substitute.
**Must be used with commercially-available 3/8" – 16 slide hammer.

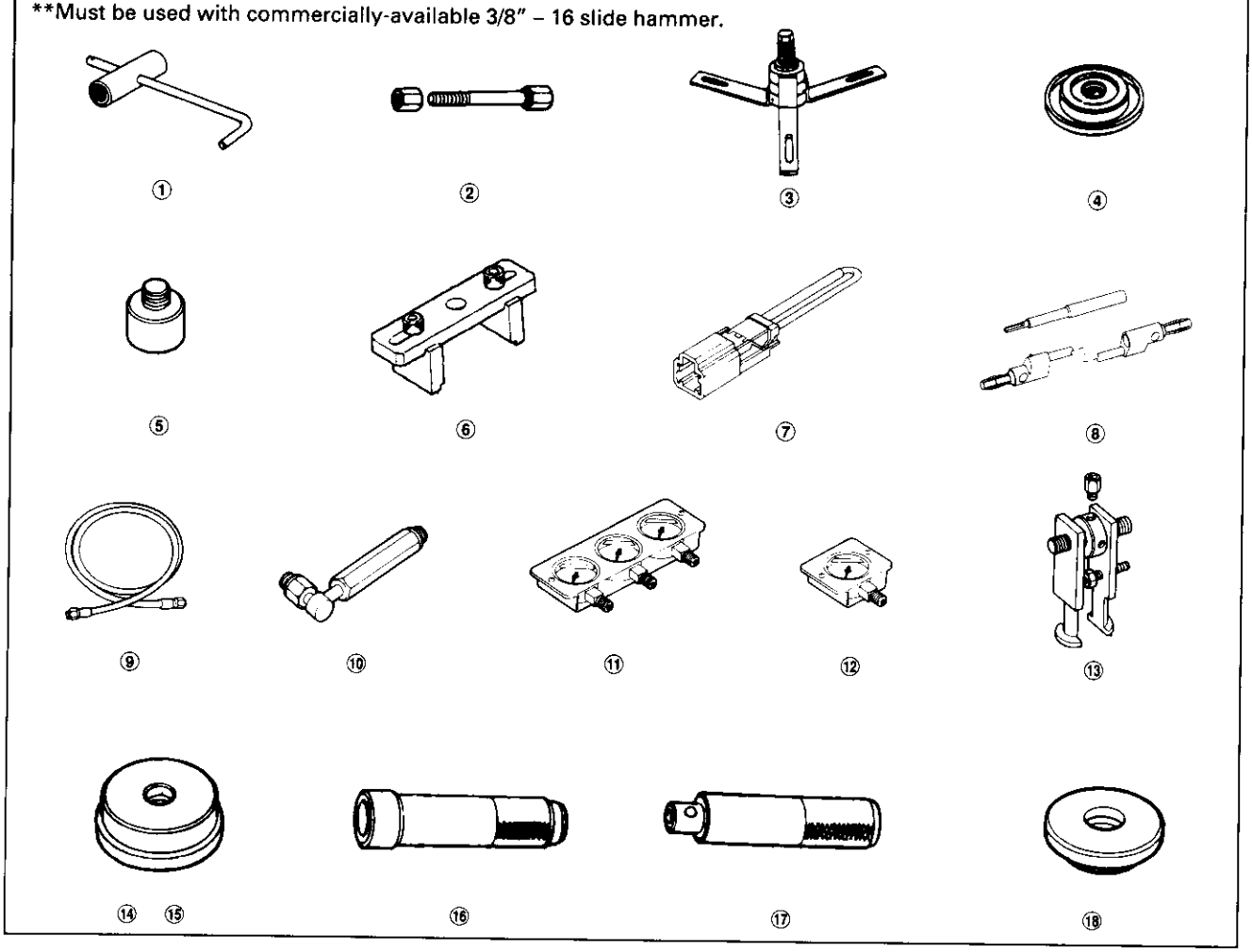

Description

The automatic transmission is a 3-element torque converter and a dual-shaft electronically controlled unit which provides 4 speeds forward and 1 reverse.

Torque Converter, Gears, and Clutches
The torque converter consists of a pump, turbine and stator, assembled in a single unit. They are connected to the engine crankshaft so they turn together as a unit as the engine turns. Around the outside of the torque converter is a ring gear which meshes with the starter pinion when the engine is being started. The entire torque converter assembly serves as a flywheel while transmitting power to the transmission mainshaft.

The transmission has two parallel shafts: the mainshaft and the countershaft. The mainshaft is in line with the engine crankshaft. The mainshaft includes the 1st, 2nd and 4th clutches, gears for 2nd, 4th, reverse and 1st (3rd gear is integral with the mainshaft, while the reverse gear is integral with the 4th gear). The countershaft includes the 3rd clutch, and gears for 3rd, 2nd, 4th, reverse, 1st and park. The gears on the mainshaft are in constant mesh with those on the countershaft. When certain combinations of gears in transmission are engaged by clutches, power is transmitted from the mainshaft to the countershaft to provide 2, D3, D4, and R positions.

Electronic Control
The electronic control system consists of the Powertrain Control Module (PCM), sensors, a linear solenoid and four solenoid valves. Shifting and lock-up are electronically controlled for comfortable driving under all conditions. The PCM is located below the dashboard, under the front lower panel on the passenger's side.

Hydraulic Control
The valve bodies include the main valve body, the secondary valve body, the regulator valve body, the servo body and the lock-up valve body through the respective separator plates. They are bolted on the torque converter housing.

The main valve body contains the manual valve, the 1-2 shift valve, the 2nd orifice control valve, the CPB (Clutch Pressure Back-up) valve, the modulator valve, the servo control valve, the relief valve, and ATF pump gears. The secondary valve body contains the 2-3 shift valve, the 3-4 shift valve, the 3-4 orifice control valve, the 4th exhaust valve and the CPC (Clutch Pressure Control) valve. The regulator valve body contains the pressure regulator valve, the torque converter check valve, the cooler relief valve, and the lock-up control valve. The servo body contains the servo valve which is integrated with the reverse shift fork, and the accumulators. The lock-up valve body contains the lock-up shift valve and the lock-up timing valve. The linear solenoid and the shift control solenoid valve A/B are bolted on the outside of the transmission housing, and the lock-up control solenoid valve A/B is bolted on the outside of the torque converter housing. Fluid from regulator passes through the manual valve to the various control valves. The clutches receive fluid from their respective feed pipes or internal hydraulic circuit.

Shift Control Mechanism
Input from various sensors located throughout the car determines which shift control solenoid valve the PCM will activate. Activating a shift control solenoid valve changes modulator pressure, causing a shift valve to move. This pressurizes a line to one of the clutches, engaging that clutch and its corresponding gear. The shift control solenoid valves A and B are controlled by the PCM.

Lock-up Mechanism
In D4 position, in 3rd and 4th, and in D3 position in 3rd, pressurized fluid is drained from the back of the torque converter through a fluid passage, causing the lock-up piston to be held against the torque converter cover. As this takes place, the mainshaft rotates at the same as the engine crankshaft. Together with hydraulic control, the PCM optimizes the timing of the lock-up mechanism. The lock-up valves control the range of lock-up according to lock-up control solenoid valves A and B, and linear solenoid. When lock-up control solenoid valves A and B activate, the modulator pressure changes. The lock-up control solenoid valves A and B and the linear solenoid are controlled by the PCM.

(cont'd)

(cont'd)

Gear Selection
The shift lever has six positions: [P] PARK, [R] REVERSE, [N] NEUTRAL, [D4] 1st through 4th gear ranges, [D3] 1st through 3rd gear ranges, [2] 2nd gear.

Position	Description
[P] PARK	Front wheels locked; park pawl engaged with park on countershaft. All clutches released.
[R] REVERSE	Reverse; reverse selector engaged with countershaft reverse gear and 4th clutch locked.
[N] NEUTRAL	All clutches released.
[D4] DRIVE (1st through 4th)	General driving; starts off in 1st, shifts automatically to 2nd, 3rd, then 4th, depending on vehicle speed and throttle position. Downshift through 3rd, 2nd and 1st on deceleration to stop. The lock-up mechanism comes into operation in [D4] position in 3rd and 4th gear.
[D3] DRIVE (1st through 3rd)	Use for rapid acceleration at highway speeds and general driving; up-hill and down-hill driving; starts off in 1st, shifts automatically to 2nd, then 3rd, depending on vehicle speed and throttle position. Downshifts through 2nd to 1st on deceleration to stop. The lock-up mechanism comes into operation in 3rd gear.
[2] SECOND	Use for engine braking or better traction starting off on loose or slippery surfaces; stays in 2nd gear, does not shift up and down.

Starting is possible only in [P] and [N] positions through the use of a slide-type, neutral-safety switch.

Automatic Transaxle (A/T) Gear Position Indicator
The A/T gear position indicator in the instrument panel shows which gear has been selected without having to look down at the console.

Clutches
The four-speed automatic transmission uses hydraulically-actuated clutches to engage or disengage the transmission gears. When hydraulic pressure is introduced into the clutch drum, the clutch piston moves. This presses the friction discs and steel plates together, locking them so they don't slip. Power is then transmitted through the engaged clutch pack to its hub-mounted gear. Likewise, when the hydraulic pressure is bled from the clutch pack, the piston releases the friction discs and the steel plates, and they are free to slide past each other. This allows the gear to spin independently on its shaft, transmitting no power.

- **1st Clutch**
  The 1st clutch engages/disengages 1st gear, and is located at the end of the mainshaft, just behind the right side cover. The 1st clutch is supplied hydraulic pressure by its ATF feed pipe within the mainshaft.

- **2nd Clutch**
  The 2nd clutch engages/disengages 2nd gear, and is located at the middle of the mainshaft. The 2nd clutch is joined back-to-back to the 4th clutch. The 2nd clutch is supplied hydraulic pressure through the mainshaft by a circuit connected to the internal hydraulic circuit.

- **3rd Clutch**
  The 3rd clutch engages/disengages 3rd gear, and is located at the end of the countershaft. The 3rd clutch is supplied hydraulic pressure by its ATF feed pipe within the countershaft.

- **4th Clutch**
  The 4th clutch engages/disengages 4th gear, as well as reverse gear, and is located at the middle of the mainshaft. The 4th clutch is joined back-to-back to the 2nd clutch. The 4th clutch is supplied hydraulic pressure by its ATF feed pipe within the mainshaft.

One-way Clutch

The one-way clutch is positioned between the countershaft 1st gear and the park gear, with the park gear splined to the countershaft. The 1st gear provides the outer race surface, and the park gear provides the inner race surface. The one-way clutch locks up when power is transmitted from the mainshaft 1st gear to the countershaft 1st gear. The 1st clutch and gears remain engaged in the 1st, 2nd, 3rd, and 4th gear ranges in the D4, D3 or 2 position.

However, the one-way clutch disengages when the 2nd, 3rd, or 4th clutches/gears are applied in the D4, D3 or 2 position. This is because the increased rotational speed of the gears on the countershaft overrides the locking "speed range" of the one-way clutch. Thereafter, the one-way clutch free-wheels with the 1st clutch still engaged.

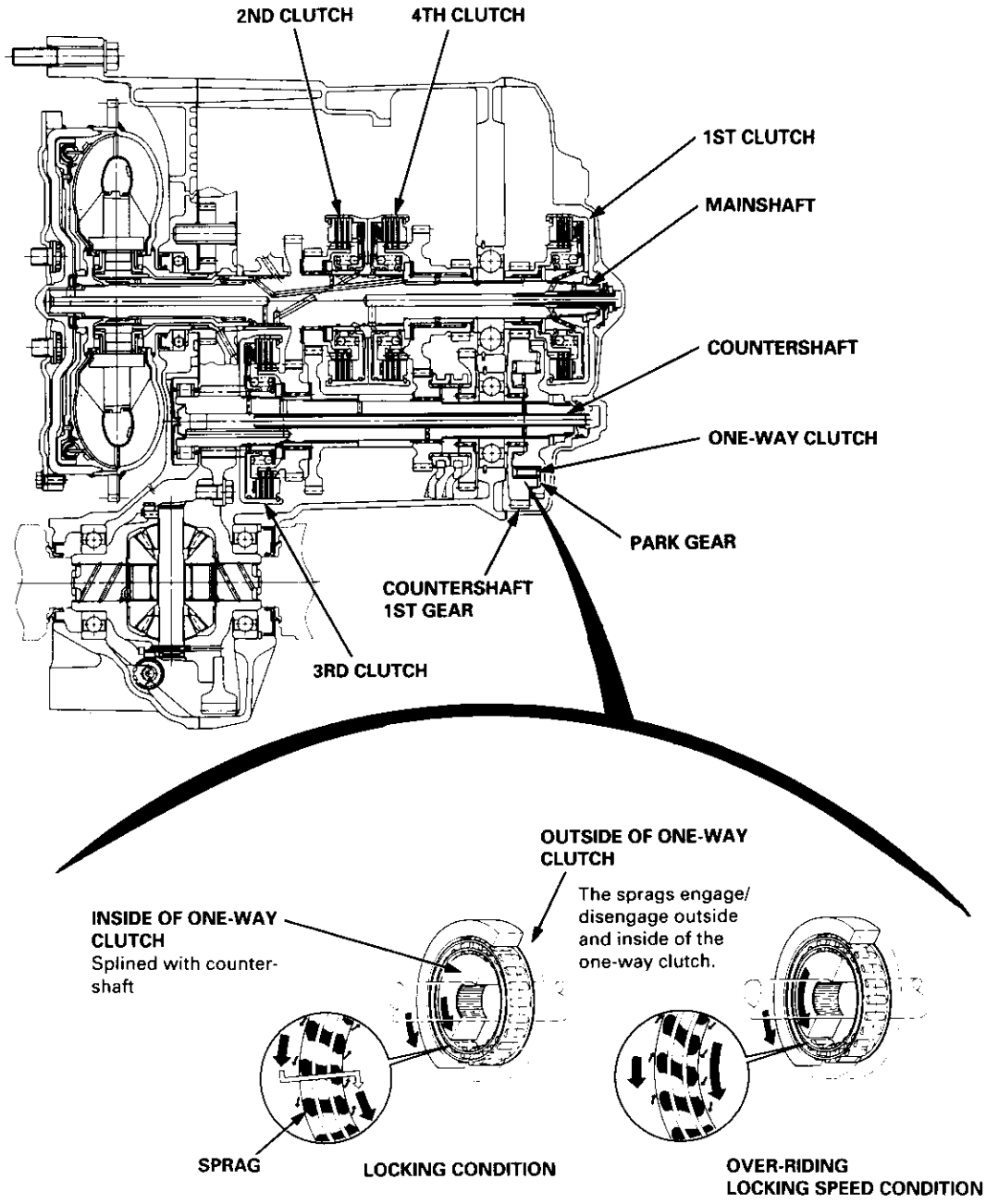

Power Flow

POSITION \ PART		TORQUE CONVERTER	1ST GEAR 1ST CLUTCH	2ND GEAR 2ND CLUTCH	3RD GEAR 3RD CLUTCH	4TH		REVERSE GEAR	PARK GEAR
						GEAR	CLUTCH		
P		○	×	×	×	×	×	×	○
R		○	×	×	×	×	○	○	×
N		○	×	×	×	×	×	×	×
D_4	1ST	○	○*2	×	×	×	×	×	×
	2ND	○	○*1	○	×	×	×	×	×
	3RD	○	○*1	×	○	×	×	×	×
	4TH	○	○*1	×	×	○	○	×	×
D_3	1ST	○	○*2	×	×	×	×	×	×
	2ND	○	○*1	○	×	×	×	×	×
	3RD	○	○*1	×	○	×	×	×	×
2		○	○*1	○	×	×	×	×	×

○: Operates, ×: Doesn't operate.
*1: Although the 1st clutch engages, driving power is not transmitted as the one-way clutch slips.
*2: The one-way clutch engages when accelerating, and slips when decelerating.

N Position
Hydraulic pressure is not applied to the clutches. Power is not transmitted to the countershaft.

P Position
Hydraulic pressure is not applied to the clutches. Power is not transmitted to the countershaft.
The countershaft is locked by the park pawl interlocking the park gear.

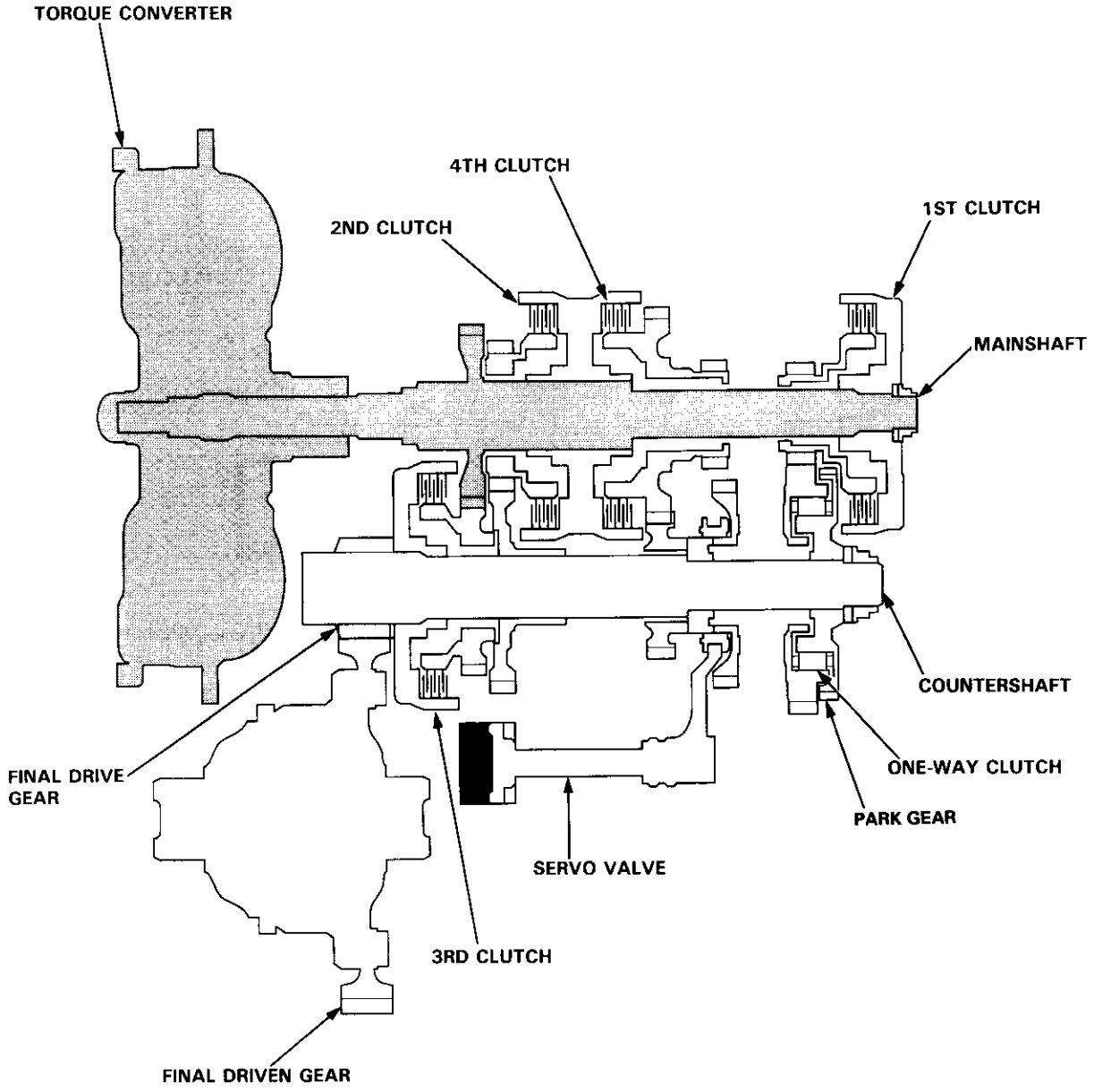

(cont'd)

Power Flow (cont'd)

1st Gear (D4 or D3 position)

In D4 or D3 position, the optimum gear is automatically selected from 1st, 2nd, 3rd and 4th gears, according to conditions such as the balance between throttle opening (engine load) and vehicle speed.

1. Hydraulic pressure is applied to the 1st clutch, which rotates together with the mainshaft, causing the mainshaft 1st gear to rotate.
2. Power is transmitted to the countershaft 1st gear, which drives the countershaft via the one-way clutch.
3. Power is transmitted to the final drive gear, which drives the final driven gear.

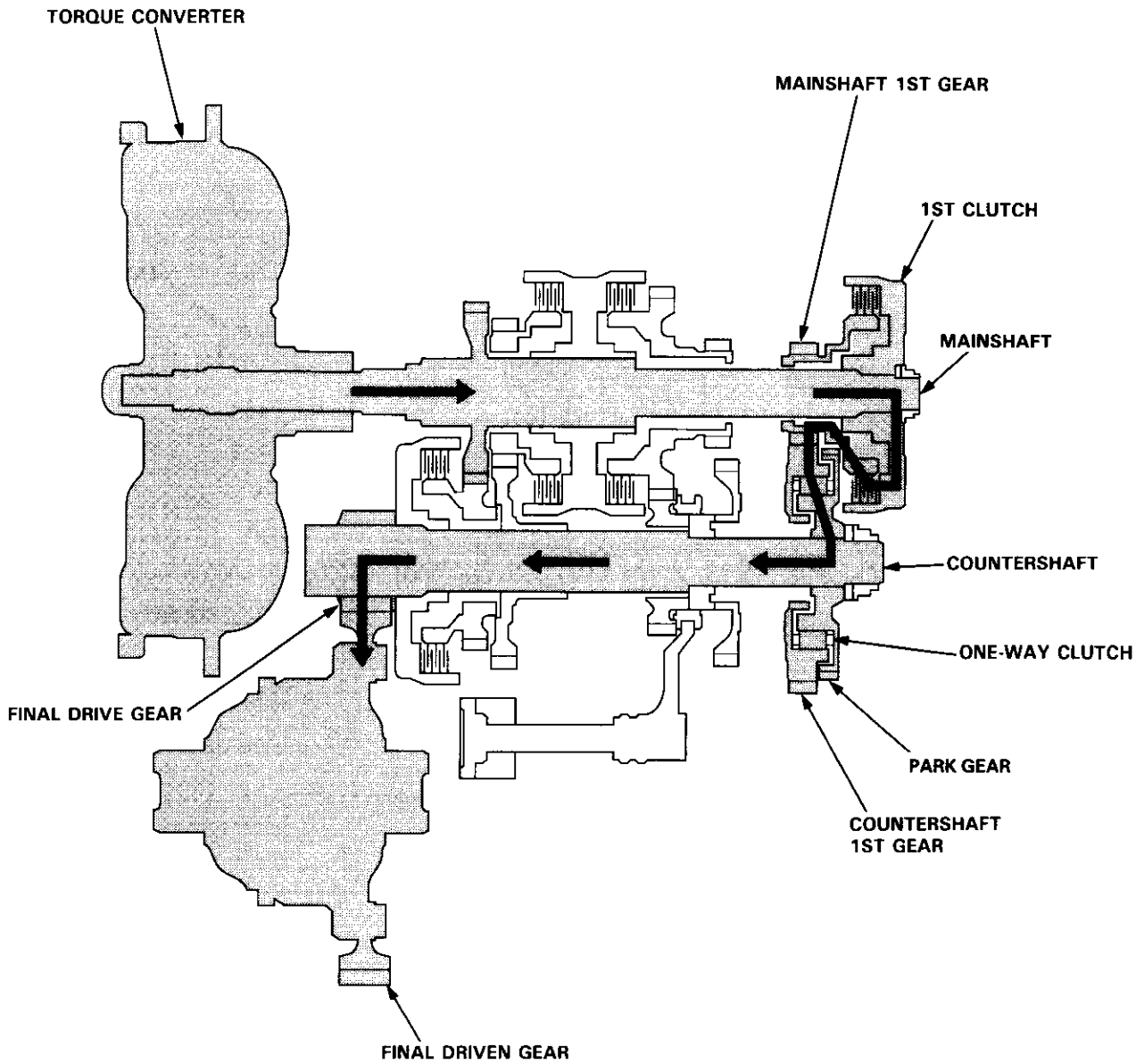

2nd Gear (D4, D3 or 2 position)

2 Position is provided to drive only 2nd gear.

1. Hydraulic pressure is applied to the 2nd clutch on the mainshaft, and power is transmitted via the 2nd clutch to the mainshaft 2nd gear.

2. Power transmitted to the mainshaft 2nd gear is conveyed via the countershaft 2nd gear, which drives the countershaft.

3. Power is transmitted to the final drive gear, which drives the final driven gear.

   NOTE: Hydraulic pressure is also applied to the 1st clutch, but since the rotation speed of the 2nd gear exceeds that of 1st gear, power from 1st gear is cut off at the one-way clutch.

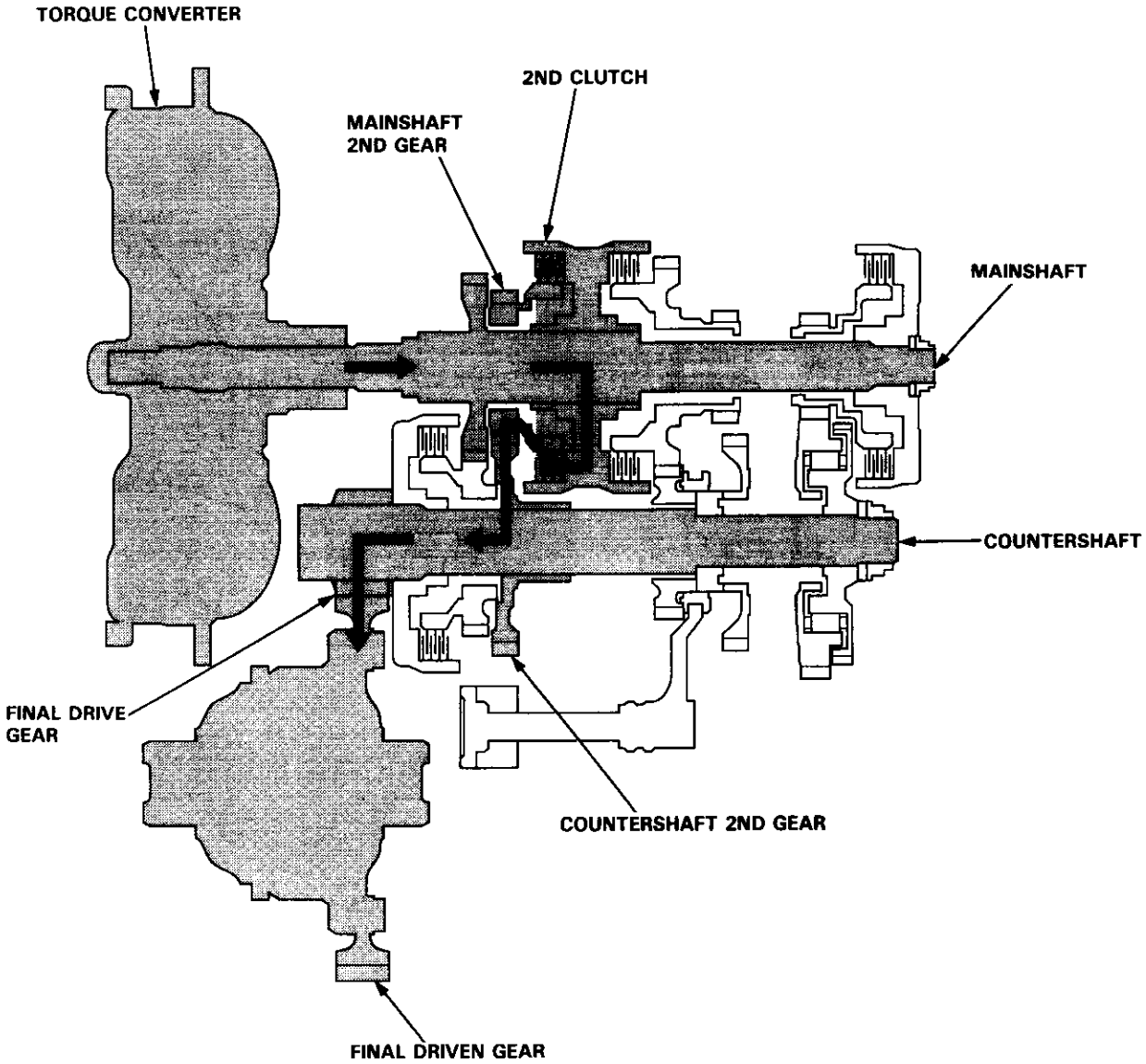

(cont'd)

Power Flow (cont'd)

3rd Gear (D4 or D3 position)

1. Hydraulic pressure is applied to the 3rd clutch. Power from the mainshaft 3rd gear is transmitted to the countershaft 3rd gear.

2. Power is transmitted to the final drive gear, which drives the final driven gear.

   NOTE: Hydraulic pressure is also applied to the 1st clutch, but since the rotation speed of 3rd gear exceeds that of 1st gear, power from 1st gear is cut off at the one-way clutch.

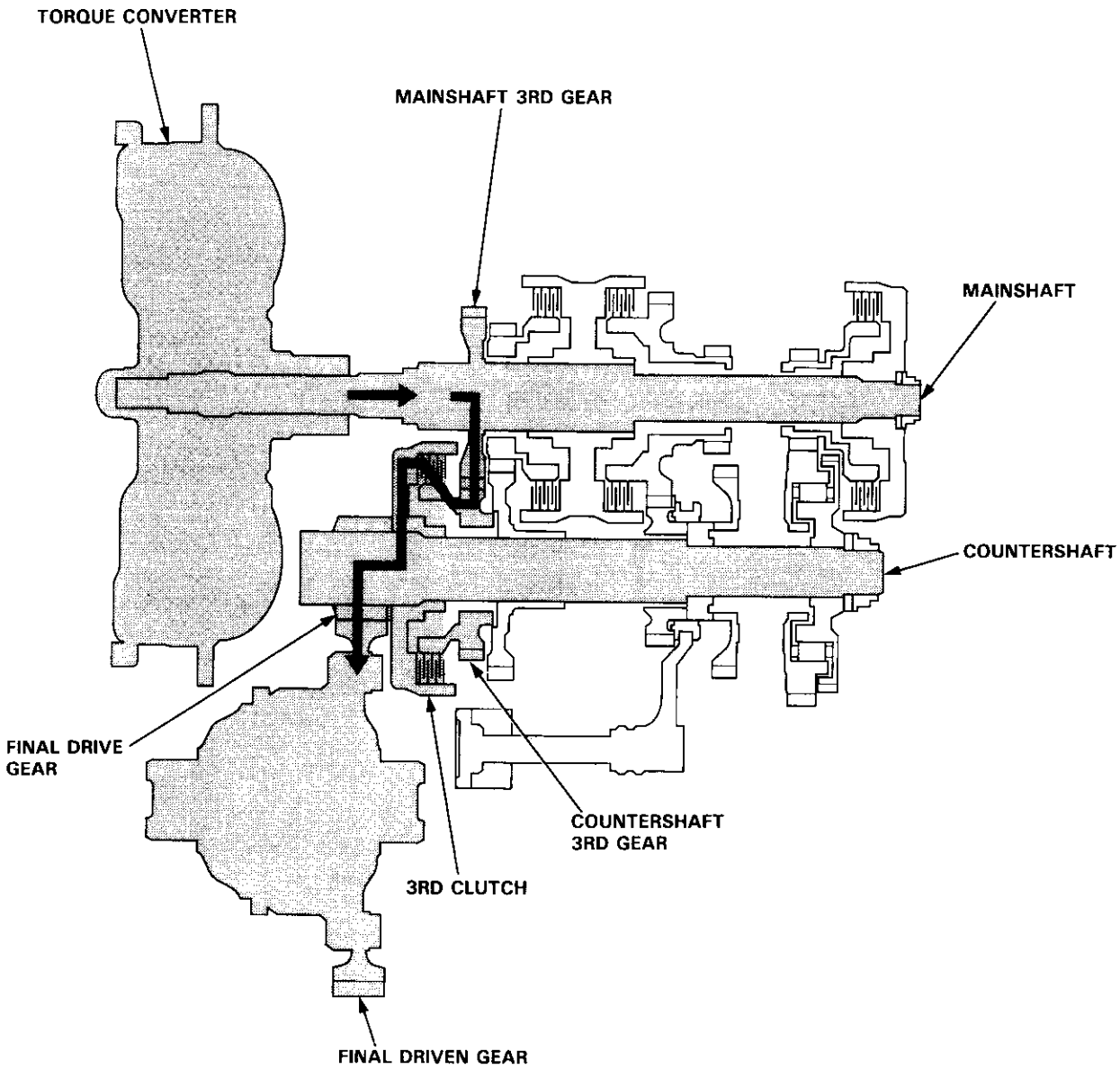

4th Gear (D4 position)

1. Hydraulic pressure is applied to the 4th clutch, which rotates together with the mainshaft, causing the mainshaft 4th gear to rotate.

2. Power is transmitted to the countershaft 4th gear, which drives the countershaft.

3. Power is transmitted to the final drive gear, which drives the final driven gear.

   NOTE: Hydraulic pressure is also applied to the 1st clutch, but since the rotation speed of 4th gear exceeds that of 1st gear, power from 1st gear is cut off at the one-way clutch.

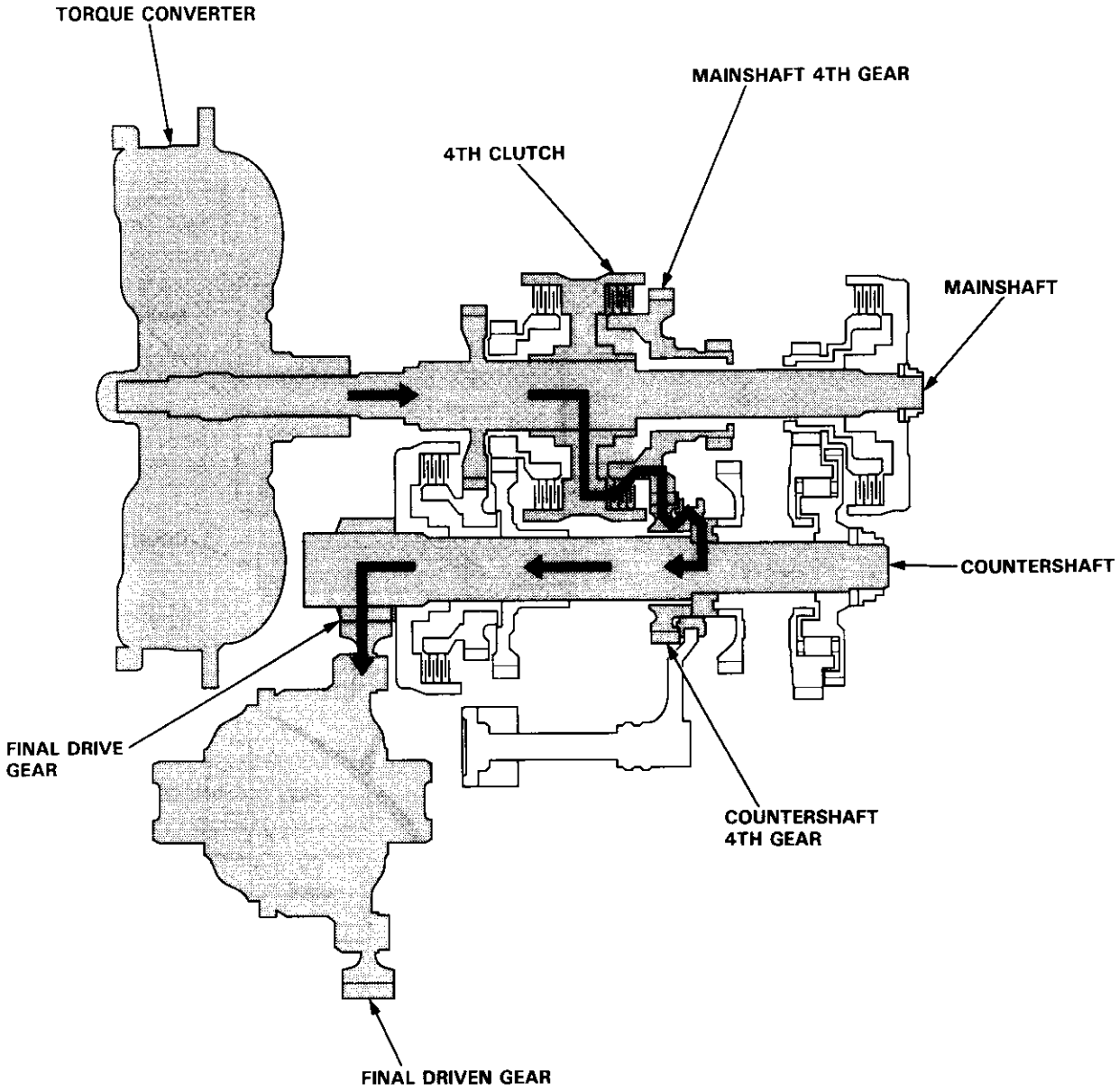

(cont'd)

Power Flow (cont'd)

[R] Position

1. Hydraulic pressure is switched by the manual valve to the servo valve, which moves the reverse shift fork to the reverse position. The reverse shift fork engages with the reverse selector, reverse selector hub, and the countershaft reverse gear.

2. Hydraulic pressure is also applied to the 4th clutch. Power is transmitted from the mainshaft reverse gear via the reverse idler gear to the countershaft reverse gear.

3. The rotation direction of the countershaft reverse gear is changed via the reverse idler gear.

4. Power is transmitted to the final drive gear, which drives the final driven gear.

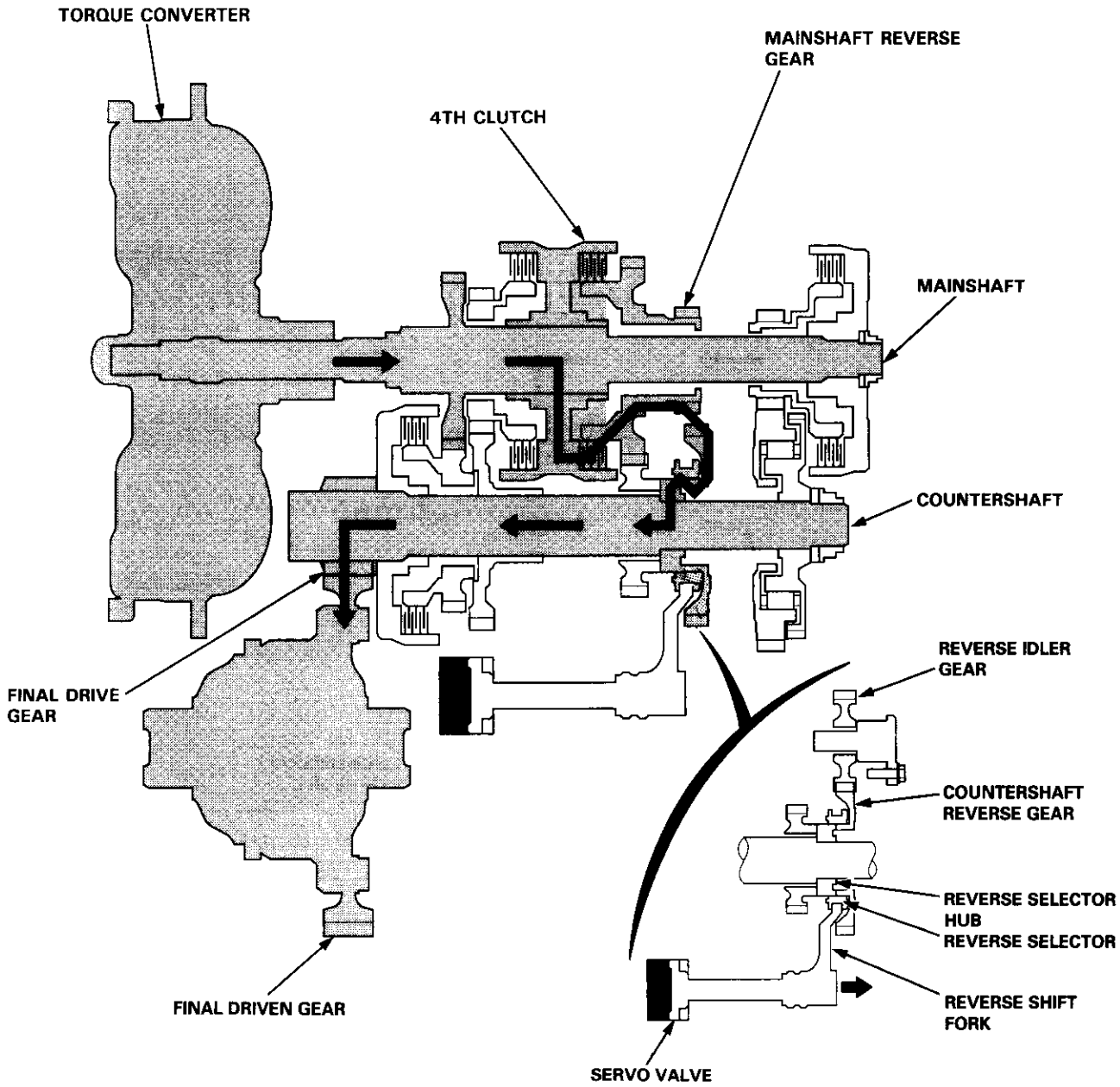

Electronic Control System

The electronic control system consists of a Powertrain Control Module (PCM), sensors, a linear solenoid and four solenoid valves. Shifting and lock-up are electronically controlled for comfortable driving under all conditions. The PCM is located below the dashboard, under the front lower panel on the passenger's side.

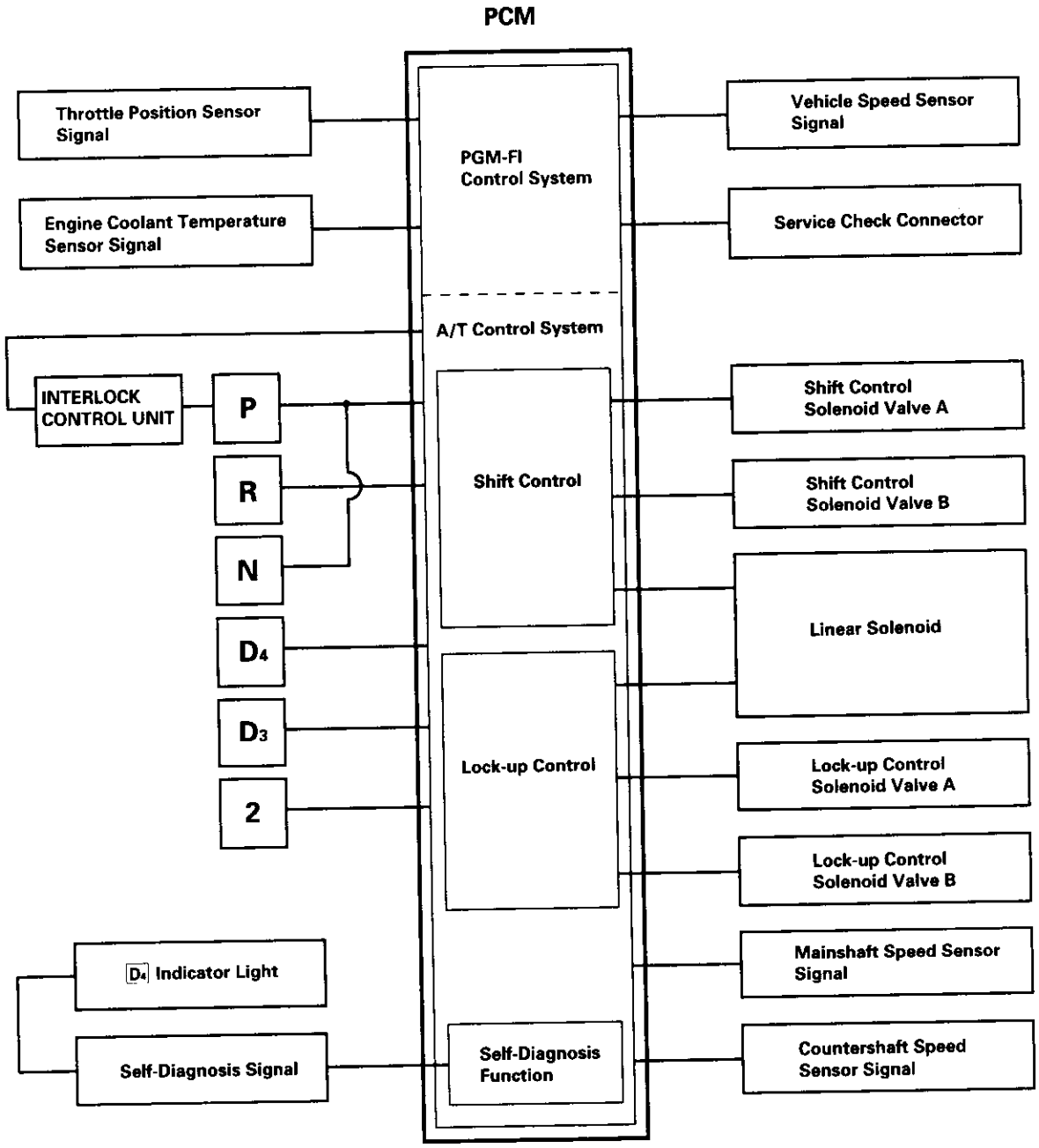

(cont'd)

Electronic Control System (cont'd)

Shift Control

The PCM instantaneously determines which gear should be selected by various signals sent from sensors, and actuates the shift control solenoid valves A and B to control shifting. Also, a Grade Logic Control System has been adopted to control shifting in D4 position while the vehicle is ascending or descending a slope, or reducing speed.

Position	Gear	Shift Control Solenoid Valve A	Shift Control Solenoid Valve B
D4, D3	1st	OFF	ON
	2nd	ON	ON
	3rd	ON	OFF
D4	4th	OFF	OFF
2	2nd	ON	ON
R*	Reverse	ON	OFF

*See page 14-31 for reverse inhibitor control description.

Lock-up Control

From sensor input signals, the PCM determines whether to turn the lock-up ON or OFF, and activates lock-up control solenoid valve A and/or B accordingly. The combination of driving signals to lock-up control solenoid valves A and B and the linear solenoid pressure is shown in the table below.

Lock-up Conditions	Lock-up Control Solenoid Valve A	Lock-up Control Solenoid Valve B	Linear Solenoid Pressure
Lock-up OFF	OFF	OFF	High
Lock-up, Half	ON	Duty operation OFF ↔ ON	Low
Lock-up, Full	ON	ON	High
Lock-up during deceleration	ON	Duty operation OFF ↔ ON	Low

GRADE LOGIC CONTROL SYSTEM

How it works:
The PCM compares actual driving conditions with driving conditions memorized in the PCM, based on the input from the vehicle speed sensor, the throttle position sensor, the barometoric pressure sensor, the engine coolant temperature sensor, the brake switch signal, and the shift lever position signal, to control shifting while a vehicle is ascending or descending a slope, or reducing speed.

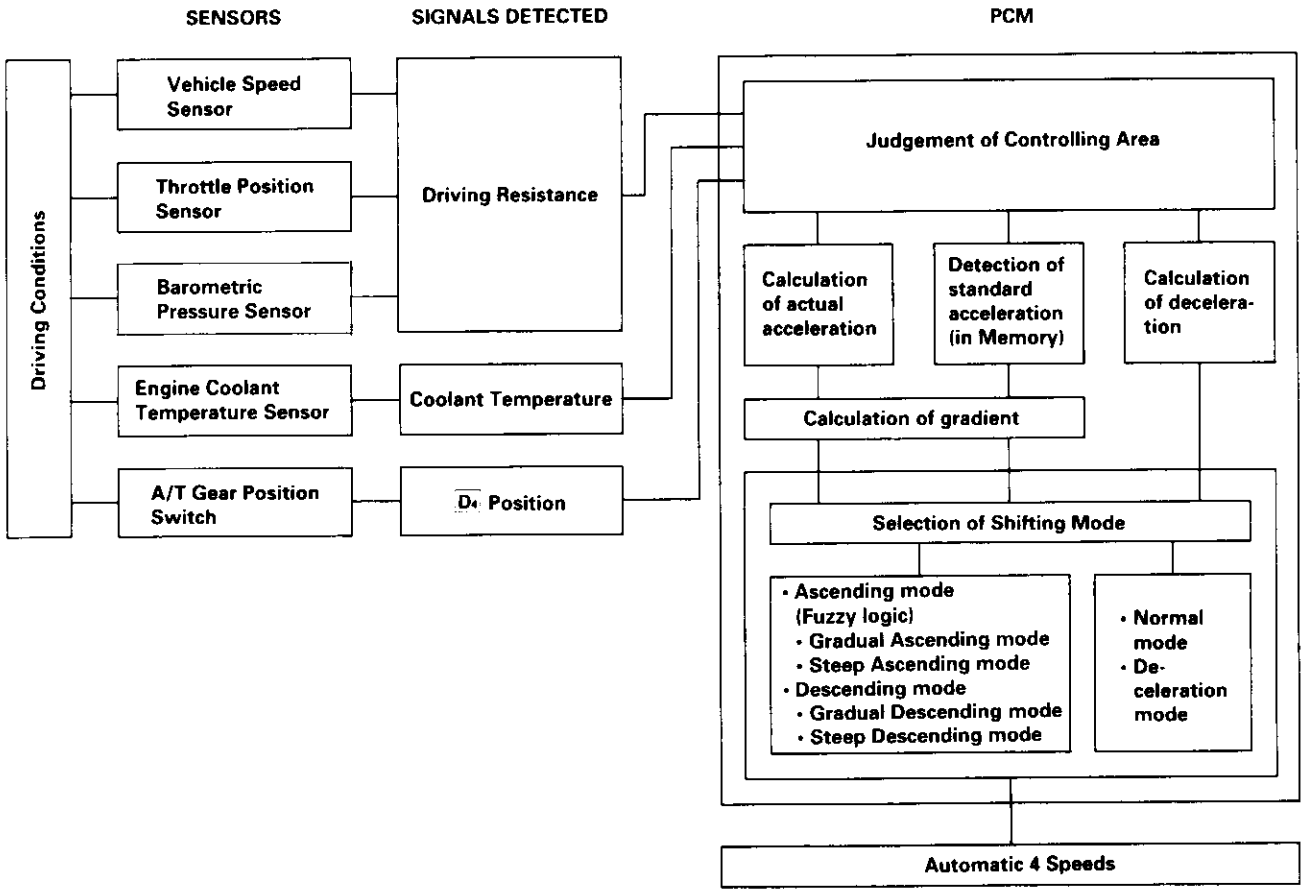

(cont'd)

Electronic Control System (cont'd)

Ascending Control

When the PCM determines that the vehicle is climbing a hill in D4 position, the system extends the engagement area of 2nd gear and 3rd gear to prevent the transmission from frequently shifting between 2nd and 3rd gears, and between 3rd and 4th gears, so the vehicle can run smooth and have more power when needed. There are two ascending modes with different 3rd gear driving areas according to the magnitude of a gradient stored in the PCM.

NOTE:
- The PCM memory contains shift schedules between 2nd and 3rd gears, and between 3rd and 4th gears that enable the PCM's fuzzy logic to automatically select the most suitable gear according to the magnitude of a gradient.
- Fuzzy logic is a form of artificial intelligence that lets computers respond to changing conditions much like a human mind would.

Descending Control

When the PCM determines that the vehicle is going down a hill in D4 position, the shift-up speed from 3rd to 4th gear when the throttle is closed becomes faster than the set speed for flat road driving to widen the 3rd gear driving area. This, in combination with engine braking from the deceleration lock-up, achieves smooth driving when the vehicle is descending. There are two descending modes with different downshift (4 – 3) schedules according to the magnitude of a gradient stored in the PCM. When the vehicle is in 4th gear, and you are decelerating on a gradual hill, or when you are applying the brakes on a steep hill, the transmission will downshift to 3rd gear. When you accelerate, the transmission will then return to 4th gear.

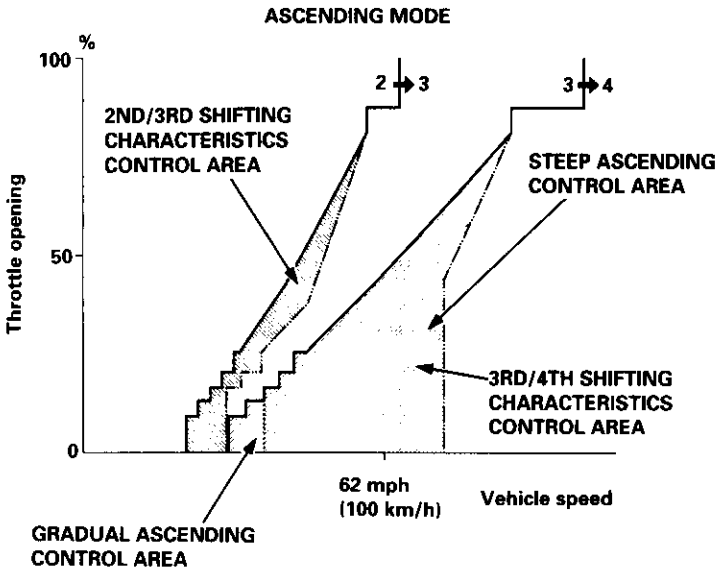

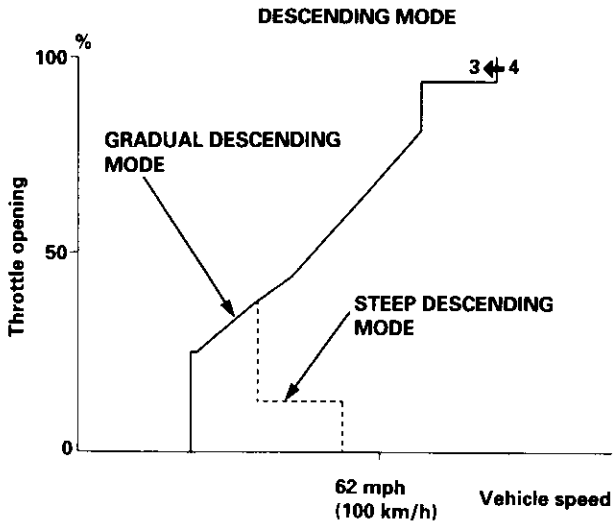

Deceleration Control

When the vehicle goes around a corner, and needs to first decelerate and then accelerate, the PCM sets the data for deceleration control to reduce the number of times the transmission shifts. When the vehicle is decelerating from speeds above 26 mph (41 km/h), the PCM shifts the transmission from 4th to 2nd earlier than normal to cope with upcoming acceleration.

Circuit Diagram and Terminal Locations — '96 – 98 Models

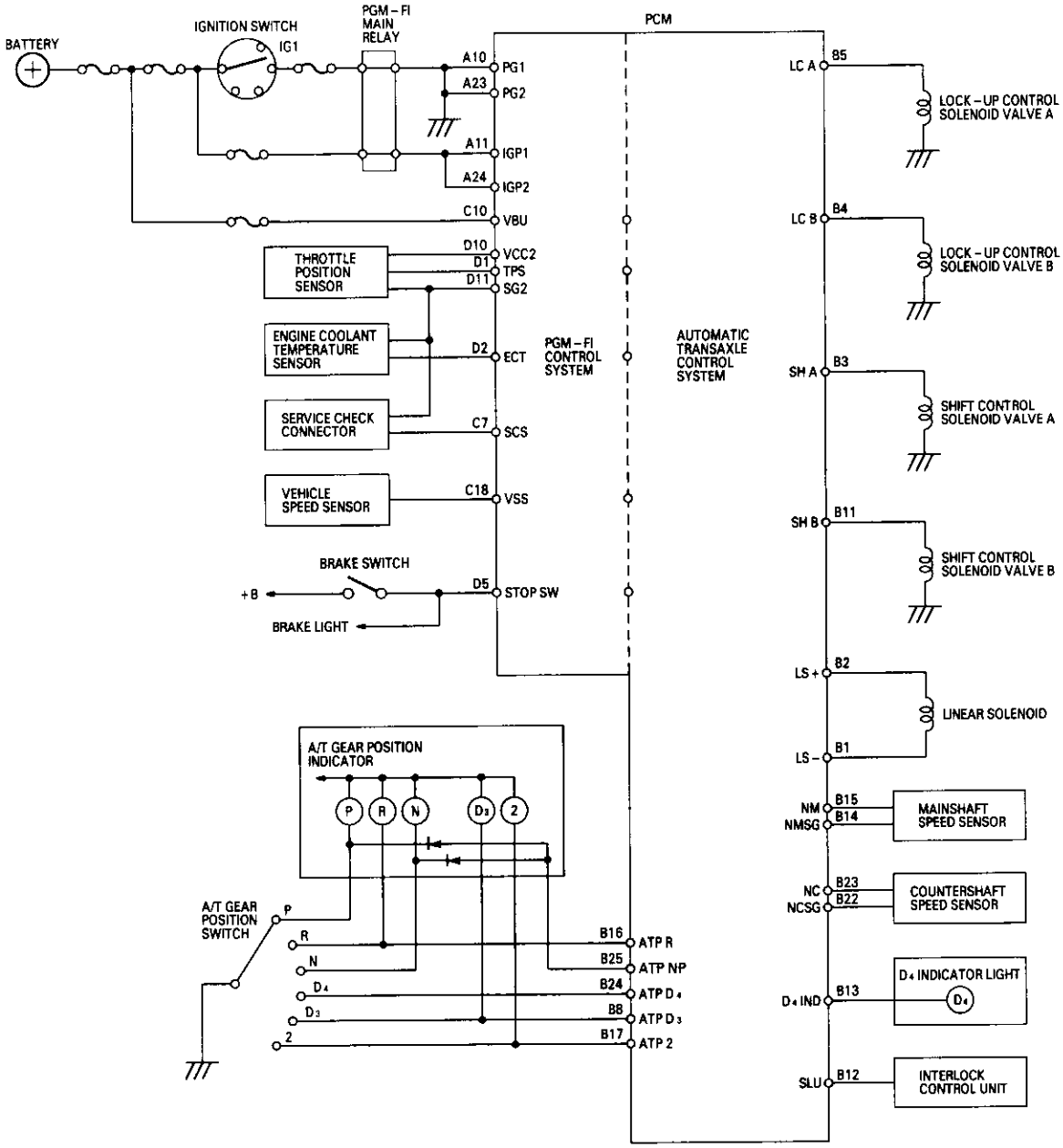

PCM Terminal Locations

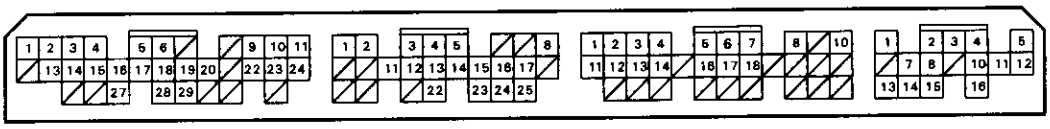

A (32P) Connector B (25P) Connector C (31P) Connector D (16P) Connector

Electronic Control System (cont'd)

Circuit Diagram and Terminal Locations — '99 – 00 Models

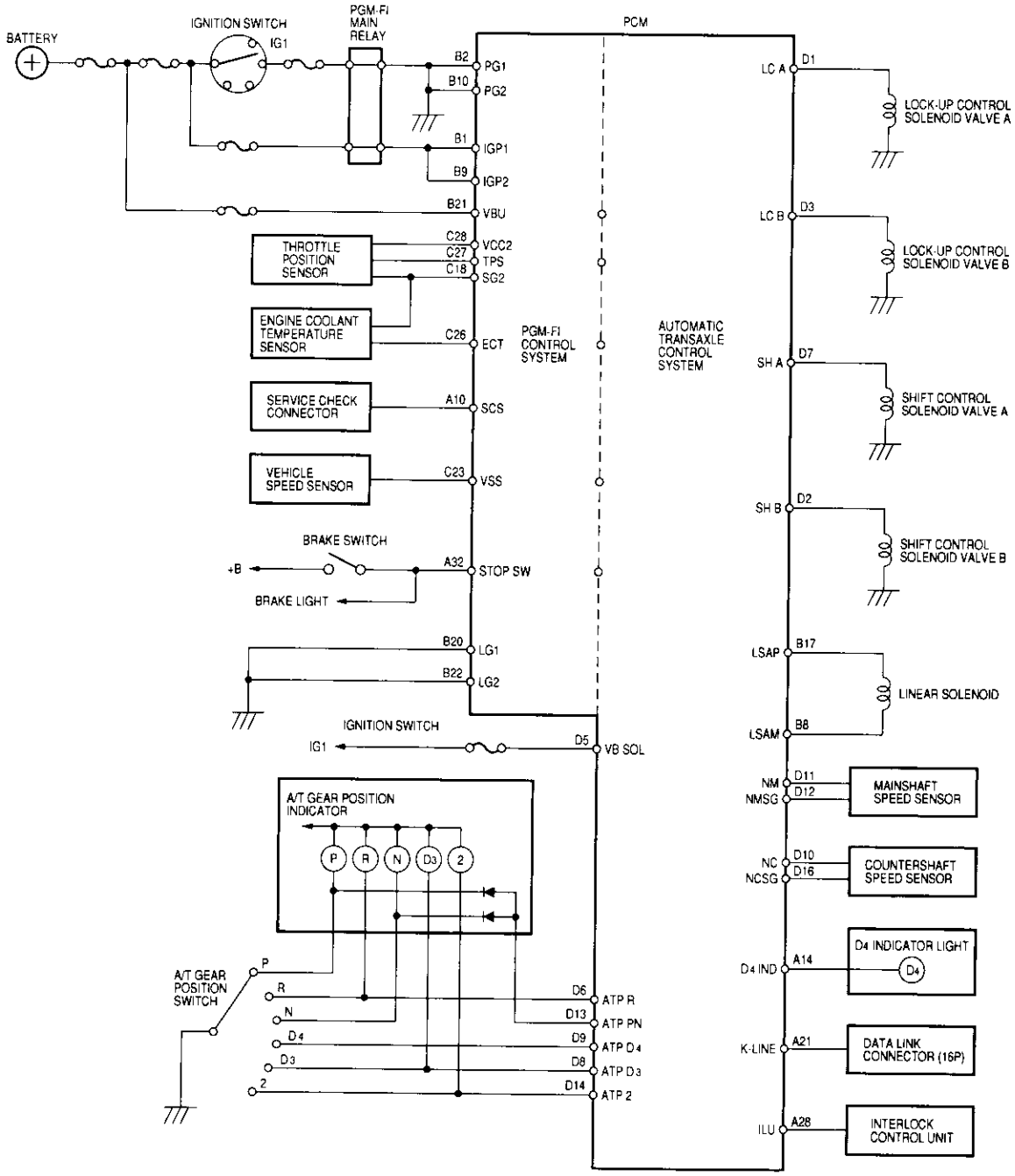

PCM Terminal Locations

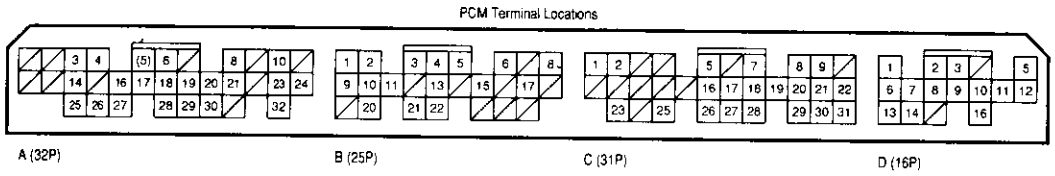

Hydraulic Control

The hydraulic control system is controlled by the ATF pump, valves, accumulators, and electronically controlled solenoids. The ATF pump is driven by splines on the end of the torque converter which is attached to the engine. Fluid from the ATF pump flows through the regulator valve to maintain specified pressure through the main valve body to the manual valve, directing pressure to each of the clutches. The valve body includes the main valve body, the regulator valve body, the lock-up valve body, the secondary valve body, the servo body, the linear solenoid, the shift control solenoid valve A/B assembly, and the lock-up control solenoid valve A/B assembly. The shift control solenoid valve A/B assembly and the linear solenoid are bolted on the outside of the transmission housing. The lock-up control solenoid valve A/B assembly is bolted on the outside of the torque converter housing.

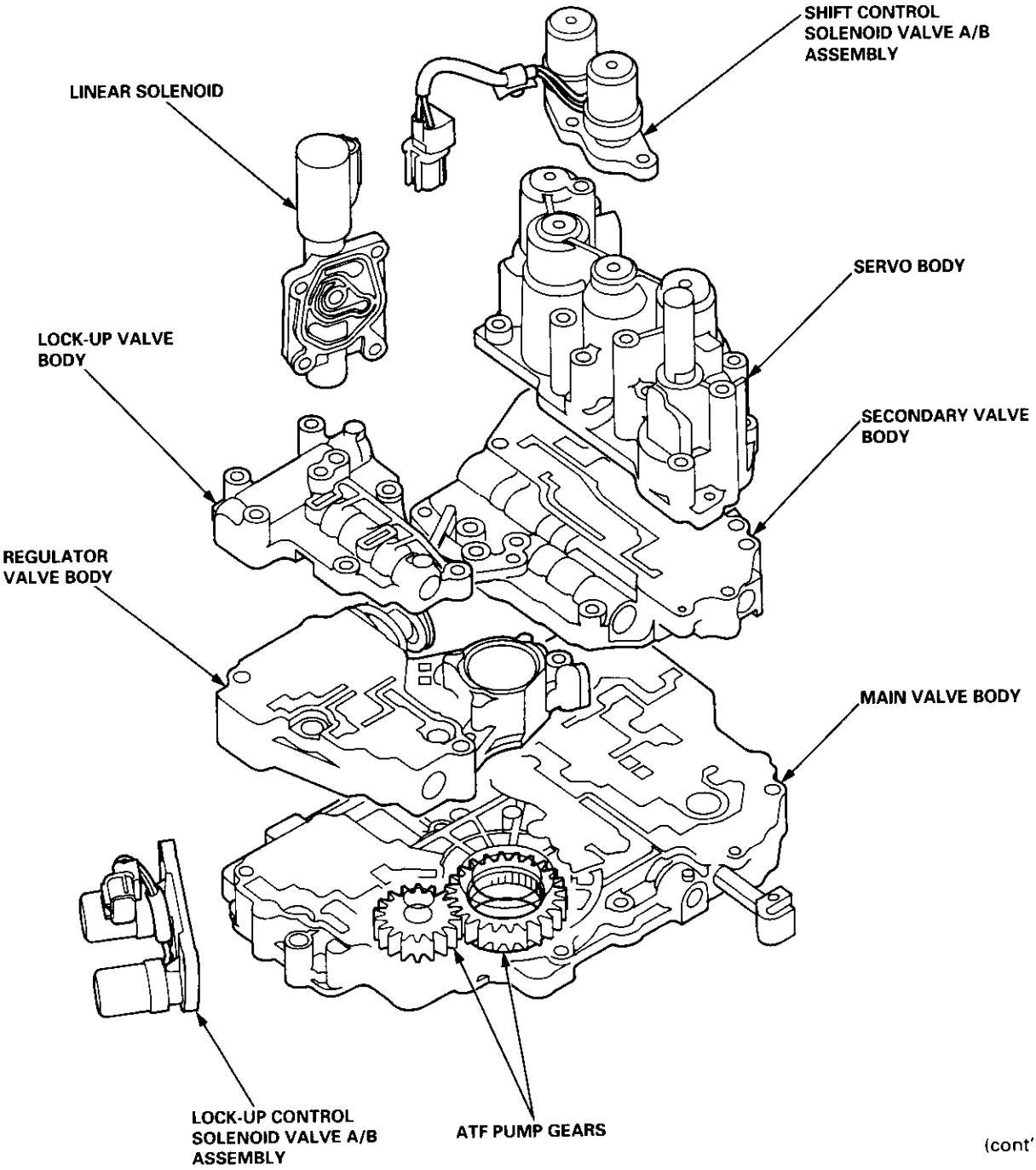

(cont'd)

Hydraulic Control (cont'd)

Main Valve Body

The main valve body houses the manual valve, the 1-2 shift valve, the 2nd orifice control valve, the CPB valve, the modulator valve, the servo control valve, and the relief valve. The primary functions of the main valve body are to switch fluid pressure on and off and to control the hydraulic pressure going to the hydraulic control system.

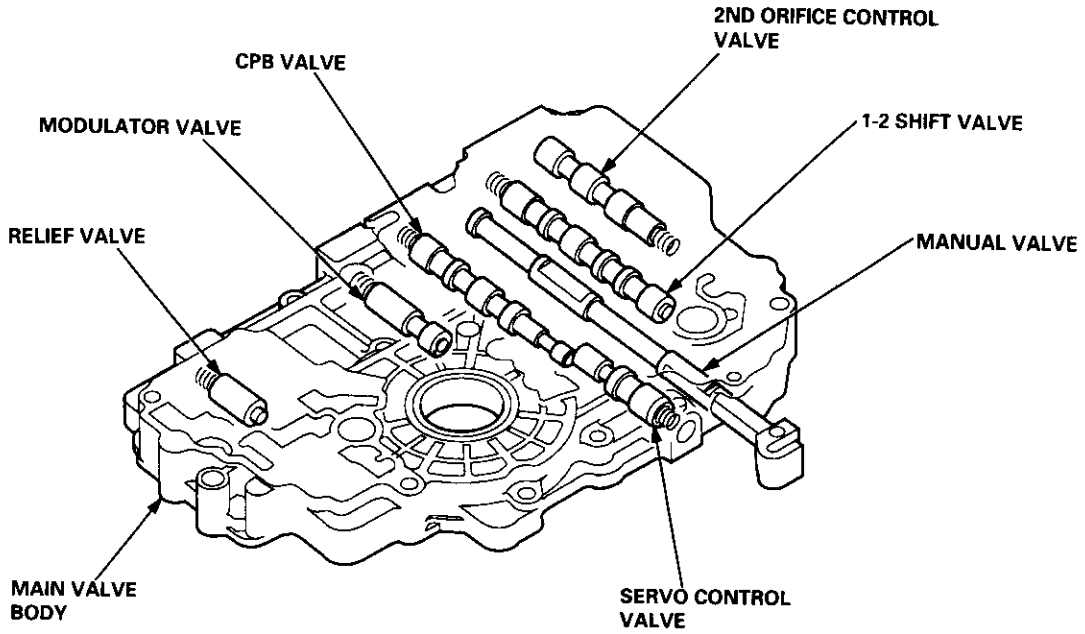

Secondary Valve Body

The secondary valve body is located on the main valve body. The secondary valve body houses the 2-3 shift valve, the 3-4 shift valve, the 3-4 orifice control valve, the 4th exhaust valve, and the CPC valve.

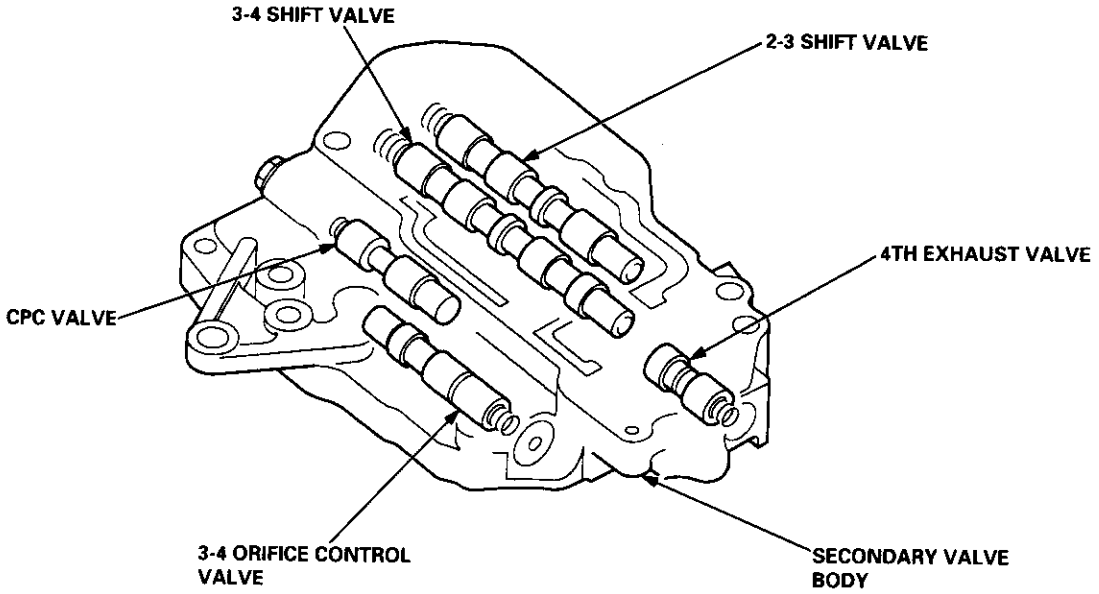

Regulator Valve Body
The regulator valve body is located on the main valve body. The regulator valve body consists of the regulator valve, the torque converter check valve, the cooler relief valve, and the lock-up control valve.

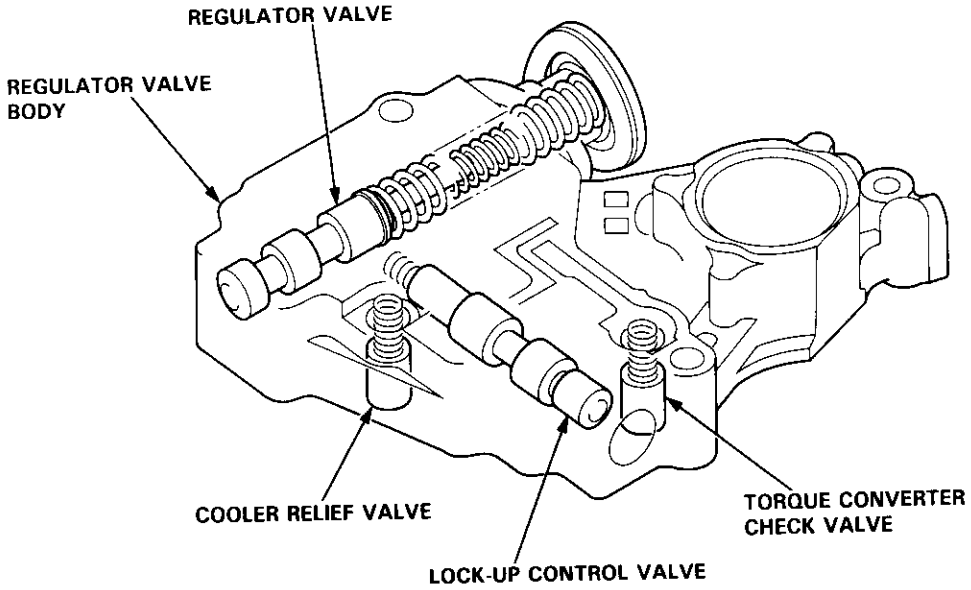

Lock-up Valve Body
The lock-up valve body with the lock-up shift valve and the lock-up timing valve is located on the regulator valve body.

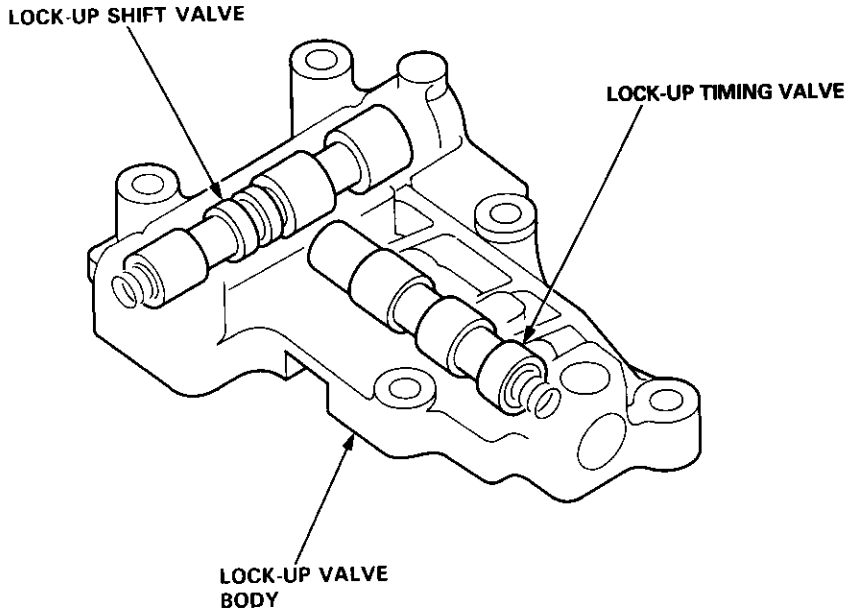

(cont'd

Hydraulic Control (cont'd)

Regulator Valve

The regulator valve maintains a constant hydraulic pressure from the ATF pump to the hydraulic control system, while also furnishing fluid to the lubricating system and torque converter. The fluid from the ATF pump flows through B and B'. The regulator valve has a valve orifice. The fluid entering from B flows through the orifice to the A cavity. This pressure of the A cavity pushes the regulator valve to the right side, and this movement of the regulator valve uncovers the fluid port to the torque converter and the relief valve. The fluid flows out to the torque converter, and the relief valve and regulator valve moves to the left side. According to the level of the hydraulic pressure through B, the position of the regulator valve changes and the amount of the fluid from B' through D and C also changes. This operation is continued, maintaining the line pressure.

NOTE: When used, "left" or "right" indicates direction on the illustration below.

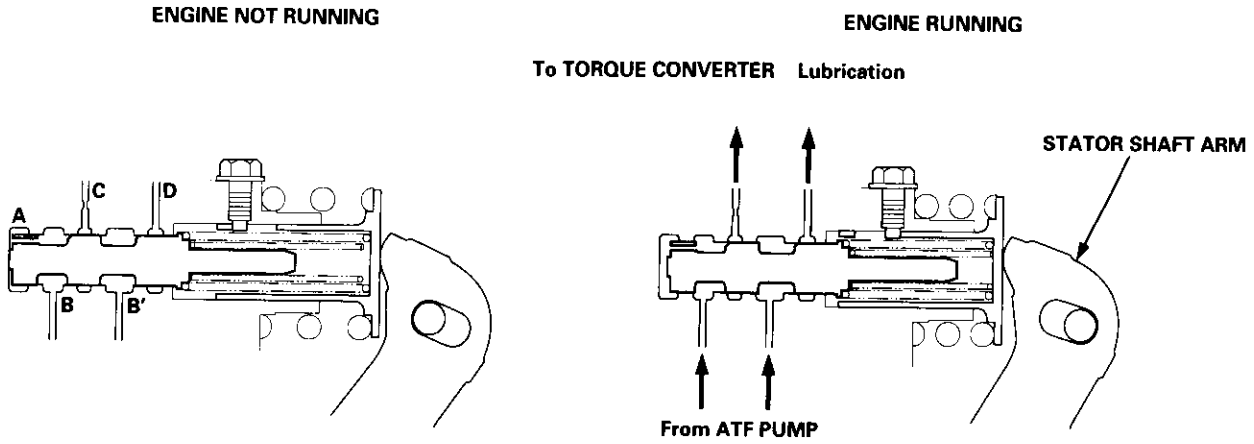

Stator Reaction Hydraulic Pressure Control

Hydraulic pressure increases according to torque, are performed by the regulator valve using the stator torque reaction. The stator shaft is splined with the stator in the torque converter, and its arm end contacts the regulator spring cap. When the vehicle is accelerating or climbing (Torque Converter Range), the stator torque reaction acts on the stator shaft, and the stator arm pushes the regulator spring cap in the direction of the arrow in proportion to the reaction. The stator reaction spring compresses, and the regulator valve moves to increase the line pressure which is regulated by the regulator valve. The line pressure reaches its maximum when the stator torque reaction reaches its maximum.

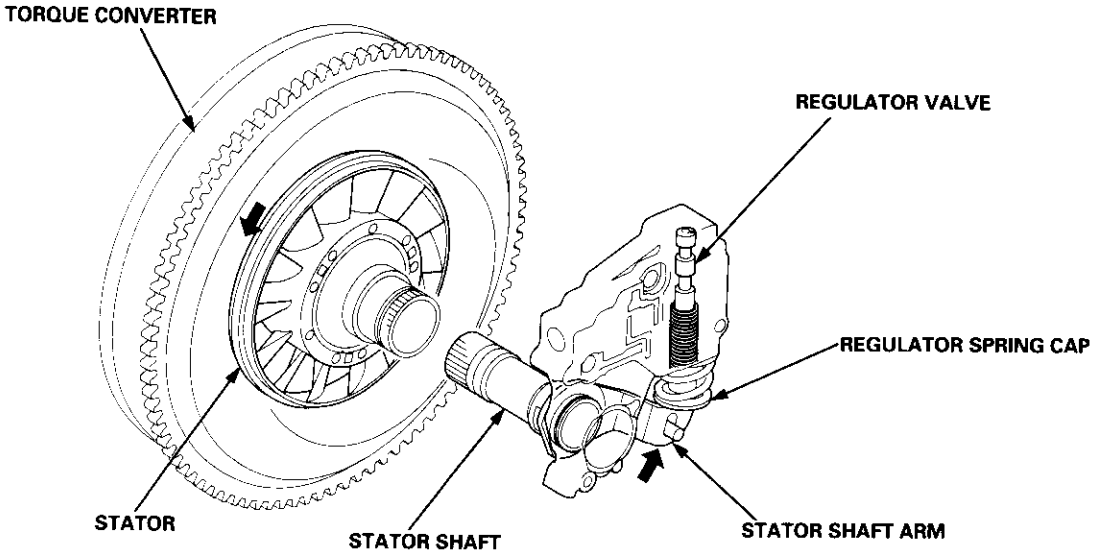

Servo Body

The servo body is located on the secondary valve body. The servo body contains the servo valve which is integrated with the reverse shift fork, and the accumulators.

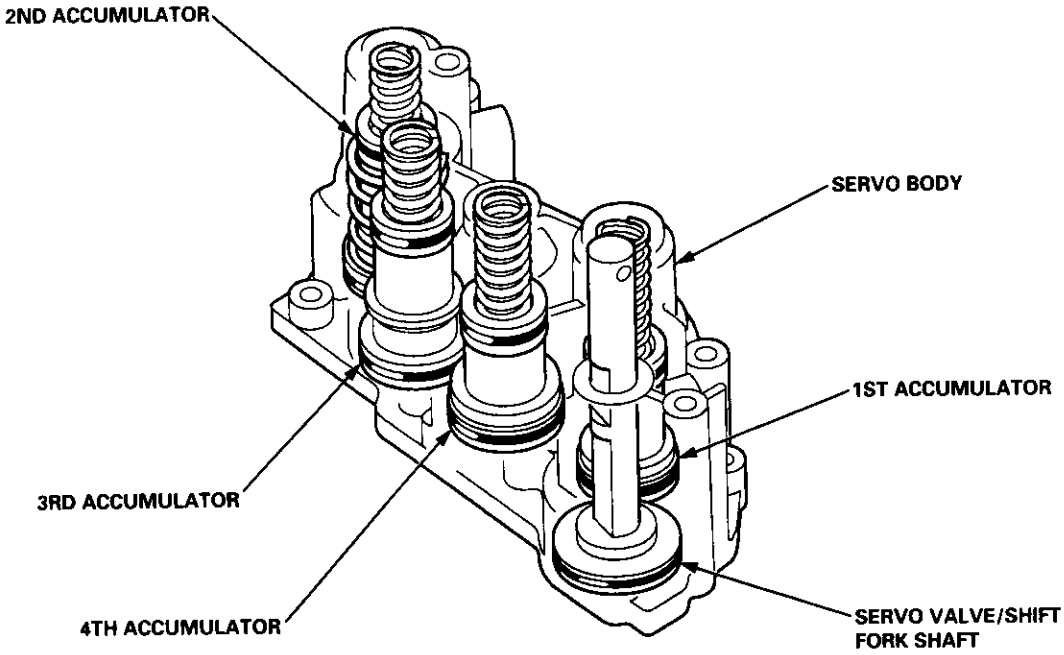

NOTE: The illustration shows the '96 – '98 models; the '99 – 00 models are similar.

Hydraulic Flow

General Chart of Hydraulic Pressure

ATF Pump — Regulator Valve
- Line Pressure
  - Modulator Pressure — Linear Solenoid
  - Clutch Pressure
- Torque Converter Pressure
- Lubrication Pressure

Distribution of Hydraulic Pressure

- Regulator Valve
  - Torque Converter Pressure
  - Lubrication Pressure
  - To regulate Line Pressure
- Manual Valve — To select Line Pressure — Clutch Pressure
- Modulator Valve — Modulator Pressure
  - Shift Control Solenoid Valves
  - Lock-up Control Solenoid Valves
  - Linear Solenoid
- 1-2 Shift Valve
- 2-3 Shift Valve
- 3-4 Shift Valve

(1-2 Shift Valve, 2-3 Shift Valve, 3-4 Shift Valve) — Clutch Pressure

PORT NO.	DESCRIPTION OF PRESSURE	PORT NO.	DESCRIPTION OF PRESSURE	PORT NO.	DESCRIPTION OF PRESSURE
1	LINE	6B	MODULATE (SHIFT CONTROL SOLENOID VALVE B)	41	4TH CLUTCH
1′	LINE	6C	MODULATE (LOCK-UP CONTROL SOLENOID VALVE A)	56	LINEAR SOLENOID
1″	LINE	6D	MODULATE (LOCK-UP CONTROL SOLENOID VALVE B)	90	TORQUE CONVERTER
2	LINE	6D′	MODULATE (LOCK-UP CONTROL SOLENOID VALVE B)	91	TORQUE CONVERTER
3	LINE	7	LINE	92	TORQUE CONVERTER
3′	LINE	8	LINE/CPC	93	ATF COOLER
3″	LINE	9	LINE	94	TORQUE CONVERTER
4	LINE	10	1ST CLUTCH	95	LUBRICATION
4′	LINE	20	2ND CLUTCH	96	TORQUE CONVERTER
4″	LINE	20A	2ND ACCUMULATOR	97	TORQUE CONVERTER
5	CPC	25	LINE	99	SUCTION
6	MODULATE	30	3RD CLUTCH	X	DRAIN
6A	MODULATE (SHIFT CONTROL SOLENOID VALVE A)	40	4TH CLUTCH		

N Position

As the engine turns, the ATF pump also starts to operate. Automatic transmission fluid (ATF) is drawn from (99) and discharged into (1). Then, ATF flowing from the ATF pump becomes the line pressure (1). The line pressure (1) is regulated by the regulator valve. The torque converter inlet pressure (92) enters (94) of the torque converter through the lock-up shift valve and discharges into (90). The torque converter check valve prevents the torque converter pressure from rising. Under this condition, the hydraulic pressure is not applied to the clutches.

NOTE: When used, "left" or "right" indicates direction on the hydraulic circuit.

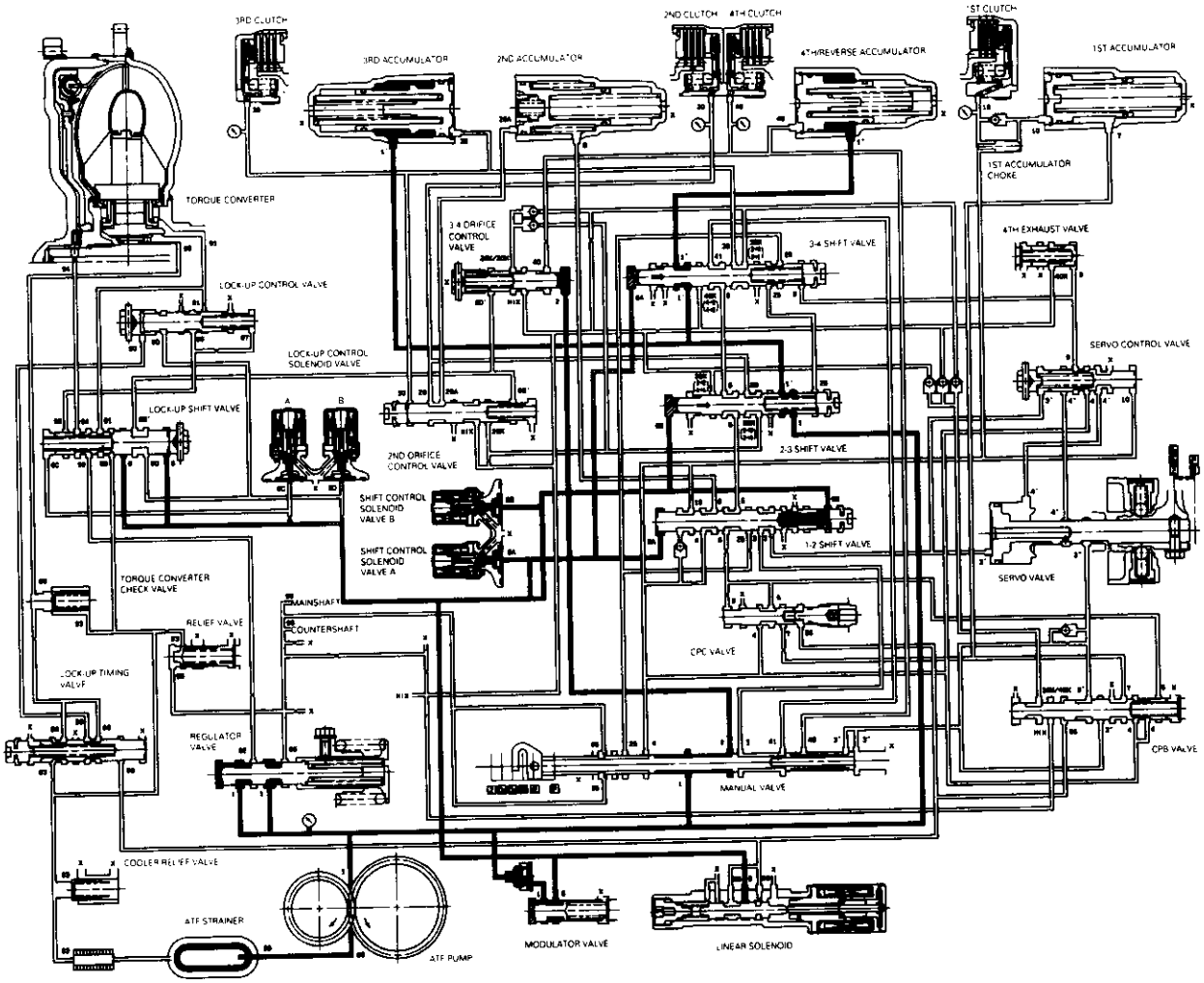

(cont'd)

Hydraulic Flow (cont'd)

2 Position

The line pressure (1) flows to the manual valve and the modulator valve. The line pressure (1) changes the line pressure (4) and (25) at the manual valve, and changes to the modulator pressure at the modulator valve. But the modulator pressure (6) does not flow to each shift valve because shift control solenoid valves A and B are turned ON by the PCM. The line pressure (4) passes through the CPB valve and the CPC valve, and changes to the line pressure (5), then flows to the 1-2 shift valve. The line pressure (5) from the 1-2 shift valve changes to the 2nd clutch pressure (20) at the 2-3 shift valve. The 2nd clutch pressure (20) is applied to the 2nd clutch, and the 2nd clutch is engaged. The line pressure (4) passes through the 1-2 shift valve and the orifice, and changes the 1st clutch pressure. The 1st clutch pressure (10) also flows to the 1st clutch. However, no power is transmitted because of the one-way clutch.

NOTE: When used, "left" or "right" indicates direction on the hydraulic circuit.

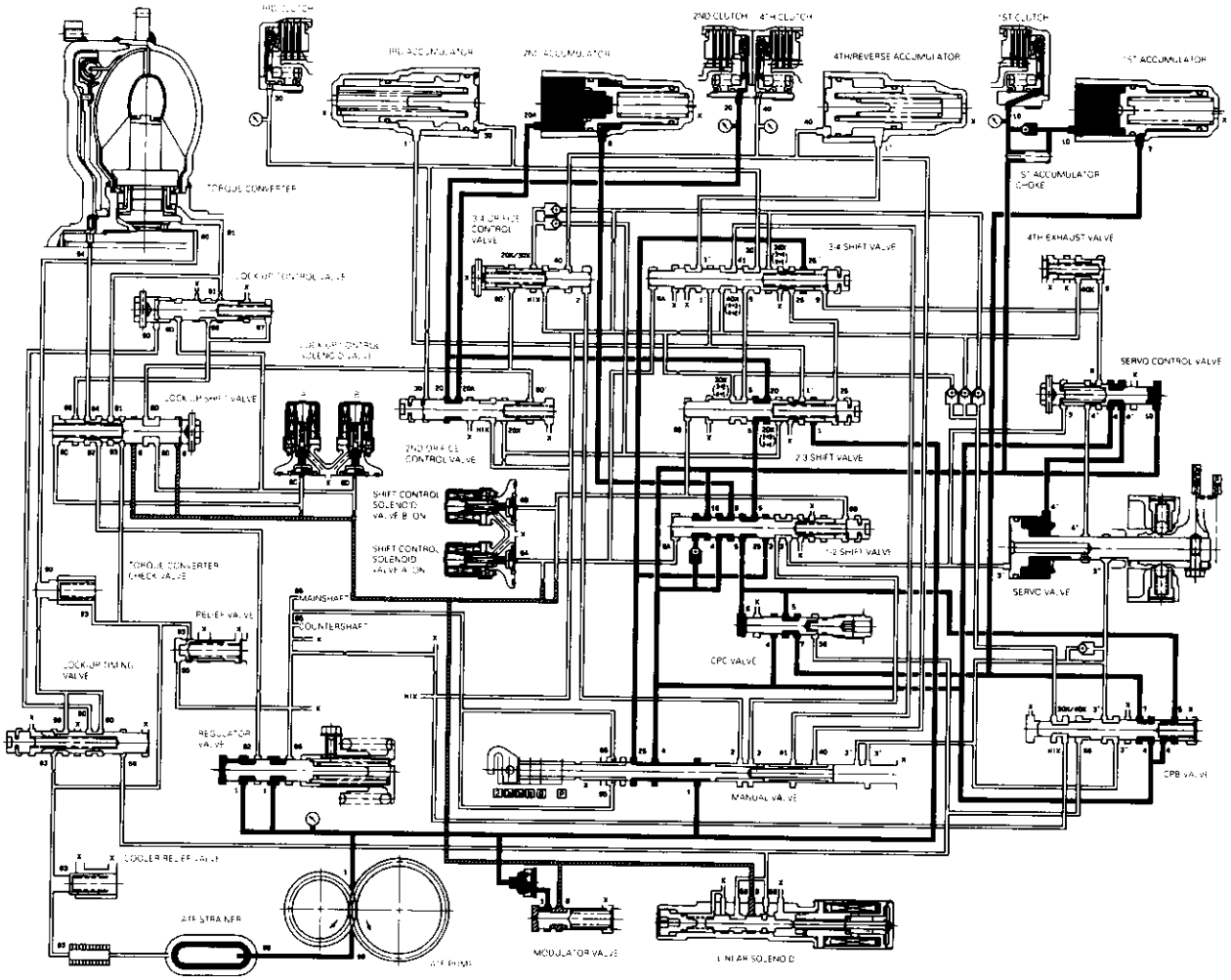

$\boxed{D_4}$ or $\boxed{D_3}$ Position

1. 1st Gear

The flow of fluid through the torque converter circuit is same as in $\boxed{N}$ position. The line pressure flows to the manual valve and the modulator valve. The line pressure changes to the modulator pressure (6) at the modulator valve and to the line pressure (4) at the manual valve. The modulator pressure (6) flows to the left end of the 1-2 shift valve and the 3-4 shift valve because shift control solenoid valve A is turned OFF and B is turned ON by the PCM. The 1-2 shift valve is moved to the right side. The line pressure (4) changes to the 1st clutch pressure (10) at the 1-2 shift valve and the orifice. The 1st clutch pressure (10) is applied to the 1st clutch and the 1st accumulator; consquently, the vehicle will move as the engine power is transmitted.

NOTE: When used, "left" or "right" indicates direction on the hydraulic circuit.

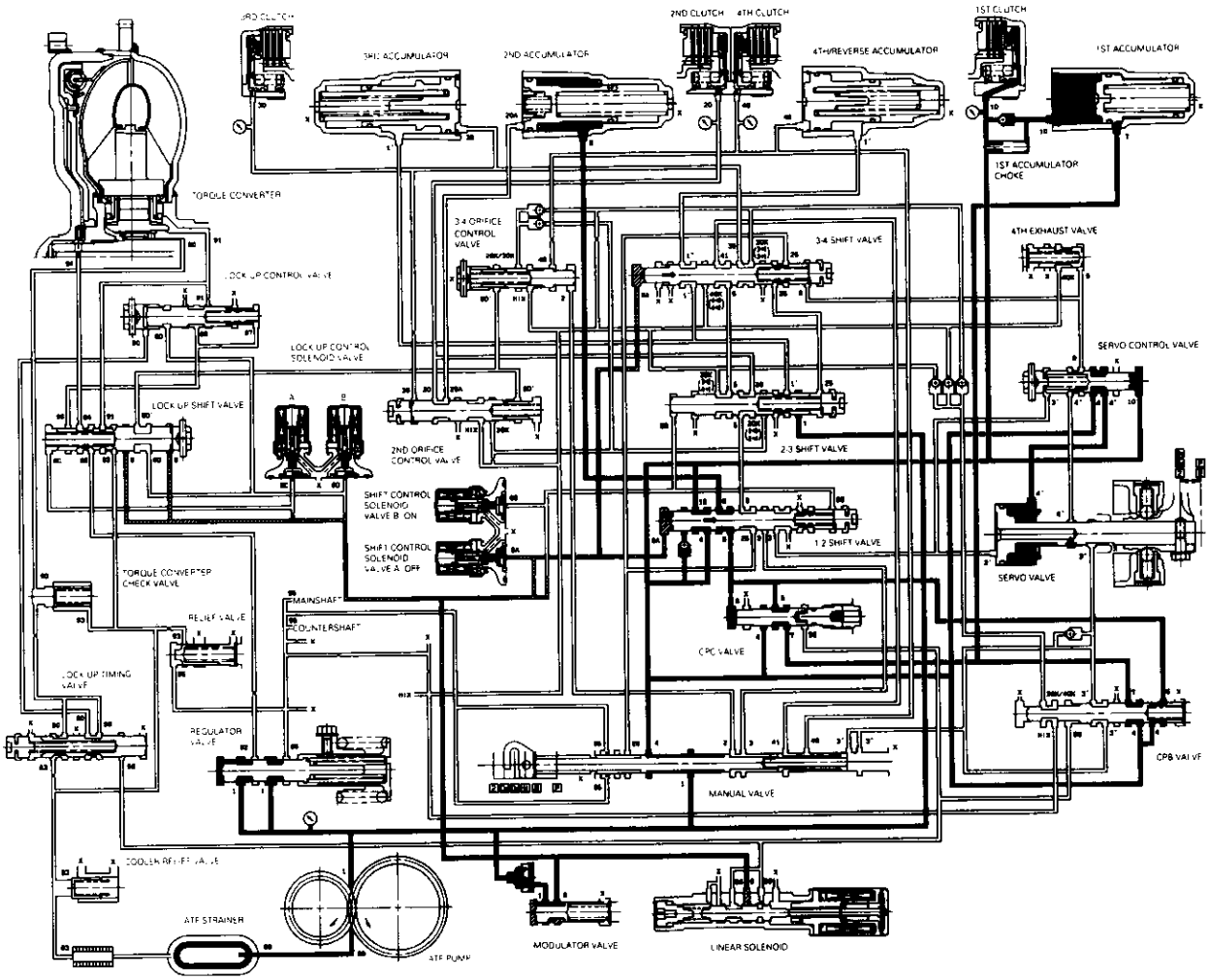

(cont'd)

Hydraulic Flow (cont'd)

2. 2nd Gear

As the speed of the vehicle reaches the prescribed value, shift control solenoid valve A is turned ON by means of the PCM. The modulator pressure (6A) in the left end of the 1-2 shift valve is released by turning shift control solenoid valve A ON. The 1-2 shift valve is moved to the left side and uncovers the port to allow line pressure (5) to the 2-3 shift valve. The line pressure (5) changes to the 2nd clutch pressure (20) at the 2-3 shift valve. The 2nd clutch pressure (20) is applied to the 2nd clutch, and the 2nd clutch is engaged.

Fluid flows by way of:
- Line Pressure (4) → CPB Valve – Line Pressure (5) → 1-2 Shift Valve – Line Pressure (5) → 2-3 Shift Valve
- 2nd Clutch Pressure (20) → 2nd Clutch

The hydraulic pressure also flows to the 1st clutch. However, no power is transmitted because of the one-way clutch.

NOTE: When used, "left" or "right" indicates direction on the hydraulic circuit.

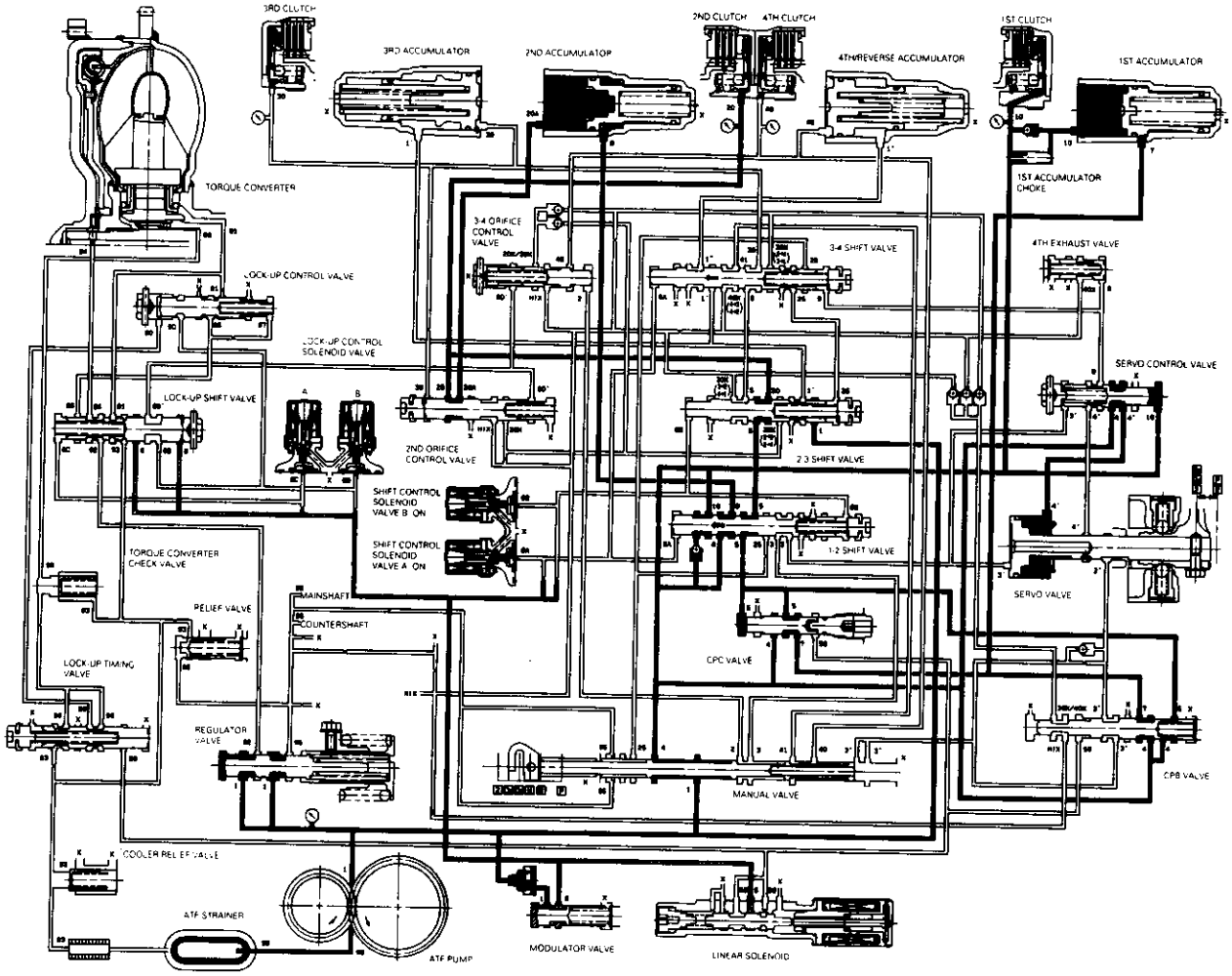

3. 3rd Gear

As the speed of the vehicle reaches the prescribed value, shift control solenoid valve B is turned OFF by means of the PCM. Shift control solenoid valve A remains ON. The modulator pressure (6) flows to the right end of the 1-2 shift valve and the left end of the 2-3 shift valve. The 2-3 shift valve is moved to the right side by the modulator pressure (6B). The 2-3 shift valve covers the port to stop line pressure (5) to the 2nd clutch and uncovers to the 3-4 shift valve as the 2-3 shift valve is moved to the right side. The line pressure (5) becomes the 3rd clutch pressure (30) at the 3-4 shift valve. The 3rd clutch pressure (30) is applied to the 3rd clutch, and the 3rd clutch is engaged.

Fluid flows by way of:
- Line pressure (4) → CPB Valve – Line Pressure (5) → 1-2 Shift Valve – Line Pressure (5) → 2-3 Shift Valve
- Line Pressure (5) → 3-4 Shift Valve – 3rd Clutch Pressure (30) → 3rd Clutch

The hydraulic pressure also flows to the 1st clutch. However, no power is transmitted because of the one-way clutch as in 2nd gear.

NOTE: When used, "left" or "right" indicates direction on the hydraulic circuit.

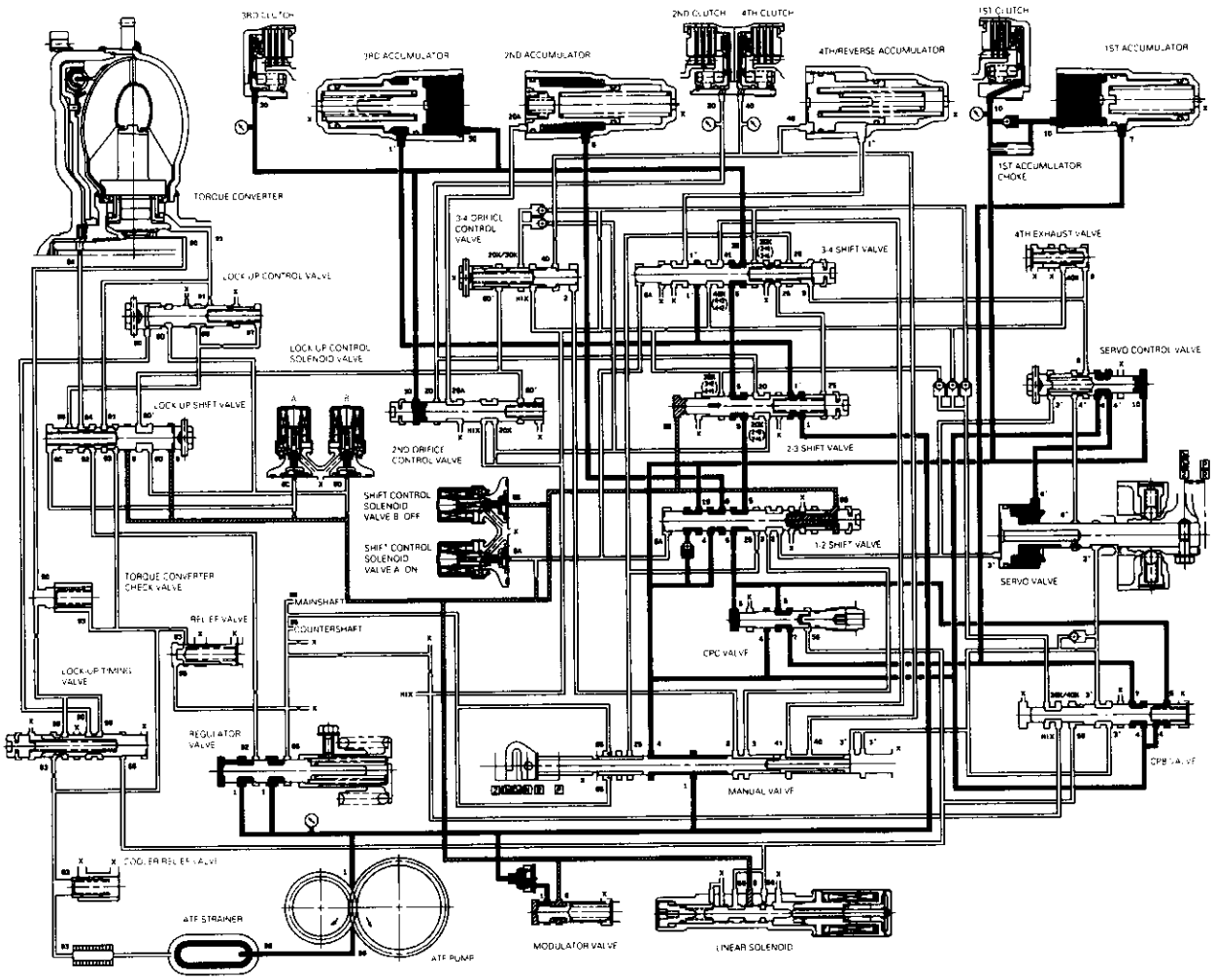

(cont'd)

Hydraulic Flow (cont'd)

4. 4th Gear (D4 Position)

As the speed of the vehicle reaches the prescribed value, shift control solenoid valve A is turned OFF by means of the PCM. Shift control solenoid valve B remains OFF. The modulator pressure (6) flows to the left end of the 1-2 shift valve and the left end of the 3-4 shift valve. The modulator pressure (6A) in the left end of the 1-2 shift valve equals the modulator pressure (6B) in the right end of the 1-2 shift valve, the 1-2 shift valve remains at left side by the tension of the valve spring.
The 3-4 shift valve is moved to the right side by the modulator pressure (6A). The 3-4 shift valve covers the port to the 3rd clutch and uncovers the port to the 4th clutch as this valve is moved to the right side. The 4th clutch pressure (41) from the 3-4 shift valve becomes the 4th clutch pressure (40) at the manual valve. The 4th clutch pressure (40) is applied to the 4th clutch, and the 4th clutch is engaged.

Fluid flows by way of:
- Line pressure (4) → CPB Valve – Line Pressure (5) → 1-2 Shift Valve – Line Pressure (5) → 2-3 Shift Valve
- Line Pressure (5) → 3-4 Shift Valve – 4th Clutch Pressure (41) → Manual Valve – 4th Clutch Pressure (40) → 4th Clutch

The hydraulic pressure also flows to the 1st clutch. However, no power is transmitted because of the one-way clutch as in 2nd and 3rd gear.

NOTE: When used, "left" or "right" indicates direction on the hydraulic circuit.

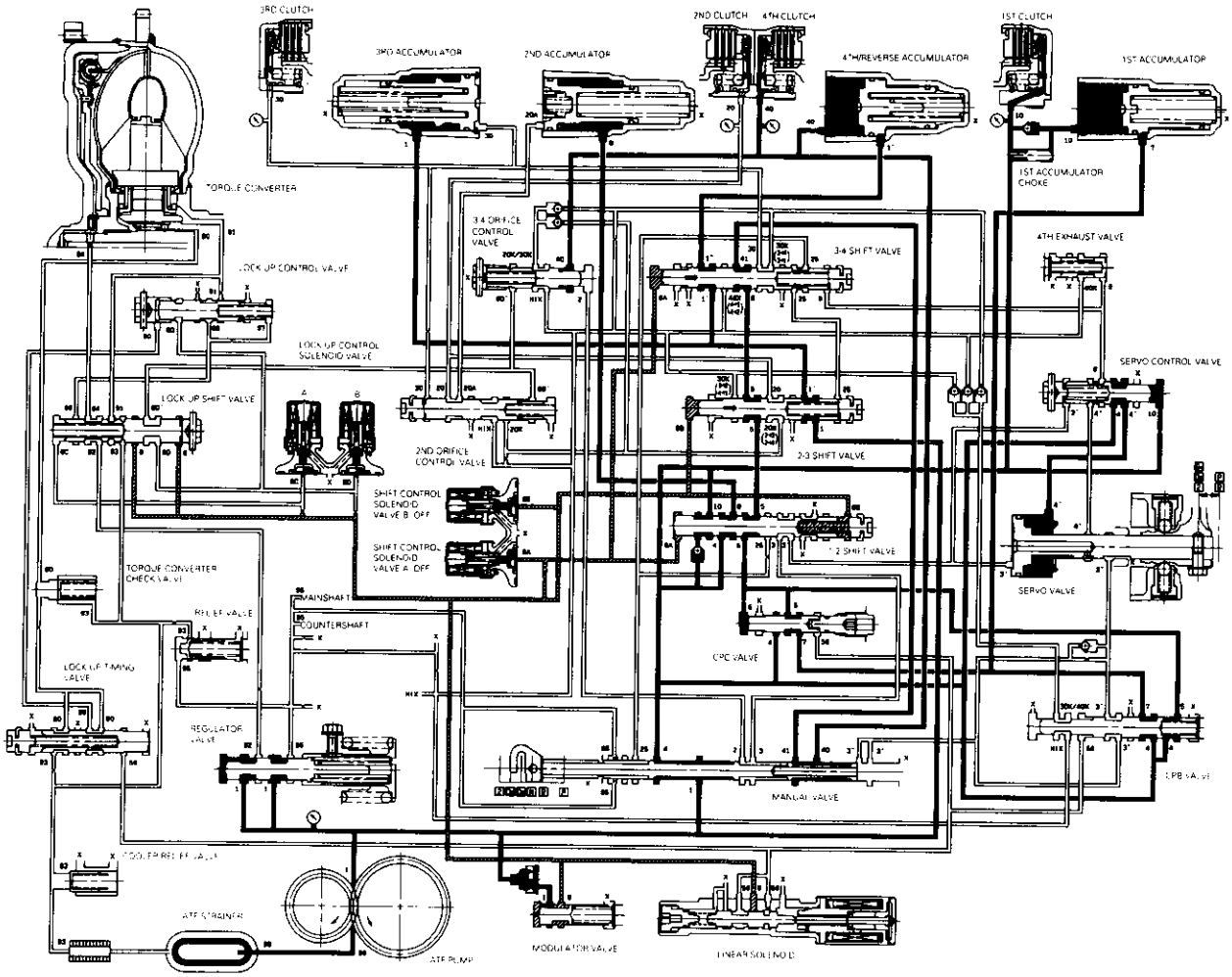

R Position

The flow of fluid through the torque converter circuit is the same as in N position. The line pressure (1) changes to the line pressure (3) and flows to the 1-2 shift valve. The line pressure (3) changes to the line pressure (3') at the 1-2 shift valve and flows to the servo valve. The servo valve is moved to the right side (Reverse range position) and uncovers the port to allow line pressure (3") to the manual valve. The line pressure (3') from the 1-2 shift valve flows through the servo valve to the manual valve and changes the 4th clutch pressure (40). The 4th clutch pressure (40) is applied to the 4th clutch, and the 4th clutch is engaged.

Reverse Inhibitor Control

When the R position is selected while the vehicle is moving forward at speeds over 6 mph (10 km/h), the PCM outputs the 1st speed signal to shift control solenoid valves A and B; shift control solenoid valve A is turned OFF, shift control solenoid valve B is turned ON. The 1-2 shift valve is moved to the right side and covers the port to stop line pressure (3') to the servo valve. The line pressure (3') is not applied to the servo valve, and the 4th clutch pressure (40) is not applied to the 4th clutch, as a result, power is not transmitted to the reverse direction.

NOTE: When used, "left" or "right" indicates direction on the hydraulic circuit.

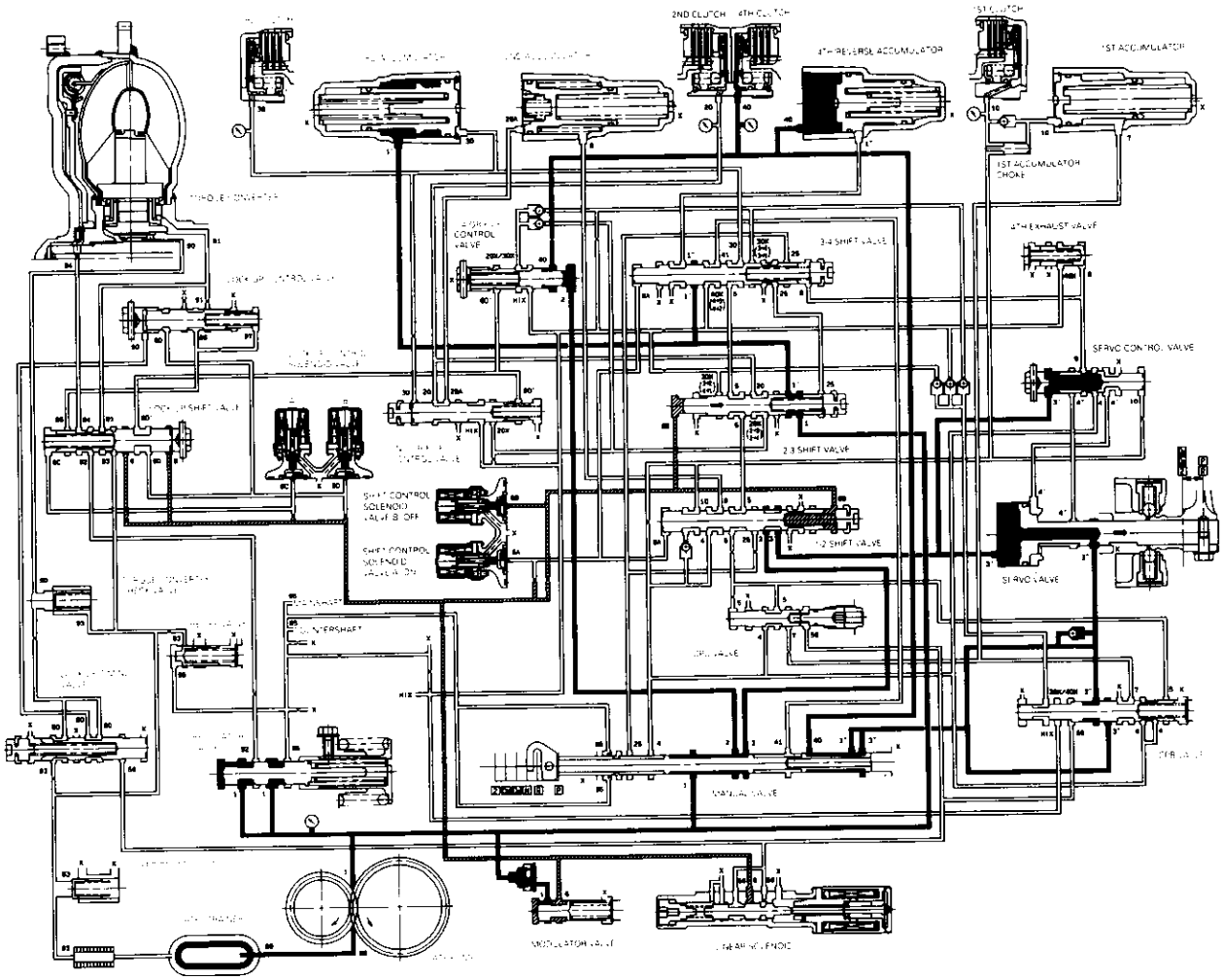

(cont'd)

Hydraulic Flow (cont'd)

P Position

The flow of fluid through the torque converter circuit is the same as in N position. The line pressure (1) changes to the line pressure (3) and flows to the 1-2 shift valve. The line pressure (3) changes to the line pressure (3') at the 1-2 shift valve and flows to the servo valve. The servo valve is moved to the right side (Reverse range position) and uncovers the port to allow line pressure (3") to the manual valve as in R position. The line pressure (3") from the servo valve is intercepted by the manual valve. However, hydraulic pressure is not supplied to the clutches, and the power is not transmitted.

NOTE: When used, "left" or "right" indicates direction on the hydraulic circuit.

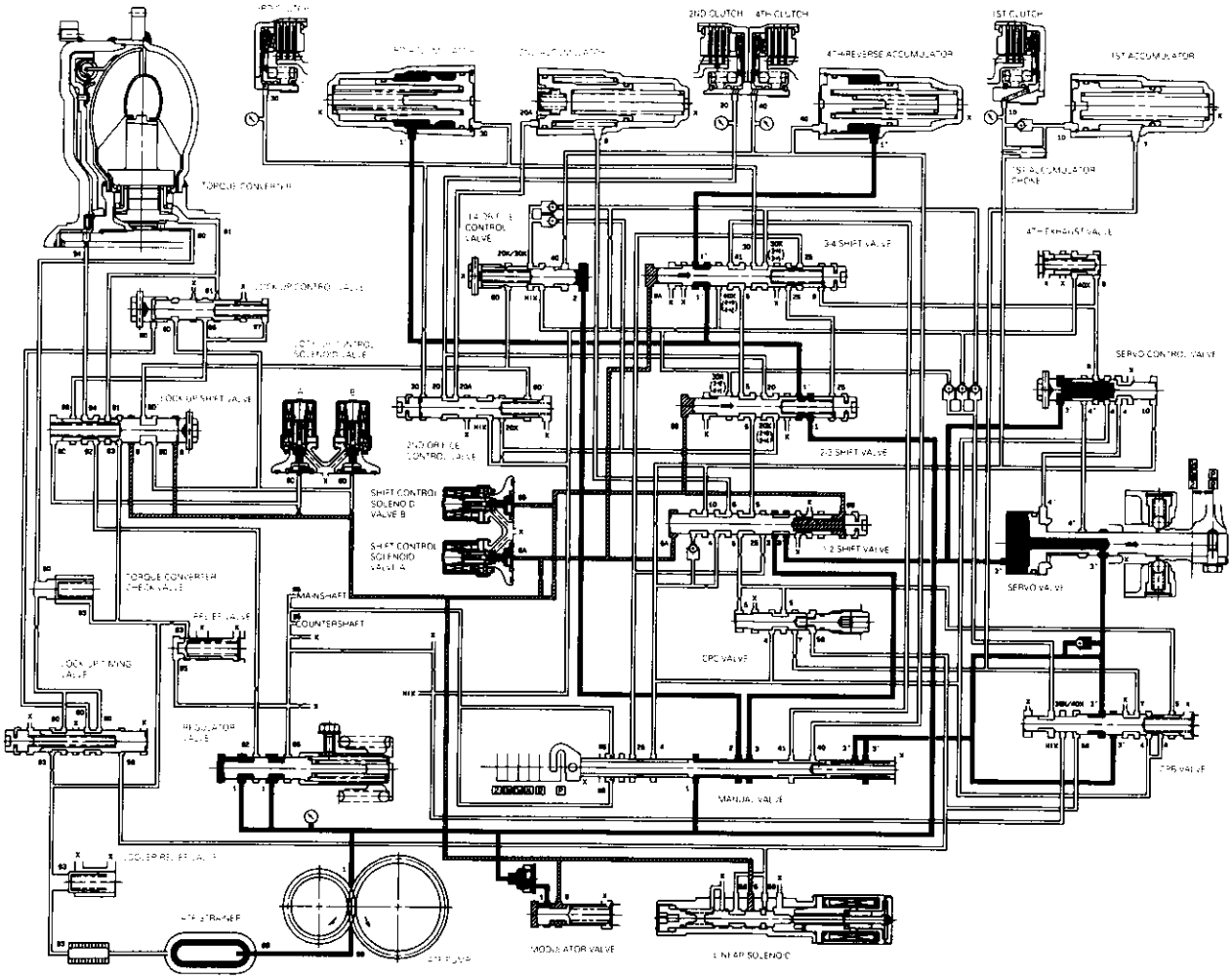

Lock-up System

Lock-up Clutch

1. Operation (clutch on)
   With the lock-up clutch on, the fluid in the chamber between the torque converter cover and the lock-up piston is drained off, and the converter fluid exerts pressure through the piston against the torque converter cover. As a result, the converter turbine is locked to the converter cover. The effect is to bypass the converter, thereby placing the vehicle in direct drive.

   Power flow

   The power flows by way of:

   Engine
   ↓
   Drive plate
   ↓
   Torque converter cover
   ↓
   Lock-up piston
   ↓
   Damper spring
   ↓
   Turbine
   ↓
   Mainshaft

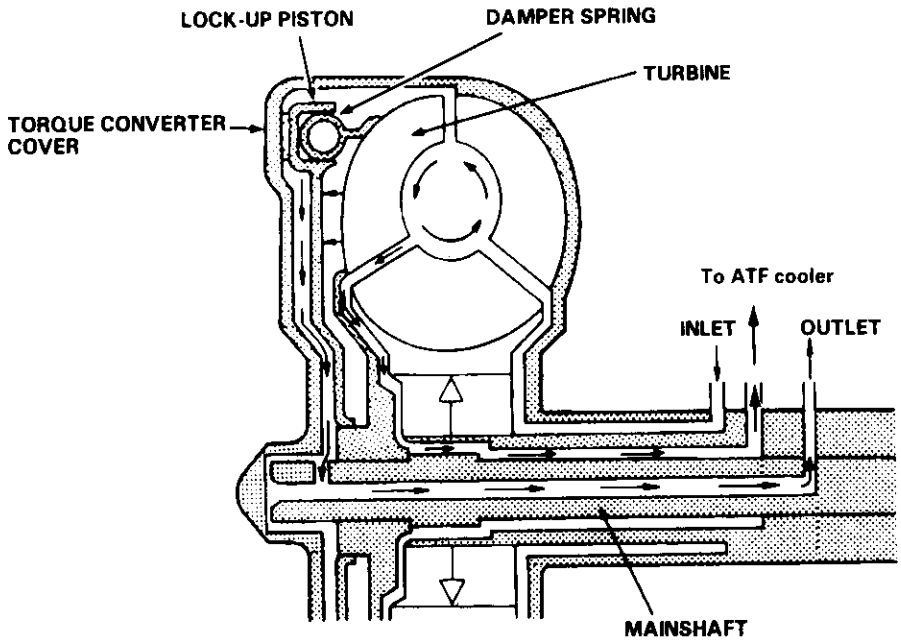

2. Operation (clutch off)
   With the lock-up clutch off, the fluid flows in the reverse of "clutch on." As a result, the lock-up piston moves away from the converter cover, and the torque converter lock-up is released.

   Power flow

   Engine
   ↓
   Drive plate
   ↓
   Torque converter cover
   ↓
   Pump
   ↓
   Turbine
   ↓
   Mainshaft

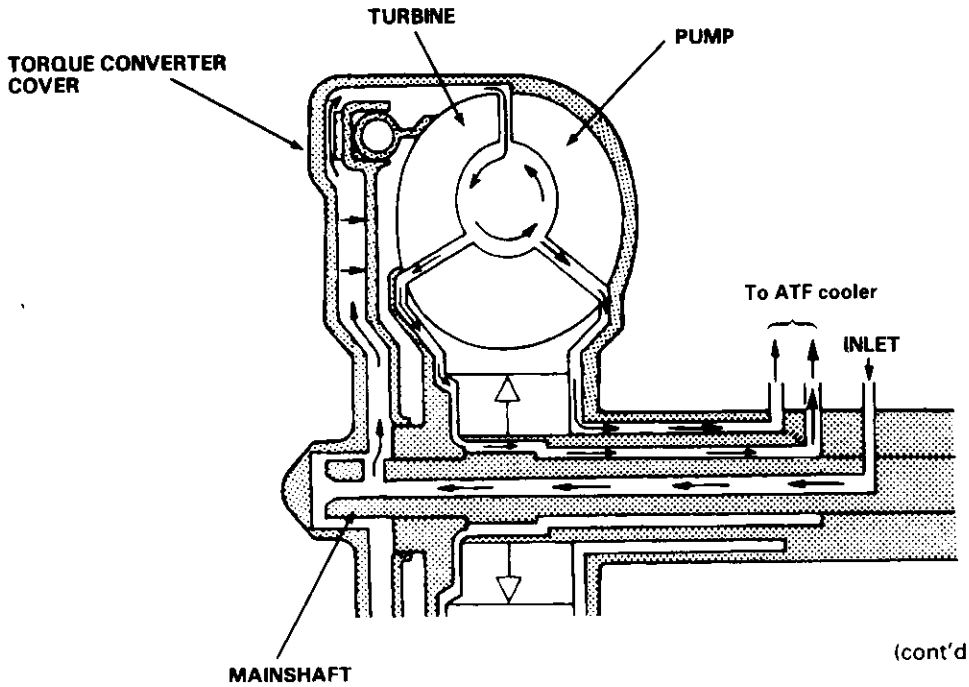

(cont'd)

Lock-up System (cont'd)

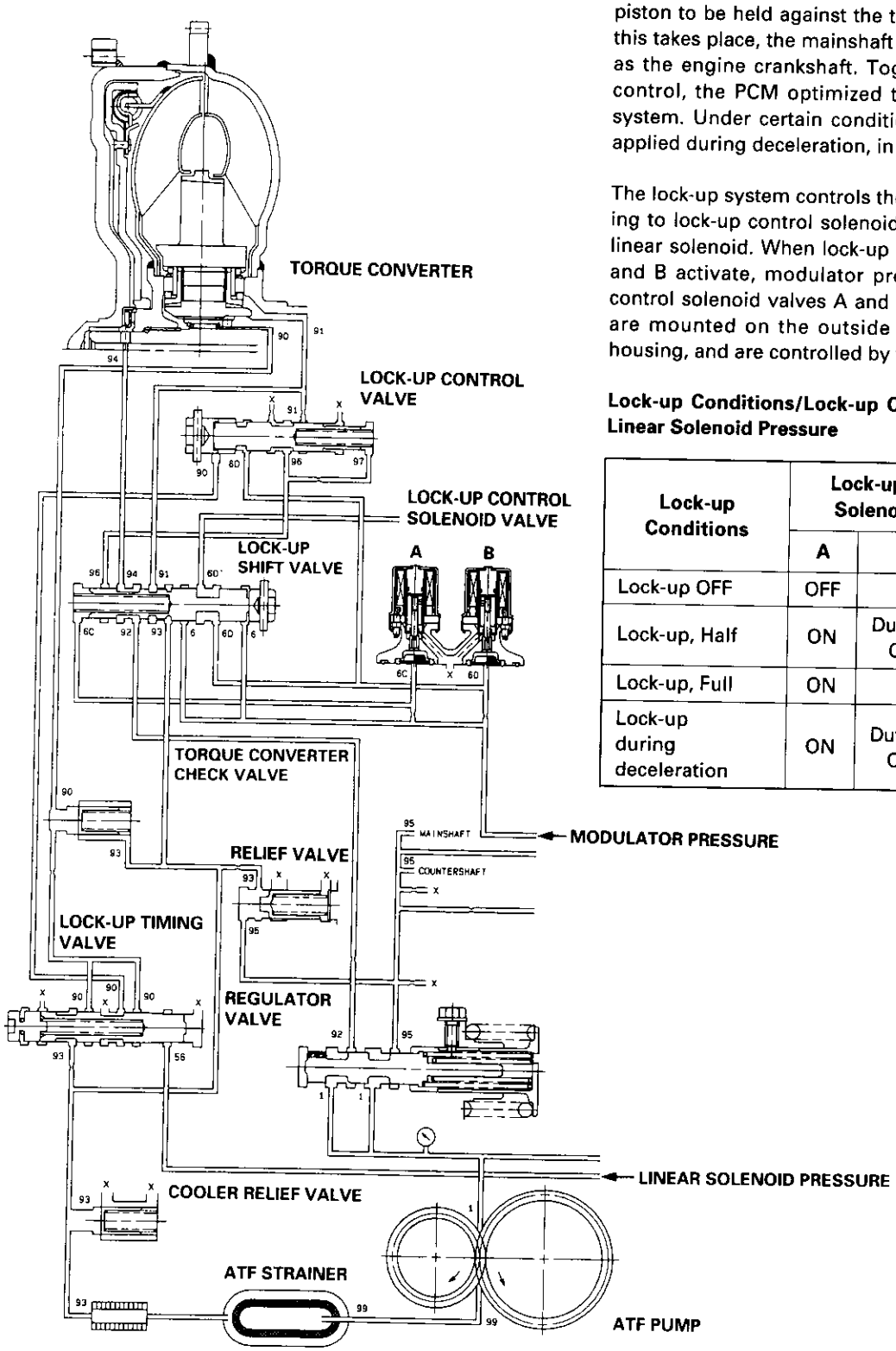

In D4 position, in 3rd and 4th, and D3 position in 3rd, pressurized fluid is drained from the back of the torque converter through a fluid passage, causing the lock-up piston to be held against the torque converter cover. As this takes place, the mainshaft rotates at the same speed as the engine crankshaft. Together with the hydraulic control, the PCM optimized the timing of the lock-up system. Under certain conditions, the lock-up clutch is applied during deceleration, in 3rd and 4th gear.

The lock-up system controls the range of lock-up according to lock-up control solenoid valves A and B, and the linear solenoid. When lock-up control solenoid valves A and B activate, modulator pressure changes. Lock-up control solenoid valves A and B and the linear solenoid are mounted on the outside of the torque converter housing, and are controlled by the PCM.

Lock-up Conditions/Lock-up Control Solenoid Valves/ Linear Solenoid Pressure

Lock-up Conditions	Lock-up Control Solenoid Valve		Linear Solenoid Pressure
	A	B	
Lock-up OFF	OFF	OFF	High
Lock-up, Half	ON	Duty operation OFF ↔ ON	Low
Lock-up, Full	ON	ON	High
Lock-up during deceleration	ON	Duty operation OFF ↔ ON	Low

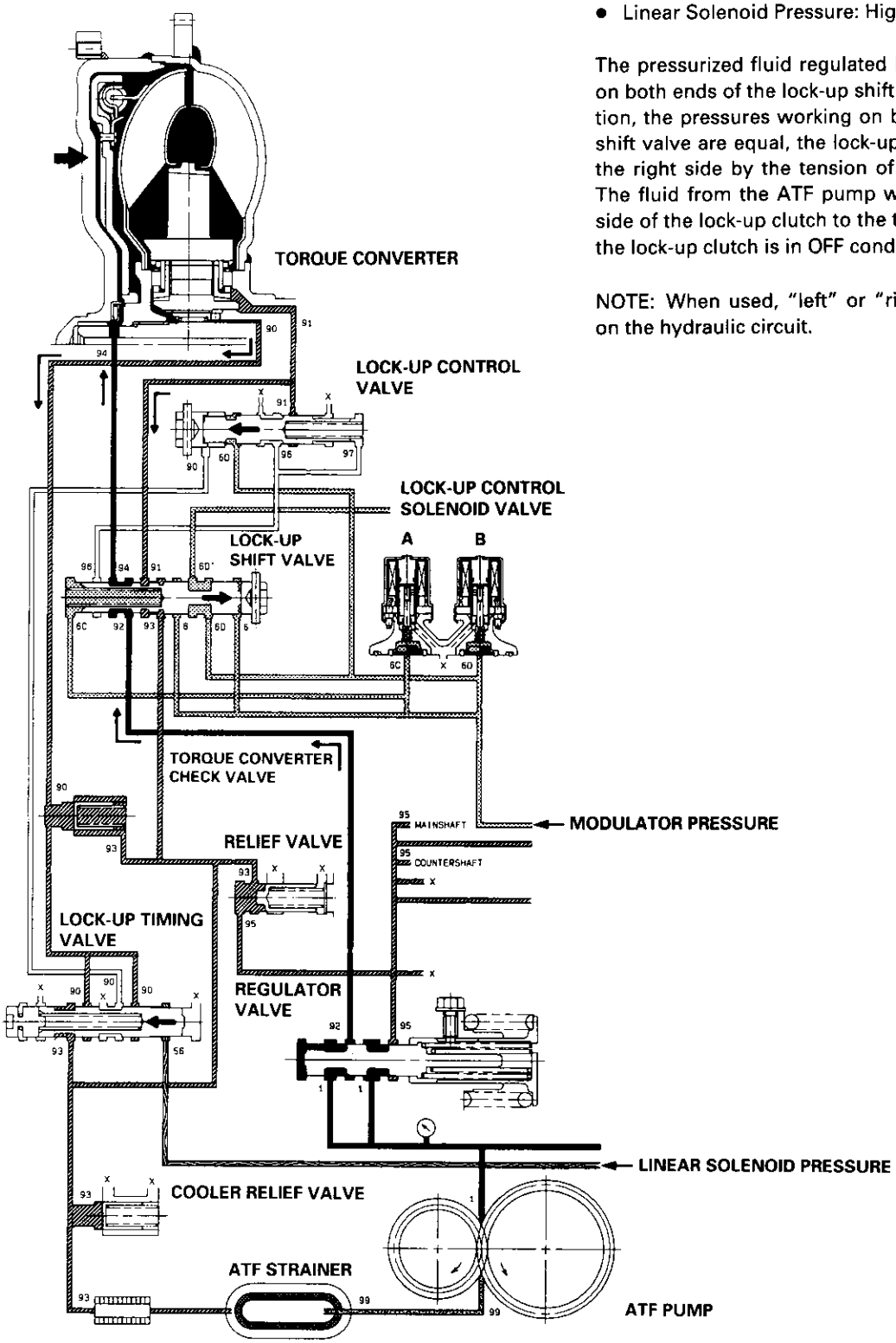

No Lock-up

- Lock-up Control Solenoid Valve A: OFF
- Lock-up Control Solenoid Valve B: OFF
- Linear Solenoid Pressure: High

The pressurized fluid regulated by the modulator works on both ends of the lock-up shift valve. Under this condition, the pressures working on both ends of the lock-up shift valve are equal, the lock-up shift valve is moved to the right side by the tension of the valve spring alone. The fluid from the ATF pump will flow through the left side of the lock-up clutch to the torque converter; that is, the lock-up clutch is in OFF condition.

NOTE: When used, "left" or "right" indicates direction on the hydraulic circuit.

(cont'd)

Lock-up System (cont'd)

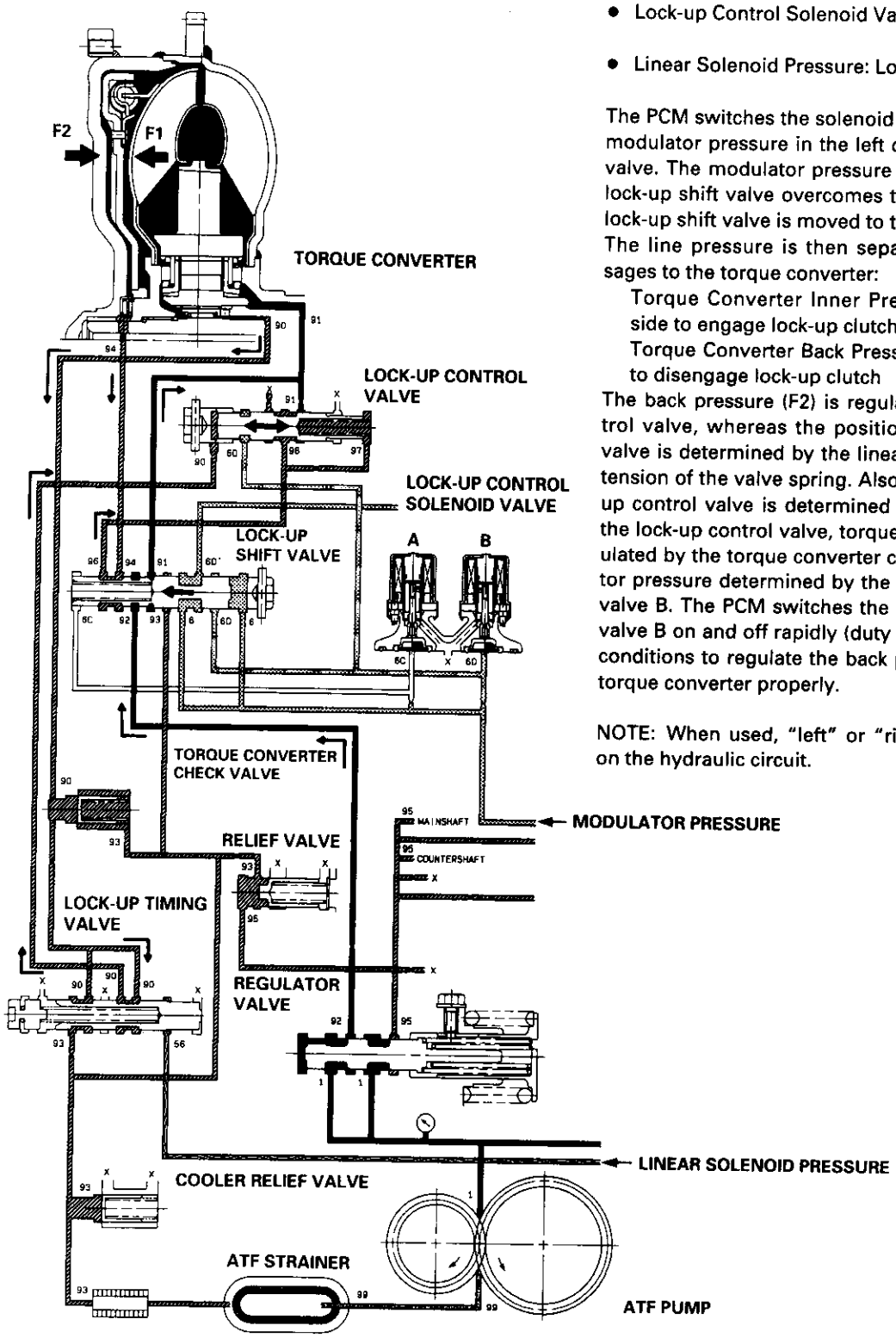

Half Lock-up

- Lock-up Control Solenoid Valve A: ON
- Lock-up Control Solenoid Valve B: Duty Operation OFF ↔ ON
- Linear Solenoid Pressure: Low

The PCM switches the solenoid valve A on to release the modulator pressure in the left cavity of the lock-up shift valve. The modulator pressure in the right cavity of the lock-up shift valve overcomes the spring force; thus the lock-up shift valve is moved to the left side.
The line pressure is then separated into the two passages to the torque converter:

Torque Converter Inner Pressure: enters into right side to engage lock-up clutch

Torque Converter Back Pressure: enters into left side to disengage lock-up clutch

The back pressure (F2) is regulated by the lock-up control valve, whereas the position of the lock-up timing valve is determined by the linear solenoid pressure and tension of the valve spring. Also the position of the lock-up control valve is determined by the back pressure of the lock-up control valve, torque converter pressure regulated by the torque converter check valve, and modulator pressure determined by the lock-up control solenoid valve B. The PCM switches the lock-up control solenoid valve B on and off rapidly (duty operation) under certain conditions to regulate the back pressure (F2) to lock the torque converter properly.

NOTE: When used, "left" or "right" indicates direction on the hydraulic circuit.

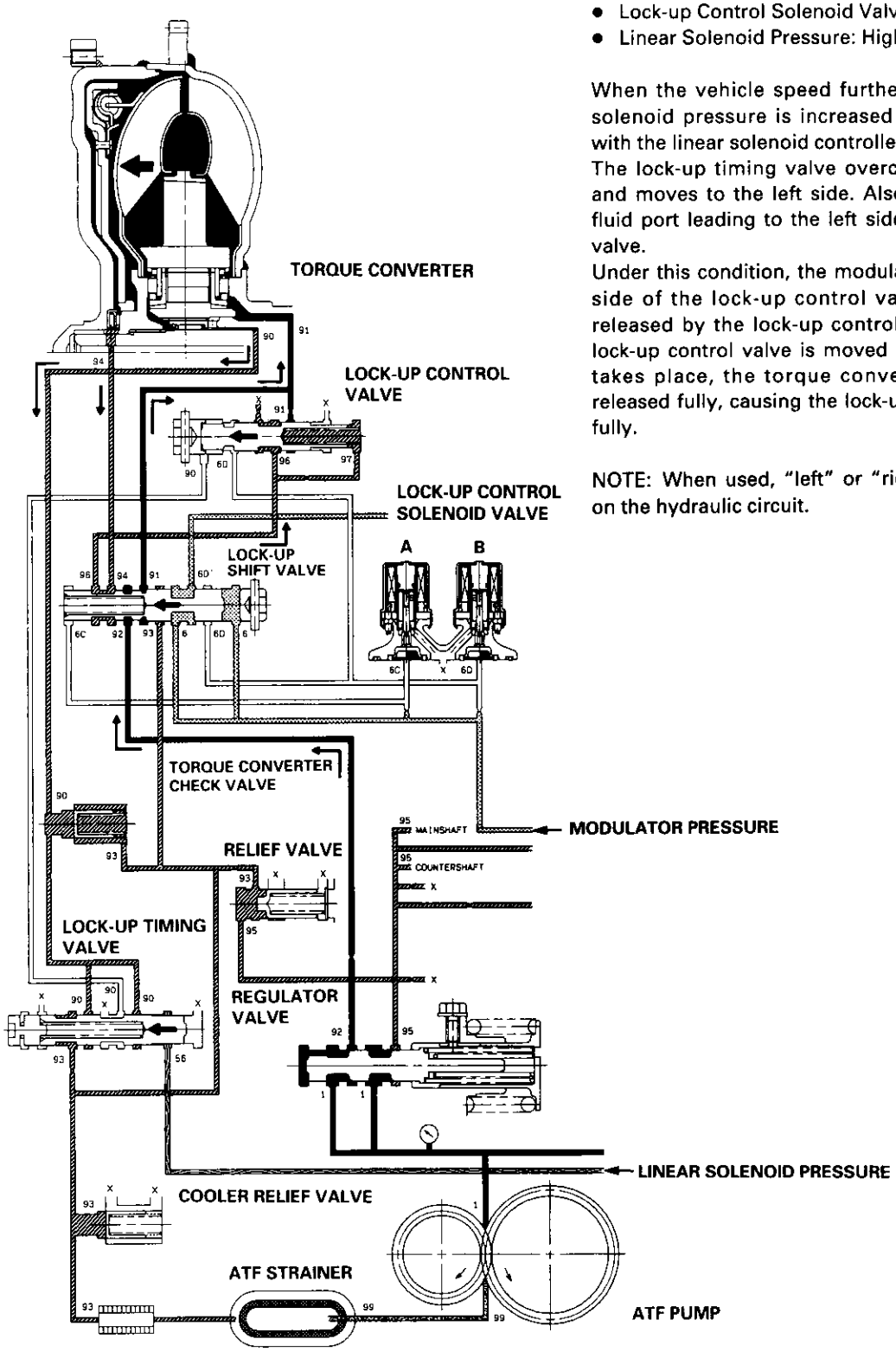

Full Lock-up

- Lock-up Control Solenoid Valve A: ON
- Lock-up Control Solenoid Valve B: ON
- Linear Solenoid Pressure: High

When the vehicle speed further increases, the linear solenoid pressure is increased to high in accordance with the linear solenoid controlled by the PCM.
The lock-up timing valve overcomes the spring force and moves to the left side. Also, this valve closes the fluid port leading to the left side of the lock-up control valve.
Under this condition, the modulator pressure in the left side of the lock-up control valve had already been released by the lock-up control solenoid valve B; the lock-up control valve is moved to the left side. As this takes place, the torque converter back pressure is released fully, causing the lock-up clutch to be engaged fully.

NOTE: When used, "left" or "right" indicates direction on the hydraulic circuit.

(cont'd)

Lock-up System (cont'd)

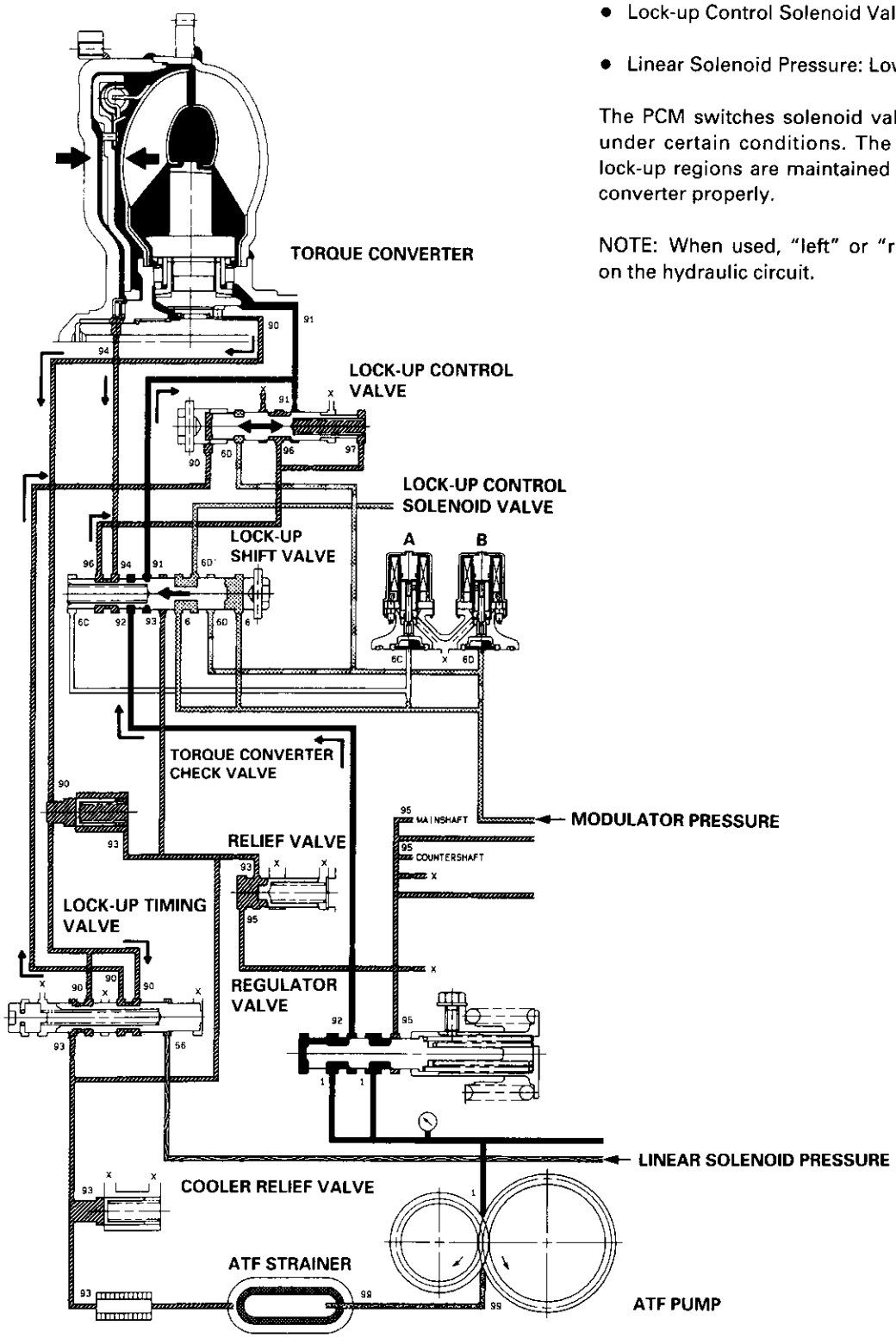

Deceleration Lock-up

- Lock-up Control Solenoid Valve A: ON
- Lock-up Control Solenoid Valve B: Duty Operation OFF ↔ ON
- Linear Solenoid Pressure: Low

The PCM switches solenoid valve B on and off rapidly under certain conditions. The slight lock-up and half lock-up regions are maintained so as to lock the torque converter properly.

NOTE: When used, "left" or "right" indicates direction on the hydraulic circuit.

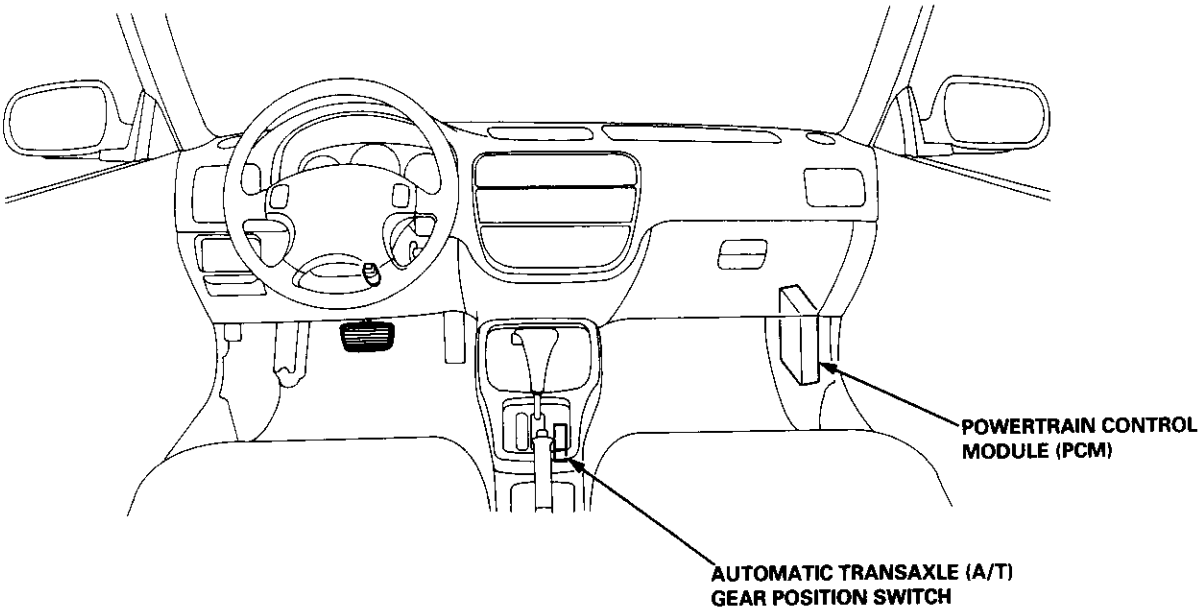
POWERTRAIN CONTROL MODULE (PCM)
AUTOMATIC TRANSAXLE (A/T) GEAR POSITION SWITCH

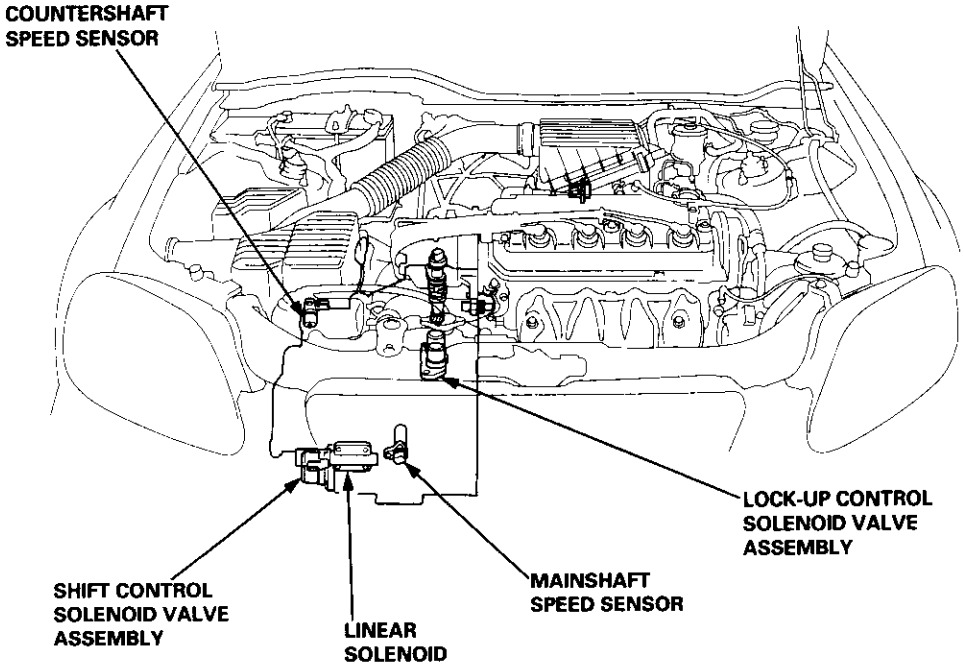
COUNTERSHAFT SPEED SENSOR
LOCK-UP CONTROL SOLENOID VALVE ASSEMBLY
MAINSHAFT SPEED SENSOR
SHIFT CONTROL SOLENOID VALVE ASSEMBLY
LINEAR SOLENOID

PCM Circuit Diagram (A/T Control System: '96 – 98 Models)

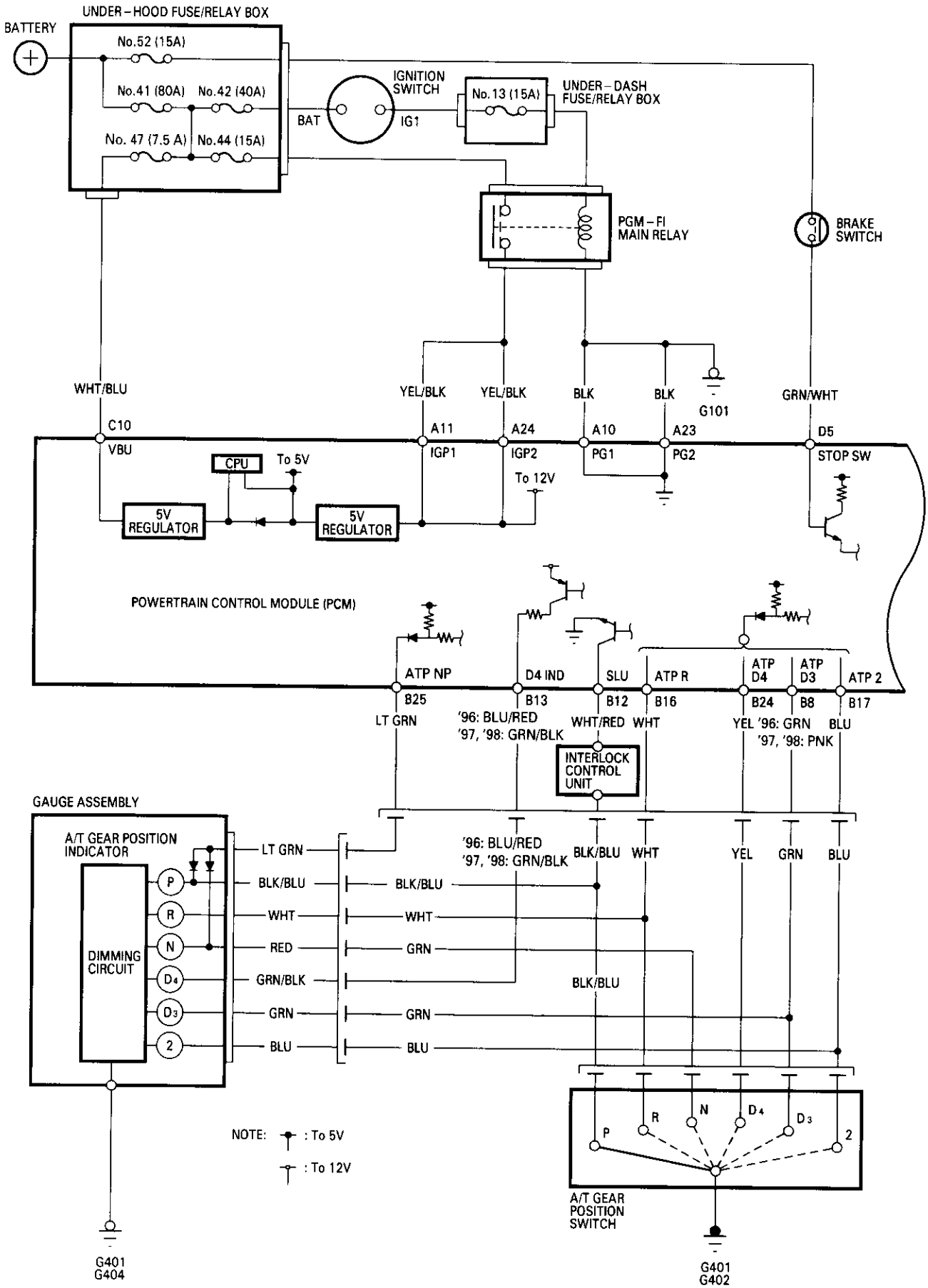

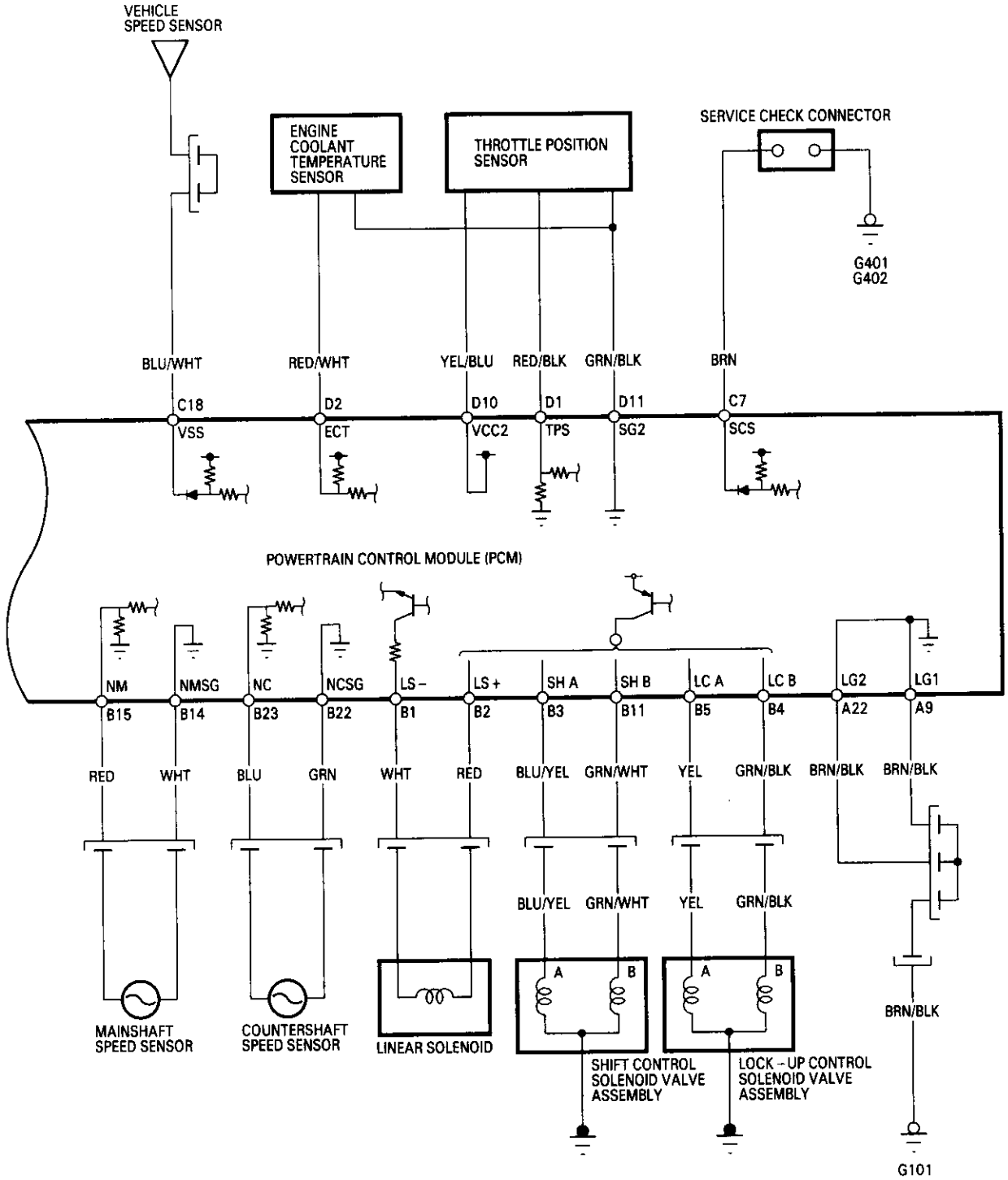

PCM Terminal Locations

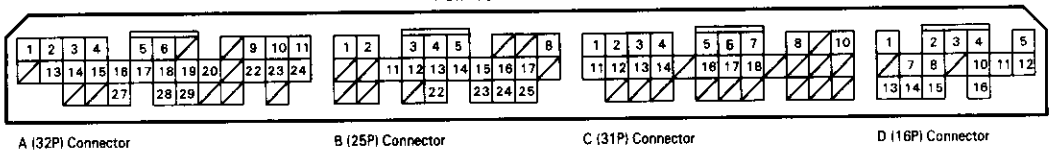

A (32P) Connector B (25P) Connector C (31P) Connector D (16P) Connector

PCM Terminal Voltage/Measuring Conditions ('96 – 98 Models)

A/T Control System

The PCM terminal voltage and measuring conditions are shown for the connector terminals that relate to the A/T control system. The other PCM terminal voltage and measuring conditions are described in section 11.

PCM Terminal Locations

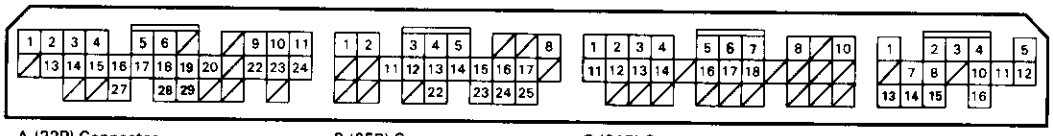

A (32P) Connector B (25P) Connector C (31P) Connector D (16P) Connector

PCM CONNECTOR A (32P)

Terminal Number	Signal	Description	Measuring Conditions/Terminal Voltage
A1 to A8	– see section 11 –		
A9	LG1	Ground	
A10	PG1	Ground	
A11	IGP1	Power supply system	With ignition switch ON (II): Battery voltage With ignition switch OFF: 0 V
A12 to A21	– see section 11 –		
A22	LG2	Ground	
A23	PG2	Ground	
A24	IGP2	Power supply system	With ignition switch ON (II): Battery voltage With ignition switch OFF: 0 V
A25 to A32	– see section 11 –		

PCM CONNECTOR B (25P)

Terminal Number	Signal	Description	Measuring Conditions/Terminal Voltage
B1	LS–	Linear solenoid power supply negative electrode	Ignition switch ON (II): Pulsing signal
B2	LS+	Linear solenoid power supply positive electrode	Ignition switch ON (II): Pulsing signal
B3	SHA	Shift control solenoid valve A control	In 2nd gear and 3rd gear in D3, D4 position, and in 2, R position: Battery voltage In 1st gear and 4th gear in D3, D4 position: 0 V
B4	LCB	Lock-up control solenoid valve B control	When full lock-up: Battery voltage When half lock-up: Pulsing signal
B5	LCA	Lock-up control solenoid valve A control	When lock-up is ON: Battery voltage With no lock-up: 0 V
B6 to B7	—	Not used	
B8	ATP D3	A/T gear position switch D3 position signal input	In D3 position: 0 V In other than D3 position: Battery voltage
B9 to B10	—	Not used	

PCM CONNECTOR B (25P) (cont'd)

Terminal Number	Signal	Description	Measuring Conditions/Terminal Voltage
B11	SHB	Shift control solenoid valve B control	In 1st gear and 2nd gear in D3, D4 position, and in 2 position: Battery voltage In 3rd gear and 4th gear in D3, D4 position: 0 V
B12	SLU	Interlock control	When ignition switch is ON (II), brake pedal depressed and accelerator pedal released: 0 V
B13	D4 IND	D4 Indicator light control	When ignition switch is first turned ON (II): Battery voltage for two seconds In D4 position: Battery voltage
B14	NMSG	Mainshaft speed sensor ground	Always: 0 V
B15	NM	Mainshaft speed sensor signal input	Depending on engine speed: Pulsing signal When engine is stopped: 0 V
B16	ATP R	A/T gear position switch R position signal input	In R position: 0 V In other than R position: Battery voltage
B17	ATP 2	A/T gear position switch 2 position signal input	In 2 position: 0 V In other than 2 position: Battery voltage
B18 to B21	—	Not used	
B22	NCSG	Countershaft speed sensor ground	Always: 0 V
B23	NC	Countershaft speed sensor signal input	Depending on vehicle speed: Pulsing signal When vehicle is stopped: 0 V
B24	ATP D4	A/T gear position switch D4 position signal input	In D4 position: 0 V In other than D4 position: 5 V
B25	ATP NP	A/T gear position switch P and N position signals input	In P and N positions: 0 V In other than P and N positions: Battery voltage

PCM CONNECTOR C (31P)

Terminal Number	Signal	Description	Measuring Conditions/Terminal Voltage
C1 to C6	– see section 11 –		
C7	SCS	Service check signal	With ignition switch ON (II) and service check connector open: 5 V With ignition switch ON (II) and service check connector connected with special tool: 0 V
C8 to C9	– see section 11 –		
C10	VBU	Back-up power system	Always battery voltage
C11 to C31	– see section 11 –		

PCM CONNECTOR D (16P)

Terminal Number	Signal	Description	Measuring Conditions/Terminal Voltage
D1 to D4	– see section 11 –		
D5	STOP SW	Brake switch signal input	Brake pedal depressed: Battery voltage Brake pedal released: 0 V
D6 to D16	– see section 11 –		

PCM Circuit Diagram (A/T Control System: '99 – 00 Models)

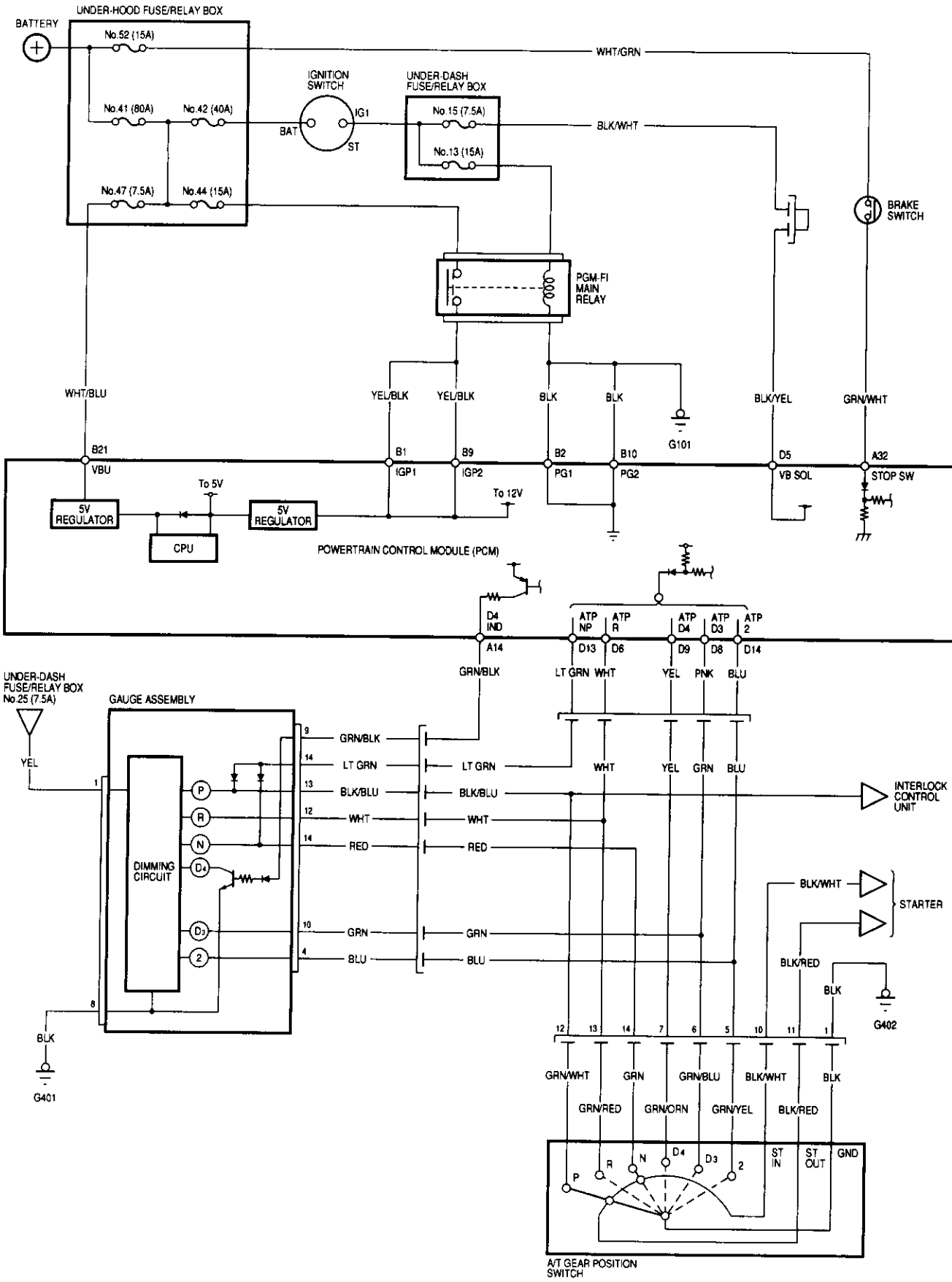

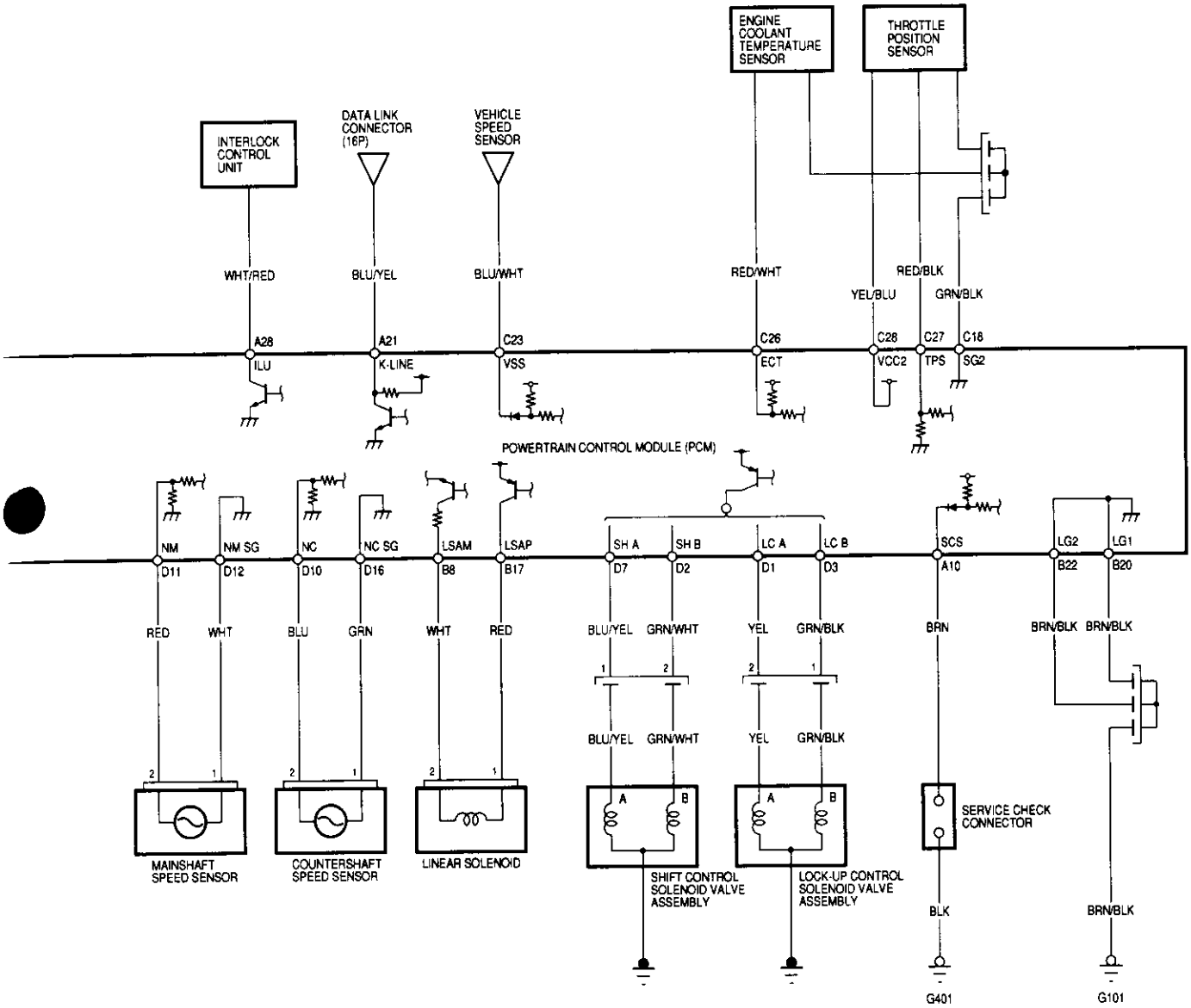

PCM Terminal Locations

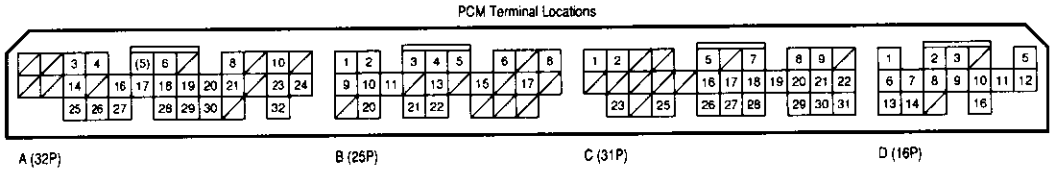

PCM Terminal Voltage/Measuring Conditions ('99 – 00 Models)

A/T Control System

The PCM terminal voltage and measuring conditions are shown for the connector terminals that are related to the A/T control system. The other PCM terminal voltage and measuring conditions are described in section 11.

PCM Connector Terminal Locations

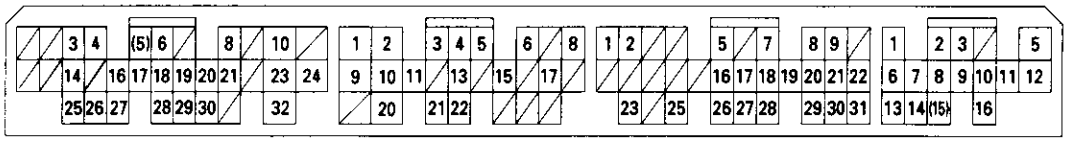

A (32P) B (25P) C (31P) D (16P)

PCM CONNECTOR A (32P)

Terminal Number	Signal	Description	Measuring Conditions/Terminal Voltage
A10	SCS	Service check signal	With ignition switch ON (II) and service check connector open: Approx. 5 V With ignition switch ON (II) and service check connector connected with special tool: 0 V
A14	D4 IND	D4 indicator light control	When ignition switch is first turned ON (II): Approx. 10 V for two seconds In D4 position: Approx. 10 V
A28	ILU	Interlock Control	When ignition switch ON (II), brake pedal depressed, and accelerator pedal released: Battery voltage
A32	STOP SW	Brake switch signal input	Brake pedal depressed: battery voltage Brake pedal released: 0 V

PCM CONNECTOR B (25P)

Terminal Number	Signal	Description	Measuring Conditions/Terminal Voltage
B1	IGP1	Power supply system	With ignition switch ON (II): Battery voltage With ignition switch OFF: 0 V
B2	PG1	Ground	
B8	LS AM	Linear solenoid power supply negative electrode	With ignition switch ON (II): Pulsing signal
B9	IGP2	Power supply system	With ignition switch ON (II): Battery voltage With ignition switch OFF: 0 V
B10	PG2	Ground	
B17	LS AP	Linear solenoid power supply positive electrode	With ignition switch ON (II): Pulsing signal
B20	LG1	Ground	
B21	VBU	Back-up power supply	Always battery voltage
B22	LG2	Ground	

PCM CONNECTOR D (16P)

Terminal Number	Signal	Description	Measuring Conditions/Terminal Voltage
D1	LCA	Lock-up control solenoid valve A control	When lock-up is ON: Battery voltage With no lock-up: 0 V
D2	SHB	Shift control solenoid valve B control	In 2 position, in 1st and 2nd gear in D_4, D_3 position: Battery voltage In 3rd gear in D_4, D_3, in 4th gear in D_4 position: 0 V
D3	LCB	Lock-up control solenoid valve B control	When full lock-up: Battery voltage With half lock-up: Pulsing signal
D4	—	Not used	
D5	VB SOL	Lock-up control solenoids, shift control solenoids and linear solenoid power supply electrode	With ignition switch ON (II): Battery voltage With ignition switch OFF: 0 V
D6	ATP R	A/T gear position switch R position input	In R position: 0 V In other than R position: Approx. 10 V
D7	SHA	Shift control solenoid valve A control	In 2 position, in 2nd and 3rd gear in D_4, D_3 position: Battery voltage In 1st gear in D_4, D_3 position, in 4th gear in D_4 position: 0 V
D8	ATP D3	A/T gear position switch D_3 position input	In D_3 position: 0 V In other than D_3 position: Approx. 10 V
D9	ATP D4	A/T gear position switch D_4 position switch	In D_4 position: 0 V In other than D_4 position: Approx. 5 V
D10	NC	Countershaft speed sensor signal input	Depending on vehicle speed: Pulsing signal When vehicle is stopped: 0 V
D11	NM	Mainshaft speed sensor signal input	Depending on engine speed: Pulsing signal When engine is stopped: 0 V
D12	NMSG	Mainshaft speed sensor ground	
D13	ATP NP	A/T gear position switch P and N position input	In P and N positions: 0 V In other than P and N positions: Approx. 10 V
D14	ATP 2	A/T gear position switch 2 position input	In 2 position: 0 V In other than 2 position: Approx. 10 V
D16	NCSG	Countershaft speed sensor ground	

Checking the Diagnostic Trouble Code (DTC) with an OBD II Scan tool or Honda PGM Tester

When the PCM senses an abnormality in the input or output systems, the D4 indicator light in the gauge assembly will blink. When the 16P Data Link Connector (DLC) (located under the dash on the driver's side) is connected to the OBD II Scan Tool or Honda PGM Tester as shown, the scan tool or tester will indicate the Diagnostic Trouble Code (DTC) when the ignition switch is turned ON(II).

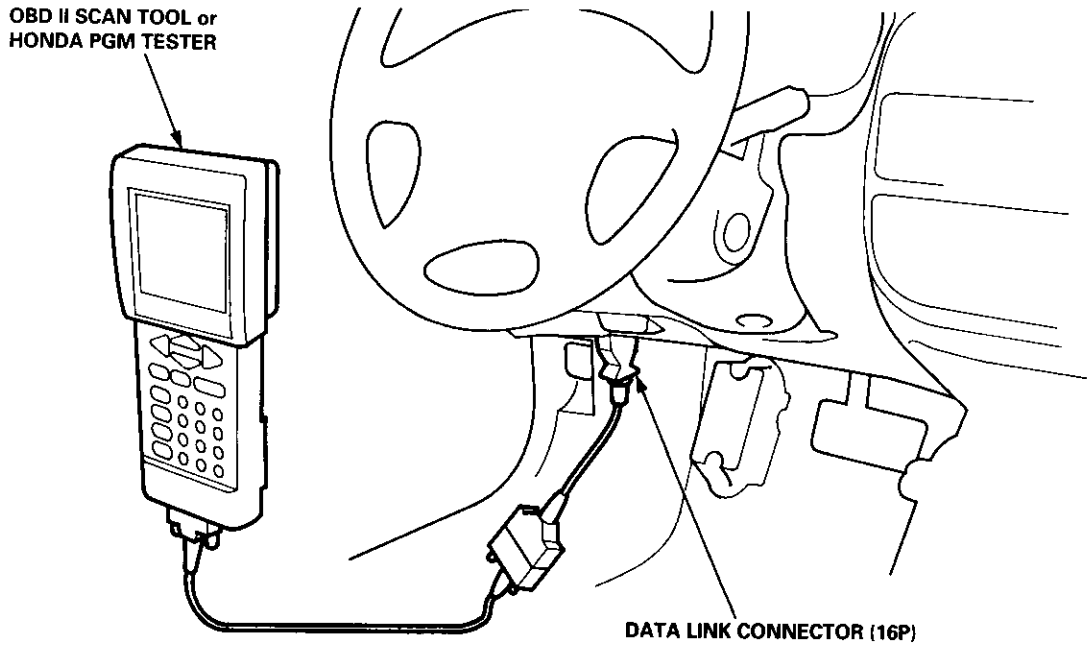

If the D4 indicator light or the MIL has been reported on, or if a driveability problem is suspected, follow this procedure:

1. Connect the OBD II Scan Tool (conforming to SAE J1978) or Honda PGM Tester to the 16P DLC. (See the OBD II Scan Tool or Honda PGM Tester user's manual for specific instructions. If you are using the Honda PGM Tester, make sure it is set to the SAE DTC type.)
2. Turn the ignition switch ON (II), and observe the DTC on the screen.
3. Record all fuel and emission DTCs, A/T DTCs, and freeze data.
4. If there is a fuel and emissions DTC, first check the fuel and emissions system as indicated by the DTC (except for DTC P0700). DTC P0700 means there is one or more A/T DTC, and no problems were detected in the fuel and emissions circuit of the PCM.
5. Write down the radio station presets.
6. Reset the memory with the PGM Tester or by removing the BACK UP fuse in the passenger's under-dash fuse/relay box for more than 10 seconds.
7. Drive the vehicle for several minutes at speeds over 30 mph (50 km/hr), and then recheck for DTCs. If the A/T DTC returns, go to the Symptom-to Component Chart on pages 14-52 and 14-53 for '96 – 98 models, and pages 14-54 and 14-55 for the '99 – 00 models. If the DTC does not return, there was an intermittent problem within the circuit. Make sure all pins and terminals in the circuit are tight, and then go to step 8.
8. Reset the radio preset stations, and set the clock.

Checking the Diagnostic Trouble Code (DTC)
with the Service Check Connector and Special Tool

When the PCM senses an abnormality in the input or output systems, the D4 indicator light in the gauge assembly will blink. When the Service Check Connector (located under the dash on the passenger side) is connected with the special tool as shown, the D4 indicator light will blink the Diagnostic Trouble Code (DTC) when the ignition switch is turned ON (II).

When the D4 indicator light has been reported on, connect the Service Check Connector with the special tool. Then turn ON (II) the ignition switch and observe the D4 indicator light.

GAUGE ASSEMBLY

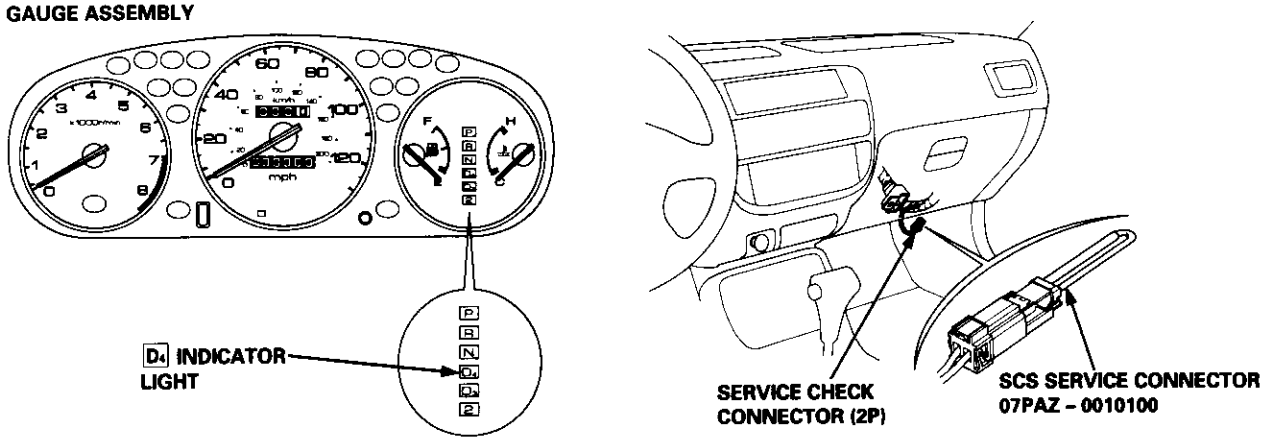

Codes 1 through 9 are indicated by individual short blinks. Codes 10 and above are indicated by a series of long and short blinks. One long blink equals 10 short blinks. Add the long and short blinks together to determine the code. After determining the code, refer to the electrical system Symptom-to Component Chart on pages 14-52 and 14-53 for '96 – 98 models, and 14-54 and 14-55 for the '99 – 00 models.

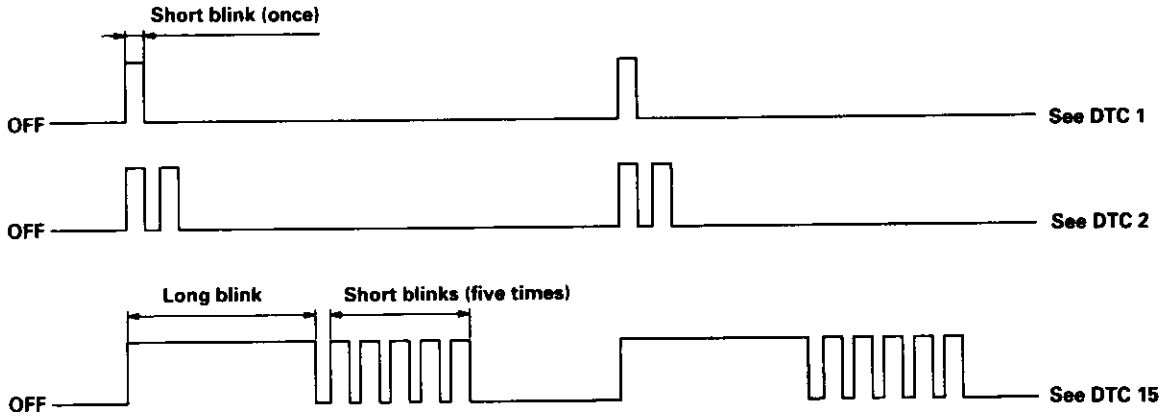

(cont'd)

(cont'd)

1. Remove the kick panel on the passenger's side (see section 20).

2. Remove the PCM, and turn the PCM over.

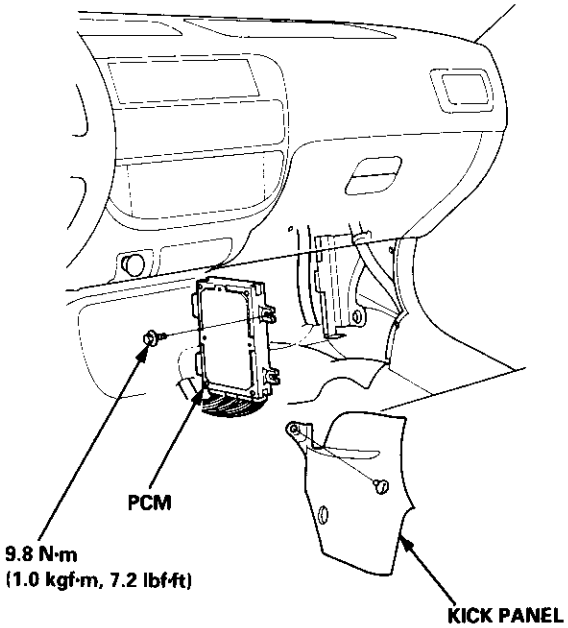

3. Inspect the circuit on the PCM according to the troubleshooting flowchart with the special tools and a digital multimeter as shown.

How to Use the Backprobe Set

Connect the backprobe adapters to the stacking patch cords, and connect the cords to a multimeter. Using the wire insulation as a guide for the contoured tip of the backprobe adapter, gently slide the tip into the connector from the wire side until it comes in contact with the terminal end of the wire.

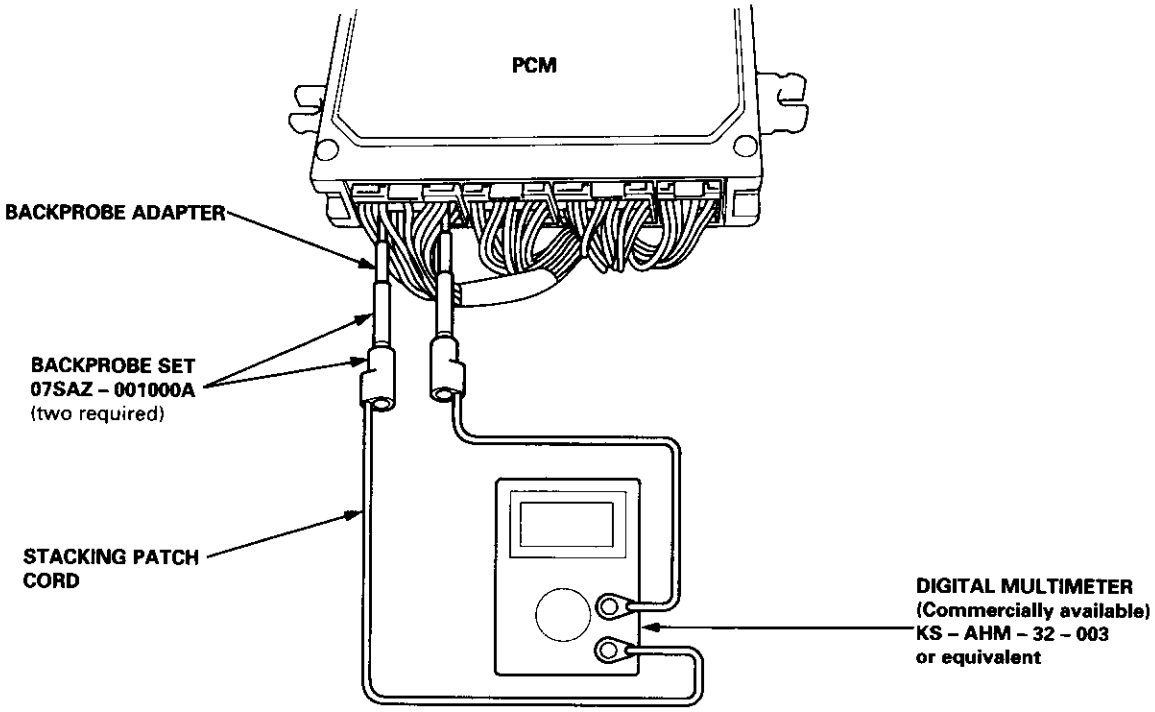

PCM Reset Procedure

1. Turn the ignition switch off.

2. Remove the BACK UP fuse (7.5 A) from the under-hood fuse/relay box for 10 seconds to reset the PCM.

   NOTE:
   - Disconnecting the BACK UP fuse also cancels the radio preset stations and clock setting. Make note of the radio presets before removing the fuse so you can reset them.
   - The PCM memory can also be cleared by using the OBD II Scan Tool or Honda PGM Tester.

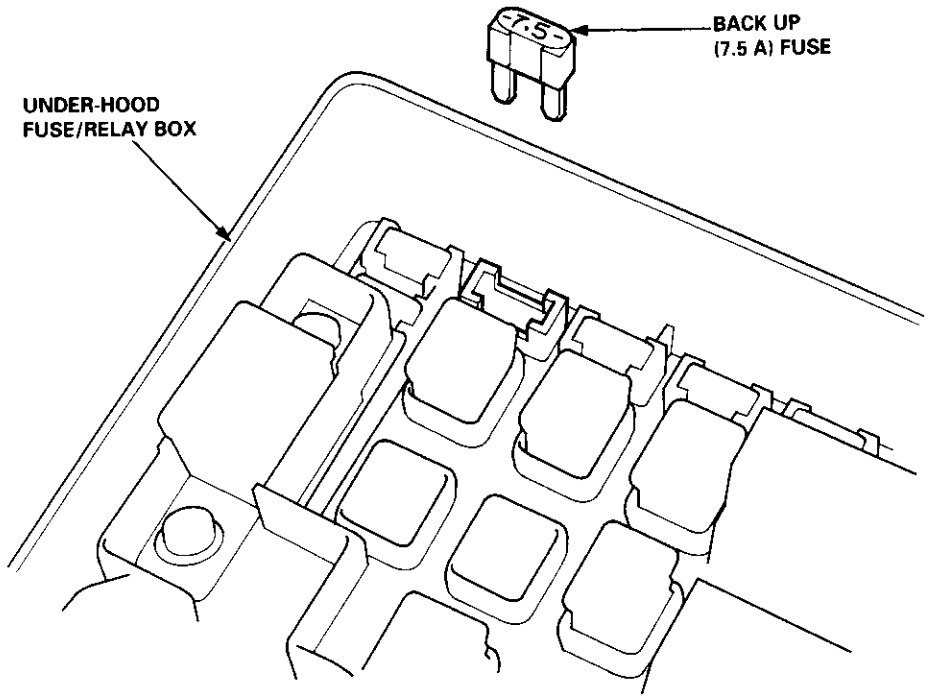

Final Procedure

NOTE: This procedure must be done after any troubleshooting.

1. Turn the ignition switch OFF.

2. Reset the PCM.

3. Disconnect the OBD II Scan Tool or Honda PGM Tester from the Data Link Connector, or remove the special tool from the Service Check Connector.

4. Turn the ignition switch ON (II), and set the radio presets and clock setting.

5. To verify the problem is repaired, test-drive the vehicle for several minutes at speeds over 30 mph (48 km/h).

Electrical System — '96 – 98 Models

DTC*1	D4 Indicator Light	MIL	Detection Item	Page
P1753 (1)	Blinks	ON	Lock-up control solenoid valve A	14-56
P1758 (2)	Blinks	ON	Lock-up control solenoid valve B	14-58
P1705 (5)	Blinks	ON	A/T gear position switch (short to ground)	14-60
P1706 (6)	OFF	ON	A/T gear position switch (open)	14-62
P0753 (7)	Blinks	ON	Shift control solenoid valve A	14-64
P0758 (8)	Blinks	ON	Shift control solenoid valve B	14-66
P0720 (9)	Blinks	ON	Countershaft speed sensor	14-68
P0715 (15)	'96 – 97 models: OFF '98 model: Blinks	ON	Mainshaft speed sensor	14-70
P1768 (16)	Blinks	ON	Linear solenoid	14-72
P0740 (40)	OFF	ON	Lock-up control system	14-74
P0730 (41)	OFF	ON	Shift control system	14-75
P0700*2 (none)	——	OFF	Automatic transmission control system in the PGM-FI control system	——

*1: The DTC in the parentheses is the code D4 indicator light indicates when the Data Link Connector is connected to the Honda PGM Tester.

*2: Whenever the Honda PGM Tester or Scan Tool detects an automatic transmission control system DTC, P0700 will be set in the PGM-FI control system.

If the self-diagnostic D4 indicator light does not blink, perform an inspection according to the table below.

Symptom	Inspection	Ref. page
D4 indicator light does not come on for two seconds after ignition switch is first turned ON (II).	———	14-76
D4 indicator light is on constantly (not blinking) whenever the ignition switch is ON (II).	———	14-78
Shift lever cannot be moved from P position with the brake pedal depressed.	Inspection	14-79

NOTE: If a customer describes the symptom for code P1706 (6), it will be necessary to recreate the symptom by test-driving, then recheck the DTC.

Electrical System — '99 – 00 Models

DTC*1	D4 Indicator Light	MIL	Detection Item	Page
P1753 (1)	Blinks	ON	Lock-up control solenoid valve A	14-80
P1758 (2)	Blinks	ON	Lock-up control solenoid valve B	14-82
P1705 (5)	Blinks	ON	A/T gear position switch (short to ground)	14-84
P1706 (6)	OFF	ON	A/T gear position switch (open)	14-87
P0753 (7)	Blinks	ON	Shift control solenoid valve A	14-89
P0758 (8)	Blinks	ON	Shift control solenoid valve B	14-91
P0720 (9)	Blinks	ON	Countershaft speed sensor	14-93
P0715 (15)	Blinks	ON	Mainshaft speed sensor	14-95
P1768 (16)	Blinks	ON	Linear solenoid	14-97
P0740 (40)	OFF	ON	Lock-up control system	14-99
P0730 (41)	OFF	ON	Shift control system	14-100
P0700*2 (none)	——	OFF	Automatic transmission control system in the PGM-FI control system	——

*1: The DTC in the parentheses is the code D4 indicator light indicates when the Data Link Connector is connected to the Honda PGM Tester.

*2: Whenever the Honda PGM Tester or Scan Tool detects an automatic transmission control system DTC, P0700 will be set in the PGM-FI control system.

If the self-diagnostic D4 indicator light does not blink and following symptoms appear, perform an inspection according to the table below.

Symptom	Reference page
D4 indicator light is on constantly (not blinking) whenever the ignition switch is ON (II).	14-101
D4 indicator light does not come on for two seconds after ignition switch is first turned ON (II).	14-102
Shift lever cannot be moved from P position with the brake pedal depressed.	14-104

Troubleshooting Flowchart — Lock-up Control Solenoid Valve A

NOTE: Record all freeze data before you troubleshoot.

- **OBD II Scan Tool indicates Code P1753.**
- **Self-diagnosis D4 indicator light blinks once.**

Possible Cause
• Disconnected lock-up control solenoid valve A connector • Short or open in lock-up control solenoid valve A wire • Faulty lock-up control solenoid valve A

Check for a Short to Power:
1. Turn the ignition switch OFF.
2. Disconnect the A (32P) and B (25P) connectors from the PCM.
3. Turn the ignition switch ON (II).
4. Measure the voltage between the B5 and A9 or A22 terminals.

PCM CONNECTORS

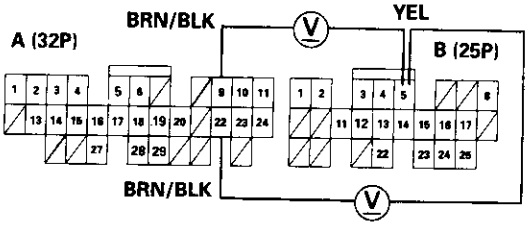

Wire side of female terminals

Is there voltage?

YES → **Repair short to power in the wire between the B5 terminal and the lock-up control solenoid valve A.**

NO ↓

Measure Lock-up Control Solenoid Valve A Resistance:
1. Turn the ignition switch OFF.
2. Measure the resistance between the B5 and A9 or A22 terminals.

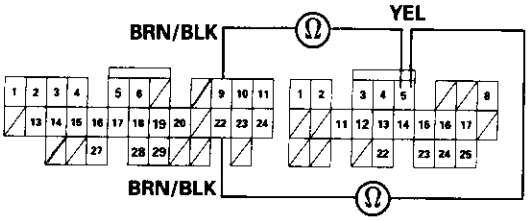

Is the resistance 12 – 25 Ω?

YES → **Check for loose PCM connectors. If necessary, substitute a known-good solenoid valve assembly or PCM and recheck.**

NO ↓

To page 14-57

From page 14-56

Check Lock-up Control Solenoid Valve A for a Short Circuit:

1. Disconnect the 2P connector from the lock-up control solenoid valve assembly.
2. Check for continuity between the B5 and A9 or A22 terminals.

Is there continuity?

YES → **Repair short to ground in the wire between the B5 terminal and the lock-up control solenoid valve A.**

NO

Measure Lock-up Control Solenoid Valve A Resistance at the Solenoid Connector:
Measure the resistance between the No. 2 terminal of the lock-up control solenoid connector and body ground.

Is the resistance 12 – 25 Ω?

YES → **Check for open in the wire between the B5 terminal and the lock-up control solenoid valve A.**

NO

Replace the lock-up control solenoid valve assembly.

PCM CONNECTORS

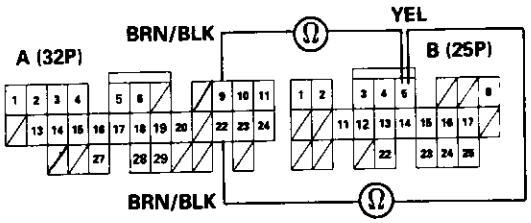

Wire side of female terminals

LOCK-UP CONTROL SOLENOID CONNECTOR

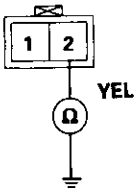

Terminal side of male terminals

Troubleshooting Flowchart — Lock-up Control Solenoid Valve B

NOTE: Record all freeze data before you troubleshoot.

- **OBD II Scan Tool indicates Code P1758.**
- **Self-diagnosis D4 indicator light blinks twice.**

Possible Cause

- **Disconnected lock-up control solenoid valve B connector**
- **Short or open in lock-up control solenoid valve B wire**
- **Faulty lock-up control solenoid valve B**

Check for a Short to Power:

1. Turn the ignition switch OFF.
2. Disconnect the A (32P) and B (25P) connectors from the PCM.
3. Turn the ignition switch ON (II).
4. Measure the voltage between the B4 and A9 or A22 terminals.

PCM CONNECTORS

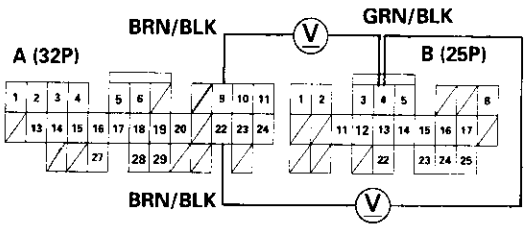

Wire side of female terminals

Is there voltage?

YES → **Repair short to power in the wire between the B4 terminal and the lock-up control solenoid valve B.**

NO

Measure Lock-up Control Solenoid Valve B Resistance:

1. Turn the ignition switch OFF.
2. Measure the resistance between the B4 and A9 or A22 terminals.

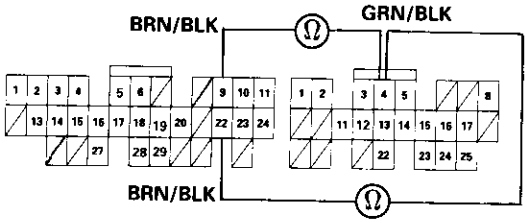

Is the resistance 12 – 25 Ω?

YES → **Check for loose PCM connectors. If necessary, substitute a known-good solenoid valve assembly or PCM and recheck.**

NO

To page 14-59

From page 14-58

Check Lock-up Control Solenoid Valve B for a Short Circuit:
1. Disconnect the 2P connector from the lock-up control solenoid valve assembly.
2. Check for continuity between the B4 and A9 or A22 terminals.

Is there continuity?

YES → **Repair short to ground in the wire between the B4 terminal and the lock-up control solenoid valve B.**

NO

Measure Lock-up Control Solenoid Valve B Resistance at the Solenoid Connector:
Measure the resistance between the No. 1 terminal of the lock-up control solenoid connector and body ground.

Is the resistance 12 – 25 Ω?

YES → **Check for open in the wire between the B4 terminal and the lock-up control solenoid valve B.**

NO

Replace the lock-up control solenoid valve assembly.

PCM CONNECTORS

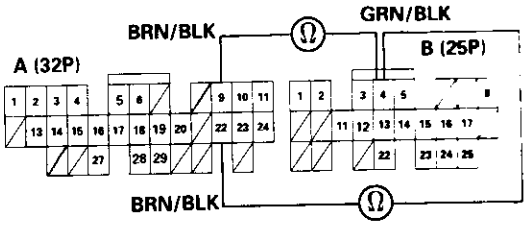

Wire side of female terminals

LOCK-UP CONTROL SOLENOID CONNECTOR

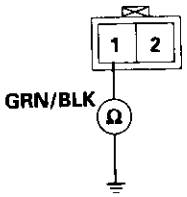

Terminal side of male terminals

Troubleshooting Flowchart — A/T Gear Position Switch (Short)

NOTE: Record all freeze data before you troubleshoot.

- **OBD II Scan Tool indicates Code P1705.**
- **Self-diagnosis D4 indicator light blinks five times.**

Possible Cause
• Short in A/T gear position switch wire • Faulty A/T gear position switch

NOTE: Code P1705 (5) is caused when the PCM receives two gear position inputs at the same time.

Observe the A/T Gear Position Indicator:
1. Turn the ignition switch ON (II).
2. Observe the A/T gear position indicator, and shift to each position.

Do any indicators stay on when the shift lever is not in those positions?

NO → **The system is OK at this time. Check the wire harness for damage.**

YES

Measure ATP R Voltage:
1. Shift to all positions other than R.
2. Measure the voltage between the B16 and A9 or A22 terminals.

Is there battery voltage?

NO → **Check for short in the wire between the B16 terminal and the A/T gear position switch or A/T gear position indicator. If wire is OK, check for loose PCM connectors. If necessary, substitute a known-good PCM and recheck.**

YES

Measure ATP NP Voltage:
1. Shift to all positions other than N or P.
2. Measure the voltage between the B25 and A9 or A22 terminals.

Is there battery voltage?

NO → **Check for short in the wire between the B25 terminal and the A/T gear position indicator, or a short in the wires between the A/T gear position indicator and the A/T gear position switch. If wires are OK, check for loose PCM connectors. If necessary, substitute a known-good PCM and recheck.**

YES

Measure ATP D4 Voltage:
1. Shift to all positions other than D4.
2. Measure the voltage between the B24 and A9 or A22 terminals.

Is there approx. 5 V?

NO → **Check for short in the wire between the B24 terminal and the A/T gear position switch. If wire is OK, check for loose PCM connectors. If necessary, substitute a known-good PCM and recheck.**

YES

To page 14-61

PCM CONNECTORS

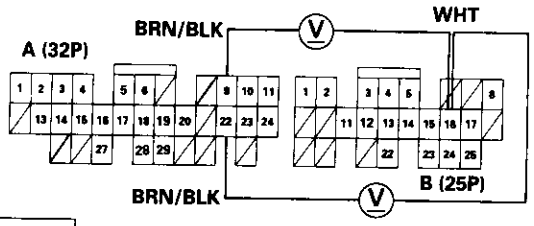

Wire side of female terminals

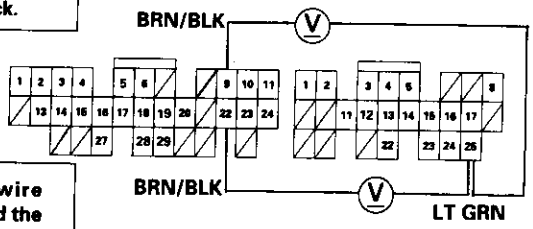

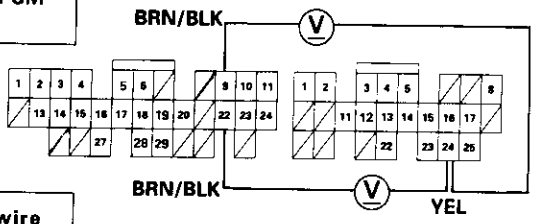

From page 14-60

Measure ATP D3 Voltage:
1. Shift to all positions other than [D3].
2. Measure the voltage between the B8 and A9 or A22 terminals.

Is there battery voltage?

NO → **Check for short in the wire between the B8 terminal and the A/T gear position switch or A/T gear position indicator. If wire is OK, check for loose PCM connectors. If necessary, substitute a known-good PCM and recheck.**

YES ↓

Measure ATP2 Voltage:
1. Shift to all positions other than [2].
2. Measure the voltage between the B17 and A9 or A22 terminals.

Is there battery voltage?

NO → **Check for short in the wire between the B17 terminal and the A/T gear position switch or A/T gear position indicator. If wire is OK, check for loose PCM connectors. If necessary, substitute a known-good PCM and recheck.**

YES ↓

Check for loose PCM connectors. If necessary, substitute a known-good PCM and recheck.

PCM CONNECTORS

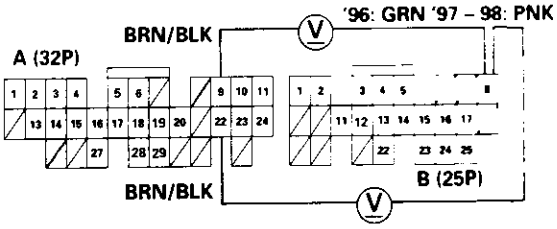

Wire side of female terminals

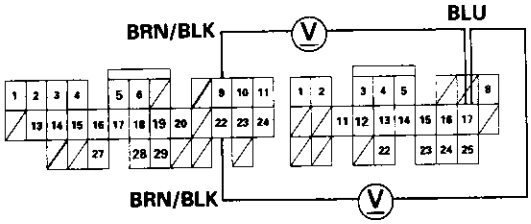

Troubleshooting Flowchart — A/T Gear Position Switch (Open)

NOTE: Record all freeze data before you troubleshoot.

- **OBD II Scan Tool indicates Code P1706.**
- **Self-diagnosis D4 indicator light blinks six times.**

Possible Cause

- **Disconnected A/T gear position switch connector**
- **Open in A/T gear position switch wire**
- **Faulty A/T gear position switch**

Measure ATP R Voltage:
1. Turn the ignition switch ON (II).
2. Shift to R position.
3. Measure the voltage between the B16 and A9 or A22 terminals.

PCM CONNECTORS

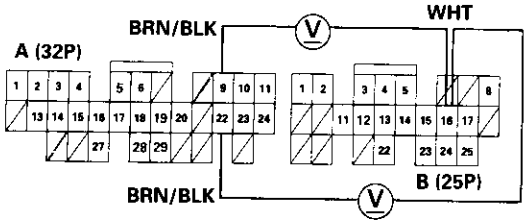

Wire side of female terminals

Is there voltage?

YES → **Repair open in the wire between the B16 terminal and the A/T gear position switch.**

NO

Measure ATP NP Voltage:
1. Shift to N or P position.
2. Measure the voltage between the B25 and A9 or A22 terminals.

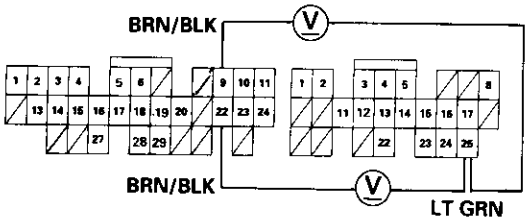

Is there voltage?

YES → **Repair open in the wire between the B25 terminal and the A/T gear position indicator or the A/T gear position switch.**

NO

Measure ATP D4 Voltage:
1. Shift to D4 position.
2. Measure the voltage between the B24 and A9 or A22 terminals.

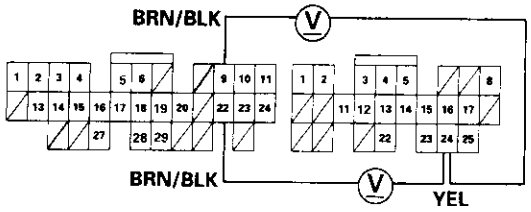

Is there voltage?

YES → **Repair open in the wire between the B24 terminal and the A/T gear position switch.**

NO

To page 14-63

From page 14-62

Measure ATP D3 Voltage:
1. Shift to [D3] position.
2. Measure the voltage between the B8 and A9 or A22 terminals.

PCM CONNECTORS

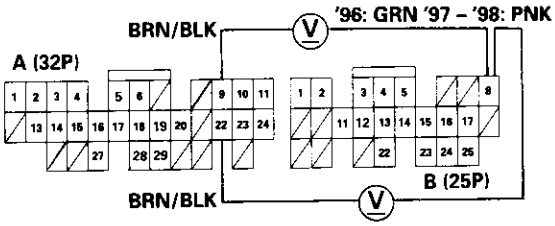

Wire side of female terminals

Is there voltage?

YES → **Repair open in the wire between the B8 terminal and the A/T gear position switch.**

NO

Measure ATP2 Voltage:
1. Shift to [2] position.
2. Measure the voltage between the B17 and A9 or A22 terminals.

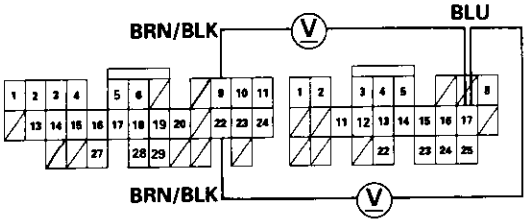

Is there voltage?

YES → **Repair open in the wire between the B17 terminal and the A/T gear position switch.**

NO

Check for loose PCM connectors. If necessary, substitute a known-good PCM and recheck.

Troubleshooting Flowchart — Shift Control Solenoid Valve A

NOTE: Record all freeze data before you troubleshoot.

- **OBD II Scan Tool indicates Code P0753.**
- **Self-diagnosis D4 indicator light blinks seven times.**

Possible Cause

- **Disconnected shift control solenoid valve A connector**
- **Short or open in shift control solenoid valve A wire**
- **Faulty shift control solenoid valve A**

Check for a Short to Power:

1. Turn the ignition switch OFF.
2. Disconnect the A (32P) and B (25P) connectors from the PCM.
3. Turn the ignition switch ON (II).
4. Measure the voltage between the B3 and A9 or A22 terminals.

PCM CONNECTORS

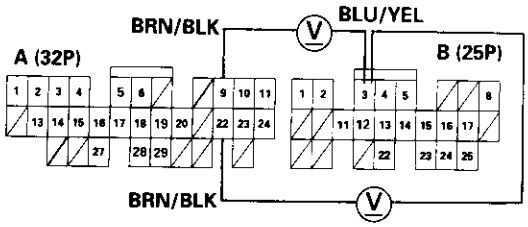

Wire side of female terminals

Is there voltage?

YES → **Repair short to power in the wire between the B3 terminal and the shift control solenoid valve A.**

NO

Measure Shift Control Solenoid Valve A Resistance:

1. Turn the ignition switch OFF.
2. Measure the resistance between the B3 and A9 or A22 terminals.

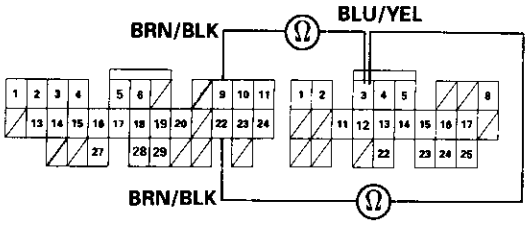

Is the resistance 12 – 25 Ω?

YES → **Check for loose PCM connectors. If necessary, substitute a known-good solenoid valve assembly or PCM and recheck.**

NO

To page 14-65

From page 14-64

Check Shift Control Solenoid Valve A for a Short Circuit:
1. Disconnect the 2P connector from the shift control solenoid valve assembly.
2. Check for continuity between the B3 and A9 or A22 terminals.

PCM CONNECTORS

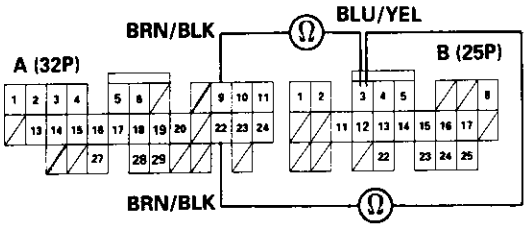

Wire side of female terminals

Is there continuity?

YES → **Repair short to ground in the wire between the B3 terminal and the shift control solenoid valve A.**

NO

Measure Shift Control Solenoid Valve A Resistance at the Solenoid Connector:
Measure the resistance between the No. 1 terminal of the shift control solenoid connector and body ground.

SHIFT CONTROL SOLENOID CONNECTOR

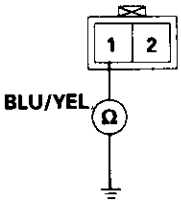

Terminal side of male terminals

Is the resistance 12 – 25 Ω?

YES → **Check for open in the wire between the B3 terminal and the shift control solenoid valve A.**

NO

Replace the shift control solenoid valve assembly.

Troubleshooting Flowchart — Shift Control Solenoid Valve B

NOTE: Record all freeze data before you troubleshoot.

- **OBD II Scan Tool indicates Code P0758.**
- **Self-diagnosis D4 indicator light blinks eight times.**

Possible Cause
• Disconnected shift control solenoid valve B connector • Short or open in shift control solenoid valve B wire • Faulty shift control solenoid valve B

Check for a Short to Power:
1. Turn the ignition switch OFF.
2. Disconnect the A (32P) and B (25P) connectors from the PCM.
3. Turn the ignition switch ON (II).
4. Measure the voltage between the B11 and A9 or A22 terminals.

PCM CONNECTORS

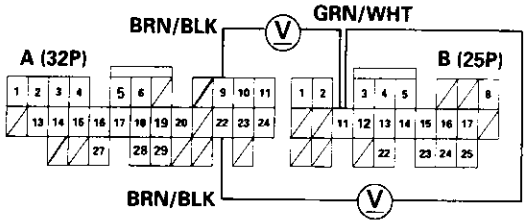

Wire side of female terminals

Is there voltage?

YES → **Repair short to power in the wire between the B11 terminal and the shift control solenoid valve B.**

NO ↓

Measure Shift Control Solenoid Valve B Resistance:
1. Turn the ignition switch OFF.
2. Measure the resistance between the B11 and A9 or A22 terminals.

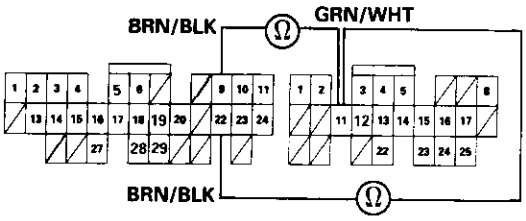

Is the resistance 12 – 25 Ω?

YES → **Check for loose PCM connectors. If necessary, substitute a known-good solenoid valve assembly or PCM and recheck.**

NO ↓

To page 14-67

From page 14-66

Check Shift Control Solenoid Valve B for a Short Circuit:
1. Disconnect the 2P connector from the shift control solenoid valve assembly.
2. Check for continuity between the B11 and A9 or A22 terminals.

PCM CONNECTORS

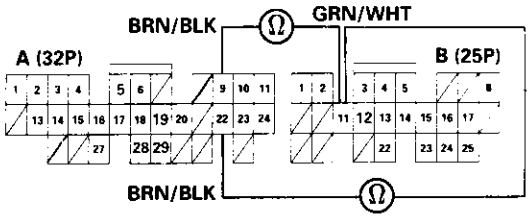

Wire side of female terminals

Is there continuity?

YES → **Repair short to ground in the wire between the B11 terminal and the shift control solenoid valve B.**

NO

Measure Shift Control Solenoid Valve B Resistance at the Solenoid Connector:
Measure the resistance between the No. 2 terminal of the shift control solenoid connector and body ground.

SHIFT CONTROL SOLENOID CONNECTOR

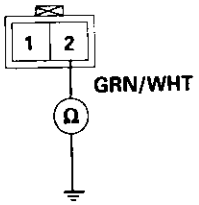

Terminal side of male terminals

Is the resistance 12 – 25 Ω?

YES → **Check for open in the wire between the B11 terminal and the shift control solenoid valve B.**

NO

Replace the shift control solenoid valve assembly.

Troubleshooting Flowchart — Countershaft Speed Sensor

NOTE: Record all freeze data before you troubleshoot.

- **OBD II Scan Tool indicates Code P0720.**
- **Self-diagnosis D4 indicator light blinks nine times.**

Possible Cause

- **Loose or faulty connection between the PCM and car harness**
- **Disconnected countershaft speed sensor connector**
- **Short or open in countershaft speed sensor wire**
- **Faulty countershaft speed sensor**

Check the countershaft speed sensor installation.

Is the countershaft speed sensor installed properly?

NO → **Reinstall and recheck.**

YES

Measure Countershaft Speed Sensor Resistance at the Sensor Connector:

1. Disconnect the 2P connector from the countershaft speed sensor connector.
2. Measure the resistance of the countershaft speed sensor.

Is the resistance 400 – 600 Ω?

NO → **Replace the countershaft speed sensor.**

YES

Check Countershaft Speed Sensor for a Short Circuit:

1. Disconnect the B (25P) connector from the PCM.
2. Check for continuity between the body ground and the B23 terminal and B22 terminal individually.

Is there continuity?

YES → **Repair short in the wires between the B23 and B22 terminals and the countershaft speed sensor.**

NO

To page 14-69

COUNTERSHAFT SPEED SENSOR CONNECTOR

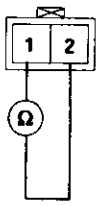

Terminal side of male terminals

PCM CONNECTOR B (25P)

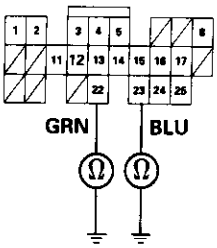

Wire side of female terminals

From page 14-68

Measure Countershaft Speed Sensor Resistance:
1. Connect the countershaft speed sensor 2P connector.
2. Measure the resistance between the B23 and B22 terminals.

Is the resistance 400 – 600 Ω?

NO → **Repair loose terminal or open in the wires between the B23 and B22 terminals and the countershaft speed sensor.**

YES → **Check for loose PCM connectors. If necessary, substitute a known-good PCM and recheck.**

PCM CONNECTOR B (25P)

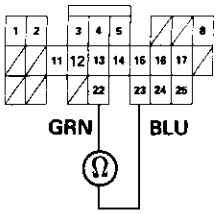

Wire side of female terminals

Troubleshooting Flowchart — Mainshaft Speed Sensor

NOTE: Record all freeze data before you troubleshoot.

- **OBD II Scan Tool indicates Code P0715.**
- **Self-diagnosis D4 indicator light indicates Code 15.**

Possible Cause
• **Disconnected mainshaft speed sensor connector** • **Short or open in mainshaft speed sensor wire** • **Faulty mainshaft speed sensor**

NOTE: Code P0715 (15) on the PCM doesn't always mean there's an electrical problem in the mainshaft or countershaft speed sensor circuit; code P0715 (15) may also indicate a mechanical problem in the transmission.

Check the mainshaft and countershaft speed sensor installation.

Are the mainshaft and countershaft speed sensor installed properly?

NO → **Reinstall and recheck.**

YES

Measure Mainshaft Speed Sensor Resistance at the Sensor Connector:
1. Disconnect the 2P connector from the mainshaft speed sensor connector.
2. Measure the resistance of the mainshaft speed sensor.

MAINSHAFT SPEED SENSOR CONNECTOR

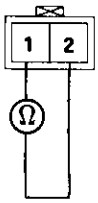

Terminal side of male terminals

Is the resistance 400 – 600 Ω?

NO → **Replace the mainshaft speed sensor.**

YES

Check Mainshaft Speed Sensor for a Short Circuit:
1. Disconnect the B (25P) connector from the PCM.
2. Check for continuity between body ground and B15 terminal and the B14 terminal individually.

PCM CONNECTOR B (25P)

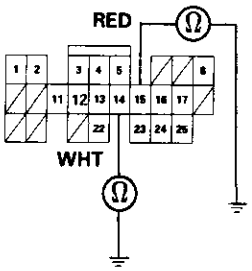

Wire side of female terminals

Is there continuity?

YES → **Repair short in the wires between the B15 and B14 terminals and the mainshaft speed sensor.**

NO

To page 14-71

From page 14-70

Measure Mainshaft Speed Sensor Resistance:
1. Connect the mainshaft speed sensor 2P connector.
2. Measure the resistance between the B15 and B14 terminals.

Is the resistance 400 – 600 Ω?

YES → **Run the Electrical Troubleshooting Flowchart for code P0720 (9). Check for loose PCM connectors. If necessary, substitute a known-good PCM and recheck.**

NO ↓

Check NM Wire Continuity:
1. Disconnect the 2P connector from the mainshaft speed sensor connector.
2. Check for continuity between the B15 terminal and the No. 1 terminal of the mainshaft speed sensor connector.

Is there continuity?

NO → **Repair open in the wire between the B15 terminal and the mainshaft speed sensor.**

YES ↓

Check NMSG Wire Continuity:
Check for continuity between the B14 terminal and the No. 2 terminal of the mainshaft speed sensor connector.

Is there continuity?

NO → **Repair open in the wire between the B14 terminal and the mainshaft speed sensor.**

YES ↓

Check for loose PCM connectors. If necessary, substitute a known-good PCM and recheck.

PCM CONNECTOR B (25P)

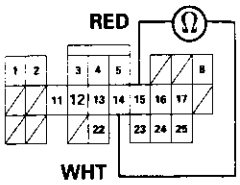

Wire side of female terminals

MAINSHAFT SPEED SENSOR CONNECTOR

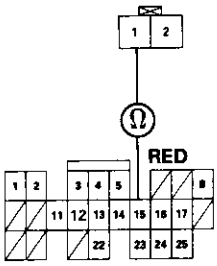

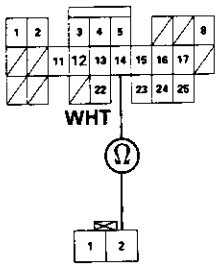

Troubleshooting Flowchart — Linear Solenoid

NOTE: Record all freeze data before you troubleshoot.

- **OBD II Scan Tool indicates Code P1768.**
- **Self-diagnosis D4 indicator light indicates Code 16.**

Possible Cause
• Disconnected linear solenoid connector • Short or open in linear solenoid wire • Faulty linear solenoid

Measure Linear Solenoid Resistance at the Solenoid Connector:
1. Turn the ignition switch OFF.
2. Disconnect the 2P connector from the linear solenoid connector.
3. Measure the resistance of the linear solenoid.

Is the resistance approx. 5.0 Ω?

NO → **Replace the linear solenoid assembly.**

YES

Check Linear Solenoid for a Short Circuit:
1. Disconnect the B (25P) connector from the PCM.
2. Check for continuity between the body ground and the B1 terminal and B2 terminal individually.

Is there continuity?

YES → **Repair short in the wires between the B1 and B2 terminals and the linear solenoid.**

NO

Measure Linear Solenoid Resistance:
1. Connect the linear solenoid connector.
2. Measure the resistance between the B1 and B2 terminals.

Is the resistance approx. 5.0 Ω?

NO → **Repair loose terminal or open in the wires between the B1 and B2 terminals and the linear solenoid.**

YES

To page 14-73

LINEAR SOLENOID CONNECTOR

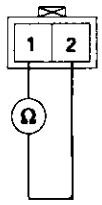

Terminal side of male terminals

PCM CONNECTOR B (25P)

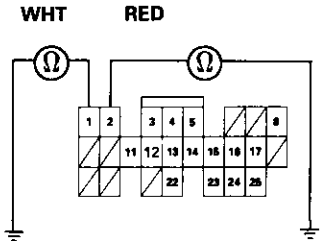

Wire side of female terminals

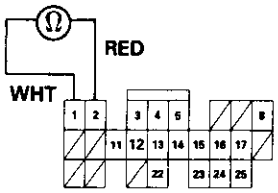

From page 14-72

Check the Ground Circuit:
Check for continuity between the A9 and A10 terminals.

Is there continuity?

NO

- **Repair open in the wire between the terminals A9 and A10 and G101.**
- **Repair loose junction connector.**
- **Repair poor ground (G101).**

YES

Check for loose PCM connectors. If necessary, substitute a known-good PCM and recheck.

PCM CONNECTOR A (32P)

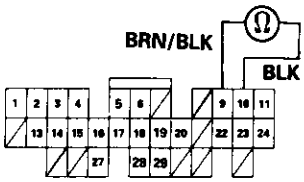

Wire side of female terminals

Troubleshooting Flowchart — Lock-up Control System

NOTE: Record all freeze data before you troubleshoot.

- **OBD II Scan Tool indicates Code P0740.**
- **Self-diagnosis D4 indicator light indicates Code 40.**

Possible Cause
Faulty Lock-up control system

Check for Another Code:
Check whether the OBD II scan tool or the D4 indicator light indicates another code.

Does the OBD II scan tool or the D4 indicator light indicate another code?

YES → **Perform the Troubleshooting Flowchart for the indicated Code(s). Recheck for code P0740 (40) after troubleshooting.**

NOTE: Do not continue with this troubleshooting until the causes of any other DTCs have been corrected.

NO

Test Line Pressure:
Measure the line pressure (see page 14-119 and 14-120).

Is the line pressure within the service limit?

NO → **Repair the hydraulic system as necessary (see page 14-119).**

YES

Replace the Lock-up Control Solenoid Valve Assembly and Recheck:

1. Replace the lock-up control solenoid valve A/B assembly (see page 14-105).
2. Turn the ignition switch OFF and reset the PCM by removing the BACK UP (7.5 A) fuse in the under-hood fuse/relay box for more than 10 seconds.
3. Using the scan tool, check to be sure that the engine coolant temperature is in 176°F (80°C) and above.
4. Drive the vehicle at 55 mph (88 km/h) constantly for more than one minute.
5. Recheck for code P0740 (40).

Does the OBD II scan tool indicate code P0740 (40)?

NO → **The system is OK at this time.**

YES

Replace the transmission and torque converter.

Troubleshooting Flowchart — Shift Control System

NOTE: Record all freeze data before you troubleshoot.

- **OBD II Scan Tool indicates Code P0730.**
- **Self-diagnosis D4 indicator light indicates Code 41.**

Possible Cause
Faulty shift control system

Check for Another Code:
Check whether the OBD II scan tool or the D4 indicator light indicate another code.

Does the OBD II scan tool or the D4 indicator light indicate another code?

YES → **Perform the Troubleshooting Flowchart for the indicated Code(s). Recheck for code P0730 (41) after troubleshooting.**

NOTE: Do not continue with this troubleshooting until the causes of any other DTCs have been corrected.

NO ↓

Test 1st, 2nd, 3rd and 4th Clutch Pressure:
Measure the 1st, 2nd, 3rd and 4th clutch pressure (see page 14-119 thru 14-121).

Is each clutch pressure within the service limit?

NO → **Repair the hydraulic system as necessary (see page 14-119 and 14-121).**

YES ↓

Replace Shift Control Solenoid Valve Assembly, Linear Solenoid Assembly and Recheck:

1. Replace the shift control solenoid valve A/B assembly (see page 14-106).
2. Replace the linear solenoid assembly (see page 14-108).
3. Turn the ignition switch OFF and reset the PCM memory by removing the BACK UP (7.5 A) fuse in the under-hood fuse/relay box for more than 10 seconds.
4. Drive the vehicle at over 12 mph (20 km/h) in 1st, 2nd, 3rd and 4th gear for more than 30 seconds at D4 position.
5. Recheck for code P0730 (41).

Does the OBD II scan tool or the D4 indicator light indicate code P0730 (41)?

NO → **The system is OK at this time.**

YES ↓

Replace the transmission.

Troubleshooting Flowchart — D4 Indicator Light Does Not Come On

The D4 indicator light does not come on when the ignition switch is first turned ON (II). (It should come on for about two seconds.)

Check the Service Check Connector:
Make sure the special tool (SCS Service Connector) is not connected to the service check connector.

Is the special tool (SCS Service Connector) connected to the service check connector?

YES → **Disconnect the special tool from the service check connector and recheck.**

NO

Check the D4 indicator Light:
Shift to D4 position.

Does the D4 indicator light come on?

YES → **Check for loose PCM connectors. If necessary, substitute a known-good PCM and recheck.**

NO

Check the Ground Circuit:
1. Turn the ignition switch OFF.
2. Disconnect the A (32P) connector from the PCM.
3. Check for continuity between the A9 terminal and body ground and the A22 terminal and body ground.

Is there continuity?

NO → **• Repair open in the wires between the A9 or A22 terminals and G101.**
• Repair poor ground (G101).

YES

To page 14-77

PCM CONNECTOR A (32P)

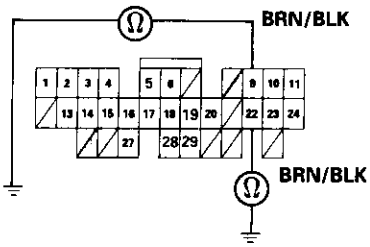

Wire side of female terminals

From page 14-76

Measure Power Supply Circuit Voltage:
1. Turn the ignition switch ON (II).
2. Measure the voltage between terminals A9 and A11 and between terminals A22 and A24.

PCM CONNECTOR A (32P)

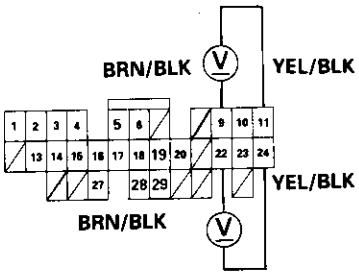

Wire side of female terminals

Is there battery voltage?

NO → **Repair open or short in the wire between the A11 and/or A24 terminals, the PGM-FI main relay, and the fuse box.**

YES

Measure D4 IND Voltage:
1. Turn the ignition switch OFF.
2. Connect the A (32P) connector to the PCM.
3. Connect a digital multitester to the B13 and A9 or A22 terminals.
4. Turn the ignition switch ON (II) and make sure that the voltage is available for two seconds.

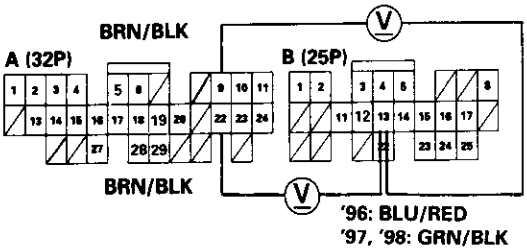

Is there voltage?

YES → **Check for open in the wire between the B13 terminal and the gauge assembly. If wire is OK, check for a faulty D4 indicator light bulb or a faulty gauge assembly printed circuit board.**

NO

Check for loose PCM connectors. Check the A/T gear position switch. If necessary, substitute a known-good PCM and recheck.

Troubleshooting Flowchart — [D4] Indicator Light On Constantly

The [D4] indicator light is on constantly (not blinking) whenever the ignition switch is ON (II).

Measure D4 IND Voltage:
1. Turn the ignition switch OFF.
2. Disconnect the B (25P) connector from the PCM.
3. Turn the ignition switch ON (II).
4. Measure the voltage between the B13 terminal and body ground.

PCM CONNECTOR B (25P)

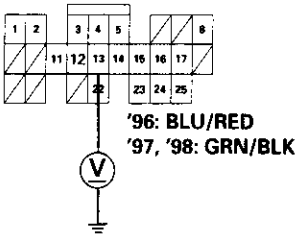

Wire side of female terminals

Is there voltage?

YES → **Repair short to power in the wire between the B13 terminal and the gauge assembly.**

NO

Measure ATP D4 Voltage:
1. Turn the ignition switch OFF.
2. Connect the B (25P) connector to the PCM.
3. Turn the ignition switch ON (II).
4. Shift to any position other than [D4].
5. Measure the voltage between the B24 terminal and body ground.

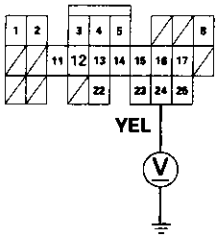

Is there voltage?

NO → **Check for a short to ground on the wire. If wire is OK, replace the A/T gear position indicator.**

YES

Replace the PCM.

Troubleshooting Flowchart — Brake Switch Signal

Inspection of the brake switch signal

Symptom
Shift lever cannot be moved from [P] position with the brake pedal depressed.

Check Brake Light Operation:
Depress the brake pedal.

Are the brake lights ON?

NO → **Repair faulty brake switch circuit (see section 23).**

YES ↓

Measure STOP SW Voltage:
1. Turn the ignition switch OFF.
2. Disconnect the A (32P) and D (16P) connectors from the PCM.
3. Measure the voltage between the D5 and A9 or A22 terminals with the brake pedal depressed.

PCM CONNECTORS

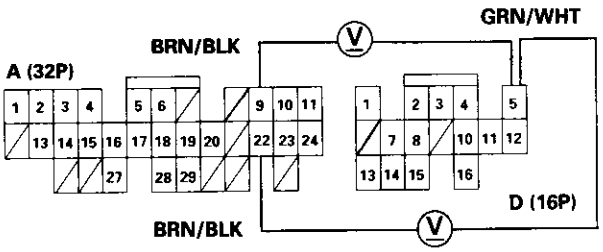

Wire side of female terminals

Is there battery voltage?

NO → **Repair open in the wire between the D5 terminal and the brake switch.**

YES ↓

- **Brake switch signal is OK.**
- **Check for loose PCM connectors. If necessary, substitute a known-good PCM and recheck.**
- **Inspect the brake switch circuit (see section 23).**

Troubleshooting Flowchart — Lock-up Control Solenoid Valve A

NOTE: Record all freeze data before you troubleshoot.

- **OBD II Scan Tool indicates Code P1753.**
- **Self-diagnosis D4 indicator light blinks once.**

Possible Cause

- **Disconnected lock-up control solenoid valve A/B assembly connector**
- **Short or open in lock-up control solenoid valve A wire**
- **Faulty lock-up control solenoid valve A**
- **Open in VB SOL wire**

Check for a Short to Power:
1. Turn the ignition switch OFF.
2. Disconnect the B (25P) and D (16P) connectors from the PCM.
3. Turn the ignition switch ON (II).
4. Measure the voltage between the D1 and B20 or B22 terminals.

PCM CONNECTORS

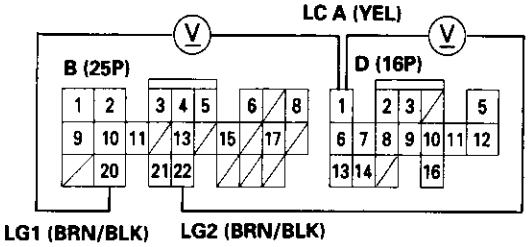

Wire side of female terminals

Is there voltage? — YES → **Repair short to power in the wire between the D1 terminal and the lock-up control solenoid valve A.**

NO

Measure Lock-up Control Solenoid Valve A Resistance:
1. Turn the ignition switch OFF.
2. Measure the resistance between the D1 and B20 or B22 terminals.

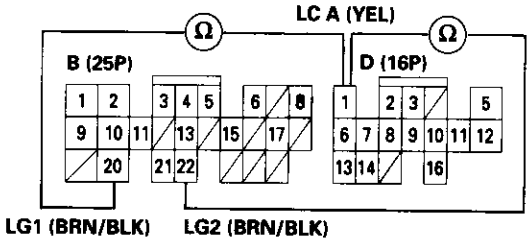

Is the resistance 12 – 25 Ω? — NO → To page 14-81

YES

Measure VB SOL Voltage:
1. Turn the ignition switch ON (II).
2. Measure the voltage between the D5 and B20 or B22 terminals.

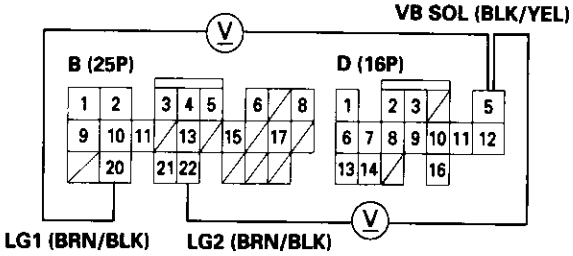

Is there battery voltage? — NO → **Check for blown No. 15 (7.5 A) fuse in the under-dash fuse/relay box. If the fuse is OK, repair open in the wire between the D5 terminal and the under-dash fuse/relay box.**

YES

Check for loose terminal fit in the PCM connectors. If necessary, substitute a known-good PCM and recheck.

From page 14-80

Check for continuity between the B20 terminal and body ground, and between the B22 terminal and body ground.

PCM CONNECTOR B (25P)

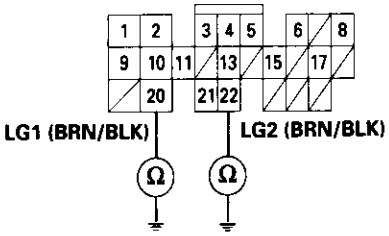

Wire side of female terminals

Is there continuity?

NO → **Repair open in the wires between the B20 and B22 terminals and ground (G101), and repair poor ground (G101).**

YES

Check Lock-up Control Solenoid Valve A for a Short Circuit:

1. Disconnect the 2P connector from the lock-up control solenoid valve A/B assembly.
2. Check for continuity between the D1 and B20 or B22 terminals.

PCM CONNECTORS

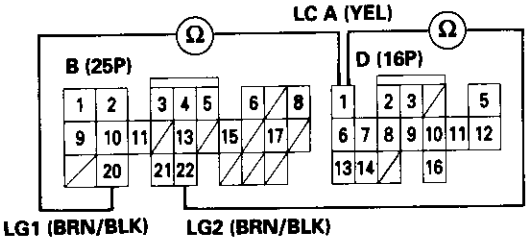

Wire side of female terminals

Is there continuity?

YES → **Repair short to ground in the wire between the D1 terminal and the lock-up control solenoid valve A.**

NO

Measure Lock-up Control Solenoid Valve A Resistance at the Solenoid Connector:
Measure the resistance between the No. 2 terminal of the lock-up control solenoid valve A/B assembly connector and body ground.

LOCK-UP CONTROL SOLENOID VALVE A/B ASSEMBLY CONNECTOR (2P)

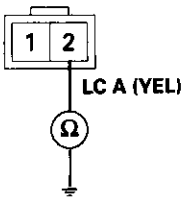

Terminal side of male terminals

Is the resistance 12 – 25 Ω?

NO → **Replace the lock-up control solenoid valve A/B assembly.**

YES

Check for open in the wire between the D1 terminal and the lock-up control solenoid valve A.

Troubleshooting Flowchart — Lock-up Control Solenoid Valve B

NOTE: Record all freeze data before you troubleshoot.

- **OBD II Scan Tool indicates Code P1758.**
- **Self-diagnosis D4 indicator light blinks twice.**

Possible Cause

- **Disconnected lock-up control solenoid valve A/B assembly connector**
- **Short or open in lock-up control solenoid valve B wire**
- **Faulty lock-up control solenoid valve B**
- **Open in VB SOL wire**

Check for a Short to Power:
1. Turn the ignition switch OFF.
2. Disconnect the B (25P) and D (16P) connectors from the PCM.
3. Turn the ignition switch ON (II).
4. Measure the voltage between the D3 and B20 or B22 terminals.

PCM CONNECTORS

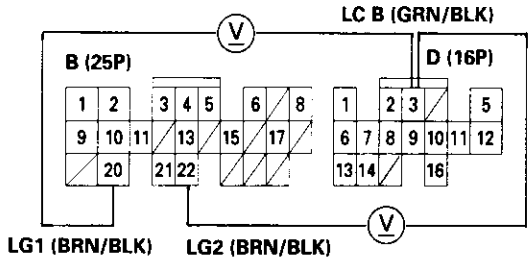

Wire side of female terminals

Is there voltage?

YES → **Repair short to power in the wire between the D3 terminal and the lock-up control solenoid valve B.**

NO

Measure Lock-up Control Solenoid Valve B Resistance:
1. Turn the ignition switch OFF.
2. Measure the resistance between the D3 and B20 or B22 terminals.

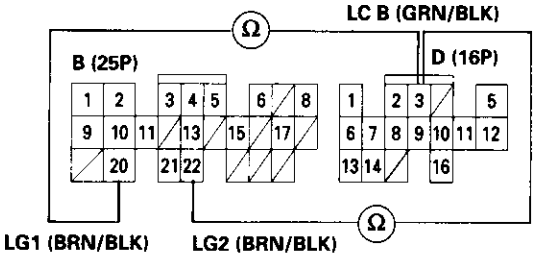

Is the resistance 12 – 25 Ω?

NO → To page 14-83

YES

Measure VB SOL Voltage:
1. Turn the ignition switch ON (II).
2. Measure the voltage between the D5 and B20 or B22 terminals.

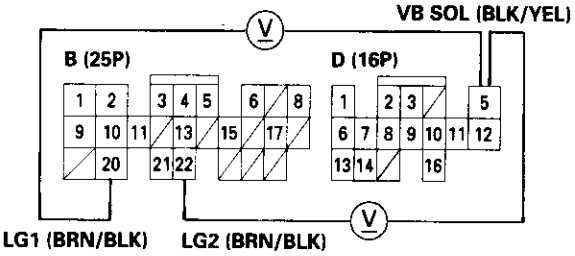

Is there battery voltage?

NO → **Check for blown No. 15 (7.5 A) fuse in the under-dash fuse/relay box. If the fuse is OK, repair open in the wire between the D5 terminal and the under-dash fuse/relay box.**

YES

Check for loose terminal fit in the PCM connectors. If necessary, substitute a known-good PCM and recheck.

From page 14-82

Check for continuity between the B20 terminal and body ground, and between the B22 terminal and body ground.

PCM CONNECTOR B (25P)

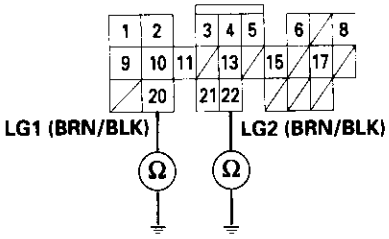

Wire side of female terminals

Is there continuity?

NO → **Repair open in the wires between the B20 and B22 terminals and ground (G101), and repair poor ground (G101).**

YES

Check Lock-up Control Solenoid Valve B for a Short Circuit:

1. Disconnect the 2P connector from the lock-up control solenoid valve A/B assembly.
2. Check for continuity between the D3 and B20 or B22 terminals.

PCM CONNECTORS

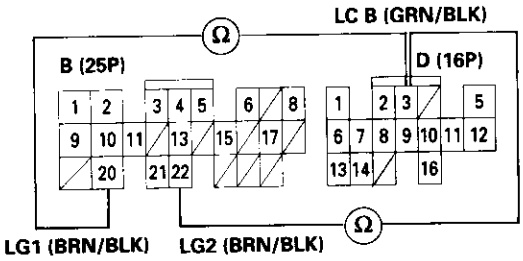

Wire side of female terminals

Is there continuity?

YES → **Repair short to ground in the wire between the D3 terminal and the lock-up control solenoid valve B.**

NO

Measure Lock-up Control Solenoid Valve B Resistance at the Solenoid Connector:
Measure the resistance between the No. 1 terminal of the lock-up control solenoid valve A/B assembly connector and body ground.

LOCK-UP CONTROL SOLENOID VALVE A/B ASSEMBLY CONNECTOR (2P)

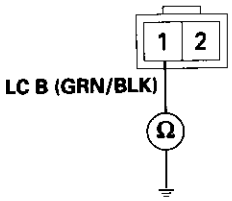

Terminal side of male terminals

Is the resistance 12 – 25 Ω?

NO → **Replace the lock-up control solenoid valve A/B assembly.**

YES

Check for open in the wire between the D3 terminal and the lock-up control solenoid valve B.

Troubleshooting Flowchart — A/T Gear Position Switch (Short)

NOTE: Record all freeze data before you troubleshoot.

- **OBD II Scan Tool indicates Code P1705.**
- **Self-diagnosis D4 indicator light blinks five times.**

Possible Cause
• Short in A/T gear position switch wire • Faulty A/T gear position switch

NOTE: Code P1705 (5) is caused when the PCM received two gear position inputs at the same time.

Observe the A/T Gear Position Indicator:
1. Turn the ignition switch ON (II).
2. Observe the A/T gear position indicator, and shift each position separately.

Does any indicator stay on when the shift lever is not in that position?

NO → **The system is OK at this time. Check the wire harness for damage.**

YES

Disconnect the A/T gear position switch connector.

Do all gear position indicators go out?

YES → **Replace the A/T gear position switch.**

NO

Connect the A/T gear position switch connector.

Measure ATP R Voltage:
1. Shift to all positions other than R.
2. Measure the voltage between the D6 and B20 or B22 terminals.

Is there battery voltage?

NO → **Check for short in the wire between the D6 terminal and the A/T gear position switch or A/T gear position indicator, and check for open in the wires between the B20 and B22 terminals and body ground (G101). If wires are OK, check for loose terminal fit in the PCM connectors. If necessary, substitute a known-good PCM and recheck.**

YES

To page 14-85

PCM CONNECTORS

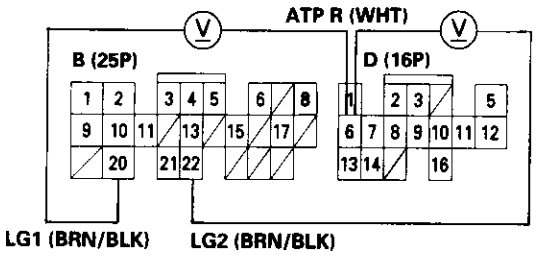

Wire side of female terminals

From page 14-84

Measure ATP NP Voltage:
1. Shift to all positions other than [P] or [N].
2. Measure the voltage between the D13 and B20 or B22 terminals.

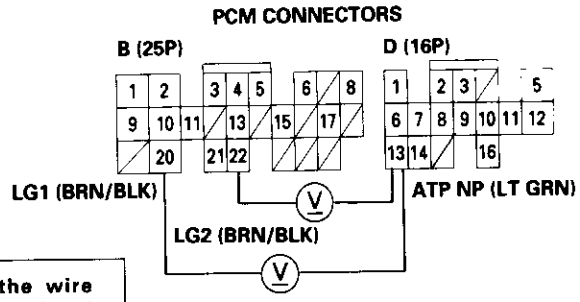

Wire side of female terminals

Is there battery voltage?

NO → **Check for short in the wire between the D13 terminal and the A/T gear position switch, and in the [P] and [N] position signal wires between the A/T gear position indicator and the A/T gear position switch. If wires are OK, check for loose terminal fit in the PCM connectors. If necessary, substitute a known-good PCM and recheck.**

YES

Measure ATP D4 Voltage:
1. Shift to all positions other than [D4].
2. Measure the voltage between the D9 and B20 or B22 terminals.

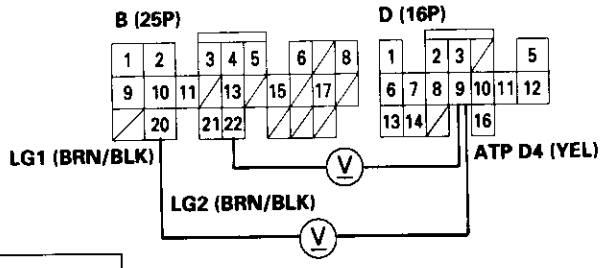

Is there approx. 5 V?

NO → **Check for short in the wire between the D9 terminal and the A/T gear position switch. If wires are OK, check for loose terminal fit in the PCM connectors. If necessary, substitute a known-good PCM and recheck.**

YES

Measure ATP D3 Voltage:
1. Shift to all positions other than [D3].
2. Measure the voltage between the D8 and B20 or B22 terminals.

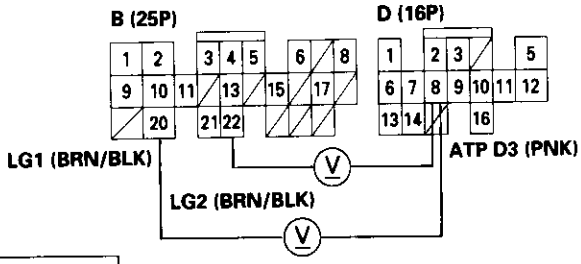

Is there battery voltage?

NO → **Check for short in the wire between the D8 terminal and the A/T gear position switch or A/T gear position indicator. If wires are OK, check for loose terminal fit in the PCM connectors. If necessary, substitute a known-good PCM and recheck.**

YES

To page 14-86

(cont'd)

Troubleshooting Flowchart — A/T Gear Position Switch (Short) (cont'd)

From page 14-85

Measure ATP 2 Voltage:
1. Shift to all positions other than [2].
2. Measure the voltage between the D14 and B20 or B22 terminals.

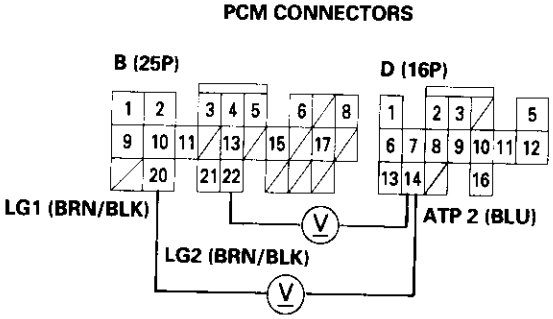

Wire side of female terminals

Is there battery voltage?

NO → **Check for short in the wire between the D14 terminal and the A/T gear position switch or A/T gear position indicator. If wires are OK, check for loose terminal fit in the PCM connectors. If necessary, substitute a known-good PCM and recheck.**

YES → **Check for loose terminal fit in the PCM connectors. If necessary, substitute a known-good PCM and recheck.**

Troubleshooting Flowchart — A/T Gear Position Switch (Open)

NOTE: Record all freeze data before you troubleshoot.

- **OBD II Scan Tool indicates Code P1706.**
- **Self-diagnosis D4 indicator light blinks six times.**

Possible Cause

- **Disconnected A/T gear position switch connector**
- **Open in A/T gear position switch wire**
- **Faulty A/T gear position switch**

Test the A/T gear position switch (see section 23).

Is the switch OK?

NO → **Replace the A/T gear position switch.**

YES

Measure ATP R Voltage:
1. Turn the ignition switch ON (II).
2. Shift to R position.
3. Measure the voltage between the D6 and B20 or B22 terminals.

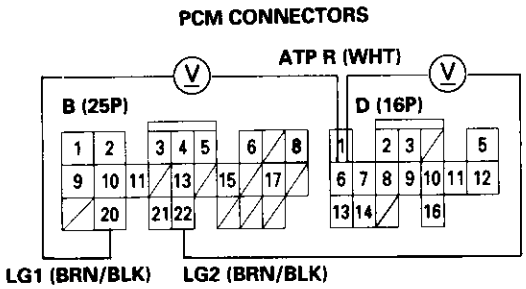

Wire side of female terminals

Is there voltage?

YES → **Repair open in the wire between the D6 terminal and the A/T gear position switch.**

NO

Measure ATP NP Voltage:
1. Shift to P or N position.
2. Measure the voltage between the D13 and B20 or B22 terminals.

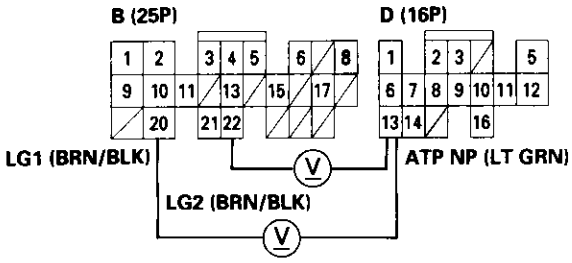

Is there voltage?

YES → **Repair open in the wire between the D13 terminal and the A/T gear position switch.**

NO

To page 14-88

(cont'd)

Troubleshooting Flowchart — A/T Gear Position Switch Open (cont'd)

From page 14-87

Measure ATP D4 Voltage:
1. Shift to [D4] position.
2. Measure the voltage between the D9 and B20 or B22 terminals.

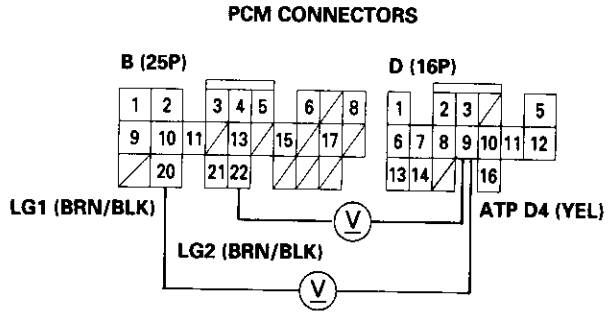

Is there voltage?

YES → **Repair open in the wire between the D9 terminal and the A/T gear position switch.**

NO

Measure ATP D3 Voltage:
1. Shift to [D3] position.
2. Measure the voltage between the D8 and B20 or B22 terminals.

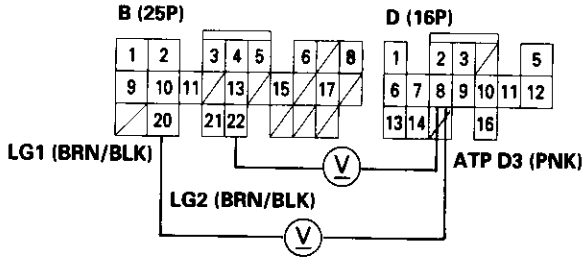

Is there voltage?

YES → **Repair open in the wire between the D8 terminal and the A/T gear position switch.**

NO

Measure ATP 2 Voltage:
1. Shift to [2] position.
2. Measure the voltage between the D14 and B20 or B22 terminals.

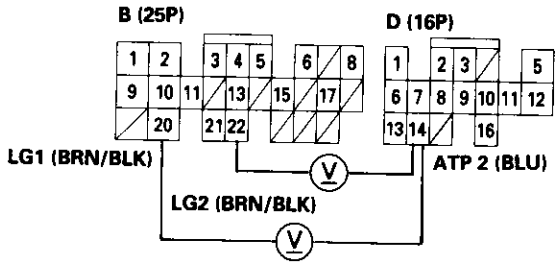

Is there voltage?

YES → **Repair open in the wire between the D14 terminal and the A/T gear position switch.**

NO

Check for loose terminal fit in the PCM connectors. If necessary, substitute a known-good PCM and recheck.

Troubleshooting Flowchart — Shift Control Solenoid Valve A

NOTE: Record all freeze data before you troubleshoot.

- **OBD II Scan Tool indicates Code P0753.**
- **Self-diagnosis D4 indicator light blinks seven times.**

Possible Cause

- **Disconnected shift control solenoid valve A/B assembly connector**
- **Short or open in shift control solenoid valve A wire**
- **Faulty shift control solenoid valve A**
- **Open in VB SOL wire**

Check for a Short to Power:
1. Turn the ignition switch OFF.
2. Disconnect the B (25P) and D (16P) connectors from the PCM.
3. Turn the ignition switch ON (II).
4. Measure the voltage between the D7 and B20 or B22 terminals.

PCM CONNECTORS

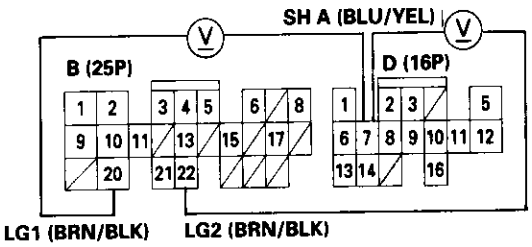

Wire side of female terminals

Is there voltage?

YES → **Repair short to power in the wire between the D7 terminal and the shift control solenoid valve A.**

NO

Measure Shift Control Solenoid Valve A Resistance:
1. Turn the ignition switch OFF.
2. Measure the resistance between the D7 and B20 or B22 terminals.

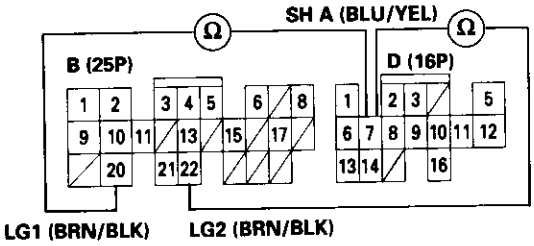

Is the resistance 12 – 25 Ω?

NO → To page 14-90

YES

Measure VB SOL Voltage:
1. Turn the ignition switch ON (II).
2. Measure the voltage between the D5 and B20 or B22 terminals.

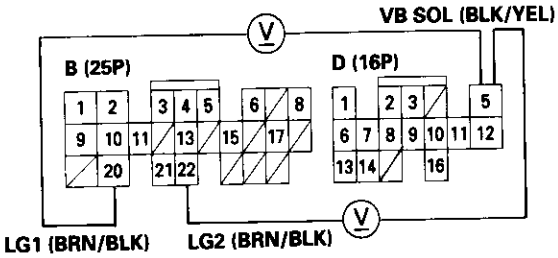

Is there battery voltage?

NO → **Check for blown No. 15 (7.5 A) fuse in the under-dash fuse/relay box. If the fuse is OK, repair open in the wire between the D5 terminal and the under-dash fuse/relay box.**

YES

Check for loose terminal fit in the PCM connectors. If necessary, substitute a known-good PCM and recheck.

(cont'd)

Troubleshooting Flowchart — Shift Control Solenoid Valve A (cont'd)

From page 14-89

Check for continuity between the B20 terminal and body ground, and between the B22 terminal and body ground.

Is there continuity?

NO → **Repair open in the wires between the B20 and B22 terminals and ground (G101), and repair poor ground (G101).**

YES

PCM CONNECTOR B (25P)

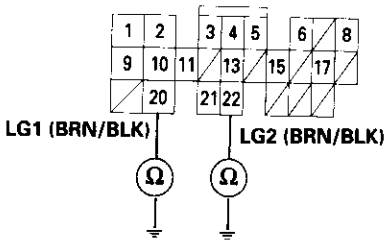

Wire side of female terminals

Check Shift Control Solenoid Valve B for a Short Circuit:

1. Disconnect the 2P connector from the shift control solenoid valve A/B assembly.
2. Check for continuity between the D7 and B20 or B22 terminals.

PCM CONNECTORS

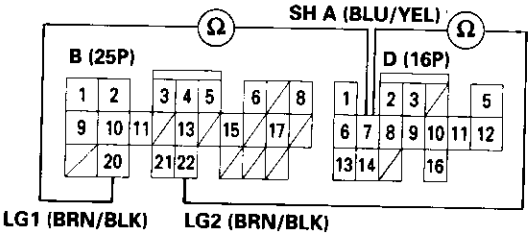

Wire side of female terminals

Is there continuity?

YES → **Repair short to ground in the wire between the D7 terminal and the shift control solenoid valve A.**

NO

Measure Shift Control Solenoid Valve A Resistance at the Solenoid Connector:
Measure the resistance between the No. 1 terminal of the shift control solenoid valve A/B assembly connector and body ground.

SHIFT CONTROL SOLENOID VALVE A/B ASSEMBLY CONNECTOR (2P)

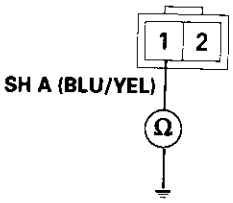

Terminal side of male terminals

Is the resistance 12 – 25 Ω?

NO → **Replace the shift control solenoid valve A/B assembly.**

YES

Check for open in the wire between the D7 terminal and the shift control solenoid valve A.

Troubleshooting Flowchart — Shift Control Solenoid Valve B

NOTE: Record all freeze data before you troubleshoot.

- **OBD II Scan Tool indicates Code P0758.**
- **Self-diagnosis D4 indicator light blinks eight times.**

Possible Cause

- **Disconnected shift control solenoid valve A/B connector**
- **Short or open in shift control solenoid valve B wire**
- **Faulty shift control solenoid valve B**
- **Open in VB SOL wire**

Check for a Short to Power:

1. Turn the ignition switch OFF.
2. Disconnect the B (25P) and D (16P) connectors from the PCM.
3. Turn the ignition switch ON (II).
4. Measure the voltage between the D2 and B20 or B22 terminals.

PCM CONNECTORS

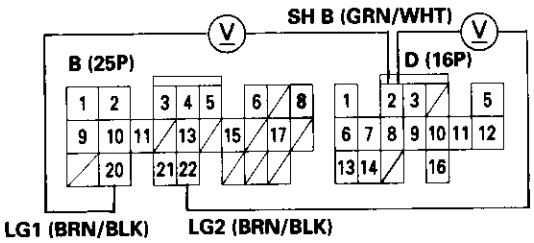

Wire side of female terminals

Is there voltage? — YES → **Repair short to power in the wire between the D2 terminal and the shift control solenoid valve B.**

NO

Measure Shift Control Solenoid Valve B Resistance:

1. Turn the ignition switch OFF.
2. Measure the resistance between the D2 and B20 or B22 terminals.

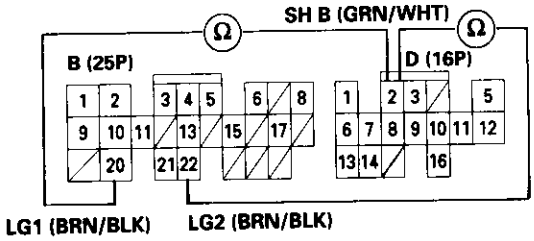

Is the resistance 12 – 25 Ω? — NO → To page 14-92

YES

Measure VB SOL Voltage:

1. Turn the ignition switch ON (II).
2. Measure the voltage between the D5 and B20 or B22 terminals.

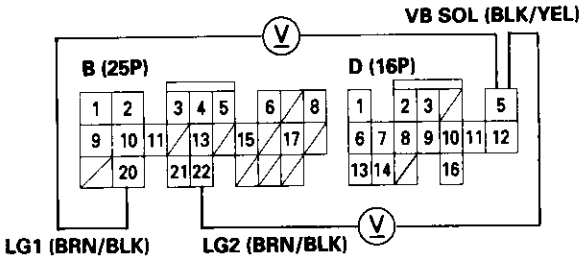

Is there battery voltage? — NO → **Check for blown No. 15 (7.5 A) fuse in the under-dash fuse/relay box. If the fuse is OK, repair open in the wire between the D5 terminal and the under-dash fuse/relay box.**

YES

Check for loose terminal fit in the PCM connectors. If necessary, substitute a known-good PCM and recheck.

(cont'd)

Troubleshooting Flowchart — Shift Control Solenoid Valve B (cont'd)

From page 14-91

Check for continuity between the B20 terminal and body ground, and between the B22 terminal and body ground.

Is there continuity?

NO → **Repair open in the wires between the B20 and B22 terminals and ground (G101), and repair poor ground (G101).**

YES

PCM CONNECTOR B (25P)

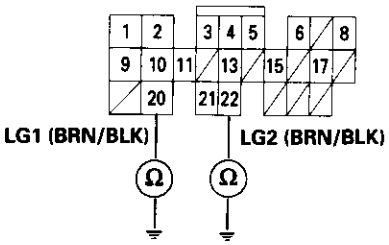

Wire side of female terminals

Check Shift Control Solenoid Valve B for a Short Circuit:

1. Disconnect the 2P connector from the shift control solenoid valve A/B assembly.
2. Check for continuity between the D2 and B20 or B22 terminals.

PCM CONNECTORS

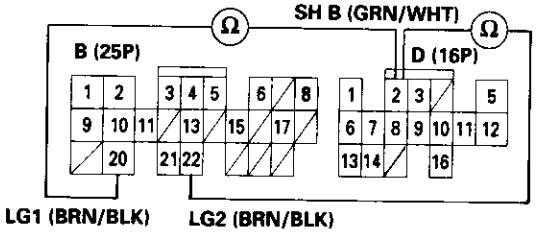

Wire side of female terminals

Is there continuity?

YES → **Repair short to ground in the wire between the D2 terminal and the shift control solenoid valve B.**

NO

Measure Shift Control Solenoid Valve B Resistance at the Solenoid Connector:
Measure the resistance between the No. 2 terminal of the shift control solenoid valve A/B assembly connector and body ground.

SHIFT CONTROL SOLENOID VALVE A/B ASSEMBLY CONNECTOR (2P)

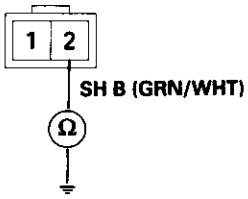

Terminal side of male terminals

Is the resistance 12 – 25 Ω?

NO → **Replace the shift control solenoid valve A/B assembly.**

YES

Check for open in the wire between the D2 terminal and the shift control solenoid valve B.

Troubleshooting Flowchart — Countershaft Speed Sensor

NOTE: Record all freeze data before you troubleshoot.

- **OBD II Scan Tool indicates Code P0720.**
- **Self-diagnosis D4 indicator light blinks nine times.**

Possible Cause

- **Loose or faulty connection between the PCM and vehicle harness**
- **Disconnected countershaft speed sensor connector**
- **Short or open in countershaft speed sensor wire**
- **Faulty countershaft speed sensor**

Check the countershaft speed sensor installation, and check it for damage.

Is the countershaft speed sensor installed properly, and not damaged?

NO → **Reinstall or replace and recheck.**

YES

Measure Countershaft Speed Sensor Resistance at the Sensor Connector:

1. Disconnect the 2P connector from the countershaft speed sensor.
2. Measure countershaft speed sensor resistance at the sensor connector.

COUNTERSHAFT SPEED SENSOR CONNECTOR

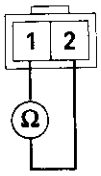

Terminal side of male terminals

Is the resistance 400 – 600 Ω?

NO → **Replace the countershaft speed sensor.**

YES

Check Countershaft Speed Sensor for a Short Circuit:

1. Disconnect the D (16P) connector from the PCM.
2. Check for continuity between body ground and the D10 terminal and D16 terminal individually.

PCM CONNECTOR D (16P)

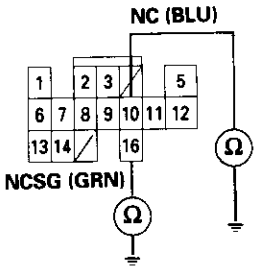

Wire side of female terminals

Is there continuity?

YES → **Repair short in the wires between the D10 and D16 terminals and the countershaft speed sensor.**

NO

To page 14-94

(cont'd

Troubleshooting Flowchart — Countershaft Speed Sensor (cont'd)

From page 14-93

Measure Countershaft Speed Sensor Circuit for an Open:
1. Connect the countershaft speed sensor connector.
2. Measure the resistance between the D10 and D16 terminals.

Is the resistance 400 – 600 Ω?

NO → **Repair loose terminal or open in the wires between the D10 and D16 terminals and the countershaft speed sensor.**

YES → **Check for loose terminal fit in the PCM connectors. If necessary, substitute a known-good PCM and recheck.**

PCM CONNECTOR D (16P)

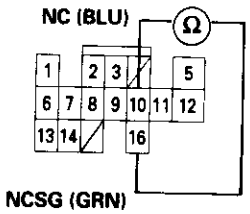

Wire side of female terminals

Troubleshooting Flowchart — Mainshaft Speed Sensor

NOTE: Record all freeze data before you troubleshoot.

- **OBD II Scan Tool indicates Code P0715.**
- **Self-diagnosis D4 indicator indicates Code 15.**

Possible Cause
• **Disconnected mainshaft speed sensor connector** • **Short or open in mainshaft speed sensor wire** • **Faulty mainshaft speed sensor**

NOTE: Code P0715 (15) on the PCM doesn't always mean there's an electrical problem in the mainshaft or countershaft speed sensor circuit; code P0715 (15) may also indicate a mechanical problem in the transmission. Any problem causing irregular countershaft to mainshaft speed difference can cause this code.

Check the mainshaft and countershaft speed sensors installation, and check them for damage.

Are the mainshaft and countershaft speed sensor installed properly, and not damaged?

NO → **Reinstall or replace and recheck.**

YES

Measure Mainshaft Speed Sensor Resistance at the Sensor Connector:

1. Disconnect the 2P connector from the mainshaft speed sensor.
2. Measure mainshaft speed sensor resistance at the sensor connector.

MAINSHAFT SPEED SENSOR CONNECTOR

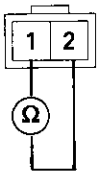

Terminal side of male terminals

Is the resistance 400 – 600 Ω?

NO → **Replace the mainshaft speed sensor.**

YES

Check Mainshaft Speed Sensor for a Short Circuit:

1. Disconnect the D (16P) connector from the PCM.
2. Check for continuity between body ground and the D11 terminal and D12 terminal individually.

PCM CONNECTOR D (16P)

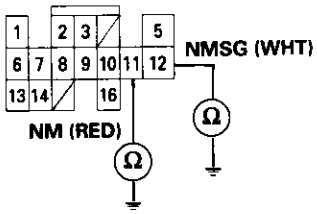

Wire side of female terminals

Is there continuity?

YES → **Repair short in the wires between the D11 and D12 terminals and the mainshaft speed sensor.**

NO

To page 14-96

(cont'd)

Troubleshooting Flowchart — Mainshaft Speed Sensor (cont'd)

From page 14-95

Measure Mainshaft Speed Sensor Resistance:
1. Connect the mainshaft speed sensor connector.
2. Measure the resistance between the D11 and D12 terminals.

PCM CONNECTOR D (16P)

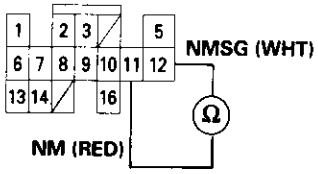

Wire side of female terminals

Is the resistance 400 – 600 Ω?

YES → **Run the Electrical Troubleshooting Flowchart for code P0720 (9). Check for loose terminal fit in the PCM connectors. If necessary, substitute a known-good PCM and recheck.**

NO

Check NM Wire Continuity:
1. Disconnect the 2P connector from the mainshaft speed sensor.
2. Check for continuity between the D11 terminal and the No. 2 terminal of the mainshaft speed sensor connector.

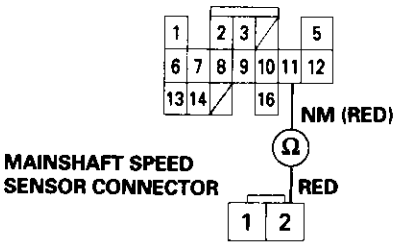

Wire side of female terminals

Is there continuity?

NO → **Repair open in the wire between the D11 terminal and the mainshaft speed sensor.**

YES

Check NMSG Wire Continuity:
Check for continuity between the D12 terminal and the No. 1 terminal of the mainshaft speed sensor connector.

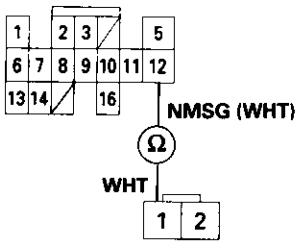

Is there continuity?

NO → **Repair open in the wire between the D12 terminal and the mainshaft speed sensor.**

YES

Check for loose terminal fit in the PCM connectors. If necessary, substitute a known-good PCM and recheck.

Troubleshooting Flowchart — Linear Solenoid

NOTE: Record all freeze data before you troubleshoot.

- **OBD II Scan Tool indicates Code P1768.**
- **Self-diagnosis D4 indicator indicates Code 16.**

Possible Cause

- **Disconnected linear solenoid connector**
- **Short or open in linear solenoid wire**
- **Faulty linear solenoid**
- **Open in VB SOL wire**
- **Open in PG line**

Measure VB SOL Voltage:
1. Turn the ignition switch OFF.
2. Disconnect the B (25P) and D (16P) connectors from the PCM.
3. Turn the ignition switch ON (II).
4. Measure the voltage between the D5 and B20 or B22 terminals.

PCM CONNECTORS

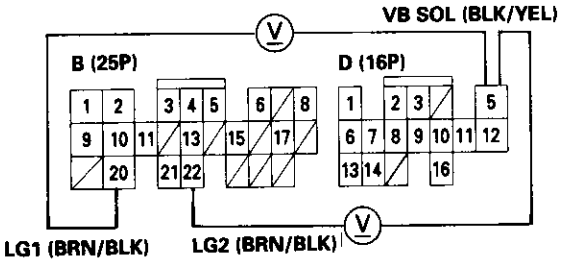

Wire side of female terminals

Is there battery voltage?

NO → **Repair open or short in the wire between the D5 terminal and the under-dash fuse/relay box.**

YES

Check the Ground Circuit:
1. Turn the ignition switch OFF.
2. Check for continuity between the terminals B2 and B22 and between terminals B10 and B20.

PCM CONNECTOR B (25P)

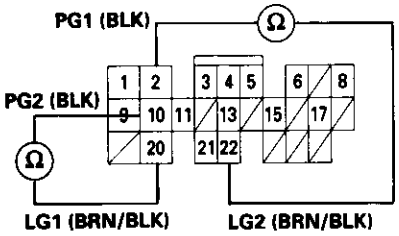

Wire side of female terminals

Is there continuity?

NO → **Repair open in the wire between the terminals B2, B10, B20, and B22 and G101. Repair poor ground (G101).**

YES

Measure Linear Solenoid Resistance at the Solenoid Connector:
1. Disconnect the linear solenoid connector.
2. Measure the resistance of the linear solenoid.

LINEAR SOLENOID CONNECTOR

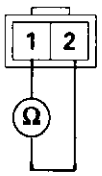

Terminal side of male terminals

Is the resistance approx. 5 Ω?

NO → **Replace the linear solenoid assembly.**

YES

To page 14-98

(cont'd)

Troubleshooting Flowchart — Linear Solenoid (cont'd)

From page 14-97

Check Linear Solenoid for a Short Circuit:
Check for continuity between the body ground and the B8 terminal and B17 terminal individually.

Is there continuity?

YES → **Repair short in the wire between the B8 and B17 terminals and the linear solenoid.**

NO

Measure Linear Solenoid Resistance:
1. Connect the linear solenoid connector.
2. Measure the resistance between the B8 and B17 terminals.

Is the resistance approx. 5.0 Ω?

NO → **Repair loose terminal or open in the wire between the B8 and B17 terminals and the linear solenoid.**

YES

Check for loose terminal fit in the PCM connectors. If necessary, substitute a known-good PCM and recheck.

PCM CONNECTOR B (25P)

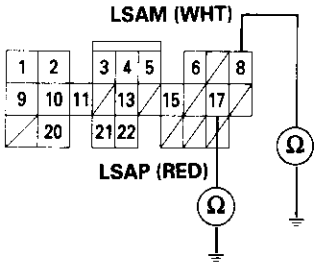

Wire side of female terminals

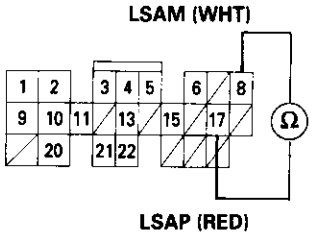

Troubleshooting Flowchart — Lock-up Control System

NOTE: Record all freeze data before you troubleshoot.

- **OBD II Scan Tool indicates Code P0740.**
- **Self-diagnosis D4 indicator light indicates Code 40.**

Possible Cause
Faulty Lock-up control system

Check for Another Code:
Check whether the OBD II scan tool or the D4 indicator light indicates another code.

Does the OBD II scan tool or the D4 indicator light indicate another code?

YES → **Perform the Troubleshooting Flowchart for the indicated Code(s). Recheck for code P0740 (40) after troubleshooting.**

NOTE: Do not continue with this troubleshooting until the causes of any other DTCs have been corrected.

NO

Test Line Pressure:
Measure the line pressure (see page 14-119 and 14-120).

Is the line pressure within the service limit?

NO → **Repair the hydraulic system as necessary (see page 14-119).**

YES

Replace the Lock-up Control Solenoid Valve Assembly and Recheck:

1. Replace the lock-up control solenoid valve A/B assembly (see page 14-105).
2. Turn the ignition switch OFF and reset the PCM by removing the BACK UP (7.5 A) fuse in the under-hood fuse/relay box for more than 10 seconds.
3. Using the scan tool, check to be sure that the engine coolant temperature is in 176°F (80°C) and above.
4. Drive the vehicle at 55 mph (88 km/h) constantly for more than one minute.
5. Recheck for code P0740 (40).

Does the OBD II scan tool indicate code P0740 (40)?

NO → **The system is OK at this time.**

YES

Replace the transmission and torque converter.

Troubleshooting Flowchart — Shift Control System

NOTE: Record all freeze data before you troubleshoot.

- **OBD II Scan Tool indicates Code P0730.**
- **Self-diagnosis D4 indicator light indicates Code 41.**

Possible Cause
Faulty shift control system

Check for Another Code:
Check whether the OBD II scan tool or the D4 indicator light indicate another code.

Does the OBD II scan tool or the D4 indicator light indicate another code?

YES → **Perform the Troubleshooting Flowchart for the indicated Code(s). Recheck for code P0730 (41) after troubleshooting.**

NOTE: Do not continue with this troubleshooting until the causes of any other DTCs have been corrected.

NO ↓

Test 1st, 2nd, 3rd and 4th Clutch Pressure:
Measure the 1st, 2nd, 3rd and 4th clutch pressure (see page 14-119 thru 14-121).

Is each clutch pressure within the service limit?

NO → **Repair the hydraulic system as necessary (see page 14-119 and 14-121).**

YES ↓

Replace Shift Control Solenoid Valve Assembly, Linear Solenoid Assembly and Recheck:

1. Replace the shift control solenoid valve A/B assembly (see page 14-106).
2. Replace the linear solenoid assembly (see page 14-108).
3. Turn the ignition switch OFF and reset the PCM memory by removing the BACK UP (7.5 A) fuse in the under-hood fuse/relay box for more than 10 seconds.
4. Drive the vehicle at over 12 mph (20 km/h) in 1st, 2nd, 3rd and 4th gear for more than 30 seconds at D4 position.
5. Recheck for code P0730 (41).

Does the OBD II scan tool or the D4 indicator light indicate code P0730 (41)?

NO → **The system is OK at this time.**

YES ↓

Replace the transmission.

Troubleshooting Flowchart — D4 Indicator Light On Constantly

The D4 indicator light is on constantly (not blinking) whenever the ignition switch is ON (II).

Measure D4 IND Voltage:
1. Turn the ignition switch OFF.
2. Disconnect the A (32P) connector from the PCM.
3. Turn the ignition switch ON (II).
4. Measure the voltage between the A14 terminal and body ground.

Is there voltage?

YES → **Repair short to power in the wire between the A14 terminal and the gauge assembly.**

NO

Measure ATP D4 Voltage:
1. Turn the ignition switch OFF.
2. Connect the A (32P) connector to the PCM.
3. Turn the ignition switch ON (II).
4. Shift to any position other than D4.
5. Measure the voltage between the D9 terminal and body ground.

Is there approx. 5 V?

YES → **Replace the PCM.**

NO

Test the A/T gear position switch (see section 23).

Is the switch OK?

NO → **Replace the A/T gear position switch.**

YES

Check for a short to ground in the wire between the D9 terminal and A/T gear position switch. If wire is OK, substitute a known-good PCM and recheck.

PCM CONNECTOR A (32P)

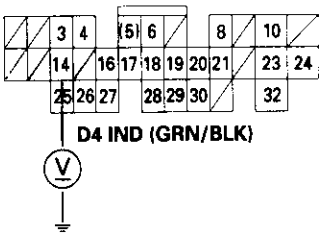

Wire side of female terminals

PCM CONNECTOR D (16P)

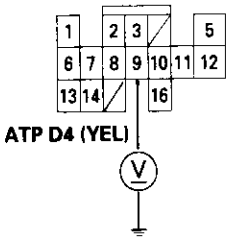

Wire side of female terminals

Troubleshooting Flowchart — D4 Indicator Light Does Not Come On

The D4 indicator light does not come on when the ignition switch is first turned ON (II). (It should come on for about two seconds.)

Check the Service Check Connector:
Make sure the special tool (SCS Service Connector) is not connected to the service check connector?

Is the special tool (SCS Service Connector) is not connected to the service check connector.

YES → **Disconnect the special tool from the service check connector and recheck.**

NO

Check the D4 Indicator Light:
Shift to D4 position.

Does the D4 indicator light come on?

YES → **Check for loose terminal fit in the PCM connectors. If necessary, substitute a known-good PCM and recheck.**

NO

Check the Ground Circuit:
1. Turn the ignition switch OFF.
2. Disconnect the B (25P) connector from the PCM.
3. Check for continuity between the B20 terminal and body ground, and between the B22 terminal and body ground.

Is there continuity?

NO → **Repair open in the wires between the B20 and B22 terminals and ground (G101), and repair poor ground (G101).**

YES

Measure Power Supply Circuit Voltage:
1. Turn the ignition switch ON (II).
2. Measure the voltage between terminals B1 and B22 and between terminals B9 and B20.

Is there battery voltage?

NO → **Repair open or short in the wire between the B1 and/or B9 terminals and the PGM-FI main relay, and between the PGM-FI main relay and the under-hood fuse/relay box.**

YES

To page 14-103

PCM CONNECTOR B (25P)

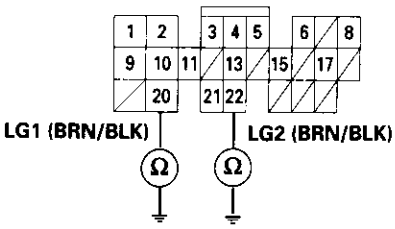

Wire side of female terminals

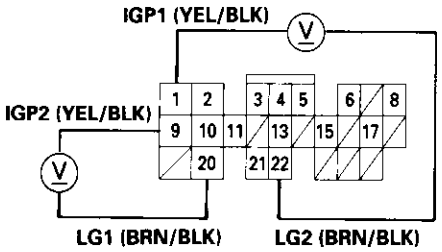

From page 14-102

Measure D4 IND Voltage:
1. Turn the ignition switch OFF.
2. Connect the B (25P) connector to the PCM.
3. Connect a digital multimeter to the A14 and B20 or B22 terminals.
4. Turn the ignition switch ON (II), and make sure that voltage is available for two seconds.

PCM CONNECTORS

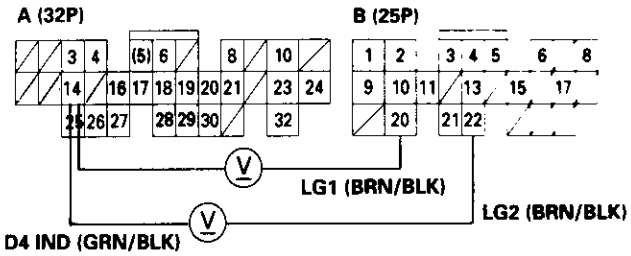

Wire side of female terminals

Is there voltage?

YES → **Check for open in the wire between the A14 terminal and the gauge assembly. If wire is OK, check for a faulty indicator light bulb or a faulty gauge assembly printed circuit board.**

NO ↓

Check D4 IND for a Short Circuit:
Check for continuity between the A14 terminal and body ground.

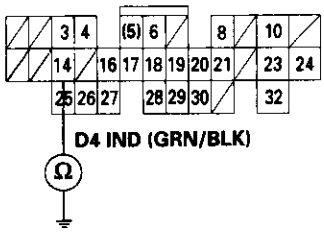

Is there continuity?

YES → **Repair short in the wire between the A14 terminal and the gauge assembly. If wire is OK, check the gauge assembly.**

NO ↓

Check for loose terminal fit in the PCM connectors. Check the A/T gear position switch. If necessary, substitute a known-good PCM and recheck.

Troubleshooting Flowchart — Brake Switch Signal

Shift lever cannot be moved from P position with the brake pedal depressed.

Check Brake Light Operation:
Depress the brake pedal.

Are the brake lights ON?

NO → **Repair faulty brake switch circuit (see section 23).**

YES

Measure STOP SW Voltage:
1. Turn the ignition switch OFF.
2. Disconnect the A (32P) and B (25P) connectors from the PCM.
3. Measure the voltage between the A32 and B20 or B22 terminals with the brake pedal depressed.

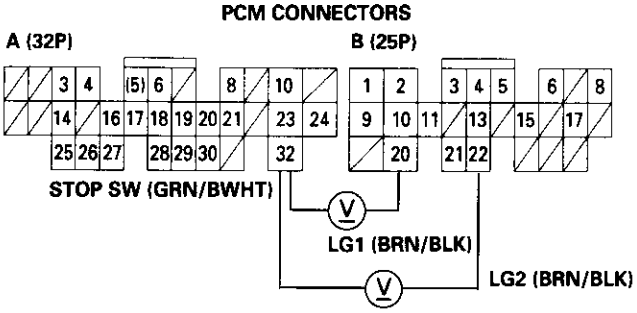

Wire side of female terminals

Is there battery voltage?

NO → **Repair open in the wire between the A32 terminal and the brake switch.**

YES

- **Brake switch signal is OK.**
- **Check for loose terminal fit in the PCM connectors. If necessary, substitute a known-good PCM and recheck.**
- **Inspect the brake switch circuit (see section 23).**

Lock-up Control Solenoid Valve A/B Assembly

Test

1. Disconnect the 2P connector from the lock-up control solenoid valve A/B assembly.

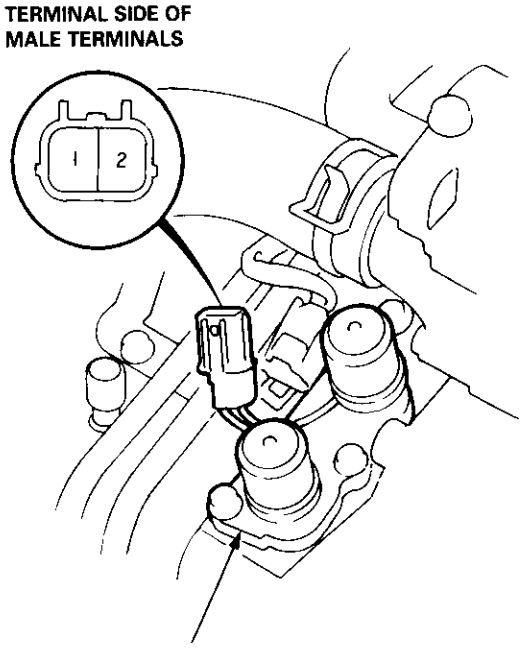

2. Measure the resistance between the No. 2 terminal (solenoid valve A) of the lock-up control solenoid valve connector and body ground, and between the No. 1 terminal (solenoid valve B) and body ground.

   STANDARD: 12 – 25 Ω

3. Replace the lock-up control solenoid valve assembly if the resistance is out of specification.

4. If the resistance is within the standard, connect the No. 1 terminal of the lock-up control solenoid valve connector to the battery positive terminal. A clicking sound should be heard. Connect the No. 2 terminal to the battery positive terminal. A clicking sound should be heard. Replace the lock-up control solenoid valve assembly if no clicking sound is heard.

Replacement

NOTE: Lock-up control solenoid valves A and B must be removed/replaced as an assembly.

1. Remove the mounting bolts and lock-up control solenoid valve A/B assembly.

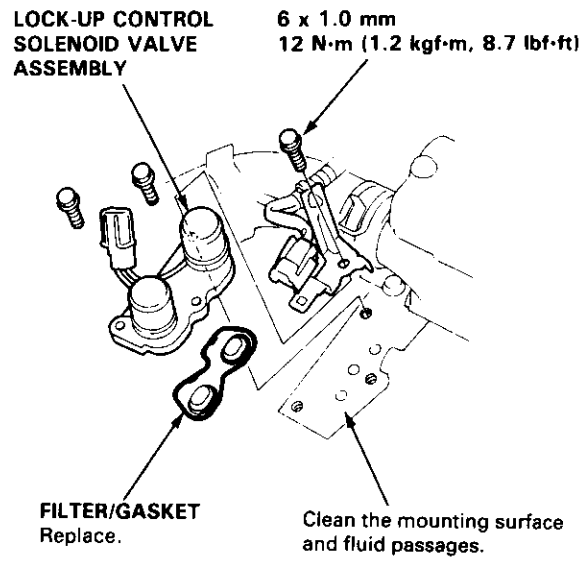

2. Clean the mounting surface and fluid passages of the lock-up control solenoid valve assembly, and install a new lock-up control solenoid valve A/B with a new filter/gasket.

3. Check the connector for rust, dirt or oil, and reconnect it securely.

Shift Control Solenoid Valve A/B Assembly

Test

1. Disconnect the 2P connector from the shift control solenoid valve A/B assembly.

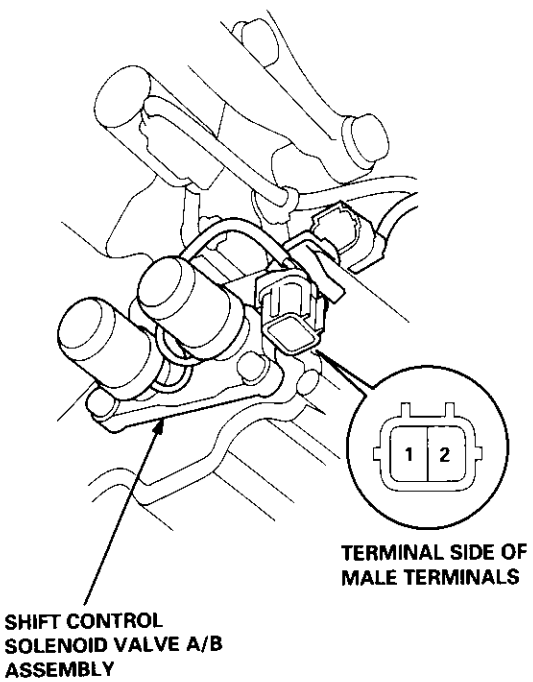

2. Measure the resistance between the No. 1 terminal (solenoid valve A) of the shift control solenoid valve connector and body ground, and between the No. 2 terminal (solenoid valve B) and body ground.

   STANDARD: 12 – 25 Ω

3. Replace the shift control solenoid valve assembly if the resistance is out of specification.

4. If the resistance is within the standard, connect the No. 1 terminal of the shift control solenoid valve connector to the battery positive terminal. A clicking sound should be heard. Connect the No. 2 terminal to the battery positive terminal. A clicking sound should be heard. Replace the shift control solenoid valve assembly if no clicking sound is heard.

Replacement

NOTE: Shift control solenoid valves A and B must be removed/replaced as an assembly.

1. Remove the mounting bolts and shift control solenoid valve A/B assembly.

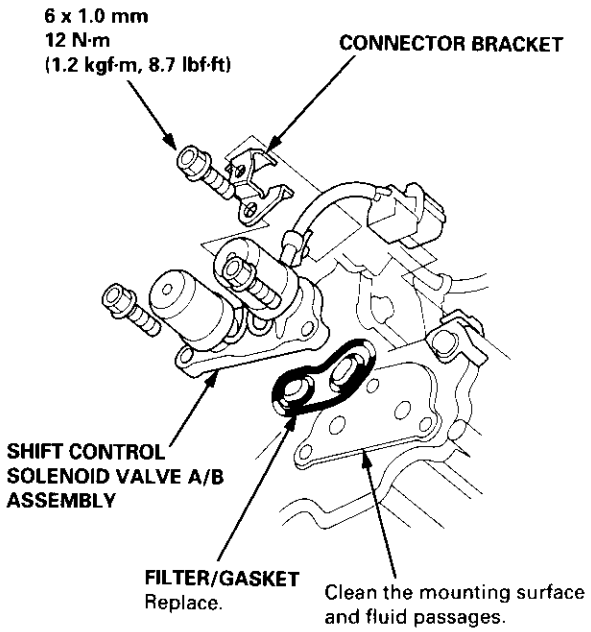

2. Clean the mounting surface and fluid passages of the shift control solenoid valve assembly, and install a new shift control solenoid valve A/B with a new filter/gasket and the clamp bracket.

3. Check the connector for rust, dirt or oil, and reconnect it securely.

Test

1. Disconnect the linear solenoid connector.

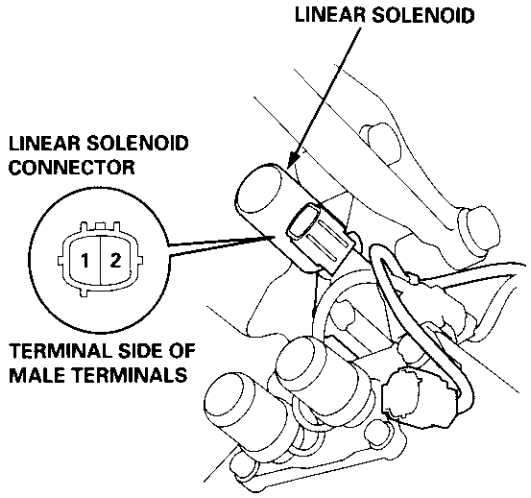

2. Measure the resistance between the No. 1 and the No. 2 terminals of the linear solenoid connector.

   STANDARD: approx. 5 Ω

3. If the resistance is out of specification, replace the linear solenoid assembly.

4. Connect the No. 2 terminal of the linear solenoid connector to the battery positive terminal and connect the No. 1 terminal to the battery negative terminal. A clicking sound should be heard.

5. If not, remove the linear solenoid assembly.

6. Check that the linear solenoid fluid passage for dust or dirt.

7. Connect the No. 2 terminal of the linear solenoid connector to the battery positive terminal and connect the No. 1 terminal to the battery negative terminal. Check that the valve moves.

8. Disconnect one of the battery terminals and check that the valve releases.

   NOTE: You can see the valve movement through the fluid passage in the mounting surface of the linear solenoid assembly.

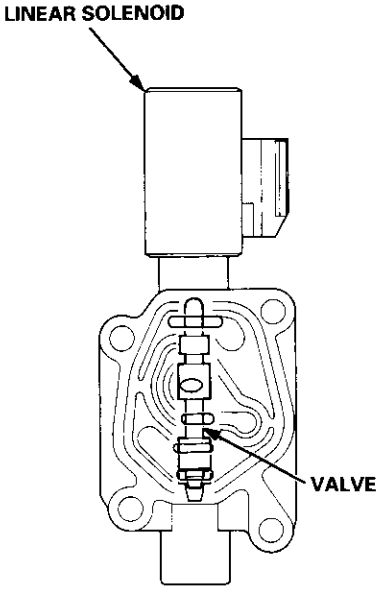

9. If the valve binds, or moves sluggishly, or the linear solenoid does not operate, replace the linear solenoid assembly.

Linear Solenoid Assembly

Replacement

1. Remove the mounting bolts and the linear solenoid assembly.

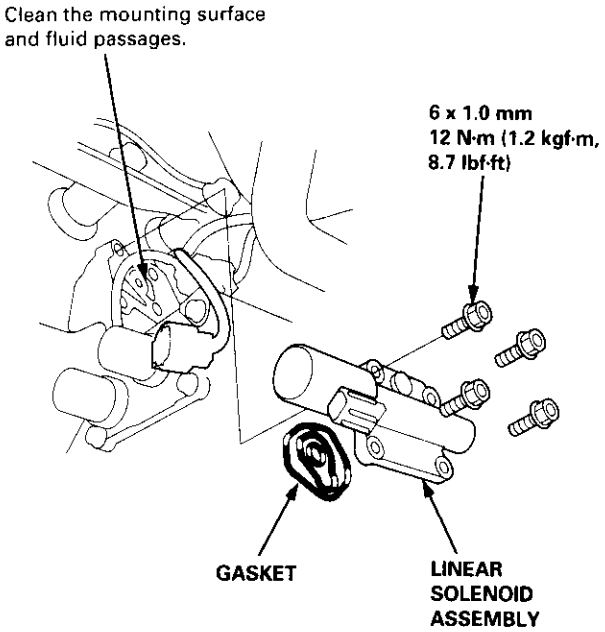

2. Clean the mounting surface and fluid passage of the linear solenoid assembly and transmission housing.

3. Install a new linear solenoid assembly with a new gasket.

   NOTE: Do not pinch the gasket when installing the linear solenoid; make sure that the gasket is installed properly in the mounting groove of the linear solenoid.

4. Check the linear solenoid connector for rust, dirt or oil, and connect it securely.

Mainshaft/Countershaft Speed Sensors

Replacement

1. Remove the 6 mm bolt and the countershaft speed sensor from the right side cover.

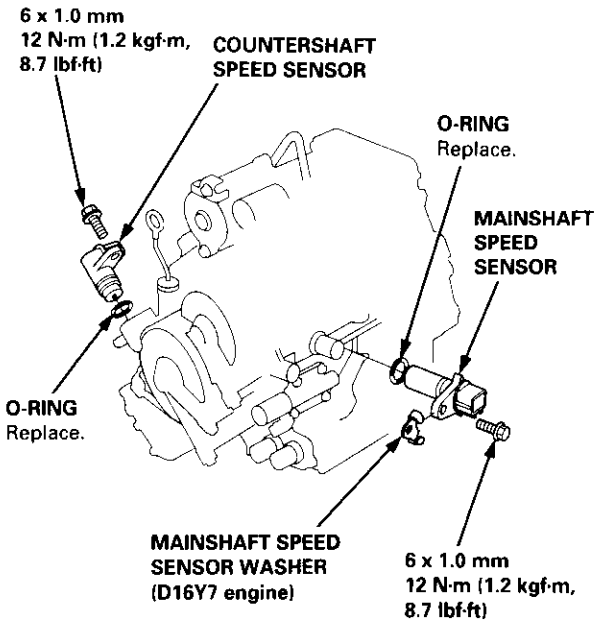

2. Remove the 6 mm bolt and the mainshaft speed sensor from the transmission housing.

3. Replace the O-ring with a new one before installing the countershaft speed sensor or the mainshaft speed sensor.

   NOTE: Install the mainshaft speed sensor washer on the mainshaft speed sensor. The mainshaft speed sensor washer is used on models with the D16Y7 engine.

Hydraulic System

SYMPTOM	Check these items on the PROBABLE CAUSE List	Check these items on the NOTES List
Engine runs, but vehicle does not move in any gear.	1, 2, 3, 5, 6, 7, 36, 38	K, L, R, S
Vehicle moves in 2, R, but not in D3, D4, position.	6, 8, 9, 10, 30, 54	C, M, O
Vehicle moves in D3, D4, R, but not in 2 position.	6, 11, 12, 24	C, L
Vehicle moves in D3, D4, 2, but not in R position.	4, 6, 14, 15	C, L, Q
Vehicle moves in N position.	10, 12, 13, 14, 16, 29, 33, 34, 35	C, D
Excessive idle vibration.	1, 2, 19, 32, 36, 45, 47, 48	B, K, L
Poor acceleration; flares on starting off in D4, D3 position		
Stall rpm high in D4, D3, 2 position.	1, 2, 3, 6, 38, 41	K, L, R
Stall rpm high in D4, D3 position.	6, 8, 10	C, D
Stall rpm high in 2 position.	6, 12	C, D
Stall rpm is in specification.	14	N
Stall rpm low.	17, 32, 45, 47, 48	R
No shift	19, 20, 40, 48, 49	G, L
Fails to shift in D3, D4 position; from 1st to 3rd gear	22, 49	
Fails to shift in D3, D4 position; from 1st to 4th gear	22, 23, 48	
Erratic upshifting.		
1-2 upshift, 2-3 upshift, 3-4 upshift	58	
1-2 upshift	21, 48	
2-3 upshift	22, 49	
3-4 upshift	23, 48	
Harsh upshift (1-2).	12, 19, 20, 29, 50, 51, 57, 58	C, D, E
Harsh upshift (2-3).	13, 19, 20, 24, 27, 29, 50, 51, 57, 58	C, D, E, H, L
Harsh upshift (3-4).	14, 19, 20, 25, 28, 29, 50, 51, 57, 58	C, D, E, I, L
Harsh downshift (2-1).	19, 20, 24, 43, 54, 57, 58	O
Harsh downshift (3-2).	12, 19, 20, 25, 43, 55, 57, 58	C, D, E, H
Harsh downshift (4-3).	13, 19, 20, 26, 43, 56, 57, 58	C, D, E, I
Flares on 2-3 upshift.	13, 19, 20, 24, 27, 51	E, L
Flares on 3-4 upshift.	14, 19, 20, 25, 28, 51	E, L, N
Excessive shock on 2-3 upshift.	13, 19, 20, 24, 27, 43, 50, 51, 58	E, L, N
Excessive shock on 3-4 upshift.	14, 19, 20, 25, 28, 43, 50, 51, 58	E, L, N
Late shift from N position to D4 or D3 position.	10, 30	M
Late shift from N position to R position.	4, 14, 21, 53	Q
Noise from transmission in all shift lever positions.	2, 37	K, L, Q
Vehicle does not accelerate more than 31 mph (50 km/h).	17	
Shift lever does not operate smoothly.	6, 39	P
Fails to shift; stuck in 4th gear.	19, 48, 49	
Transmission will not shift into park in P position.	6, 18, 39	P
Stall rpm high; all clutch pressures are in specification.	41	D, K, O
Lock-up clutch does not disengage.	19, 44, 45, 46, 47, 50, 51, 58	E, L
Lock-up clutch does not operate smoothly.	19, 41, 44, 45, 46, 47, 50, 51, 58	L
Lock-up clutch does not engage.	19, 41, 44, 45, 46, 47, 50, 51, 57, 58	E, L
Vibration in all positions	36	

(cont'd)

Hydraulic System (cont'd)

PROBABLE CAUSE			
1	Low ATF.	41	Torque converter check valve stuck.
2	ATF pump worn or binding.	42	Foreign material in separator plate.
3	Regulator valve stuck.	43	CPB valve stuck.
4	Servo valve stuck.	44	Lock-up timing valve stuck.
5	Mainshaft worn/damaged.	45	Lock-up shift valve stuck.
6	Shift cable broken/out of adjustment.	46	Lock-up control valve stuck.
7	Final gears worn/damaged.	47	Lock-up piston defective.
8	One-way (sprag) clutch worn/damaged.	48	Shift control solenoid valve A defective.
9	1st gears worn/damaged (2 gears).	49	Shift control solenoid valve B defective.
10	1st clutch defective.	50	Lock-up control solenoid valve A defective.
11	2nd gears worn/damaged (2 gears).	51	Lock-up control solenoid valve B defective.
12	2nd clutch defective.	52	Servo control valve stuck.
13	3rd clutch defective.	53	1st accumulator defective.
14	4th clutch defective.	54	Foreign material in 2nd exhaust orifice.
15	Reverse gears worn/damaged (3 gears).	55	Foreign material in 3rd exhaust orifice.
16	Excessive ATF.	56	Foreign material in 4th exhaust orifice.
17	Torque converter one-way clutch defective.	57	Mainshaft speed sensor defective.
18	Park mechanism defective.	58	Countershaft speed sensor defective.
19	Linear solenoid assembly defective.		
20	CPC valve stuck.		
21	1-2 shift valve stuck.		
22	2-3 shift valve stuck.		
23	3-4 shift valve stuck.		
24	2nd accumulator defective.		
25	3rd accumulator defective.		
26	4th accumulator defective.		
27	2nd orifice control valve stuck.		
28	3-4 orifice control valve stuck.		
29	Foreign material in main orifice.		
30	Foreign material in 1st orifice.		
31	Foreign material in reverse orifice.		
32	Engine output low.		
33	Needle bearing worn/damaged.		
34	Thrust washer worn/damaged.		
35	Clutch clearance incorrect.		
36	Drive plate defective or transmission misassembly.		
37	Torque converter housing or transmission housing bearing worn/damaged.		
38	ATF strainer clogged.		
39	Joint in shift cable and transmission or body worn.		
40	Modulator valve stuck.		

The following symptoms can be caused by improper repair or assembly	Check these items on the PROBABLE CAUSE DUE TO IMPROPER REPAIR List	Items on the NOTES List
Vehicle creeps in N position.	R1, R2	
Vehicle does not move in D_3 or D_4 position.	R4	
Transmission locks up in R position.	R3, R11	
Excessive drag in transmission.	R6	K, R
Excessive vibration, rpm related.	R7	
Noise with wheels moving only.	R5	
Main seal pops out.	R8	S
Various shifting problems.	R9, R10	

PROBABLE CAUSE DUE TO IMPROPER REPAIR	
R1.	Improper clutch clearance.
R2.	Improper gear clearance.
R3.	Park lever installed upside down.
R4.	One-way (sprag) clutch installed upside down.
R5.	Reverse selector hub installed upside down.
R6.	ATF pump binding.
R7.	Torque converter not fully seated in ATF pump.
R8.	Main seal improperly installed.
R9.	Springs improperly installed.
R10.	Valves improperly installed.
R11.	Shift fork bolt not installed.

(cont'd)

Hydraulic System (cont'd)

NOTES	
A.	See flushing procedure, page 14-187 and 188.
B.	Set idle rpm in gear to specified idle speed. If still no good, adjust motor mounts as outlined in engine section of this manual.
C.	If the large clutch piston O-ring is broken, inspect the piston groove for rough machining.
D.	If the clutch pack is seized or is excessively worn, inspect the other clutches for wear, and check the orifice control valves, CPC valve and linear solenoid for free movement.
E.	If the linear solenoid is stuck, inspect the clutches for wear.
G.	If the 1-2 shift valve is stuck closed, the transmission will not upshift. If stuck open, the transmission has no 1st gear.
H.	If the 2nd orifice control valve is stuck, inspect the 2nd and 3rd clutch packs for wear.
I.	If the 3-4 orifice control valve is stuck, inspect the 3rd and 4th clutch packs for wear.
J.	If the clutch pressure control valve is stuck closed, the transmission will not shift out of 1st gear.
K.	Improper alignment or main valve body and torque converter housing may cause ATF pump seizure. The symptoms are mostly an rpm-related ticking noise or a high-pitched squeak.
L.	If the ATF strainer is clogged with particles of steel or aluminum, inspect the ATF pump and differential pinion shaft. If both are OK and no cause for the contamination is found, replace the torque converter.
M.	If the 1st clutch feed pipe guide in the end cover is scored by the mainshaft, inspect the ball bearing for excessive movement in the transmission housing. If OK, replace the end cover as it is dented. The O-ring under the guide is probably worn.
N.	• Replace the mainshaft if the bushing for the 4th feed pipe is loose or damaged. If the 4th feed pipe is damaged or out of round, replace the right side cover. • Replace the mainshaft if the bushing for the 1st feed pipe is loose or damaged. If the 1st feed pipe is damaged or out of round, replace it.
O.	A worn or damaged sprag clutch is mostly a result of shifting the transmission in D3 or D4 position while the wheels rotate in reverse, such as rocking the vehicle in snow.
P.	Inspect the frame for collision damage.
Q.	Inspect for damage and wear: 1. Reverse selector gear teeth chamfers. 2. Engagement teeth chamfers of countershaft 4th and reverse gear. 3. Shift fork for scuff marks in center. 4. Differential pinion shaft for wear under pinion gears. 5. Bottom of 3rd clutch for swirl marks. Replace items 1, 2, 3 and 4 if worn or damaged. If transmission makes a clicking, grinding or whirring noise, also replace mainshaft 4th gear, reverse idler gear, and countershaft 4th gear in addition to 1, 2, 3 or 4. If differential pinion shaft is worn, overhaul differential assembly, and replace ATF strainer, and thoroughly clean transmission, flush torque converter, cooler and lines. If bottom of 3rd clutch is swirled and transmission makes gear noise, replace the countershaft and final driven gear.
R.	Be very careful not to damage the torque converter housing when replacing the main ball bearing. You may also damage the ATF pump when you torque down the main valve body. This will result in ATF pump seizure if not detected. Use the proper tools.
S.	Install the main seal flush with the torque converter housing. If you push it into the torque converter housing until it bottoms out, it will block the fluid return passage and result in damage.

NOTE: Warm up the engine to normal operating temperature (the radiator fan comes on).

1. Apply parking brake and block the wheels. Start the engine, then shift to D4 position while depressing the brake pedal. Depress the accelerator pedal and release it suddenly. The engine should not stall.
2. Repeat same test in D3 position.
3. Test-drive the vehicle on a flat road in the D4 position. Check that the shift points occur at approximate speeds shown in the table. Also check for abnormal noise and clutch slippage.
   NOTE: Throttle position sensor voltage represents the throttle opening.
   a. Unbolt the PCM for road testing; refer to page 14-50.
   b. Set the digital multimeter to check the throttle position sensor voltage between PCM terminals:
      - '96 – 98 models: D1 (+) and A9 (–) or A22 (–).
      - '99 – 00 models: C27 (+) and B20 (–) or B22 (–).

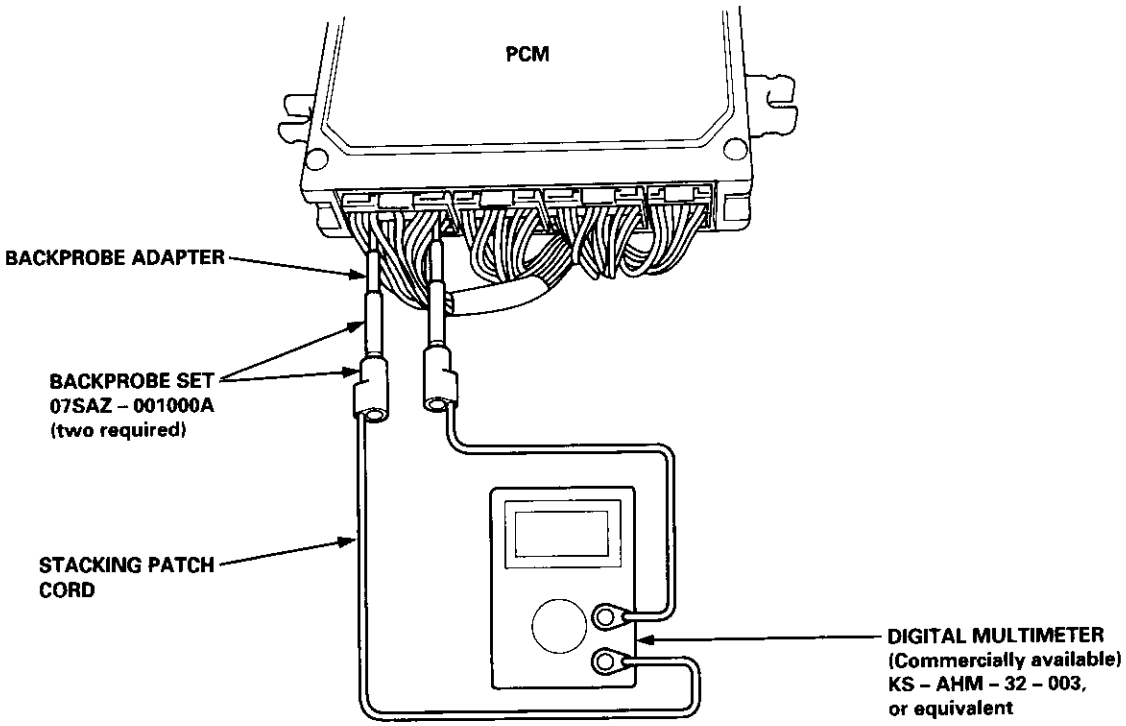

'96 – 98 Models:

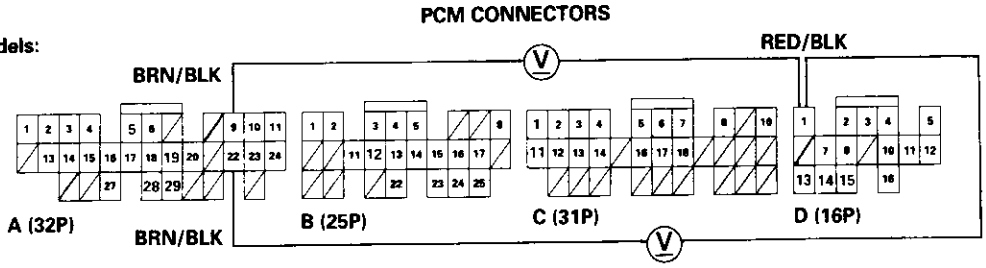

Wire side of female terminals

'99 – 00 Models:

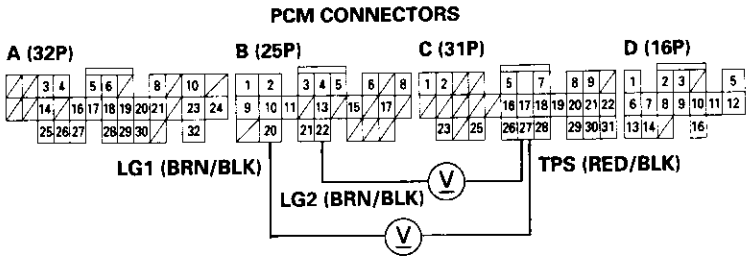

Wire side of female terminals

cont'd

(cont'd)

D4 Position: D16Y7 engine

- **Upshift**

Throttle Opening	Unit of speed	1st → 2nd	2nd → 3rd	3rd → 4th	Lock-up ON
Throttle position sensor voltage: 0.75 V	mph	9 – 12	20 – 23	28 – 32	21 – 24
	km/h	15 – 19	32 – 37	45 – 52	34 – 39
Throttle position sensor voltage: 2.25 V	mph	21 – 25	40 – 45	59 – 65	62 – 67
	km/h	34 – 40	65 – 73	95 – 104	99 – 108
Fully-opened throttle Throttle position sensor voltage: 4.5 V	mph	33 – 38	63 – 71	101 – 112	99 – 109
	km/h	53 – 61	102 – 115	163 – 180	159 – 176

- **Downshift**

Throttle Opening	Unit of speed	Lock-up OFF	4th → 3rd	3rd → 2nd	2nd → 1st
Fully-closed throttle Throttle position sensor voltage: 0.5 V	mph	19 – 22	17 – 20	6 – 9 (3rd → 1st)	
	km/h	30 – 35	27 – 32	10 – 15 (3rd → 1st)	
Fully-opened throttle Throttle position sensor voltage: 4.5 V	mph	95 – 105	85 – 95	54 – 61	25 – 30
	km/h	153 – 169	137 – 153	87 – 98	40 – 48

D4 Position: D16Y8 engine

- **Upshift**

Throttle Opening	Unit of speed	1st → 2nd	2nd → 3rd	3rd → 4th	Lock-up ON
Throttle position sensor voltage: 0.75 V	mph	9 – 12	20 – 23	28 – 32	21 – 24
	km/h	15 – 19	32 – 37	45 – 52	34 – 39
Throttle position sensor voltage: 2.25 V	mph	21 – 25	40 – 45	59 – 65	62 – 67
	km/h	34 – 40	65 – 73	95 – 104	99 – 108
Fully-opened throttle Throttle position sensor voltage: 4.5 V	mph	32 – 37	62 – 70	96 – 107	95 – 106
	km/h	52 – 60	100 – 113	155 – 172	153 – 170

- **Downshift**

Throttle Opening	Unit of speed	Lock-up OFF	4th → 3rd	3rd → 2nd	2nd → 1st
Fully-closed throttle Throttle position sensor voltage: 0.5 V	mph	19 – 22	17 – 20	6 – 9 (3rd → 1st)	
	km/h	30 – 35	27 – 32	10 – 15 (3rd → 1st)	
Fully-opened throttle Throttle position sensor voltage: 4.5 V	mph	91 – 101	85 – 95	54 – 61	25 – 30
	km/h	147 – 163	137 – 153	87 – 98	40 – 48

NOTE:
- Lock-up ON: The lock-up control solenoid valve A turns ON.
- Lock-up OFF: The lock-up control solenoid valve A turns OFF.

4. Accelerate to about 35 mph (57 km/h) so the transmission is in 4th, then shift from D4 position to 2 position. The vehicle should immediately begin slowing down from engine braking.

   CAUTION: Do not shift from D4 or D3 position to 2 position at speeds over 63 mph (100 km/h); you may damage the transmission.

5. Check for abnormal noise and clutch slippage in the following positions.

   2 (2nd Gear) Position
   a. Accelerate from a stop at full throttle. Check that there is no abnormal noise or clutch slippage.
   b. Upshifts and downshifts should not occur with the selector in this position.

   R (Reverse) Position
   Accelerate from a stop at full throttle, and check for abnormal noise and clutch slippage.

6. Test in P (Park) Position
   Park the vehicle on slope (approx. 16°), apply the parking brake, and shift into P position. Release the brake; the vehicle should not move.

Stall Speed

Test

CAUTION:
- **To prevent transmission damage, do not test stall speed for more than 10 seconds at a time.**
- **Do not shift the lever while raising the engine speed.**
- **Be sure to remove the pressure gauge before testing stall speed.**

1. Engage the parking brake, and block the front wheels.
2. Connect a tachometer to the engine, and start the engine.
3. Make sure the A/C switch is OFF.
4. After the engine has warmed up to normal operating temperature (the radiator fan comes on), shift into [2] position.
5. Fully depress the brake pedal and accelerator for 6 to 8 seconds, and note engine speed.
6. Allow two minutes for cooling, then repeat the test in [D4] and [R] positions.

   NOTE:
   - Stall speed tests should be used for diagnostic purposes only.
   - Stall speed should be the same in [D4], [2] and [R] positions.

Stall Speed RPM:
Specification: 2,700 rpm
Service Limit: 2,550 – 2,850 rpm

TROUBLE	PROBABLE CAUSE
Stall rpm high in [D4], [2] and [R] positions	• Low fluid level or ATF pump output • Clogged ATF strainer • Pressure regulator valve stuck closed • Slipping clutch
Stall rpm high in [R] position	• Slippage of 4th clutch
Stall rpm high in [2] position	• Slippage of 2nd clutch
Stall rpm high in [D4] position	• Slippage of 1st clutch or 1st gear one-way clutch
Stall rpm low in [D4], [2] and [R] positions	• Engine output low • Torque converter one-way clutch slipping

Checking

NOTE: Keep all foreign particles out of the transmission.

1. Warm up the engine to normal operating temperature (the radiator fan comes on).
2. Park the vehicle on the level ground, then turn off the engine.
3. Remove the dipstick (yellow loop) from the transmission, and wipe it with a clean cloth.
4. Insert the dipstick into the transmission.

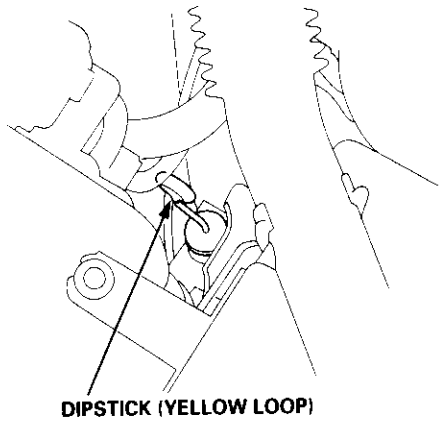

5. Remove the dipstick and check the fluid level. It should be between the upper mark and lower marks.

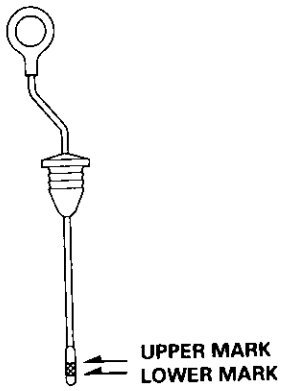

6. If the level is below the lower mark, pour the recommended fluid into the filler hole to bring it to the upper mark. Always use Genuine Honda Premium Formula Automatic Transmission Fluid (ATF). Using a non-Honda ATF can affect shift quality.
7. Insert the dipstick back into the transmission in the direction shown.

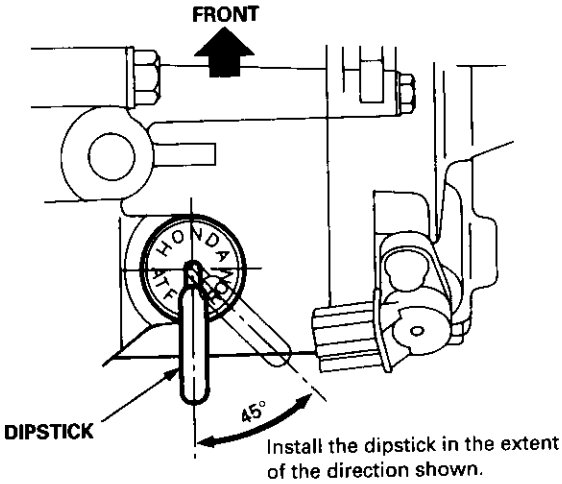

Changing

NOTE: Keep all foreign particles out of the transmission.

1. Bring the transmission up to operating temperature (the radiator fan comes on) by driving the vehicle.

2. Park the vehicle on the level ground, and turn the engine off.

3. Remove the drain plug, and drain the automatic transmission fluid (ATF).

   NOTE: If a cooler flusher is to be used, see page 14-187 and 14-188.

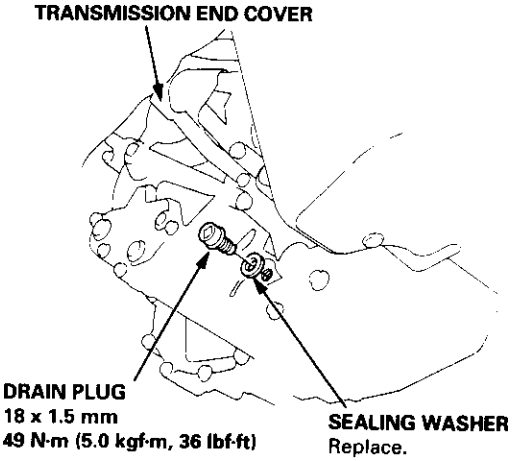

4. Reinstall the drain plug with a new sealing washer, then refill the transmission with the recommended fluid into the filler hole to the upper mark on the dipstick. Always use Genuine Honda Premium Formula Automatic Transmission Fluid (ATF). Using a non-Honda ATF can affect shift quality.

   Automatic Transmission Fluid Capacity:
   2.7 ℓ (2.9 US qt, 2.4 Imp qt) at changing
   5.9 ℓ (6.2 US qt, 5.2 Imp qt) at overhaul

Pressure Testing

⚠ WARNING

- **While testing, be careful of the rotating front wheels.**
- **Make sure lifts, jacks, and safety stands are placed properly (see section 1).**

CAUTION:

- **Before testing, be sure the transmission fluid is filled to the proper level.**
- **Warm up the engine before testing.**

1. Raise the vehicle (see section 1).

2. Warm up the engine, then stop the engine and connect a tachometer.

3. Connect the oil pressure gauges to each inspection hole.

   TORQUE: 18 N·m (1.8 kgf·m, 13 lbf·ft)

   CAUTION: Connect the oil pressure gauges securely; be sure not to allow dust and other foreign particles to enter the inspection holes.

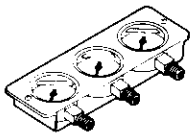

A/T OIL PRESSURE GAUGE SET W/PANEL
07406 – 0020400

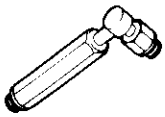

A/T OIL PRESSURE HOSE ADAPTER
07MAJ – PY40120
(4 required)

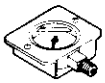

A/T LOW PRESSURE GAUGE SET W/PANEL
07406 – 0070300

A/T OIL PRESSURE HOSE
2210 mm
07MAJ – PY4011A
(4 required)

4. Start the engine, and measure the respective pressure as follows.
   - Line Pressure
   - 1st Clutch Pressure
   - 2nd, 3rd and 4th Clutch Pressure

5. Install a new washer and the sealing bolt in the inspection hole, and tighten to the specified torque.

   TORQUE: 18 N·m (1.8 kgf·m, 13 lbf·ft)

   NOTE: Do not reuse old sealing washers; always replace washers.

(cont'd)

(cont'd)

Line Pressure/1st Clutch Pressure Measurement

1. Set the parking brake, and block both rear wheels securely.
2. Start the engine, and run it at 2,000 rpm.
3. Shift to [N] or [P] position, then measure line pressure.

   NOTE: Higher pressure may be indicated if measurements are made in shift lever positions other than [N] or [P] position.

4. Shift to [D4] position, hold the engine at 2,000 rpm, and measure 1st clutch pressure.

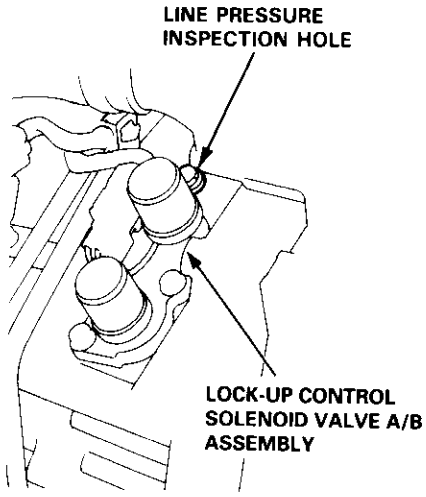

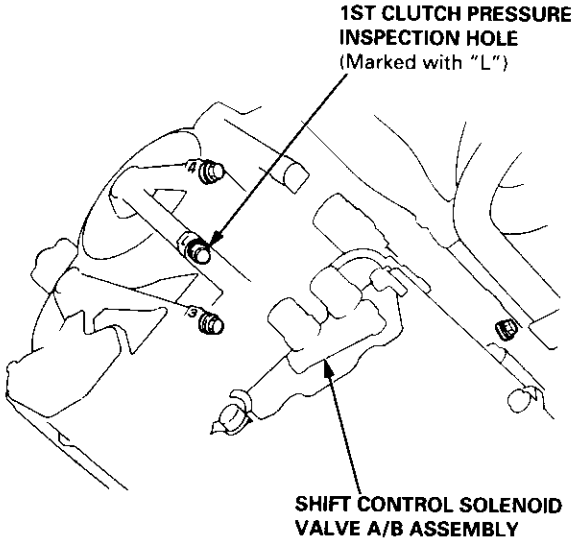

PRESSURE	SHIFT LEVER POSITION	SYMPTOM	PROBABLE CAUSE	FLUID PRESSURE	
				Standard	Service Limit
Line	[N] or [P]	No (or low) line pressure	Torque converter, ATF pump, pressure regulator, torque converter check valve	830 – 880 kPa (8.5 – 9.0 kgf/cm², 120 – 130 psi)	780 kPa (8.0 kgf/cm², 110 psi)
1st Clutch	[D4]	No or low 1st pressure	1st Clutch		

2nd, 3rd and 4th Clutch Pressure Measurement

1. Set the parking brake, and block both rear wheels securely.
2. Start the engine, and run it the engine at 2,000 rpm.
3. Shift to [2] position, then measure 2nd clutch pressure.
4. Shift to [D3] position, then measure 3rd clutch pressure.
5. Shift to [D4] position, then measure 4th clutch pressure.
6. Shift to [R] position, then measure 4th clutch pressure.

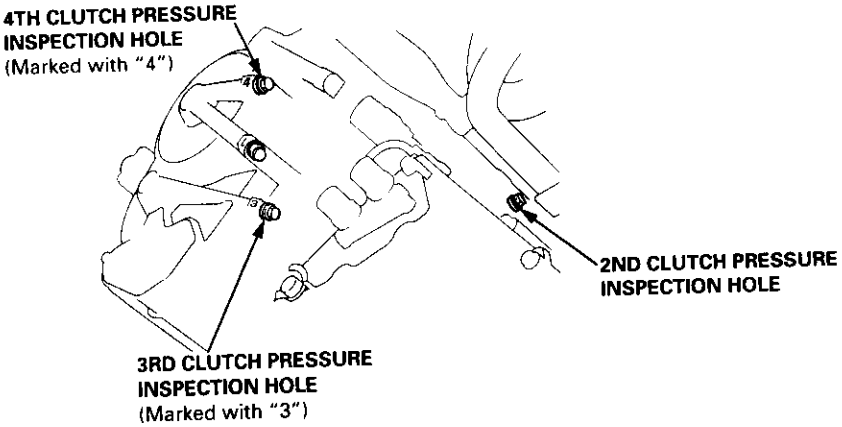

PRESSURE	SHIFT LEVER POSITION	SYMPTOM	PROBABLE CAUSE	FLUID PRESSURE	
				Standard	Service Limit
2nd Clutch	[2]	No or low 2nd pressure	2nd Clutch	800 – 850 kPa (8.2 – 8.7 kgf/cm², 120 – 120 psi)	760 kPa (7.7 kgf/cm², 110 psi)
3rd Clutch	[D3]	No or low 3rd pressure	3rd Clutch	810 – 860 kPa (8.3 – 8.8 kgf/cm², 120 – 130 psi)	760 kPa (7.8 kgf/cm², 110 psi)
4th Clutch	[D4]	No or low 4th pressure	4th Clutch		
	[R]		Servo Valve or 4th Clutch		

Removal

⚠ WARNING

- **Make sure lifts, jacks and safety stands are placed properly, and hoist bracket are attached to the correct position on the engine (see section 1).**
- **Apply parking brake and block rear wheels so vehicle will not roll off stands and fall on you while working under it.**

CAUTION: Use fender covers to avoid damaging painted surfaces.

1. Disconnect the battery negative (–) terminal from the battery, then remove the positive (+) terminal.

2. Remove the intake air duct.

   D16Y7 engine:
   Remove the intake air duct and resonator.

   D16Y8 engine:
   Remove the intake air duct and the air cleaner housing assembly.

3. Remove the starter cables and cable holder from the starter motor.

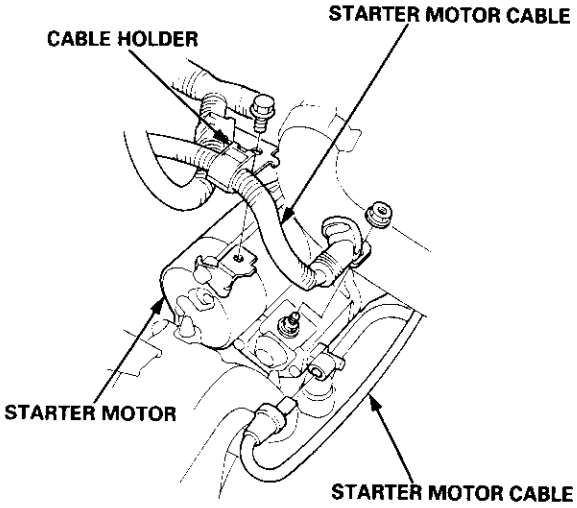

4. Remove the transmission ground cable, and disconnect the lock-up control solenoid connector.

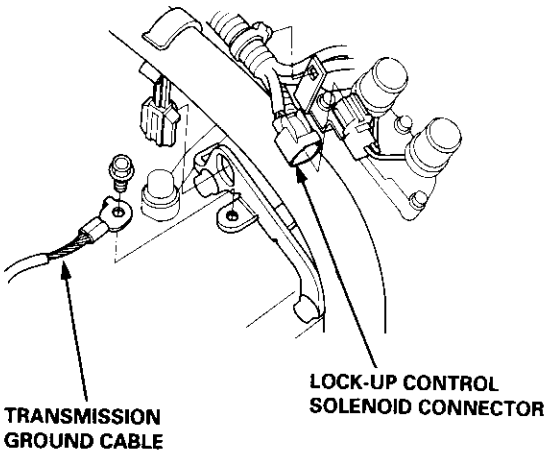

5. Disconnect the vehicle speed sensor (VSS) connector and the countershaft speed sensor connector.

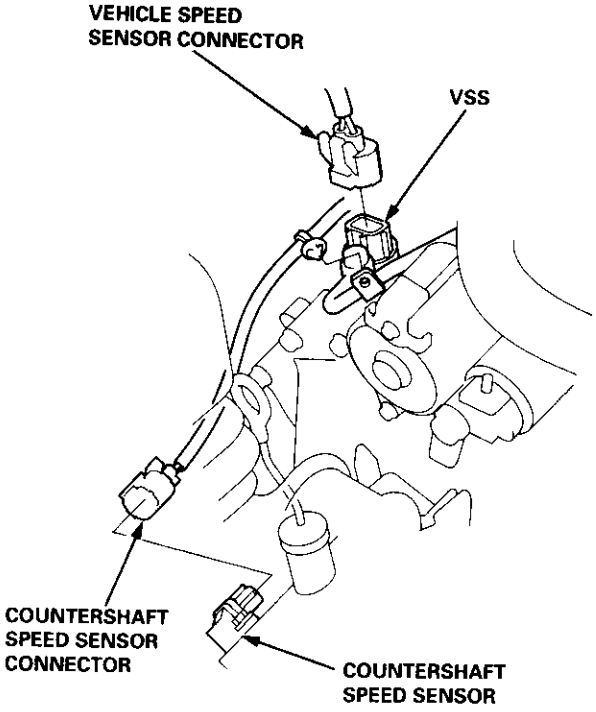

6. Remove the transmission housing mounting bolts and the rear engine mounting bolt.

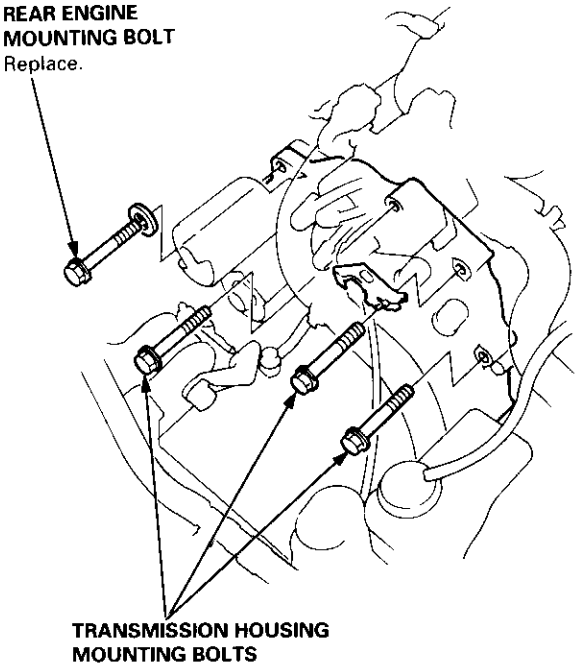

7. Disconnect the shift control solenoid, the linear solenoid, and the mainshaft speed sensor connectors.

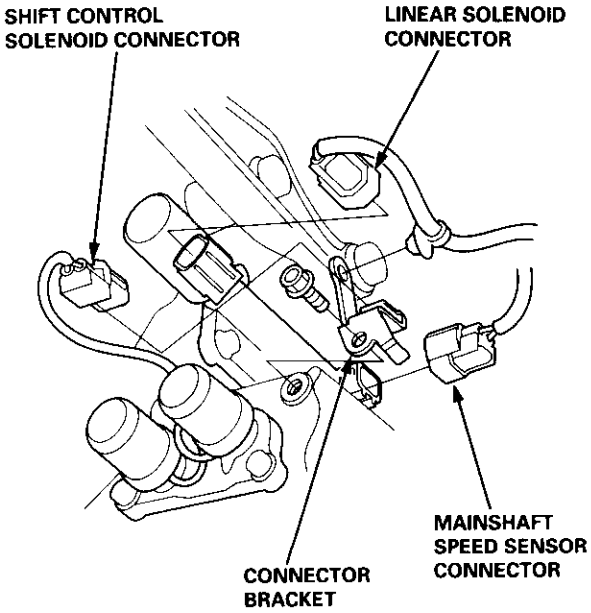

8. Remove the drain plug, and drain the automatic transmission fluid (ATF). Reinstall the drain plug with a new sealing washer.

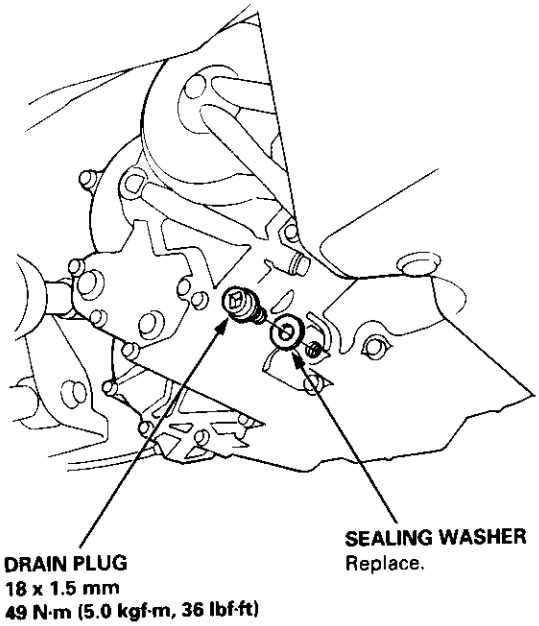

9. Remove the splash shield.

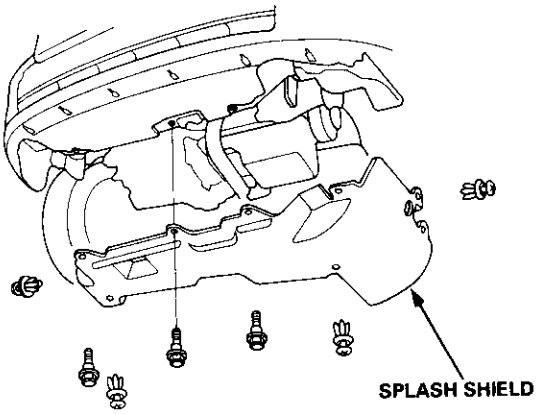

(cont'd)

Removal (cont'd)

10. Remove the cotter pins and castle nuts, then separate the ball joints from the lower arms (see section 18).

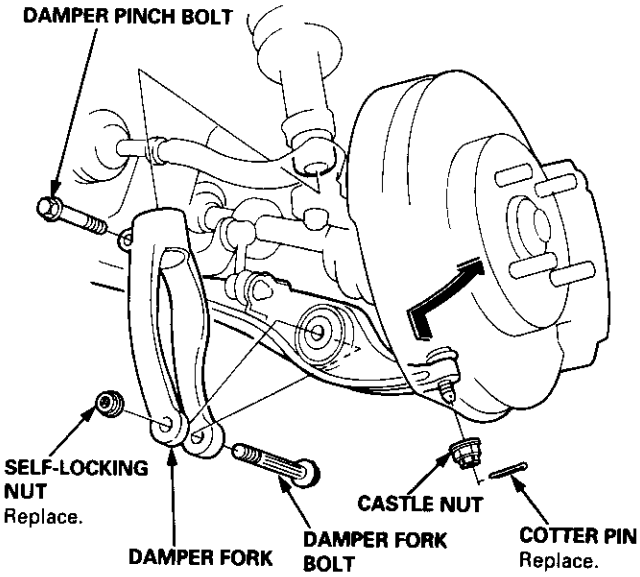

11. Remove the right damper fork bolt, then separate right damper fork and damper.

12. Pry the right and left driveshafts out of the differential.

13. Pull on the inboard joint to remove the right and left driveshafts (see section 16).

14. Tie plastic bags over the driveshaft ends.

    NOTE: Coat all precision finished surfaces with clean engine oil.

15. Remove the exhaust pipe A.

    NOTE: D16Y8 engine is shown; D16Y7 engine is similar.

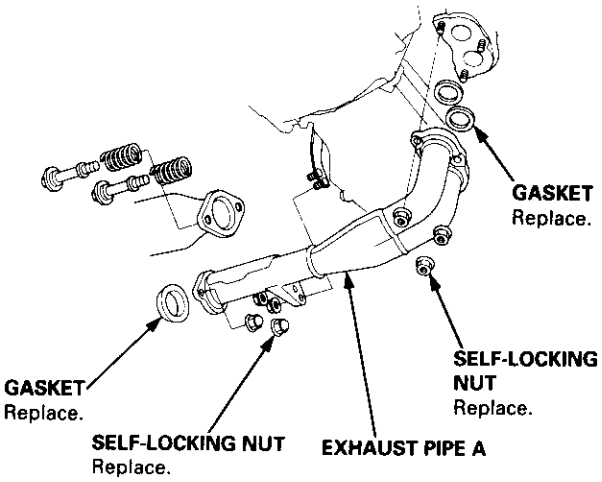

16. Remove the shift cable cover, then remove the shift cable by removing the control lever.

    CAUTION: Take care not to bend the shift cable.

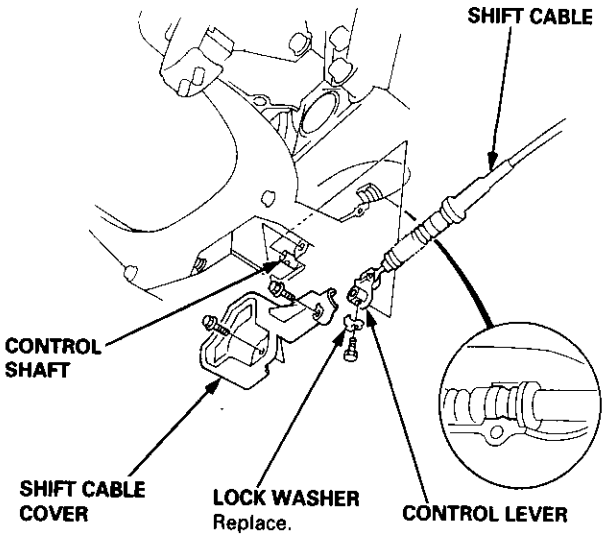

17. Remove the right front mount/bracket.

18. Remove the ATF cooler hoses at the ATF cooler lines. Turn the ends of the ATF cooler hoses up to prevent ATF from flowing out, then plug the ATF cooler hoses and lines.

    NOTE: Check for any sign of leakage at the hose joints.

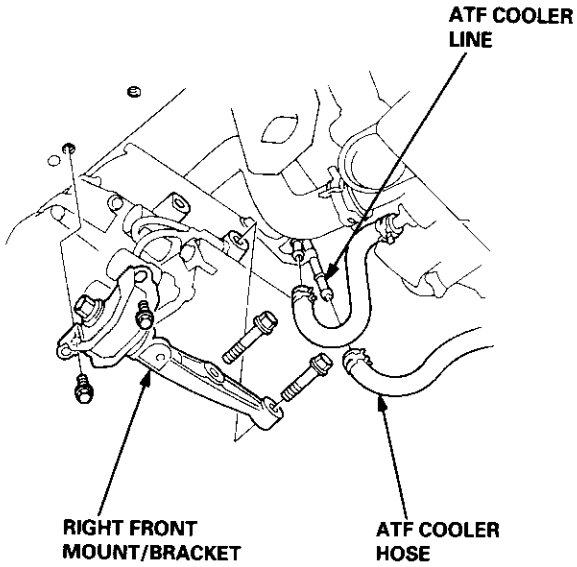

19. Remove the engine stiffener and the torque converter cover.

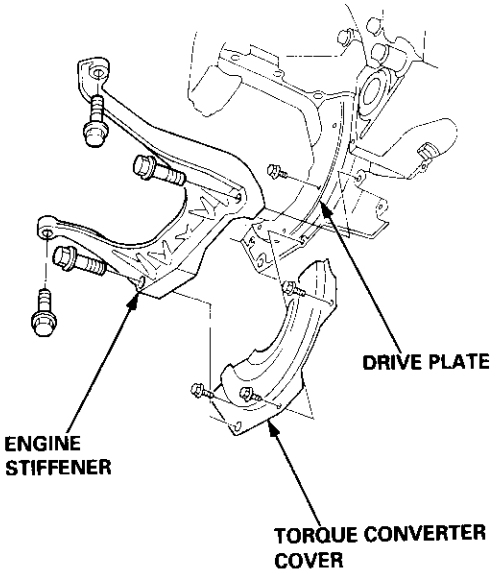

20. Remove the eight drive plate bolts one at a time while rotating the crankshaft pulley.

21. Remove the distributor.

22. Attach a hoisting bracket to the engine, then lift the engine slightly.

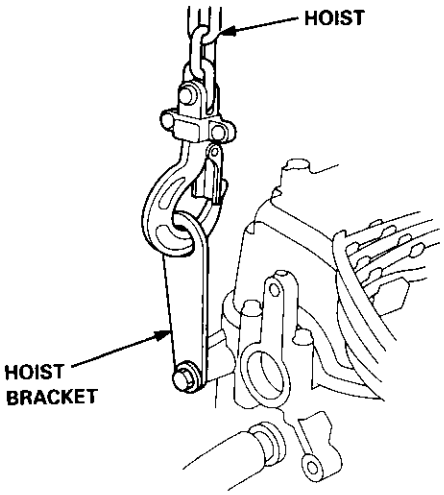

23. Place a jack under the transmission, and raise the transmission just enough to take weight off of the mounts, then remove the transmission mount.

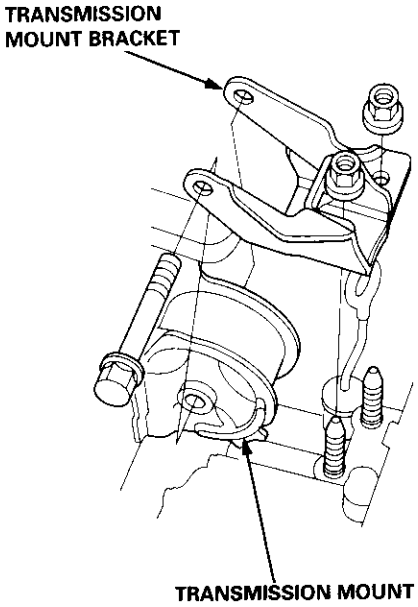

24. Remove the transmission housing mounting bolts and the rear engine mounting bolts.

25. Pull the transmission away from the engine until it clears the 14 mm dowel pins, then lower it on the transmission jack.

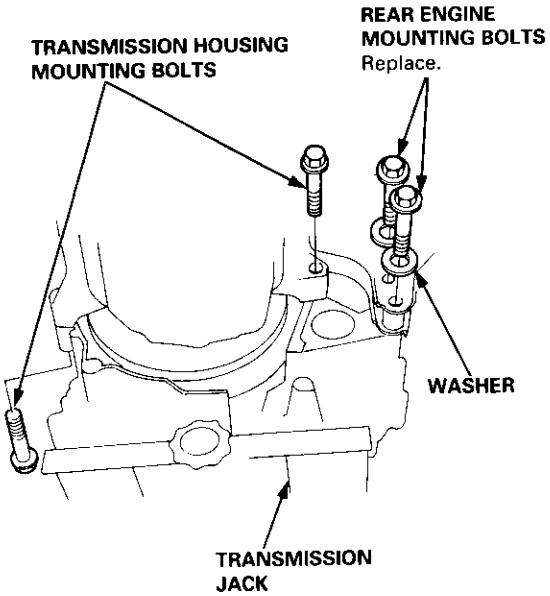

26. If necessary, remove the torque converter and the starter motor.

Transmission/End Cover

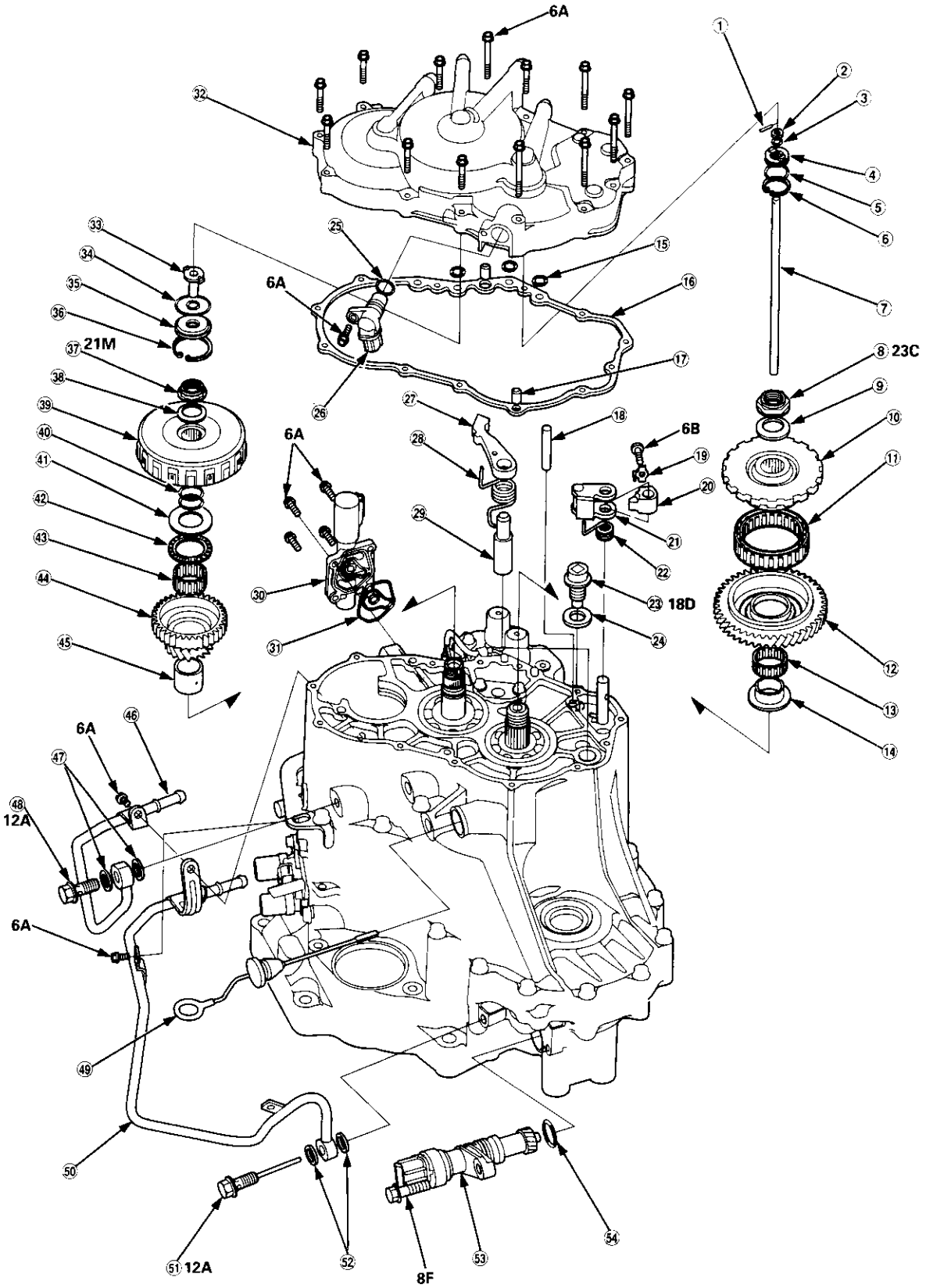

① **ROLLER**
② **COLLAR**
③ **O-RING** Replace.
④ **FEED PIPE FLANGE**
⑤ **O-RING** Replace.
⑥ **SNAP RING**
⑦ **3RD CLUTCH FEED PIPE**
⑧ **COUNTERSHAFT LOCKNUT (FLANGE NUT) 23 x 1.25 mm** Replace.
⑨ **CONICAL SPRING WASHER** Replace.
⑩ **PARK GEAR**
⑪ **ONE-WAY CLUTCH**
⑫ **COUNTERSHAFT 1ST GEAR**
⑬ **NEEDLE BEARING**
⑭ **COUNTERSHAFT 1ST GEAR COLLAR**
⑮ **O-RINGS** Replace.
⑯ **END COVER GASKET** Replace.
⑰ **DOWEL PINS**
⑱ **PARK PAWL STOP**
⑲ **LOCK WASHER** Replace.
⑳ **PARK STOP** Selective part
㉑ **PARK LEVER**
㉒ **PARK LEVER SPRING**
㉓ **DRAIN PLUG**
㉔ **SEALING WASHER** Replace.
㉕ **O-RING** Replace.
㉖ **COUNTERSHAFT SPEED SENSOR**
㉗ **PARK PAWL**
㉘ **PARK PAWL SPRING**
㉙ **PARK PAWL SHAFT**
㉚ **LINEAR SOLENOID ASSEMBLY**
㉛ **LINEAR SOLENOID GASKET** Replace.
㉜ **END COVER**
㉝ **1ST CLUTCH FEED PIPE**
㉞ **O-RINGS** Replace.
㉟ **FEED PIPE FLANGE**
㊱ **SNAP RING**
㊲ **MAINSHAFT LOCKNUT (FLANGE NUT) 21 x 1.25 mm** Replace.
㊳ **CONICAL SPRING WASHER** Replace.
㊴ **1ST CLUTCH ASSEMBLY**
㊵ **O-RINGS** Replace.
㊶ **THRUST WASHER**
㊷ **THRUST NEEDLE BEARING**
㊸ **NEEDLE BEARING**
㊹ **MAINSHAFT 1ST GEAR**
㊺ **MAINSHAFT 1ST GEAR COLLAR**
㊻ **ATF COOLER LINE**
㊼ **SEALING WASHERS** Replace.
㊽ **LINE BOLT**
㊾ **ATF DIPSTICK**
㊿ **ATF COOLER LINE**
(51) **LINE BOLT**
(52) **SEALING WASHERS** Replace.
(53) **VEHICLE SPEED SENSOR**
(54) **O-RING** Replace.

TORQUE SPECIFICATIONS

Bolt/Nut No.	Torque Value	Size	Remarks
6A	12 N·m (1.2 kgf·m, 8.7 lbf·ft)	6 x 1.0 mm	
6B	14 N·m (1.4 kgf·m, 10 lbf·ft)	6 x 1.0 mm	
8F	22 N·m (2.2 kgf·m, 16 lbf·ft)	8 x 1.25 mm	
12A	28 N·m (2.9 kgf·m, 21 lbf·ft)	12 x 1.25 mm	Line bolt
18D	49 N·m (5.0 kgf·m, 36 lbf·ft)	18 x 1.5 mm	Drain plug
21M	78 N·m (8.0 kgf·m, 58 lbf·ft)	21 x 1.25 mm	Mainshaft locknut: Left-hand threads
23C	103 N·m (10.5 kgf·m, 75.9 lbf·ft)	23 x 1.25 mm	Countershaft locknut: Left-hand threads

Transmission Housing

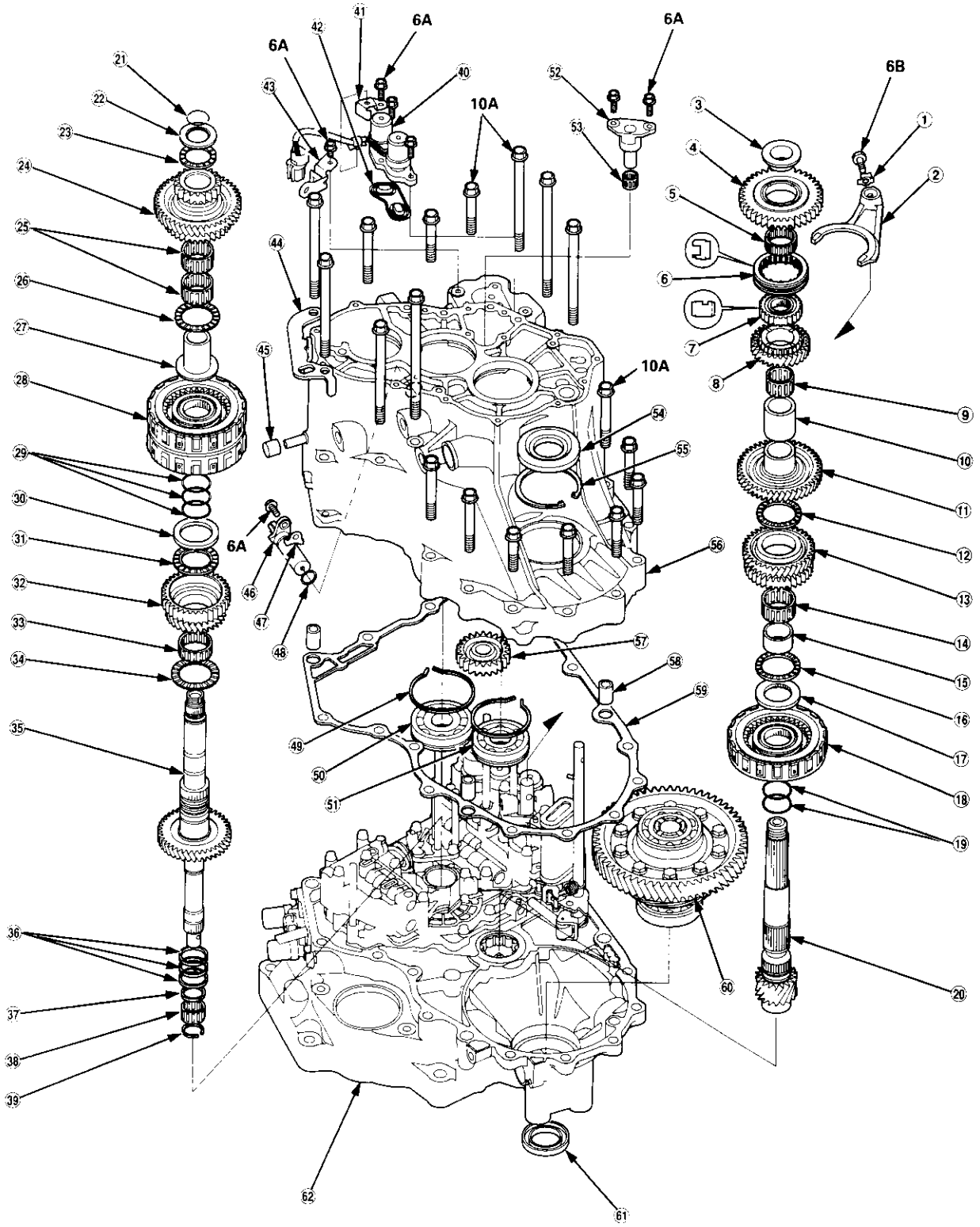

① **LOCK WASHER** Replace.
② **REVERSE SHIFT FORK**
③ **COUNTERSHAFT REVERSE GEAR COLLAR**
④ **COUNTERSHAFT REVERSE GEAR**
⑤ **NEEDLE BEARING**
⑥ **REVERSE SELECTOR**
⑦ **REVERSE SELECTOR HUB**
⑧ **COUNTERSHAFT 4TH GEAR**
⑨ **NEEDLE BEARING**
⑩ **DISTANCE COLLAR, 28 mm** Selective part
⑪ **COUNTERSHAFT 2ND GEAR**
⑫ **THRUST NEEDLE BEARING**
⑬ **COUNTERSHAFT 3RD GEAR**
⑭ **NEEDLE BEARING**
⑮ **COUNTERSHAFT 3RD GEAR COLLAR**
⑯ **THRUST NEEDLE BEARING**
⑰ **SPLINED WASHER**
⑱ **3RD CLUTCH ASSEMBLY**
⑲ **O-RINGS** Replace.
⑳ **COUNTERSHAFT**
㉑ **SNAP RING**
㉒ **THRUST WASHER**
㉓ **THRUST NEEDLE BEARING**
㉔ **MAINSHAFT 4TH GEAR/REVERSE GEAR**
㉕ **NEEDLE BEARINGS**
㉖ **THRUST NEEDLE BEARING**
㉗ **MAINSHAFT 4TH GEAR COLLAR**
㉘ **2ND/4TH CLUTCH ASSEMBLY**
㉙ **O-RINGS** Replace.
㉚ **THRUST WASHER, 36.5 x 55 mm** Selective part
㉛ **THRUST NEEDLE BEARING**
㉜ **MAINSHAFT 2ND GEAR**
㉝ **NEEDLE BEARING**
㉞ **THRUST NEEDLE BEARING**
㉟ **MAINSHAFT**
㊱ **SEALING RINGS, 35 mm**
㊲ **SEALING RING, 29 mm**
㊳ **NEEDLE BEARING**
㊴ **SET RING**
㊵ **SHIFT CONTROL SOLENOID VALVE A/B ASSEMBLY**
㊶ **HARNESS CLAMP BRACKET**
㊷ **SHIFT CONTROL SOLENOID FILTER/GASKET** Replace.
㊸ **CONNECTOR BRACKET**
㊹ **TRANSMISSION HANGER**
㊺ **BREATHER CAP**
㊻ **MAINSHAFT SPEED SENSOR**
㊼ **MAINSHAFT SPEED SENSOR WASHER (D16Y7 engine)**
㊽ **O-RING** Replace.
㊾ **SNAP RING**
㊿ **MAINSHAFT TRANSMISSION HOUSING BEARING**
(51) **COUNTERSHAFT TRANSMISSION HOUSING BEARING**
(52) **REVERSE IDLER GEAR SHAFT HOLDER ASSEMBLY**
(53) **NEEDLE BEARING**
(54) **OIL SEAL** Replace.
(55) **SET RING, 80 mm** Selective part
(56) **TRANSMISSION HOUSING**
(57) **REVERSE IDLER GEAR**
(58) **DOWEL PINS**
(59) **TRANSMISSION HOUSING GASKET** Replace.
(60) **DIFFERENTIAL ASSEMBLY**
(61) **OIL SEAL** Replace.
(62) **TORQUE CONVERTER HOUSING**

TORQUE SPECIFICATIONS

Bolt/Nut No.	Torque Value	Size	Remarks
6A	12 N·m (1.2 kgf·m, 8.7 lbf·ft)	6 x 1.0 mm	
6B	14 N·m (1.4 kgf·m, 10 lbf·ft)	6 x 1.0 mm	
10A	44 N·m (4.5 kgf·m, 33 lbf·ft)	10 x 1.25 mm	

Torque Converter Housing/Valve Body

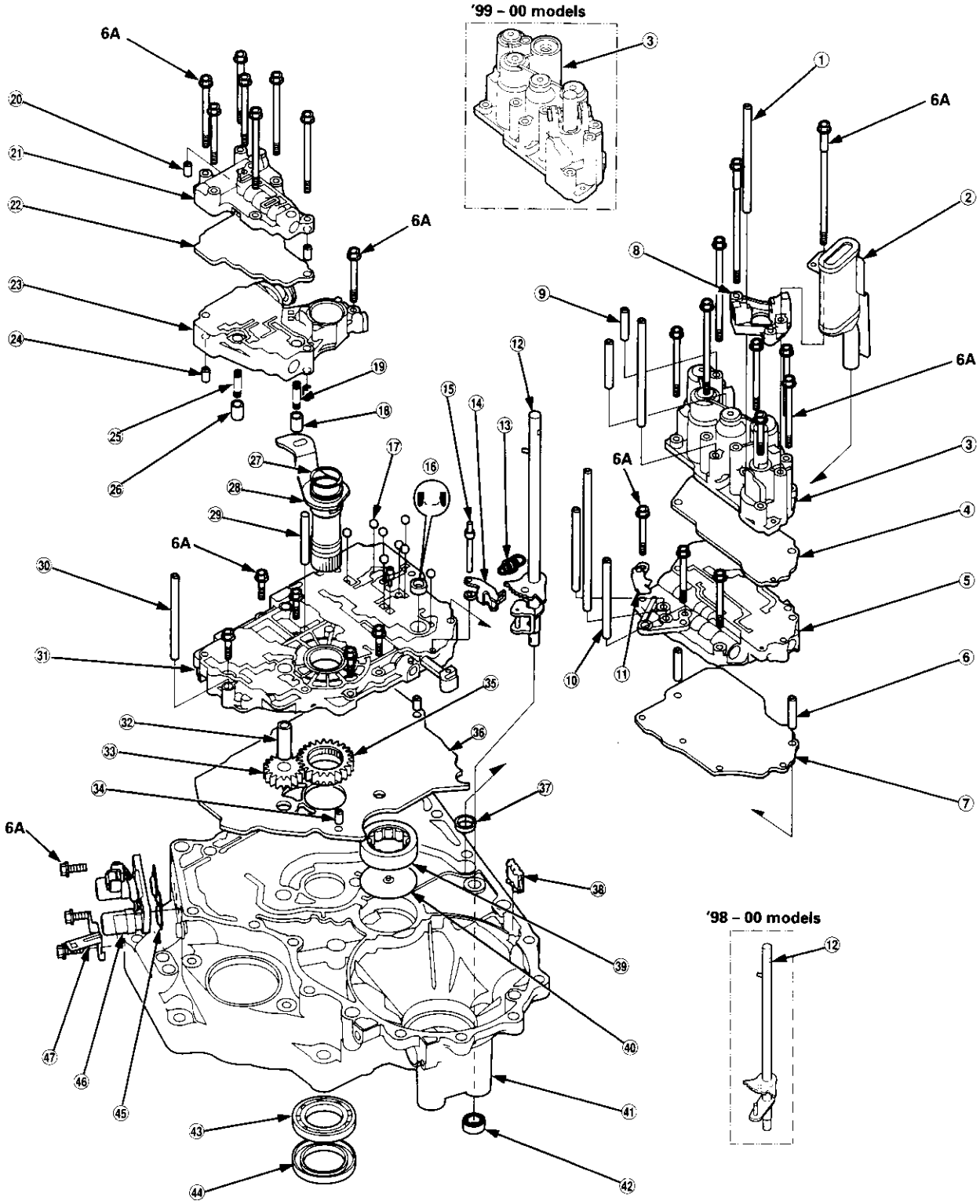

① **ATF FEED PIPE**
② **ATF STRAINER**
③ **SERVO BODY**
'99 – 00 models servo body has integrally molded servo detent.
④ **SERVO SEPARATOR PLATE**
⑤ **SECONDARY VALVE BODY**
⑥ **DOWEL PINS**
⑦ **SECONDARY SEPARATOR PLATE**
⑧ **SERVO DETENT BASE ('96 – '98 models)**
⑨ **ATF FEED PIPES**
⑩ **ATF FEED PIPES**
⑪ **SHAFT STOP**
⑫ **CONTROL SHAFT**
⑬ **DETENT ARM SPRING**
⑭ **DETENT ARM**
⑮ **DETENT ARM SHAFT**
⑯ **FILTER** Replace.
⑰ **CHECK BALLS**
⑱ **TORQUE CONVERTER CHECK VALVE**
⑲ **TORQUE CONVERTER CHECK VALVE SPRING**
⑳ **DOWEL PINS**
㉑ **LOCK-UP VALVE BODY**
㉒ **LOCK-UP SEPARATOR PLATE**
㉓ **REGULATOR VALVE BODY**
㉔ **DOWEL PINS**
㉕ **COOLER RELIEF VALVE SPRING**
㉖ **COOLER RELIEF VALVE**
㉗ **O-RING** Replace.
㉘ **STATOR SHAFT**
㉙ **STOP SHAFT**
㉚ **ATF FEED PIPE**
㉛ **MAIN VALVE BODY**
㉜ **ATF PUMP DRIVEN GEAR SHAFT**
㉝ **ATF PUMP DRIVEN GEAR**
㉞ **DOWEL PINS**
㉟ **ATF PUMP DRIVE GEAR**
㊱ **MAIN SEPARATOR PLATE**
㊲ **SUCTION PIPE COLLAR**
㊳ **ATF MAGNET**
㊴ **COUNTERSHAFT TORQUE CONVERTER HOUSING BEARING**
㊵ **ATF GUIDE PLATE**
㊶ **TORQUE CONVERTER HOUSING**
㊷ **OIL SEAL** Replace.
㊸ **MAINSHAFT TORQUE CONVERTER HOUSING BEARING**
㊹ **OIL SEAL** Replace.
㊺ **LOCK-UP CONTROL SOLENOID FILTER/GASKET** Replace.
㊻ **LOCK-UP CONTROL SOLENOID VALVE A/B ASSEMBLY**
㊼ **CONNECTOR BRACKET**

TORQUE SPECIFICATIONS

Bolt/Nut No.	Torque Value	Size	Remarks
6A	12 N·m (1.2 kgf·m, 8.7 lbf·ft)	6 x 1.0 mm	

Removal

NOTE:
- Clean all parts thoroughly in solvent or carburetor cleaner, and dry with compressed air.
- Blow out all passages.
- When removing the right side cover, replace the following:
  - — O-rings
  - — Mainshaft and countershaft locknuts
  - — Conical spring washers
  - — End cover gasket
  - — Lock washer
  - — Sealing washers

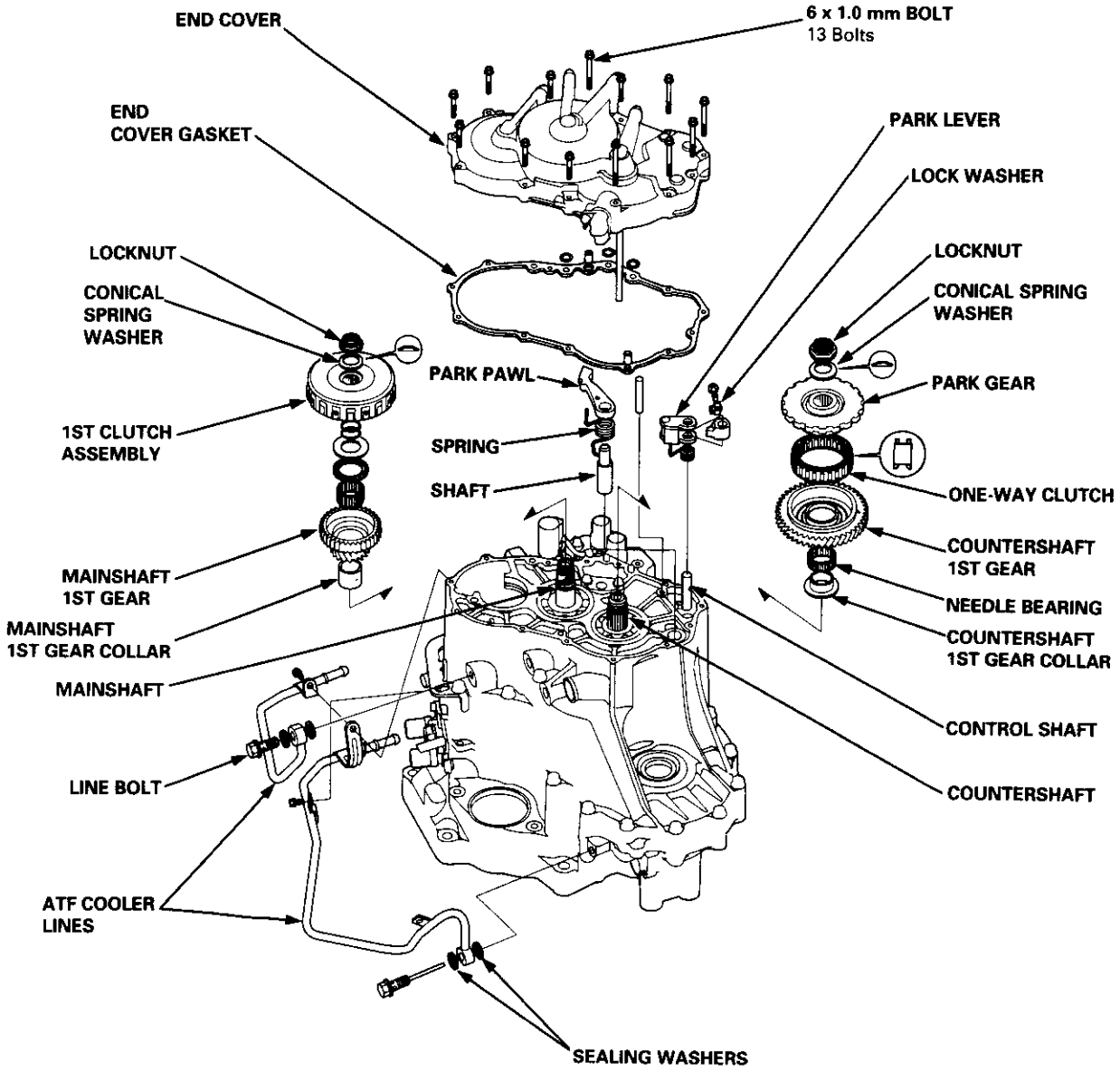

1. Remove the 13 bolts securing the end cover, then remove the cover.

2. Slip the special tool onto the mainshaft as shown.

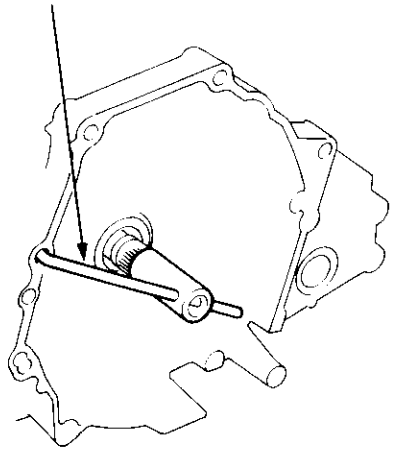

3. Engage the park pawl with the park gear.

4. Cut the lock tabs of the mainshaft and countershaft locknuts using a chisel as shown, then remove the locknuts and conical spring washers.

   CAUTION: Keep all of the chiseled particles out of the transmission.

   NOTE:
   - Mainshaft and countershaft locknuts have left-hand threads.
   - Always wear safety glasses.

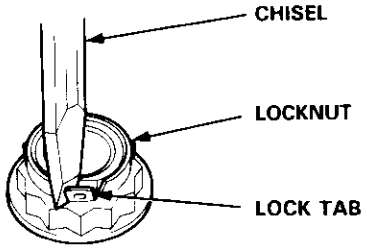

5. Remove the special tool from the mainshaft after removing the locknuts.

6. Remove the 1st clutch and mainshaft 1st gear assembly and mainshaft 1st gear collar from the mainshaft.

7. Remove the park pawl, spring and shaft.

8. Remove the park lever from the control shaft.

9. Using a universal two-jaw puller, remove the park gear, one-way clutch and countershaft 1st gear assembly.

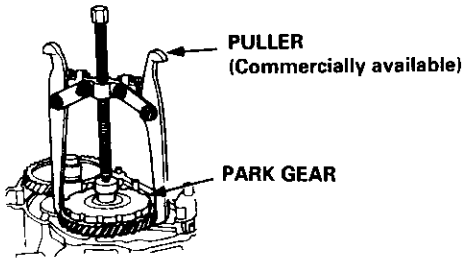

10. Remove the needle bearing and the countershaft 1st gear collar from the countershaft.

11. Remove the ATF cooler lines and ATF dipstick.

Transmission Housing

Removal

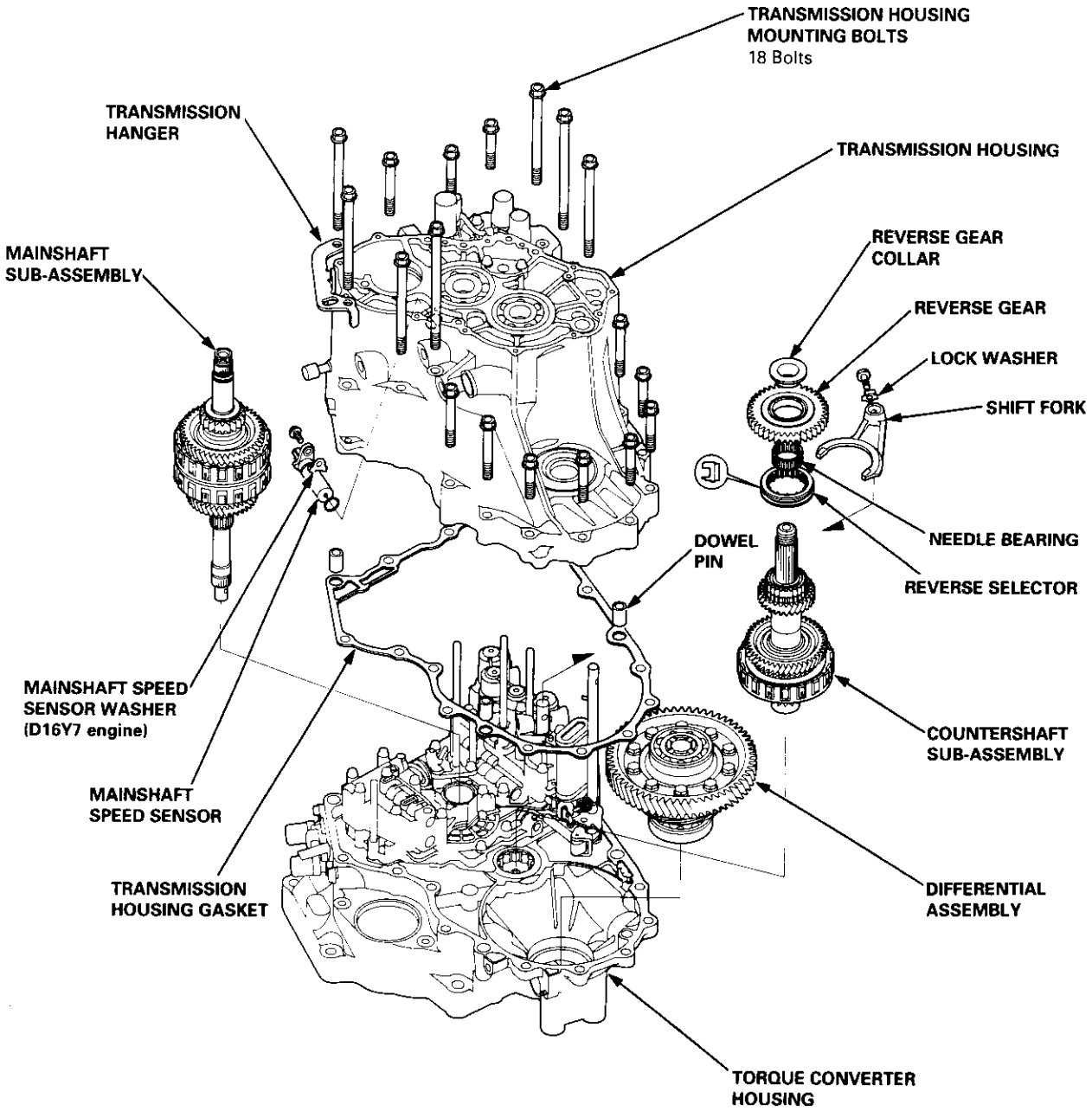

NOTE:
- Clean all parts thoroughly in solvent or carburetor cleaner, and dry with compressed air.
- Blow out all passages.
- When removing the transmission housing, replace the following:
  — O-ring
  — Transmission housing gasket
  — Lock washer

1. Remove the mainshaft speed sensor from the transmission housing.

2. Remove the transmission housing mounting bolts and hanger.

3. Align the spring pin on the control shaft with the transmission housing groove by turning the control shaft.

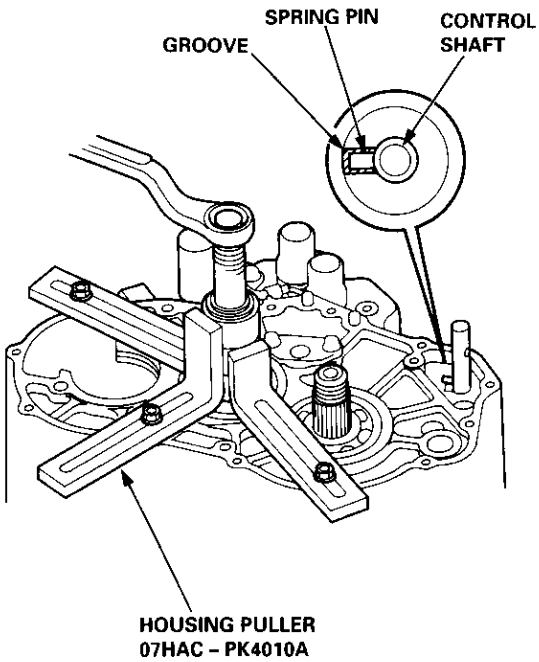

4. Install the special tool on the transmission housing, then remove the housing as shown.

   CAUTION: Make sure the mainshaft speed sensor has been removed from the transmission housing before removing the transmission housing from the torque converter housing.

5. Remove the countershaft reverse gear with the collar and needle bearing.

6. Remove the lock bolt securing the shift fork, then remove the fork with the reverse selector from the countershaft.

7. Remove the countershaft sub-assembly and the mainshaft sub-assembly together.

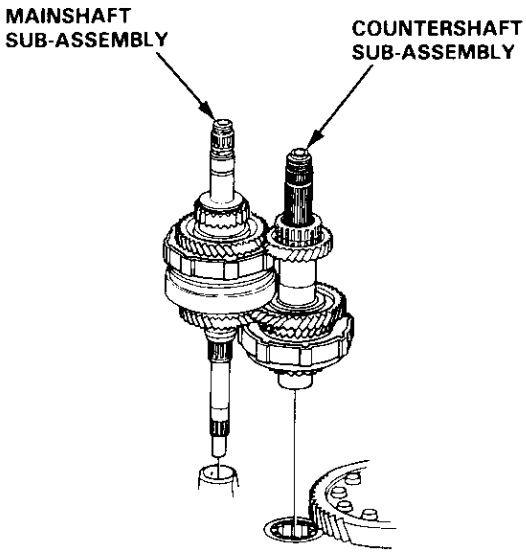

8. Remove the differential assembly from the torque converter housing.

Removal

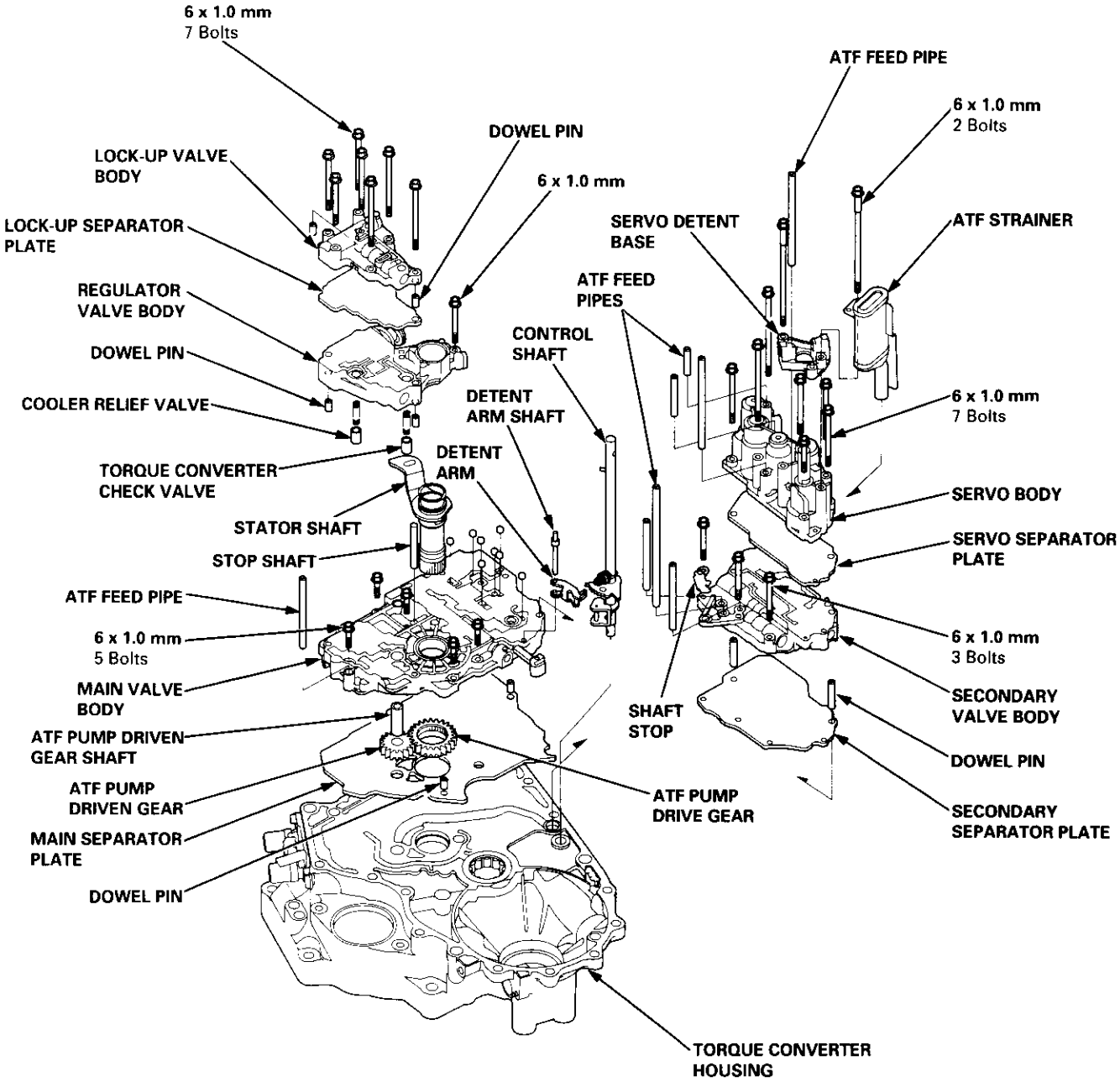

NOTE: The illustration shows the '96 – 98 models, the '99 – 00 models do not have the servo detent base; the servo detent is integral with the servo body.

NOTE:
- Clean all parts thoroughly in solvent or carburetor cleaner, and dry with compressed air.
- Blow out all passages.
- When removing the valve body, replace the O-ring.

1. Remove the ATF feed pipes from the servo body, secondary valve body and main valve body.

2. For '96 – 98 models: Remove the ATF strainer and servo detent base (two bolts).
   For '99 – 00 models: Remove the ATF strainer (one bolt).

3. Remove the servo body and servo separator plate ('96 – 98 models: seven bolts, '99 – 00 models: eight bolts).

4. Remove the secondary valve body, shaft stop and secondary separator plate (three bolts).

5. Remove the lock-up valve body and separator plate (seven bolts).

6. Remove the regulator valve body (one bolt).

7. Remove the stator shaft and stop shaft.

8. Remove the detent spring from the detent arm, then remove the control shaft from the torque converter housing.

9. Remove the detent arm and detent arm shaft from the main valve body.

10. Remove the main valve body (five bolts).

    NOTE: Do not let the eight check balls fall out of the main valve body when removing the main valve body.

11. Remove the ATF pump driven gear shaft, then remove the ATF pump gears.

12. Remove the main separator plate and two dowel pins.

13. Clean the inlet opening of the ATF strainer thoroughly with compressed air, then check that it is in good condition, and the inlet opening is not clogged.

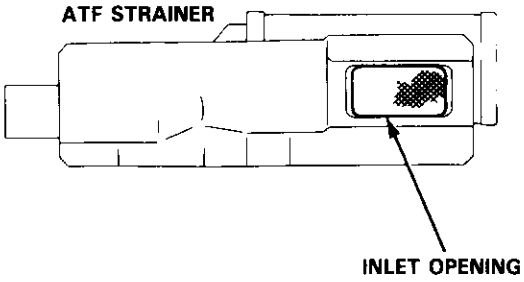

14. Test the filter by pouring clean ATF fluid through the inlet opening. Replace the ATF strainer if it is clogged or damaged.

    NOTE: The ATF strainer can be reused if it is not clogged.

Valve Caps

Description

- Caps with one projected tip and one flat end are installed with the flat end toward the inside of the valve body.
- Caps with a projected tip on each end are installed with the smaller tip toward the inside of the valve body. The small tip is a spring guide.

Toward outside of valve body.

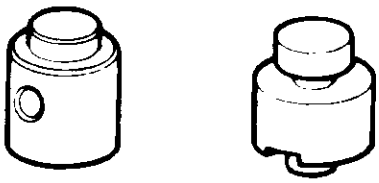

Toward inside of valve body.

- Caps with one projected tip and hollow end are installed with the tip toward the inside of the valve body. The tip is a spring guide.

Toward outside of valve body.

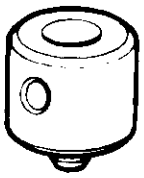

Toward inside of valve body.

- Caps with hollow ends are installed with the hollow end away from the inside of the valve body.
- Caps with notched ends are installed with the notch toward the inside of the valve body.
- Caps with flat ends and a hole through the center are installed with the smaller hole toward the inside of the valve body.

Toward outside of valve body.

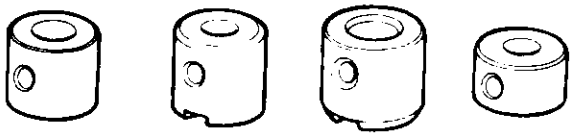

Toward inside of valve body.

- Caps with flat ends and a groove around the cap are installed with the grooved side toward the outside of the valve body.

Toward outside of valve body.

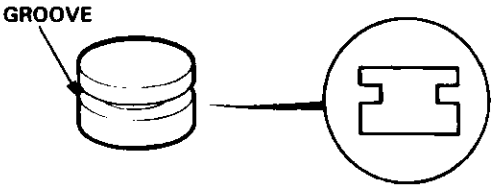

Sectional view.

Toward inside of valve body.

Repair

NOTE: This repair is only necessary if one or more of the valves in a valve body do not slide smoothly in their bores. You may use this procedure to free the valves in the valve bodies.

1. Soak a sheet of #600 abrasive paper in ATF for about 30 minutes.

2. Carefully tap the valve body so the sticking valve drops out of its bore.

   CAUTION: It may be necessary to use a small screwdriver to pry the valve free. Be careful not to scratch the bore with the screwdriver.

3. Inspect the valve for any scuff marks. Use the ATF-soaked #600 paper to polish off any burrs that are on the valve, then wash the valve in solvent and dry it with compressed air.

4. Roll up half a sheet of ATF-soaked paper, and insert it in the valve bore of the sticking valve.
   Twist the paper slightly, so that it unrolls and fits the bore tightly, then polish the bore by twisting the paper as you push it in and out.

   CAUTION: The valve body is aluminum and doesn't require much polishing to remove any burrs.

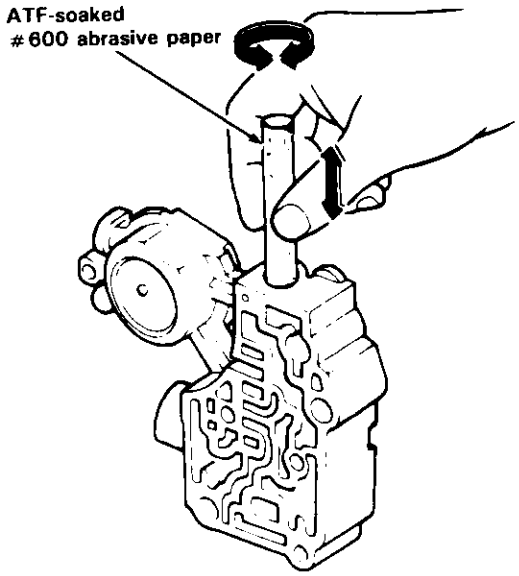

5. Remove the #600 paper and thoroughly wash the entire valve body in solvent, then dry it with compressed air.

6. Coat the valve with ATF, then drop it into its bore. It should drop to the bottom of the bore under its own weight. If not, repeat step 4, then retest.

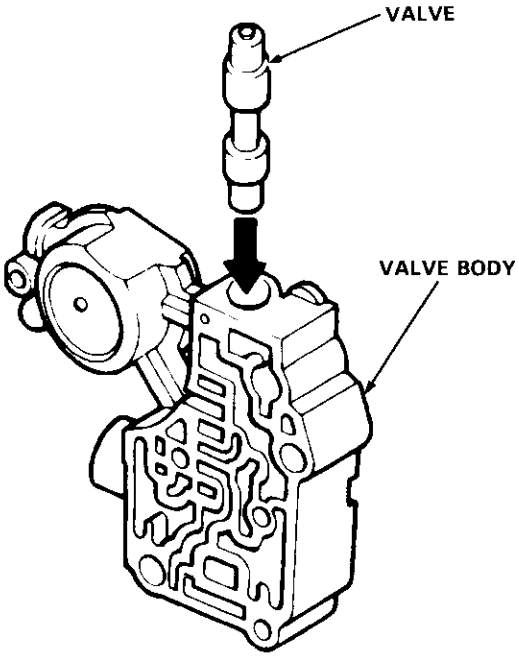

7. Remove the valve, then thoroughly clean it and the valve body with solvent. Dry all parts with compressed air, then reassemble using ATF as a lubricant.

Assembly

NOTE:
Coat all parts with ATF before assembly.

- Install the valve, valve spring and cap in the valve body and secure with the roller.

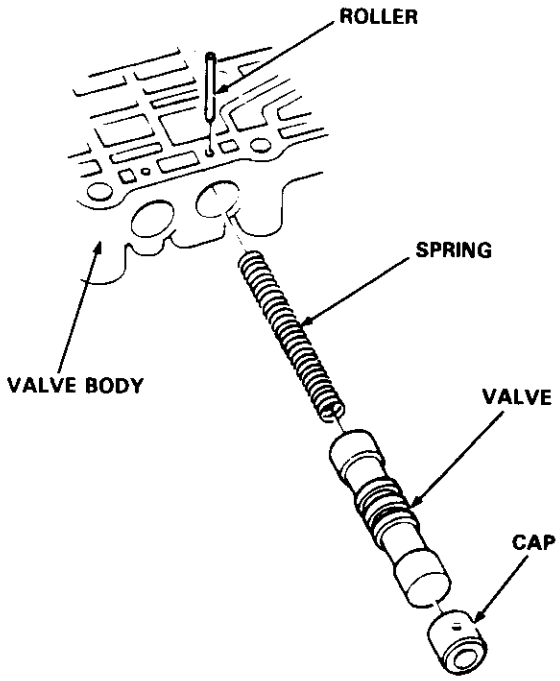

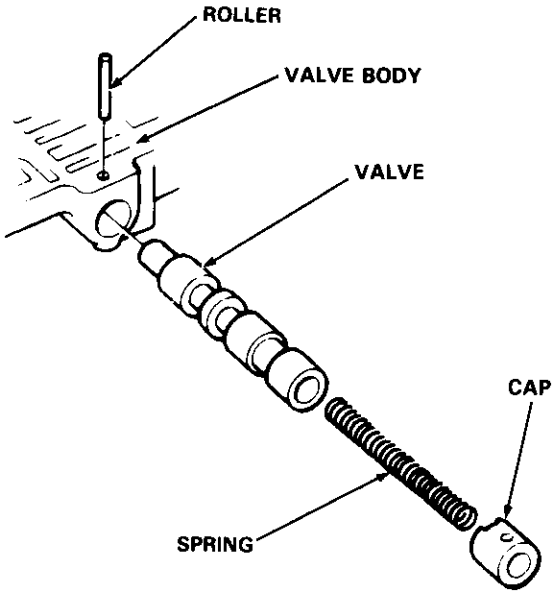

- Set the spring in the valve and install it in the valve body. Push the spring in with a screwdriver, then install the spring seat.

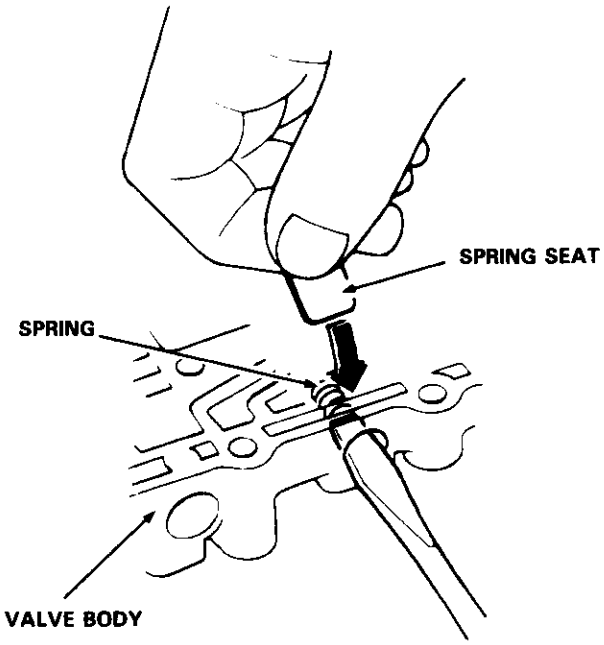

- Install the valve, spring and cap in the valve body. Push the cap, then install the clip.

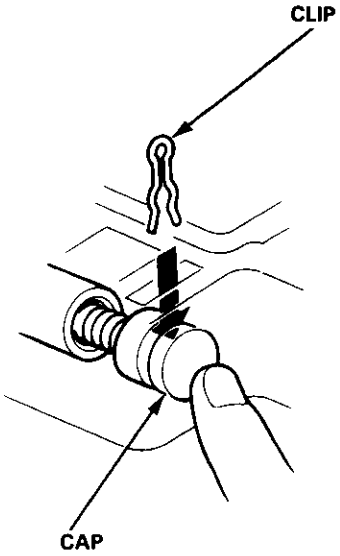

Inspection

1. Install the ATF pump gears and ATF pump driven gear shaft in the main valve body.

   NOTE:
   - Lubricate all parts with ATF during inspection.
   - Install the ATF pump driven gear with its grooved and chamfered side facing up as shown.

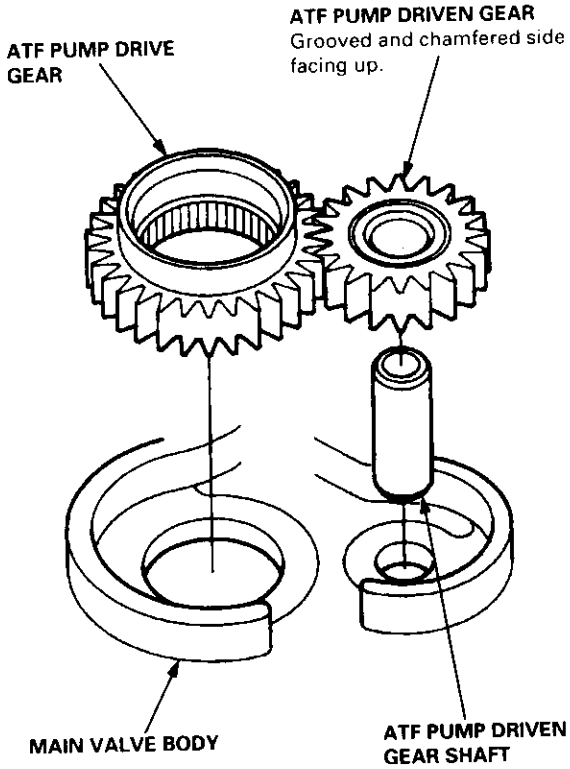

2. Measure the side clearance of the ATF pump drive and driven gears.

   ATF Pump Gears Side (Radial) Clearance:
   Standard (New):
   ATF Pump Drive Gear
   0.105 – 0.1325 mm (0.004 – 0.005 in)
   ATF Pump Driven Gear
   0.035 – 0.0625 mm (0.0014 – 0.0025 in)

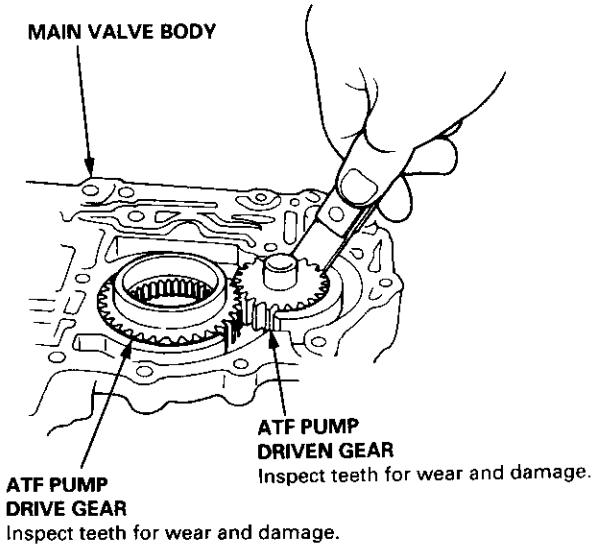

3. Remove the ATF pump driven gear shaft. Measure the thrust clearance of the ATF pump driven gear-to-valve body.

   ATF Pump Drive/Driven Gear Thrust (Axial) Clearance:
   Standard (New): 0.03 – 0.05 mm (0.001 – 0.002 in)
   Service Limit: 0.07 mm (0.003 in)

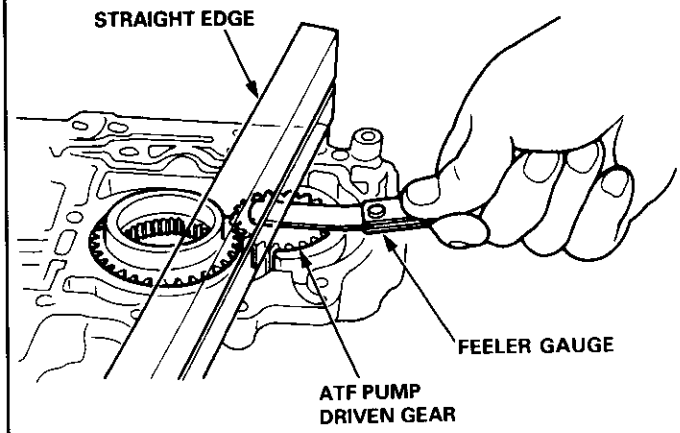

Main Valve Body

Disassembly/Inspection/Reassembly

NOTE:
- Clean all parts thoroughly in solvent or carburetor cleaner, and dry with compressed air. Blow out all passages.
- Replace the valve body as an assembly if any parts are worn or damaged.
- Check all valves for free movement. If any fail to slide freely, see Valve Body Repair on page 14-139.
- Coat all parts with ATF during assembly.

CAUTION: Do not use a magnet to remove the check balls; it may magnetize the balls.

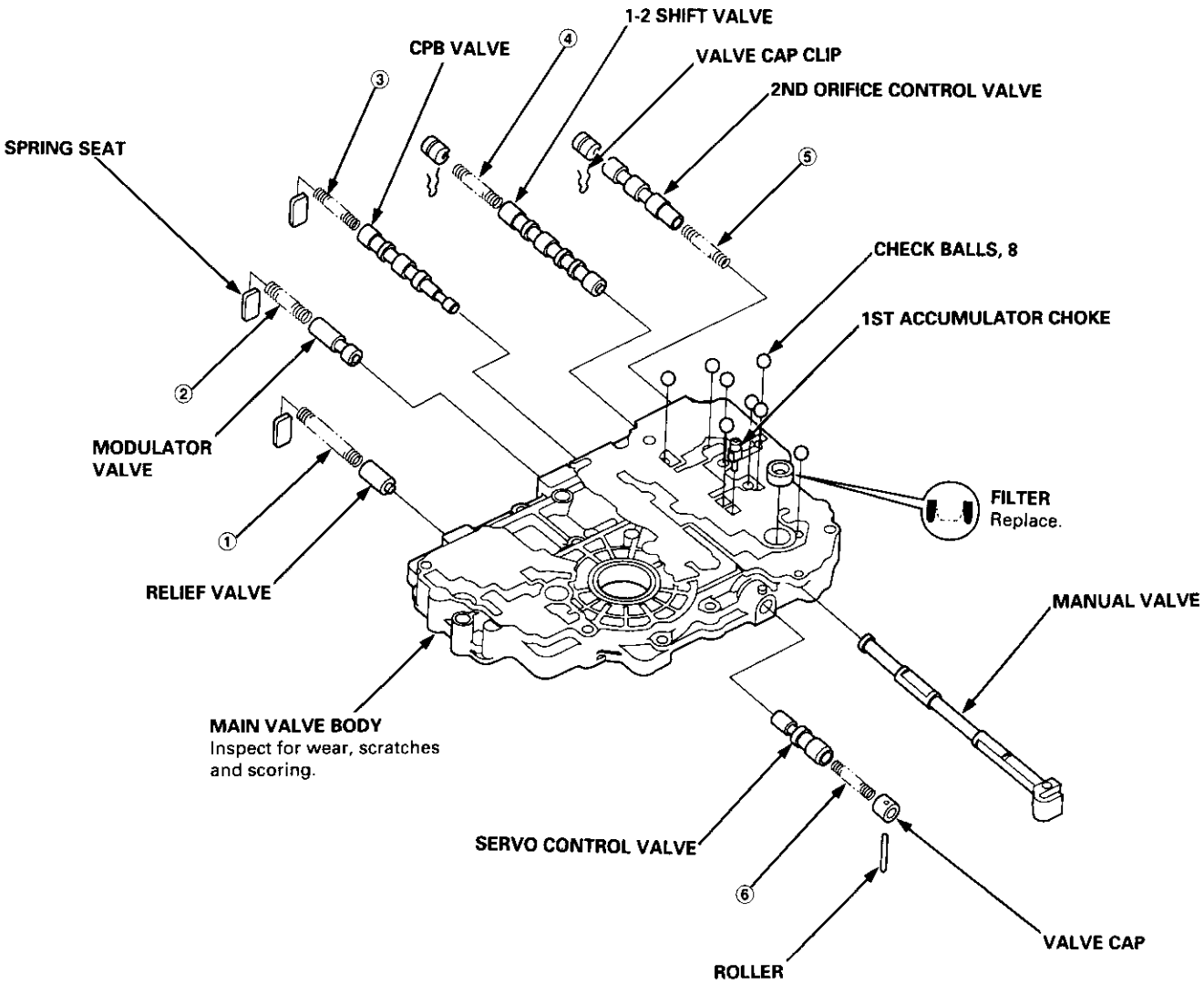

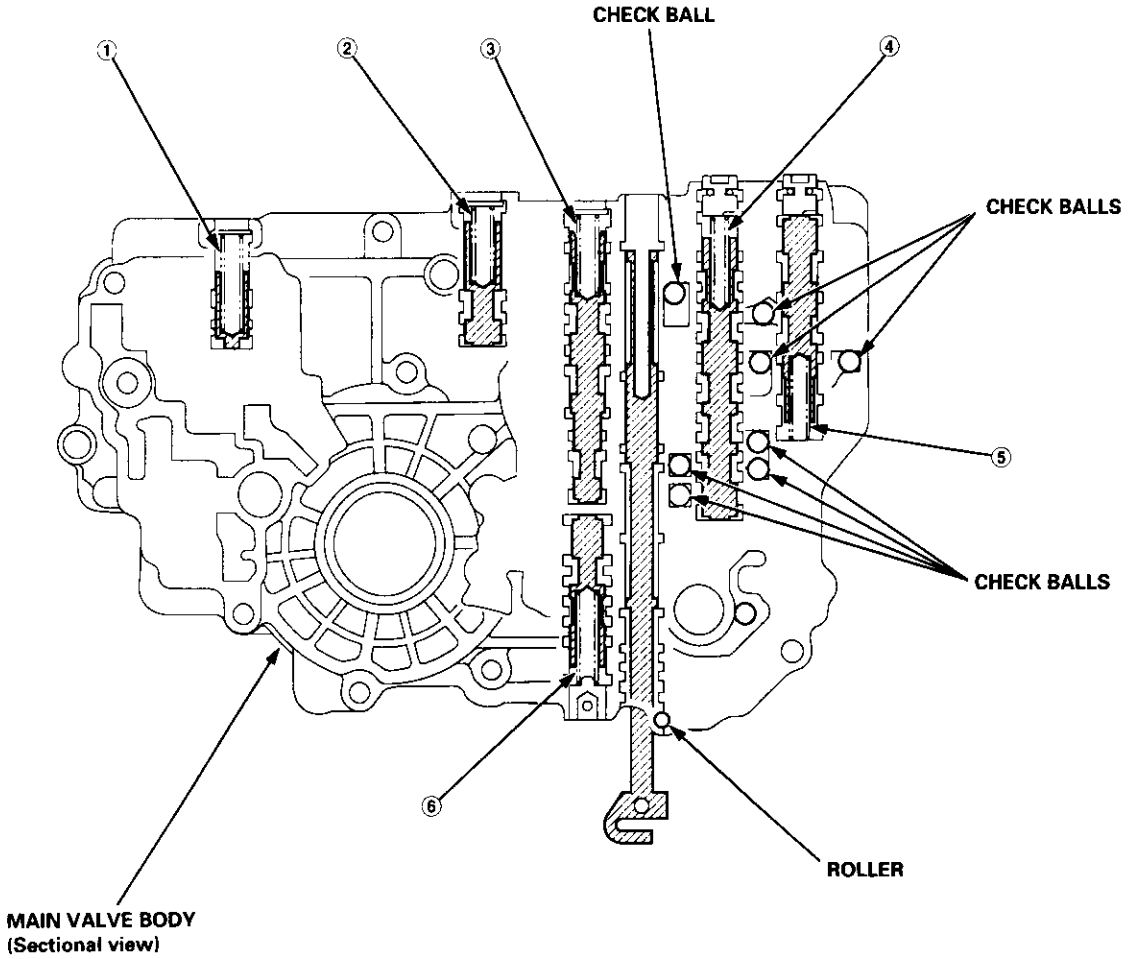

SPRING SPECIFICATIONS

Unit: mm (in)

No.	Springs	Standard (New)			
		Wire Dia.	O.D.	Free Length	No. of Coils
①	Relief valve spring	1.1 (0.043)	8.6 (0.342)	37.1 (1.461)	13.4
②	Modulator valve spring	1.4 (0.055)	9.4 (0.374)	35.0 (1.378)	10.9
③	CPB valve spring	0.9 (0.035)	8.1 (0.322)	47.2 (1.858)	18.3
④	1-2 shift valve spring	0.9 (0.035)	7.6 (0.302)	41.3 (1.626)	16.3
⑤	2nd orifice control valve spring	0.7 (0.028)	6.6 (0.262)	34.8 (1.370)	22.0
⑥	Servo control valve spring	1.0 (0.039)	8.1 (0.322)	52.1 (2.051)	20.8

Secondary Valve Body

Disassembly/Inspection/Reassembly

NOTE:
- Clean all parts thoroughly in solvent or carburetor cleaner, and dry with compressed air. Blow out all passages.
- Replace the secondary valve body kit, P/N 27700 – P4R – 315 (The secondary valve body kit includes the linear solenoid assembly) if any parts are worn or damaged.
- Check all valves for free movement. If any fail to slide freely, see Valve Body Repair on page 14-139.
- Coat all parts with ATF during assembly.
- The CPC valve is installed in the secondary valve body, held in place by the lock bolt.

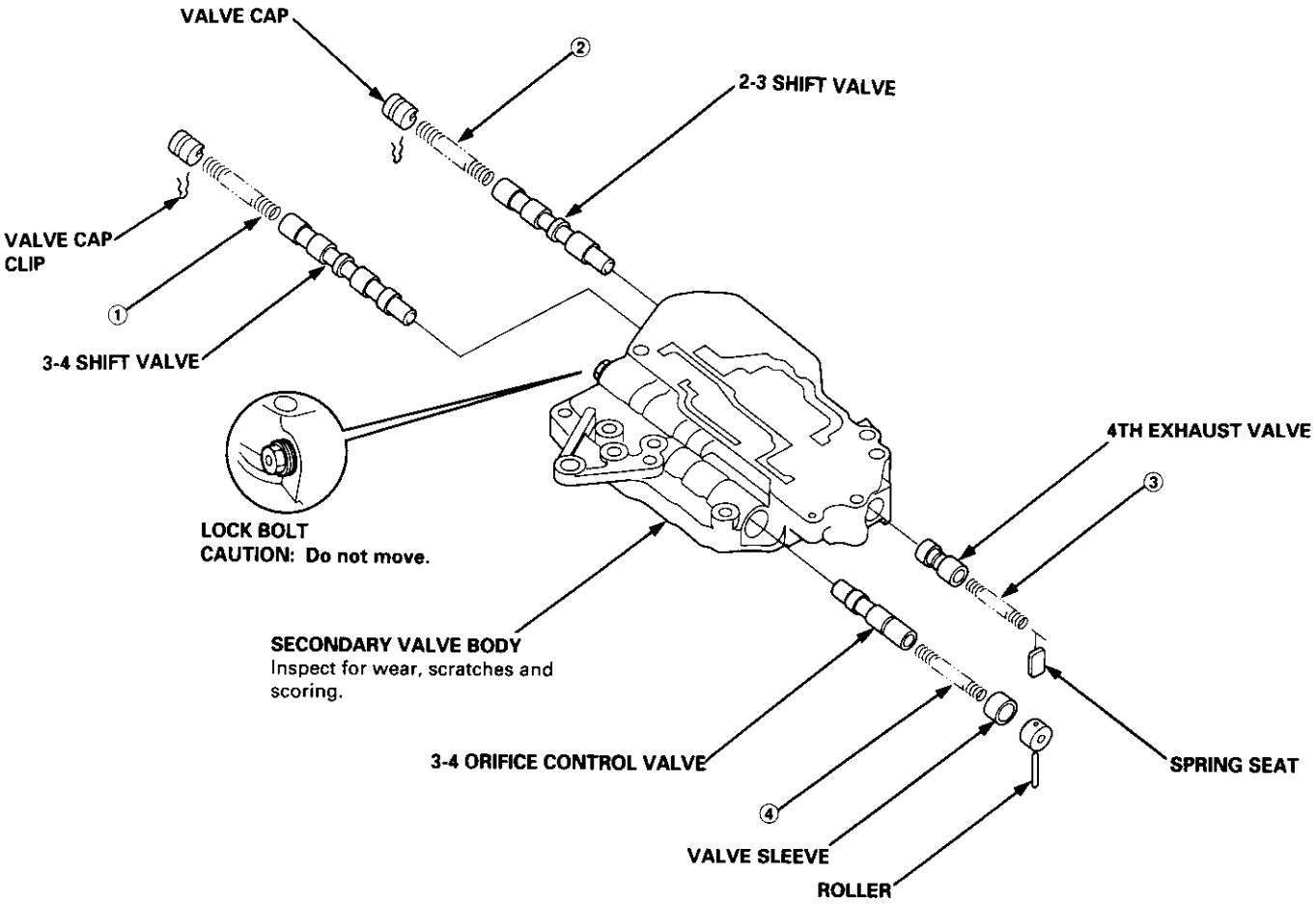

SPRING SPECIFICATIONS

Unit: mm (in)

No.	Springs	Standard (New)			
		Wire Dia.	O.D.	Free Length	No. of Coils
①	3-4 shift valve spring	0.9 (0.035)	7.6 (0.302)	57.0 (2.244)	26.8
②	2-3 shift valve spring	0.9 (0.035)	7.6 (0.302)	57.0 (2.244)	26.8
③	4th exhaust valve spring	0.9 (0.035)	6.1 (0.242)	36.4 (1.433)	19.5
④	3-4 orifice control valve spring	0.7 (0.028)	6.6 (0.262)	37.5 (1.476)	24.6

Disassembly/Inspection/Reassembly

NOTE:
- Clean all parts thoroughly in solvent or carburetor cleaner, and dry with compressed air. Blow out all passages.
- Replace the valve body as an assembly if any parts are worn or damaged.
- Check all valves for free movement. If any fail to slide freely, see Valve Body Repair on page 14-139.

1. Hold the regulator spring cap in place while removing the stop bolt. Once the stop bolt is removed, release the spring cap slowly.

   CAUTION: The regulator spring cap can pop out when the stop bolt is removed.

2. Reassembly is the reverse order of the disassembly procedure.

   NOTE:
   - Coat all parts with ATF during assembly.
   - Align the hole in the regulator spring cap with the hole in the valve body, then press the spring cap into the valve body, and tighten the stop bolt.

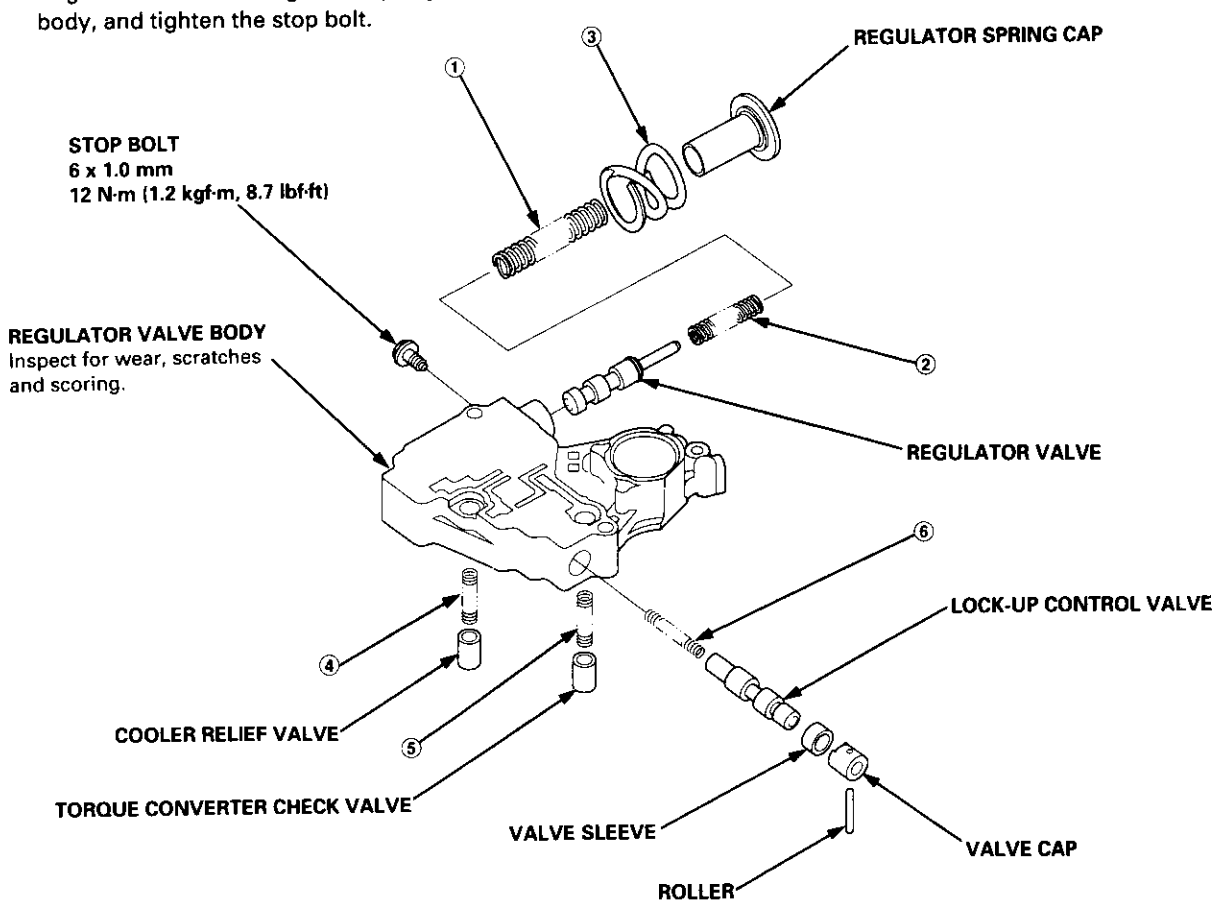

SPRING SPECIFICATIONS

Unit: mm (in)

No.	Springs	Standard (New)			
		Wire Dia.	O.D.	Free Length	No. of Coils
①	Regulator valve spring A	1.8 (0.071)	14.7 (0.584)	87.8 (3.457)	16.5
②	Regulator valve spring B	1.8 (0.071)	9.6 (0.381)	44.0 (1.732)	11.0
③	Stator reaction spring	4.5 (0.177)	35.4 (1.407)	30.3 (1.193)	1.9
④	Cooler relief valve spring	1.0 (0.039)	8.4 (0.334)	33.8 (1.331)	8.2
⑤	Torque converter check valve spring	1.0 (0.039)	8.4 (0.334)	33.8 (1.331)	8.2
⑥	Lock-up control valve spring	0.7 (0.028)	6.6 (0.262)	38.0 (1.496)	14.1

Disassembly/Inspection/Reassembly

NOTE:
- Clean all parts thoroughly in solvent or carburetor cleaner, and dry with compressed air. Blow out all passages.
- Replace the valve body as an assembly if any parts are worn or damaged.
- Coat all parts with ATF during assembly.
- Replace the O-rings.
- The servo body shows the '96 – 98 models: the '99 – 00 models have an integrally molded servo detent.

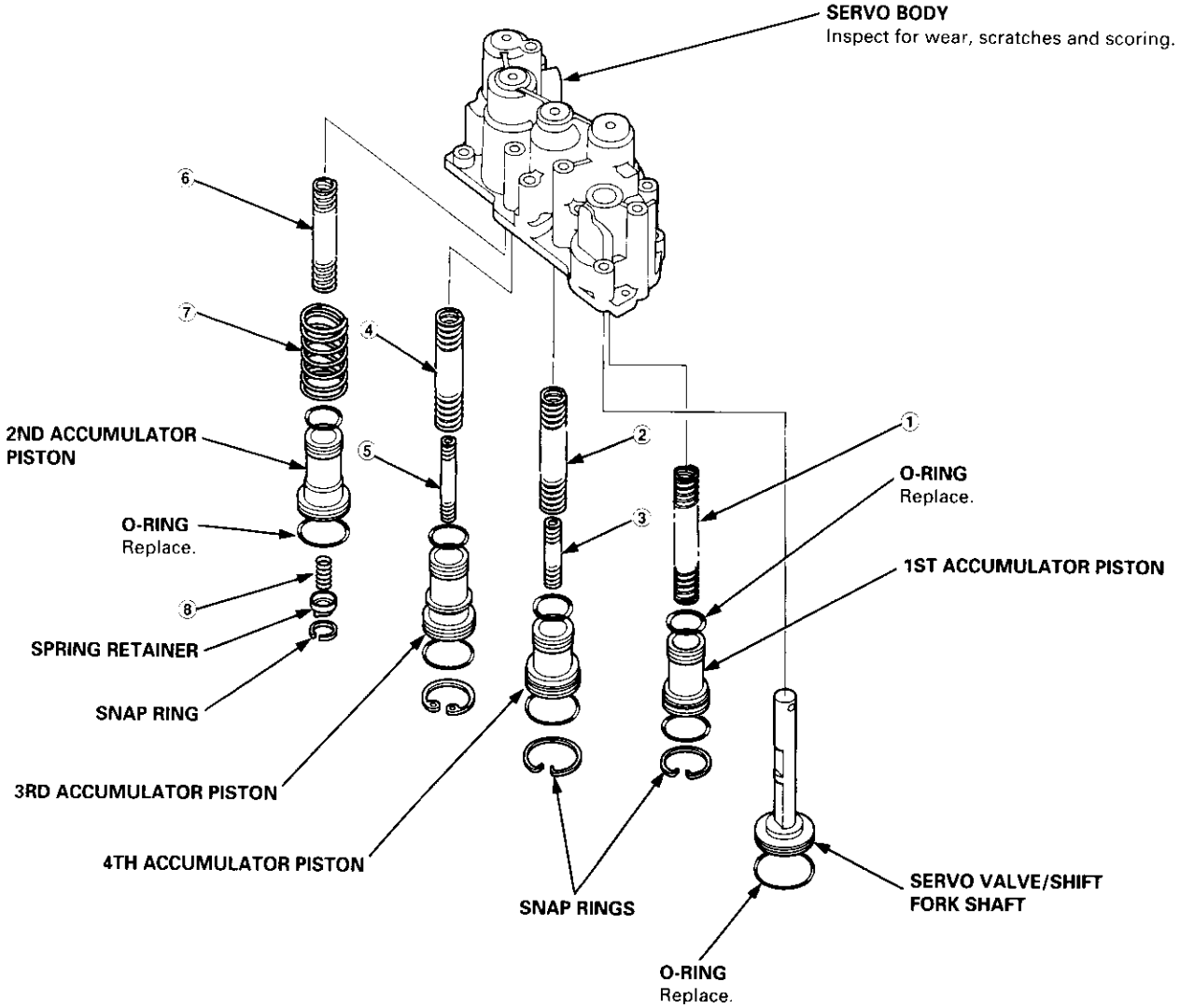

SPRING SPECIFICATIONS

Unit: mm (in)

No.	Springs	Standard (New)			
		Wire Dia.	O.D.	Free Length	No. of Coils
①	1st accumulator spring	2.1 (0.083)	16.0 (0.636)	89.1 (3.508)	16.2
②	4th accumulator spring A	2.6 (0.102)	17.0 (0.676)	87.0 (3.425)	14.2
③	4th accumulator spring B	2.3 (0.091)	10.2 (0.402)	51.6 (2.031)	13.8
④	3rd accumulator spring A	2.8 (0.110)	17.5 (0.695)	89.3 (3.516)	15.6
⑤	3rd accumulator spring B	2.2 (0.087)	31.0 (1.220)	35.1 (1.382)	2.4
⑥	2nd accumulator spring C	2.2 (0.087)	14.5 (0.576)	68.0 (2.677)	13.9
⑦	2nd accumulator spring A	2.4 (0.094)	29.0 (1.152)	39.0 (1.535)	2.9
⑧	2nd accumulator spring B	1.6 (0.063)	9.0 (0.358)	20.7 (0.815)	6.1

Disassembly/Inspection/Reassembly

NOTE:
- Clean all parts thoroughly in solvent or carburetor cleaner, and dry with compressed air. Blow out all passages.
- Replace the valve body as an assembly if any parts are worn or damaged.
- Check all valves for free movement. If any fail to slide freely, see Valve Body Repair on page 14-139.
- Coat all parts with ATF during assembly.

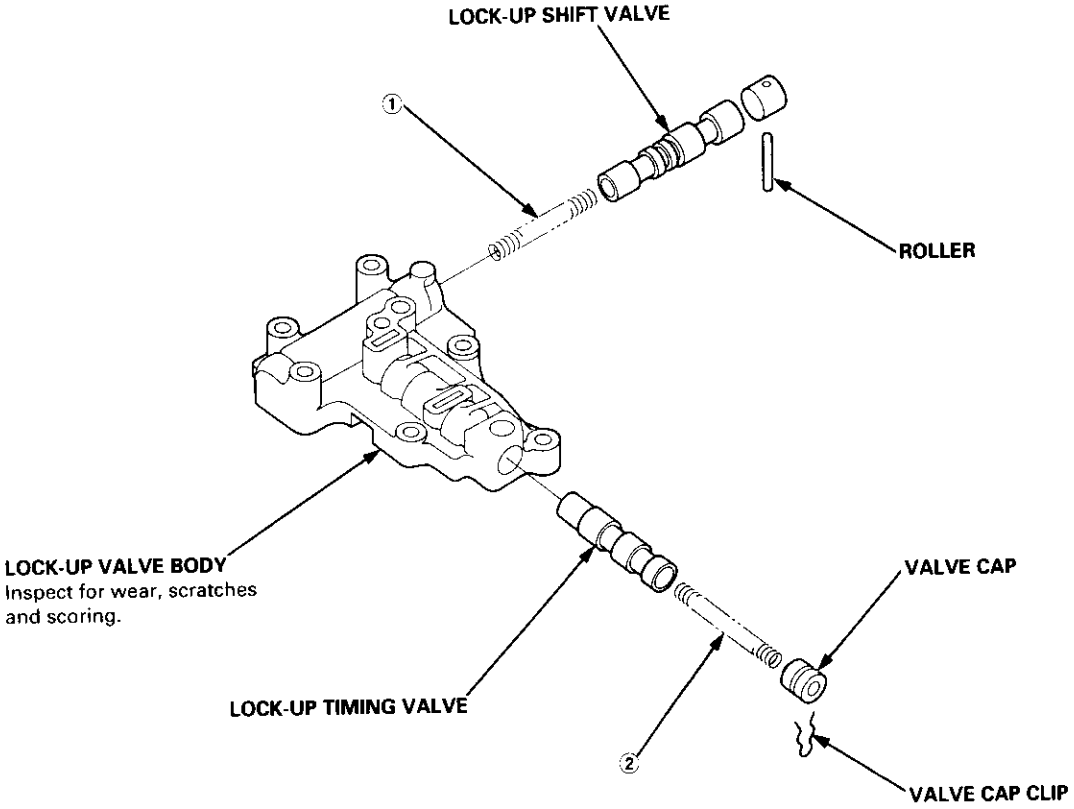

SPRING SPECIFICATIONS

Unit: mm (in)

No.	Springs	Standard (New)			
		Wire Dia.	O.D.	Free Length	No. of Coils
①	Lock-up shift valve spring	0.9 (0.035)	7.6 (0.302)	73.7 (2.902)	32.0
②	Lock-up timing valve spring	0.9 (0.035)	8.1 (0.319)	80.7 (3.177)	45.8

Disassembly/Inspection/Reassembly

NOTE:
- Lubricate all parts with ATF during reassembly.
- Inspect the thrust needle bearings and the needle bearings for galling and rough movement.
- Before installing the O-rings, wrap the shaft splines with tape to prevent damaging the O-rings.
- Locknut has left-hand threads.

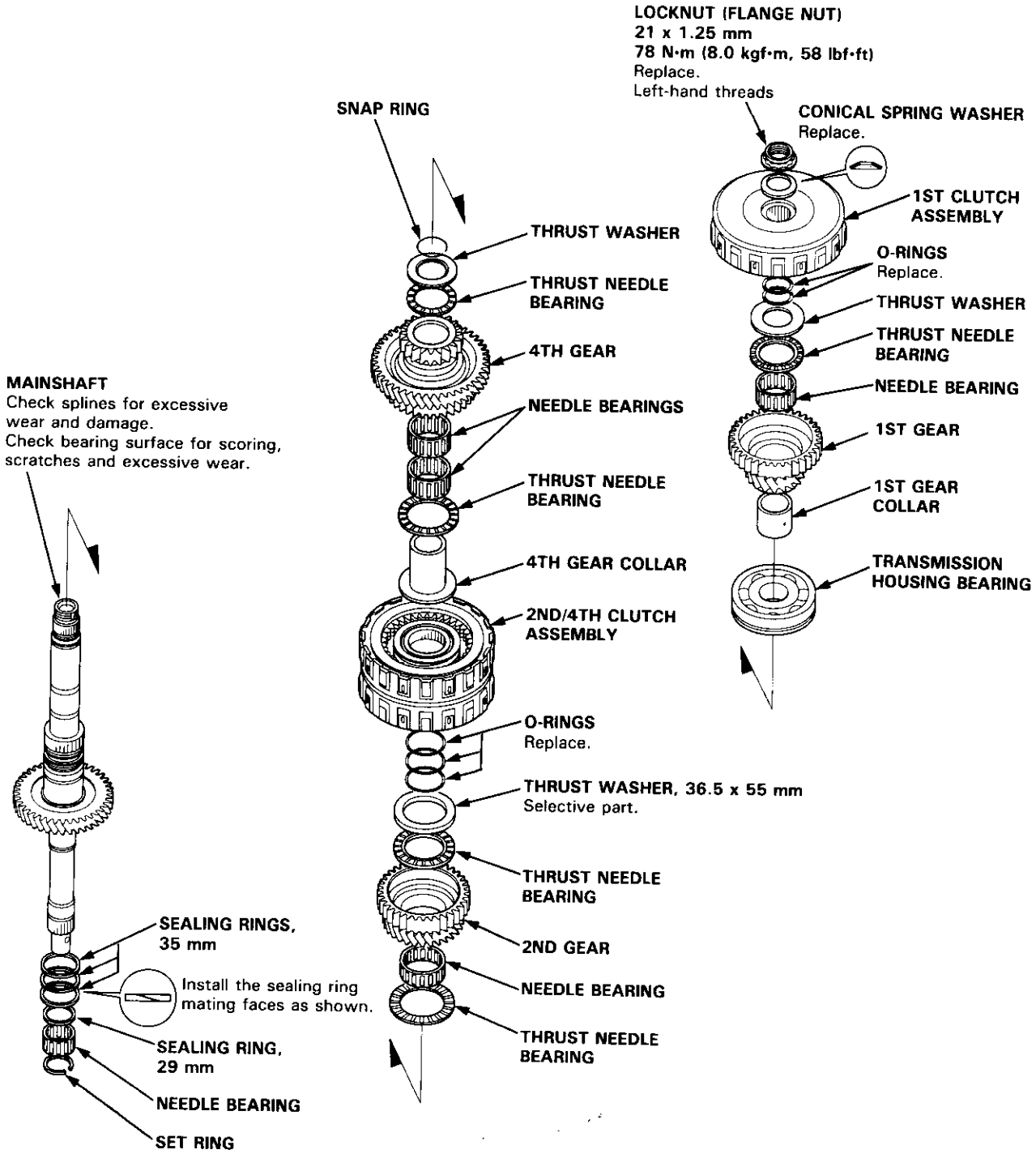

Inspection

- Clearance Measurement

NOTE: Lubricate all parts with ATF during assembly.

1. Remove the mainshaft bearing from the transmission housing (see page 14-174).

2. Assemble the parts below on the mainshaft.

   NOTE: Do not assemble the O-rings during inspection.

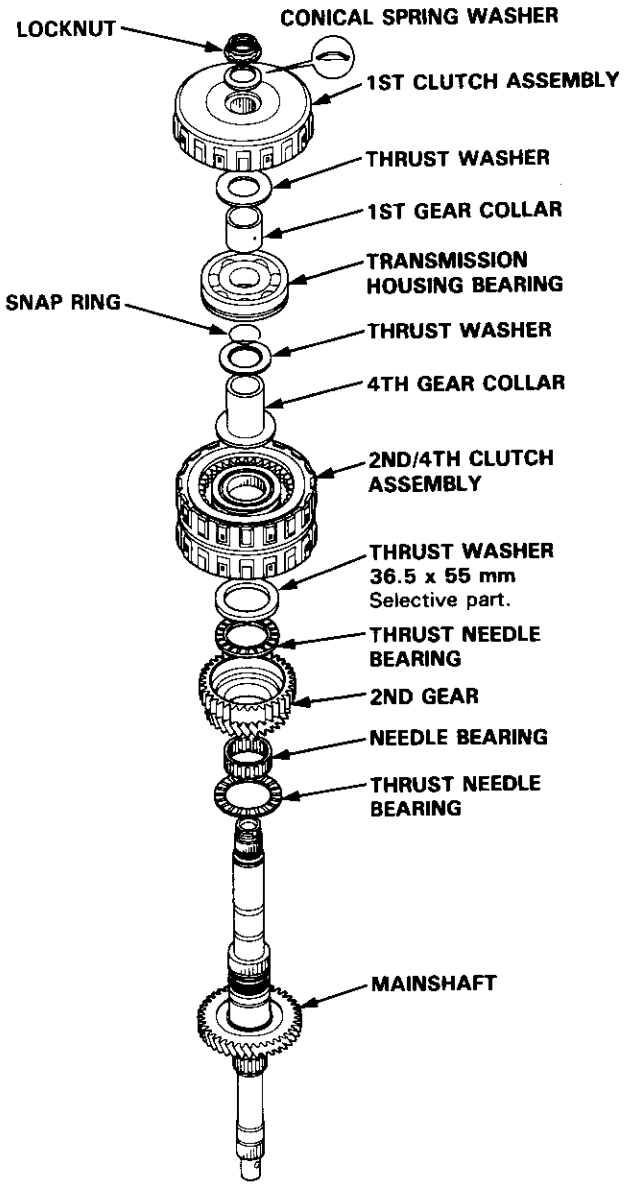

3. Torque the mainshaft locknut to 29 N·m (3.0 kgf·m, 22 lbf·ft).

   NOTE: Mainshaft locknut has left-hand threads.

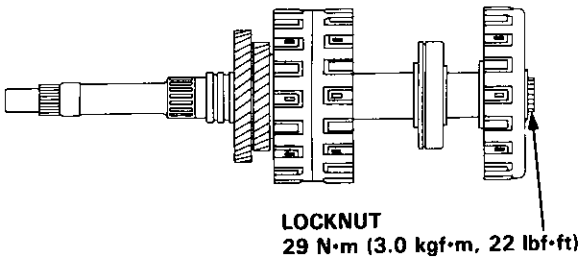

4. Hold 2nd gear against the 2nd clutch, then measure the clearance between 2nd gear and 3rd gear with a feeler gauge.

   NOTE: Take measurements in at least three places, and use the average as the actual clearance.

   STANDARD: 0.05 – 0.13 mm (0.002 – 0.005 in)

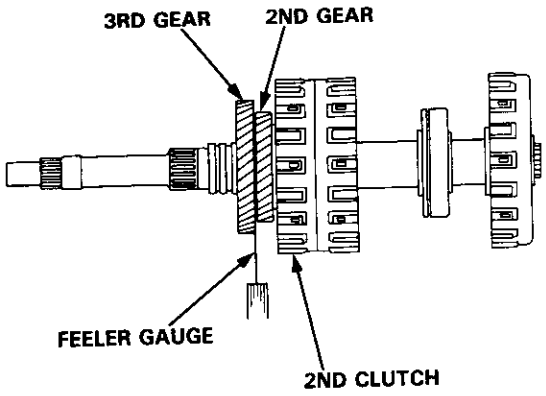

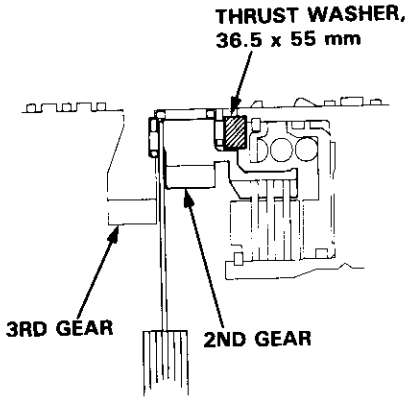

(cont'd)

Inspection (cont'd)

5. If the clearance is out of tolerance, remove the thrust washer and measure the thickness.

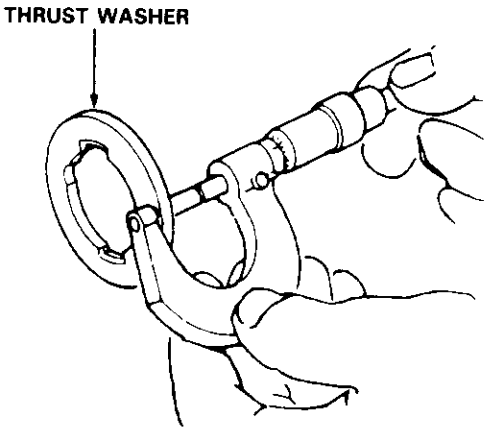

6. Select and install a new washer, then recheck.

THRUST WASHER 36.5 x 55 mm

No.	Part Number	Thickness
1	90441 – P4P – 010	4.00 mm (0.157 in)
2	90442 – P4P – 010	4.05 mm (0.159 in)
3	90443 – P4P – 010	4.10 mm (0.161 in)
4	90444 – P4P – 010	4.15 mm (0.163 in)
5	90445 – P4P – 010	4.20 mm (0.165 in)
6	90446 – P4P – 010	4.25 mm (0.167 in)
7	90447 – P4P – 010	4.30 mm (0.169 in)
8	90448 – P4P – 010	4.35 mm (0.171 in)
9	90449 – P4P – 010	4.40 mm (0.173 in)
10	90450 – P4P – 000	4.45 mm (0.175 in)

7. After replacing the thrust washer, make sure the clearance is within tolerance.

Disassembly/Inspection/Reassembly

NOTE:
- Lubricate all parts with ATF before reassembly.
- Inspect the thrust needle bearings and the needle bearings for galling and rough movement.
- Before installing the O-rings, wrap the shaft splines with tape to prevent damaging the O-rings.
- Locknut has left-hand threads.

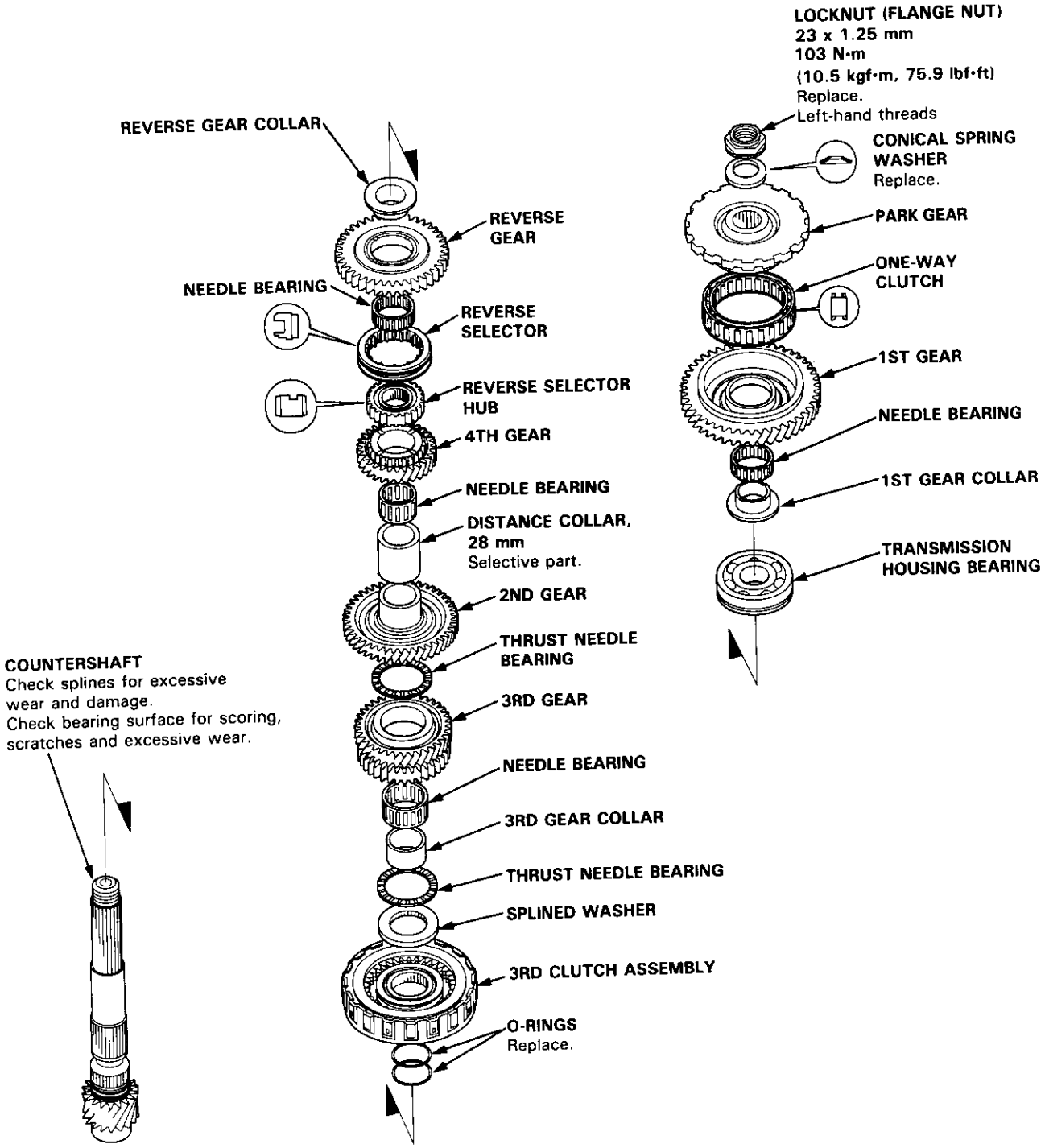

Disassembly/Reassembly

1. Using a hydraulic press, press out the countershaft while supporting 4th gear.

   NOTE: Place an attachment between the press and the countershaft to prevent damage to the shaft.

   CAUTION: Do not allow the countershaft to fall and hit the ground when pressed clear.

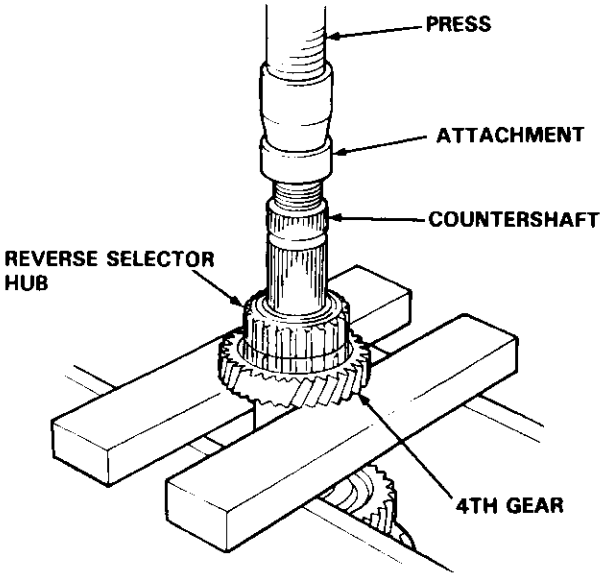

2. Assemble the parts on the countershaft as shown below.

   NOTE:
   - Lubricate all parts with ATF during assembly.
   - Before installing the O-rings, wrap the shaft splines with tape to prevent damaging the O-rings.

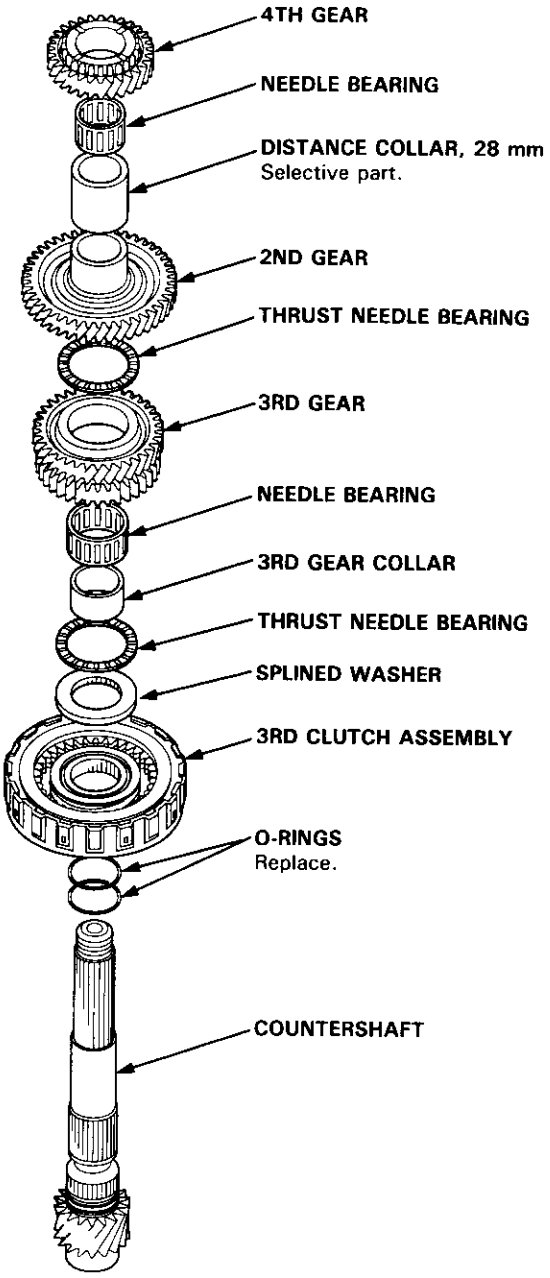

3. Install the reverse selector hub on the countershaft sub-assembly, and then press the reverse selector hub using the special tool and a press as shown.

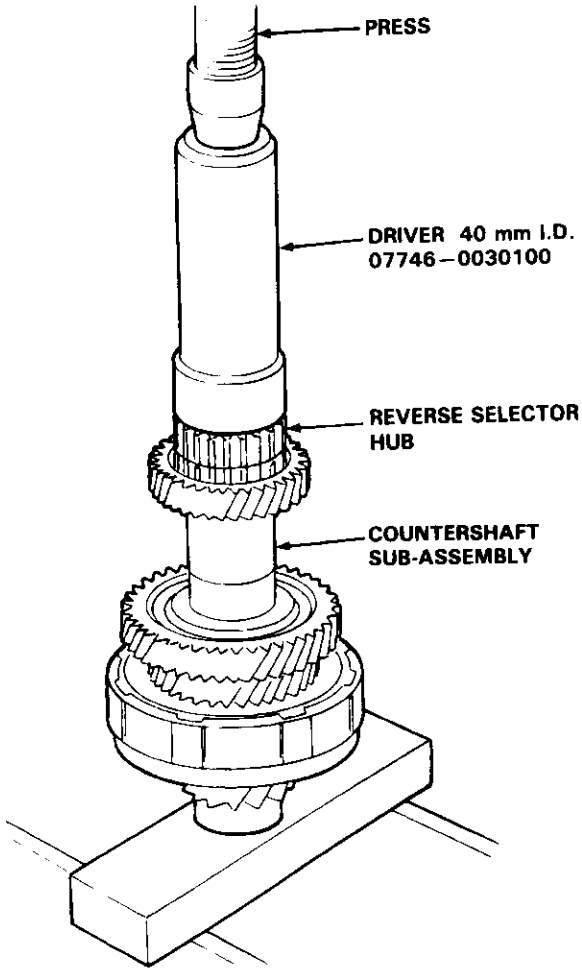

Inspection

- Clearance Measurement

NOTE: Lubricate all parts with ATF during assembly.

1. Remove the countershaft bearing from the transmission housing (see page 14-174).

2. Install the parts below on the countershaft using the special tool and a press as described on this page.

   NOTE: Do not assemble the O-rings during inspection.

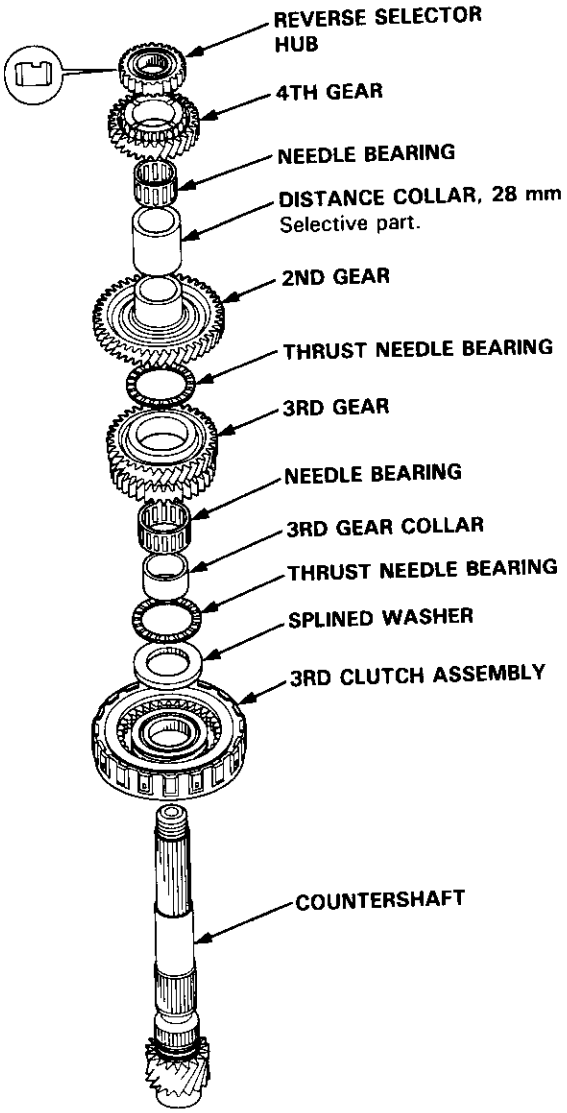

(cont'd)

Inspection (cont'd)

3. Install the parts below on the countershaft sub-assembly, then torque the locknut to 29 N·m (3.0 kgf·m, 22 lbf·ft).

   NOTE: Countershaft locknut has left-hand threads.

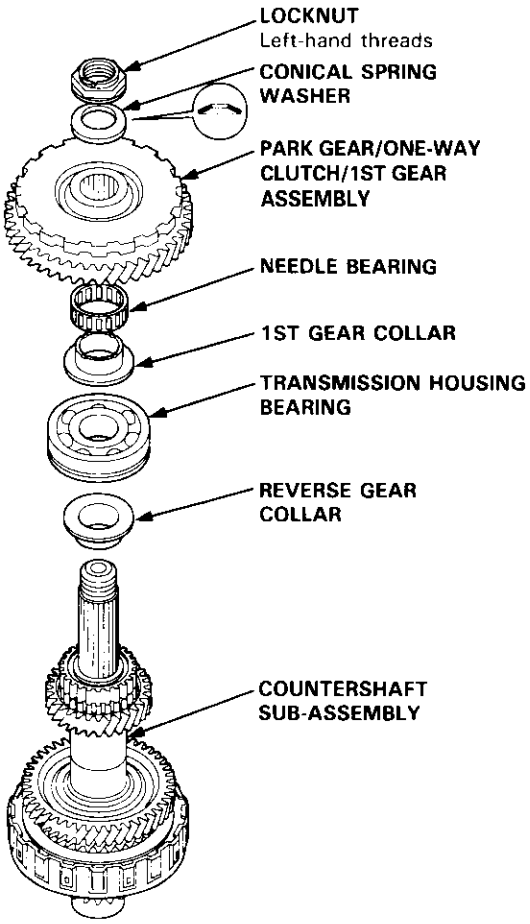

4. Measure the clearance between the 2nd gear and the 28 mm distance collar with a feeler gauge.

   NOTE: Take measurements in at least three places, and use the average as the actual clearance.

   STANDARD: 0.10 – 0.18 mm (0.004 – 0.007 in)

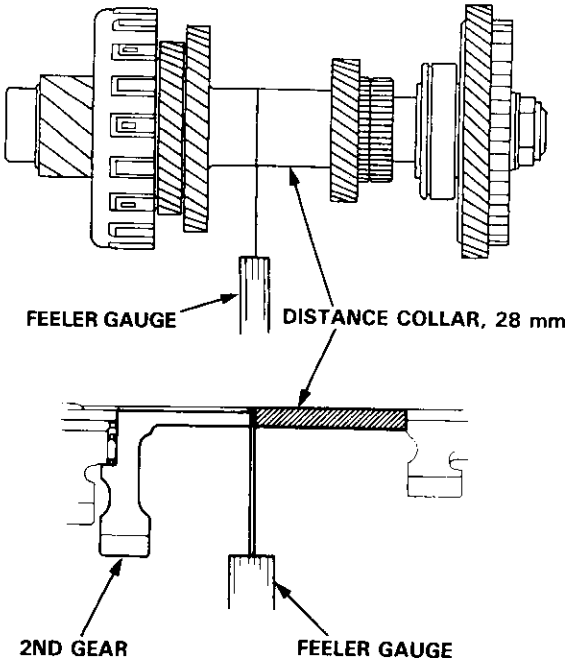

5. If the clearance is out of tolerance, remove the 28 mm distance collar and measure the width.

6. Select and install a new distance collar, then recheck.

DISTANCE COLLAR, 28 mm

No.	Part Number	Width
1	90503 – PC9 – 000	39.00 mm (1.535 in)
2	90504 – PC9 – 000	39.10 mm (1.539 in)
3	90505 – PC9 – 000	39.20 mm (1.543 in)
4	90507 – PC9 – 000	39.30 mm (1.547 in)
5	90508 – PC9 – 000	39.05 mm (1.537 in)
6	90509 – PC9 – 000	39.15 mm (1.541 in)
7	90510 – PC9 – 000	39.25 mm (1.545 in)
8	90511 – PC9 – 000	38.90 mm (1.531 in)
9	90512 – PC9 – 000	38.95 mm (1.533 in)

7. After selecting a new distance collar, recheck the clearance and make sure it is within tolerance.

Disassembly/Inspection/Reassembly

1. Separate countershaft 1st gear from the park gear by turning the park gear in the direction shown.

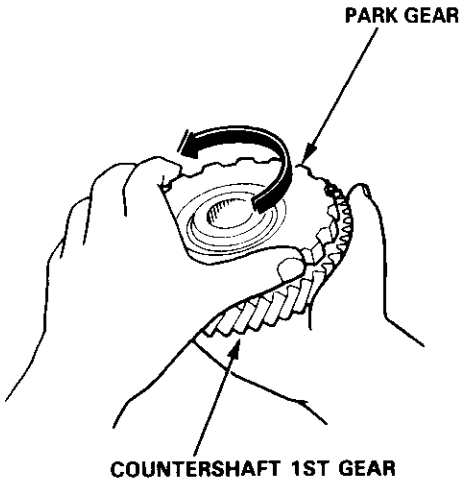

2. Remove the one-way clutch by prying it up with the end of a screwdriver.

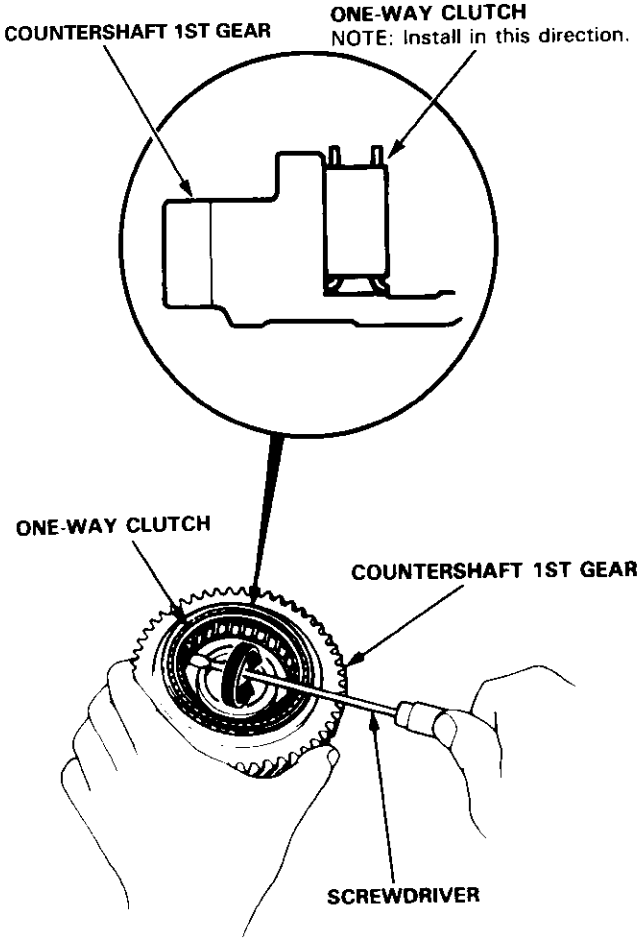

3. Inspect the parts as follows:

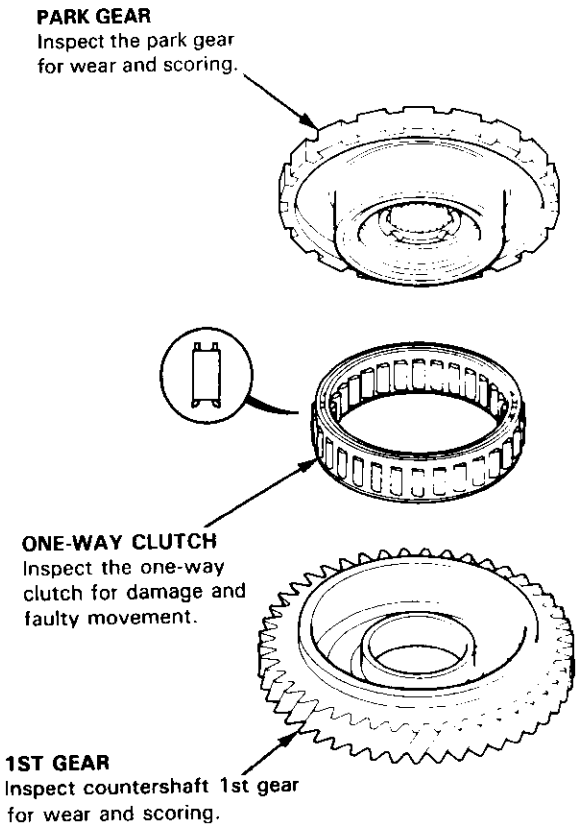

4. After the parts are assembled, hold countershaft 1st gear and turn the park gear in the direction shown to be sure it turns freely. Also make sure the park gear does not turn in the opposite direction.

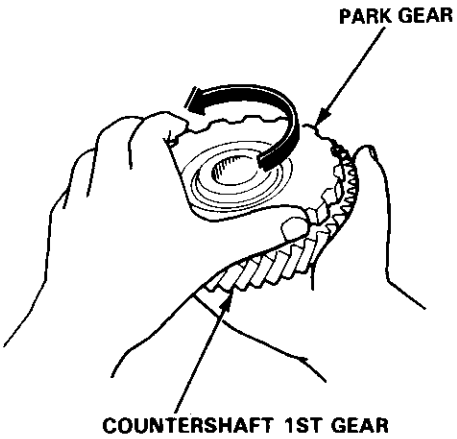

Illustrated Index (A4RA, B4RA Transmission)

3RD CLUTCH

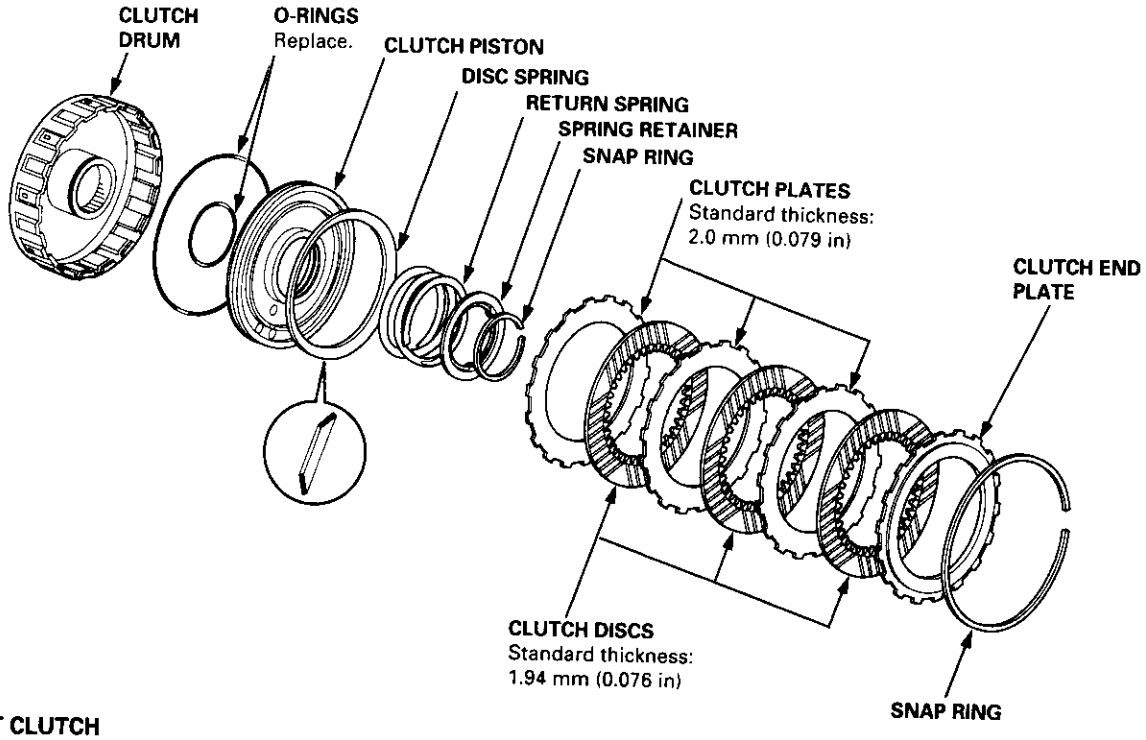

1ST CLUTCH

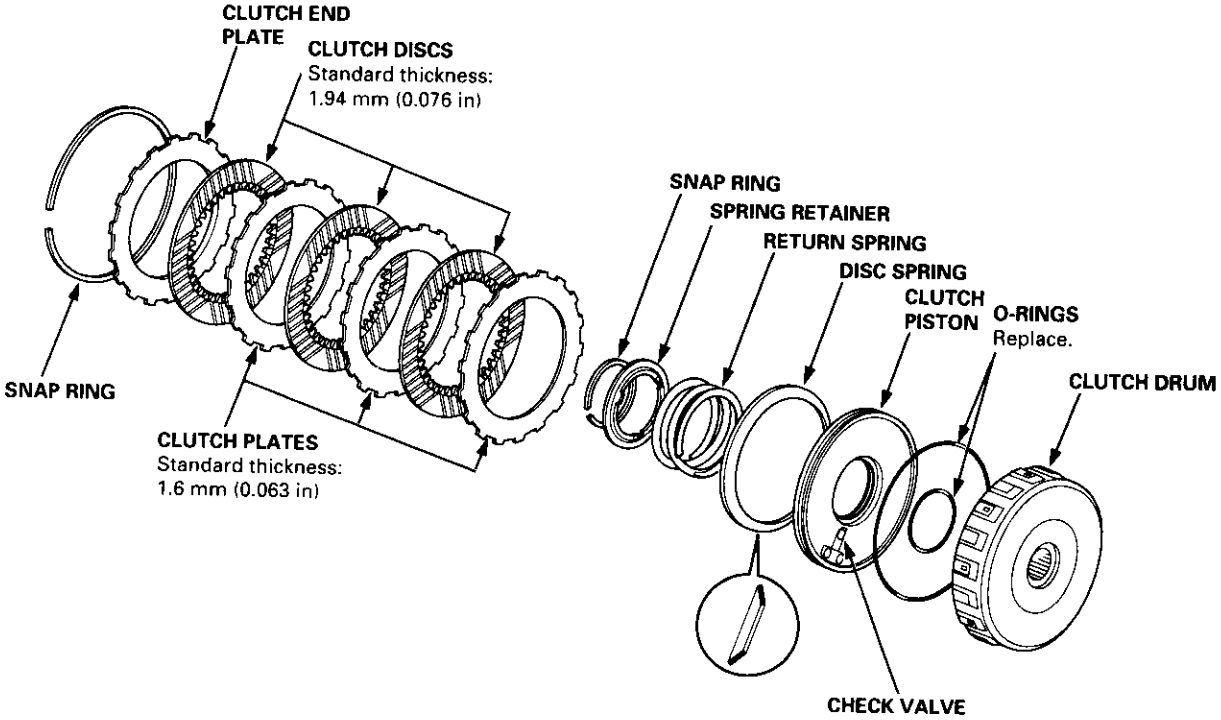

2ND/4TH CLUTCH

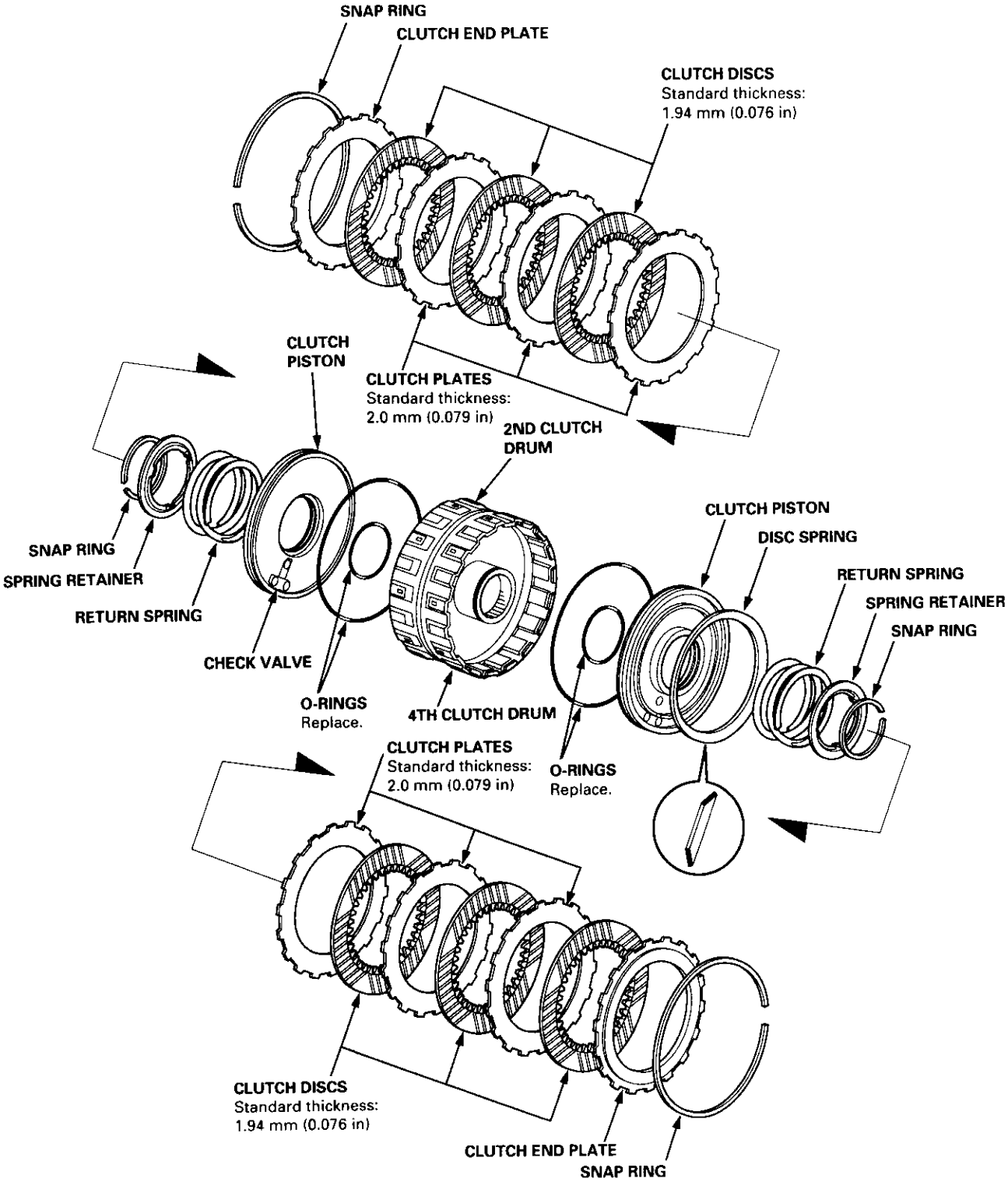

Illustrated Index (M4RA Transmission)

3RD CLUTCH

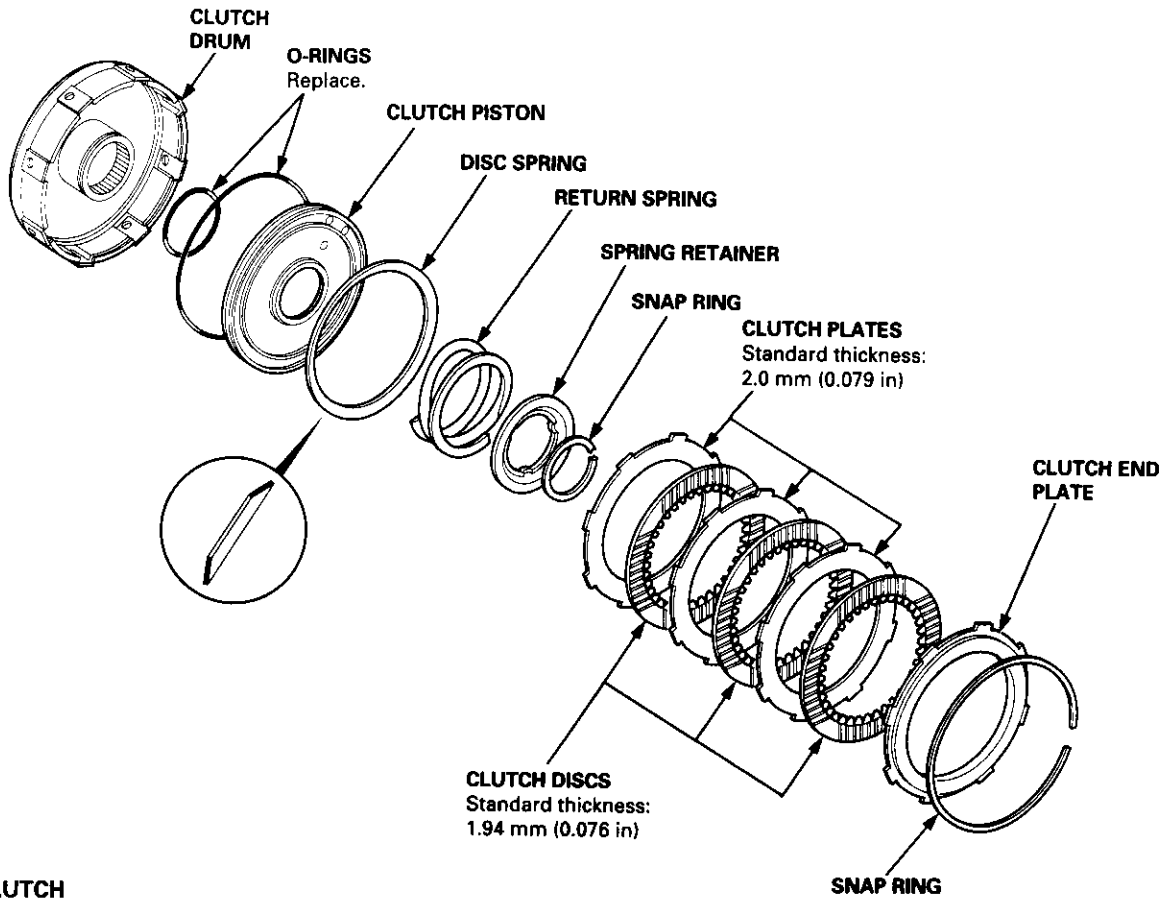

1ST CLUTCH

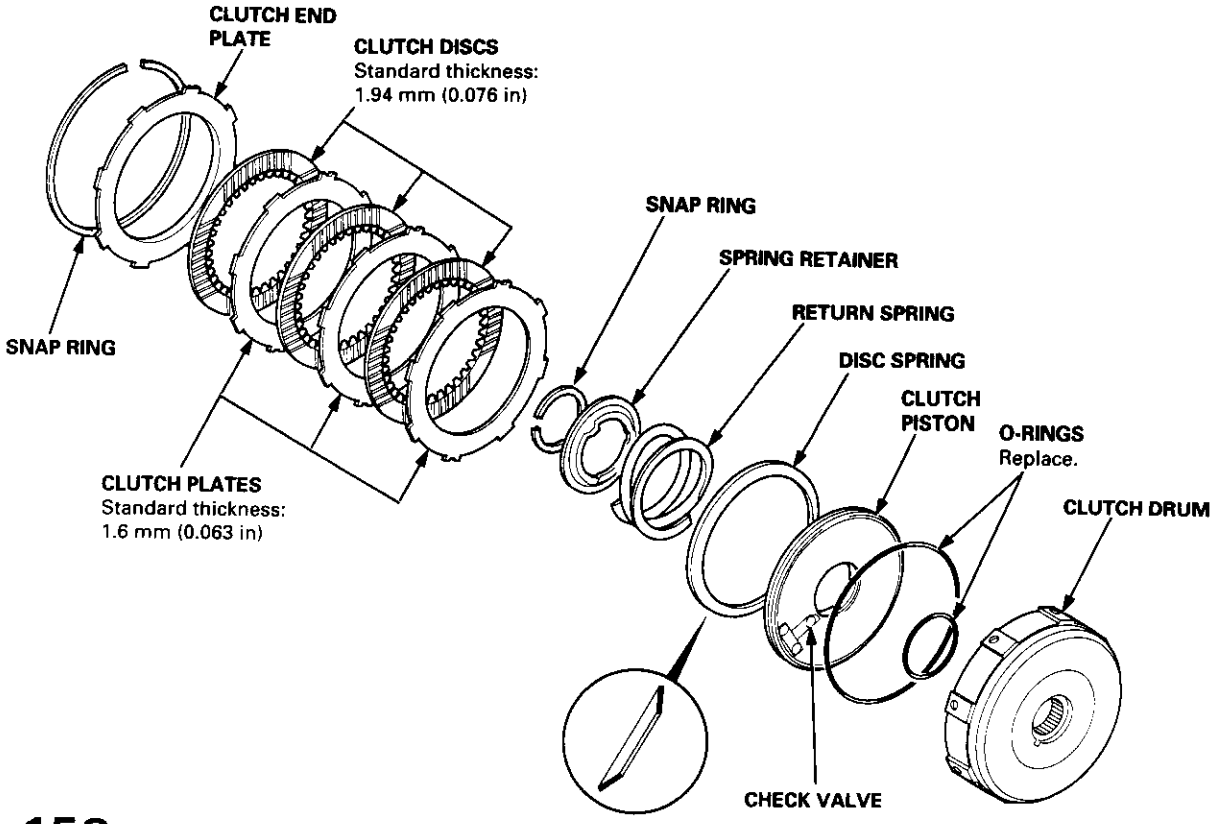

2ND/4TH CLUTCH

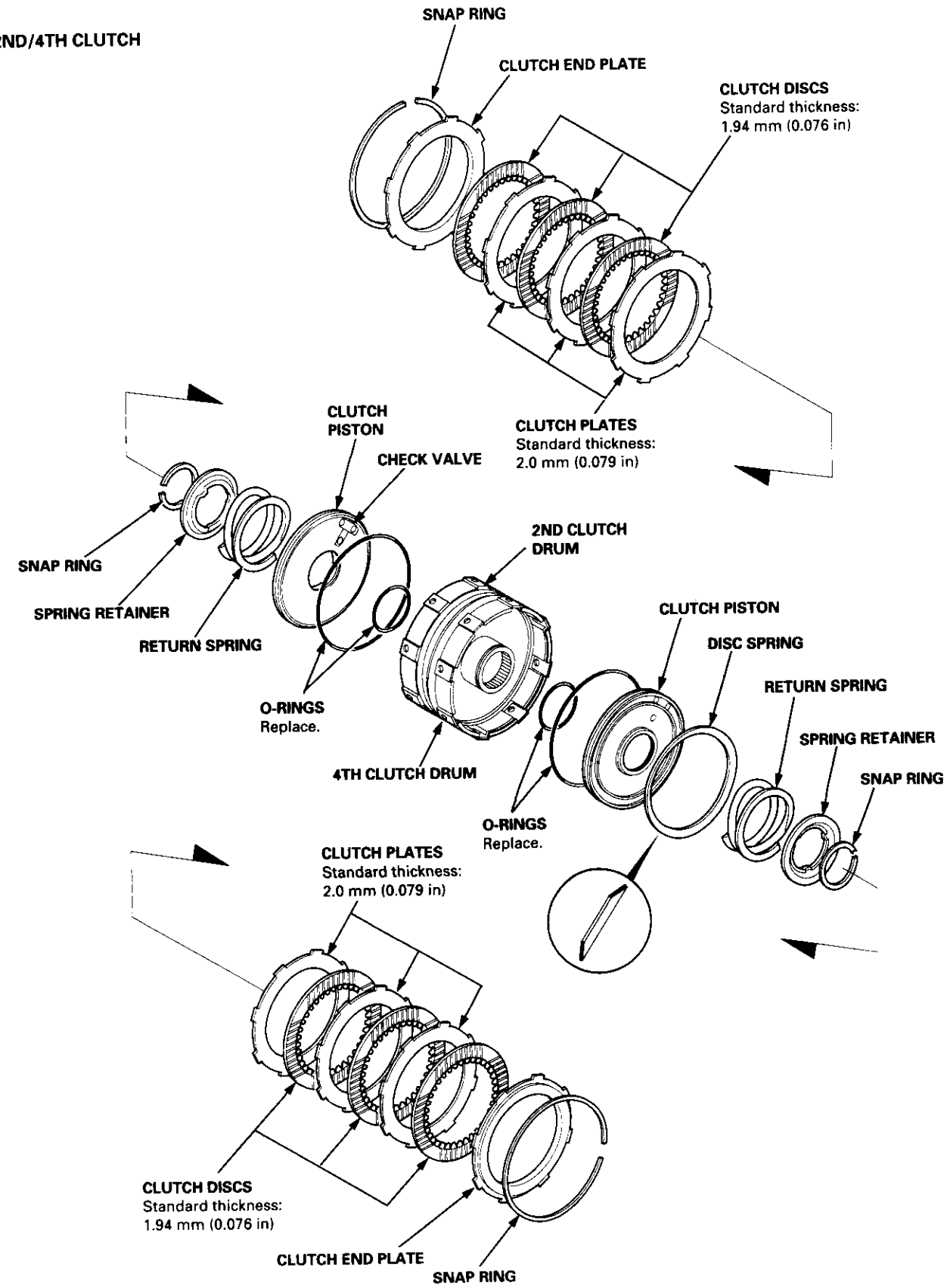

Disassembly

1. Remove the snap ring, then remove the clutch end plate, clutch discs and plates.

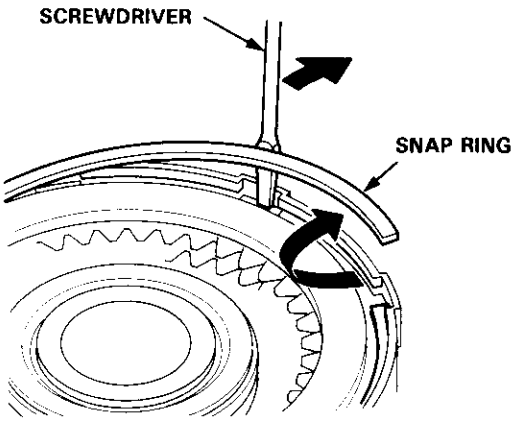

2. Remove the disc spring.

   NOTE: Except 2nd clutch.

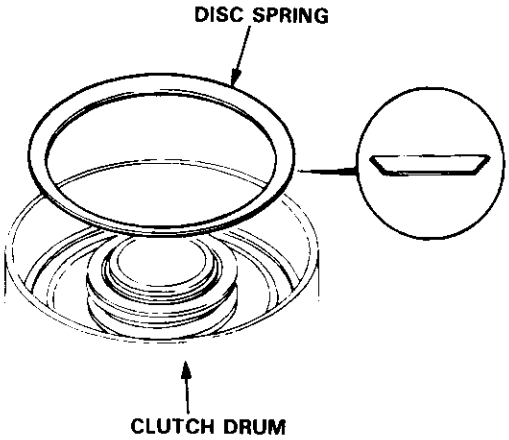

3. Install the special tools as shown.

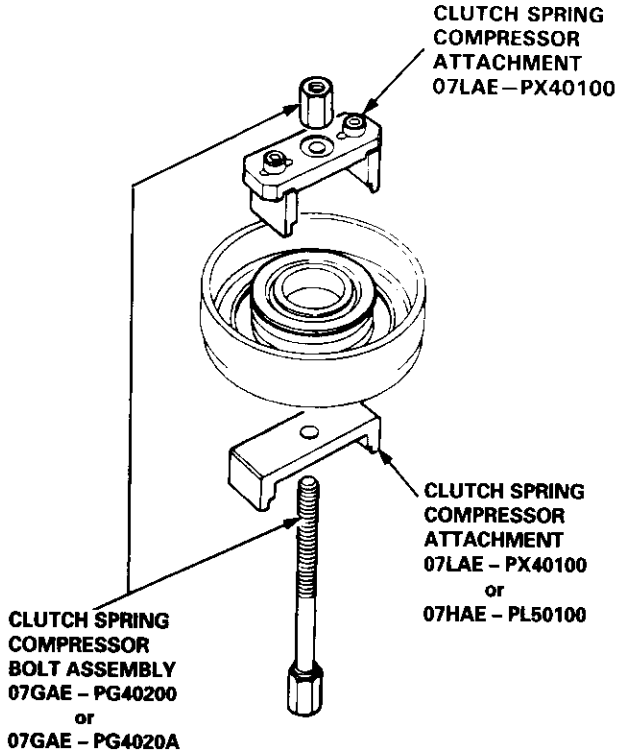

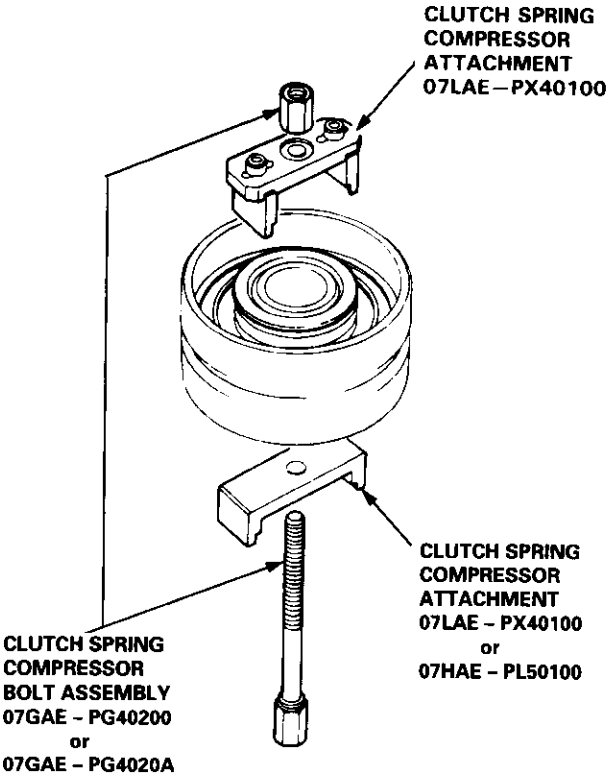

CAUTION: If either end of the special tool is set over an area of the spring retainer which is unsupported by the return spring, the retainer may be damaged. Be sure the special tool is adjusted to have full contact with the spring retainer.

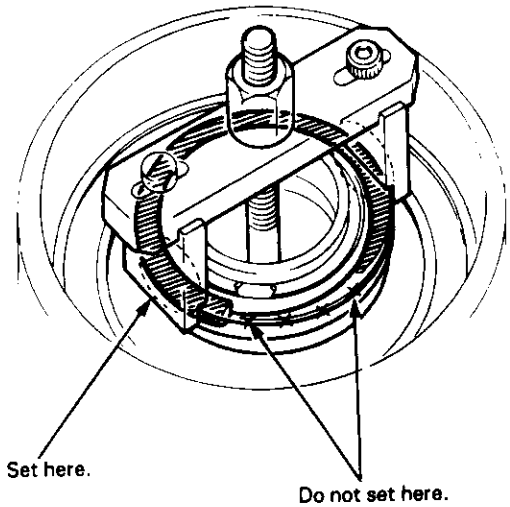

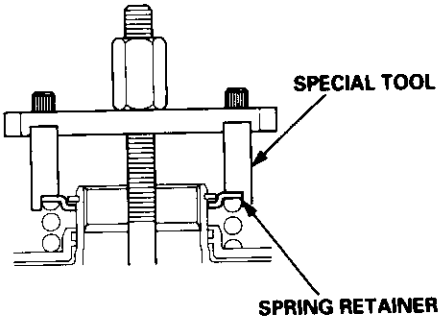

4. Compress the return spring.

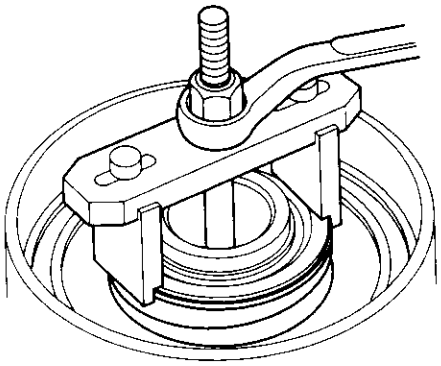

5. Remove the snap ring. Then remove the special tools, spring retainer and return spring.

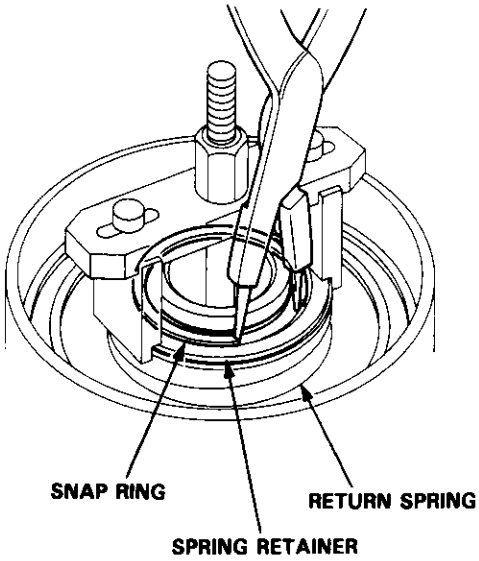

6. Wrap a shop rag around the clutch drum, and apply air pressure to the ATF passage to remove the piston.
   Place a finger tip on the other end while applying air pressure.

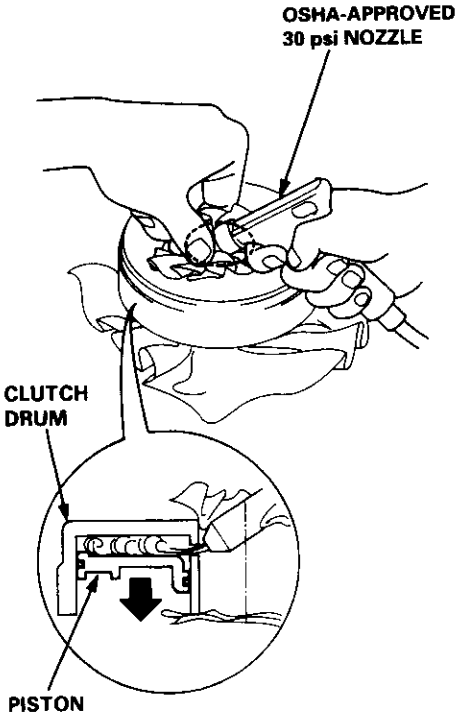

Reassembly

NOTE:
- Clean all parts thoroughly in solvent or carburetor cleaner, and dry them with compressed air.
- Blow out all passages.
- Lubricate all parts with ATF before reassembly.

1. Inspect the check valve; if it's loose, replace the piston.

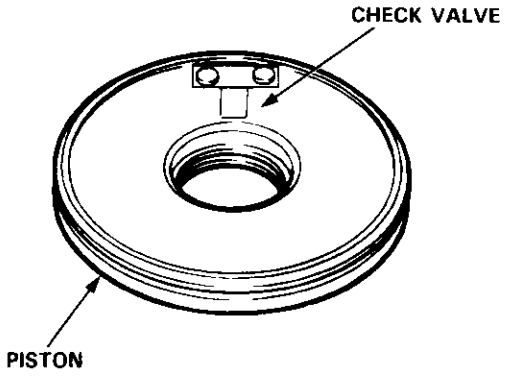

2. Install new O-rings on the clutch piston.

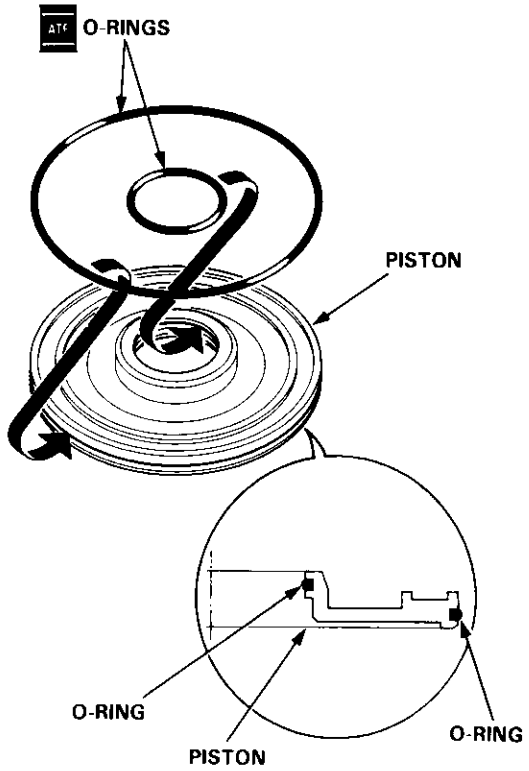

3. Install the piston in the clutch drum. Apply pressure and rotate to ensure proper seating.

   NOTE: Lubricate the piston O-ring with ATF before installing.

   CAUTION: Do not pinch the O-ring by installing the piston with too much force.

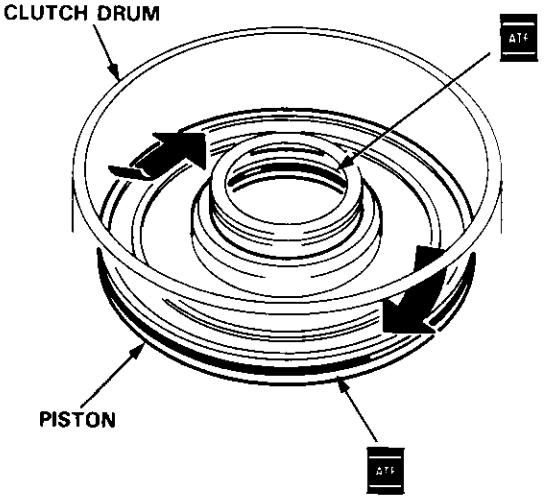

4. Install the return spring and spring retainer, and position the snap ring on the retainer.

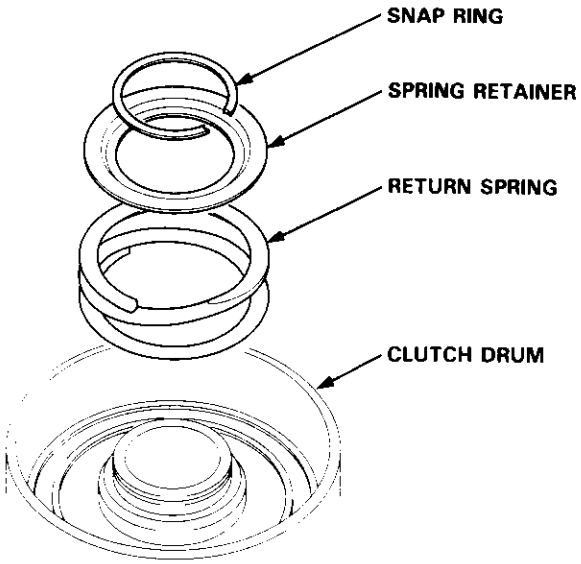

5. Install the special tools as shown.

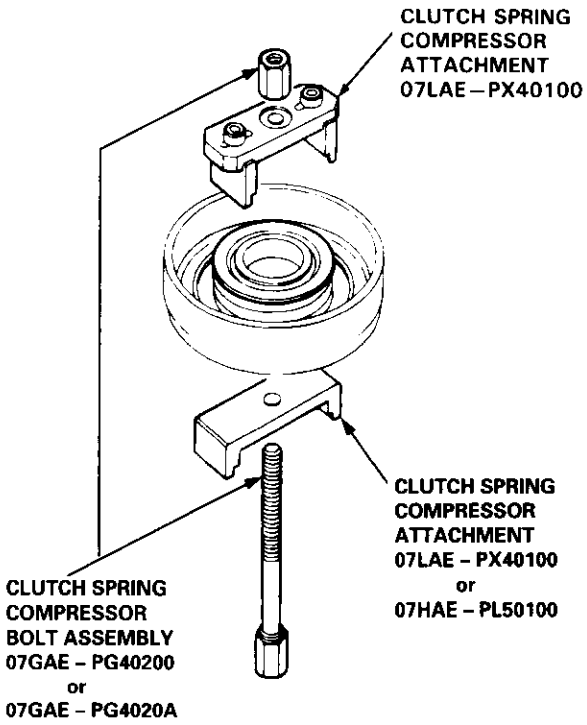

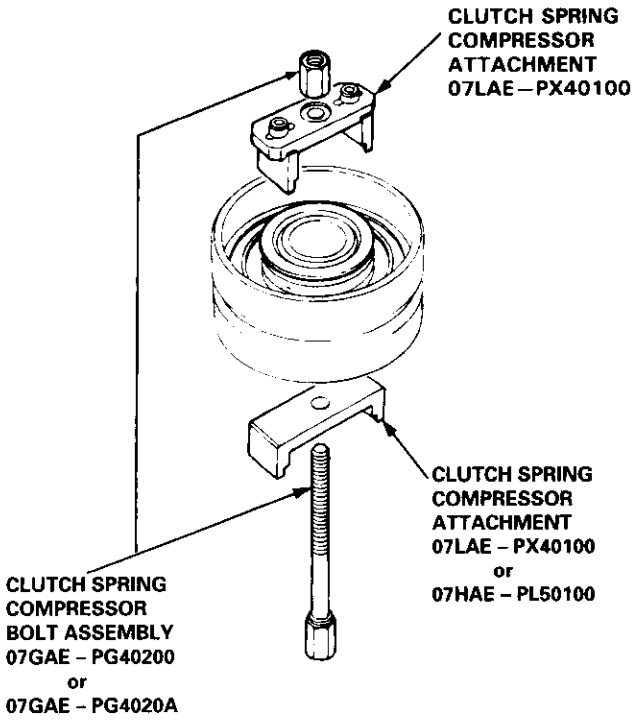

CAUTION: If either end of the special tool is set over an area of the spring retainer which is unsupported by the return spring, the retainer may be damaged. Be sure the special tool is adjusted to have full contact with the spring retainer.

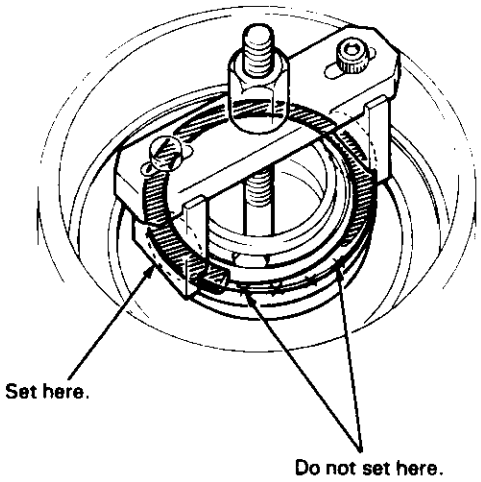

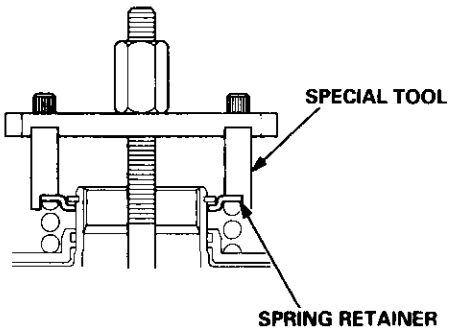

6. Compress the return spring.

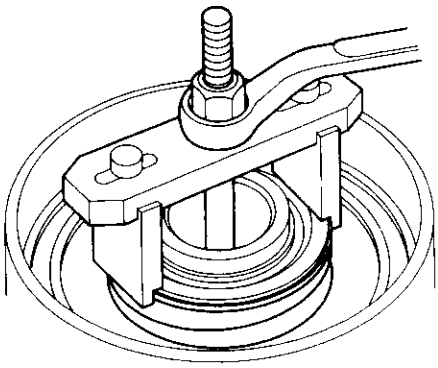

(cont'd)

Reassembly (cont'd)

7. Install the snap ring.

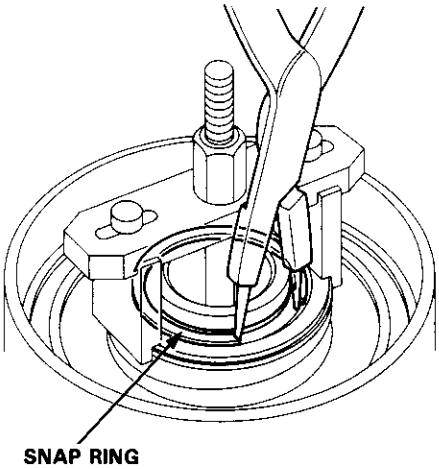

8. Remove the special tools.

9. Install the disc spring.

   NOTE: Install the disc spring in the direction shown, except 2nd clutch.

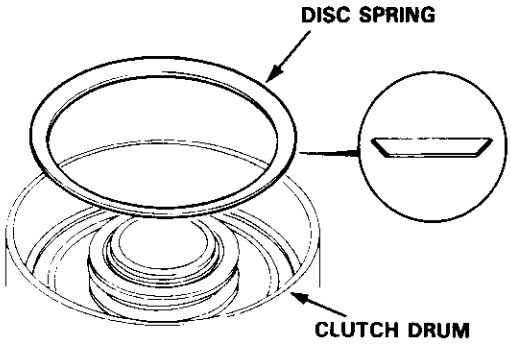

10. Soak the clutch discs thoroughly in ATF for a minimum of 30 minutes.

11. Starting with a clutch plate, alternately install the clutch plates and discs. Install the clutch end plate with flat side toward the disc.

    NOTE: Before installing the plates and discs, make sure the inside of the clutch drum is free of dirt or other foreign matter.

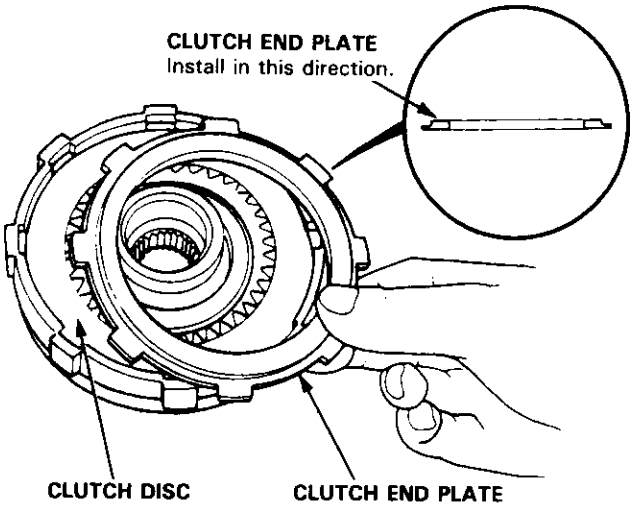

12. Install the snap ring.

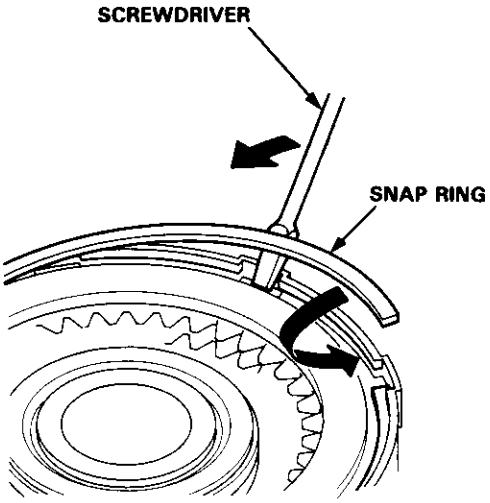

13. Measure the clearance between the clutch end plate and top disc with a dial indicator. Zero the dial indicator with the clutch end plate lowered and lift it up to the snap ring. The distance that the clutch end plate moves is the clearance between the clutch end plate and top disc.

    NOTE: Take measurements in at least three places, and use the average as the actual clearance.

Clutch End Plate-to-Top Disc Clearance:

Clutch	Service Limit
1st	0.65 – 0.85 mm (0.026 – 0.033 in)
2nd	0.65 – 0.85 mm (0.026 – 0.033 in)
3rd	0.40 – 0.60 mm (0.016 – 0.024 in)
4th	0.40 – 0.60 mm (0.016 – 0.024 in)

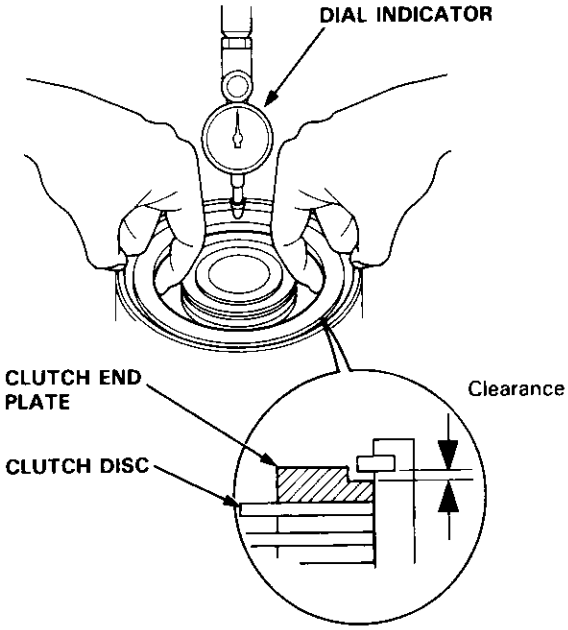

14. If the clearance is not within the service limits, select a new clutch end plate from the following table.

    NOTE: If the thickest clutch end plate is installed, but the clearance is still over the standard, replace the clutch discs and clutch plates.

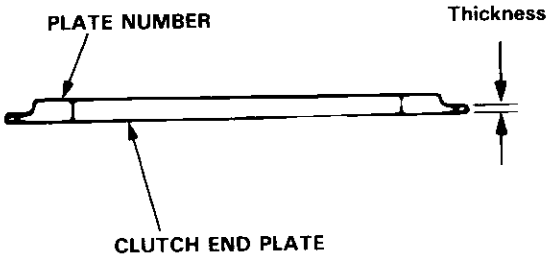

CLUTCH END PLATE

A4RA, B4RA Transmission:

Plate No.	Part Number	Thickness
1	22551 – P4R – 003	2.1 mm (0.083 in)
2	22552 – P4R – 003	2.2 mm (0.087 in)
3	22553 – P4R – 003	2.3 mm (0.091 in)
4	22554 – P4R – 003	2.4 mm (0.094 in)
5	22555 – P4R – 003	2.5 mm (0.098 in)
6	22556 – P4R – 003	2.6 mm (0.102 in)
7	22557 – P4R – 003	2.7 mm (0.106 in)
8	22558 – P4R – 003	2.8 mm (0.110 in)
9	22559 – P4R – 003	2.9 mm (0.114 in)

M4RA Transmission:

Plate No.	Part Number	Thickness
1	22551 – PC9 – 000	2.4 mm (0.094 in)
2	22552 – PC9 – 000	2.5 mm (0.098 in)
3	22553 – PC9 – 000	2.6 mm (0.102 in)
4	22554 – PC9 – 000	2.7 mm (0.106 in)
5	22555 – PC9 – 000	2.8 mm (0.110 in)
6	22556 – PC9 – 000	2.9 mm (0.114 in)
7	22557 – PC9 – 000	3.0 mm (0.118 in)
8	22558 – PC9 – 000	3.1 mm (0.122 in)
9	22559 – PC9 – 000	3.2 mm (0.126 in)
10	22560 – PC9 – 000	3.3 mm (0.130 in)
11	22561 – PC9 – 000	2.1 mm (0.082 in)
12	22562 – PC9 – 000	2.2 mm (0.086 in)
13	22563 – PC9 – 000	2.3 mm (0.090 in)
14	22574 – P4V – 003	3.4 mm (0.134 in)
15	22561 – P4V – 003	3.5 mm (0.138 in)
16	22562 – P4V – 003	3.6 mm (0.142 in)
17	22563 – P4V – 003	3.7 mm (0.146 in)
18	22564 – P4V – 003	3.8 mm (0.150 in)

15. After replacing the clutch end plate, make sure that the clearance is within tolerance.

Illustrated Index

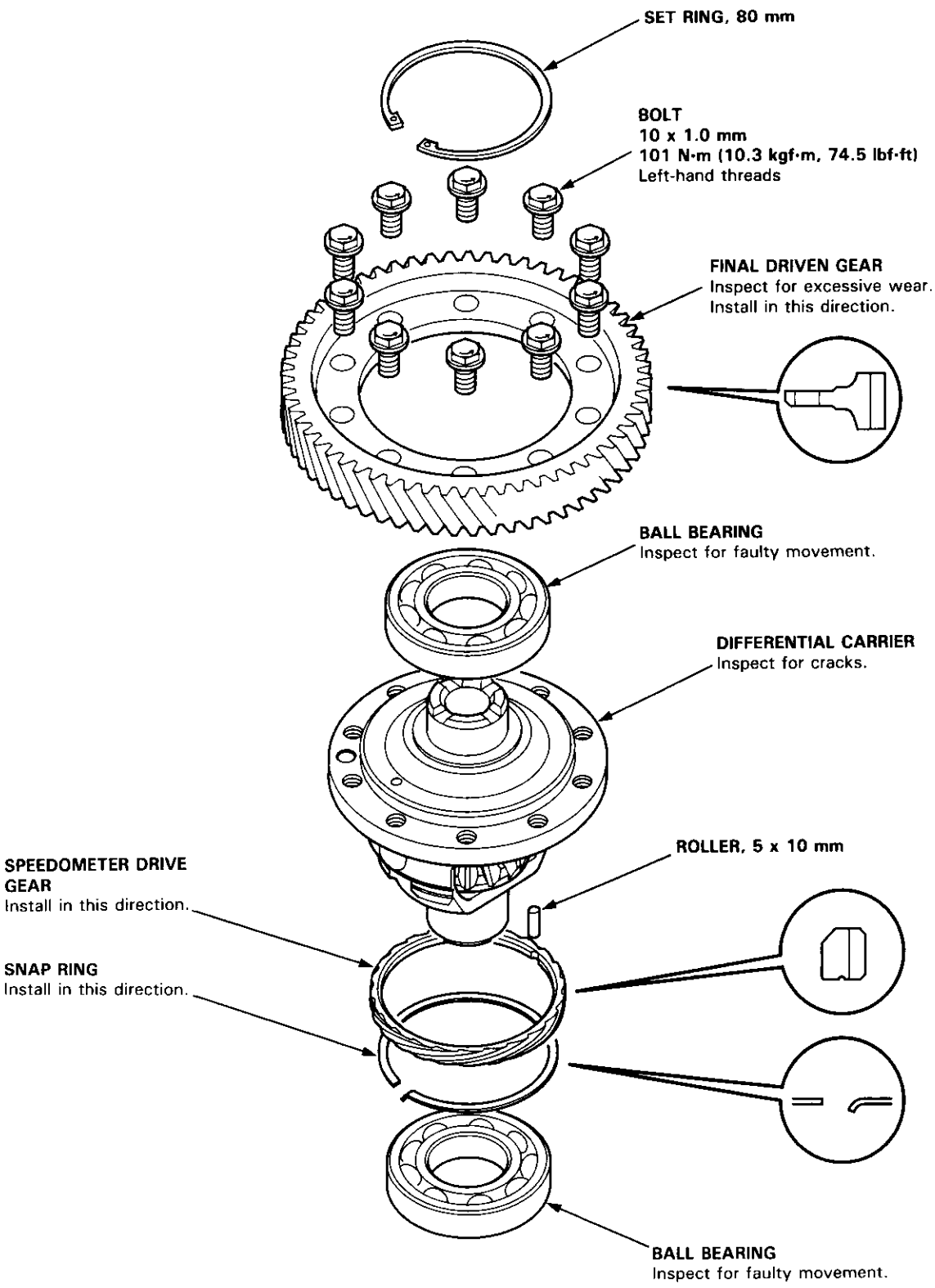

Backlash Inspection

1. Place differential assembly on V-blocks and install both axles.

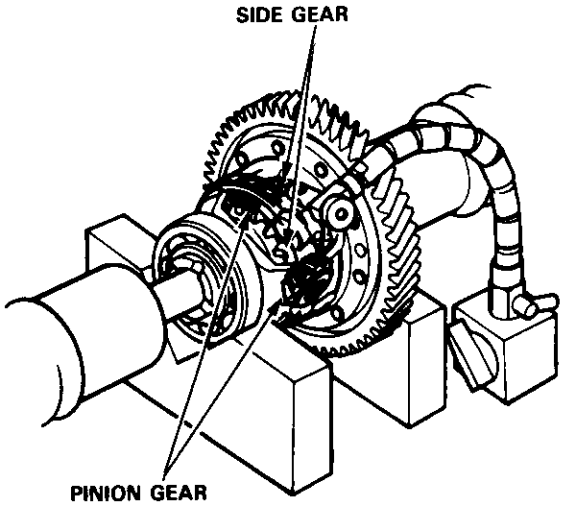

2. Check backlash of both pinion gears.

   Standard (New): 0.05 – 0.15 mm (0.002 – 0.006 in)

3. If backlash is out of tolerance, replace the differential carrier.

Bearing Replacement

NOTE: Check bearings for wear and rough rotation. If bearings are OK, removal is not necessary.

1. Remove bearings using a bearing puller.

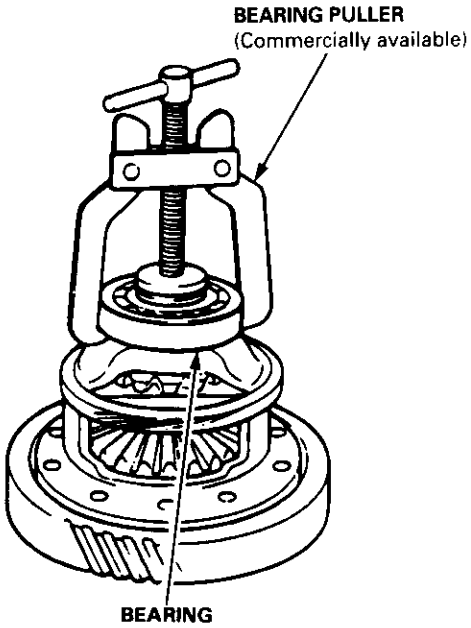

2. Install new bearings using the special tool as shown.

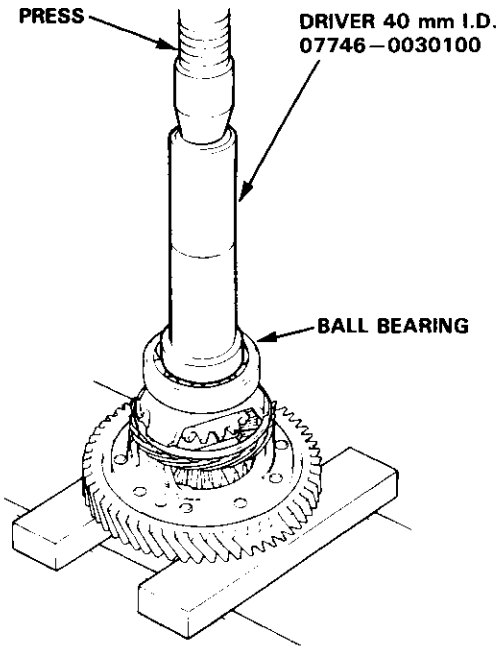

Differential Carrier Replacement

1. Remove the final driven gear from the differential carrier.

   NOTE: The final driven gear bolts have left-hand threads.

2. Pry the snap ring off differential carrier, then remove the speedometer drive gear and 5 x 10 mm roller.

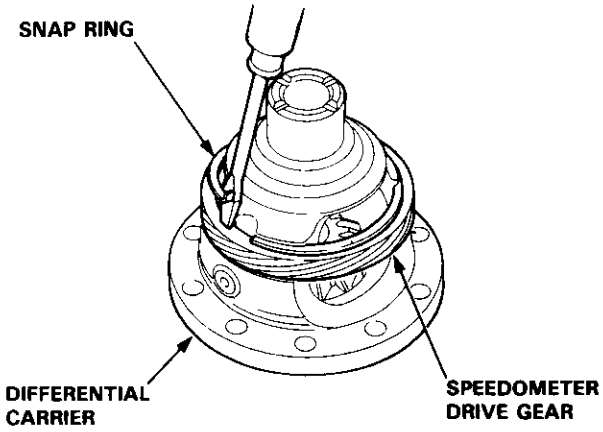

3. Install the 5 x 10 mm roller in the differential carrier.

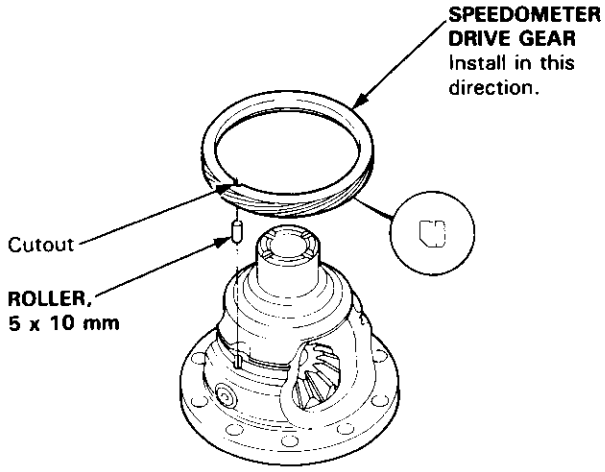

4. Install the speedometer drive gear with its chamfered side facing the carrier. Align the cutout on the bore of the speedometer drive gear with the 5 x 10 mm roller.

5. Align the hooked end of the snap ring with the pinion shaft as shown, then install the snap ring in the differential carrier groove.

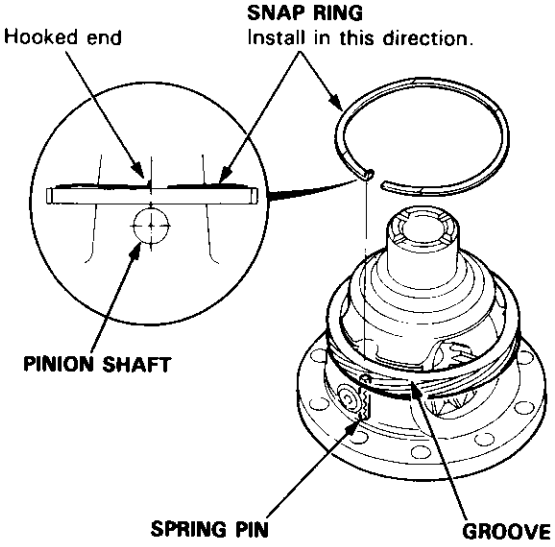

6. Install the final driven gear, then tighten the bolts to the specified torque.

   TORQUE: 101 N·m (10.3 kgf·m, 74.5 lbf·ft)

   NOTE: The final driven gear bolts have left-hand threads.

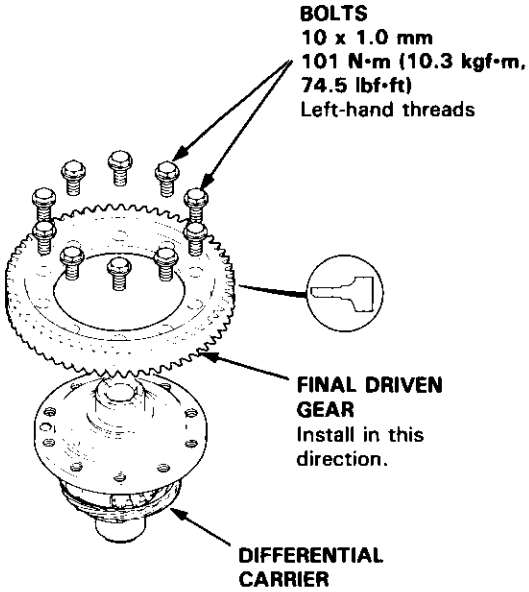

7. Install a new ball bearing (see page 14-167).

Oil Seal Removal

1. Remove the differential assembly.
2. Remove the oil seal from the transmission housing.

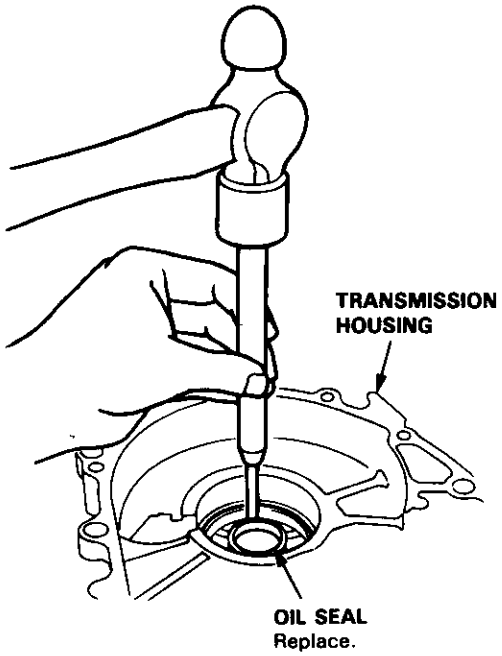

3. Remove the oil seal from the torque converter housing.

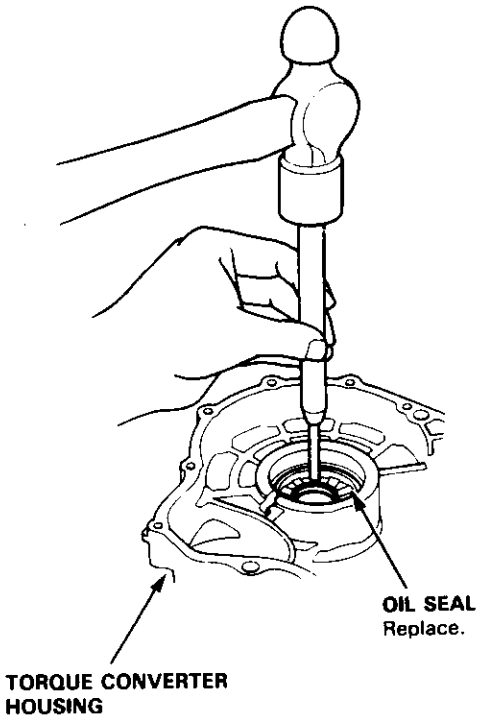

Oil Seal Installation/Side Clearance

1. Install a 2.50 mm (0.098 in) set ring, 80 mm in transmission housing.

   NOTE: Do not install the oil seal yet.

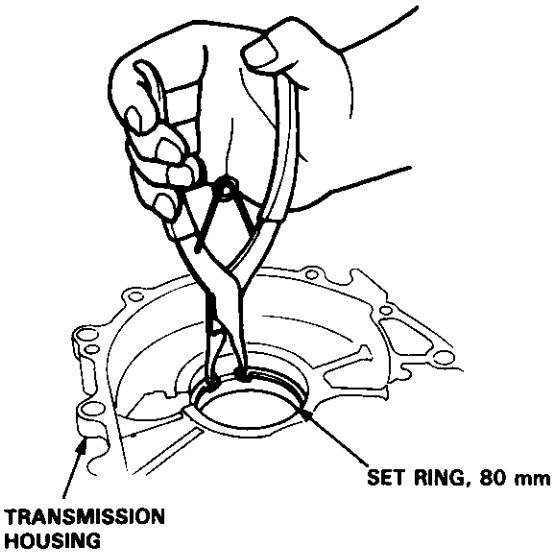

2. Install the differential assembly into the torque converter housing using the special tool as shown.

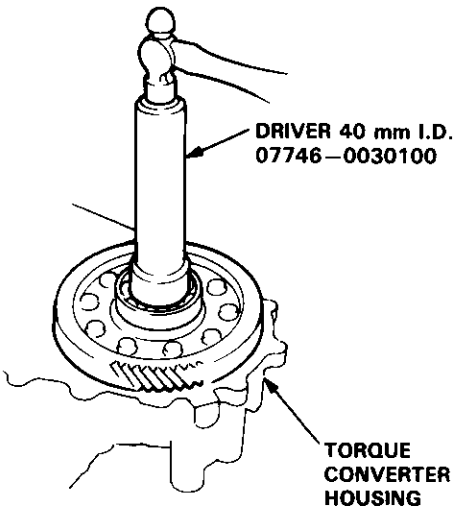

3. Install the transmission housing and tighten the bolts (see page 14-178 and 14-179).

(cont'd)

Oil Seal Installation/Side Clearance (cont'd)

4. Tap on the transmission housing side of the differential assembly with the special tool to seat the differential assembly in the torque converter housing.

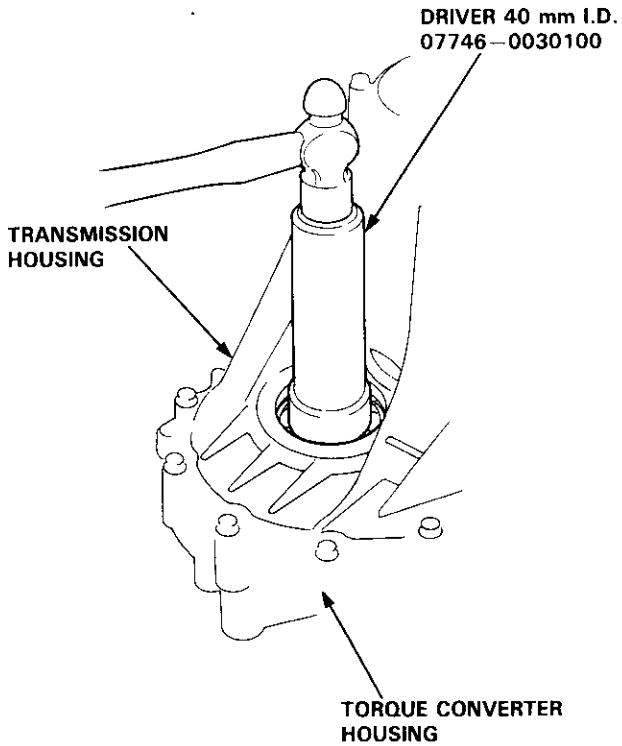

5. Measure the clearance between the 80 mm set ring and outer race of the ball bearing in the transmission housing.

STANDARD: 0 – 0.15 mm (0 – 0.006 in)

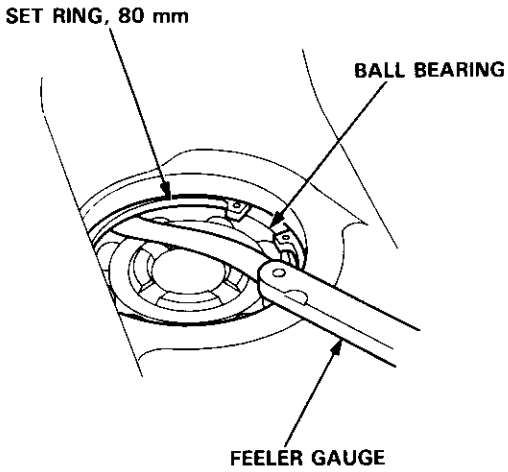

6. If the clearance is more than the standard, select a new set ring from the table, and install:

SET RING, 80 mm

Part Number	Thickness
90414 – 689 – 000	2.50 mm (0.098 in)
90415 – 689 – 000	2.60 mm (0.102 in)
90416 – 689 – 000	2.70 mm (0.106 in)
90417 – 689 – 000	2.80 mm (0.110 in)
90418 – 689 – 000	2.90 mm (0.114 in)
90419 – PH8 – 000	3.00 mm (0.118 in)

NOTE: If the clearance measured in step 5 is standard, it is not necessary to perform steps 7 and 8.

7. Remove the transmission housing.

8. Replace the 2.50 mm (0.098 in) 80 mm set ring with the one of the correct thickness selected in step 6.

9. Install the new oil seal flush with the transmission housing using the special tools as shown.

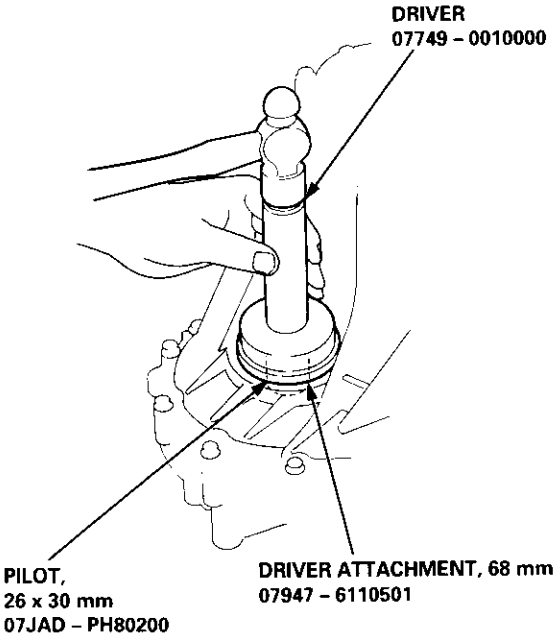

10. Install the new oil seal flush with the torque converter housing using the special tools as shown.

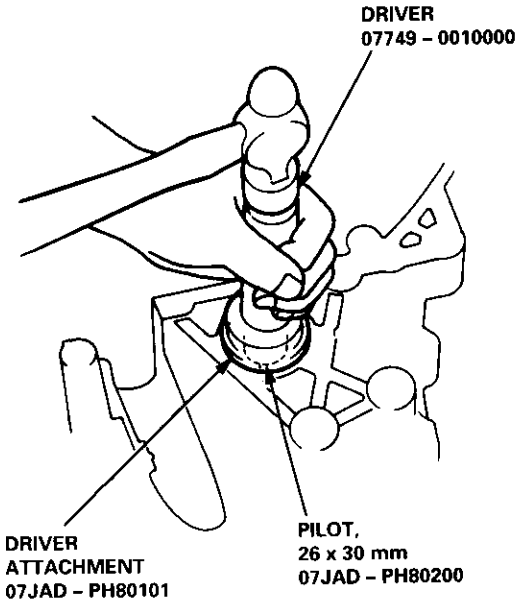

Mainshaft Bearing/Oil Seal Replacement

1. Remove the mainshaft bearing and oil seal using the special tools as shown.

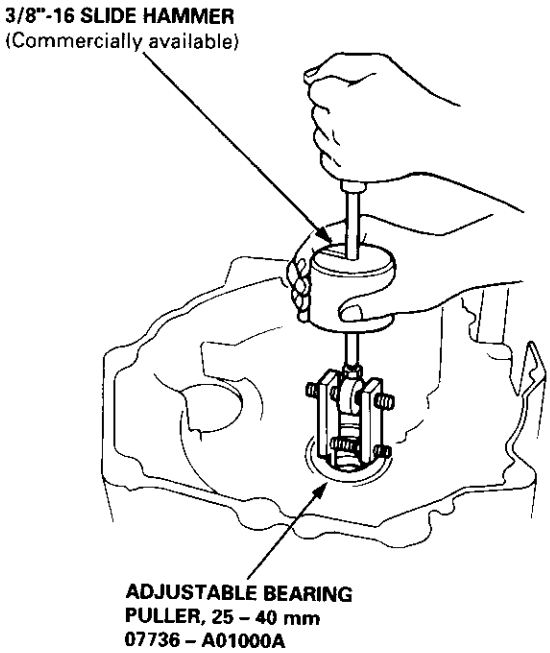

2. Drive in the new mainshaft bearing until it bottoms in the housing using the special tools as shown.

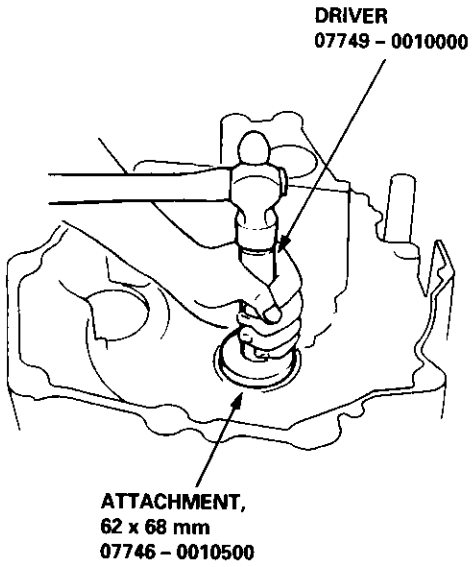

3. Install the new oil seal flush with the housing using the special tools as shown.

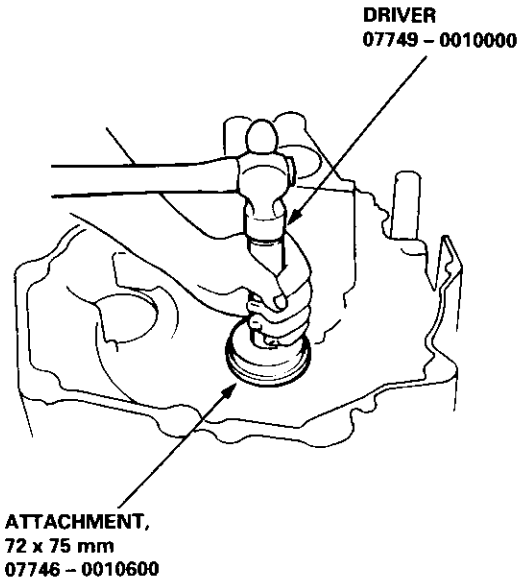

Countershaft Bearing Replacement

1. Remove the countershaft bearing using the special tools as shown.

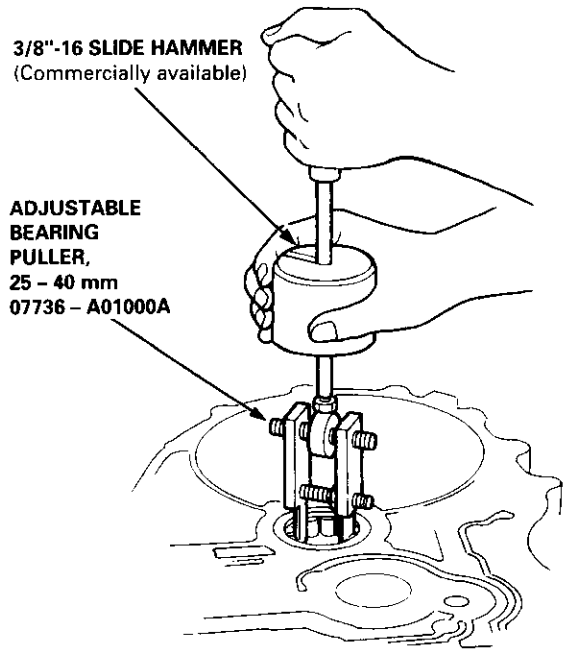

2. Install the ATF guide plate.

3. Drive the new bearing into the housing using the special tools as shown.

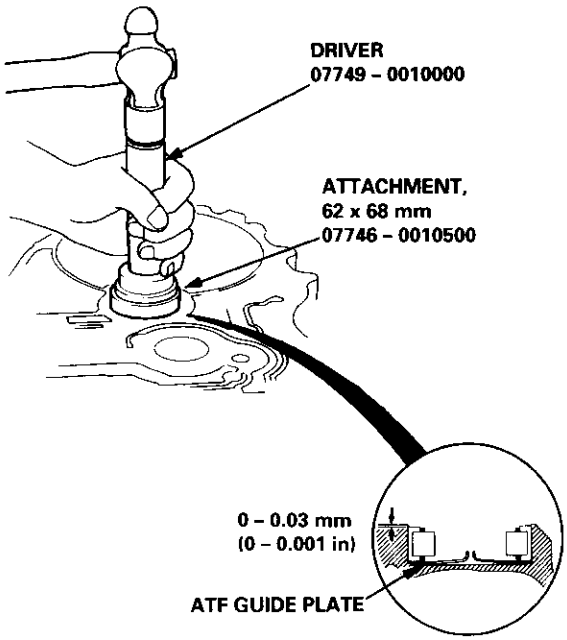

Mainshaft/Countershaft Bearings Replacement

1. To remove the mainshaft and countershaft bearings from the transmission housing, expand each snap ring with snap ring pliers, then push the bearing out using the special tools and a press as shown.

   NOTE: Do not remove the snap rings unless it's necessary to clean the grooves in the housing.

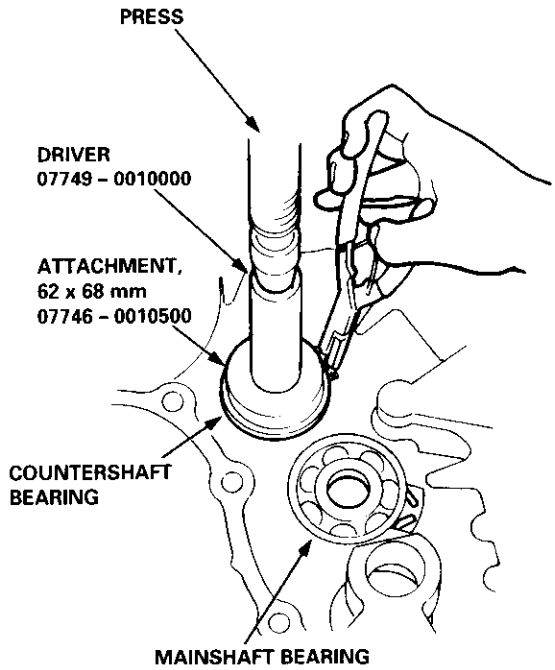

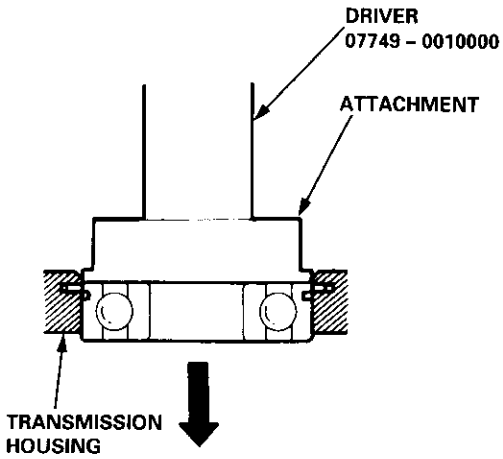

ATTACHMENT
- **Mainshaft Bearing Installation use:**
  ATTACHMENT, 72 x 75 mm
  07746 - 0010600
- **Countershaft Bearing Installation use:**
  ATTACHMENT, 62 x 68 mm
  07746 - 0010500

2. Expand each snap ring with snap ring pliers, insert the new bearing part-way into the housing using the special tools and a press as shown. Install the bearing with the groove facing outside the housing.

   NOTE: Coat all parts with ATF.

3. Release the pliers, then push the bearing down into the housing until the ring snaps in place around it.

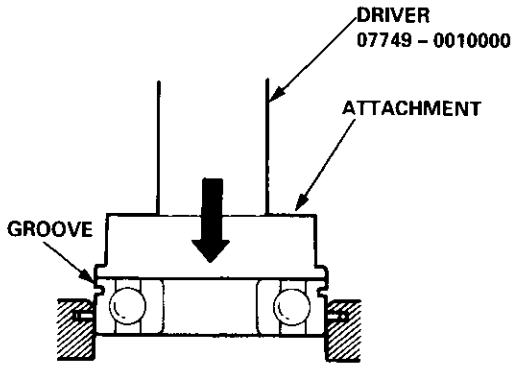

ATTACHMENT
- **Mainshaft Bearing Removal use:**
  ATTACHMENT, 72 x 75 mm
  07746 - 0010600
- **Countershaft Bearing Removal use:**
  ATTACHMENT, 62 x 68 mm
  07746 - 0010500

4. After installing the bearing verify the following:

   - The snap ring is seated in the bearing and housing grooves.
   - The ring end gap is correct.

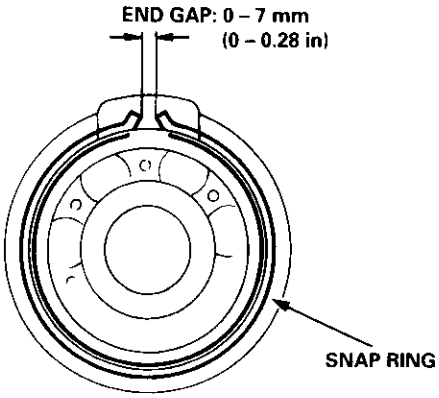

Installation

1. Install the reverse idler gear.

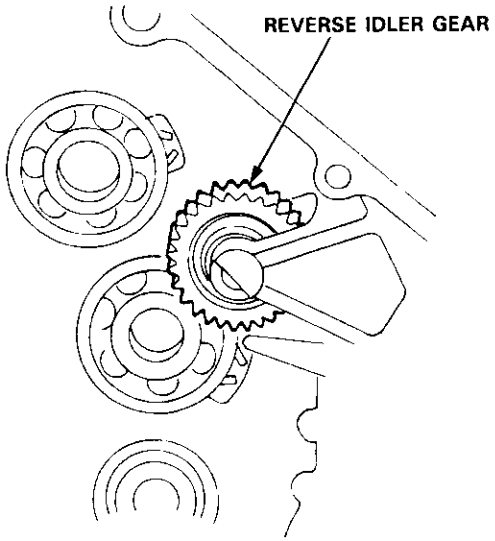

2. Install the reverse idler gear shaft holder and needle bearing into the transmission housing, then tighten the bolts.

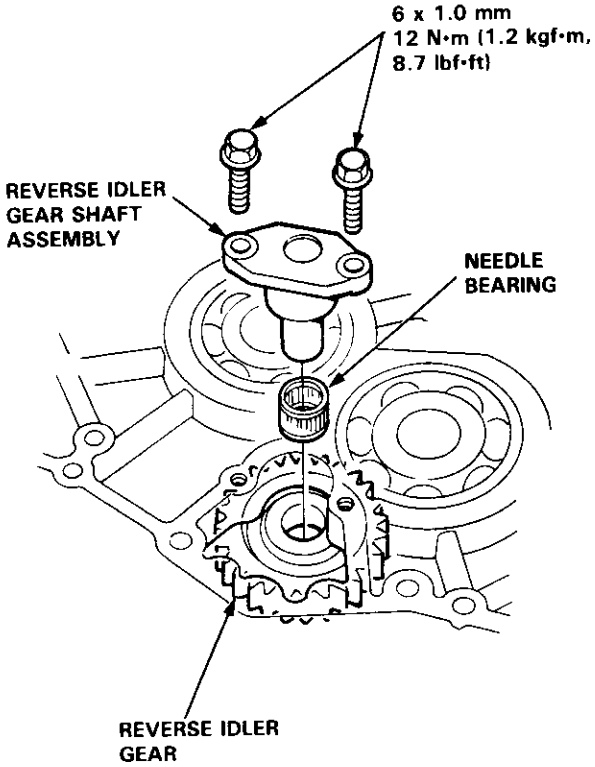

Inspection/Adjustment

1. Set the park lever in the [P] position.

2. Measure the distance between the park pawl shaft and the park lever roller pin as shown.

STANDARD: 72.9 – 73.9 mm (2.87 – 2.91 in)

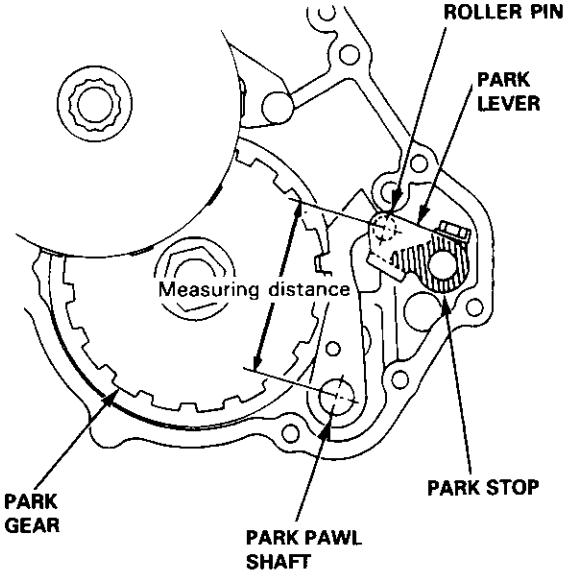

3. If the measurement is out of tolerance, select and install the appropriate park stop from the table below.

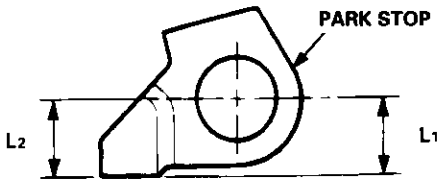

PARK STOP

Mark	Part Number	L_1	L_2
1	24537 – PA9 – 003	11.00 mm (0.433 in)	11.00 mm (0.433 in)
2	24538 – PA9 – 003	10.80 mm (0.425 in)	10.65 mm (0.419 in)
3	24539 – PA9 – 003	10.60 mm (0.417 in)	10.30 mm (0.406 in)

4. After replacing the park stop, make sure the distance is within tolerance.

Reasembly

NOTE:
- Coat all parts with ATF.
- Replace the following parts:
  - — O-rings
  - — Lock washers
  - — Gaskets
  - — Mainshaft and countershaft locknuts and conical spring washers
  - — Sealing washers

TORQUE: 12 N·m (1.2 kgf·m, 8.7 lbf·ft)

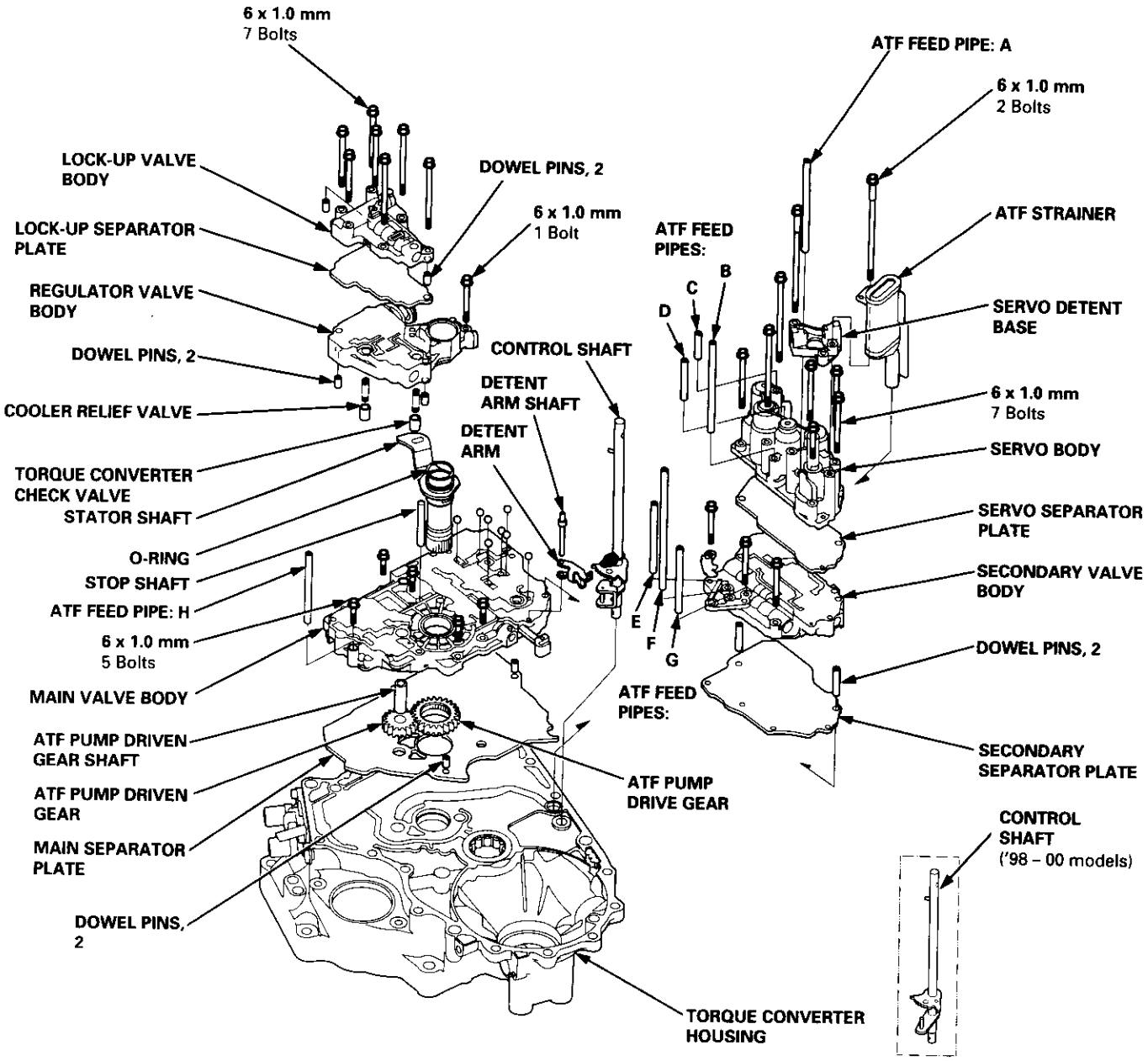

NOTE: The illustration shows the '96 – 98 models, the '99 – 00 models do not have the servo detent base; the servo detent is integral with the servo body.

1. Install the ATF magnet and suction pipe collar in the torque converter housing, if necessary.
2. Install the main separator plate and the two dowel pins on the torque converter housing.
3. Install the ATF pump drive gear, ATF pump driven gear and ATF pump driven gear shaft on the torque converter housing.

   NOTE: Install the ATF pump driven gear with its grooved and chamfered side facing down.

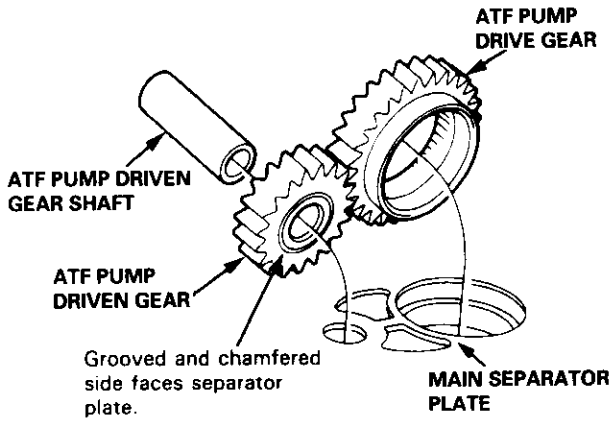

4. Loosely install the main valve body with five bolts. Make sure the ATF pump drive gear rotates smoothly in the normal operating direction and the ATF pump driven gear shaft moves smoothly in the axial and normal operating directions.
5. Install the secondary valve body, separator plate and two dowel pins on the main valve body.

   NOTE: Do not install the bolts.

6. Install the control shaft in the housing with the control shaft and manual valve together.
7. Install the detent arm and arm shaft in the main valve body, then hook the detent arm spring to the detent arm.

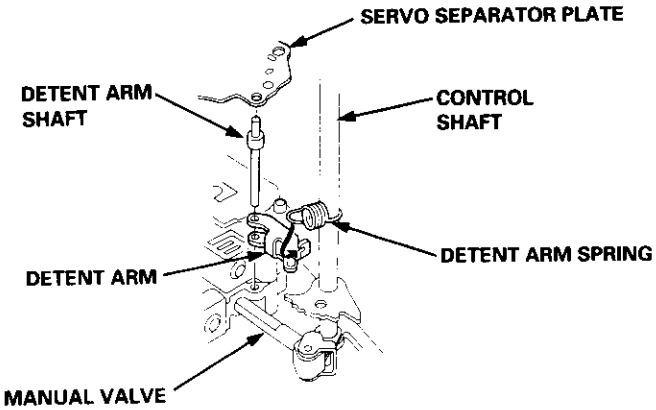

8. Install the servo body and separator plate on the secondary valve body ('96 – 98 models: seven bolts, '99 – 00 models: eight bolts).

9. For '96 – 98 models: Install the servo detent base and the ATF strainer (two bolts).
   For '99 – 00 models: Install the ATF strainer (one bolt).

10. Tighten the five bolts on the main valve body to 12 N·m (1.2 kgf·m, 8.7 lbf·ft).
    Make sure the ATF pump drive gear and ATF pump driven gear shaft move smoothly.

11. If the ATF pump drive gear and ATF pump driven gear shaft do not move freely, loosen the five bolts on the main valve body, and disassemble the valve bodies.
    Realign the ATF pump driven gear shaft and reassemble the valve bodies, then retighten the bolts to the specified torque.

    CAUTION: Failure to align the ATF pump driven gear shaft correctly will result in a seized ATF pump drive gear or ATF pump driven gear shaft.

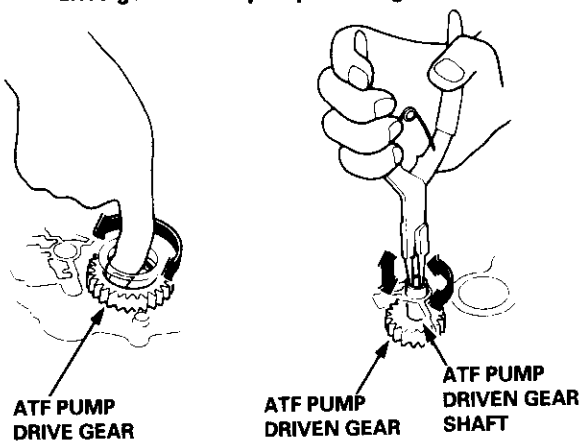

12. Install the stator shaft and stop shaft.

13. Install the bolts and the shaft stop on the secondary valve body, then tighten the bolts (three bolts).

14. Install the torque converter check valve, cooler relief valve and valve springs in the regulator valve body, then install the regulator valve body on the main valve body (one bolt).

15. Install the lock-up valve body on the regulator valve body (seven bolts).

16. Install the ATF feed pipes in the main valve body, the three ATF feed pipes in the secondary valve and the four ATF feed pipes in the servo body. (cont'd)

Reassembly (cont'd)

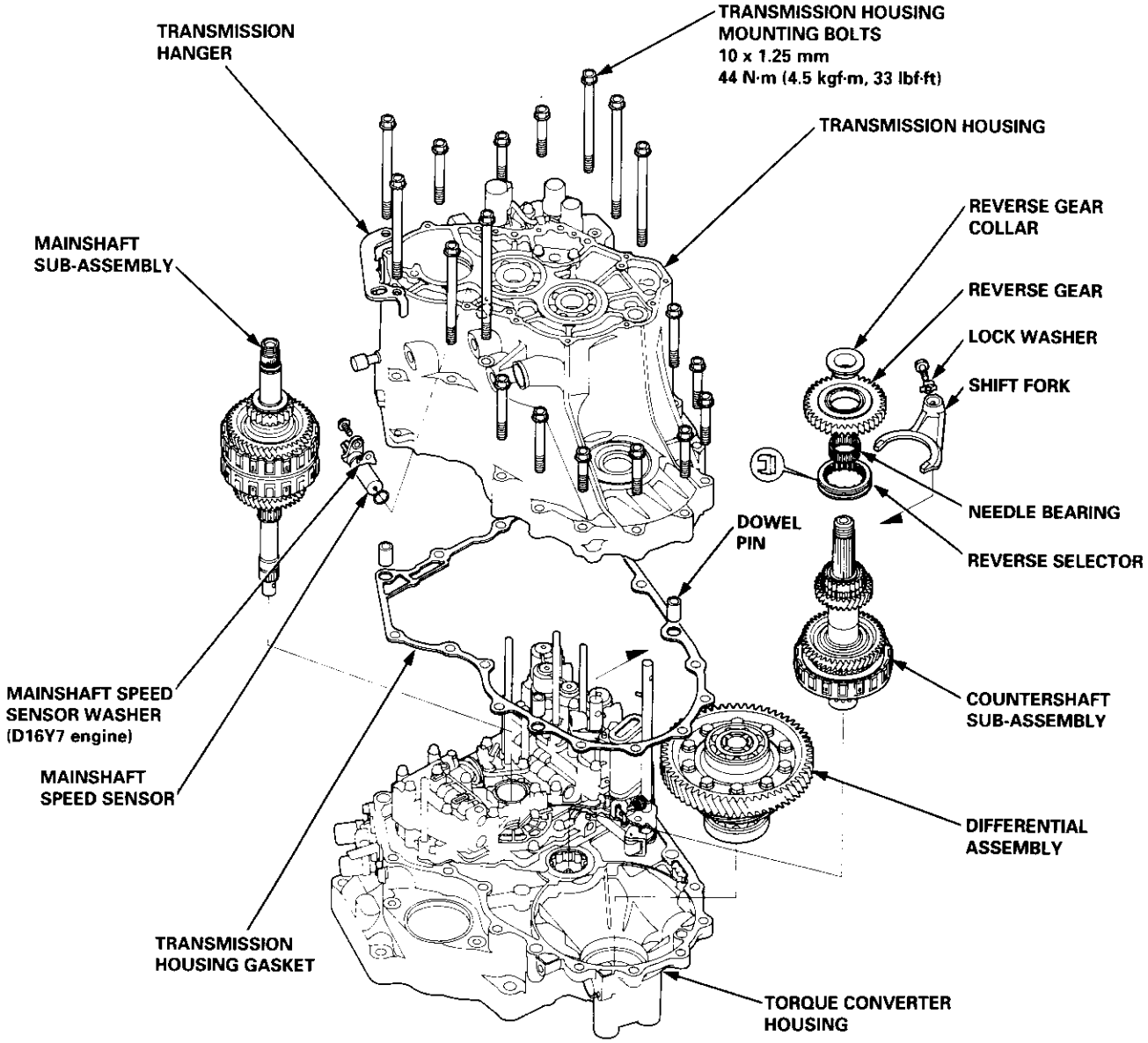

17. Install the reverse idler gear and the gear shaft holder (see page 14-175).

18. Install the differential assembly in the torque converter housing.

19. Assemble the mainshaft sub-assembly and the countershaft sub-assembly, then install them together in the torque converter housing.

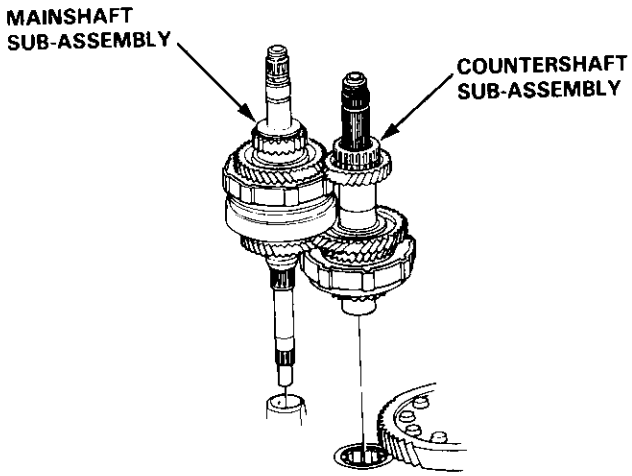

20. Turn the shift fork so the large chamfered hole is facing the fork bolt hole, then install the shift fork with the reverse selector, and tighten the lock bolt. Bend the lock tab against the bolt head.

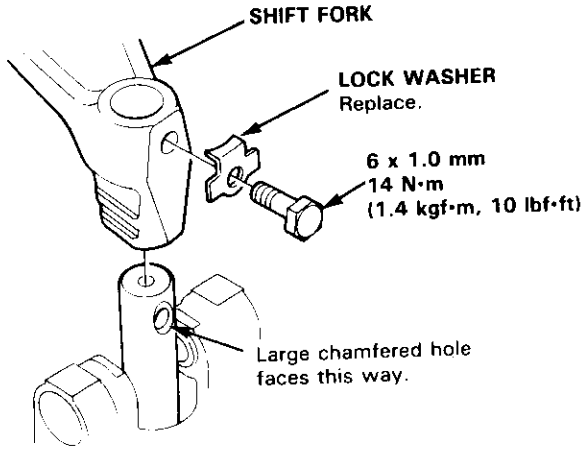

21. Install the needle bearing, countershaft reverse gear and reverse gear collar on the countershaft.

22. Align the spring pin on the control shaft with the transmission housing groove by turning the control shaft.

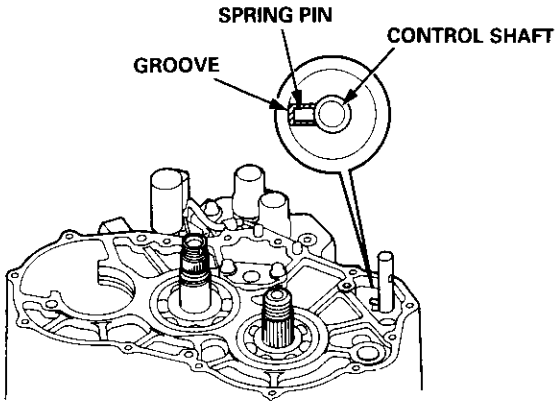

23. Install the two dowel pins and a new gasket on the torque converter housing.

24. Place the transmission housing on the torque converter housing.

CAUTION: Make sure that the mainshaft speed sensor is not installed on the transmission housing before installing the transmission housing on the torque converter housing.

25. Install the transmission housing mounting bolts along with the transmission hanger, then tighten the bolts in two or more steps in the sequence as shown.

TORQUE: 44 N·m (4.5 kgf·m, 33 lbf·ft)

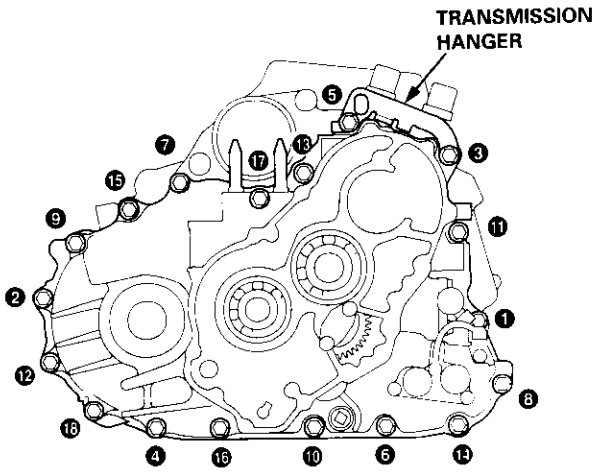

(cont'd)

Reassembly (cont'd)

26. Slip the special tool onto the mainshaft as shown.

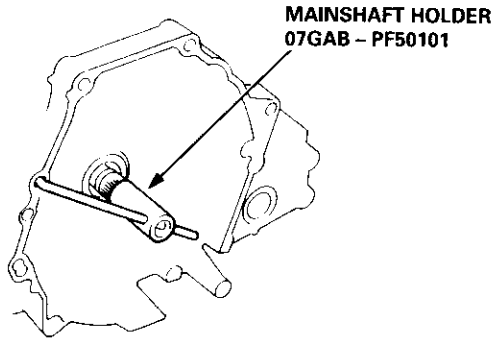

27. Install the park lever on the control shaft.

28. Assemble the one-way clutch and the park gear with the countershaft 1st gear (see page 14-155).

29. Install the countershaft 1st gear collar, needle bearing, and the countershaft 1st gear/park gear assembly on the countershaft.

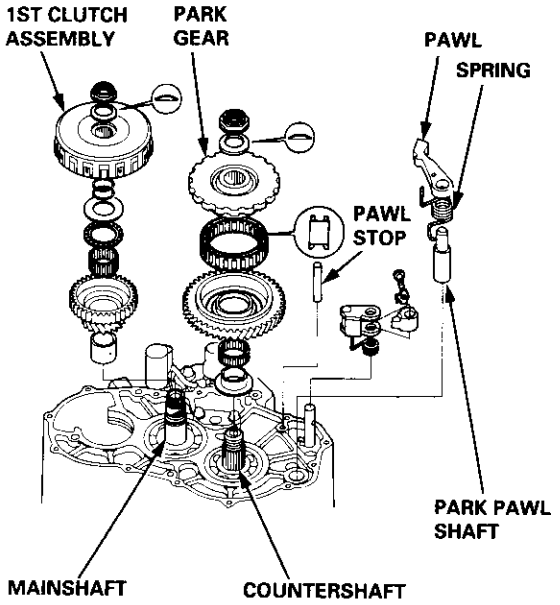

30. Install the park pawl shaft, spring, pawl, and pawl stop on the transmission housing, then engage the park pawl with the park gear.

31. Install the mainshaft 1st gear collar on the mainshaft.

32. Wrap the shaft splines with tape to prevent the O-rings, then install new O-rings on the mainshaft.

33. Assemble the thrust washer, thrust needle bearing, needle bearing, and mainshaft 1st gear in the 1st clutch assembly, then install them on the mainshaft.

34. Install new conical spring washers and locknuts on each shaft.

CAUTION: Install the conical spring washers in the direction shown.

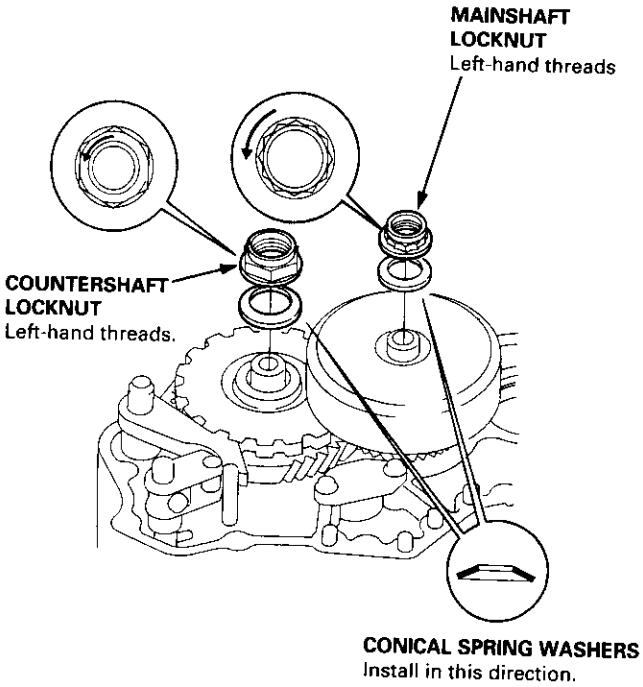

35. Tighten the locknuts to the specified torque.

NOTE:
- Do not use an impact wrench. Always use a torque wrench to tighten the locknut.
- Mainshaft and countershaft locknuts have left-hand threads.

TORQUE:

MAINSHAFT	**78 N·m (8.0 kgf·m, 58 lbf·ft)**
COUNTERSHAFT	**103 N·m (10.5 kgf·m, 75.9 lbf·ft)**

36. Remove the special tool from mainshaft, then stake each locknut using a 3.5 mm punch as shown.

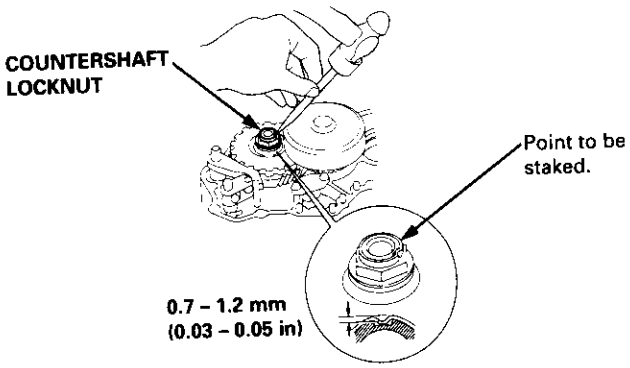

37. Set the park lever in the [P] position, then verify that the park pawl engages the park gear.

38. If the pawl does not engage fully, check the park pawl stop clearance (see page 14-175).

39. Tighten the lock bolt and bend the lock tab.

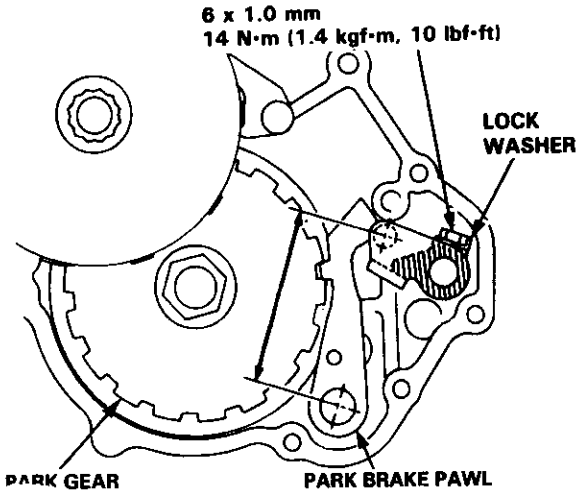

40. Install the end cover with two dowel pins and a new gasket (thirteen bolts).

TORQUE: 12 N·m (1.2 kgf·m, 8.7 lbf·ft)

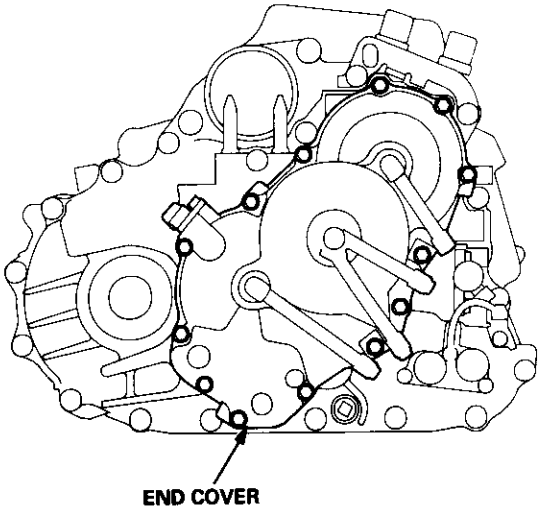

41. Install the ATF cooler lines with new sealing washers.

TORQUE: 28 N·m (2.9 kgf·m, 21 lbf·ft)

42. Install the ATF dipstick.

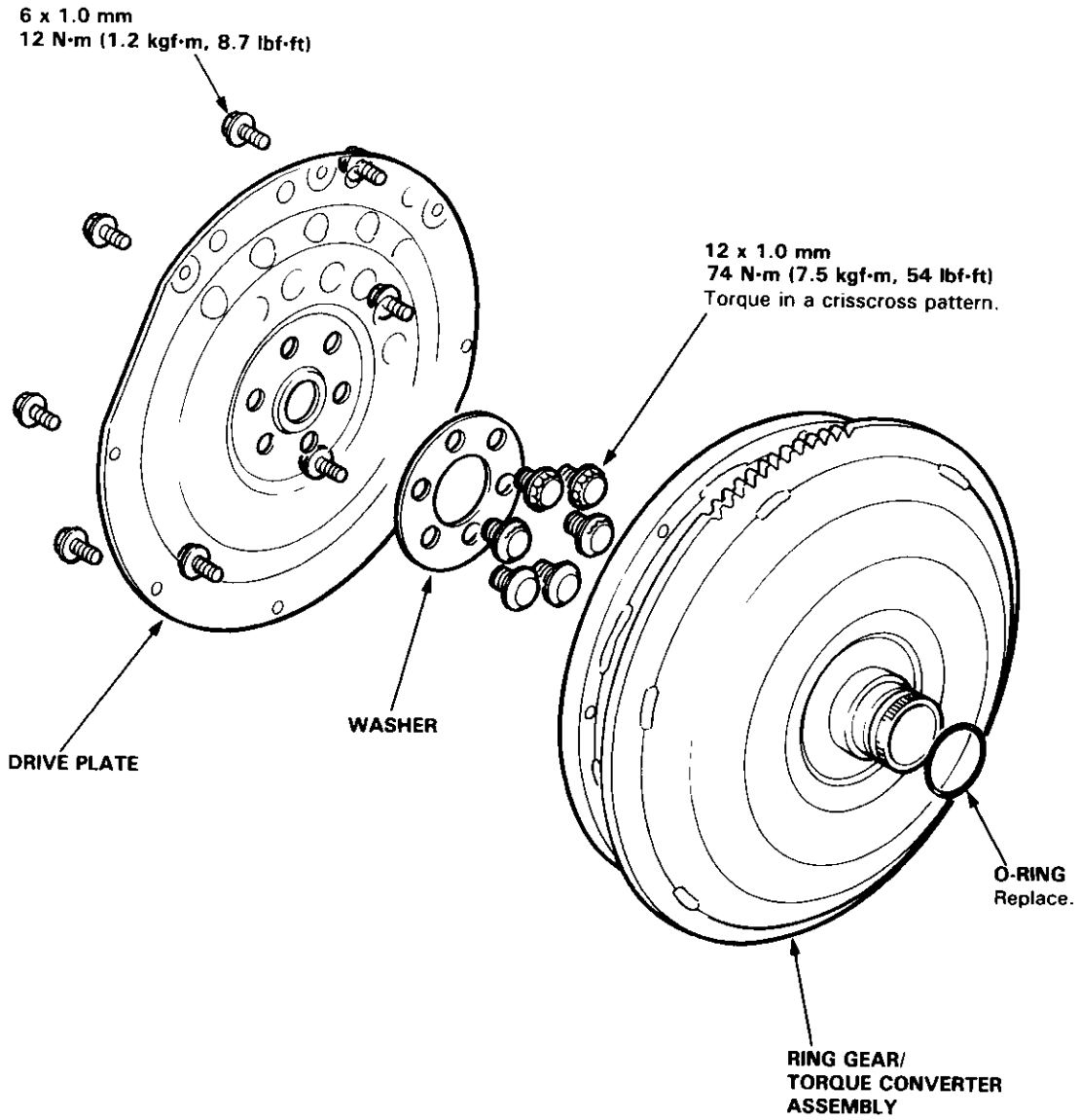
6 x 1.0 mm
12 N·m (1.2 kgf·m, 8.7 lbf·ft)
12 x 1.0 mm
74 N·m (7.5 kgf·m, 54 lbf·ft)
Torque in a crisscross pattern.
DRIVE PLATE
WASHER
O-RING
Replace.
RING GEAR/
TORQUE CONVERTER
ASSEMBLY

Installation

1. Flush the ATF cooler as described on page 14-187 and 14-188.

2. Install the torque converter assembly securely with a new O-ring on the mainshaft.

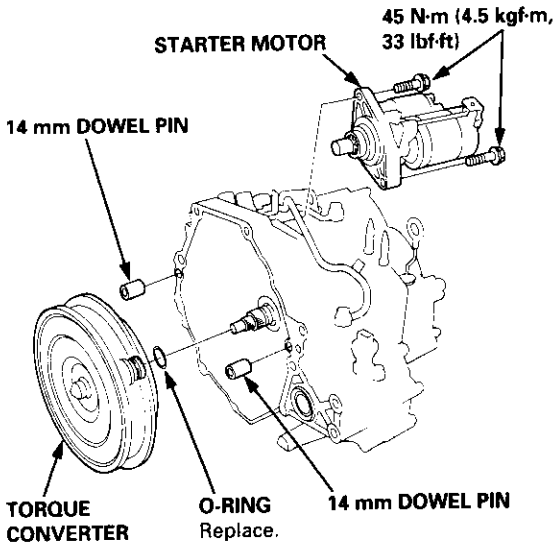

3. Install the starter motor on the torque converter housing, then install the two 14 mm dowel pins in the torque converter housing.

4. Place the transmission on a jack, and raise it to the engine assembly level.

5. Attach the transmission to the engine, then install two transmission housing mounting bolts and two rear engine mounting bolts.

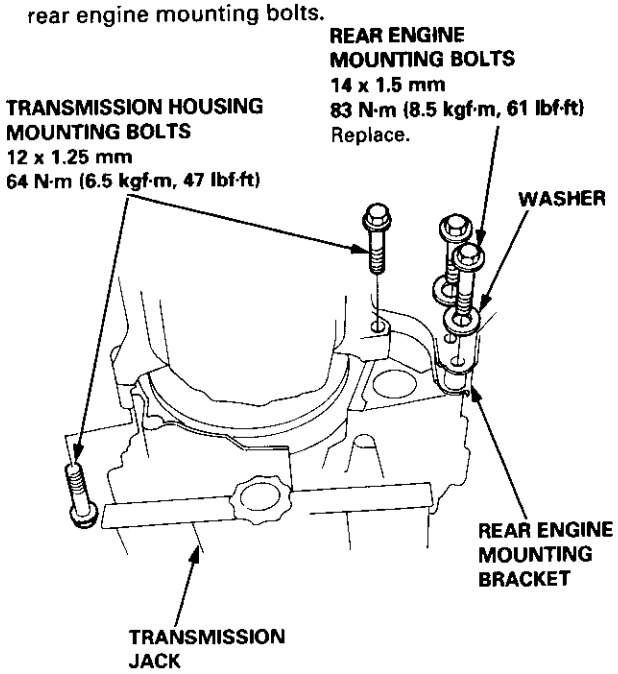

6. Install the transmission mount bracket.

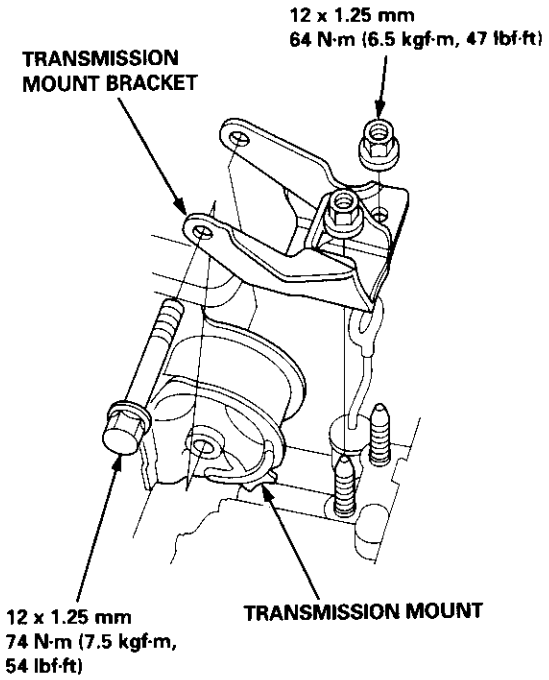

7. Install the remaining transmission housing mounting bolts and remaining rear engine mounting bolt.

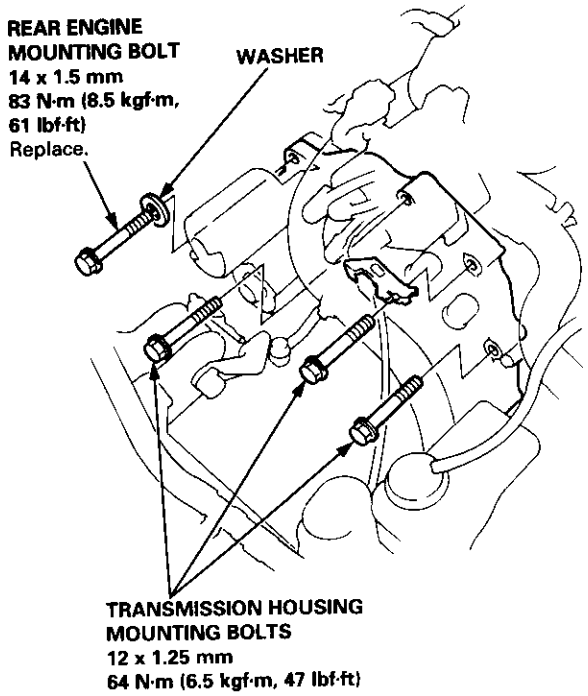

8. Remove the transmission jack.

(cont'd)

Installation (cont'd)

9. Attach the torque converter to the drive plate with eight drive plate bolts and torque as follows:
   Rotate the crankshaft pulley as necessary to tighten the bolts to 1/2 of the specified torque, then to the final torque, in a crisscross pattern.
   After tightening the last bolt, check that the crankshaft rotates freely.

   TORQUE: 12 N·m (1.2 kgf·m, 8.7 lbf·ft)

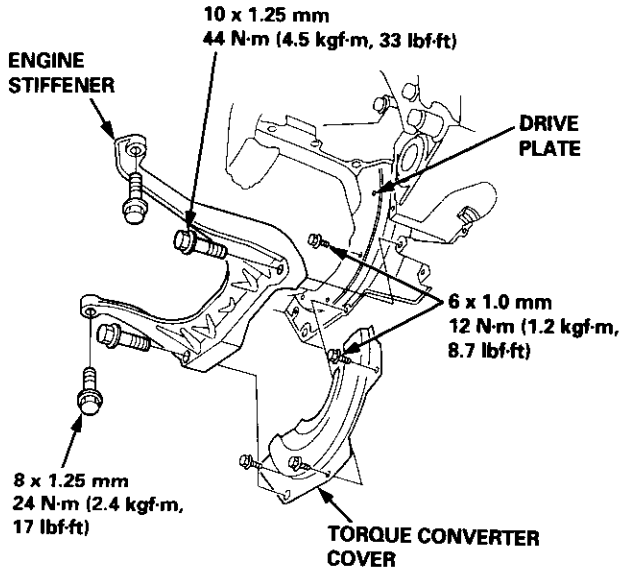

10. Install the torque converter cover and the engine stiffener.
11. Tighten the crankshaft pulley bolt, if necessary (see section 6).
12. Connect the ATF cooler hoses to the ATF cooler lines (see page 14-192).

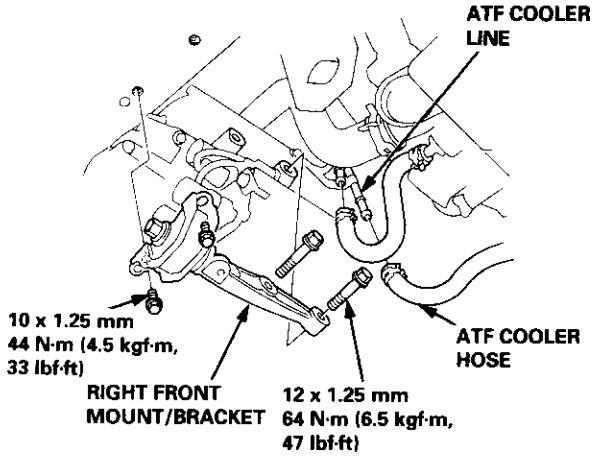

13. Install the right front mount/bracket.

14. Install the control lever with a new lock washer to the control shaft, then install the shift cable cover.

    CAUTION: Take care not to bend the shift cable.

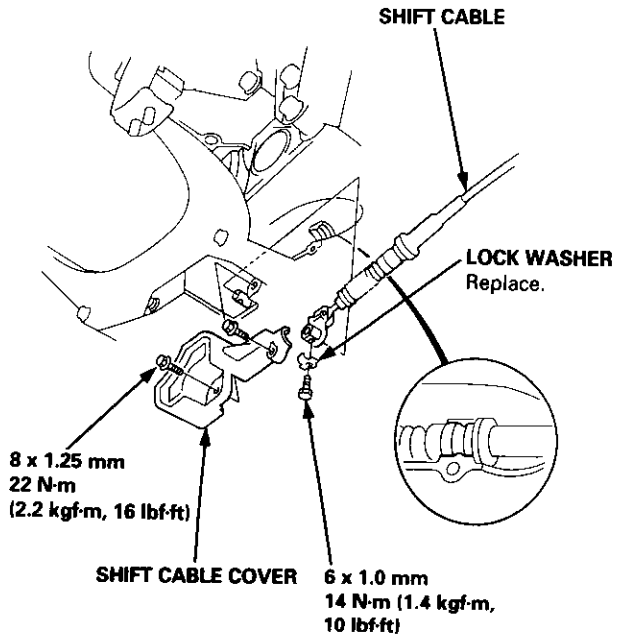

15. Install the exhaust pipe A.

    NOTE: D16Y8 engine is shown; D16Y7 engine is similar.

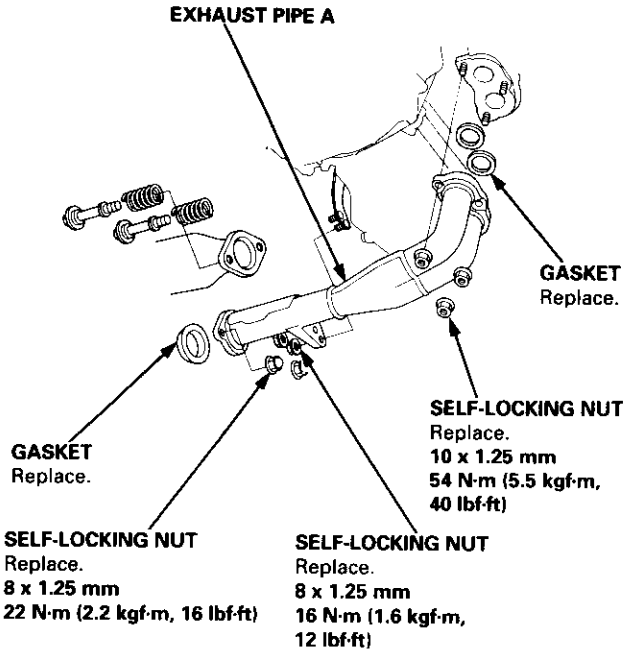

16. Install a new set ring on the end of each driveshaft.
17. Install the right and left driveshafts (see section 16).
CAUTION: While installing the driveshafts in the differential, be sure not to allow dust and other foreign particles to enter into the transmission.
NOTE:
- Clean the areas where the driveshafts contact the transmission (differential) thoroughly with solvent or carburetor cleaner, and dry with compressed air.
- Turn the right and left steering knuckle fully outward, and slide each driveshaft into the differential until you feel its set ring clip engage the side gear.

18. Install the damper fork, then install the right and left ball joints to the each lower arm with the castle nuts and new cotter pins.

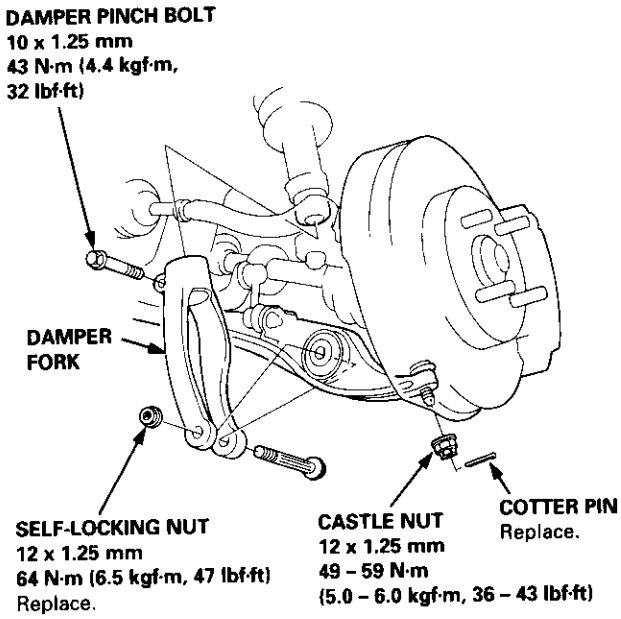

19. Install the splash shield.

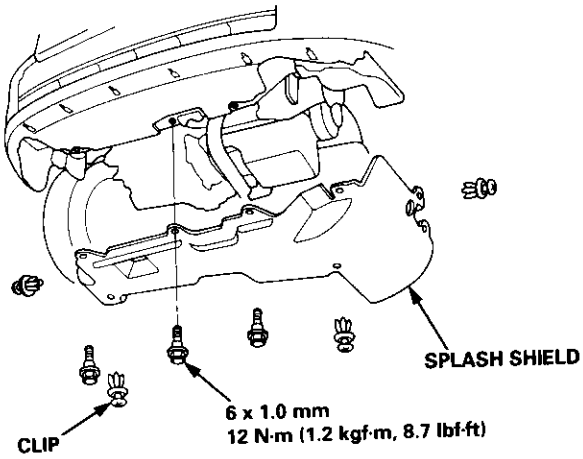

20. Connect the mainshaft speed sensor, the linear solenoid and the shift control solenoid connectors.

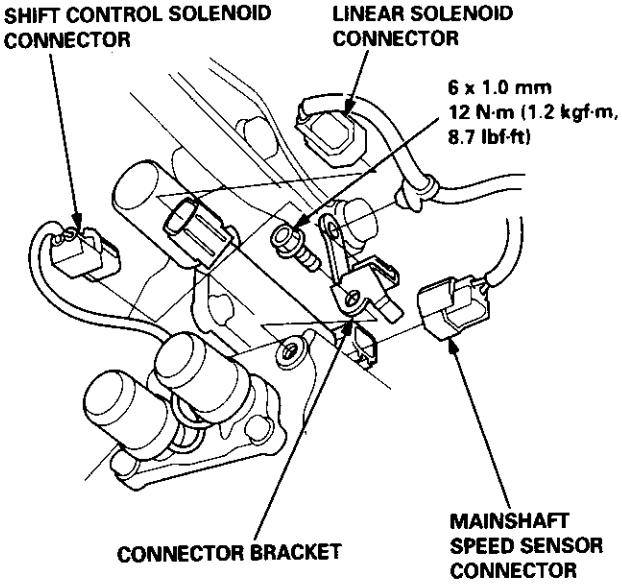

21. Connect the countershaft speed sensor and the vehicle speed sensor (VSS) connectors.

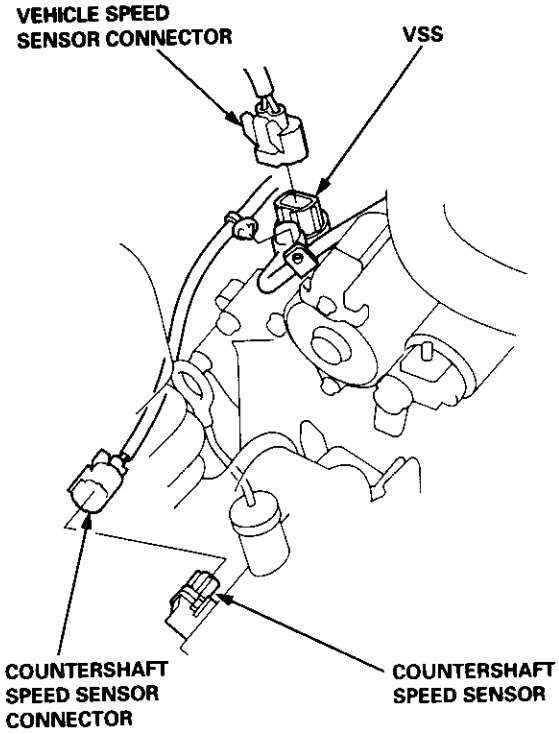

(cont'd)

Installation (cont'd)

22. Connect the lock-up control solenoid connector, and install the transmission ground cable.

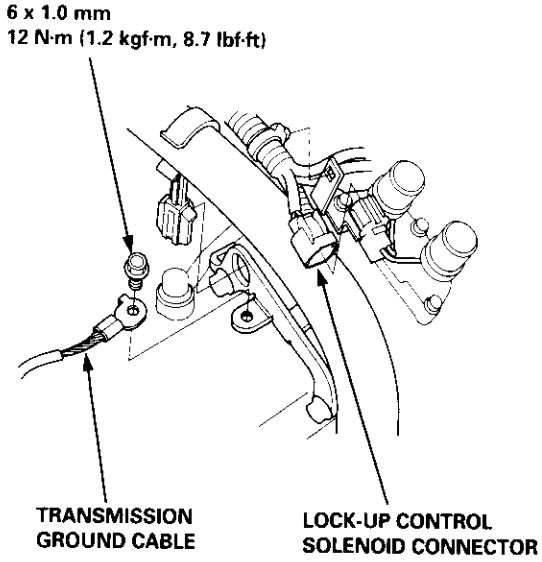

23. Connect the starter cables on the starter motor, and install the cable holder.

NOTE: When installing the starter cable terminal, make sure that the crimped side of the ring terminal is facing out (see section 23).

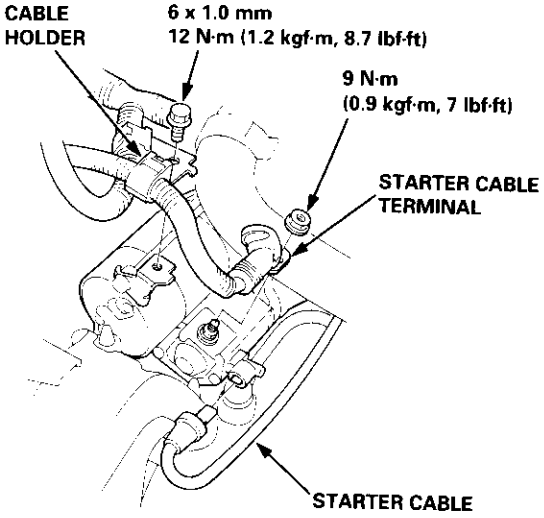

24. Install the intake air duct.

D16Y7 engine:
Install the intake air duct and the resonator.

D16Y8 engine:
Install the intake air duct and the air cleaner housing assembly.

25. Refill the transmission with ATF (see page 14-118).

26. Connect the positive (+) cable first, then the negative (–) cable to the battery.

27. Check the ignition timing (see section 23).

28. Start the engine. Set the parking brake, and shift the transmission through all gears, three times. Check the shift cable adjustment (see page 14-190).

29. Check the front wheel alignment (see section 18).

30. Let the engine reach operating temperature (the cooling fan comes on) with the transmission in N or P position, then turn it off and check the fluid level (see page 14-117).

31. Road test as described on pages 14-113 thru 14-116.

Cooler Flushing

⚠ WARNING To prevent injury to face and eyes, always wear safety glasses or a face shield when using the transmission flusher.

NOTE: This procedure should be performed before reinstalling the transmission.

1. Check the tool and hoses for wear and cracks before using. If wear or cracks are found, replace the hoses before using.

2. Using the measuring cup, fill the tank with 21 ounces (approximately 2/3 full) of biodegradable flushing fluid (J35944 – 20). Do not substitute with any other fluid. Follow the handling procedure on the fluid container.

3. Secure the flusher filler cap, and pressurize the tank with compressed air to between 550 – 829 kpa (5.6 – 8.45 kgf/cm², 80 – 120psi).

   NOTE: The air line should be equipped with a water trap to ensure a dry air system.

4. Hang the tool under the vehicle.

5. Attach the tank's discharge hose to the return line of the transmission cooler using a clamp.

6. Connect the drain hose to the inlet line on the transmission cooler using a clamp.

   IMPORTANT:
   Securely clamp the opposite end of the drain hose to a bucket or floor drain.

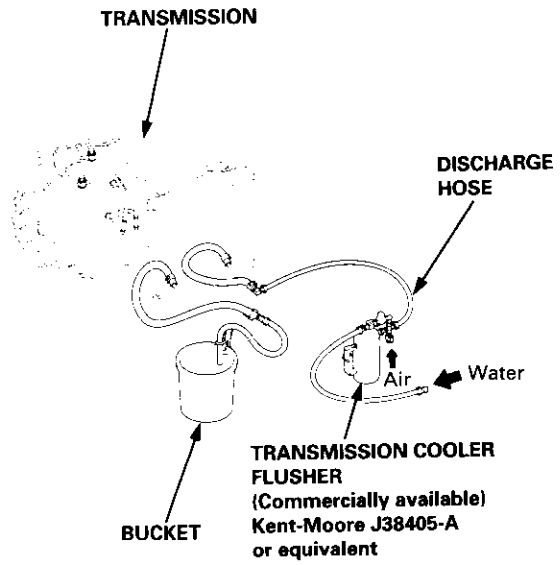

7. With the water and air valves off, attach the water and air supplies to the flusher. (Hot water if available.)

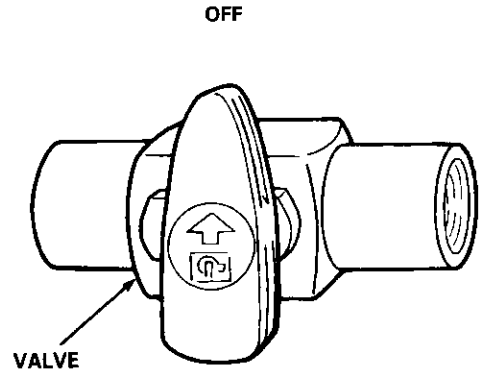

8. Turn on the flusher water valve so water will flow through the cooler for 10 seconds.

   NOTE: If water does not flow through the cooler, it is completely plugged, cannot be flushed, and must be replaced.

9. Depress the trigger to mix the flushing fluid into the water flow. Use the wire clip to hold the trigger down.

10. While flushing with the water and flushing fluid for two minutes, turn the air valve on for five seconds every 15 – 20 seconds to create a surging action.
    AIR PRESSURE: MAX 845 kpa (8.45 kgf/cm², 120 psi)

11. Turn the water valve off. Release the trigger, then reverse the hoses to the cooler so you can flush in the opposite direction. Repeat steps 8 through 10.

12. Release the trigger, and rinse the cooler with water only for one minute.

13. Turn the water valve off, and turn off the water supply.

14. Turn the air valve on to dry the system out with air for two full minutes or until no moisture is visible leaving the drain hose.

    CAUTION: Residual moisture in the cooler or pipes can damage the transmission.

15. Remove the flusher from the cooler line. Attach the drain hose to a container.

16. Install the transmission, and leave the drain hose attached to the cooler line.

(cont'd)

Cooler Flushing (cont'd)

17. Make sure the transmission is in the [P] position. Fill the transmission with ATF, and run the engine for 30 seconds or until approximately 0.95 ℓ (1.0 US qt., 0.8 Imp qt.) is discharged.

18. Remove the drain hose, and reconnect the cooler return hose to the transmission (see page 14-192).

19. Refill the transmission with ATF to the proper level (see page 14-118).

TOOL MAINTENANCE

1. Empty and rinse after each use. Fill the can with water and pressurize the can. Flush the discharge line to ensure that the unit is clean.

2. If discharge liquid does not foam, the orifice may be blocked.

3. To clean, disconnect the plumbing from the tank at the large coupling nut.

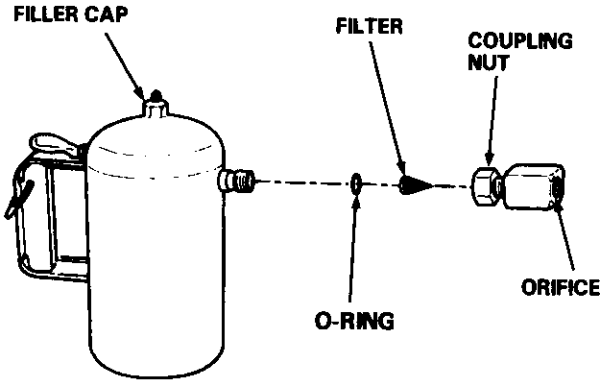

4. Remove the in-line filter from the discharge side and clean if necessary.

5. The fluid orifice is located behind the filter. Clean it with the pick stored in the bottom of the tank handle, or blow it clean with air. Securely reassemble all parts.

Removal/Installation

WARNING Make sure lifts are placed properly (see section 1).

1. Remove the front console (see section 20).
2. Shift to [N] position, then remove the lock pin from the adjuster.

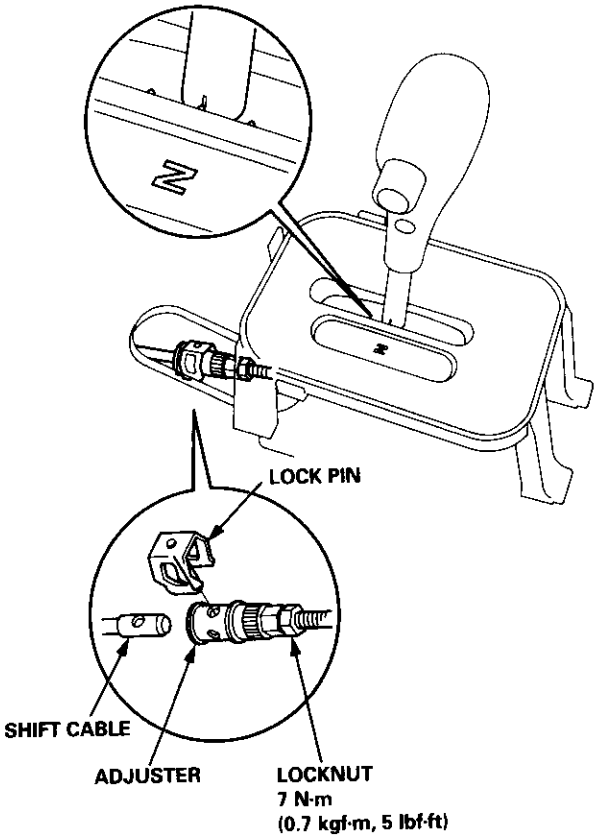

3. Remove the shift cable bracket.

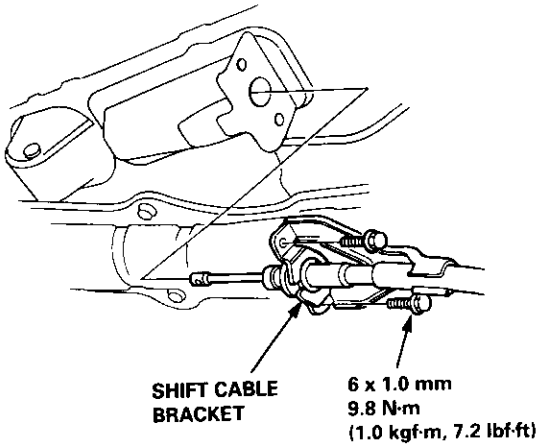

4. Remove the shift cable holder.
5. Remove the shift cable cover.
6. Remove the control lever from the control shaft, then remove the shift cable. Take care not to bend the cable when removing/installing it.

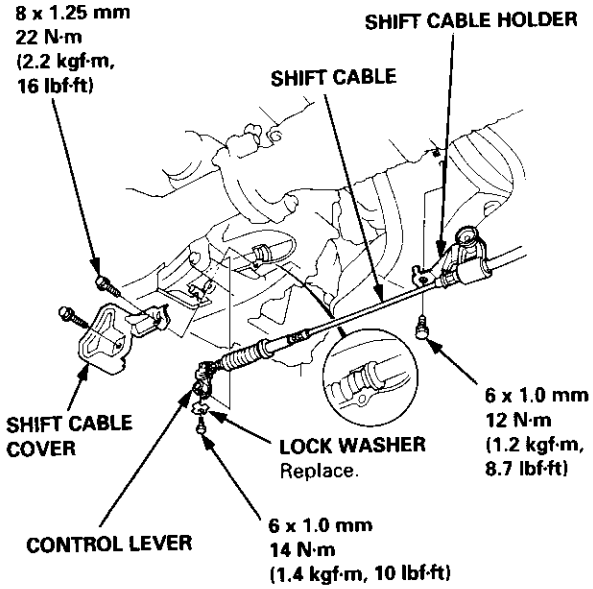

7. Install the shift cable in the reverse order of removal.
8. Check the cable adjustment on reassembly (see page 14-190).

Adjustment

⚠WARNING Make sure lifts are placed properly (see section 1).

1. Remove the front console (see section 20).
2. Shift to [N] position, then remove the lock pin from the adjuster.

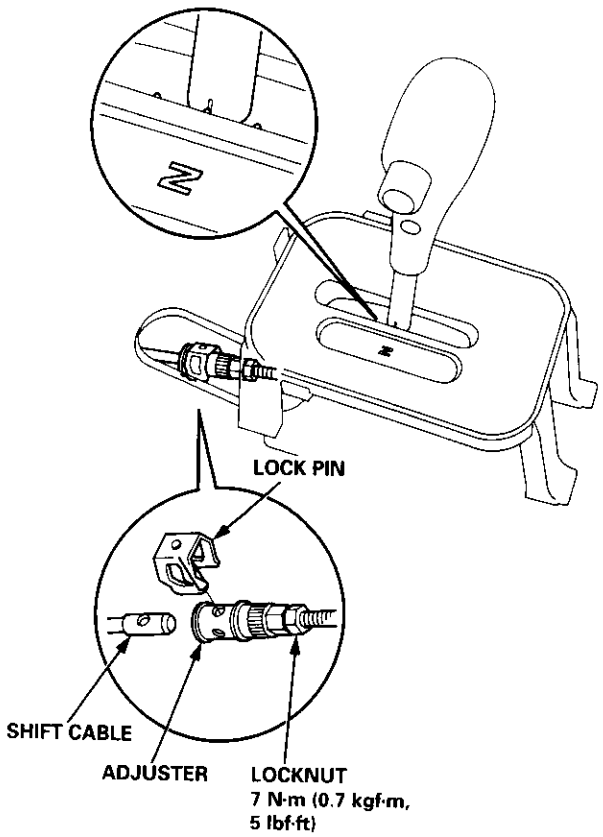

3. Check that the hole in the adjuster is perfectly aligned with the hole in the shift cable. There are two holes in the adjuster. They are positioned 90° apart to allow cable adjustment in 1/4 turn increments.

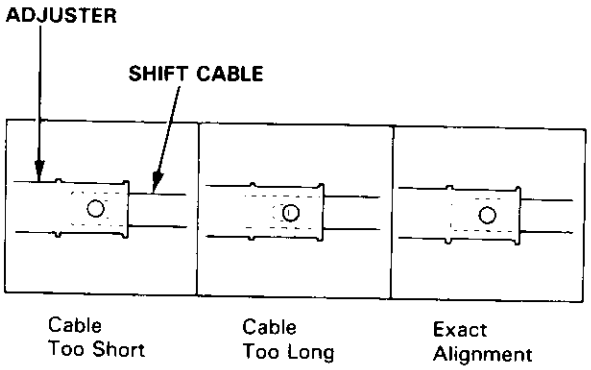

4. If the hole is not perfectly aligned, loosen the locknut on the adjuster and adjust as required.
5. Tighten the locknut to 7 N·m (0.7 kgf·m, 5 lbf·ft).
6. Install the lock pin on the adjuster. If you feel the lock pin binding as you reinstall it, the cable is still out of adjustment and must be readjusted.
7. Make sure the lock pin is seated in the adjuster securely.
8. Move the shift lever to each gear, and verify that the shift position indicator follows the automatic transaxle gear position switch.
9. Start the engine, and check the shift lever in all gears. If any gear does not work properly, refer to troubleshooting (see page 14-109 thru 14-112).
10. Insert the ignition key into the key cylinder on the A/T gear position indicator panel, and verify that the shift lock lever is released.

Shift Lever

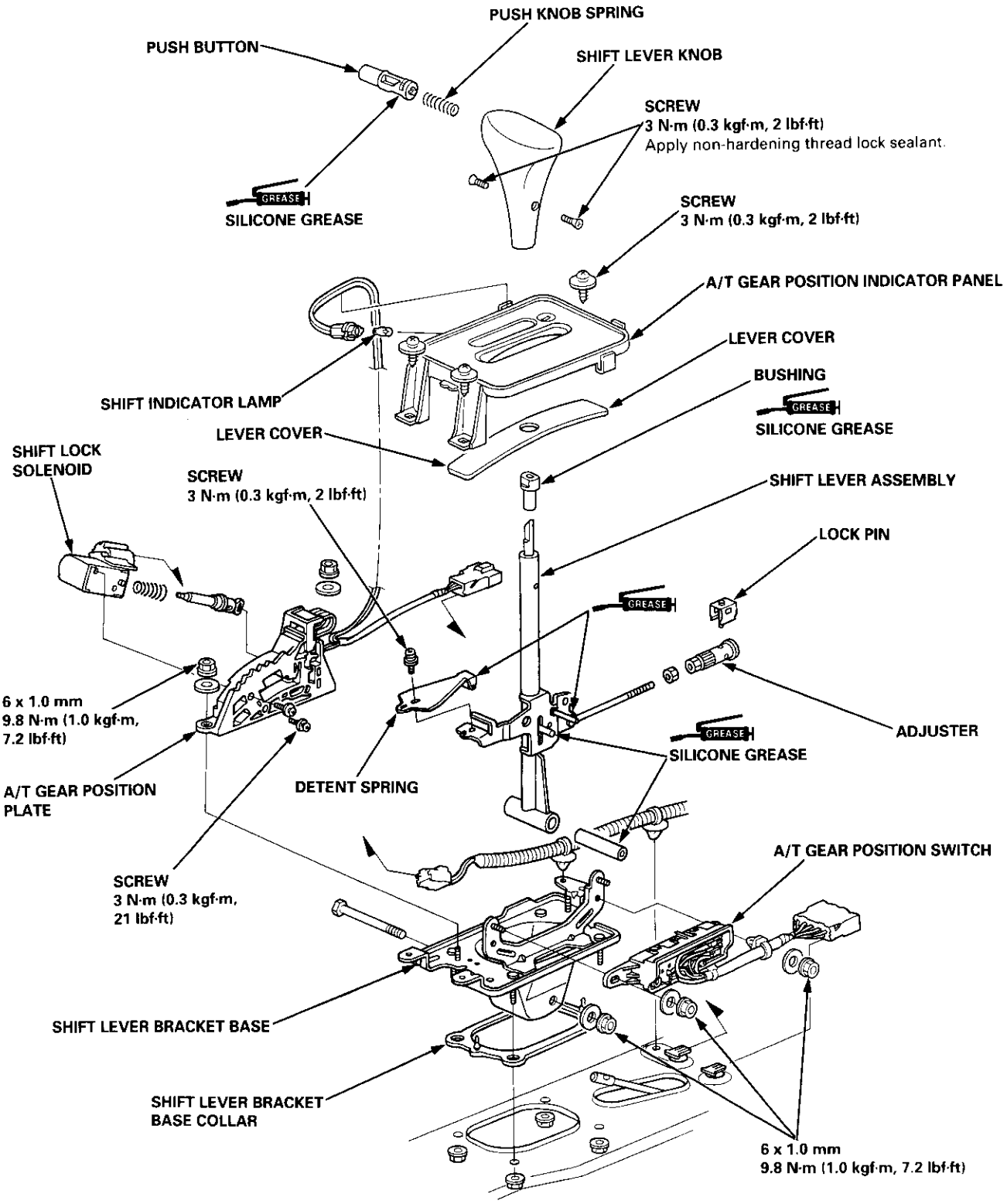
PUSH KNOB SPRING
PUSH BUTTON
SHIFT LEVER KNOB
SCREW
3 N·m (0.3 kgf·m, 2 lbf·ft)
Apply non-hardening thread lock sealant.
GREASE
SILICONE GREASE
SCREW
3 N·m (0.3 kgf·m, 2 lbf·ft)
A/T GEAR POSITION INDICATOR PANEL
LEVER COVER
BUSHING
GREASE
SILICONE GREASE
SHIFT INDICATOR LAMP
LEVER COVER
SHIFT LOCK SOLENOID
SCREW
3 N·m (0.3 kgf·m, 2 lbf·ft)
SHIFT LEVER ASSEMBLY
LOCK PIN
GREASE
6 x 1.0 mm
9.8 N·m (1.0 kgf·m, 7.2 lbf·ft)
ADJUSTER
GREASE
SILICONE GREASE
A/T GEAR POSITION PLATE
DETENT SPRING
A/T GEAR POSITION SWITCH
SCREW
3 N·m (0.3 kgf·m, 21 lbf·ft)
SHIFT LEVER BRACKET BASE
SHIFT LEVER BRACKET BASE COLLAR
6 x 1.0 mm
9.8 N·m (1.0 kgf·m, 7.2 lbf·ft)

Shift Indicator Panel

Adjustment

1. Check that the index mark on the indicator aligns with the [N] mark on the shift indicator panel when the transmission is in NEUTRAL.

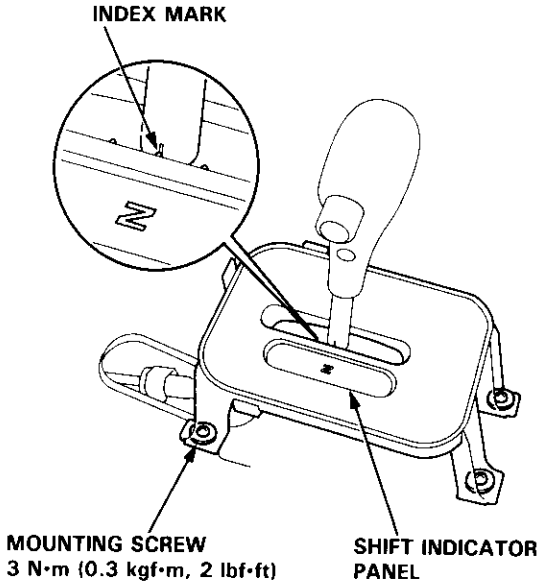

2. If not aligned, remove the front console (see section 20).

3. Remove the shift indicator panel mounting screws and adjust by moving the panel.

   NOTE: Whenever the shift indicator panel is removed, reinstall the panel as described above.

ATF Cooler Hoses

Connection

1. Connect the ATF cooler hoses to the ATF cooler lines and ATF cooler, and secure them with the clips as shown.

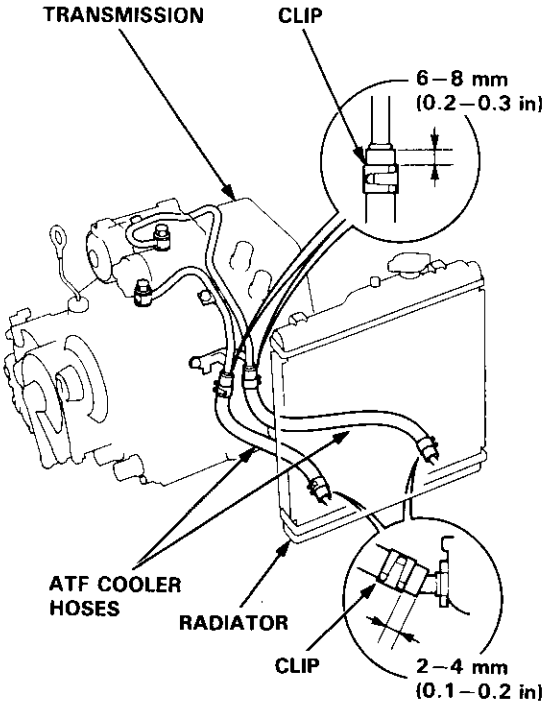

Continuously Variable Transmission (CVT)

Special Tools 14-194
Description 14-195
Clutches/Reverse Brake/Planetary Gear/Pulleys 14-198
Power Flow 14-200
Electronic Control System ('96 – 98 Models) 14-203
Electronic Control System ('99 – 00 Models) 14-205
Hydraulic Control 14-208
Hydraulic Flow 14-212
Park Mechanism 14-222
Electrical System
Component Locations
'96 – 98 Models 14-224
'99 – 00 Models 14-225
TCM Circuit Diagram ('96 – 98 Models) 14-226
TCM Terminal Voltage/ Measuring Conditions ('96 – 98 Models) 14-228
PCM Circuit Diagram (A/T Control System: '99 – 00 Models) 14-230
PCM Terminal Voltage/Measuring Conditions ('99 – 00 Models) A/T Control System 14-232
Troubleshooting Procedures 14-234
Symptom-to-Component Chart
Electrical System — '96 – 98 Models 14-238
Electrical System — '99 – 00 Models 14-240
Electrical Troubleshooting
Troubleshooting Flowcharts ('96 – 98 Models) 14-242
Troubleshooting Flowchart ('99 – 00 Models) 14-265
Linear Solenoids/Inhibitor Solenoid Test 14-291
Drive Pulley/Driven Pulley/Secondary Gear Shaft Speed Sensors Replacement 14-292
Start Clutch Control
Start Clutch Calibration Procedure 14-293
Hydraulic System
Symptom-to-Component Chart
Hydraulic System 14-294
Road Test 14-296
Stall Speed Test 14-298
Fluid Level Checking/Changing 14-299
Pressure Testing 14-300
Lower Valve Body Assembly Replacement 14-302
ATF Filter Removal/Installation 14-303
Transmission
Transmission Removal 14-304
Illustrated Index
Transmission/Lower Valve Body Assembly 14-308
Transmission Housing/Flywheel Housing ... 14-310
End Cover/Intermediate Housing 14-312
Transmission Housing/ Lower Valve Body Assembly Removal 14-314
Transmission Housing/Flywheel Housing Removal 14-316
End Cover/Intermediate Housing Removal 14-318
Manual Valve Body Disassembly/Inspection/Reassembly 14-320
Forward Clutch
Illustrated Index 14-321
Disassembly 14-322
Reassembly 14-324
Secondary Gear Shaft 25 x 35 mm Thrust Shim Selection 14-328
Differential
Illustrated Index 14-329
Backlash Inspection 14-329
Bearing Replacement 14-330
Differential Carrier Replacement 14-330
Oil Seal Removal 14-331
Oil Seal Installation/Side Clearance 14-331
Flywheel Housing Input Shaft Oil Seal Replacement 14-333
Transmission Housing Bearings
Driven Pulley Shaft Bearing Replacement 14-334
Secondary Gear Shaft Bearing Replacement 14-335
Flywheel Housing Bearing
Secondary Gear Shaft Bearing Replacement 14-335
Ring Gear Bearing Replacement 14-336
Control Shaft Assembly Removal/Installation 14-336
Transmission Reassembly 14-338
Flywheel/Drive Plate 14-347
Transmission
Installation 14-348
Cooler Flushing 14-352
Shift Cable
Removal/Installation 14-354
Adjustment 14-355
Shift Lever 14-356
Shift Indicator Panel Adjustment 14-357
ATF Cooler/Hoses Installation 14-357

Special Tools

Ref. No.	Tool Number	Description	Qty	Page Reference
①	07GAE – PG40200	Clutch Spring Compressor Bolt Assembly	1	14-322, 325
②	07JAD – PH80200	Pilot, 26 x 30 mm	1	14-333
③*	07LAE – PX40100	Clutch Spring Compressor Attachment	2	14-322, 325
④	07PAZ – 0010100	SCS Service Connector	1	14-235, 293
⑤	07SAZ – 001000A	Backprobe Set	2	14-236, 296
⑥	07TAE – P4V0110	Reverse Brake Spring Compressor	1	14-319, 339
⑦	07TAE – P4V0120	Start Clutch Remover	1	14-317
⑧	07TAE – P4V0130	Start Clutch Installer	1	14-342, 343
⑨	07MAJ – PY4011A	A/T Oil Pressure Hose, 2210 mm	4	14-300
⑩	07MAJ – PY40120	A/T Oil Pressure Hose, Adapter	4	14-300
⑪	07406 – 0020400	A/T Oil Pressure Gauge Set w/panel	1	14-300
⑫	07406 – 0070300	A/T Low Pressure Gauge w/panel	1	14-300
⑬**	07736 – A01000A	Adjustable Bearing Puller, 25 – 40 mm	1	14-335
⑭	07746 – 0010100	Attachment, 32 x 35 mm	1	14-333, 336
⑮	07746 – 0010500	Attachment, 62 x 68 mm	1	14-335
⑯	07746 – 0010600	Attachment, 72 x 75 mm	1	14-334, 335
⑰	07746 – 0030100	Driver 40 mm I.D.	1	14-330, 331
⑱	07749 – 0010000	Driver	1	14-333, 334, 335, 336
⑲	07947 – 6110501	Driver Attachment, 68 mm	1	14-333
⑳	07947 – 6340201	Driver Attachment, 58 x 72 mm	1	14-333

*07HAE – PL50101 can be used as a substitute.
**Must be used with commercially-available 3/8" – 16 slide hammer.

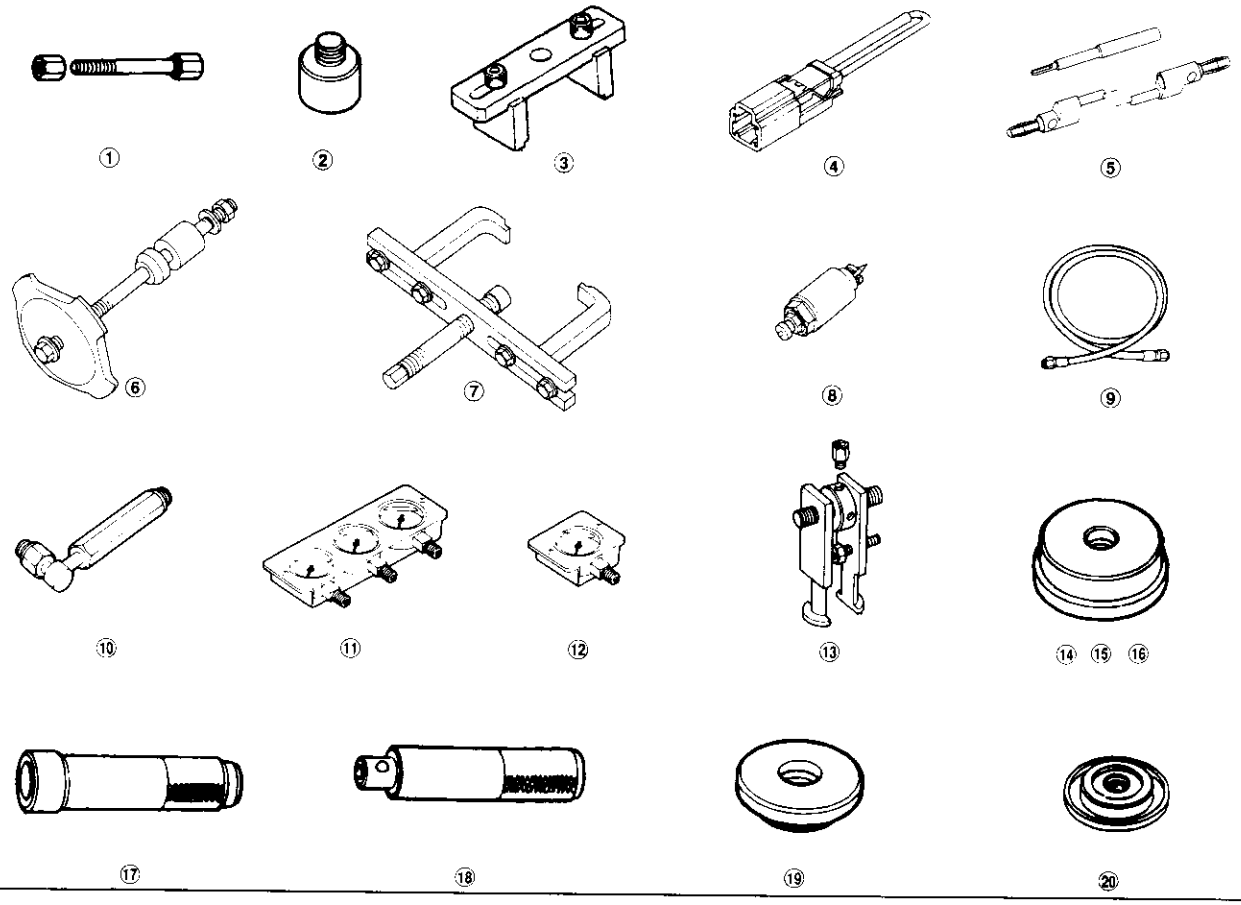

Description

The Continuously Variable Transmission (CVT) is an electronically controlled automatic transmission with drive and driven pulleys, and a steel belt. The CVT provides non-stage speeds forward and one reverse. The entire unit is positioned in line with the engine.

Transmission
Around the outside of the flywheel is a ring gear which meshes with the starter pinion when the engine is being started. The transmission has four parallel shafts: the input shaft, the drive pulley shaft, the driven pulley shaft, and the secondary gear shaft. The input shaft is in line with the engine crankshaft. The drive pulley shaft and the driven pulley shaft consist of movable and fixed face pulleys. Both pulleys are linked by the steel belt.

The input shaft includes the sun gear. The drive pulley shaft includes the forward clutch which mounts the carrier assembly on the forward clutch drum. The carrier assembly includes the pinion gears which mesh with the sun gear and the ring gear. The ring gear has a hub-mounted reverse brake disc.

The driven pulley shaft includes the start clutch and the secondary drive gear which is integral with the park gear. The secondary gear shaft is positioned between the secondary drive gear and the final driven gear. The secondary gear shaft includes the secondary driven gear which serves to change the rotation direction, because the drive pulley shaft and the driven pulley shaft rotate the same direction. When certain combinations of planetary gears in the transmission are engaged by the clutches and the reverse brake, power is transmitted from the drive pulley shaft to the driven pulley shaft to provide [L], [S], [D], and [R].

Electronic Control
'96 – 98 Models:
The electronic control system consists of the Transmission Control Module (TCM), sensors, three linear solenoids, and a inhibitor solenoid. Shifting is electronically controlled under all conditions.
The TCM is located below the dashboard, behind the kick panel on the driver's side.
'99 – 00 Models:
The electronic control system consists of a Powertrain Control Module (PCM), sensors, three linear solenoids and an inhibitor solenoid. Shifting is electronically controlled under all conditions. A Grade Logic Control System to control shifting in [D] position while the vehicle is ascending or descending a slope.
The PCM is located below the dashboard, under the kick panel on the passenger's side.

Hydraulic Control
The lower valve body assembly includes the main valve body, the Pressure Low (PL) regulator valve body, the shift valve body, the start clutch control valve body, and the secondary valve body. They are positioned on the lower part of the transmission housing.
The main valve body contains the Pressure High (PH) control valve, the lubrication valve, and the pitot regulator valve.
The secondary valve body contains the PH regulator valve, the clutch reducing valve, the start clutch valve accumulator, and the shift inhibitor valve. The PL regulator valve body contains the PL regulator valve and the PH-PL control valve which is joined to the PH-PL control linear solenoid. The inhibitor solenoid valve is bolted on the PL regulator valve body.

The shift valve body contains the shift valve and the shift control valve, which is joined to the shift control linear solenoid. The start clutch control valve body contains the start clutch control valve, which is joined to the start clutch control linear solenoid. The linear solenoids and the inhibitor solenoid are controlled by the TCM or PCM. The manual valve body which contains the manual valve and the reverse inhibitor valve, is bolted on the intermediate housing.

The ATF pump assembly is located on the transmission housing, and is linked with the input shaft by the sprockets and the sprocket chain. The pulleys and the clutch receive fluid from their respective feed pipes, and the reverse brake receives fluid from internal hydraulic circuit.

Shift Control Mechanism
Input from various sensors located throughout the vehicle determines which linear solenoid the TCM or PCM will activate. Activating the shift control linear solenoid changes the shift control valve pressure, causing the shift valve to move. This pressurizes the drive pulley pressure to the drive pulley and the driven pulley pressure to the driven pulley and changes their effective pulley ratio. Activating the start clutch control linear solenoid moves the start clutch control valve. The start clutch control valve uncovers the port, providing pressure to the start clutch to engage it. (cont'd)

(cont'd)

Gear Selection

The shift lever has six positions: P PARK, R REVERSE, N NEUTRAL, D DRIVE, S SECOND, and L LOW.

Position	Description
P PARK	Front wheels locked; park pawl engaged with the park gear on the driven pulley shaft. The start clutch and the forward clutch released.
R REVERSE	Reverse; reverse brake engaged.
N NEUTRAL	Neutral; the start clutch and the forward clutch released.
D DRIVE	General driving; the transmission automatically adjusts to keep the engine at the best speed for driving conditions.
S SECOND	For rapid acceleration at highway speeds; the transmission shifts into a lower range of ratios for better acceleration and increased engine braking.
L LOW	For engine braking and power for climbing; the transmission shifts into the lowest range of the ratios.

Starting is possible only in P and N positions through the use of a slide-type, neutral-safety switch.

Automatic Transaxle (A/T) Gear Position Indicator
The A/T gear position indicator in the instrument panel shows which gear has been selected without having to look down at the console.

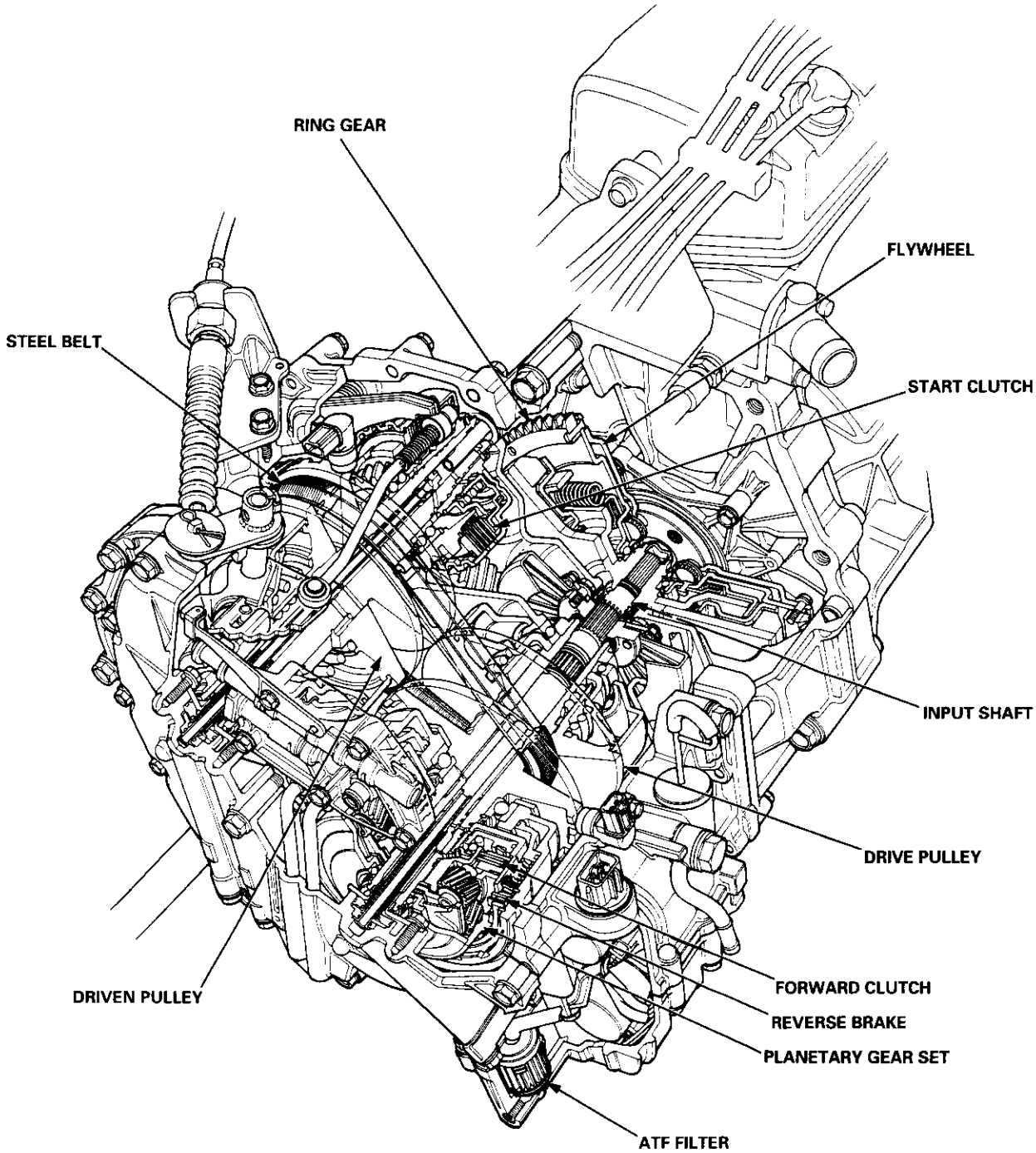
RING GEAR
FLYWHEEL
STEEL BELT
START CLUTCH
INPUT SHAFT
DRIVE PULLEY
DRIVEN PULLEY
FORWARD CLUTCH
REVERSE BRAKE
PLANETARY GEAR SET
ATF FILTER

Clutches/Reverse Brake/Planetary Gear/Pulleys

Clutches/Reverse Brake

The CVT uses the hydraulically-actuated clutches and brake to engage or disengage the transmission gears. When hydraulic pressure is introduced into the clutch drum and the reverse brake piston cavity, the clutch piston and the reverse brake piston move. This presses the friction discs and the steel plates together, locking them so they don't slip. Power is then transmitted through the engaged clutch pack to its hub-mounted gear, and through engaged ring gear to pinion gears.

Likewise, when the hydraulic pressure is bled from the clutch pack and the reverse brake piston cavity, the piston releases the friction discs and the steel plates, and they are free to slide past each. This allows the gear to spin independently on its shaft, transmitting no power.

Start Clutch

The start clutch, which is located at the end of the driven pulley shaft, engages/disengages the secondary drive gear.

The start clutch is supplied hydraulic pressure by its ATF feed pipes within the driven pulley shaft.

Forward Clutch

The forward clutch, which is located at the end of the drive pulley shaft, engages/disengages the sun gear.

The forward clutch is supplied hydraulic pressure by its ATF feed pipe within the drive pulley shaft.

Reverse Brake

The reverse brake, which is located inside the intermediate housing around the ring gear, locks the ring gear in [R] position. The reverse brake discs are mounted to the ring gear and the reverse brake plates are mounted to the intermediate housing. The reverse brake is supplied hydraulic pressure by a circuit connected to the internal hydraulic circuit.

Planetary Gear

The planetary gear consists of a sun gear, a carrier assembly, and a ring gear. The sun gear is connected to the input shaft with splines. The pinion gears are mounted to the carrier which is mounted to the forward clutch drum. The sun gear inputs the engine power via the input shaft to the planetary gear, and the carrier outputs the engine power. The ring gear is only used for switching the rotation direction of the pulley shafts.

In [D], [S], and [L] positions (forward range), the pinion gears don't rotate and revolve with the sun gear, so the carrier rotates. In [R] position (reverse range), the reverse brake locks the ring gear and the sun gear drives the pinion gears to rotate. The pinion gears rotate and revolve in the opposite direction from the rotation direction of the sun gear, and the carrier rotates with pinion gear revolution.

Pulleys

Each pulley consists of a movable face and a fixed face, and the effective pulley ratio changes with engine speed. The drive pulley and the driven pulley are linked by the steel belt.

To achieve a low pulley ratio, high hydraulic pressure works on the movable face of the driven pulley and reduces the effective diameter of the drive pulley, and a lower hydraulic pressure works on the movable face of the drive pulley to eliminate the steel belt slippage. To achieve a high pulley ratio, high hydraulic pressure works on the movable face of the drive pulley and reduces the effective diameter of the driven pulley, and a lower hydraulic pressure works on the movable face of the driven pulley to eliminate the steel belt slippage.

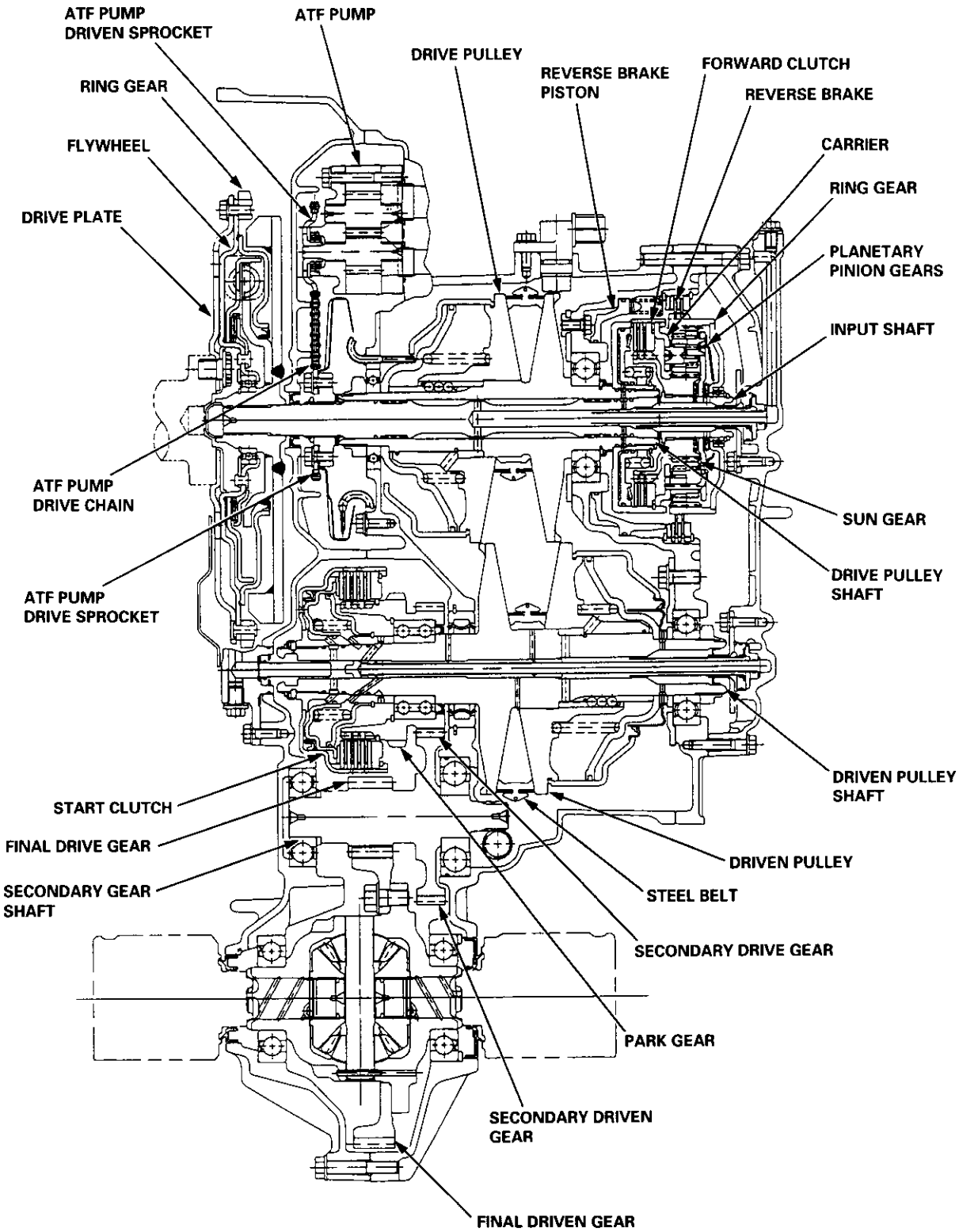
ATF PUMP DRIVEN SPROCKET
ATF PUMP
DRIVE PULLEY
REVERSE BRAKE PISTON
FORWARD CLUTCH
REVERSE BRAKE
RING GEAR
FLYWHEEL
CARRIER
RING GEAR
DRIVE PLATE
PLANETARY PINION GEARS
INPUT SHAFT
ATF PUMP DRIVE CHAIN
SUN GEAR
DRIVE PULLEY SHAFT
ATF PUMP DRIVE SPROCKET
DRIVEN PULLEY SHAFT
START CLUTCH
FINAL DRIVE GEAR
DRIVEN PULLEY
SECONDARY GEAR SHAFT
STEEL BELT
SECONDARY DRIVE GEAR
PARK GEAR
SECONDARY DRIVEN GEAR
FINAL DRIVEN GEAR

Power Flow

N Position

- Start Clutch: released
- Forward Clutch: released
- Reverse Brake: released

Hydraulic pressure is not applied to the start clutch, forward clutch, and the reverse brake. Power is not transmitted to the secondary drive gear.

P Position

- Start Clutch: released
- Forward Clutch: released
- Reverse Brake: released

Hydraulic pressure is not applied to the start clutch, forward clutch, and the reverse brake. Power is not transmitted to the secondary drive gear. The secondary drive gear is locked by the park pawl interlocking the park gear.

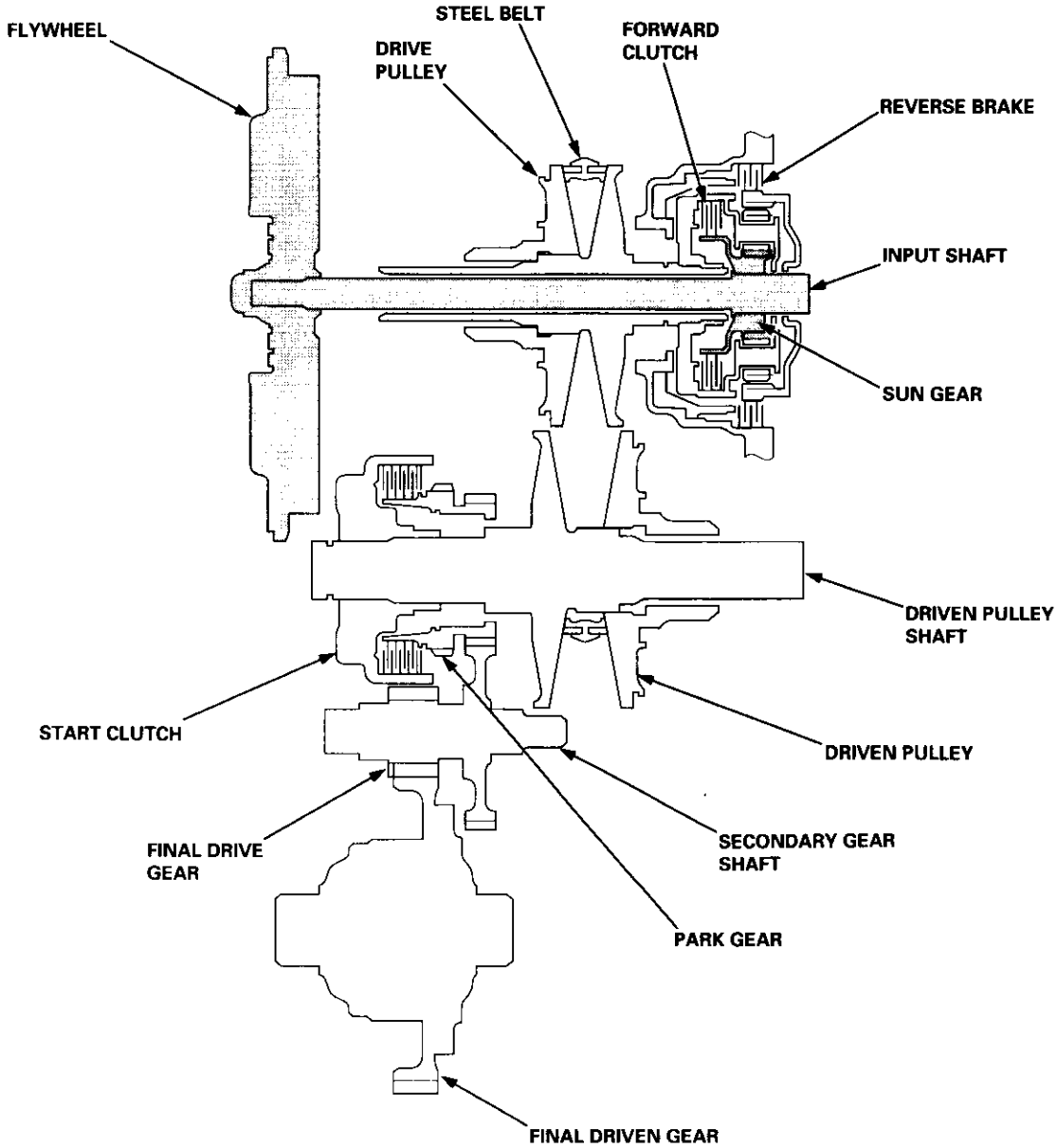

D, S, and L Positions (Forward Range)

- Start Clutch: engaged
- Forward Clutch: engaged
- Reverse Brake: released

1. The hydraulic pressure is applied to the forward clutch and the start clutch, and the sun gear drives the forward clutch.

2. The forward clutch drives the drive pulley shaft, which drives the driven pulley shaft linked by the steel belt.

3. The driven pulley shaft drives the secondary drive gear, via the start clutch.

4. Power is transmitted to the secondary driven gear, which drives the final driven gear.

NOTE: The working hydraulic pressure on the movable face of each shaft depends on the throttle opening position.

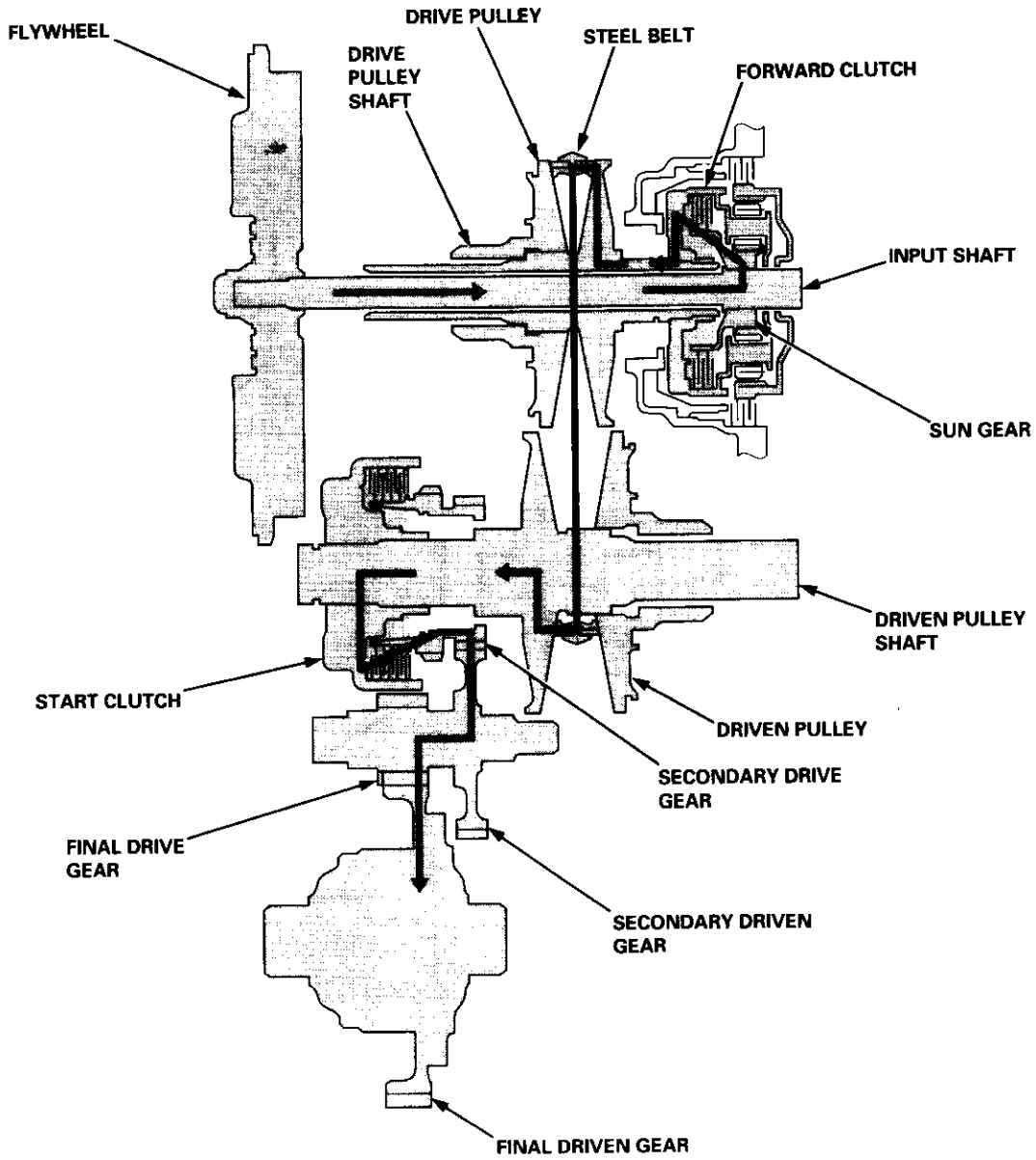

(cont'd)

Power Flow (cont'd)

R Position

- Start Clutch: engaged
- Forward Clutch: released
- Reverse Brake: engaged

1. The hydraulic pressure is applied to the reverse brake and the start clutch. The sun gear drives the pinion gears, and the pinion gears revolve around the sun gear. The carrier assembly rotates in the opposite direction from the rotation direction of the sun gear.

2. The carrier assembly drives the drive pulley shaft via the forward clutch drum, and the drive pulley shaft drives the driven pulley shaft linked by the steel belt.

3. The driven pulley shaft drives the secondary drive gear via the start clutch.

4. Power is transmitted to the secondary driven gear, which drives the final driven gear.

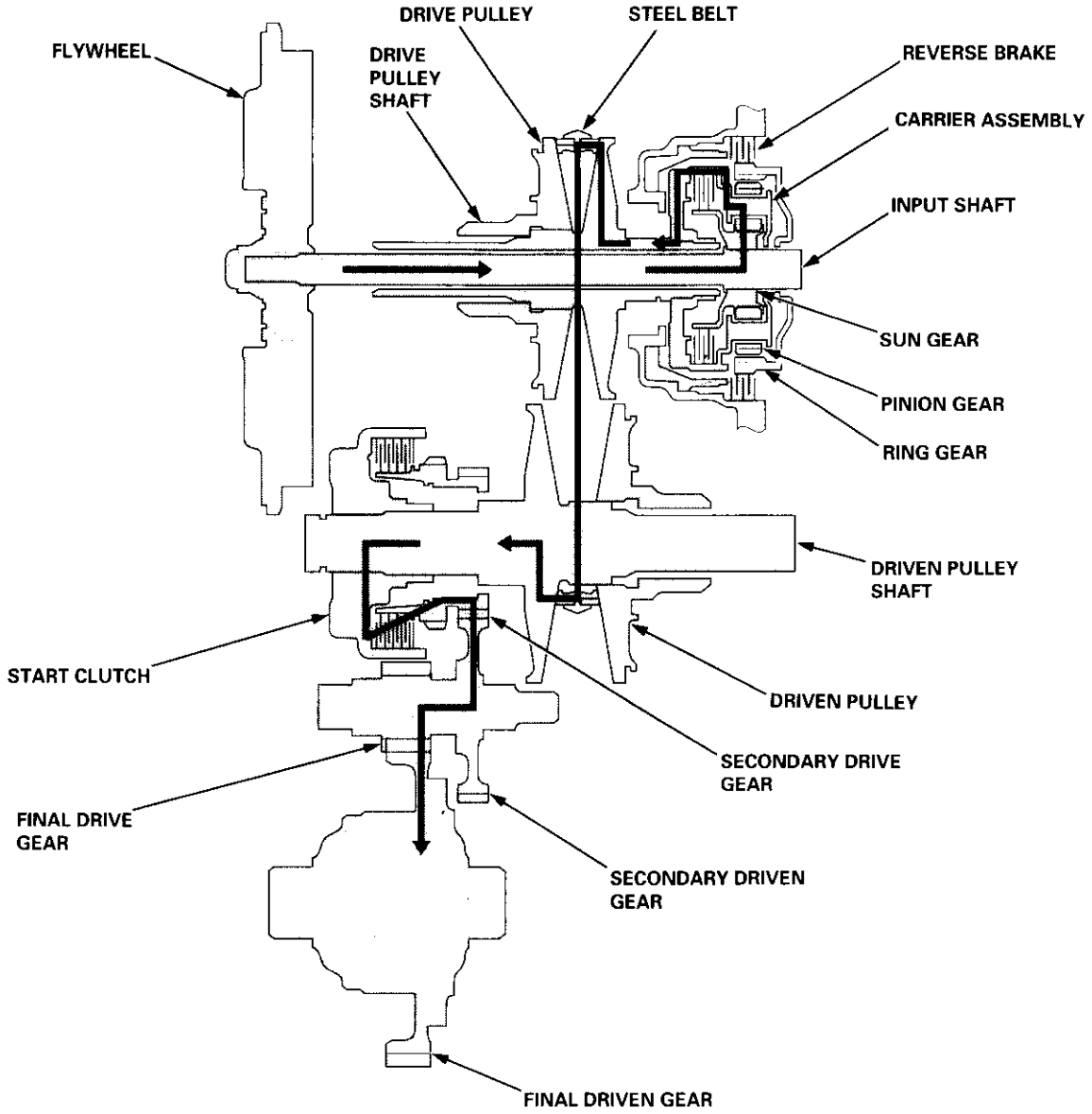

Electronic Control System ('96 – 98 Models)

The electronic control system consists of the Transmission Control Module (TCM), sensors, three linear solenoids, and an inhibitor solenoid. Shifting is electronically controlled under all conditions.
The TCM is located below the dashboard, behind the kick panel on the driver's side.

The TCM controls the transmission to reduce engine speed and retain the engine's cooling efficiency when the vehicle is driven with full throttle acceleration.
If the vehicle is continuously driven at full throttle acceleration, the TCM regulates the pulley hydraulic pressure to increase the pulley ratio, which, as the result, reduces the engine speed and retains the designed cooling efficiency. After the vehicle has been driven at a lower engine speed for a while, the TCM increases the pulley ratio to the original ratio.
For smooth starting in the [R] position, the TCM sends a signal to the ECM to cut off the A/C clutch (if the A/C is on) and increases the engine speed to 900 rpm when the transmission is shifted to the [R] position.

The start clutch functions to make smooth starting possible. To let the start clutch function properly, the TCM regulates the start clutch hydraulic pressure based on the engine's negative pressure memorized in the [N] position.

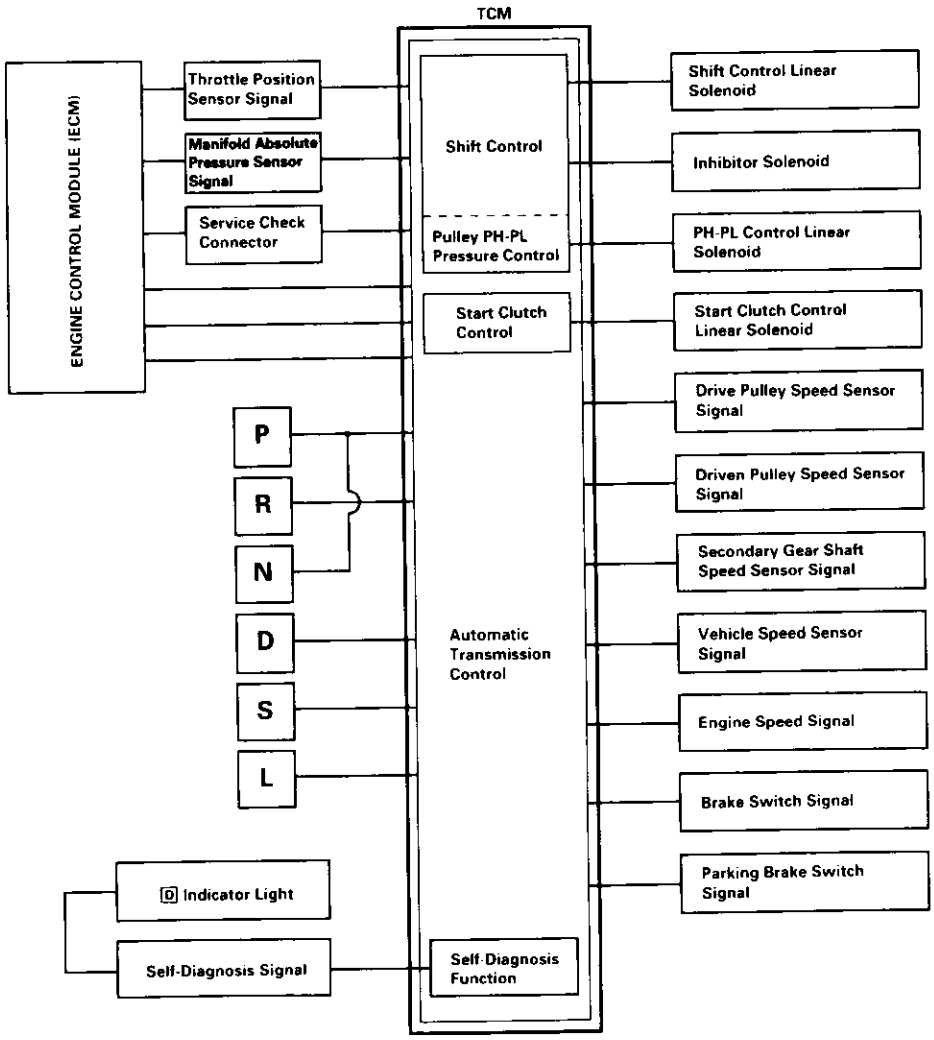

(cont'd)

Electronic Control System ('96 – 98 Models) (cont'd)

Circuit Diagram and Terminal Locations

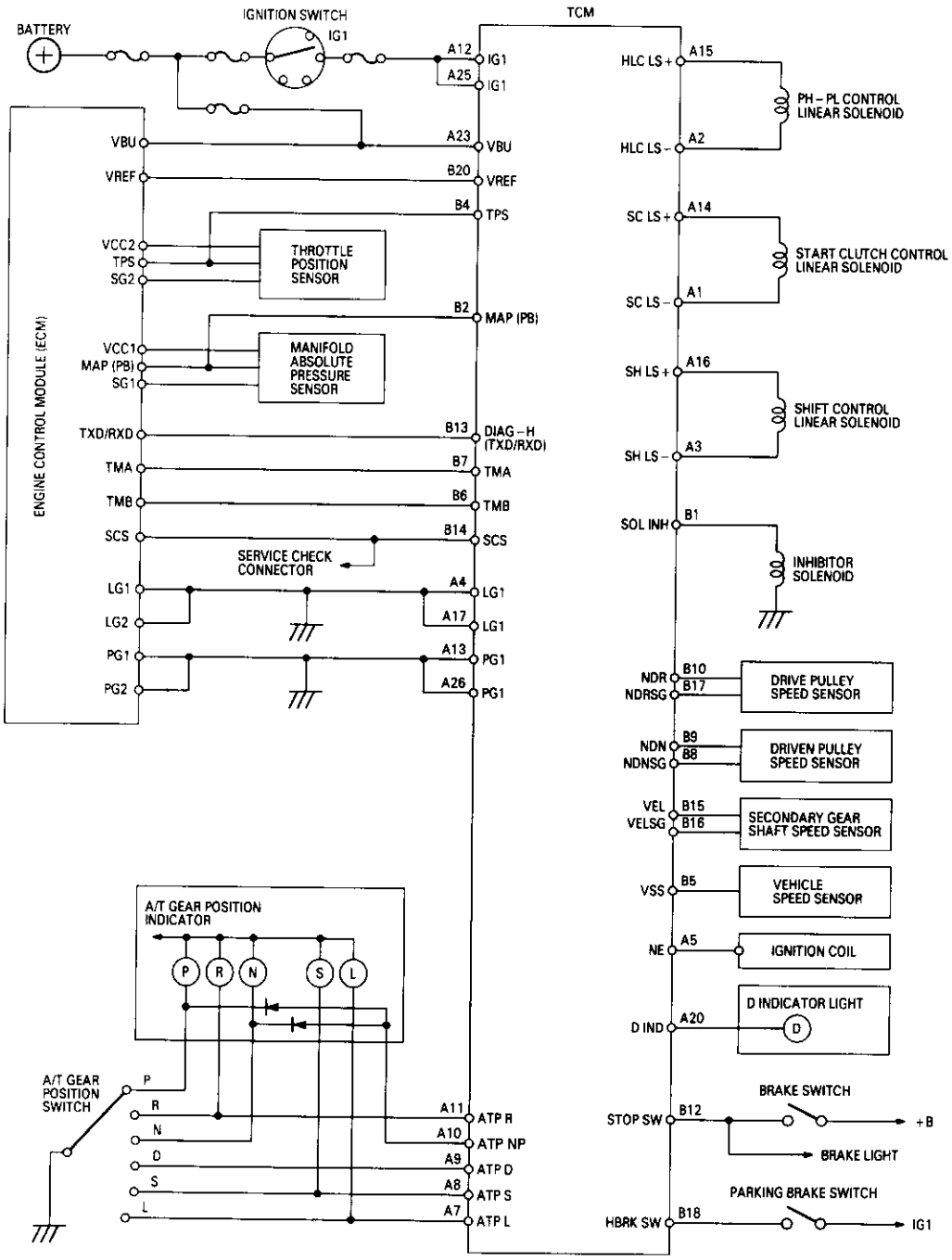

TCM Terminal Locations

1	2	3	4	5		7	8	9	10	11	12	13	1	2		4	5	6	7	8	9	10	
14	15	16	17			20			23		25	26	12	13	14	15	16	17	18		20		

TCM – A (26P) Connector

TCM – B (22P) Connector

Electronic Control System ('99 – 00 Models)

The electronic control system consists of a Powertrain Control Module (PCM), sensors, three linear solenoids and an inhibitor solenoid. Shifting is electronically controlled under all conditions. A Grade Logic Control System to control shifting in D position while the vehicle is ascending or descending a slope.
The PCM is located below the dashboard, under the kick panel on the passenger's side.

The PCM controls the transmission to reduce engine speed and retain the engine's cooling efficiency when the vehicle is driven with full throttle acceleration.
If the vehicle is continuously driven at full throttle acceleration, the PCM regulates the pulley hydraulic pressure to increase the pulley ratio which, as the result, reduces the engine speed and retains the designed cooling efficiency. After the vehicle has been driven at a lower engine speed for a while, the PCM increases the pulley ratio to the original ratio.
For smooth starting in the R position, the PCM cuts off the A/C clutch (if the A/C is on) and increases the engine speed to 900 rpm when the transmission is shifted to the R position.

The start clutch functions to make smooth starting possible. To let the start clutch function properly, the PCM regulates the start clutch hydraulic pressure based on the engine's negative pressure memorized in the N position.

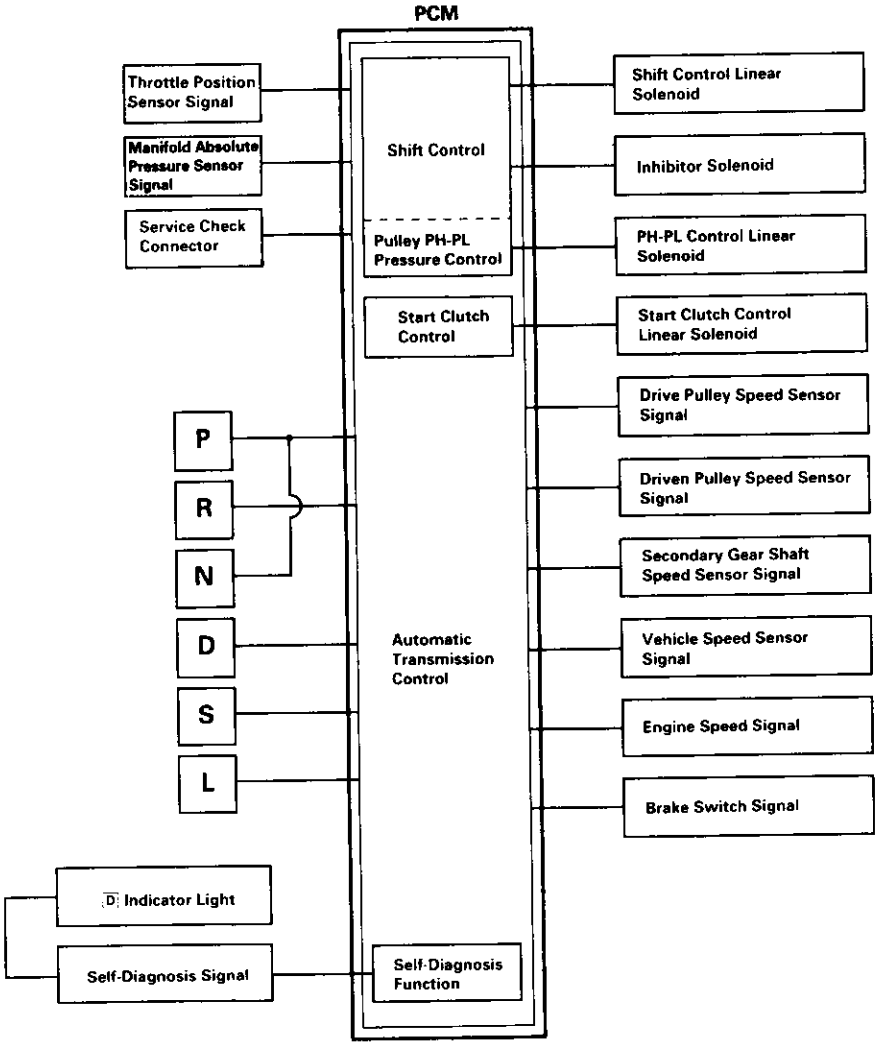

(cont'd)

Electronic Control System ('99 – 00 Models) (cont'd)

Grade Logic Control System

How it works:

The PCM compares actual driving conditions with memorized driving conditions, based on the input from the vehicle speed sensor, the throttle position sensor, the manifold absolute pressure sensor, the engine coolant temperature sensor, the brake switch signal, and the shift lever position signal, to control shifting while the vehicle is ascending or descending a slope.

Ascending Control

When the PCM determines that the vehicle is climbing a hill in [D] position, the system selects the most suitable shift schedule (pulley ratio) according to the magnitude of a gradient, so the vehicle can run smooth and have more power when needed. There are three ascending modes with different shift schedules according to the magnitude of a gradient in the PCM.

Descending Control

When the PCM determines that the vehicle is going down a hill in [D] position, the system selects the most suitable shift schedule (pulley ratio) according to the magnitude of a gradient. This, in combination with engine braking, achieves smooth driving when the vehicle is descending. There are three descending modes with different shift schedules according to the magnitude of a gradient in the PCM.

Circuit Diagram and Terminal Locations — '99 - 00 Models

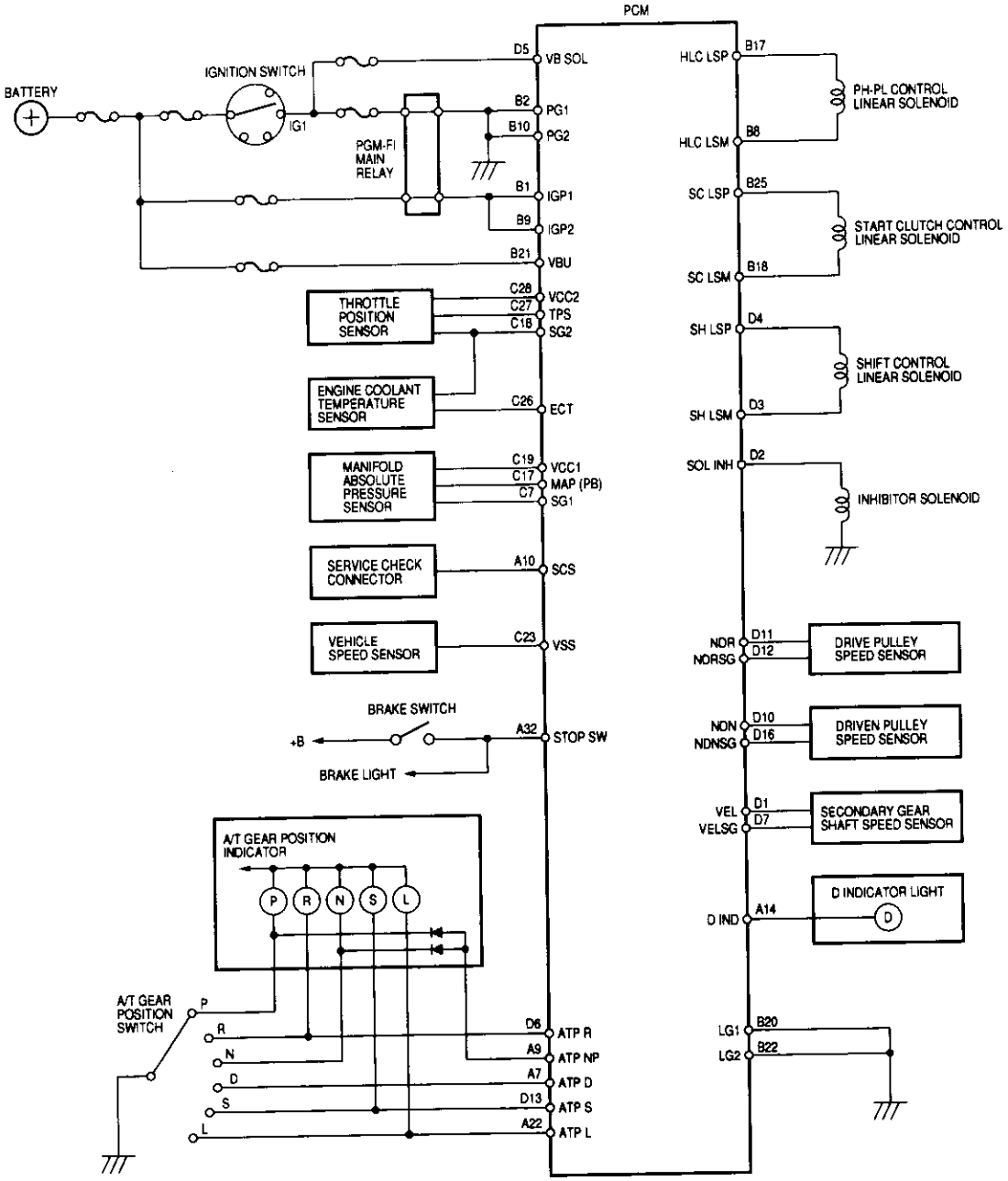

PCM Connector Terminal Locations

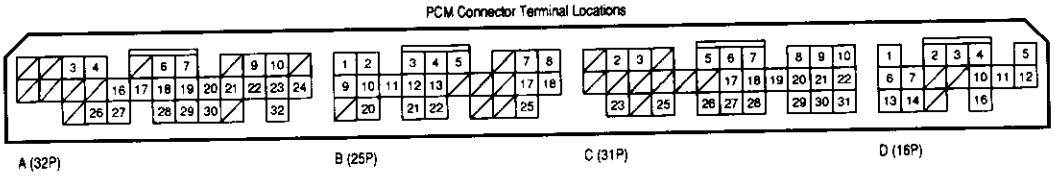

A (32P) B (25P) C (31P) D (16P)

Hydraulic Control

The hydraulic control system is controlled by the ATF pump, the valves, and the solenoids. The ATF pump is driven by the input shaft. The ATF pump and the input shaft are linked by the ATF pump drive chain and the sprockets. The inhibitor solenoid valve and the linear solenoids, which are located on their valve body, are controlled by the TCM or PCM. Fluid from the ATF pump flows through the PH regulator valve to maintain specified pressure to the drive pulley, the driven pulley, and the manual valve.
The lower valve body assembly includes the main valve body, the PL regulator valve body, the shift valve body, the start clutch control valve body, and the secondary valve body.

Main Valve Body
The main valve body contains the PH control valve, the lubrication valve, and the pitot regulator valve.

- **PH Control Valve**
  The PH control valve supplies PH control pressure (PHC) in accordance with the PH-PL control pressure (HLC), and supplies PH control pressure to the PH regulator valve, which also regulates PH pressure. At kick-down, it increases PH control pressure which increases the high (PH) pressure. This shortens the shift speed by releasing the reverse inhibitor pressure (RI) from the inhibitor solenoid valve.

- **Lubrication Valve**
  The lubrication valve controls the lubrication pressure to each shaft and maintains lubrication pressure. When the pressure is too high, the spring is compressed. This moves the lubrication valve and opens the fluid leak passage.

- **Pitot Regulator Valve**
  The pitot regulator valve controls the start clutch pressure (SC) in accordance with the engine speed, when the electronic control system is faulty.

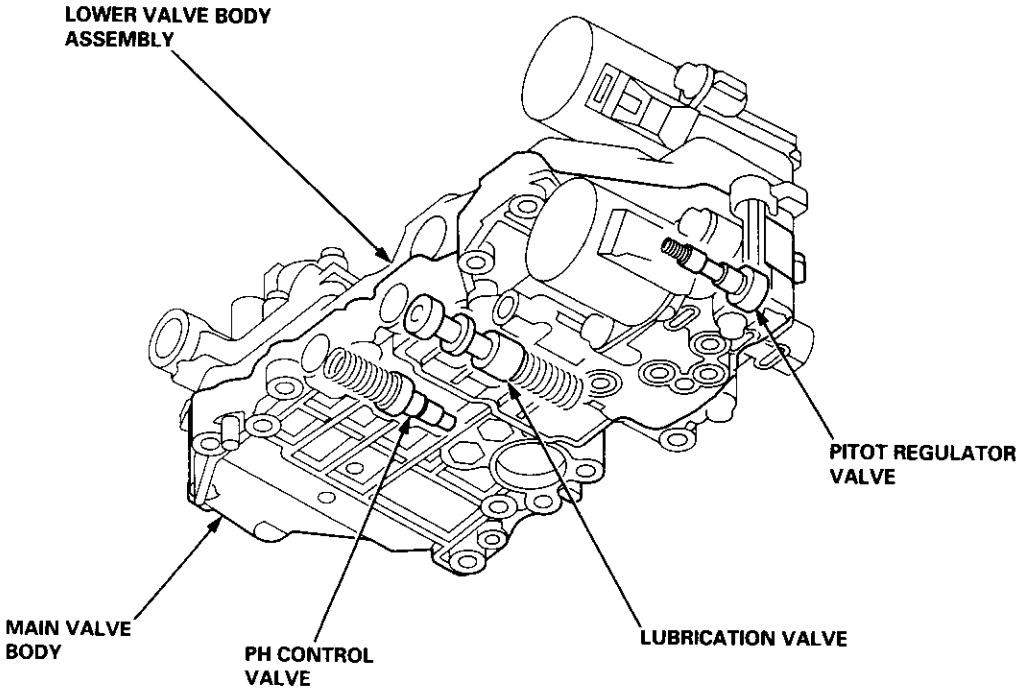

Secondary Valve Body
The secondary valve body contains the PH regulator valve, the clutch reducing valve, the start clutch valve accumulator, and the shift inhibitor valve.

- **PH Regulator Valve**
  The PH regulator valve maintains hydraulic pressure supplied from the ATF pump, and supplies PH pressure to the hydraulic control circuit and the lubrication circuit. PH pressure is regulated at the PH regulator valve by the PH control pressure (PHC) from the PH control valve.

- **Clutch Reducing Valve**
  The clutch reducing valve receives PH pressure from the PH regulator valve and regulates the clutch reducing pressure (CR). The clutch reducing valve supplies clutch pressure (CR) to the manual valve and the start clutch control valve, and supplies signal pressure to the PH-PL pressure control valve, the shift control valve, and the inhibitor solenoid valve.

- **Start Clutch Valve Accumulator**
  The start clutch valve accumulator stabilizes the hydraulic pressure that is supplied to the start clutch.

- **Shift Inhibitor Valve**
  The shift inhibitor valve switches the fluid passage to switch the start clutch control from electronic control to hydraulic control when the electronic control system is faulty. It also supplies clutch reducing pressure (CR) to the pitot regulator valve and the pitot lubrication pipe.

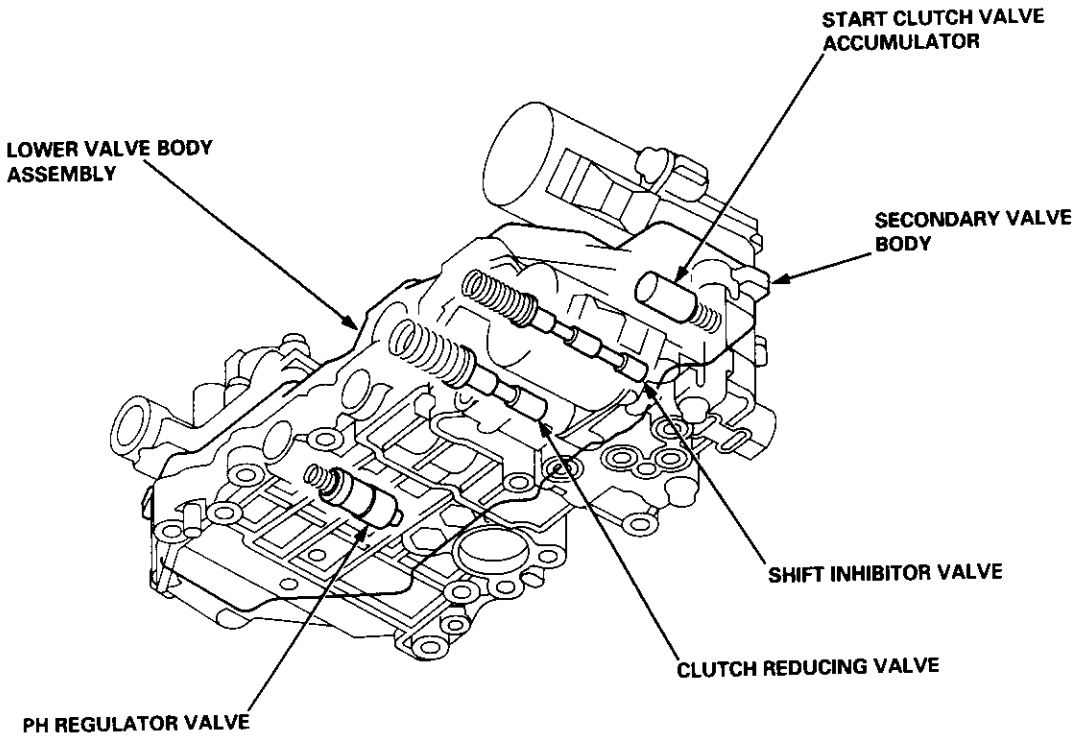

(cont'd)

Hydraulic Control (cont'd)

PL Regulator Valve Body
The PL regulator valve body contains the PL regulator valve and the PH-PL control valve, which is joined with the PH-PL control linear solenoid. The inhibitor solenoid is bolted on the PL regulator valve body.

- **PL Regulator Valve**
  The PL regulator valve supplies low pressure (PL) to the pulley to eliminate steel belt slippage.
  The PL pressure is controlled by the PH-PL control pressure (HLC).

- **PH-PL Control Valve**
  The PH-PL control valve controls the PL regulator valve according to engine torque. The PH-PL control valve supplies PH-PL control pressure (HLC) to the PH control valve to regulate PH pressure higher than PL pressure. The PH-PL control valve is controlled by the PH-PL control linear solenoid, which is controlled by the TCM or PCM.

- **Inhibitor Solenoid**
  The inhibitor solenoid controls the reverse inhibitor valve by turning on and off. Also, the inhibitor solenoid controls PH control pressure (PHC) by applying reverse inhibitor pressure (RI) to the PH control valve. The inhibitor solenoid is controlled by the TCM or PCM.

Start Clutch Control Valve Body
The start clutch control valve body contains the start clutch control valve. Both are joined to the start clutch control linear solenoid.

- **Start Clutch Control Valve**
  The start clutch control valve controls start clutch engagement according to the throttle opening. The start clutch control valve is controlled by the start clutch control linear solenoid, which is controlled by the TCM or PCM.

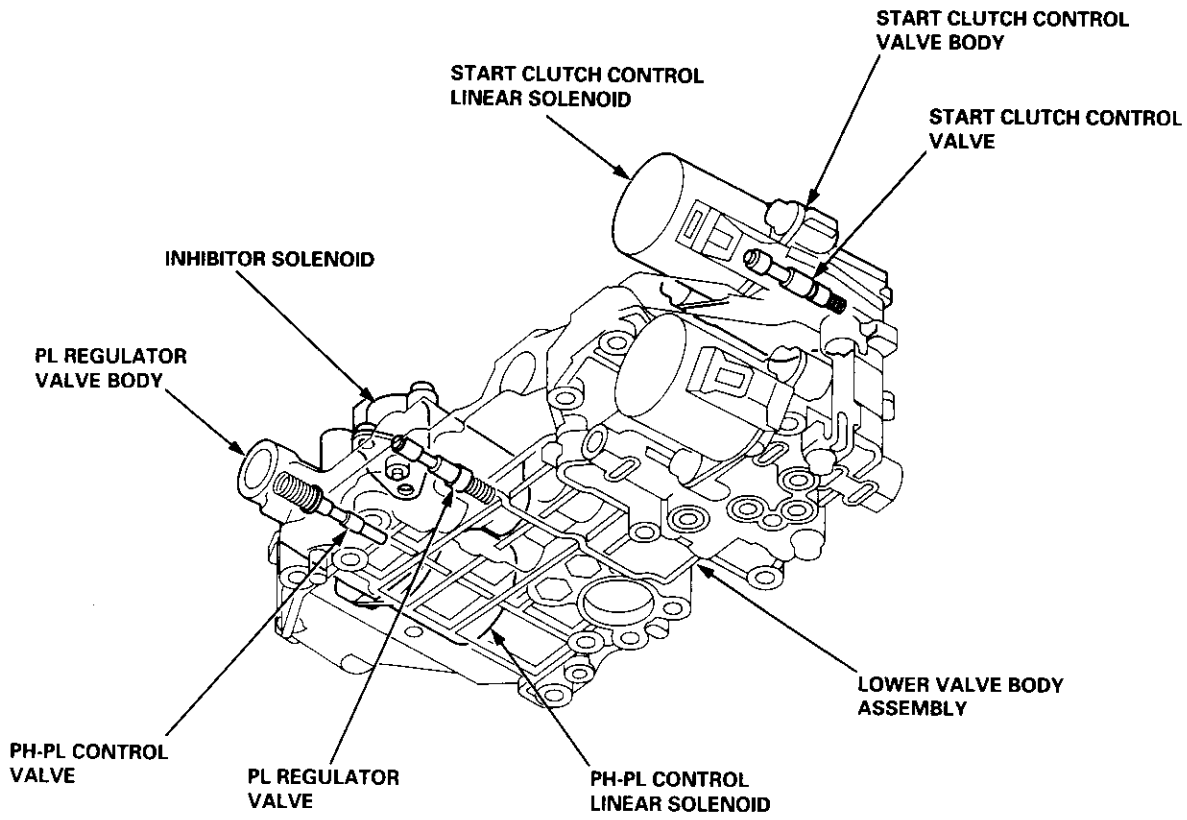

Shift Valve Body
The shift valve body contains the shift valve and the shift control valve. Both are joined to the shift control linear solenoid.

- **Shift Valve**
  The shift valve is controlled by shift valve pressure (SV) from the shift control valve. The shift valve distributes PH pressure and PL pressure to drive pulley and the driven pulley, to shift the transmission.

- **Shift Control Valve**
  The shift control valve controls the shift valve in accordance with the throttle opening and vehicle speed. The shift control valve is controlled by the shift control linear solenoid, which is controlled by the TCM or PCM. When the electronic control system is faulty, the shift control valve switches the shift inhibitor valve to uncover the port leading the pitot regulator pressure to the start clutch.

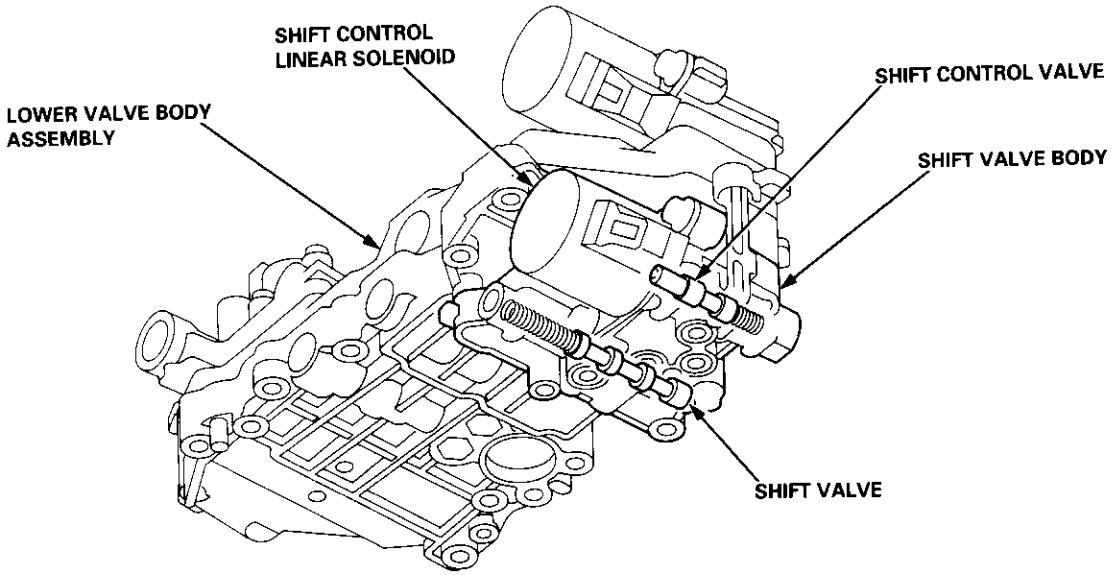

Manual Valve Body
The manual valve body contains the manual valve and the reverse inhibitor valve. The manual valve body is bolted to the intermediate housing.

- **Manual Valve**
  The manual valve mechanically uncovers/covers the fluid passage according to the shift lever position.

- **Reverse Inhibitor Valve**
  The reverse inhibitor valve is controlled by the reverse inhibitor pressure (RI). It intercepts the hydraulic circuit to the reverse brake while the vehicle is moving forward at speeds over approximately 6 mph (10 km/h).

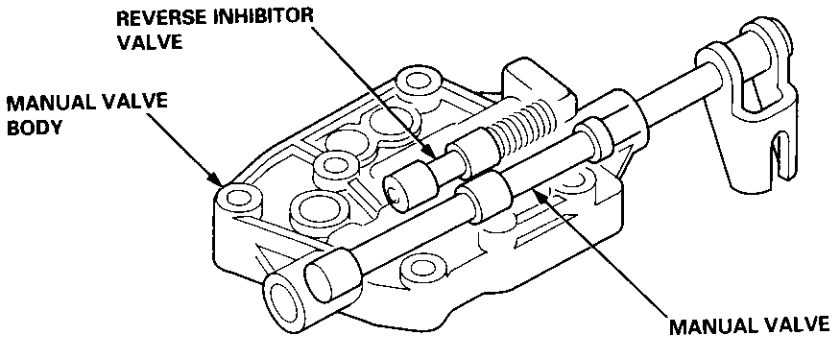

Hydraulic Flow

General Chart of Hydraulic Pressure

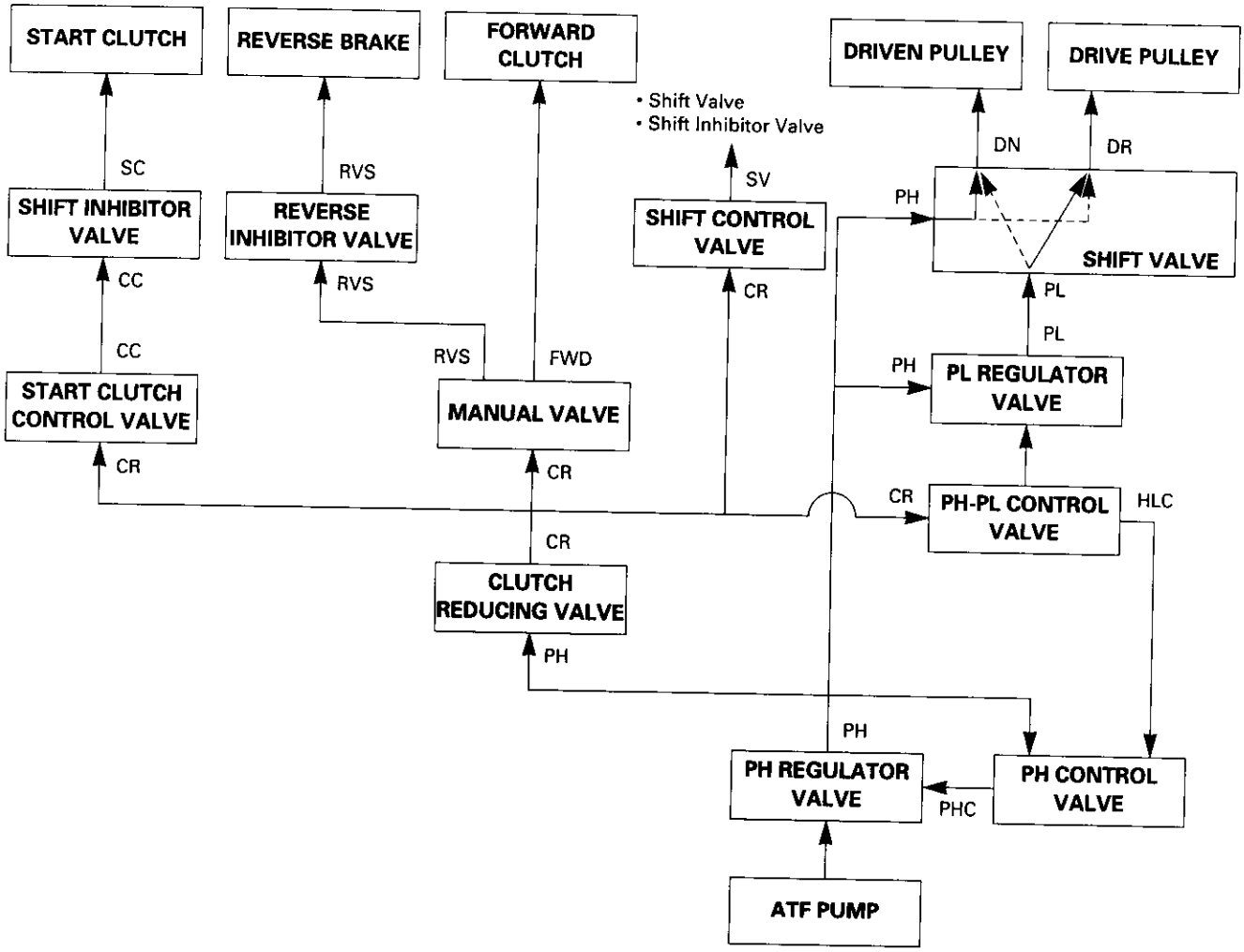

NO.	DESCRIPTION OF PRESSURE	NO.	DESCRIPTION OF PRESSURE
CC	CLUTCH CONTROL	PP	PITOT PIPE
COL	ATF COOLER	PR	PITOT REGULATOR
CR	CLUTCH REDUCING	RCC	RECIRCULATION
DN	DRIVEN PULLEY	RI	REVERSE INHIBITOR
DR	DRIVE PULLEY	RVS	REVERSE BRAKE
FWD	FORWARD CLUTCH	SC	START CLUTCH
HLC	PH-PL CONTROL	SI	SHIFT INHIBITOR
LUB	LUBRICATION	SUC	SUCTION
PH	PRESSURE HIGH	SV	SHIFT VALVE
PHC	PH CONTROL	X	LEAK
PL	PRESSURE LOW		

N Position

As the engine turns, the ATF pump also starts to operate. Fluid from the ATF pump flows to the PH regulator valve and the clutch reducing valve. The PH regulator valve regulates high pressure (PH), and send it to the shift valve and the PL regulator valve. The high pressure (PH) flows to the movable face of the driven pulley via the shift valve, and turns into low pressure (PL) at the PL regulator valve. The low pressure (PL) flows to the movable face of the drive pulley via the shift valve. At this time, the pulley ratio remains low.
The high pressure (PH) becomes the clutch reducing pressure (CR) at the clutch reducing valve. The clutch reducing pressure (CR) flows to the start clutch control valve, the manual valve, the PH-PL control valve, and the shift control valve, and is intercepted by those valves.
Under this condition, hydraulic pressure is not applied to the clutches and reverse brake.

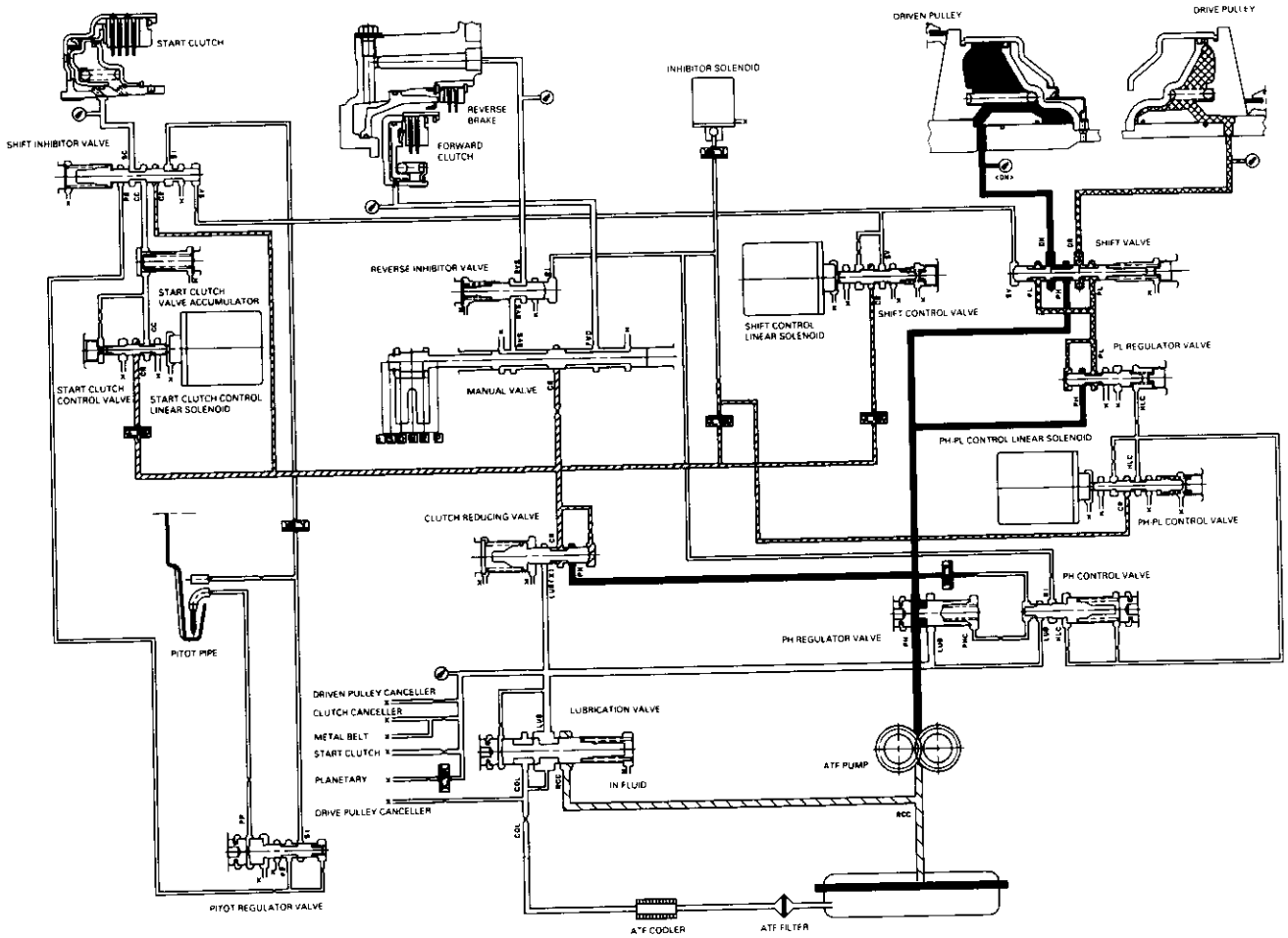

(cont'd)

Hydraulic Flow (cont'd)

D position, at low speed range

The flow of fluid up to the drive pulley, the driven pulley, and the clutch reducing valve is the same as in N position. The pulley ratio is low because the driven pulley receives high pressure (PH), and the drive pulley receives low pressure (PL). The clutch reducing pressure (CR) flows through the manual valve to the forward clutch, then forward clutch is engaged. The forward clutch then drives the drive pulley shaft, which drives the driven pulley shaft.
Also, clutch reducing pressure (CR) flows to the start clutch control valve, and becomes clutch control pressure (CC). Clutch control pressure (CC) becomes start clutch pressure (SC) at the shift inhibitor valve. Start clutch pressure (SC) is applied to the start clutch to engage the start clutch.

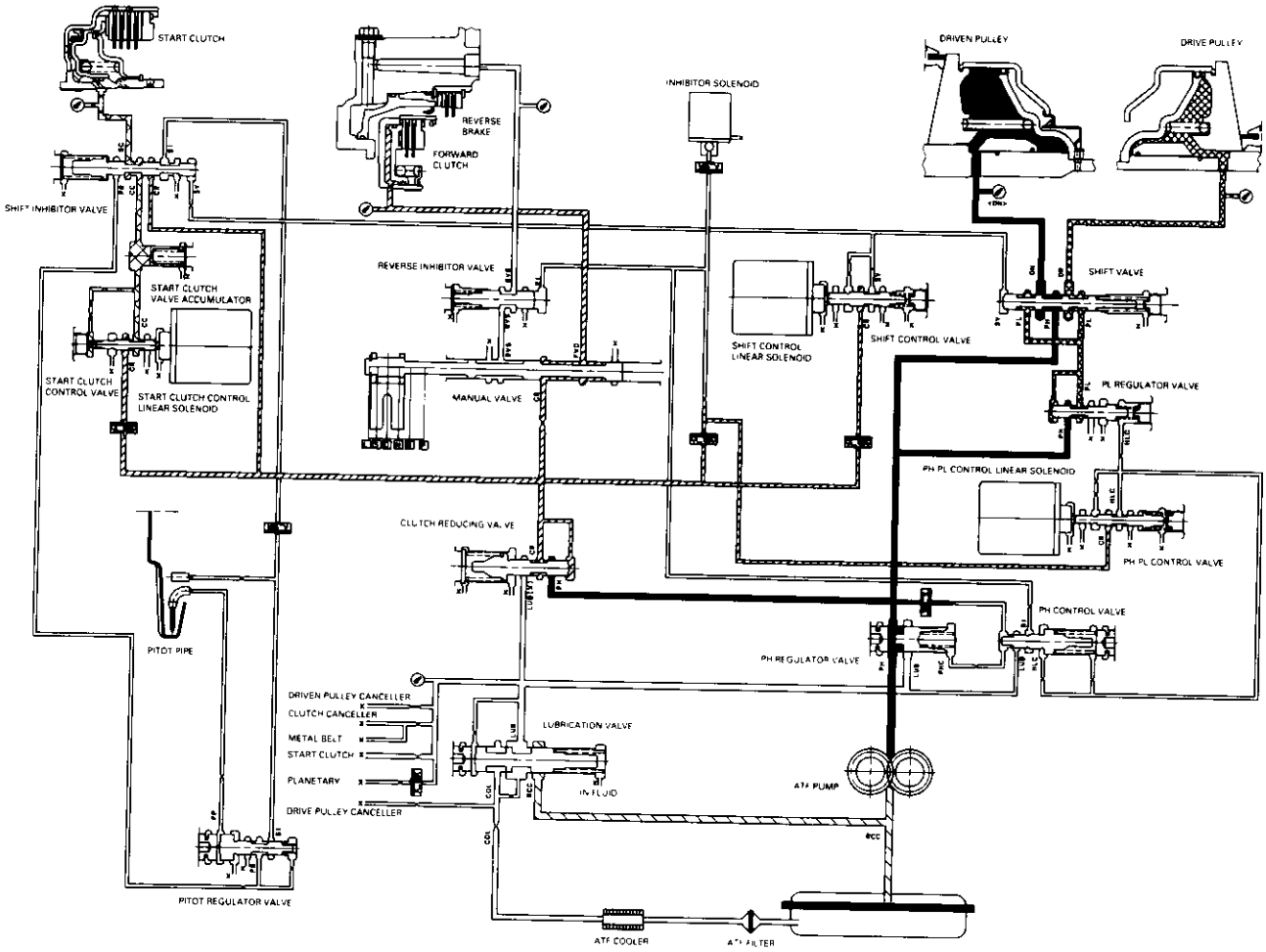

D position, at middle speed range

As the speed of the vehicle reaches the prescribed value, the shift control linear solenoid is activated by the TCM or PCM. The shift control linear solenoid controls the shift control valve to activate shift valve pressure (SV). Clutch reducing pressure (CR) from the clutch reducing valve becomes shift valve pressure (SV) at the shift control valve. Shift valve pressure (SV) flows to the left end of the shift valve, the shift valve to the right side and positioning it in the middle of its travel. The shift valve covers the port to stop high pressure (PH) to the pulleys, and uncovers the port leading low pressure (PL) to the pulleys. The drive pulley and the driven pulley receive low pressure (PL). At this time, the pulley ratio is in the middle. Pressure remains to apply the forward clutch and the start clutch.

NOTE: When used, "left" or "right" indicates direction on the hydraulic circuit.

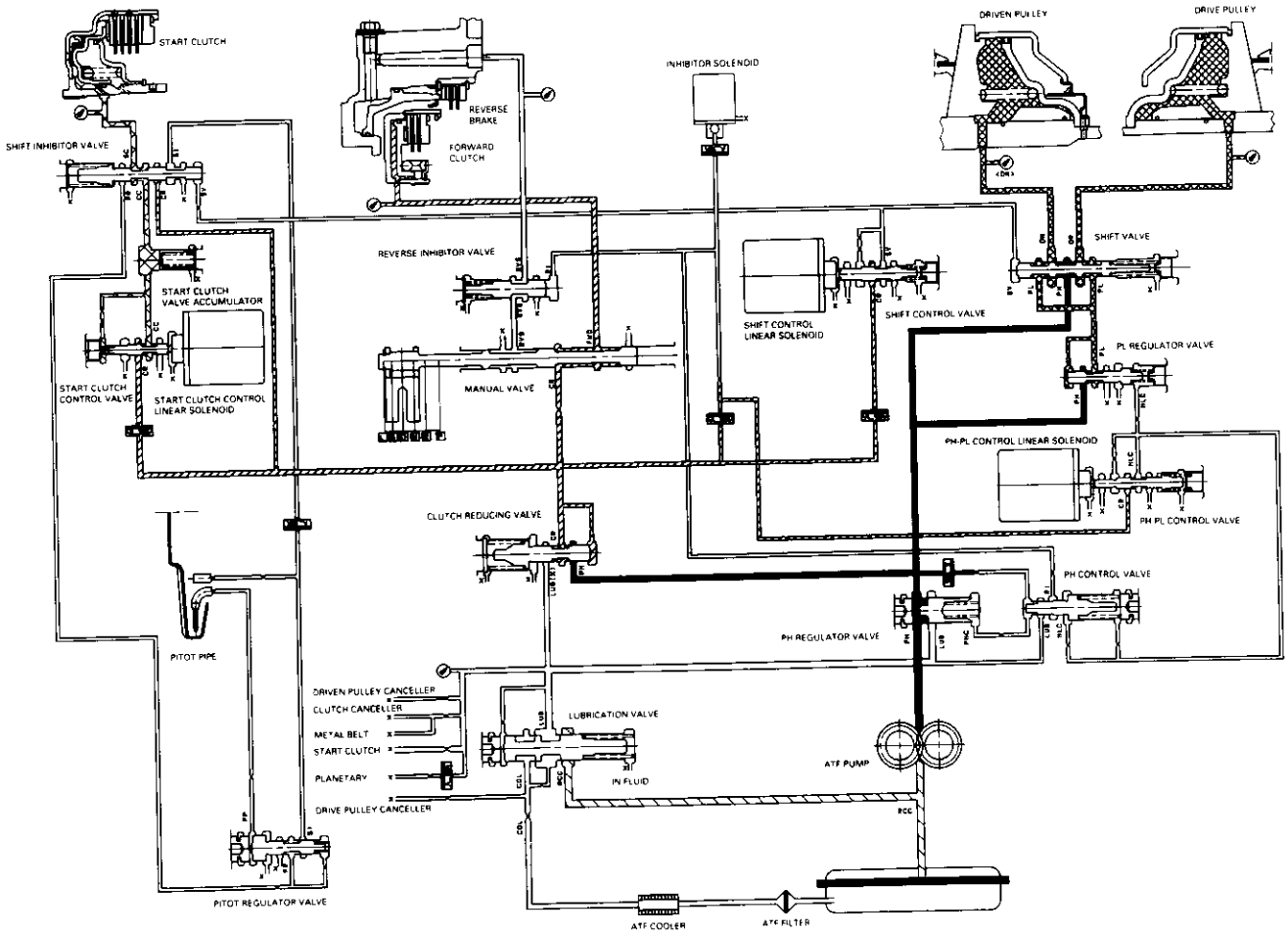

(cont'd)

Hydraulic Flow (cont'd)

D position, at high speed range

As the speed of the vehicle reaches the prescribed value, the shift control linear solenoid moves the shift control valve to increase shift valve pressure (SV) at the left end of the shift valve. The shift valve moves to the right side compared to its position at the middle pulley ratio. The shift valve uncovers the port leading high pressure (PH) to the drive pulley and uncovers the port leading low pressure (PL) to the driven pulley. The drive pulley receives high pressure (PH) and the driven pulley receives low pressure (PL). The pulley ratio is high.
Pressure remains to apply the forward clutch and the start clutch.

NOTE: When used, "left" or "right" indicates direction on the hydraulic circuit.

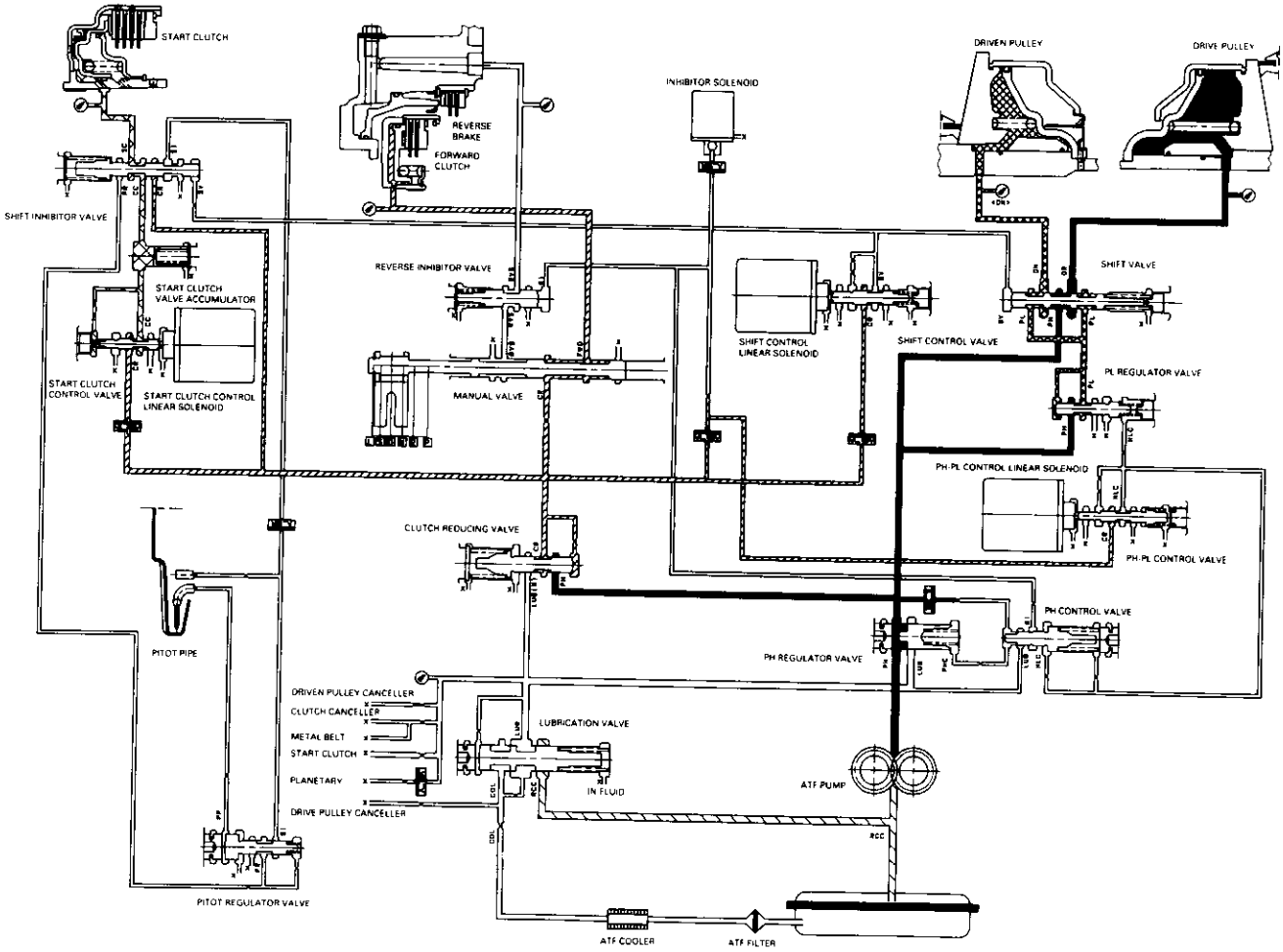

R position

The flow of fluid up to the drive pulley, the driven pulley, and the clutch reducing valve is the same as in N position. The pulley ratio is low because the driven pulley receives high pressure (PH) and the drive pulley receives low pressure (PL). The manual valve is shifted into the R position, and it uncovers the port that leads reverse brake pressure (RVS) to the reverse inhibitor valve. The inhibitor solenoid turns off by means of the TCM or PCM, and reverse inhibitor pressure (RI) is applied to the right end of the reverse inhibitor valve. The reverse inhibitor valve moves to the left side, and uncovers the port that leads reverse brake pressure (RVS) to the reverse brake. Clutch reducing pressure (CR) becomes reverse brake pressure (RVS) at the manual valve, and flows to the reverse brake. The reverse brake is engaged, and it locks the ring gear.

NOTE: When used, "left" or "right" indicates direction on the hydraulic circuit.

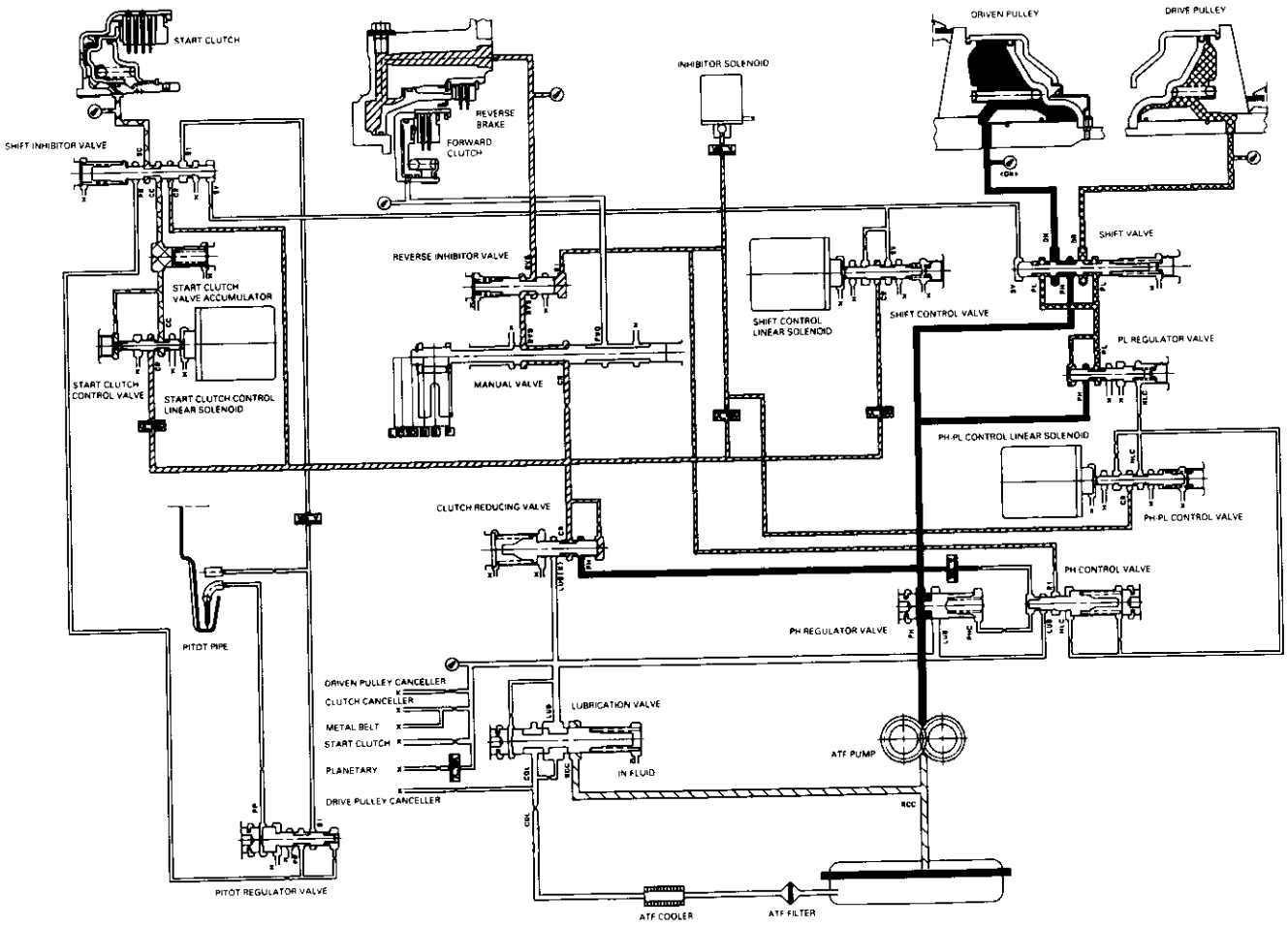

(cont'd)

Hydraulic Flow (cont'd)

R position

Reverse Inhibitor Control

If the R position is selected while the vehicle is moving forward at speeds over 6 mph (10 km/h), the inhibitor solenoid doesn't turn off by means of the TCM or PCM. Reverse inhibitor pressure (RI) is not applied to the reverse inhibitor valve as the reverse inhibitor solenoid turns on. The reverse inhibitor valve is kept on the right side, and covers the port to stop reverse brake pressure (RVS) to the reverse brake from the manual valve. Reverse brake pressure (RVS) is not applied to the reverse brake, and power is not transmitted to the reverse direction.

NOTE: When used, "left" or "right" indicates direction on the hydraulic circuit.

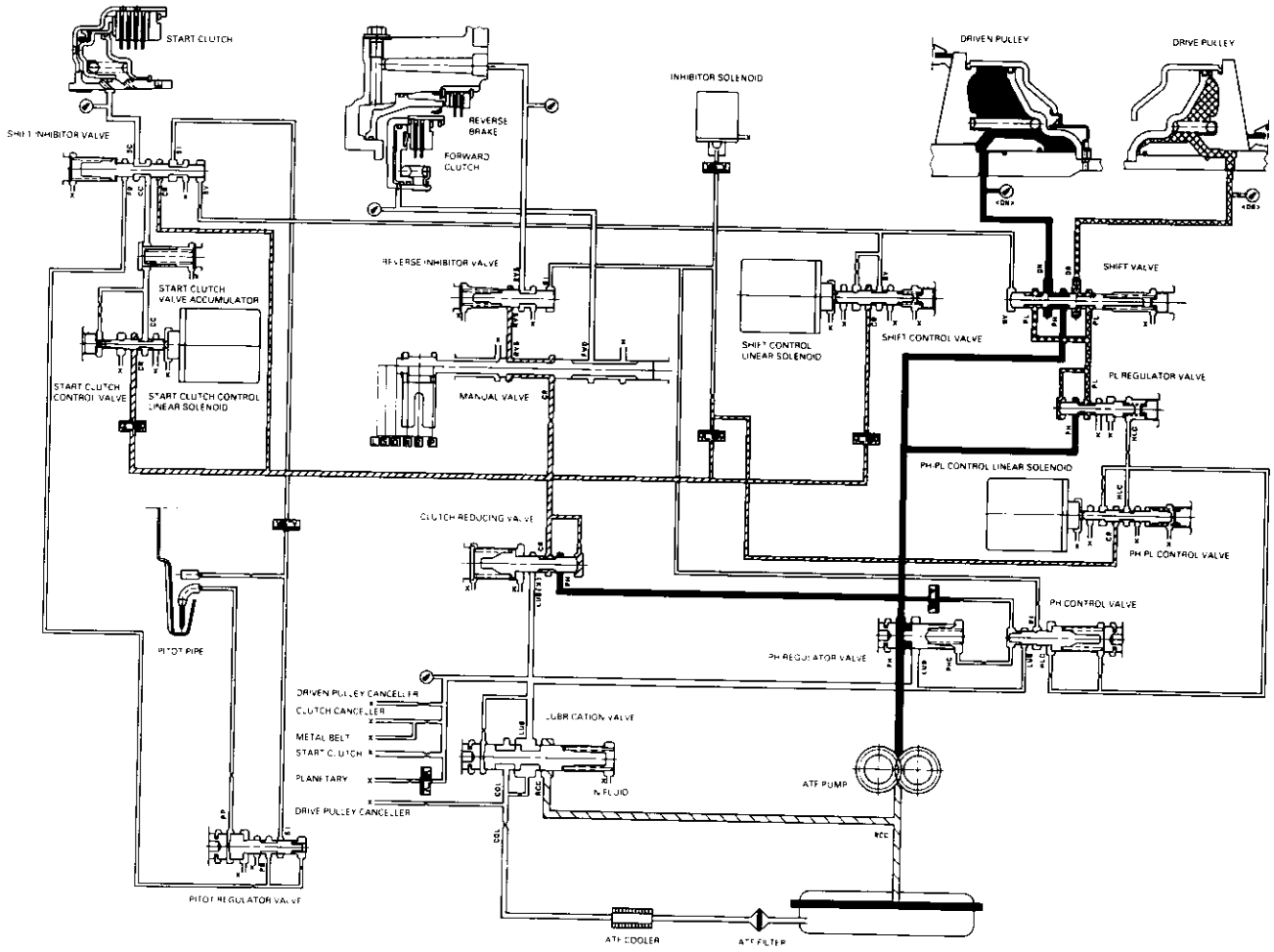

P position

The flow of fluid up to the drive pulley, the driven pulley, and the clutch reducing valve is the same as in N position. Clutch reducing pressure (CR) flows to the start clutch control valve, the manual valve, and the shift control valve, and is intercepted by those valves.
Under this condition, hydraulic pressure is not applied to the clutches and reverse brake.

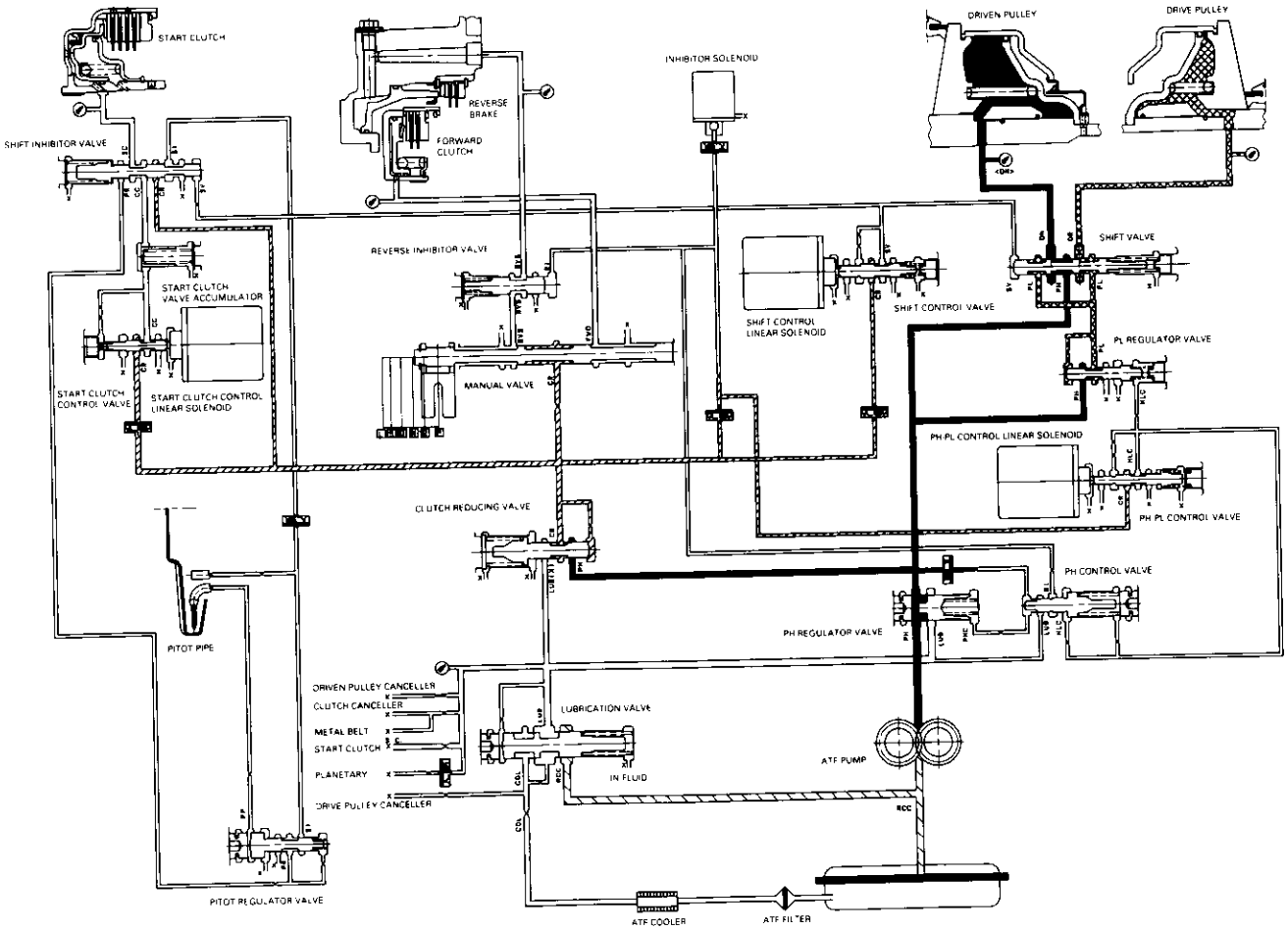

(cont'd)

Hydraulic Flow (cont'd)

[D] position, when the electronic control system is faulty.

When the electronic control system (linear solenoids and sensors) is faulty, the transmission uses the pitot pipe pressure (PP) to allow the vehicle to drive.

When all linear solenoids and sensors are off because of a faulty electronic control system, clutch reducing pressure (CR) flows to the start clutch control valve, the manual valve, the PH-PL control valve, and the shift control valve. Clutch reducing pressure (CR) becomes shift valve pressure (SV) at the shift control valve, and shift valve pressure (SV) is applied to the left end of the shift valve and the right end of the shift inhibitor valve. The shift valve moves to the right side, and uncovers the port that leads high pressure (PH) to the drive pulley and uncovers the port that leads low pressure (PL) to the driven pulley. At this time, the pulley ratio is high. The shift inhibitor valve moves to the left side, and uncovers the port that leads shift inhibitor pressure (SI) to the pitot lubrication pipe and the pitot regulator valve. The pitot lubrication pipe discharges fluid inside of the pitot flange, and discharged fluid enters into the pitot pipe and it is applied to the left end of the pitot regulator valve. The pitot regulator valve moves to the right side, and uncovers the port that leads pitot regulator pressure (PR) to the shift inhibitor valve. Pitot regulator pressure (PR) becomes start clutch pressure (SC) at the shift inhibitor valve, and is applied to the start clutch. The start clutch is engaged. The forward clutch pressure (FWD) is applied to the forward clutch, and the forward clutch is engaged. This allows the vehicle to drive.

NOTE: When used, "left" or "right" indicates direction on the hydraulic circuit.

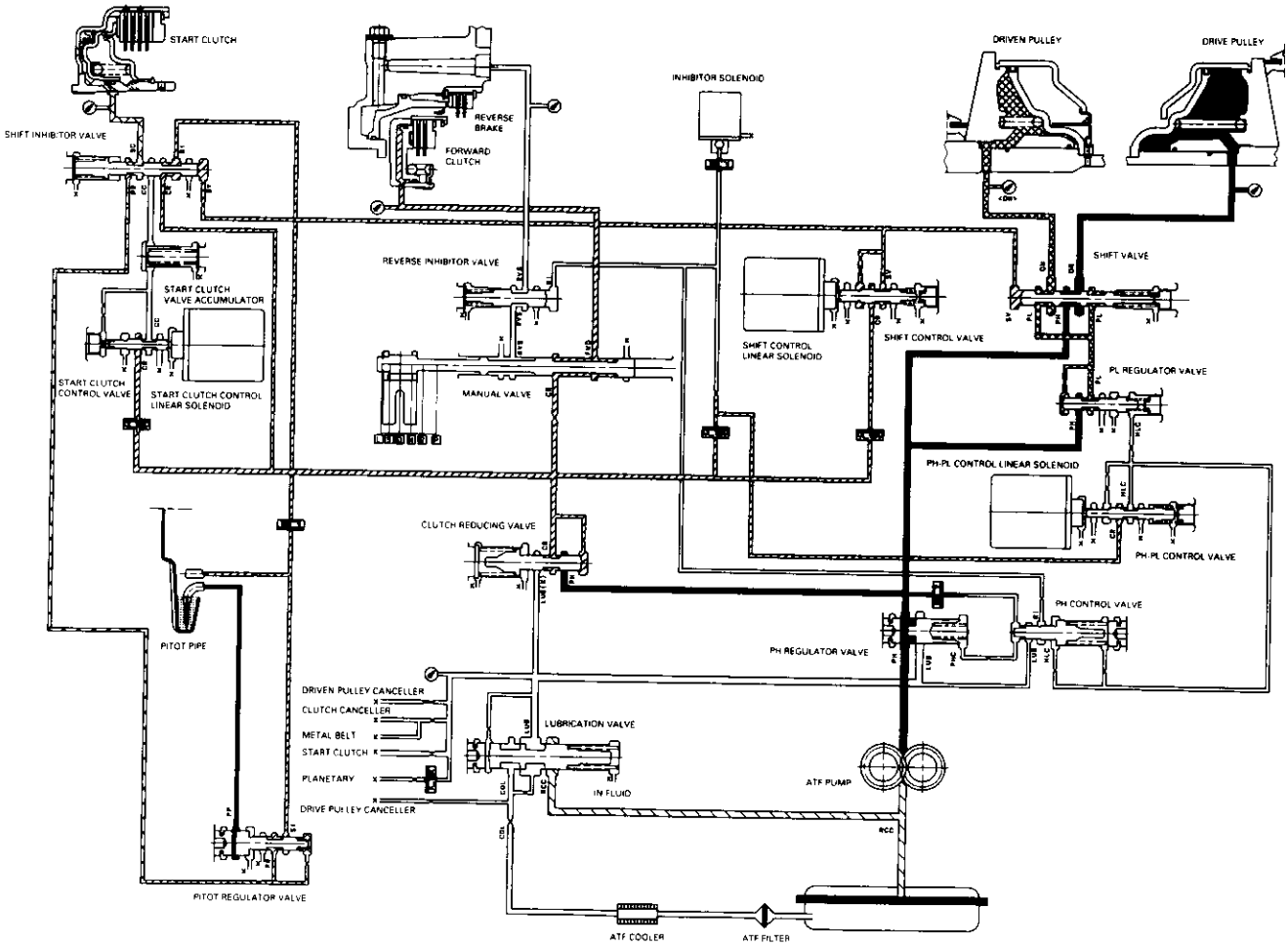

R position, when the electronic control system is faulty.

The flow of fluid up to the drive pulley, the driven pulley, and the start clutch is the same as in D position. The manual valve is shifted into the R position, and it uncovers the port that leads reverse brake pressure (RVS) to the reverse inhibitor valve. Reverse inhibitor pressure (RI) is applied to the right end of the reverse inhibitor valve because of a faulty inhibitor solenoid. The reverse inhibitor valve moves to the left side, and uncovers the port that leads reverse brake pressure (RVS) at the manual valve, and flows to the reverse brake. Clutch reducing pressure (CR) becomes reverse brake pressure (RVS) at the manual valve, and flows to the reverse brake. The reverse brake is engaged and locks the ring gear. This allows the vehicle to drive in reverse.

NOTE: When used, "left" or "right" indicates direction on the hydraulic circuit.

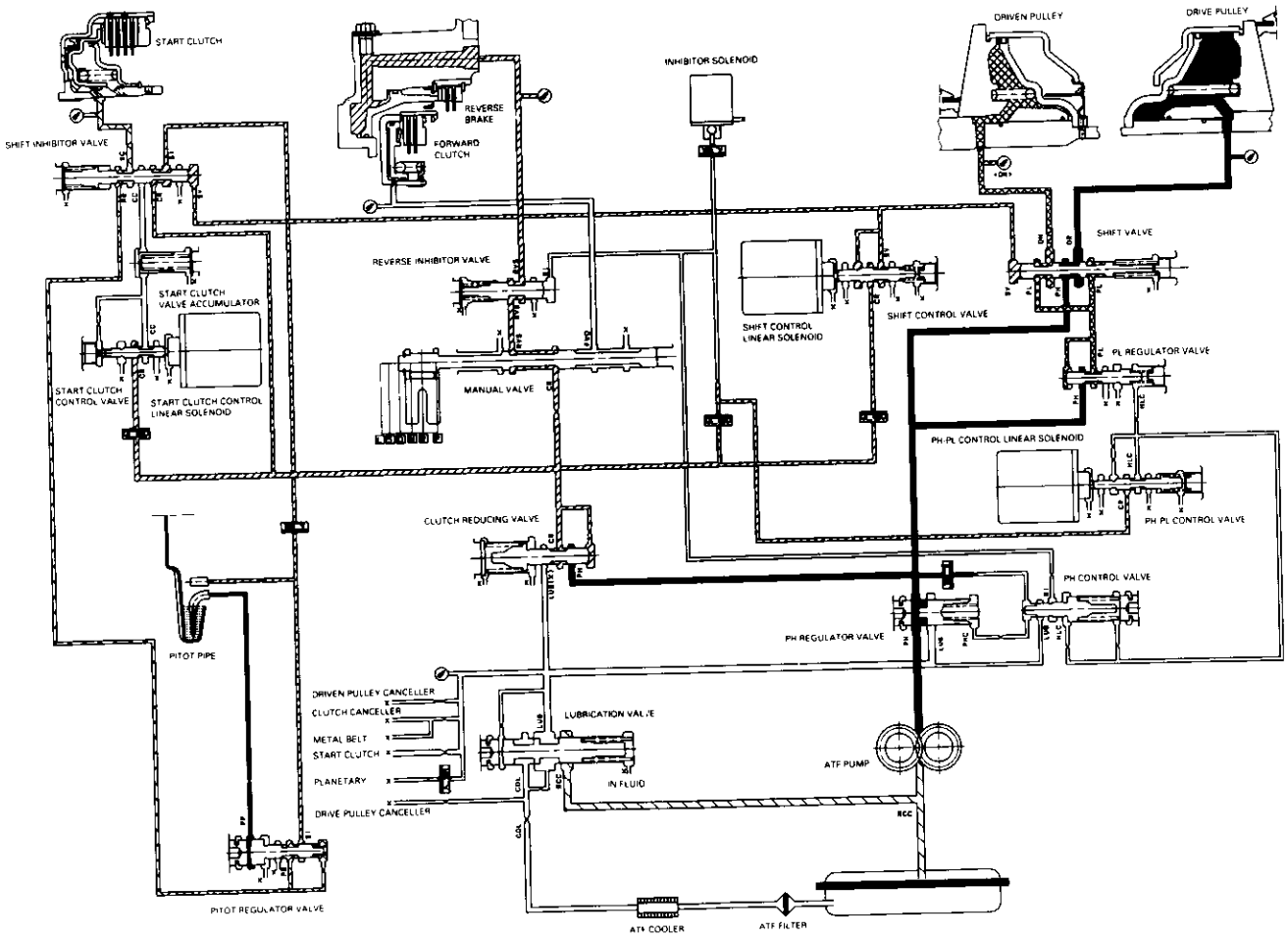

Park Mechanism

The park mechanism locks the transmission by engaging the park pawl with the park gear which is integral with the secondary drive gear. The secondary drive gear engages with the secondary driven gear which engages with the final driven gear.
Shifting to [P] position causes the park cone (installed at the end of the park rod) to press the park pawl onto the park gear. Even if the end of the park pawl rides on the top of the park gear teeth, slight movement of the vehicle will cause the park pawl and the park gear to mesh with each other completely because the park cone receives the tension from the park rod spring. The park pawl receives the tension (which acts to separate the park pawl from the park gear) from the park pawl spring.

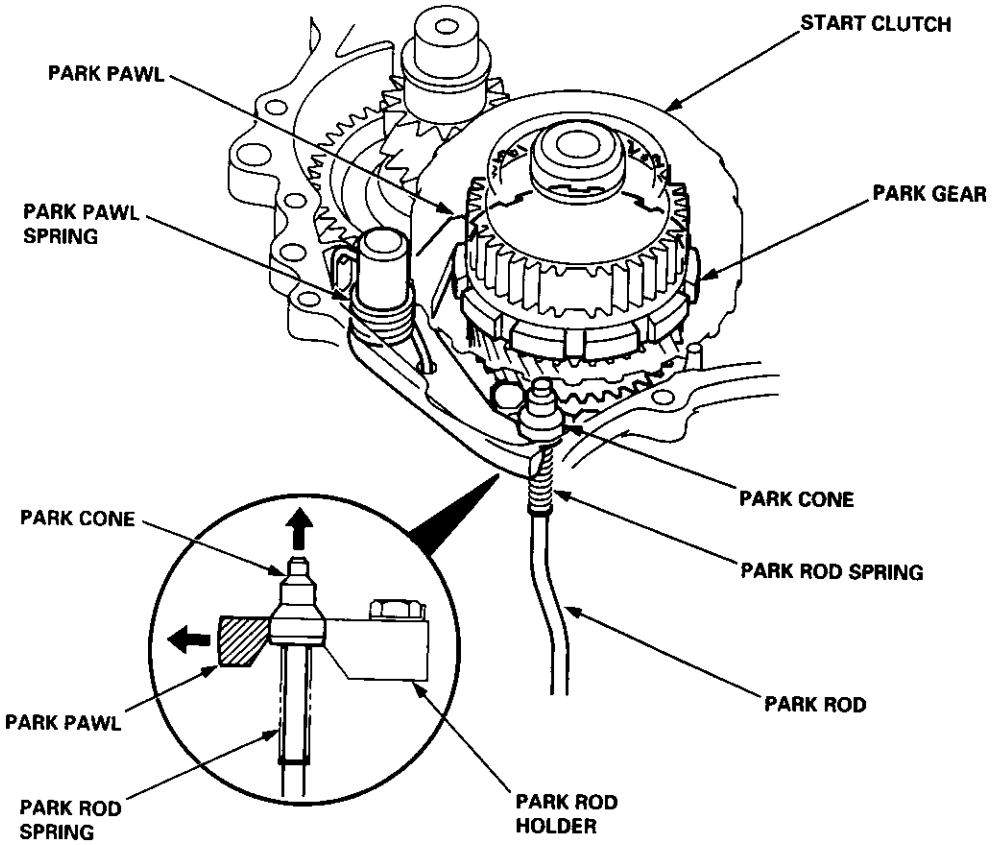

Component Locations

'96 – 98 Models

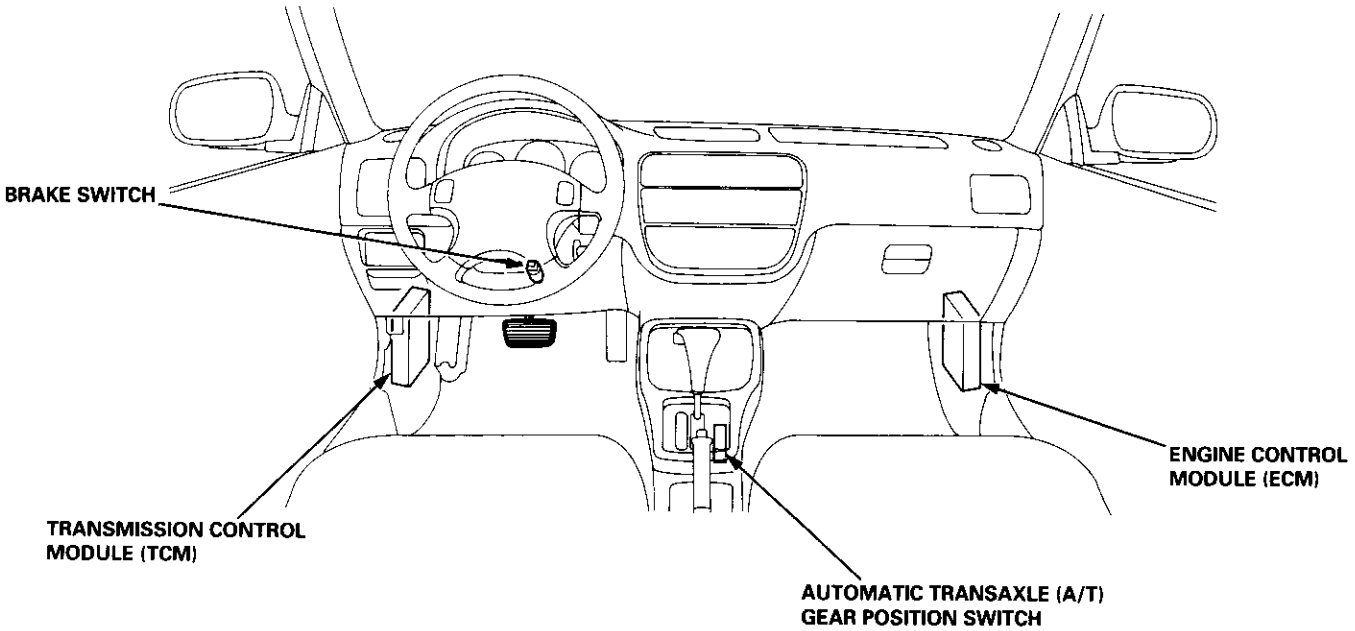

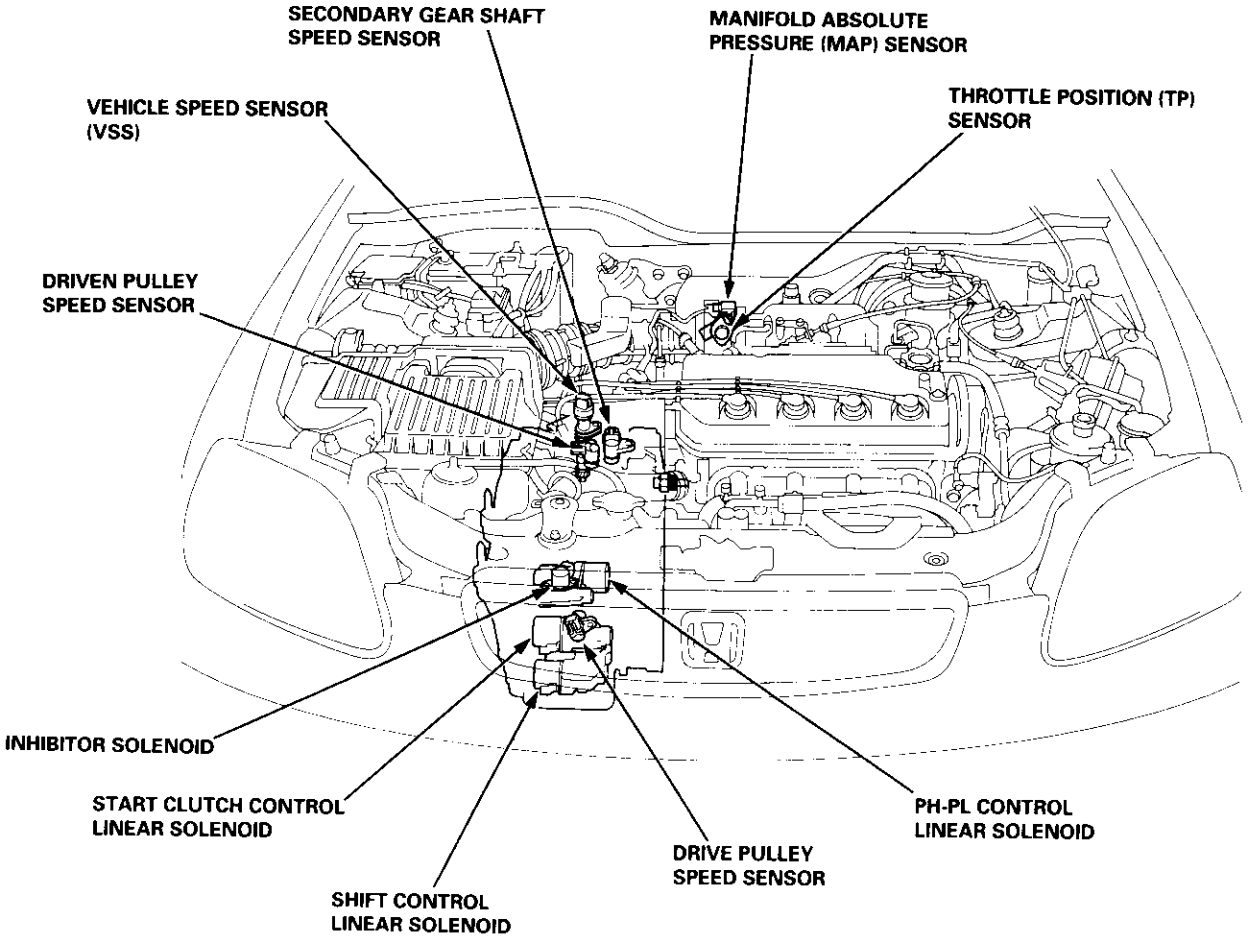

'99 – 00 Models

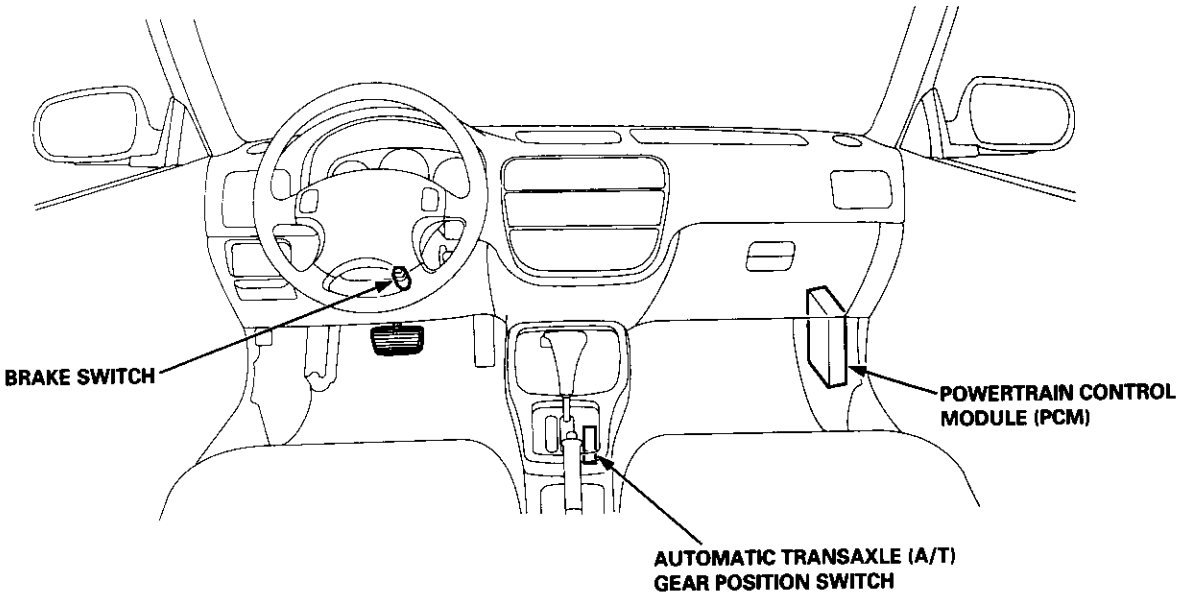
BRAKE SWITCH
POWERTRAIN CONTROL MODULE (PCM)
AUTOMATIC TRANSAXLE (A/T) GEAR POSITION SWITCH

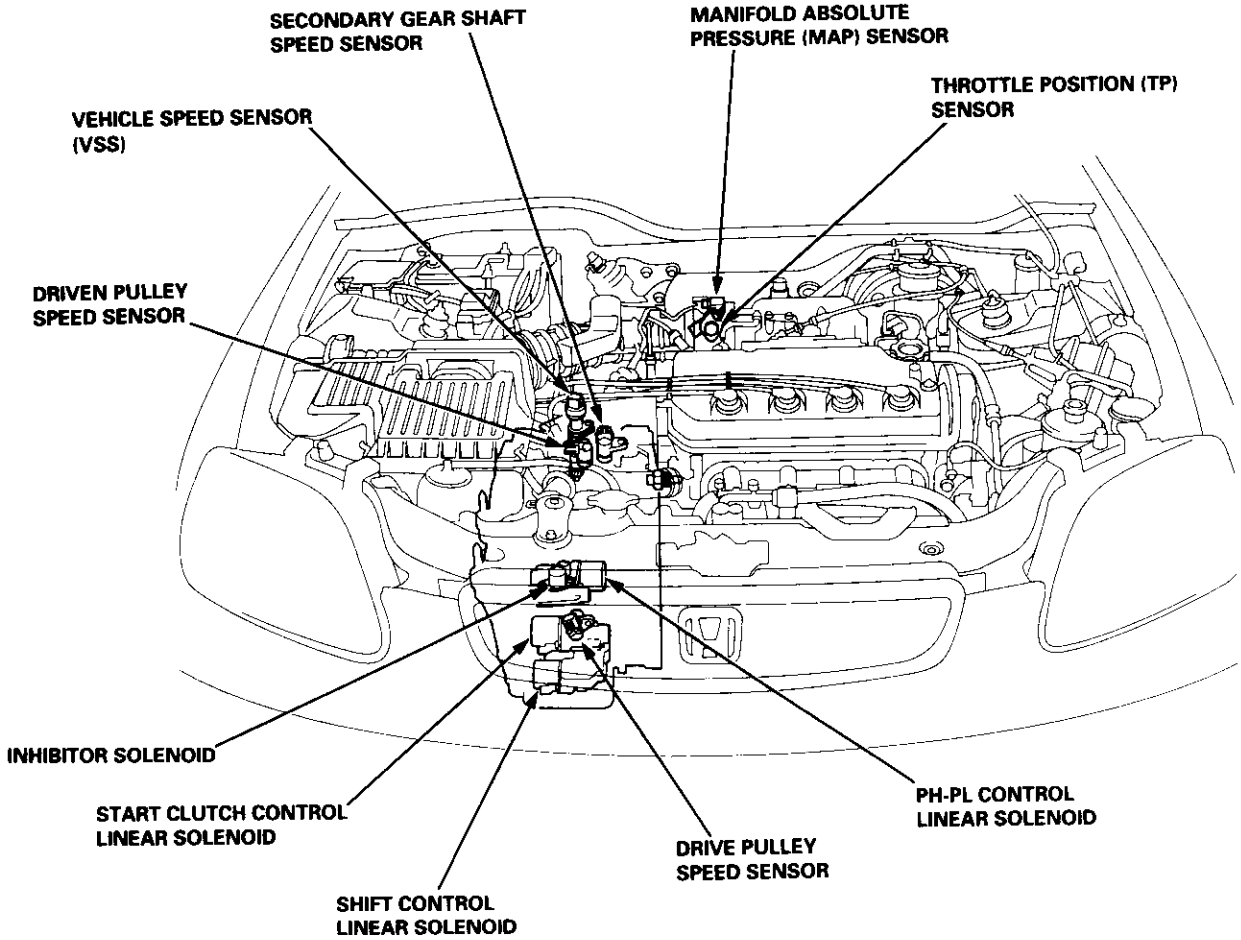
SECONDARY GEAR SHAFT SPEED SENSOR
MANIFOLD ABSOLUTE PRESSURE (MAP) SENSOR
THROTTLE POSITION (TP) SENSOR
VEHICLE SPEED SENSOR (VSS)
DRIVEN PULLEY SPEED SENSOR
INHIBITOR SOLENOID
START CLUTCH CONTROL LINEAR SOLENOID
SHIFT CONTROL LINEAR SOLENOID
DRIVE PULLEY SPEED SENSOR
PH-PL CONTROL LINEAR SOLENOID

TCM Circuit Diagram ('96 – 98 Models)

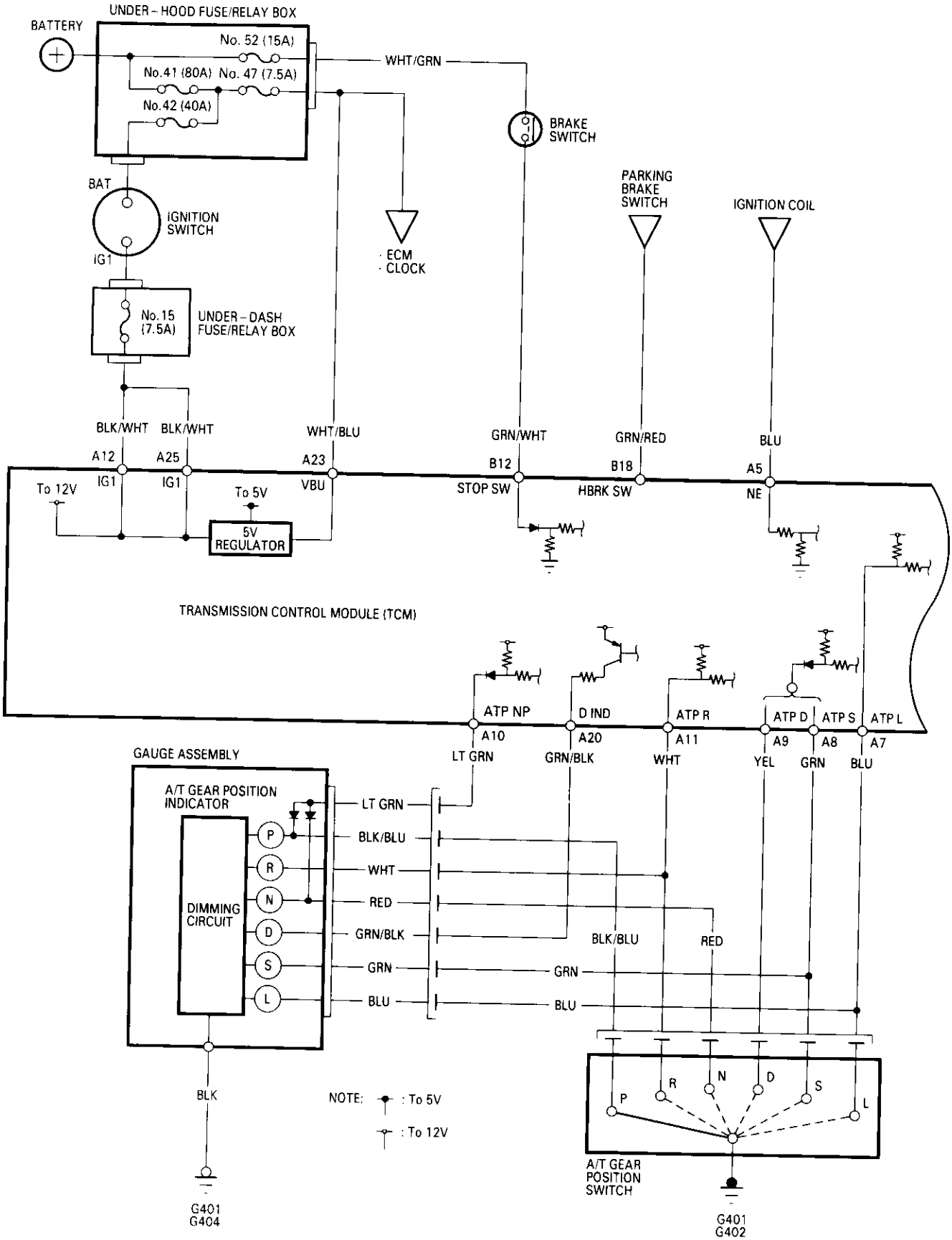

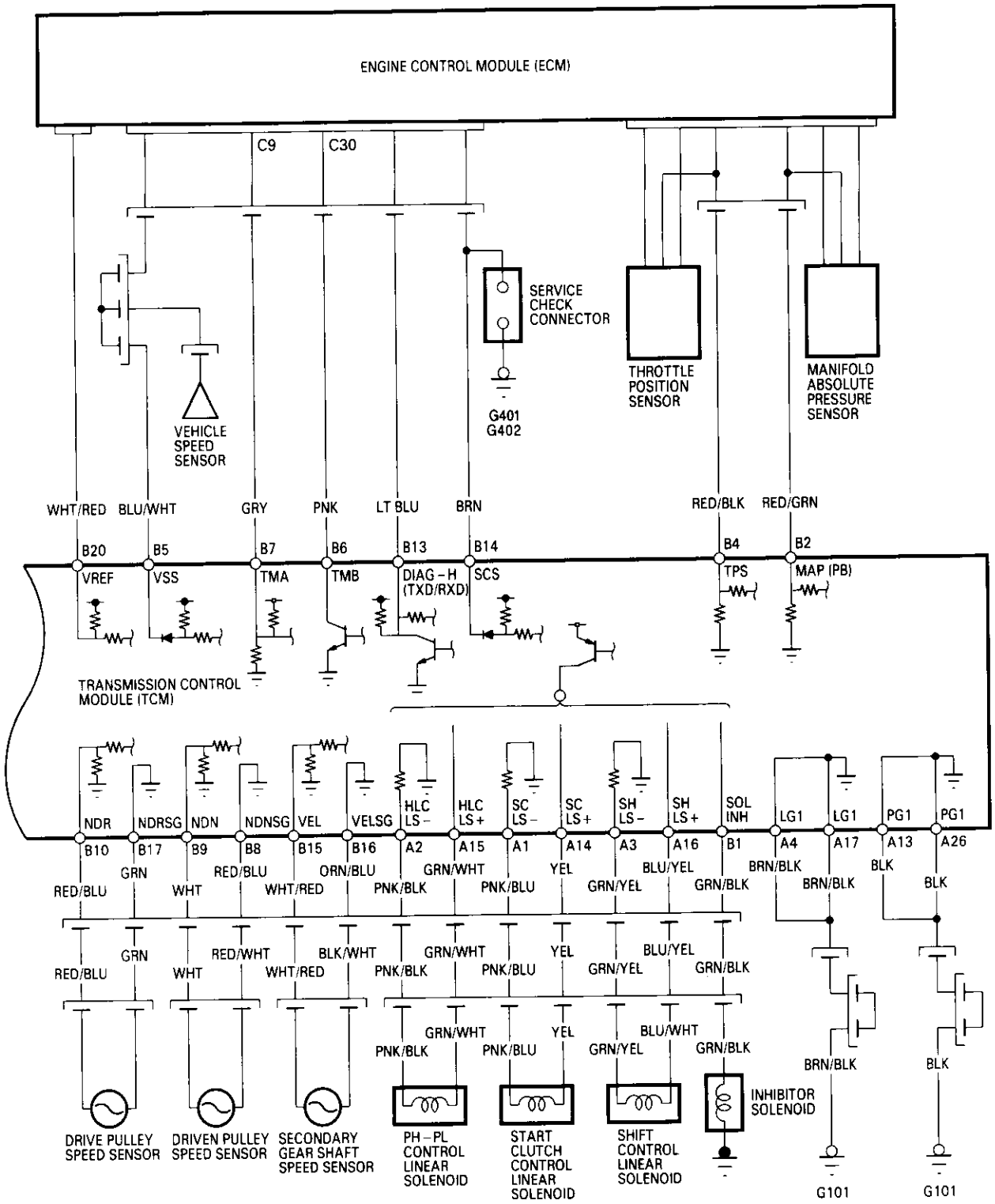

TCM Terminal Locations

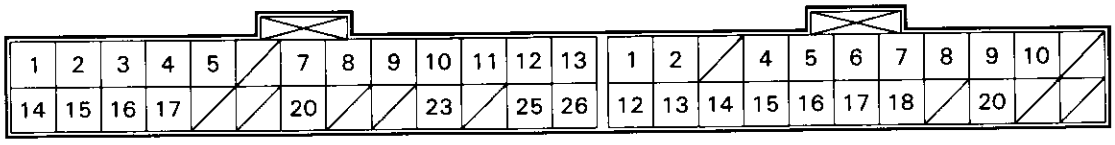

TCM – A (26P) Connector

TCM – B (22P) Connector

TCM Terminal Voltage/Measuring Conditions ('96 – 98 Models)

TCM Terminal Locations

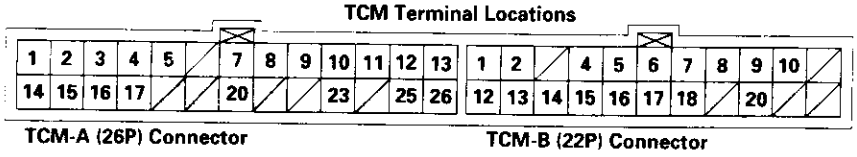

TCM CONNECTOR A (26P)

Terminal Number	Signal	Description	Measuring Conditions/Terminal Voltage
A1	SC LS–	Start clutch control linear solenoid power supply negative electrode	Engine idling, [P] position: Approx. 0.4 V
A2	HLC LS–	PH-PL control linear solenoid power supply negative electrode	Engine idling, [P] position: Approx. 0.7 V
A3	SH LS–	Shift control linear solenoid power supply negative electrode	Engine idling, [P] position: Approx. 0.8 V
A4	LG1	Ground	
A5	NE	Engine speed signal input	With engine running: Pulsing signal
A6	——	Not used	
A7	ATP L	A/T gear position switch [L] position signal input	In [L] position: 0 V In other than [L] position: Approx. 10 V
A8	ATP S	A/T gear position switch [S] position signal input	In [S] position: 0 V In other than [S] position: Approx. 10 V
A9	ATP D	A/T gear position switch [D] position signal input	In [D] position: 0 V In other than [D] position: Approx. 10 V
A10	ATP NP	A/T gear position switch [N] or [P] position signals input	In [N] or [P] position: 0 V In other than [N] or [P] position: Approx. 10 V
A11	ATP R	A/T gear position switch [R] position signal input	In [R] position: 0 V In other than [R] position: Approx. 10 V
A12	IG1	Power supply system	With ignition switch ON (II): Battery voltage With ignition switch OFF: 0 V
A13	PG1	Ground	
A14	SC LS+	Start clutch control linear solenoid power supply positive electrode	Engine idling, [P] position: Approx. 2.5 V
A15	HLC LS+	PH-PL control linear solenoid power supply positive electrode	Engine idling, [P] position: Approx. 5.0 V
A16	SH LS+	Shift control linear solenoid power supply positive electrode	Engine idling, [P] position: Approx. 6.0 V
A17	LG1	Ground	
A18	——	Not used	
A19	——	Not used	
A20	D IND	[D] indicator light control	When [D] indicator light comes on: Approx. 10 V When [D] indicator light OFF: 0 V
A21	——	Not used	
A22	——	Not used	
A23	VBU	Back-up power system	Always battery voltage
A24	——	Not used	
A25	IG1	Power supply system	With ignition switch ON (II): Battery voltage With ignition switch OFF: 0 V
A26	PG1	Ground	

TCM CONNECTOR B (22P)

Terminal Number	Signal	Description	Measuring Conditions/Terminal Voltage
B1	SOL INH	Inhibitor solenoid control	With inhibitor solenoid ON: Battery voltage With inhibitor solenoid OFF: 0 V
B2	MAP (PB)	Manifold Absolute Pressure (MAP) sensor signal input	With ignition switch ON (II): Approx. 2.5 V With engine idling: Approx. 1.0 V (depending on engine speed)
B3	——	Not used	
B4	TPS	Throttle Position (TP) sensor signal input	With ignition switch ON (II) and throttle fully open: 4.14 – 4.82 V With ignition switch ON (II) and throttle fully closed: 0.44 – 0.56 V
B5	VSS	Vehicle Speed Sensor (VSS) signal input	With ignition switch ON (II) and rotating front wheels: 0 – 5 V cycle
B6	TMB	Data communication with ECM: Transmission control data output	With ignition switch ON (II): Pulsing signal
B7	TMA	Data communication with ECM: PGM-FI control data input	With ignition switch ON (II): Pulsing signal
B8	NDN SG	Driven pulley speed sensor ground	
B9	NDN	Driven pulley speed sensor signal input	In other than N and P position: Pulsing signal
B10	NDR	Drive pulley speed sensor signal input	In other than N and P position: Pulsing signal
B11	——	Not used	
B12	STOP SW	Brake switch signal input	With brake pedal depressed: Battery voltage With brake pedal released: 0 V
B13	DIAG-H (TXD/RXD)	Data communication: Diagnostic trouble code output	With ignition switch ON (II): Approx. 5.0 V
B14	SCS	Service check signal	With ignition switch ON (II) and service check connector open: Approx. 5 V With ignition switch ON (II) and service check connector connected with special tool: 0 V
B15	VEL	Secondary gear shaft speed sensor signal input	Depending on vehicle speed: Pulsing signal When vehicle is stopped: 0 V
B16	VEL SG	Secondary gear shaft speed sensor ground	
B17	NDR SG	Drive pulley speed sensor ground	
B18	HBRK SW	Parking brake switch signal input	With parking brake lever pulled: 0 V With parking brake lever released: Battery voltage
B19	——	Not used	
B20	VREF	+5 V reference	With ignition switch ON (II): Approx. 5 V
B21	——	Not used	
B22	——	Not used	

PCM Circuit Diagram (A/T Control System: '99 – 00 Models)

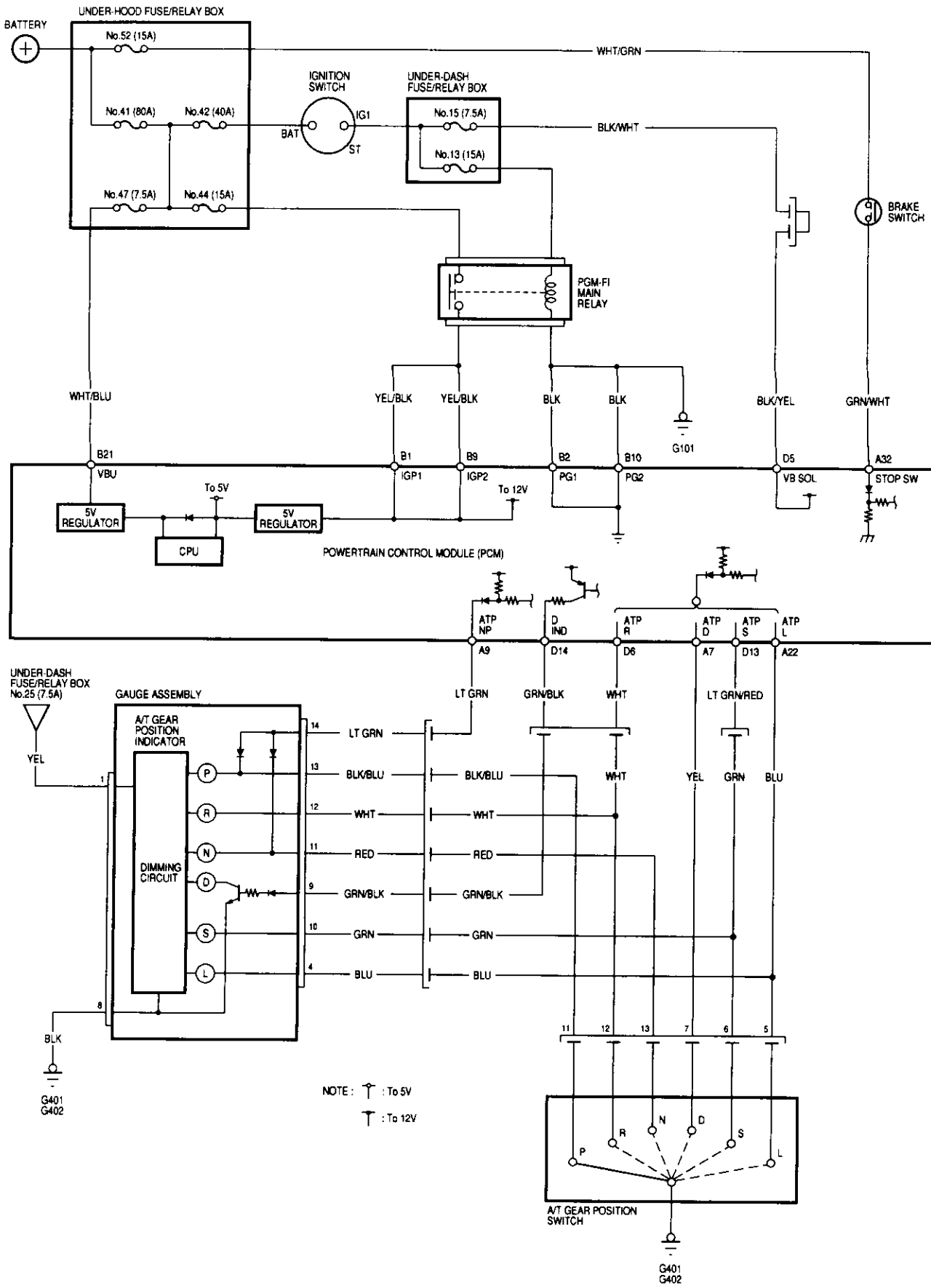

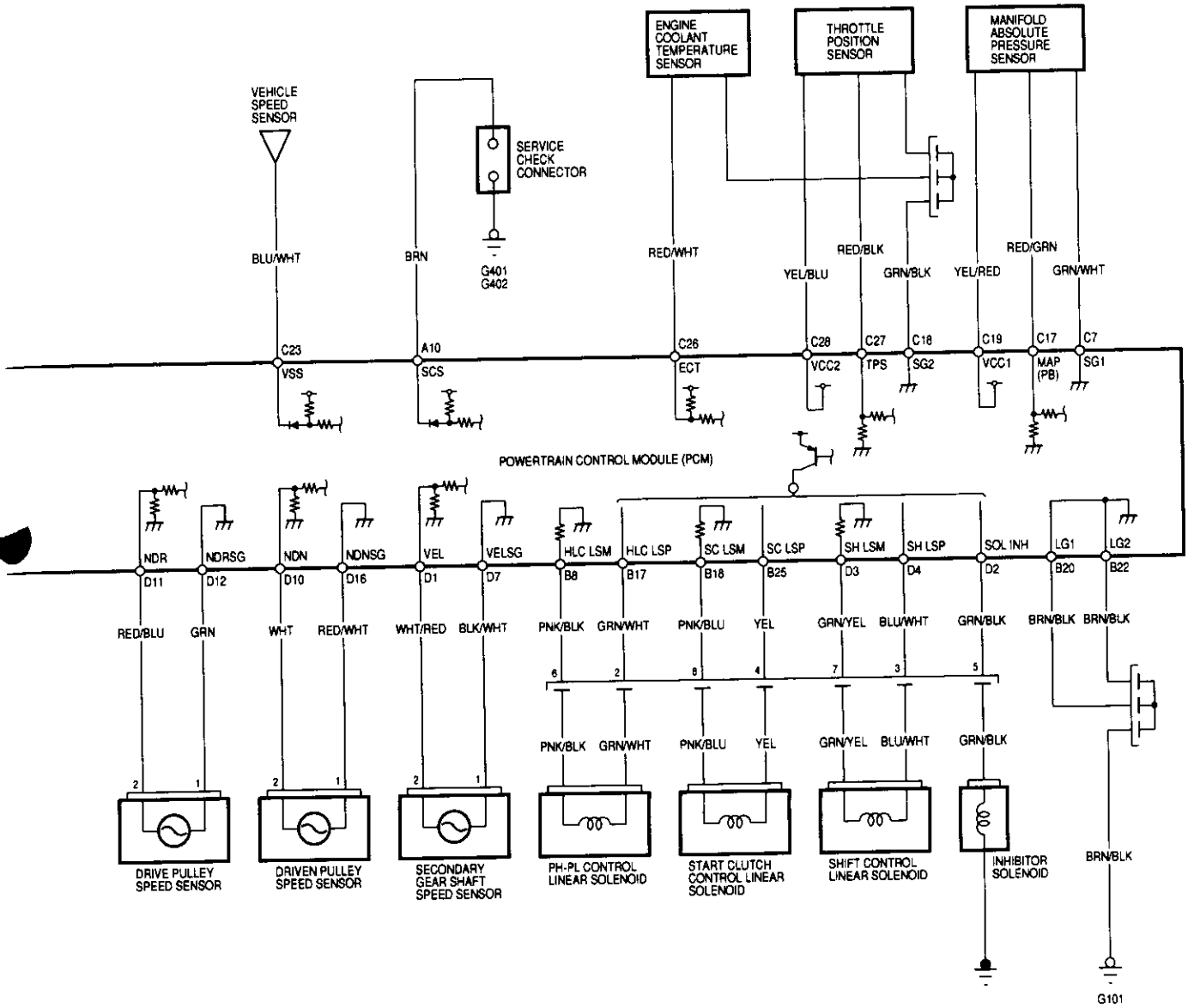

PCM Terminal Locations

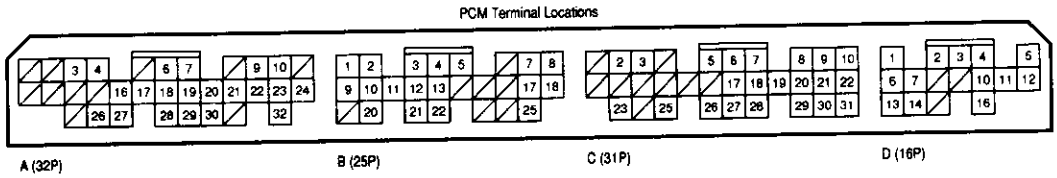

A/T Control System

The PCM terminal voltage and measuring conditions are shown for the connector terminals that are related to the A/T control system. The other PCM terminal voltage and measuring conditions are described in section 11.

PCM Connector Terminal Locations

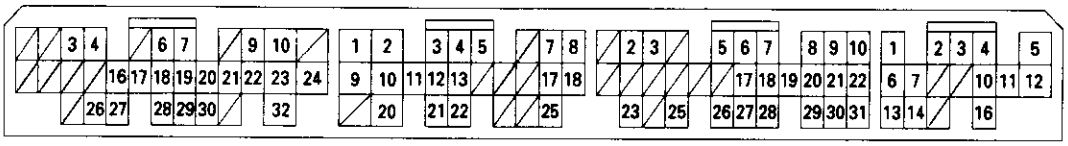

A (32P) B (25P) C (31P) D (16P)

PCM CONNECTOR A (32P)

Terminal Number	Signal	Description	Measuring Conditions/Terminal Voltage
A7	ATP D	A/T gear position switch [D] position input	In [D] position: 0 V In other than [D] position: Approx. 10 V
A9	ATP NP	A/T gear position switch [P] and [N] positions input	In [P] and [N] positions: 0 V In other than [P] and [N] position: Approx. 10 V
A10	SCS	Timing and adjustment service check signal	With ignition switch ON (II) and service check connector open: 5 V With ignition switch ON (II) and service check connector connected with special tool: 0 V
A22	ATP L	A/T gear position switch [L] position input	In [L] position: 0 V In other than [L] position: Approx. 10 V
A32	STOP SW	Brake switch signal output	Brake pedal depressed: Battery voltage Brake pedal released: 0 V

PCM CONNECTOR B (25P)

Terminal Number	Signal	Description	Measuring Conditions/Terminal Voltage
B1	IGP1	Power supply circuit from main relay	With ignition switch ON (II): Battery voltage With ignition switch OFF: 0 V
B2	PG1	Ground	
B8	HLC LSM	PH-PL control linear solenoid power supply negative electrode	
B9	IGP2	Power supply circuit from main relay	With ignition switch ON (II): Battery voltage With ignition switch OFF: 0 V
B10	PG2	Ground	
B17	HLC LSP	PH-PL control linear solenoid power supply positive electrode	With ignition switch ON (II): Pulsing signal
B18	SC LSM	Start clutch control linear solenoid power supply negative electrode	
B20	LG1	Ground	
B21	VBU	Back-up power supply	Always battery voltage
B22	LG2	Ground	
B25	SC LSP	Start clutch control linear solenoid power supply positive electrode	With ignition switch ON (II): Pulsing signal

PCM CONNECTOR D (16P)

Terminal Number	Signal	Description	Measuring Conditions/Terminal Voltage
D1	VEL	Secondary gear shaft speed sensor signal input	Depending on vehicle speed: Pulsing signal When vehicle is stopped: Approx. 0 V
D2	SOL INH	Inhibitor solenoid control	With inhibitor solenoid ON: Battery voltage With inhibitor solenoid OFF: 0 V
D3	SH LSM	Shift control linear solenoid power supply negative electrode	
D4	SH LSP	Shift control linear solenoid power supply positive electrode	With ignition switch ON (II): Pulsing signal
D5	VB SOL	Power supply for solenoid valves	With ignition switch ON (II): Battery voltage With ignition switch OFF: 0 V
D6	ATP R	A/T gear position switch R position input	In R position: 0 V In other than R position: Approx. 10 V
D7	VEL SG	Secondary gear shaft speed sensor ground	
D8	——	Not used	
D9	——	Not used	
D10	NDN	Driven pulley speed sensor signal input	In other than P and N position: Pulsing signal
D11	NDR	Driven pulley speed sensor signal input	In other than P and N position: Pulsing signal
D12	NDR SG	Drive pulley speed sensor ground	
D13	ATP S	A/T gear position switch S position input	In S position: 0 V In other than S position: Battery voltage
D14	D IND	D indicator light control	When ignition switch is first turned ON (II): Battery voltage for two seconds In D position: Battery voltage
D15	——	Not used	
D16	NDN SG	Driven pulley speed sensor ground	

I. **How To Begin Troubleshooting**
When the [D] indicator light has been reported on, use the appropriate procedure below to diagnose and repair the problem.

A. When the [D] indicator light has come on:

1. Connect the Honda PGM Tester or an OBD II Scan Tool to the 16P Data Link Connector (DLC) located near the left kick panel.

2. Turn the ignition switch ON (II).

3. Check the DTC and note it. Also check and note the freeze frame data.
Refer to the Diagnostic Trouble Code Chart and begin troubleshooting.

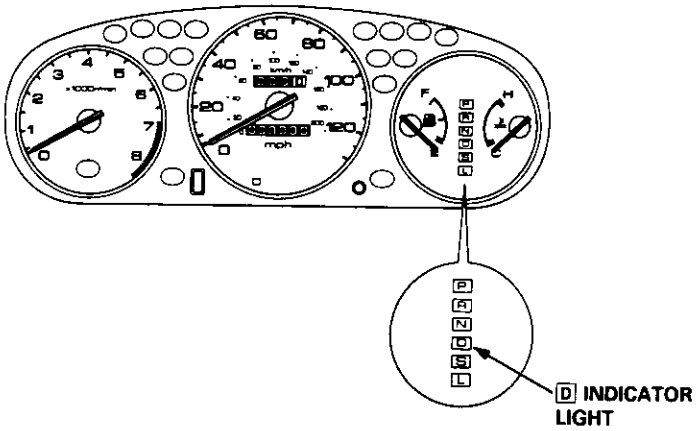

NOTE: See the OBD II Scan Tool or Honda PGM Tester user's manuals for specific operating instructions.

Some PGM-FI problems will also make the [D] indicator light come on. After repairing the PGM-FI system, disconnect the BACK UP fuse (7.5 A) in the under-hood fuse/relay box for more than 10 seconds to reset the TCM or PCM memory, then recheck.

NOTE: Disconnecting the BACK UP fuse also cancels the radio preset stations and the clock setting. Make note of the radio presets before removing the fuse so you can reset them.

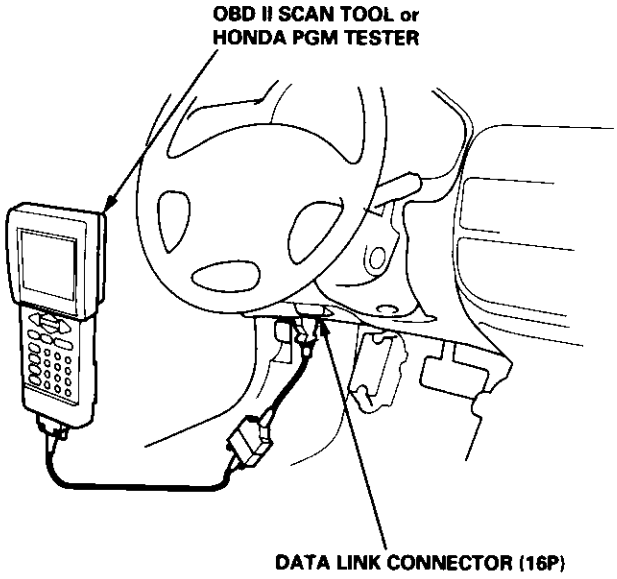

B. DTCs will be indicated by the blinking of the [D] indicator light with the SCS service connector connected to the Service Check Connector as shown. (The Service Check Connector (2P) is located under the dash on the passenger's side of the vehicle.) Turn the ignition switch ON (II).

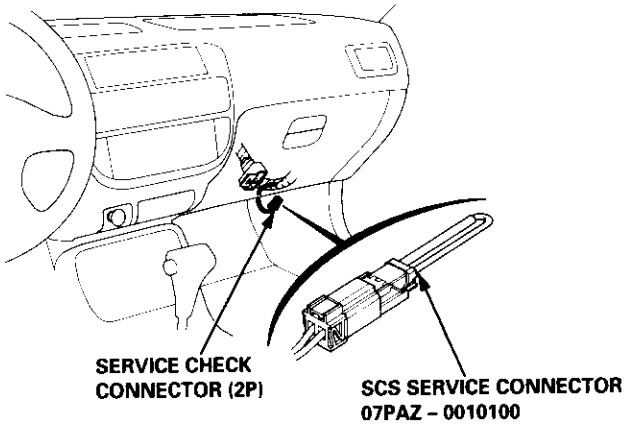

Codes 1 through 9 are indicated by individual short blinks. Codes 10 and above are indicated by a series of long and short blinks. One long blink equals 10 short blinks. Add the long and short blinks together to determine the code. After determining the code, refer to the electrical system Symptom-to-Component Chart on pages 14-238 and 14-239 for the '96 – 98 models, and on pages 14-240 and 14-241 for the '99 – 00 models.

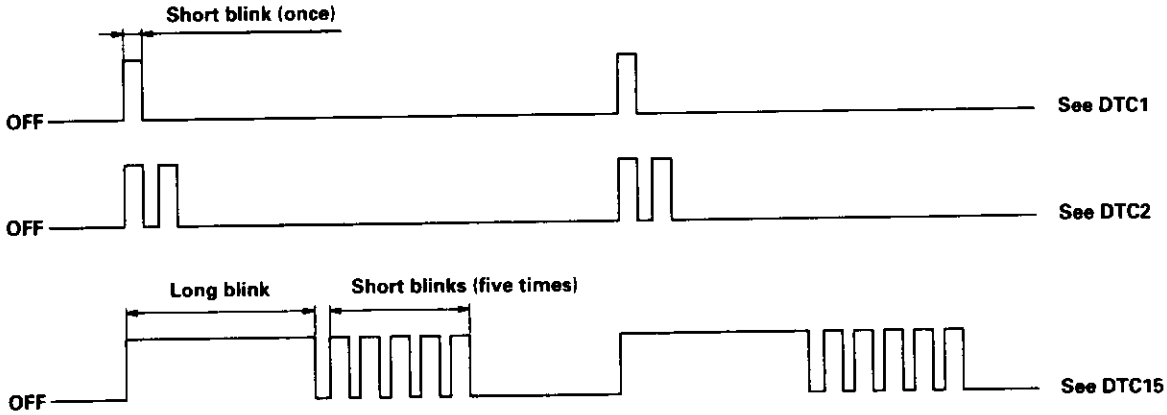

Some PGM-FI problems will also make the [D] indicator light come on. After repairing the PGM-FI system, disconnect the BACK UP fuse (7.5 A) in the under-hood fuse/relay box for more than 10 seconds to reset the TCM or PCM memory, then recheck.

(cont'd)

(cont'd)

C. If the inspection for a particular code requires voltage or resistance checks at the TCM or PCM connectors, remove the driver's side kick panel, and unbolt the TCM, and at the PCM connectors, remove the passenger's side kick panel, and unbolt the PCM. Turn the ignition switch OFF, and connect the backprobe sets and a digital multimeter as described below. Check the system according to the procedure described for the appropriate code(s) listed on the following pages.

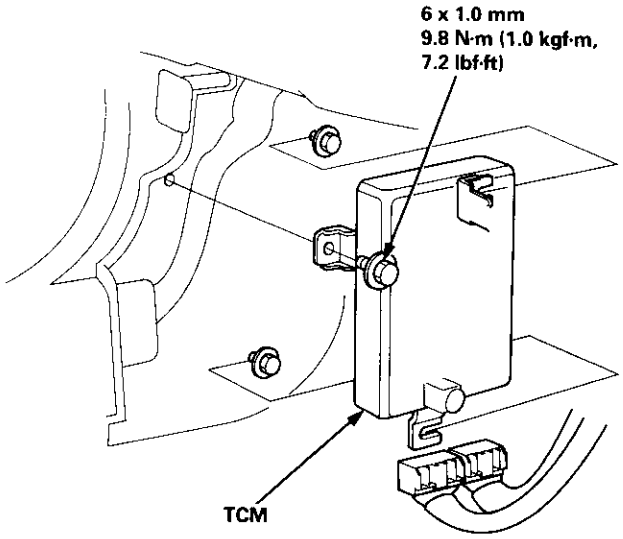

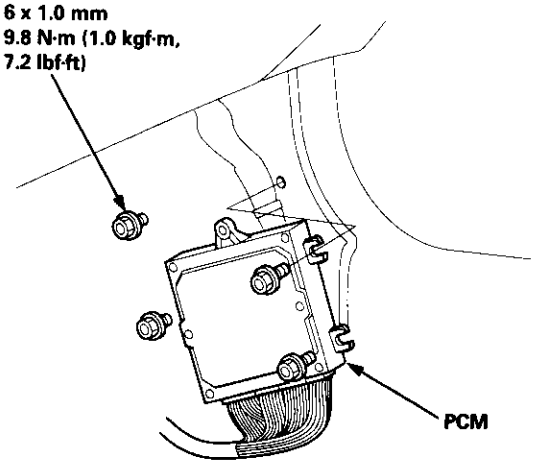

How to use the Backprobe Set

Connect the backprobe adapters to the stacking patch cords, and connect the cords to a multimeter. Using the wire insulation as a guide for the contoured tip of the backprobe adapter, gently slide the tip into the connector from the wire side until comes in contact with the terminal end of the wire.

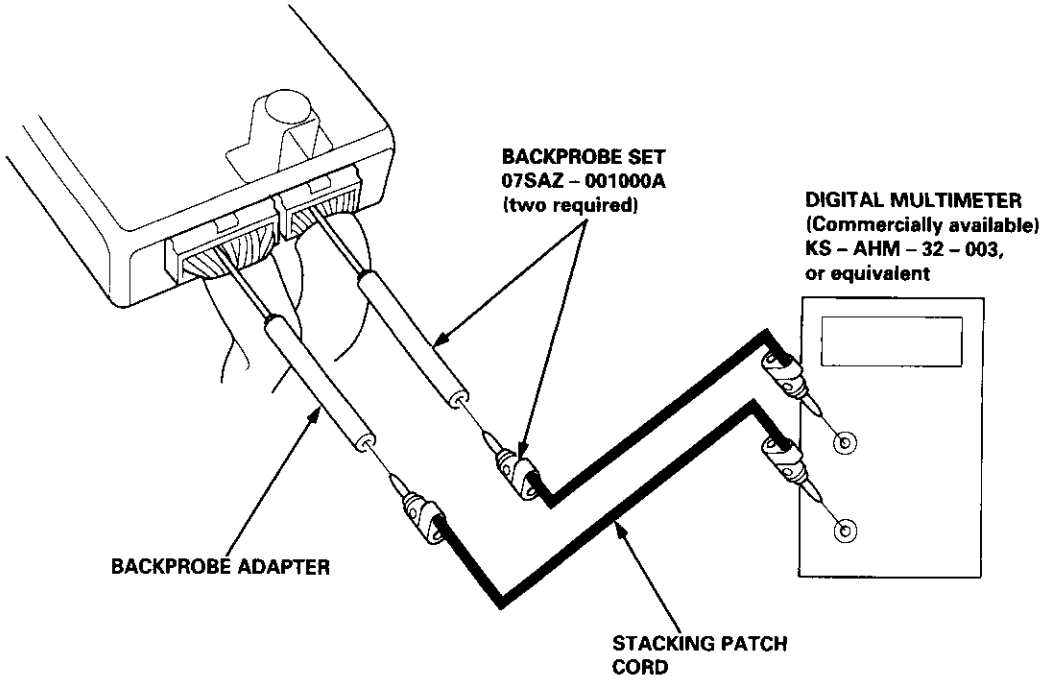

II. TCM Reset Procedure

1. Turn the ignition switch off.

2. Remove the BACK UP fuse (7.5 A) from the under-hood fuse/relay box for 10 seconds to reset the TCM or PCM.

   NOTE:
   - Disconnecting the BACK UP fuse also cancels the radio preset stations and the clock setting. Make note of the radio presets before removing the fuse so you can reset them.

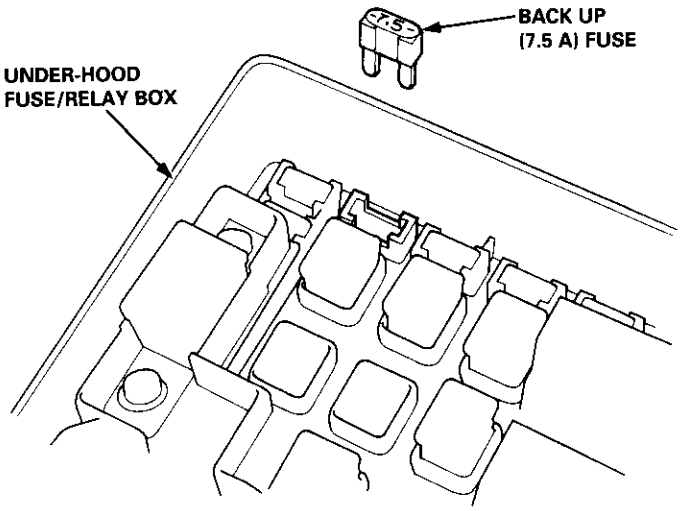

   - The TCM or PCM can also be cleared by using the OBD II Scan Tool or Honda PGM Tester.

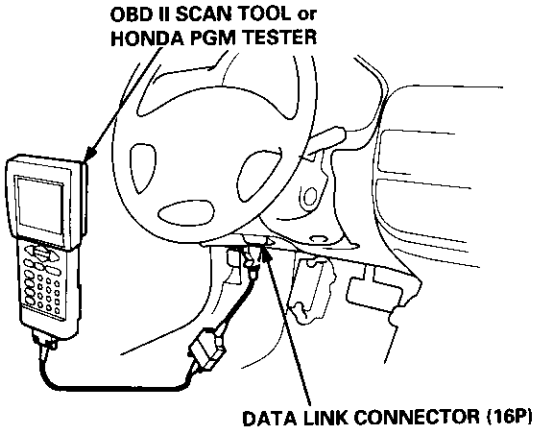

III. Final Procedure

NOTE: This procedure must be done after any troubleshooting.

1. Turn the ignition switch off.

2. Reset the TCM or PCM.

3. Disconnect the OBD II Scan Tool or Honda PGM Tester from the Data Link Connector (16P), or remove the special tool from the Service Check Connector.

4. Turn the ignition switch ON (II), and set the radio presets and clock setting.

Electrical System — '96 – 98 Models

DTC*	D Indicator Light	MIL	Detection Item	Page
P1790 (3)	Blinks	ON	Throttle position sensor	14-242
P1791 (4)	Blinks	ON	Vehicle speed sensor	14-243
P1705 (5)	Blinks	ON	A/T gear position switch (short to ground)	14-244
P1706 (6)	OFF	ON	A/T gear position switch (open)	14-246
P0725 (11)	Blinks	ON	Ignition coil	14-248
P1793 (12)	Blinks	ON	Manifold absolute pressure sensor	14-249
P1870 (30)	Blinks	ON	Shift control linear solenoid	14-250
P1873 (31)	Blinks	ON	PH-PL control linear solenoid	14-251
P1879 (32)	Blinks	ON	Start clutch control linear solenoid	14-252
P1882 (33)	Blinks	ON	Inhibitor solenoid	14-253
P1885 (34)	Blinks	ON	Drive pulley speed sensor	14-254
P1886 (35)	Blinks	ON	Driven pulley speed sensor	14-255
P1888 (36)	Blinks	ON	Secondary gear shaft speed sensor	14-256
P1655 (37)	Blinks	ON	ECM or TCM	14-257
P1890 (42)	Blinks	ON	Shift control system	14-259
P1891 (43)	Blinks	ON	Start clutch control system	14-260

*: The DTC in parentheses is the code D indicator light indicates when the Data Link Connector is connected to the Honda PGM Tester.

If the self-diagnostic [D] indicator light does not blink, perform an inspection according to the table below.

Symptom	Inspection	Ref. page
[D] indicator light does not come on for two seconds after ignition switch is first turn on (II).	——	14-262
[D] indicator light is on constantly (not blinking) whenever the ignition switch is on (II).	——	14-264

NOTE:

- If a customer described the symptom for code P1706 (6), it will be necessary to recreate the symptom by test driving, then recheck the DTC.
- Sometime the [D] indicator light and the Malfunction Indicator lamp (MIL) may come on simultaneously. If so, repair the PGM-FI system according to the DTC, then reset the memory by removing the BACK UP fuse in the under-hood fuse/relay box for more than 10 seconds. Drive the vehicle for several minutes at a speed over 30 mph (50 km/h), then recheck the DTC.

Electrical System — '99 – 00 Models

DTC*	D Indicator Light	MIL	Detection Item	Page
P1705 (5)	Blinks	ON	A/T gear position switch (short to ground)	14-265
P1706 (6)	OFF	ON	A/T gear position switch (open)	14-268
P1870 (30)	Blinks	ON	Shift control linear solenoid	14-271
P1873 (31)	Blinks	ON	PH-PL control linear solenoid	14-273
P1879 (32)	Blinks	ON	Start clutch control linear solenoid	14-275
P1882 (33)	Blinks	ON	Inhibitor solenoid	14-277
P1885 (34)	Blinks	ON	Drive pulley speed sensor	14-279
P1886 (35)	Blinks	ON	Driven pulley speed sensor	14-281
P1888 (36)	Blinks	ON	Secondary gear shaft speed sensor	14-283
P1890 (42)	Blinks	ON	Shift control system	14-285
P1891 (43)	Blinks	ON	Start clutch control system	14-286

*: The DTC in parentheses is the code D indicator light indicates when the Data Link Connector is connected to the Honda PGM Tester.

If the self-diagnostic [D] indicator light does not blink, perform an inspection according to the table below.

Symptom	Inspection	Ref. page
[D] indicator light does not come on for two seconds after ignition switch is first turned ON (II).	——	14-288
[D] indicator light is on constantly (not blinking) whenever the ignition switch is ON (II).	——	14-290

NOTE:

- If a customer described the symptom for code P1706 (6), it will be necessary to recreate the symptom by test driving, then recheck the DTC.
- Sometimes, the [D] indicator light and the Malfunction Indicator lamp (MIL) may come on simultaneously. If so, repair the PGM-FI system according to the DTC, then reset the memory by removing the BACK UP RADIO fuse in the under-hood fuse/relay box for more than 10 seconds. Drive the car for several minutes at a speed over 30 mph (50 km/h), then recheck the DTC.

Troubleshooting Flowchart — Throttle Position (TP) Sensor

NOTE: Record all freeze data before you troubleshoot.

- **OBD II Scan Tool indicates Code P1790.**
- **Self-diagnosis D indicator light blinks three times.**

Possible Cause
• Disconnected throttle position (TP) sensor connector • Short or open in TP sensor wire • Faulty TP sensor

Check for Another Code or MIL Blinking:
1. Turn the ignition switch ON (II).
2. Check whether the OBD II scan tool indicates another code or the Malfunction Indicator Lamp (MIL) blinks (see section 11).

Does the OBD II scan tool indicate another code or is the MIL blinking?

YES → **Repair the PGM-FI system (see section 11).**

NO

Measure VREF Voltage:
1. Turn the ignition switch OFF.
2. Disconnect the A (26P) and B (22P) connectors from the TCM.
3. Turn the ignition switch ON (II).
4. Measure the voltage between the B20 and A13 or A26 terminals.

TCM CONNECTORS

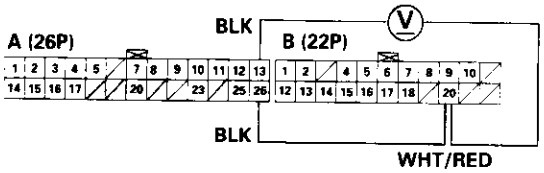

Wire side of female terminals

Is there approx. 5 V?

NO → **Repair open or short in the wire between the B20 terminal and the ECM.**

YES

Measure TPS Voltage:
Measure the voltage between the B4 and A13 or A26 terminals.

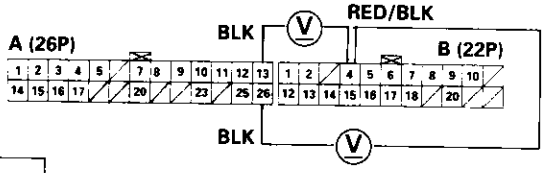

Is there 0.4 – 0.6 V?

NO → **Repair open in the wire between the B4 terminal and the TP sensor.**

YES

Check for loose TCM connectors. If necessary, substitute a known-good TCM and recheck.

Troubleshooting Flowchart — Vehicle Speed Sensor (VSS)

NOTE: Record all freeze data before you troubleshoot.

- **OBD II Scan Tool indicates Code P1791.**
- **Self-diagnosis [D] indicator light blinks four times.**

Possible Cause

- **Disconnected vehicle speed sensor (VSS) connector**
- **Short or open in VSS wire**
- **Faulty VSS**

Check that the speedometer operates correctly.

Does the speedometer operate?

NO → **Refer to section 23 for vehicle speed sensor (VSS) test.**

YES

Check the VSS Voltage:

1. Raise the vehicle.
2. Shift the transmission to [N] position.
3. Disconnect the A (26P) and B (22P) connectors from the TCM.
4. Turn the ignition switch ON (II).
5. Rotate the front wheel and check for the voltage between the B5 and A13 or A26 terminals. Block the other wheel so it does not turn.

⚠ WARNING

- **Make sure lifts, jacks, and safety stands are placed properly (see section 1).**
- **Set the parking brake securely, and block the rear wheels.**
- **Jack up the front of the vehicle, and support it with safety stands.**

TCM CONNECTORS

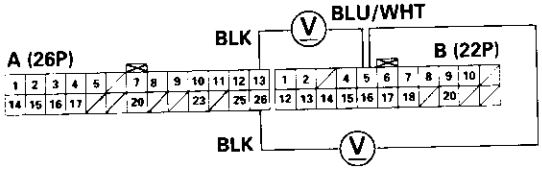

Wire side of female terminals

Does 0 V and approx. 5 V or more appear alternately?

NO → **Check for open in the wire between the B5 terminal and the vehicle speed sensor (VSS). If wire is OK, check the VSS (see section 23).**

YES

Check for loose TCM connectors. If necessary, substitute a known-good TCM and recheck.

Troubleshooting Flowchart — A/T Gear Position Switch (Short)

NOTE: Record all freeze data before you troubleshoot.

- **OBD II Scan Tool indicates Code P1705.**
- **Self-diagnosis [D] indicator light blinks five times.**

Possible Cause
• Short in A/T gear position switch wire • Faulty A/T gear position switch

NOTE: Code P1705(5) is caused when the TCM receives two gear position inputs at the same time.

Observe the A/T gear position indicator:
1. Turn the ignition switch ON (II).
2. Observe the A/T gear position indicator, and shift to each position separately.

Do any indicators stay on when the shift lever is not in that position?

NO → **The system is OK at this time. Check the wire harness for damage.**

YES ↓

Measure ATP R Voltage:
1. Shift to all positions other than [R].
2. Measure the voltage between the A11 and A13 or A26 terminals.

Is there approx. 10 V?

NO → **Check for short in the wire between the A11 terminal and the A/T gear position switch or A/T gear position indicator. If wire is OK, check for loose TCM connectors. If necessary, substitute a known-good TCM and recheck.**

YES ↓

Measure ATP NP Voltage:
1. Shift to all positions other than [N] or [P].
2. Measure the voltage between the A10 and A13 or A26 terminals.

Is there approx. 10 V?

NO → **Check for short in the wire between the A10 terminal and the A/T gear position indicator, or a short in the wires between the A/T gear position indicator and the A/T gear position switch. If wires are OK, check for loose TCM connectors. If necessary, substitute a known-good TCM and recheck.**

YES ↓

Measure ATP D Voltage:
1. Shift to all positions other than [D].
2. Measure the voltage between the A9 and A13 or A26 terminals.

Is there approx. 10 V?

NO → **Check for short in the wire between the A9 terminal and the A/T gear position switch. If wire is OK, check for loose TCM connectors. If necessary, substitute a known-good TCM and recheck.**

YES ↓

To page 14-245

TCM CONNECTOR A (26P)

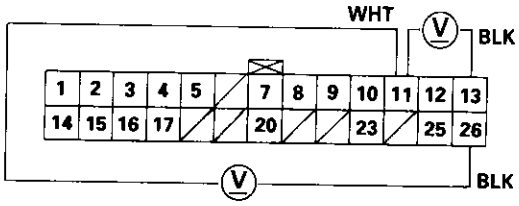

Wire side of female terminals

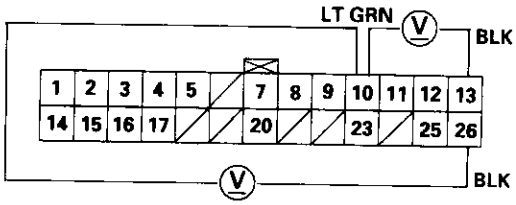

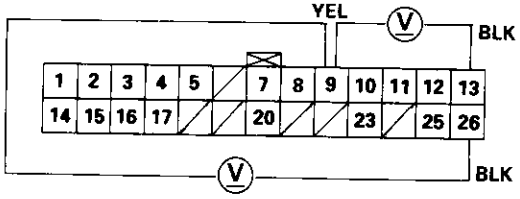

From page 14-244

Measure ATP S Voltage:
1. Shift to all positions other than [S].
2. Measure the voltage between the A8 and A13 or A26 terminals.

Is there approx. 10 V?

NO → **Check for short in the wire between the A8 terminal and the A/T gear position switch or the A/T gear position indicator. If wire is OK, check for loose TCM connectors. If necessary, substitute a known-good TCM and recheck.**

YES ↓

Measure ATP L Voltage:
1. Shift to all positions other than [L].
2. Measure the voltage between the A7 and A13 or A26 terminals.

Is there approx. 10 V?

NO → **Check for short in the wire between the A7 terminal and the A/T gear position switch or the A/T gear position indicator. If wire is OK, check for loose TCM connectors. If necessary, substitute a known-good TCM and recheck.**

YES ↓

Check for loose TCM connectors. If necessary, substitute a known-good TCM and recheck.

TCM CONNECTOR A (26P)

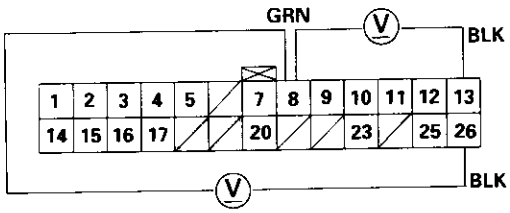

Wire side of female terminals

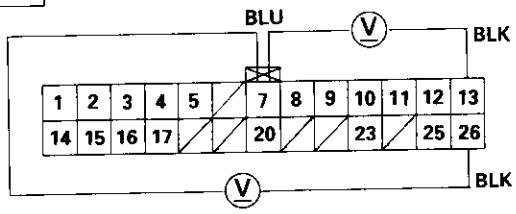

Troubleshooting Flowchart — A/T Gear Position Switch (Open)

NOTE: Record all freeze data before you troubleshoot.

- **OBD II Scan Tool indicates Code P1706.**
- **Self-diagnosis [D] indicator light blinks six times.**

Possible Cause
• Disconnected A/T gear position switch connector • Open in A/T gear position switch wire • Faulty A/T gear position switch

TCM CONNECTOR A (26P)

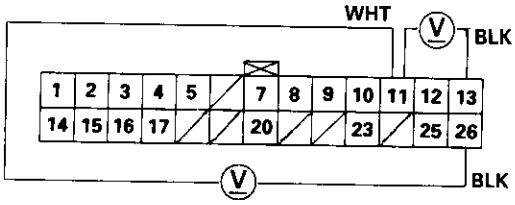

Wire side of female terminals

Measure ATP R Voltage:
1. Turn the ignition switch ON (II).
2. Shift to [R] position.
3. Measure the voltage between the A11 and A13 or A26 terminals.

Is there voltage?

YES → **Repair open in the wire between the A11 terminal and the A/T gear position switch.**

NO

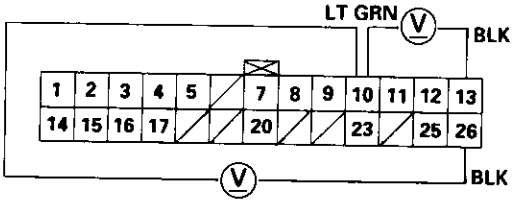

Measure ATP NP Voltage:
1. Shift to [N] or [P] position.
2. Measure the voltage between the A10 and A13 or A26 terminals.

Is there voltage?

YES → **Repair open in the wire between the A10 terminal and the A/T gear position switch.**

NO

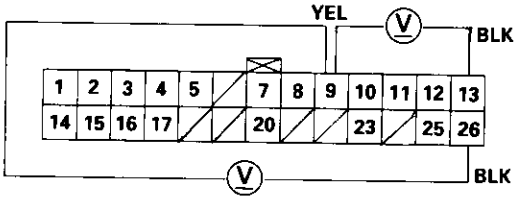

Measure ATP D Voltage:
1. Shift to [D] position.
2. Measure the voltage between the A9 and A13 or A26 terminals.

Is there voltage?

YES → **Repair open in the wire between the A9 terminal and the A/T gear position switch.**

NO

To page 14-247

From page 14-246

Measure ATP S Voltage:
1. Shift to [S] position.
2. Measure the voltage between the A8 and A13 or A26 terminals.

Is there voltage?

YES → **Repair open in the wire between the A8 terminal and the A/T gear position switch.**

NO

Measure ATP L Voltage:
1. Shift to [L] position.
2. Measure the voltage between the A7 and A13 or A26 terminals.

Is there voltage?

YES → **Repair open in the wire between the A7 terminal and the A/T gear position switch.**

NO

Check for loose TCM connectors. If necessary, substitute a known-good TCM and recheck.

TCM CONNECTOR A (26P)

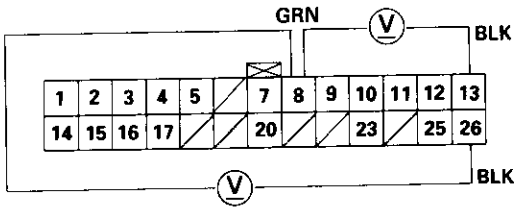

Wire side of female terminals

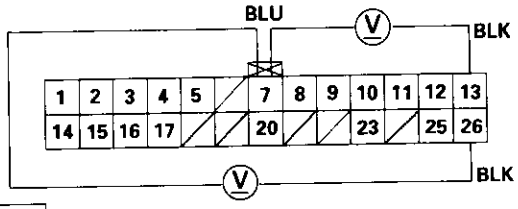

Troubleshooting Flowchart — Ignition Coil

NOTE: Record all freeze data before you troubleshoot.

- **OBD II Scan Tool indicates Code P0725.**
- **Self-diagnosis [D] indicator light indicates Code 11.**

Possible Cause
• Disconnected ignition coil connector • Short or open ignition coil wire • Faulty ignition coil

Measure NE Voltage:
1. Disconnect the A (26P) connector from the TCM.
2. Start the engine.
3. Measure the voltage between the A5 and A13 or A26 terminals.

TCM CONNECTOR A (26P)

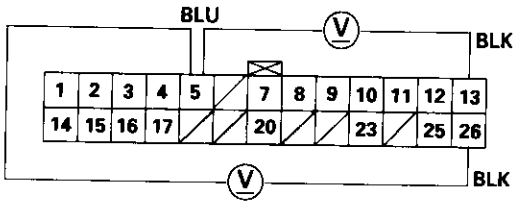

Wire side of female terminals

Is there battery voltage?

NO → **Repair open or short in the wire between the A5 terminal and the ignition coil. If wire is OK, check the ignition coil test (see section 23).**

YES → **Check for loose TCM connector. If necessary, substitute a known-good TCM and recheck.**

Troubleshooting Flowchart — Manifold Absolute Pressure (MAP) Sensor

NOTE: Record all freeze data before you troubleshoot.

- **OBD II Scan Tool indicates Code P1793.**
- **Self-diagnosis [D] indicator light indicates Code 12.**

Possible Cause

- **Disconnected manifold absolute pressure (MAP) sensor connector**
- **Short or open in MAP sensor wire**
- **Faulty MAP sensor**

Check for Another Code or MIL Blinking:

1. Turn the ignition switch ON (II).
2. Check whether the OBD II scan tool indicates another code or the Malfunction Indicator Lamp (MIL) blinks (see section 11).

Does the OBD II scan tool indicate another code or is the MIL blinking?

YES → **Repair PGM-FI system (see section 11).**

NO

Measure VREF Voltage:

1. Turn the ignition switch OFF.
2. Disconnect the A (26P) and B (22P) connectors from the TCM.
3. Turn the ignition switch ON (II).
4. Measure the voltage between the B20 and A13 or A26 terminals.

TCM CONNECTORS

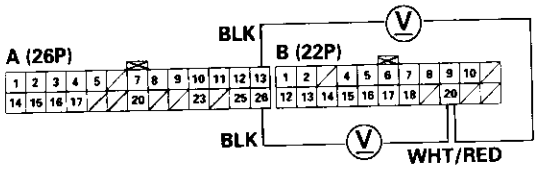

Wire side of female terminals

Is there approx. 5 V?

NO → **Repair open or short in the wire between the B20 terminal and the ECM.**

YES

Measure MAP (PB) Voltage:
Measure the voltage between the B2 and A13 or A26 terminals.

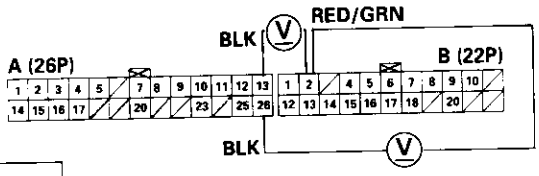

Is there approx. 3 V?

NO → **Repair open or short in the wire between the B2 terminal and the MAP sensor.**

YES

Check for loose TCM connectors. If necessary, substitute a known-good TCM and recheck.

Troubleshooting Flowchart — Shift Control Linear Solenoid

NOTE: Record all freeze data before you troubleshoot.

- **OBD II Scan Tool indicates Code P1870.**
- **Self-diagnosis [D] indicator light indicates Code 30.**

Possible Cause

- **Disconnected solenoid harness connector**
- **Short or open in shift control linear solenoid wire**
- **Faulty shift control linear solenoid**

Measure Shift Control Linear Solenoid Resistance at the Solenoid Harness Connector:

1. Disconnect the 8P connector from the solenoid harness connector.
2. Measure the resistance between the No. 3 and the No. 7 terminals of the solenoid harness connector.

SOLENOID HARNESS 8P CONNECTOR

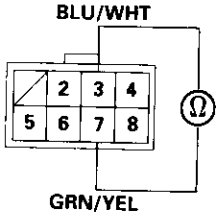

Terminal side of male terminals

Is the resistance 3.8 – 6.8 Ω?

NO → **Replace the lower valve body assembly.**

YES

Check Shift Control Linear Solenoid for a Short Circuit:

1. Disconnect the A (26P) connector from the TCM.
2. Check for continuity between body ground and the A3 terminal and the A16 terminal individually.

TCM CONNECTOR A (26P)

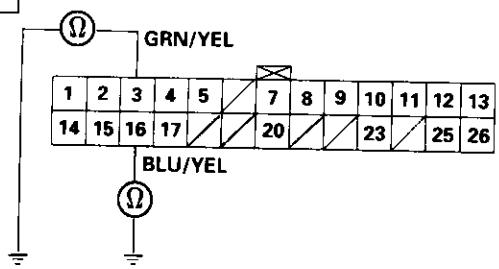

Wire side of female terminals

Is there continuity?

YES → **Repair short in the wires between the A3 and A16 terminals and the body ground.**

NO

Measure Shift Control Linear Solenoid Resistance:

1. Connect the 8P connector to the solenoid harness connector.
2. Measure the resistance between the A3 and A16 terminals.

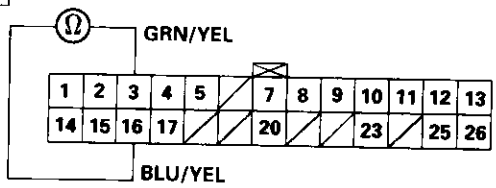

Is the resistance 3.8 – 6.8 Ω?

NO → **Repair loose terminal or open in the wires between the A3 and A16 terminals and the solenoid harness connector.**

YES

Check for loose TCM connectors. If necessary, substitute a known-good TCM and recheck.

Troubleshooting Flowchart — PH-PL Control Linear Solenoid

NOTE: Record all freeze data before you troubleshoot.

- **OBD II Scan Tool indicates Code P1873.**
- **Self-diagnosis [D] indicator light indicates Code 31.**

Possible Cause
• Disconnected solenoid harness connector • Short or open in PH-PL control linear solenoid wire • Faulty PH-PL control linear solenoid

Measure PH-PL Control Linear Solenoid Resistance at the Solenoid Harness Connector:
1. Disconnect the 8P connector from the solenoid harness connector.
2. Measure the resistance between the No. 2 and the No. 6 terminals of the solenoid harness connector.

SOLENOID HARNESS 8P CONNECTOR

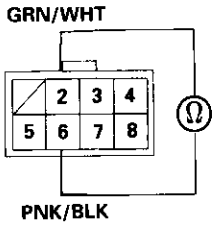

Terminal side of male terminals

Is the resistance 3.8 – 6.8 Ω?

NO → **Replace the lower valve body assembly.**

YES

Check PH-PL Control Linear Solenoid for a Short Circuit:
1. Disconnect the A (26P) connector from the TCM.
2. Check for continuity between body ground and the A2 terminal and the A15 terminal individually.

TCM CONNECTOR A (26P)

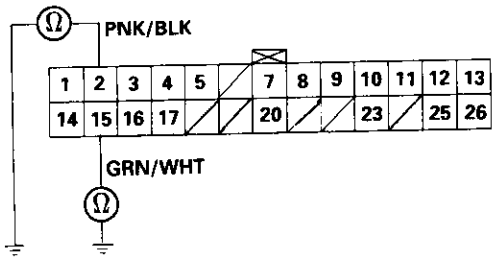

Wire side of female terminals

Is there continuity?

YES → **Repair short in the wires between the A2 and A15 terminals and the body ground.**

NO

Measure PH-PL Control Linear Solenoid Resistance:
1. Connect the 8P connector to the solenoid harness connector.
2. Measure the resistance between the A2 and A15 terminals.

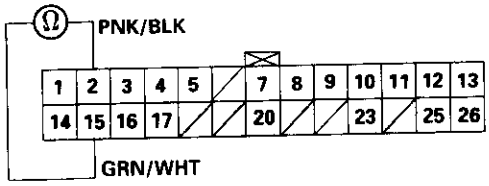

Is the resistance 3.8 – 6.8 Ω?

NO → **Repair loose terminal or open in the wires between the A2 and A15 terminals and the solenoid harness connector.**

YES

Check for loose TCM connectors. If necessary, substitute a known-good TCM and recheck.

Troubleshooting Flowchart — Start Clutch Control Linear Solenoid

NOTE: Record all freeze data before you troubleshoot.

- **OBD II Scan Tool indicates Code P1879.**
- **Self-diagnosis [D] indicator light indicates Code 32.**

Possible Cause
• Disconnected solenoid harness connector • Short or open in start clutch control linear solenoid wire • Faulty start clutch control linear solenoid

Measure Start Clutch Control Linear Solenoid Resistance at the Solenoid Harness Connector:
1. Disconnect the 8P connector from the solenoid harness connector.
2. Measure the resistance between the No. 4 and the No. 8 terminals of the solenoid harness connector.

SOLENOID HARNESS 8P CONNECTOR

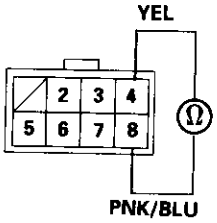

Terminal side of male terminals

Is the resistance 3.8 – 6.8 Ω?

NO → **Replace the lower valve body assembly.**

YES ↓

Check Start Clutch Control Linear Solenoid for a Short Circuit:
1. Disconnect the A (26P) connector from the TCM.
2. Check for continuity between body ground and the A1 terminal and the A14 terminal individually.

TCM CONNECTOR A (26P)

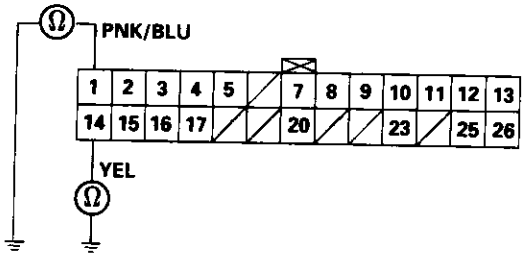

Wire side of female terminals

Is there continuity?

YES → **Repair short in the wires between the A1 and A14 terminals and the body ground.**

NO ↓

Measure Start Clutch Control Linear Solenoid Resistance:
1. Connect the 8P connector to the solenoid harness connector.
2. Measure the resistance between the A1 and A14 terminals.

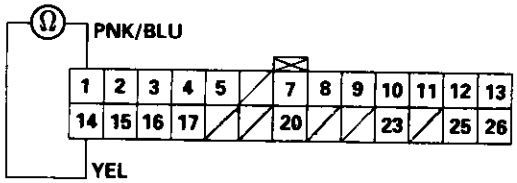

Is the resistance 3.8 – 6.8 Ω?

NO → **Repair loose terminal or open in the wires between the A1 and A14 terminals and the solenoid harness connector.**

YES ↓

Check for loose TCM connectors. If necessary, substitute a known-good TCM and recheck.

Troubleshooting Flowchart — Inhibitor Solenoid

NOTE: Record all freeze data before you troubleshoot.

- **OBD II Scan Tool indicates Code P1882.**
- **Self-diagnosis [D] indicator light indicates Code 33.**

Possible Cause
• Disconnected solenoid harness connector • Short or open in inhibitor solenoid wire • Faulty inhibitor solenoid

Measure Inhibitor Solenoid Resistance at the Solenoid Harness Connector:

1. Disconnect the 8P connector from the solenoid harness connector.
2. Measure the resistance between the No. 5 terminal of the solenoid harness connector and body ground.

SOLENOID HARNESS 8P CONNECTOR

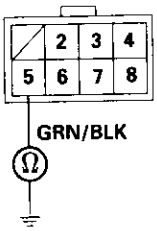

Terminal side of male terminals

Is the resistance 11.7 – 21.0 Ω?

- NO → **Replace the lower valve body assembly.**
- YES ↓

Check Inhibitor Solenoid for a Short Circuit:

1. Disconnect the B (22P) connector from the TCM.
2. Check for continuity between the B1 terminal and body ground.

TCM CONNECTOR B (22P)

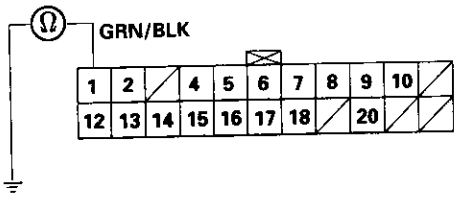

Wire side of female terminals

Is there continuity?

- YES → **Repair short in the wire between the B1 and the body ground.**
- NO ↓

Measure Inhibitor Solenoid Resistance:

1. Connect the 8P connector to the solenoid harness connector.
2. Measure the resistance between the B1 and body ground.

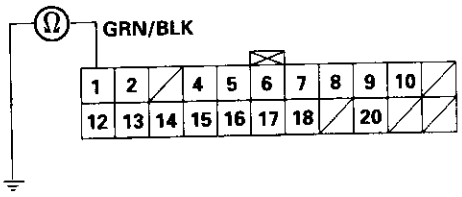

Is the resistance 11.7 – 21.0 Ω?

- NO → **Repair loose terminal or open in the wire between the B1 and the solenoid harness connector.**
- YES ↓

Check for loose TCM connectors. If necessary, substitute a known-good TCM and recheck.

Troubleshooting Flowchart — Drive Pulley Speed Sensor

NOTE: Record all freeze data before you troubleshoot.

- **OBD II Scan Tool indicates Code P1885.**
- **Self-diagnosis [D] indicator light indicates Code 34.**

Possible Cause
• Disconnected drive pulley speed sensor connector • Short or open in drive pulley speed sensor wire • Faulty drive pulley speed sensor

Check the drive pulley speed sensor installation.

Is the drive pulley speed sensor installed properly?

NO → **Reinstall and recheck.**

YES

Measure Drive Pulley Speed Sensor Resistance at the Sensor Connector:
1. Disconnect the 2P connector from the drive pulley speed sensor connector.
2. Measure the resistance of the drive pulley speed sensor.

Is the resistance 350 – 600 Ω?

NO → **Replace the drive pulley speed sensor.**

YES

Check Drive Pulley Speed Sensor for a Short Circuit:
1. Disconnect the B (22P) connector from the TCM.
2. Check for continuity between body ground and the B10 terminal and B17 terminal individually.

Is there continuity?

YES → **Repair short in the wires between the B10 and B17 terminals and the drive pulley speed sensor.**

NO

Measure Drive Pulley Speed Sensor Resistance:
1. Connect the drive pulley speed sensor 2P connector.
2. Measure the resistance between the B10 and B17 terminals.

Is the resistance 350 – 600 Ω?

NO → **Repair loose terminal or open in the wires between the B10 and B17 terminals and the drive pulley speed sensor.**

YES

Check for loose TCM connector. If necessary, substitute a known-good TCM and recheck.

DRIVE PULLEY SPEED SENSOR 2P CONNECTOR

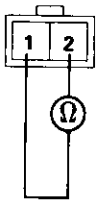

Terminal side of male terminals

TCM CONNECTOR B (22P)

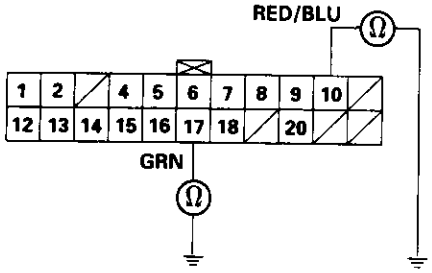

Wire side of female terminals

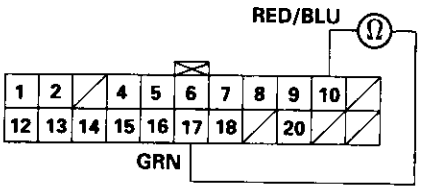

Troubleshooting Flowchart — Driven Pulley Speed Sensor

NOTE: Record all freeze data before you troubleshoot.

- **OBD II Scan Tool indicates Code P1886.**
- **Self-diagnosis [D] indicator light indicates Code 35.**

Possible Cause

- **Disconnected driven pulley speed sensor connector**
- **Short or open in driven pulley speed sensor wire**
- **Faulty driven pulley speed sensor**

Check the driven pulley speed sensor installation.

Is the driven pulley speed sensor installed properly?

NO → **Reinstall and recheck.**

YES

Measure Driven Pulley Speed Sensor Resistance at the Sensor Connector:

1. Disconnect the 2P connector from the driven pulley speed sensor connector.
2. Measure the resistance of the driven pulley speed sensor.

Is the resistance 350 – 600 Ω?

NO → **Replace the driven pulley speed sensor.**

YES

Check Driven Pulley Speed Sensor for a Short Circuit:

1. Disconnect the B (22P) connector from the TCM.
2. Check for continuity between body ground and the B8 terminal and B9 terminal individually.

Is there continuity?

YES → **Repair short in the wires between the B8 and B9 terminals and the driven pulley speed sensor.**

NO

Measure Driven Pulley Speed Sensor Resistance:

1. Connect the driven pulley speed sensor 2P connector.
2. Measure the resistance between the B8 and B9 terminals.

Is the resistance 350 – 600 Ω?

NO → **Repair loose terminal or open in the wires between the B8 and B9 terminals and the driven pulley speed sensor.**

YES

Check for loose TCM connector. If necessary, substitute a known-good TCM and recheck.

DRIVEN PULLEY SPEED SENSOR 2P CONNECTOR

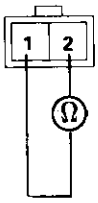

Terminal side of male terminals

TCM CONNECTOR B (22P)

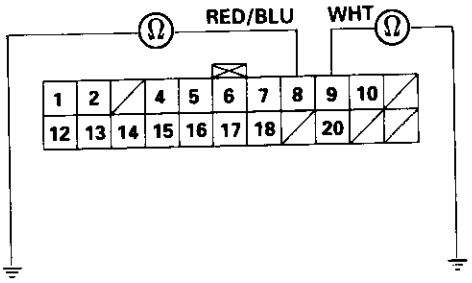

Wire side of female terminals

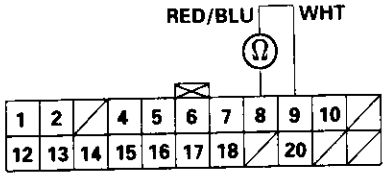

Troubleshooting Flowchart — Secondary Gear Shaft Speed Sensor

NOTE: Record all freeze data before you troubleshoot.

- **OBD II Scan Tool indicates Code P1888.**
- **Self-diagnosis [D] indicator light indicates Code 36.**

Possible Cause

- **Disconnected secondary gear shaft speed sensor connector**
- **Short or open in secondary gear shaft speed sensor wire**
- **Faulty secondary gear shaft speed sensor**

Check the secondary gear shaft speed sensor installation.

Is the secondary gear shaft speed sensor installed properly?

NO → **Reinstall and recheck.**

YES

Measure Secondary Gear Shaft Speed Sensor Resistance at the Sensor Connector:

1. Disconnect the 2P connector from the secondary gear shaft speed sensor connector.
2. Measure the resistance of the secondary gear shaft speed sensor.

Is the resistance 350 – 600 Ω?

NO → **Replace the secondary gear shaft speed sensor.**

YES

Check Countershaft Speed Sensor for a Short Circuit:

1. Disconnect the B (22P) connector from the TCM.
2. Check for continuity between body ground and the B15 terminal and B16 terminal individually.

Is there continuity?

YES → **Repair short in the wires between the B15 and B16 terminals and the secondary gear shaft speed sensor.**

NO

Measure Secondary Gear Shaft Speed Sensor Resistance:

1. Connect the secondary gear shaft speed sensor 2P connector.
2. Measure the resistance between the B15 and B16 terminals.

Is the resistance 350 – 600 Ω?

NO → **Repair loose terminal or open in the wires between the B15 and B16 terminals and the secondary gear shaft speed sensor.**

YES

Check for loose TCM connector. If necessary, substitute a known-good TCM and recheck.

SECONDARY GEAR SHAFT SPEED SENSOR 2P CONNECTOR

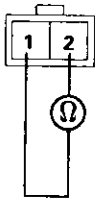

Terminal side of male terminals

TCM CONNECTOR B (22P)

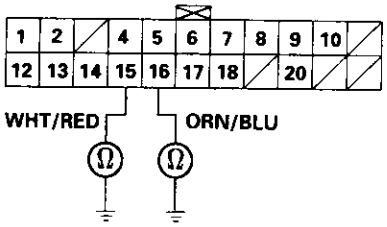

Wire side of female terminals

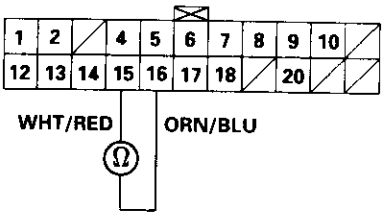

Troubleshooting Flowchart — TMA and TMB Signals

NOTE: Record all freeze data before you troubleshoot.

- **OBD II Scan Tool indicates Code P1655.**
- **Self-diagnosis [D] indicator light indicates Code 37.**

Possible Cause

- **Short or open in TMA wire between B7 terminal and ECM**
- **Short or open in TMB wire between B6 terminal and ECM**
- **Faulty ECM**
- **Faulty TCM**

Check TMA Wire Continuity:

1. Turn the ignition switch OFF.
2. Disconnect the B (22P) connector from the TCM.
3. Disconnect the C (31P) connector from the ECM.
4. Check for continuity between the B7 terminal of the TCM and the C9 terminal of the ECM.

TCM CONNECTOR B (22P)

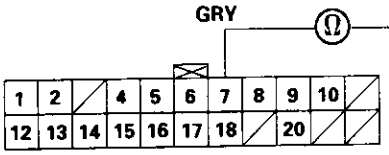

ECM CONNECTOR C (31P)

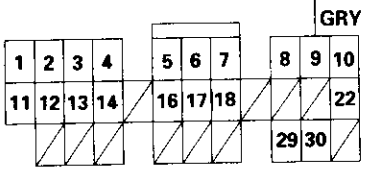

Wire side of female terminals

Is there continuity?

NO → **Repair open in the wire between the TCM and the ECM.**

YES ↓

Check TMA Wire for a Short Circuit:
Check for continuity between the B7 terminal of the TCM or the C9 terminal of the ECM and body ground.

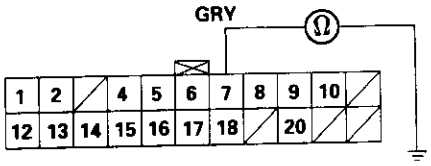

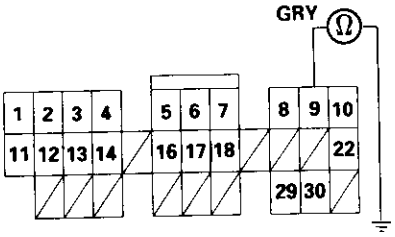

Is there continuity?

YES → **Repair short to body ground in the wire.**

NO ↓

Check the ECM:

1. Reconnect the C (31P) connector to the ECM, and the B (22P) connector to the TCM.
2. Turn the ignition switch ON (II).
3. Measure the voltage between the C9 terminal of the ECM and body ground.

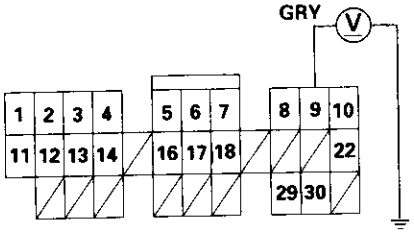

Is there approx. 10 V?

YES → **Check for loose ECM connectors. If necessary, substitute a known-good ECM and recheck.**

NO ↓

To page 14-258

(cont'd)

Troubleshooting Flowchart — TMA and TMB Signals (cont'd)

from page 14-257

Check TMB Wire Continuity:
1. Turn the ignition switch OFF.
2. Disconnect the C (31P) connector from the ECM, and the B (22P) connector from the TCM.
3. Check for continuity between the B6 terminal of the TCM and the C30 terminal of the ECM.

TCM CONNECTOR B (22P)

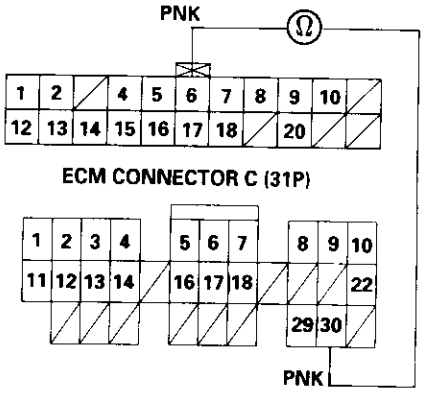

Wire side of female terminals

Is there continuity?

NO → **Repair open in the wire between the TCM and the ECM.**

YES

Check TMB Wire for a Short Circuit:
Check for continuity between the B6 terminal of the TCM or the C30 terminal of the ECM and body ground.

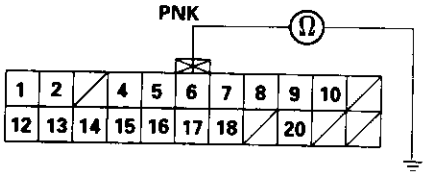

Is there continuity?

YES → **Repair short to body ground in the wire.**

NO

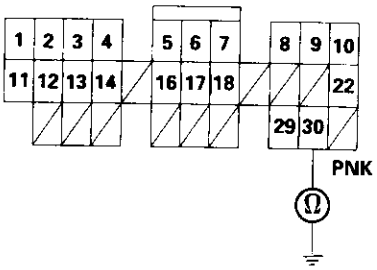

Check the TCM:
1. Reconnect the B (22P) connector to the TCM, and the C (31P) connector to the ECM.
2. Turn the ignition switch ON (II).
3. Measure the voltage between the B6 terminal of the TCM and body ground.

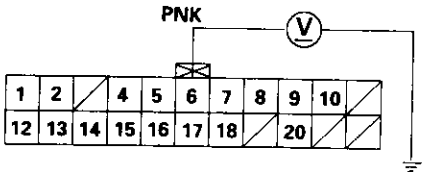

Is there approx. 5 V?

NO → **Replace the TCM.**

YES

Check for loose TCM connectors. If necessary, substitute a known-good TCM and recheck.

Troubleshooting Flowchart — Shift Control System

NOTE: Record all freeze data before you troubleshoot.

- **OBD II Scan Tool indicates Code P1890.**
- **Self-diagnosis [D] indicator light indicates Code 42.**

Possible Cause
Faulty shift control system

Check for Another Code:
Check whether the [D] indicator light indicates another code.

Is the [D] indicator light indicate another code?

- YES → **Perform the Troubleshooting Flowchart for the indicated Code(s).**
- NO ↓

Check Stall Speed RPM:
Measure the stall speed RPM (see page 14-298).

Is the stall speed over 3,500 rpm?

- YES → **Replace the transmission.**
- NO ↓

Is the stall speed below 2,000 rpm?

- YES → **Replace the lower valve body assembly.**
- NO ↓

Test-drive and Check Engine Speed:
1. Drive the vehicle at 30 mph (50 km/h) constantly for several minutes.
2. Check the engine speed.

Is the engine speed within the specification (see page 14-296 and 14-297)?

- YES → **Replace the lower valve body assembly.**
- NO ↓

Replace the transmission.

Troubleshooting Flowchart — Start Clutch Control System

NOTE: Record all freeze data before you troubleshoot.

- **OBD II Scan Tool indicates Code P1891.**
- **Self-diagnosis [D] indicator light indicates Code 43.**

Possible Cause
Faulty start clutch control system

Check for Another Code:
Check whether the [D] indicator light indicates another code.

Is the [D] indicator light indicate another code?

YES → **Perform the Troubleshooting Flowchart for the indicated Code(s).**

NO

Test Start Clutch Operation:
1. Turn the ignition switch OFF.
2. Disconnect the 8P connector from the solenoid harness connector.
3. Start the engine, and shift to [D] position.
4. Check whether the vehicle moves.

Does the vehicle move?

NO → **Replace the start clutch assembly.**

YES

Check Creeping Speed:
1. Turn the ignition switch OFF.
2. Reconnect the 8P connector to the solenoid harness connector.
3. Start the engine, and shift to [D] position.
4. Check whether the vehicle creeps, and check the creeping speed.

Does the vehicle move and is the creeping speed approx. 3 mph (5 km/h)?

NO → **Replace the lower valve body assembly.**

YES

To page 14-261

From page 14-260

Check Stall Speed RPM:
Measure the stall speed RPM (see page 14-298).

Is the stall speed over 3,500 rpm?

YES → **Replace the start clutch assembly.**

NO

Warm Up Engine and Recheck Failure:
1. Warm up the engine to normal operating temperature (the radiator fan comes on).
2. Check whether the start clutch problem appears again.

Does the problem appear?

YES → **Replace the start clutch assembly.**

NO

The system is OK at this time.

Troubleshooting Flowchart — [D] Indicator Light Does Not Come On

The [D] Indicator light does not come on when the ignition switch is first turned ON (II). (It should come on for about two seconds.)

Check the Service Check Connector:
Make sure the special tool (SCS Service Connector) is not connected to the service check connector.

Is the special tool (SCS Service Connector) connected to the service check connector?

YES → **Disconnect the special tool from the service check connector and recheck.**

NO

Check the [D] Indicator Light:
Shift to [D] position.

Does the [D] indicator light come on?

YES → **Check for loose TCM connectors. If necessary, substitute a known-good TCM and recheck.**

NO

Check the Ground Circuit:
1. Turn the ignition switch OFF.
2. Disconnect the A (26P) connector from the TCM.
3. Check for continuity between the A13 terminal and body ground and the A26 terminal and body ground.

Is there continuity?

NO → **• Repair open in the wires between the A13 or A26 terminals and G101.**
• Repair poor ground (G101).

YES

To page 14-263

TCM CONNECTOR A (26P)

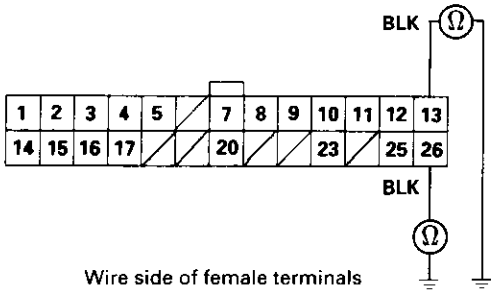

Wire side of female terminals

From page 14-262

Measure Power Supply Circuit Voltage:
1. Turn the ignition switch ON (II).
2. Measure the voltage between terminals A12 and A13 and between terminals A25 and A26.

TCM CONNECTOR A (26P)

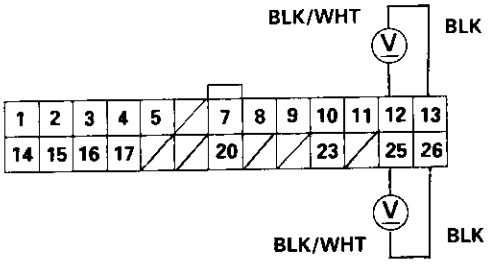

Wire side of female terminals

Is there battery voltage?

NO → **Repair open or short in the wire between the A12 and/or A25 terminals and the under-dash fuse box.**

YES

Measure D IND Voltage:
1. Turn the ignition switch OFF.
2. Connect the A (26P) connector to the TCM.
3. Connect a digital multitester to the A20 and A13 or A26 terminals.
4. Turn the ignition switch ON (II), and make sure that the voltage is available for two seconds.

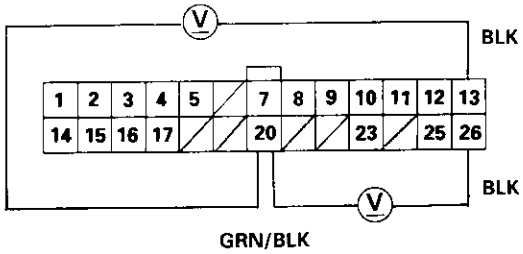

Is there voltage?

YES → **Check for open in the wire between the A20 terminal and the gauge assembly. If the wire is OK, check for a faulty [D] indicator light bulb or a faulty gauge assembly printed circuit board.**

NO

Check D IND for an Short Circuit:
1. Turn the ignition switch OFF.
2. Disconnect the A (26P) connector from the TCM.
3. Check for continuity between the A20 terminal and the No. 9 terminal of the gauge assembly connector (see section 23).

TCM CONNECTOR A (26P)

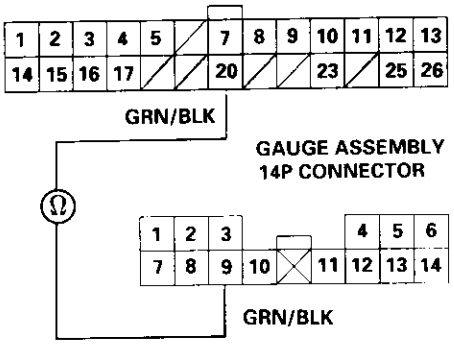

Wire side of female terminals

Is there continuity?

NO → **Repair open in the wire between the A20 terminal and the gauge assembly.**

YES

Check for loose TCM connectors. Check the A/T gear position switch. If necessary, substitute a known-good TCM and recheck.

Troubleshooting Flowchart — [D] Indicator Light On Constantly

The [D] indicator light is on constantly (not blinking) whenever the ignition switch is ON (II).

Measure D IND Voltage:
1. Turn the ignition switch OFF.
2. Disconnect the A (26P) connector from the TCM.
3. Turn the ignition switch ON (II).
4. Measure the voltage between the A20 terminal and body ground.

TCM CONNECTOR A (26P)

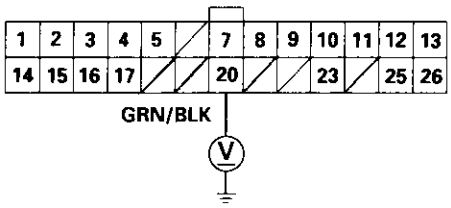

Wire side of female terminals

Is there voltage?

YES → **Repair short to power in the wire between the A20 terminal and the gauge assembly.**

NO

Measure ATP D Voltage:
1. Turn the ignition switch OFF.
2. Connect the A (26P) connector to the TCM.
3. Turn the ignition switch ON (II).
4. Shift to any position other than [D].
5. Measure the voltage between the A9 terminal and body ground.

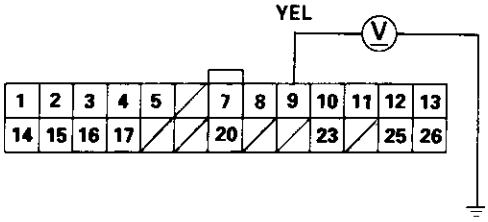

Is there voltage?

NO → **Check for a short to ground on the wire. If wire is OK, replace the A/T gear position indicator.**

YES

Replace the TCM.

Troubleshooting Flowchart — A/T Gear Position Switch (Short)

NOTE: Record all freeze data before you troubleshoot.

- **OBD II Scan Tool indicates Code P1705.**
- **Self-diagnosis [D] indicator light blinks five times.**

Possible Cause
• Short in A/T gear position switch wire • Faulty A/T gear position switch

NOTE: Code P1705(5) is caused when the PCM received two gear position inputs at the same time.

Observe the A/T Gear Position Indicator:
1. Turn the ignition switch ON (II).
2. Observe the A/T gear position indicator, and shift each position separately.

Does any indicator stay on when the shift lever is not in that position?

NO → **The system is OK at this time. Check the wire harness for damage.**

YES

Disconnect the A/T gear position switch connector.

Do all gear position indicators go out?

YES → **Replace the A/T gear position switch.**

NO

Connect the A/T gear position switch connector.

Measure ATP R Voltage:
1. Shift to all positions other than [R].
2. Measure the voltage between the D6 and B20 or B22 terminals.

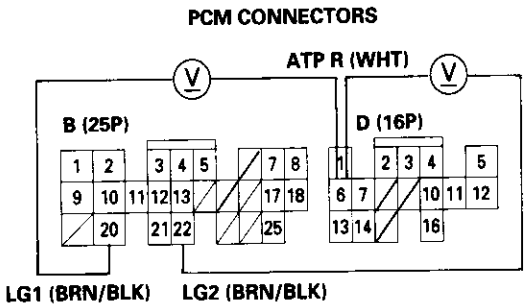

Wire side of female terminals

Is there approx. 10 V?

NO → **Check for short in the wire between the D6 terminal and the A/T gear position switch or A/T gear position indicator, and check for open in the wires between the B20 and B22 terminals and body ground (G101). If wires are OK, check for loose terminal fit in the PCM connectors. If necessary, substitute a known-good PCM and recheck.**

YES

To page 14-266

(cont'd)

Troubleshooting Flowchart — A/T Gear Position Switch (Short) (cont'd)

From page 14-265

Measure ATP NP Voltage:
1. Shift to all positions other than [P] or [N].
2. Measure the voltage between the A9 and B20 or B22 terminals.

PCM CONNECTORS

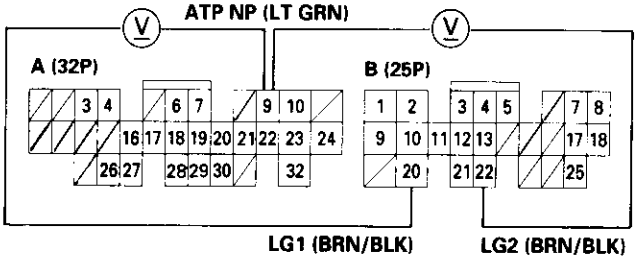

Wire side of female terminals

Is there approx. 10 V?

NO → **Check for short in the wire between the A9 terminal and the A/T gear position switch, and in the [P] and [N] position signal wires between the A/T gear position indicator and the A/T gear position switch. If wires are OK, check for loose terminal fit in the PCM connectors. If necessary, substitute a known-good PCM and recheck.**

YES

Measure ATP D Voltage:
1. Shift to all positions other than [D].
2. Measure the voltage between the A7 and B20 or B22 terminals.

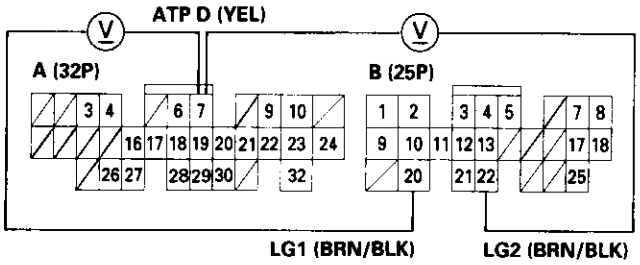

Is there approx. 10 V?

NO → **Check for short in the wire between the A7 terminal and the A/T gear position switch. If wires are OK, check for loose terminal fit in the PCM connectors. If necessary, substitute a known-good PCM and recheck.**

YES

To page 14-267

From page 14-266

Measure ATP S Voltage:
1. Shift to all positions other than [S].
2. Measure the voltage between the D13 and B20 or B22 terminals.

PCM CONNECTORS

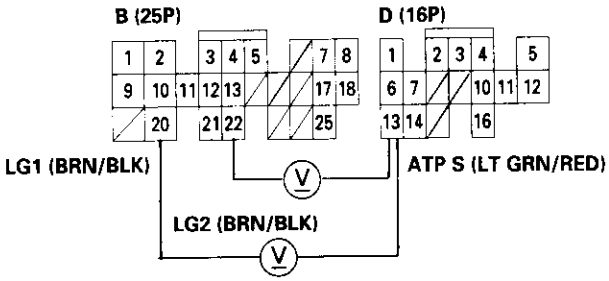

Wire side of female terminals

Is there approx. 10 V?

NO → **Check for short in the wire between the D13 terminal and the A/T gear position switch or A/T gear position indicator. If wires are OK, check for loose terminal fit in the PCM connectors. If necessary, substitute a known-good PCM and recheck.**

YES

Measure ATP L Voltage:
1. Shift to all positions other than [L].
2. Measure the voltage between the A22 and B20 or B22 terminals.

PCM CONNECTORS

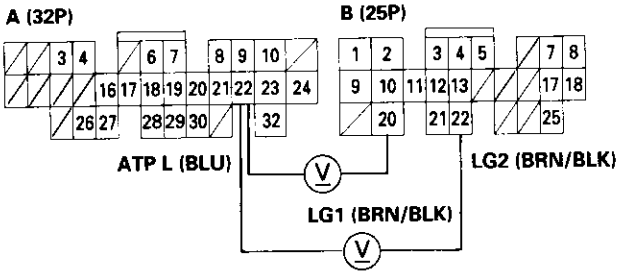

Is there approx. 10 V?

NO → **Check for short in the wire between the A22 terminal and the A/T gear position switch or A/T gear position indicator. If wires are OK, check for loose terminal fit in the PCM connectors. If necessary, substitute a known-good PCM and recheck.**

YES

Check for loose terminal fit in the PCM connectors. If necessary, substitute a known-good PCM and recheck.

Troubleshooting Flowchart — A/T Gear Position Switch (Open)

NOTE: Record all freeze data before you troubleshoot.

- **OBD II Scan Tool indicates Code P1706.**
- **Self-diagnosis [D] indicator light blinks six times.**

Possible Cause

- **Disconnected A/T gear position switch**
- **Open in A/T gear position switch wire**
- **Faulty A/T gear position switch**

Test the A/T gear position switch (see section 23).

Is the switch OK?

NO → **Replace the A/T gear position switch.**

YES

Measure ATP R Voltage:
1. Turn the ignition switch ON (II).
2. Shift to [R] position.
3. Measure the voltage between the D6 and B20 or B22 terminals.

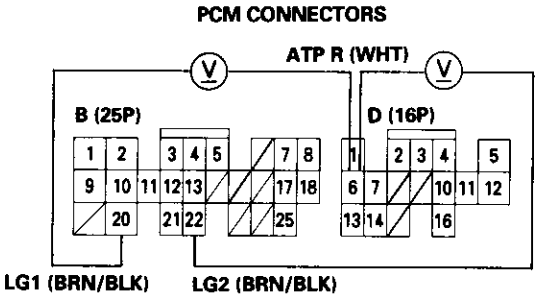

Wire side of female terminals

Is there voltage?

YES → **Repair open in the wire between the D6 terminal and the A/T gear position switch.**

NO

Measure ATP NP Voltage:
1. Shift to [P] or [N] position.
2. Measure the voltage between the A9 and B20 or B22 terminals.

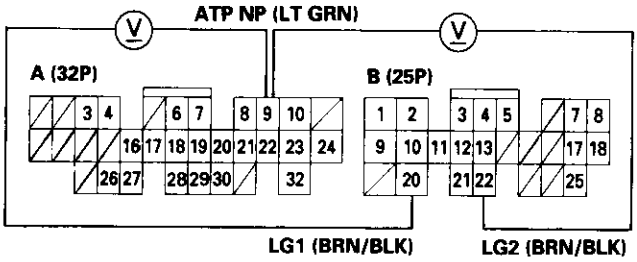

Is there voltage?

YES → **Repair open in the wire between the A9 terminal and the A/T gear position switch.**

NO

To page 14-269

From page 14-268

Measure ATP D Voltage:
1. Shift to [D] position.
2. Measure the voltage between the A7 and B20 or B22 terminals.

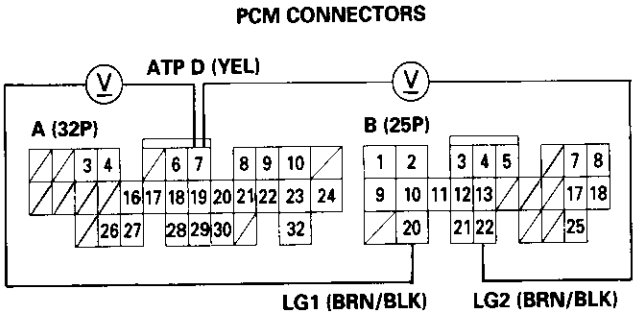

Is there voltage?

YES → **Repair open in the wire between the A7 terminal and the A/T gear position switch.**

NO

Measure ATP S Voltage:
1. Shift to [S] position.
2. Measure the voltage between the D13 and B20 or B22 terminals.

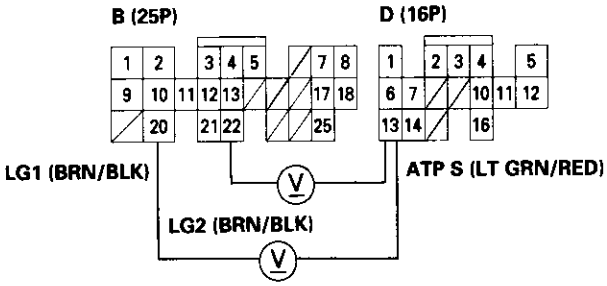

Is there voltage?

YES → **Repair open in the wire between the D13 terminal and the A/T gear position switch.**

NO

To page 14-270

(cont'd)

Troubleshooting Flowchart — A/T Gear Position Switch (Open) (cont'd)

From page 14-B-269

Measure ATP L Voltage:
1. Shift to [L] position.
2. Measure the voltage between the A22 and B20 or B22 terminals.

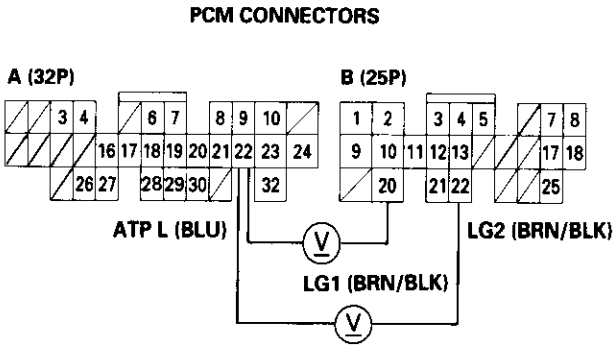

Wire side of female terminals

Is there voltage?

YES → **Repair open in the wire between the A22 terminal and the A/T gear position switch.**

NO

Check LG Wire for an Open Circuit:
1. Turn the ignition switch OFF.
2. Check for continuity between the B20 terminal and body ground, and between the B22 terminal and body ground.

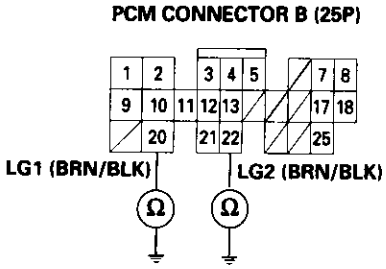

Wire side of female terminals

Is there continuity?

NO → **Repair open in the wires between the B20 and B22 terminals and body ground, and repair poor ground (G101).**

YES

Check for loose terminal fit in the PCM connectors. If necessary, substitute a known-good PCM and recheck.

Troubleshooting Flowchart — Shift Control Linear Solenoid

NOTE: Record all freeze data before you troubleshoot.

- **OBD II Scan Tool indicates Code P1870.**
- **Self-diagnosis [D] indicator light indicates Code 30.**

Possible Cause

- **Disconnected solenoid harness connector**
- **Short or open in shift control linear solenoid wire**
- **Faulty shift control linear solenoid**
- **Open in VB SOL wire**
- **Open in PG1 and PG2 wires or poor ground (G101)**

Measure VB SOL Voltage:

1. Turn the ignition switch OFF.
2. Disconnect the B (25P) and D (16P) connectors from the PCM.
3. Turn the ignition switch ON (II).
4. Measure the voltage between the D5 and B20 or B22 terminals.

PCM CONNECTORS

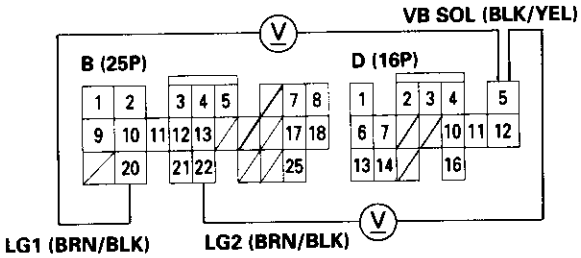

Wire side of female terminals

Is there battery voltage?

NO → **Repair open or short in the wire between the D5 terminal and the under-dash fuse/relay box.**

YES

Check the Ground Circuit:

1. Turn the ignition switch OFF.
2. Check for continuity between the terminals B2 and B22 and between terminals B10 and B20.

PCM CONNECTOR B (25P)

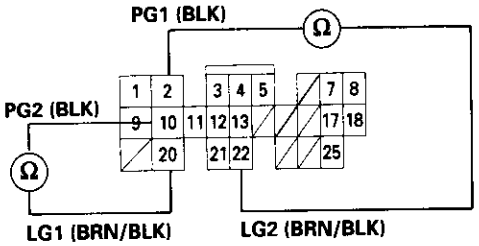

Is there continuity?

NO → **Repair open in the wire between the terminals B2, B10, B20, and B22 and G101. Repair poor ground (G101).**

YES

To page 14-272

(cont'd)

Troubleshooting Flowchart — Shift Control Linear Solenoid (cont'd)

From page 14-271

Measure Shift Control Linear Solenoid Resistance at the Solenoid Harness Connector:
1. Disconnect the solenoid harness 8P connector.
2. Measure the resistance between the No. 3 and No. 7 terminals of the solenoid harness 8P connector.

Is the resistance 3.8 – 6.8 Ω?

NO → **Replace the lower valve body assembly.**

YES

Check Shift Control Linear Solenoid for a Short Circuit:
Check for continuity between the body ground and the D3 terminal and D4 terminal individually.

Is there continuity?

YES → **Repair short in the wire between the D3 and D4 terminals and the shift control linear solenoid.**

NO

Measure Shift Control Linear Solenoid Resistance:
1. Connect the solenoid harness 8P connector.
2. Measure the resistance between the D3 and D4 terminals.

Is the resistance 3.8 – 6.8 Ω?

NO → **Repair loose terminal or open in the wires between the D3 and D4 terminals and the shift control linear solenoid.**

YES

Check for loose terminal fit in the PCM connectors. If necessary, substitute a known-good PCM and recheck.

SOLENOID HARNESS 8P CONNECTOR

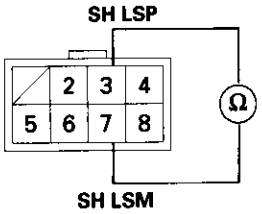

Terminal side of male terminals

PCM CONNECTOR D (16P)

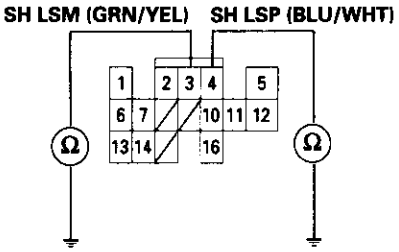

Wire side of female terminals

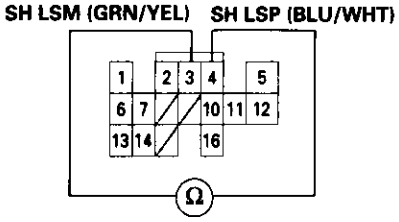

Troubleshooting Flowchart — PH-PL Control Linear Solenoid

NOTE: Record all freeze data before you troubleshoot.

- **OBD II Scan Tool indicates Code P1873.**
- **Self-diagnosis [D] indicator light indicates Code 31.**

Possible Cause

- **Disconnected solenoid harness connector**
- **Short or open in PH-PL control linear solenoid wire**
- **Faulty PH-PL control linear solenoid**
- **Open in VB SOL wire**
- **Open in PG1 and PG2 wires or poor ground (G101)**

Measure VB SOL Voltage:

1. Turn the ignition switch OFF.
2. Disconnect the B (25P) and D (16P) connectors from the PCM.
3. Turn the ignition switch ON (II).
4. Measure the voltage between the D5 and B20 or B22 terminals.

PCM CONNECTORS

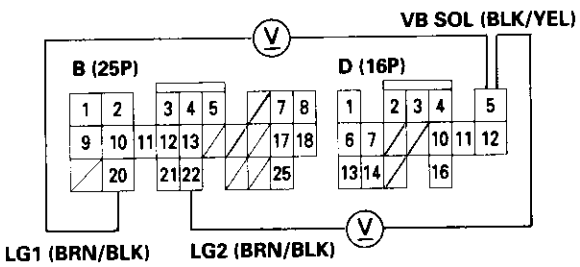

Wire side of female terminals

Is there battery voltage?

NO → **Repair open or short in the wire between the D5 terminal and the under-dash fuse/relay box.**

YES

Check the Ground Circuit:

1. Turn the ignition switch OFF.
2. Check for continuity between the terminals B2 and B22 and between terminals B10 and B20.

PCM CONNECTOR B (25P)

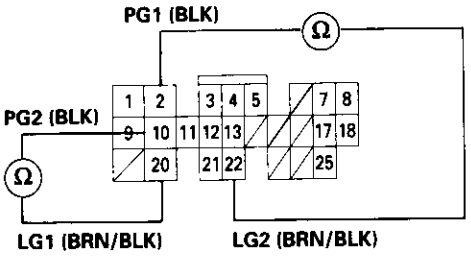

Is there continuity?

NO → **Repair open in the wire between the terminals B2, B10, B20, and B22 and G101. Repair poor ground (G101).**

YES

To page 14-274

(cont'd)

Troubleshooting Flowchart — PH-PL Control Linear Solenoid (cont'd)

From page 14-273

Measure PH-PL Control Linear Solenoid Resistance at the Solenoid Harness Connector:
1. Disconnect the solenoid harness 8P connector.
2. Measure the resistance between the No. 2 and No. 6 terminals of the solenoid harness 8P connector.

Is the resistance 3.8 – 6.8 Ω?

NO → **Replace the lower valve body assembly.**

YES

Check PH-PL Control Linear Solenoid for a Short Circuit:
Check for continuity between the body ground and the B8 terminal and B17 terminal individually.

Is there continuity?

YES → **Repair short in the wire between the B8 and B17 terminals and the PH-PL control linear solenoid.**

NO

Measure PH-PL Control Linear Solenoid Resistance:
1. Connect the solenoid harness 8P connector.
2. Measure the resistance between the B8 and B17 terminals.

Is the resistance 3.8 – 6.8 Ω?

NO → **Repair loose terminal or open in the wires between the B8 and B17 terminals and the PH-PL control linear solenoid.**

YES

Check for loose terminal fit in the PCM connectors. If necessary, substitute a known-good PCM and recheck.

SOLENOID HARNESS 8P CONNECTOR

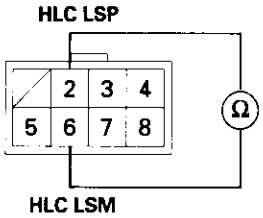

Terminal side of male terminals

PCM CONNECTOR B (25P)

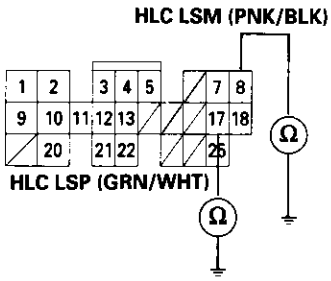

Wire side of female terminals

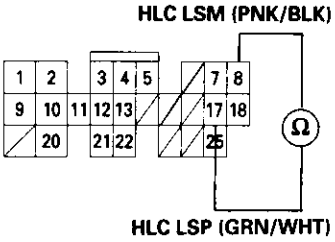

Troubleshooting Flowchart — Start Clutch Control Linear Solenoid

NOTE: Record all freeze data before you troubleshoot.

- **OBD II Scan Tool indicates Code P1879.**
- **Self-diagnosis [D] indicator light indicates Code 32.**

Possible Cause

- **Disconnected solenoid harness connector**
- **Short or open in start clutch control linear solenoid wire**
- **Faulty start clutch control linear solenoid**
- **Open in VB SOL wire**
- **Open in PG1 and PG2 wires or poor ground (G101)**

Measure VB SOL Voltage:

1. Turn the ignition switch OFF.
2. Disconnect the B (25P) and D (16P) connectors from the PCM.
3. Turn the ignition switch ON (II).
4. Measure the voltage between the D5 and B20 or B22 terminals.

PCM CONNECTORS

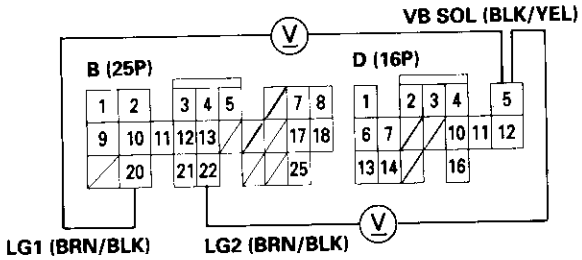

Wire side of female terminals

Is there battery voltage?

NO → **Repair open or short in the wire between the D5 terminal and the under-dash fuse/relay box.**

YES

Check the Ground Circuit:

1. Turn the ignition switch OFF.
2. Check for continuity between the terminals B2 and B22 and between terminals B10 and B20.

PCM CONNECTOR B (25P)

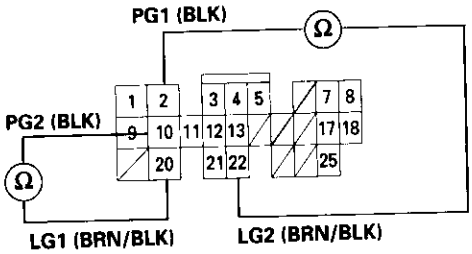

Is there continuity?

NO → **Repair open in the wire between the terminals B2, B10, B20, and B22 and G101. Repair poor ground (G101).**

YES

To page 14-276

(cont'd)

Troubleshooting Flowchart — Start Clutch Control Linear Solenoid (cont'd)

From page 14-275

Measure Start Clutch Control Linear Solenoid Resistance at the Solenoid Harness Connector:
1. Disconnect the solenoid harness 8P connector.
2. Measure the resistance between the No. 4 and No. 8 terminals of the solenoid harness 8P connector.

Is the resistance 3.8 – 6.8 Ω?

NO → **Replace the lower valve body assembly.**

YES ↓

SOLENOID HARNESS 8P CONNECTOR

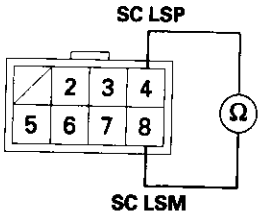

Terminal side of male terminals

Check Start Clutch Control Linear Solenoid for a Short Circuit:
Check for continuity between the body ground and the B18 terminal and B25 terminal individually.

Is there continuity?

YES → **Repair short in the wire between the B18 and B25 terminals and the shift control linear solenoid.**

NO ↓

PCM CONNECTOR B (25P)

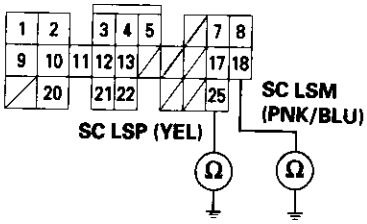

Wire side of female terminals

Measure Start Clutch Control Linear Solenoid Resistance:
1. Connect the solenoid harness 8P connector.
2. Measure the resistance between the B18 and B25 terminals.

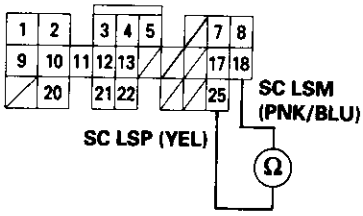

Is the resistance 3.8 – 6.8 Ω?

NO → **Repair loose terminal or open in the wires between the B18 and B25 terminals and the start clutch control linear solenoid.**

YES ↓

Check for loose terminal fit in the PCM connectors. If necessary, substitute a known-good PCM and recheck.

Troubleshooting Flowchart — Inhibitor Solenoid

NOTE: Record all freeze data before you troubleshoot.

- **OBD II Scan Tool indicates Code P1882.**
- **Self-diagnosis [D] indicator light indicates Code 33.**

Possible Cause

- **Disconnected solenoid harness connector**
- **Short or open in inhibitor solenoid wire**
- **Faulty inhibitor solenoid**
- **Open in VB SOL wire**
- **Open in PG1 and PG2 wires or poor ground (G101)**

Measure VB SOL Voltage:

1. Turn the ignition switch OFF.
2. Disconnect the B (25P) and D (16P) connectors from the PCM.
3. Turn the ignition switch ON (II).
4. Measure the voltage between the D5 and B20 or B22 terminals.

PCM CONNECTORS

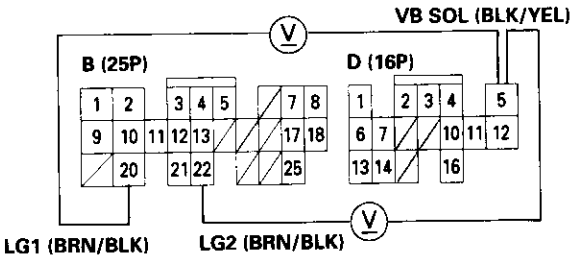

Wire side of female terminals

Is there battery voltage?

NO → **Repair open or short in the wire between the D5 terminal and the under-dash fuse/relay box.**

YES

Check the Ground Circuit:

1. Turn the ignition switch OFF.
2. Check for continuity between the terminals B2 and B22 and between terminals B10 and B20.

PCM CONNECTOR B (25P)

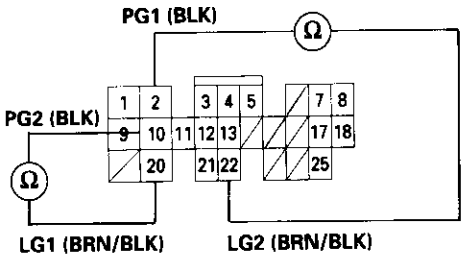

Is there continuity?

NO → **Repair open in the wire between the terminals B2, B10, B20, and B22 and G101. Repair poor ground (G101).**

YES

To page 14-278

(cont'd)

Troubleshooting Flowchart — Inhibitor Solenoid (cont'd)

From page 14-277

Measure Inhibitor Solenoid Resistance at the Solenoid Harness Connector:
1. Disconnect the solenoid harness 8P connector.
2. Measure the resistance between the No. 5 terminal of the solenoid harness 8P connector and body ground.

SOLENOID HARNESS 8P CONNECTOR

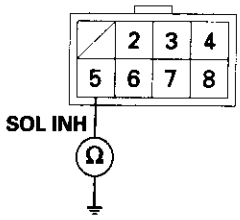

Terminal side of male terminals

Is the resistance 11.7 – 21.0 Ω?

NO → **Replace the lower valve body assembly.**

YES

Check Inhibitor Solenoid for a Short Circuit:
Check for continuity between the D2 and B20 or B22 terminals.

PCM CONNECTORS

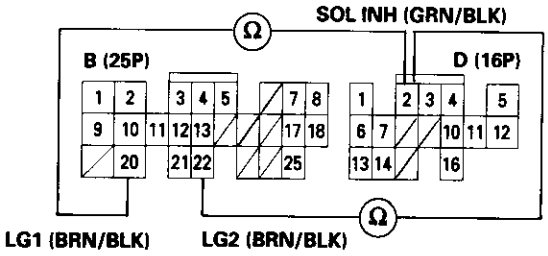

Wire side of female terminals

Is there continuity?

YES → **Repair short in the wire between the D2 terminal and the inhibitor solenoid.**

NO

Measure Inhibitor Solenoid Resistance:
1. Connect the solenoid harness 8P connector.
2. Measure the resistance between the D2 and B20 or B22 terminals.

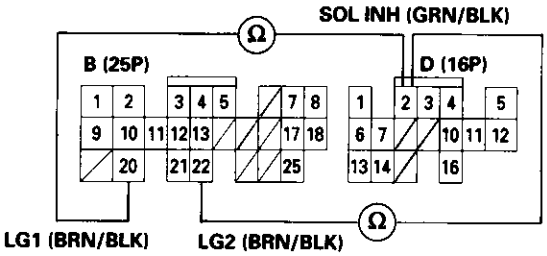

Is the resistance 11.7 – 21.0 Ω?

NO → **Repair loose terminal or open in the wire between the D2 terminal and the inhibitor solenoid.**

YES

Check for loose terminal fit in the PCM connectors. If necessary, substitute a known-good PCM and recheck.

Troubleshooting Flowchart — Drive Pulley Speed Sensor

NOTE: Record all freeze data before you troubleshoot.

- **OBD II Scan Tool indicates Code P1885.**
- **Self-diagnosis [D] indicator light indicates Code 34.**

Possible Cause

- **Disconnected drive pulley speed sensor connector**
- **Short or open in drive pulley speed sensor wire**
- **Faulty drive pulley speed sensor**

Check the drive pulley speed sensor installation, and check it for damage.

Is the drive pulley speed sensor installed properly, and not damaged?

NO → **Reinstall or replace and recheck.**

YES

Measure Drive Pulley Speed Sensor Resistance at the Sensor Connector:

1. Disconnect the 2P connector from the drive pulley speed sensor.
2. Measure drive pulley speed sensor resistance at the sensor connector.

DRIVE PULLEY SPEED SENSOR CONNECTOR

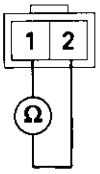

Terminal side of male terminals

Is the resistance 350 – 600 Ω?

NO → **Replace the drive pulley speed sensor.**

YES

Check Drive Pulley Speed Sensor for a Short Circuit:

1. Disconnect the D (16P) connector from the PCM.
2. Check for continuity between body ground and the D11 terminal and D12 terminal individually.

PCM CONNECTOR D (16P)

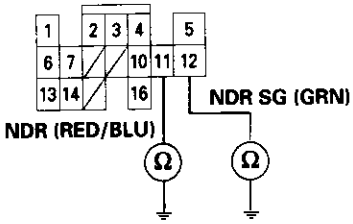

Wire side of female terminals

Is there continuity?

YES → **Repair short in the wires between the D11 and D12 terminals and the drive pulley speed sensor.**

NO

To page 14-280

(cont'd)

Troubleshooting Flowchart — Drive Pulley Speed Sensor (cont'd)

From page 14-279

Measure Drive Pulley Speed Sensor Circuit for an Open:
1. Connect the drive pulley speed sensor connector.
2. Measure the resistance between the D11 and D12 terminals.

Is the resistance 350 – 600 Ω?

NO → **Repair loose terminal or open in the wires between the D11 and D12 terminals and the drive pulley speed sensor.**

YES → **Check for loose terminal fit in the PCM connectors. If necessary, substitute a known-good PCM and recheck.**

PCM CONNECTOR D (16P)

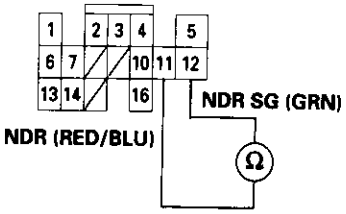

Wire side of female terminals

Troubleshooting Flowchart — Driven Pulley Speed Sensor

NOTE: Record all freeze data before you troubleshoot.

- **OBD II Scan Tool indicates Code P1886.**
- **Self-diagnosis [D] indicator light indicates Code 35.**

Possible Cause

- **Disconnected driven pulley speed sensor connector**
- **Short or open in driven pulley speed sensor wire**
- **Faulty driven pulley speed sensor**

Check the driven pulley speed sensor installation, and check it for damage.

Is the driven pulley speed sensor installed properly, and not damaged?

NO → **Reinstall or replace and recheck.**

YES

Measure Driven Pulley Speed Sensor Resistance at the Sensor Connector:

1. Disconnect the 2P connector from the driven pulley speed sensor.
2. Measure driven pulley speed sensor resistance at the sensor connector.

Is the resistance 350 – 600 Ω?

NO → **Replace the driven pulley speed sensor.**

YES

Check Driven Pulley Speed Sensor for a Short Circuit:

1. Disconnect the D (16P) connector from the PCM.
2. Check for continuity between body ground and the D10 terminal and D16 terminal individually.

Is there continuity?

YES → **Repair short in the wires between the D10 and D16 terminals and the driven pulley speed sensor.**

NO

To page 14-282

DRIVEN PULLEY SPEED SENSOR CONNECTOR

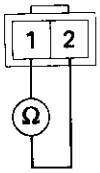

Terminal side of male terminals

PCM CONNECTOR D (16P)

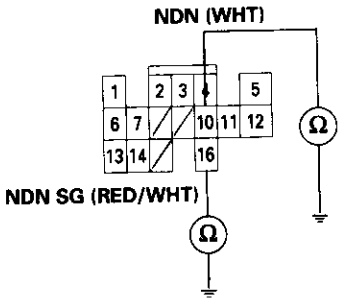

Wire side of female terminals

(cont'd)

Troubleshooting Flowchart — Driven Pulley Speed Sensor (cont'd)

From page 14-281

Measure Driven Pulley Speed Sensor Circuit for an Open:
1. Connect the driven pulley speed sensor connector.
2. Measure the resistance between the D10 and D16 terminals.

Is the resistance 350 – 600 Ω?

NO → **Repair loose terminal or open in the wires between the D10 and D16 terminals and the driven pulley speed sensor.**

YES → **Check for loose terminal fit in the PCM connectors. If necessary, substitute a known-good PCM and recheck.**

PCM CONNECTOR D (16P)

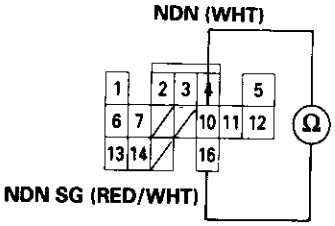

Wire side of female terminals

Troubleshooting Flowchart — Secondary Gear Shaft Speed Sensor

NOTE: Record all freeze data before you troubleshoot.

- **OBD II Scan Tool indicates Code P1888.**
- **Self-diagnosis [D] indicator light indicates Code 36.**

Possible Cause

- **Disconnected secondary gear shaft speed sensor connector**
- **Short or open in secondary gear shaft speed sensor wire**
- **Faulty secondary gear shaft speed sensor**

Check the secondary gear shaft speed sensor installation, and check it for damage.

Is the secondary gear shaft speed sensor installed properly, and not damaged?

NO → **Reinstall or replace and recheck.**

YES

Measure Secondary Gear Shaft Speed Sensor Resistance at the Sensor Connector:

1. Disconnect the 2P connector from the secondary gear shaft speed sensor.
2. Measure secondary gear shaft speed sensor resistance at the sensor connector.

Is the resistance 350 – 600 Ω?

NO → **Replace the secondary gear shaft speed sensor.**

YES

Check Secondary Gear Shaft Speed Sensor for a Short Circuit:

1. Disconnect the D (16P) connector from the PCM.
2. Check for continuity between body ground and the D1 terminal and D7 terminal individually.

Is there continuity?

YES → **Repair short in the wires between the D1 and D7 terminals and the secondary gear shaft speed sensor.**

NO

To page 14-284

SECONDARY GEAR SHAFT SPEED SENSOR CONNECTOR

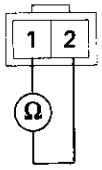

Terminal side of male terminals

PCM CONNECTOR D (16P)

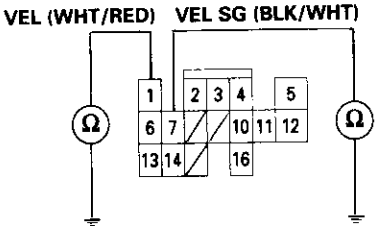

Wire side of female terminals

(cont'd)

Troubleshooting Flowchart — Secondary Gear Shaft Speed Sensor (cont'd)

From page 14-283

Measure Secondary Gear Shaft Speed Sensor Circuit for an Open:
1. Connect the secondary gear shaft speed sensor connector.
2. Measure the resistance between the D1 and D7 terminals.

Is the resistance 350 – 600 Ω?

NO → **Repair loose terminal or open in the wires between the D1 and D7 terminals and the secondary gear shaft speed sensor.**

YES → **Check for loose terminal fit in the PCM connectors. If necessary, substitute a known-good PCM and recheck.**

PCM CONNECTOR D (16P)

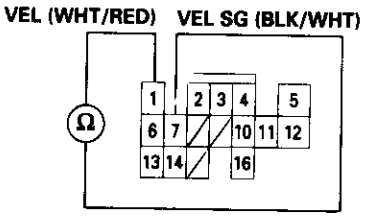

Wire side of female terminals

Troubleshooting Flowchart — Shift Control System

NOTE: Record all freeze data before you troubleshoot.

Possible Cause
Faulty shift control system

- **OBD II Scan Tool indicates Code P1890.**
- **Self-diagnosis [D] indicator light indicates Code 42.**

Check for Another Code:
Check whether the [D] indicator light indicates another code.

Is the [D] indicator light indicate another code?

YES → **Perform the Troubleshooting Flowchart for the indicated Code(s).**

NO

Check Stall Speed RPM:
Measure the stall speed RPM (see page 14-298).

Is the stall speed over 3,500 rpm?

YES → **Replace the transmission.**

NO

Is the stall speed below 2,000 rpm?

YES → **Replace the lower valve body assembly.**

NO

Test-drive and Check Engine Speed:
1. Drive the vehicle at 30 mph (50 km/h) constantly for several minutes.
2. Check the engine speed.

Is the engine speed within the specification (see page 14-296 and 14-297)?

YES → **Replace the lower valve body assembly.**

NO

Replace the transmission.

Troubleshooting Flowchart — Start Clutch Control System

NOTE: Record all freeze data before you troubleshoot.

- **OBD II Scan Tool indicates Code P1891.**
- **Self-diagnosis [D] indicator light indicates Code 43.**

Possible Cause
Faulty start clutch control system

Check for Another Code:
Check whether the [D] indicator light indicates another code.

Is the [D] indicator light indicate another code?

YES → **Perform the Troubleshooting Flowchart for the indicated Code(s).**

NO ↓

Test Start Clutch Operation:
1. Turn the ignition switch OFF.
2. Disconnect the 8P connector from the solenoid harness connector.
3. Start the engine, and shift to [D] position.
4. Check whether the vehicle moves.

Does the vehicle move?

NO → **Replace the start clutch assembly.**

YES ↓

Check Creeping Speed:
1. Turn the ignition switch OFF.
2. Reconnect the 8P connector to the solenoid harness connector.
3. Start the engine, and shift to [D] position.
4. Check whether the vehicle creeps, and check the creeping speed.

Does the vehicle move and is the creeping speed approx. 3 mph (5 km/h)?

NO → **Replace the lower valve body assembly.**

YES ↓

To page 14-287

From page 14-286

Check Stall Speed RPM:
Measure the stall speed RPM (see page 14-298).

Is the stall speed over 3,500 rpm?

YES → **Replace the start clutch assembly.**

NO

Warm Up Engine and Recheck Failure:
1. Warm up the engine to normal operating temperature (the radiator fan comes on).
2. Check whether the start clutch problem appears again.

Does the problem appear?

YES → **Replace the start clutch assembly.**

NO

The system is OK at this time.

Troubleshooting Flowchart — [D] Indicator Light Does Not Come On

The [D] indicator light does not come on when the ignition switch is first turned ON (II). (It should come on for about two seconds.)

Check the Service Check Connector:
Make sure the special tool (SCS Service Connector) is not connected to the service check connector.

Is the special tool (SCS Service Connector) connected to the service check connector?

YES → **Disconnect the special tool from the service check connector and recheck.**

NO

Check the [D] Indicator Light:
Shift to [D] position.

Does the [D] indicator light come on?

YES → **Check for loose terminal fit in the PCM connectors. If necessary, substitute a known-good PCM and recheck.**

NO

Check the Ground Circuit:
1. Turn the ignition switch OFF.
2. Disconnect the B (25P) connector from the PCM.
3. Check for continuity between the B20 terminal and body ground, and between the B22 terminal and body ground.

Is there continuity?

NO → **Repair open in the wires between the B20 and B22 terminals and ground (G101), and repair poor ground (G101).**

YES

Measure Power Supply Circuit Voltage:
1. Turn the ignition switch ON (II).
2. Measure the voltage between terminals B1 and B22 and between terminals B9 and B20.

Is there battery voltage?

NO → **Repair open or short in the wire between the B1 and/or B9 terminals and the PGM-FI main relay, and between the PGM-FI main relay and the under-hood fuse/relay box.**

YES

To page 14-289

PCM CONNECTOR B (25P)

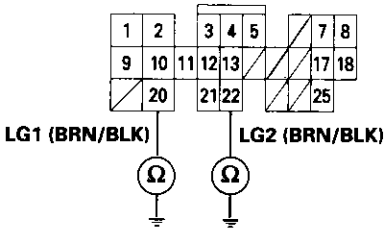

Wire side of female terminals

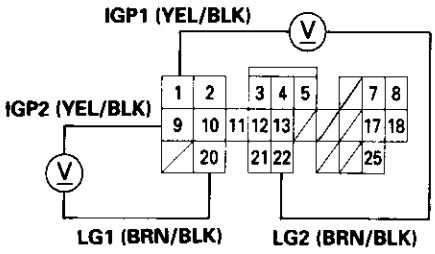

From page 14-289

Measure D IND Voltage:
1. Turn the ignition switch OFF.
2. Connect the B (25P) connector to the PCM.
3. Connect a digital multimeter to the D14 and B20 or B22 terminals.
4. Turn the ignition switch ON (II), and make sure that voltage is available for two seconds.

Is there voltage?

YES → **Check for open in the wire between the D14 terminal and the gauge assembly. If wire is OK, check for a faulty indicator light bulb or a faulty gauge assembly printed circuit board.**

NO

Check D IND for a Short Circuit:
Check for continuity between the D14 terminal and body ground.

Is there continuity?

YES → **Repair short in the wire between the D14 terminal and the gauge assembly.**

NO

Check for loose terminal fit in the PCM connectors. Check the A/T gear position switch. If necessary, substitute a known-good PCM and recheck.

PCM CONNECTORS

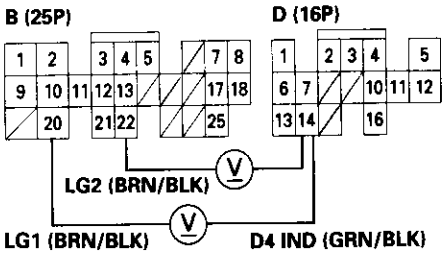

Wire side of female terminals

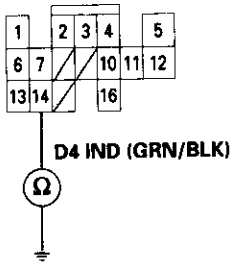

Troubleshooting Flowchart — [D] Indicator Light On Constantly

The [D] indicator light is on constantly (not blinking) whenever the ignition switch is ON (II).

Measure D IND Voltage:
1. Turn the ignition switch OFF.
2. Disconnect the D (16P) connector from the PCM.
3. Turn the ignition switch ON (II).
4. Measure the voltage between the D14 terminal and body ground.

Is there voltage?

YES → **Repair short to power in the wire between the D14 terminal and the gauge assembly.**

NO

PCM CONNECTOR D (16P)

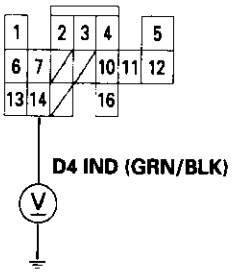

Wire side of female terminals

Measure ATP D Voltage:
1. Turn the ignition switch OFF.
2. Connect the D (16P) connector to the PCM.
3. Turn the ignition switch ON (II).
4. Shift to any position other than [D].
5. Measure the voltage between the A7 terminal and body ground.

PCM CONNECTOR A (32P)

ATP D4 (YEL)

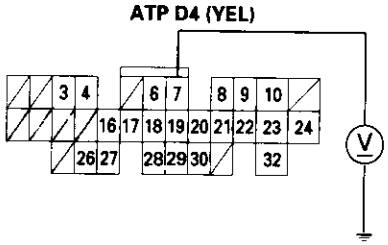

Wire side of female terminals

Is there approx. 10 V?

YES → **Replace the PCM.**

NO

Test the A/T gear position switch (see section 23).

Is the switch OK?

NO → **Replace the A/T gear position switch.**

YES

Check for a short to ground in the wire between the A7 terminal and A/T gear position switch. If wire is OK, substitute a known-good PCM and recheck.

Test

1. Disconnect the 8P connector from the solenoid harness connector.

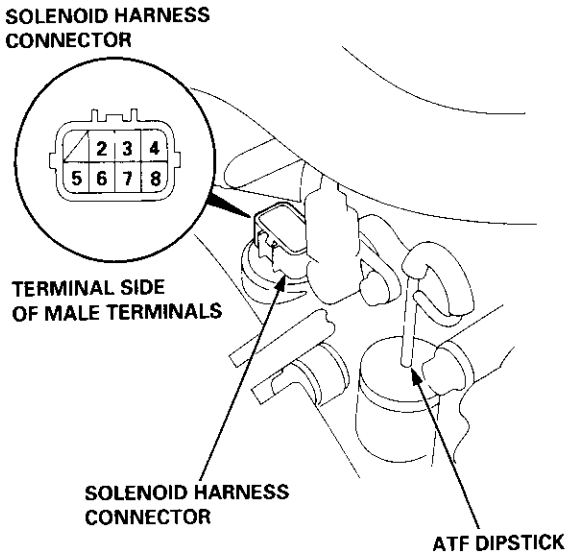

2. Measure the resistance of the shift control linear solenoid between the No. 3 and No. 7 terminals of the solenoid harness connector.

3. Measure the resistance of the PH-PL control linear solenoid between the No. 2 and No. 6 terminals.

4. Measure the resistance of the start clutch control linear solenoid between the No. 4 and No. 8 terminals.

   STANDARD: 3.8 – 6.8 Ω

5. Measure the resistance of the inhibitor solenoid between the No. 5 terminal and body ground.

   STANDARD: 11.7 – 21.0 Ω

6. Replace the lower valve body assembly if any solenoid resistance is not within its standard.

7. If all of the resistances are within the standard, a clicking sound should be heard when connecting the battery terminals to the solenoid harness connector terminals below:

   - **Shift control linear solenoid**
     No. 3: Battery positive terminal
     No. 7: Battery negative terminal
   - **PH-PL control linear solenoid**
     No. 2: Battery positive terminal
     No. 6: Battery negative terminal
   - **Start clutch control linear solenoid**
     No. 4: Battery positive terminal
     No. 8: Battery negative terminal
   - **Inhibitor solenoid**
     No. 5: Battery positive terminal
     Body ground: Battery negative terminal

SOLENOID HARNESS CONNECTOR

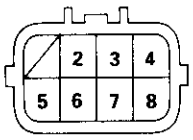

Terminal side of male terminals

8. If no clicking sound is heard, replace the lower valve body assembly.

   NOTE: If the lower valve body assembly replacement is required, see Lower Valve Body Assembly Replacement (page 14-302).

Drive Pulley/Driven Pulley/Secondary Gear Shaft Speed Sensors

Replacement

CAUTION: While replacing the speed sensor, be sure not to allow dust and other foreign particles to enter into the transmission.

1. Disconnect the connectors for the drive pulley, the driven pulley, and the secondary gear shaft speed sensor.
2. Remove the 6 mm bolt from the transmission housing, and remove the drive pulley, the driven pulley, and the secondary gear shaft speed sensors.
3. Replace the O-rings before reinstalling the drive pulley, the driven pulley, and the secondary gear shaft speed sensors.

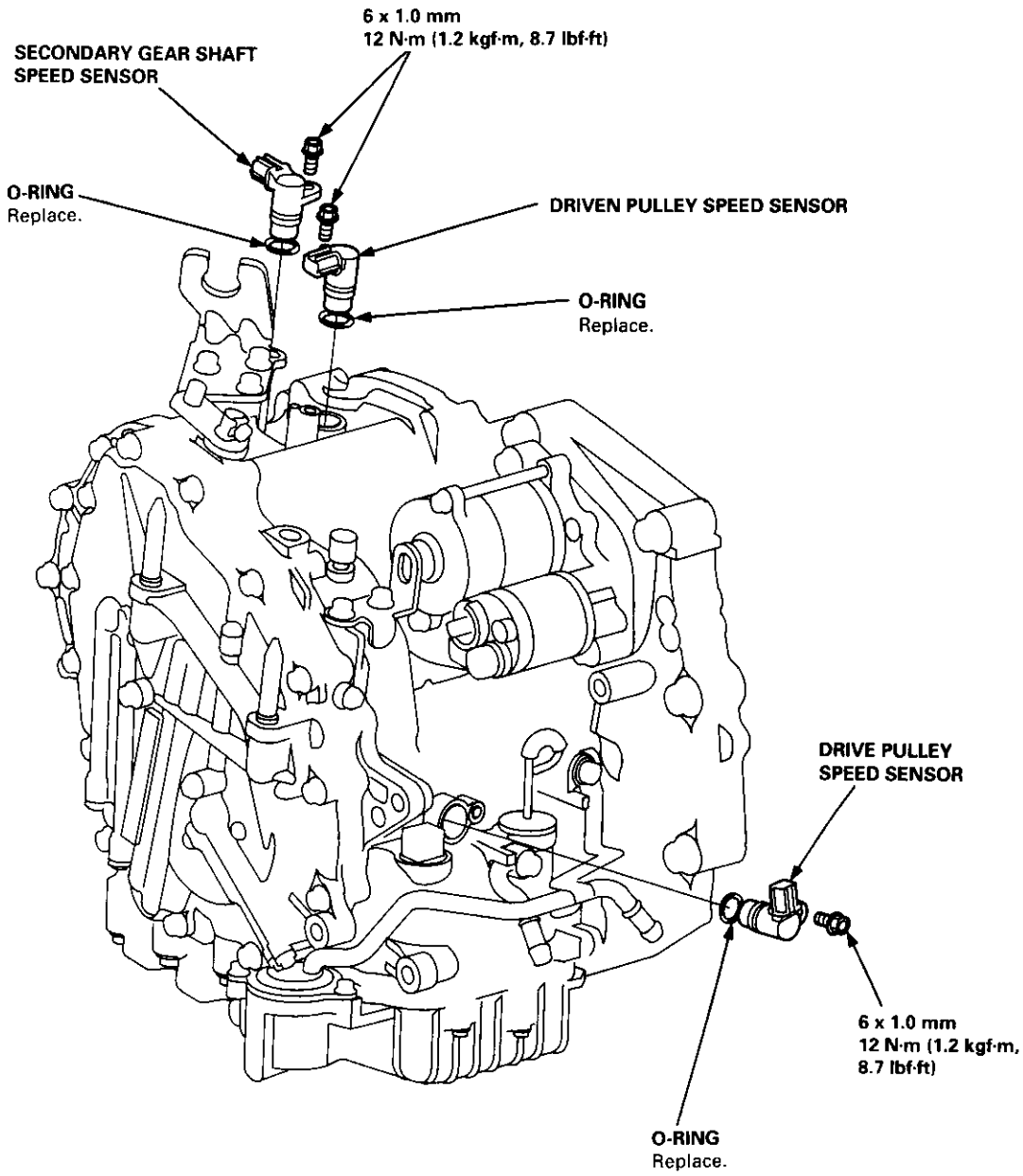

Start Clutch Calibration Procedure

NOTE: When the following parts are replaced, the TCM must memorize the feedback signal for the start clutch control.

- TCM
- Transmission assembly
- Start clutch assembly
- Lower valve body assembly
- Engine assembly or overhaul

'96 Model Only

CAUTION: Do not use this procedure on '97 – 00 models or you will damage the transmission. On '97 – 00 models, the TCM or PCM memorizes the feedback signals when you drive the vehicle.

1. Engage the parking brake, and block the front wheels securely.

2. Connect the SCS service connector to the Service Check Connector as shown. (The Service Check Connector (2P) is located under the dash on the passenger's side of the vehicle.)

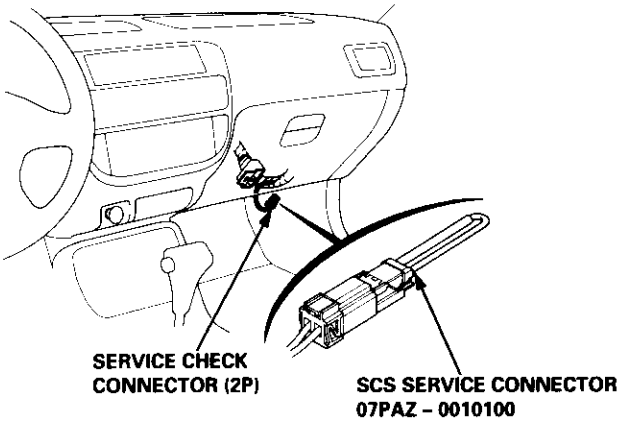

3. Start the engine, and warm it up to normal operating temperature (the radiator fan comes on twice).

4. Fully depress the brake pedal and accelerator for 20 seconds in the [D] position.

5. Shift into [N] or [P] position. To store the engine negative pressure in memory, let the engine idle in [N] or [P] position for one minute under the following conditions:

   - With the brake pedal depressed.
   - With the A/C switch OFF.
   - With the combination light switch OFF.
   - With the heater fan switch OFF.
   - Turn OFF all other electrical systems.

   NOTE: Start step 5 within 60 seconds after the radiator fan goes off.

6. Shift into [D] position, and let the engine idle for two minutes to store the feedback signal in memory under the same conditions as in step 5.

7. Connect the Honda PGM Tester. Check that the TCM has completed the start clutch calibration.

   NOTE:
   - The TCM will not store the feedback signal when the CVT fluid temperature is below 40°C (104°F) even if the engine coolant temperature reaches the normal operating temperature.
   - Repeat these procedures until the start clutch calibration is completed.

8. Disconnect the SCS service connector from the Service Check Connector.

'97 – 00 Models

The TCM ('97 – 98 models) and PCM ('99 – 00 models) memorize the feedback signal when you drive the vehicle as follows:

- After warming up the engine (the radiator fan comes on).
- Shift into [D] position.
- Turn OFF all electrical systems.
- Drive the vehicle up to the speed 37 mph (60 km/h).
- After the speed reaches 37 mph (60 km/h), release the accelerator for 5 seconds.

Symptom-to-Component Chart

Hydraulic System

SYMPTOM	Check these items on the PROBABLE CAUSE List
Engine runs, but vehicle does not move in any position.	1, 2, 3, 4, 5, 6, 7, 8, 9, 10, 20, 34, 35, 36, 38, 41
Vehicle does not move in D, L, S positions.	10, 11, 12, 20, 41
Vehicle does not move in R position.	5, 10, 11, 12, 17, 18, 19, 20, 39, 41
No shift to higher ratio.	9, 13, 14, 15, 16, 35, 37, 40
Poor acceleration.	9, 13, 14, 15, 16, 20, 35, 37, 38, 40
Flares on moving.	9, 10, 20, 21, 35, 36, 38, 40, 42
Excessive shock when depressing and releasing accelerator pedal.	9, 10, 20, 21, 35, 36, 38, 42
No engine braking.	9, 20, 21, 35, 36, 38
Vehicle does not accelerate in R position.	9, 17, 18, 19, 20, 35, 36, 38
Vehicle moves in N position. (Shift cable adjustment is proper).	10, 22, 23
Late shift from N position to D position, and from D position to N position.	10, 11, 12, 22, 41
Late shift from N position to R position, and from R position to N position.	11, 12, 17, 18, 22, 41
Engine stops when shifted to D position from N position.	9, 10, 20, 35, 37, 38, 42
Engine stops when shifted to R position from N position.	9, 18, 19, 20, 25, 26, 35, 37, 38, 42
Noise from transmission in R position.*1	5, 17, 18, 19, 25, 26
Excessive idle vibration.	2, 3, 8, 27, 28
Noise from transmission in N and P positions.	2, 3, 19, 24, 25, 28
Hunting engine speed.	16, 35, 37, 38
Vibration in all position.	8, 28
Shift lever does not operate smoothly.	11, 29, 41
Transmission will not shift into P position or transmission cannot be removed from P position.	11, 29, 30, 31, 32, 33
Vehicle does not accelerate to more than a certain speed.	9, 10, 14, 15, 16, 20, 35, 37
Excessive shock on starting off.	38, 42
Flares on accelerating at low speed.	20, 21, 38, 42
Excessive vibration in D, L, S, R positions.	20, 21, 38, 42
Low engine speed in D, L, S, R positions.	20, 21, 38, 42
Stall speed high.	10, 20, 38
Stall speed low.	9, 20, 27, 37, 38
Judder on starting off.	20, 43

*1: Some gear noise is normal in the R position due to planetary gear action.

PROBABLE CAUSE LIST	
1	Low CVT fluid level
2	ATF pump worn. AT gears worn or damaged. Foreign material in ATF pump.
3	ATF pump chain/ATF pump sprocket worn or damaged.
4	Input shaft worn or damaged.
5	Sun gear worn or damaged.
6	Final driven gear worn or damaged.
7	Secondary drive gear/secondary driven gear worn or damaged.
8	Flywheel/drive plate worn or damaged.
9	Intermediate housing assembly worn or damaged.
10	Forward clutch defective.
11	Shift cable broken/out of adjustment.
12	Manual lever pin worn.
13	ATF feed pipe (pulley pressure) worn or damaged.
14	Drive pulley speed sensor/driven pulley speed sensor defective.
15	Vehicle speed sensor defective.
16	TCM or PCM defective.
17	Reverse brake defective.
18	Reverse brake piston and related parts worn or damaged.
19	Planetary gear worn or damaged.
20	Start clutch defective.
21	ATF feed pipe (start clutch pressure) worn or damaged.
22	Clutch clearance/reverse brake clearance incorrect.
23	Reverse brake return spring/retainer worn or damaged.
24	Needle bearing on input shaft worn or damaged.
25	Thrust needle bearing on carrier worn or damaged.
26	Thrust washer on carrier worn or damaged.
27	Engine output low.
28	Flywheel assembly defective.
29	Control lever worn or damaged.
30	Park pawl/park pawl shaft worn or damaged.
31	Detent lever/park brake rod assembly worn or damaged.
32	Park gear worn or damaged.
33	Park pawl spring worn or damaged.
34	ATF strainer/ATF filter clogged.
35	Lower valve body assembly defective.
36	Lower valve body assembly defective (PL regulator valve body assembly defective).
37	Lower valve body assembly defective (shift valve body assembly defective).
38	Lower valve body assembly defective (start clutch control valve body assembly defective).
39	Lower valve body assembly defective (inhibitor solenoid defective).
40	Solenoid harness worn or damaged.
41	Manual valve body worn or damaged.
42	PB feedback system defective.
43	CVT fluid deteriorated.

NOTE: Warm up the engine to normal operating temperature (the radiator fan comes on).

1. Apply the parking brake and block the wheels. Start the engine, then shift to the [D] position while depressing the brake pedal. Depress the accelerator pedal and release it suddenly. The engine should not stall.

2. Test in [P] position
   Park the vehicle in a slope (approx. 16°), apply the parking brake, and shift into [P] position. Release the brake; the vehicle should not move.

3. Test-drive the vehicle on a flat road in the position shown in the table. Check that the engine speeds meet the approximate vehicle speeds shown in the table.

   NOTE: Throttle position sensor voltage represents the throttle opening. To monitor the throttle position sensor voltage, use one of the following methods:

   A. Connect the Honda PGM Tester, and go to the PGM-FI Data List.

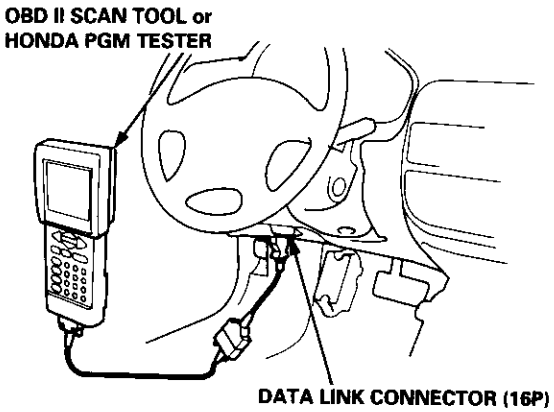

   B. 1. For road testing on '96 – 98 models, remove the driver's side kick panel to expose the TCM; on '99 – 00 models, remove the passenger's side kick panel to expose the PCM (see page 14-236).

   2. Set the digital multimeter to check throttle position sensor voltage between terminals:
      - **'96 – 98 models: TCM B4 (+) and A4 (–) or A17 (–).**
      - **'99 – 00 models: PCM C27 (+) and B20 (–) or B22 (–).**

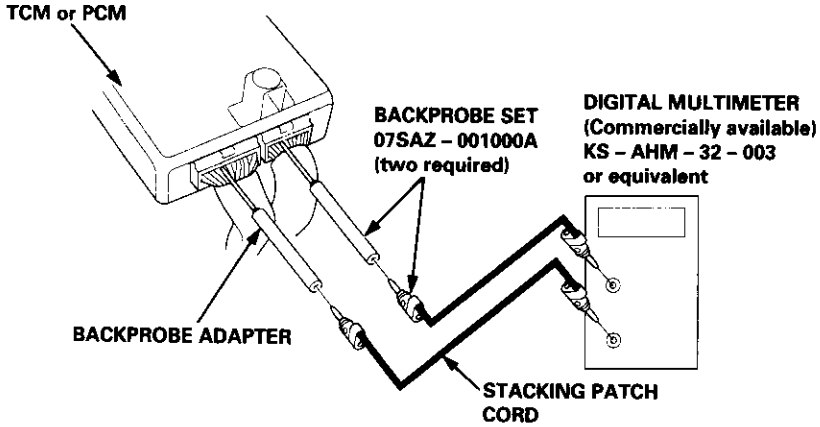

'96 – 98 Models:

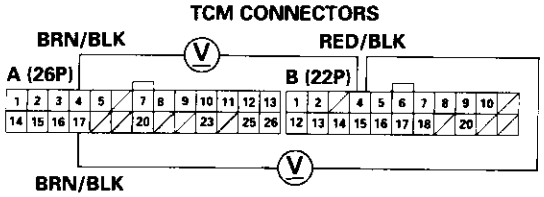

Wire side of female terminals

'99 – 00 Models:

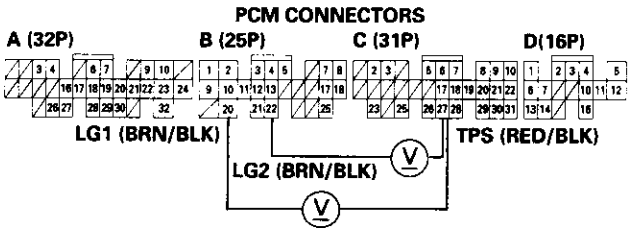

Wire side of female terminals

- **[D] position: Engine Speed rpm**

Throttle Opening	Vehicle Speed		
	25 mph (40 km/h)	37 mph (60 km/h)	62 mph (100 km/h)
Throttle position sensor voltage: 0.75 V	1,250 – 1,650	——	——
Throttle position sensor voltage: 2.25 V	2,500 – 3,100	2,650 – 3,250	2,700 – 3,300
Throttle position sensor voltage: 4.5 V Full throttle position	3,950 – 4,550	4,650 – 5,250	5,200 – 5,800

- **[S] position: Engine Speed rpm**

Throttle Opening	Vehicle Speed		
	25 mph (40 km/h)	37 mph (60 km/h)	62 mph (100 km/h)
Throttle position sensor voltage: 0.75 V	1,800 – 2,200	2,200 – 2,800	3,550 – 4,150
Throttle position sensor voltage: 2.25 V	2,950 – 3,550	3,250 – 3,850	4,050 – 4,650
Throttle position sensor voltage: 4.5 V Full throttle position	4,100 – 4,700	5,100 – 5,700	5,900 – 6,500

- **[L] position: Engine Speed rpm**

Throttle Opening	Vehicle Speed		
	25 mph (40 km/h)	37 mph (60 km/h)	62 mph (100 km/h)
Throttle position sensor voltage: 0.75 V	3,100 – 3,700	3,650 – 4,250	4,450 – 5,050
Throttle position sensor voltage: 2.25 V	3,500 – 4,100	4,050 – 4,650	4,800 – 5,400
Throttle position sensor voltage: 4.5 V Full throttle position	4,100 – 4,700	5,100 – 5,700	5,900 – 6,500

Stall Speed

Test

CAUTION:
- **To prevent transmission damage, do not test stall speed for more than 10 seconds at a time.**
- **Do not shift the lever while raising the engine speed.**
- **Be sure to remove the pressure gauge before testing stall speed.**
- **Stall speed tests should be used for diagnostic purposes only.**

1. Engage the parking brake, and block the front wheels.
2. Connect a tachometer to the engine, and start the engine.
3. Make sure the A/C switch is OFF.
4. After the engine has warmed up to normal operating temperature (the radiator fan comes on), shift into D position.
5. Fully depress the brake pedal and accelerator for 6 to 8 seconds, and note engine speed.
6. Allow two minutes for cooling, then repeat the test in S, L, and R positions.

Stall Speed RPM in D position:
Specification: 2,500 rpm
Service Limit: 2,350 – 2,650 rpm

Stall Speed RPM in S, L and R positions:
Specification: 3,000 rpm
Service Limit: 2,800 – 3,100 rpm

TROUBLE	PROBABLE CAUSE
Stall rpm high in D, S, L, and R positions	• Low fluid level or ATF pump output • Clogged ATF strainer • PH regulator valve stuck closed • Slippage of forward clutch • Faulty start clutch
Stall rpm high in R position	• Slippage of reverse brake • Faulty start clutch
Stall rpm low in D, S, L, and R positions	• Engine output low • Faulty start clutch • Stuck shift valve

Checking/Changing

CAUTION: While checking and changing, be sure not to allow dust and other foreign particles to enter into the transmission.

Checking

NOTE: Check the fluid level with the engine at normal operating temperature (the radiator fan comes on).

1. Park the vehicle on the level ground. Turn off the engine.
2. Remove the dipstick (yellow loop) from the transmission, and wipe it with a clean cloth.

   NOTE: Check the transmission fluid 60 to 90 seconds after shutting off the engine.
3. Insert the dipstick into the transmission.

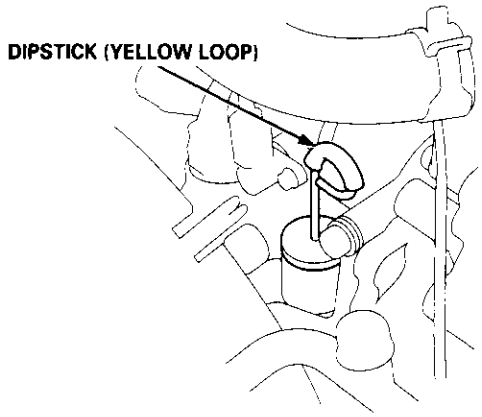

4. Remove the dipstick and check the fluid level. It should be between the upper and lower mark.

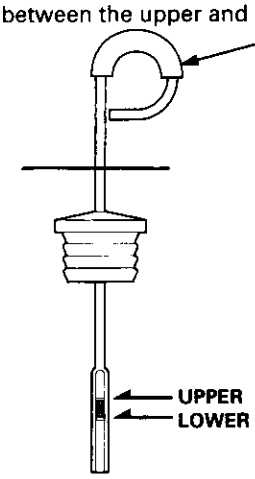

5. If the level is below the lower mark, add fluid into the filler hole to bring it to the upper mark. Use Genuine Honda CVT Fluid only.
6. Insert the dipstick into the transmission.

Changing

1. Bring the transmission up to normal operating temperature (the radiator fan comes on) by driving the vehicle. Park the vehicle on the level ground, and turn off the engine.
2. Remove the drain plug, and drain the CVT fluid.

   NOTE: If a cooler flusher is to be used, see page 14-352 and 14-353.
3. Reinstall the drain plug with a new sealing washer, then refill the transmission with Genuine Honda CVT Fluid to the upper mark on the dipstick.

   Automatic Transmission Fluid Capacity:
   3.9 ℓ (4.1 US qt, 3.4 Imp qt) at changing
   6.4 ℓ (6.8 US qt, 5.6 Imp qt) at overhaul

   Recommended Automatic Transmission Fluid:
   Genuine Honda CVT Fluid.

   Use Genuine Honda CVT fluid only. Using other fluids can affect transmission operation and may reduce transmission life.

   Change Interval:
   Normal Condition: 30, 000 miles (48,000 km)
   Severe Condition: 30,000 miles (48,000 km), but if you drive at high speeds in high [90°F (32°C) and above] temperatures, the transmission fluid should be changed every 15,000 miles (24,000 km).

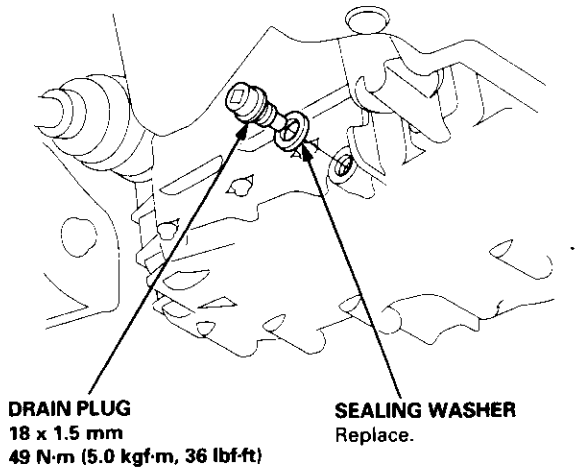

Pressure Testing

⚠ WARNING

- **While testing, be careful of the rotating front wheels.**
- **Make sure lifts, jacks, and safety stands are placed properly (see section 1).**

CAUTION:

- **Before testing, be sure the transmission fluid is filled to the proper level.**
- **Warm up the engine to normal operating temperature before testing.**
- **While testing, be sure not to allow dust and other foreign particles to enter into the transmission.**

1. Raise the front of the vehicle, and support it with safety stands (see section 1).
2. Set the parking brake, and block both rear wheels securely.
3. Allow the front wheels to rotate freely.
4. Warm up the engine (the radiator fan comes on), then stop and connect a tachometer.
5. Connect the special tool to each inspection hole.

   TORQUE: 18 N·m (1.8 kgf·m, 13 lbf·ft)

   CAUTION:
   - **Connect the oil pressure gauge securely, be sure not to allow dust and other foreign particles to enter the inspection hole.**
   - **When troubleshooting by the [D] indicator light indicates a problem, you must use an oil pressure gauge that measures 4,900 kPa (4.90 MPa, 50.0 kgf/cm², 711 psi) or more when measuring drive pulley pressure and driven pulley pressure.**

   NOTE:
   - Drive pulley pressure may be above 3,430 kPa (3.43 MPa, 35.0 kgf/cm², 498 psi) when there is a transmission problem that causes the TCM or PCM to go into the fail-safe mode.
   - Use a commercially available oil pressure gauge that measures 4,900 kPa (4.90 MPa, 50.0 kgf/cm², 711 psi) or more, and the A/T Oil Pressure Hose, 2210 mm (07MAJ – PY4011A).

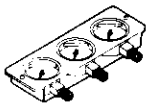

A/T OIL PRESSURE GAUGE SET W/PANEL 07406 – 0020400

A/T LOW PRESSURE GAUGE W/PANEL 07406 – 0070300

A/T PRESSURE HOSE ADAPTER 07MAJ – PY40120 (4 Required)

A/T PRESSURE HOSE 2210 mm 07MAJ – PY4011A (4 Required)

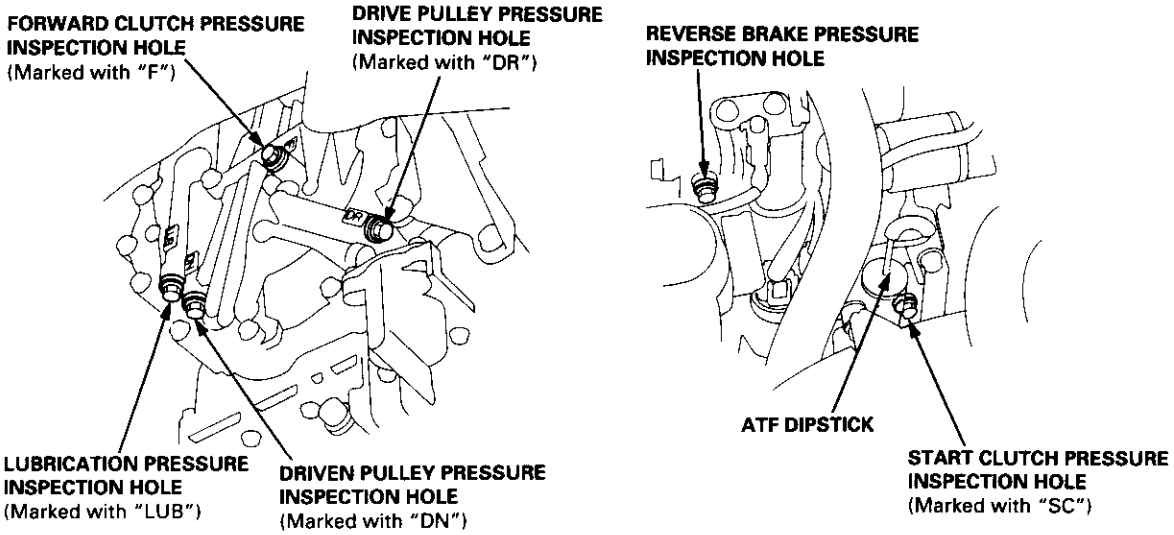

6. Start the engine.

7. Shift to the respective shift lever positions in the table, and measure the following pressures at 1,500 rpm.

   - Forward Clutch Pressure
   - Reverse Brake Pressure
   - Drive Pulley Pressure
   - Driven Pulley Pressure

8. Shift to [N] position, and measure the lubrication pressure at 3,000 rpm.

PRESSURE	SHIFT LEVER POSITION	SYMPTOM	PROBABLE CAUSE	FLUID PRESSURE Standard/Service Limit
Forward Clutch	[D]	No or low forward clutch pressure	Forward Clutch	1.4 – 1.75 MPa (14.3 – 17.8 kgf/cm², 203 – 253 psi)
Reverse Brake	[R]	No or low reverse brake pressure	Reverse Brake	1.4 – 1.75 MPa (14.3 – 17.8 kgf/cm², 203 – 253 psi)
Drive Pulley	[N]	No or low drive pulley pressure	ATF pump, PH regulator valve, PL regulator valve, Shift valve	0.2 – 0.7 MPa (2 – 7.1 kgf/cm², 28 – 101 psi)
		Drive pulley pressure too high	PH regulator valve, PL regulator valve, Shift valve, Shift control linear solenoid	
Driven Pulley		No or low driven pulley pressure	ATF pump, PH regulator valve, Shift valve, Shift control linear solenoid	1.5 – 2.3 MPa (15.3 – 23.5 kgf/cm², 218 – 334 psi)
		Driven pulley pressure too high	PH regulator valve	
Lubrication		No or low lubrication pressure	ATF pump, Lubrication valve	Above 0.2 MPa (Above 2 kgf/cm², 30 psi)

9. Disconnect the special tool after pressure testing.

10. Install the sealing bolts in the inspection holes with new sealing washers, and tighten the bolts to the specified torque.

    TORQUE: 18 N·m (1.8 kgf·m, 13 lbf·ft)

    CAUTION: Keep all foreign particles out of the transmission.

Lower Valve Body Assembly

Replacement

⚠WARNING Make sure lifts, jacks, and safety stands are placed properly (see section 1).

CAUTION: While removing and installing the lower valve body assembly, be sure not to allow dust and other foreign particles to enter into the transmission.

1. Raise the front of the vehicle, and support it with safety stands (see section 1).

2. Set the parking brake, and block both rear wheels securely.

3. Remove the drain plug, and drain the CVT fluid. Reinstall the drain plug with a new sealing washer (see page 14-299).

   CAUTION: Keep all of other foreign particles out of the transmission.

4. Disconnect the 8P connector from the solenoid harness connector.

5. Remove the ATF cooler hoses at the ATF cooler lines. Turn the ends of the ATF cooler hoses up to prevent ATF from flowing out, then plug the ATF cooler hoses.

   CAUTION: Keep all of other foreign particles out of the transmission.

6. Remove the right front mount/bracket.

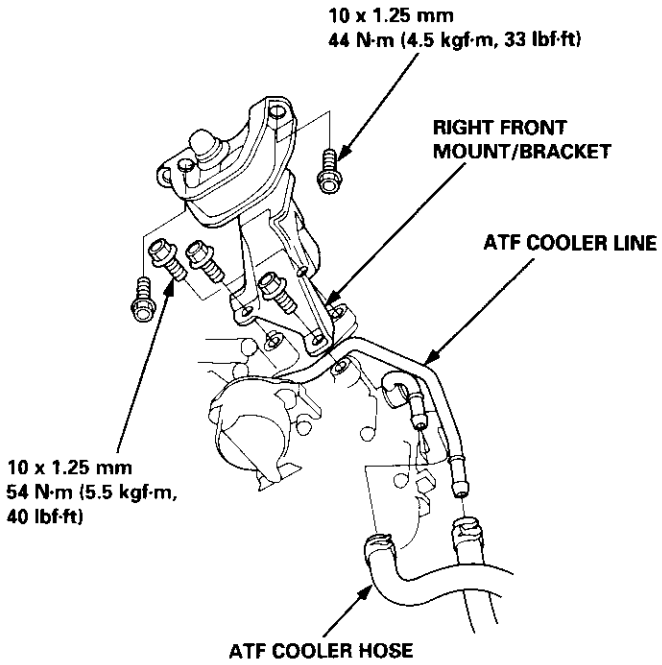

7. Remove the ATF cooler outlet line.
8. Remove the ATF cooler line bracket bolt.
9. Remove the ATF pan (fourteen bolts).
10. Remove the ATF strainer (two bolts).
11. Remove the one bolt securing the solenoid harness connector.
12. Remove the lower valve body assembly (eight bolts).

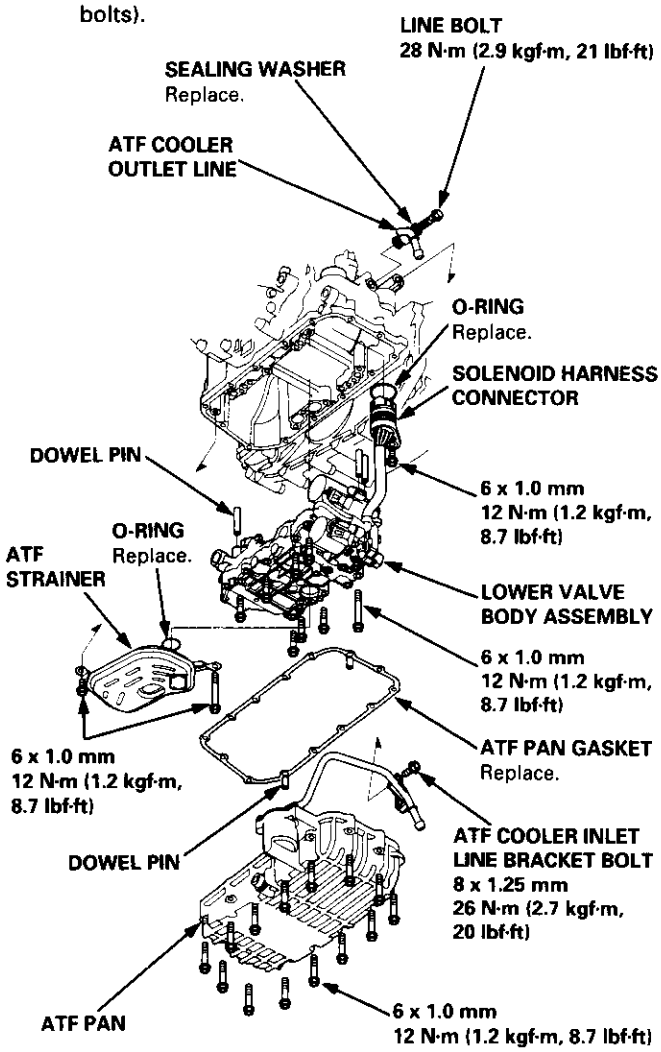

13. Install the new lower valve body in the reverse order of the removal procedure.
    CAUTION: Keep all of other foreign particles out of the transmission.
    NOTE:
    - Replace the following parts:
      — O-rings on the solenoid harness connector and the ATF strainer
      — ATF pan gasket
      — Sealing washers
    - If the ATF cooler inlet line bracket is bent or warped, put it back to the original position.
14. Perform the start clutch calibration procedure on page 14-293.

Removal/Installation

⚠WARNING Make sure lifts, jacks, and safety stands are placed properly (see section 1).

CAUTION: While removing and installing the ATF filter, be sure not to allow dust or other foreign particles to enter the transmission.

1. Raise the front of the vehicle, and support it with safety stands (see section 1).

2. Set the parking brake, and block both rear wheels securely.

3. Remove the drain plug, and drain the CVT fluid. Reinstall the drain plug with a new sealing washer (see page 14-299).

   CAUTION: Keep all foreign particles out of the transmission.

4. Remove the ATF cooler hoses at the ATF cooler lines. Turn the ends of the ATF cooler hoses up to prevent ATF from flowing out, then plug the ATF cooler hoses.

   CAUTION: Keep all foreign particles out of the transmission.

5. Remove the right front mount/bracket.

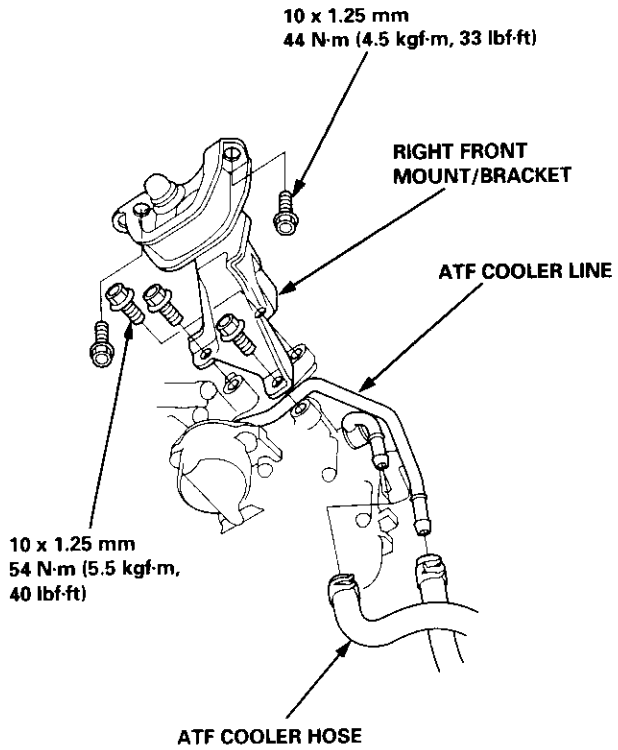

6. Remove the ATF cooler outlet line.
7. Remove the ATF cooler line bracket bolt.
8. Remove the ATF pan (fourteen bolts).
9. Remove the ATF cooler inlet line from the ATF pan (three bolts).
10. Remove the ATF filter, and clean it.
11. Check that the ATF filter is in good condition.
12. Replace the ATF filter if it is clogged.

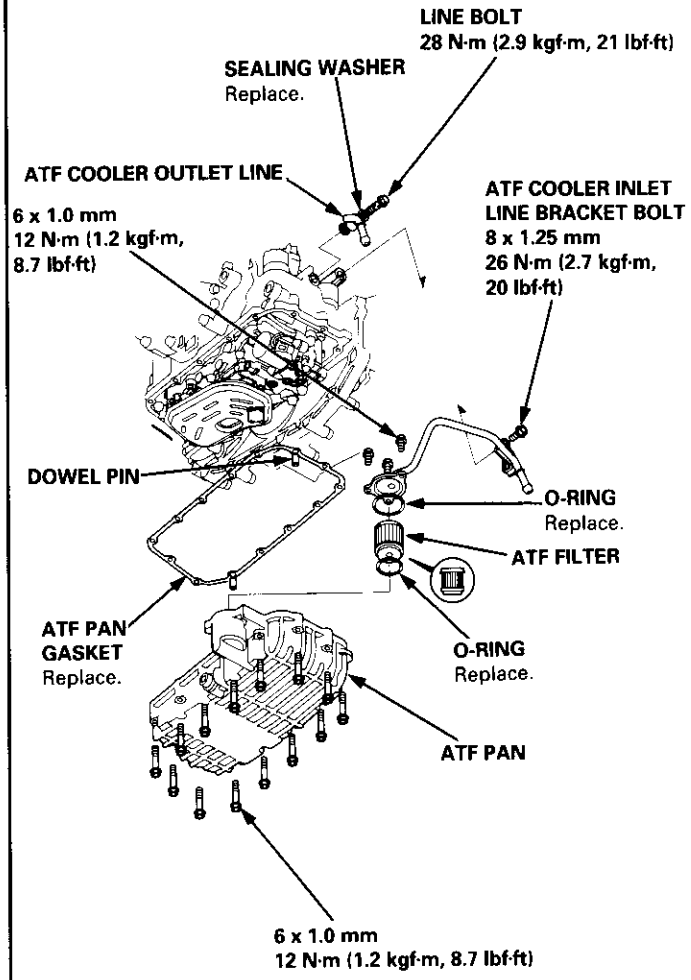

13. Install the ATF filter in the reverse order of the removal procedure.

    CAUTION: Keep all foreign particles out of the transmission.

    NOTE:
    - Replace the O-rings, the ATF pan gasket and sealing washers.
    - If the ATF cooler inlet line bracket is bent or warped, put it back to the original position.

Removal

⚠ WARNING

- **Make sure lifts, jacks, and safety stands are placed properly, and hoist bracket are attached to the correct position on the engine (see section 1).**
- **Apply parking brake and block rear wheels so the vehicle will not roll off stands and fall on you while working under it.**

CAUTION: Use fender covers to avoid damaging painted surfaces.

1. Disconnect the battery negative (–) terminal from the battery, then remove the positive (+) terminal.

2. Remove the intake air duct and air cleaner housing assembly.

3. Remove the starter cables and cable holder from the starter motor.

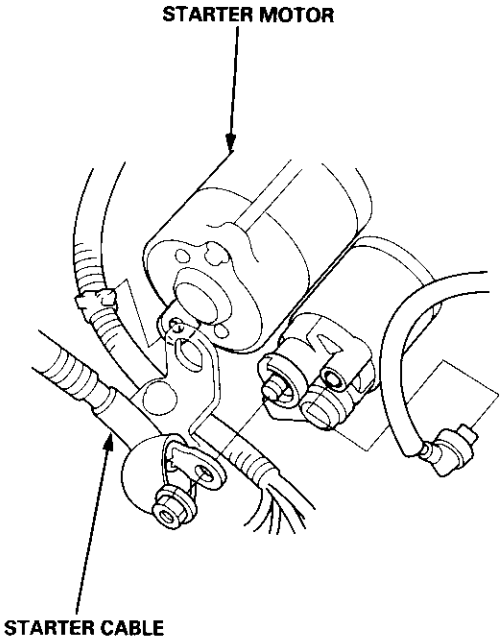

4. Disconnect the solenoid harness connector, the drive pulley speed sensor connector, and the ground cable terminals.

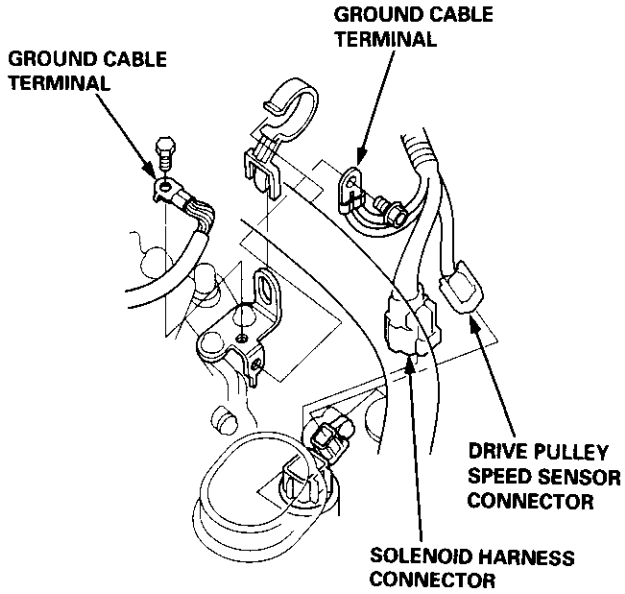

5. Remove the clip, then separate the shift cable from the control lever.

CAUTION: Take care not to bend the shift cable.

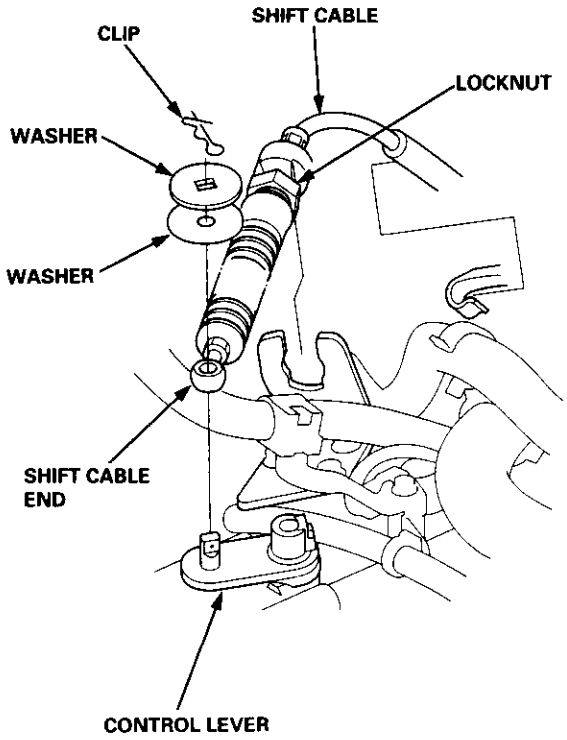

6. Disconnect the vehicle speed sensor (VSS) connector, the driven pulley speed sensor connector, and the secondary gear shaft speed sensor connector.

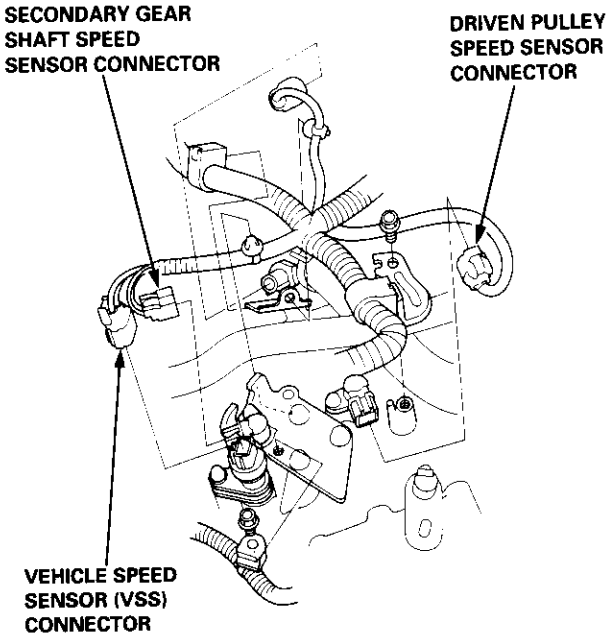

7. Remove the transmission housing mounting bolts.

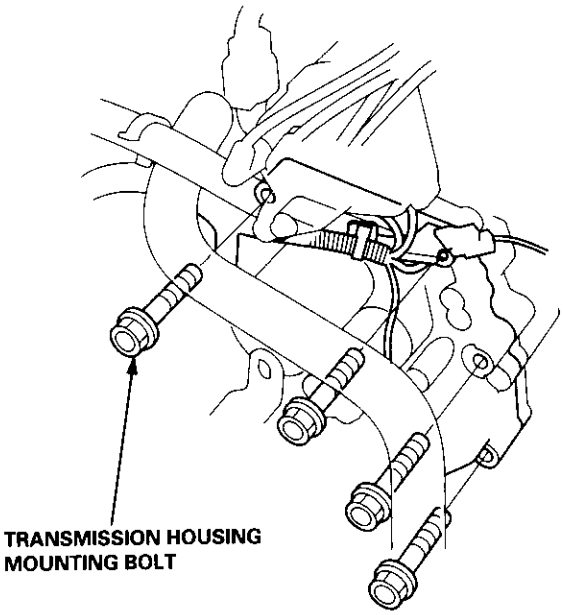

8. Remove the drain plug, and drain the CVT fluid. Reinstall the drain plug with a new sealing washer.

CAUTION: While installing the drain plug, be sure not to allow dust and other foreign particles to enter into the transmission.

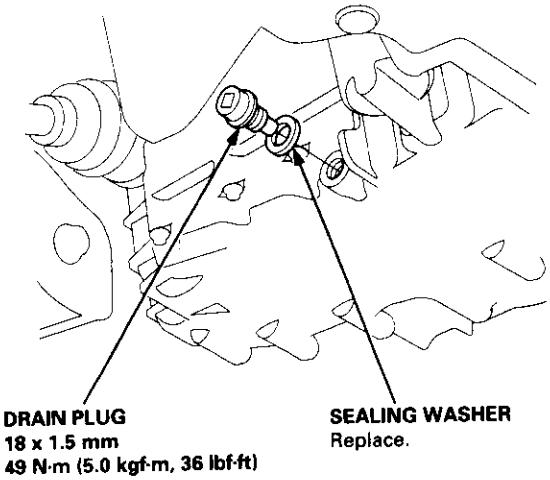

9. Remove the splash shield.

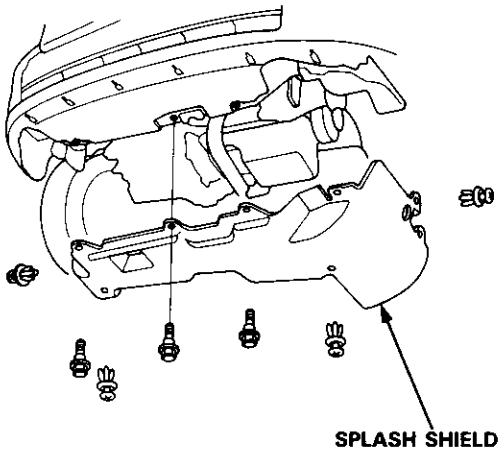

(cont'd)

Removal (cont'd)

10. Remove the cotter pins and castle nuts, then separate the ball joints from the lower arm (see section 18).

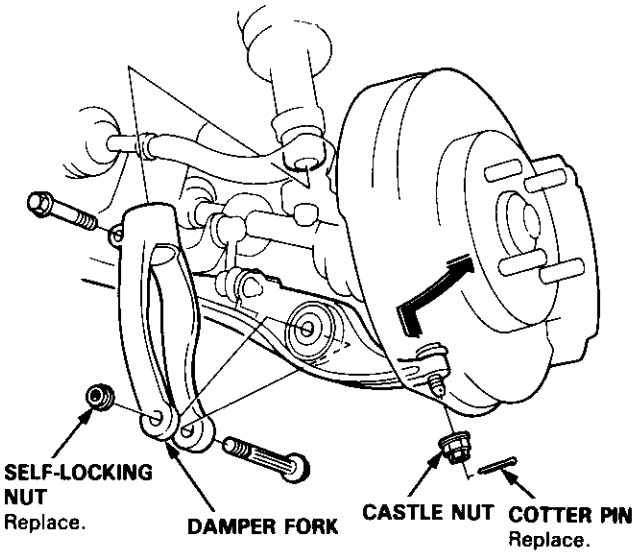

11. Remove the right damper fork bolt, then separate right damper fork and damper.

12. Pry the right and left driveshafts out of the differential.

13. Pull on the inboard joint to remove the right and left driveshafts (see section 16).

14. Tie plastic bags over the driveshaft ends.

    NOTE: Coat all precision finished surfaces with clean engine oil.

15. Remove the exhaust pipe A.

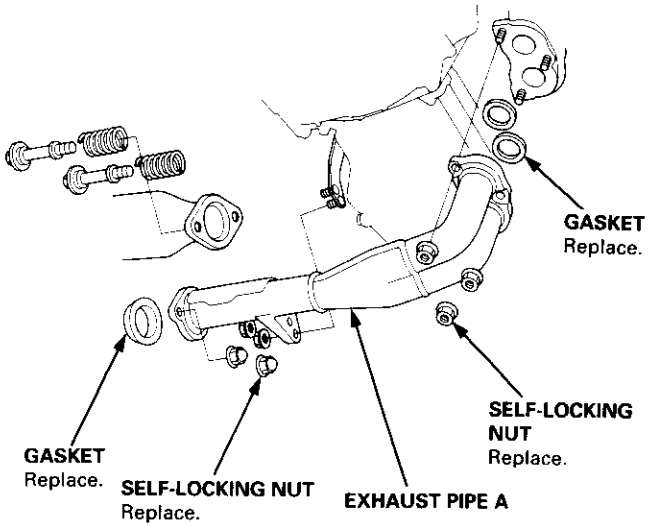

16. Remove the right front mount/bracket.

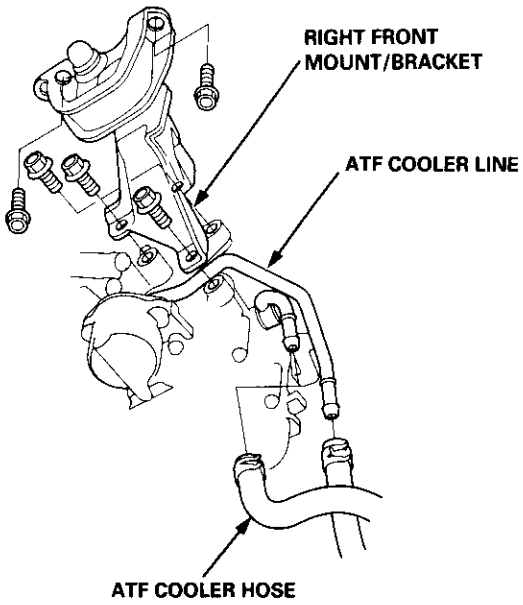

17. Remove the ATF cooler hoses at the ATF cooler lines. Turn the ends of the ATF cooler hoses up to prevent CVT fluid from flowing out, then plug the ATF cooler hoses and lines.

    NOTE: Check for any sign of leakage at the hose joints.

18. Remove the engine stiffeners and the flywheel cover.

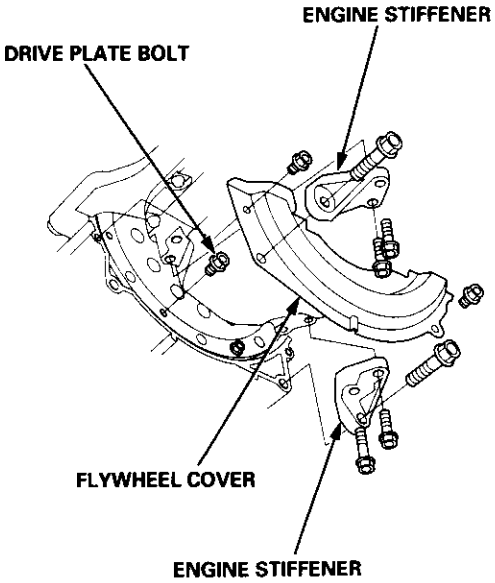

19. Remove the eight drive plate bolts one at time while rotating the crankshaft pulley.

20. Remove the distributor.

21. Attach a hoisting bracket to the engine, then lift the engine slightly.

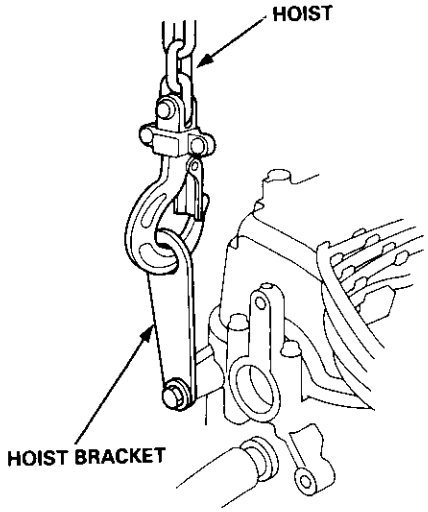

22. Place a jack under the transmission, and raise the transmission just enough to take weight off of the mounts, then remove the transmission mount bracket.

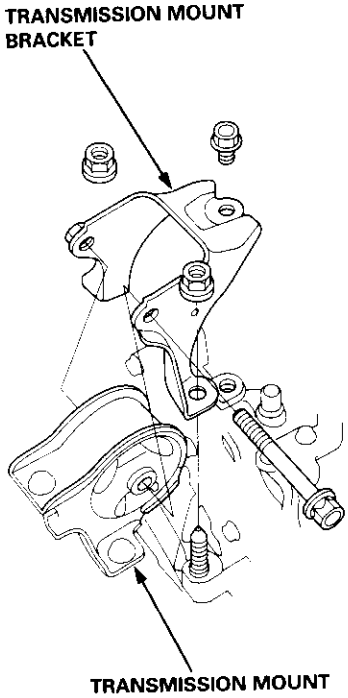

23. Remove the transmission housing mounting bolt and rear engine mounting bolts.

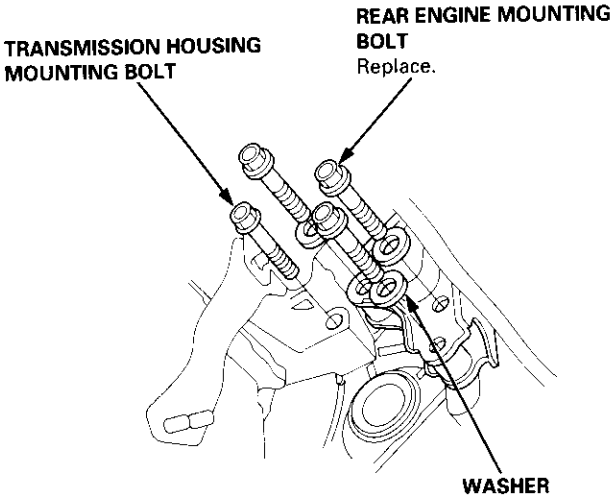

24. Pull the transmission away from the engine until it clears the 14 mm dowel pins, then lower it on the transmission jack.

Transmission/Lower Valve Body Assembly

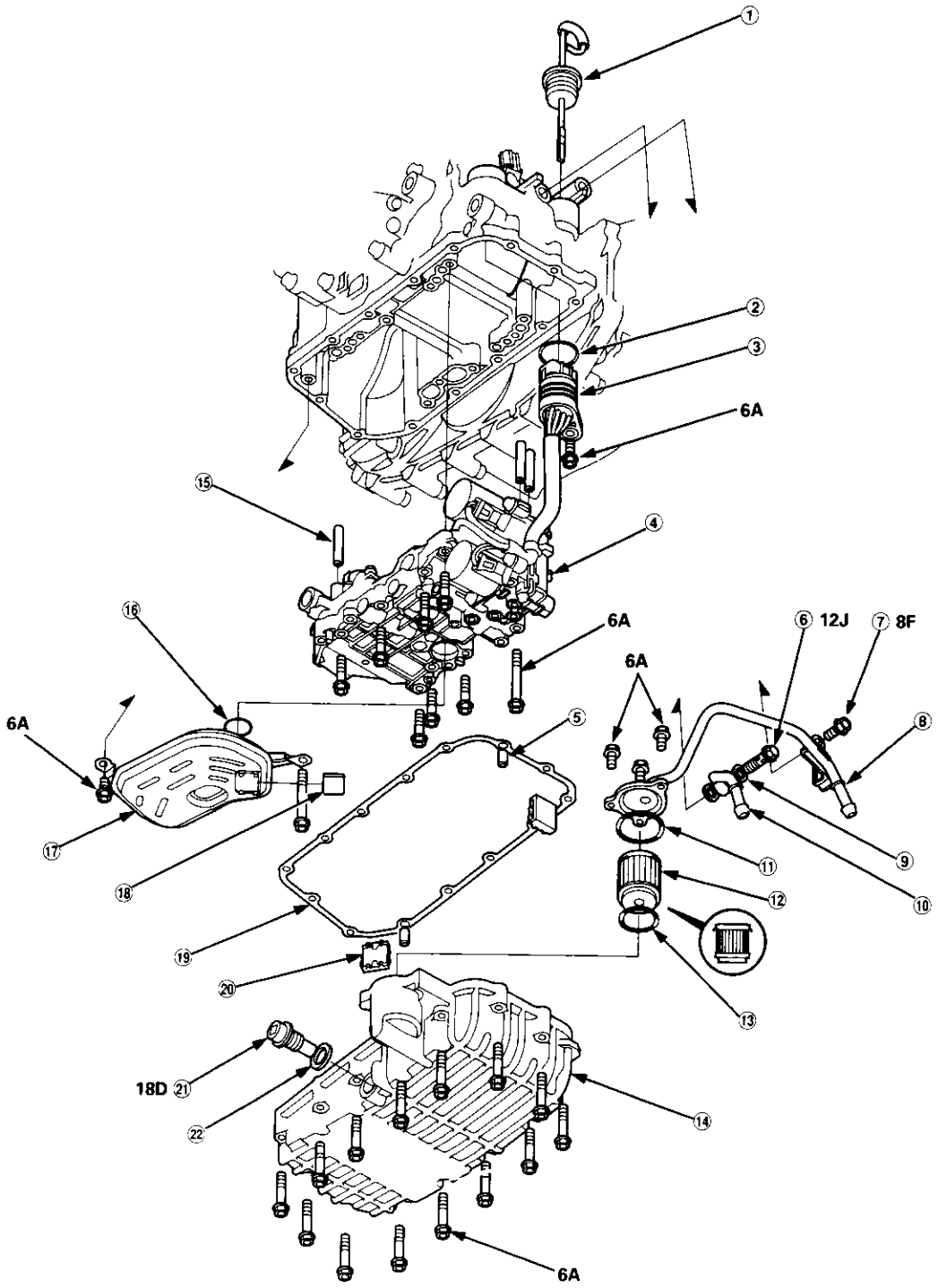

① **ATF DIPSTICK**
② **O-RING** Replace.
③ **SOLENOID HARNESS CONNECTOR**
④ **LOWER VALVE BODY ASSEMBLY**
⑤ **DOWEL PIN**
⑥ **LINE BOLT**
⑦ **ATF COOLER INLET LINE BRACKET BOLT**
⑧ **ATF COOLER INLET LINE ASSEMBLY**
⑨ **SEALING WASHER** Replace.
⑩ **ATF COOLER OUTLET PIPE**
⑪ **O-RING** Replace.
⑫ **ATF FILTER**
⑬ **O-RING** Replace.
⑭ **ATF PAN**
⑮ **DOWEL PIN**
⑯ **O-RING** Replace.
⑰ **ATF STRAINER**
⑱ **ATF MAGNET**
⑲ **ATF PAN GASKET** Replace.
⑳ **ATF MAGNET**
㉑ **DRAIN PLUG**
㉒ **SEALING WASHER** Replace.

TORQUE SPECIFICATIONS

Bolt/Nut No.	Torque Value	Size	Remarks
6A	12 N·m (1.2 kgf·m, 8.7 lbf·ft)	6 x 1.0 mm	
8F	26 N·m (2.7 kgf·m, 20 lbf·ft)	8 x 1.25 mm	
12J	28 N·m (2.9 kgf·m, 21 lbf·ft)	12 x 1.25 mm	Line bolt
18D	49 N·m (5.0 kgf·m, 36 lbf·ft)	18 x 1.5 mm	Drain plug

Transmission Housing/Flywheel Housing

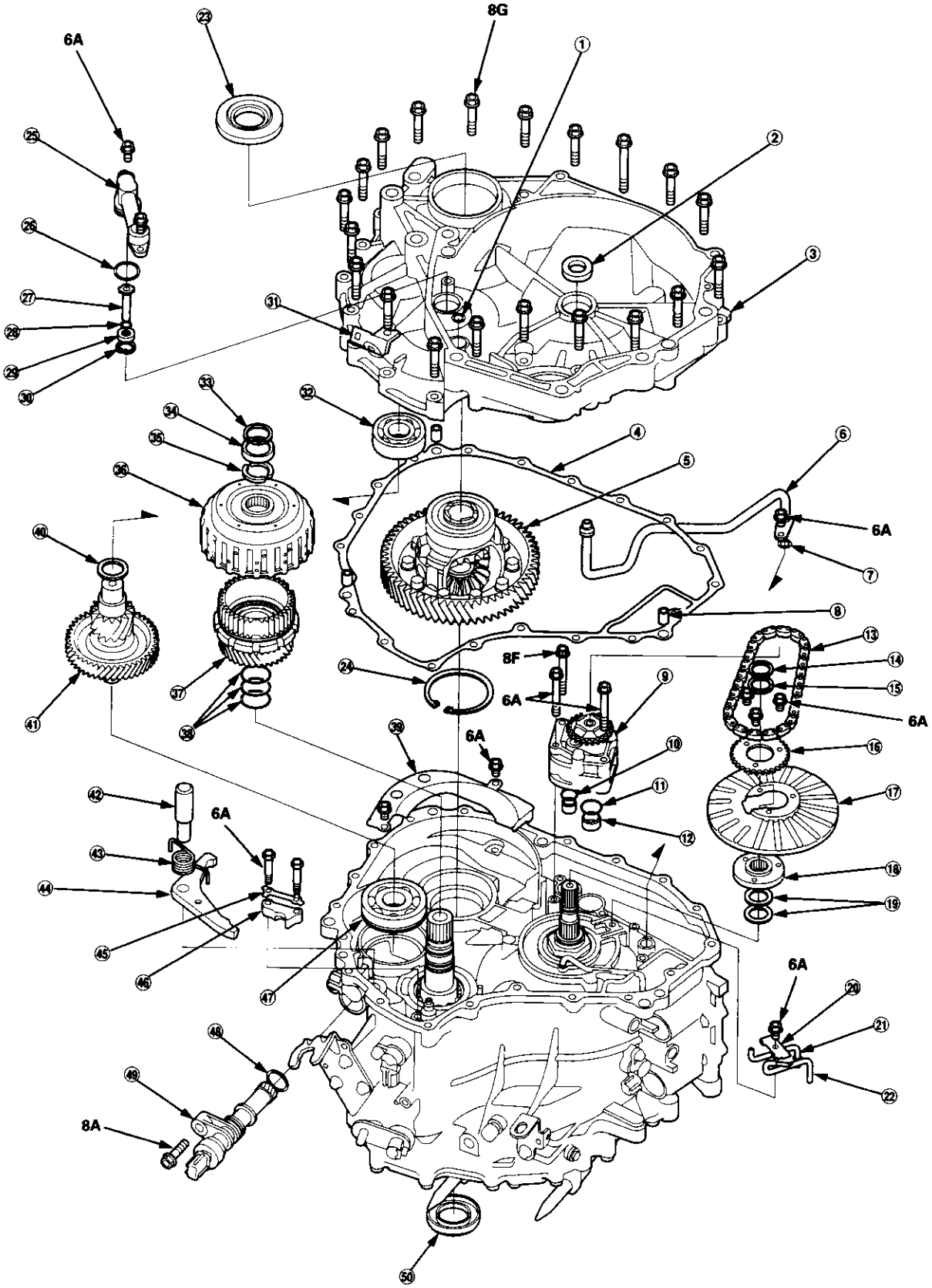

① **O-RING** Replace.
② **OIL SEAL** Replace.
③ **FLYWHEEL HOUSING**
④ **FLYWHEEL HOUSING GASKET** Replace.
⑤ **DIFFERENTIAL ASSEMBLY**
⑥ **ATF PASSAGE LINE ASSEMBLY**
⑦ **O-RING** Replace.
⑧ **DOWEL PIN**
⑨ **ATF PUMP ASSEMBLY**
⑩ **DOWEL PIN, 18 x 10 mm**
⑪ **O-RING** Replace.
⑫ **DOWEL PIN, 22 x 10 mm**
⑬ **ATF PUMP DRIVE CHAIN**
⑭ **SNAP RING**
⑮ **THRUST SHIM, 22 x 28 mm** Selective part
⑯ **ATF PUMP DRIVE SPROCKET**
⑰ **PITOT FLANGE**
⑱ **ATF PUMP DRIVE SPROCKET HUB**
⑲ **THRUST WASHERS**
⑳ **PITOT PIPE BRACKET**
㉑ **PITOT LUBRICATION PIPE**
㉒ **PITOT PIPE**
㉓ **OIL SEAL** Replace.
㉔ **SET RING, 80 mm** Selective part
㉕ **ATF PASSAGE LINE HOLDER ASSEMBLY**
㉖ **O-RING** Replace.
㉗ **START CLUTCH ATF FEED PIPE**
㉘ **O-RING** Replace.
㉙ **FEED PIPE FLANGE**
㉚ **SNAP RING**
㉛ **CONNECTOR BRACKET**
㉜ **BALL BEARING**
㉝ **SNAP RING**
㉞ **COTTER RETAINER**
㉟ **COTTERS, 25.5 mm** Selective part
㊱ **START CLUTCH ASSEMBLY**
㊲ **SECONDARY DRIVE GEAR ASSEMBLY**
㊳ **O-RINGS** Replace.
㊴ **DIFFERENTIAL COVER**
㊵ **THRUST SHIM, 25 x 35 mm** Selective part
㊶ **SECONDARY GEAR SHAFT**
㊷ **PARK PAWL SHAFT**
㊸ **PARK PAWL SPRING**
㊹ **PARK PAWL**
㊺ **TONGUED WASHER** Replace.
㊻ **PARK ROD HOLDER**
㊼ **BALL BEARING**
㊽ **O-RING** Replace.
㊾ **VEHICLE SPEED SENSOR**
㊿ **OIL SEAL** Replace.

TORQUE SPECIFICATIONS

Bolt/Nut No.	Torque Value	Size	Remarks
6A	12 N·m (1.2 kgf·m, 8.7 lbf·ft)	6 x 1.0 mm	
8A	22 N·m (2.2 kgf·m, 16 lbf·ft)	8 x 1.25 mm	
8F	26 N·m (2.7 kgf·m, 20 lbf·ft)	8 x 1.25 mm	
8G	29 N·m (3.0 kgf·m, 22 lbf·ft)	8 x 1.25 mm	

Right Side Cover/Intermediate Housing

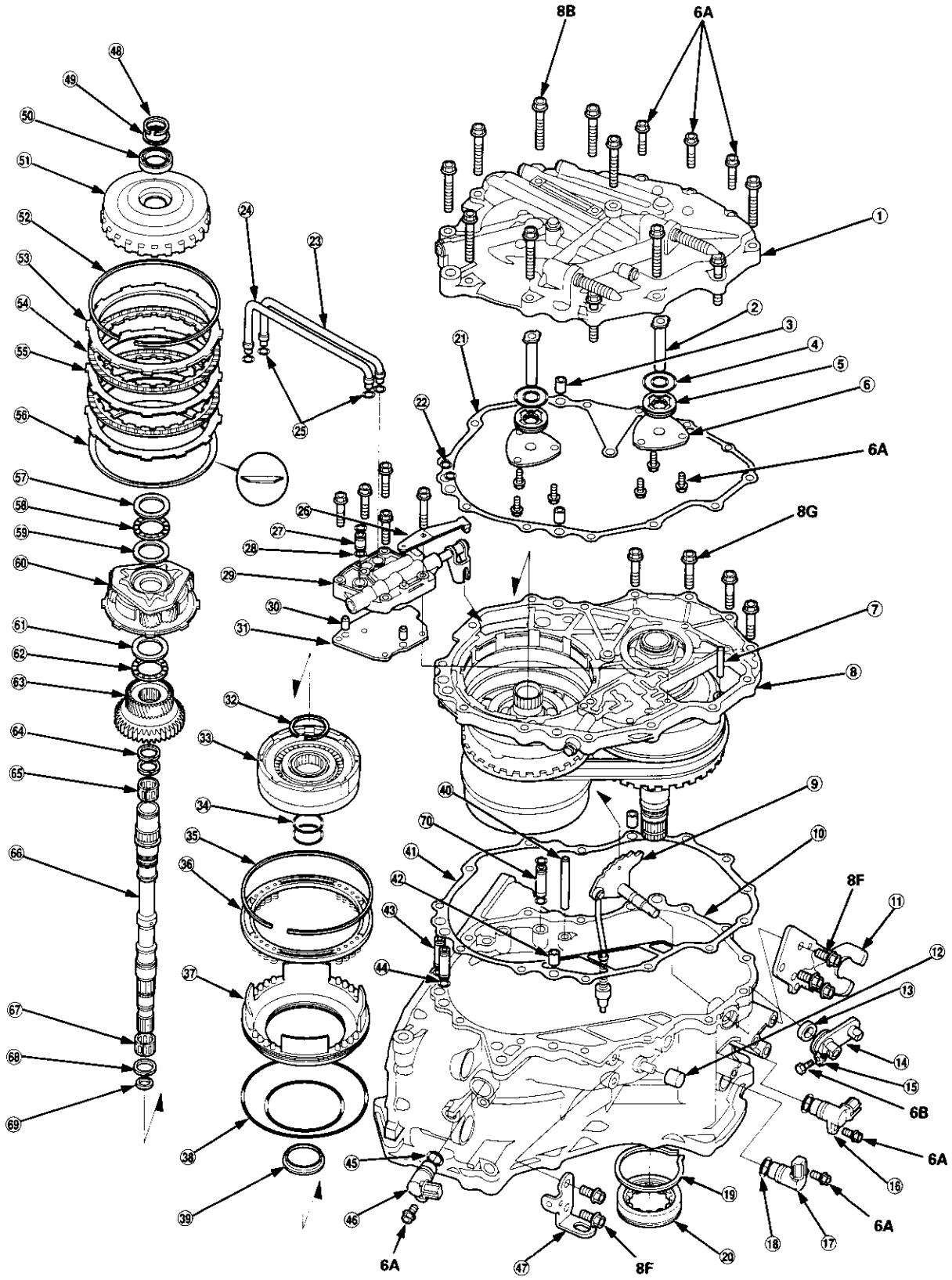

① **END COVER**
② **ATF FEED PIPE**
③ **DOWEL PIN**
④ **O-RING** Replace.
⑤ **FEED PIPE FLANGE**
⑥ **FEED PIPE FLANGE PLATE**
⑦ **ROLLER**
⑧ **INTERMEDIATE HOUSING ASSEMBLY**
⑨ **CONTROL SHAFT ASSEMBLY**
⑩ **TRANSMISSION HOUSING**
⑪ **SHIFT CABLE BRACKET**
⑫ **BREATHER CAP**
⑬ **OIL SEAL** Replace.
⑭ **CONTROL LEVER**
⑮ **LOCK WASHER** Replace.
⑯ **SECONDARY GEAR SHAFT SPEED SENSOR**
⑰ **DRIVEN PULLEY SPEED SENSOR**
⑱ **O-RING** Replace.
⑲ **SNAP RING**
⑳ **TRANSMISSION HOUSING DRIVEN PULLEY SHAFT ROLLER BEARING**
㉑ **END COVER GASKET** Replace.
㉒ **O-RING** Replace.
㉓ **MANUAL VALVE BODY LINE A**
㉔ **MANUAL VALVE BODY LINE B**
㉕ **O-RING** Replace.
㉖ **DETENT SPRING**
㉗ **ATF FEED PIPE**
㉘ **O-RING** Replace.
㉙ **MANUAL VALVE BODY**
㉚ **DOWEL PIN**
㉛ **MANUAL VALVE BODY SEPARATOR PLATE**
㉜ **SNAP RING**
㉝ **FORWARD CLUTCH ASSEMBLY**
㉞ **O-RING** Replace.
㉟ **SNAP RING**
㊱ **SPRING RETAINER/RETURN SPRING ASSEMBLY**
㊲ **REVERSE BRAKE PISTON**
㊳ **O-RING** Replace.
㊴ **SNAP RING RETAINER**
㊵ **ATF FEED PIPE**
㊶ **TRANSMISSION HOUSING GASKET** Replace.
㊷ **DOWEL PIN**
㊸ **ATF FEED PIPE**
㊹ **O-RING** Replace.
㊺ **O-RING** Replace.
㊻ **DRIVE PULLEY SPEED SENSOR**
㊼ **TRANSMISSION HANGER**
㊽ **SNAP RING**
㊾ **THRUST SHIM, 25 x 31 mm** Selective part
㊿ **BALL BEARING**
(51) **RING GEAR**
(52) **SNAP RING**
(53) **REVERSE BRAKE END PLATE** Selective part
(54) **REVERSE BRAKE DISC**
(55) **REVERSE BRAKE PLATE**
(56) **DISC SPRING**
(57) **THRUST WASHER**
(58) **THRUST NEEDLE BEARING**
(59) **THRUST WASHER**
(60) **CARRIER ASSEMBLY**
(61) **THRUST WASHER**
(62) **THRUST NEEDLE BEARING**
(63) **SUN GEAR**
(64) **SEALING RING** Replace.
(65) **NEEDLE BEARING**
(66) **INPUT SHAFT**
(67) **NEEDLE BEARING**
(68) **SEALING RING** Replace.
(69) **SEALING RING (RUBBER)** Replace.
(70) **ATF FEED PIPE**

TORQUE SPECIFICATIONS

Bolt/Nut No.	Torque Value	Size	Remarks
6A	12 N·m (1.2 kgf·m, 8.7 lbf·ft)	6 x 1.0 mm	
6B	14 N·m (1.4 kgf·m, 10 lbf·ft)	6 x 1.0 mm	
8B	37 N·m (3.8 kgf·m, 27 lbf·ft)	8 x 1.25 mm	
8F	26 N·m (2.7 kgf·m, 20 lbf·ft)	8 x 1.25 mm	
8G	29 N·m (3.0 kgf·m, 22 lbf·ft)	8 x 1.25 mm	

Transmission Housing/Lower Valve Body Assembly

Removal

NOTE:
- Clean all parts thoroughly in solvent or carburetor cleaner, and dry with compressed air.
- Blow out all passages.
- When removing the lower valve body, replace the following:
  - — O-rings
  - — ATF pan gasket
  - — Sealing washers

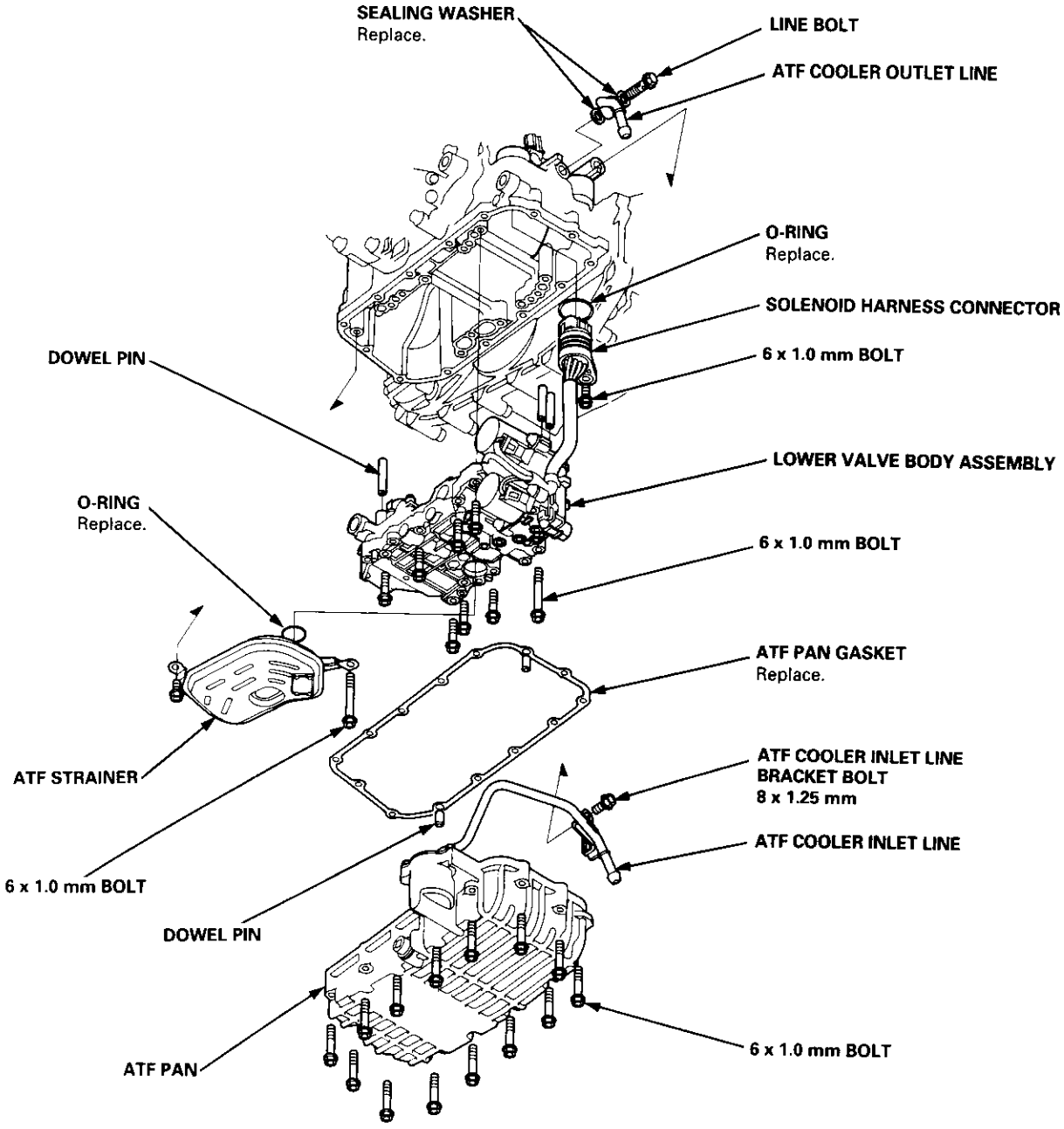

1. Remove the ATF cooler inlet line bracket bolt.

2. Remove the ATF cooler outlet line.

3. Remove the ATF pan (fourteen bolts).

4. Remove the ATF strainer (two bolts).

5. Remove the one bolt securing the solenoid harness connector, then push the connector.

6. Remove the lower valve body (eight bolts).

7. Clean the inlet opening of the ATF strainer thoroughly with compressed air, then check that it is in good condition, and the inlet opening is not clogged.

ATF STRAINER

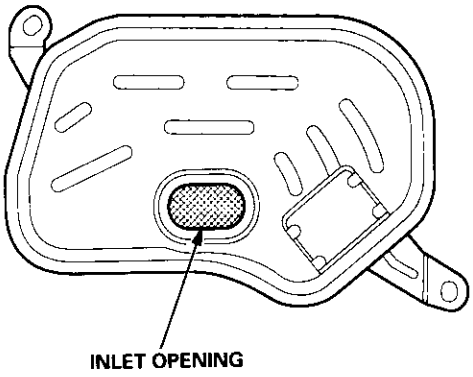

8. Replace the ATF strainer if it is clogged or damaged.

   NOTE: The ATF strainer can be reused if it is not clogged.

Transmission Housing/Flywheel Housing

Removal

NOTE:
- Clean all parts thoroughly in solvent or carburetor cleaner, and dry with compressed air.
- Blow out all passages.
- When removing the transmission housing/flywheel housing, replace the following:
  - — O-rings
  - — Secondary drive gear assembly
  - — Start clutch assembly
  - — Flywheel housing gasket

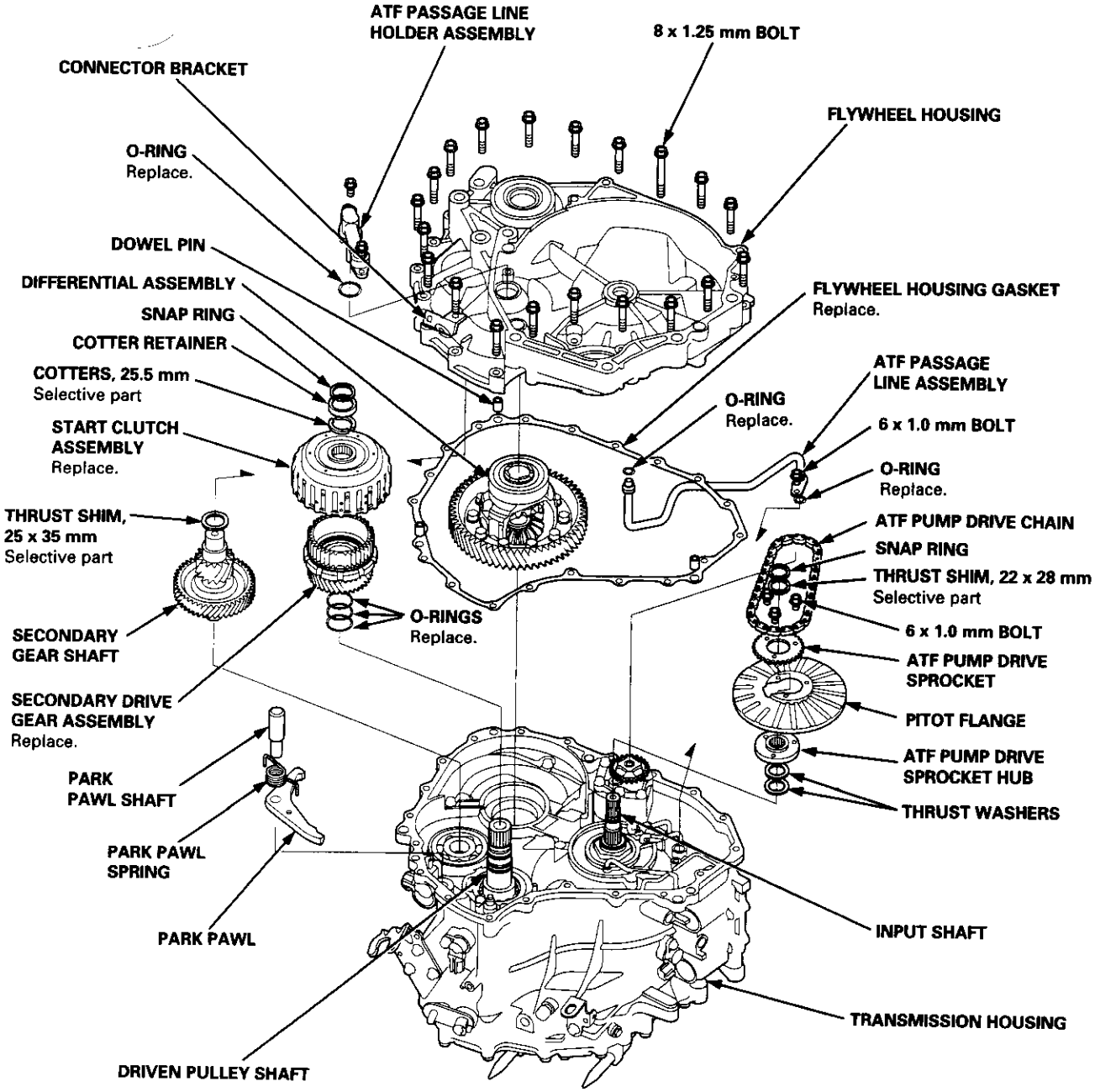

1. Remove the ATF passage line holder assembly.

2. Remove the flywheel housing (twenty bolts).

3. Remove the ATF passage line assembly (one bolt).

4. Remove the ATF pump drive sprocket (three bolts), then remove the ATF pump drive chain.

5. Move the pitot flange toward its cutout, then remove the pitot flange.

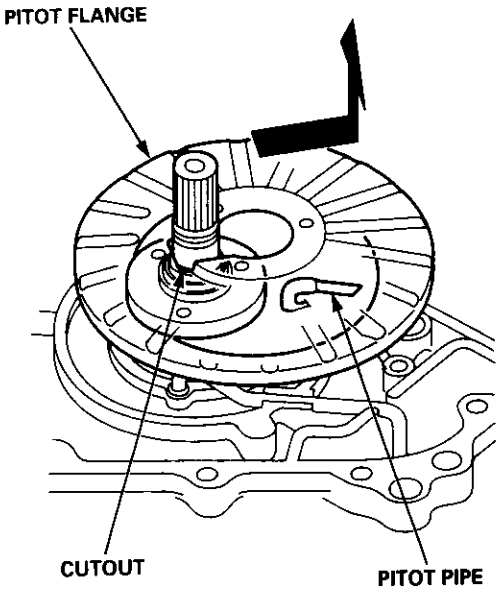

6. Remove the snap ring securing the ATF pump drive sprocket hub, then remove the 22 x 28 mm thrust shim, the ATF pump drive sprocket hub and the thrust washers.

7. Remove the differential assembly.

8. Remove the park pawl shaft, the park pawl spring, and the park pawl.

9. Remove the snap ring securing the start clutch, then remove the cotter retainer and the cotters.

10. Set the special tool on the start clutch, and attach the pawl of the special tool to the park gear securely as shown.

CAUTION:
- **Do not place the pawl of the special tool on the start clutch guide. If the pawl of the special tool contacts the start clutch guide, the start clutch guide may be damaged.**
- **Be sure not to allow dust and other foreign particles to enter into the driven pulley shaft.**

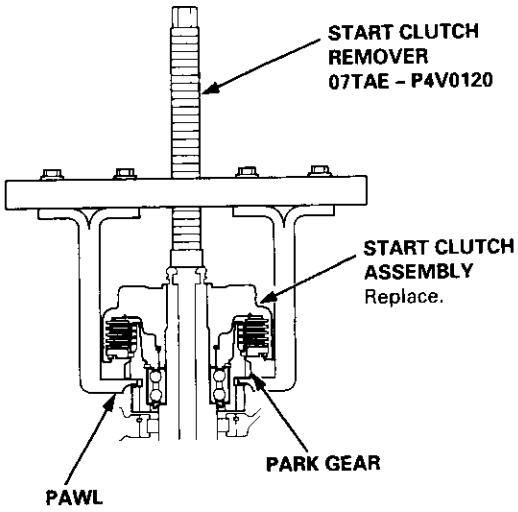

11. Remove the start clutch and the secondary drive gear assembly using the special tool, then remove the secondary gear shaft.

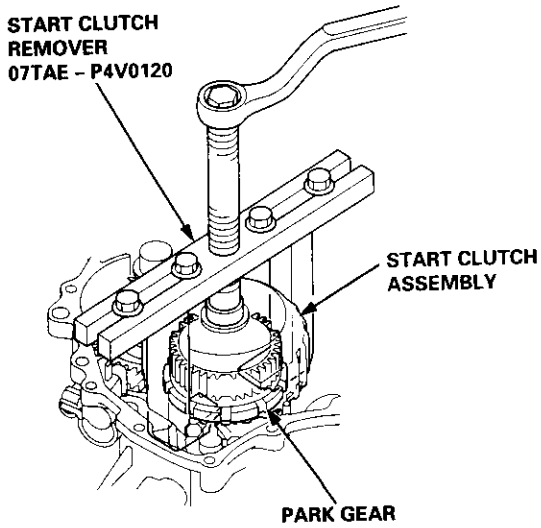

End Cover/Intermediate Housing

Removal

NOTE:
- Clean all parts in solvent or carburetor cleaner, and dry with compressed air.
- Blow out all passages.
- When removing the end cover/intermediate housing, replace the following parts:
  - — O-rings
  - — End cover gasket
  - — Transmission housing gasket
  - — Sealing rings
  - — Sealing washers

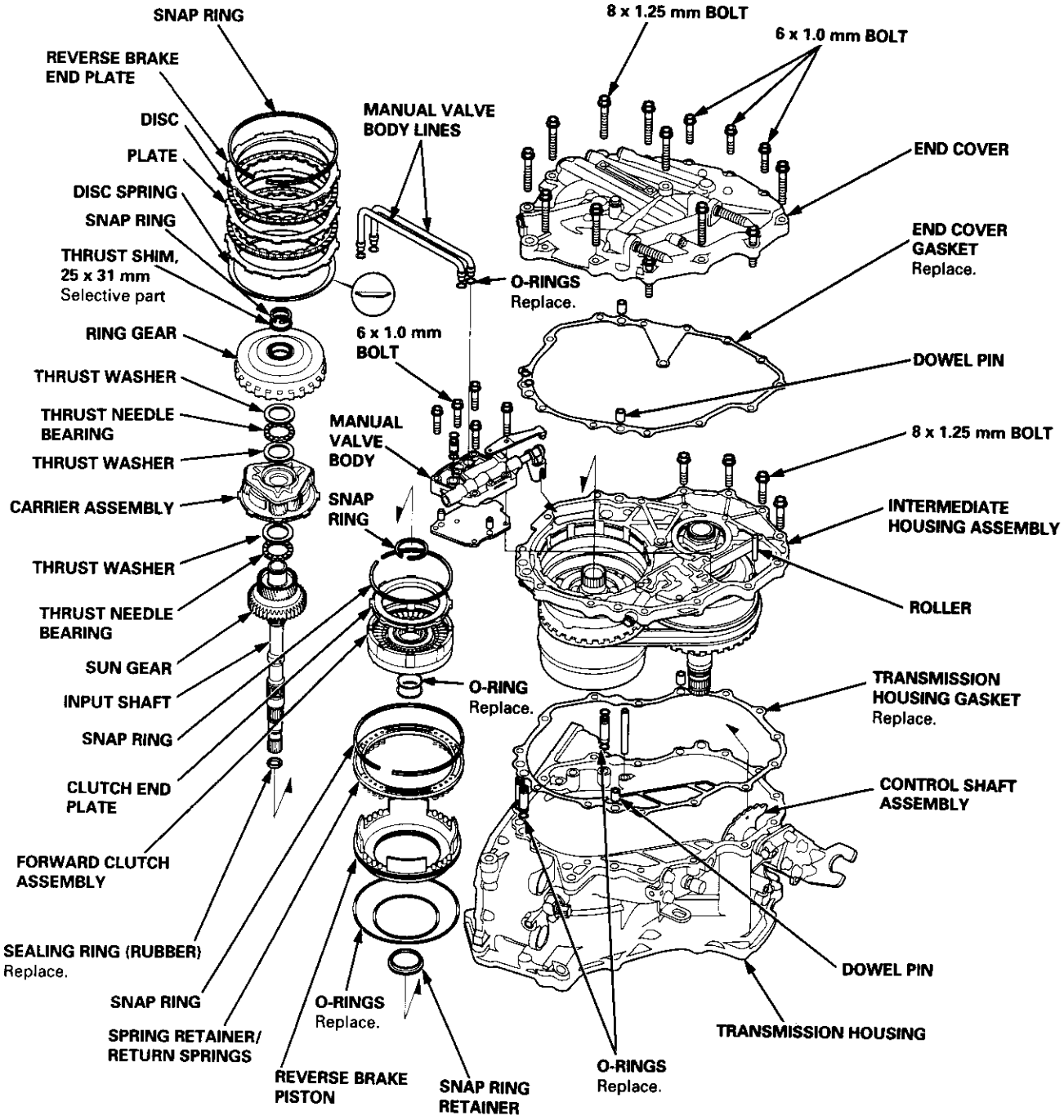

1. Remove the end cover (three 6 mm bolts, eleven 8 mm bolts).

2. Remove the manual valve body lines A and B.

3. Remove the snap ring securing the ring gear, then remove the thrust shim and the ring gear.

4. Remove the snap ring securing the reverse brake discs and plates, then remove the reverse brake end plate, brake discs, brake plates, and disc spring.

5. Remove the carrier with the thrust washers and the thrust needle bearing from the forward clutch.

6. Remove the sun gear and the input shaft as a sub assembly by pulling it.
   The sun gear is press fitted tightly into input shaft.

7. Remove the snap ring securing the forward clutch, and remove the snap ring securing the forward clutch end plate, then remove the forward clutch end plate.

8. Reinstall the carrier on the forward clutch, then secure the carrier with the snap ring on the forward clutch end plate.

9. Remove the forward clutch and carrier assembly together.

10. Install the special tool to remove the snap ring securing the reverse brake return spring retainer as shown.

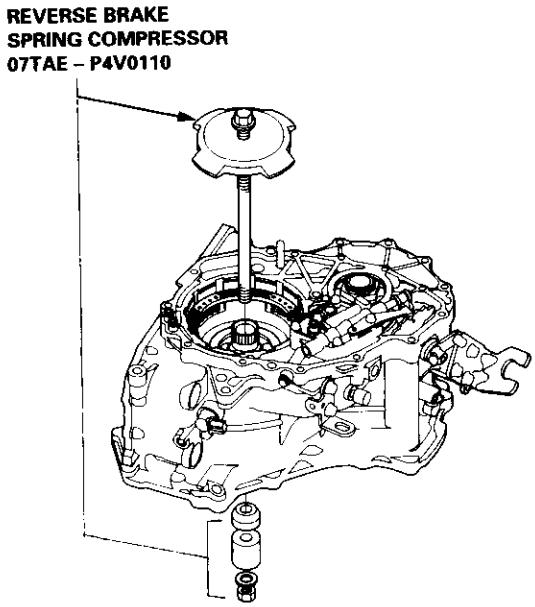

11. Compress the return springs, then remove the snap ring.

CAUTION: If the spring retainer tab is on the reverse brake piston, the spring retainer may be damaged. Be sure the spring retainer tab is not on the piston.

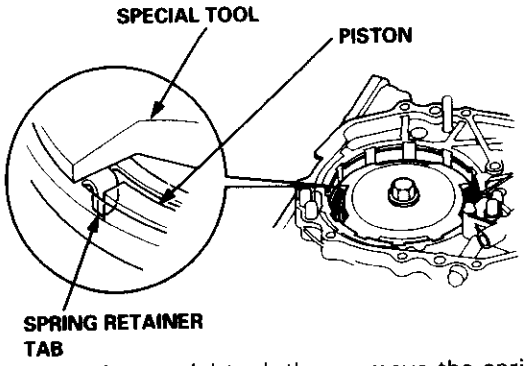

12. Remove the special tool, then remove the spring retainer/return spring assembly.
13. Remove the sealing bolt securing the reverse brake pressure inspection hole.
14. Apply air pressure to the inspection hole to remove the reverse brake piston.

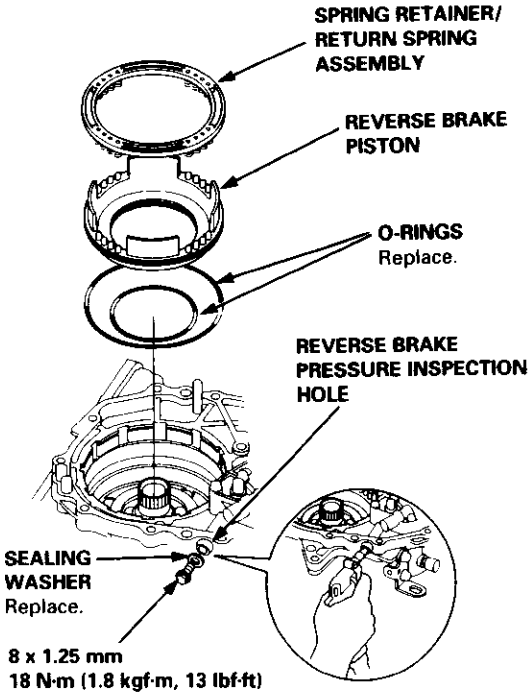

15. Remove the snap ring retainer from the drive pulley shaft.
16. Remove the manual valve body (five bolts).
17 Remove the roller and push the control shaft assembly toward the outside of the transmission housing, then remove the intermediate housing (four bolts).

Manual Valve Body

Disassembly/Inspection/Reassembly

NOTE:
- Clean all parts thoroughly in solvent or carburetor cleaner, and dry with compressed air. Blow out all passages.
- Coat all parts with CVT Fluid during assembly.

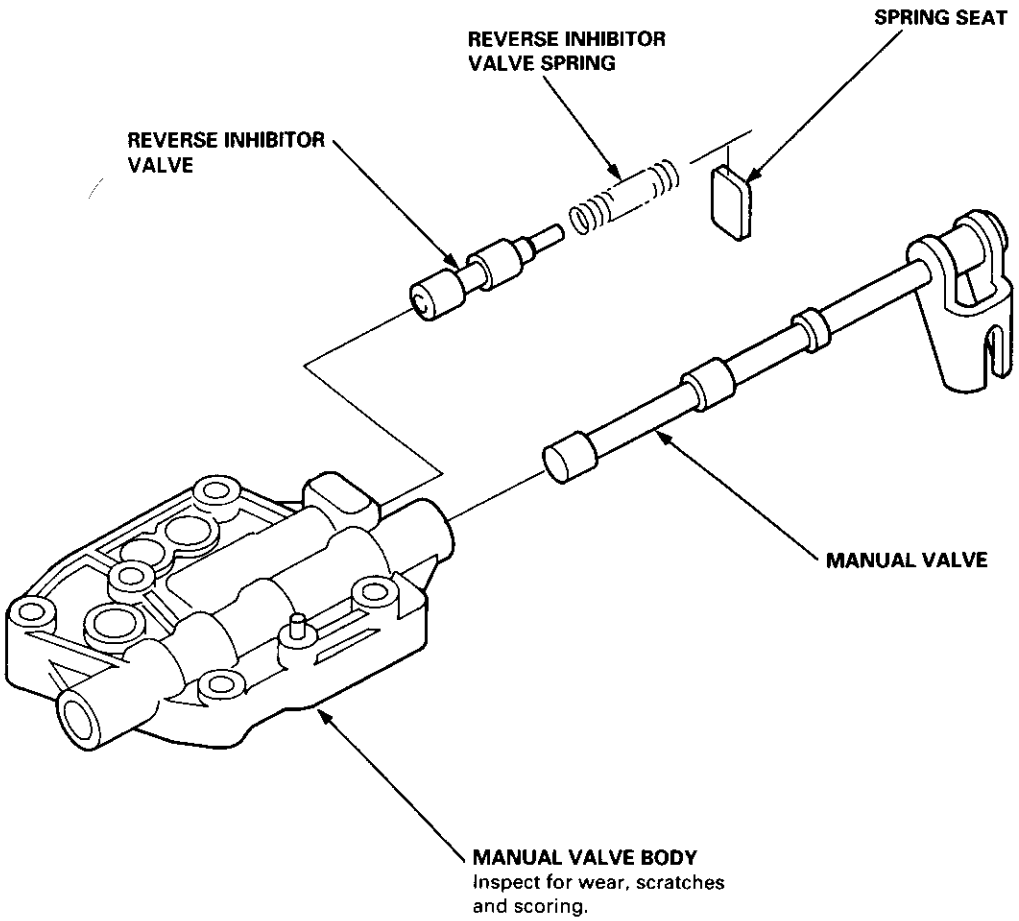

Illustrated Index

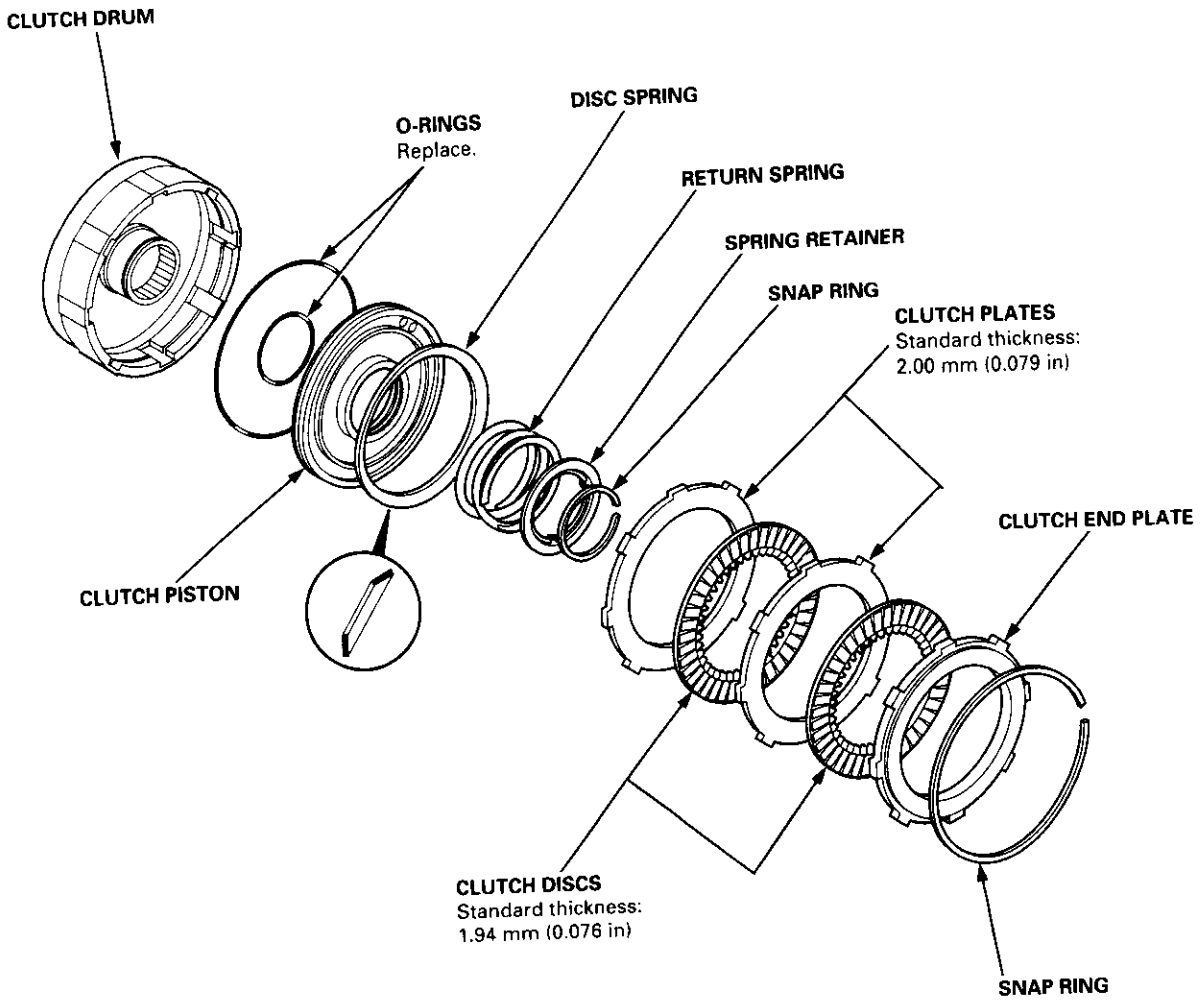

Disassembly

1. Remove the snap ring, then remove the clutch end plate, clutch discs, and plates.

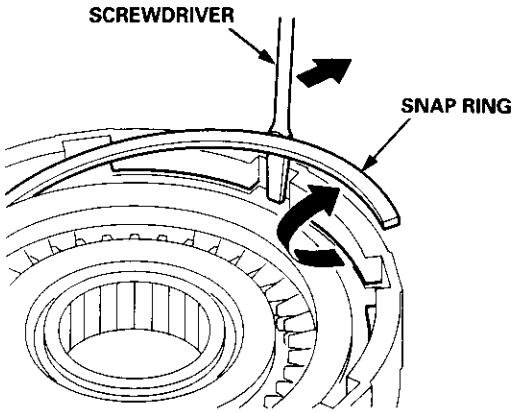

2. Remove the disc spring.

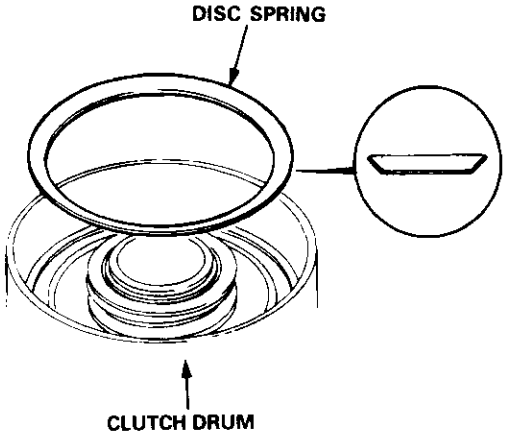

3. Install the special tools as shown.

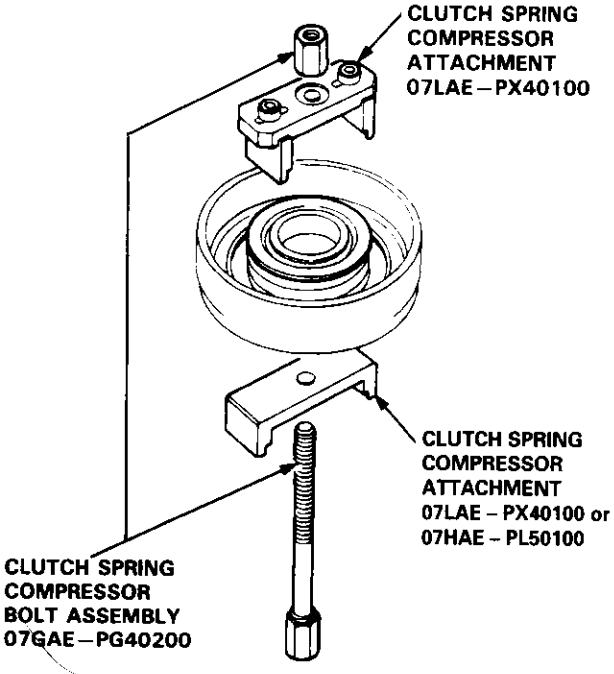

CAUTION: If either end of the special tool is set over an area of the spring retainer which is unsupported by the return spring, the retainer may be damaged. Be sure the special tool is adjusted to have full contact with the spring retainer.

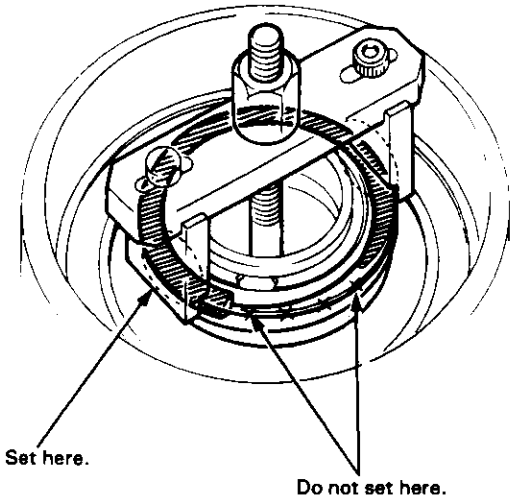

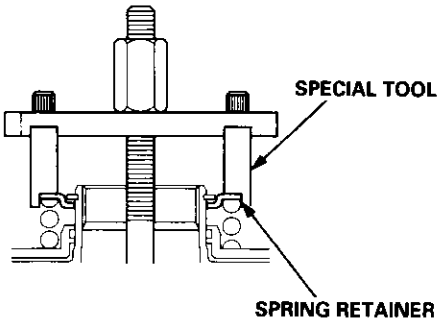

4. Compress the return spring.

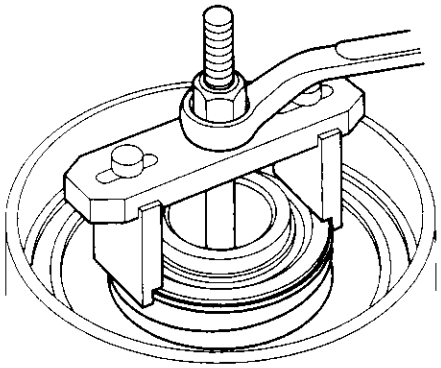

5. Remove the snap ring. Then remove the special tools, spring retainer, and return spring.

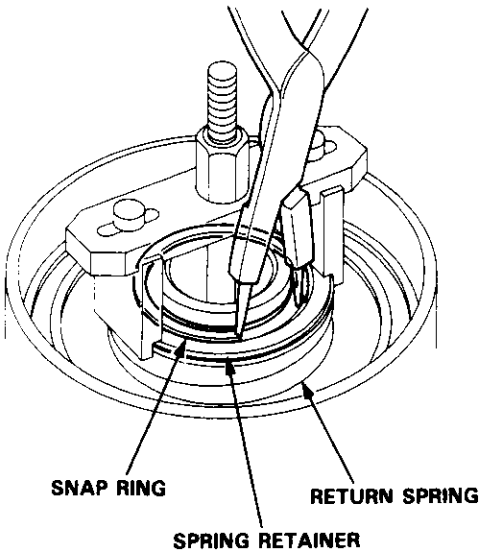

6. Wrap a shop rag around the clutch drum, and apply air pressure to the fluid passage to remove the piston. Place a finger tip on the other end while applying air pressure.

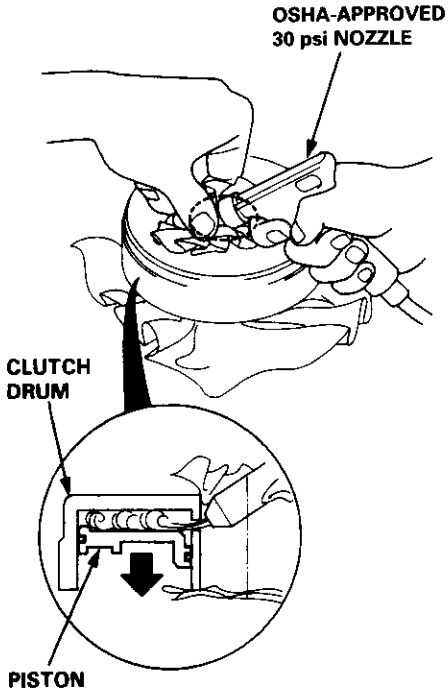

Reassembly

NOTE:
- Clean all parts thoroughly in solvent or carburetor cleaner, and dry them with compressed air.
- Blow out all passages.
- Lubricate all parts with CVT Fluid before reassembly.

1. Inspect the check valve; if it's loose, replace the piston.

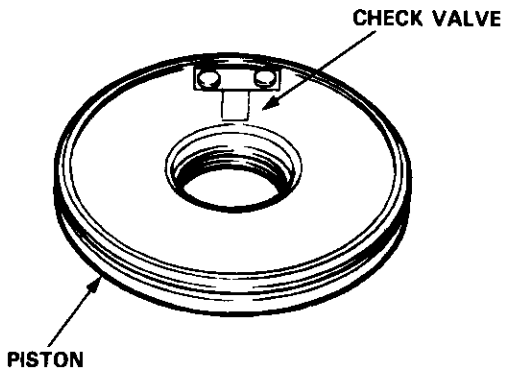

2. Install new O-rings on the clutch piston.

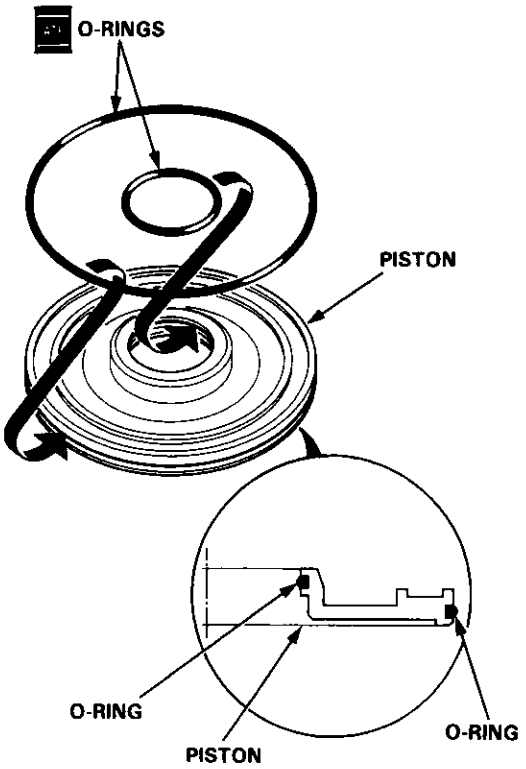

3. Install the piston in the clutch drum. Apply pressure and rotate to ensure proper seating.

   NOTE: Lubricate the piston O-ring with CVT Fluid before installing.

   CAUTION: Do not pinch the O-ring by installing the piston with too much force.

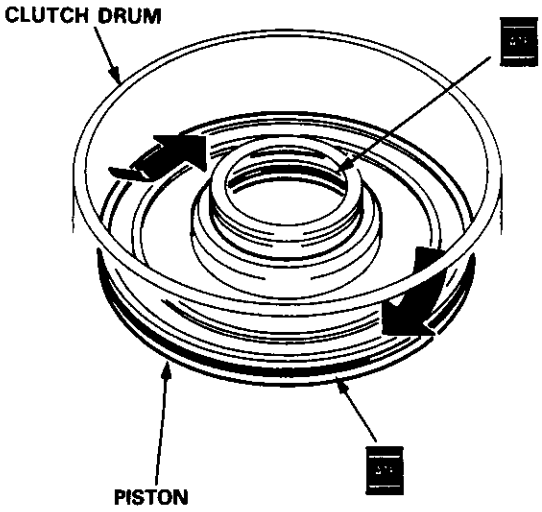

4. Install the return spring and spring retainer, and position the snap ring on the retainer.

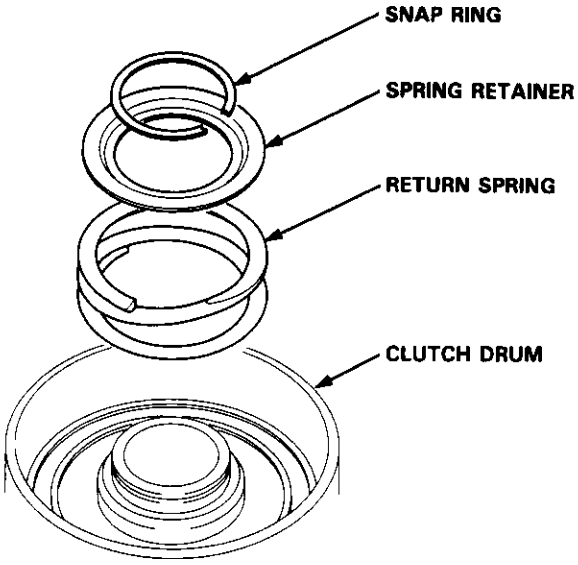

5. Install the special tools as shown.

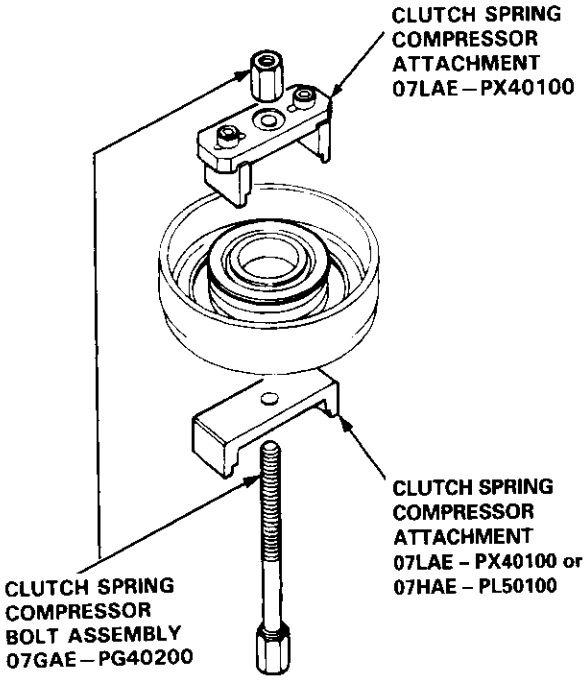

CAUTION: If either end of the special tool is set over an area of the spring retainer which is unsupported by the return spring, the retainer may be damaged. Be sure the special tool is adjusted to have full contact with the spring retainer.

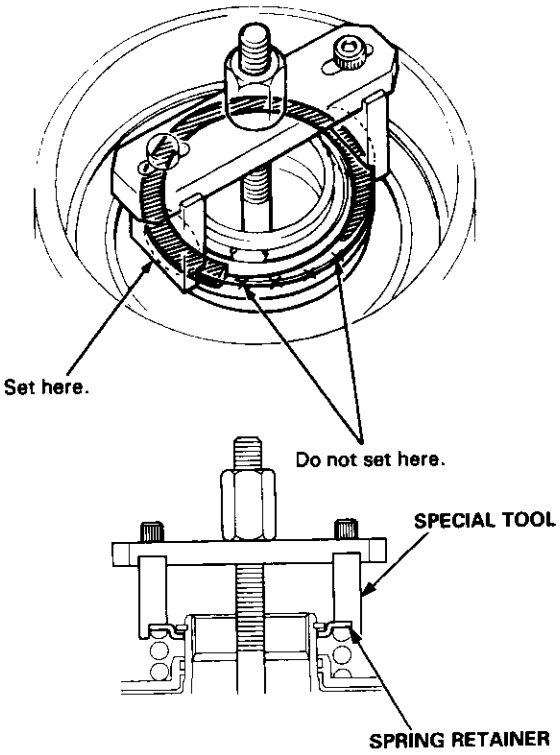

6. Compress the return spring.

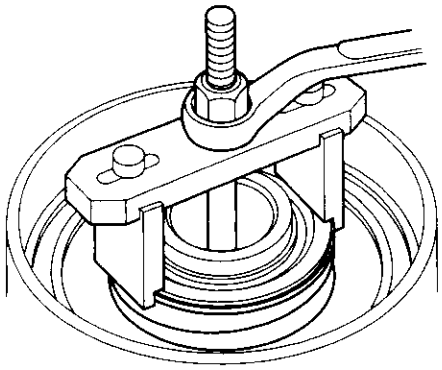

7. Install the snap ring.

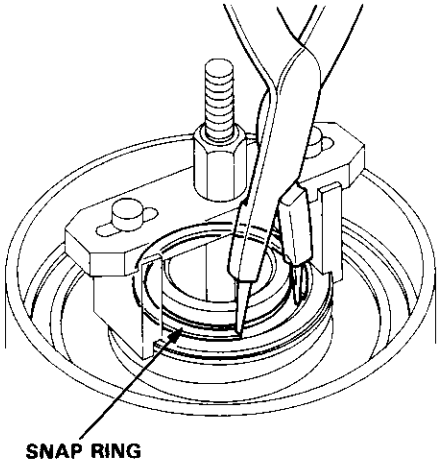

8. Remove the special tools.

(cont'd)

Reassembly (cont'd)

9. Install the disc spring.

   NOTE: Install the disc spring in the direction shown.

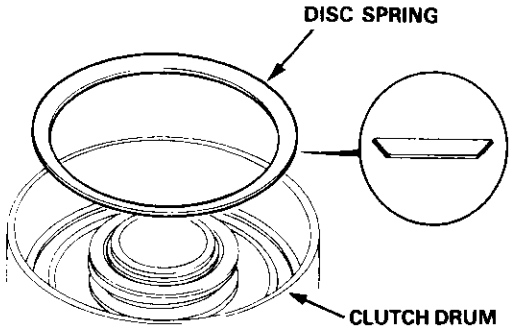

10. Soak the clutch discs thoroughly in CVT Fluid for a minimum of 30 minutes.

11. Starting with a clutch plate, alternately install the clutch plates and discs. Install the clutch end plate with flat side toward the disc.

    NOTE: Before installing the plates and discs, make sure the inside of the clutch drum is free of dirt or other foreign matter.

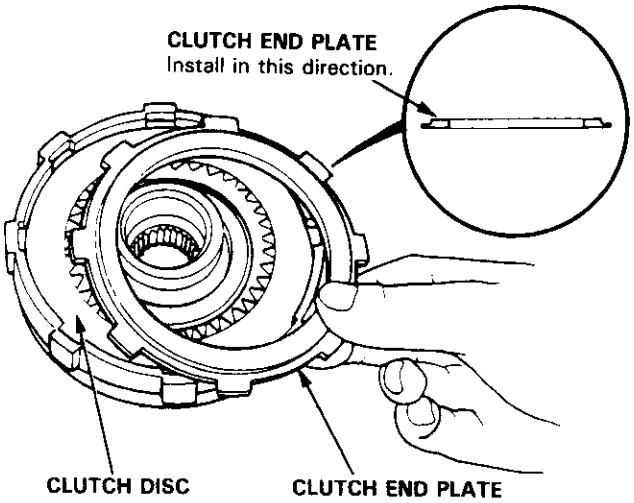

12. Install the snap ring.

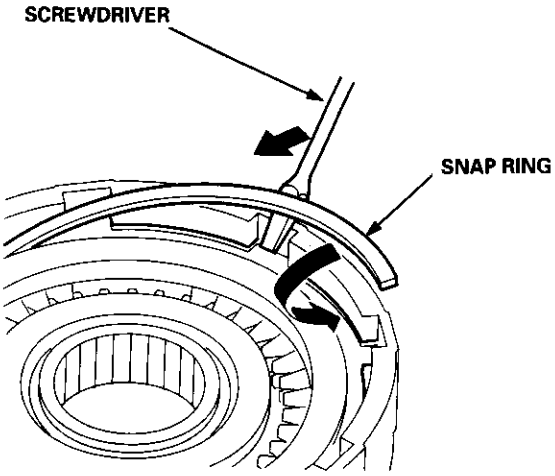

13. Verify that the snap ring end gap is correct.

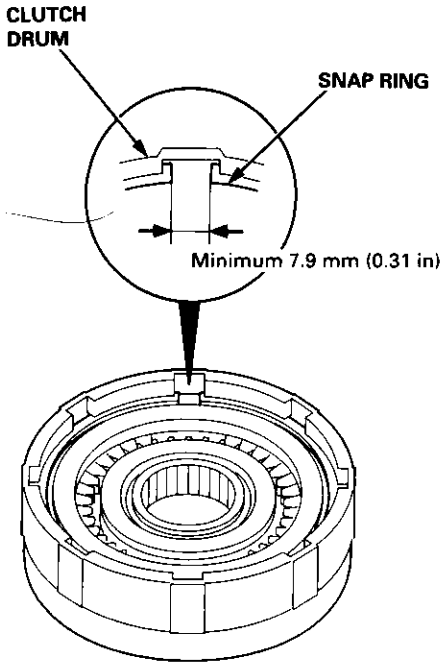

14. Measure the clearance between the clutch end plate and top disc with a dial indicator. Zero the dial indicator with the clutch end plate lowered, and lift it up to the snap ring. The distance that the clutch end plate moves is the clearance between the clutch end plate and top disc.

NOTE: Take measurements in at least three places, and use the average as the actual clearance.

Clutch End Plate-to-Top Disc Clearance:

STANDARD: 0.6 – 0.8 mm (0.024 – 0.031 in)

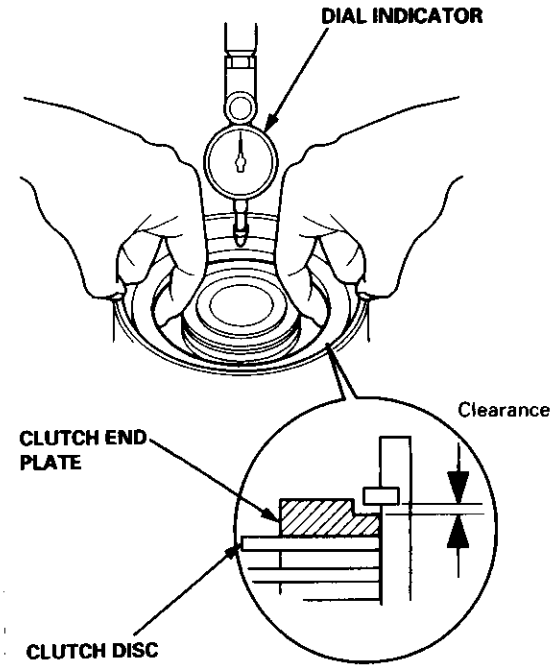

15. If the clearance is out of tolerance, select a new clutch end plate from the following table, then recheck.

NOTE: If the thickest clutch end plate is installed but the clearance is still over the standard, replace the clutch discs and clutch plates.

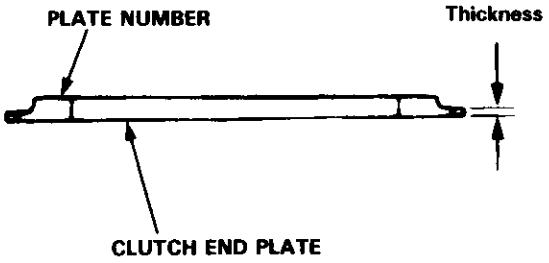

FORWARD CLUTCH END PLATE

Plate No.	Part Number	Thickness
1 or 15	22561 – P4V – 003	3.5 mm (0.138 in)
2 or 16	22562 – P4V – 003	3.6 mm (0.142 in)
3 or 17	22563 – P4V – 003	3.7 mm (0.146 in)
4 or 18	22564 – P4V – 003	3.8 mm (0.150 in)
5 or 19	22565 – P4V – 003	3.9 mm (0.154 in)
6 or 20	22566 – P4V – 003	4.0 mm (0.157 in)
7 or 21	22567 – P4V – 003	4.1 mm (0.161 in)
8 or 22	22568 – P4V – 003	4.2 mm (0.165 in)
9 or 23	22569 – P4V – 003	4.3 mm (0.169 in)
10 or 24	22570 – P4V – 003	4.4 mm (0.173 in)
11 or 25	22571 – P4V – 003	4.5 mm (0.177 in)
12 or 26	22572 – P4V – 003	4.6 mm (0.181 in)
13 or 27	22573 – P4V – 003	4.7 mm (0.185 in)

16. After replacing the clutch end plate, make sure that the clearance is within tolerance.

25 x 35 mm Thrust Shim Selection

1. Measure the distance between the flywheel housing surface and the ball bearing as shown, then note the measurement (Measurement A).

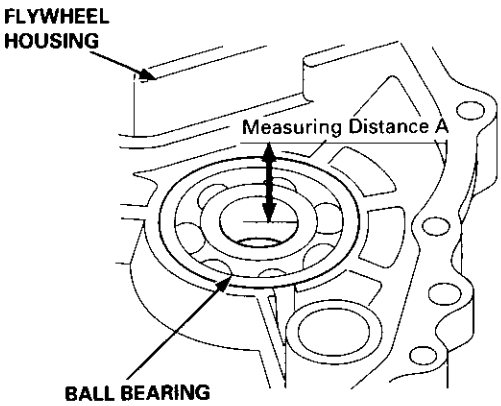

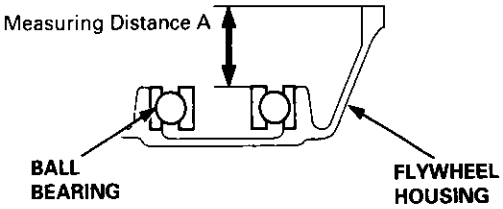

2. Install the secondary gear shaft in the transmission housing.

3. Measure the distance between the transmission housing surface and the thrust washer mounting surface of the secondary gear shaft as shown, then note the measurement (Measurement B).

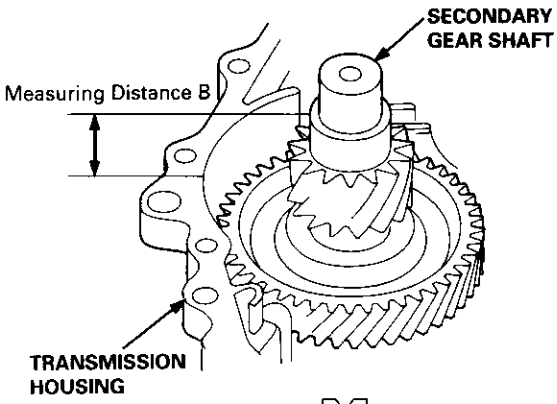

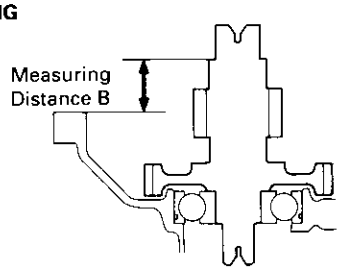

4. Calculate 25 x 35 mm thrust shim thickness by following formula.

FORMULA:
25 x 35 mm Thrust Shim Thickness
= Measurement A – Measurement B + Flywheel Housing Gasket Thickness: 0.5 mm (0.020 in)

Example:
Measurement A: 32.7 mm (1.287 in)
Measurement B: 30.1 mm (1.185 in)

25 x 35 mm Thrust Shim Thickness
= 32.7 mm (1.287 in) – 30.1 mm (1.185 in)
+ 0.5 mm (0.020 in)
= 3.1 mm (0.122 in)

Select 25 x 35 mm Thrust Shim D.

5. Select the 25 x 35 mm thrust shim from the following the table.

THRUST SHIM, 25 x 35 mm

No.	Part Number	Thickness
A	90551 – P4V – 000	2.8 mm (0.110 in)
B	90552 – P4V – 000	2.9 mm (0.114 in)
C	90553 – P4V – 000	3.0 mm (0.118 in)
D	90554 – P4V – 000	3.1 mm (0.122 in)
E	90555 – P4V – 000	3.2 mm (0.126 in)
F	90556 – P4V – 000	3.3 mm (0.130 in)
G	90557 – P4V – 000	3.4 mm (0.134 in)
H	90558 – P4V – 000	3.5 mm (0.138 in)
I	90559 – P4V – 000	3.6 mm (0.142 in)
J	90560 – P4V – 000	3.7 mm (0.146 in)
K	90561 – P4V – 000	3.8 mm (0.150 in)

Illustrated Index

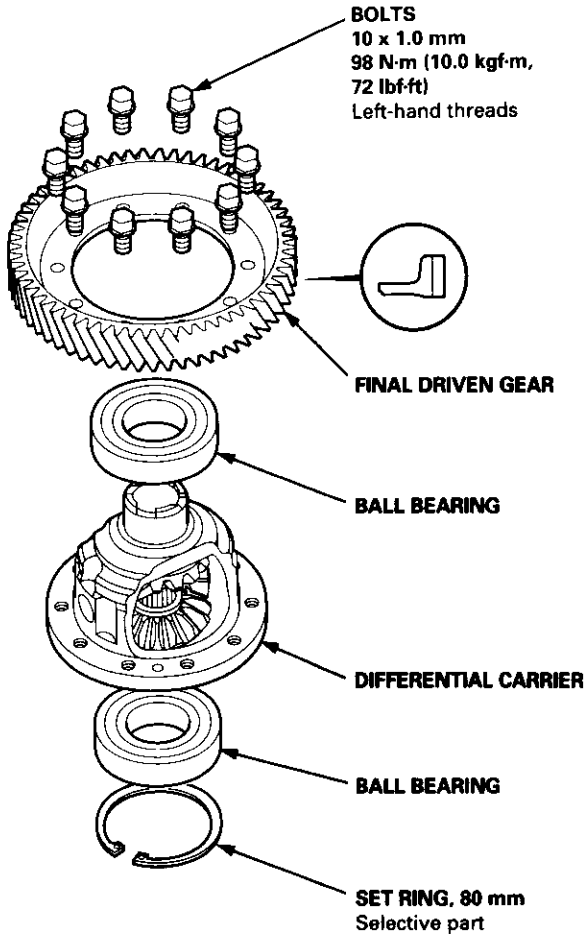

Backlash Inspection

1. Place the differential assembly on V-blocks, and install both axles.
2. Check the backlash of both pinion gears.

   Standard (New): 0.05 – 0.15 mm (0.002 – 0.006 in)

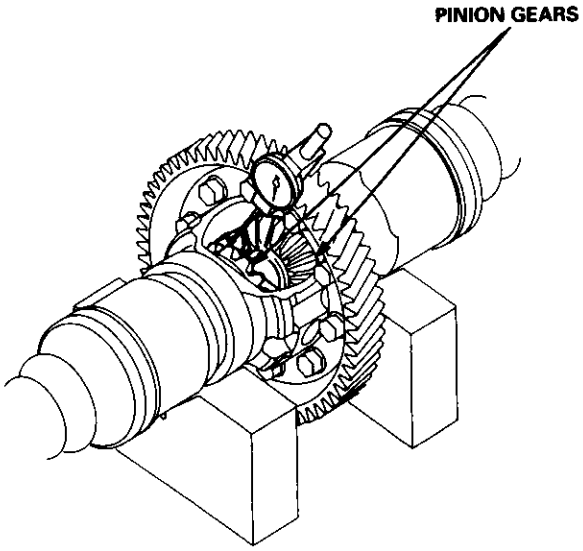

3. If the backlash is out of tolerance, replace the differential carrier.

Bearing Replacement

NOTE: Check the bearings for wear and rough rotation. If the bearings are OK, removal is not necessary.

1. Remove the ball bearings using a bearing puller.

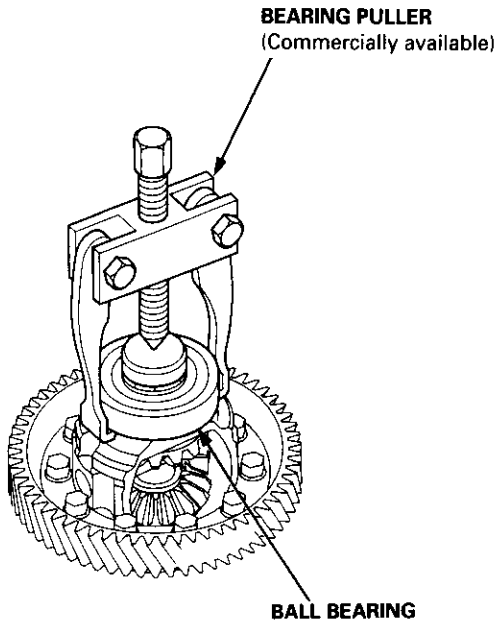

2. Install the new ball bearings using the special tool with a press as shown.

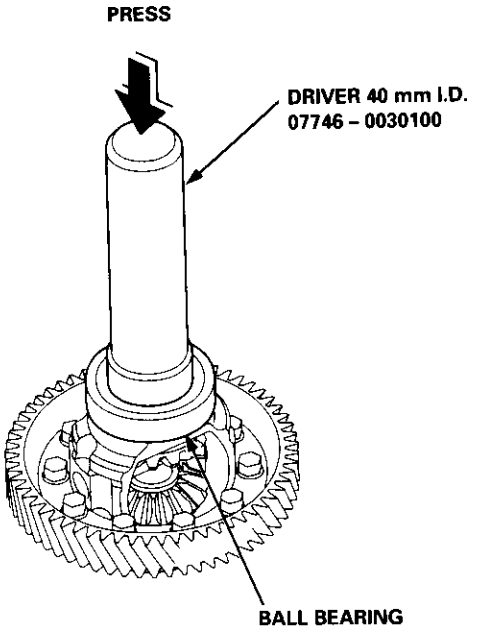

Differential Carrier Replacement

1. Remove the final driven gear from the differential carrier.

   NOTE: The final driven gear bolts have left-hand threads.

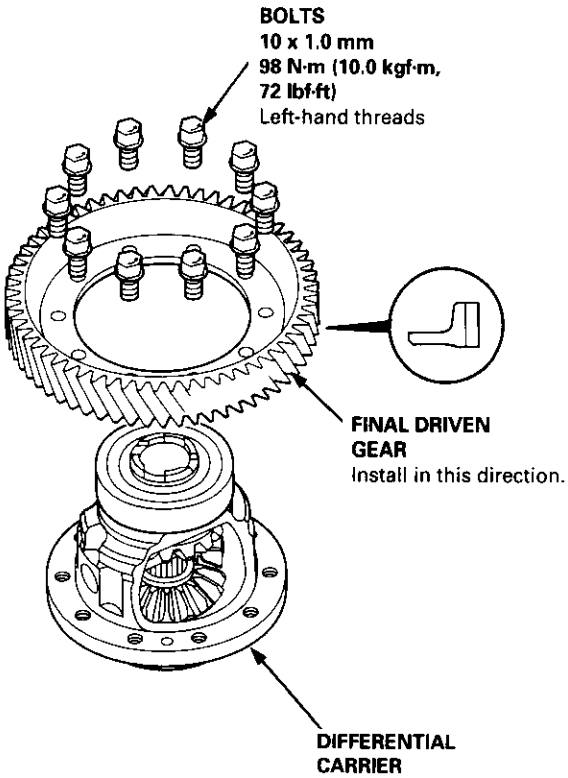

2. Install the final driven gear with its chamfered side on the inner bore facing the differential carrier.

3. Tighten the bolts to the specified torque in a crisscross pattern.

   TORQUE: 98 N·m (10.0 kgf·m, 72 lbf·ft)

Oil Seal Removal

1. Remove the differential assembly.
2. Remove the oil seal from the transmission housing.

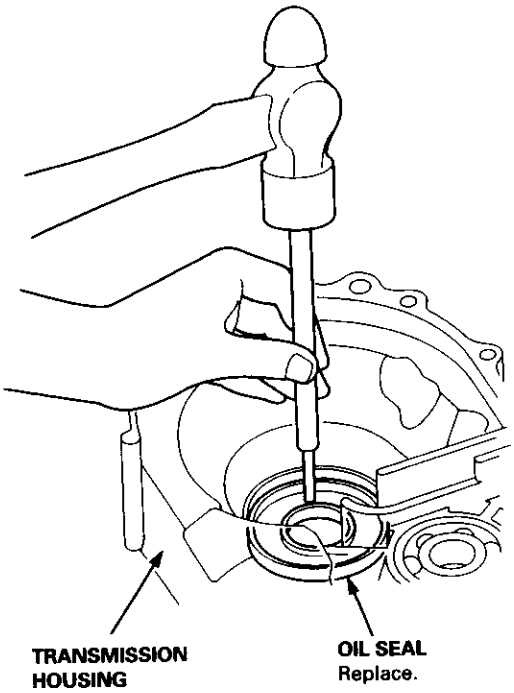

3. Remove the oil seal from the flywheel housing.

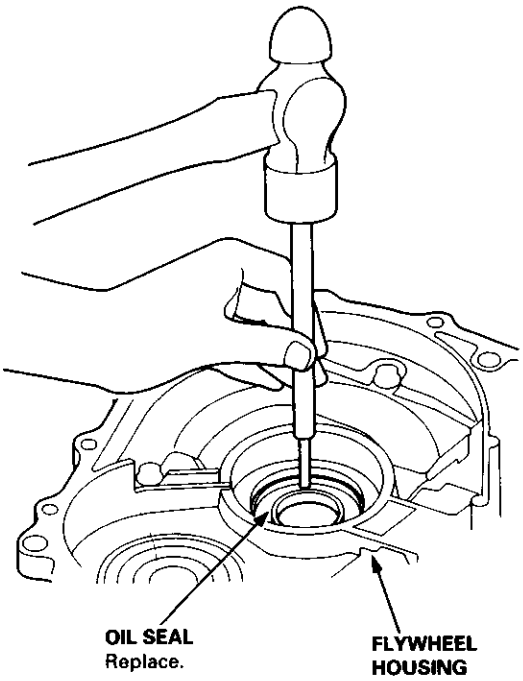

Oil Seal Installation/Side Clearance

1. Install a 2.50 mm (0.098 in) thick 80 mm wide set ring in the transmission housing.

   NOTE: Do not install the oil seal yet.

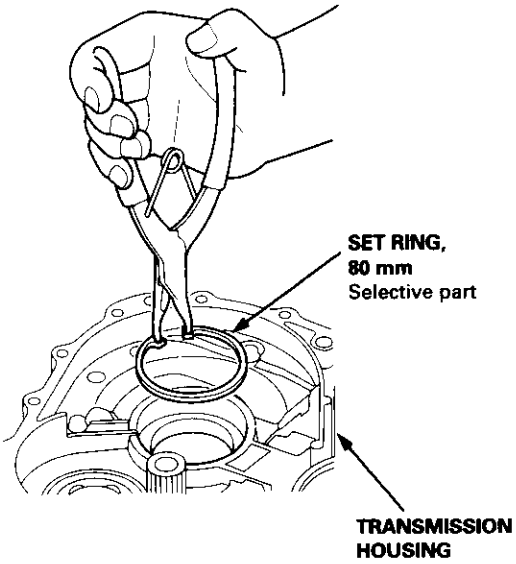

2. Install the differential assembly into the transmission housing using the special tool as shown.

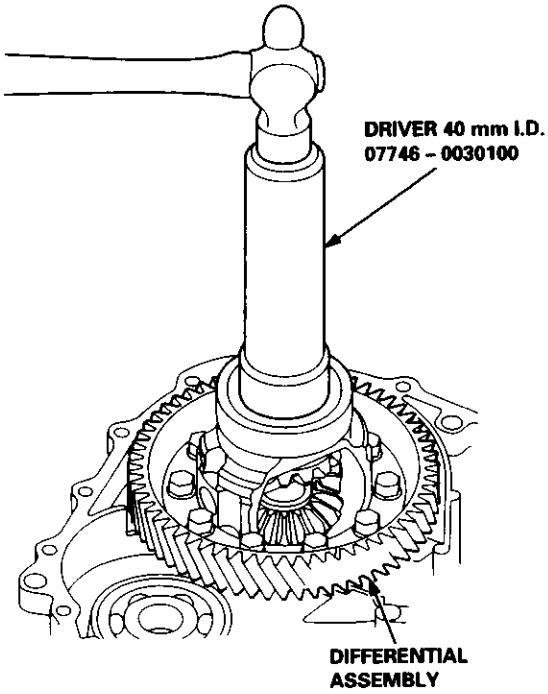

(cont'd)

Oil Seal Installation/Side Clearance (cont'd)

3. Install the flywheel housing, and tighten the bolts.

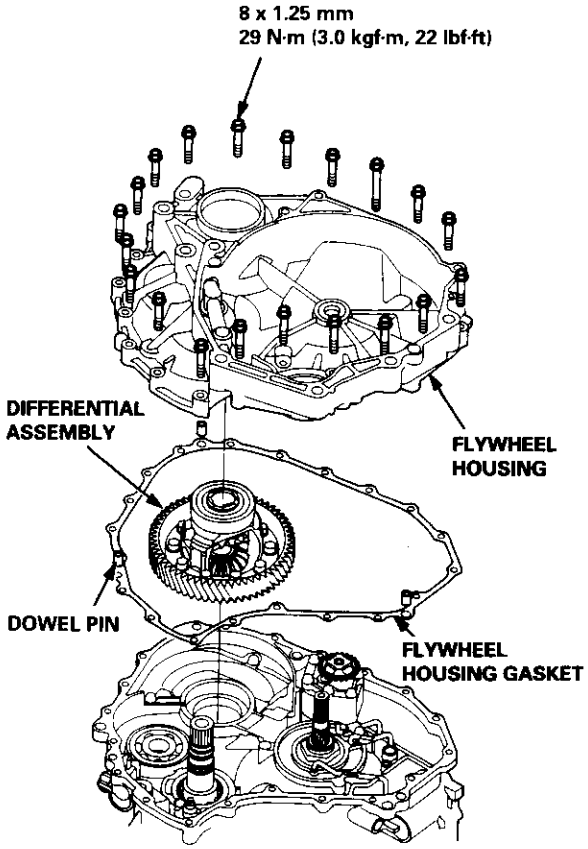

4. Measure the clearance between the 80 mm set ring and outer race of the ball bearing in the transmission housing.

STANDARD: 0 – 0.15 mm (0 – 0.006 in)

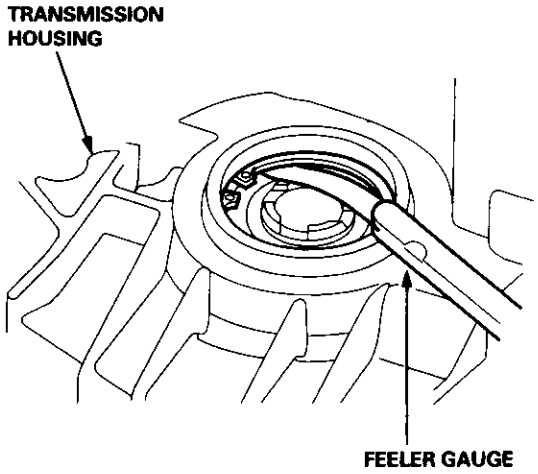

5. If the clearance is more than the standard, select a new set ring from the table, and install it.

SET RING, 80 mm

Part Number	Thickness
90414 – 689 – 000	2.50 mm (0.098 in)
90415 – 689 – 000	2.60 mm (0.102 in)
90416 – 689 – 000	2.70 mm (0.106 in)
90417 – 689 – 000	2.80 mm (0.110 in)
90418 – 689 – 000	2.90 mm (0.114 in)
90419 – PH8 – 000	3.00 mm (0.118 in)

NOTE: If the clearance measured in step 4 is standard, it is not necessary to perform steps 7 and 8.

6. Remove the flywheel housing.

7. Replace the 2.50 mm (0.098 in) set ring, 80 mm with the one of the correct thickness selected in step 5.

8. Install the oil seal in the transmission housing using the special tools as shown.

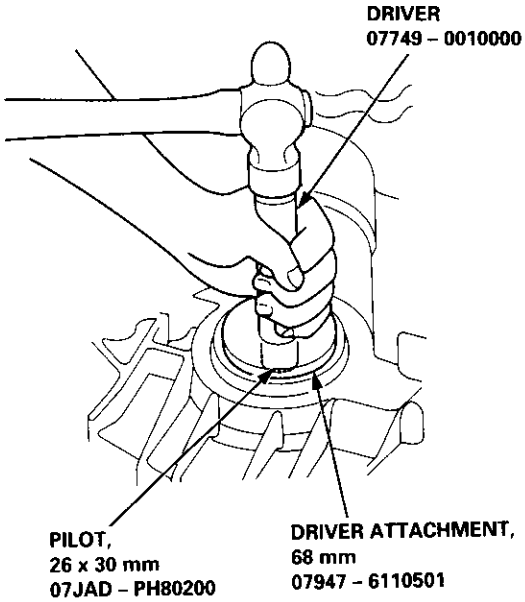

9. Install the oil seal in the flywheel housing using the special tools as shown.

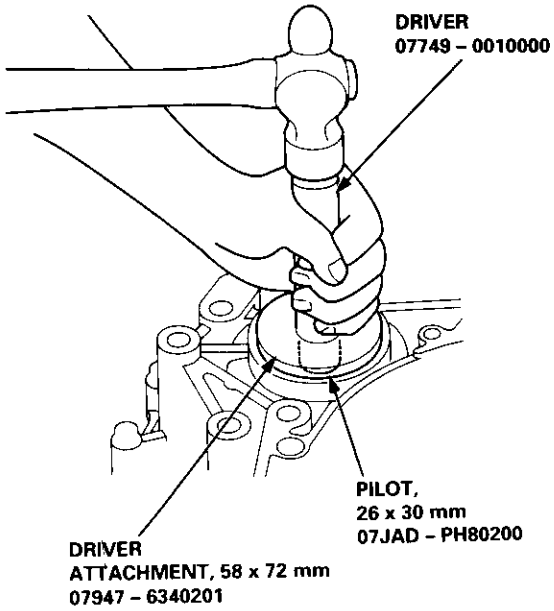

Replacement

1. Remove the input shaft oil seal from the flywheel housing.

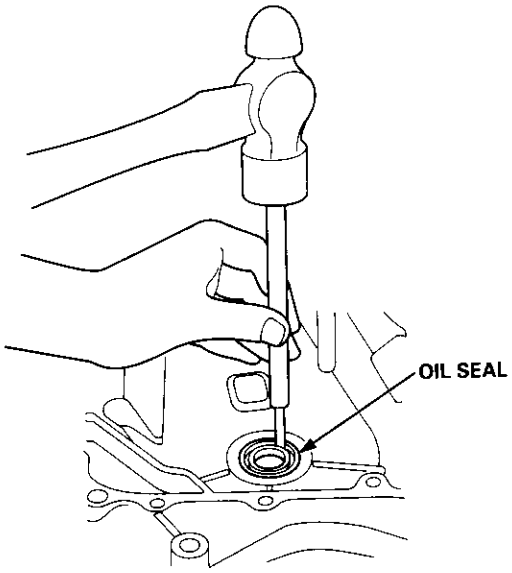

2. Install the oil seal in the flywheel housing using the special tools as shown.

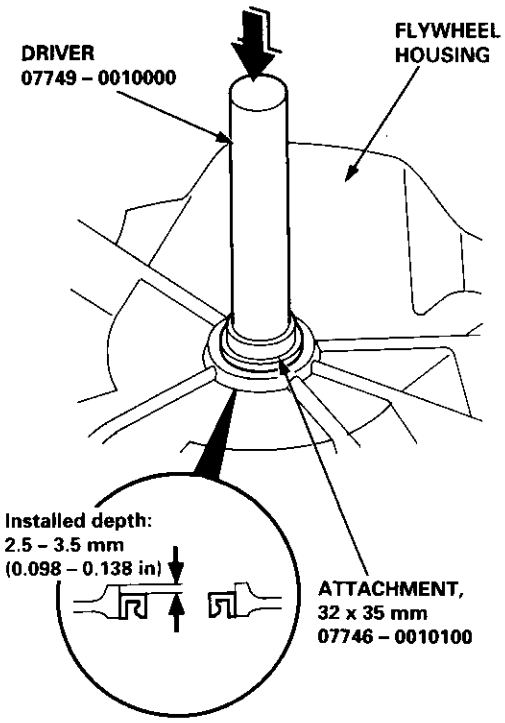

Driven Pulley Shaft Bearing Replacement

1. To remove the driven pulley shaft bearing from the transmission housing, expand the snap ring with snap ring pliers, then push the bearing out using the special tools and a press as shown.

   NOTE: Do not remove the snap ring unless it's necessary to clean the groove in the housing.

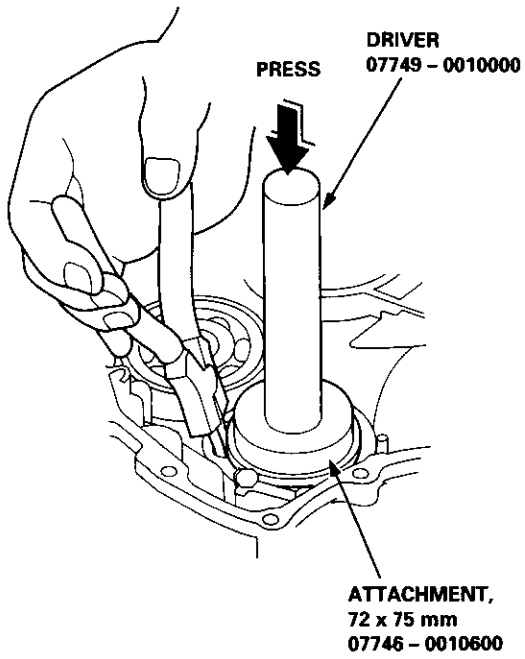

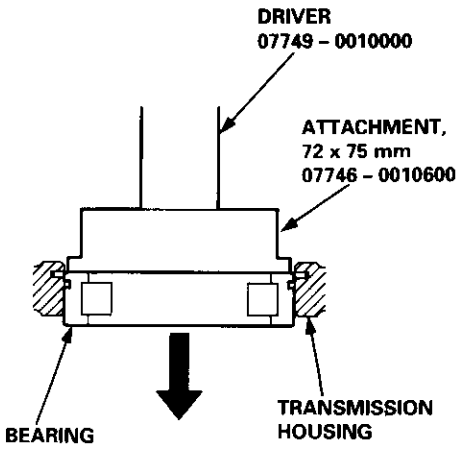

2. Expand the snap ring with snap ring pliers, insert the new bearing part-way into the housing using the special tools and a press as shown. Install the bearing with the groove facing outside the housing.

   NOTE: Coat all parts with CVT Fluid.

3. Release the pliers, then using the special tools, push the bearing down into the housing until the snap ring snaps in place.

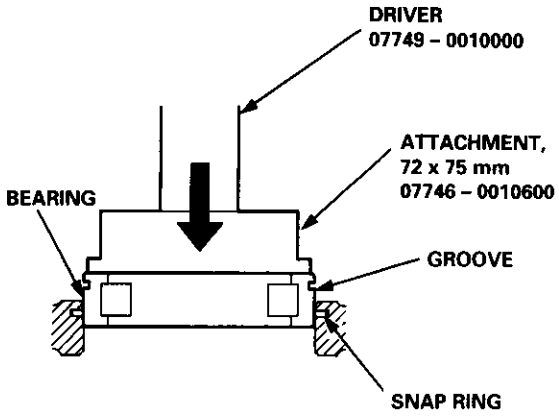

4. After installing the bearing verify the following:

   - The snap ring is seated in the bearing and housing grooves.
   - The ring end gap is correct.

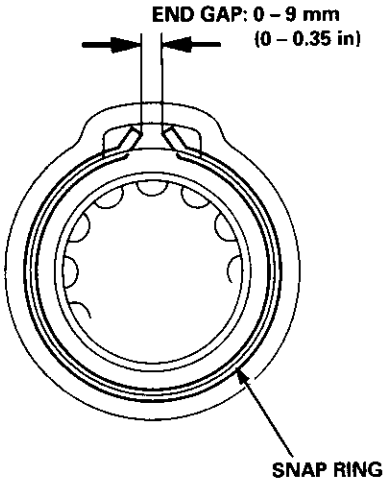

Secondary Gear Shaft Bearing Replacement

1. Remove the secondary gear shaft bearing using the special tools as shown.

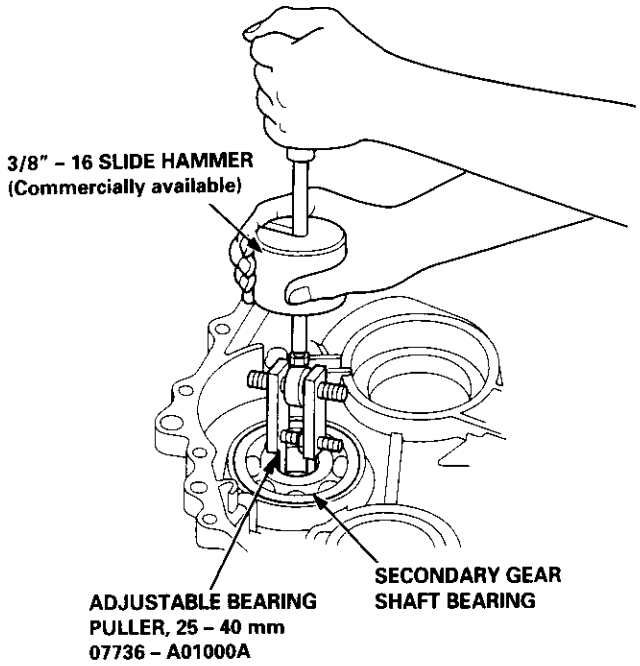

2. Install the new secondary gear shaft bearing until it bottoms in the transmission housing, using the special tools as shown.

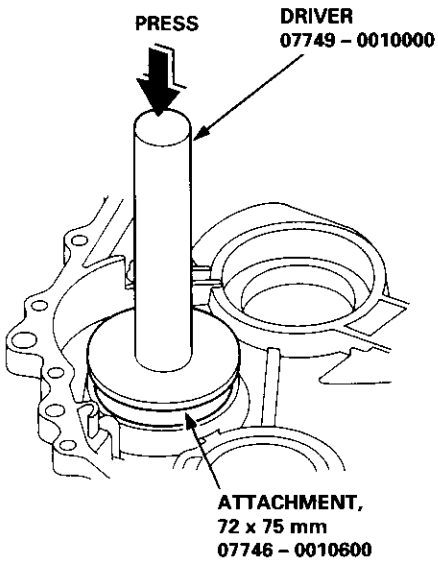

Secondary Gear Shaft Bearing Replacement

1. Remove the secondary gear shaft bearing using the special tool as shown.

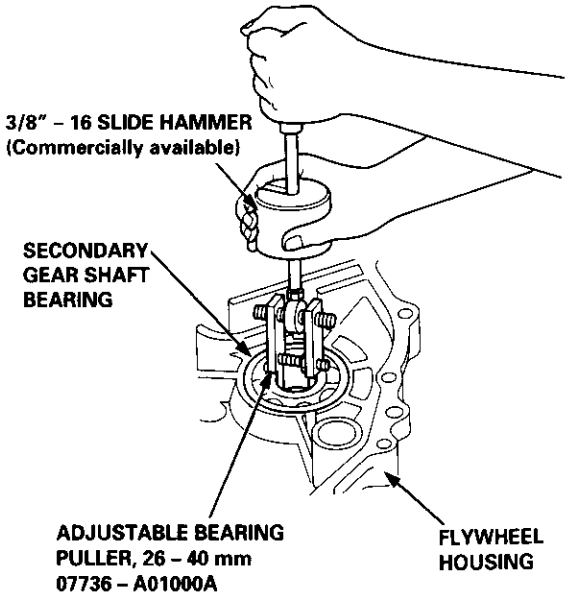

2. Install the new secondary gear shaft bearing until it bottoms in the flywheel housing, using the special tools as shown.

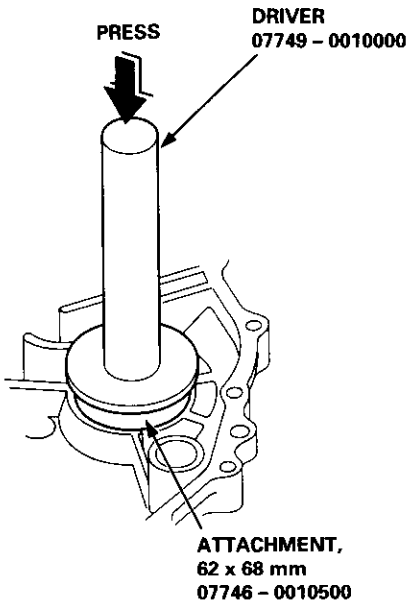

Ring Gear Bearing

Replacement

1. Remove the ring gear bearing.

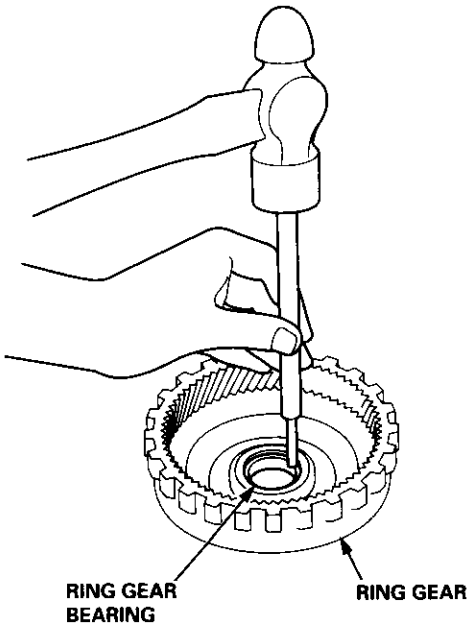

2. Install the new ring gear bearing until it bottoms in the ring gear, using the special tools as shown.

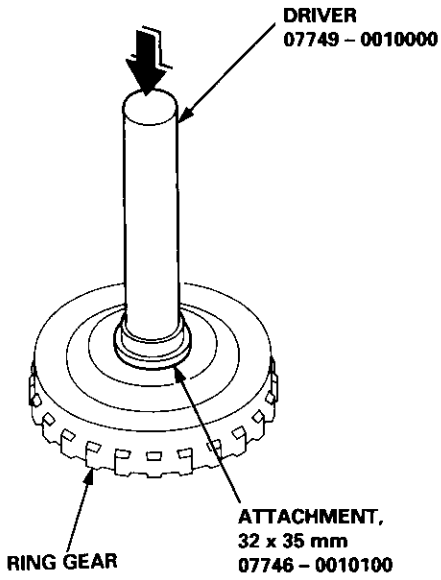

Control Shaft Assembly

Removal/Installation

1. Remove the bolt and lock washer.

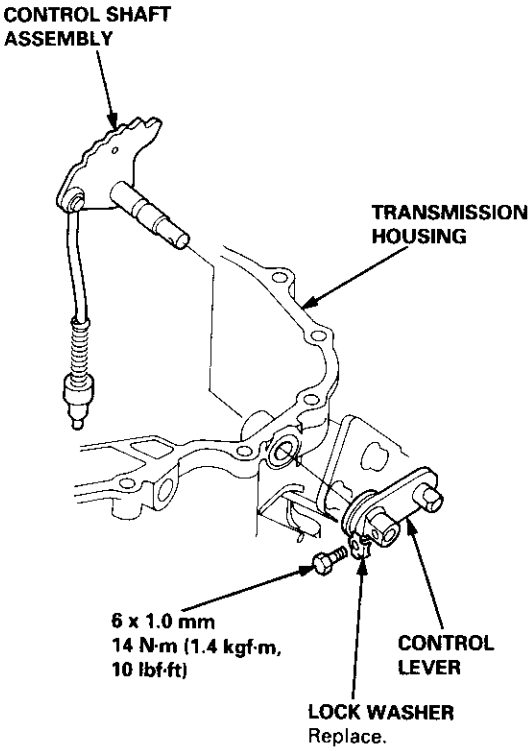

2. Remove the control lever from the control shaft.
3. Remove the control shaft assembly.
4. Install the control shaft assembly in the transmission housing.
5. Install the control lever to the control shaft.
6. Install and tighten the bolt with a new lock washer.

Reassembly

CAUTION: While reassembling, be sure not to allow dust and other foreign particles to enter into the transmission.

NOTE:
- Coat all parts with CVT Fluid.
- Replace the following parts:
  - — O-rings
  - — Sealing rings
  - — Sealing washers
  - — Gaskets
  - — Start clutch assembly and secondary drive gear assembly

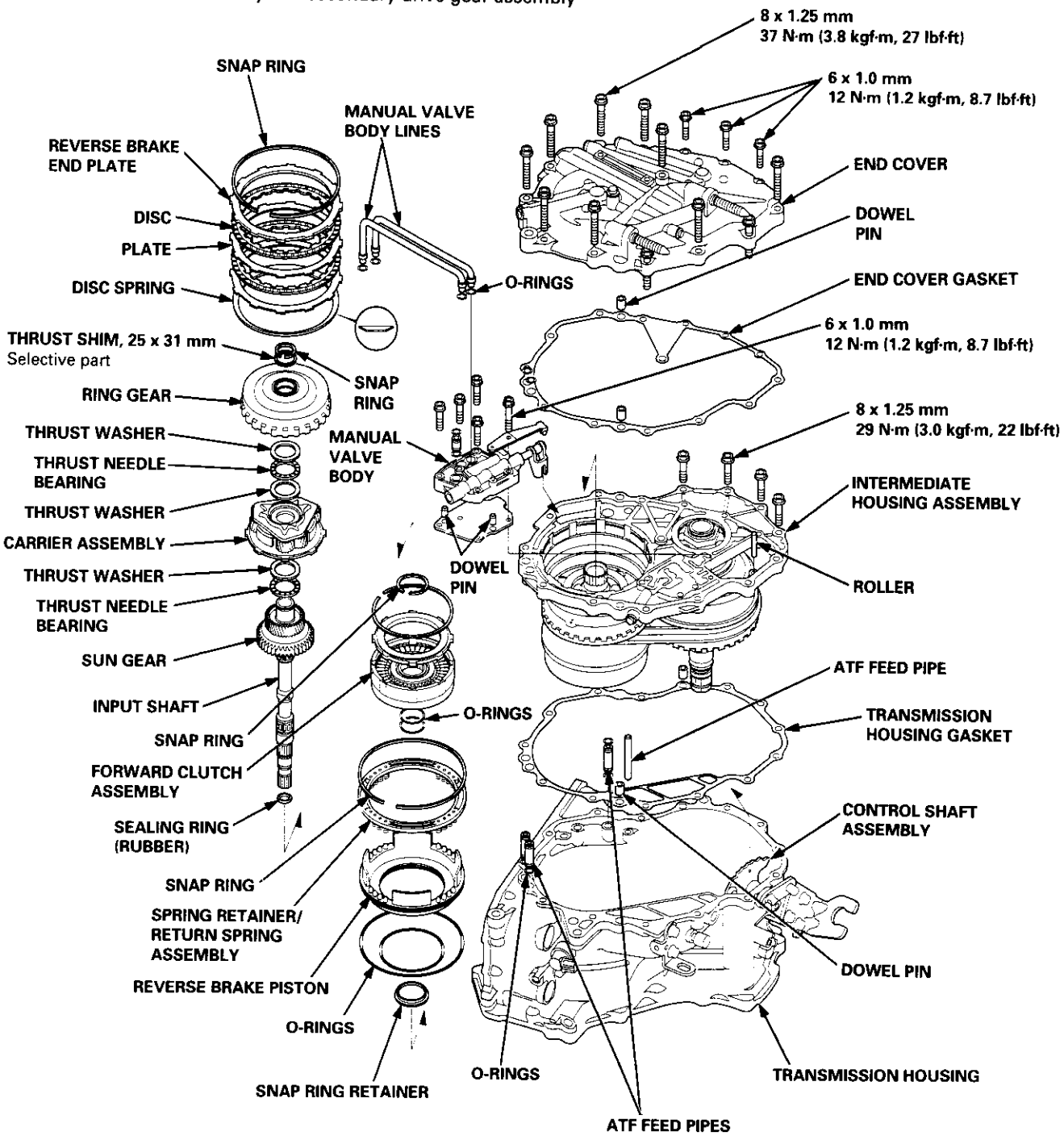

1. Install the ATF feed pipe in the transmission housing, and install the three ATF feed pipes with new O-rings in the transmission housing.
2. Install the two dowel pins and new transmission housing gasket on the transmission housing.
3. Push the control shaft assembly toward the outside of the transmission housing, then install the intermediate housing assembly (four bolts).
4. Install the manual valve body separator plate and the two dowel pins on the intermediate housing, then install the manual valve body with the detent spring (five bolts).
5. Put the control shaft assembly back, then install the roller in the intermediate housing.
6. Install the reverse brake piston in the intermediate housing.
7. Install the spring retainer/return spring assembly on the reverse brake piston.

   NOTE: Install the return springs on the spring guides of the reverse brake piston securely.

8. Install the special tool to compress the return spring as shown.

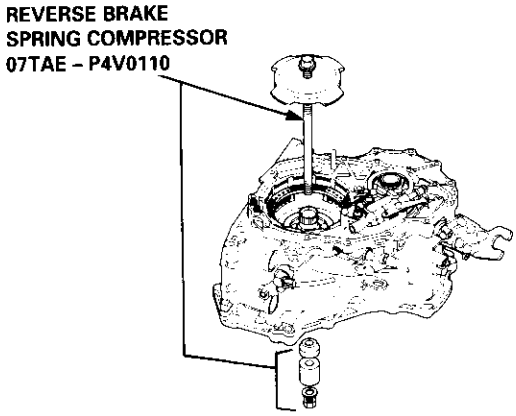

CAUTION: If the spring retainer tab is on the reverse brake piston, the spring retainer may be damaged. Be sure the spring retainer tab is not on the piston.

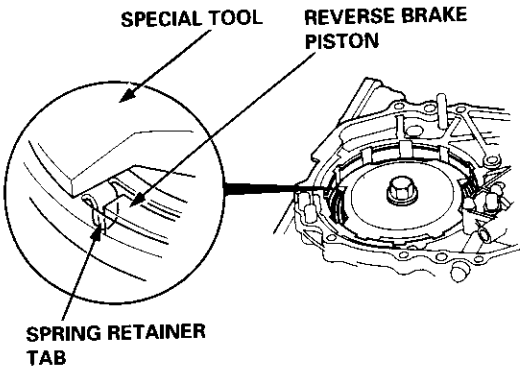

9. Compress the return springs, then install the snap ring in the intermediate housing above the spring retainer.

10. Verify that the snap ring end gap is correct.

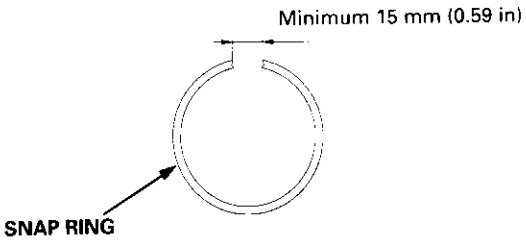

11. Soak the reverse brake discs thoroughly in CVT Fluid for minimum 30 minutes.

12. Install the disc spring on the reverse brake piston.

13. Starting with a reverse brake plate, alternately install the reverse brake plates and discs. Install the reverse brake end plate, and the snap ring.

14. Measure the clearance between the reverse brake end plate and the top disc with a dial indicator. Zero the dial indicator with a reverse brake end plate lowered, and lift it up to the snap ring. The distance that the reverse brake and plate moves is the clearance between the reverse end plate, and the top disc.

    NOTE: Take measurements in at least three places, and use the average as the actual clearance.

STANDARD: 0.45 – 0.75 mm (0.018 – 0.030 in)

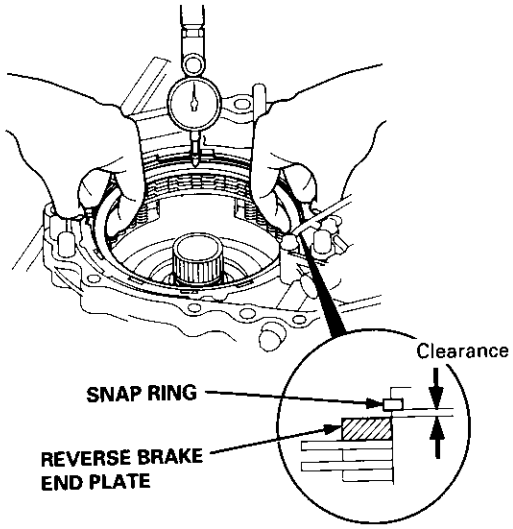

(cont'd)

Reassembly (cont'd)

15. If the clearance is not within the standard, remove the reverse brake end plate and measure its thickness.
16. Select and install a new reverse brake end plate, then recheck.

    NOTE: If the thickest reverse brake end plate is installed, but the clearance is still over the standard, replace the reverse brake discs and plates.

REVERSE BRAKE END PLATE

Plate No.	Part Number	Thickness
1	22551 – P4V – 003	3.6 mm (0.142 in)
2	22552 – P4V – 003	3.8 mm (0.150 in)
3	22553 – P4V – 003	4.0 mm (0.157 in)
4	22554 – P4V – 003	4.2 mm (0.165 in)
5	22555 – P4V – 003	4.4 mm (0.173 in)
6	22556 – P4V – 003	4.6 mm (0.181 in)
7	22557 – P4V – 003	4.8 mm (0.189 in)
8	22558 – P4V – 003	5.0 mm (0.200 in)

17. After replacing the reverse brake end plate, make sure that the clearance is within the standard.
18. Remove the snap ring, reverse brake end plate, discs, plates, and disc spring.
19. Install the snap ring retainer on the drive pulley shaft.
20. Wrap the drive pulley shaft splines with tape to prevent damage to the O-rings, then install new O-rings.
21. Install the forward clutch assembly on the drive pulley shaft, then install the snap ring.

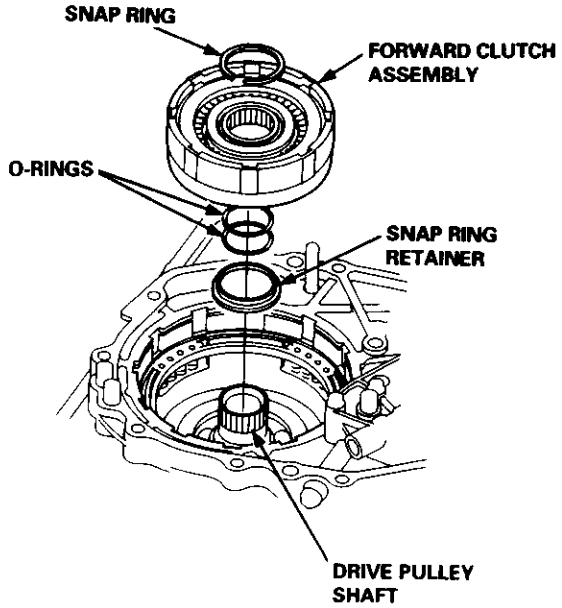

22. Verify that the outside diameter of the snap ring is correct.

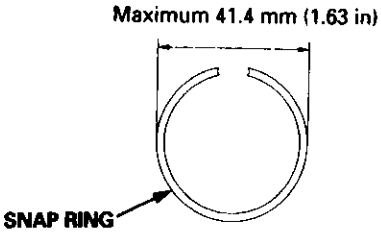

23. Install the input shaft and the sun gear as a sub assembly.
24. Install the thrust needle bearing and the thrust washer on the sun gear.

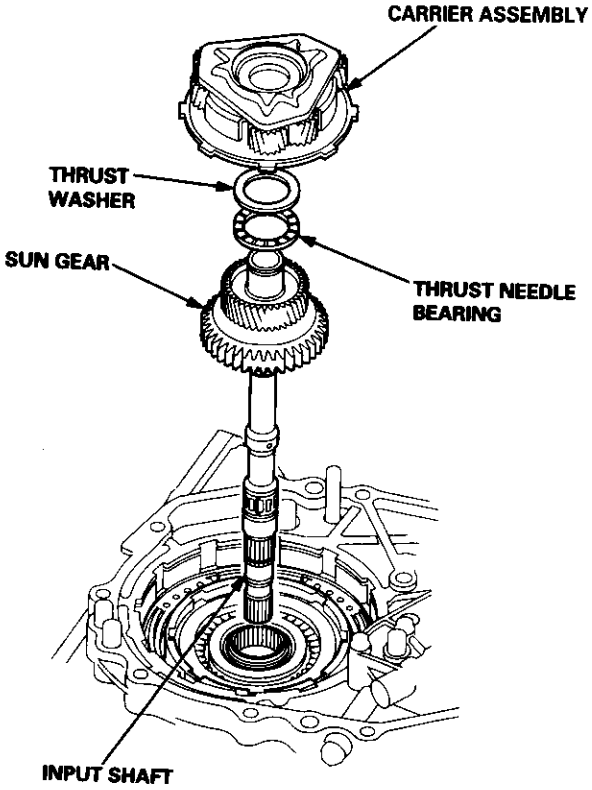

25. Install the carrier assembly on the forward clutch.

26. Install the thrust washer, the thrust needle bearing, and the thrust washer on the carrier assembly.

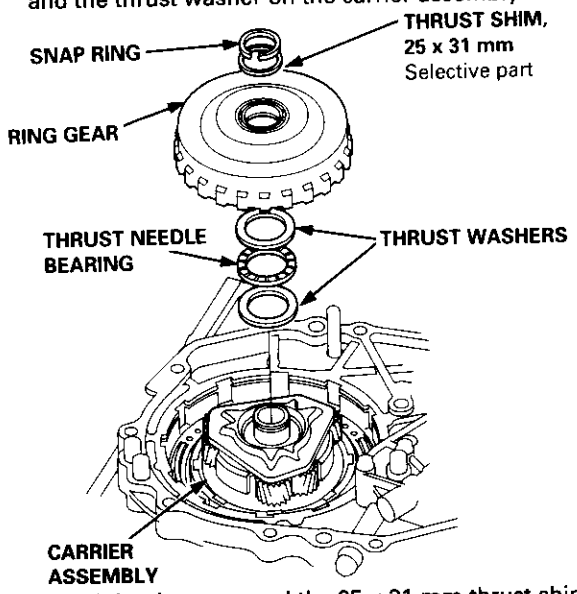

27. Install the ring gear and the 25 x 31 mm thrust shim, then install the snap ring.

28. Verify that the outside diameter of the snap ring is correct.

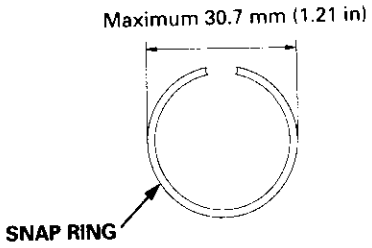

29. Measure the clearance between the 25 x 31 mm thrust shim and the snap ring.

STANDARD: 0.05 – 0.11 mm (0.0020 – 0.0043 in)

NOTE: Take measurements in at least three places, and use the average as the actual clearance.

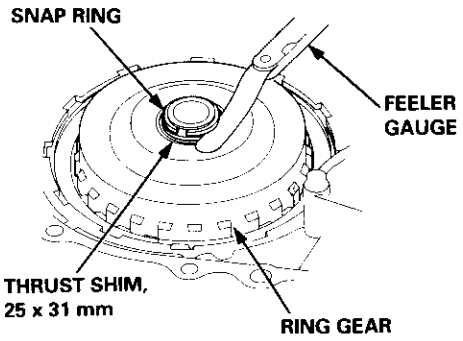

30. If the clearance is out of tolerance, remove the 25 x 31 mm thrust shim and measure its thickness.

31. Select and install a new 25 x 31 mm thrust shim, then recheck.

THRUST SHIM, 25 x 31 mm

No.	Part Number	Thickness
A	90451 – P4V – 000	1.05 mm (0.041 in)
B	90452 – P4V – 000	1.12 mm (0.044 in)
C	90453 – P4V – 000	1.19 mm (0.047 in)
D	90454 – P4V – 000	1.26 mm (0.050 in)
E	90455 – P4V – 000	1.33 mm (0.052 in)
F	90456 – P4V – 000	1.40 mm (0.055 in)
G	90457 – P4V – 000	1.47 mm (0.058 in)
H	90458 – P4V – 000	1.54 mm (0.061 in)
I	90459 – P4V – 000	1.61 mm (0.063 in)
J	90460 – P4V – 000	1.68 mm (0.066 in)
K	90461 – P4V – 000	1.75 mm (0.069 in)
L	90462 – P4V – 000	1.82 mm (0.072 in)
M	90480 – P4V – 000	1.085 mm (0.0427 in)
N	90481 – P4V – 000	1.155 mm (0.0454 in)
O	90482 – P4V – 000	1.225 mm (0.0482 in)
P	90483 – P4V – 000	1.295 mm (0.0510 in)
Q	90484 – P4V – 000	1.365 mm (0.0537 in)
R	90485 – P4V – 000	1.435 mm (0.0565 in)
S	90486 – P4V – 000	1.505 mm (0.0593 in)
T	90487 – P4V – 000	1.575 mm (0.0620 in)
U	90488 – P4V – 000	1.645 mm (0.0648 in)
V	90489 – P4V – 000	1.715 mm (0.0675 in)
W	90490 – P4V – 000	1.785 mm (0.0703 in)

32. After replacing the 25 x 31 mm thrust shim, make sure that the clearance is within tolerance and the snap ring outside diameter is correct.

33. Install the disc spring in the direction shown.

34. Starting with a reverse brake plate, alternately install the reverse brake plates and discs. Install selected reverse brake end plate, then install the snap ring.

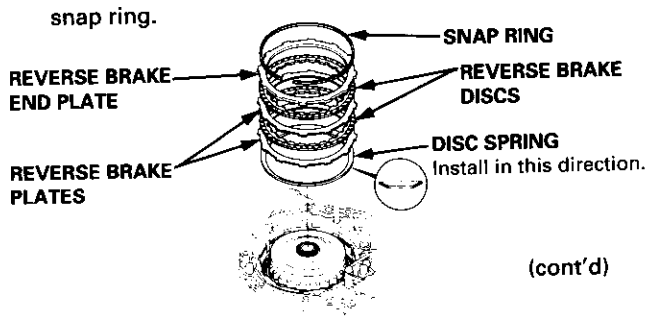

(cont'd)

Reassembly (cont'd)

35. Verify that the snap ring end gap is correct.

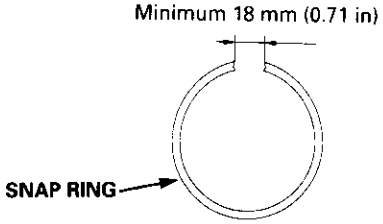

36. Install the manual valve body lines A and B with new O-rings on the manual valve body and the intermediate housing.

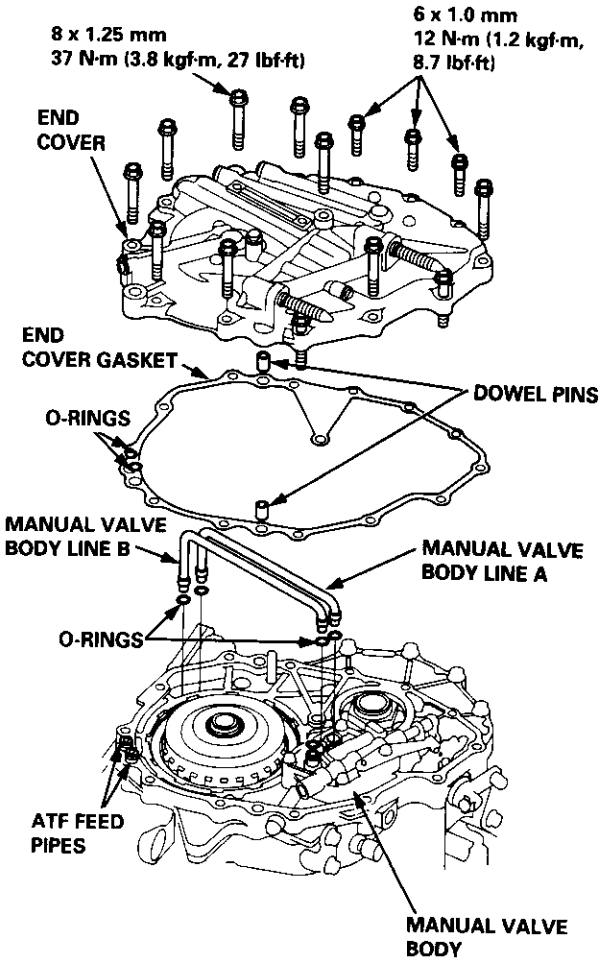

37. Install the two dowel pins and new end cover gasket on the intermediate housing, then install new O-rings on the ATF feed pipes.

38. Install the end cover (three 6 mm bolts, eleven 8 mm bolts).

    NOTE: Install the nine 8 mm bolts in the end cover (two 8 mm bolts remain in the end cover) then tighten the eleven 8 mm bolts.

39. Install the park pawl, spring, and shaft on the transmission housing, then move the control lever to any gear other than [P] position.

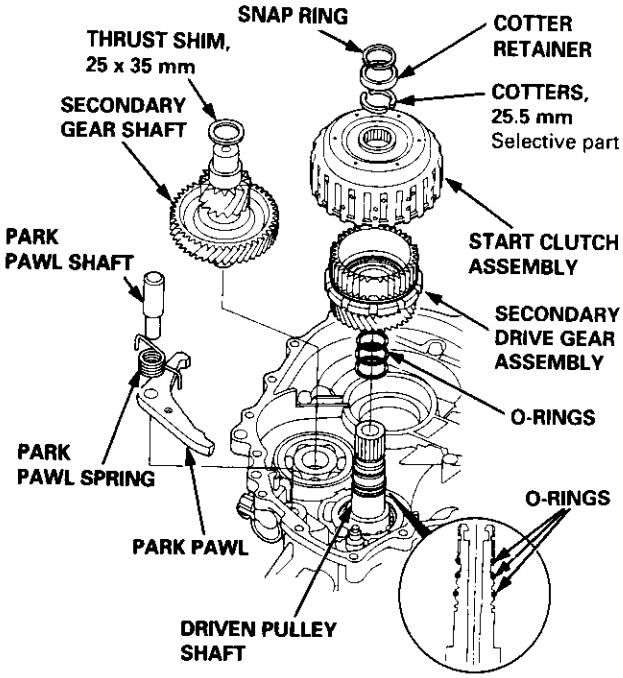

40. Install the secondary gear shaft with selected 25 x 35 mm thrust shim (see page 14-328).

41. Wrap the driven pulley shaft splines with tape to prevent damage to the O-rings, then install new O-rings.
42. Assemble the secondary drive gear assembly in the start clutch assembly, then install them on the driven pulley shaft.
43. Pull the handle of the special tool up, then install the tip of it into the driven pulley shaft hole, and set the special tool on the start clutch.

CAUTION: While installing the start clutch and the secondary drive gear assembly using the special tool, be sure not to allow dust or other foreign particles to enter into the transmission.

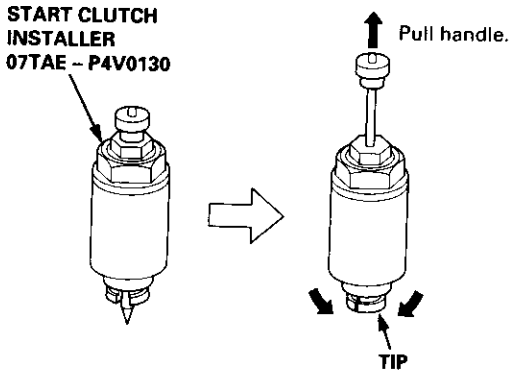

44. Push the handle of the special tool, then tighten the nut to seat the secondary drive gear assembly on the driven pulley shaft securely.

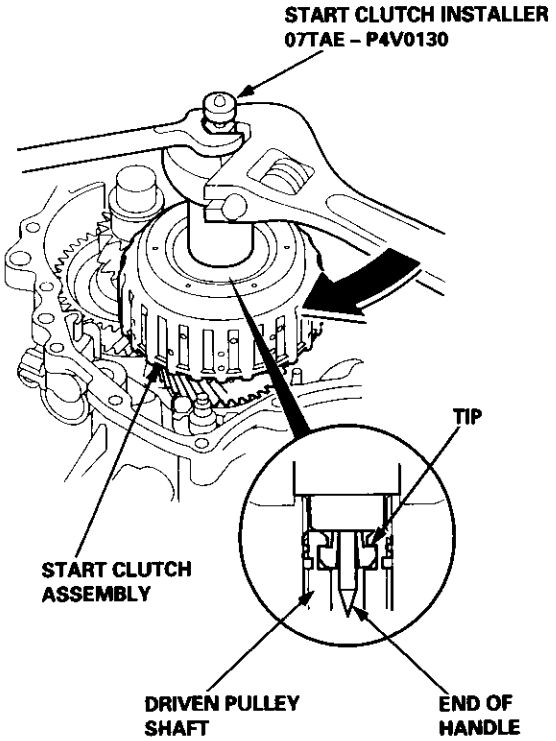

45. Pull the handle of the special tool up, and remove the special tool.

46. Install the cotters, then measure the clearance between the cotters and the start clutch guide.

STANDARD: 0 – 0.13 mm (0 – 0.005 in)

NOTE: Take measurements in at least three places, and use the average as the actual clearance.

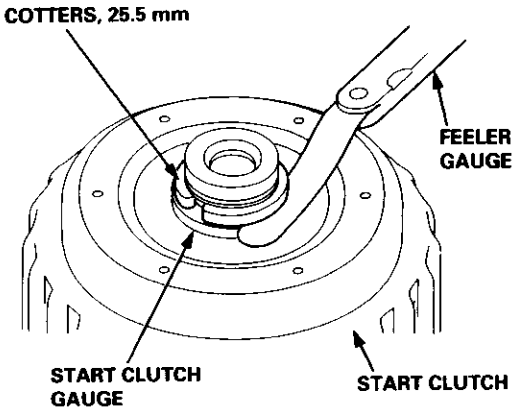

47. If the clearance is not within the standard, remove the cotters and measure their thickness.

48. Select and install new cotters, then recheck.

COTTERS, 25.5 mm

No.	Part Number	Thickness
A	90429 – P4V – 000	2.9 mm (0.114 in)
B	90430 – P4V – 000	3.0 mm (0.118 in)
C	90431 – P4V – 000	3.1 mm (0.122 in)
D	90432 – P4V – 000	3.2 mm (0.126 in)

49. After replacing the 25.5 mm cotters, make sure that the clearance is the standard.

50. Install the cotter retainer and the snap ring.

51. Verify that the outside diameter of the snap ring is correct.

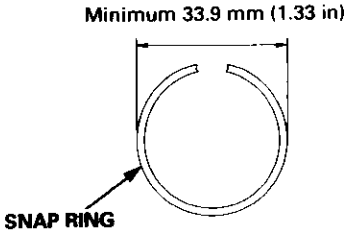

52. Install the thrust washers, the ATF pump drive sprocket hub and the 22 x 28 mm thrust shim on the input shaft, then install the snap ring.

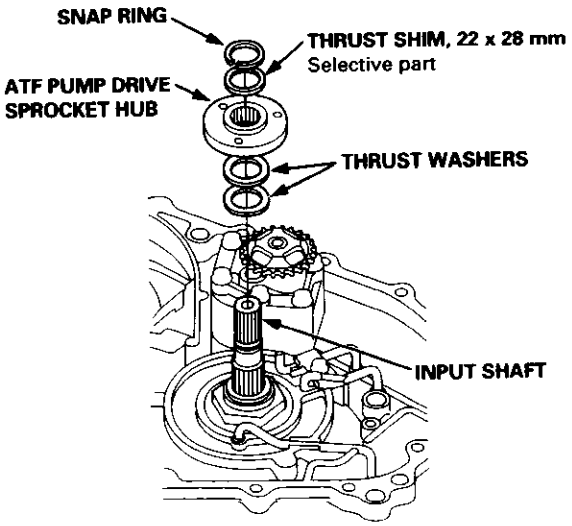

(cont'd)

Reassembly (cont'd)

53. Verify that the outside diameter of the snap ring is correct.

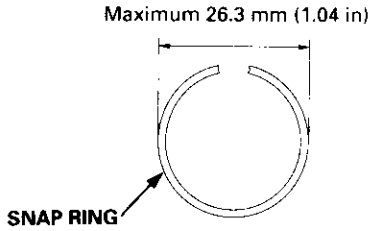

54. Measure the clearance between the 22 x 28 mm thrust shim and the snap ring.

STANDARD: 0.37 – 0.65 mm (0.015 – 0.026 in)

NOTE: Take measurements in at least three places, and use the average as the actual clearance.

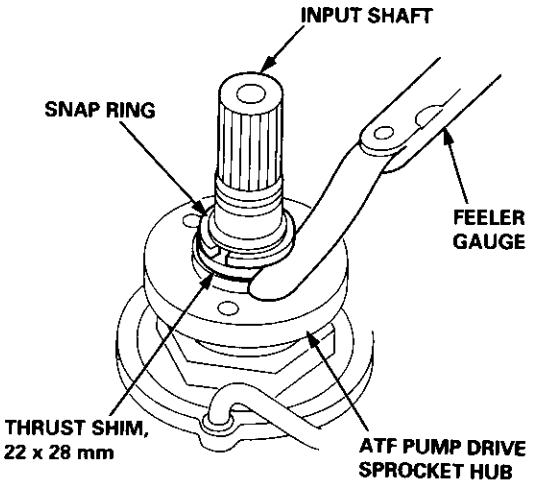

55. If the clearance is out of tolerance, remove the 22 x 28 mm thrust shim and measure its thickness.

56. Select and install a new 22 x 28 mm thrust shim, then recheck.

THRUST SHIM, 22 x 28 mm

No.	Part Number	Thickness
C	90573 – P4V – 000	1.15 mm (0.045 in)
D	90574 – P4V – 000	1.40 mm (0.055 in)
E	90575 – P4V – 000	1.65 mm (0.065 in)
F	90576 – P4V – 000	1.90 mm (0.075 in)
G	90577 – P4V – 000	2.15 mm (0.085 in)
H	90578 – P4V – 000	2.40 mm (0.095 in)

57. After replacing the 22 x 28 mm thrust shim, make sure that the clearance is within tolerance and the snap ring outside diameter is correct.

58. Install the pitot flange using its cutout as shown to clear the pitot pipes.

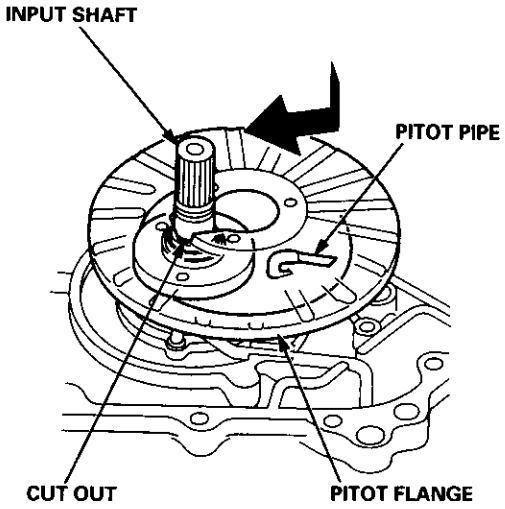

59. Install the ATF pump drive sprocket, and put the ATF pump drive chain on the ATF pump drive and driven sprockets, then install and tighten the bolts (three bolts).

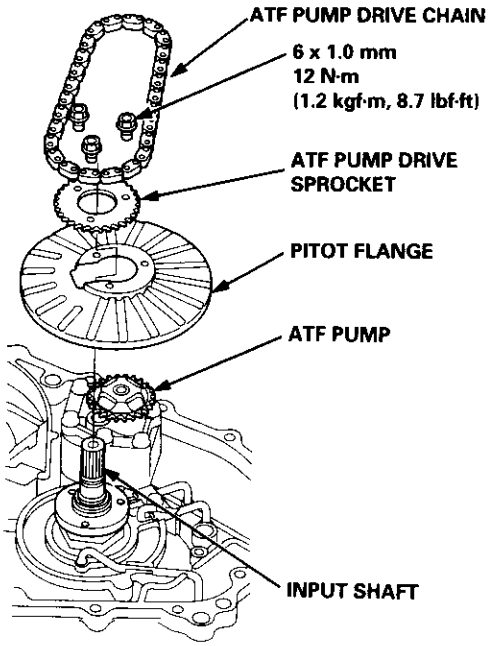

60. Install the differential assembly.

61. Install the ATF passage line assembly with new O-rings (one bolt).

62. Install the three dowel pins and new flywheel housing gasket on the transmission housing.

63. Install the flywheel housing and connector bracket (twenty bolts).

64. Install the ATF passage line holder assembly (two bolts).

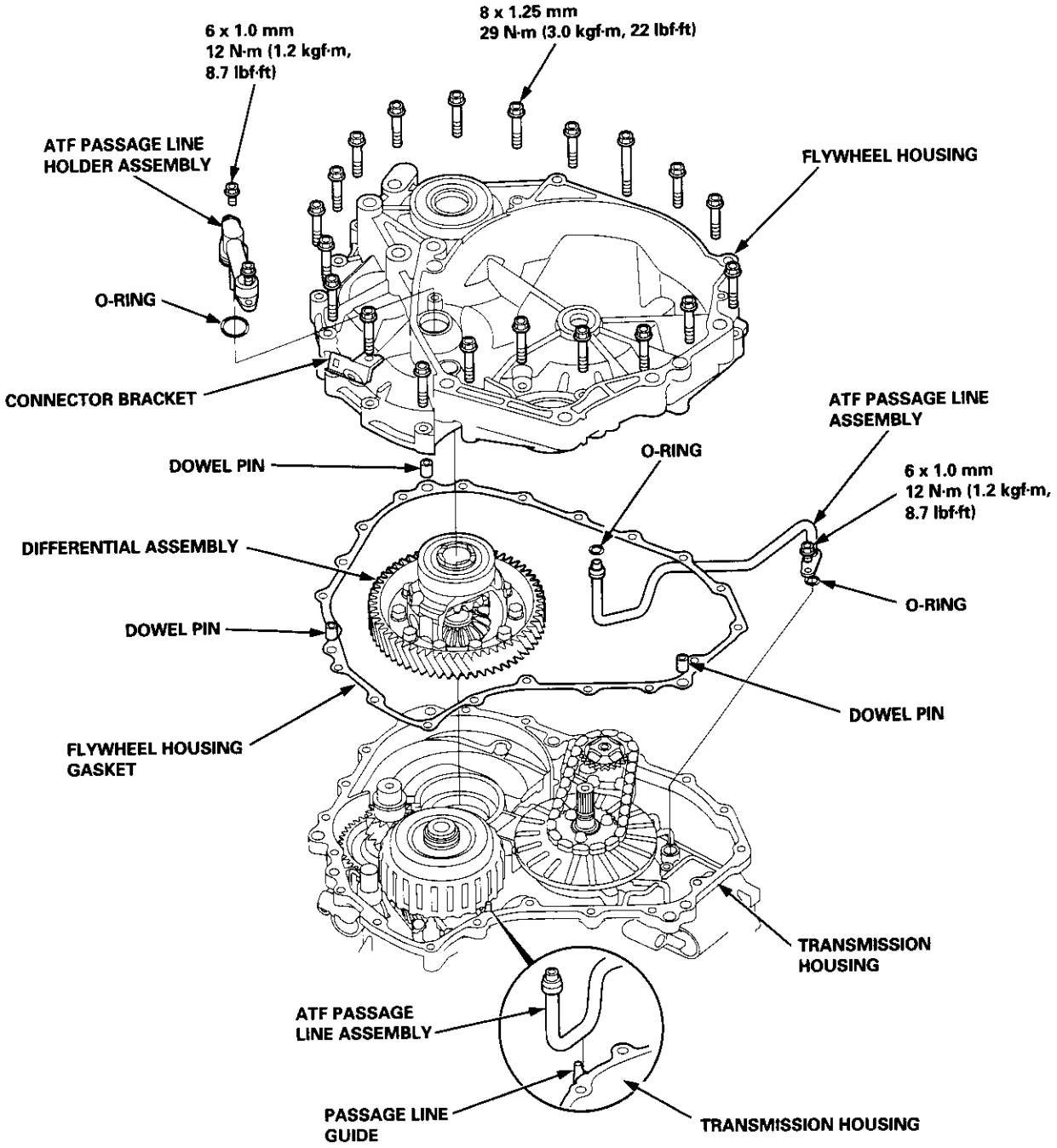

(cont'd)

Reassembly (cont'd)

65. Install the solenoid harness connector with a new O-ring (one bolt), then install the lower valve body assembly with three dowel pins (eight bolts).

66. Install the ATF strainer with a new O-ring (two bolts).

67. If necessary, assemble the ATF pan, ATF filter, and the ATF cooler inlet line (see page 14-303).

68. Install the ATF pan with the two dowel pins and a new ATF pan gasket (fourteen bolts).

69. Install the ATF cooler inlet line bracket bolt.

70. Install the ATF cooler outlet line with the line bolt and new sealing washers.

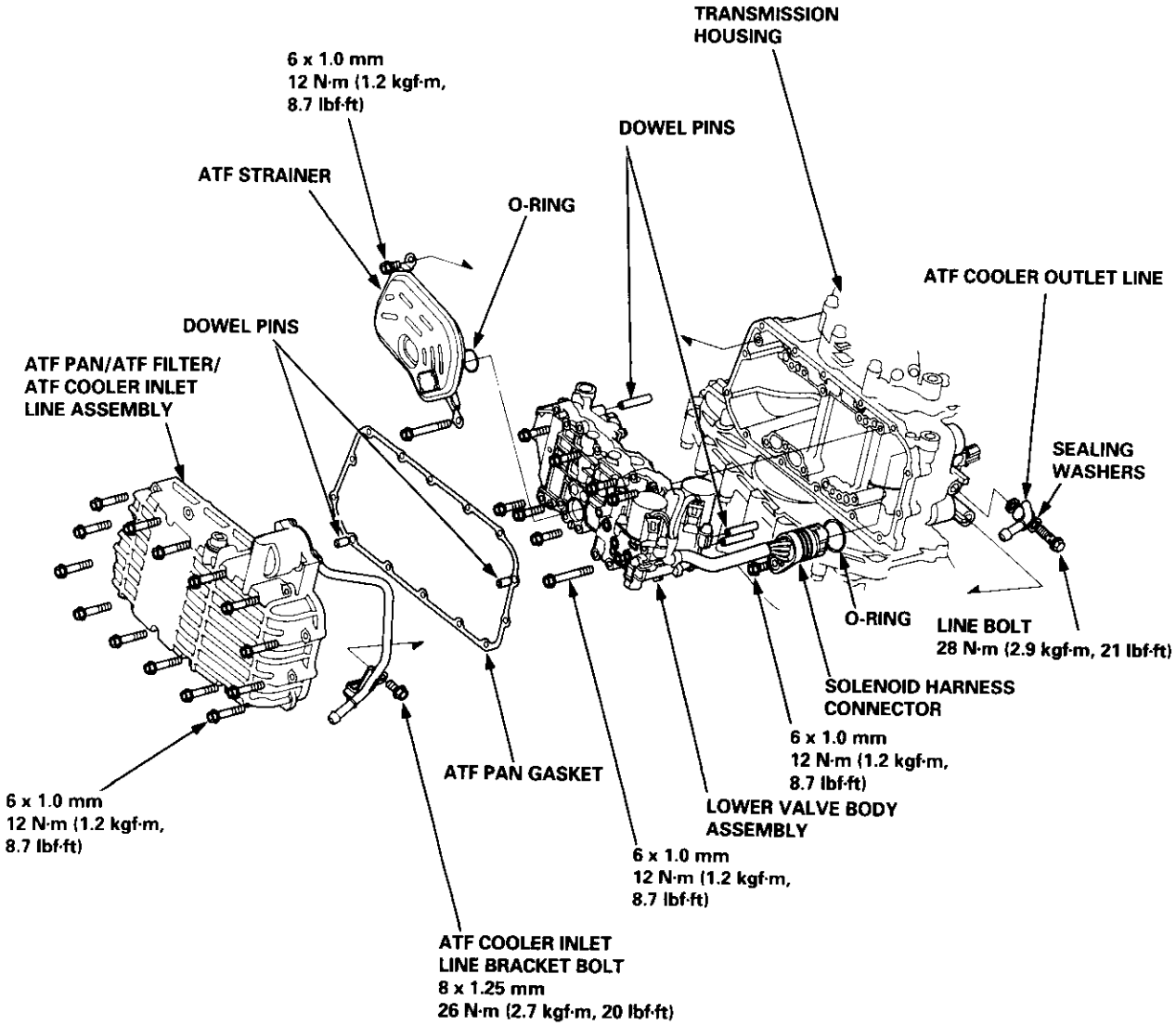

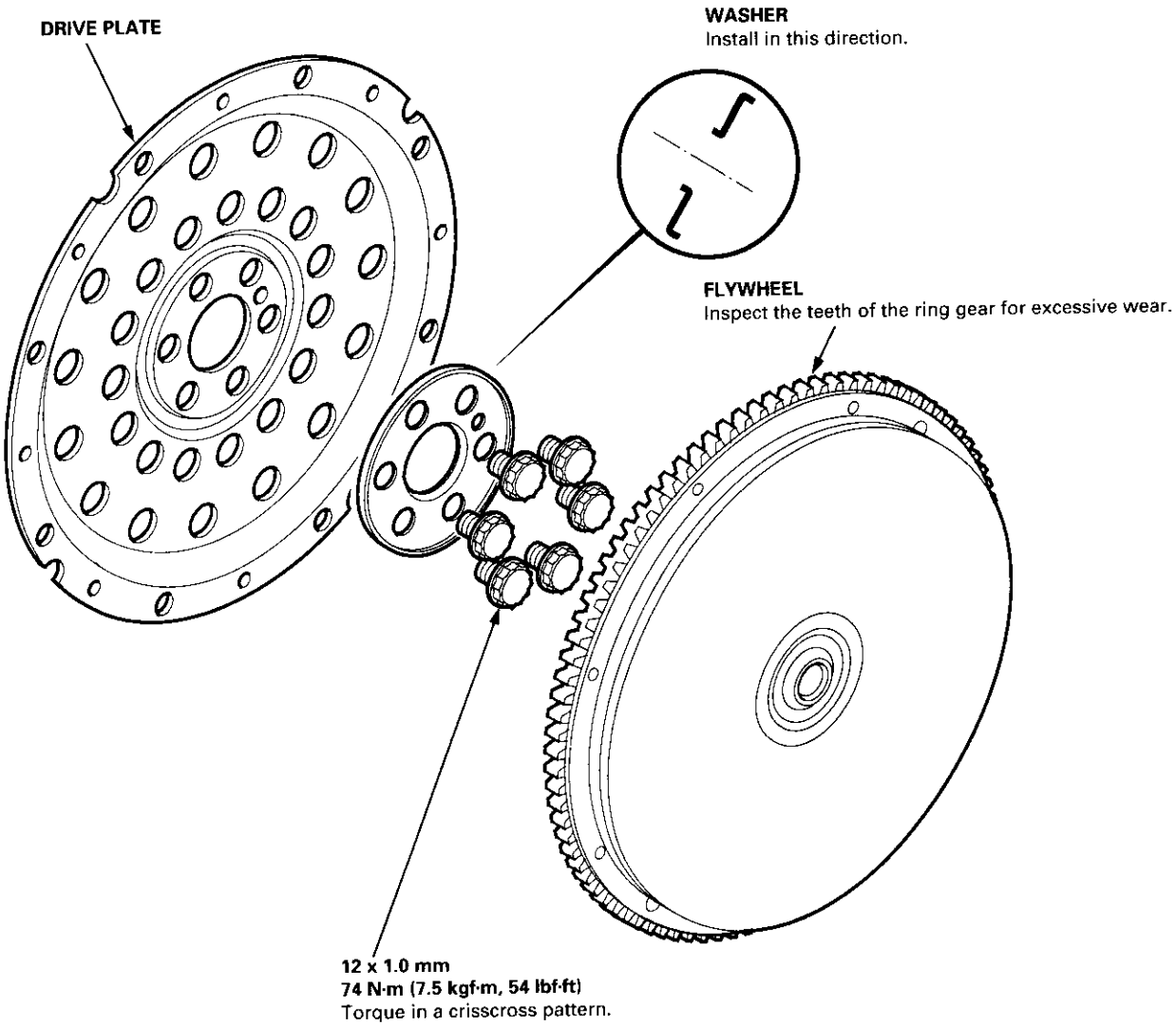
DRIVE PLATE
WASHER
Install in this direction.
FLYWHEEL
Inspect the teeth of the ring gear for excessive wear.
12 x 1.0 mm
74 N·m (7.5 kgf·m, 54 lbf·ft)
Torque in a crisscross pattern.

Installation

1. Flush the ATF cooler as described on pages 14-352 and 14-353.

2. Remove the used grease in the flywheel hub cap and flywheel splines.

3. Fill the inside of the flywheel hub cap, and coat the flywheel hub splines with Super High Temp Urea Grease (P/N 08798 – 9002) as shown.

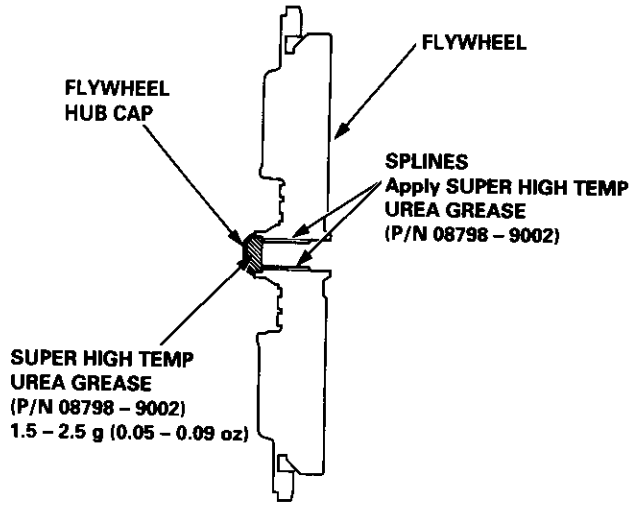

4. Install a new sealing ring (rubber) on the input shaft, and install two 14 x 20 mm dowel pins in the flywheel housing.

5. Install the flywheel securely on the input shaft, then install the starter motor on the flywheel housing.

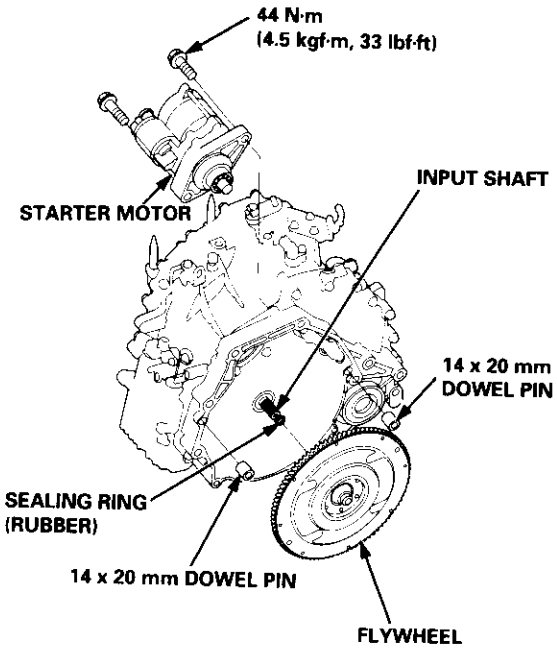

6. Place the transmission on a jack, and raise it to the engine assembly level.

7. Attach the transmission on the engine, then install the transmission housing mounting bolt and rear engine mounting bolts.

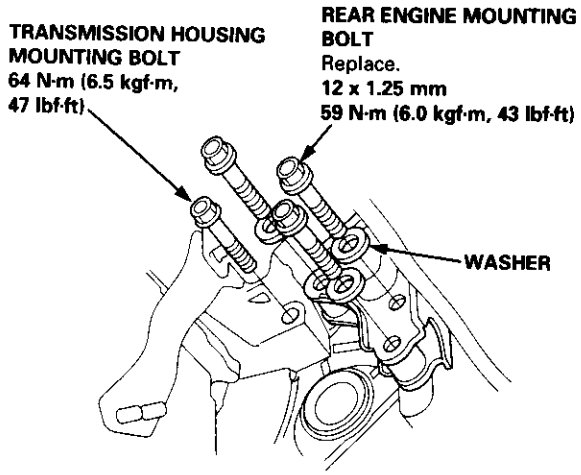

8. Install the transmission mount bracket. Tighten the long bolt loosely, and tighten the nuts and bolt on the mount bracket to the specified torque. Then tighten the long bolt to the specified torque.

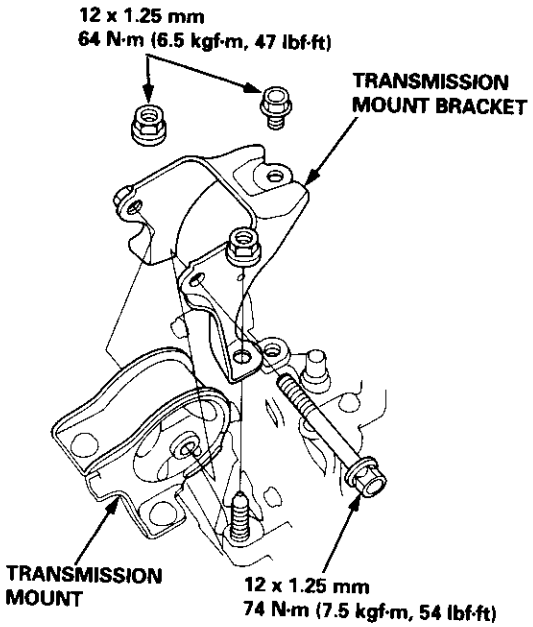

9. Install the remaining transmission housing mounting bolts.

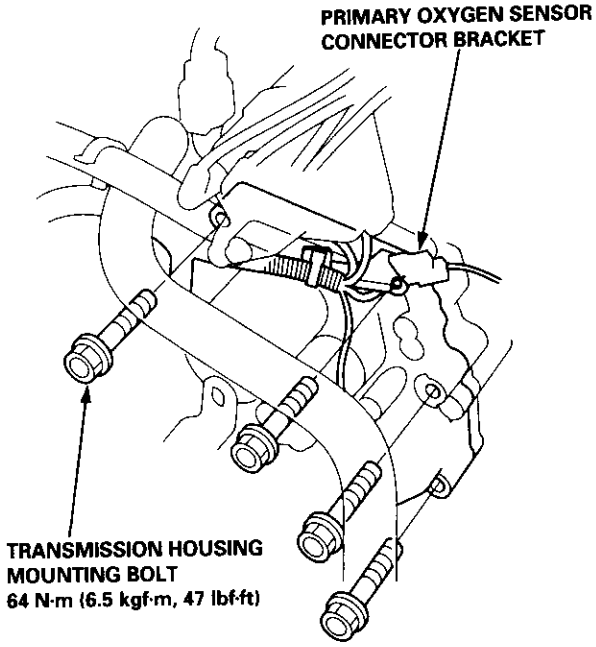

10. Remove the transmission jack and the hoist, then remove the hoist bracket from the engine.

11. Attach the flywheel to the drive plate with eight bolts and torque as follows:
Rotate the crankshaft pulley as necessary to tighten the bolts to half of the specified torque, then to the final torque, in a crisscross pattern.
After tightening the last bolt, check that the crankshaft rotates freely.

12. Install the flywheel cover and the engine stiffeners.

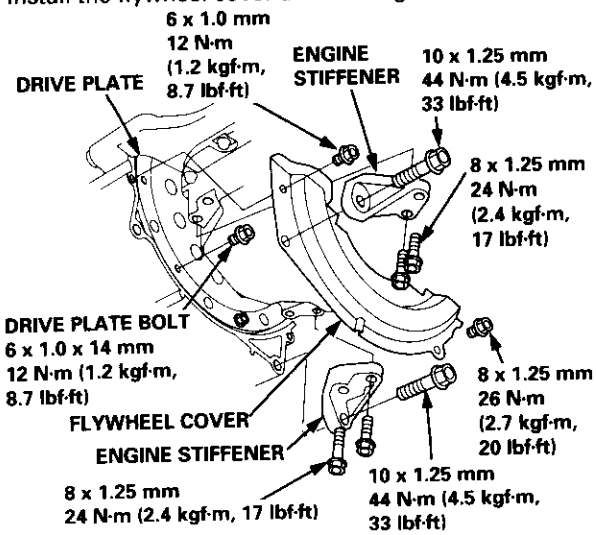

13. Tighten the crankshaft pulley bolt, if necessary (see section 6).

14. Connect the ATF cooler hoses to the ATF cooler lines (see page 14-357).

CAUTION: While connecting the ATF cooler hoses, be sure not to allow dust and other foreign particles to enter into the transmission.

15. Install the right front mount/bracket.

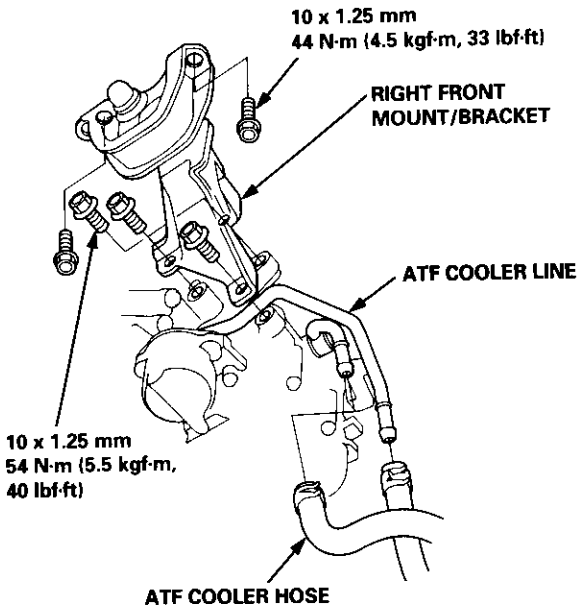

16. Install the exhaust pipe A.

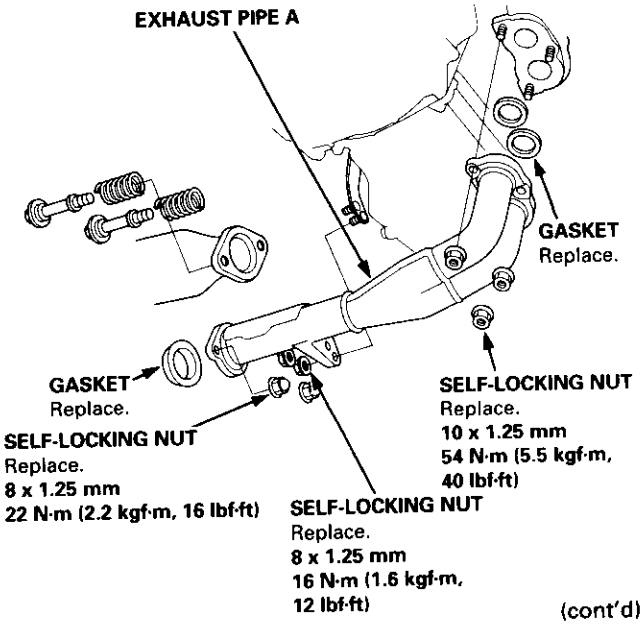

(cont'd)

Installation (cont'd)

17. Install a new set ring on the end of each driveshaft.

18. Install the right and left driveshafts (see section 16).

    CAUTION: While installing the driveshafts in the differential, be sure not to allow dust and other foreign particles to enter into the transmission.

    NOTE:
    - Clean the areas where the driveshafts contact the transmission (differential) thoroughly with solvent or carburetor cleaner, and dry with compressed air.
    - Turn the right and left steering knuckle fully outward, and slide each driveshaft into the differential until you feel its set ring clip engage the side gear.

19. Install the damper fork, then install the right and left ball joints to each lower arm with the castle nuts and new cotter pins.

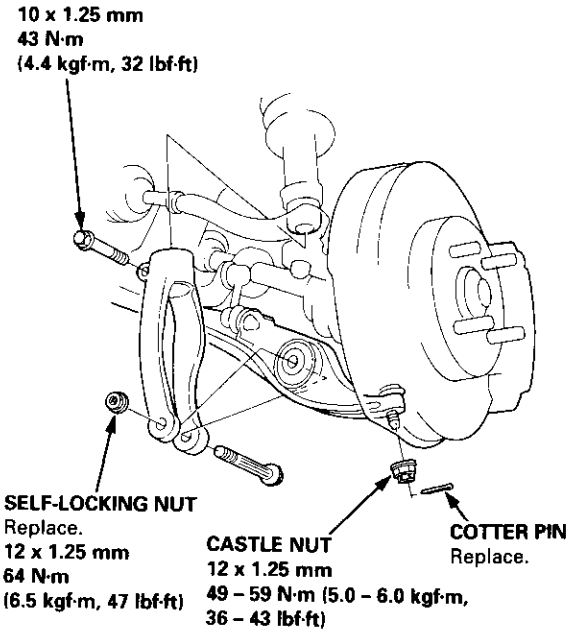

20. Install the splash shield.

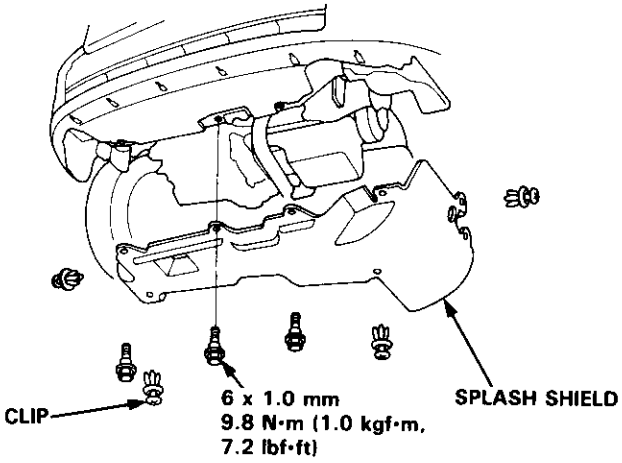

21. Connect the vehicle speed sensor connector, the driven pulley speed sensor connector and the secondary gear shaft speed sensor connector.

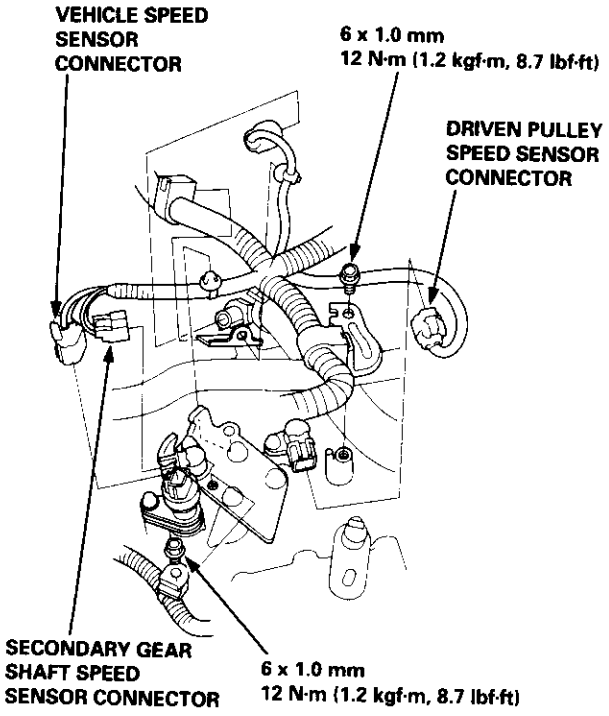

22. Install the shift cable end on the control lever, and install the shift cable on the shift cable bracket.

CAUTION: Take care not to bend the shift cable.

23. Install the clip in the direction shown.

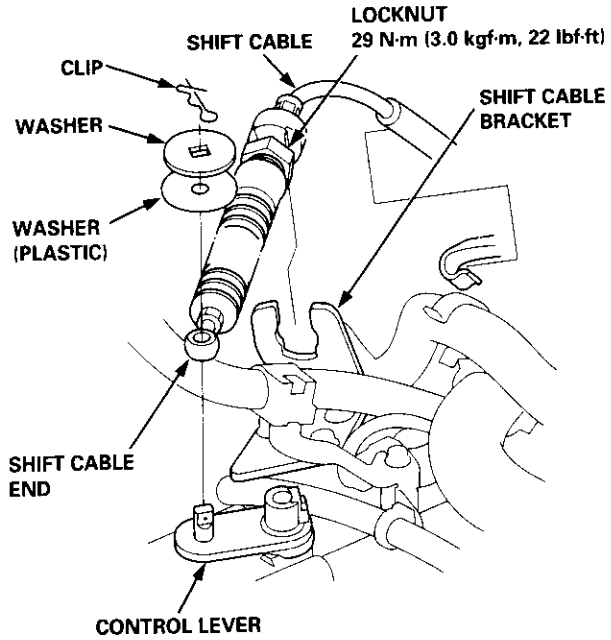

24. Connect the solenoid harness connector, the drive pulley speed sensor connector, and the ground cable terminals.

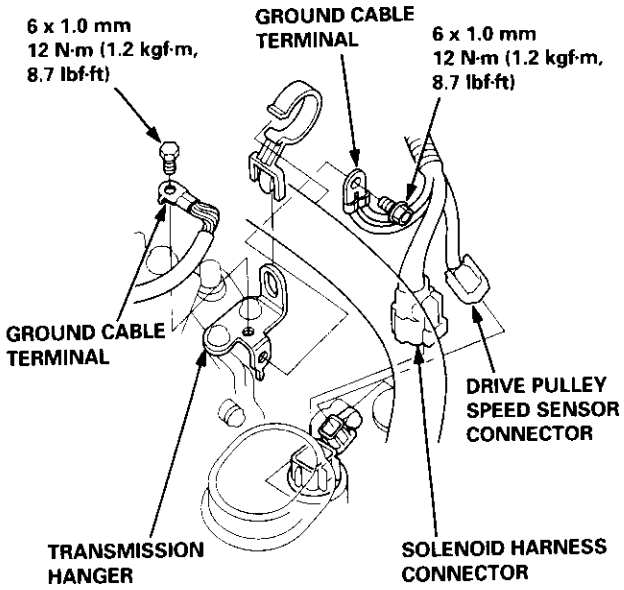

25. Connect the starter motor cable on the starter motor, and install the cable holder.

NOTE: When installing the starter motor cable, make sure that the crimped side of the ring terminal is facing out (see section 23).

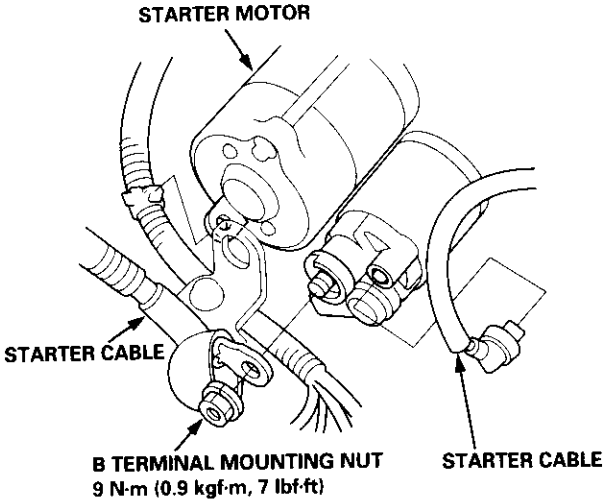

26. Install all removed connectors and clamps.
27. Install the distributor.
28. Install the intake air duct and air cleaner housing assembly.
29. Refill the transmission with the recommended Genuine Honda CVT Fluid (see page 14-299).

CAUTION: While filling the CVT Fluid, be sure not to allow dust and other foreign particles to enter into the transmission.

30. Connect the battery positive (+) terminal first, then the negative (–) terminal to the battery.
31. Check the ignition timing (see section 23).
32. Start the engine. Set the parking brake, and shift the transmission through all gears three times. Check shift cable adjustment (see page 14-355).
33. Check the front wheel alignment (see section 18).
34. Let the engine reach operating temperature (the radiator fan comes on) with the transmission in N or P position, then turn it off and check fluid level.
35. Perform the start clutch calibration procedure on page 14-293.
36. Road test as described on pages 14-296 and 14-297.

Cooler Flushing

⚠ WARNING To prevent injury to face and eyes, always wear safety glasses or a face shield when using the transmission flusher.

NOTE: This procedure should be performed before reinstalling the transmission.

1. Check the tools and hoses for wear and cracks before using. If wear or cracks are found, replace the hoses before using.

2. Using the measuring cup, fill the tank with 21 ounces (approximately 2/3 full) of biodegradable flushing fluid (J35944 – 20). Do not substitute with any other fluid. Follow the handling procedure on the fluid container.

3. Secure the flusher filler cap, and pressurize the tank with compressed air to between 550 – 829 kpa (5.6 – 8.45 kgf/cm², 80 – 120 psi).

   NOTE: The air line should be equipped with a water trap to ensure a dry air system.

4. Hang the tool under the vehicle.

5. Attach the tank's discharge hose to the return line of the transmission cooler using a clamp.

6. Connect the drain hose to the inlet line on the transmission cooler using a clamp.

   IMPORTANT:
   Securely clamp the opposite end of the drain hose to a bucket or floor drain.

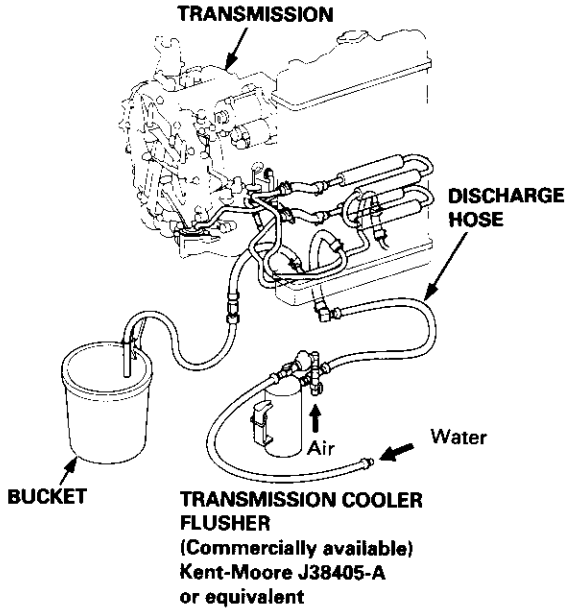

7. With the water and air valves off, attach the water and air supplies to the flusher. (Hot water if available.)

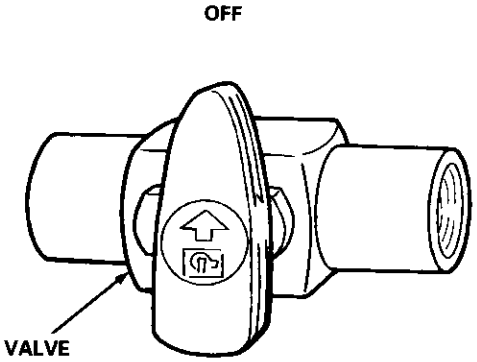

8. Turn on the flusher water valve so water will flow through the cooler for 10 seconds.

   NOTE: If water does not flow through the cooler, it is completely plugged, cannot be flushed, and must be replaced.

9. Depress the trigger to mix the flushing fluid into the water flow. Use the wire clip to hold the trigger down.

10. While flushing with the water and flushing fluid for two minutes, turn the air valve on for five seconds every 15 – 20 seconds to create a surging action.
    AIR PRESSURE: MAX 845 kpa (8.45 kgf/cm², 120 psi)

11. Turn the water valve off. Release the trigger, then reverse the hoses to the cooler so you can flush in the opposite direction. Repeat steps 8 through 10.

12. Release the trigger, and rinse the cooler with water only for one minute.

13. Turn the water valve off, and turn off the water supply.

14. Turn the air valve on to dry the system out with air for two full minutes or until no moisture is visible leaving the drain hose.

    CAUTION: Residual moisture in the cooler or lines can damage the transmission.

15. Remove the flusher from the cooler line. Attach the drain hose to a container.

16. Install the transmission, and leave the drain hose attached to the cooler line.

17. Make sure the transmission is in the [P] position. Fill the transmission with CVT Fluid, and run the engine for 30 seconds or until approximately 0.95 ℓ (1.0 US qt., 0.8 Imp qt.) is discharged.

18. Remove the drain hose, and reconnect the cooler return hose to the transmission (see page 14-355).

19. Refill the transmission with CVT Fluid to the proper level (see page 14-299).

TOOL MAINTENANCE

1. Empty and rinse after each use. Fill the can with water and pressurize the can. Flush the discharge line to ensure that the unit is clean.

2. If discharge liquid does not foam, the orifice may be blocked.

3. To clean, disconnect the plumbing from the tank at the large coupling nut.

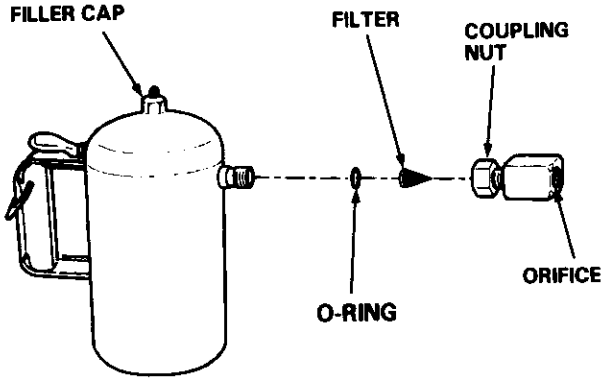

4. Remove the in-line filter from the discharge side and clean if necessary.

5. The fluid orifice is located behind the filter. Clean it with the pick stored in the bottom of the tank handle, or blow it clean with air. Securely reassemble all parts.

Removal/Installation

WARNING Make sure lifts, jacks and safety stands are placed properly (see section 1).

1. Remove the front console (see section 20).

2. Shift to [N] position, then remove the lock pin from the adjuster.

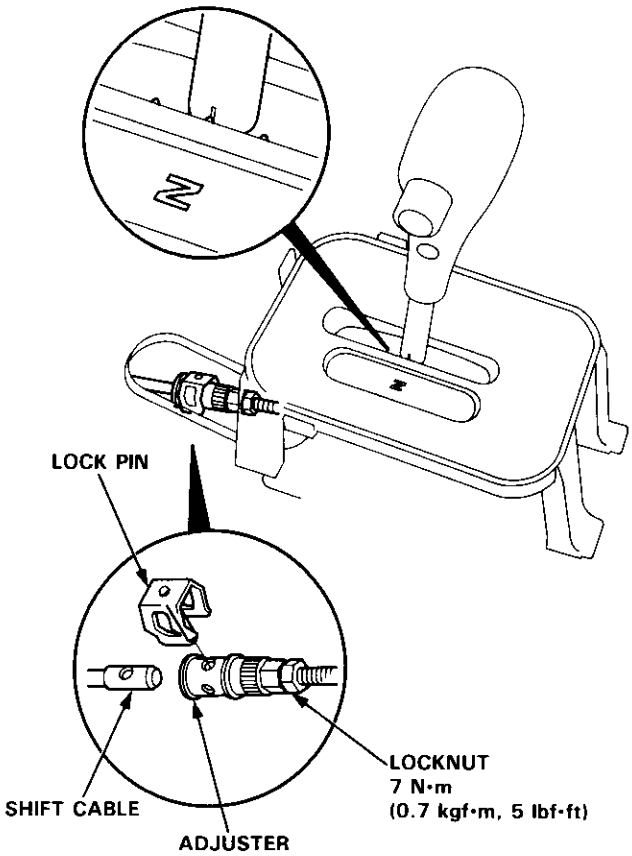

3. Remove the air cleaner housing assembly.

4. Remove the clip from the control lever, and loosen the locknut.

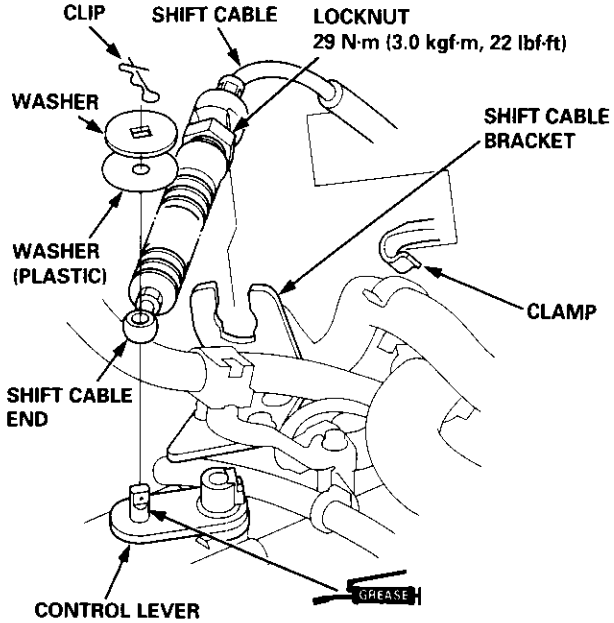

5. Remove the shift cable from the control lever, the shift cable bracket, and the clamp.

6. Remove the shift cable bracket bolts and nuts, then remove the shift cable. Take care not to bend the shift cable when removing/installing it.

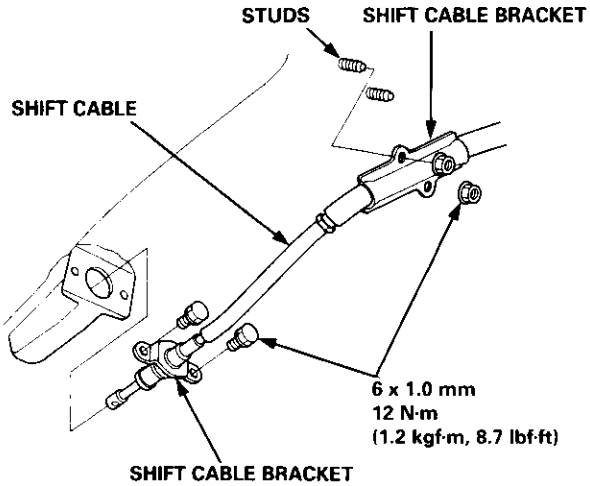

7. Install the shift cable in the reverse order of removal.

8. Check the cable adjustment (see page 14-355).

Adjustment

⚠ WARNING Make sure lifts, jacks and safety stands are placed properly (see section 1).

1. Remove the front console (see section 20).

2. Shift to [N] position, then remove the lock pin from the adjuster.

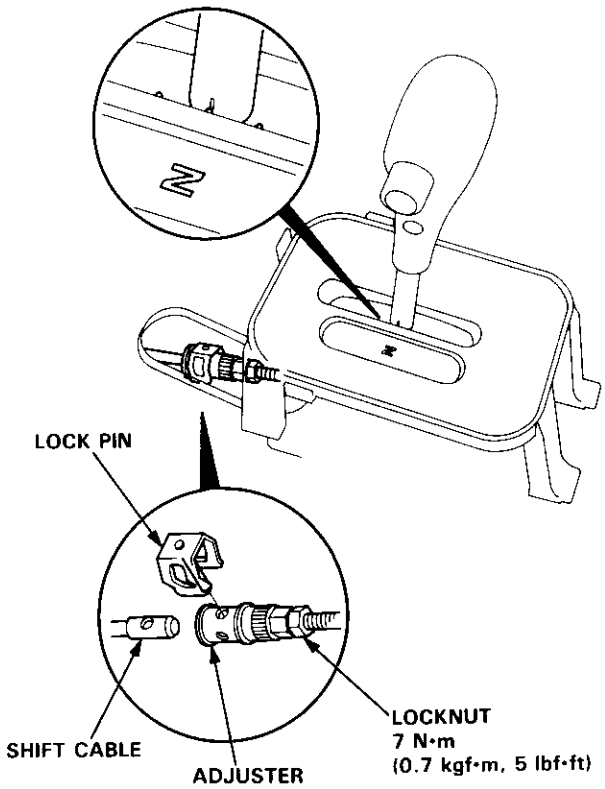

3. Check that the hole in the adjuster is perfectly aligned with the hole in the shift cable. There are two holes in the adjuster. They are positioned 90° apart to allow cable adjustment in 1/4 turn increments.

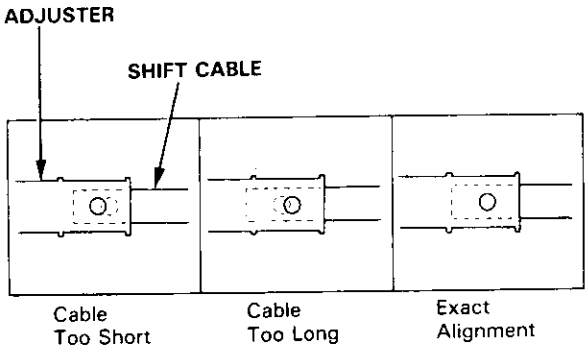

4. If the hole is not perfectly aligned, loosen the locknut on the adjuster and adjust as required.

5. Tighten the locknut to 7 N·m (0.7 kgf·m, 5 lbf·ft).

6. Install the lock pin on the adjuster. If you feel the lock pin binding as you reinstall it, the cable is still out of adjustment and must be readjusted.

7. Make sure the lock pin is seated in the adjuster securely.

8. Move the shift lever to each position, and verify that the shift position indicator follows the automatic transaxle gear position switch.

9. Start the engine, and check the shift lever in all positions. If any gear does not work properly, refer to troubleshooting (see page 14-294 and 14-295).

10. Insert the ignition key into the key cylinder on the A/T gear position indicator panel, and verify that the shift lock lever is released.

Shift Lever

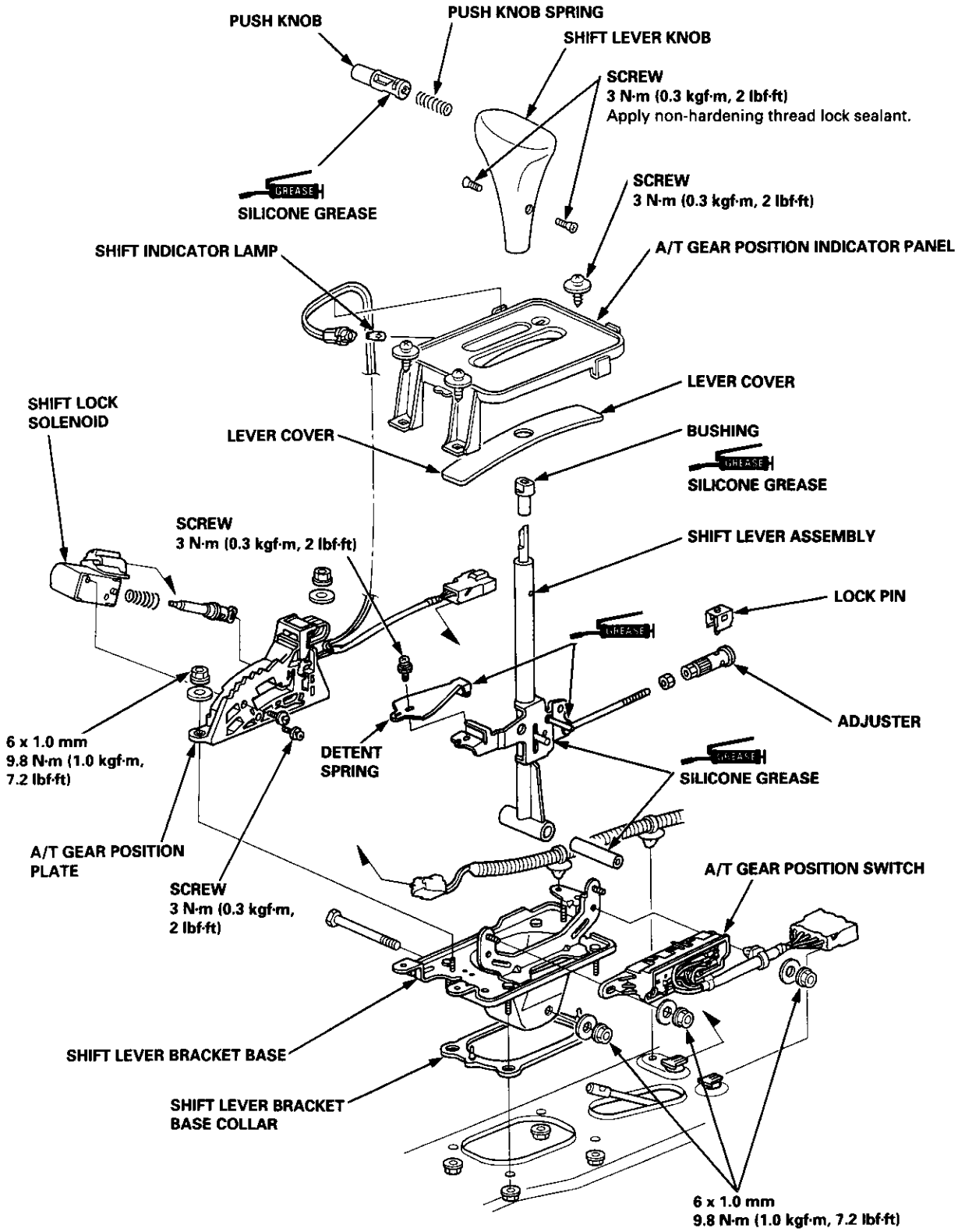
PUSH KNOB
PUSH KNOB SPRING
SHIFT LEVER KNOB
SCREW
3 N·m (0.3 kgf·m, 2 lbf·ft)
Apply non-hardening thread lock sealant.
GREASE
SILICONE GREASE
SCREW
3 N·m (0.3 kgf·m, 2 lbf·ft)
SHIFT INDICATOR LAMP
A/T GEAR POSITION INDICATOR PANEL
LEVER COVER
SHIFT LOCK SOLENOID
LEVER COVER
BUSHING
GREASE
SILICONE GREASE
SCREW
3 N·m (0.3 kgf·m, 2 lbf·ft)
SHIFT LEVER ASSEMBLY
LOCK PIN
GREASE
ADJUSTER
6 x 1.0 mm
9.8 N·m (1.0 kgf·m, 7.2 lbf·ft)
DETENT SPRING
GREASE
SILICONE GREASE
A/T GEAR POSITION PLATE
SCREW
3 N·m (0.3 kgf·m, 2 lbf·ft)
A/T GEAR POSITION SWITCH
SHIFT LEVER BRACKET BASE
SHIFT LEVER BRACKET BASE COLLAR
6 x 1.0 mm
9.8 N·m (1.0 kgf·m, 7.2 lbf·ft)

Adjustment

1. Check that the index mark on the indicator aligns with the [N] mark on the shift indicator panel when the transmission is in NEUTRAL.

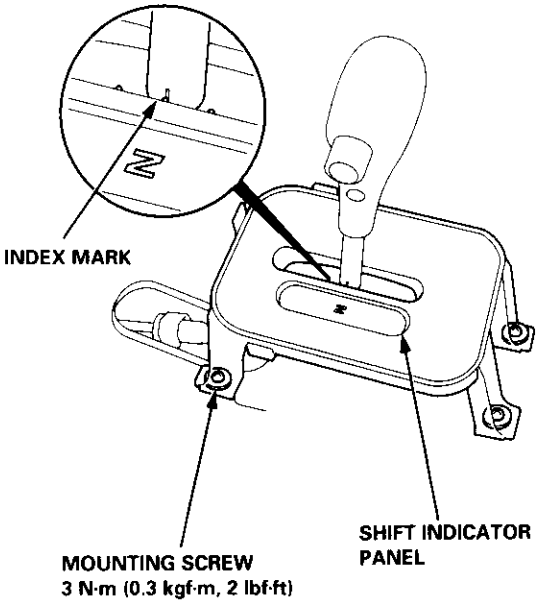

2. If not aligned, remove the front console (see section 20).

3. Remove the shift indicator panel mounting screws and adjust by moving the panel.

   NOTE: Whenever the shift indicator panel is removed, reinstall the panel as described above.

Installation

1. Install the ATF cooler, ATF cooler line assembly and the ATF cooler hoses.

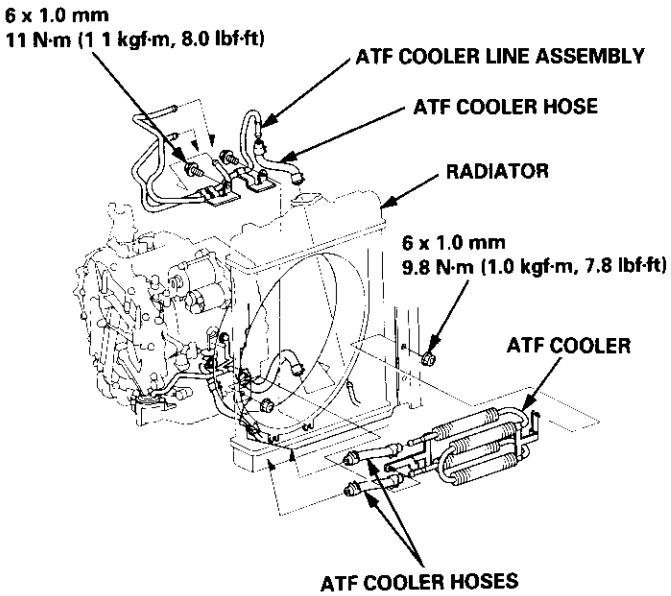

2. Connect the ATF cooler hoses to the ATF cooler lines and ATF cooler, and secure them with the clips as shown.

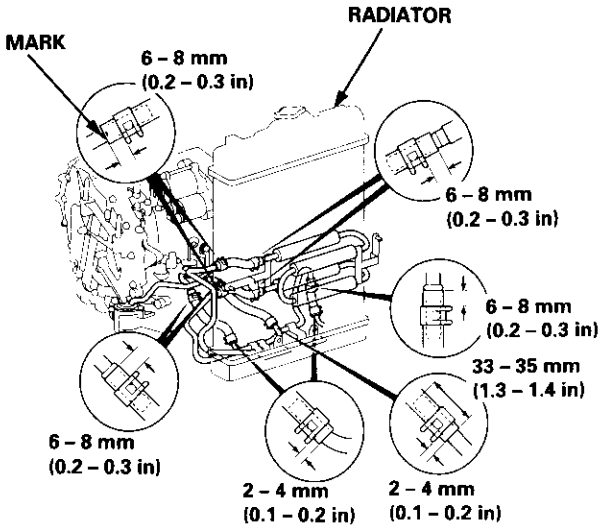

There is no chapter 15 in the printed version of this manual. I actually went to a Honda dealership and asked if I could look at the manual. The mechanic told me Honda probably used chapter 15 for something in another market with a different transmission option.

Driveshafts

Special Tools 16-2
Driveshafts
  Inspection 16-3
  Removal 16-3
  Disassembly 16-5
  Reassembly 16-8
  Installation 16-18
Intermediate Shaft
  Removal 16-20
  Disassembly 16-20
  Reassembly 16-21
  Installation 16-23

Special Tools

Ref. No.	Tool Number	Description	Qty	Remark
①	07JAF – SH20400	Support Base Attachment	1	
②	07LAD – PW50601	Inner Race Driver	1	
③	07MAC – SL00200	Ball Joint Remover, 28 mm	1	
④	07746 – 0010300	Driver Attachment, 42 x 47 mm	1	
⑤	07746 – 0010400	Driver Attachment, 52 x 55 mm	1	
⑥	07746 – 0030400	Driver Attachment, 35 mm I.D.	1	
⑦	07749 – 0010000	Handle Driver	1	
⑧	07965 – SD90100	Support Base	1	
⑨	07XAC – 0010100	Threaded Adapter, 22 x 1.5 mm	1	

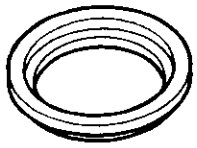
①

②

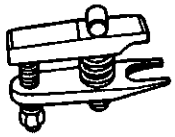
③

④

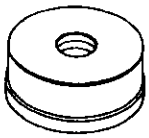
⑤

⑥

⑦

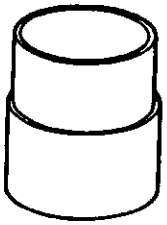
⑧

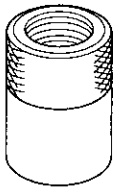
⑨

Inspection

Driveshaft Boot
Check the boots on the driveshaft for cracks, damage, leaking grease and loose boot bands. If any damage is found, replace the boot and boot bands.

Loose Splines
Turn the driveshaft by hand and make sure the splines and joint are not excessively loose. If any damage is found, replace the inboard joint.

Twisted or Cracked
Make sure the driveshaft is not twisted or cracked. Replace it if necessary.

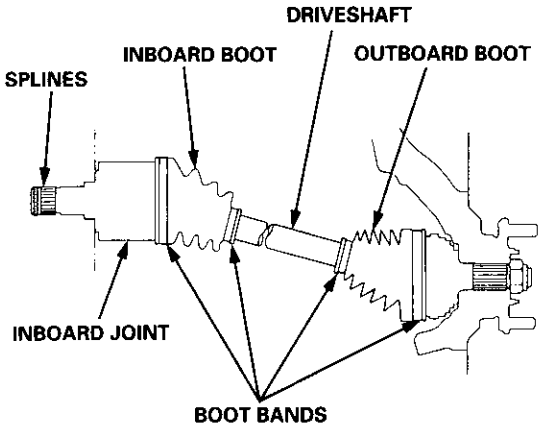

Removal

1. Loosen the wheel nuts slightly.
2. Raise the front of the vehicle, and support it with safety stands in the proper locations (see section 1).
3. Remove the wheel nuts and front wheels.

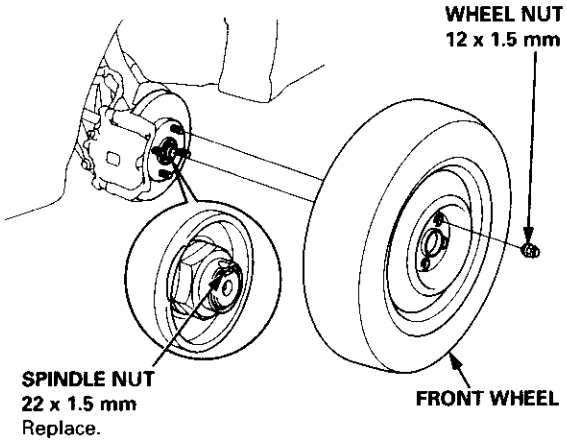

4. Drain the transmission fluid (see section 13 or 14).
5. Raise the locking tab on the spindle nut, then remove the nut.
6. Remove the self-locking nut and flange bolts.

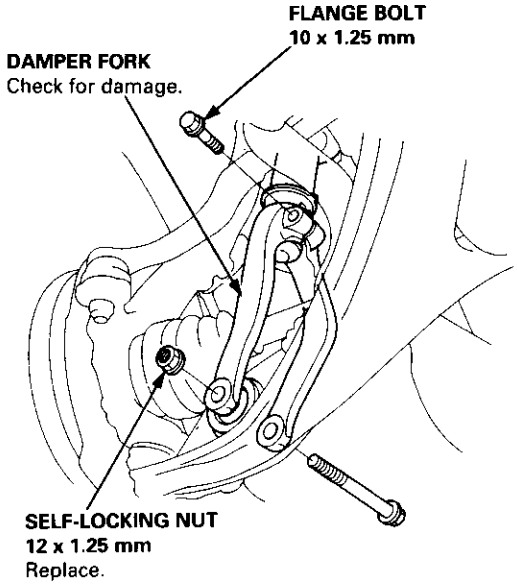

7. Remove the damper fork.

(cont'd)

Removal (cont'd)

8. Remove the cotter pin from the lower arm ball joint castle nut, and remove the nut.

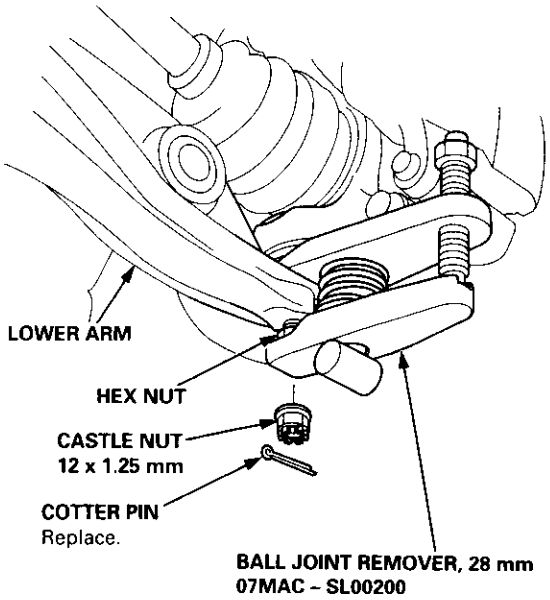

9. Install a 12 mm hex nut on the ball joint. Be sure that the hex nut is flush with the ball joint pin end, or the threaded section of the ball joint pin might be damaged by the special tool.

10. Use the special tool as shown in section 18, to separate the ball joint and lower arm. Be careful not to damage the ball joint boot.

    NOTE: If necessary, apply penetrating type lubricant to loosen the ball joint.

11. Pry the driveshaft assembly with a screwdriver, as shown, to force the set ring at the driveshaft end past the groove.

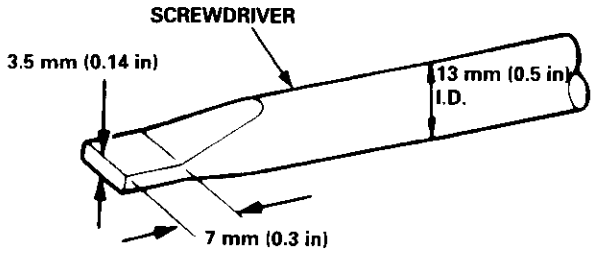

12. Pull the inboard joint, and remove the driveshaft from the differential case as an assembly. Do not pull on the driveshaft; the inboard joint may come apart. Use care when prying out the assembly, and pull it straight to avoid damaging the differential oil seal.

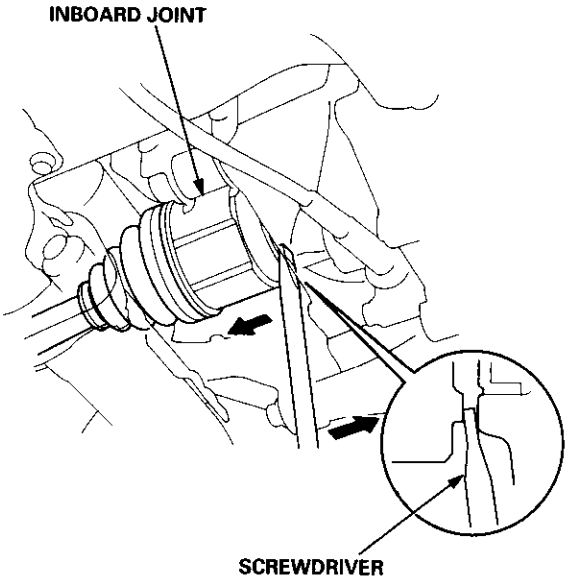

13. Pull the knuckle outward, and remove the driveshaft outboard joint from the front wheel hub using a plastic hammer.

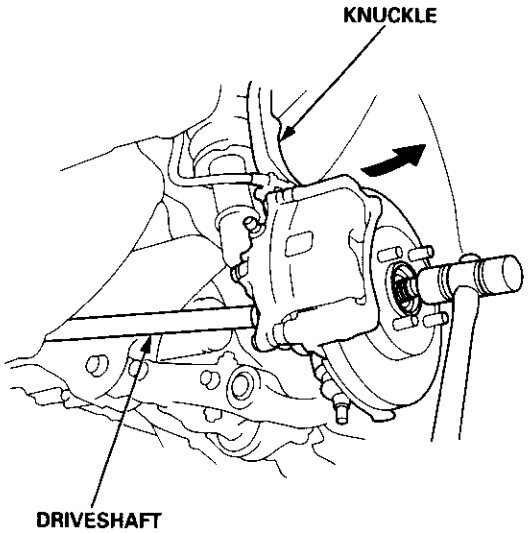

Disassembly

Inboard Joint Side:

1. Carefully clamp the driveshaft in a vise with soft jaws, then remove the set ring from the inboard joint.

2. Remove the boot bands. Take care not to damage the boot.
   - If the boot band is a locking tab type, pry up the locking tabs with a screwdriver, and raise the end of the band.
   - If the boot band is a welded type, cut the boot band.
   - If the boot band is a crimping type, pry up the end of the band with a screwdriver.
   - If the boot band is a double loop type, lift up the band bend.

Locking Tab Type

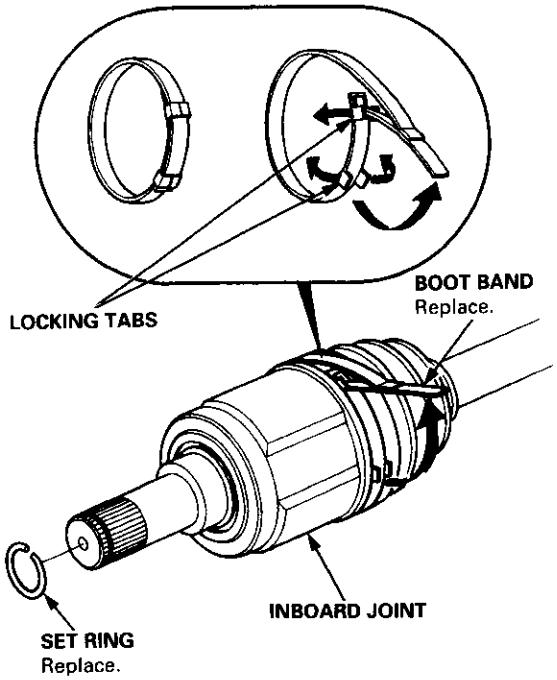

Welded Type

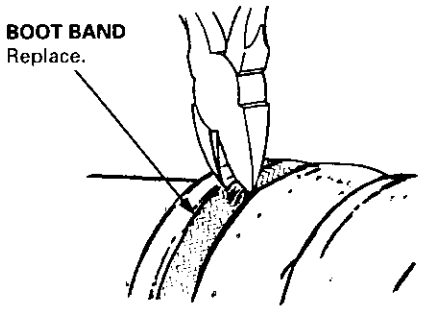

Crimping Type

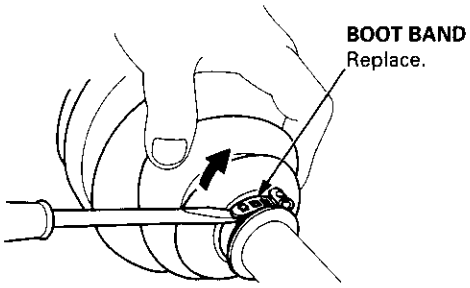

Double Loop Type

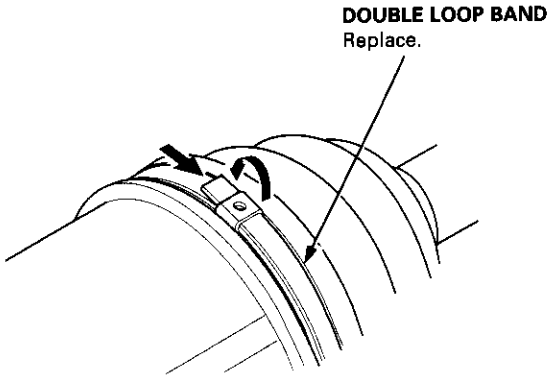

3. Mark each roller and inboard joint to identify the locations of rollers and grooves in the inboard joint. Then remove the inboard joint on the shop towel. Be careful not to drop the rollers when separating them from the inboard joint.

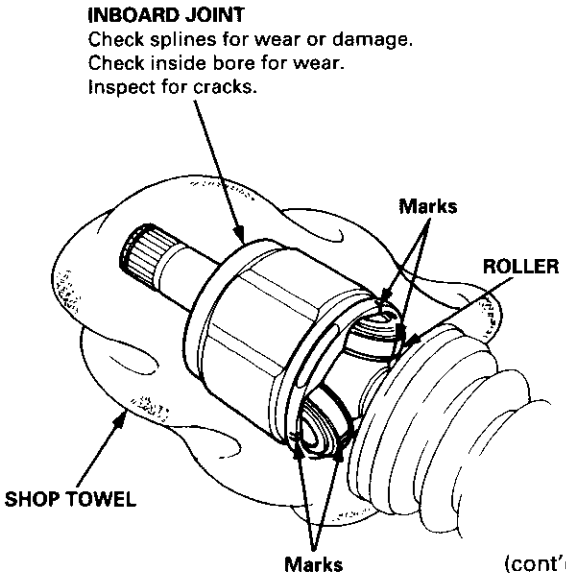

(cont'd)

Disassembly (cont'd)

4. Mark the rollers and spider to identify the locations of the rollers on the spider, then remove the rollers.

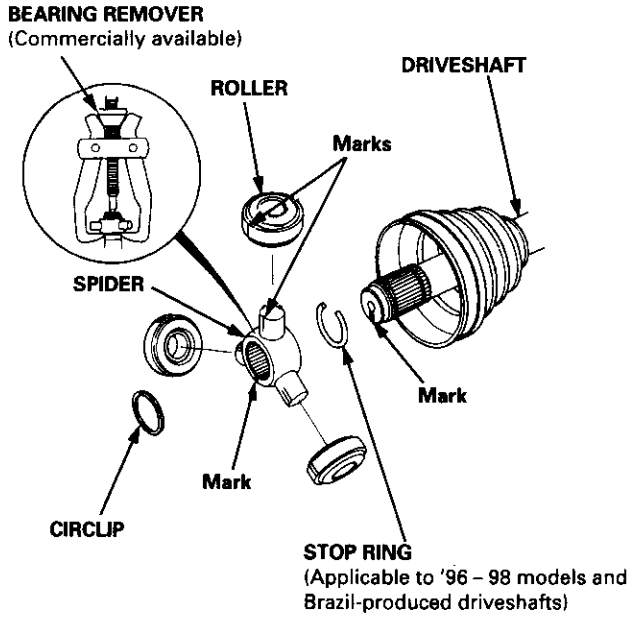

5. Remove the circlip.

6. Mark the spider and driveshaft to identify the position of the spider on the shaft.

7. Remove the spider using a bearing remover.

8. Remove the stop ring (Applicable to '96 – 98 models and Brazil-produced driveshafts).

9. Wrap the splines on the driveshaft with vinyl tape to prevent damage to the boot and dynamic damper.

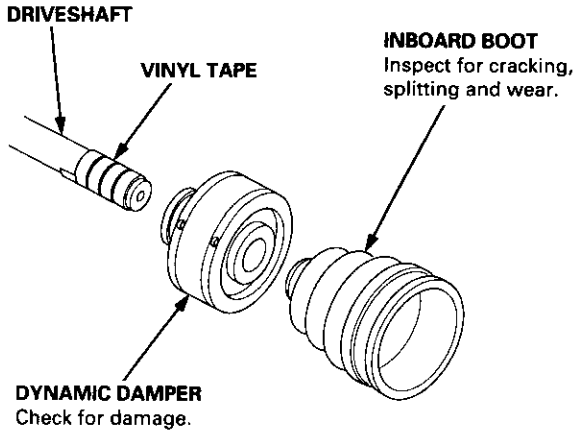

10. Remove the inboard boot, and if necessary, the dynamic damper.

Outboard Joint Side:

1. Lift up the three tabs with a screwdriver, then remove the boot bands. Take care not to damage the boot.

   NOTE:
   - If the boot band is a double loop type, lift up the band bend.
   - If the boot band is a welded type, cut the boot band.
   - If the boot band is a locking tabs type, pry up the tabs with a screwdriver and lift up the end of the band.

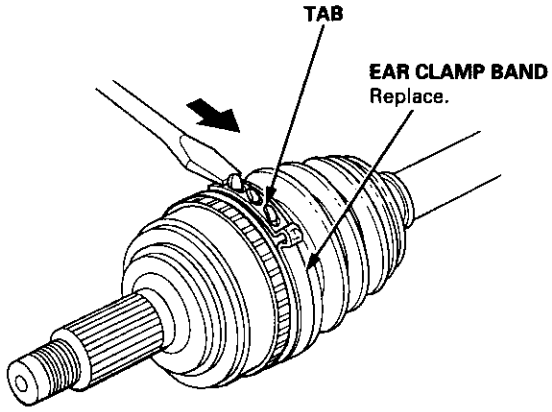

2. Slide the outboard boot to the inboard joint side.

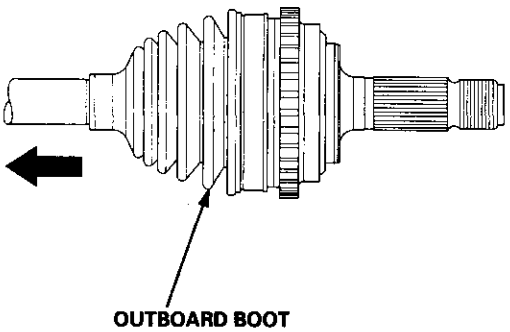

3. Wipe off the grease to expose the driveshaft and the outboard joint inner race.

4. Mark the driveshaft at the same position of the outboard joint end with paint.

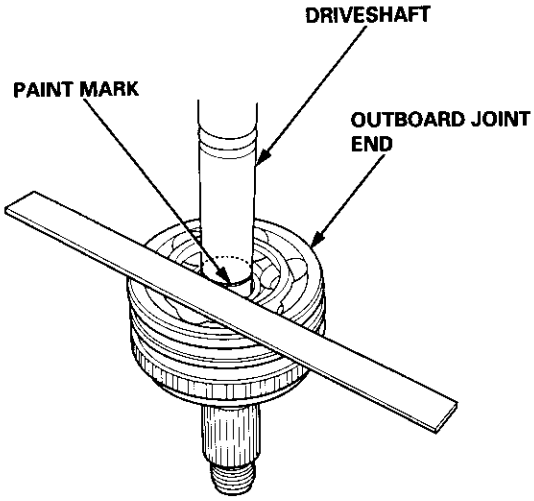

5. Carefully clamp the driveshaft in a vise.

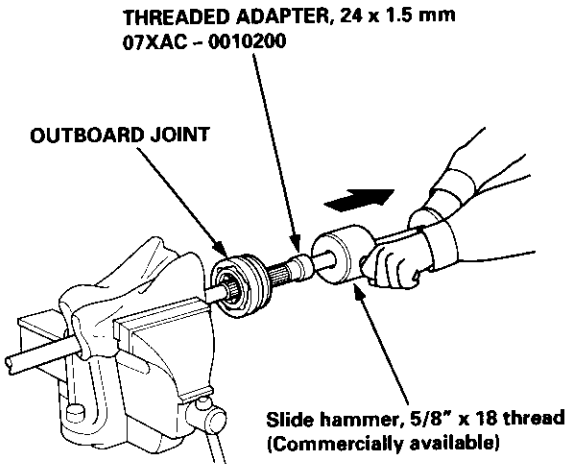

6. Remove the outboard joint using a special tool as shown.

7. Remove the driveshaft from the vise.

8. Remove the stop ring from the driveshaft.

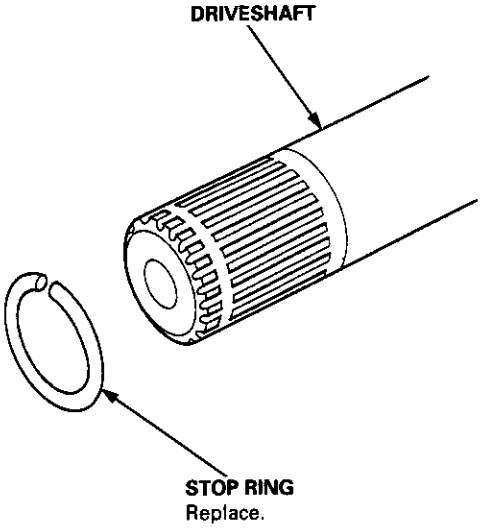

Reassembly

U.S. and Canada-Produced Driveshafts

Note these items during reassembly:

- Clean the disassembled parts with solvent, and dry them thoroughly with compressed air. Do not wash the rubber parts with solvent.
- GREASE : Thoroughly pack the inboard joint and both joint boots with the joint grease included in the new driveshaft set.

Grease quantity:

Inboard Joint	115 – 135 g (4.0 – 4.8 oz)
Outboard Joint	115 – 135 g (4.0 – 4.8 oz)

- The '98 Canada model and all '99 – 00 models uses a TPE (Thermoplastic Polyester Elastomer) outboard joint boot. Use the ear clamp type boot band in the outboard joint boot set.

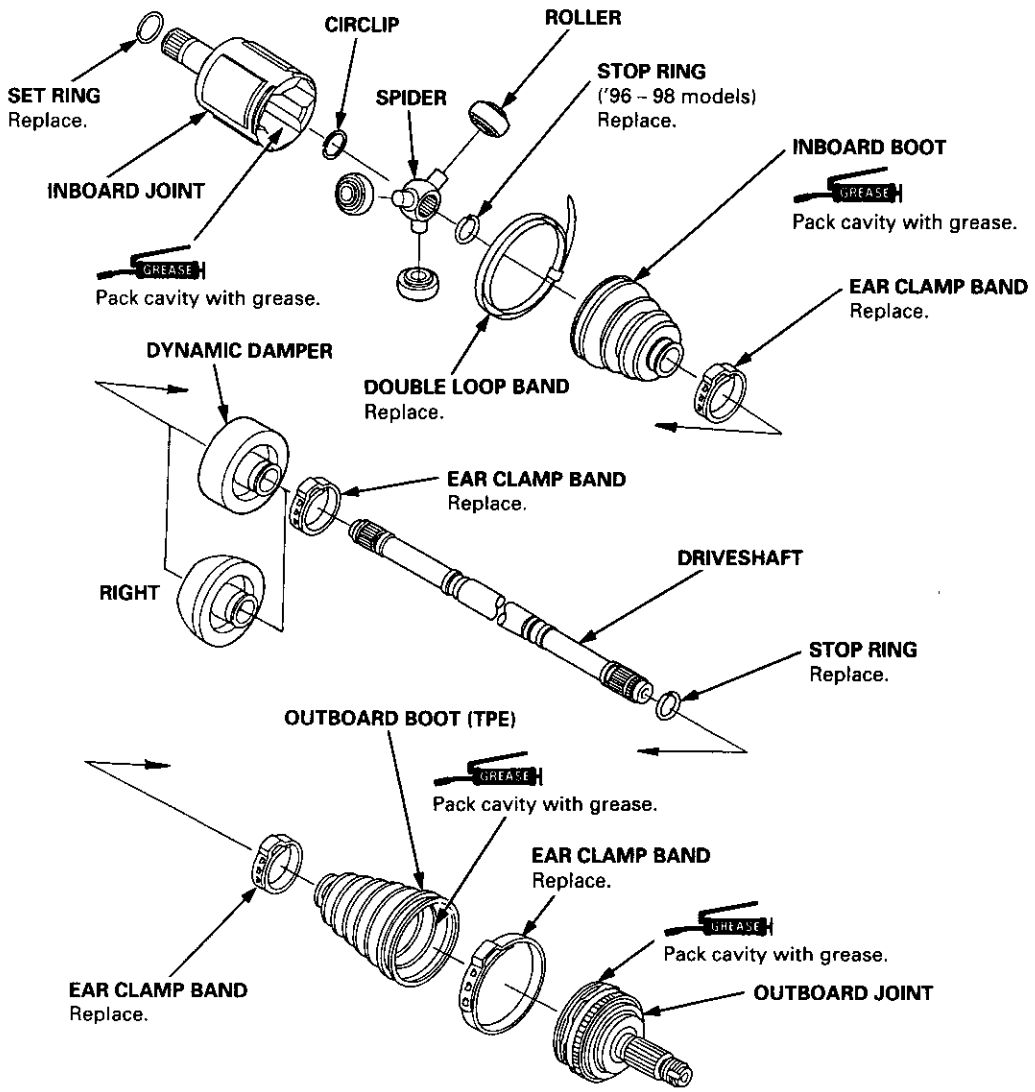

Brazil-Produced Driveshafts

Note these items during reassembly:

- Clean the disassembled parts with solvent, and dry them thoroughly with compressed air. Do not wash the rubber parts with solvent.
- GREASE : Thoroughly pack the inboard joint and both joint boots with the joint grease included in the new driveshaft set.

Grease quantity:

Inboard Joint	115 – 135 g (4.0 – 4.8 oz)
Outboard Joint	115 – 135 g (4.0 – 4.8 oz)

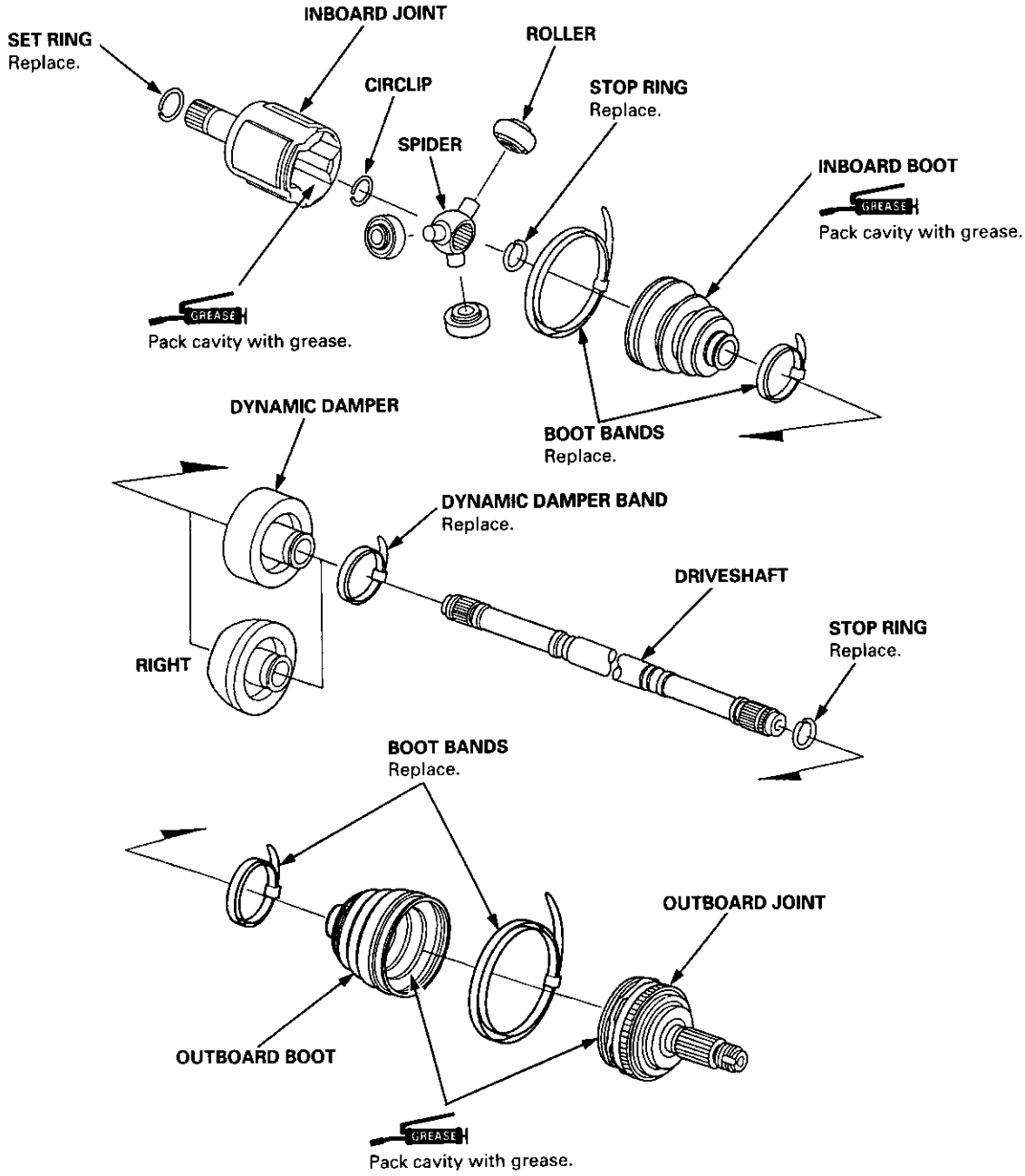

(cont'd)

Reassembly (cont'd)

Japan-Produced Driveshafts

Note these items during reassembly:

- Clean the disassembled parts with solvent, and dry them thoroughly with compressed air. Do not wash the rubber parts with solvent.
- GREASE : Thoroughly pack the inboard joint and both joint boots with the joint grease included in the new driveshaft set.

Grease quantity:

Inboard Joint	1600 DOHC VTEC engine	130 – 140 g (4.6 – 4.9 oz)	
	Except 1600 DOHC VTEC engine	110 – 120 g (3.9 – 4.2 oz)	
	Splines (A)	0.5 – 1.0 g (0.018 – 0.035 oz)	
Outboard Joint	1600 DOHC VTEC engine	Rubber boot: 90 – 100 g (3.2 – 3.5 oz)	TPE boot: 105 – 115 g (3.7 – 4.1 oz)
	Except 1600 DOHC VTEC engine	Rubber boot: 70 – 80 g (2.5 – 2.8 oz)	TPE boot: 95 – 105 g (3.4 – 3.7 oz)

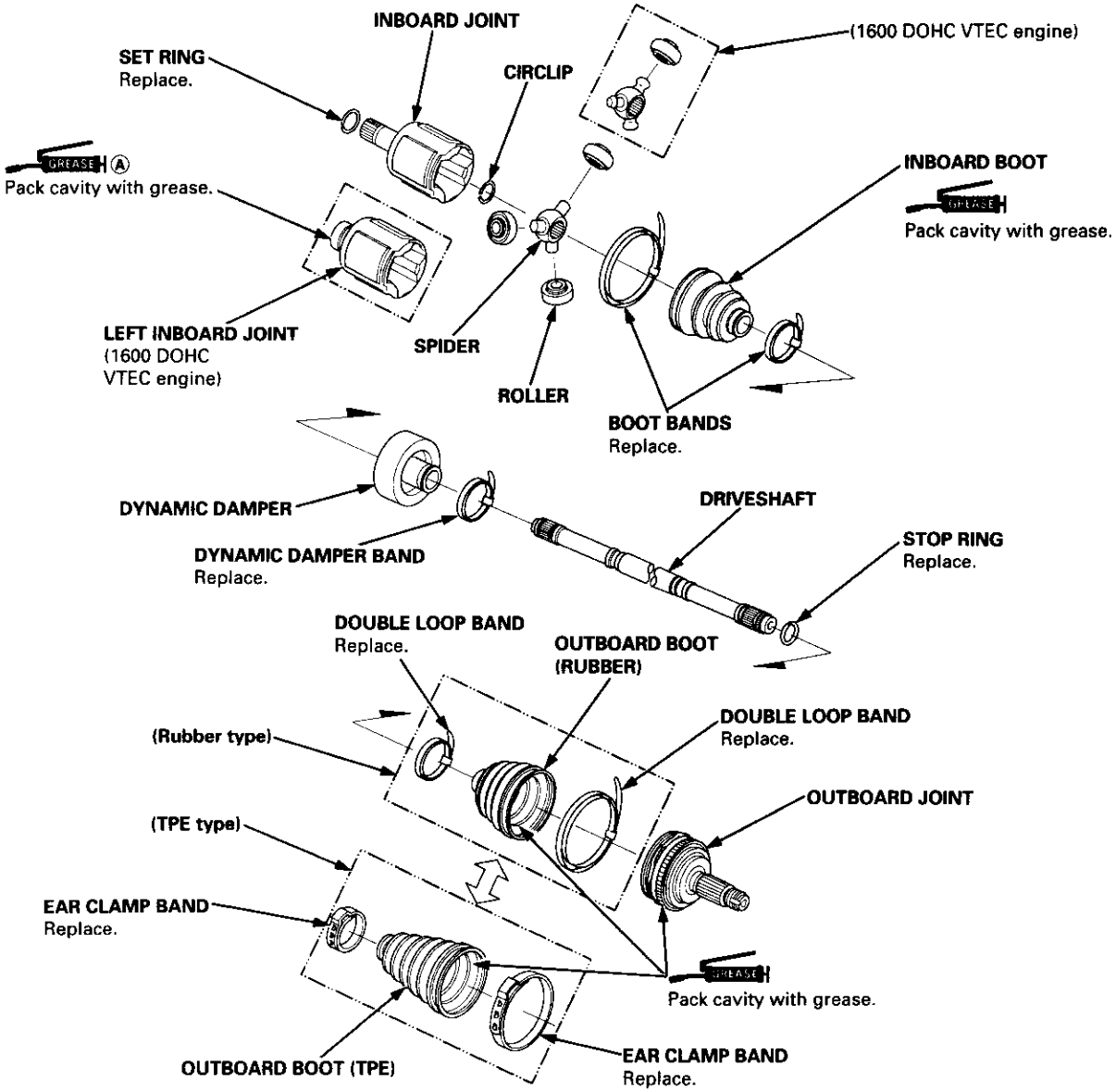

Inboard Joint Side:

1. Wrap the splines with vinyl tape to prevent damage to the boots and dynamic damper.

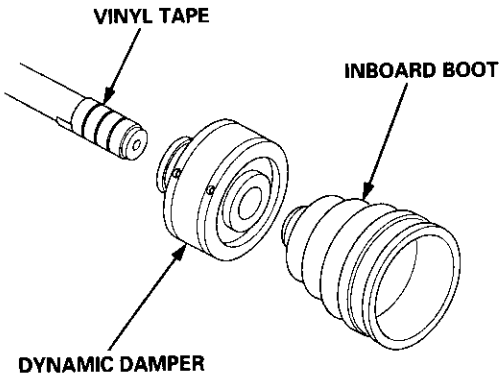

2. Install the dynamic damper and inboard boot to the driveshaft, then remove the vinyl tape. Take care not to damage the boots.

3. Install the stop ring into the driveshaft groove (Applicable to '96 – 98 models and Brazil – Produced driveshafts). Always rotate the stop ring in its groove to be sure it is fully seated.

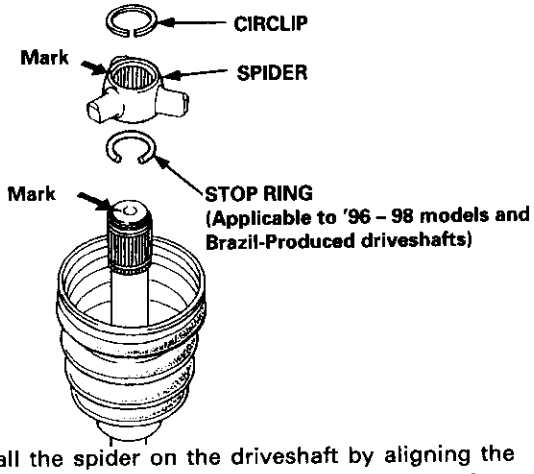

4. Install the spider on the driveshaft by aligning the marks on the spider and the end of the driveshaft.

5. Fit the circlip into the driveshaft groove. Always rotate the circlip in its groove to be sure it is fully seated.

6. Fit the rollers onto the spider with their high shoulders facing outward, and note these items:
   - Reinstall the rollers in their original positions on the spider by aligning the marks.
   - Hold the driveshaft pointed up to prevent the rollers from falling off.

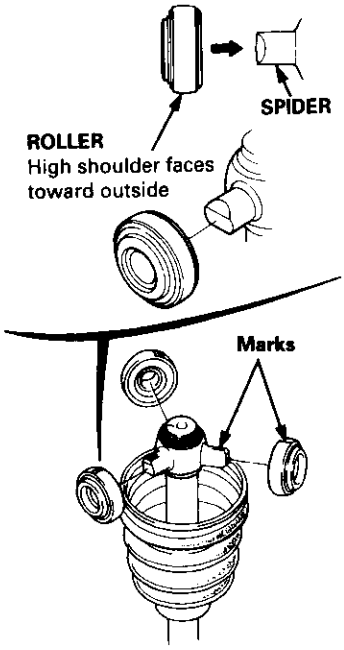

7. Pack the inboard joint with the joint grease included in the new driveshaft set.

Grease quantity:
Japan-Produced:
1600 DOHC VTEC engine:
130 – 140 g (4.6 – 4.9 oz)
Except 1600 DOHC VTEC engine:
110 – 120 g (3.9 – 4.2 oz)
Left inboard joint splines Ⓐ:
0.5 – 1.0 g (0.018 – 0.035 oz)
U.S., Canada, and Brazil-Produced:
115 – 135 g (4.0 – 4.8 oz)

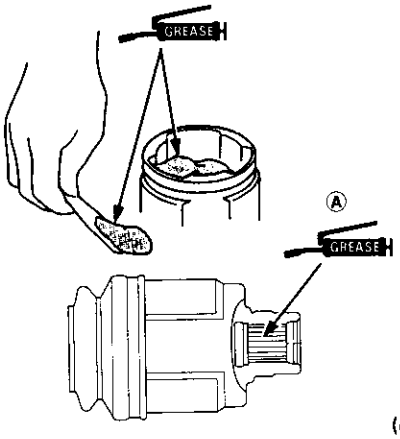

(cont'd)

Reassembly (cont'd)

8. Fit the inboard joint onto the driveshaft, and note these items:
   - Reinstall the inboard joint onto the driveshaft by aligning the marks on the inboard joint with the marks on the rollers.
   - Hold the driveshaft so that the inboard joint points up to prevent it from falling off.

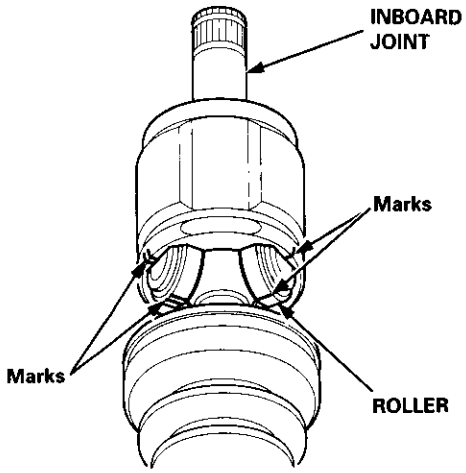

9. Adjust the length of the driveshafts to the figure below, then adjust the boots to halfway between full compression and full extension. The ends of the boots seat in the groove of the driveshaft and joint.

Left driveshaft, 1600 DOHC VTEC model:
475 – 480 mm (18.7 – 18.9 in)

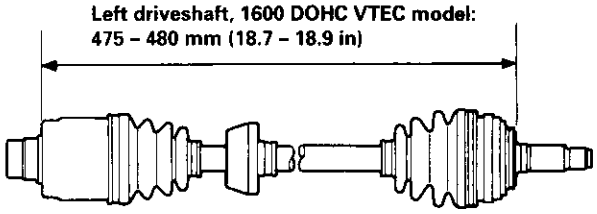

Right driveshaft, 1600 DOHC VTEC model:
475 – 480 mm (18.7 – 18.9 in)
Left driveshaft, all other models:
774 – 779 mm (30.5 – 30.7 in)
Right driveshaft, all other models:
501 – 506 mm (19.7 – 19.9 in)

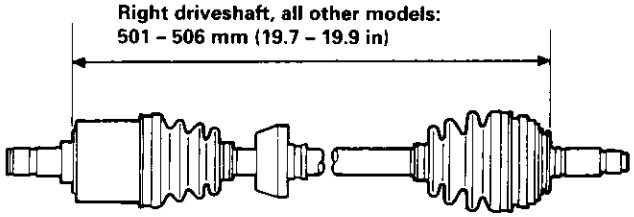

10. If necessary position the dynamic damper as shown below.
    - Install a new dynamic damper band, and bend down both sets of locking tabs.
    - Lightly tap on the doubled-over portion of the band to reduce its height.

Left:
1600 DOHC VTEC model: 26 ± 2 mm (1.0 ± 0.1 in)
All other models: 94 ± 2 mm (3.7 ± 0.1 in)
With "SR1" mark: 75 ± 2 mm (2.9 ± 0.1 in)
Right:
1600 DOHC VTEC models: 26 ± 2 mm (1.0 ± 0.1 in)
All other models: 55 ± 2 mm (2.2 ± 0.1 in)

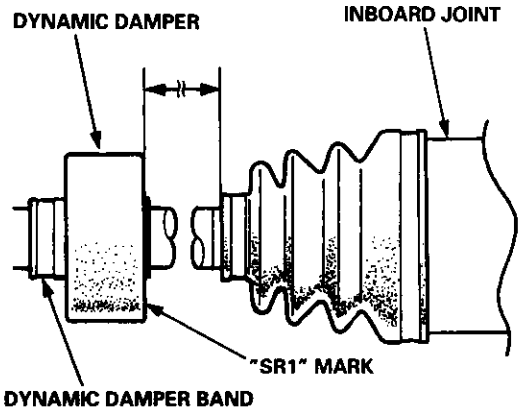

U.S. and Canada-Produced (TPE BOOT)
Left: 536 ± 2 mm (21.1 ± 0.1 in)
Right: 283 ± 2 mm (10.4 ± 0.1 in)

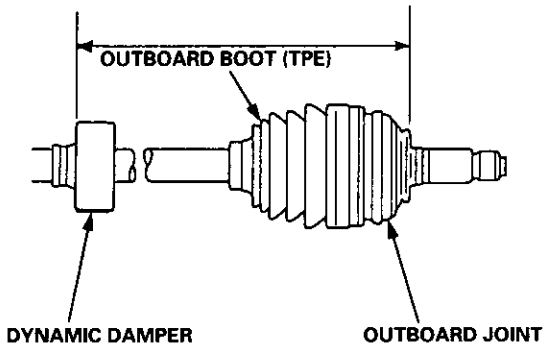

11. Set the double loop band onto the boot and dynamic damper with the band end toward the front of the vehicle.

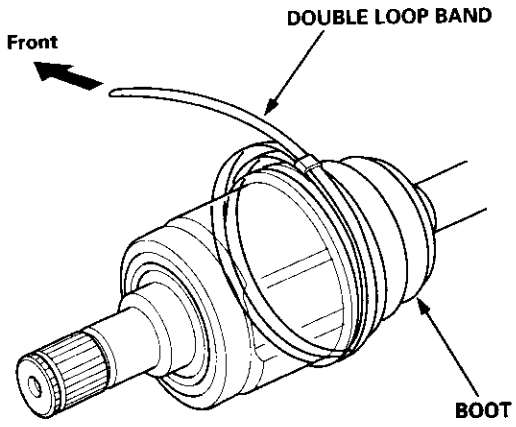

12. Pull up the slack in the band by hand.

13. Mark a position on the band 10 – 14 mm (0.4 – 0.6 in) from the clip.

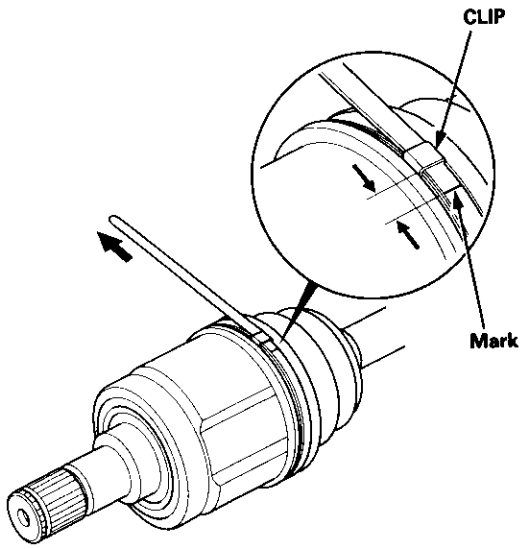

14. Thread the free end of the band through the nose section of the boot band tool and into the slot on the winding mandrel.

15. Place a wrench on the winding mandrel of the boot band tool, and tighten the band until the mark you made on the band meets the edge of the clip.

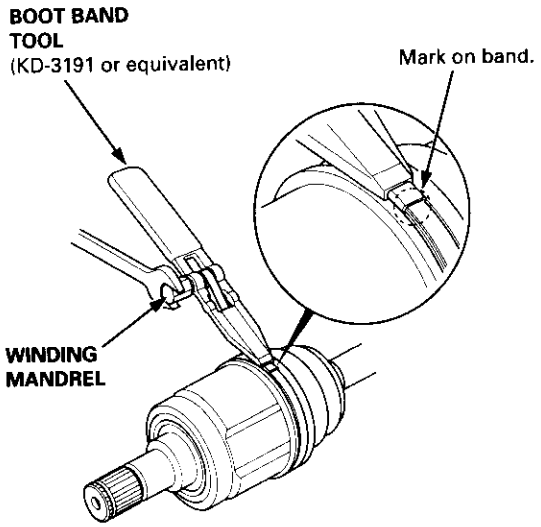

16. Lift up the boot band tool to bend the free end of the band 90 degrees, then center-punch the clip.

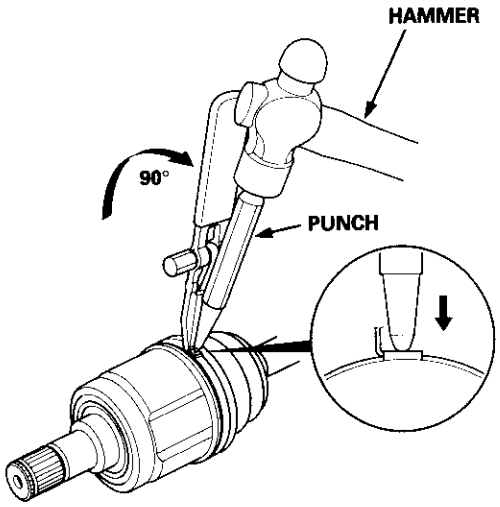

(cont'd)

Reassembly (cont'd)

17. Unwind the boot band tool, and cut off the excess 5 – 10 mm (0.2 – 0.4 in) from the clip.

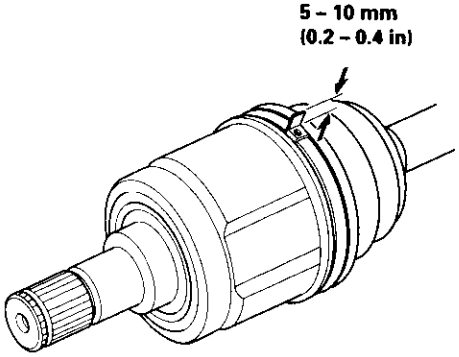

18. Secure the end of the boot band by tapping it down with a hammer.

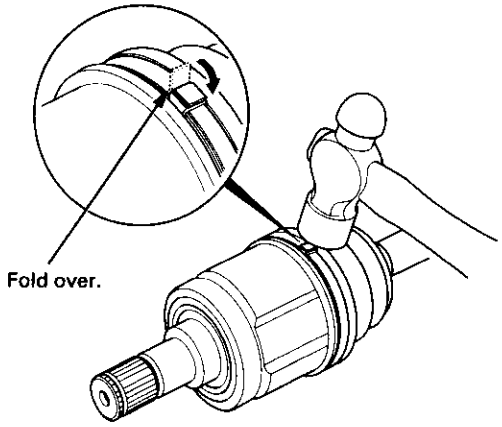

19. Install the new set ring.

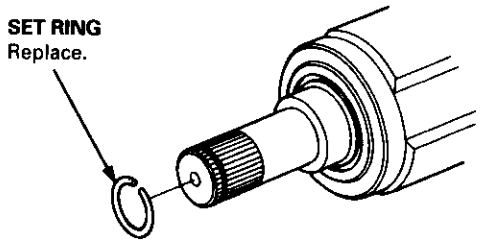

Note these items after reassembly:
- Make sure the band and clip does not interfere with anything and the band does not move.
- Remove any grease remaining on the surrounding surfaces.

Outboard Joint Side:

1. Wrap the splines with vinyl tape to prevent damage to the boot.

TPE type:

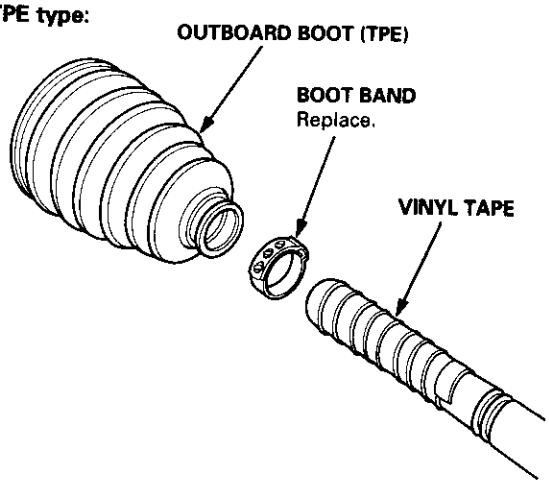

Rubber type:

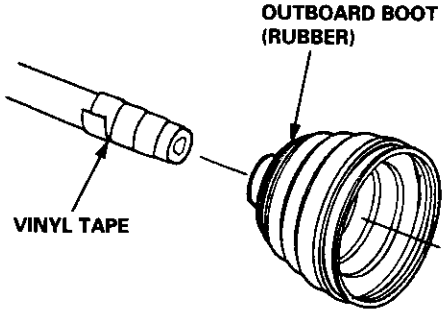

2. Install the boot band and outboard boot, then remove the vinyl tape. Take care not to damage the boot.

3. Install the stop ring into the driveshaft groove.

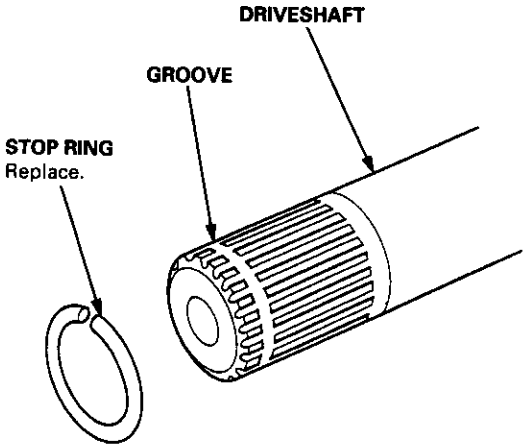

4. Insert the driveshaft into the outboard joint until the stop ring is close on the joint.

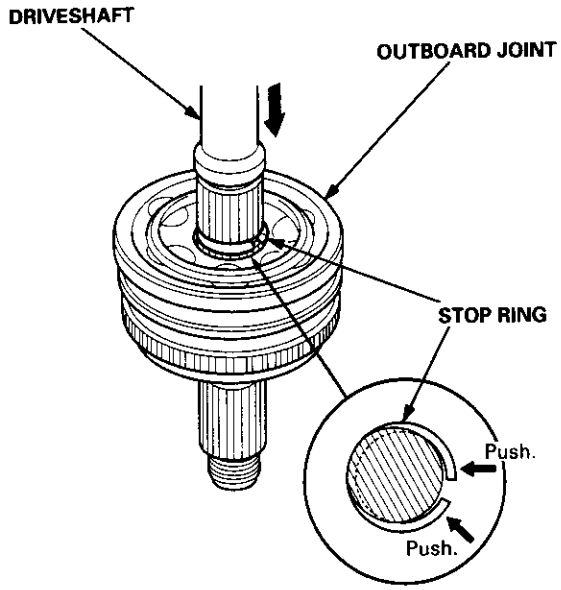

5. To completely seat the outboard joint, pick up the driveshaft and joint, and drop them from about 10 cm (4 to 5 inches) onto a hard surface. Do not use a hammer as excessive force may damage the driveshaft.

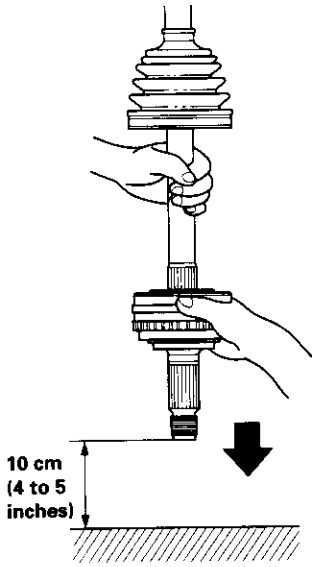

6. Check the alignment of the paint mark with the outboard joint end.

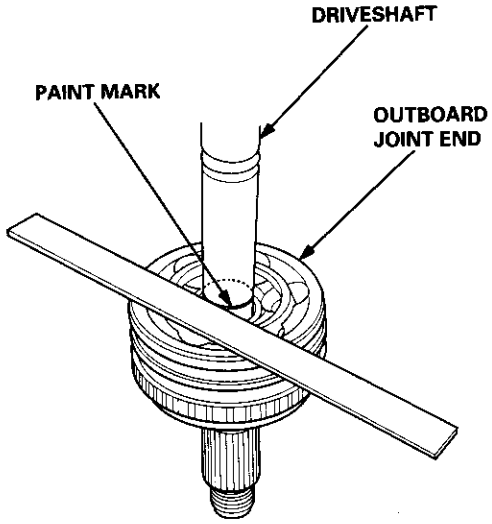

7. Pack the outboard joint with the joint grease included in the new joint boot set.

Grease quantity
U.S., Canada, and Brazil-Produced:
115 – 135 g (4.0 – 4.8 oz)
Japan-Produced:
1600 DOHC VTEC engine:
Rubber boot: 90 – 100 g (3.2 – 3.5 oz)
TPE boot: 105 – 115 g (3.7 – 4.1 oz)
Except 1600 DOHC VTEC engine:
Rubber boot: 70 – 80 g (2.5 – 2.8 oz)
TPE boot: 95 – 105 g (3.4 – 3.7 oz)

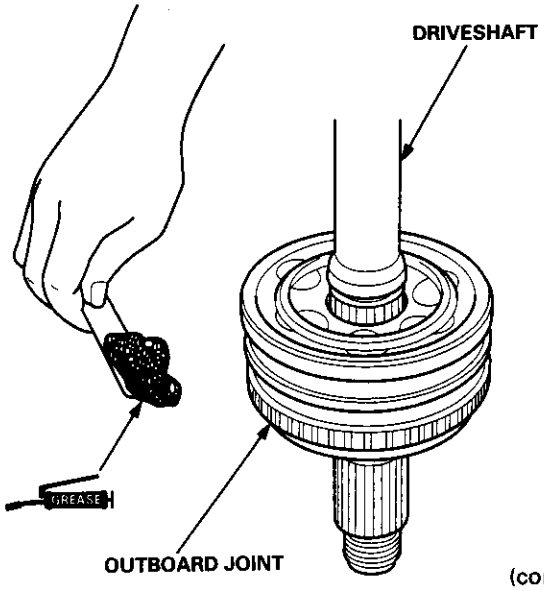

(cont'd)

Reassembly (cont'd)

8. Install the outboard boot and the boot bands.
   - If the boot is the rubber type, go to step 13.
   - If the boot is the TPE type, go to step 9.

9. Fit the boot ends onto the driveshaft and outboard joint.

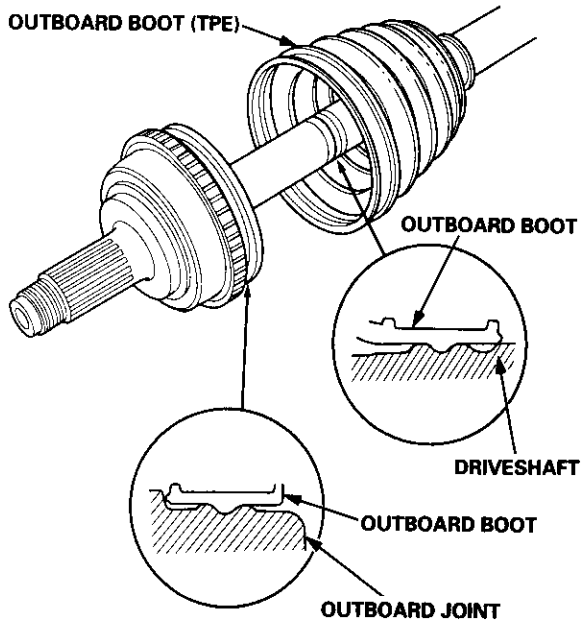

10. Set the ear clamp band by threading the tab into the holes of the band.

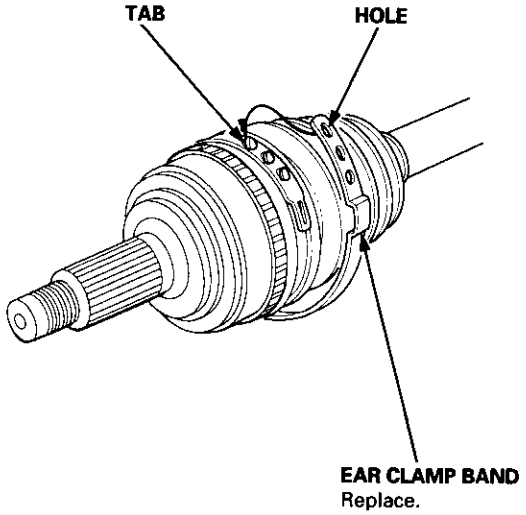

11. Close the ear portion of the band with a commercially available boot band pincers.

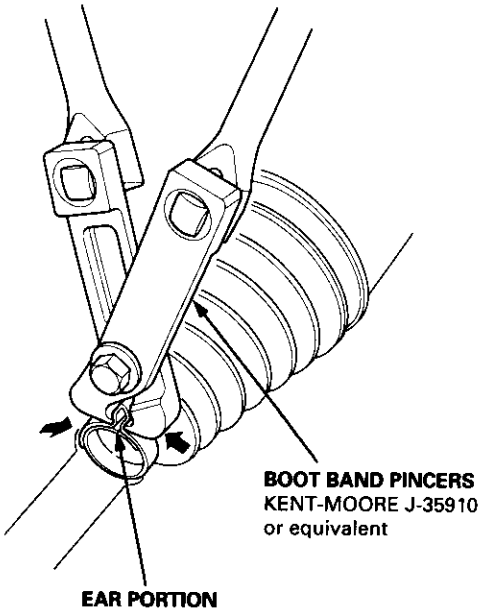

12. Check the clearance between the closed ear portion of the band. If the clearance is not within the standard, close the ear portion of the band further.

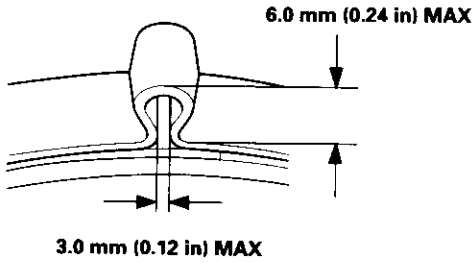

13. Fit the boot ends onto the driveshaft and the outboard joint

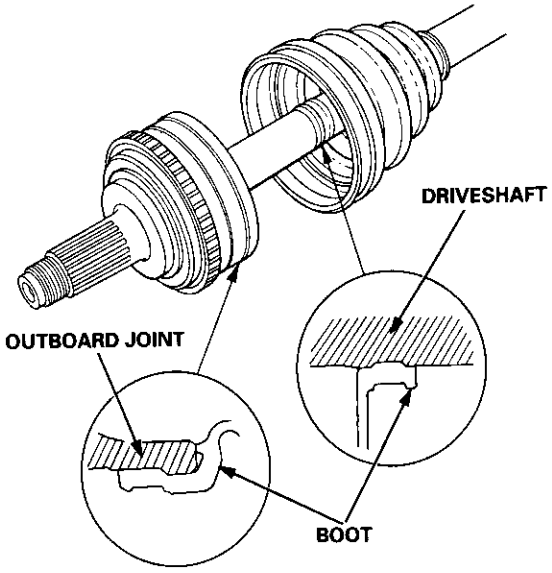

14. Fit the double loop boot bands onto the boot ends.

15. Pull up the slack in the band by hand.

16. Mark a position on the band 10 – 14 mm (0.4 – 0.6 in.) from the clip.

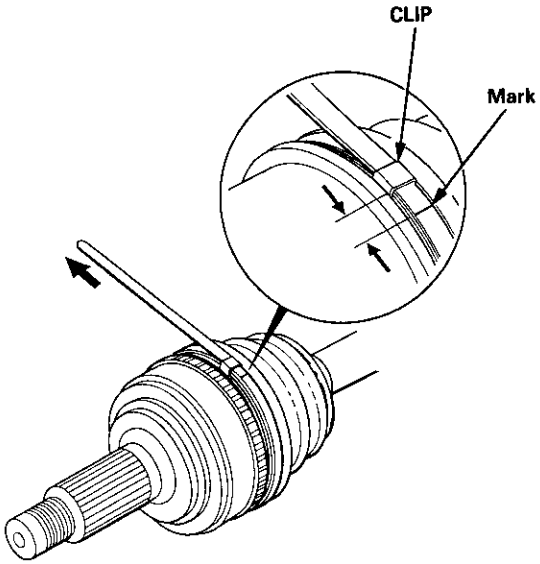

17. Thread the free end of the band through the nose section of a commercially available boot band tool KD-3191 or equivalent and into the slot on the winding mandrel.

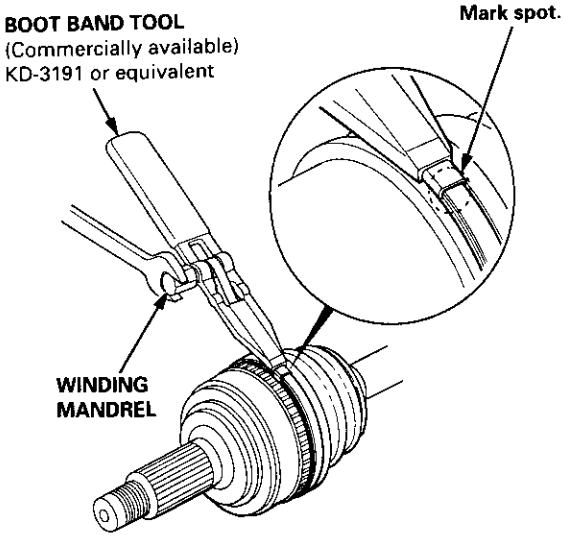

18. Place a wrench on the winding mandrel of the boot band tool, and tighten the band until the marked spot on the band meets the edge of the clip.

19. Lift up the boot band tool to bend the free end of the band 90° to the clip. Center punch the clip, then fold over the remaining tail onto the clip.

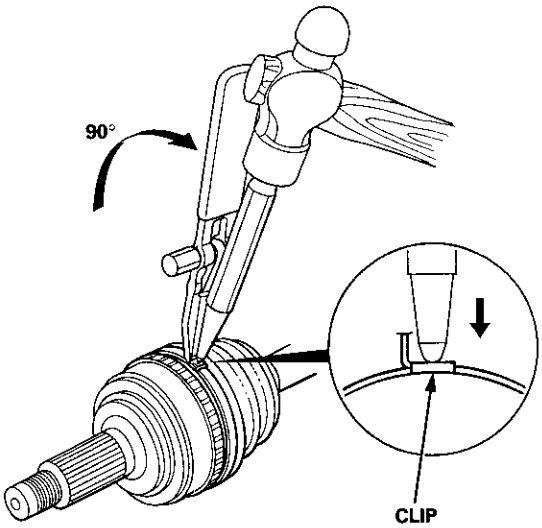

(cont'd)

Reassembly (cont'd)

20. Unwind the boot band tool, and cut off the excess free end of the band to leave a 5 – 10 mm (0.2 – 0.4 in.) tail protruding from the clip.

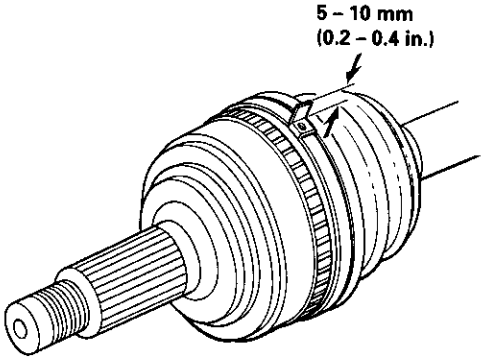

21. Bend the band by tapping it down with a hammer.

    NOTE: Make sure the band and the clip does not interfere with anything, and the band does not move. Remove any grease remaining in the surrounding surfaces.

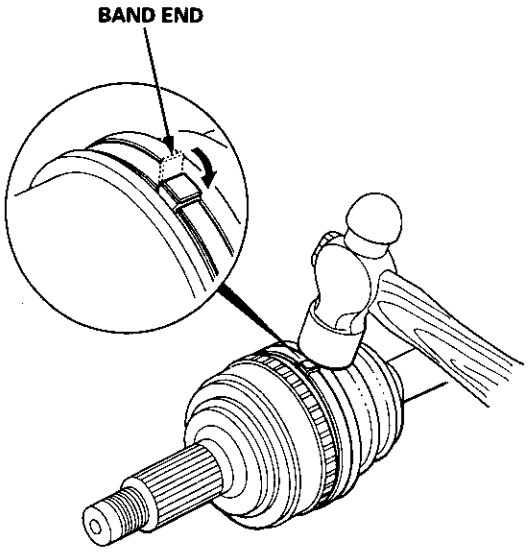

Installation

1. Install the new set ring onto the driveshaft groove. Always use a new set ring whenever the driveshaft is being installed.

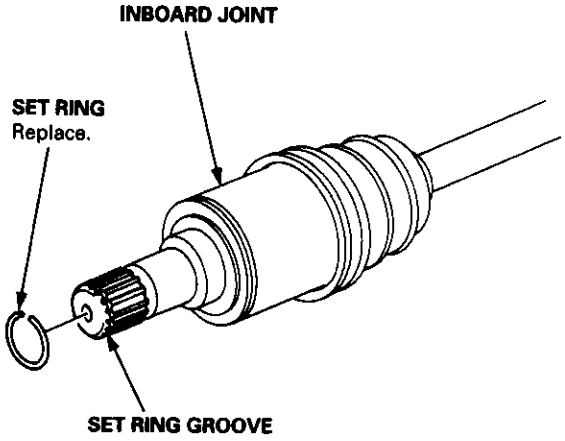

2. Install the outboard joint into the knuckle.

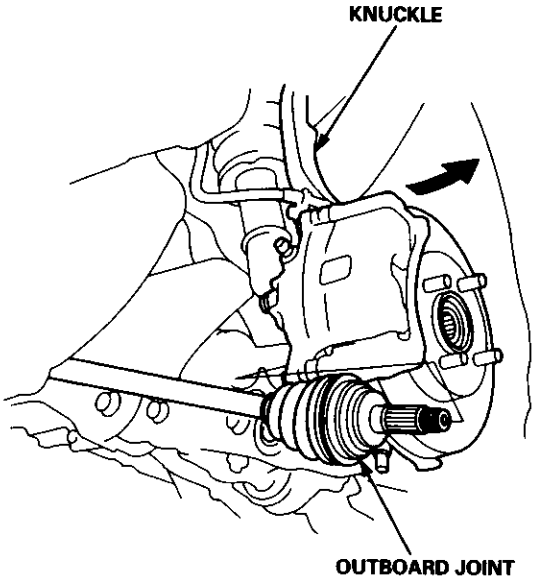

3. Insert the inboard end of the driveshaft into the differential or intermediate shaft until the set ring locks in the groove.

NOTE: Clean the areas where the driveshaft contact the transmission (differential) thoroughly with solvent or carburetor cleaner, and dry with compressed air.

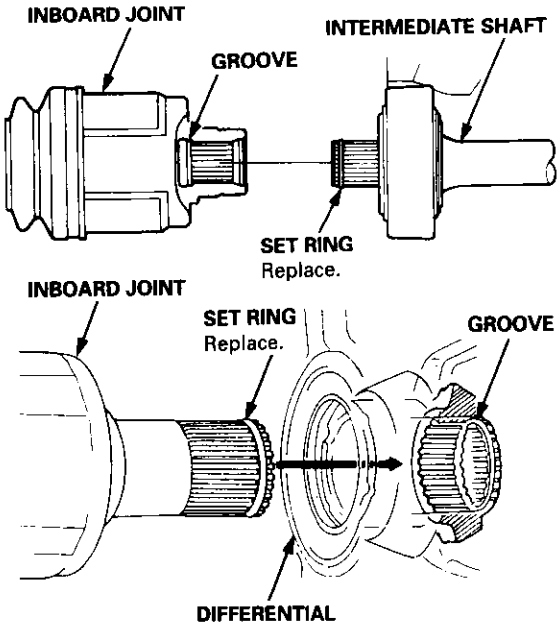

4. Install the knuckle on the lower arm, then tighten the castle nut and install a new cotter pin.

NOTE: Wipe off the grease before tightening the nut at the ball joint.

CAUTION:
- **Be careful not to damage the ball joint boot.**
- **Torque the castle nut to the lower torque specification, then tighten it only far enough to align the slot with the pin hole. Do not align the nut by loosening.**

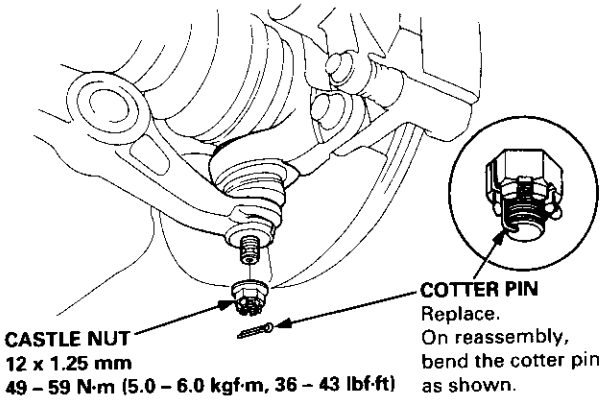

5. Install the damper fork over the driveshaft and onto the lower arm. Install the damper in the damper fork so the aligning tab is aligned with the slot in the damper fork.

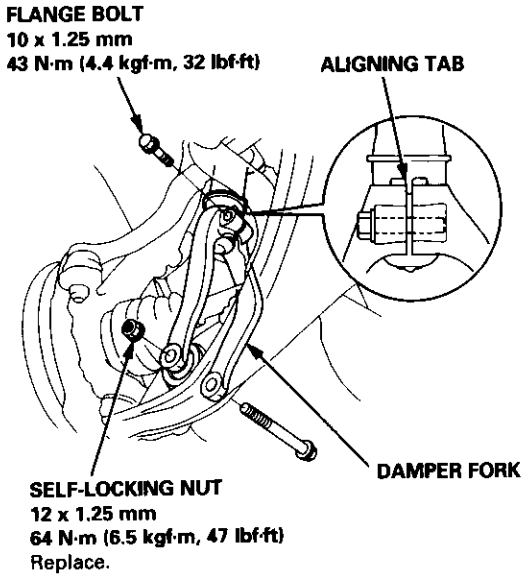

6. Loosely install the flange bolts and the new self-locking nut.
7. Apply oil to the seating surface of the new spindle nut.

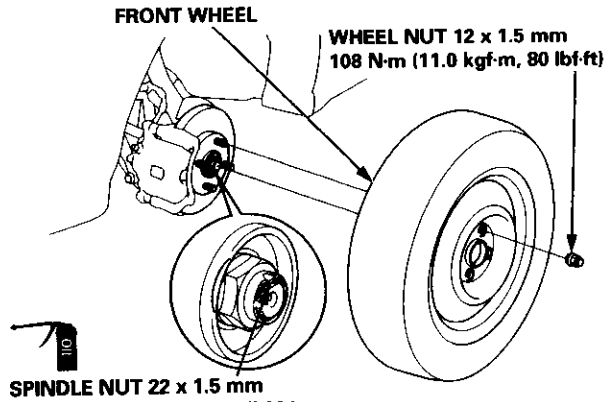

8. Install a new spindle nut, then tighten the nut.
9. Clean the mating surfaces of the brake disc and the wheel, then install the front wheel with the wheel nuts.
10. Tighten the flange bolts and the new self-locking nut with the vehicle's weight on the damper.
11. Refill the transmission with recommended fluid (see section 13 or 14).
12. Check the front wheel alignment and adjust if necessary (see section 18).

Intermediate Shaft

Removal

1. Drain the transmission oil or fluid (see section 13 or 14).

2. Remove the left driveshaft (see page 16-3).

3. Remove the three dowel bolts.

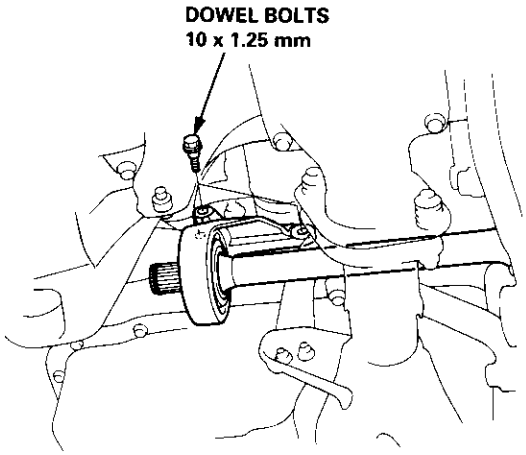

4. Remove the intermediate shaft from the differential.

   CAUTION: Hold the intermediate shaft horizontal until it is clear of the differential to prevent damage to the differential oil seal.

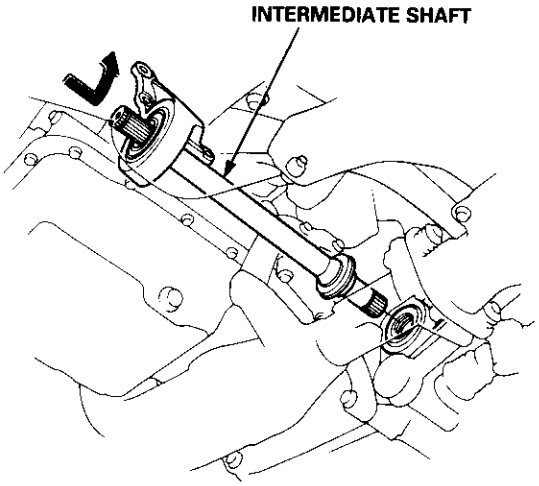

Disassembly

NOTE: Be careful not to damage the metal rings on the intermediate shaft during disassembly.

1. Remove the set ring.

2. Remove the intermediate shaft outer seal from the bearing support.

3. Remove the external circlip.

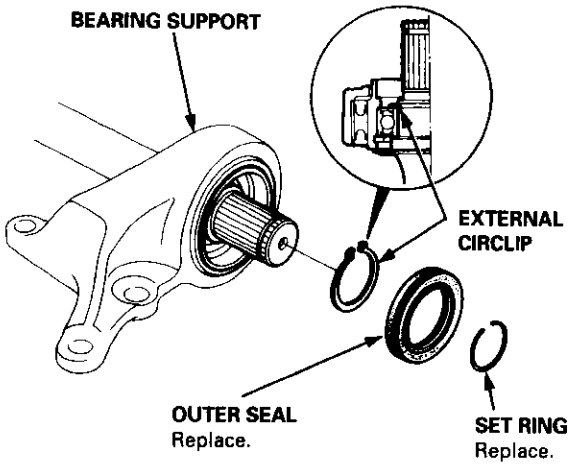

Disassembly

4. Press the intermediate shaft out of the shaft bearing using the special tools and a press as shown.

5. Remove the internal circlip.

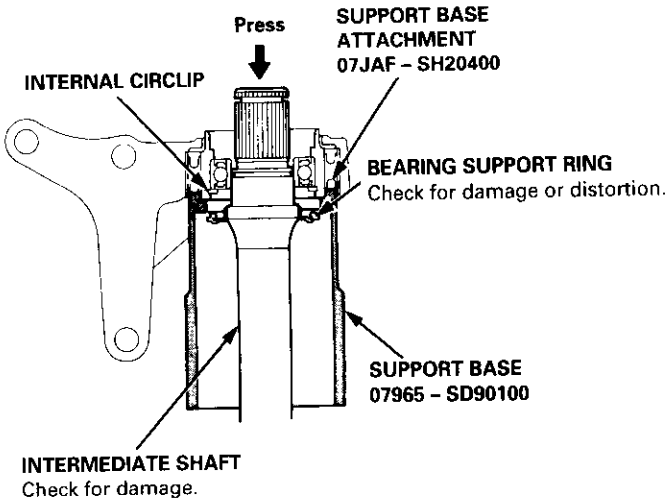

6. Press the intermediate shaft bearing out of the bearing support using the special tools and a press as shown.

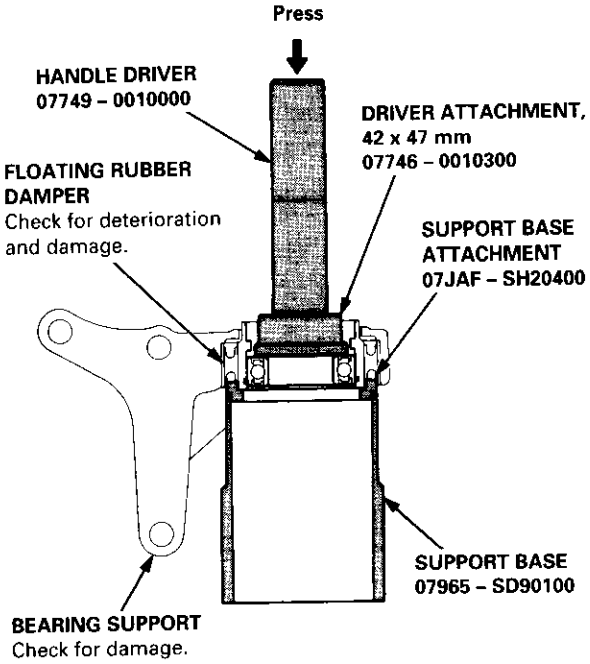

Reassembly

NOTE:
- Clean the disassembled parts with solvent, and dry them thoroughly with compressed air. Do not wash the rubber parts with solvent.
- Be careful not to damage the metal rings on the intermediate shaft during reassembly.

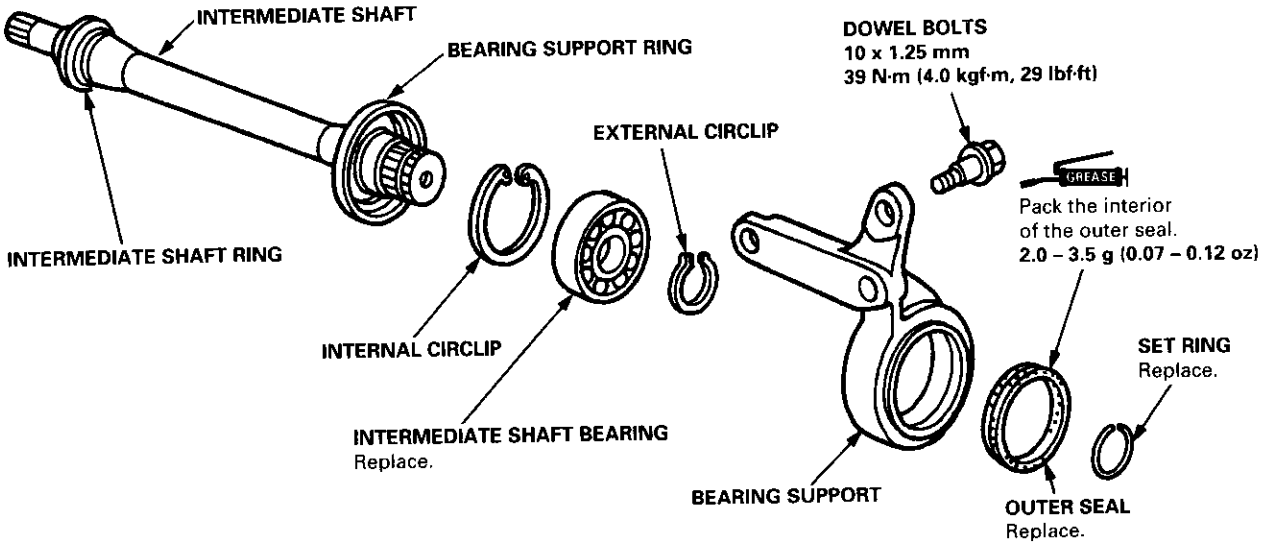

(cont'd)

Reassembly (cont'd)

1. Press the intermediate shaft bearing into the bearing support using the special tools and a press as shown.

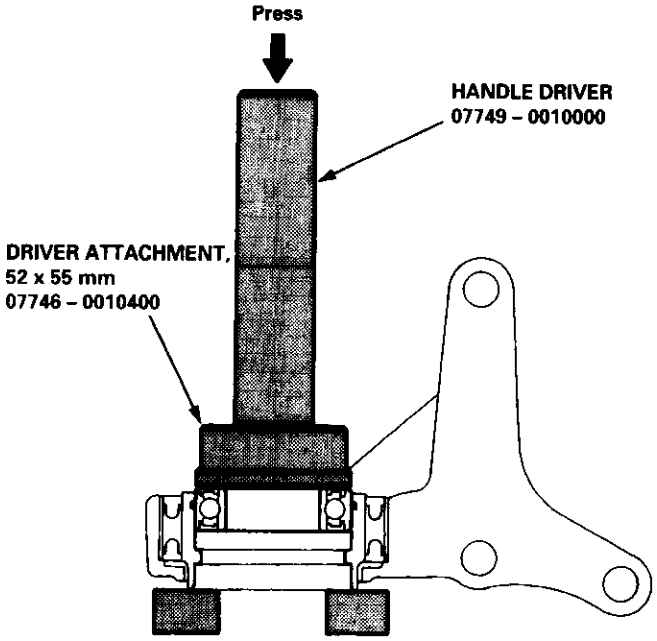

2. Seat the internal circlip in the groove of the bearing support.

3. Press the intermediate shaft into the shaft bearing using the special tools and a press.

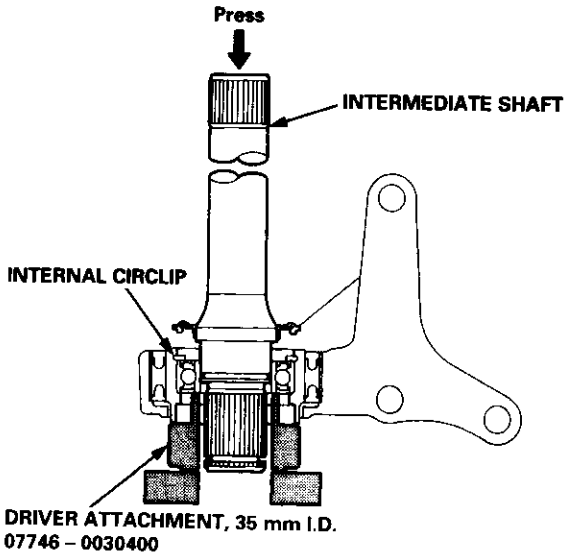

4. Seat the external circlip in the groove of the intermediate shaft.

5. Install the outer seal into the bearing support using the special tools as shown.

   NOTE: Install the seal flush with the bearing support.

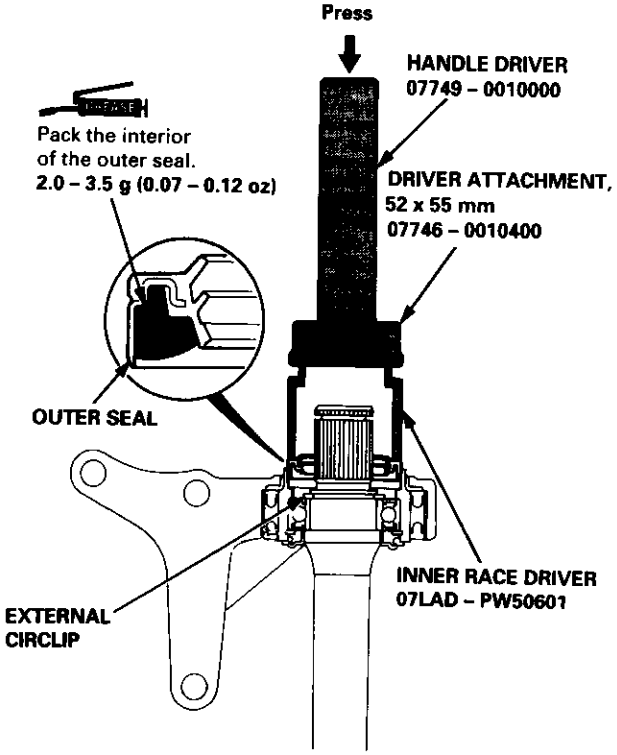

6. Install the new set ring in the intermediate shaft groove.

Installation

1. Insert the intermediate shaft assembly into the differential.

   CAUTION: Hold the intermediate shaft horizontal to prevent damage to the differential oil seal.

   NOTE: Clean the areas where the intermediate shaft contacts the transmission (differential) thoroughly with solvent or carburetor cleaner, and dry with compressed air.

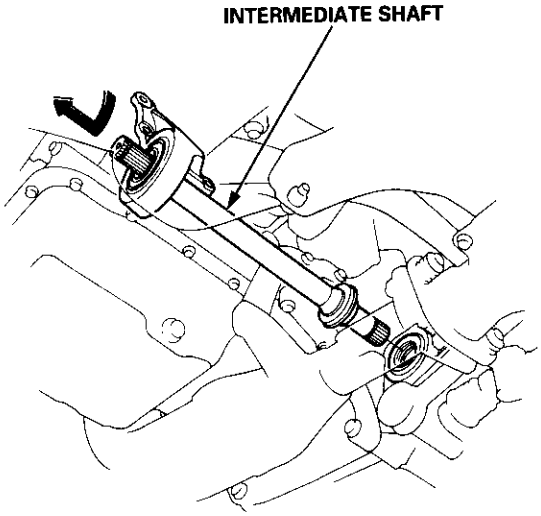

2. Install the three dowel bolts, then tighten them.

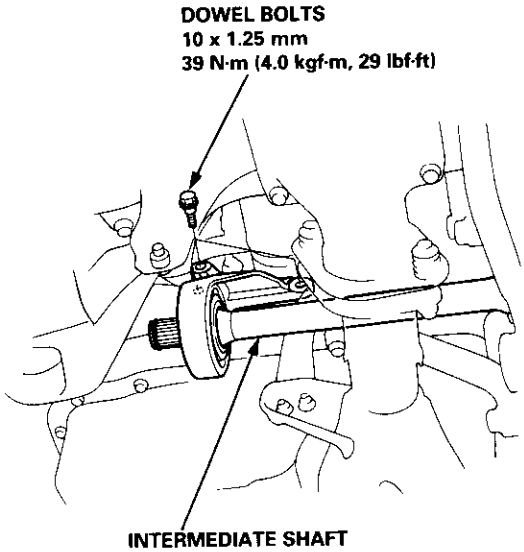

Steering

Special Tools 17-2

Manual Steering

Component Locations
- Index 17-3

Inspection and Adjustment
- Steering Operation 17-4
- Rack Guide Adjustment 17-5

*Steering Wheel
- (See power steering section)

*Steering Column
- (See power steering section)

Steering Gearbox
- Removal 17-5
- Disassembly 17-7
- Reassembly 17-9
- Installation 17-13

Power Steering

Component Locations
- Index 17-15

System Description
- Fluid Flow Diagram 17-16
- Steering Pump 17-17
- Steering Gearbox 17-20

Troubleshooting
- General Troubleshooting 17-22
- Noise and Vibration 17-26
- Fluid Leaks 17-28

Inspection and Adjustment
- Steering Operation 17-30
- Power Assist Check With Vehicle Parked 17-30
- Steering Linkage and Gearbox 17-31
- Pump Belt 17-32
- Rack Guide Adjustment 17-33
- Fluid Replacement 17-33
- Pump Pressure Check 17-34

*Steering Wheel
- Removal 17-35
- Installation 17-35
- Disassembly/Reassembly 17-36

*Steering Column
- Removal/Installation 17-37
- Inspection 17-38

Power Steering Hoses, Lines
- Fluid Leakage Inspection 17-39
- Replacement 17-39

Power Steering Pump
- Removal/Installation 17-40
- Disassembly 17-41
- Inspection 17-42
- Reassembly 17-44

Steering Gearbox
- Removal 17-47
- Disassembly 17-49
- Reassembly 17-55
- Installation 17-65
- Ball Joint Boot Replacement 17-68

Special Tools

Ref. No	Tool Number	Description	Qty	Page Reference
①	07GAF – PH70100	Pilot Collar	1	17-54
②	07GAG – SD4010A or 07GAG – SD40100	Piston Seal Ring Guide	1	17-59
③	07GAG – SD4020A or 07GAG – SD40200	Piston Seal Ring Sizing Tool	1	17-59
④	*07JGG – 001010A	Belt Tension Gauge	1	17-32
⑤	07MAC – SL00200	Ball Joint Remover, 28 mm	1	17-6, 47
⑥	07NAD – SR3020A	Cylinder End Seal Remover Attachment	1	17-51
⑦	07NAG – SR3090A or 07NAG – SR30900	Piston Seal Ring Sizing Tool	1	17-56
⑧	07RAK – S040110	P/S Joint Adaptor (Pump)	1	17-34
⑨	07RAK – S040121 or 07RAK – S040120	P/S Joint Adaptor (Hose)	1	17-34
⑩	07406 – 001000A or 07406 – 0010001	P/S Pressure Gauge	1	17-34
⑪	07725 – 0030000	Universal Holder	1	17-42, 46
⑫	07746 – 0010100	Attachment, 32 x 35 mm	1	17-57, 58
⑬	07746 – 0020100	Driver, 22 mm I.D.	1	17-10
⑭	07746 – 0030300	Attachment, 30 mm I.D.	1	17-44
⑮	07749 – 0010000	Driver	1	17-57
⑯	07916 – SA50001	Locknut Wrench, 40 mm	1	17-5, 33
⑰	07965 – SA50500	Front Hub Dis/Assembly Tool	1	17-68
⑱	07974 – SA5020A or 07974 – SA50200	Sleeve Seal Ring Sizing Tool	1	17-57
⑲	07974 – SA50800	Ball Joint Boot Clip Guide	1	17-57, 68

* Included in the Belt Tension Gauge Set, 07TGG – 001000A.

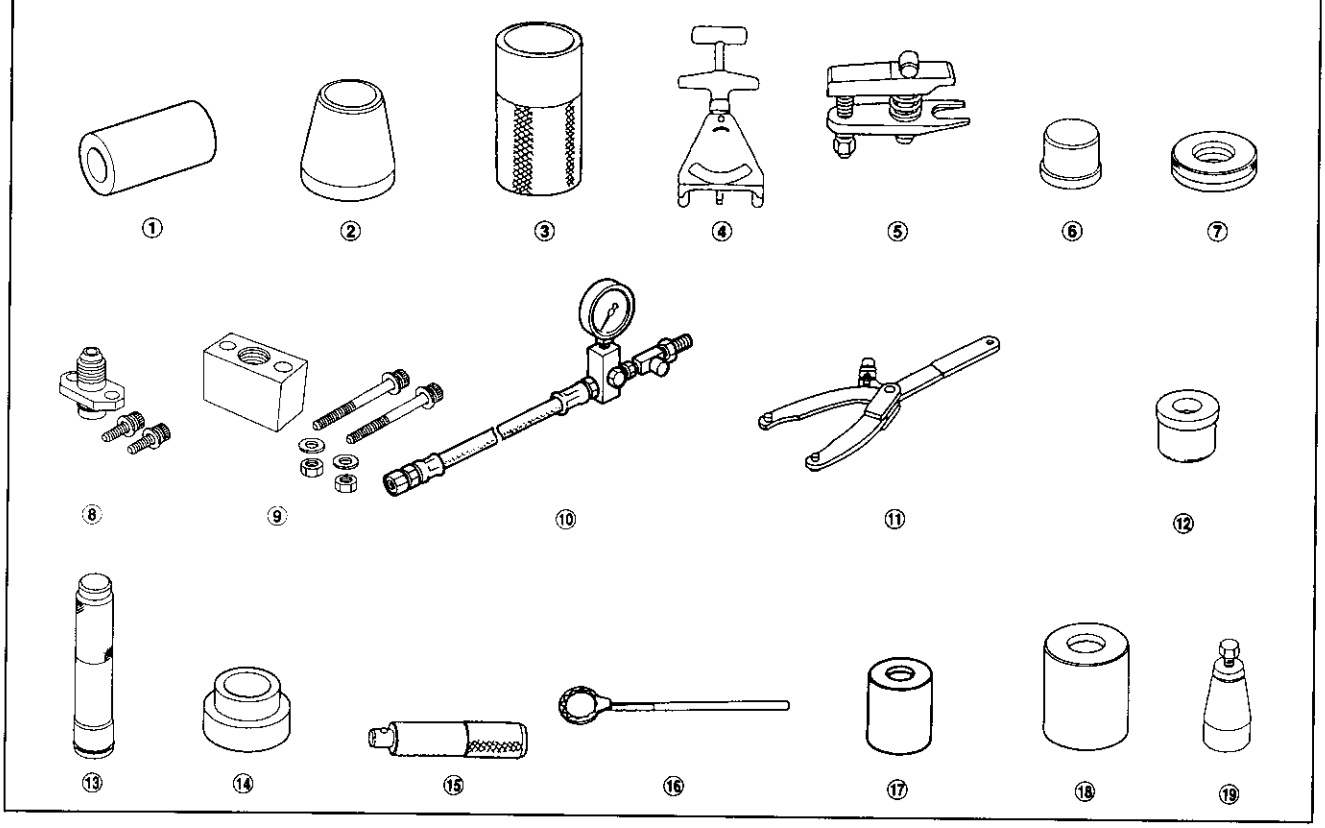

Index

Manual Steering

NOTE:
- If an intact airbag assembly has been removed from a scrapped vehicle or has been found defective or damaged during transit, storage or service, it should be deployed (see section 24).
- Before removing the gearbox, remove the driver's airbag assembly and steering wheel.
- After installing the gearbox, check the wheel alignment and adjust if necessary.

SRS components are located in this area. Review the SRS component locations, precautions, and procedures in the SRS section (24) before performing repairs or service.

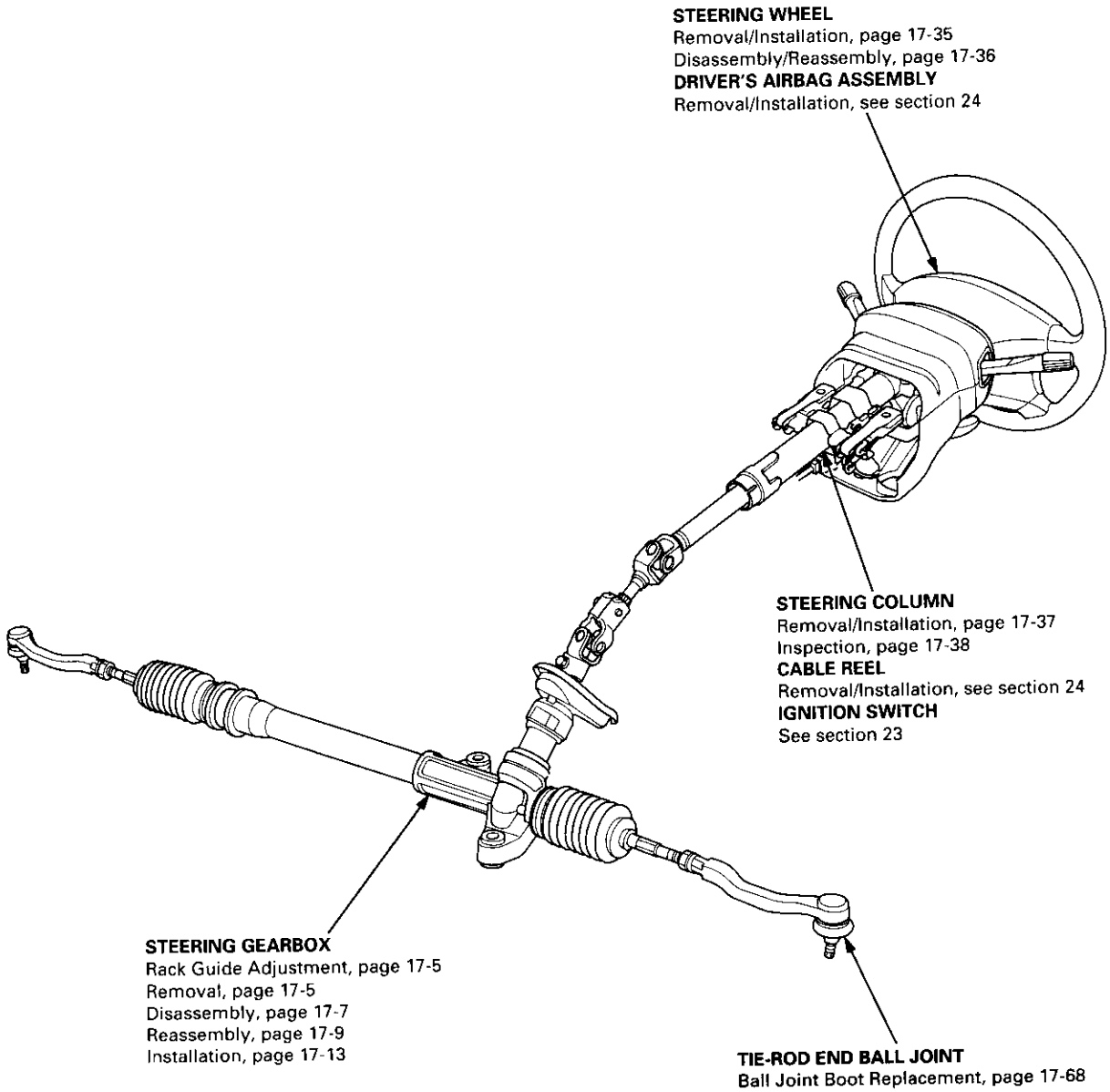

Steering Operation

Steering Wheel Rotational Play
Place the front wheels in a straight ahead position and measure the distance the steering wheel can be turned without moving the front wheels.

ROTATIONAL PLAY: 0 – 10 mm (0 – 0.4 in)

If the play exceeds the service limit, perform rack guide adjustment (see page 17-5).
If the play is still excessive after rack guide adjustment, inspect the steering linkage and gearbox as described below.

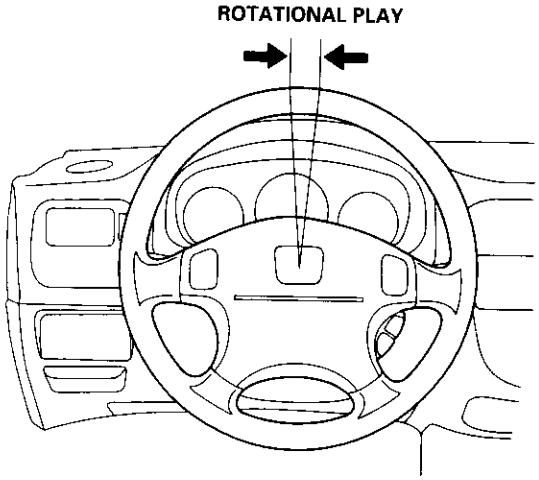

Steering Effort Check
Raise the front wheels off the ground.
Turn the steering wheel with a spring scale and check its reading.

Standard: 15 N (1.5 kgf, 3.3 lbf) maximum

If it reads more, perform rack guide adjustment (see page 17-5).

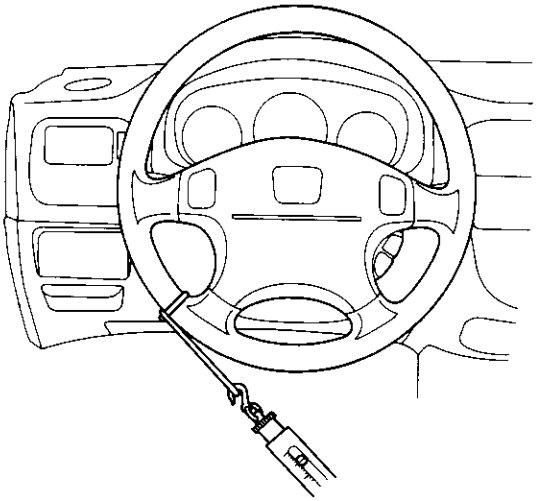

Steering Linkage and Gearbox

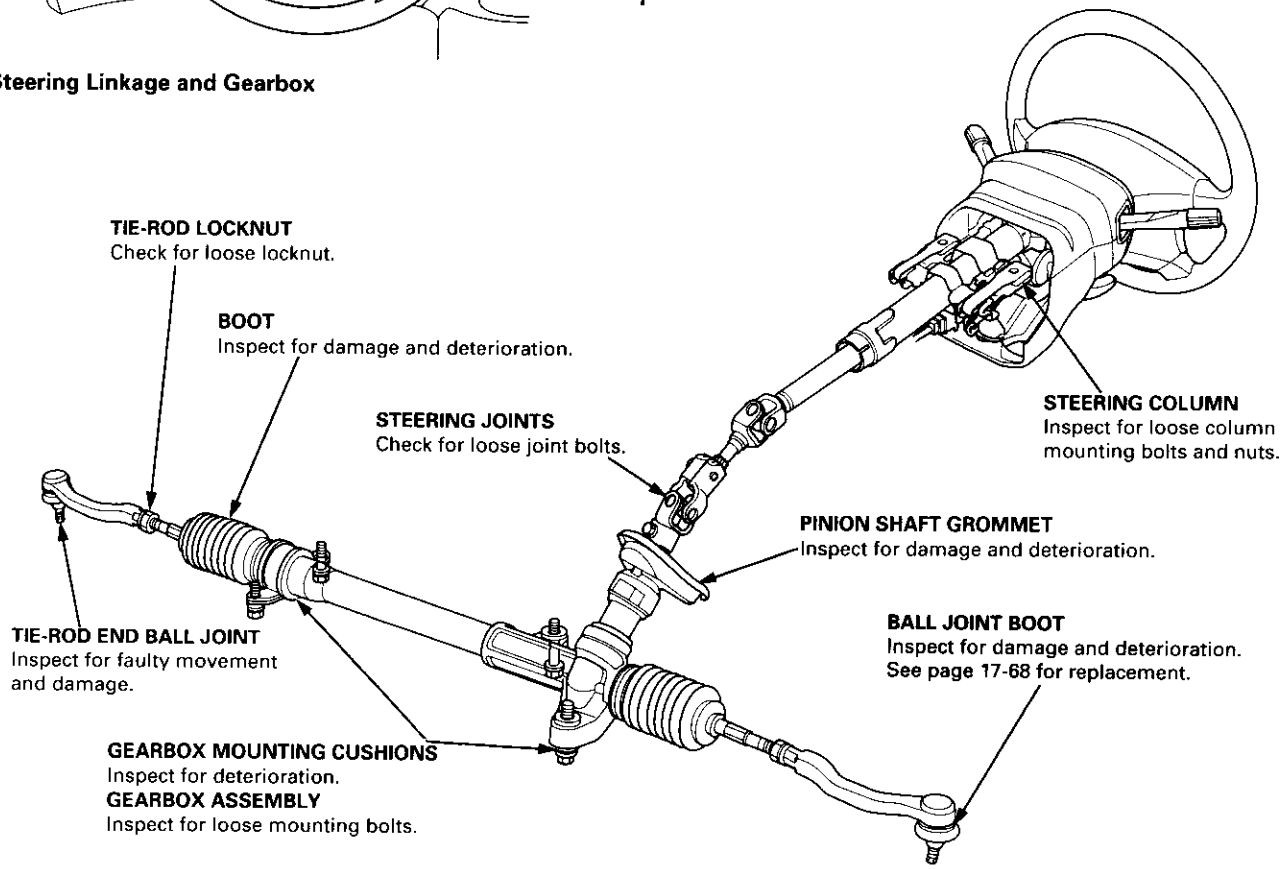

Rack Guide Adjustment

NOTE: Perform the rack guide adjustment with the wheels in the straight ahead position.

1. Loosen the rack guide screw locknut with the special tool, then loosen the rack guide screw.

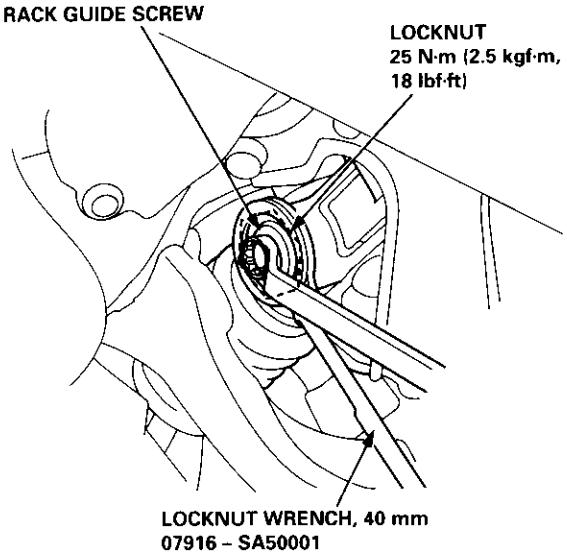

2. Tighten the rack guide screw until it compresses the spring and seats against the rack guide, then loosen it.

3. Retighten the rack guide screw to 4 N·m (0.4 kgf·m, 2.9 lbf·ft), then back it off to specified angle.

   Specified Return Angle: 30° max.

4. Tighten the locknut while holding the rack guide screw.

5. Check for tight or loose steering through the complete turning travel.

6. Recheck steering effort (see page 17-4).

Removal

NOTE: Using solvent and a brush, to wash any oil and dirt off the gearbox. Blow dry with compressed air.

1. Raise the front of vehicle, and support it on safety stands in the proper locations (see section 1).

2. Remove the front wheels.

3. Remove the steering wheel (see page 17-35).

4. Remove the steering joint cover.

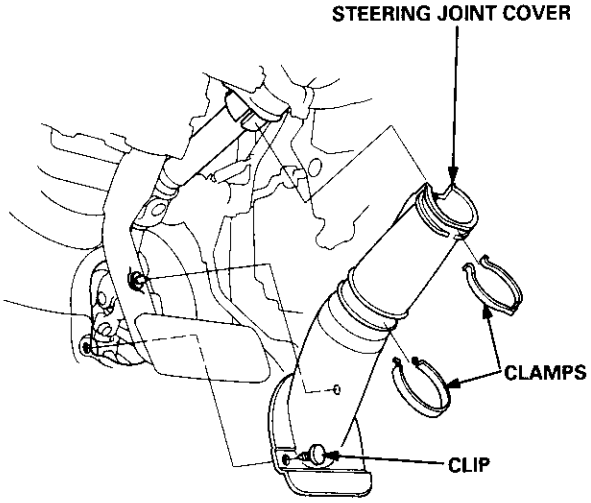

5. Remove the steering joint lower bolt, and disconnect the steering joint by moving the joint toward the column.

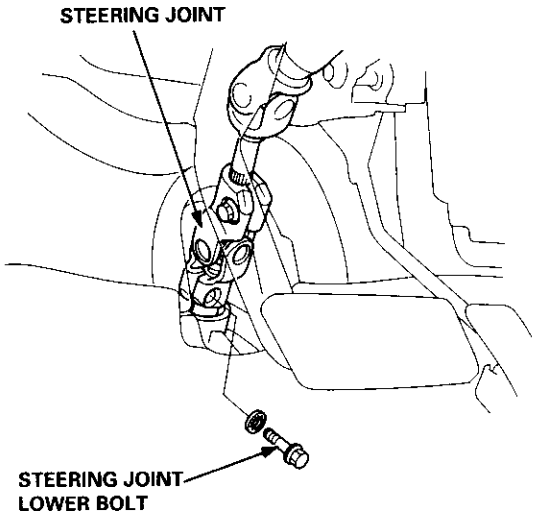

(cont'd)

Removal (cont'd)

6. Remove the cotter pin from the castle nut ('96 – '97 models) or nut ('98 – '00 models) and remove the nut.

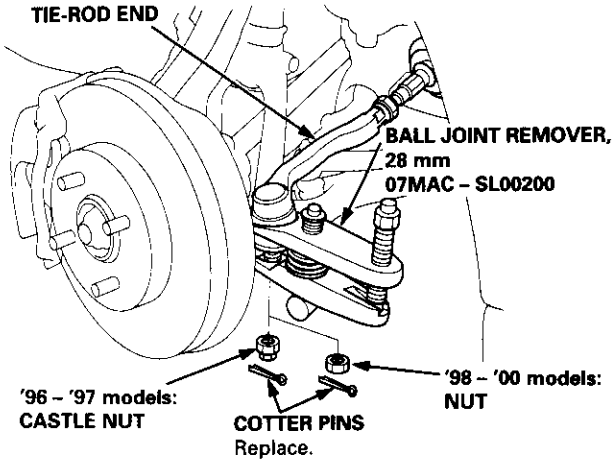

7. Install the 10 mm hex nut on the ball joint.
   Be sure that the 10 mm hex nut is flush with the ball joint pin end, or the threaded section of the ball joint pin might be damaged by the ball joint remover.

   NOTE: Remove the ball joint using the special tool. Refer to section 18 for how to use the ball joint remover.

8. Separate the tie-rod ball joint and knuckle using the special tool.

   CAUTION: Avoid damaging the ball joint boot.

9. Remove the left tie-rod end, then slide the rack all the way to the right.

10. Separate the exhaust pipe A or TWC (see section 9).

11. Disconnect the shift linkage (see section 13 or section 14).

12. Remove the stiffener plate.

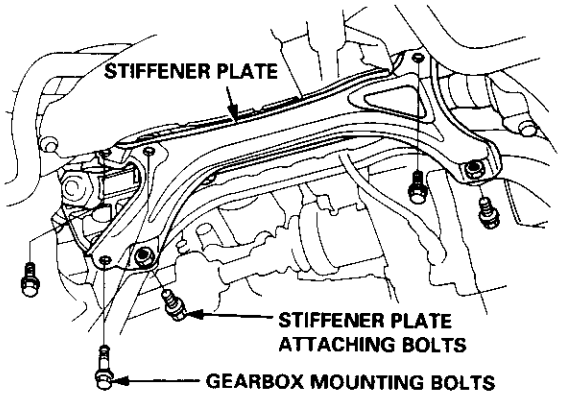

13. Remove the mounting bracket.

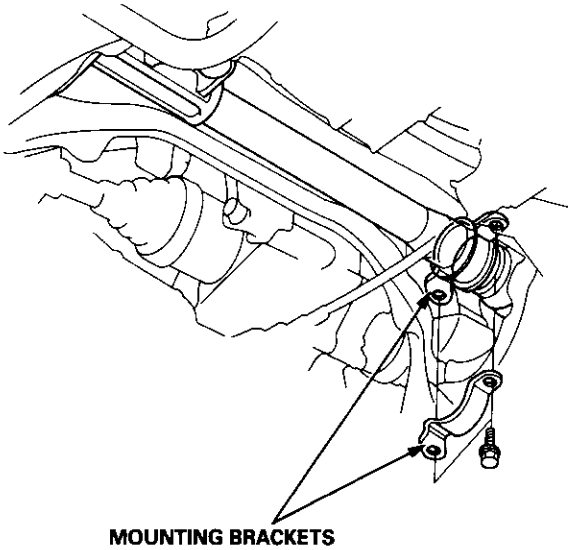

14. Pull the steering gearbox all the way down to clear the pinion shaft from the bulkhead, then remove the pinion shaft grommet.

15. Move the steering gearbox to right so the left rack end clears the rear beam, then tilt the left side down to remove it from the car.

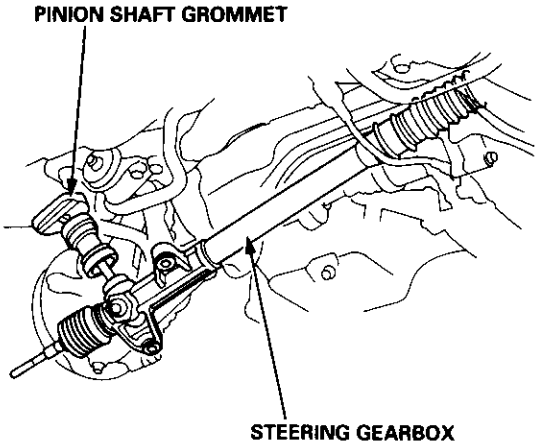

Disassembly

1. Place the gearbox in a vise with a soft jaws, then clamp the gearbox at the mount bracket or gear housing.

   CAUTION: Be careful not to distort the gear housing by clamping it too tight in the vise incorrectly.

2. Remove the tie-rod end and locknut.

3. Remove the boot bands and tie-rod clips. Pull the boots away from the ends of the gearbox.

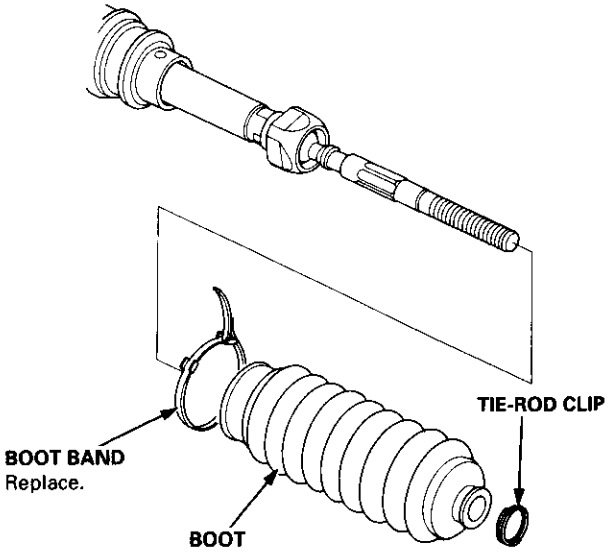

4. Hold the steering rack with one wrench, and unscrew the rack end with another wrench.

   CAUTION: Be careful not to damage the rack surface with the wrench.

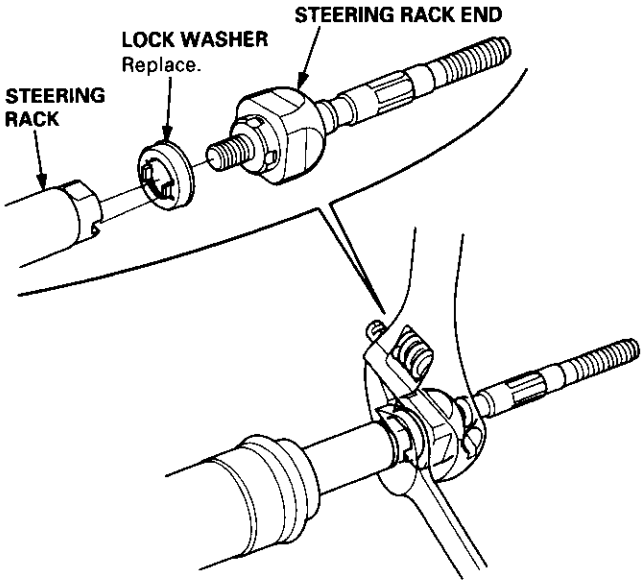

5. Push the right end of the rack back into the cylinder housing so the smooth surface that rides against the seal won't be damaged.

6. Loosen the locknut, and remove the rack guide screw.

7. Remove the disc washer, spring and rack guide from the gear housing.

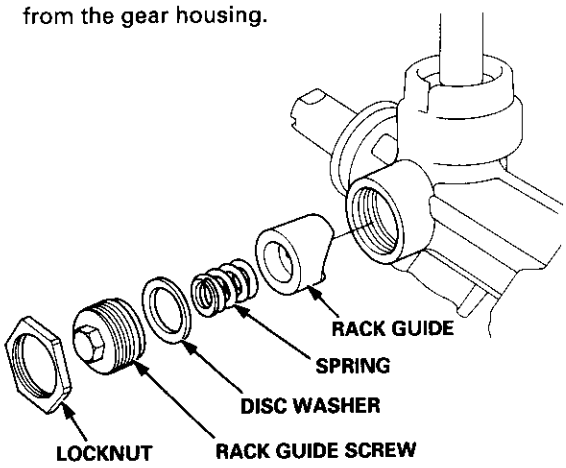

8. Remove the pinion dust seal and the 35 mm snap ring.

9. Hold the pinion shaft with a vise securely.
   Remove the pinion by tapping evenly around the flanged section of the gearbox with a plastic hammer.

   CAUTION: Do not tap on the steering rack.

   NOTE: Do not reuse the removed pinion.

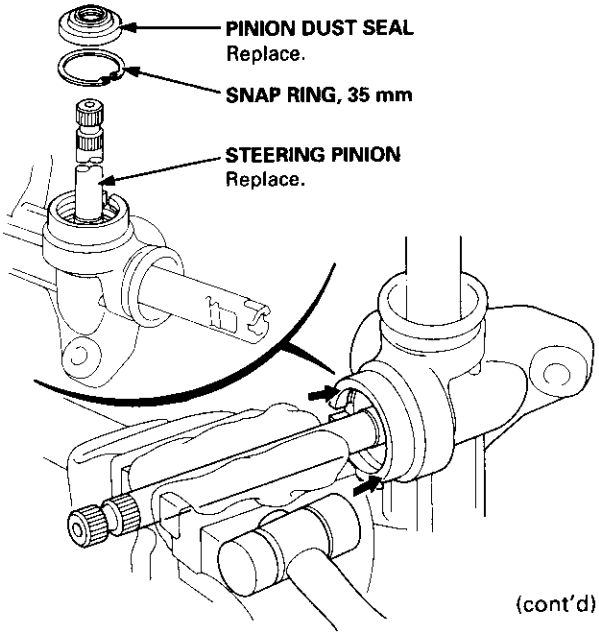

(cont'd)

Disassembly (cont'd)

10. Slide the steering rack out of the cylinder housing.

    CAUTION: Be careful not to damage the bushing in the cylinder housing.

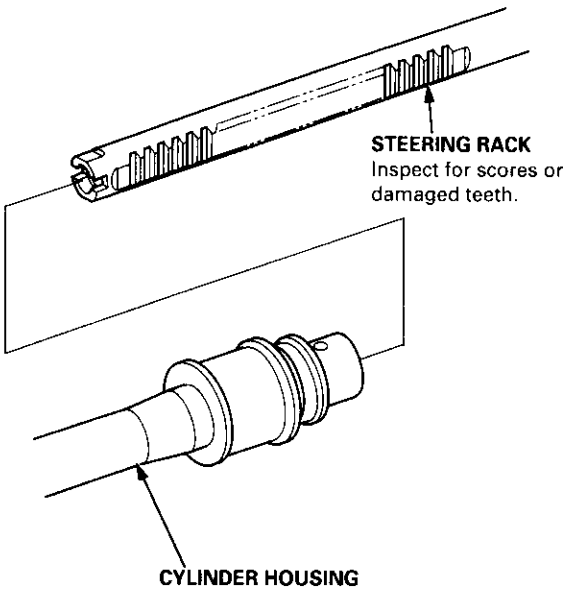

11. Remove the rack end bushing.

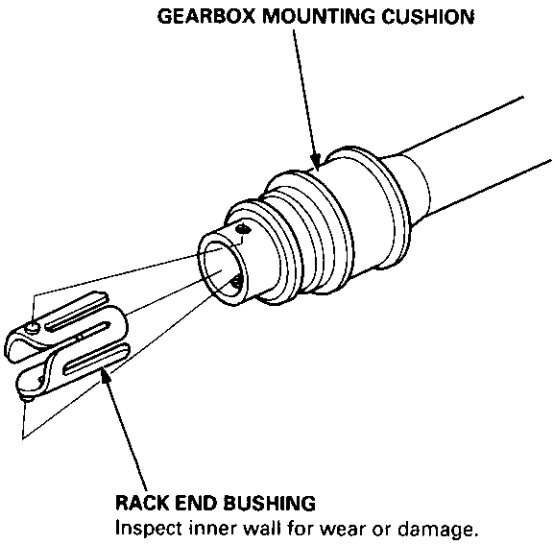

12. Replace the gearbox mounting cushion if necessary:

    - To remove the cushion, use a sharp knife and make a cut down the length of the cushion. Be careful not to damage the paint on the outside of the cylinder housing. Remove the old cushion.
    - Apply weatherstrip adhesive to the inside of the new cushion. Install the cushion onto the cylinder housing and position it 20 – 22 mm (0.79 – 0.87 in) from the end of the cylinder housing as shown.

    NOTE: After installing the cushion, wipe off any excess adhesive that may have dripped into the inside of the cylinder housing.

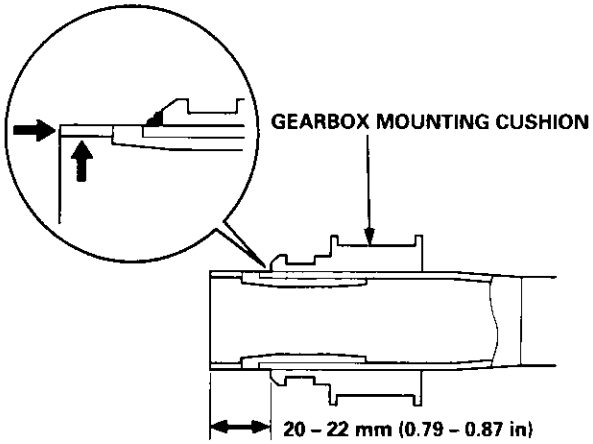

Reassembly

NOTE:
- Clean the disassembled parts with solvent, and dry them with compressed air. Do not dip the rubber parts in solvent.
- Always replace the non-reuseable parts with new ones before assembly.
- Do not allow dust, dirt, or other foreign materials to enter the steering gearbox.

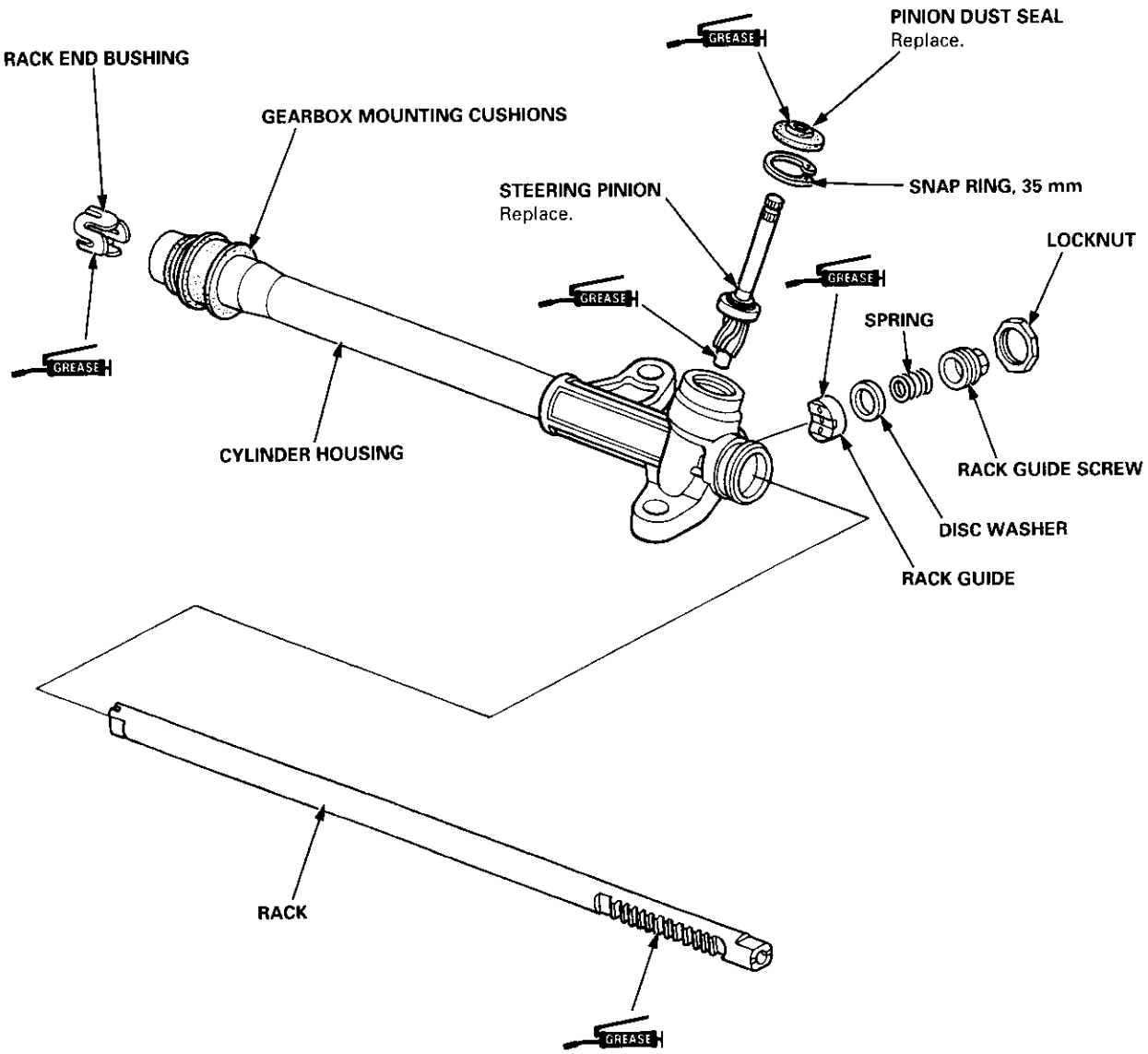

(cont'd)

Reassembly (cont'd)

1. Apply a thin coat of grease to the inside surface of the rack end bushing.

   Grease quantity: 1 – 3 g (0.04 – 0.1 oz)

   CAUTION: Do not fill the slots with grease; they must remain open to serve as air passages.

2. Install the rack end bushing by aligning the round projection on the bushing with the hole in the cylinder housing

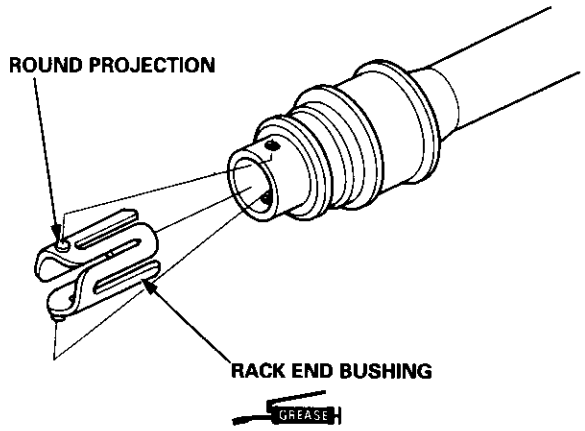

3. Grease the steering rack teeth.

4. Install the steering rack into the cylinder housing carefully to avoid damaging the rack end bushing.

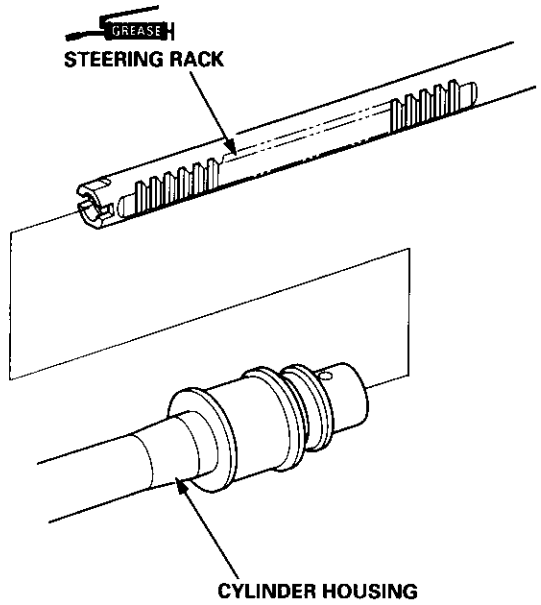

5. Drive in the steering pinion in the gear housing with the special tools.

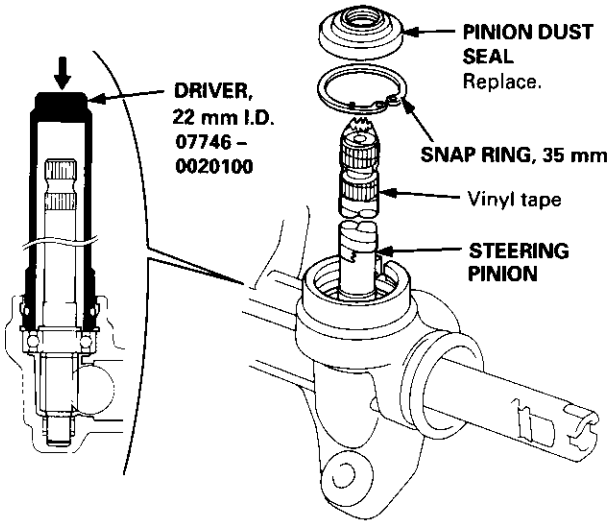

6. Install the 35 mm snap ring securely in the gear housing groove.

7. Apply vinyl tape to the pinion shaft, then coat the vinyl tape with grease.

8. Install the pinion dust seal on the gear housing until it seats properly, then remove the tape.

9. Grease the sliding surface of the rack guide, and install it on to the gear housing.

10. Install the spring, disc washer and rack guide screw on the gear housing.

    NOTE: Install the disc washer with its convex side facing in.

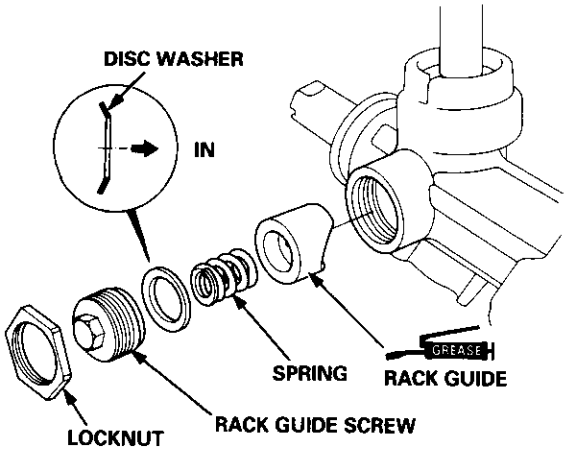

11. Adjust the rack guide screw (see page 17-5).

12. Install the new lock washer in the groove in the steering rack.
13. Install the steering rack end into the rack.

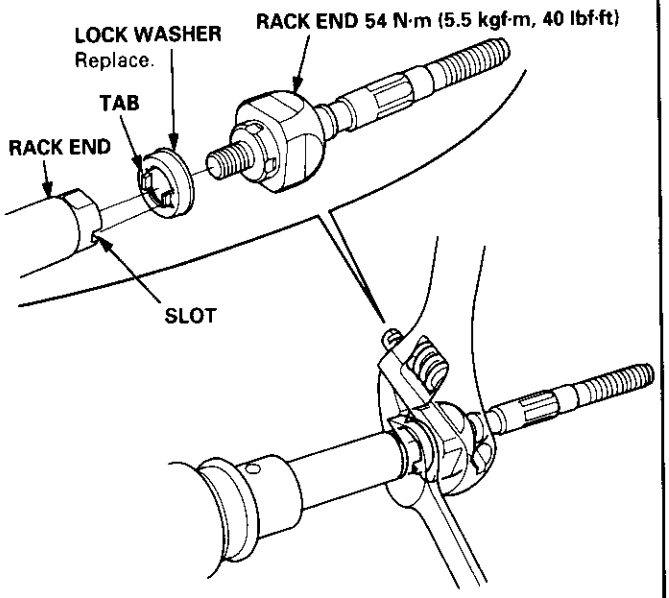

14. Hold the steering rack with a wrench and tighten the rack end with another.
    CAUTION: Be careful not to damage the rack surface with the wrench.
15. After tightening the rack ends, stake the four sections of the lock washer with a roll pin drift and a mallet.
    - Place the wood block on the press table, then set the lock washer section of the rack end on the wood block securely.
    - Be sure the tool is aligned with the flat sections of the steering rack end before pressing.
    - Stake the lock washer in the center of the flat section of the steering rack end.

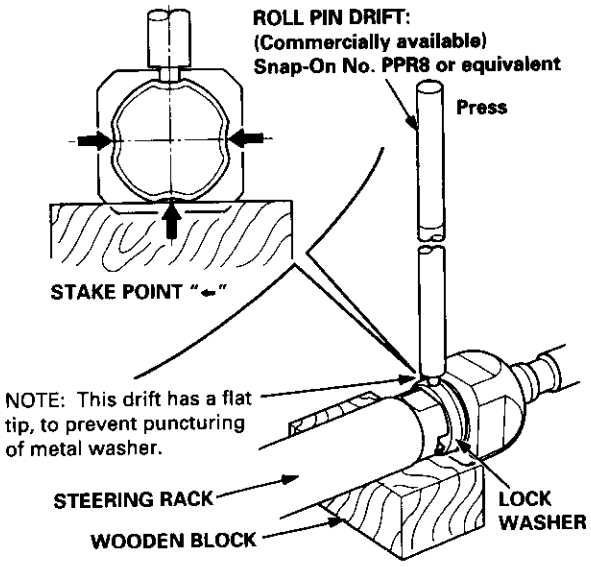

16. Apply grease around the outside of the rack end housing.

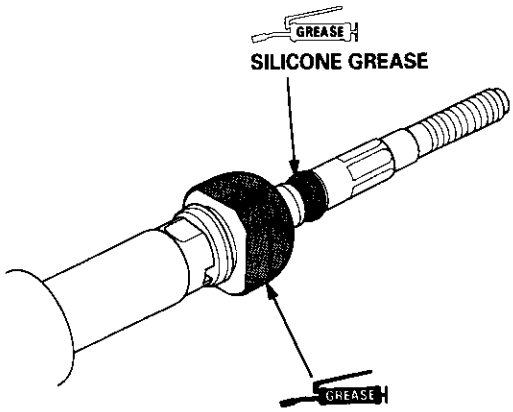

17. Apply a light coat of silicone grease to the boot grooves on the rack ends.
18. Install the boots in the rack end with the tie-rod clips.

    NOTE: Install the boot band with the rack in the straight ahead position (right and left tie-rods are equal in length).

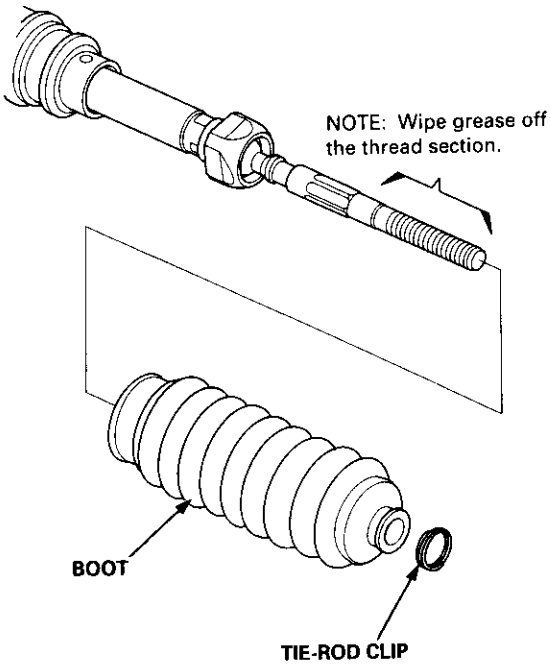

(cont'd)

Reassembly (cont'd)

19. Install the boot band so that the locking tabs of the band (stake points) are in the range shown below. (Tabs should face up and slightly forward.)

20. Bend both sets of locking tabs.

21. Lightly tap on the doubled-over portions to reduce their height.

    CAUTION: Stake the band locking tabs firmly.

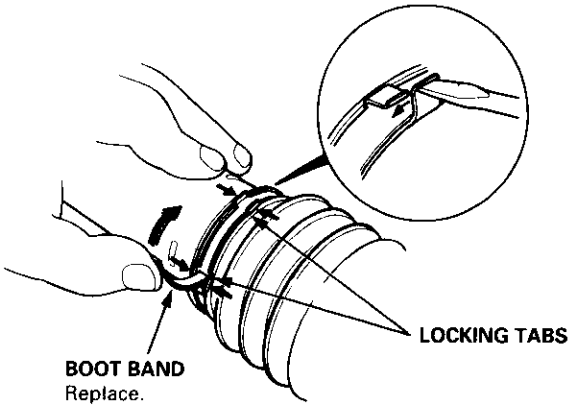

22. Slide the rack right and left to be certain that the boots are not deformed or twisted.

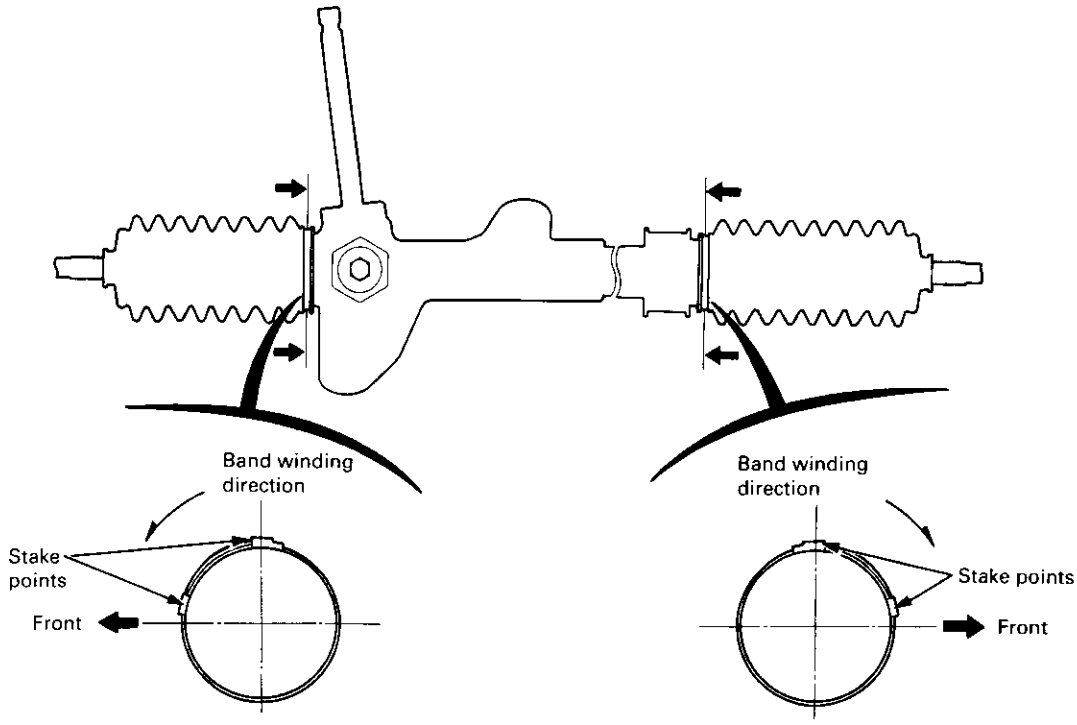

Left Boot Band
(Viewed from the left side)

Right Boot Band
(Viewed from the right side)

Installation

1. Slide the rack all the way to the right.

2. Install the pinion shaft grommet, and insert the pinion shaft up through the bulkhead.

   NOTE: Align the notch in the pinion shaft grommet with the tab on the gear housing.

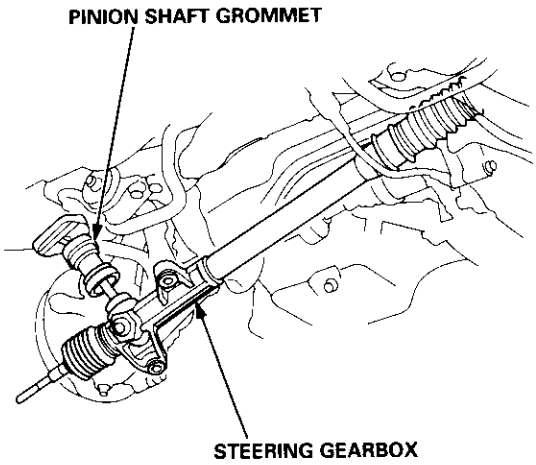

3. Install the mounting brackets with the two gearbox mounting bolts on the cushion.

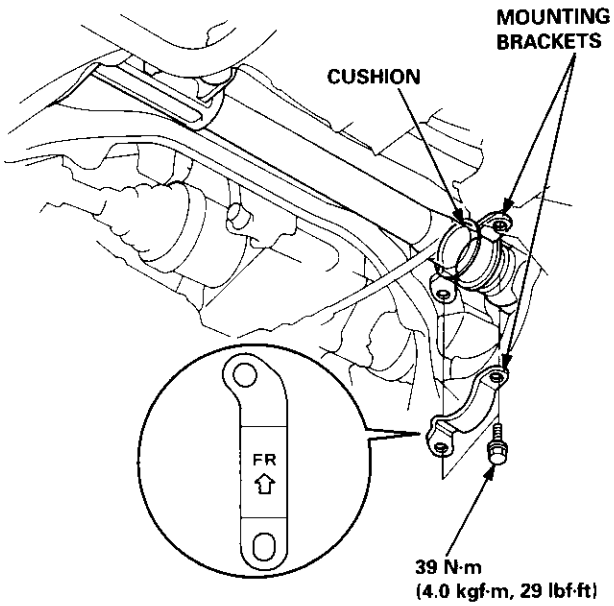

NOTE: The arrow on the bracket point toward the front.

4. Install the stiffener plate with the two gearbox mounting bolts and stiffener plate attaching bolts.
   NOTE: Install the bolts loosely first, then tighten them securely.

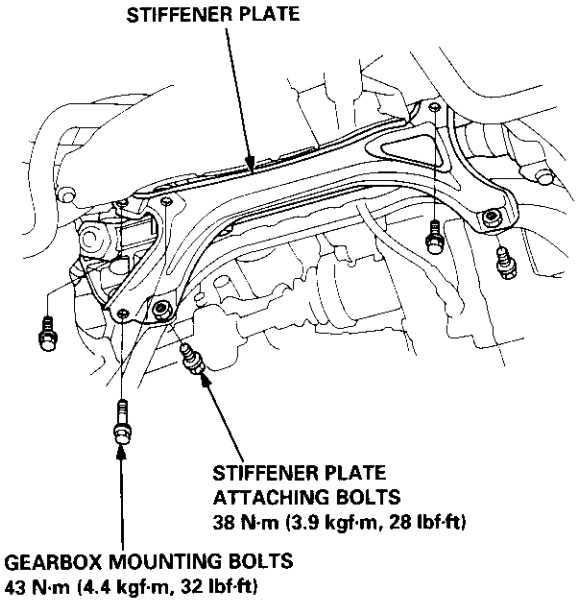

5. Center the steering rack within its stroke.
6. Slip the lower end of the steering joint onto the pinion shaft (line up the bolt hole with the groove around the shaft), and tighten the lower bolt.
   NOTE:
   - Connect the steering shaft and pinion with the steering wheel and steering rack centered.
   - Be sure that the lower steering joint bolt is securely in the groove in the steering gearbox pinion.
   - If the steering wheel and rack are not centered, reposition the serrations at lower end of the steering joint.

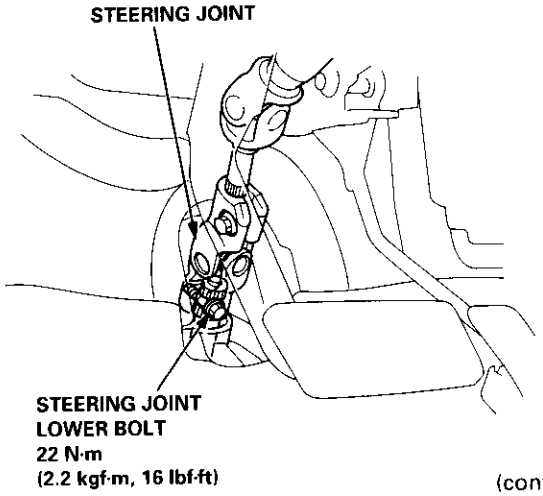

(cont'd)

Installation (cont'd)

7. Center the cable reel by first rotating it clockwise until it stops. Then rotate it counterclockwise (approximately two turns) until the arrow mark on the label points straight up. Reinstall the steering wheel (see page 17-35).

8. Install the steering joint cover with the clamps and clips.

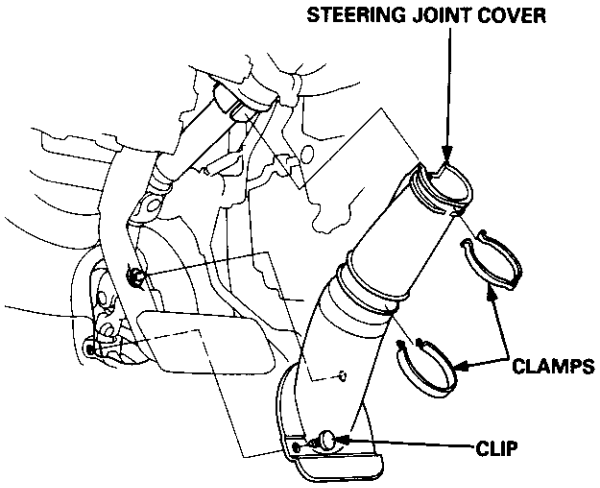

9. Reconnect the tie-rod ends to the steering knuckles, then tighten the castle nut ('96 – '97 models) or nut ('98 – '00 models) to the specified torque, and install new cotter pins.

   NOTE: Before connecting the tie-rod ends, wipe off any grease contamination from the ball joint tapered section and threads.

   CAUTION: Torque the castle nut to the lower torque specification, then tighten it only far enough to align the slot with the pin hole. Do not align the nut by loosening ('96 – '97 models only).

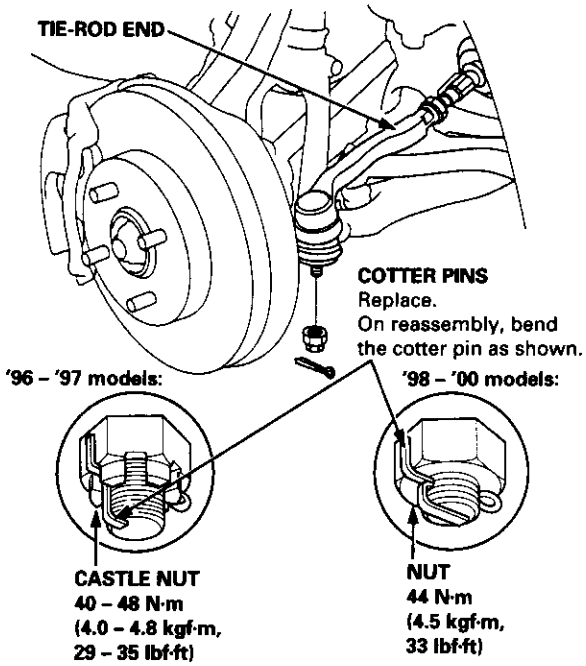

10. Install the exhaust pipe A or TWC (see section 9).

11. Connect the shift linkage (see section 13 or section 14).

12. Install the front wheels.

13. After installation, perform the following checks.

    - Adjust the front toe (see section 18).
    - Check the steering wheel spoke angle. Adjust by turning the right and left tie-rods, if necessary.

    NOTE: Turn the right and left tie-rods equally.

Index

Power Steering:

NOTE:
- If an intact airbag assembly has been removed from a scrapped vehicle or has been found defective or damaged during transit, storage or service, it should be deployed (see section 24).
- Before removing the gearbox, remove the driver's airbag assembly and steering wheel.
- After installing the gearbox, check the wheel alignment and adjust if necessary.

SRS components are located in this area. Review the SRS component locations, precautions, and procedures in the SRS section (24) before performing repairs or service.

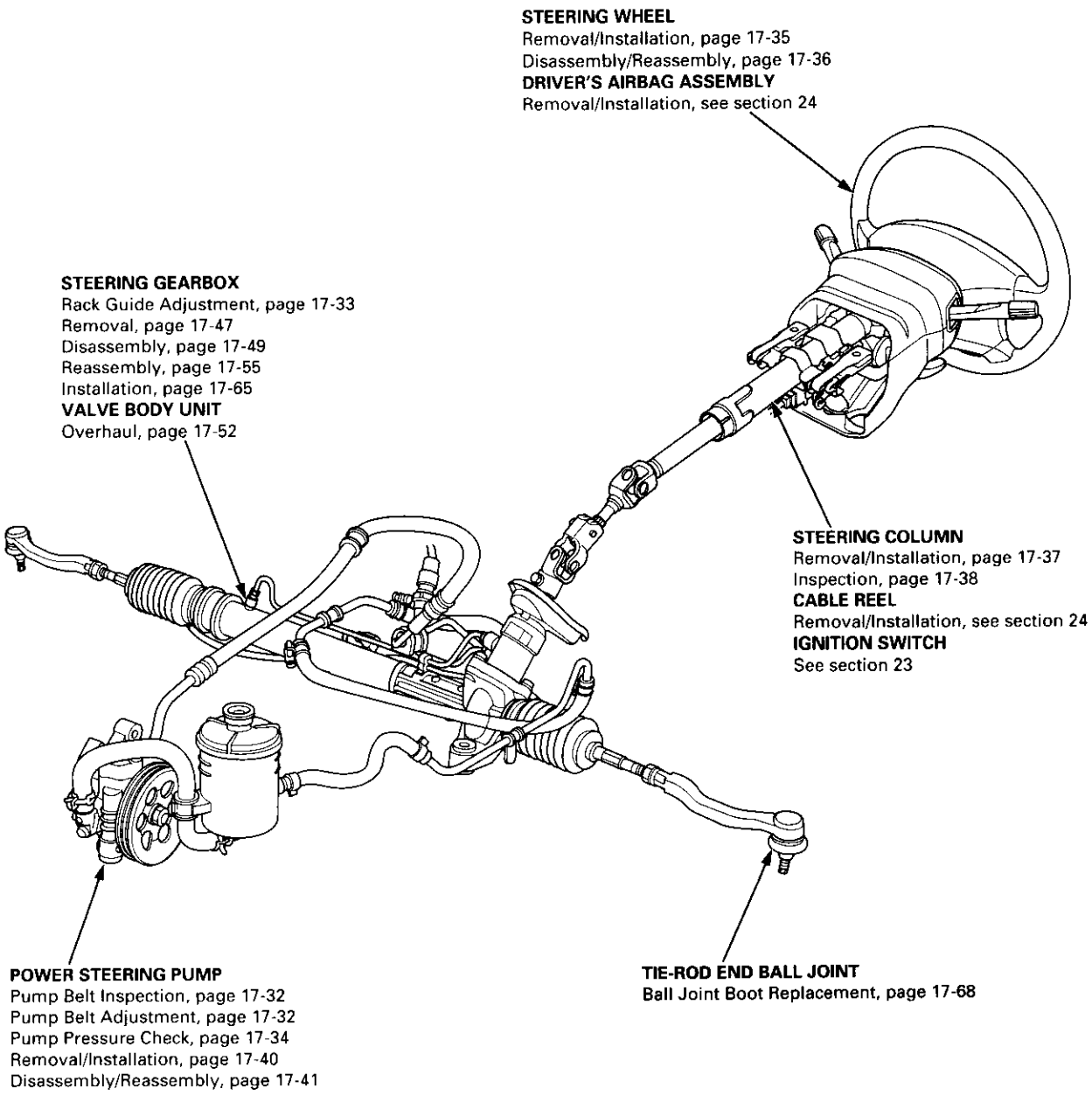

Fluid Flow Diagram

The system is a compact rotary-valve-type power steering, connected to the steering gearbox. The fluid pressure is provided by a vane-type pump which is driven by the engine crank pulley. The amount of fluid and pressure is regulated by the flow control valve built into the pump. The fluid pressure from the pump is delivered to the valve body unit around the pinion of the steering gearbox. The valve inside the valve body unit controls the hydraulic pressure and changes the direction of the flow. The fluid then flows to the power cylinder, where rack thrust is generated. Fluid returning from the power cylinder flows back to the reservoir, where the fluid is "filtered" and supplied to the pump again.

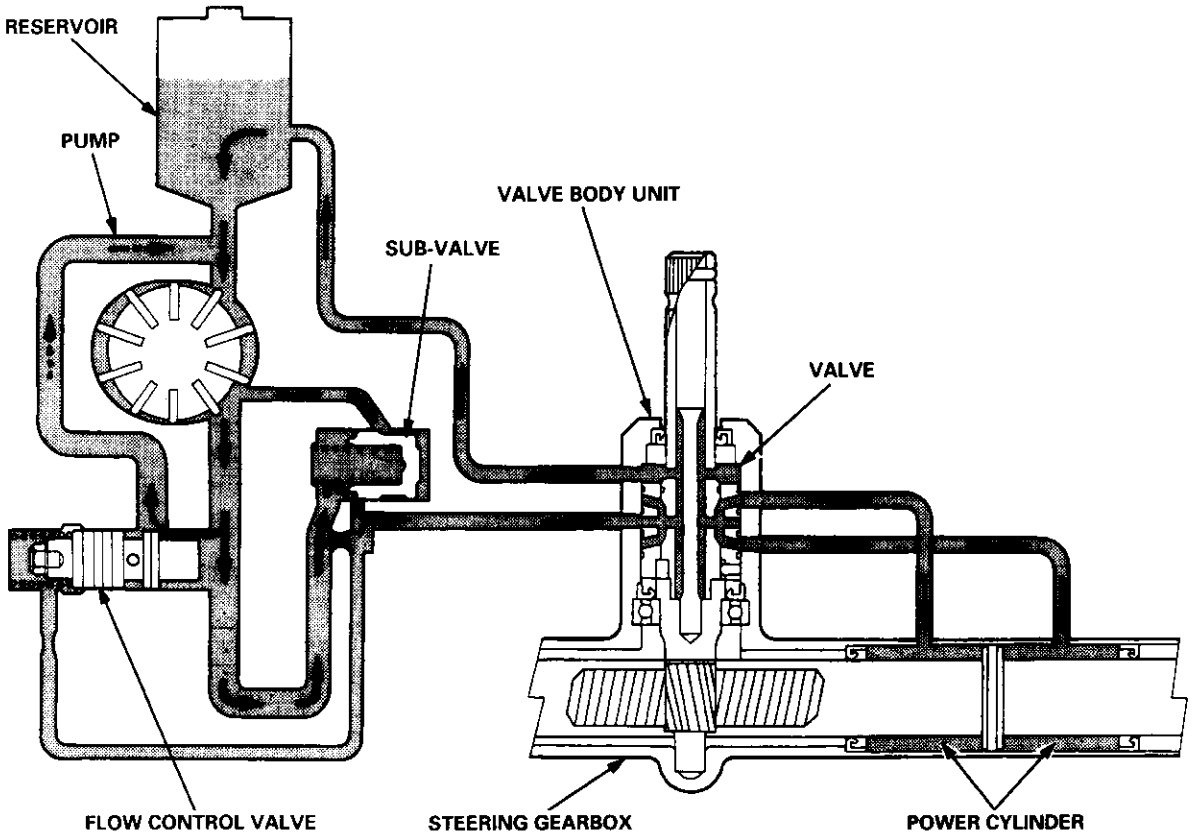

Steering Pump

Construction

The pump is a vane-type incorporating a flow control valve (with an integrated relief valve) and is driven by a POLY-V-belt from the crank pulley. The pump features 10 vanes. Each vane performs two intake/discharge operations for every rotation of the rotor. This means that the hydraulic fluid pressure pulse becomes extremely small during discharge.

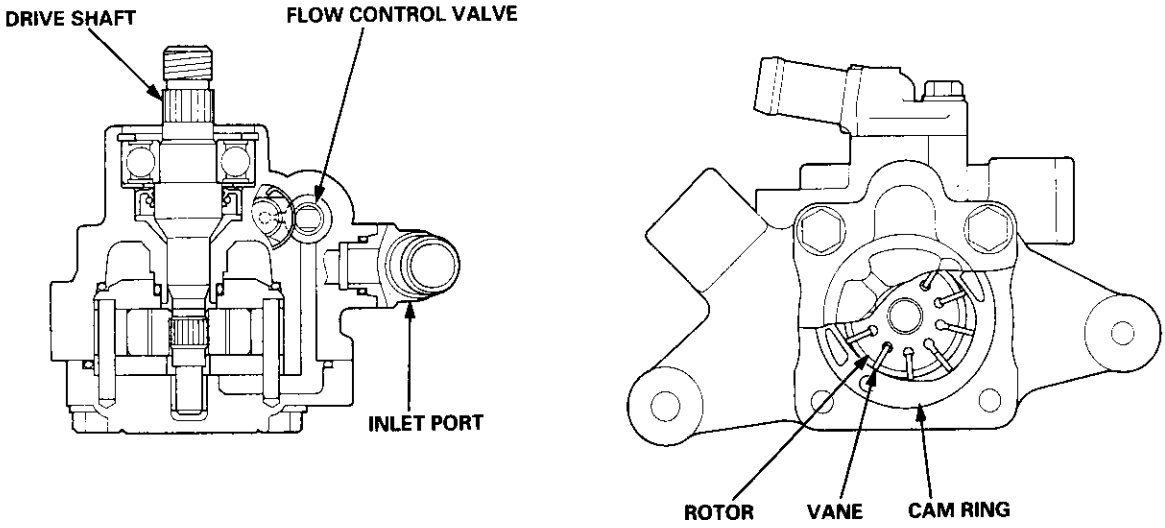

Operation

The belt-driven pulley rotates the rotor through the drive shaft. As the rotor rotates, the hydraulic pressure is applied to the vane chamber of the rotor and the vanes will rotate while being pushed onto the inner circumference of the cam ring. The inner circumference of the cam ring has an extended portion with respect to the center of the shaft, so the vanes move downward in the axial direction as the rotor rotates. As a result of this roller movement, the internal volume of the vane chamber will change, resulting in fluid intake and discharge.

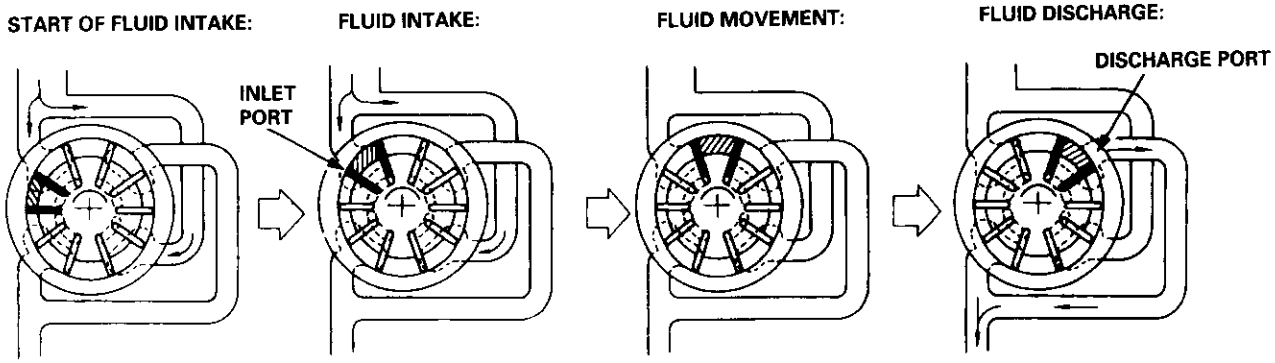

The vanes are pushed onto the inner circumference of the cam ring.

The volume of the vane chamber increases so that fluid is sucked in.

The sucked-in fluid moves toward the discharge port.

As the vanes return to the their original position on the inner side, the volume of the vane chamber decreases so the fluid is discharged from the discharge port.

(cont'd)

Steering Pump (cont'd)

The flow control valve and sub-valve in the pump performs the following steps ① through ④ to control the flow of fluid, that is to increase the discharge volume when engine speed is low, and to decrease it when the engine speed increases. The assistance thrust of the steering gearbox changes in compliance with the change in the discharge volume.

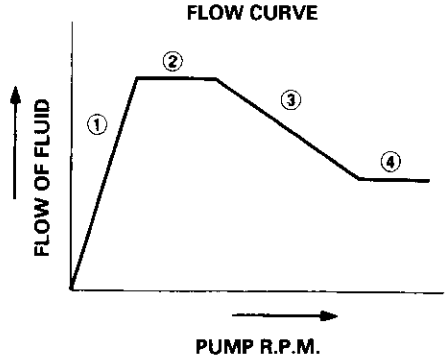

① When the engine starts, fluid discharged from the discharge port starts to flow through oil passage A, the fixed orifice and the variable orifice to the steering gearbox. When the engine speed is extremely low, the return port is closed by the flow control valve.
Fluid pressure discharged from the discharge port is applied to the top of the sub-valve, and the fluid pressure that passed through oil passage A is applied to the bottom of the sub-valve. When this happens, the pressure difference between the ends of oil passage A, which is caused by the resistance oil passage A when the fluid flows through the passage, is applied to the sub-valve. However, the pressure difference applied to the sub-valve, that is the force that pushes the sub-valve down, is too small to overcome the spring force, and the variable orifice is fully open when the engine speed is extremely low.

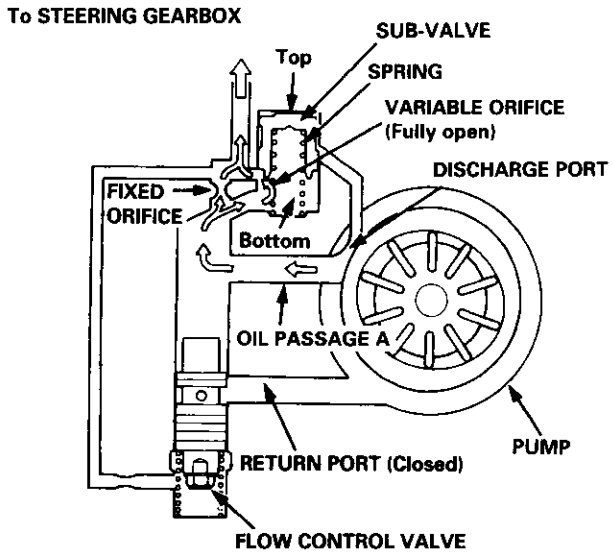

② Because the fluid volume flowing through the fixed orifice and variable orifice increases, a pressure difference is created between the ends of these orifices, and it increases in proportion to the engine speed. As the fluid pressure that passed the fixed orifice and variable orifice is directed to the bottom of the flow control valve, a pressure difference is created between the top and bottom of the valve, which pushes down the flow control valve and opens the return port. As a result, part of the fluid discharged from the discharge port returns to the pump suction port, keeping the discharge volume constant.
In this condition, the sub-valve does not move, and the variable orifice stays fully open.

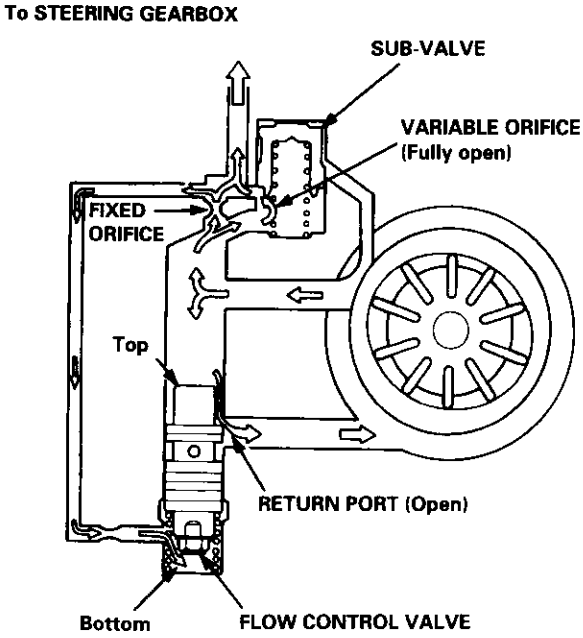

③ The fluid volume that flows thorough oil passage A and the pressure difference applied to the sub-valve increase in proportion to the engine speed. The sub-valve lowers overcoming the spring force, and it starts to close the variable orifice to regulate the discharge volume. When this happens, the fluid volume flowing to the steering gearbox decreases as the engine speed increases. At the same time, the flow control valve continues to control the fluid volume to the return port.

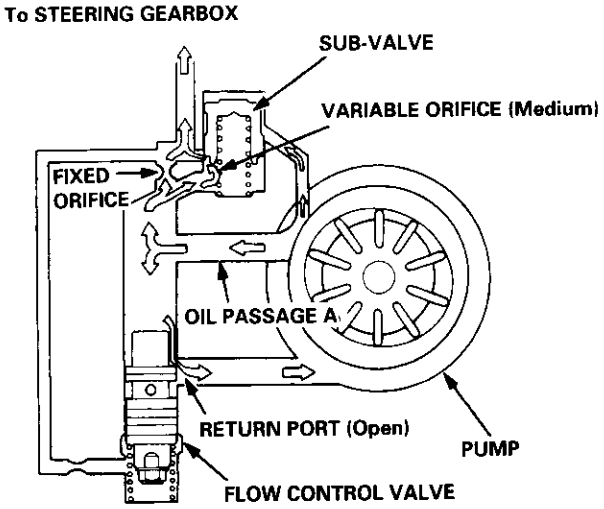

④ As the engine speed increases further, the pressure difference at the sub-valve increases further as well. The sub-valve then closes the variable orifice completely, regulating the discharge volume further. When this happens, the fluid volume discharged from the pump to the steering gearbox is regulated and maintained at a given level until the engine speed reaches the high speed range. The flow control valve functions continues to control the fluid volume to the return port.

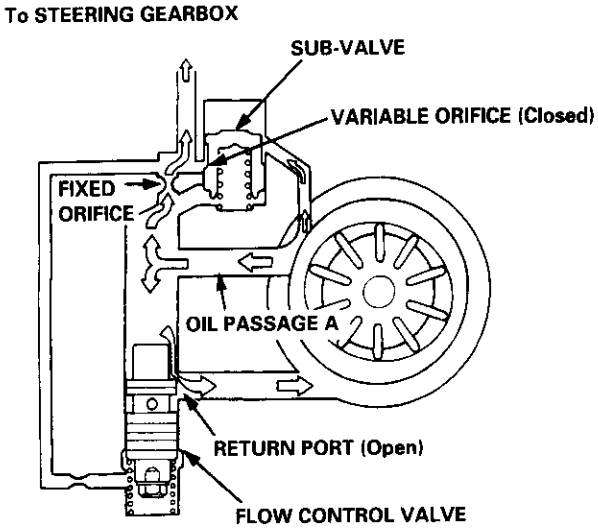

Pressure Relief

Pressure at the discharge side of the fixed orifice is directed to the bottom of the flow control valve. When the pressure builds up, the relief valve in the flow control valve opens to release the pressure at the bottom of the valve. This allows the flow control valve to be pushed back by the pressure difference, and the fluid volume to the pump return port increases.
As explained above, the system keeps the pump discharge pressure (relief pressure) from exceeding the given level by controlling the volume of the fluid to the pump return port.

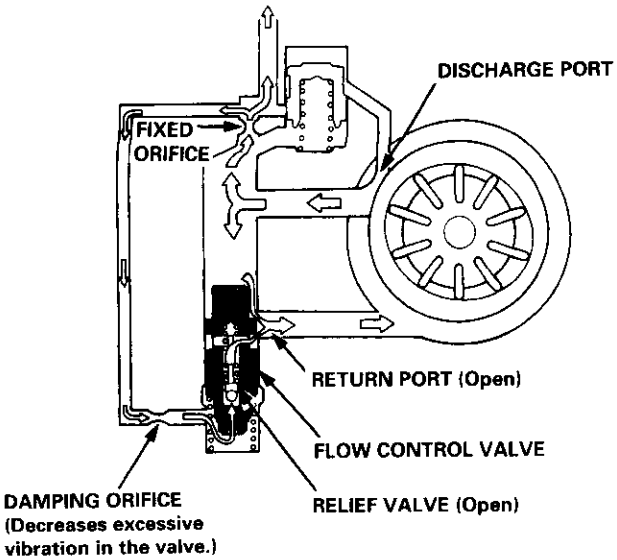

Steering Gearbox

The rack-and-pinion type steering gearbox has a valve body unit incorporated with the pinion to control the steering fluid pressure. Steering fluid from the pump is regulated by a rotary valve in the valve body unit and is sent through the cylinder line to the power cylinder, where hydraulic pressure is applied. The steering fluid in the other side of the power cylinder returns through the cylinder line and valve body unit to the reservoir.

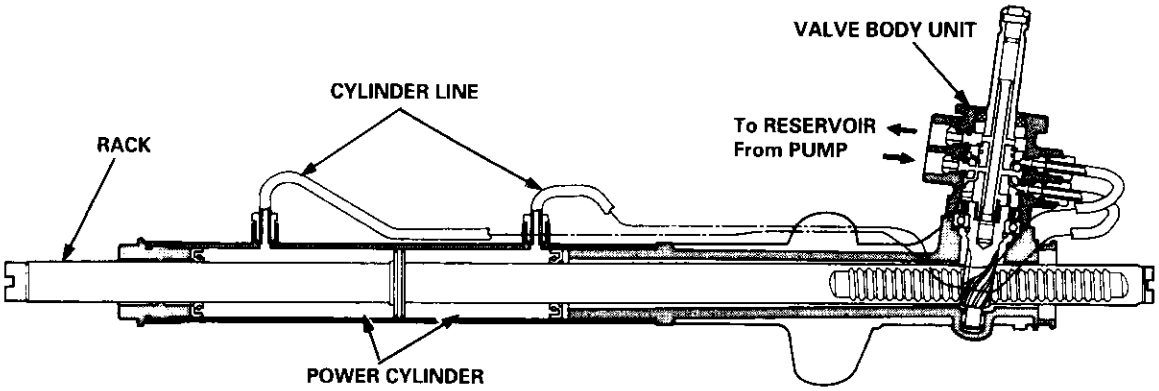

Valve Body Unit

Inside the valve body unit is the valve, which is coaxial with the pinion shaft, and controls the steering fluid pressure. The valve housing is connected with the fluid line from the pump, the return line to the reservoir, and the two cylinder lines from the respective power cylinder. The pinion shaft is double - structured with the input shaft connected to the pinion gear, both of which are interconnected with the torsion bar.
The pin inserted in the valve and the pinion shaft groove engage; this allows the pinion shaft to rotate together with the valve. Because of this construction, the difference in angle in the circumferential direction between the input shaft and the valve becomes larger according to the torsional strength of the pinion or steering resistance. However, maximum torsion between the shafts is regulated by the engaged splines of the shafts at the pin engagement section to hold the torsion bar within the set value.
This allows the steering system to function as an ordinary rack-and-pinion type steering if the steering fluid is not pressurized because of a faulty pump.

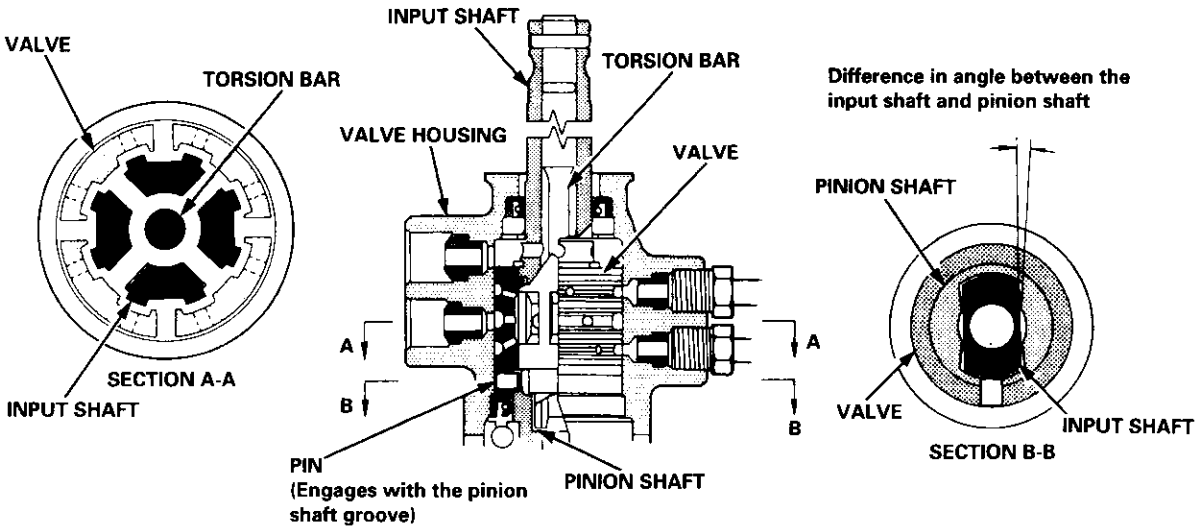

Pressure Control

Low assist at higher speeds:
When steering resistance is low, such as when driving at high speeds, or when driving straight ahead, the input shaft is near or in the neutral position, so there is little or no flow to any of the power cylinder orifices. Most of the feed pressure from the pump is bypassed to the reservoir. Because of this, the pressure stays the same in both sides of the power cylinder, resulting in low or no assist.

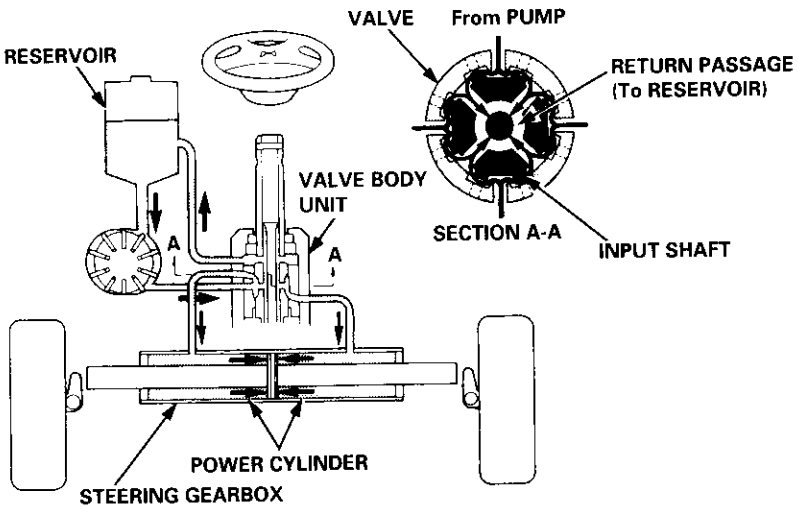

High assist at lower speeds:
When steering resistance is high, such as when driving at low speeds, or when turning the wheel with the vehicle stopped, the difference in angle created between the input shaft and the valve opens the fluid passage on one side, and closes the fluid passage on the other side, at each pair of orifices. The fluid pressure increases in the side of the power cylinder fed by the larger fluid passage. This increased pressure pushes on the rack piston, allowing the steering wheel to be turned with light effort. On the other side of the power cylinder, the return passage opens allowing the steering fluid to return through the input shaft to the reservoir. The fluid passages to the power cylinder automatically change in size, increasing as the steering resistance increases. In other words, the passages become larger and power assist increases when the steering effort would normally be high, (for example, when parking or making low speed turns), and the passages become smaller and power assist decreases when the steering effort would normally be low, (for example, when driving at high speeds or straight ahead).

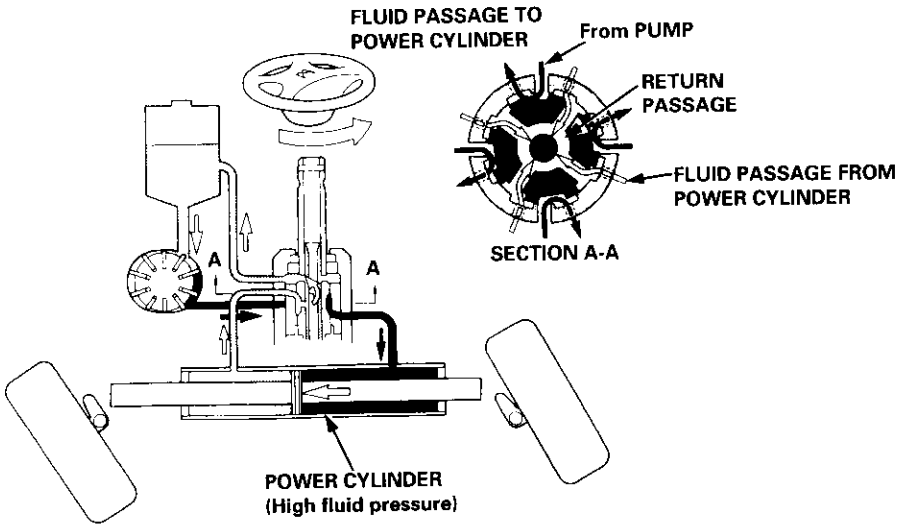

General Troubleshooting

Check the following before you begin:

- Has the suspension been modified in a way that would affect steering?
- Are tire sizes, tire variety and air pressure correct?
- Is the steering wheel original equipment or equivalent?
- Is the power steering pump belt properly adjusted?
- Is steering fluid reservoir filled to proper level?
- Is the engine idle speed correct and steady?

Hard Steering (Check the power assist, see page 17-30. If the force is over 29 N (3.0 kgf, 6.6 lbf), Precede with this troubleshooting.)

Check the pump fluid pressure (see page 17-34).
Measure steady-state fluid pressure while idling with the both valves fully open.
It should be 1,500 kPa (15 kgf/cm², 213 psi) or below.

Abnormal fluid pressure (fluid pressure is too high)

Check the feed and return circuit lines and hose between the gearbox and pump for clogging and deformation.

Normal line and hose

Faulty valve body unit

Normal

Check the pump fluid pressure (see page 17-34).
Measure pump relief pressure while idling with the pressure control valve fully closed.
It should be 6,400 – 7,400 kPa (65 – 75 kgf/cm², 920 – 1,070 psi)

Relief pressure too low

Check the flow control valve (see page 17-42).
- Check the valve for smooth movement in the housing.
- Check the relief valve for leaks.

Normal relief pressure

Go to page 17-23

Normal

Faulty pump assembly

Abnormal

Faulty flow control valve (Replace the pump as an assembly)

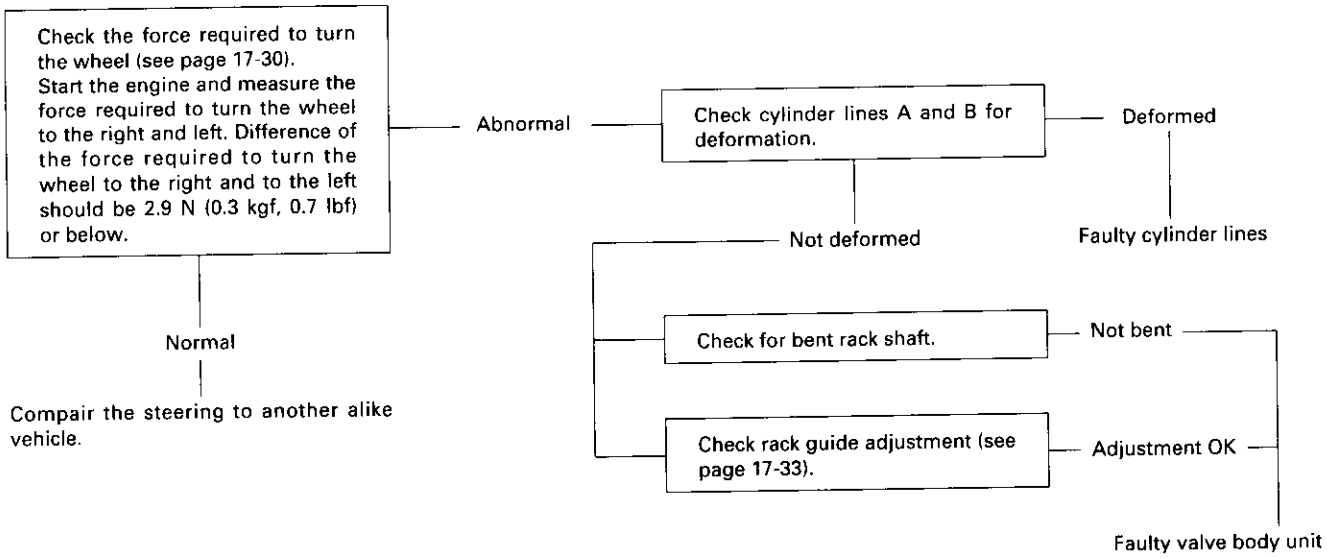
Check the force required to turn the wheel (see page 17-30).
Start the engine and measure the force required to turn the wheel to the right and left. Difference of the force required to turn the wheel to the right and to the left should be 2.9 N (0.3 kgf, 0.7 lbf) or below.
Abnormal
Check cylinder lines A and B for deformation.
Deformed
Faulty cylinder lines
Not deformed
Check for bent rack shaft.
Not bent
Check rack guide adjustment (see page 17-33).
Adjustment OK
Faulty valve body unit
Normal
Compair the steering to another alike vehicle.

(cont'd)

General Troubleshooting (cont'd)

Assist (excessively light steering) at high speed.

- Check the rack guide for proper adjustment (see page 17-33).
  - If the problem is not corrected by adjusting the rack guide, adjust the front wheel alignment (see section 18).

Shock or vibration when wheel is turned to full lock.

- Check the rack guide for proper adjustment (see page 17-33).
  - Rack guide was backed off excessively.
    - Adjust the rack guide.
      - If the problem is not corrected by adjusting the rack guide, replace the gearbox.
  - Rack guide is adjusted properly.
    - Check the belt for slippage and adjust as necessary (see page 17-32).

Steering wheel will not return smoothly.

- Check cylinder lines A and B for deformation.
  - A or B cylinder line is deformed; replace it.
  - A and B cylinder lines are normal, check wheel alignment (see section 18).
    - Wheel alignment is abnormal, adjust as needed.
    - Wheel alignment is normal. Check the steering wheel operation and power assist check (see page 17-30).
      - If the measurements are out of specifications, adjust the rack guide.
        - If the problem is not corrected by adjusting the rack guide, replace the gearbox.

Uneven or rough steering.	Improperly adjusted rack guide.	Adjust the rack guide (see page 17-33).
		If the problem is not corrected by adjusting the rack guide, replace the gearbox.
	Belt slipping on pulley.	Adjust the belt tension. Replace the belt, if necessary (see page 17-32).
	Idle speed low or erratic.	If the engine stalls when the wheel is turned while car is stopped or moving at low speed, adjust the idle speed (see section 11).
	Air in reservoir, or check power steering fluid level.	Check power steering fluid level. If the level is excessively low, check for leaks in the system. Add fluid to the specified level.
		If fluid level is OK, check O-rings and seals on both ends of the pump inlet hose, and the P/S pump housing mating surfaces and the pump shaft oil seal for suction leaks. Replace parts as necessary.

Steering wheel kicks back during wide turns.	Pump belt slipping on pulley (pump stops momentarily).	Adjust the belt tension (see page 17-32) or replace belt.
	Install the power steering pressure gauge. Close the pressure control valve fully and measure the pump pressure (see page 17-34).	Check if pump pressure is normal and the gauge needle travel is 500 kPa (5 kgf/cm^2, 71 psi) or less. Check the flow control valve if the needle travel exceeds 500 kPa (5 kgf/cm^2, 71 psi). If the flow control valve is normal, replace the pump as an assembly.

Noise and Vibration

NOTE: Pump noise in first 2 – 3 minutes after starting in cold weather is normal.

Humming	Humming due to pulsation of fluid is normal, particularly when the wheel is turned with the vehicle stopped.	
	If equipped with automatic transmission, the hum could be the torque converter or pump noise.	Confirm by temporarily removing the pump belt.
	High-pressure line touching the frame.	Reposition the line.
Rattle or chattering	Loose steering shaft connector, tie-rod, or ball joint.	Check and tighten, or replace parts as necessary.
	Column shaft wobbling.	Replace the column assembly.
	Check the rack guide for proper adjustment (see page 17-33).	Adjust, if necessary.
	Rattling sound and feeling when turning the steering wheel right and left with the engine OFF is normal.	
Hissing	Pump noise, though not loud, from the valve body unit can be heard when turning the steering wheel right or left. This is normal.	

CAUTION: When inspecting, do not hold the steering wheel all the way to the right or the left.

- Pump noise
  - Grating noise from pump
    - Cavitation caused by air bubbles in the fluid.
      - Check the fluid level. If low, fill the reservoir to the proper level, and check for leaks. Tighten or replace as necessary.
      - Check for a crushed suction hose or a loose hose clamp allowing air into the suction side of the system. Tighten or replace as necessary.
      - Check the pump seal.
  - Pump gear noise
    - NOTE: Pump noise up to 2 – 3 minutes after starting in cold weather is normal. Compare pump noise at operating temperature to simular vehicle.
      - If pump noise is abnormally loud, remove and inspect the pump for wear and damage (see page 17-41).
  - Squeaking
    - Belt slipping.
      - Tighten or replace the belt.
  - Rattle or chattering
    - Loose pump pulley.
      - Tighten or replace the pulley. If shaft is loose, replace the pump.

Fluid Leaks

- Check the gearbox assembly for oil leaks carefully. Oil can leak out of various points, depending on location of the faulty oil seals/seal rings. Check the following before removing the gearbox from the frame.

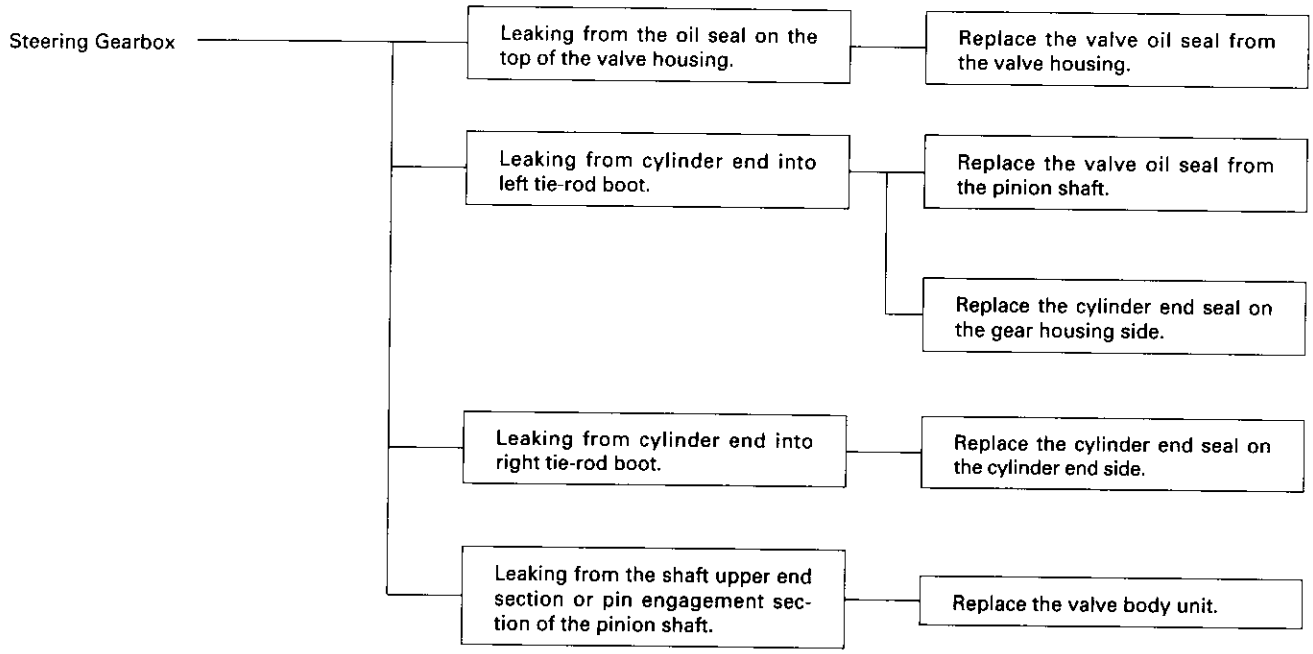

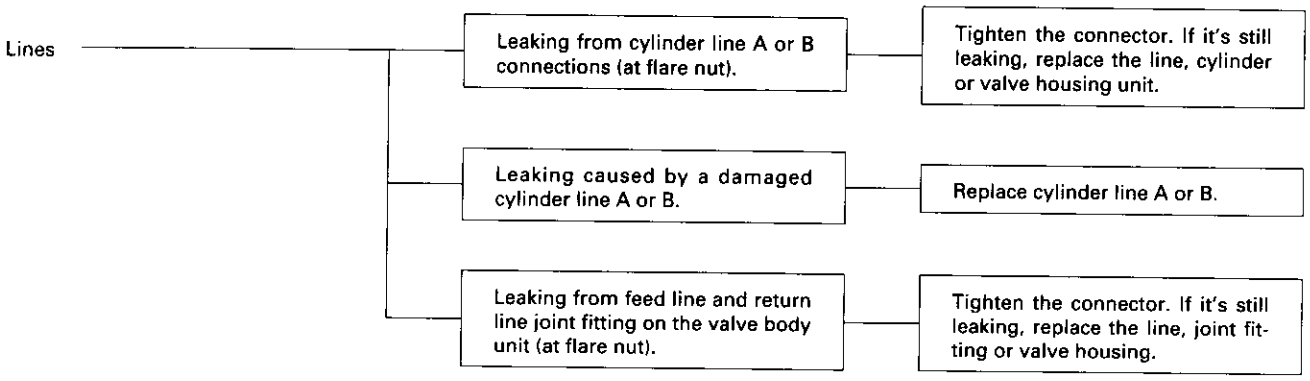

Pump	Front seal leaking.	Replace front seal.
	Pump housing leaks at either end.	Replace the housing O-rings. If the housing still leaks, replace the pump.
Reservoir	Leaking from around cap.	Reservoir is overfilled. Pull off the hose and drain the reservoir to the proper level.
		Air leak in suction side of the system (reservoir, inlet hose, front pump seal).
Pump outlet line (high-pressure)	Leaking at the threaded fitting.	Tighten the fitting. If it's still leaking, replace the O-ring or feed line.
	Leaking at the swagged joint.	Replace the feed line.
Pump inlet line (low-pressure)	Leaking because of damage, deterioration, or improper assembly.	Replace or repair as necessary.

Steering Operation

Place the front wheels in the straight ahead position, and measure the distance the steering wheel can be turned without moving the front wheels.

ROTATIONAL PLAY: 0 – 10 mm (0 – 0.39 in)

If the play exceeds the service limit, perform rack guide adjustment (see page 17-33).
If the play is still excessive after rack guide adjustment, inspect the steering linkage and gearbox as described on the next page.

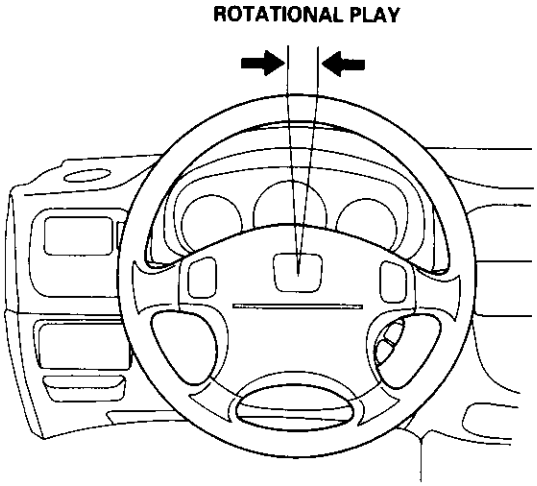

Power Assist Check with Vehicle Parked

1. Check the power steering fluid level (see page 17-33) and pump belt tension (see page 17-32).

2. Start the engine, allow it to idle, and turn the steering wheel from lock-to-lock several times to warm up the fluid.

3. Attach a spring scale to the steering wheel. With the engine idling and the vehicle on a clean, dry floor, pull the scale as shown and read it as soon as the tires begin to turn.

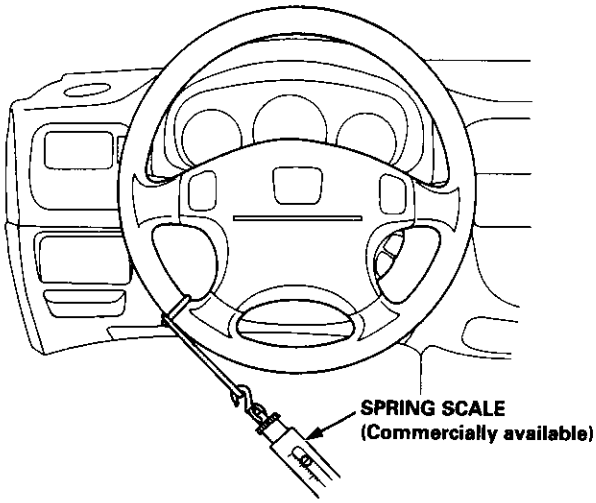

4. The scale should read no more than 29 N (3.0 kgf, 6.6 lbf). If it reads more, check the gearbox and pump.

Steering Linkage and Gearbox

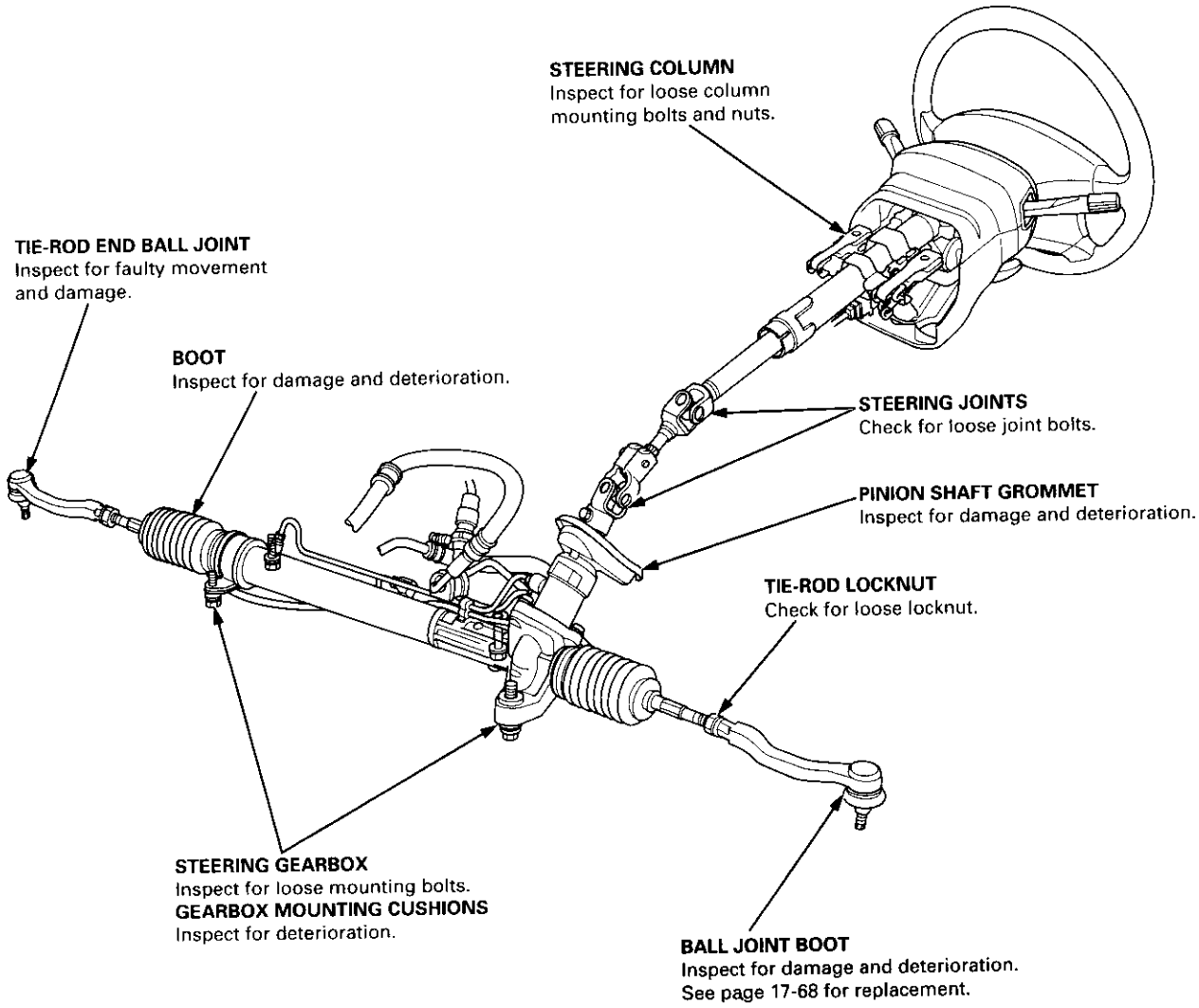

Pump Belt

NOTE: When using a new belt, first adjust the deflection or tension to the values for the new belt, then readjust the deflection or tension to the values for the used belt after running engine for five minutes.

Inspection

Attach the special tool to the belt and measure the tension of the belt.

Tension:

'99 – '00 models: B16A2 Engine Type only

Used Belt:	**390 – 540 N (40 – 55 kgf, 88 – 120 lbf)**
New Belt:	**740 – 880 N (75 – 90 kgf, 170 – 200 lbf)**

'96 – '00 models: Other Engine Types

Used Belt:	**340 – 490 N (35 – 50 kgf, 77 – 110 lbf)**
New Belt:	**640 – 780 N (65 – 80 kgf, 143 – 176 lbf)**

NOTE:

- If there are cracks or any damage evident on the belt, replace it with a new one.
- Follow the manufacturer's instructions for the tension gauge.

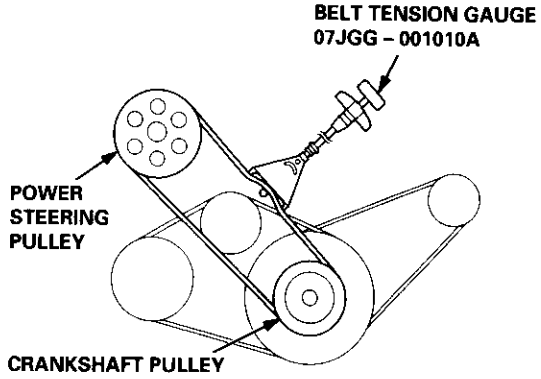

Inspect the pump belt for cracks or any damage. Replace the belt with a new one if necessary.

Measurement without Belt Tension Gauge:

Apply a force of 98 N (10 kgf, 22 lbf) and measure the deflection between the power steering pump and the crankshaft pulleys.

Deflection:

'99 – '00 models: B16A2 Engine Type only

Used Belt:	**7.5 – 11.0 mm (0.30 – 0.43 in)**
New Belt:	**5.0 – 7.0 mm (0.20 – 0.28 in)**

'96 – '00 models: Other Engine Types

Used Belt:	**10.5 – 14.0 mm (0.41 – 0.55 in)**
New Belt:	**7.5 – 10.0 mm (0.30 – 0.39 in)**

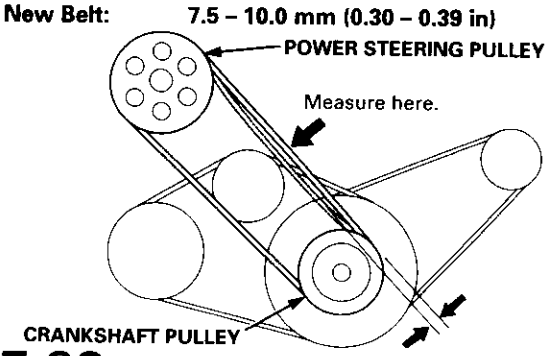

Adjustment

1. Loosen the power steering pump mounting bolts.
2. Adjust the belt tension.

'99 – '00 models: B16A2 Engine Type only

- Turn the adjusting bolt by hand to get the proper belt tension, then retighten the mounting bolts.

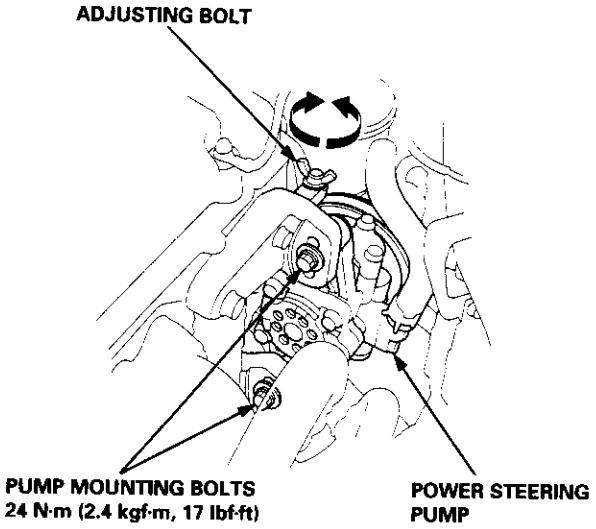

'96 – '00 models: Other Engine Types

- Pry power steering pump away from the engine with a wrench to get the proper belt tension, then retighten the mounting bolts.

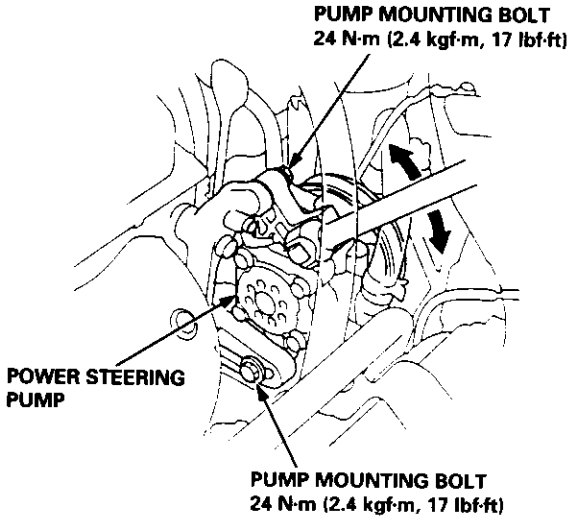

3. Start the engine and turn the steering wheel from lock-to-lock several times, then stop the engine and recheck the deflection of the belt.

Rack Guide Adjustment

NOTE: Perform rack guide adjustment with the wheels in the straight ahead position.

1. Loosen the rack guide screw locknut with the special tool.

   '96 – '97 models:
   Loosen the rack guide screw.

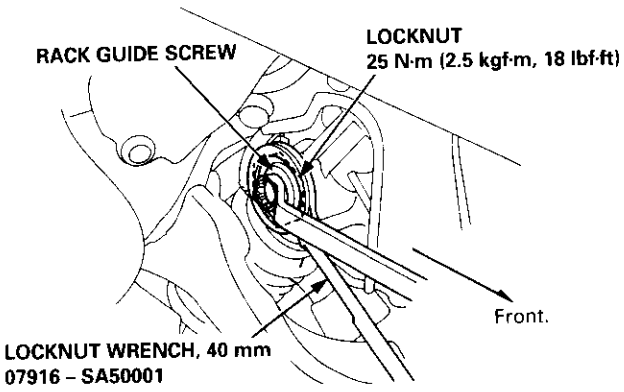

   '98 – '00 models:
   Remove the rack guide screw and remove the old sealant off of the threaded section.
   Apply new sealant all around the threads. Loosely install the rack guide screw.

2. Tighten the rack guide screw to 25 N·m (2.5 kgf·m, 18 lbf·ft), then loosen it.

3. Retighten the rack guide screw to 3.9 N·m (0.4 kgf·m, 2.9 lbf·ft), then back it off to specified angle.

   Specified Return Angle: 20° max.

4. Tighten the locknut while holding the rack guide screw.

5. Check for tight or loose steering through the complete turning travel.

6. Perform following inspections:

   - Steering operation (see page 17-30).
   - Power assist with vehicle parked.

Fluid Replacement

Check the reservoir at regular intervals, and add fluid as necessary.

CAUTION: Always use Genuine Honda Power Steering Fluid-V or S. Using any other type of power steering fluid or automatic transmission fluid can cause increased wear and poor steering in cold weather.

SYSTEM CAPACITY:
0.85 liter (0.90 US. qt, 0.75 Imp.qt)
at disassembly

RESERVOIR CAPACITY:
0.4 liter (0.42 US. qt, 0.35 Imp.qt)

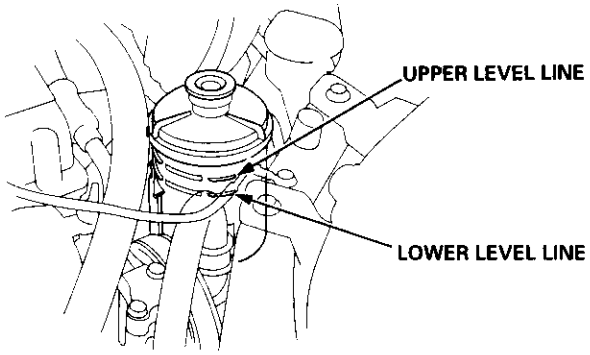

1. Raise the reservoir, then disconnect the return hose.
2. Connect a hose of suitable diameter to the disconnected return hose, and put the hose end in a suitable container.
   CAUTION: Take care not to spill the fluid on the body and parts. Wipe off any spilled fluid at once.

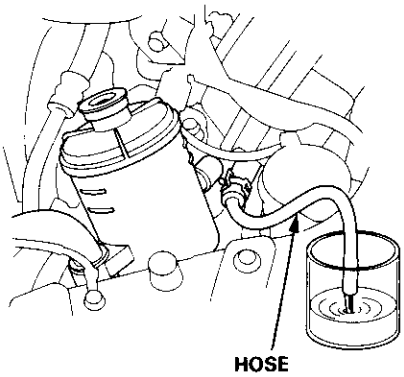

3. Start the engine, let it run at idle, and turn the steering wheel from lock-to-lock several times. When fluid stops running out of the hose, shut off the engine. Discard the fluid.
4. Reinstall the return hose on the reservoir.
5. Fill the reservoir to the upper level line.
6. Start the engine and run it at fast idle, then turn the steering from lock-to-lock several times to bleed air from the system.
7. Recheck the fluid level and add some if necessary.
   CAUTION: Do not fill the reservoir beyond the upper level line.

Pump Pressure Check

Check the fluid pressure as follows to determine whether the trouble is in the pump or gearbox.

NOTE: First check the power steering fluid level and pump belt tension.

CAUTION: Disconnect the high pressure hose with care so as not to spill the power steering fluid on the frame and other parts.

1. Disconnect the outlet line from the pump outlet fitting, then install the P/S joint adaptor (pump) on the pump outlet.
2. Connect the P/S joint adaptor (hose) to the power steering pressure gauge, then connect the outlet hose to the adaptor.
3. Install the power steering pressure gauge to the P/S joint adaptor (pump) as shown.

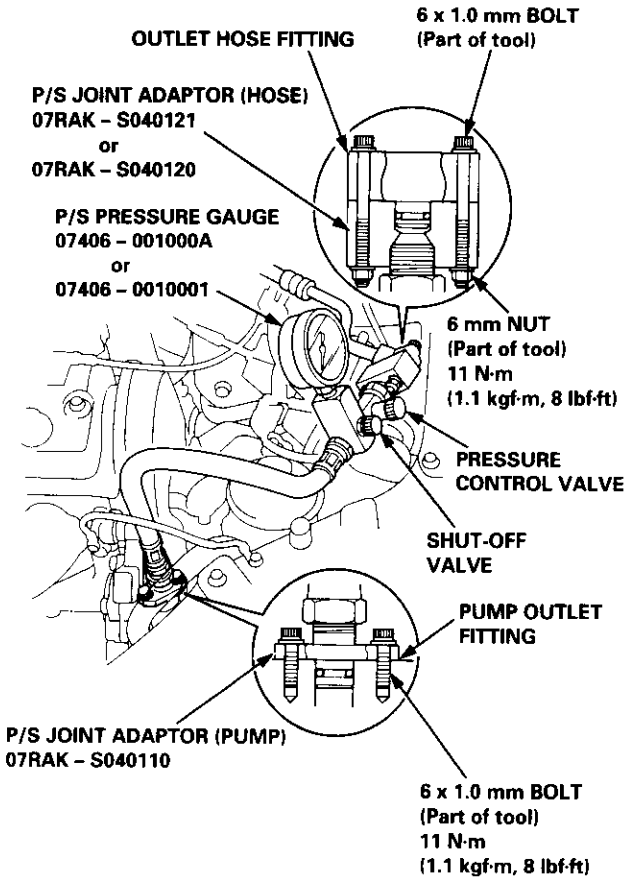

4. Open the shut-off valve fully.
5. Open the pressure control valve fully.
6. Start the engine and let it idle.
7. Turn the steering wheel from lock-to-lock several times to warm the fluid to operating temperature.
8. Measure steady-state fluid pressure while idling. If the pump is in good condition, the gauge should read less than 1500 kPa (15 kgf/cm², 213 psi).
   If it reads high, check the outlet line or valve body unit (see General Troubleshooting 17-22).
9. Close the pressure control valve, then close the shut-off valve gradually until the pressure gauge needle is stable. Read the pressure.
10. Immediately open the pressure control valve fully.

    CAUTION: Do not keep the pressure control valve closed more then 5 seconds or the pump could be damaged by over-heating.

    If the pump is in good condition, the gauge should read at least 6,400 – 7,400 kPa (65 – 75 kgf/cm², 920 – 1,070 psi). A low reading means pump output is too low for full assist. Repair or replace the pump.

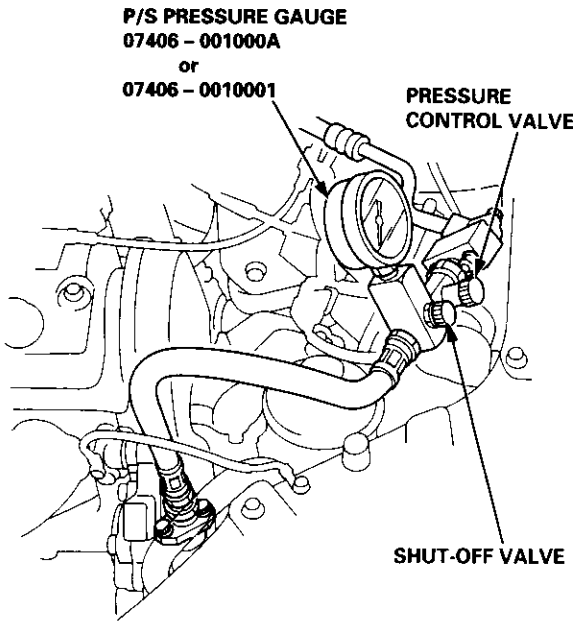

Removal

SRS components are located in this area. Review the SRS component locations, precautions, and procedures in the SRS section (24) before performing repairs or service.

NOTE: Before removing the steering wheel, align the front wheels straight ahead.

1. Remove the driver's airbag assembly from the steering wheel (see section 24).

2. Disconnect the horn connector and cruise control switches connector.

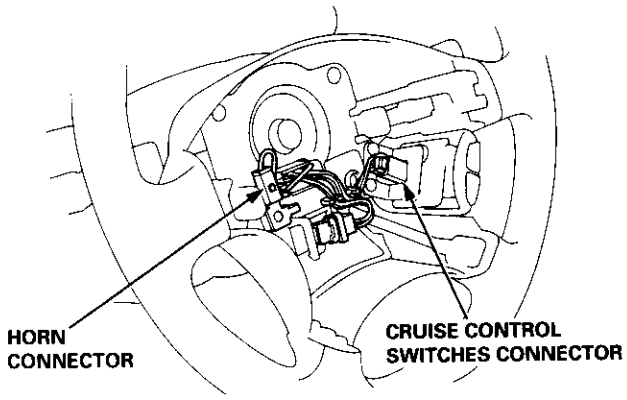

3. Remove the steering wheel nut.

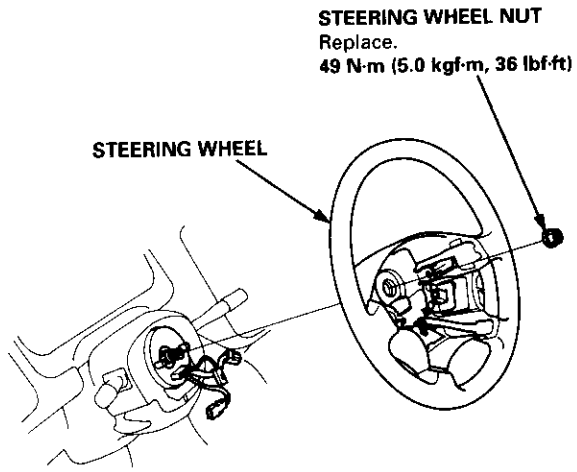

4. Remove the steering wheel by rocking it slightly from side-to-side as you pull steadily with both hands.

Installation

CAUTION: Do not tap on the steering wheel or steering column shaft when installing the steering wheel.

NOTE: Before installing the steering wheel, align the front wheels straight ahead.

1. Before installing the steering wheel, center the cable reel. Do this by first rotating the cable reel clockwise until it stops. Then rotate it counterclockwise approximately two turns. The arrow mark on the cable reel label should points straight up.

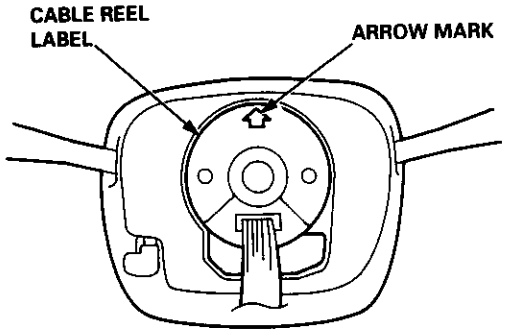

2. Install the steering wheel with the steering wheel nut.

   NOTE: Be sure the steering wheel shaft engages the cable reel and canceling sleeve.

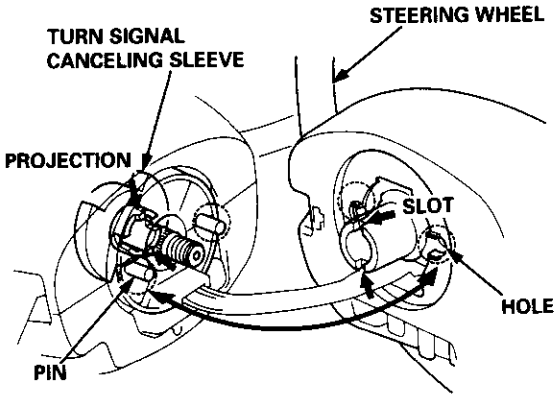

3. Attach the cruise control switches connector to the steering wheel clip.

4. Connect the horn connector.

5. Install the driver's airbag assembly, and confirm proper system operation (see section 24).

6. Check the horn and cruise control switches for proper operations.

Disassembly/Reassembly

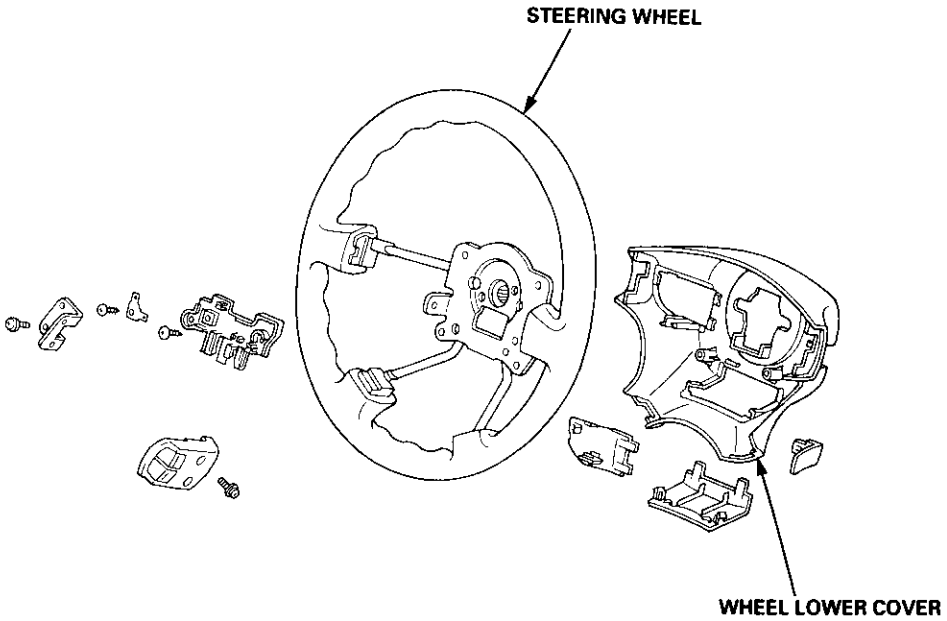

Removal/Installation

SRS components are located in this area. Review the SRS component locations, precautions, and procedures in the SRS section (24) before performing repairs or service.

NOTE: Before removing the steering column for SRS, remove the driver's airbag assembly and cable reel (see section 24).

1. Remove the steering wheel (see page 17-35).
2. Remove the driver's dashboard lower cover and driver's knee bolster (see section 20).
3. Remove the combination switch assembly from the steering column shaft by disconnecting the connectors.
4. Disconnect the ignition switch connectors.
5. Remove the steering joint cover.
6. Remove the steering joint bolts.
7. Disconnect the steering joint by moving the joint toward the column, and remove it from the column shaft.
8. Remove the steering column by removing the attaching nuts and bolt.
9. Installation is the reverse of the removal procedure.

NOTE:

- Make sure the steering joint is connected as follows:
  a. Insert the upper end of the steering joint onto the steering shaft (line up the bolt hole with the flat on the shaft), and loosely install the upper joint bolt.
  b. Slip the lower end of the steering joint onto the pinion shaft (line up the bolt hole with the groove around the shaft), and loosely install the lower joint bolt.
     Be sure that the lower joint bolt is securely in the groove in the pinion shaft.
  c. Pull on the steering joint to make sure that the steering joint is fully seated. Then tighten the joint bolts.
- Be sure the wires are not caught or pinched by any parts when installing the column.
- Make sure the wire harness is routed and fastened properly.
- Make sure the connectors are properly connected.

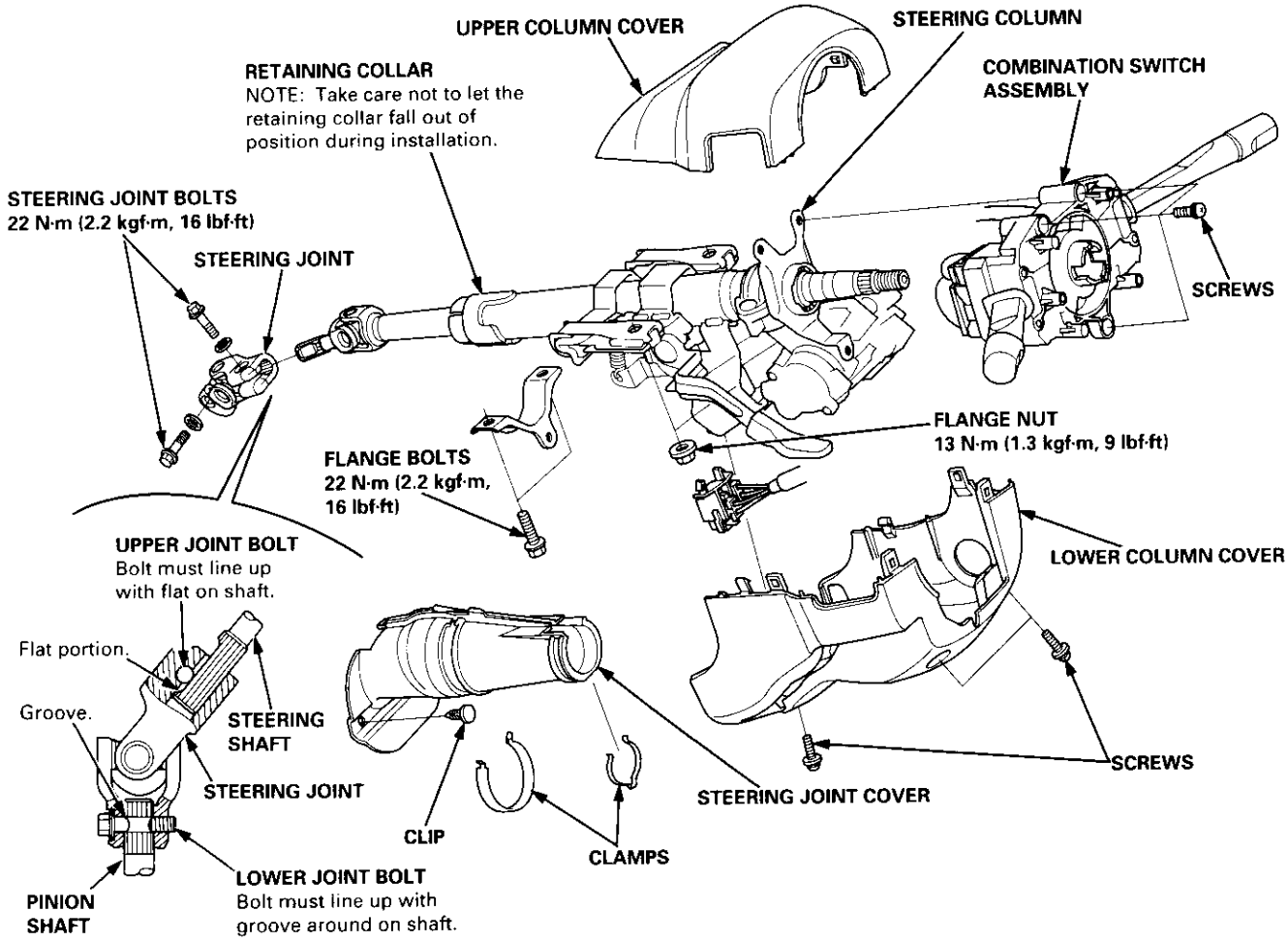

Inspection

NOTE: The tilt steering column type is shown; the conventional steering column is similar except for the tilt mechanism.

- Check the steering column ball bearing and the steering joint bearings for play and proper movement. If there is noise or if there is excessive play, replace the steering column as an assembly.
- Check the retaining collar for damage. If it is damaged, replace the retaining collar.
- Check the absorbing plates, absorbing plate guides and sliding capsules for distortion or breakage. Replace the steering column as an assembly if they are distorted or broken.

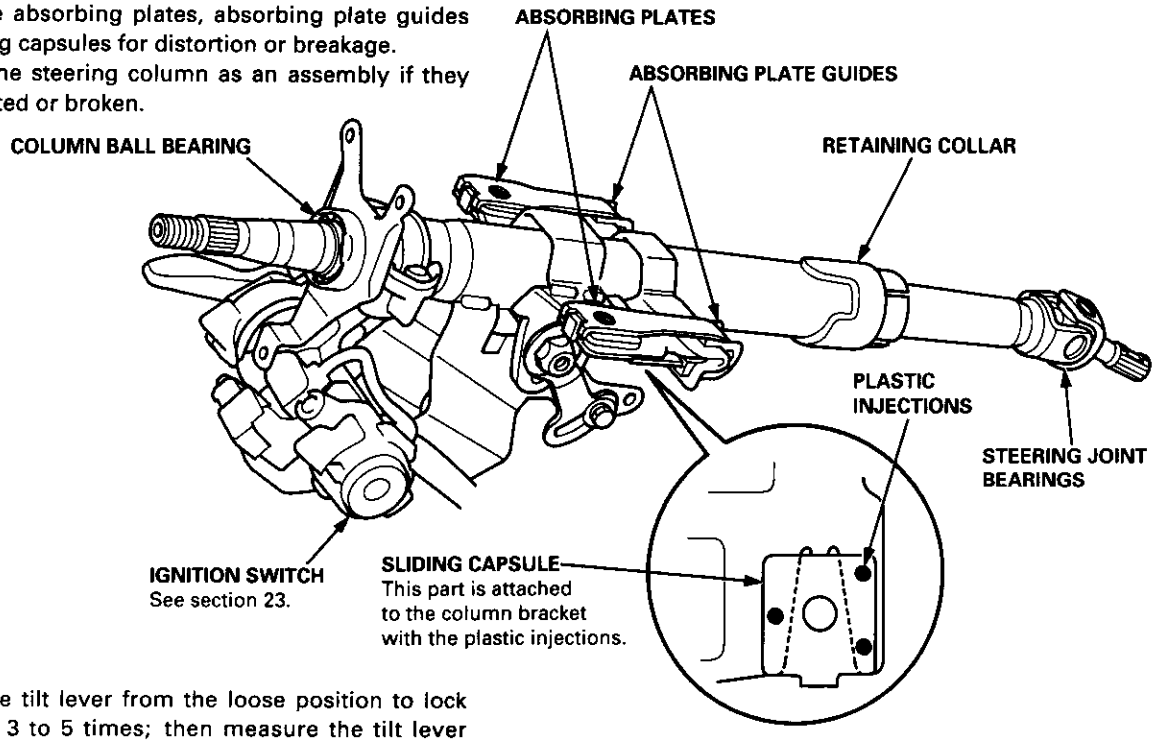

1. Move the tilt lever from the loose position to lock position 3 to 5 times; then measure the tilt lever preload 10 mm (0.4 in) from the end of the tilt lever.

   Preload: 70 – 90 N (7 – 9 kgf, 15 – 20 lbf)

2. If the measurement is out of the specification, adjust the preload using the following procedures.

   a. Loosen the tilt lever, and set the steering column in the neutral position.
   b. Remove the 6 mm lock bolt and remove the stop.
   c. Adjust the preload by turning the tilt lock bolt left or right.
   d. Pull up the tilt lever to the uppermost position and install the stop. Check the preload again. If the measurement is still out of specification, repeat the above procedures "a" through "c" to adjust.

   CAUTION: Be careful not to loosen the tilt lever when installing the stop or tightening the 6 mm lock bolt.

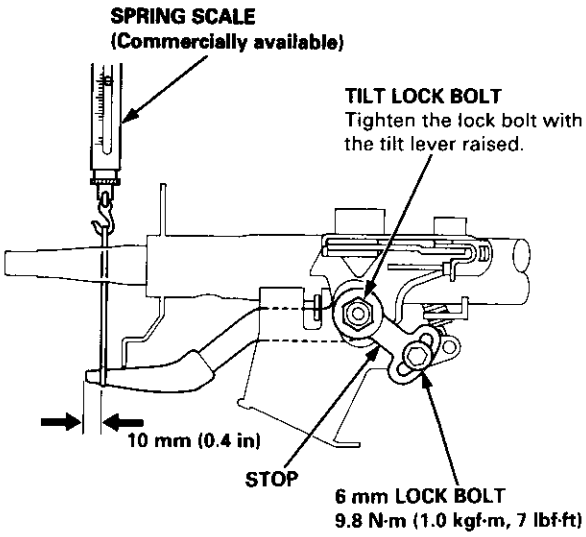

Fluid Leakage Inspection

HOSES and LINES

- Inspect hoses for damage, leaks, interference or twisting.
- Inspect fluid lines for damage, rusting and leakage.
- Inspect for leaks at hose and line joints and connections.

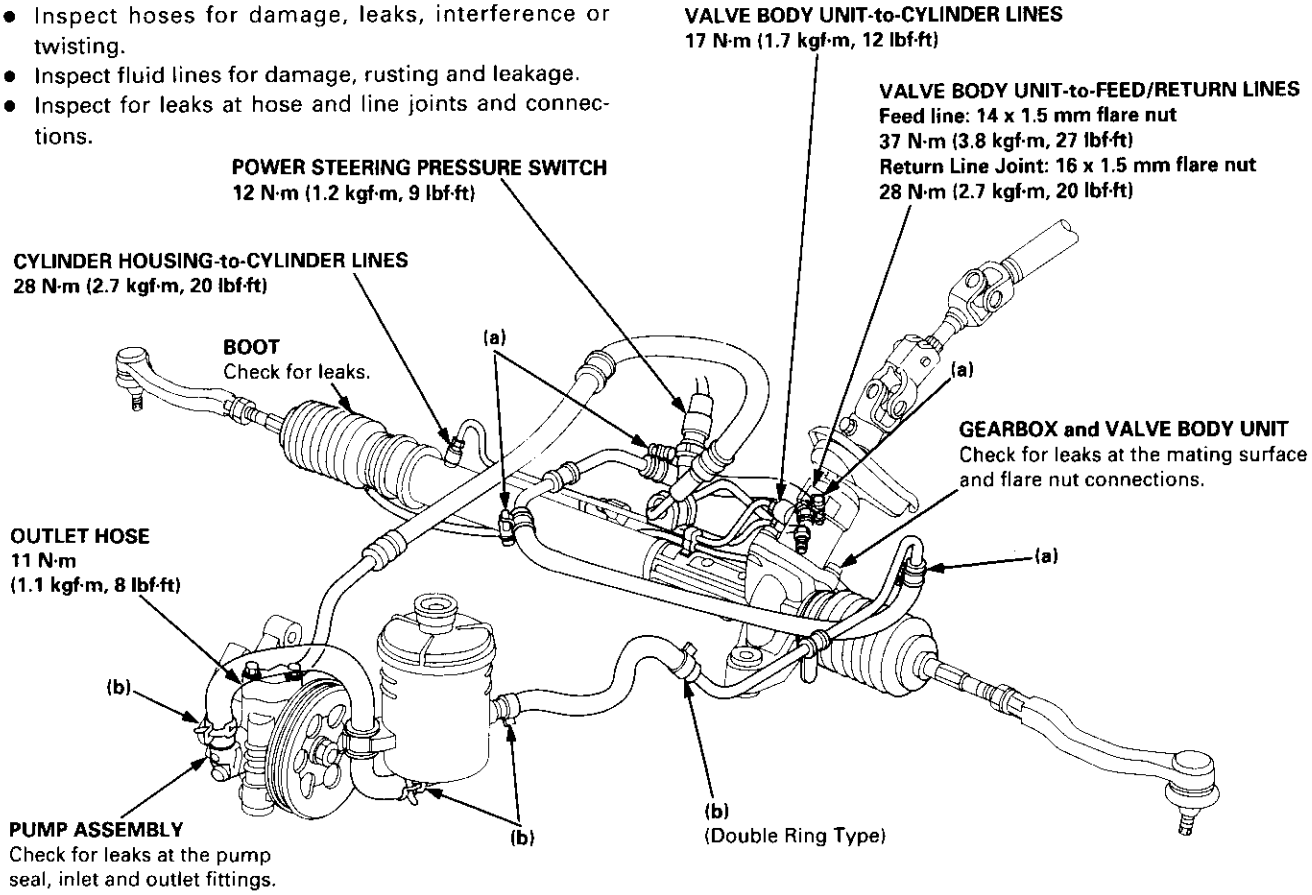

Replacement

NOTE:

- Connect each hose to the corresponding pipe securely until it contacts the stop on the line. Install the clamp or adjustable clamp at the specified distance from the hose end as shown.
- Add the power steering fluid to the specified level on the reservoir and check for leaks.

CAUTION: Check all clamps for deterioration or deformation; replace with the clamps new ones if necessary.

ADJUSTABLE HOSE CLAMP:

- Position the adjustable hose clamps at the points indicated (a) in the drawing above.
- Slide the hose over the line until it contacts the stop.

HOSE CLAMP:

- Position the hose clamps at the points indicated (b) in the drawing above.
- Slide the hose over the line until it contacts the stop.

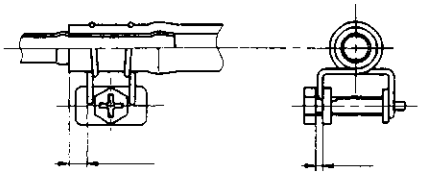

2.5 – 5.5 mm (0.01 – 0.22 in) **2.0 – 4.0 mm (0.08 – 0.16 in)**

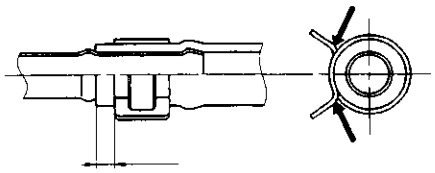

2.5 – 5.5 mm (0.01 – 0.22 in)

Removal/Installation

NOTE: Before disconnecting the hoses from the pump, place a suitable container under the vehicle.

1. Remove the belt by loosening the pump mounting bolts and adjusting bolt ('99 – '00 models: B16A2 Engine Type only).

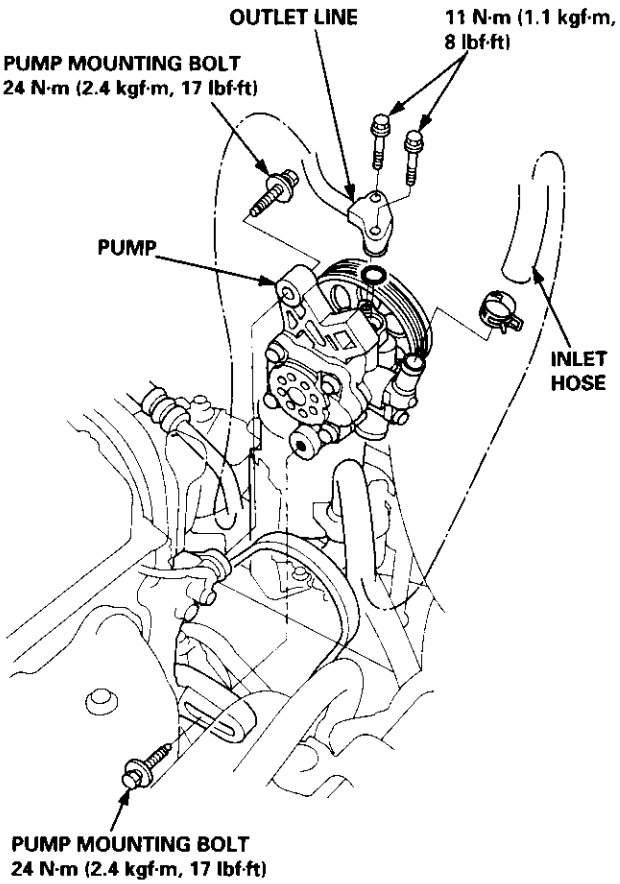

2. Cover the A/C compressor with several shop towels to protect it from spilled power steering fluid.

3. Disconnect the inlet hose and the outlet line from the pump, and plug them.

   NOTE: Take care not to spill the fluid on the body or parts. Wipe off any spilled fluid at once.

4. Remove the pump mounting bolts and adjusting bolt ('99 – '00 models: B16A2 Engine Type only), then remove the pump.

   NOTE:
   - Do not turn the steering wheel with the pump removed.
   - Wrap the opening of the pump with a piece of tape to prevent foreign material from entering the pump.

5. Connect the inlet hose and the outlet line. Tighten the pump fittings securely.

6. Loosely install the pump in the pump bracket with mounting bolts and adjusting bolt ('99 – '00 models: B16A2 Engine Type only).

7. Install the pump belt.

   CAUTION:
   - **Make sure that the power steering belt is properly positioned on the pulleys.**
   - **Do not get power steering fluid or grease in the power steering belt or pulley faces. Clean off any fluid or grease before installation.**

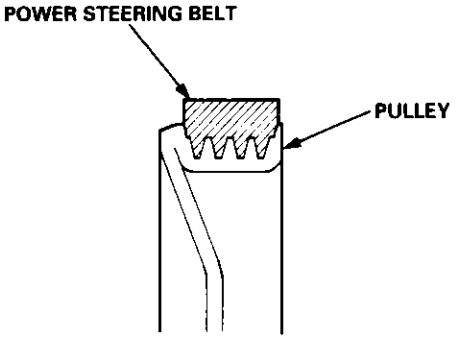

8. Adjust the pump belt (see page 17-32).

9. Fill the reservoir to the upper level line (see page 17-33).

Disassembly

CAUTION: The power steering components are made of aluminum. Avoid damaging the components during assembly.

NOTE:
- Clean the disassembled parts with a solvent, and dry them with compressed air. Do not dip the rubber parts in a solvent.
- Always replace the O-rings and rubber seals with new ones before assembly.
- Apply recommended power steering fluid to the parts indicated in the assembly procedures.
- Do not allow dust, dirt, or other foreign materials to enter the power steering system.
- Replace the pump as an assembly if the parts indicated with asterisk (*) are worn or damaged.

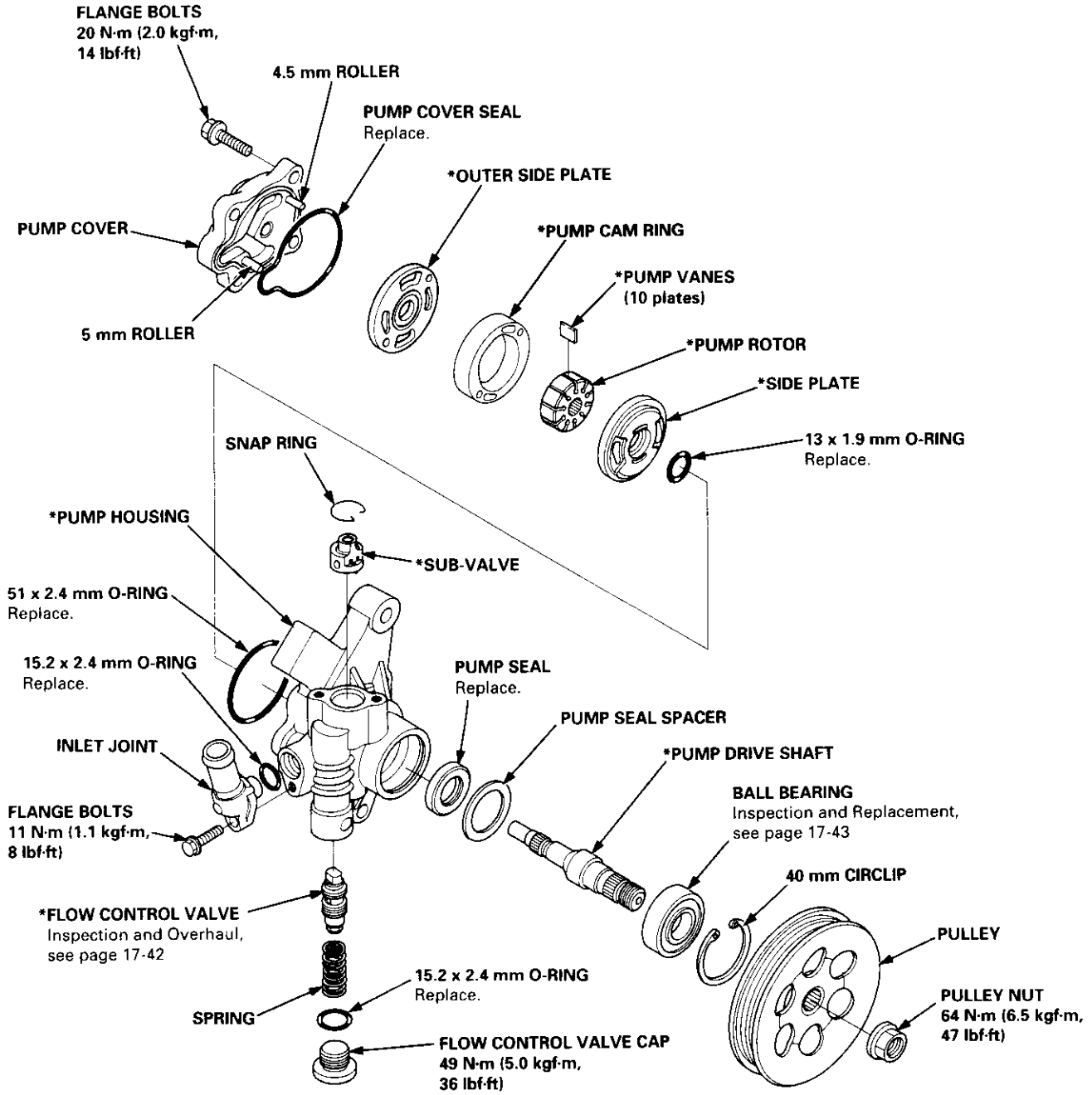

(cont'd)

Disassembly (cont'd)

1. Drain the fluid from the pump.

2. Hold the steering pump in a vise with soft jaws, hold the pulley with the special tool, and remove the pulley nut and pulley.

   CAUTION: Be careful not to damage the pump housing with the jaws of the vise and extension bar.

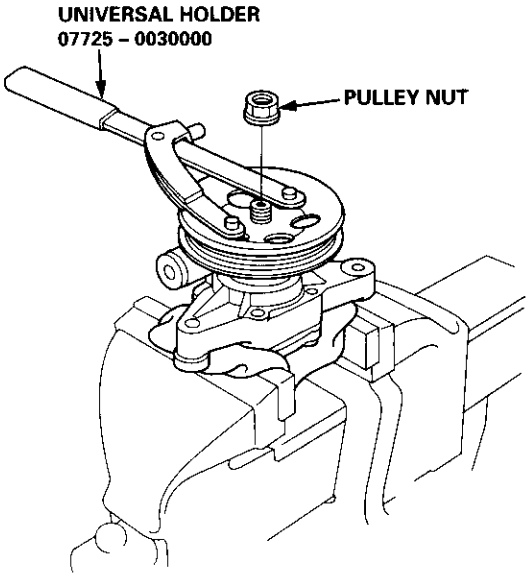

3. Loosen the flow control valve cap with a hex wrench and remove it.

4. Remove the O-ring, flow control valve and spring.

5. Remove the inlet joint and O-ring.

6. Remove the pump cover and pump cover seal.

7. Remove the outer side plate, pump cam ring, pump rotor, pump vanes, side plate and O-rings.

8. Remove the snap ring, then remove the sub-valve from the pump housing.

9. Remove the circlip, then remove the pump drive shaft by tapping the shaft end with the plastic hammer.

10. Remove the pump seal spacer and pump seal.

Inspection

Flow Control Valve:

1. Check the flow control valve for wear, burrs, and other damage to the edges of the grooves in the valve.

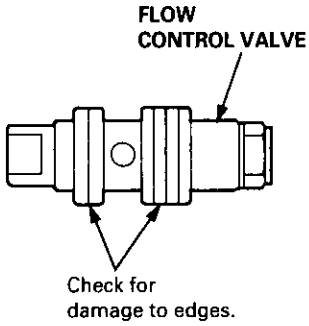

2. Inspect the bore the flow control valve for scratches or wear.

3. Slip the valve back in the pump, and check that it moves in and out smoothly.

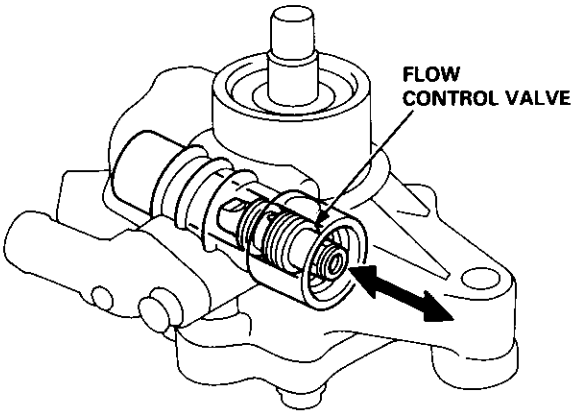

   If OK, go on step 4; if not, replace the pump as an assembly. The flow control valve is not available separately.

4. Attach a hose to the end of the valve as shown.

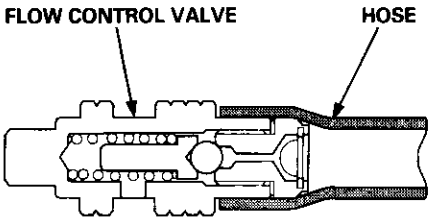

5. Submerge the valve in a container of power steering fluid or solvent, and blow in the hose. If air bubbles leak through the valve at less than 98 kPa (1.0 kgf/cm², 14.2 psi), repair it as follows.

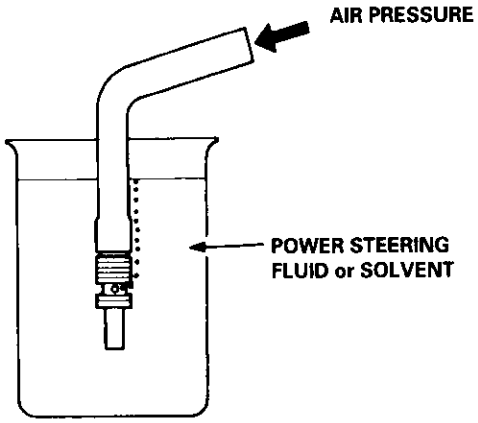

6. Hold the bottom end of the valve with a open end wrench.

7. Unscrew the seat in the top end of the valve, and remove any shims, the relief check ball, relief valve and relief valve spring.

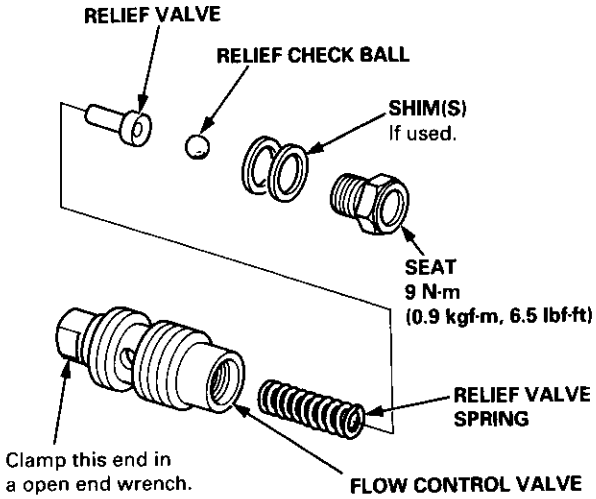

8. Clean all the parts in solvent, dry them off, then reassemble and retest the valve. If the flow control valve tests OK, reinstall it in the pump. If the flow control valve still leaks air, replace the pump as an assembly. The flow control valve is not available separately.

   NOTE: If necessary, relief pressure is adjusted at the factory by adding shims under the check ball seat. If you found shims in your valve, be sure you reinstall as many as you took out.

Ball Bearing:

1. Inspect the ball bearing by rotating the outer race slowly. If any play or roughness is felt, replace the ball bearing.

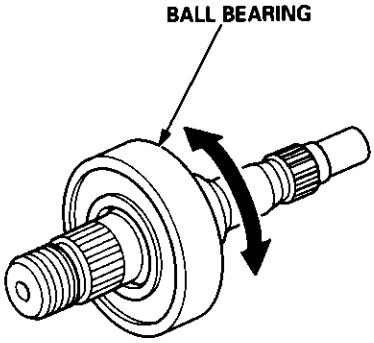

2. Remove and discard the ball bearing using a press as shown.

3. Install the new ball bearing using a press as shown.

Ball Bearing Replacement:

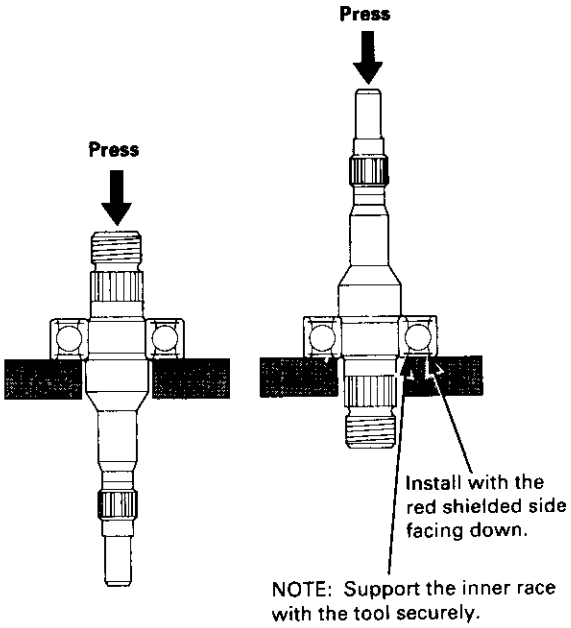

Reassembly

1. Align the pin of the sub-valve with the oil passage in pump housing, and push down the sub-valve. Install the snap ring properly.

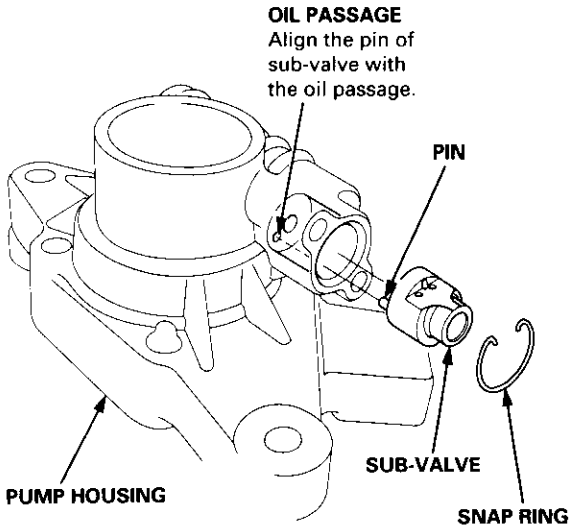

2. Install the new pump seal in the pump housing by hand, then install the pump seal spacer.

   NOTE: Insert the pump seal with its grooved side facing in.

3. Position the pump drive shaft in the pump housing, then drive it in using a special tool as shown.

4. Install the 40 mm circlip with its radiused side facing out.

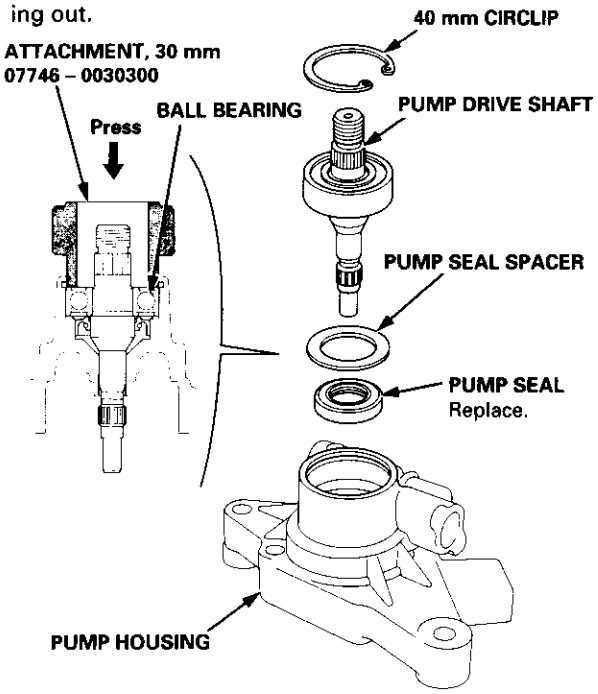

5. Coat the pump cover seal and the cover bushing with the power steering fluid, then install the pump cover seal into the groove in the pump cover.

6. Install the outer side plate over the two rollers.

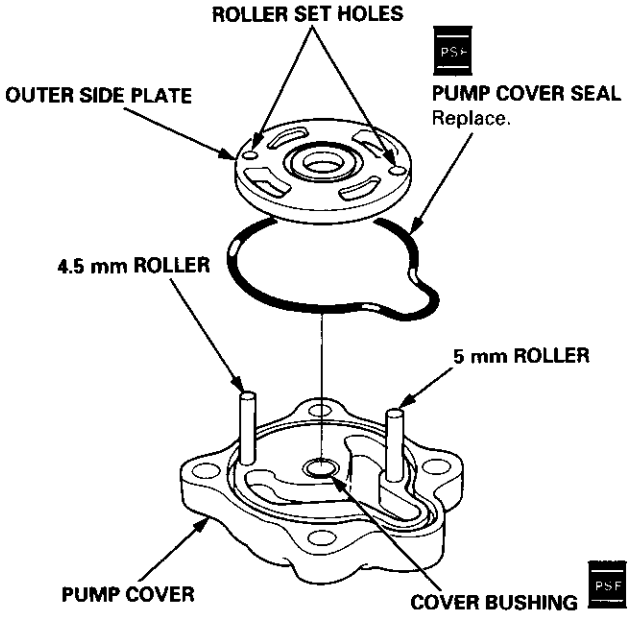

7. Set the pump cam ring over the two rollers with the " ○ " mark on the cam ring upward.

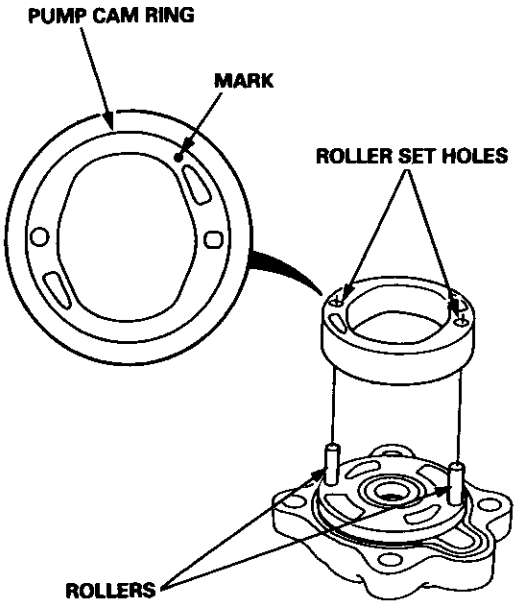

8. Assemble pump rotor to the pump cover with the " ○ " marks on the rotor facing down.

9. Set the 10 vanes in the grooves in the rotor.

   NOTE: Be sure that the round ends of the vanes are in contact with the sliding surface of the cam ring.

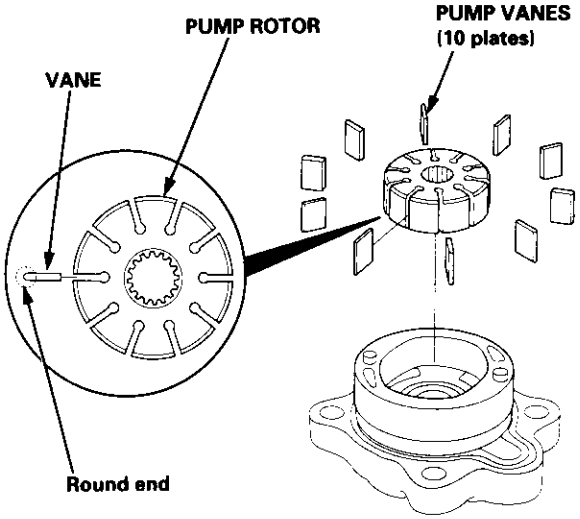

10. Coat the O-ring with power steering fluid, and install it into the grooves in the side plate.

11. Install the side plate on the cam ring by aligning the roller set holes in the side plate with the rollers.

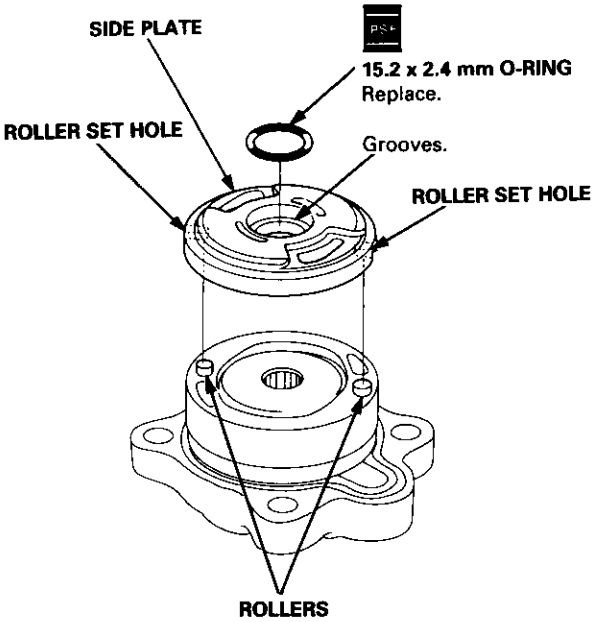

12. Coat the O-ring with power steering fluid, and position it into the pump housing.

13. Install the pump cover assembly in the pump housing.

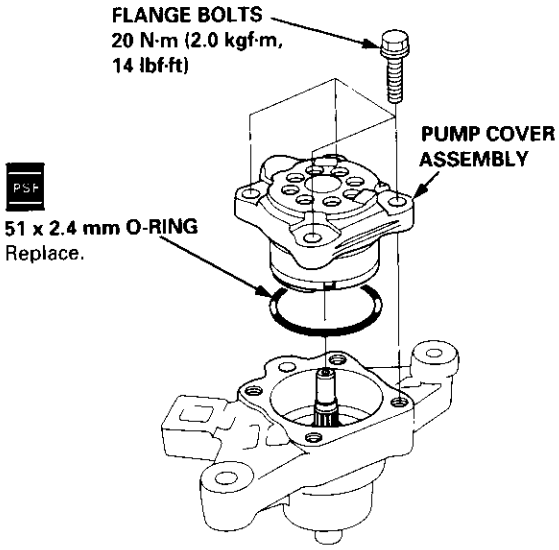

14. Coat the flow control valve with power steering fluid.

15. Install the flow control valve and spring on the pump housing.

16. Coat the O-ring with power steering fluid, and install it on the flow control valve cap.

17. Install the flow control valve cap on the pump housing, and tighten it.

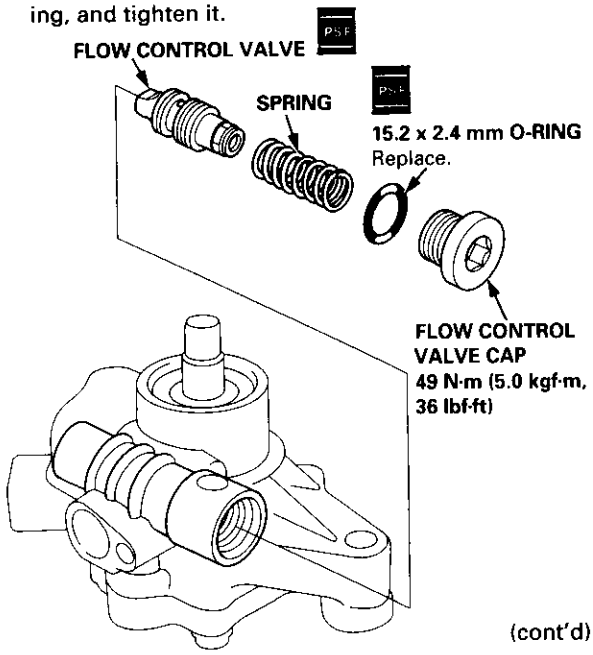

(cont'd)

Reassembly (cont'd)

18. Coat the O-ring with power steering fluid, and install it into the grooves in the inlet joint.

19. Install the inlet joint on the pump housing.

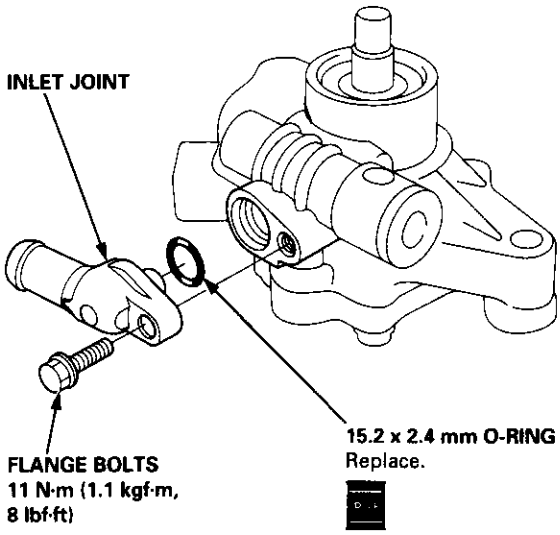

20. Install the pulley as shown below, then loosely install the pulley nut. Hold the steering pump in a vise with soft jaws.

CAUTION: Be careful not to damage the pump housing with the jaws of the vise.

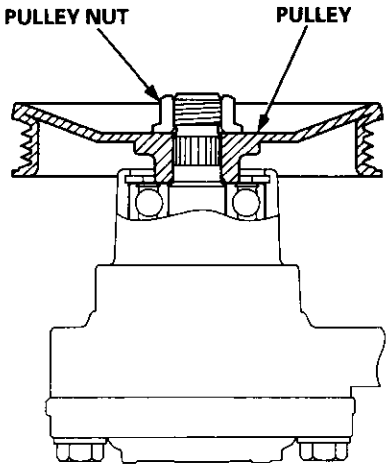

21. Hold the pulley with the special tool, and tighten the pulley nut.

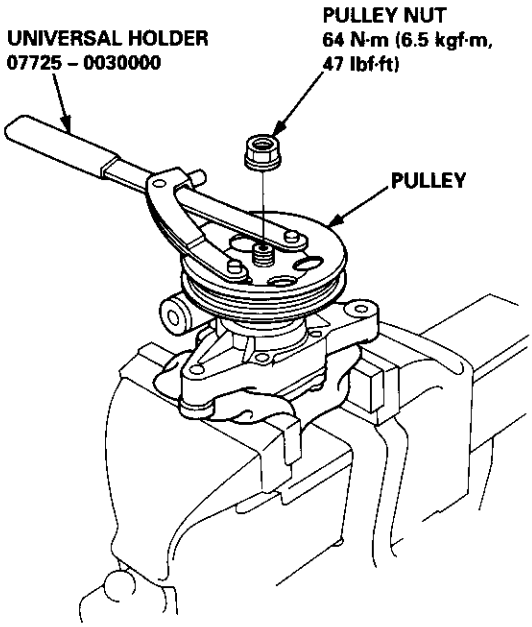

22. Check that the pump turns smoothly by turning the pulley by hand.

Removal

NOTE: Using solvent and a brush, wash any oil and dirt off the valve body unit its lines, and the end if the gearbox. Blow dry with compressed air.

1. Drain the power steering fluid as described on page 17-33.

2. Raise the front of vehicle, and support it on safety stands in the proper locations (see section 1).

3. Remove the front wheels.

4. Remove the driver's airbag assembly, and steering wheel (see page 17-35).

5. Remove the steering joint cover.

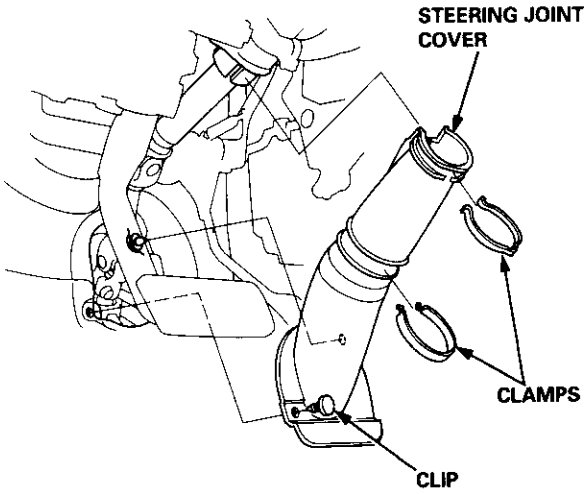

6. Remove the steering joint lower bolt, and loosen the steering joint upper bolt. Disconnect the steering joint by moving the joint toward the column.

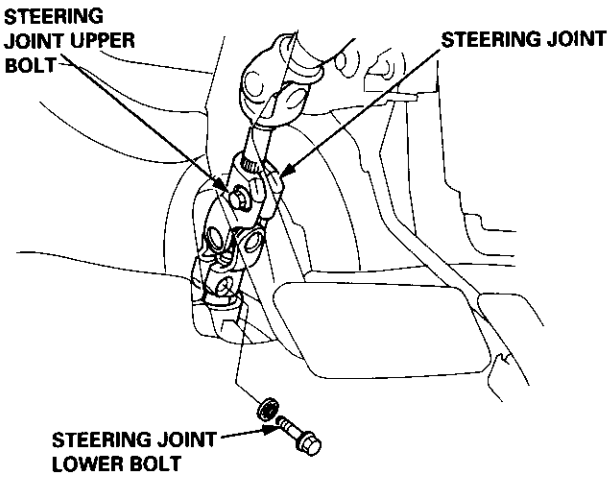

7. Remove the cotter pin from the castle nut ('96 – '97 models) or nut ('98 – '00 models) and remove the nut.

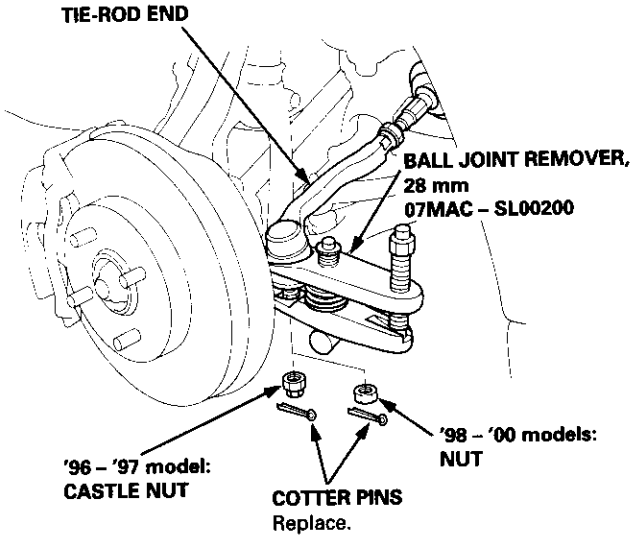

8. Install the 10 mm hex nut on the ball joint.
   Be sure that the 10 mm hex nut is flush with the ball joint pin end, or the threaded section of the ball joint pin might be damaged by the special tool.

   NOTE: Remove the ball joint using the special tool. Refer to section 18 for how to use the ball joint remover.

9. Separate the tie-rod ball joint and knuckle using the special tool.

   CAUTION: Avoid damaging the ball joint boot.

10. Remove the left tie-rod end, then slide the rack all the way to the right.

11. Separate the exhaust pipe A or TWC (see section 9).

12. Disconnect the shift linkage (see section 13 or section 14).

(cont'd)

Removal (cont'd)

13. Loosen the 14 mm flare nut and disconnect the feed line.

14. Loosen the adjustable hose clamp and disconnect the return hose.

15. Loosen the 16 mm flare nut and remove the return hose joint from the valve body unit.

    CAUTION: After disconnecting the hose and line, plug or seal the hose and line with a piece of tape or equivalent to prevent foreign materials from entering the valve body unit.

    NOTE: Do not loosen the cylinder line A and B between the valve body unit and cylinder.

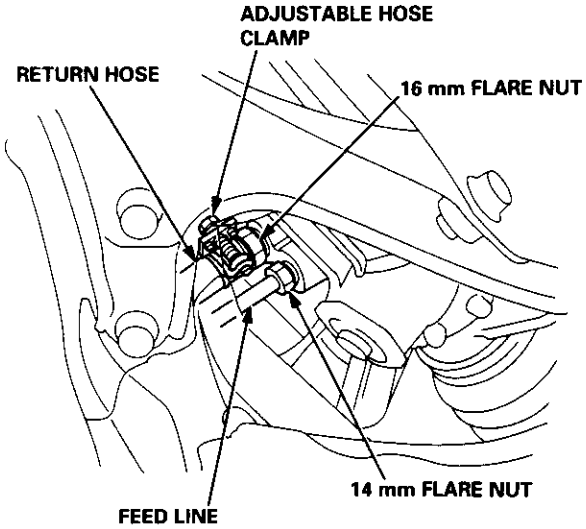

16. Remove the stiffener plate.

    NOTE: Some stiffener plate attaching bolts are also used as gearbox mounting bolts. The gearbox will tilt to side when these bolts are removed.

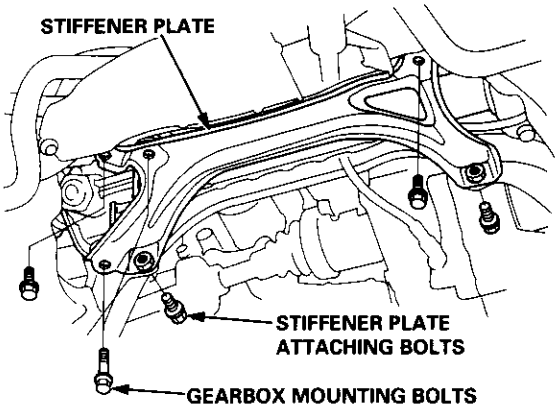

17. Remove the mounting brackets.

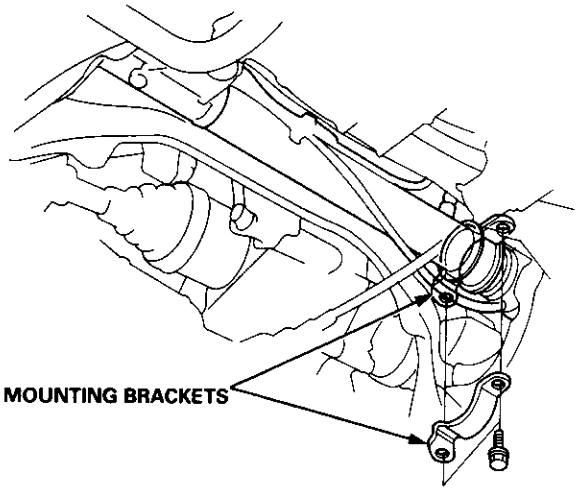

18. Pull the steering gearbox all the way down to clear the pinion shaft from the bulkhead, then remove the pinion shaft grommet.

19. Move the steering gearbox to right so the left rack end clears the rear beam, then tilt the left side down to remove it from the vehicle.

    CAUTION: Be careful not to bend or damage the feed line and cylinder lines when removing the gearbox.

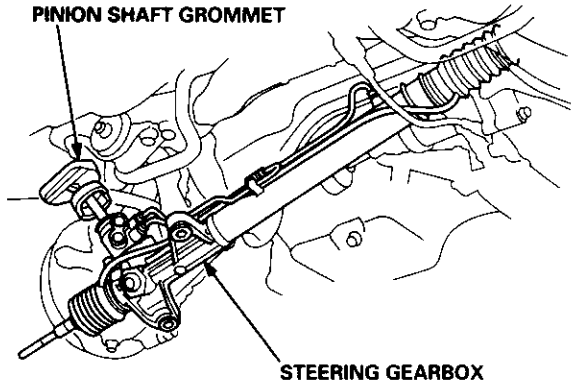

Disassembly

Steering Rack Disassembly

NOTE:
- Before disassemble the gearbox, wash it off with solvent and a brush.
- Do not dip seals and O-rings in solvent.

1. Remove the steering gearbox (see page 17-47).

2. Remove the tie-rod end and locknut.

3. Remove air tube and clips.

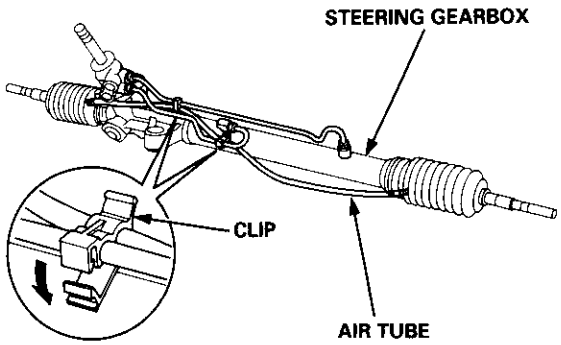

4. Remove the boot bands and tie-rod clips. Pull the boots away from the ends of the gearbox.

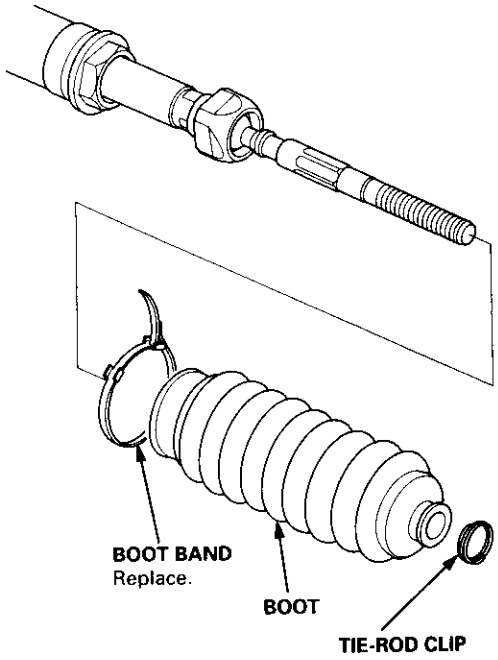

5. Hold the steering rack with a wrench ('98 – '00 models: left end only), and unscrew the rack end with another wrench.

   CAUTION: Be careful not to damage the rack surface with the wrench.

   NOTE: '96 – '97 models is shown.

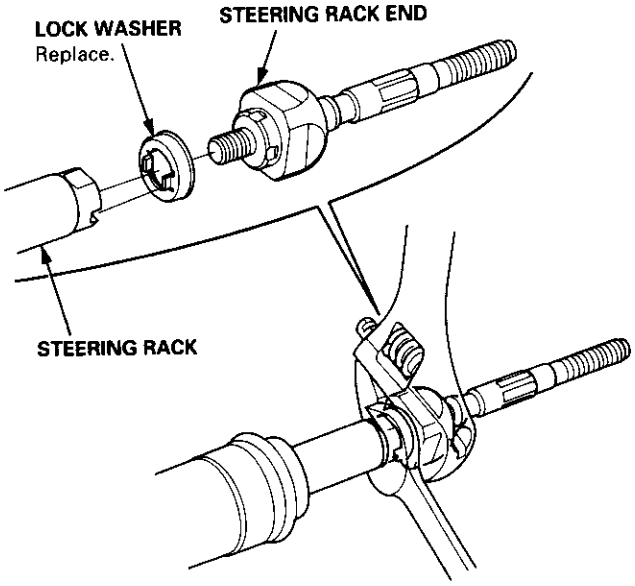

6. Loosen the locknut, then remove the rack guide screw and O-ring ('96 – '97 models only).

7. Remove the spring and the rack guide from the gear housing.

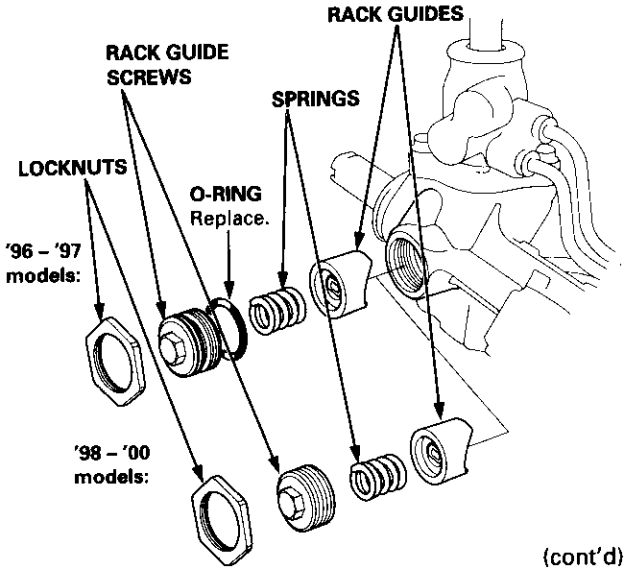

(cont'd)

Disassembly (cont'd)

8. Remove cylinder lines A and B from the gearbox.

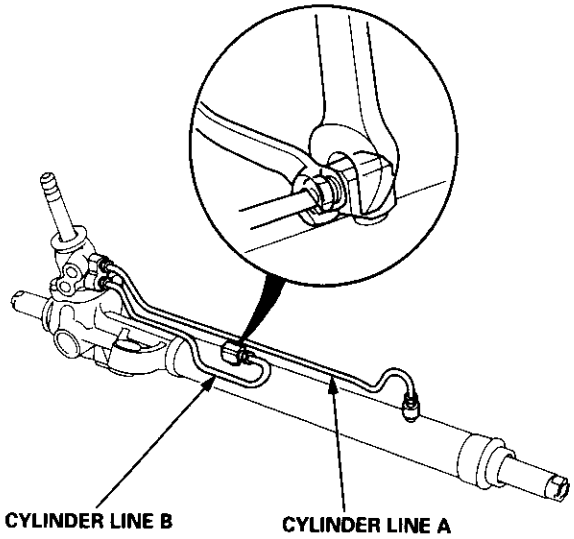

9. Drain the fluid from the cylinder fittings by slowly moving the steering rack back and forth.

10. Remove the two flange bolts, then remove the valve body unit from the gearbox. (See page 17-52 for valve body unit disassembly.)

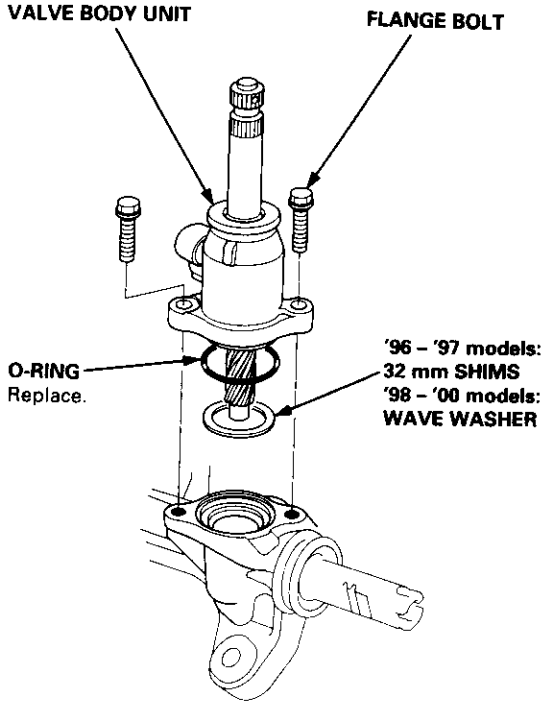

11. Drill a 3 mm (0.12 in) diameter hole approximately 2.5 – 3.0 mm (0.10 – 0.12 in) in depth in the staked point on the cylinder.

CAUTION:
- **Do not allow metal shavings to enter the cylinder housing.**
- **After removing the cylinder end, remove any burrs at the staked point.**

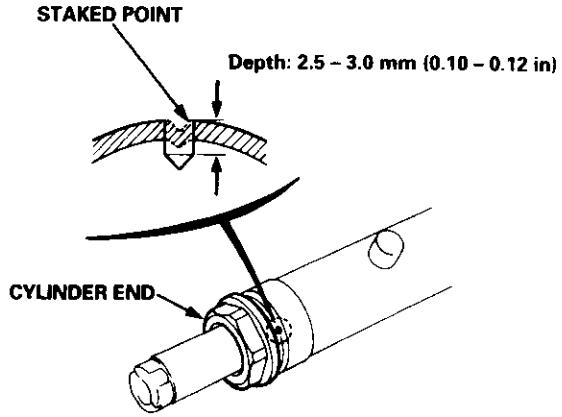

12. Hold the steering gearbox using a C-clamp as shown.

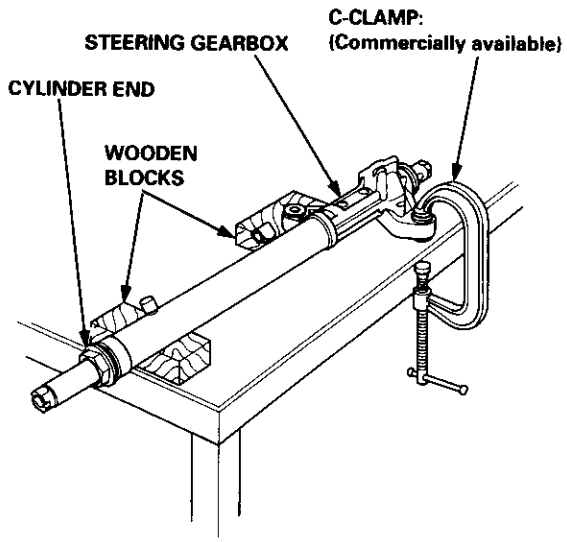

13. Loosen and remove the cylinder end.

14. Assemble a 12 x 1.25 mm flange nut onto a 12 x 175 mm grade 10 flange bolt as shown.

NOTE: Wrap the flange portion of the bolt with vinyl tape to protect the cylinder.

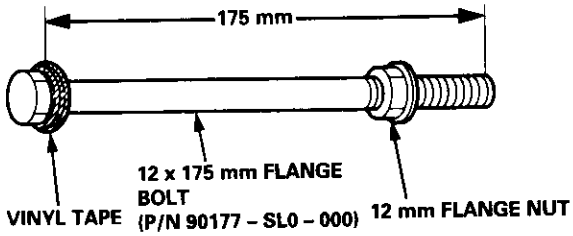

15. Install the flange bolt into the end of the steering rack until it bottoms in the hole, then back the flange bolt out 1/4 turn. Hold the flange bolt, and tighten the flange nut against the rack by hand.
16. Install the bearing separator on the gearbox housing as shown.

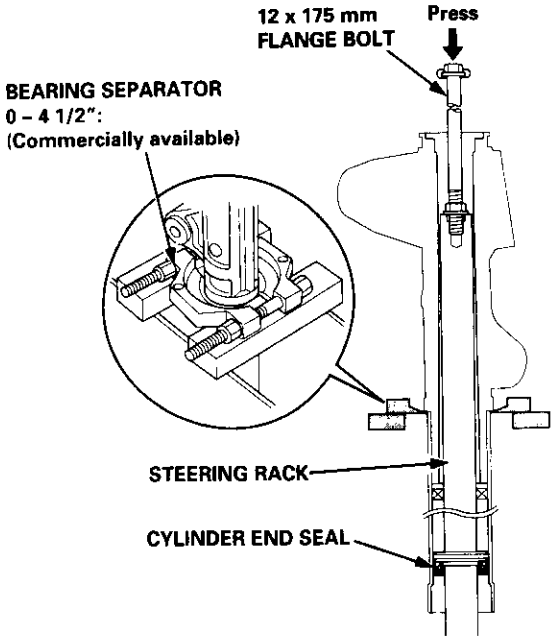

17. Set the gearbox in a press so the gear housing point upward, then press the cylinder end seal and steering rack out of the gearbox.

NOTE: Hold the steering rack to keep it from falling when pressed clear.

CAUTION:
- **Be careful not damage to inner surface of the cylinder housing with the flange bolt.**
- **Do not place your fingers under the steering rack.**

18. Remove the 12 mm bolt and nut from the steering rack.
19. Remove the cylinder end seal from the steering rack.

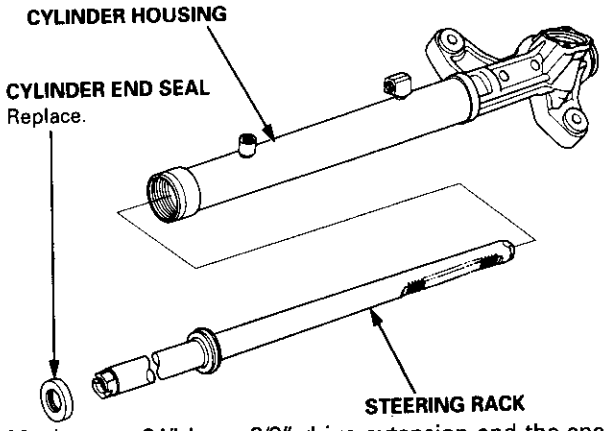

20. Insert a 24" long, 3/8" drive extension and the special tool into the cylinder from the gearbox side.
NOTE: Make sure that the special tool is securely positioned on the backup ring edges.
CAUTION: Be careful not damage to inner surface of the cylinder housing with the special tool.
21. Set the gearbox in a press, then press out the cylinder end seal and backup ring from the gearbox.
CAUTION:
- **Keep the tool straight to avoid damaging the cylinder wall. Check the tool angle, and correct it if necessary, when removing the cylinder end seal.**
- **Use a press to remove the cylinder end seal. Do not try to remove the seal by striking the tool. It will break the backup ring, and the cylinder end seal will remain in the gearbox.**

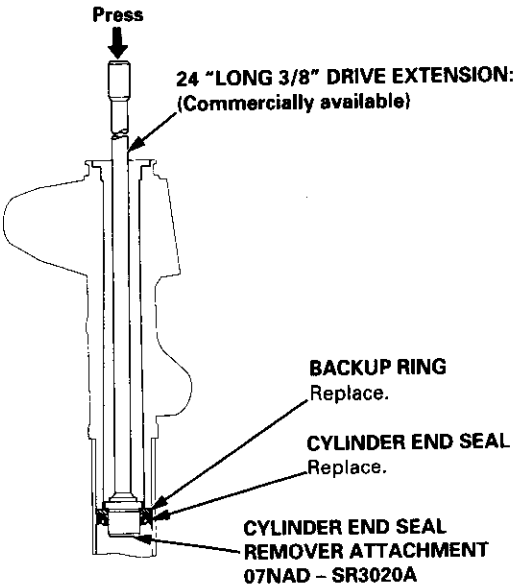

(cont'd)

Disassembly (cont'd)

22. Carefully pry the piston seal ring and O-ring off the piston rack.

    CAUTION: Be careful not to damage the inside of seal ring groove and piston edges when removing the seal ring.

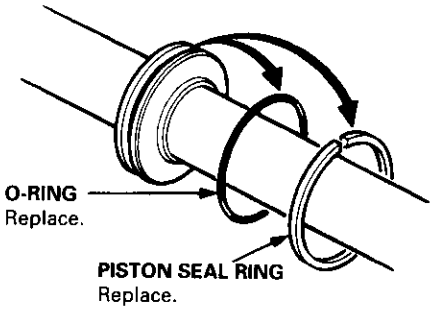

Valve Body Unit Disassembly

23. Before removing the valve housing, apply vinyl tape to splines of the pinion shaft.

24. Separate the valve housing from the pinion shaft/ valve using a press.

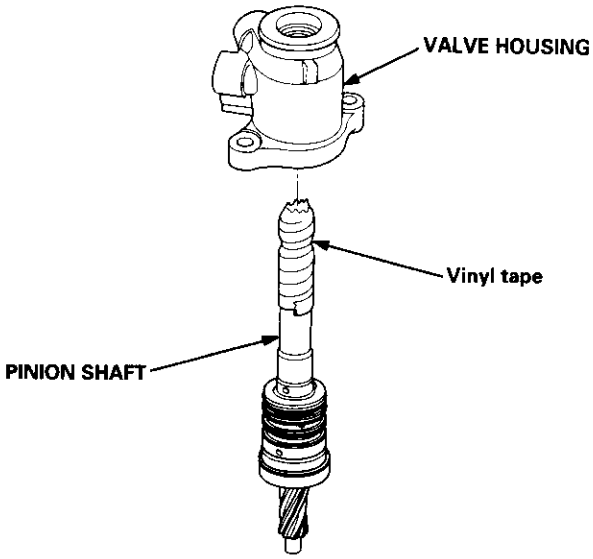

25. Check the inner wall of the valve housing where the seal ring slides with your finger. If there is a step in the wall, the valve housing is worn. Replace the valve housing.

    NOTE:
    - There may be the sliding marks from the seal ring on the wall of the valve housing. Replace the valve housing only if the wall is stepped.
    - When the valve housing is replaced, install new shim(s) on the bearing surface of the housing to adjust the thickness.

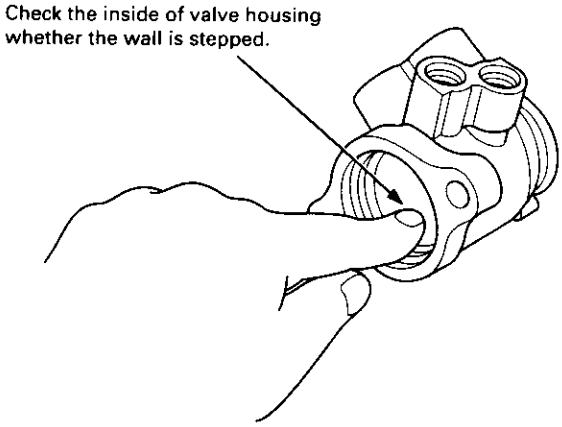

26. Check for wear, burrs and other damage to the edges of the grooves in the sleeve.

NOTE: The pinion shaft and sleeve are a precision matched set. If either the pinion shaft or sleeve must be replaced, replace both parts as a set.

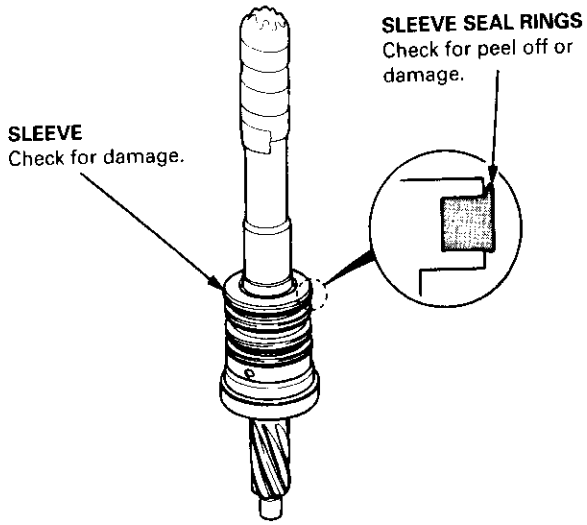

27. Remove the circlip and pinion shaft sleeve from the pinion shaft.

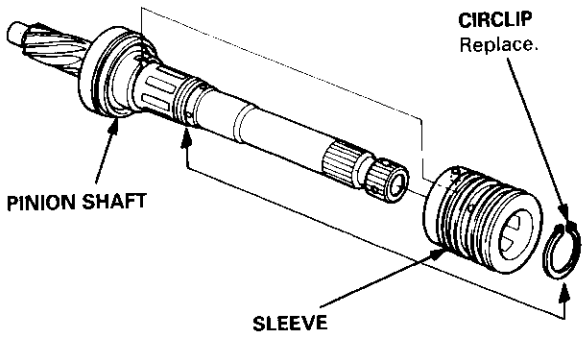

28. Using a cutter or an equivalent tool, cut and remove the four seal rings from the sleeve.

CAUTION: Be careful not to damage the edges of the sleeve grooves and outer surface when removing the seal rings.

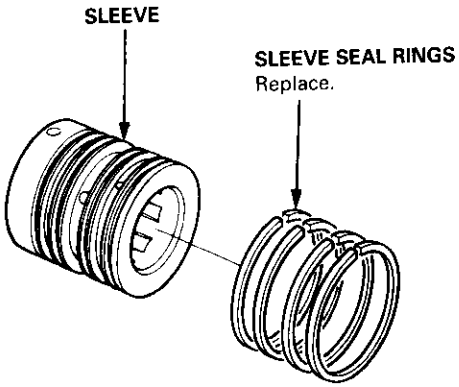

29. Using a cutter or an equivalent tool, cut the valve seal ring and O-ring at the groove the pinion shaft. Remove the valve seal ring and O-ring.

CAUTION: Be careful not to damage the edges of the pinion shaft groove and outer surface when removing the valve seal ring and O-ring.

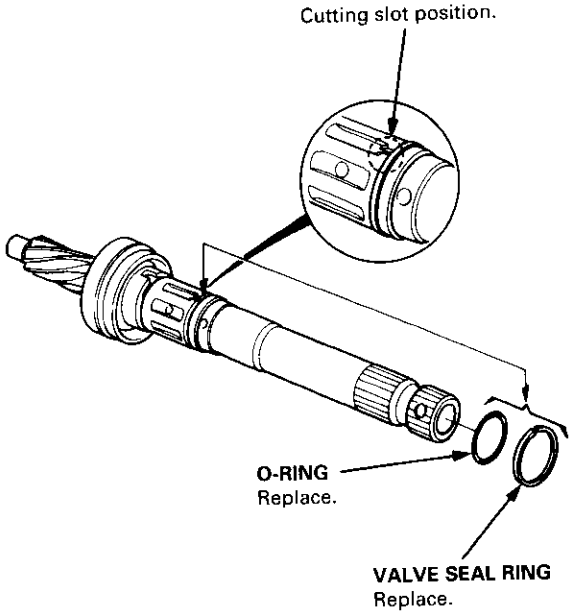

(cont'd)

Disassembly (cont'd)

30. Remove the valve oil seal and backup ring ('96 – '97 models) or wave washer ('98 – '00 models) from the pinion shaft.

    NOTE:
    - Inspect the ball bearing by rotating the outer race slowly. If there is any excessive play, replace the pinion shaft and sleeve as an assembly.
    - The pinion shaft and sleeve are a precise fit; do not intermix old and new pinion shafts and sleeves.

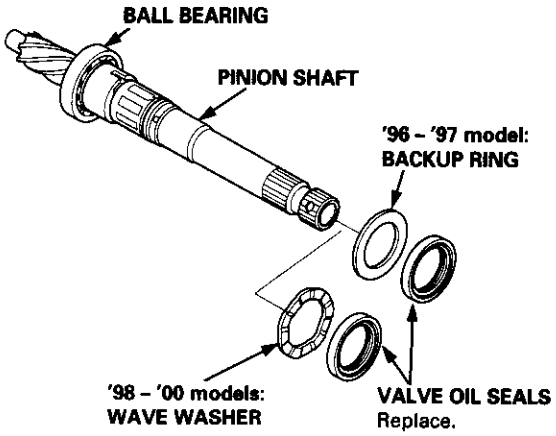

31. Press the valve oil seal and roller bearing ('96 – '97 models) or bushing ('98 – '00 models) out of the valve housing using a hydraulic press and special tool shown below.

    NOTE: Do not use a hammer; it will damage the special tool.

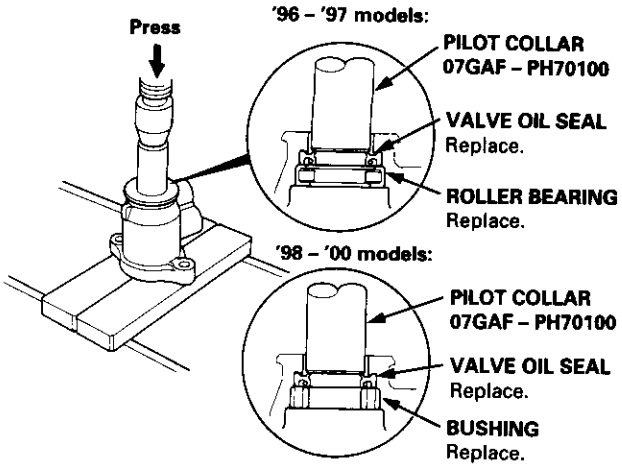

Reassembly

NOTE:
- Clean the disassembled parts with a solvent, and dry them with compressed air. Do not dip the rubber parts in a solvent.
- Always replace the O-rings and rubber seals with new ones before assembly.
- Apply the recommended power steering fluid to the parts indicated in the assembly procedures.
- Do not allow dust, dirt, or other foreign materials to enter the power steering system.
- Use the appropriate special tools where necessary.

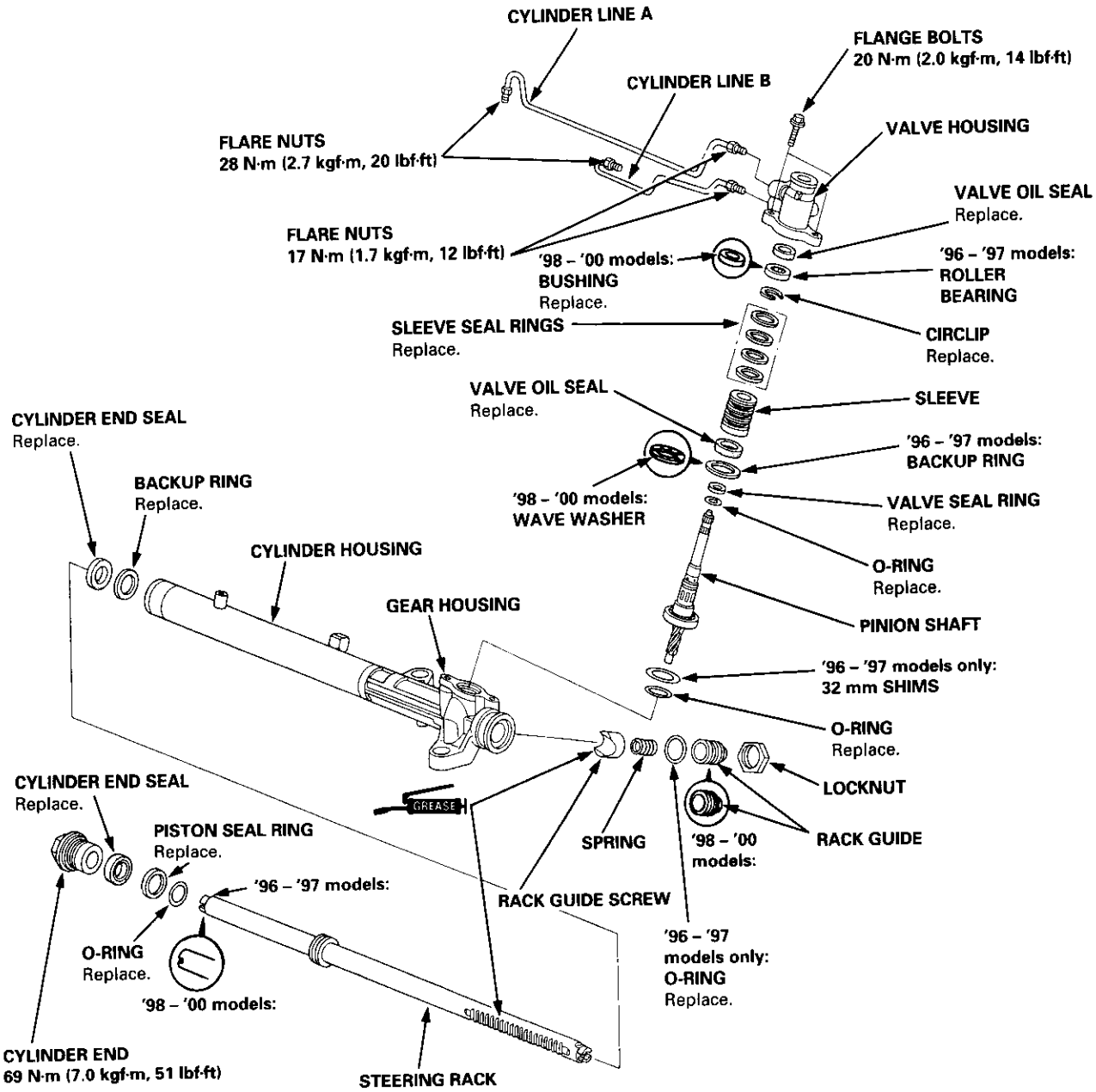

(cont'd)

Reassembly (cont'd)

Valve Body Unit Reassembly

1. Apply vinyl tape to the stepped portion of the pinion shaft, and coat the surface of the vinyl tape with the power steering fluid.
2. Install the backup ring ('96 – '97 models) or wave washer ('98 – '00 models) with its tapered side as shown below.
3. Coat the inside surface of the new valve oil seal with power steering fluid.
4. Slide the valve oil seal over the pinion shaft, being careful not to damage the sealing lip.

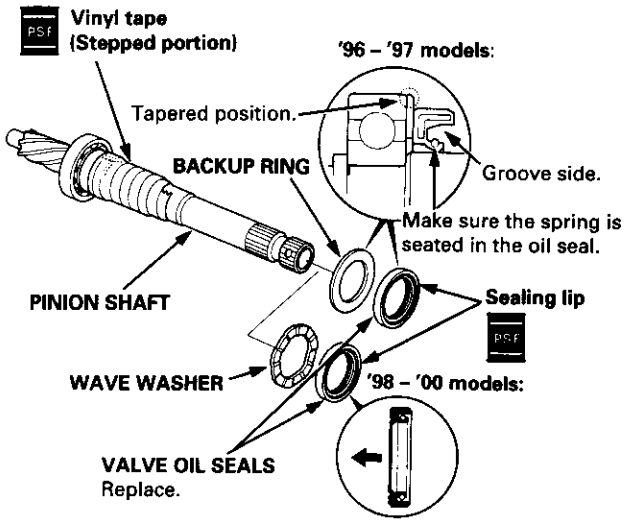

CAUTION: Install the valve oil seal with its grooved side facing opposite the bearing.

5. Apply vinyl tape to the splines and stepped portion of the shaft, and coat the surface of the vinyl tape with the power steering fluid.
6. Fit the new O-ring in the groove of the pinion shaft. Then slide the new valve seal ring over the shaft and the groove in on the pinion shaft.
7. Remove the vinyl tape from the pinion shaft.

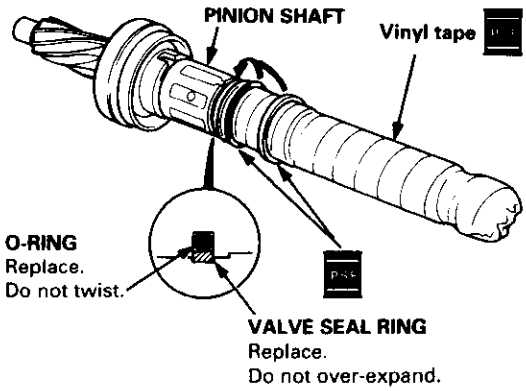

8. Apply power steering fluid to the surface of the valve seal ring that was installed on the pinion shaft.
9. Apply power steering fluid to the inside of the special tool. Set the larger diameter end of the special tool over the valve seal ring.
10. Move the special tool up and down several times to make the valve seal ring fit in the pinion shaft.
11. Remove the special tool.
12. Turn the special tool over, and set the smaller diameter end of the special tool over the valve seal ring. Move the special tool up and down several times to make the valve seal ring fit snugly in the pinion shaft.

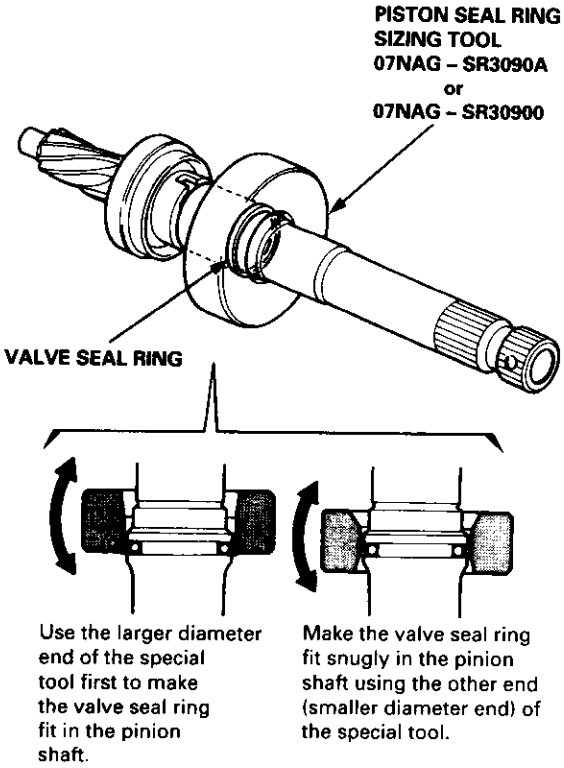

13. Apply power steering fluid to the surface of the special tool. Set the new seal rings over the special tool from the smaller diameter end of the tool, and expand the seal rings. Do two rings at a time from each end of the sleeve.

NOTE:
- Do not over-expand the seal ring. Install the resin seal rings with care so as not to damage them. After installation, be sure to contract the seal rings using the special tool (sizing tool).
- There are two types of sleeve seal rings: black and brown. Do not mix the different types of sleeve seal rings as they are not compatible.

14. Set the special tool in the grooves in the sleeve, and set each ring in each groove securely.

NOTE: After installation, compress the seal rings with your fingers temporarily.

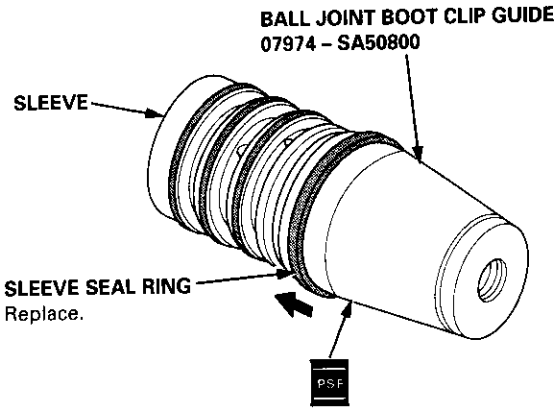

15. Apply power steering fluid to the seal rings on the sleeve, and to the entire inside surface of the special tool.
16. Insert the sleeve into the special tool slowly.
17. Move the sleeve each direction several times to make the seal rings snugly fit in the sleeve.

NOTE: Be sure that the seal rings are not turned up.

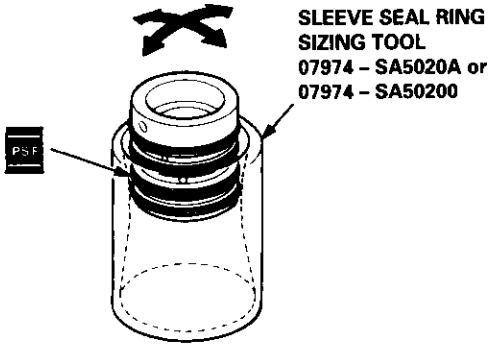

18. Apply power steering fluid to the surface of the pinion shaft. Assemble the sleeve over the pinion shaft by aligning the locating pin on the inside of the sleeve with the cutout in the shaft. Then install the new circlip securely in the pinion shaft groove.

NOTE:
- Be careful not to damage the valve seal ring when inserting the sleeve.
- Install the circlip with its radiused side toward the sleeve.

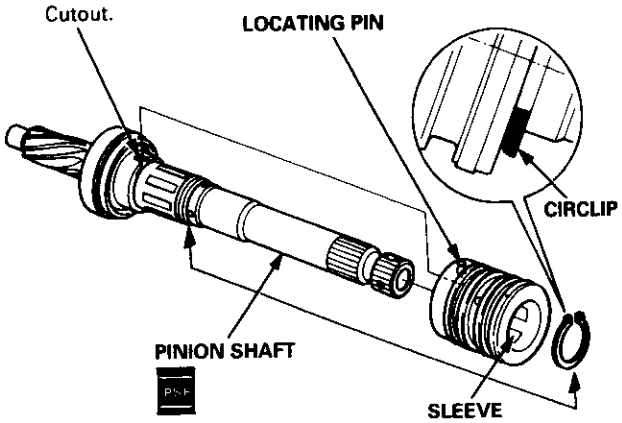

19. Apply power steering fluid to the seal ring lip of the valve oil seal, then install the seal in the valve housing using a hydraulic press and special tools as shown.

CAUTION: Install the valve oil seal with its grooved side facing the tool.

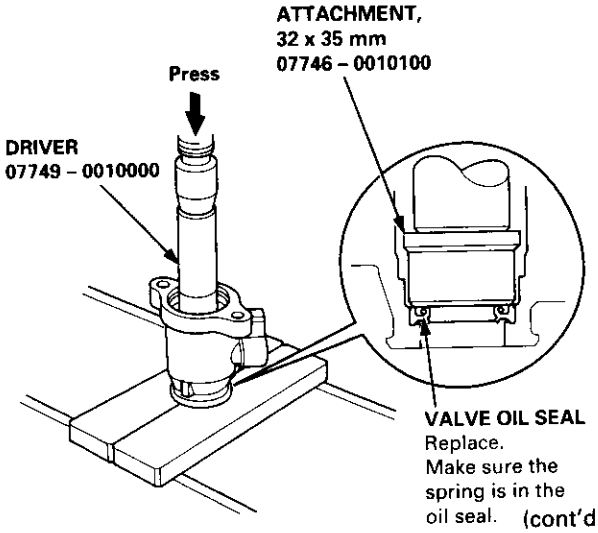

(cont'd)

Reassembly (cont'd)

20. Press the new bearing ('96 – '97 models) or new bushing ('98 – '00 models) into the valve housing using a hydraulic press and special tool as shown.

    NOTE: Place the roller bearing ('96 – '97 models) on the valve housing with the stamped letter facing up towards the valve side.

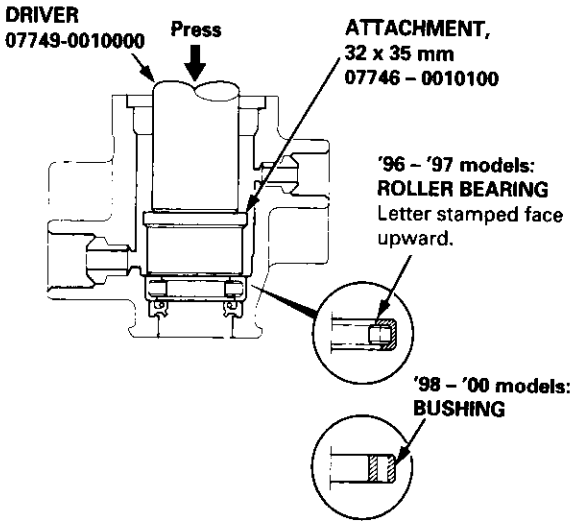

21. Apply vinyl tape to the pinion shaft, then coat the vinyl tape with power steering fluid.

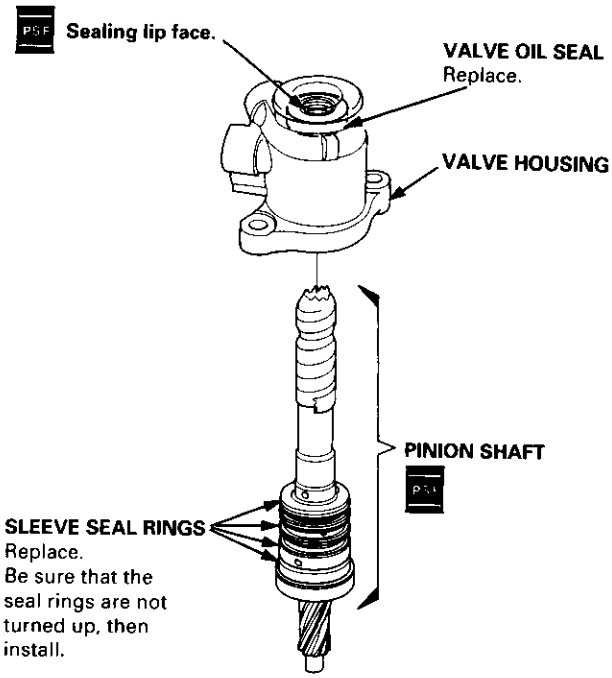

22. Insert the pinion shaft into the valve housing.

    CAUTION: Be careful not to damage the valve seal rings.

23. Remove the vinyl tape from the pinion shaft.

24. Press the pinion shaft/sleeve using a hydraulic press as shown.

    NOTE: Check that the pinion shaft/sleeve turns smoothly by turning the pinion shaft.

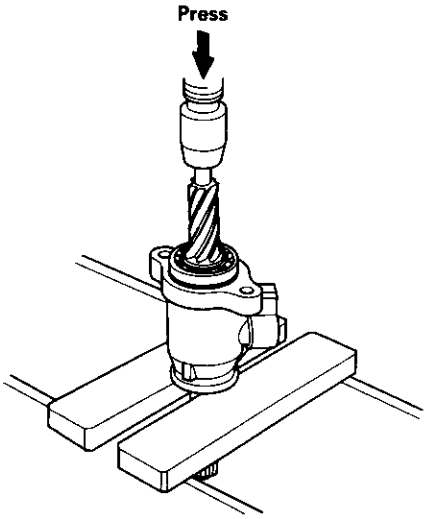

Steering Rack Reassembly

25. Coat the piston seal ring guide with power steering fluid, then slide it onto the rack, big end first.

26. Position the new O-ring and new piston seal ring on the special tool, then slide them down toward the big end of the tool.

    NOTE:
    - Do not over expand the resin seal rings. Install the resin seal rings with care so as not to damage them. After installation, be sure to contract the seal ring using the special tool (sizing tool).
    - Replace the piston's O-ring and seal ring as a set.

27. Pull the O-ring off into the piston groove, then pull the piston seal ring off into the piston groove on top of the O-ring.

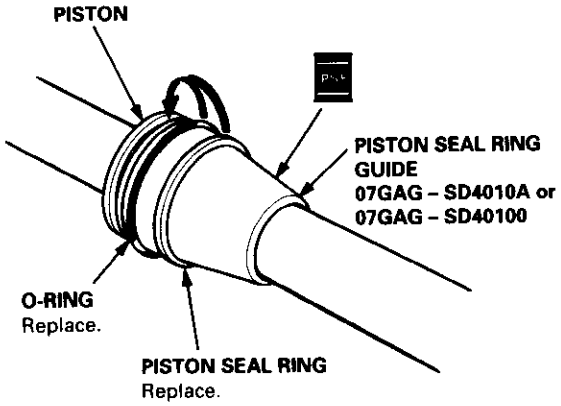

28. Coat the piston seal ring and the inside of the special tool with power steering fluid.

29. Carefully slide the tool onto the rack and over the piston seal ring.

30. Move the special tool back and forth several times to make the piston seal ring fit snugly in the piston.

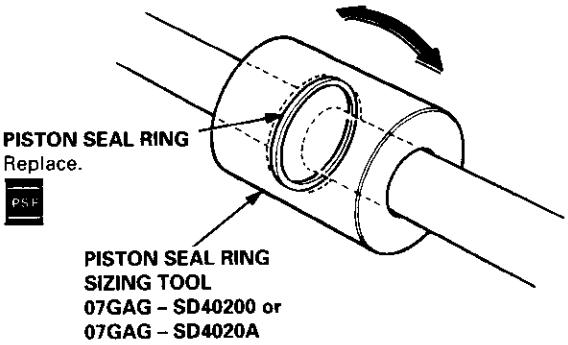

31. Wrap vinyl tape around the rack teeth and rack end edges, then coat the surface of the tape with the power steering fluid.
    NOTE: Make sure that the vinyl tape is wrapped carefully so that there is no stepped portion.

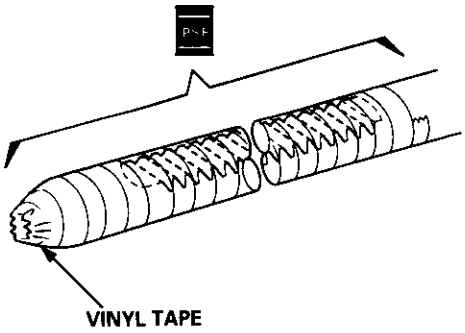

32. Coat the inside surface of the new cylinder end seal with power steering fluid.
33. Install the cylinder end seal onto the steering rack with its grooved side toward the piston.
    CAUTION: When installing the cylinder end seal, be careful not damage the sealing lip face of the seal with the edges or teeth of the steering rack.

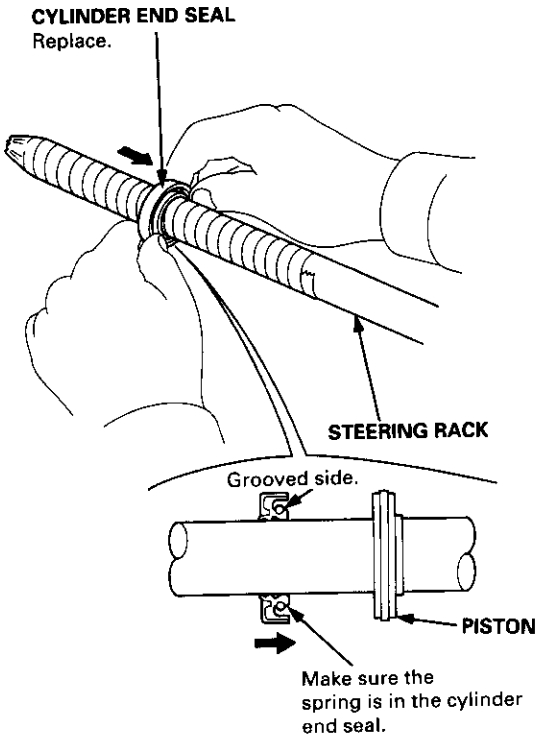

34. Remove the vinyl tape from the steering rack.
    NOTE: Remove any residue of tape adhesive.

(cont'd)

Reassembly (cont'd)

35. Install the new backup ring on the steering rack, then place the cylinder end seal to piston.

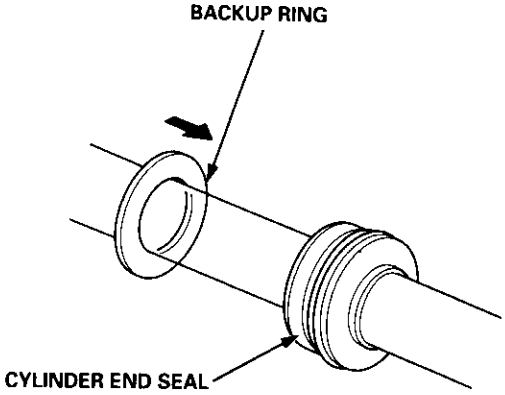

36. Grease the steering rack teeth, then insert the steering rack into the gear housing.

CAUTION: Be careful not to damage to inner surface of the cylinder housing with the rack edges.

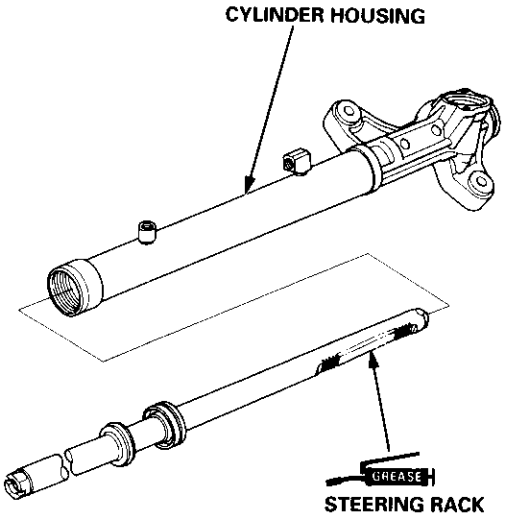

37. Install the flange bolt into the end of the steering rack until it bottoms in the hole, then back the flange bolt out 1/4 turn. Hold the flange bolt and tighten the flange nut against the rack by hand.

38. Install the cylinder end seal into the bottom of the cylinder by pressing on the bolt with a press as shown.

CAUTION: Do not push on the bolt with excessive force as it may damage the cylinder end seal.

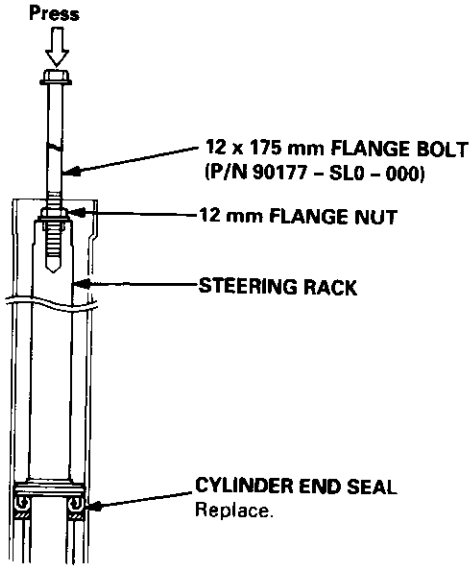

39. Remove the flange bolt, and center the steering rack.

40. Wrap vinyl tape around the rack end edges, and coat the surface of the tape with the power steering fluid.

NOTE: Make sure that the vinyl tape is wrapped carefully so that there is no stepped portion.

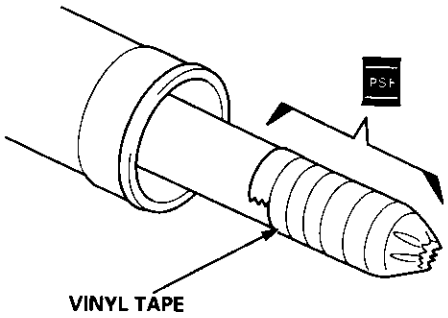

41. Coat the inside surface of the new cylinder end seal with power steering fluid.

42. Install the cylinder end seal onto the steering rack with its grooved side toward the piston.

43. Push in the cylinder end seal with your finger.

CAUTION: When installing the cylinder end seal, be careful not damage the sealing face of the seal with the threads and burrs at the staked position of the cylinder housing.

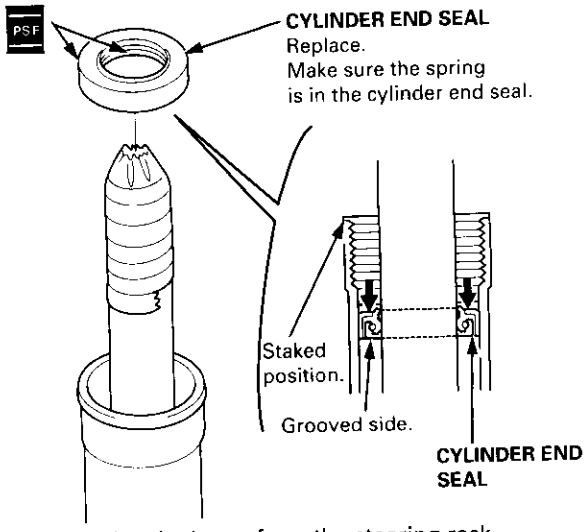

44. Remove the vinyl tape from the steering rack.

NOTE: Remove any residue of tape adhesive.

45. Hold the steering gearbox using a C-clamp as shown.

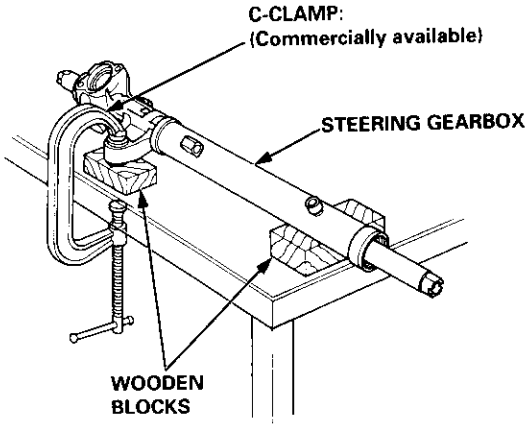

46. Coat the inside surface of the cylinder end with power steering fluid, then install the cylinder end by screwing it into the cylinder housing.

47. Remove the C-clamp from the steering gearbox.

48. After tightening the cylinder end, stake the point of the cylinder housing shown below. For '98 – '00 models go to step 51.

NOTE: Stake the cylinder in the position opposite from where the stake was removed during disassembly.

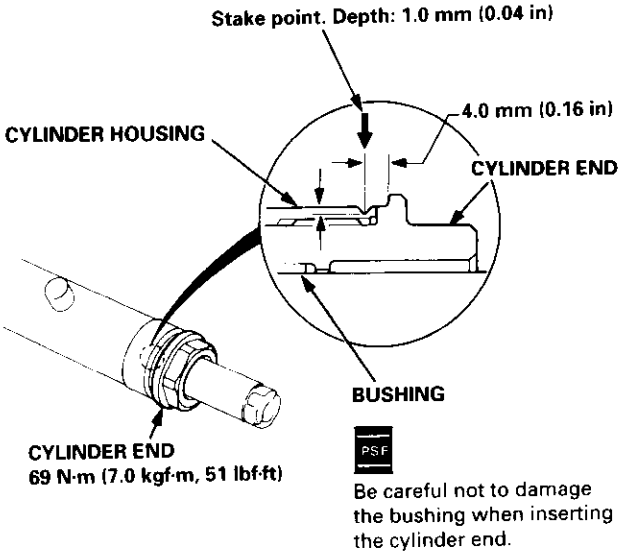

49. Select the 32 mm shim(s) ('96 – '97 model only).

NOTE: Only reinstall the original 32 mm shim(s) when the steering gearbox is reassembled without replacing the pinion shaft, valve housing, and gearbox housing with new ones.
If the pinion shaft, valve housing, and gearbox housing are replaced, select the new shim(s) as follows.

Shim selection:

a. Set the four 32 mm shims on the bearing surface of the gearbox housing. Total thickness of the four shims should equal no more than 0.70 mm.
Shim set: four 32 mm shims (Thickness: 0.10 mm, 0.15 mm, 0.20 mm, 0.25 mm respectively)

CAUTION: The four 32 mm shims do not have thickness identification marks. Measure the thickness of each shim using a micrometer, and mark the shim for identification.

(cont'd)

Reassembly (cont'd)

b. Install the valve body unit on the gearbox, and tighten the flange bolts to the specified torque.

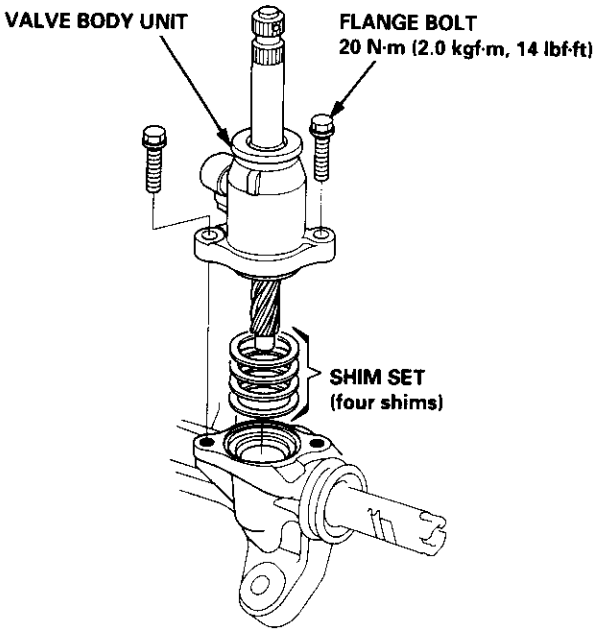

c. Measure the clearance between the gearbox and valve body unit using a feeler gauge as shown.

NOTE: Measure the clearance at the point midway between the two mounting bolts.

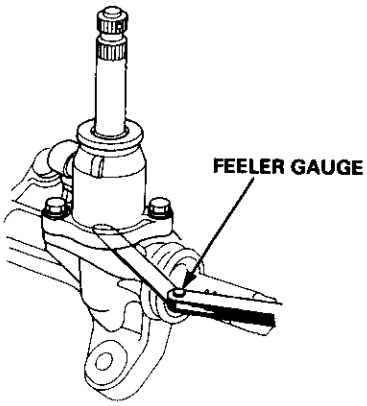

d. Determine the required thickness of the 32 mm shims by subtracting the clearance obtained in the step "c" from the total thickness of the four shims. (Total thickness of the 4 shims) – (Clearance) = Required thickness of the shims

NOTE: Select the shims so that the total thickness is close to, but less than, the required thickness.

Example:
Measurement is 0.28 mm (0.011 in):
0.70 – 0.28 = 0.42 mm (0.028 – 0.011 = 0.017 in)

The selected shims should be 0.25 mm (0.010 in) and 0.15 mm (0.006 in) in thickness.

If the required shim thickness is 0.10 mm or less, no shims are necessary.

50. Set the selected 32 mm shims ('96 – '97 models only) on the bearing surface of the gearbox housing.

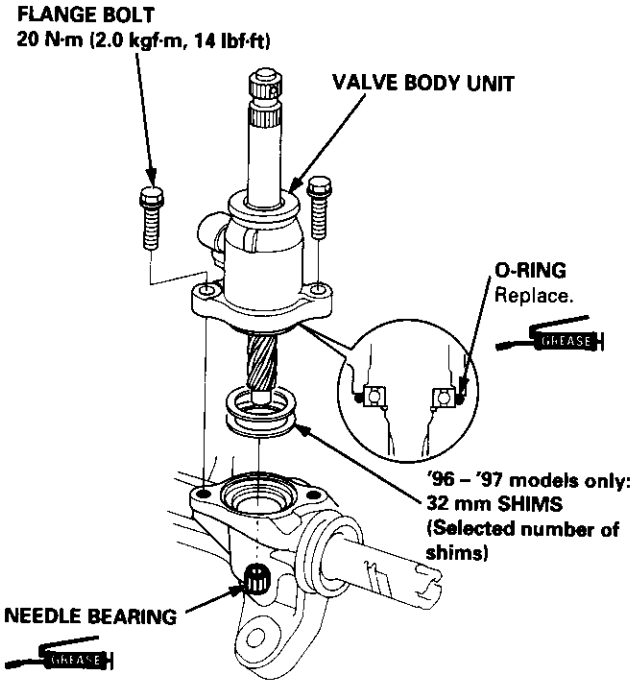

51. Coat the new O-ring with grease, and carefully fit it on the valve housing.

52. Apply grease to the needle bearing in the gearbox housing.

53. Install the valve body unit on the gearbox housing by engaging the gears.

NOTE: Note the valve body unit installation position (direction of line connection).

54. Tighten the flange bolts to the specified torque.

55. Install the cylinder lines A and B.
NOTE:
- Clean the joints of the cylinder lines A and B thoroughly. The joints must be free of foreign material.
- Install the cylinder lines A and B by tighting the flare nuts by hand first, then tighten the flare nuts to the specified torque.

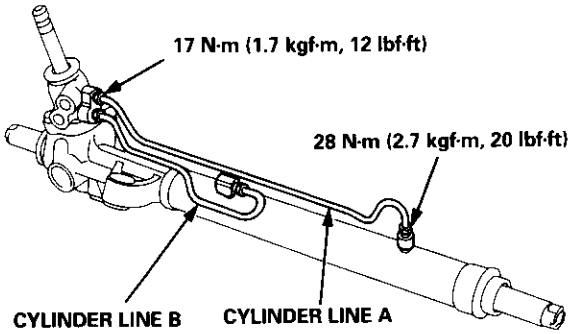

56. Grease the sliding surface of the rack guide, and install it onto the gear housing.
57. **'96 – '97 models:**
Apply a thin coat of grease to the new O-ring, and install it on the rack guide screw.
'98 – '00 models:
Remove the old sealant off of the threaded section, then apply new sealant all around the threads.
58. Install the spring, rack guide screw and locknut on the gear housing.
59. Adjust the rack guide screw (see page 17-33).
NOTE: After adjusting, check that the rack moves smoothly by sliding the rack right and left.

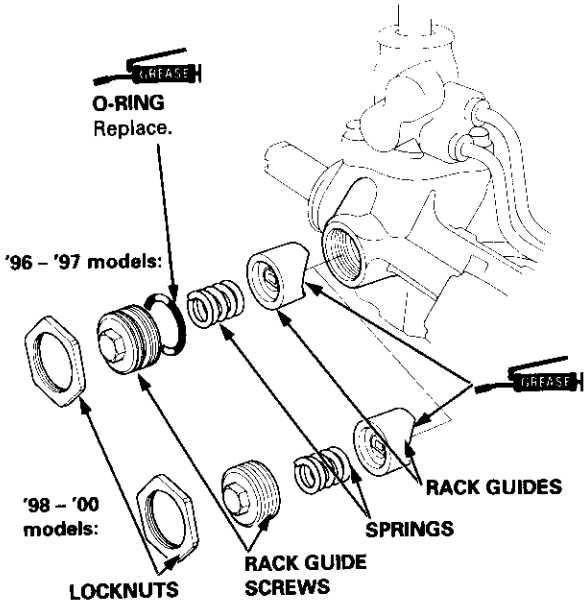

60. Install the new lockwasher in the groove in the steering rack.
61. Screw each rack ends into the rack.
62. Hold the steering rack with a wrench ('98 – '00 models: left end only), and tighten the rack ends.
CAUTION: Be careful not to damage the rack surface with the wrench.
NOTE: '96 – '97 model is shown.

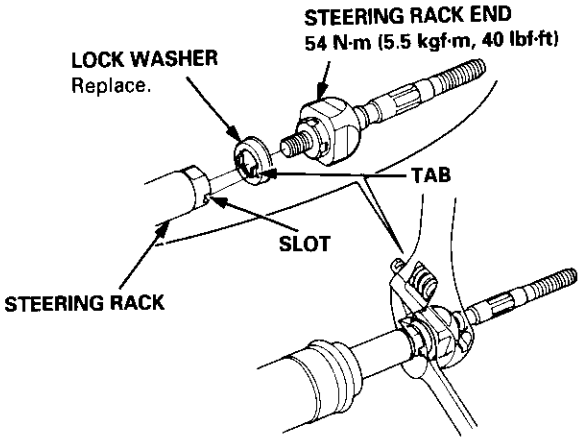

63. After tightening the rack ends, stake the four sections of lock washer with a drift and a mallet.
- Place the wood block on the press table, then set the lock washer section of the rack end on the wood block securely.
- Be sure the tool is aligned with the flat sections of the steering rack end before pressing.
- Stake the lock washer in the center of the flat section of the steering rack end.

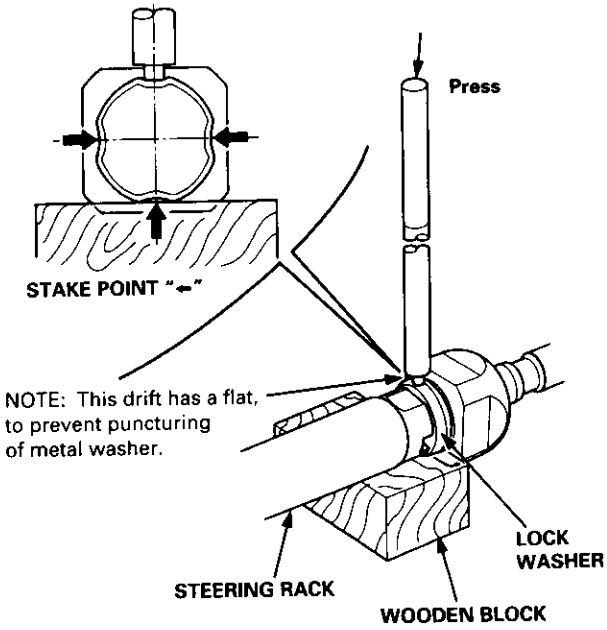

(cont'd)

Reassembly (cont'd)

64. Apply grease to the circumference of the rack end housing.

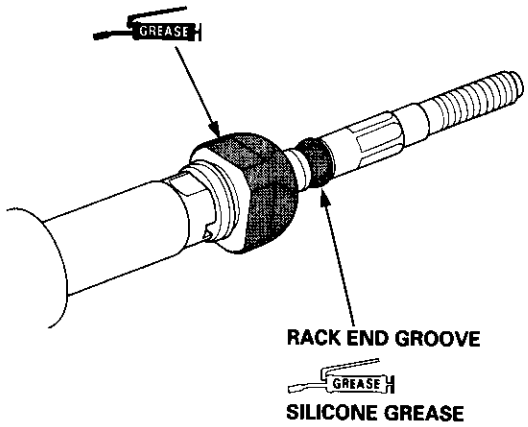

65. Apply a light coat of silicone grease to the boot grooves on the rack ends.

66. Install the boots in the rack end with the tie-rod clips.

NOTE: Install the boots with the rack in the straight ahead position (right and left tie-rods are equal in length).

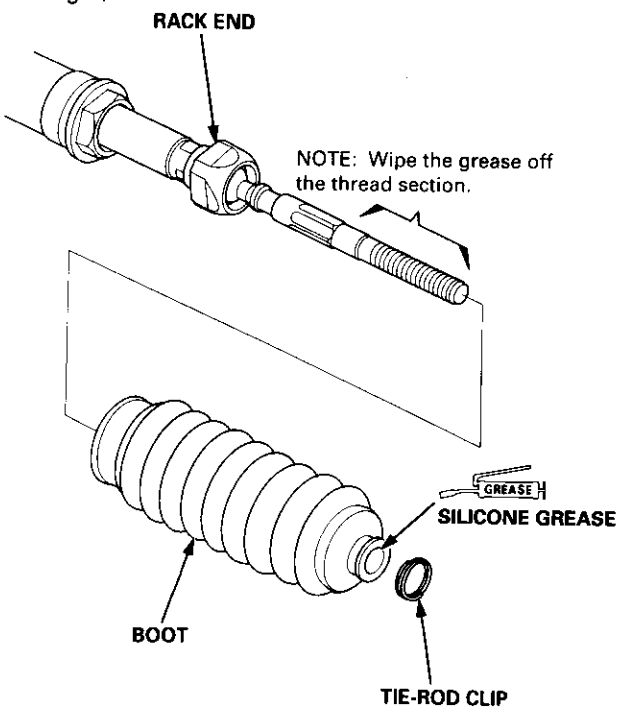

67. Adjust the air hose fitting position of the boots by turning it as shown below.

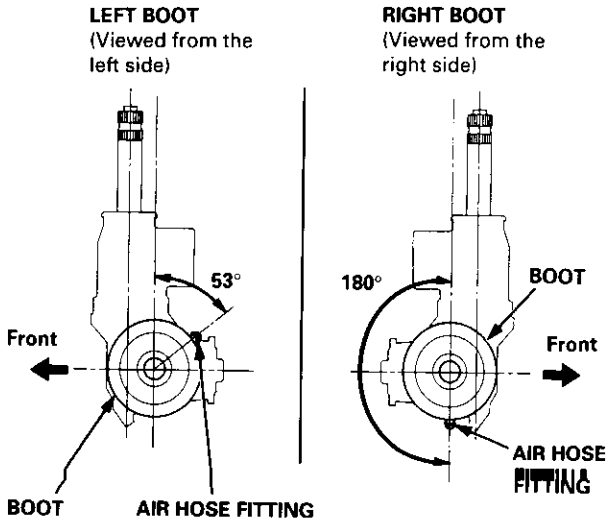

68. Install new boot bands on the boot, and bend both sets of locking tabs.

CAUTION: Stake the band locking tabs firmly.

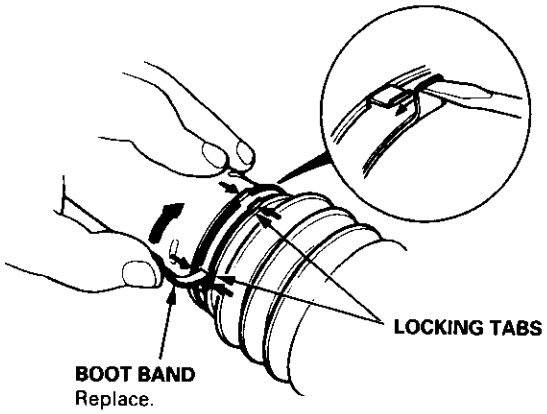

69. Lightly tap on the doubled-over portions to reduce their height.

70. Slide the rack right and left to be certain that the boots are not deformed or twisted.

71. Connect the air tube between the right and left boot.

72. Install the clips on the cylinder lines, then clamp the air tube with the clips.

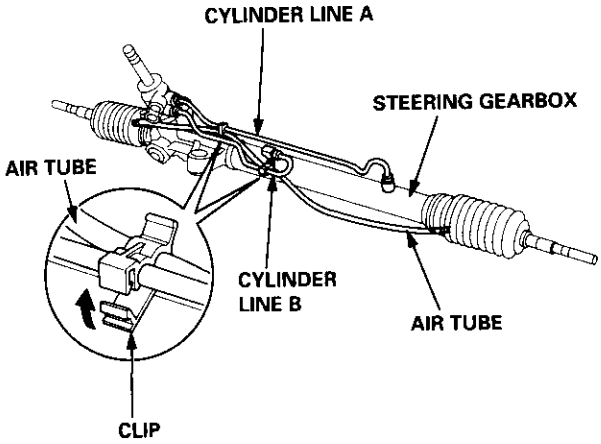

Installation

CAUTION: Be careful not to bend or damage the feed line and cylinder lines when installing the gearbox.

1. Before installing the gearbox, slide the rack all the way to right.

2. Install the mounting cushion on the steering gearbox.

3. Install the pinion shaft grommet, then insert the pinion shaft up through the bulkhead.

   NOTE: Align the notch in the pinion shaft grommet with the tab on the valve housing.

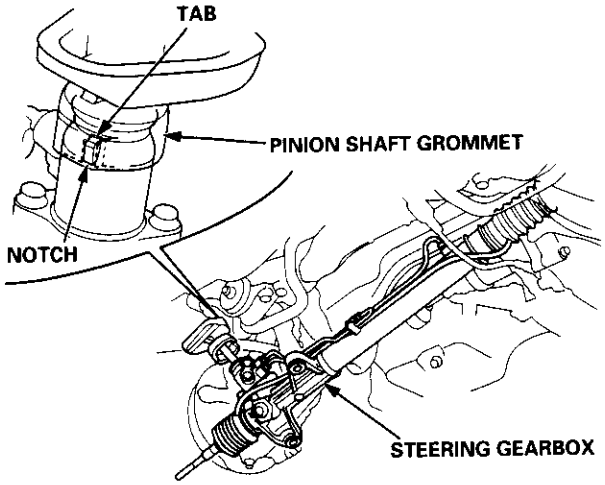

4. Install the mounting bracket over the mounting cushion, then install two gearbox mounting bolts.

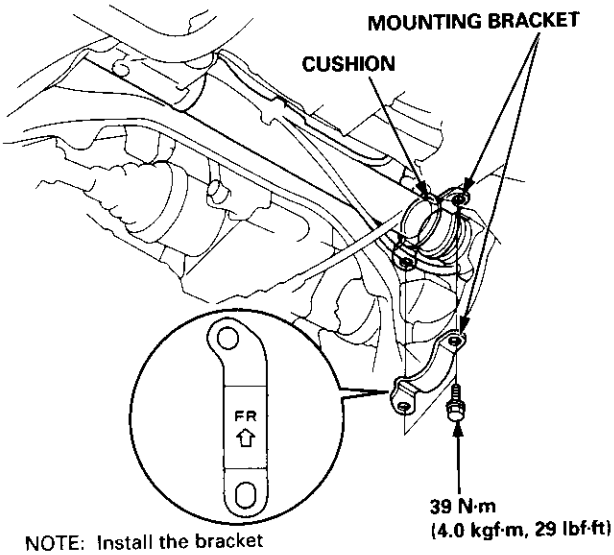

NOTE: Install the bracket with the arrow pointing toward the front.

(cont'd)

Installation (cont'd)

5. Install the stiffener plate with the two gearbox mounting bolts and stiffener plate attaching bolts.

   CAUTION: Be sure the air tube is not caught or pinched by stiffener plate.

   NOTE: Install the bolts loosely first, then tighten them securely.

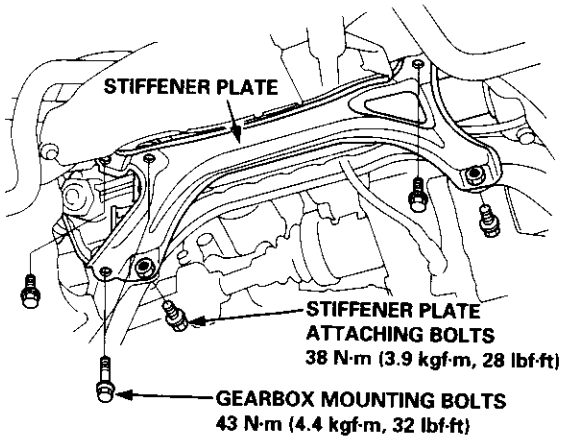

6. Install the return hose joint by tightening the 16 mm flare nut.

7. Connect the return hose securely, and tighten the adjustable hose clamp from the engine compartment.

8. Connect the feed line and tighten the 14 mm flare nut.

   NOTE: Make sure that there is no interference between the fluid lines, the rear beam or any other parts.

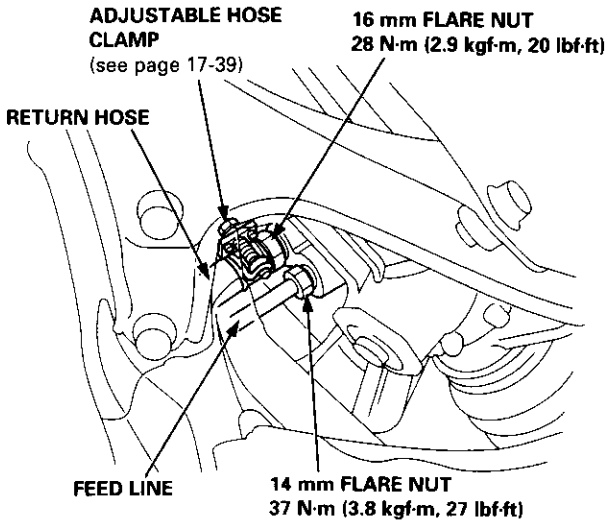

9. Center the steering rack within its stroke.

10. Slip the lower end of the steering joint onto the pinion shaft (line up the bolt hole with the groove around the shaft), and tighten the upper and lower steering joint bolt.

    NOTE:
    - Connect the steering shaft and pinion with the cable reel and steering rack centered.
    - Be sure that the lower steering joint bolt is securely in the groove in the steering gearbox pinion.
    - If the steering wheel and rack are not centered, reposition the serrations at lower end of the steering joint.

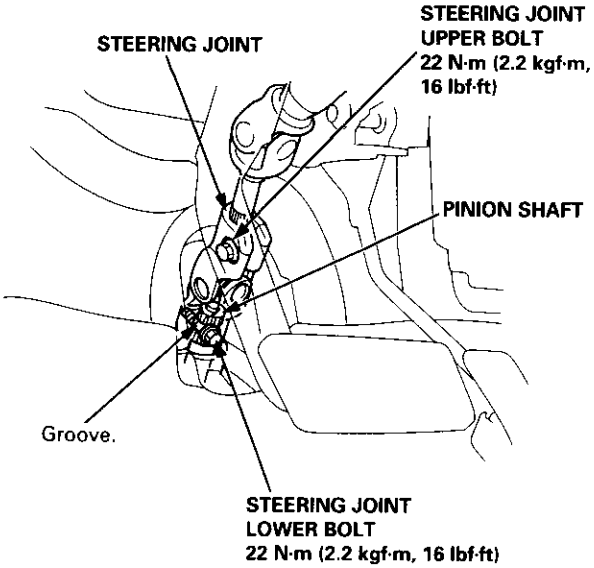

11. Center the cable reel by first rotating it clockwise until it stops. Then rotate it counterclockwise (approximately two turns) until the arrow mark on the label points straight up. Reinstall the steering wheel (see page 17-35).

12. Install the steering joint cover with the clamps and a clip.

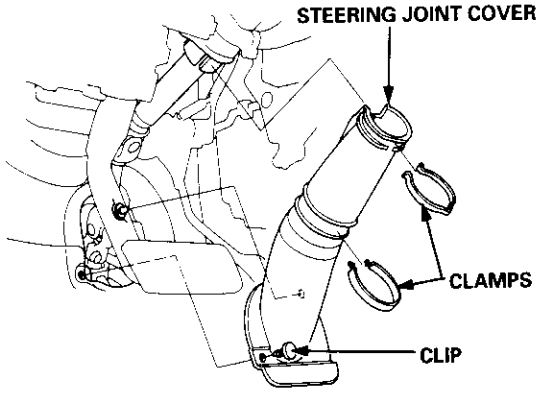

13. Reconnect the tie-rod ends to the steering knuckles, tighten the castle nut ('96 – '97 models) or nut ('98 – '00 models) to the specified torque, and install new cotter pins.

NOTE: Before connecting the tie-rod ends, wipe off any grease contamination from the ball joint tapered section and threads.

CAUTION: Torque the castle nut to the lower torque specification, then tighten it only far enough to align the slot with the pin hole. Do not align the nut by loosening ('96 – '97 models only).

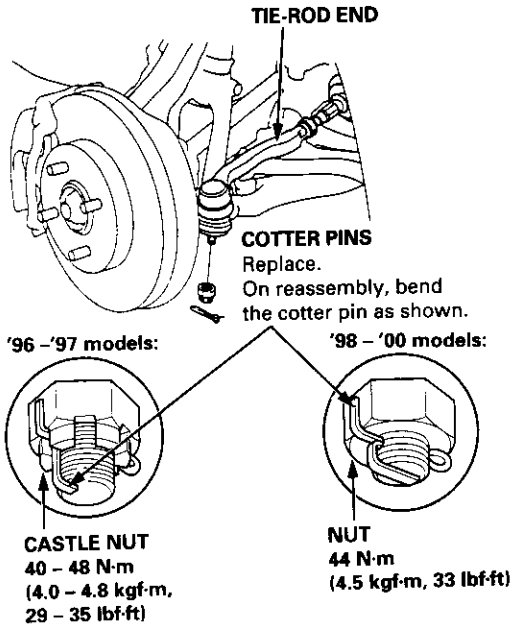

14. Install the exhaust pipe A or TWC (see section 9).

15. Connect the shift linkage (see section 13 or section 14).

16. Install the front wheels.

17. Fill the system with power steering fluid, and bleed air from the system (see page 17-33).

18. After installation, perform the following checks.
    - Start the engine, allow it to idle, and turn the steering wheel from lock-to-lock several times to warm up the fluid. Check the gearbox for leaks (see page 17-39).
    - Adjust the front toe (see section 18).
    - Check the steering wheel spoke angle. Adjust by turning the right and left tie-rods, if necessary.

    NOTE: Turn the right and left tie-rods equally.

Ball joint Boot Replacement

'96 – '97 models:

1. Remove the boot set ring and the boot.

   CAUTION: Do not contaminate the boot installation section with grease.

2. Pack the interior of the boot and lip with grease.

3. Wipe the grease off the sliding surface of the ball pin, then pack the lower area with fresh grease.

   CAUTION:
   - **Keep grease off the boot installation section and the tapered section of the ball pin.**
   - **Do not allow dust, dirt, or other foreign materials to enter the boot.**

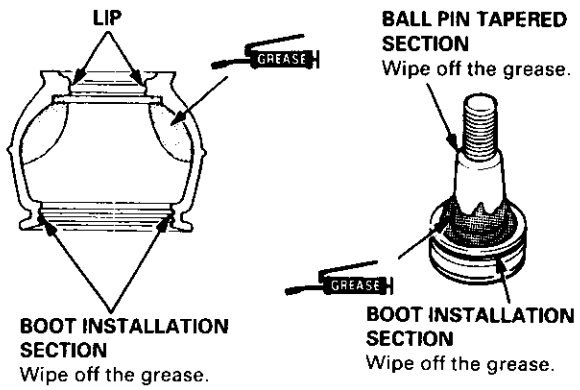

4. Install the boot in the groove of the boot installation section securely, then bleed the air from the boot.

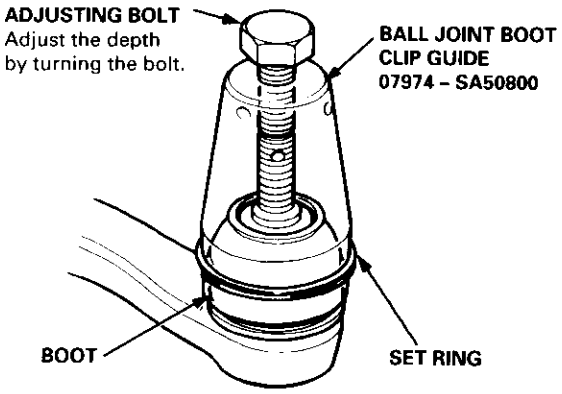

5. Adjust the special tool with the adjusting bolt until the end of the tool aligns with the groove on the boot. Slide the set ring over the tool and into position.

   CAUTION: After installing the boot, check the ball pin tapered section for grease contamination and wipe it if necessary.

'98 – '00 models:

CAUTION: Do not contaminate the boot installation section with grease.

1. Remove the boot from the tie-rod end, and wipe the old grease off the ball pin.

2. Pack the lower area of the ball pin with fresh grease.

3. Pack the interior of the new boot and lip with fresh grease.

   CAUTION:
   - **Keep grease off the boot installation section and the tapered section if the ball pin.**
   - **Do not allow dust, dirt, or other foreign materials to enter the boot.**

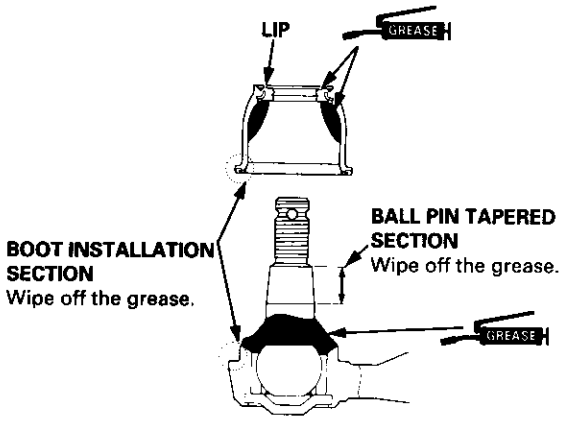

4. Install the new boot using the special tool as shown below.

   NOTE: The boot must not be a gap at the boot installation sections.

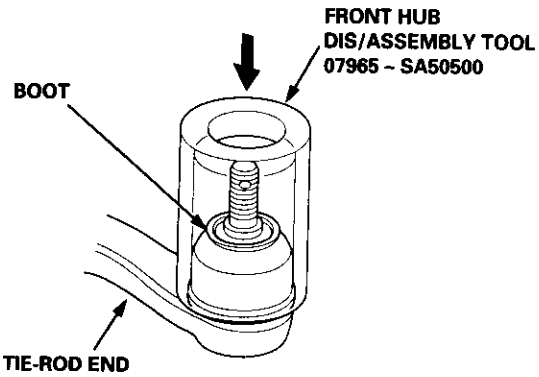

CAUTION: After installing the boot, check the ball pin tapered section for grease contamination, and wipe it if necessary.

Suspension

Special Tools 18-2
Component Locations
  Index 18-3
Wheel Alignment
  Caster 18-4
  Camber 18-4
  Front Toe Inspection/
    Adjustment 18-5
  Rear Toe Inspection/
    Adjustment 18-5
  Turning Angle Inspection 18-6
Wheel/Hub Inspection
  Bearing End Play 18-7
  Wheel Runout 18-7
Front Suspension
  Suspension Arms Replacement
    ('96 – 99 models) 18-8
  Suspension Arms Replacement
    ('99 2D Si and Si-R models) 18-9
  Knuckle/Hub Replacement 18-10
  Lower Ball Joint Replacement 18-16
  Ball Joint Boot Replacement 18-17
Front Damper
  Removal 18-17
  Disassembly/Inspection 18-18
  Reassembly 18-19
  Installation 18-19
Rear Suspension
  Suspension Arms Replacement
    ('96 – 99 models) 18-21
  Suspension Arms Replacement
    ('99 2D Si and Si-R models) 18-22
  Hub Bearing Unit Replacement 18-23
  Upper Arm Bushing
    Replacement 18-25
Rear Damper
  Removal 18-26
  Disassembly/Inspection 18-27
  Reassembly 18-28
  Installation 18-29

Special Tools

Ref. No.	Tool Number	Description	Qty	Page Reference
①	07GAF – SE00200	Hub Assembly Guide Attachment	1	18-15
②	07GAF – SE00401	Hub Dis/Assembly Base	1	18-14
③	07GAG – SD40700	Ball Joint Boot Clip Guide	1	18-17
④	07JAF – SH20110	Hub Dis/Assembly Pilot, 38 mm	1	18-14
⑤	07JAF – SH20120	Hub Dis/Assembly Shaft, 22.4 x 25.4 mm	1	18-14
⑥	07JAF – SH20200	Ball Joint Remover Base	1	18-16
⑦	07MAC – SL00200	Ball Joint Remover, 28 mm	1	18-12, 13
⑧	07746 – 0010500	Attachment, 62 x 68 mm	1	18-14
⑨	07749 – 0010000	Driver	1	18-14
⑩	07947 – 6340201	Driver Attachment	1	18-15
⑪	07965 – SB00100	Ball Joint Remover/Installer	1	18-16
⑫	07965 – SB00200	Ball Joint Installer Base	1	18-16
⑬	07965 – SD90100	Support Base	1	18-15
⑭	07974 – SA50700	Ball Joint Boot Clip Guide	1	18-16, 17

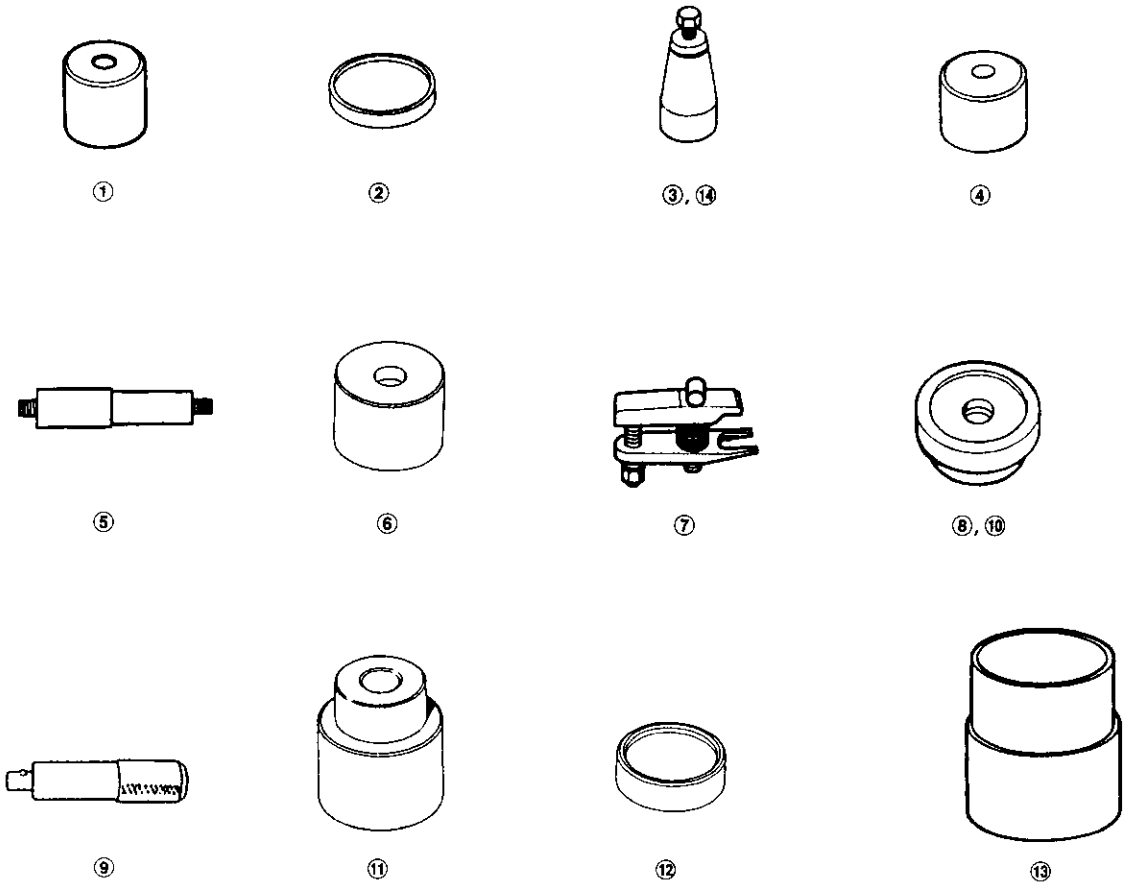

Index

Wheel Alignment, page 18-4

Front Suspension:

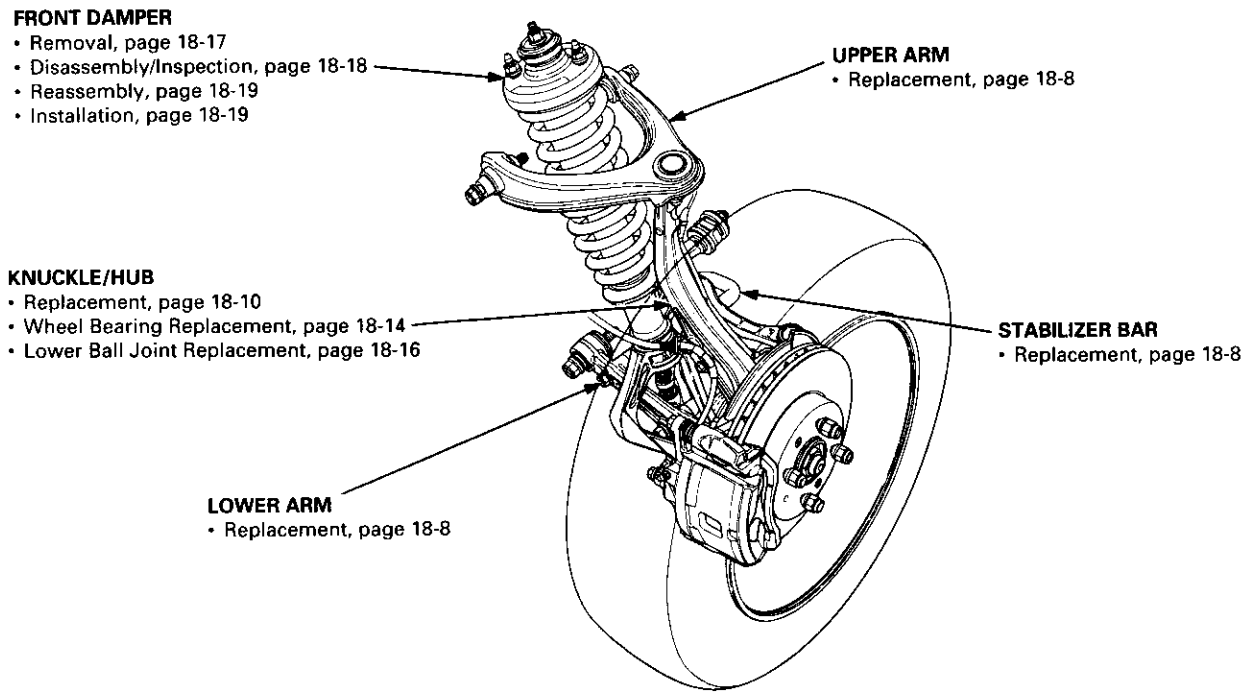

Rear Suspension:

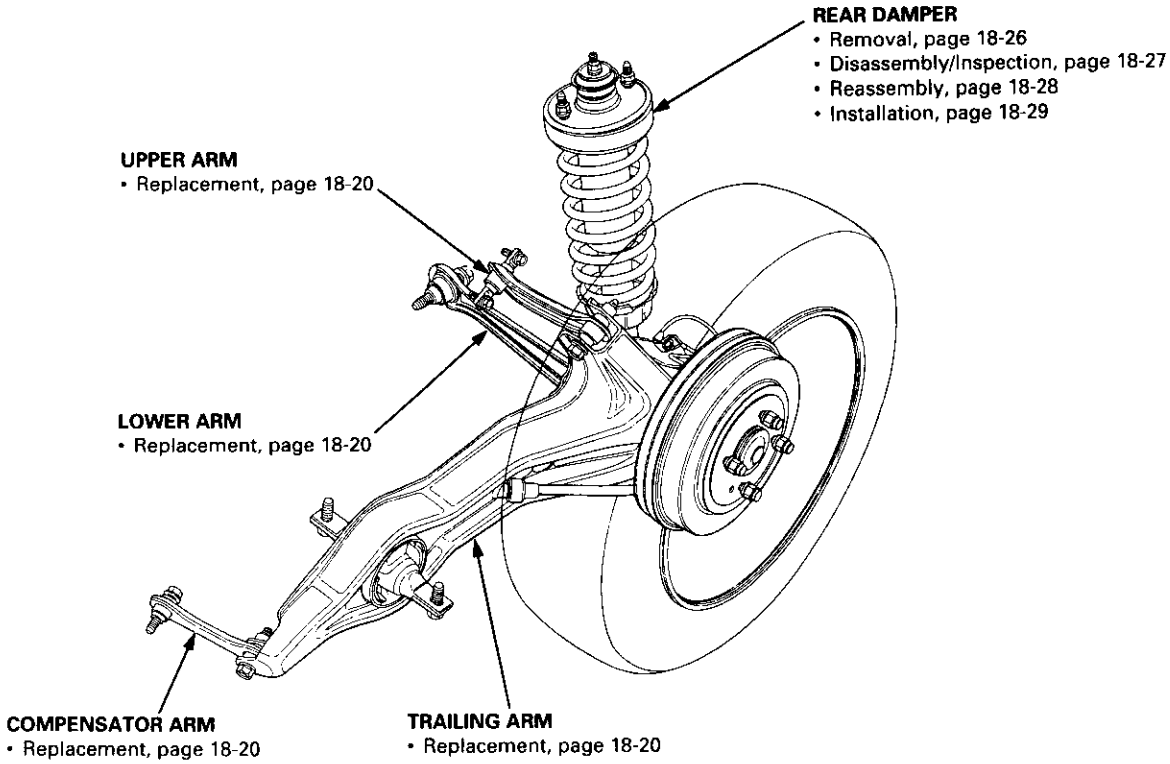

Caster

NOTE: For proper inspection/adjustment of the wheel alignment check and adjust the following before checking the alignment.

- Check that the suspension is not modified.
- Check the tire size and tire pressure.
- Check the runout of the wheels and tires.
- Check the suspension ball joints. (Hold a wheel with your hands and move it up and down and right and left to check for wobbling.)

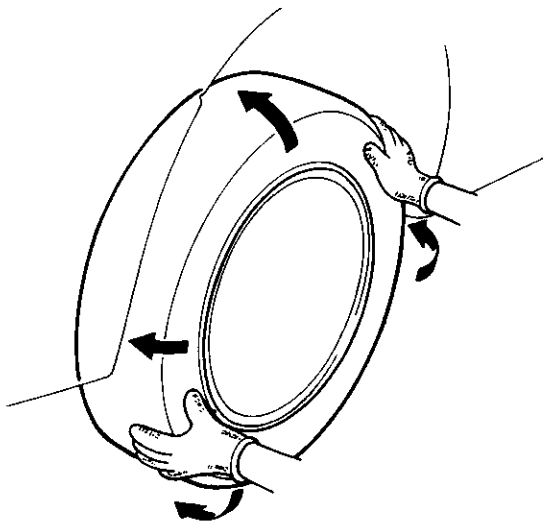

Inspection

NOTE: Use commercially-available computerized four wheel alignment equipment to measure wheel alignment (caster, camber, toe, and turning angle). Follow the equipment manufacturer's instructions.

1. Check the caster angle.

   Caster angle: 1°40′ ± 1°

2. If out of specification, check for bent or damaged suspension components.

Camber

Inspection

NOTE: Use commercially-available computerized four wheel alignment equipment to measure wheel alignment (caster, camber, toe, and turning angle). Follow the equipment manufacturer's instructions.

1. Check the camber angle.

   Camber angle:
   Front: 0°00′ ± 1°
   Rear: – 1° ± 1°

2. If out of specification, check for bent or damaged suspension components.

Front Toe Inspection/Adjustment

NOTE: Use commercially-available computerized four wheel alignment equipment to measure wheel alignment (caster, camber, toe, and turning angle). Follow the equipment manufacturer's instructions.

1. Check the tire pressure.

2. Center steering wheel spokes.

3. Check the toe with the wheels pointed straight ahead.

   Front toe: IN 1 ± 2 mm (IN 1/16 ± 1/16 in)

   — If adjustment is required, go on to step 4.

   — If no adjustment is required, remove alignment equipment.

4. Loosen the tie-rod locknuts, and turn both tie-rods in the same direction until the front wheels are in straight ahead position.

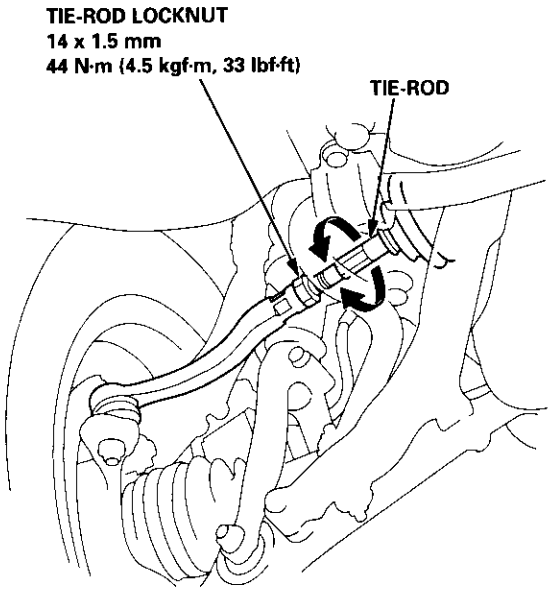

5. Turn both tie-rods equally until the toe reading on the turning radius gauge is correct.

6. After adjusting, tighten the tie-rod locknuts.

   NOTE: Reposition the tie-rod boot if it is twisted or displaced.

Rear Toe Inspection/Adjustment

NOTE: Use commercially-available computerized four wheel alignment equipment to measure wheel alignment (caster, camber, toe, and turning angle). Follow the equipment manufacturer's instructions.

1. Release parking brake.

   NOTE:
   - Measure difference in toe measurements with the wheels pointed straight ahead.
   - If the parking brake is engaged, you may get an incorrect reading.

   Rear toe-in: 2^{+2}_{-1} mm ($1/16^{+1/16}_{-1/16}$ in)

   — If adjustment is required, go to step 2.

   — If no adjustment is required, remove alignment equipment.

2. Before adjustment, note the locations of adjusting bolts on the right and left compensator arms.

3. Loosen the adjusting bolts, and slide the compensator arm in or out, as shown, to adjust the toe.

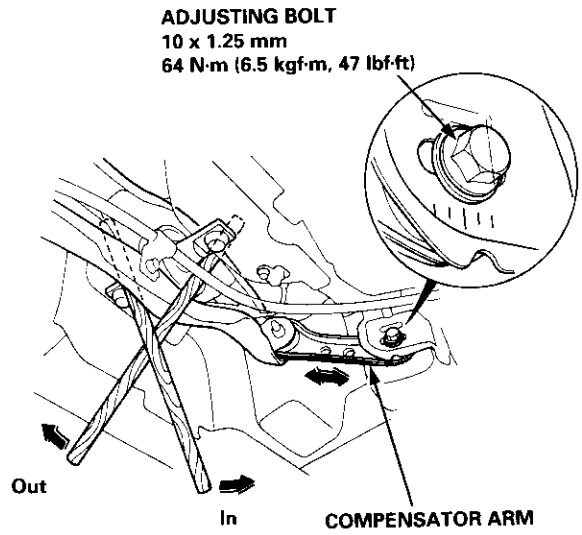

4. Tighten the adjusting bolts.

- Example:
  After the rear toe inspection, the wheel is 2 mm (0.08 in) out of the specification.
  — Move the arm so the adjusting bolt moves 2 mm (0.08 in) inward from the position recorded before the adjustment.
  — The distance the adjusting bolt is moved should be equal to the amount out-of-specification.

Turning Angle Inspection

NOTE: Use commercially-available computerized four wheel alignment equipment to measure wheel alignment (caster, camber, toe, and turning angle). Follow the equipment manufacturer's instructions.

1. Turn the wheel right and left while applying the brake, and measure the turning angle of both wheels.

   Turning angle:
   Inward wheel: 39°50′
   Outward wheel (reference): 33°10′

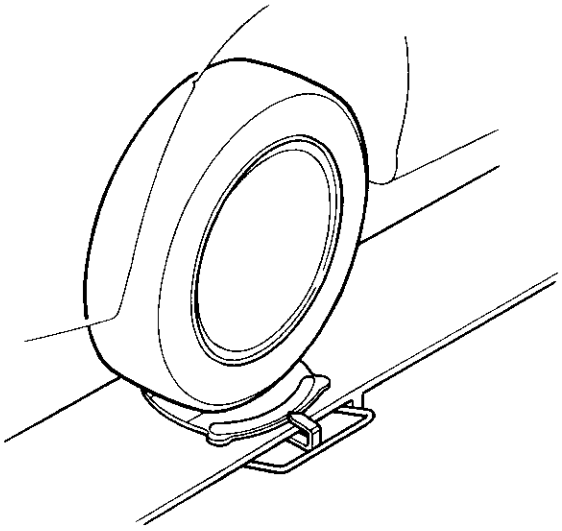

2. If the turning angle is not within the specifications, check for bent or damaged suspension components.

Bearing End Play

1. Raise the vehicle off the ground, and support it with safety stands in the proper locations (see section 1).
2. Remove the wheels, then reinstall the wheel nuts.
3. Attach the dial gauge as shown.
4. Measure the bearing end play by moving the disc in or outward.

   Front/Rear:
   Standard: 0 – 0.05 mm (0 – 0.002 in)

Front:

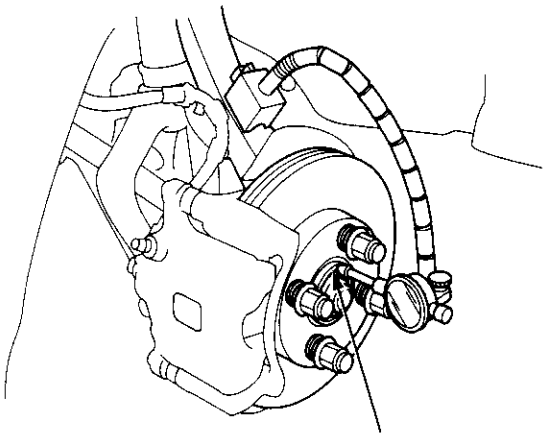

Measure end play at the hub flange.

Rear:

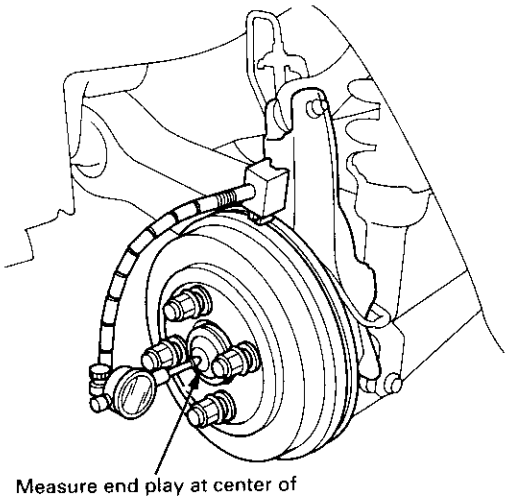

Measure end play at center of the hub cap.

5. If the bearing end play measurement is more than the standard, replace the wheel bearing.

Wheel Runout

1. Raise the vehicle off the ground, and support it with safety stands in the proper locations (see section 1).
2. Check for bent or deformed wheels.
3. Attach the dial gauge as shown.
4. Measure the wheel runout by turning the wheel.

   Front and Rear Wheel Axial Runout:
   Standard:
   Steel Wheel: 0 – 1.0 mm (0 – 0.04 in)
   Aluminum Wheel: 0 – 0.7 mm (0 – 0.03 in)

   Service Limit: 2.0 mm (0.08 in)

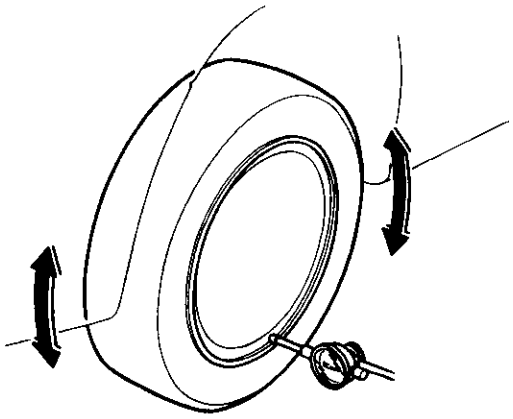

   Front and Rear Wheel Radial Runout:
   Standard:
   Steel Wheel: 0 – 1.0 mm (0 – 0.04 in)
   Aluminum Wheel: 0 – 0.7 mm (0 – 0.03 in)

   Service Limit: 1.5 mm (0.06 in)

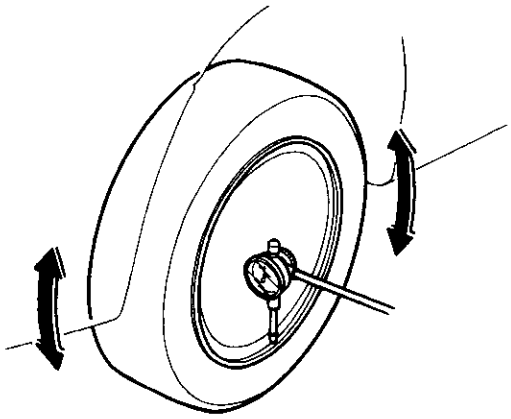

5. If the wheel runout is more than the service limit, replace the wheel.

Suspension Arms Replacement ('96 – 99 models)

CAUTION:
- **Replace the self-locking nuts after removal.**
- **The vehicle should be on the ground before any bolts or nuts connected to rubber mounts or bushings are tightened.**

NOTE:
- Wipe off any dirt, oil or grease on the threads before tightening the fasteners.
- The right and left damper forks are not interchangeable. The left damper fork is marked with "AL" while the right damper fork is marked with "AR".
- The right and left upper arms are not interchangeable. The left upper arm is marked with "SO1-L" while the right upper arm is marked with "SO1-R".
- Before tightening the upper and lower mounting nuts on the stabilizer link, adjust the location of the link with the suspension under vehicle load.
- When installing the radius arm washers, the "FR" mark faces the front of the vehicle.
- After installing the suspension arm, check the front wheel alignment, and adjust if necessary (see page 18-4).

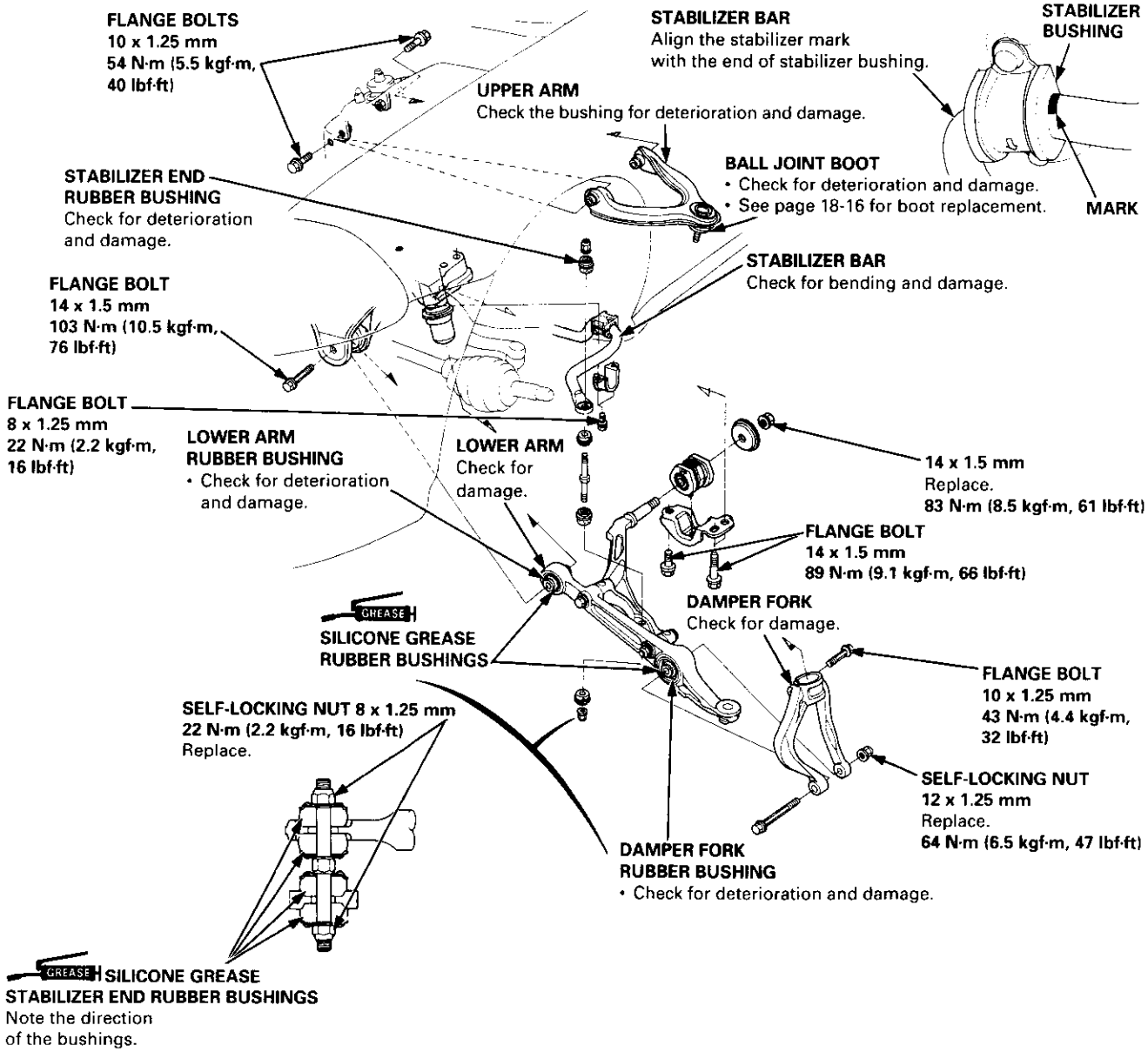

Suspension Arms Replacement ('99 2D Si and Si-R models)

CAUTION:

- **Replace the self-locking nuts after removal.**
- **The vehicle should be on the ground before any bolts or nuts connected to rubber mounts or bushings are tightened.**

NOTE:

- Wipe off any dirt, oil or grease on the threads before tightening the fasteners.
- The right and left damper forks are not interchangeable. The left damper fork is marked with "AL" while the right damper fork is marked with "AR".
- The right and left upper arms are not interchangeable. The left upper arm is marked with "SO1-L" while the right upper arm is marked with "SO1-R".
- Before tightening the upper and lower mounting nuts on the stabilizer link, adjust the location of the link with the suspension under vehicle load.
- When installing the radius arm washers, the "FR" mark faces the front of the vehicle.
- After installing the suspension arm, check the front wheel alignment, and adjust if necessary (see page 18-4).

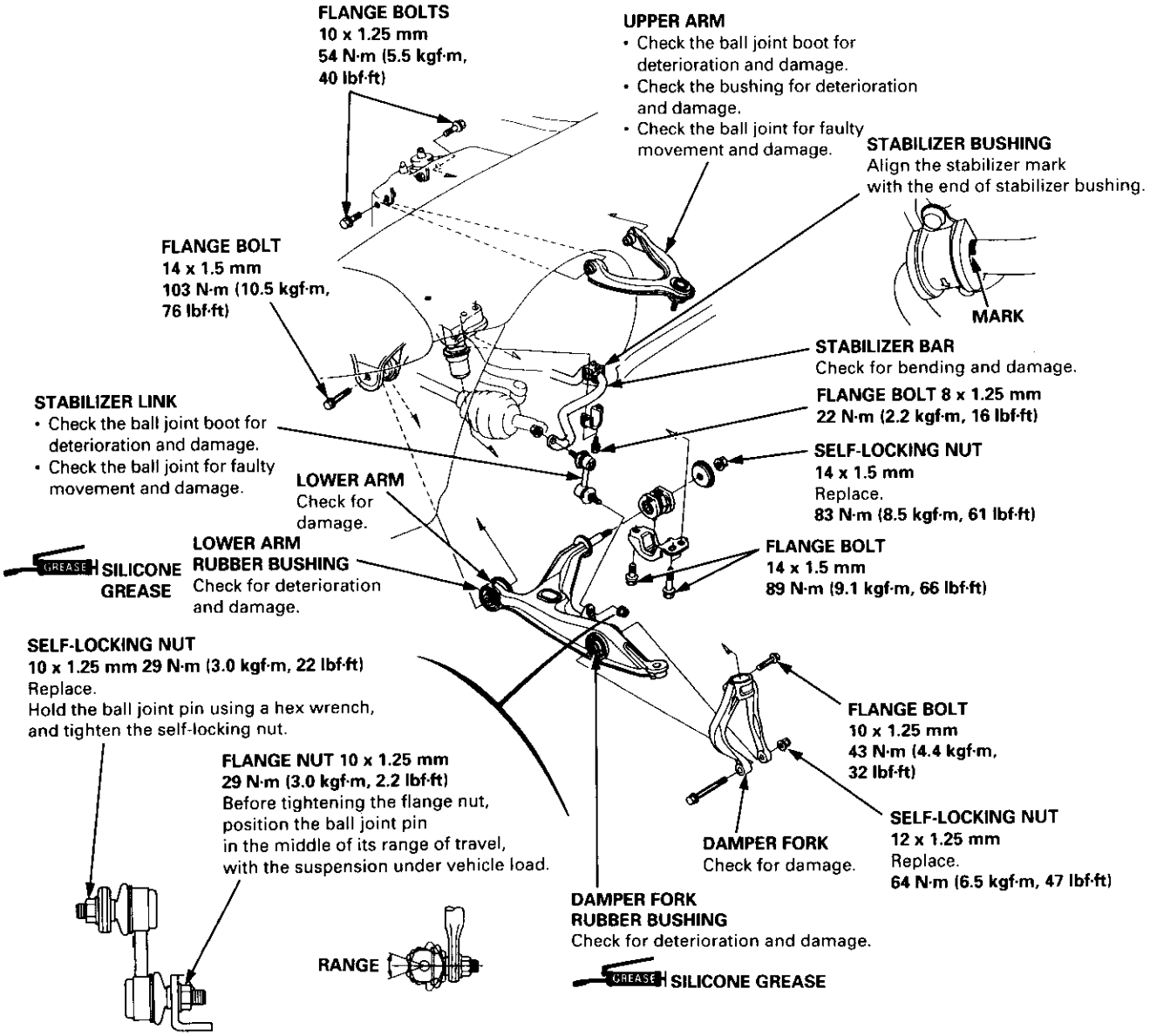

Knuckle/Hub Replacement

CAUTION:
- **Replace the self-locking nuts after removal.**
- **The vehicle should be on the ground before any bolts or nuts connected to rubber mounts or bushings are tightened.**
- **Torque the castle nut to the lower torque specification, then tighten it only far enough to align the slot with the pin hole. Do not align the nut by loosening.**

NOTE:
- Use only genuine Honda wheel weights for aluminum wheels. Non-genuine wheel weights may corrode and damage the aluminum wheels.
- On the aluminum wheels, remove the center cap from the inside of the wheel after removing the wheel.
- Before installing the brake disc, clean the mating surfaces of the front hub and brake disc.
- Before installing the wheel, clean the mating surfaces of the brake disc and wheel.
- Wipe off the grease before tightening the nut at the ball joint.

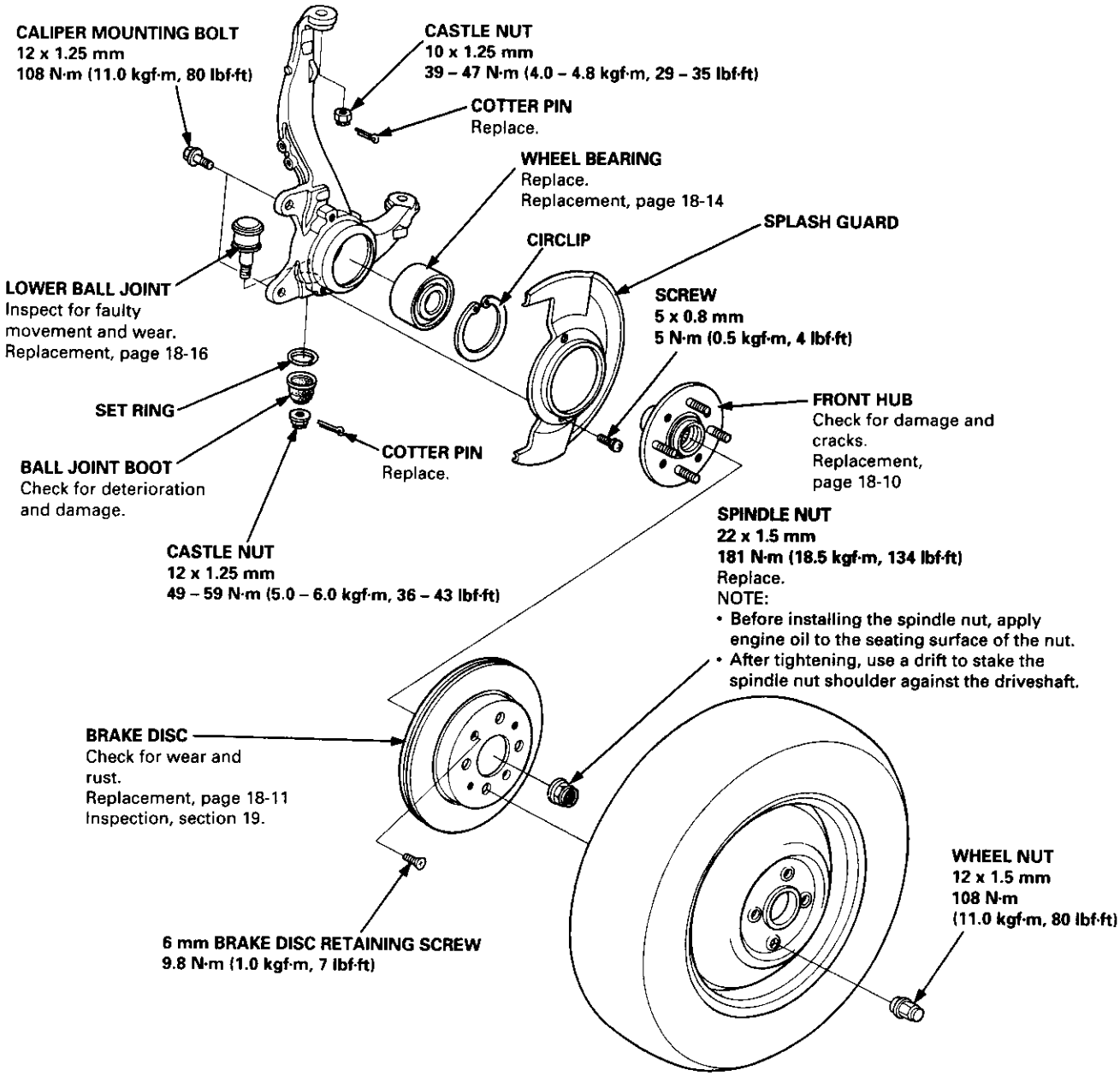

1. Loosen the wheel nuts slightly.

2. Raise the front of the vehicle, and support it with safety stands in the proper locations (see section 1).

3. Remove the wheel nuts and wheel.

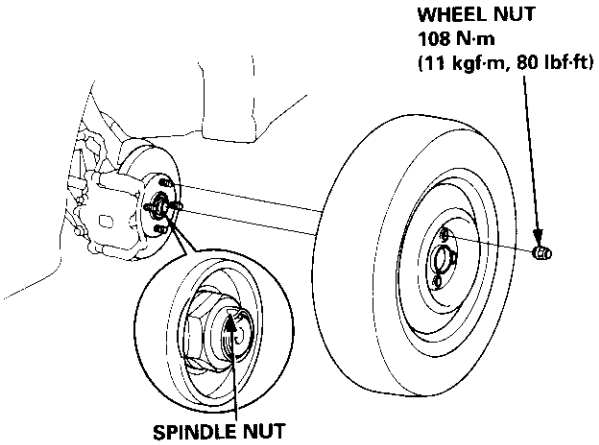

4. Raise the locking tab on the spindle nut, then remove the nut.
5. Remove the brake hose mounting bolts.

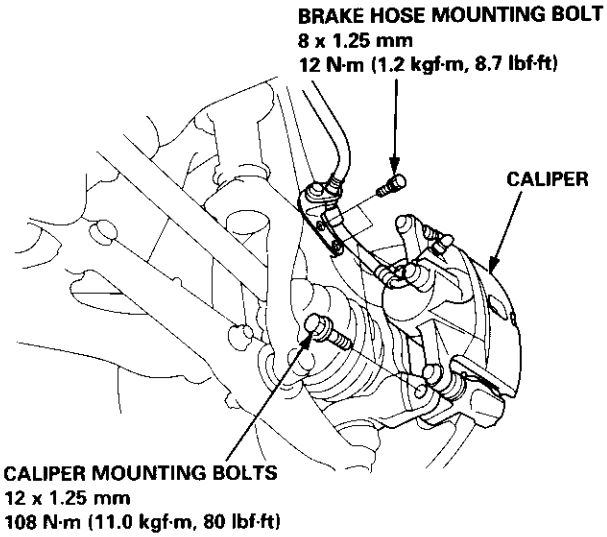

6. Remove the caliper mounting bolts and hang the caliper assembly to one side.

CAUTION: To prevent accidental damage to the caliper assembly or brake hose, use a short piece of wire to hang the caliper from the undercarriage.

7. Remove the 6 mm brake disc retaining screws.

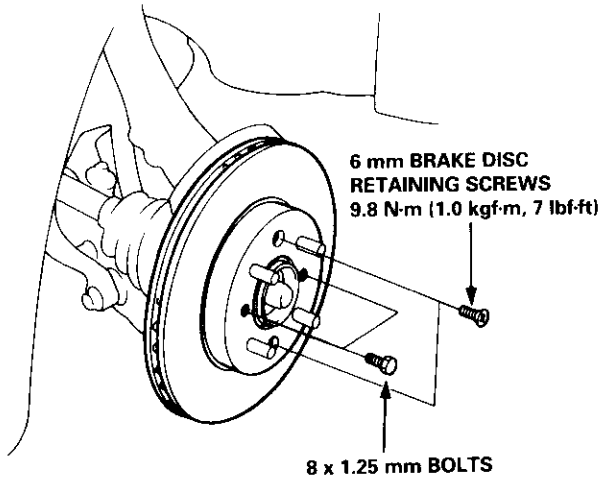

8. Screw two 8 x 1.25 mm bolts into the disc to push it away from the hub.

   NOTE: Turn each bolt two turns at a time to prevent cocking the disc excessively.

9. Remove the brake disc from the knuckle.

10. Check the front hub for damage and cracks.

11. Remove the wheel sensor from the knuckle (for vehicles with ABS).

    NOTE: Do not disconnect the wheel sensor connector.

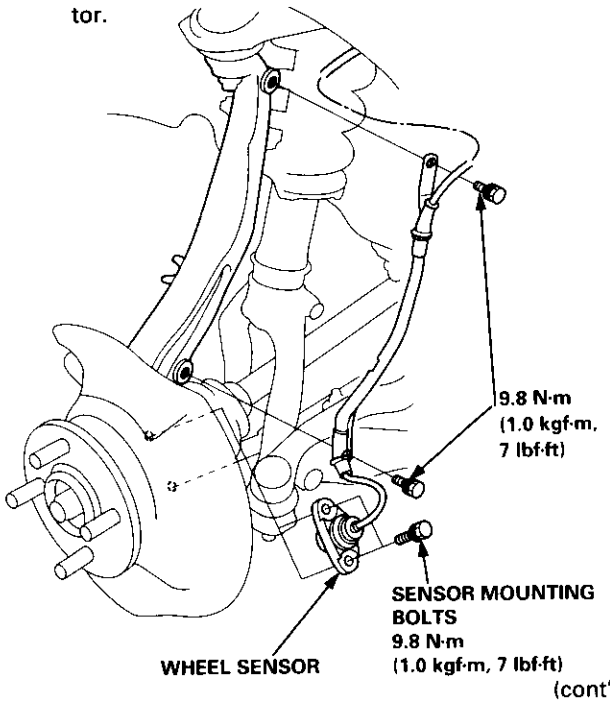

(cont'd)

Knuckle/Hub Replacement (cont'd)

NOTE: Use the special tool to separate the ball joints from the suspension or steering arm.

CAUTION: Be careful not to damage the ball joint boot.

12. Clean any dirt or grease off the ball joint.

13. Remove the cotter pin from the steering arm, and remove the nut.

14. Apply grease to the special tool on the areas shown. This will ease installation of the tool and prevent damage to the pressure bolt threads.

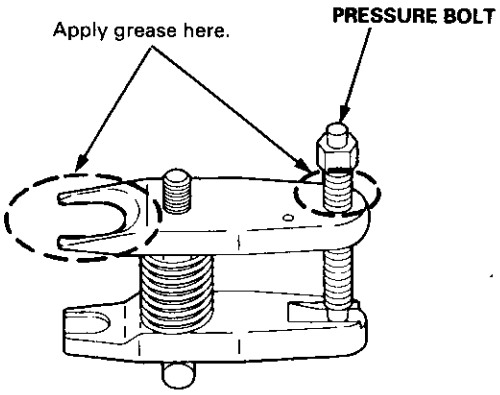

15. Install a 10 mm hex nut onto the ball joint. Be sure that the hex nut is flush with the ball joint pin end to prevent damage to the threaded end of the ball joint.

16. Install the special tool as shown. Insert the jaws carefully, making sure you do not damage the ball joint boot. Adjust the jaw spacing by turning the pressure bolt.

    NOTE: If necessary, apply penetrating type lubricant to loosen the ball joint.

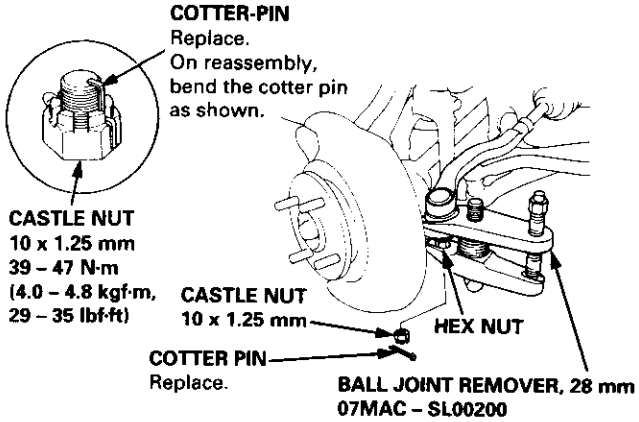

17. Once the special tool is in place, turn the adjusting bolt as necessary to make the jaws parallel. Then hand-tighten the pressure bolt, and recheck the jaws to make sure they are still parallel.

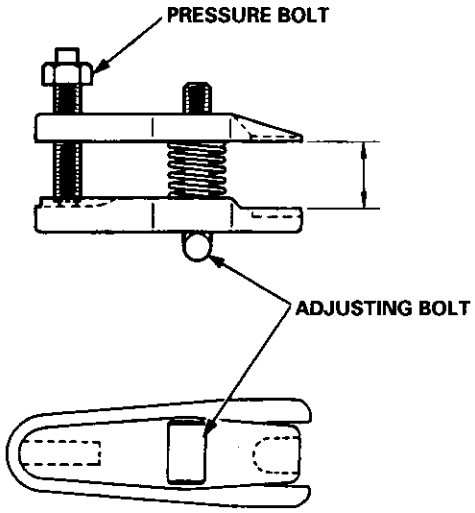

    NOTE: After making the adjustment to the adjusting bolt, be sure the head of the adjusting bolt is in this position to the allow the jaw to pivot.

18. With a wrench, tighten the pressure bolt until the ball joint shaft pops loose from the steering arm.

    WARNING Wear eye protection. The ball joint can break loose suddenly and scatter dirt or other debris into your eyes.

19. Remove the tool, then remove the nut from the end of the ball joint and pull the ball joint out of the steering/suspension arm. Inspect the ball joint boot and replace it if damaged.

20. Remove the cotter pin from the lower arm ball joint castle nut, and remove the nut.

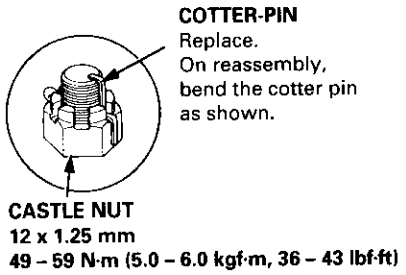

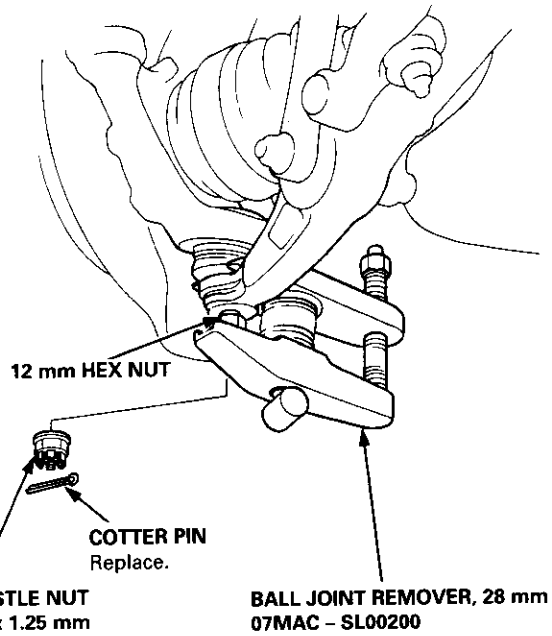

21. Install a 12 mm hex nut onto the ball joint. Be sure that the hex nut is flush with the ball joint pin end, or the threaded section of the ball joint pin might be damaged by the ball joint remover.

22. Use the special tool as shown on page 18-12 to separate the ball joint and lower arm.

    NOTE: If necessary, apply penetrating type lubricant to loosen the ball joint.

23. Remove the cotter pin from the upper ball joint castle nut, and remove the nut.

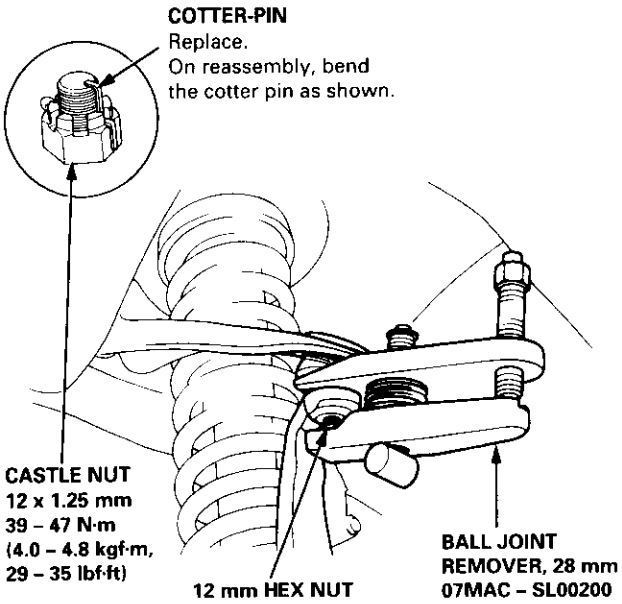

24. Install the 12 mm hex nut onto the ball joint. Be sure that the hex nut is flush with the ball joint pin end, or the threaded section of the ball joint pin might be damaged by the ball joint remover.

25. Use the special tool as shown on page 18-12 to separate the ball joint and knuckle.

    NOTE: If necessary, apply penetrating type lubricant to loosen the ball joint.

26. Pull the knuckle outward and remove the driveshaft outboard joint from the knuckle by tapping the driveshaft end with a plastic hammer, then remove the knuckle.

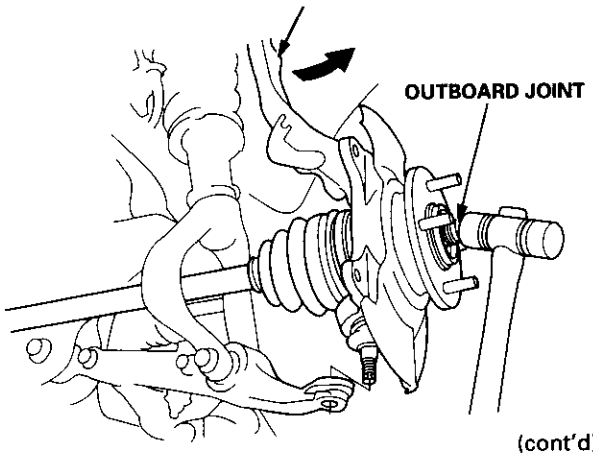

(cont'd)

Knuckle/Hub Replacement (cont'd)

NOTE: Replace the bearing with a new one after removal.

27. Separate the hub from the knuckle using the special tools and a hydraulic press.

CAUTION:
- **Take care not to distort the splash guard.**
- **Hold onto the hub to keep it from falling when pressed clear.**
- **To prevent damage to the tool, make sure the threads are fully engaged before pressing.**

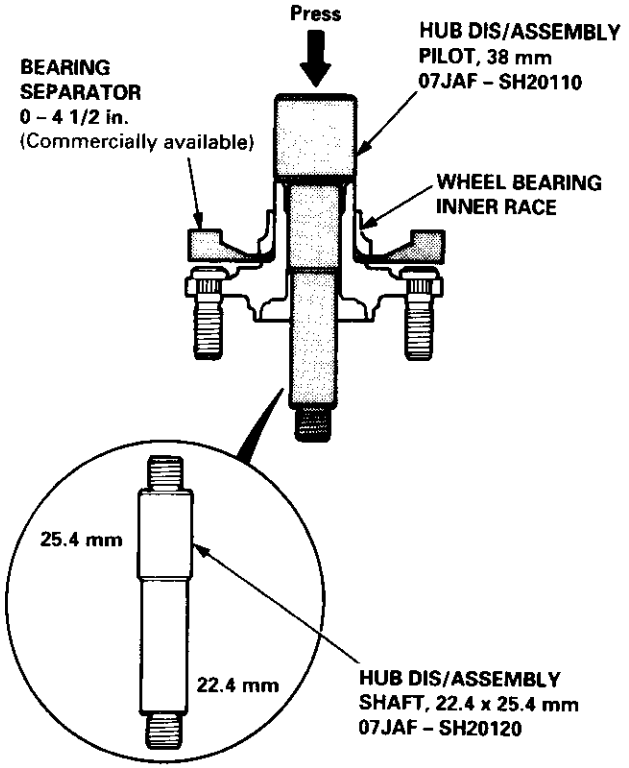

28. Remove the circlip and the splash guard from the knuckle.

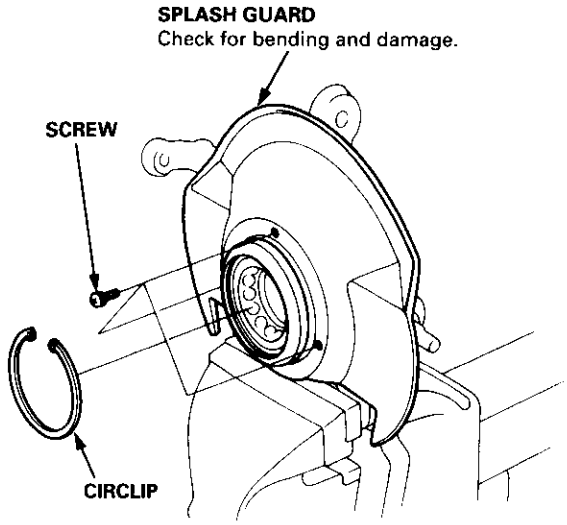

29. Press the wheel bearing out of the knuckle using the special tools and a press as shown.

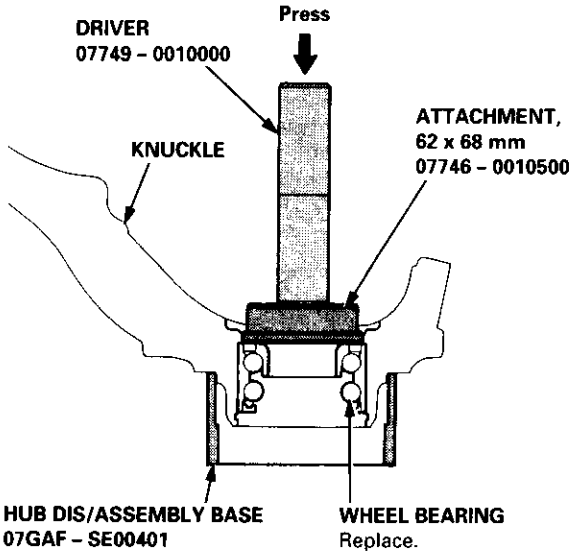

30. Press the wheel bearing inner race from the hub using the special tools, a bearing separator, and a press as shown.

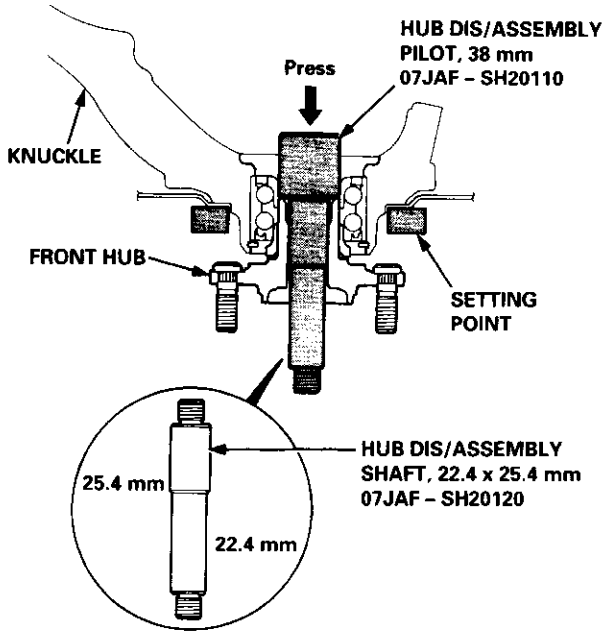

NOTE: Wash the knuckle and hub thoroughly in high flash point solvent before reassembly.

31. Press a new wheel bearing into the knuckle using the special tools and a press as shown.

NOTE: Place the wheel bearing onto the knuckle with the pack seal (metal color) toward the inside. Be careful not to damage the sleeve of the pack seal.

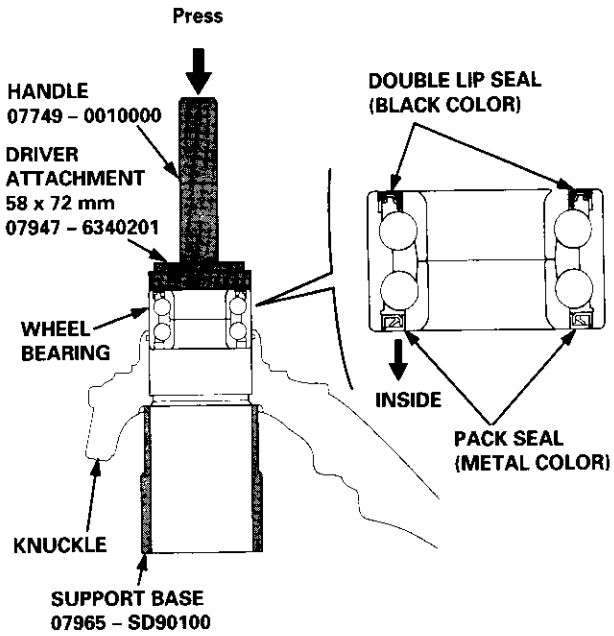

32. Install the circlip securely in the knuckle groove.

33. Install the splash guard, and tighten the screws.

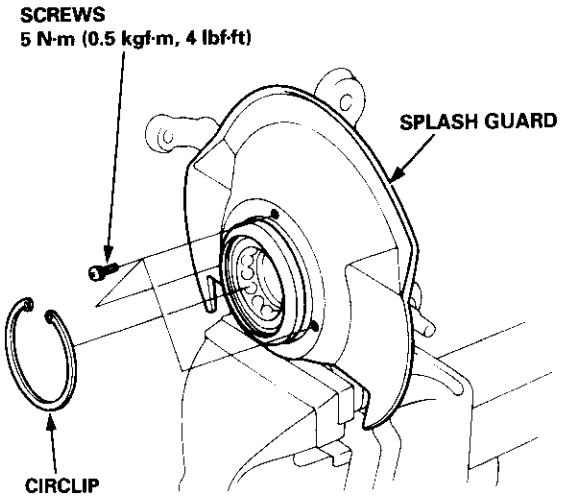

34. Install the hub on the knuckle using the special tools shown and a hydraulic press as shown.

CAUTION: Take care not to distort the splash guard.

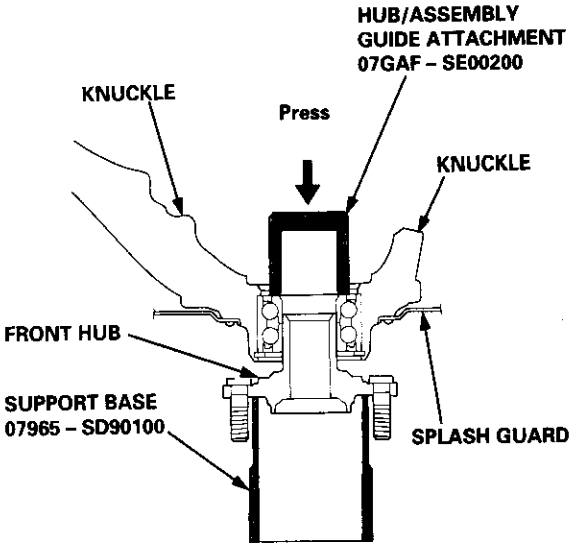

35. Install the knuckle in the reverse order of removal, and pay particular attention to the following items:

- Be careful not to damage the ball joint boots when installing the knuckle.
- Torque all mounting hardware to the specified torque values.
- Torque the castle nuts to the lower torque specifications, then tighten them only far enough to align the slot with the pin hole. Do not align the castle nut by loosening.
- Install new cotter pins into the castle nuts after torquing.
- Avoid twisting the sensor wires when installing the wheel sensor.
- Before installing the brake disc, clean the mating surfaces of the front hub and the inside of the brake disc.
- Before installing the wheel, clean the mating surface of the brake disc and the inside of the wheel.
- Check the front wheel alignment, and adjust it if necessary (see page 18-4).

Lower Ball Joint Replacement

1. Remove the knuckle (see page 18-11).
2. Remove the boot by prying the set ring off.
3. Check the boot for deterioration and damage, replace if necessary.
4. Install the special tools onto the ball joint and tighten the castle nut.
5. Position the special tools over the ball joint as shown, then set the assembly in a vise. Press the ball joint out of the knuckle.

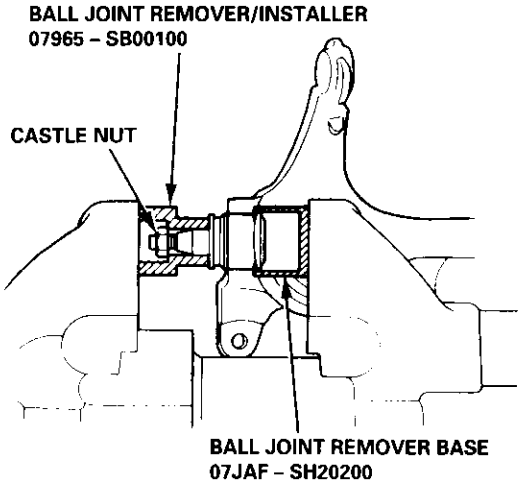

6. Place the ball joint in position by hand.
7. Install the special tools over the ball joint as shown, then press the ball joint in.

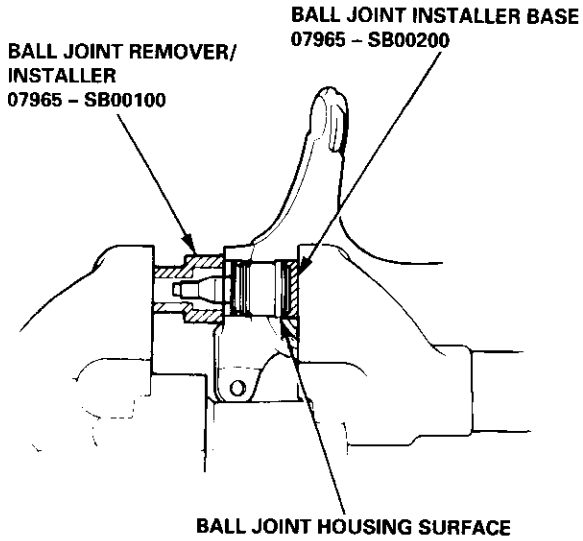

8. Install the ball joint boot and set ring using the special tool (see page 18-16).

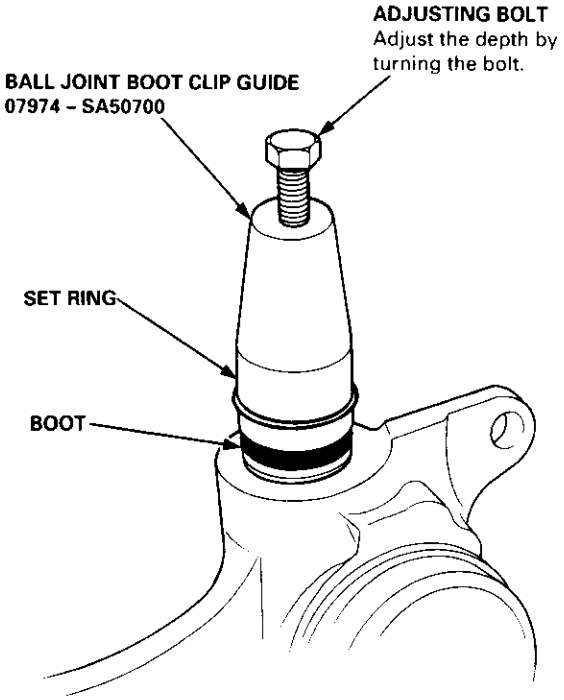

9. Install the knuckle in the reverse order of removal, and pay particular attention to the following items:
   - Be careful not to damage the ball joint boots when installing the knuckle.
   - Torque all mounting hardware to the specified torque values.
   - Torque the castle nuts to the lower torque specifications, then tighten them only far enough to align the slot with the pin hole. Do not align the castle nut by loosening.
   - Install new cotter pins into the castle nuts after torquing.
   - Avoid twisting the sensor wires when installing the wheel sensor.
   - Before installing the brake disc, clean the mating surfaces of the front hub and the inside of the brake disc.
   - Before installing the wheel, clean the mating surface of the brake disc and the inside of the wheel.
   - Check the front wheel alignment, and adjust it if necessary (see page 18-4).

Ball Joint Boot Replacement

1. Remove the set ring and the boot.

   CAUTION: Do not contaminate the boot installation section with grease.

2. Pack the interior of the boot and lip with grease.

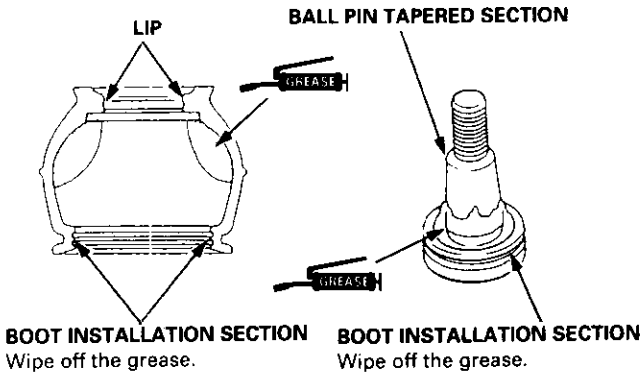

3. Wipe the grease off the sliding surface of the ball pin and pack with fresh grease.

   CAUTION:
   - **Keep grease off the boot installation section and the tapered section of the ball pin.**
   - **Do not allow dust, dirt, or other foreign materials to enter the boot.**

4. Install the boot into the groove of the boot installation section securely, then bleed the air.

5. Install the upper and lower ball joint boot set rings using the special tools as follows:

   Lower ball joint: Adjust the special tool with the adjusting bolt until the end of the tool aligns with the groove on the boot. Slide the set ring over the tool and into position.

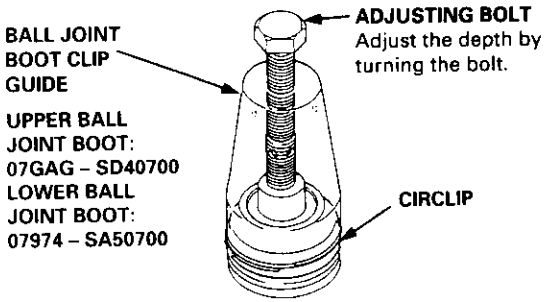

CAUTION: After installing the boot, check the ball pin tapered section for grease contamination and wipe it if necessary.

Removal

1. Remove the front wheels (see page 18-11).

2. Remove the damper pinch bolt from the top of damper fork.

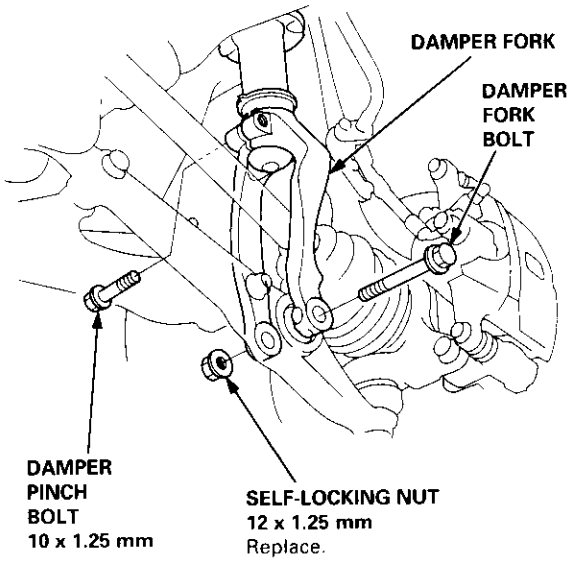

3. Remove the damper fork bolt and self-locking nut from the bottom of the damper fork, then remove damper fork.

4. Remove the damper by removing the two nuts.

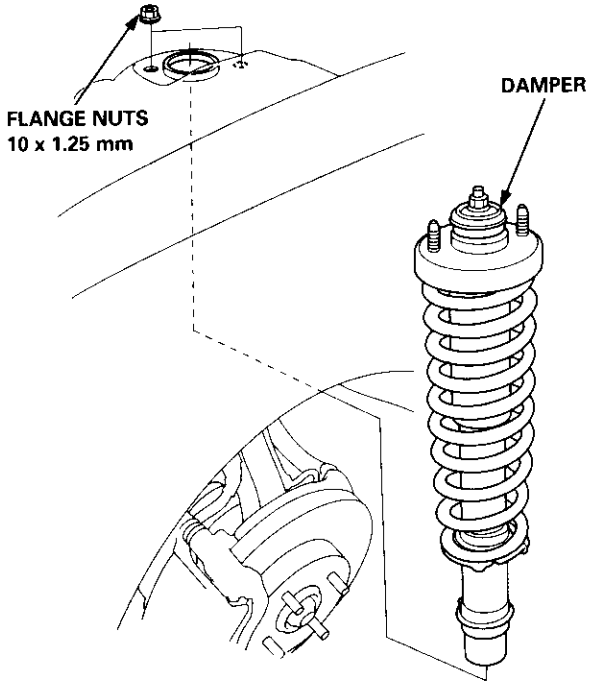

Disassembly/Inspection

Disassembly

1. Compress the damper spring with the spring compressor according to the manufacturer's instructions, then remove the self-locking nut.

   CAUTION: Do not compress the spring more than necessary to remove the nut.

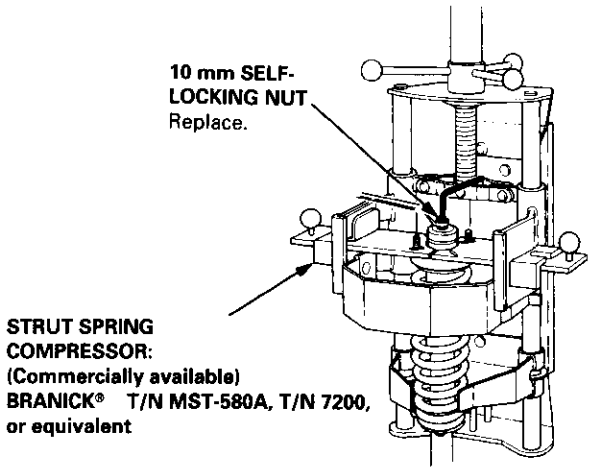

2. Release the pressure from the spring compressor, then disassemble the damper as shown in the next column.

Inspection

1. Reassemble all parts, except the spring.
2. Push on the damper assembly as shown.

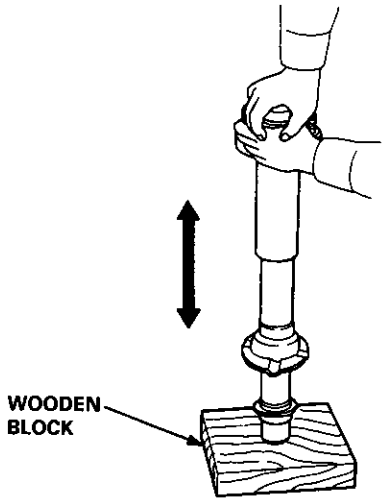

3. Check for smooth operation through a full stroke, both compression and extension.
   NOTE: The damper should move smoothly. If it does not (no compression or no extension), the gas is leaking, and the damper should be replaced.
4. Check for oil leaks, abnormal noises, or binding during these tests.

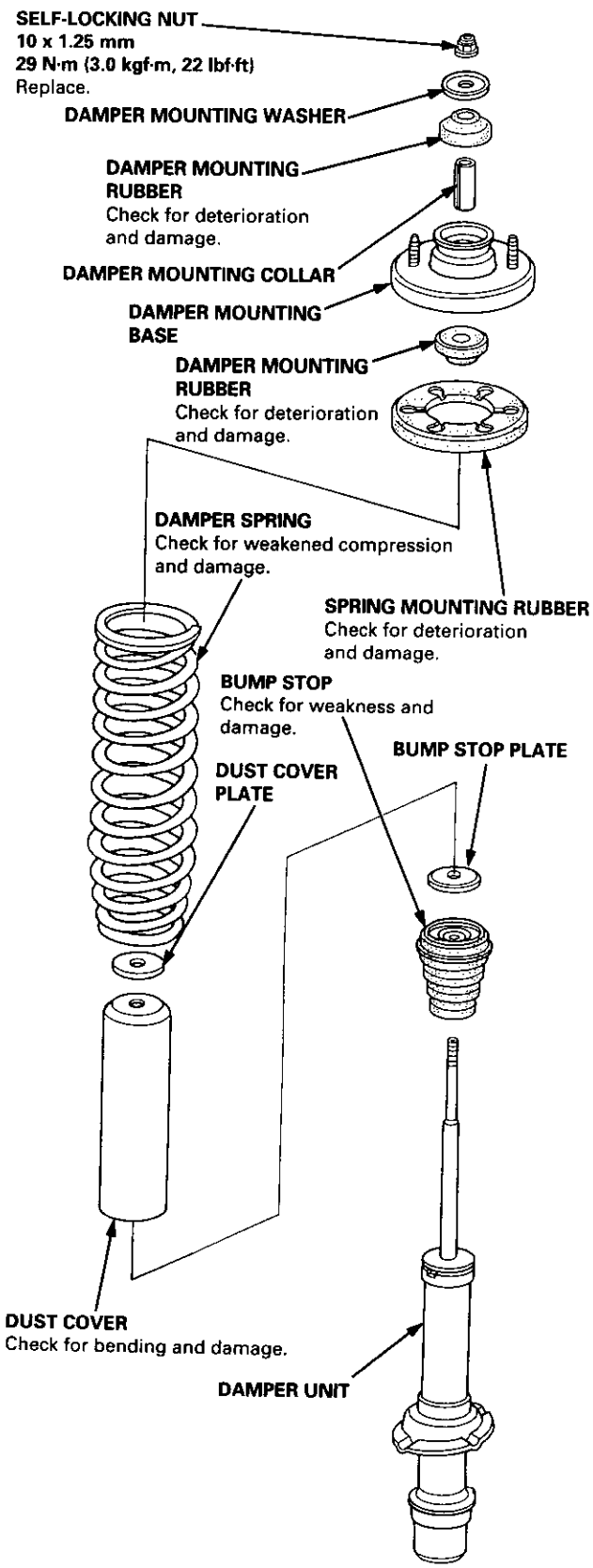

Reassembly

1. Install the damper unit on a spring compressor.

2. Assemble the damper in reverse order of removal except the damper mounting washer and self locking nut.

   NOTE: Align the bottom of the damper spring and spring lower seat as shown.

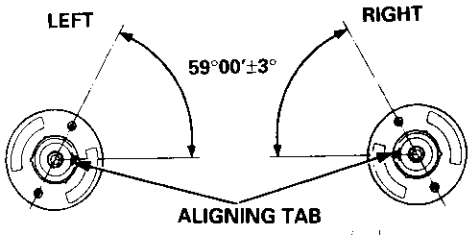

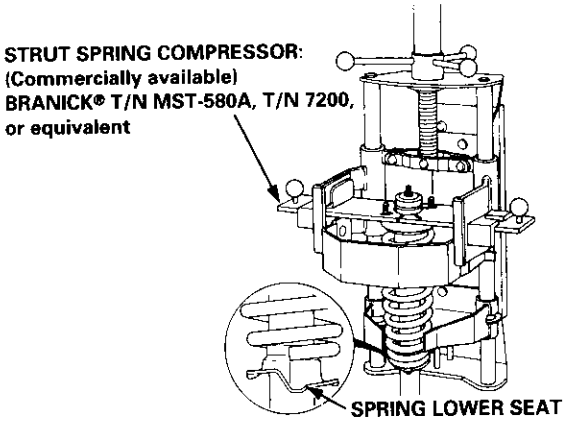

3. Position the damper mounting base onto the damper unit as shown.

4. Compress the damper spring.

5. Install the damper mounting rubber, damper mounting washer, and a new 10 mm self-locking nut.

6. Hold the damper shaft, and tighten the 10 mm self-locking nut.

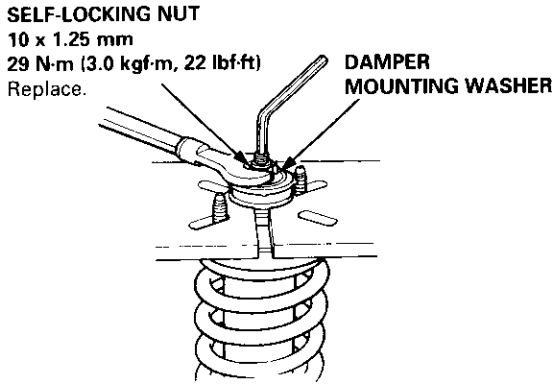

Installation

1. Loosely install the damper onto the frame with the aligning tab facing inside, then loosely install the two flange nuts.

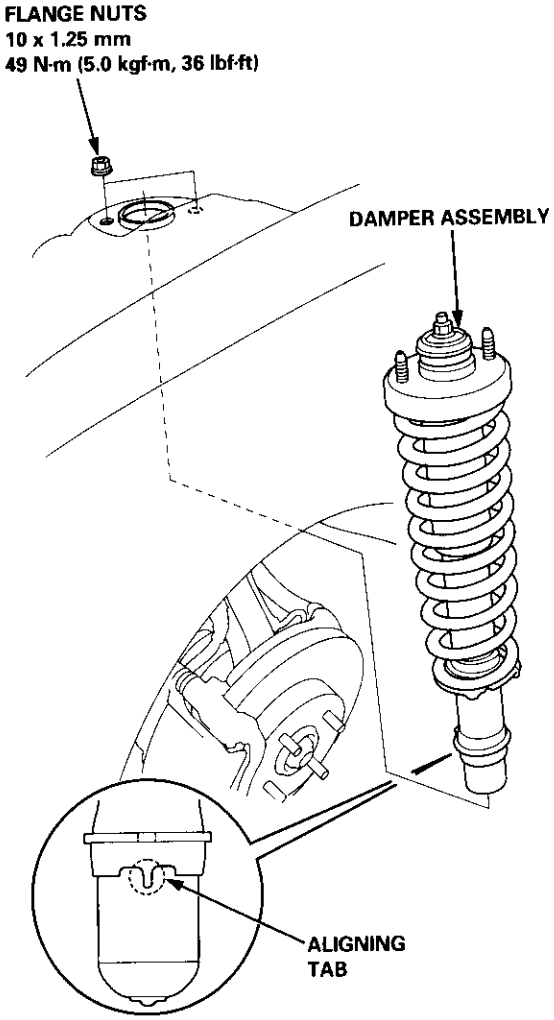

(cont'd)

Installation (cont'd)

2. Install the damper fork over the driveshaft and onto the lower arm. Install the front damper into the damper fork so the aligning tab is aligned with the slot in the damper fork.

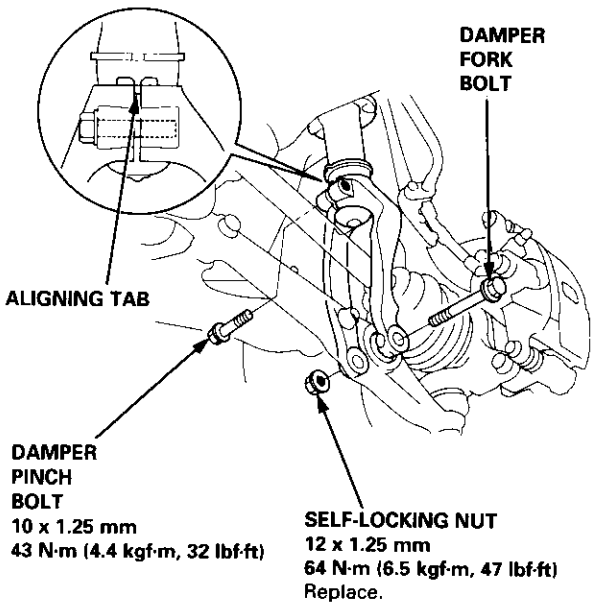

3. Loosely install the damper pinch bolt into the top of the damper fork.

4. Loosely install the damper fork bolt and a new self-locking nut into the bottom of the damper fork.

5. Raise the knuckle with a floor jack until the vehicle just lifts off the safety stand.

   ⚠ WARNING The floor jack must be securely positioned or personal injury may result.

6. Tighten the damper pinch bolt.

7. Tighten the damper fork bolt and self-locking nut.

8. Tighten the flange nuts on top of the damper.

9. Install the brake hose mounts with the brake hose mounting bolts.

10. Install the front wheel.

Suspension Arms Replacement ('96 – 99 models)

WARNING When the suspension arms are to be removed, place additional weight in the trunk before hoisting. When substantial weight is removed from the rear of the vehicle, the center of gravity may change causing the car to tip forward.

CAUTION:
- **Replace the self-locking nuts after removal.**
- **The vehicle should be on the ground before any bolts or nuts connected to rubber mounts or bushings are tighten.**

NOTE:
- Make sure the toe adjusting bolts on the compensator arm are installed in the same direction.
- "↑ UP L" or "↑ UP LH G" or "↑ UP LK" or "↑ UP LS" is stamped on the left upper arm and "↑ UP R" or "↑ UP RH G" or "↑ UP RK" or "↑ UP RS" on the right upper arm.
- The right and left compensator arm are symmetrical. Install so the "↑ UP" stamped side faces forward.
- After installing the suspension arm, check the rear wheel alignment, and adjust if necessary (see page 18-4).

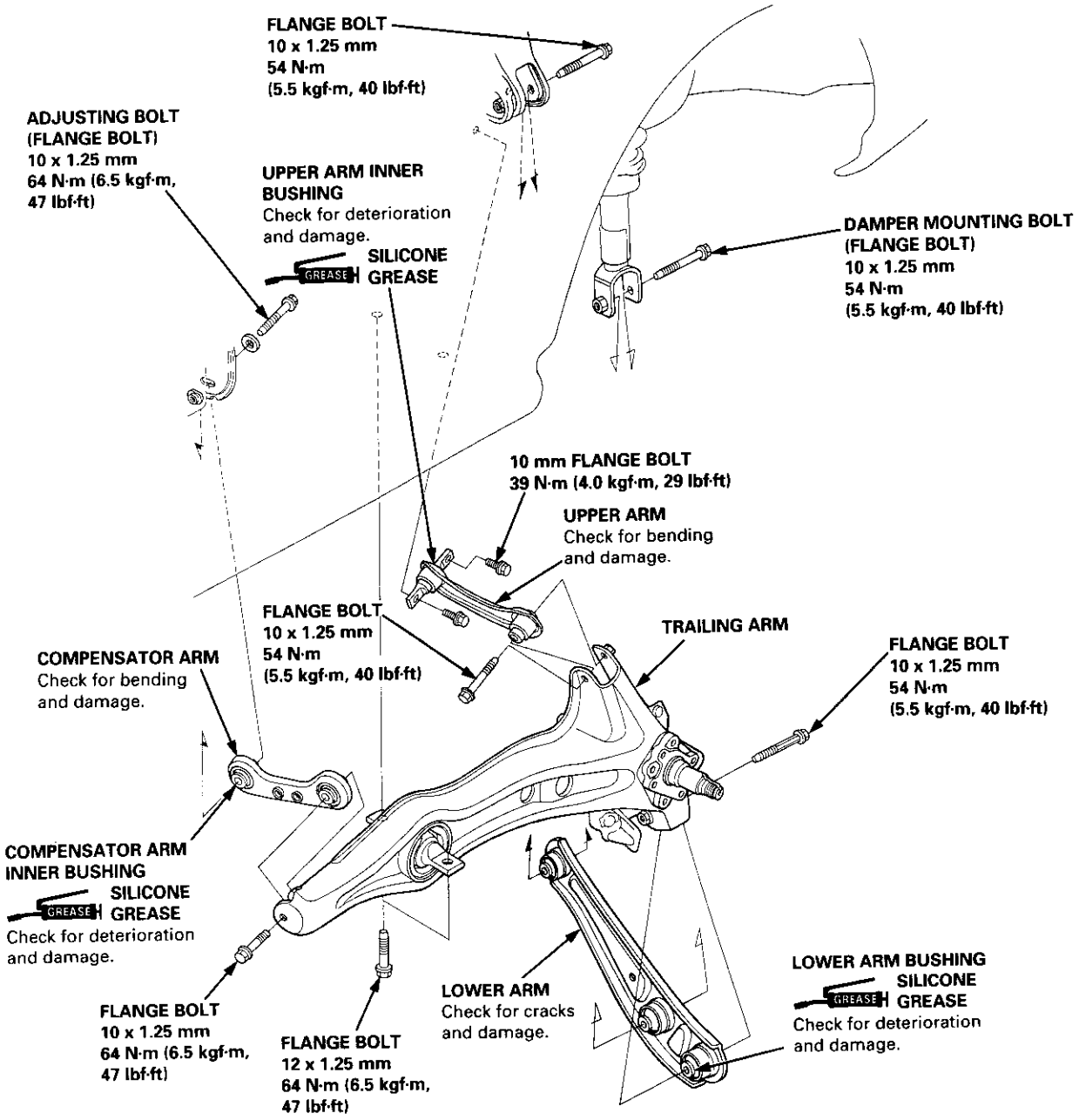

Suspension Arms Replacement ('99 2D Si and Si-R models)

CAUTION:
- **Replace the self-locking nut after removal.**
- **The vehicle should be on the ground before any bolts or nuts connected to rubber mounts or bushing are tightened.**

NOTE:
- Make sure the toe adjusting bolts on the compensator arm are installed in the same direction.
- "↑ UP L" or "↑ UP LH G" or "↑ UP LK" or "↑ UP LS" is stamped on the left upper arm and "↑ UP R" or "↑ UP RH G" or "↑ UP RK" or "↑ UP RS" on the right upper arm.
- The right and left compensator arm are symmetical. Install so the "UP ↑" mark points to the front.
- After installing the suspension arm, check the wheel alignment and adjust if necessary.

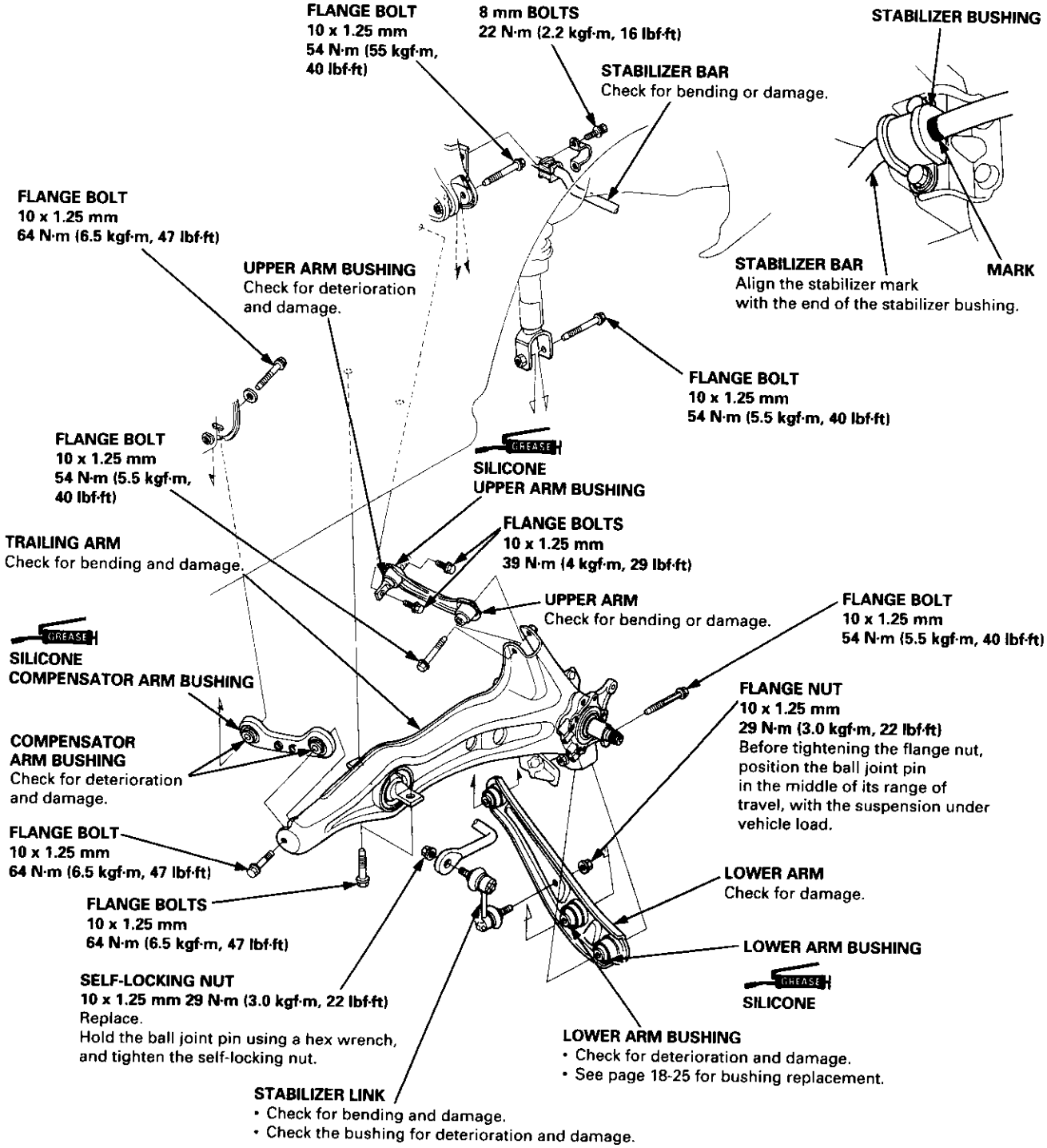

Hub Bearing Unit Replacement

NOTE:
- Use only genuine Honda wheel weights for aluminum wheels. Non-genuine wheel weights may corrode and damage the aluminum wheels.
- On the aluminum wheels, remove the center cap from the inside of the wheel after removing the wheel.
- Before installing the brake disc (or brake drum), clean the mating surfaces of the rear hub and the brake disc (or brake drum).
- Before installing the wheel, clean the mating surfaces of the brake disc (or brake drum) and wheel.

*1: For vehicles with drum brakes.
*2: '99 2D Si and Si-R models

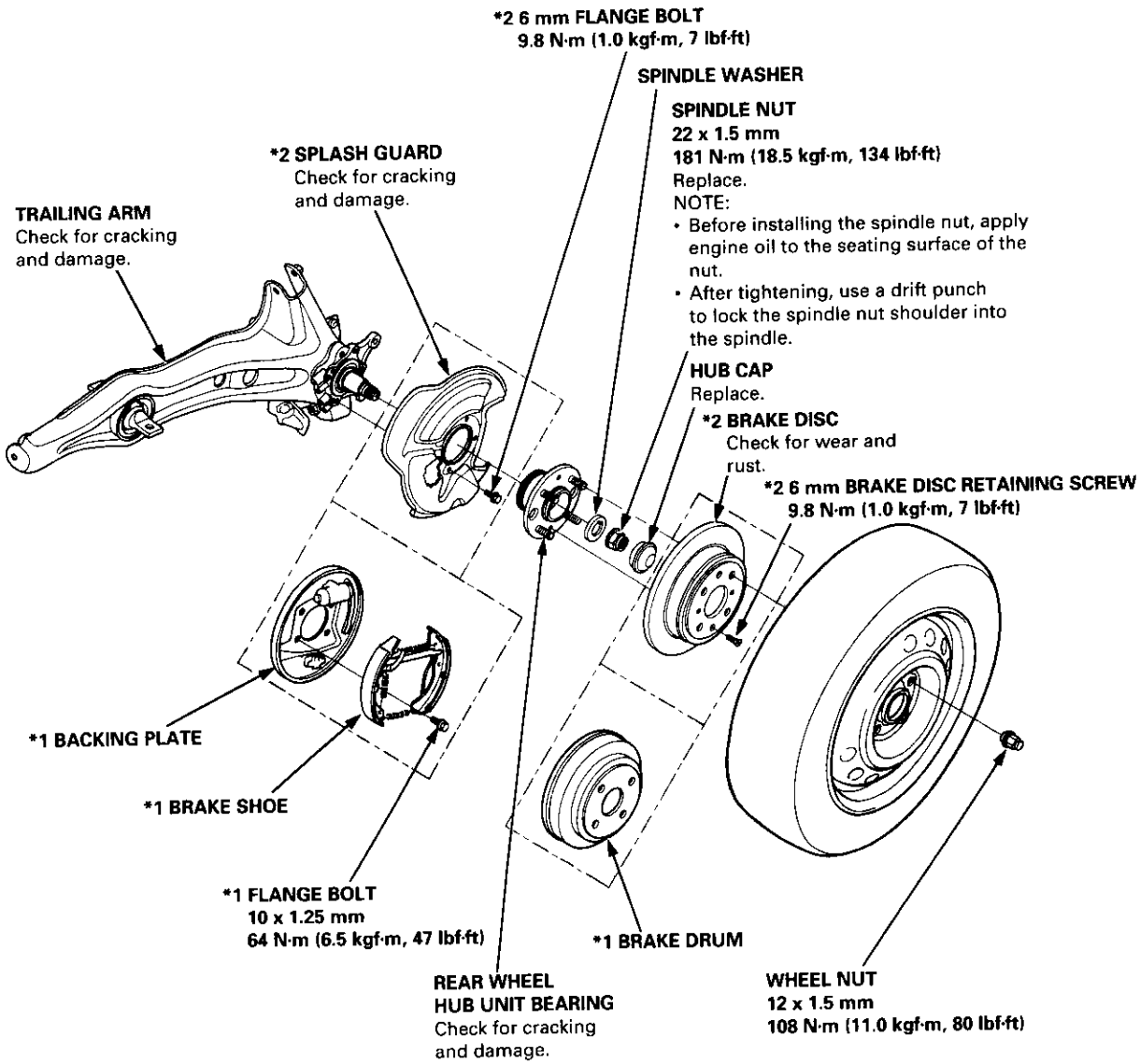

(cont'd)

Hub Bearing Unit Replacement (cont'd)

NOTE: Disc type ('99 2D Si and Si-R models)

1. Loosen the wheel nuts slightly.
2. Raise the rear of vehicle, and support it with safety stands in the proper locations (see section 1).
3. Remove the wheel nuts and rear wheel.
4. Pull the parking brake lever up.
5. Remove the hub cap.
6. Raise the locking tab on the spindle nut, then remove the nut.

SPINDLE NUT
22 x 1.5 mm
181 N·m (18.5 kgf·m, 134 lbf·ft)
Replace.
NOTE:
- Before installing the spindle nut, apply engine oil to the seating surface of the nut.
- After tightening, use a drift to stake the spindle nut shoulder against the spindle.

For vehicles with drum brakes:

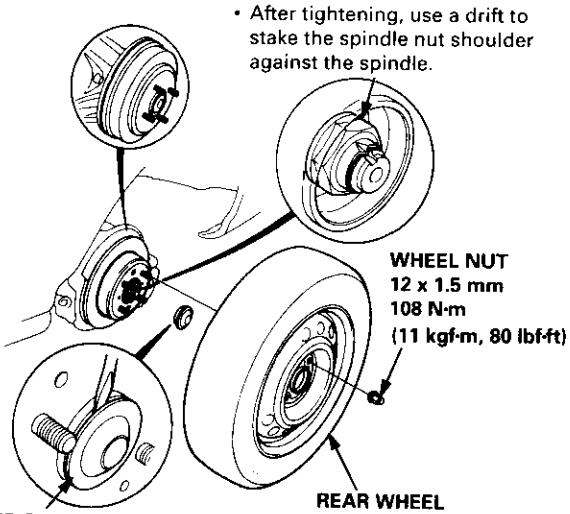

Replace.
NOTE: Take care not to damage the hub unit on disassembly.

7. Remove the 6 mm brake disc retaining screws.

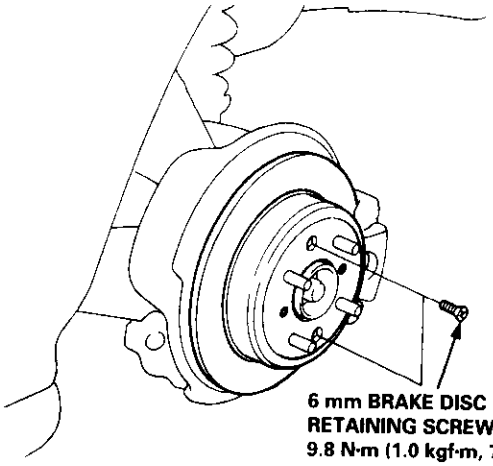

8. Release the parking brake lever.
9. Remove the brake drum, hub unit bearing, and spindle washer (for vehicles with drum brakes).

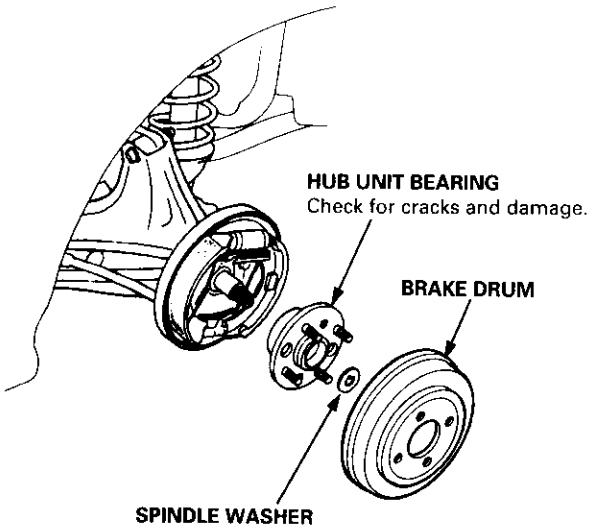

10. Remove the 6 mm flange bolts and caliper shield.

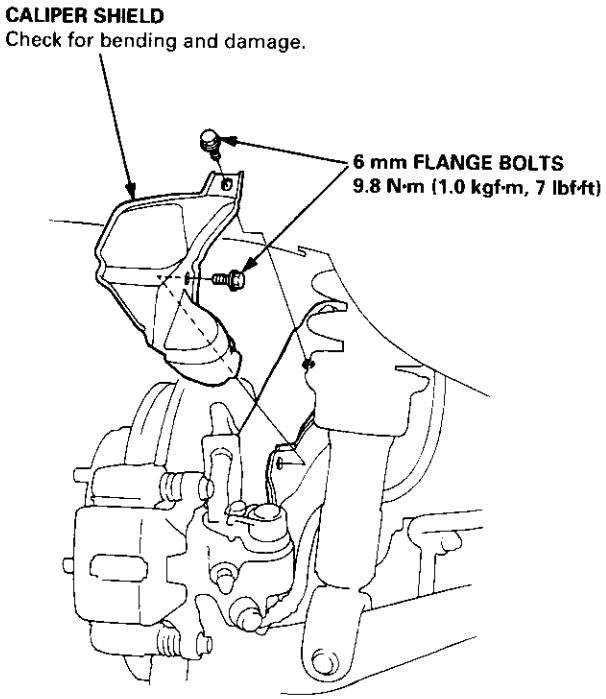

11. Remove the two brake hose mounting bolts.

12. Remove the caliper bracket mounting bolts, and hang the caliper to one side.

CAUTION: To prevent accidental damage to the caliper or brake hose, use a short piece of wire to hang the caliper from the undercarriage.

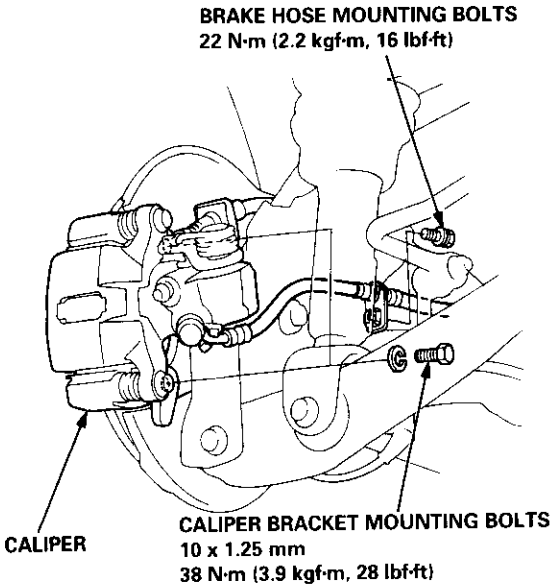

13. Screw two 8 x 1.25 mm bolts into the disc to push it away from the hub.

NOTE: Turn each bolt two turns at a time to prevent cocking the disc excessively.

14. Remove the brake disc.

15. Remove the hub unit bearing from the spindle.

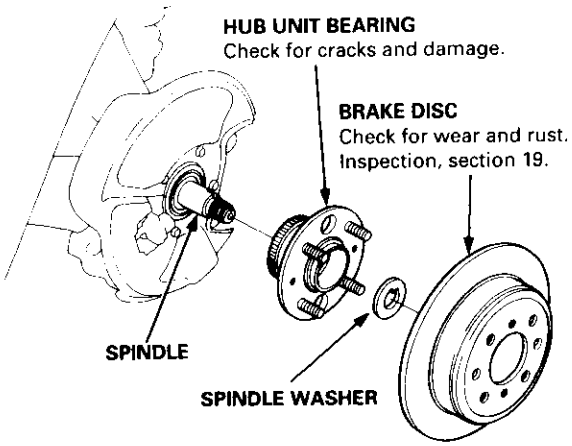

16. Install in the reverse order of removal.

Upper Arm Bushing Replacement

1. Remove the upper arm bushing and upper arm inner bushing as shown.

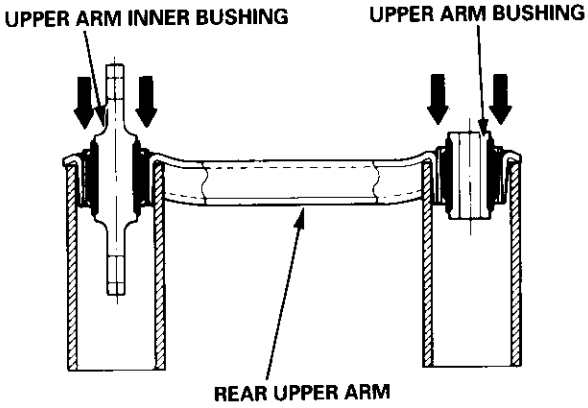

2. Scribe a line on the upper arm inner bushing so that it is in line with the bolt mounting surface.

3. Mark to points on the upper arm so that they are in line and make a right angle with the arm as shown in the drawing.

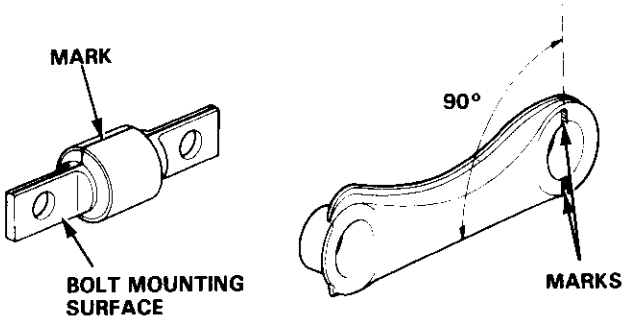

4. Drive in the upper arm inner bushing with the marks aligned.

5. Drive the upper arm bushing into the upper arm.

NOTE: Drive in the upper arm bushing and upper arm inner bushing until their leading edges are flush with the upper arm.

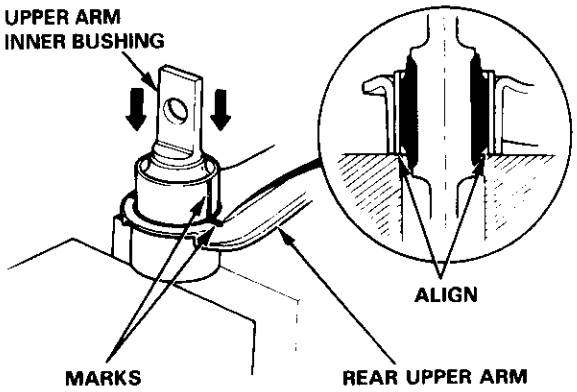

Rear Damper

Removal

1. Remove the rear wheels (see page 18-22).

2. Remove the speaker cover and speaker (Hatchback). Sedan and Coupe: Remove the trunk side panel (see section 20).

3. Remove the two flange nuts.

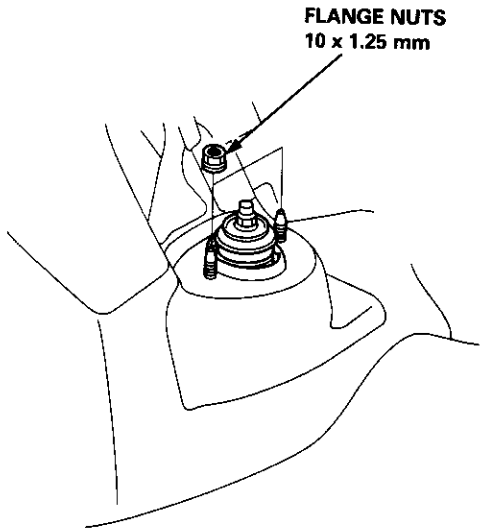

4. Remove the flange bolt from the damper.

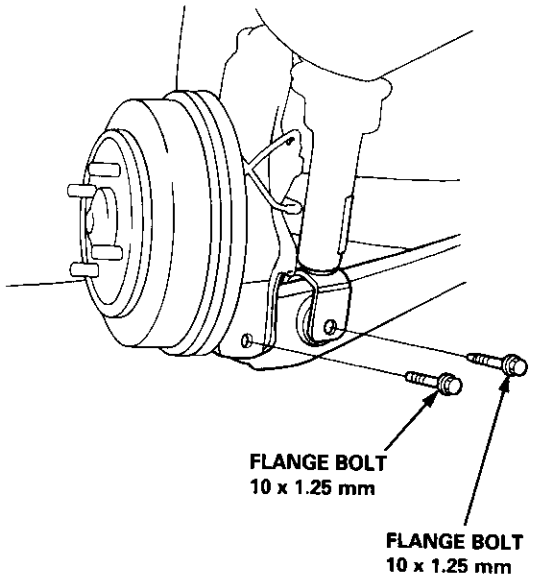

5. Remove the flange bolt that connects the lower arm to the trailing arm.

6. Lower the rear suspension, and remove the damper.

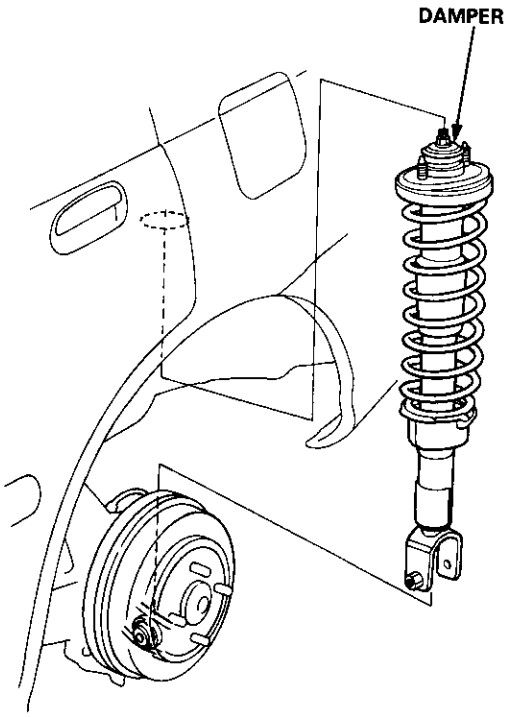

Disassembly/Inspection

Disassembly

1. Compress the damper spring with the spring compressor according to the manufacturer's instructions, then remove the self-locking nut.

   CAUTION: Do not compress the spring more than necessary to remove the self-locking nut.

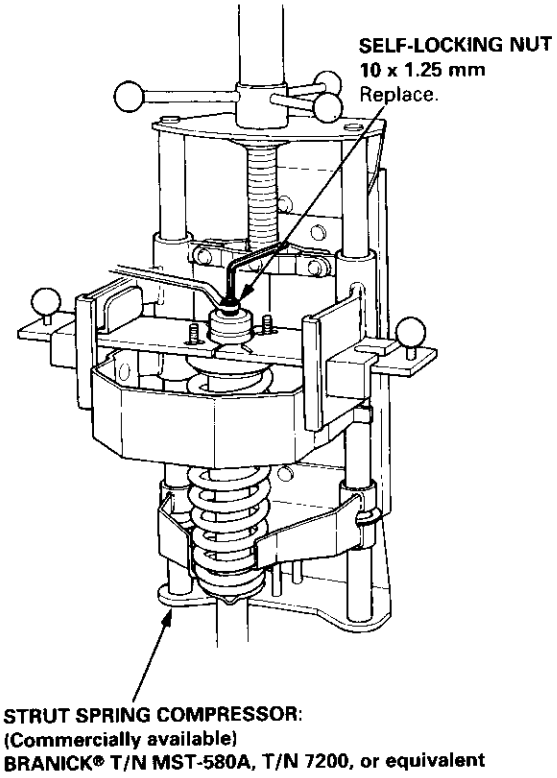

2. Release the pressure from the spring compressor, then disassemble the damper as shown on page 18-25.

Inspection

1. Reassemble all parts, except the spring.

2. Push on the damper as shown.

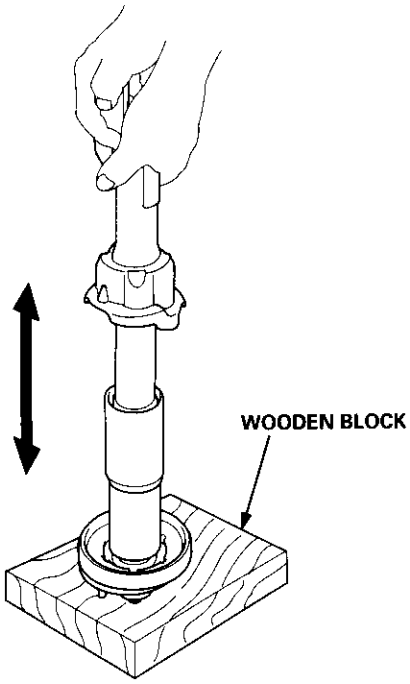

3. Check for smooth operation through a full stroke, both compression and extension.

   NOTE: The damper should move smoothly. If it does not (no compression or no extension), the gas is leaking, and the damper should be replaced.

4. Check for oil leaks, abnormal noises, and binding during these tests.

(cont'd)

Disassembly/Inspection (cont'd)

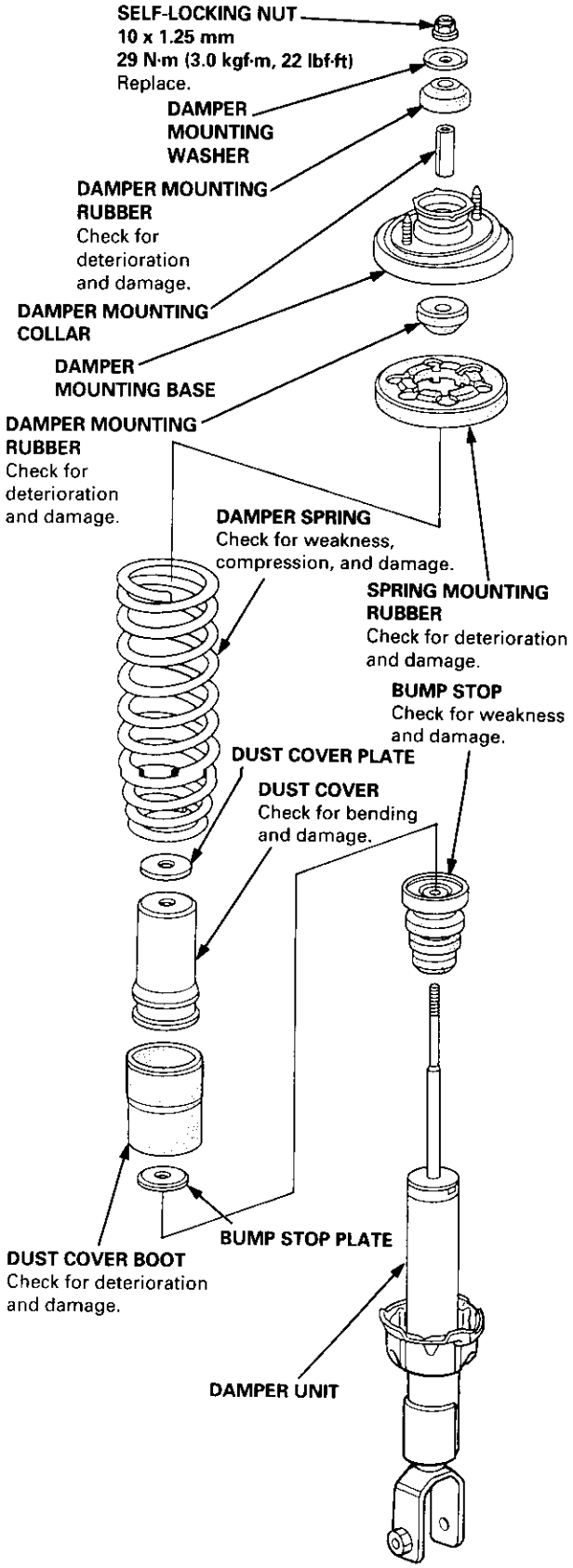

Reassembly

1. Install the damper unit onto a spring compressor.

   NOTE: Follow the manufacturer's instructions.

2. Assemble the rear damper in the reverse order of disassembly except the damper mounting washer and self-locking nut.

   NOTE: Align the bottom of the damper spring and spring lower seat as shown.

3. Position the damper mounting base onto the damper unit as shown.

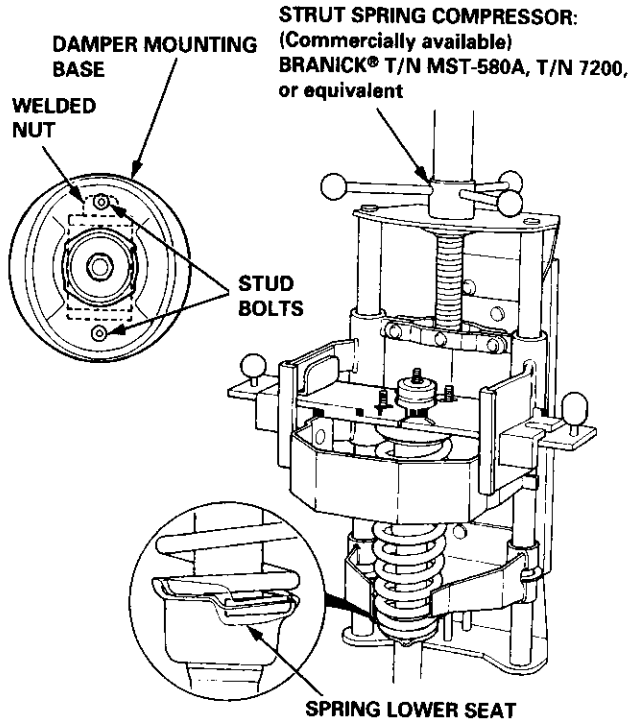

4. Compress the damper spring with the spring compressor.

5. Install the damper mounting washer, and loosely install a new self-locking nut.

6. Hold the damper shaft with a hex wrench, and tighten the self-locking nut.

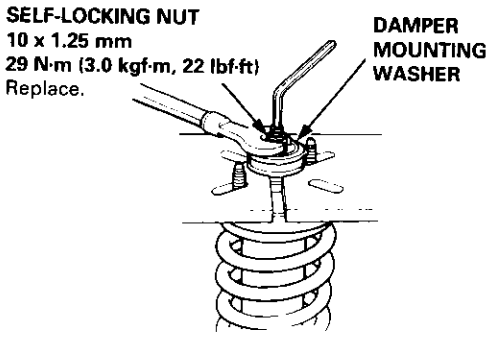

Installation

1. Lower the rear suspension, and position the damper with the spring stop pointed toward the left side of the vehicle.

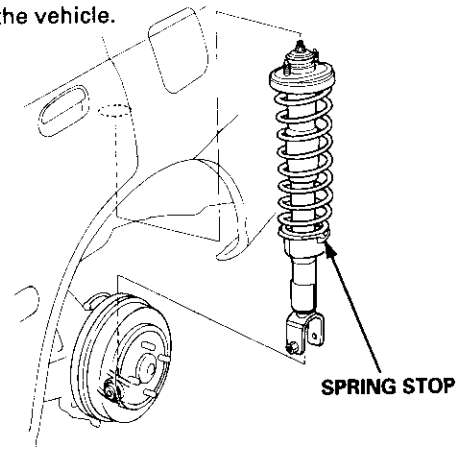

2. Loosely install the two flange nuts.

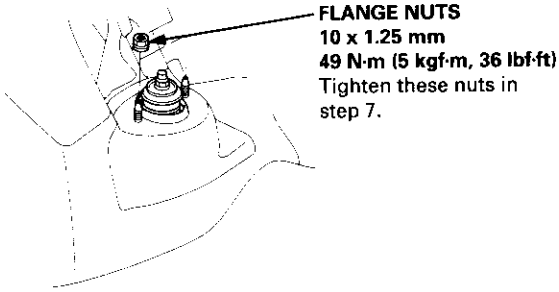

3. Loosely install the flange bolts.

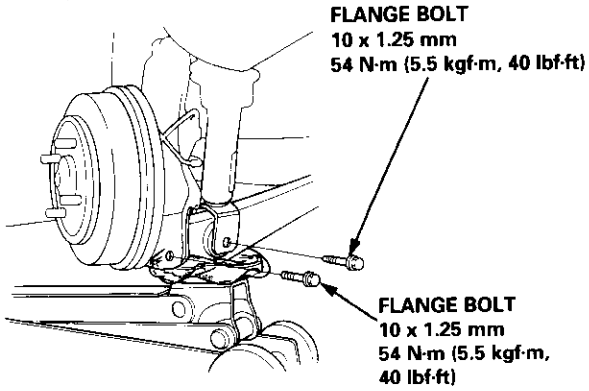

4. Raise the rear suspension with a floor jack until the vehicle just lifts off the safety stand.

   WARNING The floor jack must be securely positioned or personal injury may result.

5. Tighten the flange bolts.

6. Tighten the two flange nuts on top of the damper to the specified torque.

7. Check the rear wheel alignment and adjust if necessary (see page 18-4).

Brakes

Conventional Brakes 19-1
Anti-lock Brake System (ABS) 19-43

Conventional Brake

Special Tools 19-2
Component Locations
  Index 19-3
Inspection and Adjustment
Brake System Rubber Parts
  and Brake Booster 19-4
  Brake Pedal 19-5
  Parking Brake 19-6
  Bleeding 19-7
Front Brake Pads
  Inspection and Replacement 19-8
Front Brake Disc
  Disc Runout Inspection 19-12
  Disc Thickness and Parallelism
    Inspection 19-12
Front Brake Caliper
  Disassembly 19-13
  Reassembly 19-16
Master Cylinder/Brake Booster
  Removal/Installation 19-21
  Pushrod Clearance Adjustment 19-22
  Brake Booster Inspection 19-23
Rear Brake Pads
  Inspection and Replacement 19-24
Rear Brake Disc
  Disc Runout Inspection 19-26
  Disc Thickness and Parallelism
    Inspection 19-26
Rear Brake Caliper
  Disassembly 19-27
  Reassembly 19-31
Rear Drum Brake
  Index/Inspection 19-35
  Inspection 19-36
  Brake Shoe Disassembly 19-37
  Brake Shoe Reassembly 19-37
Brake Hoses/Lines
  Inspection/Torque Specifications 19-39
  Hose Replacement 19-40
Parking Brake Cable
  Inspection and Replacement 19-41

Special Tools

Ref. No.	Tool Number	Description	Qty	Page Reference
①	07HAE – SG00100	Brake Spring Compressor	1	19-28, 33
②	07JAG – SD40100	Pushrod Adjustment Gauge	1	19-22
③	07914 – SA50001	Snap Ring Pliers	1	19-29, 33

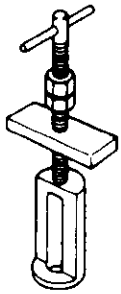

①

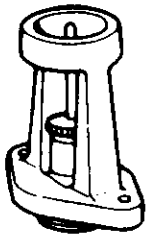

②

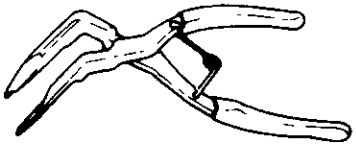

③

Index

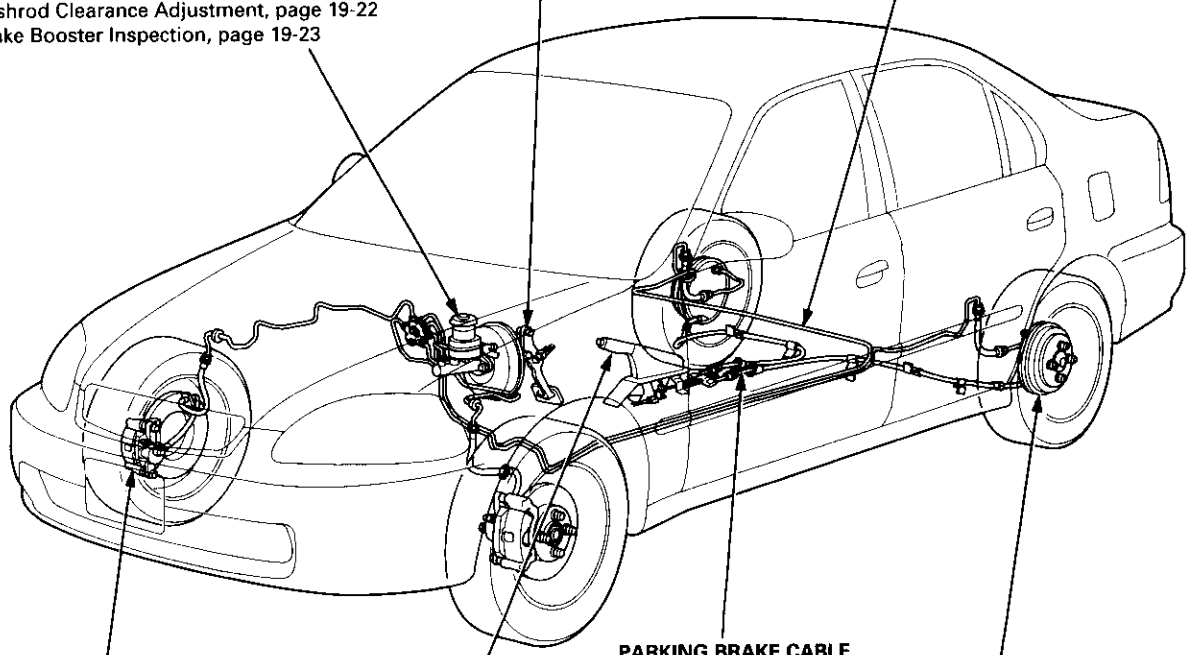

BRAKE PEDAL
Inspection and Adjustment, page 19-5

BRAKE HOSES LINES
Inspection/Torque specifications, page 19-39
Hose Replacement, page 19-40

MASTER CYLINDER/BRAKE BOOSTER
Removal/Installation, page 19-21
Pushrod Clearance Adjustment, page 19-22
Brake Booster Inspection, page 19-23

PARKING BRAKE CABLE
Inspection and Replacement, page 19-41

PARKING BRAKE
Adjustment, page 19-6

FRONT BRAKES
NOTE: There are two types of front brake calipers: The caliper types can be identified by the "5410" or "2056" stamped on the caliper body. Check the type of the brake caliper before servicing.
Front Brake Pads
5410 Type: page 19-8
2056 Type: page 19-10
Front Brake Disc, page 19-12
Front Brake Caliper
5410 Type: page 19-13
2056 Type: page 19-14

REAR DRUM BRAKES
Inspection, page 19-36
Brake Shoe Replacement, page 19-37
REAR DISC BRAKES
Rear Brake Pads, page 19-24
Rear Brake Disc, page 19-26
Rear Brake Caliper, page 19-27

Brake System Rubber Parts and Brake Booster

Ⓐ **Brake Booster**
Check brake operation by applying the brakes.
If the brakes do not work properly, check the brake booster. Replace the brake booster as an assembly if it does not work properly or if there are signs of leakage.

Ⓑ **Piston Cup and Pressure Cup Inspection**

- Check brake operation by applying the brakes.
  Visually check for damage or signs of fluid leakage.
  Replace the master cylinder as an assembly if the pedal does not work properly or if there is damage or signs of fluid leakage.

- Check for a difference in brake pedal stroke between quick and slow brake applications. Replace the master cylinder if there is a difference in pedal stroke.

Ⓒ **Brake Hoses**
Visually check for damage or signs of fluid leakage.
Replace the brake hose with a new one if it is damaged or leaking.

Ⓓ **Caliper Piston Seal and Piston Boots**
Check brake operation by applying the brakes.
Visually check for damage or signs of fluid leakage.
If the pedal does not operate properly, the brakes drag, or there is damage or signs of fluid leakage, disassemble and inspect the brake caliper. Replace the boots and seals with new ones whenever the brake caliper is disassembled.

Ⓔ **Wheel Cylinder Piston Cup and Dust Cover**
Check brake operation by applying the brakes.
Visually check for damage or signs of fluid leakage.
If the pedal does not operate properly, the brakes drag, or there is damage or signs of fluid leakage, disassemble and inspect the wheel cylinder. If necessary, replace the wheel cylinder as an assembly.

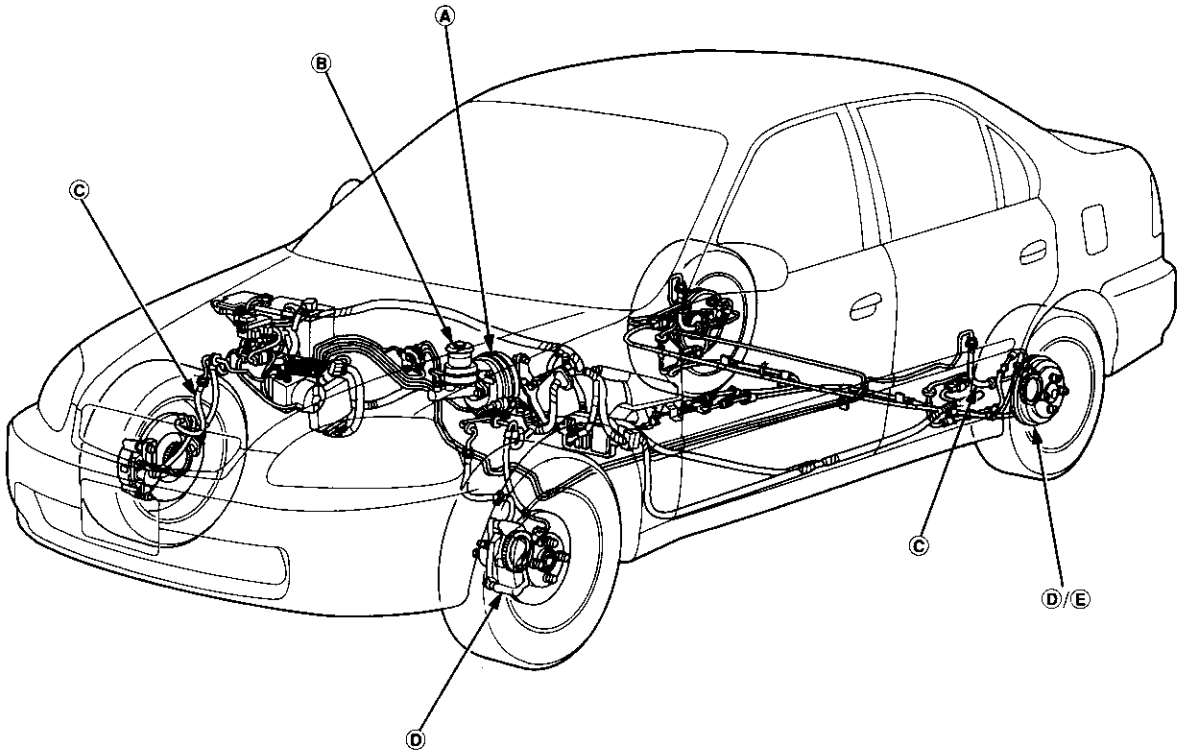

Brake Pedal

Pedal Height

1. Disconnect the brake switch connector, loosen the brake switch locknut, and back off the brake switch until it is no longer touching the brake pedal.

2. At the carpet cutout, measure the pedal height from the right side center of the pedal pad.

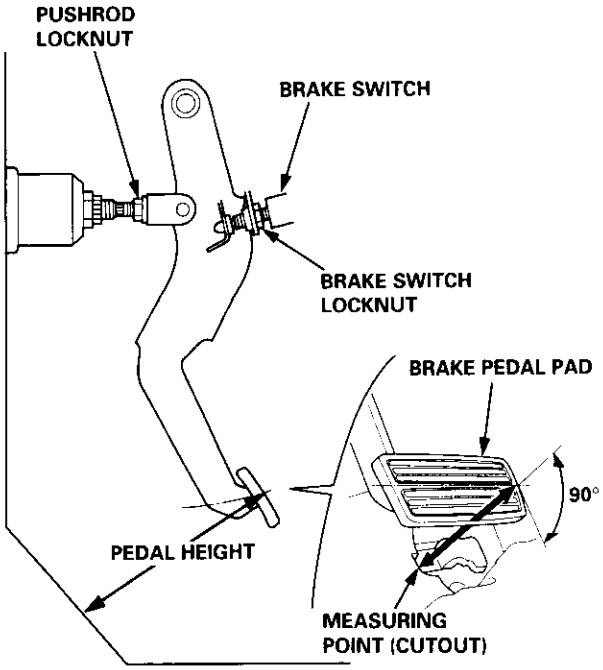

Standard Pedal Height (with carpet removed):
M/T: 156.5 mm (6.16 in)
A/T, CVT: 161 mm (6 5/16 in)

3. Loosen the pushrod locknut, and screw the pushrod in or out with pliers until the standard pedal height from the floor is reached. After adjustment, tighten the locknut firmly.

   NOTE: Do not adjust the pedal height with the pushrod depressed.

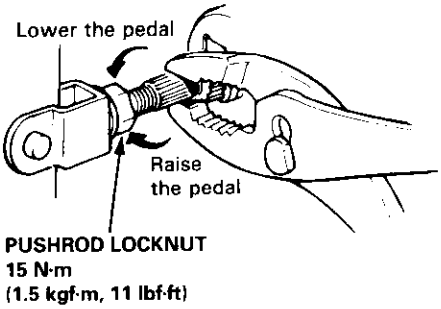

4. Screw in the brake switch until its plunger is fully depressed (threaded end touching the pad on the pedal arm). Then back off the switch 1/4 turn to make 0.3 mm (0.01 in) of clearance between the threaded end and pad. Tighten the locknut firmly. Connect the brake switch connector.

   CAUTION: Make sure that the brake lights go off when the pedal is released.

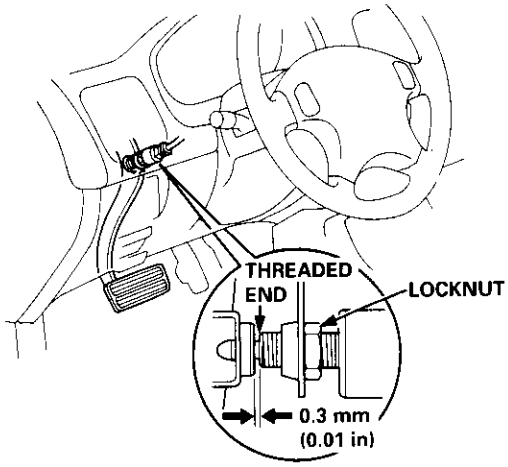

5. Check the brake pedal free play as described below.

Pedal Free Play

1. With the engine off, inspect the play on the pedal pad by pushing the pedal by hand.

   Free Play: 1 – 5 mm (1/16 – 3/16 in)

2. If the pedal free play is out of specification, adjust the brake switch.

   CAUTION: If the pedal free play is insufficient, it may result in brake drag.

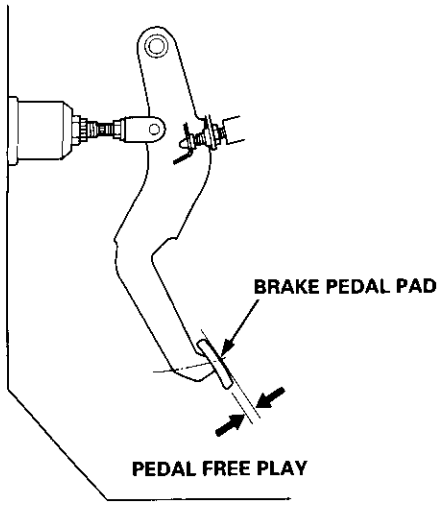

Parking Brake

Inspection

1. Pull the parking brake lever with 196 N (20 kgf, 44 lbf) force to fully apply the parking brake. The parking brake lever should be locked within the specified number of clicks.

   Lever Locked clicks: 6 – 9

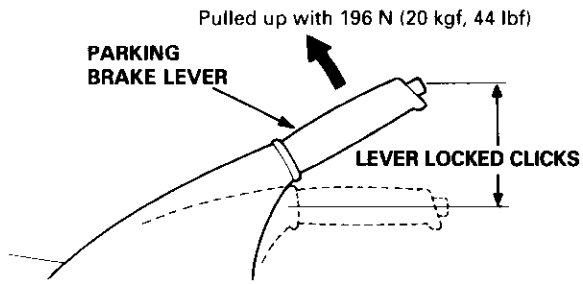

2. Adjust the parking brake if the lever clicks are out of specification.

Adjustment

NOTE: After servicing the rear brake pads or calipers, or the rear brake shoe, loosen the parking brake adjusting nut, start the engine, and depress the brake pedal several times to set the self-adjusting brake before adjusting the parking brake.

1. Raise the rear wheels off the ground, and support the vehicle on safety stands.

   ⚠WARNING Block the front wheels before jacking up the rear of the vehicle.

2. On vehicles with rear disc brakes, make sure the parking brake arm on the rear brake caliper contacts the brake caliper pin.

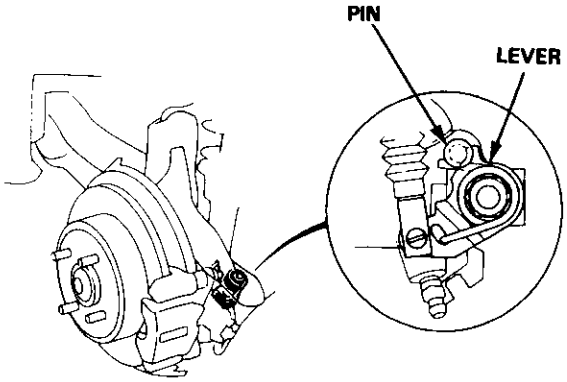

3. Remove the rear console (see section 20).

4. Pull the parking brake lever up one click.

5. Tighten the adjusting nut until the rear wheels drag slightly when turned.

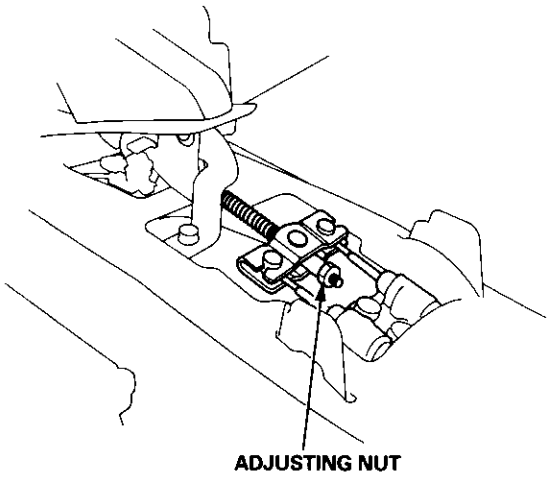

6. Release the parking brake lever fully, and check that the rear wheels do not drag when turned. Readjust if necessary.

7. Make sure that the parking brakes are fully applied when the parking brake lever is pulled up fully.

8. Reinstall the rear console.

Bleeding

CAUTION:

- **Always use Genuine Honda DOT 3 Brake Fluid. Using a non-Honda brake fluid can cause corrosion and decrease the life of the system.**
- **Make sure no dirt or other foreign matter is allowed to contaminate the brake fluid.**
- **Do not spill brake fluid on the vehicle, it may damage the paint; if brake fluid does contact the paint, wash it off immediately with water.**

NOTE: The reservoir on the master cylinder must be at the MAX (upper) level mark at the start of the bleeding procedure and checked after bleeding each brake caliper. Add fluid as required.

1. Make sure the brake fluid level in the reservoir is at the MAX (upper) level line.

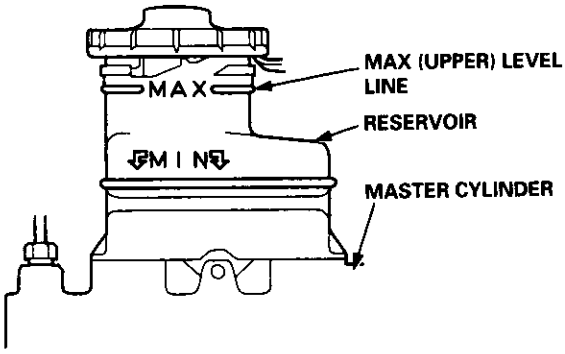

2. Have someone slowly pump the brake pedal several times, then apply steady pressure.

3. Loosen the brake bleed screw to allow air to escape from the system. Then tighten the bleed screw securely.

4. Repeat the procedure for each wheel in the sequence shown below until air bubbles no longer appear in the fluid.

5. Refill the master cylinder reservoir to the MAX (upper) level line.

BLEEDING SEQUENCE:

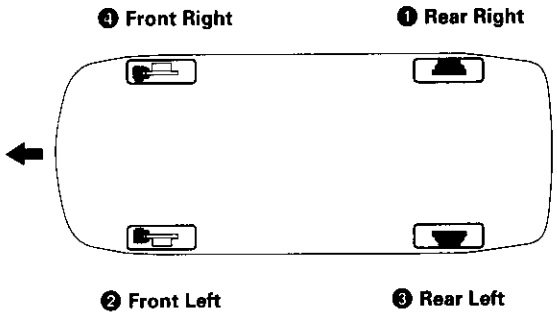

FRONT:

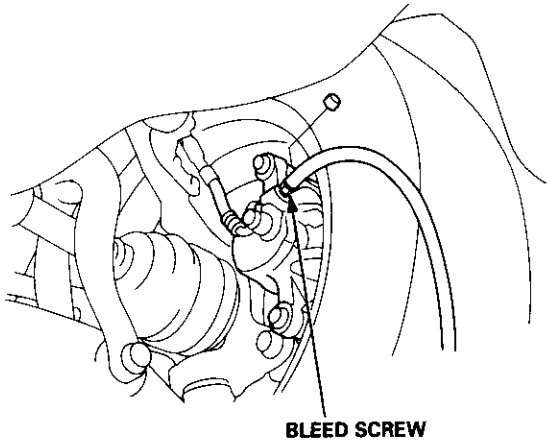

BLEED SCREW
9 N·m (0.9 kgf·m, 6.5 lbf·ft)

REAR (Drum Brake):

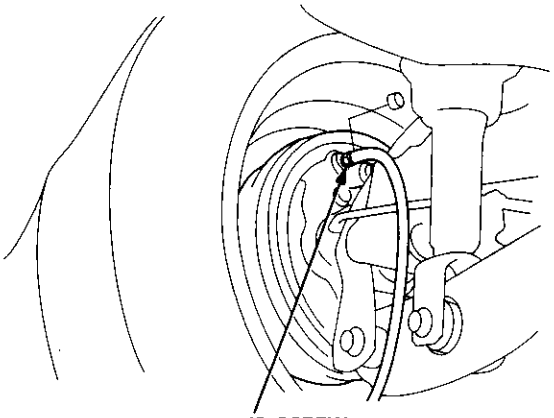

BLEED SCREW
7 N·m (0.7 kgf·m, 5 lbf·ft)

REAR (Disc Brake):

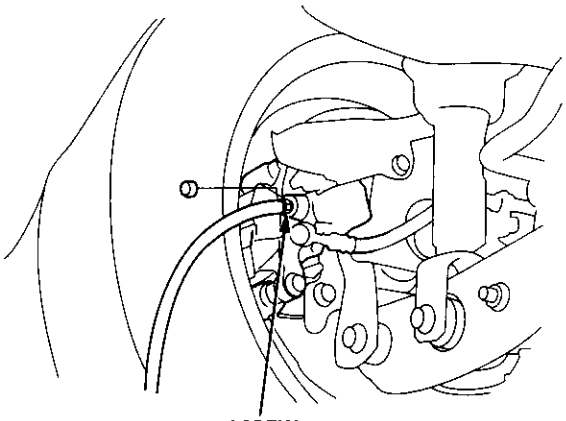

BLEED SCREW
9 N·m (0.9 kgf·m, 6.5 lbf·ft)

Inspection and Replacement

NOTE: There are two types of front brake calipers: The caliper types can be identified by the "5410" or "2056" stamped on the caliper body as shown below. Check the type of the brake caliper before servicing.

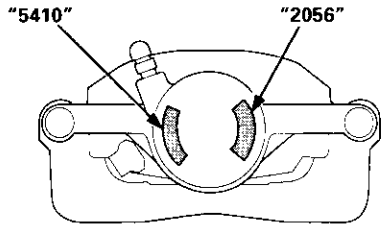

5410 Type:

NOTE: For 2056 type disassembly procedures, see page 19-10.

⚠ WARNING

- **Never use an air hose or dry brush to clean brake assemblies.**
- **Use an OSHA approved vacuum cleaner to avoid breathing brake dust.**

1. Loosen the front wheel nuts slightly, then raise the vehicle, and support it on safety stands. Remove the front wheels.
2. Remove the brake hose bracket from the knuckle.
3. Remove the caliper bolt, and pivot the caliper up out of the way.

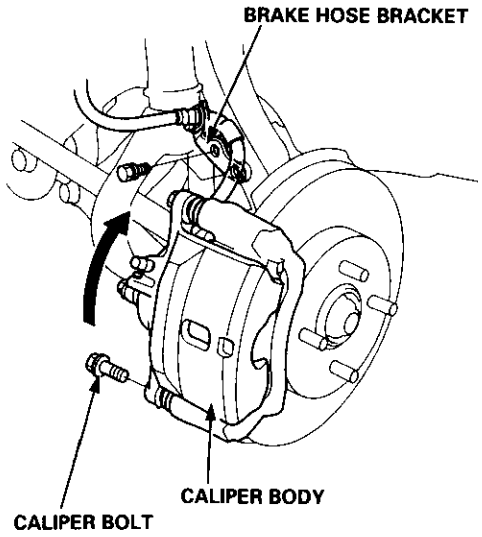

NOTE: Check the hoses and pin boots for damage and deterioration.

4. Remove the pad shim, pad retainers, and pads.

   NOTE: When the caliper is equipped with an outer pad shim, replace the shim together with the pads as a set.

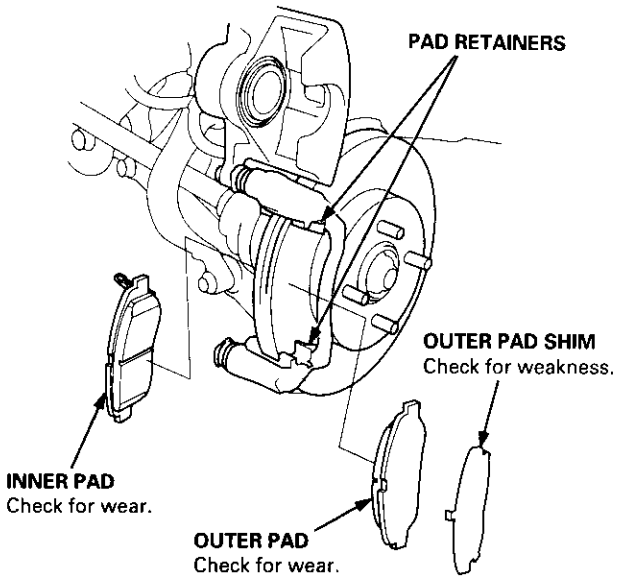

5. Using vernier calipers, measure the thickness of each brake pad lining. The measurement does not include the pad backing plate thickness.

   Brake Pad Thickness:
   Standard: 9.5 – 10.5 mm (0.37 – 0.41 in)
   Service Limit: 1.6 mm (0.06 in)

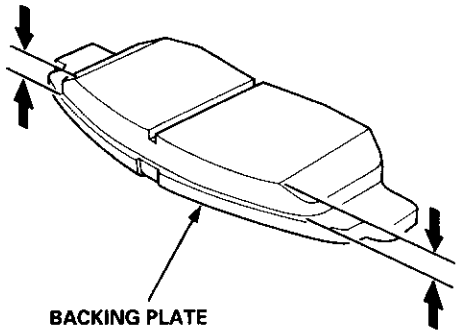

6. If the brake pad thickness is less than the service limit, replace the front pads as a set.

7. Clean the caliper thoroughly; remove any rust, and check for grooves and cracks.
8. Check the brake disc for damage and cracks.
9. Install the pad retainers.

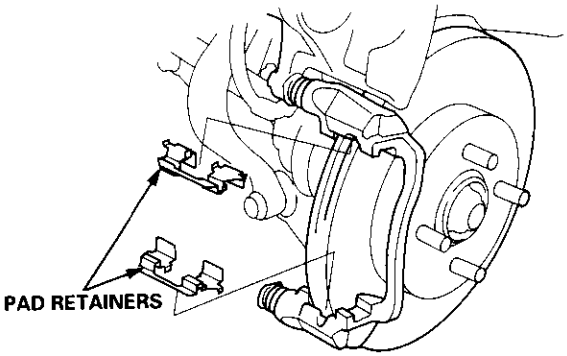

10. Apply grease to the points indicated by the arrows in the following illustration:

    NOTE: Use the pad grease included in the pad set or Molykote M77 grease, and apply a thin coat of grease evenly to the designated points.

    - Piston end and inner pad contact surface
    - Pad and caliper bracket contact surface
    - Outer pad and caliper body contact surface
    - Outer pad shim and outer pad contact surface
    - Outer pad shim and caliper body contact surface

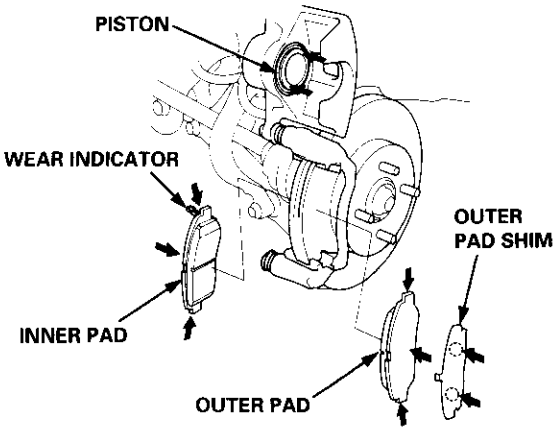

11. Install the brake pads and pad shim correctly.

    ⚠ WARNING

    - **When reusing the pads, always reinstall the brake pads in their original positions to prevent loss of braking efficiency.**
    - **Contaminated brake discs or pads reduce stopping ability. Keep grease off the discs and pads.**

    NOTE: Install the pad with the wear indicator on the inside.

12. Push in the piston so that the caliper will fit over the pads. Make sure that the piston boot is in position to prevent damaging it when pivoting the caliper down.

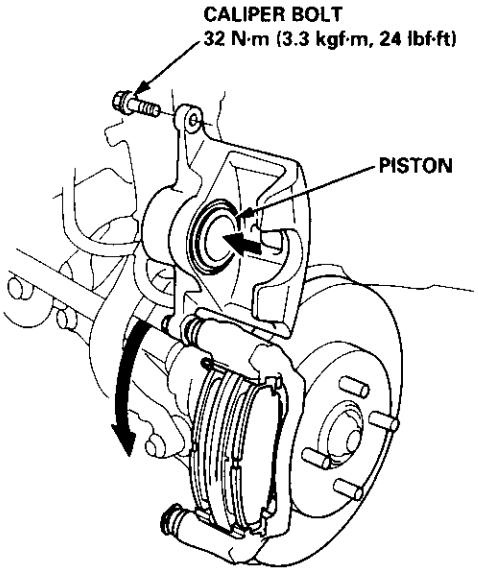

13. Pivot the caliper down into position, then install the caliper bolt and tighten it.

    CAUTION: Be careful not damage the pin boot when pivoting the caliper down.

14. Install the brake hose bracket on the knuckle.

    NOTE: Inspect the brake hose for interference or twisting.

15. Depress the brake pedal several times to make sure the brakes work, then test-drive.

    NOTE: Engagement of the brake may require a greater pedal stroke immediately after the brake pads have been replaced as a set. Several applications of the brake pedal will restore the normal pedal stroke.

16. After installation, check for leaks at hose and line joints or connections, and retighten if necessary.

(cont'd)

Inspection and Replacement (cont'd)

2056 Type:

⚠ WARNING

- **Never use an air hose or dry brush to clean brake assemblies.**
- **Use an OSHA-approved vacuum cleaner to avoid breathing brake dust.**

1. Loosen the front wheel nuts slightly, then raise the vehicle, and support it on safety stands. Remove the front wheels.
2. Remove the brake hose bracket from the knuckle.
3. Remove the caliper bolt B, and pivot the caliper up out of the way.

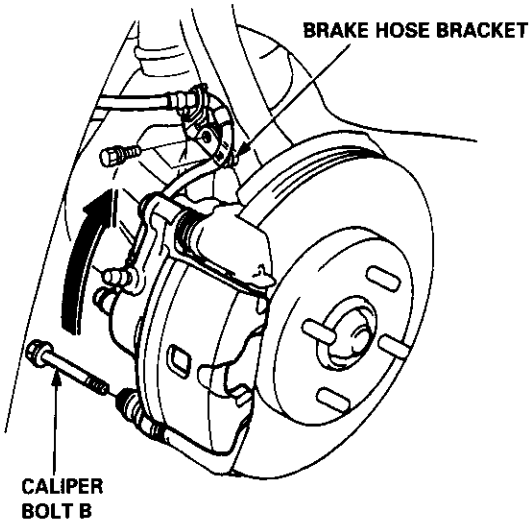

NOTE: Check the hoses and pin boots for damage and deterioration.

4. Remove the pad shim, pad retainers, and pads.

NOTE: When replacing the pads, replace the shim together with the pads as a set.

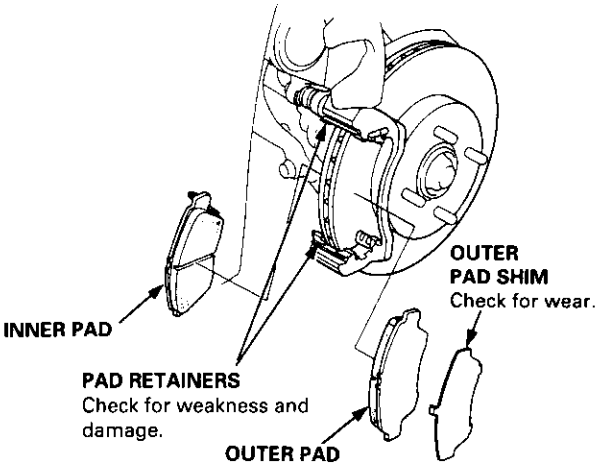

5. Using vernier calipers, measure the thickness of each brake pad lining. The measurement does not include the pad backing plate thickness.

Brake Pad Thickness:
Standard: 8.5 – 9.5 mm (0.33 – 0.37 in)
Service Limit: 1.6 mm (0.06 in)

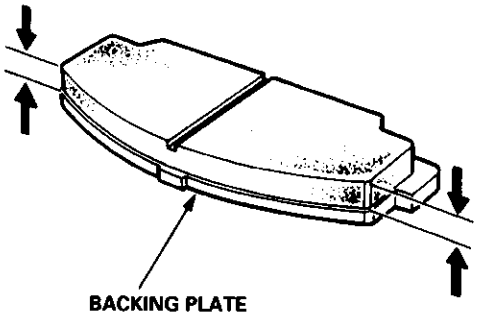

6. If the brake pad thickness is less than the service limit, replace the front pads as a set.
7. Clean the caliper thoroughly; remove any rust, and check for grooves and cracks.
8. Check the brake disc for damage and cracks.
9. Install the pad retainers.

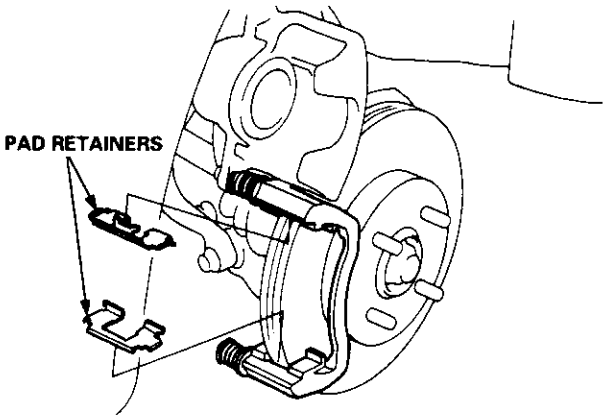

10. Apply grease to the points indicated by the arrows in the following illustration:

NOTE: Use the pad grease included in the pad set or Molykote M77 grease, and apply a thin coat of grease evenly to the designated points.

- Piston end and inner pad contact surface
- Pad and caliper bracket contact surface
- Outer pad and caliper body contact surface
- Outer pad shim and outer pad contact surface
- Outer pad shim and caliper body contact surface

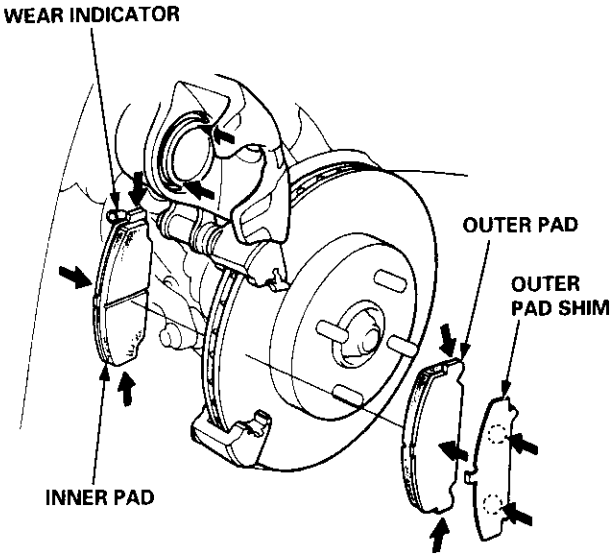

11. Install the brake pads and pad shim correctly.

⚠ WARNING

- **When reusing the pads, always reinstall the brake pads in their original positions to prevent loss of braking efficiency.**
- **Contaminated brake discs or pads reduce stopping ability. Keep grease off the discs and pads.**

NOTE: Install the pad with the wear indicator on the inside.

12. Push in the piston so that the caliper will fit over the pads. Make sure that the piston boot is in position to prevent damaging it when pivoting the caliper down.

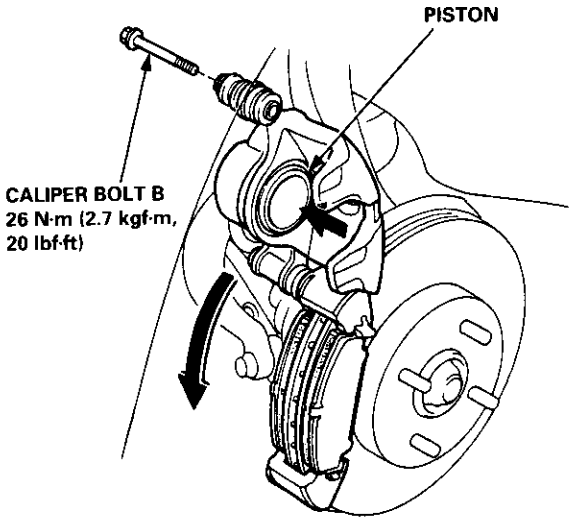

13. Pivot the caliper down into position, then install caliper bolt B and tighten it.

14. Install the brake hose bracket on the knuckle.

NOTE: Inspect the brake hose for interference and twisting.

15. Depress the brake pedal several times to make sure the brakes work, then test-drive.

NOTE: Engagement of the brake may require a greater pedal stroke immediately after the brake pads have been replaced as a set. Several applications of the brake pedal will restore the normal pedal stroke.

16. After installation, check for leaks at hose and line joints and connections, and retighten if necessary.

Disc Runout Inspection

1. Loosen the front wheel nuts slightly, then raise the vehicle, and support it on safety stands. Remove the front wheels.

2. Remove the brake pads (see page 19-8).

3. Inspect the disc surface for damage and cracks. Clean the disc thoroughly and remove all rust.

4. Use wheel nuts and suitable plain washers to hold the disc securely against the hub, then mount a dial indicator as shown, and measure the runout at 10 mm (0.4 in) from the outer edge of the disc.

   Brake Disc Runout:
   Service Limit: 0.10 mm (0.004 in)

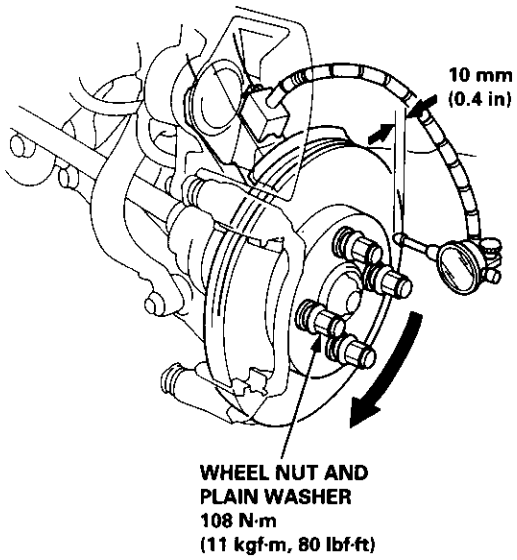

5. If the disc is beyond the service limit, refinish the brake disc with an on-car brake lathe. The Kwik-Lathe produced by Kwik-way Manufacturing Co. and the "Front Brake Disc Lathe" offered by Snap-on Tools Co. are approved for this operation.

   Max. Refinish Limit: 19.0 mm (0.75 in)

   NOTE: A new disc should be refinished if its runout is greater than 0.10 mm (0.004 in)

Disc Thickness and Parallelism Inspection

1. Loosen the front wheel nuts slightly, then raise the vehicle, and support it on safety stands. Remove the front wheels.

2. Remove the brake pads (see page 19-8).

3. Using a micrometer, measure disc thickness at eight points, approximately 45° apart and 10 mm (0.4 in) in from the outer edge of the disc.

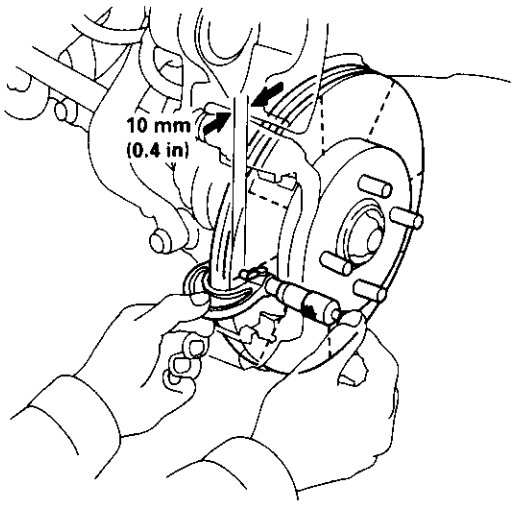

   Brake Disc Thickness:
   Standard: 20.9 – 21.8 mm (0.82 – 0.86 in)
   Max. Refinishing Limit: 19.0 mm (0.75 in)

   NOTE: Replace the brake disc if the smallest measurement is less than the max. refinishing limit.

   Brake Disc Parallelism: 0.015 mm (0.0006 in) max.

   NOTE: This is the maximum allowable difference between the thickness measurements.

4. If the disc is beyond the service limit for parallelism, refinish the brake disc with an on-car brake lathe. The Kwik-Lathe produced by Kwik-Way Manufacturing Co. and the "Front Brake Disc Lathe" offered by Snap-on Tools Co. are approved for this operation.

   NOTE: See section 18 for brake disc replacement.

Disassembly

NOTE: There are two types of front brake calipers: The caliper types can be identified by the "5410" or "2056" stamped on the caliper body as shown below. Check the type of the brake caliper before servicing.

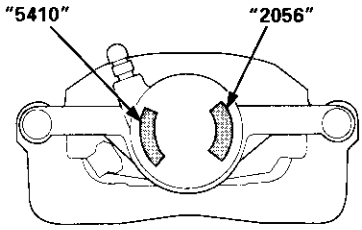

5410 Type:

NOTE: For 2056 type disassembly procedures, see page 19-14.

⚠ WARNING

- **Never use an air hose or dry brush to clean brake assemblies.**
- **Use an OSHA approved vacuum cleaner to avoid breathing brake dust.**

CAUTION:

- **Do not spill brake fluid on the vehicle; it may damage the paint; if brake fluid does contact the paint, wash it off immediately with water.**
- **To prevent spills, cover the hose joints with rags or shop towels.**
- **Clean all parts in brake fluid and air dry; blow out all passages with compressed air.**

1. Remove the banjo bolt, and disconnect the brake hose from the caliper.

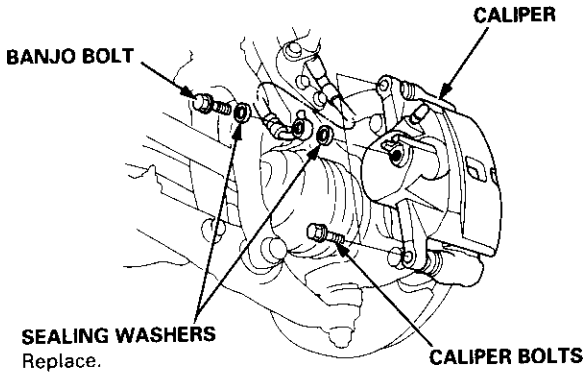

2. Remove the caliper bolts, then remove the caliper from the bracket.

3. Remove the caliper pins and pin boots from the caliper bracket.

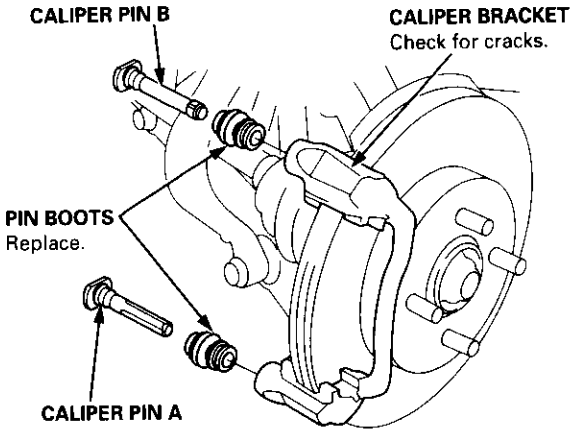

4. If necessary, apply compressed air to the caliper fluid inlet to get the piston out. Place a shop rag or wooden block as shown to cushion the piston when it is expelled. Use low pressure air in short spurts.

⚠ WARNING

- **Do not place your fingers in front of the piston.**
- **Do not use high air pressure; use an OSHA approved 30 PSI nozzle.**

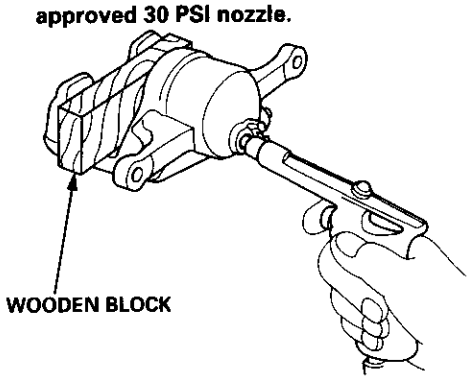

5. Remove the piston from the caliper, and check the piston for scoring.

6. Remove the boot clip, piston boot and piston seal.

CAUTION: Take care not to damage the cylinder bore.

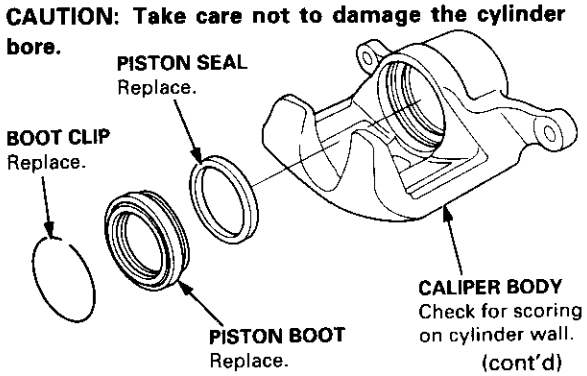

(cont'd)

Disassembly (cont'd)

2056 Type:

⚠ WARNING

- **Never use an air hose or dry brush to clean brake assemblies.**
- **Use an OSHA approved vacuum cleaner to avoid breathing brake dust.**

CAUTION:

- **Do not spill brake fluid on the vehicle; it may damage the paint; if brake fluid does contact the paint, wash it off immediately with water.**
- **To prevent spills, cover the hose joints with rags or shop towels.**
- **Clean all parts in brake fluid and air dry; blow out all passages with compressed air.**

1. Remove the banjo bolt, and disconnect the brake hose from the caliper.

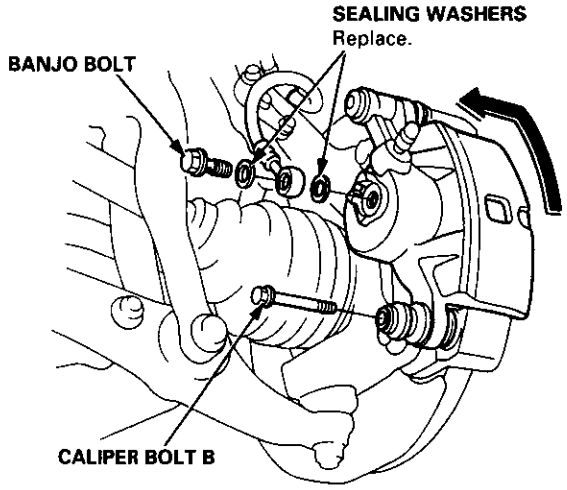

2. Remove caliper bolt B, pivot the caliper up out of the way, then remove the caliper from the bracket.

3. Remove the guide pin boot from sleeve A on the caliper bracket.

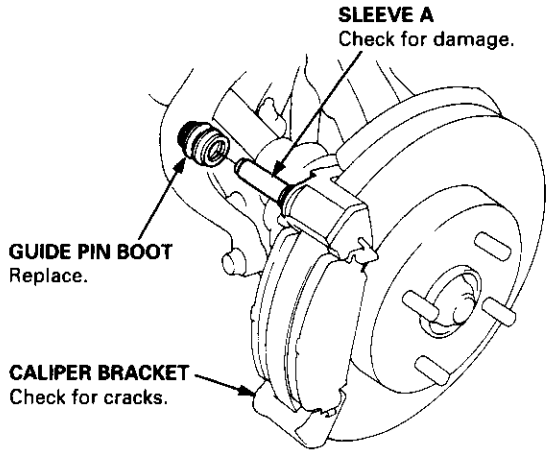

4. Remove the pin boot, sleeve B and sleeve boot from the caliper body.

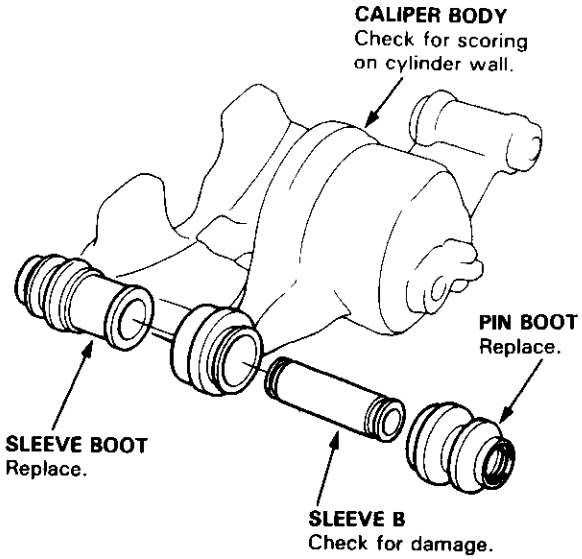

5. If necessary, apply compressed air to the caliper fluid inlet to get the piston out. Place a shop rag or wooden block as shown to cushion the piston when it is expelled. Use low pressure air in short spurts.

⚠ WARNING

- **Do not place your fingers in front of the piston.**
- **Do not use high air pressure; use an OSHA approved 30 PSI nozzle.**

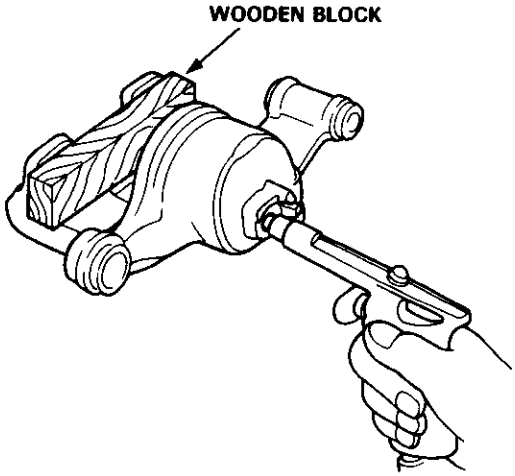

6. Remove the piston from the caliper, and check the piston for scoring.

7. Remove the boot clip, piston boot and piston seal.

CAUTION: Take care not to damage the cylinder bore.

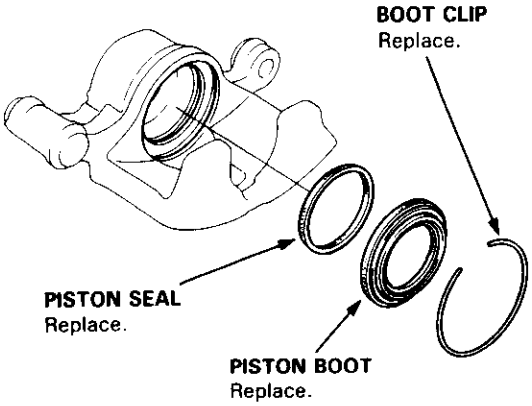

Reassembly

5410 Type:

NOTE: For 2056 type reassembly procedures, see page 19-18.

⚠ WARNING

- **Never use an air hose or dry brush to clean brake assemblies.**
- **Use an OSHA approved vacuum cleaner to avoid breathing brake dust.**
- **Contaminated brake discs or pads reduce stopping ability.**
- **When reusing the pads, always reinstall the brake pads in their original positions to prevent loss of braking efficiency.**

CAUTION:

- **Do not spill brake fluid on the vehicle; it may damage the paint; if brake fluid does contact the paint, wash it off immediately with water.**
- **Clean all parts in brake fluid and air dry; blow out all passages with compressed air.**
- **Before reassembling, check that all parts are free of dust and other foreign particles.**
- **Replace parts with new ones whenever specified to do so.**
- **Make sure no dirt or other foreign matter is allowed to contaminate the brake fluid.**
- **Always use Genuine Honda DOT 3 Brake Fluid. Using a non-Honda brake fluid can cause corrosion and decrease the life of the system.**

NOTE:

- Coat the piston, piston seal, and caliper bore with clean brake fluid.
- Replace all rubber parts with new ones whenever disassembled.

GREASE: Use recommended rubber grease in the caliper seal set.

GREASE: Use recommended seal grease in the caliper seal set.

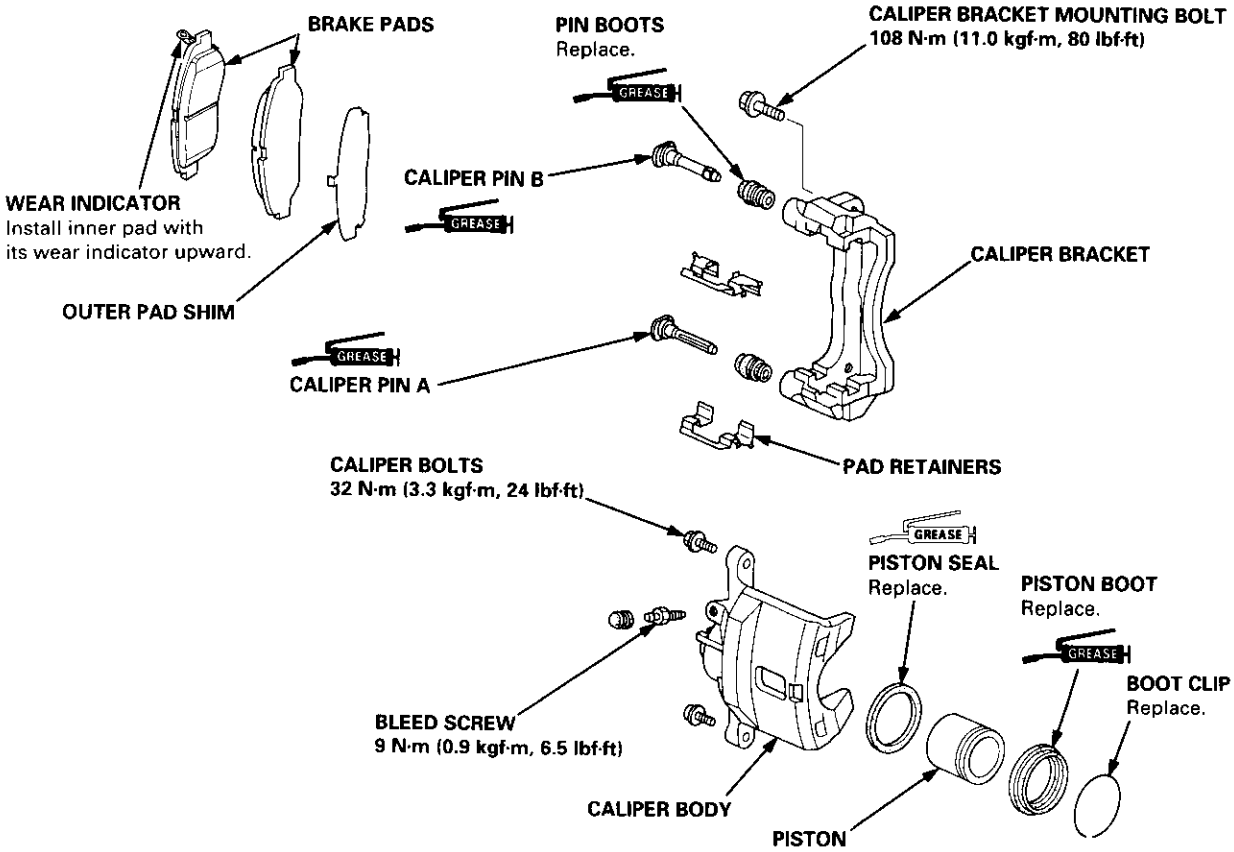

1. Clean the piston and caliper bore with brake fluid, and inspect for wear and damage.
2. Coat the new piston seal with the recommended rubber grease in the caliper seal set, and install the seal in the cylinder groove.
3. Apply the recommended seal grease in the caliper seal set to the sealing lips and inside of a new piston boot, and securely install it in the caliper with the new boot clip.

CAUTION: Be careful not to damage the caliper cylinder wall.

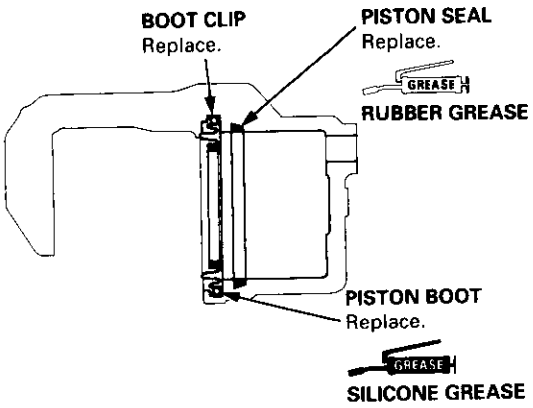

4. Lubricate the caliper and piston with brake fluid, then install the piston in the cylinder with the dished end facing in.

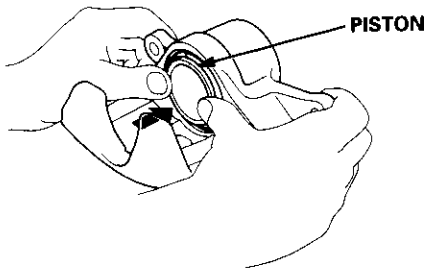

5. Apply the recommended seal grease in the caliper seal set to the sliding surface of the pins and the inside of the new pin boots.
6. Install the pin boots into the grooves in the caliper bracket properly.

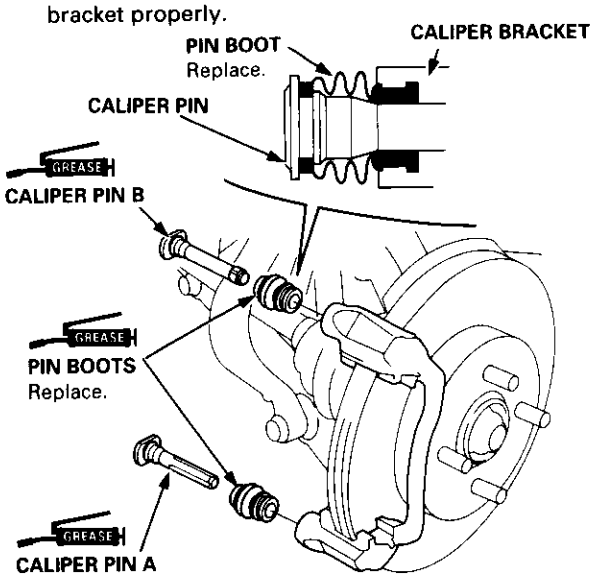

7. Insert pin A and pin B into the caliper bracket.
8. Install the pin boots into the grooves in the pins properly.
9. Install the brake pads in their original positions (see page 19-9).
10. Push in the piston so that the caliper will fit over the pads, and install the caliper.
11. Tighten the caliper bolts.
12. Connect the brake hose to the caliper with new sealing washers, and tighten the banjo bolt.

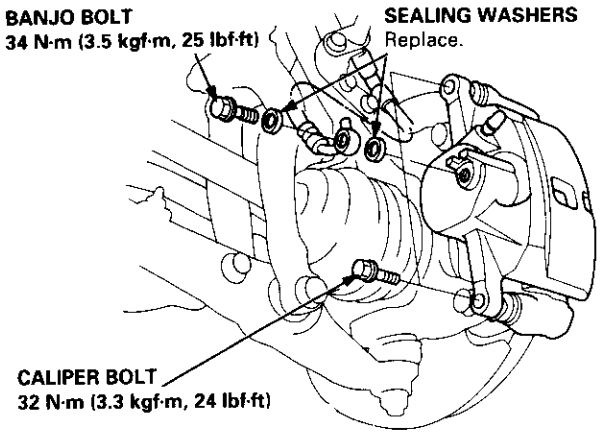

13. Fill the brake reservoir, and bleed the brake system (see page 19-7).
14. Perform the following checks:
    - Check for leaks at hose and line joints and connections, and retighten if necessary.
    - Check for brake hoses for interference and twisting.

(cont'd)

Reassembly (cont'd)

2056 Type:

⚠ WARNING

- **Never use an air hose or dry brush to clean brake assemblies.**
- **Use an OSHA approved vacuum cleaner to avoid breathing brake dust.**
- **Contaminated brake discs or pads reduce stopping ability.**
- **When reusing the pads, always reinstall the brake pads in their original positions to prevent loss of braking efficiency.**

CAUTION:

- **Do not spill brake fluid on the vehicle; it may damage the paint; if brake fluid does contact the paint, wash it off immediately with water.**
- **Clean all parts in brake fluid and air dry; blow out all passages with compressed air.**
- **Before reassembling, check that all parts are free of dust and other foreign particles.**
- **Replace parts with new ones whenever specified to do so.**
- **Make sure no dirt or other foreign matter is allowed to contaminate the brake fluid.**
- **Always use Genuine Honda DOT 3 Brake Fluid. Using a non-Honda brake fluid can cause corrosion and decrease the life of the system.**

NOTE:

- Coat the piston, piston seal, and caliper bore with clean brake fluid.
- Replace all rubber parts with new ones whenever disassembled.

GREASE: Use recommended rubber grease in the caliper seal set.

GREASE: Use recommended seal grease in the caliper seal set.

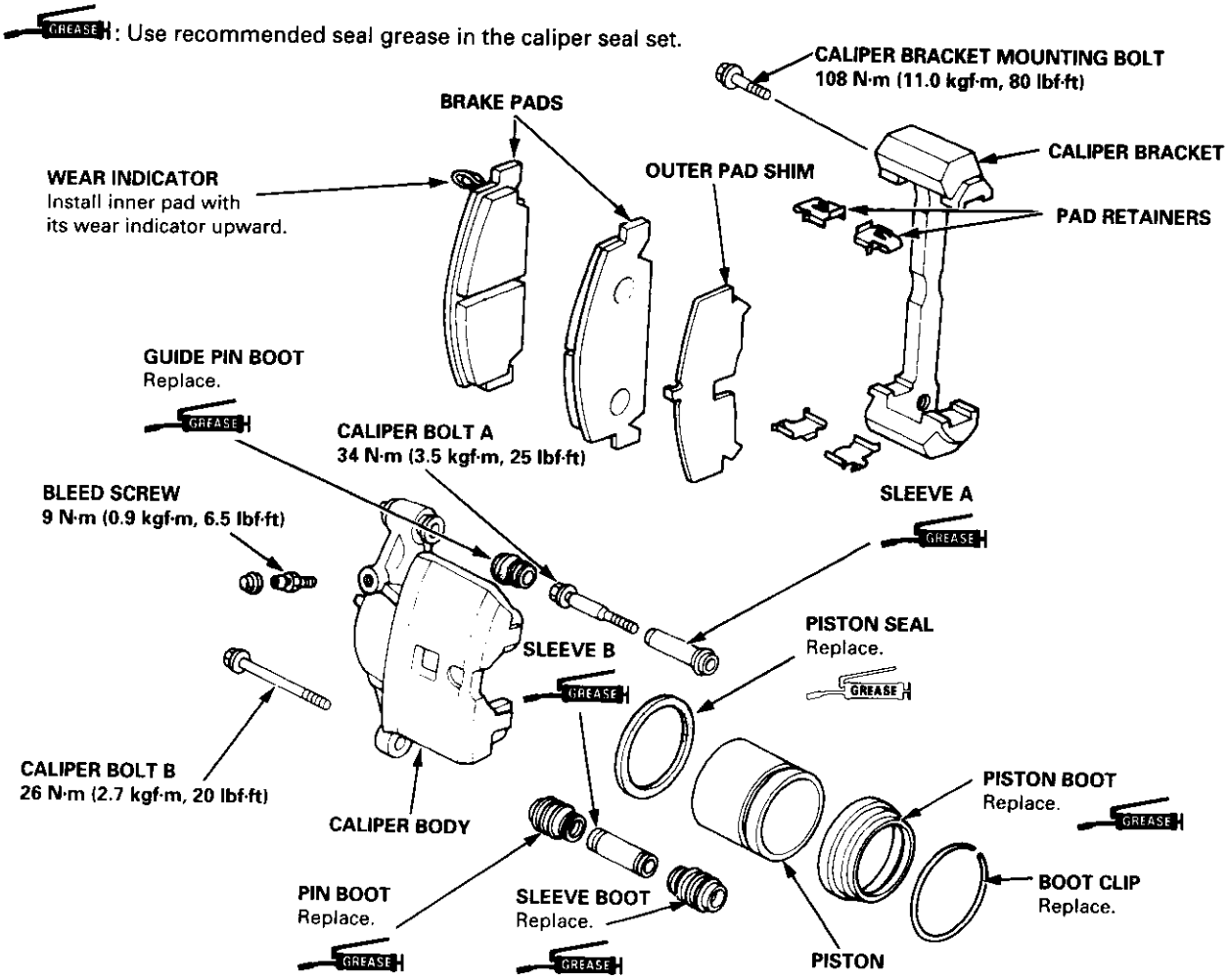

1. Clean the piston and caliper bore with brake fluid, and inspect for wear and damage.

2. Coat a new piston seal with the recommended rubber grease in the caliper seal set, and install the seal in the cylinder groove.

3. Apply the recommended seal grease in the caliper seal set to the sealing lips and inside of a new piston boot, and securely install it in the caliper with a new boot clip.

   CAUTION: Be careful not to damage the caliper cylinder wall.

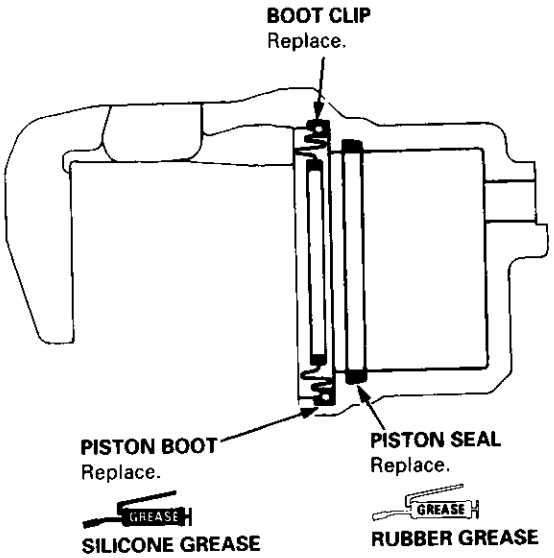

4. Lubricate the caliper and piston with brake fluid, then install the piston in the cylinder with the dished end facing in.

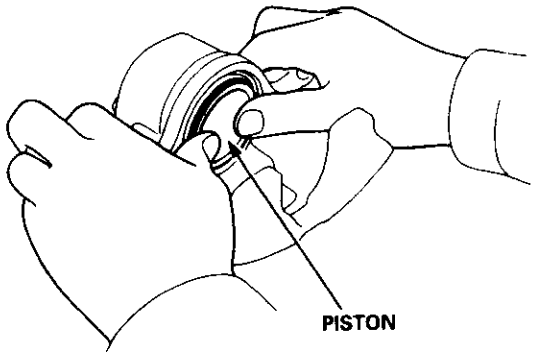

5. Apply the recommended seal grease in the caliper seal set to the sliding surface of sleeve B and the inside of the new pin and sleeve boots.

6. Install the new sleeve and pin boots and sleeve B on the caliper.

   NOTE: Make sure to install the boots into the grooves in the caliper and sleeve B properly.

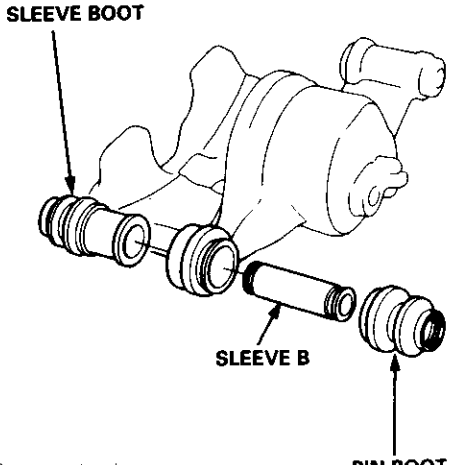

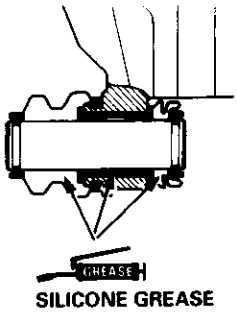

(cont'd)

Reassembly (cont'd)

7. Apply the recommended seal grease in the caliper seal set to the sliding surface of sleeve A and the inside of a new guide pin boot.

8. Install the guide pin boot into the groove in the sleeve A.

9. Make sure that the brake pad retainers and brake pads are in their original positions (see page 19-10).

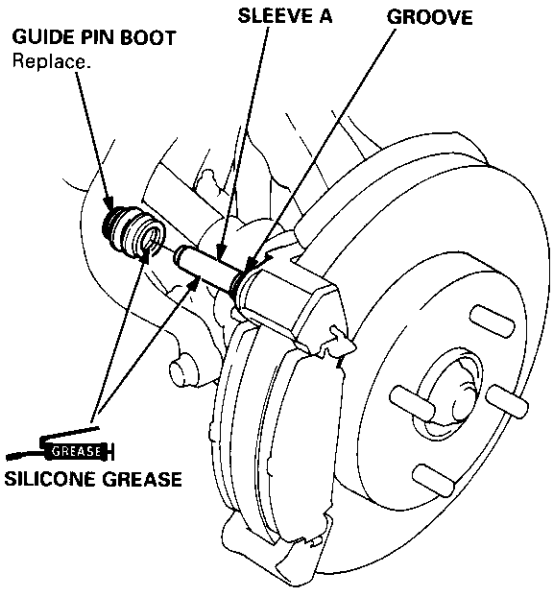

10. Install the caliper onto sleeve A, and pivot it down into position.

    NOTE: Install the guide pin boot into the groove in the caliper properly.

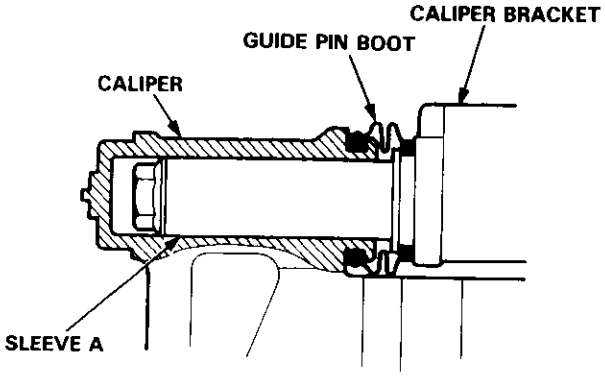

11. Connect the brake hose to the caliper with new sealing washers, and tighten the banjo bolt.

12. Tighten the caliper bolt B.

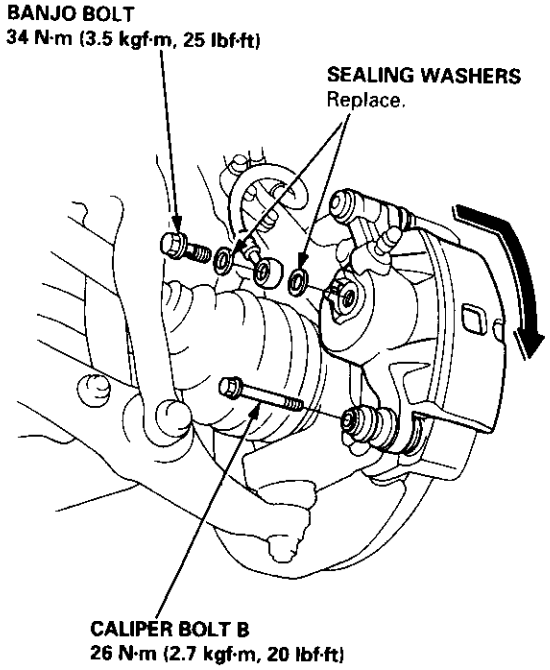

13. Fill the brake reservoir and bleed the brake system (see page 19-7).

14. Perform the following checks.
    - Check for leaks at hose and line joints and connections, and retighten if necessary.
    - Check for brake hoses for interference and twisting.

Removal/Installation

CAUTION:
- **Be careful not to bend or damage the brake lines when removing the master cylinder.**
- **Do not spill brake fluid on the vehicle; it may damage the paint; if brake fluid does contact the paint, wash it off immediately with water.**
- **To prevent spills, cover the hose joints with rags or shop towels.**

1. Disconnect the brake fluid level switch connectors.
2. Remove the reservoir cap from the master cylinder.
3. The brake fluid may be sucked out through the top of the master cylinder reservoir with a syringe.
4. Disconnect the brake lines from the master cylinder.
5. Remove the master cylinder mounting nuts and washers.
6. Remove the master cylinder from the brake booster.
7. Disconnect the vacuum hose from the brake booster.
8. Remove the cotter pin and clevis pin from the clevis.

   CAUTION: Do not disconnect the clevis by removing it from the operating rod of the brake booster. If the clevis is loosened, adjust the pushrod length before installing the brake booster (see page 19-22).

9. Remove the four booster mounting nuts.
10. Pull the brake booster forward until the clevis is clear of the bulkhead.
11. Remove the brake booster from the engine compartment.
12. Install the brake booster and master cylinder in the reverse order of removal.

    CAUTION:
    - **When connecting the brake lines, make sure that there is no interference between the brake lines and other parts.**
    - **Be careful not to bend or damage the brake lines when installing the master cylinder.**

    NOTE: If replacing the master cylinder or brake booster, check and adjust the pushrod clearance before installing the master cylinder (see page 19-22).

13. Fill the master cylinder reservoir, and bleed the brake system (see page 19-7).
14. After installation, check the brake pedal height and brake pedal free play (see page 19-5) and adjust if necessary.

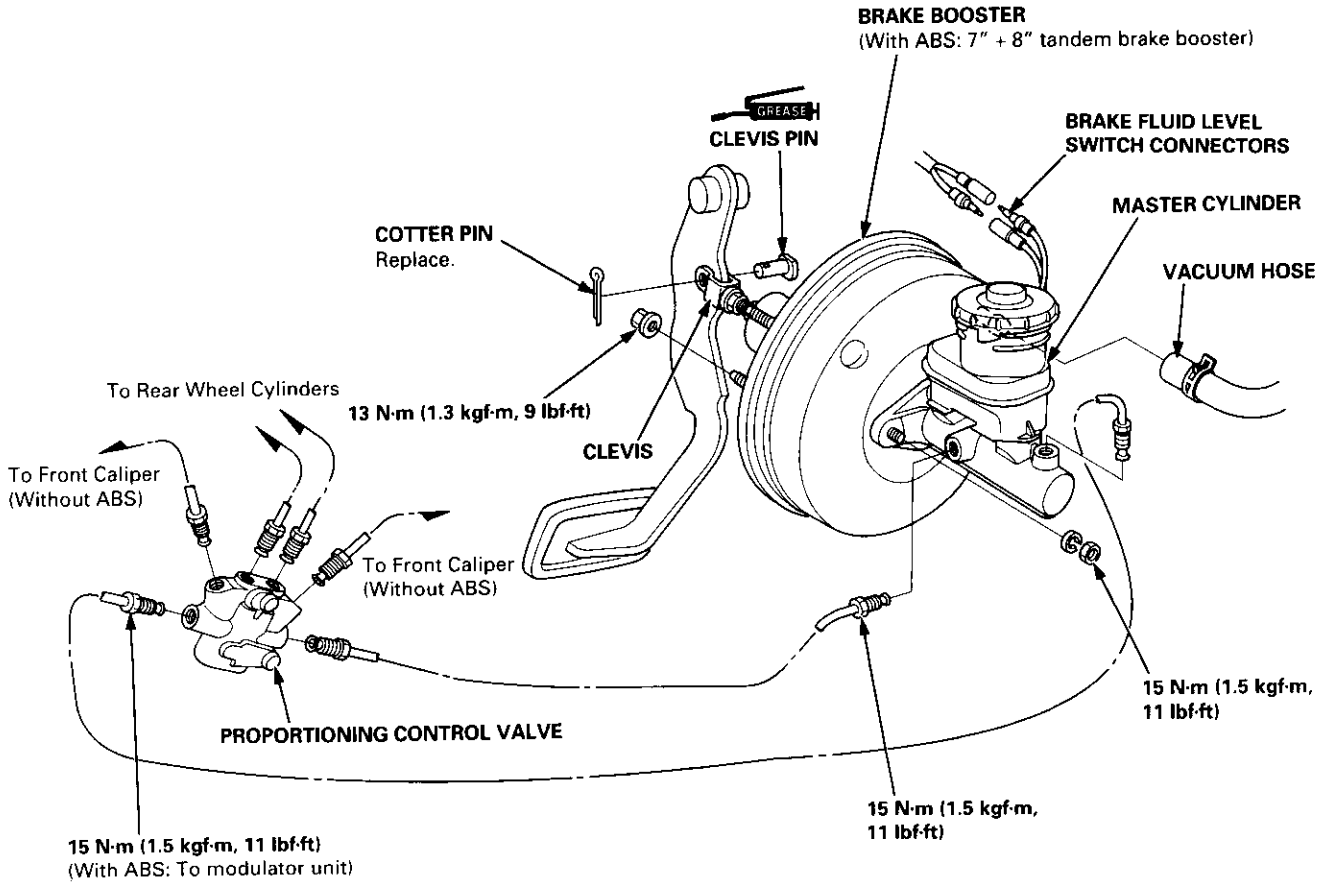

Pushrod Clearance Adjustment

NOTE:
- The master cylinder pushrod-to-piston clearance must be checked and adjustments made, if necessary, before installing the master cylinder.
- ABS type is shown, conventional brake type is similar.

1. Set the special tool on the master cylinder body; push in the center shaft until the top of it contacts the end of the secondary piston by turning the adjusting nut.

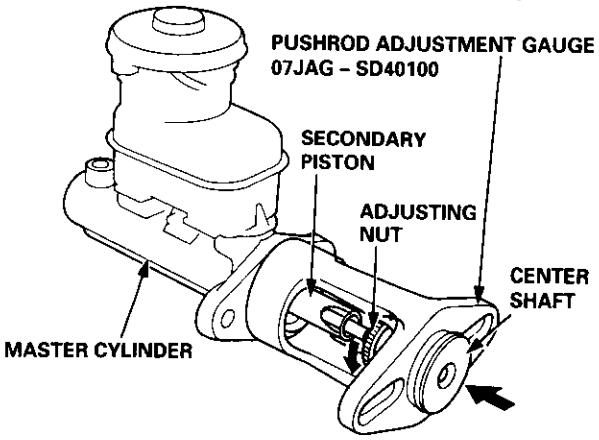

2. Without disturbing the center shaft's position, install the special tool upside down on the booster.
3. Install the master cylinder nuts, and tighten to the specified torque.
4. Connect the booster in-line with a vacuum gauge 0 – 101 kPa (0 – 760 mmHg, 30 in.Hg) to the booster's engine vacuum supply, and maintain an engine speed that will deliver 66 kPa (500 mmHg, 20 in.Hg) vacuum.
5. With a feeler gauge, measure the clearance between the gauge body and the adjusting nut as shown.

Clearance: 0 – 0.4 mm (0 – 0.02 in)

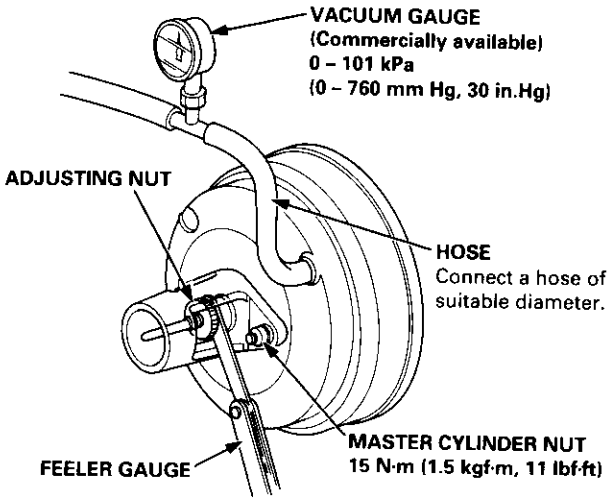

NOTE: If the clearance between the gauge body and adjusting nut is 0.4 mm (0.02 in), the pushrod-to-piston clearance is 0 mm. However, if the clearance between the gauge body and adjusting nut is 0 mm, the pushrod-to-piston clearance is 0.4 mm (0.02 in) or more. Therefore, it must be adjusted and rechecked.

6. If clearance is incorrect, loosen the star locknut, and turn the adjuster in or out to adjust.

NOTE:
- Adjust the clearance while the specified vacuum is applied to the booster.
- Hold the clevis while adjusting.

7. Tighten the star locknut securely.
8. Remove the special tool.

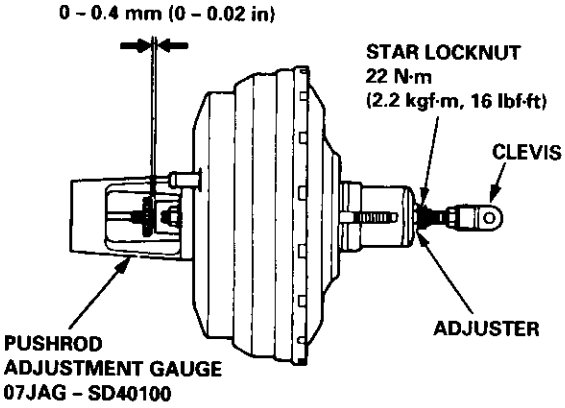

9. Adjust the pushrod length as shown if the booster is removed.

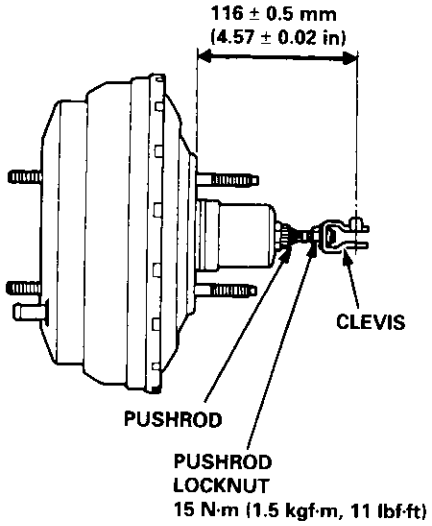

10. Install the master cylinder (see page 19-21).

Brake Booster Inspection

Functional Test

1. With the engine stopped, depress the brake pedal several times to deplete the vacuum reservoir, then depress the pedal hard and hold it for 15 seconds. If the pedal sinks, either the master cylinder is bypassing internally, or the brake system (master cylinder, lines, modulator, proportioning control valve, or caliper) is leaking.
2. Start the engine with the pedal depressed. If the pedal sinks slightly, the vacuum booster is operating normally. If the pedal height does not vary, the booster or check valve is faulty.
3. With the engine running, depress the brake pedal lightly. Apply just enough pressure to hold back automatic transmission creep. If the brake pedal sinks more than 25 mm (1.0 in.) in three minutes, the master cylinder is faulty. A slight change in pedal height when the A/C compressor cycles on and off if normal. (The A/C compressor load changes the vacuum available to the booster.)

Leak Test

1. Depress the brake pedal with the engine running, then stop the engine. If the pedal height does not vary while depressed for 30 seconds, the vacuum booster is OK. If the pedal rises, the booster is faulty.
2. With the engine stopped, depress the brake pedal several times using normal pressure. When the pedal is first depressed, it should be low. On consecutive applications, the pedal height should gradually rise. If the pedal position does not vary, check the booster check valve.

Booster Check Valve Test

1. Disconnect the brake booster vacuum hose at the booster.
2. Start the engine and let it idle. There should be vacuum. If no vacuum is available, the check valve is not working properly. Replace the brake booster vacuum hose and check valve, and retest.

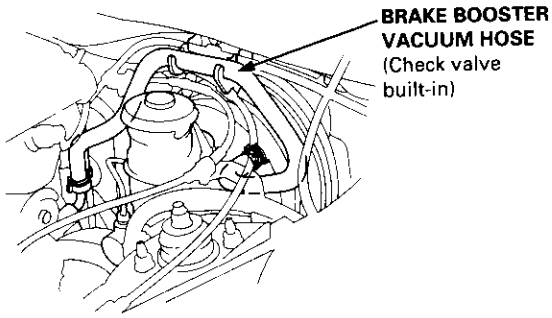

Inspection and Replacement

⚠ WARNING

- **Never use an air hose or dry brush to clean brake assemblies.**
- **Use an OSHA-approved vacuum cleaner to avoid breathing brake dust.**

1. Block the front wheels, loosen the rear wheel nuts slightly, support the rear of the vehicle on safety stands, then remove the rear wheels.

2. Release the parking brake, and remove the caliper shield.

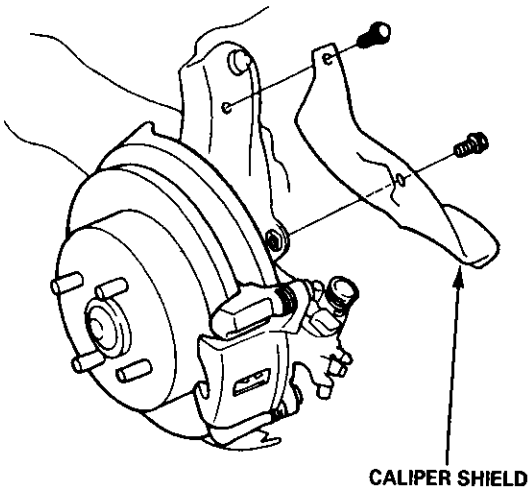

3. Remove the brake hose clamp bolt from the trailing arm first, then remove the two caliper mounting bolts and the caliper from the bracket.

   CAUTION:
   - **Thoroughly clean the outside of the caliper to prevent dust and dirt from entering inside.**
   - **Support the caliper with a piece of wire so that it does not hang from the brake hose.**

   NOTE: Check the hoses and pin boots for damage or deterioration.

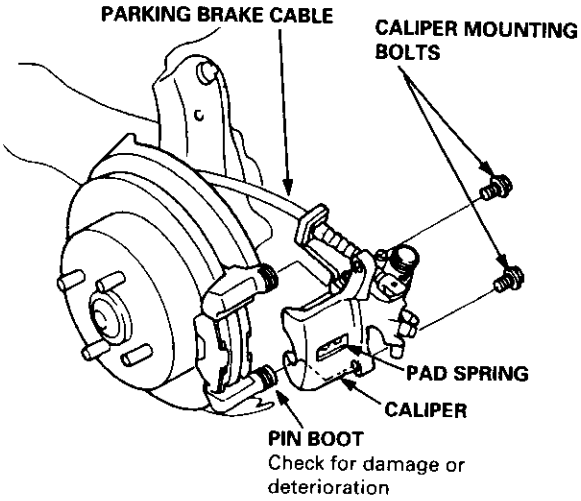

4. Remove the outer pad shim, pads, and pad retainers.

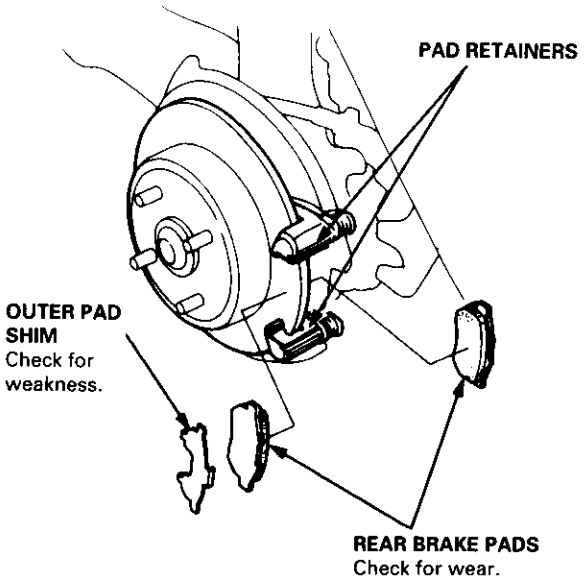

5. Using vernier calipers, measure the thickness of each brake pad lining. The measurement does not include the pad backing plate thickness.

   Brake Pad Thickness:
   Standard: 7.0 – 8.0 mm (0.28 – 0.31 in)
   Service Limit: 1.6 mm (0.06 in)

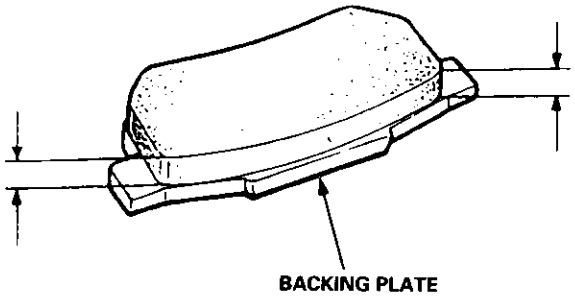

6. If the pad thickness is less than the service limit, replace the pads and shims together as a set.

7. Clean the caliper thoroughly; remove any rust, and check for grooves and cracks.

8. Check the brake disc for damage and cracks.

9. Make sure that the pad retainers are installed in their correct positions.

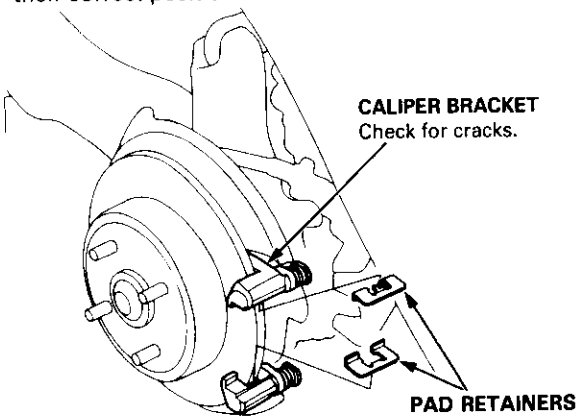

10. Apply grease to the points indicated by the arrow in the following drawing:

    NOTE: Use the pad grease included in the pad set or Molykote M77 grease, and apply a thin coat of grease evenly to the designated points.
    - Piston end and inner pad contact surface
    - Pad and caliper bracket contact surface
    - Outer pad shim and outer pad contact surface
    - Outer pad shim and caliper body contact surface

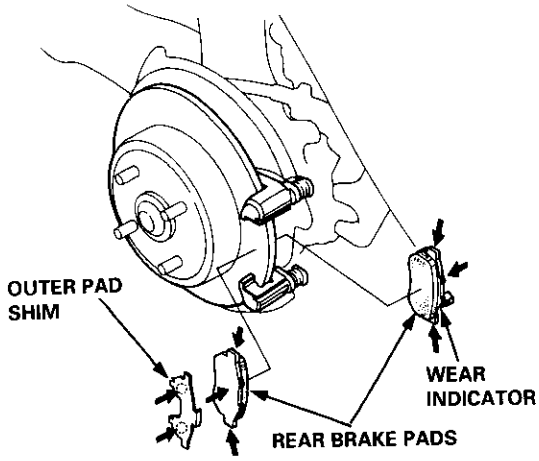

11. Install the brake pads and outer pad shim on the caliper bracket. Install the inner pad with its wear indicator facing downward.

    ⚠ WARNING
    - **When reusing the pads, always reinstall the brake pads in their original positions to prevent loss of braking efficiency.**
    - **Contaminated brake discs or pads reduce stopping ability. Keep grease off the discs and pads.**

12. Rotate the caliper piston clockwise into the cylinder, then align the cutout in the piston with the tab on the inner pad by turning the piston back.

    CAUTION: Lubricate the boot with rubber grease to avoid twisting the piston boot. If the piston boot is twisted, back it out so it sits properly.

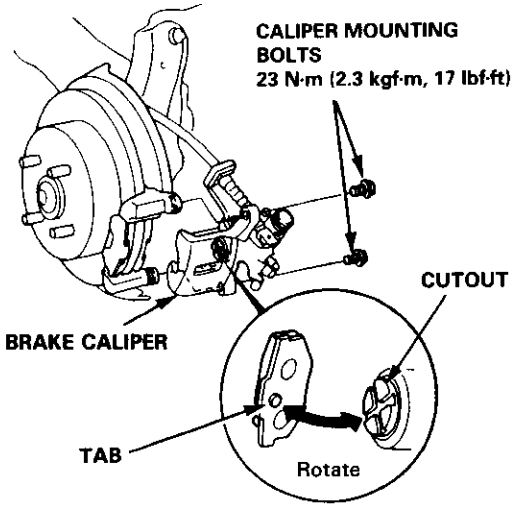

13. Install the brake hose clamp on the trailing arm.

14. Install and tighten the caliper mounting bolts.

15. Install the caliper shield.

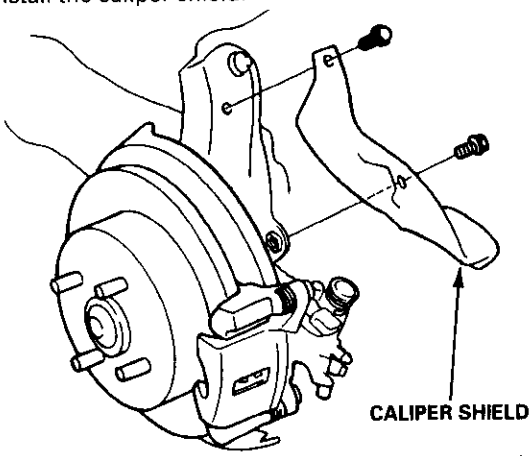

16. After installation, check for leaks at hose and line joints and connections, and retighten if necessary.

17. Depress the brake pedal several times to make sure the brakes work, then test-drive.

    NOTE: Engagement of the brake may require greater pedal travel immediately after the brake pads have been replaced as a set. Several light applications of the brake pedal will restore the normal pedal travel. Greater than normal pedal travel may damage the master cylinder.

Disc Runout Inspection

1. Loosen the front wheel nuts slightly, then raise the vehicle, and support it on safety stands. Remove the front wheels.

2. Remove the brake pads (see page 19-24).

3. Inspect the disc surface for damage and cracks. Clean the disc thoroughly, and remove all rust.

4. Use wheel nuts and suitable plain washers to hold the disc securely against the hub, then mount a dial indicator as shown, and measure the runout at 10 mm (0.4 in) from the outer edge of the disc.

   Brake Disc Runout:
   Service Limit: 0.10 mm (0.004 in)

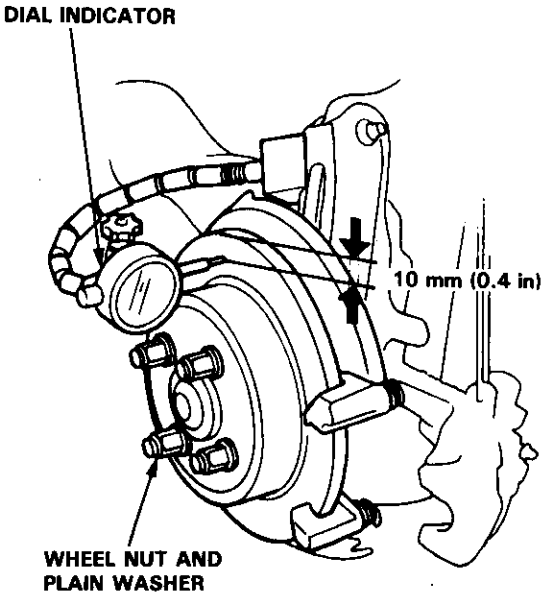

5. If the disc is beyond the service limit, refinish the brake disc.

   Max. Refinishing Limit: 8.0 mm (0.31 in)

   NOTE: A new disc should be refinished if its runout is greater than 0.10 mm (0.004 in).

Disc Thickness and Parallelism Inspection

1. Loosen the front wheel nuts slightly, then raise the vehicle, and support it on safety stands. Remove the front wheels.

2. Remove the brake pads (see page 19-24).

3. Using a micrometer, measure disc thickness at eight points, approximately 45° apart and 10 mm (0.4 in) in from the outer edge of the disc. Replace the brake disc if the smallest measurement is less than the max. refinishing limit.

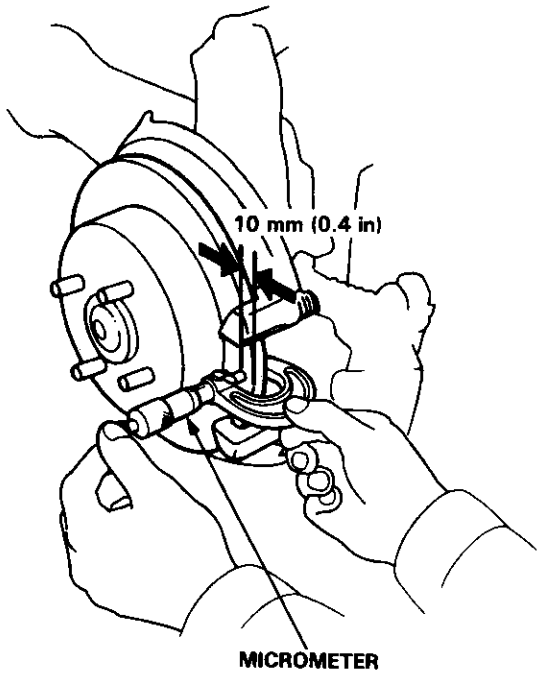

   Brake Disc Thickness:
   Standard: 8.9 – 9.1 mm (0.350 – 0.358 in)
   Max. Refinishing Limit: 8.0 mm (0.31 in)

   Brake Disc Parallelism: 0.015 mm (0.0006 in) max.

   NOTE: This is the maximum allowable difference between the thickness measurements.

4. If the disc is beyond the service limit for parallelism, refinish the brake disc.

   NOTE: See section 18 for brake disc replacement.

Disassembly

⚠ WARNING

- **Never use an air hose or dry brush to clean brake assemblies.**
- **Use an OSHA-approved vacuum cleaner to avoid breathing brake dust.**
- **Contaminated brake discs or pads reduce stopping ability.**

CAUTION:

- **Do not spill brake fluid on the car; it may damage the paint; if brake fluid does contact the paint, wash it off immediately with water.**
- **To prevent spills, cover the hose joints with rags or shop towels.**
- **Clean all parts in brake fluid and air dry; blow out all passages with compressed air.**

1. Remove the caliper shield (see page 19-24).

2. Remove the lock pin and clevis pin. Remove the cable clip, and disconnect the cable from the arm.

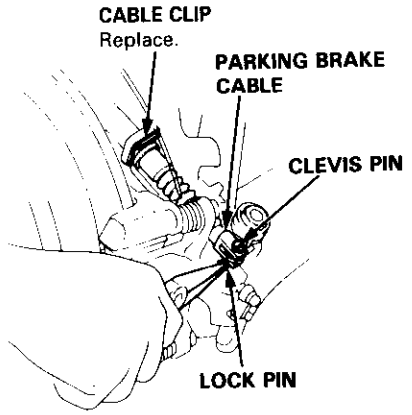

3. Remove the banjo bolt and two sealing washers.

4. Remove the two caliper mounting bolts and caliper body from the bracket.

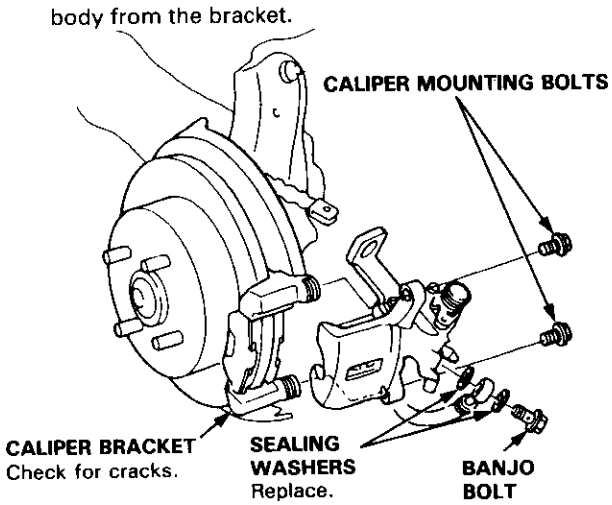

5. Remove the pins and pin boots from the caliper bracket.

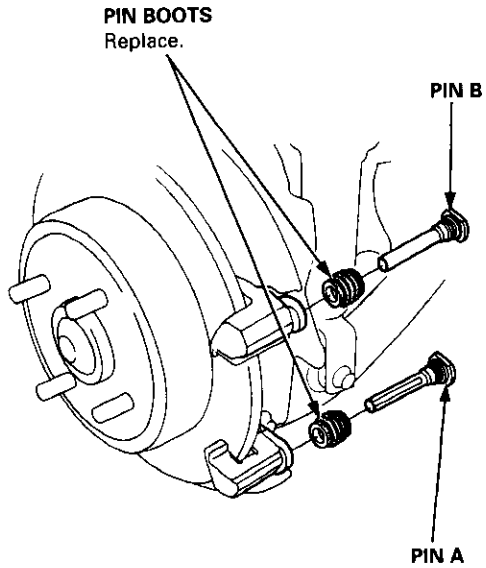

6. Remove the pad spring from the caliper body.

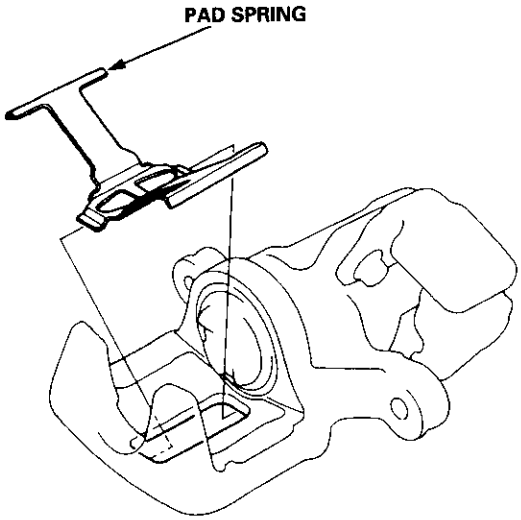

(cont'd)

Disassembly (cont'd)

7. Remove the piston by rotating the piston counter-clockwise with the tool, and remove the piston boot.

CAUTION: Avoid damaging the piston.

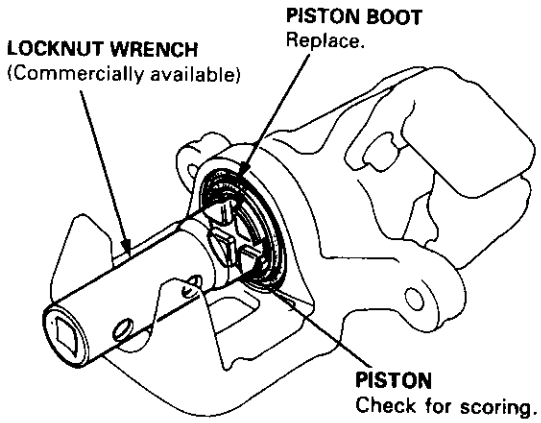

8. Remove the piston seal.

CAUTION: Take care not to damage the cylinder bore.

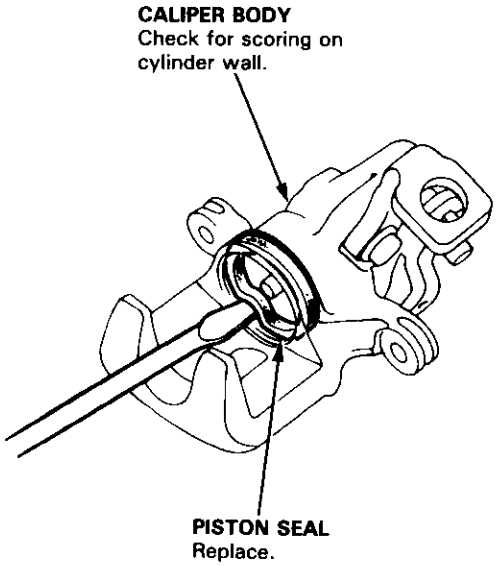

9. Install the special tool between the caliper body and spring cover.

CAUTION: Be careful not to damage the inside of the caliper cylinder during caliper disassembly.

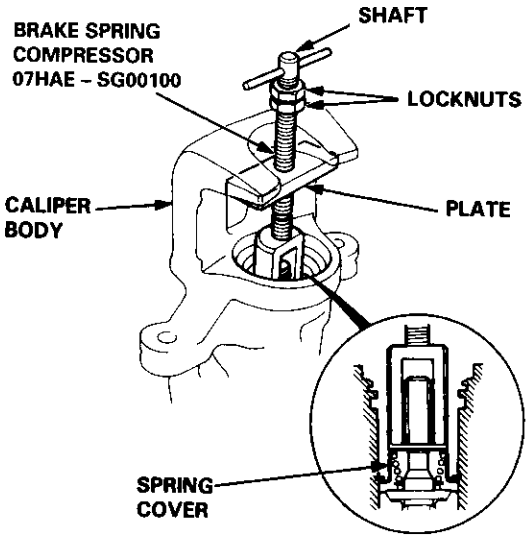

10. Position the locknuts as shown, then turn the shaft until the plate just contacts the caliper body.

NOTE: Do not compress the spring under the spring cover.

11. Turn the shaft clockwise 1/4 – 1/2 turn to compress adjusting spring B in the caliper body.

CAUTION: To prevent damage to the inner components, do not turn the shaft more than 1/2 turn.

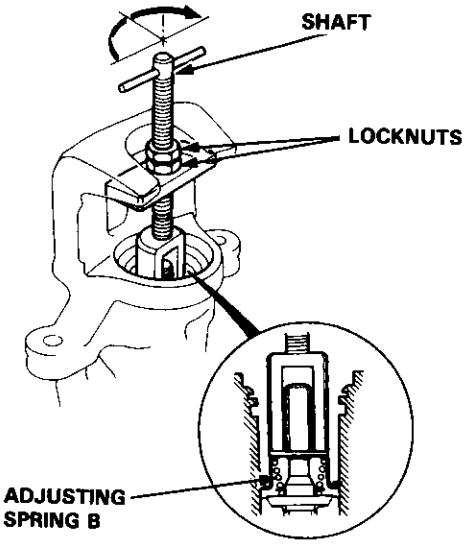

12. Lower the locknuts fully, and tighten them securely.

    NOTE: Keep the locknuts in this position until you reinstall the circlip.

13. Remove the circlip with snap ring pliers.

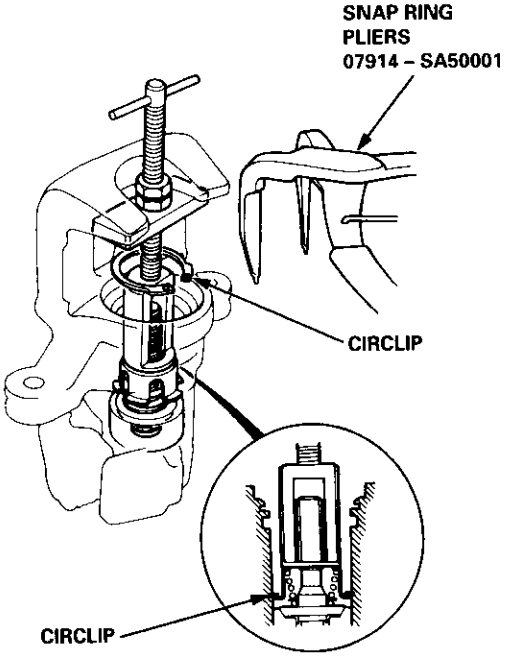

14. Hold the plate with your fingers, and turn the shaft counterclockwise. Remove the special tool from the caliper.

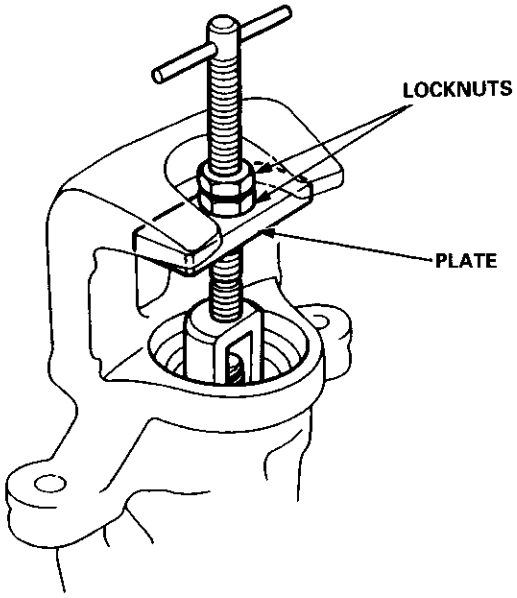

15. Remove the adjusting bolt.

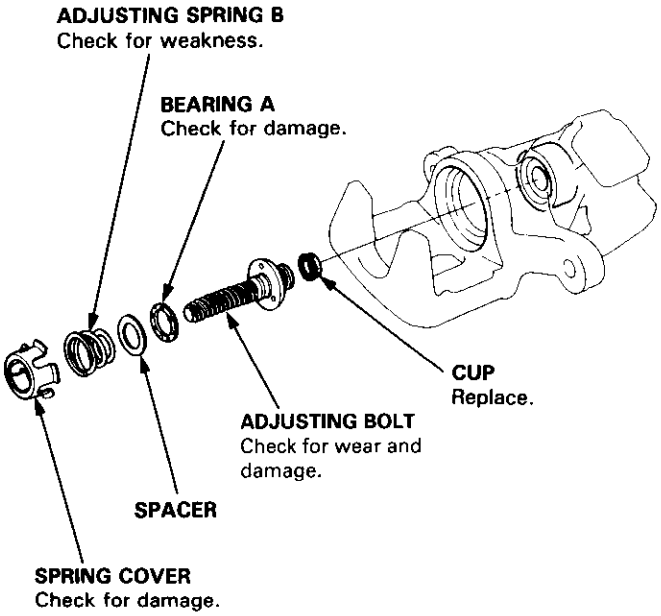

16. Remove the spring cover, adjusting spring B, spacer, bearing A, and cup from the adjusting bolt.

17. Remove the sleeve piston, and remove the pin from the cam in the caliper body.

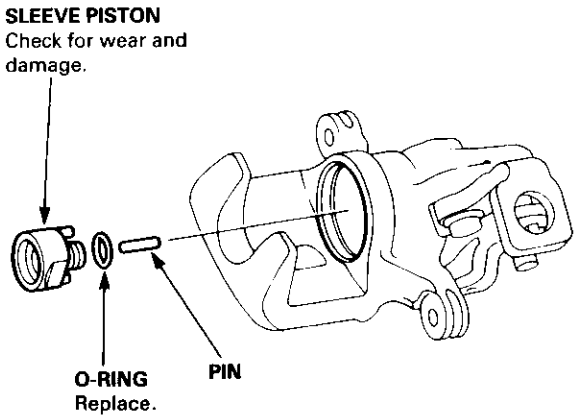

(cont'd)

Disassembly (cont'd)

18. Remove the return spring.

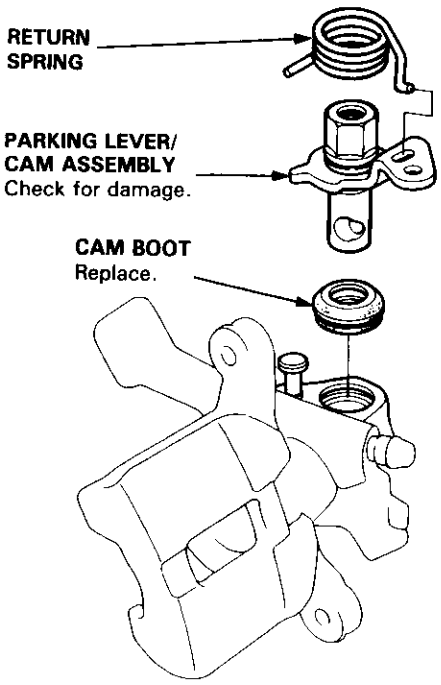

19. Remove the parking lever and cam as an assembly from the caliper body.

    CAUTION: Do not loosen the parking nut with the cam installed in the caliper body. If the lever and shaft must be separated, hold the lever in a vise, and loosen the parking nut.

20. Remove the cam boot.

Reassembly

⚠ WARNING

- **Never use an air hose or dry brush to clean brake assemblies.**
- **Use an OSHA-approved vacuum cleaner to avoid breathing brake dust.**
- **Contaminated brake discs or pads reduce stopping ability.**
- **When reusing the pads, install them in their original positions to prevent loss of braking efficiency.**

CAUTION:

- **Do not spill brake fluid on the vehicle; It may damage the paint; if brake fluid does contact the paint, wash it off immediately with water.**
- **Clean all parts in brake fluid and air dry; blow out all passages with compressed air.**
- **Before reassembling, check that all parts are free of dust and other foreign particles.**
- **Replace parts with new ones whenever specified to do so.**
- **Make sure no dirt or other foreign matter is allowed to contaminate the brake fluid.**
- **Always use Genuine Honda DOT 3 Brake fluid. Using a non-Honda brake fluid can cause corrosion and decrease the life of the system.**

NOTE:

- Coat piston, piston seal, and caliper bore with clean brake fluid.
- Replace all rubber parts with new ones whenever disassembled.

- GREASE: Use recommended silicone and pin greases in the caliper seal set.
- GREASE: Use recommended rubber grease in the caliper seal set.

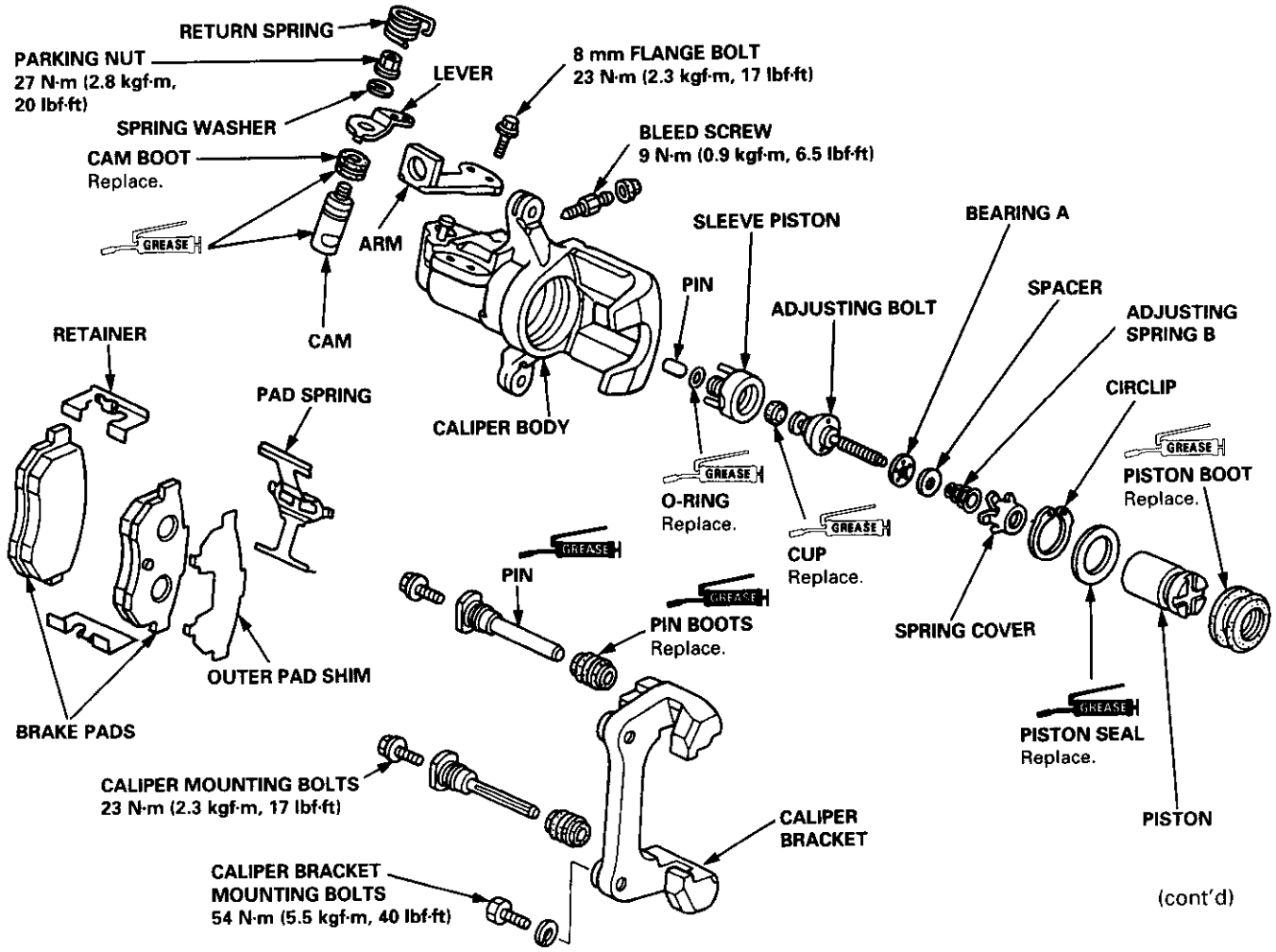

(cont'd)

Reassembly (cont'd)

1. Pack all cavities of the needle bearing with the recommended rubber grease in the caliper seal set.

2. Coat a new cam boot with recommended rubber grease in the caliper seal set, and install it in the caliper body.

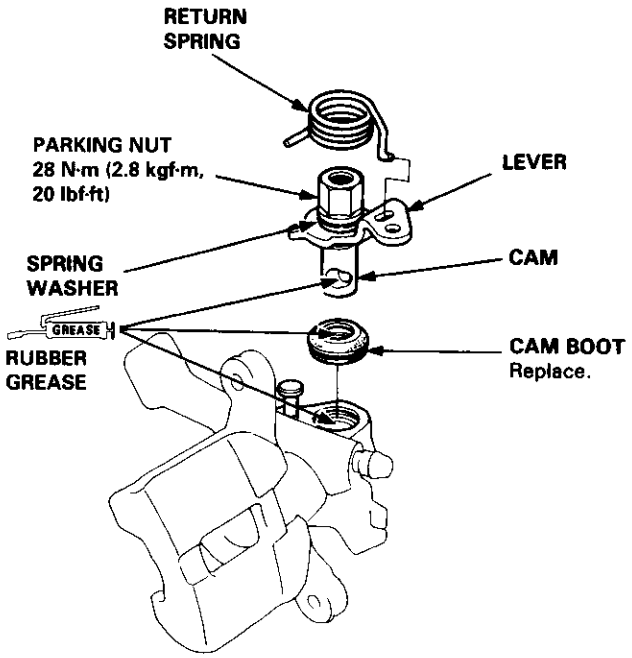

3. Apply recommended rubber grease in the caliper seal set to the pin contacting area of the cam, and install the cam and lever assembly into the caliper body.

4. Install the return spring.

   CAUTION:
   - **When the cam and lever were separated, be sure to assemble them before installing the cam in the caliper body. Install the lever and spring washer, apply locking agent to the threads, and tighten the parking nut while holding the lever with a vise.**
   - **Avoid damaging the cam boot since it must be installed before the cam.**
   - **When installing the cam, do not allow the cam boot lips to turn outside in.**

5. Install the pin in the cam.

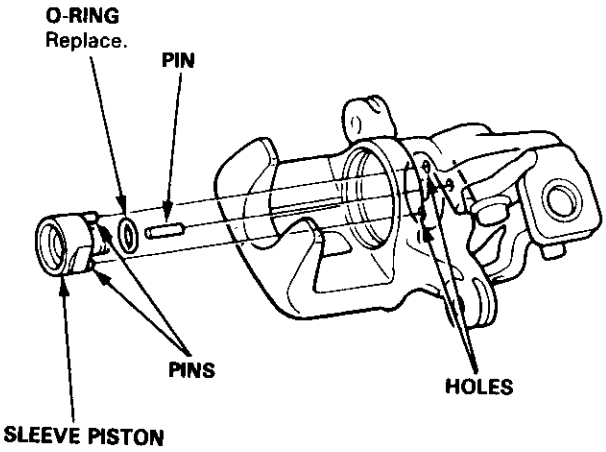

6. Install a new O-ring on the sleeve piston.

7. Install the sleeve piston so that the hole in the bottom of the piston is aligned with the pin in the cam, and the two pins on the piston are aligned with the holes in the caliper.

8. Coat a new cup with recommended rubber grease in the caliper seal set, and install it with its groove facing the bearing A side of the adjusting bolt.

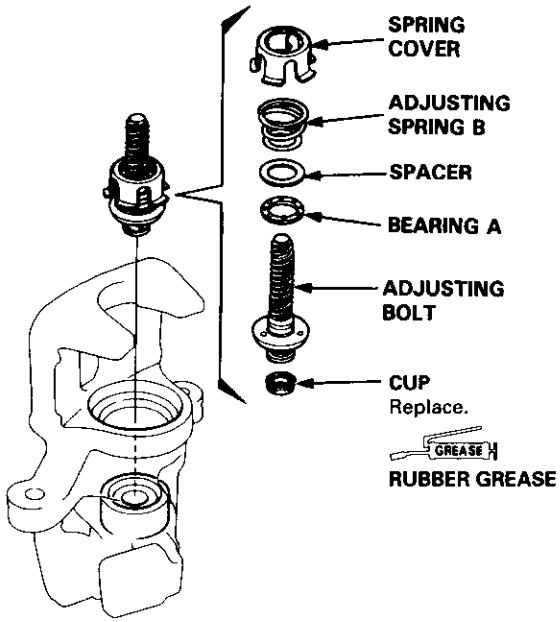

9. Fit the bearing A, spacer, adjusting spring B, and spring cover on the adjusting bolt, and install them in the caliper cylinder.

10. Install the special tool onto the spring cover, and turn the shaft until the locknut contacts the plate.

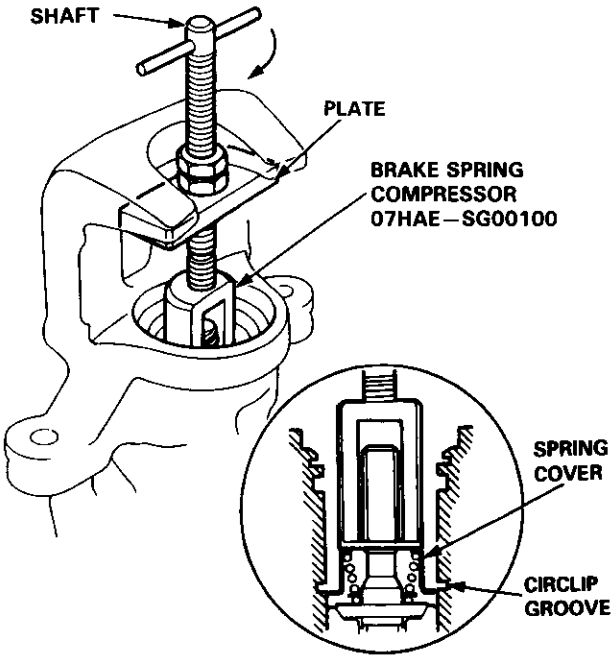

11. Check that the flared end of the spring cover is below the circlip groove.

12. Install the circlip into the groove, then remove the special tool.

    NOTE: Check that the circlip is seated in the groove properly.

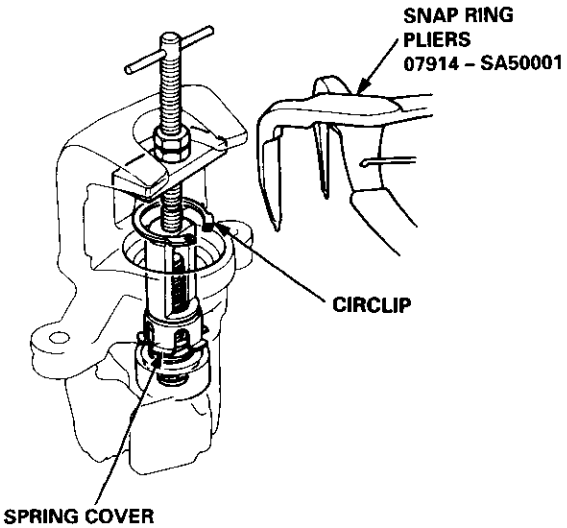

13. Coat a new piston seal with recommended silicone grease in the caliper seal set, and install it in the caliper.

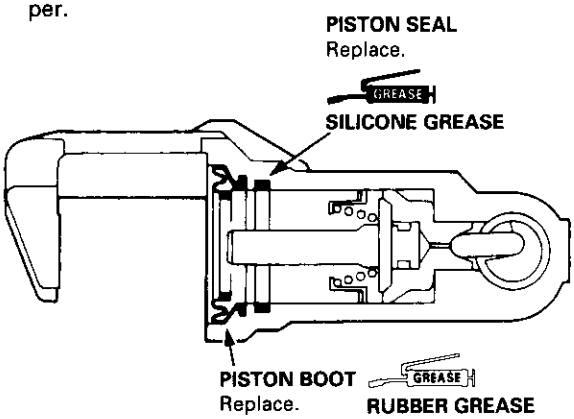

14. Apply recommended rubber grease in the caliper seal set to the sealing lips and inside of a new piston boot, and install it in the caliper.

15. Coat the outside of the piston with brake fluid, and install it onto the adjusting bolt while rotating it clockwise with the tool.

    CAUTION: Avoid damaging the piston and piston boot.

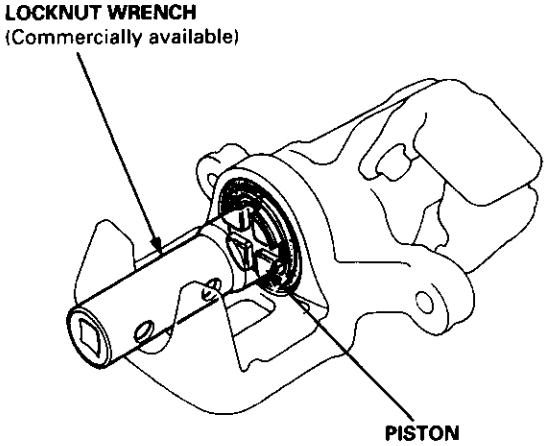

(cont'd)

Reassembly (cont'd)

16. Install the pad spring onto the caliper.

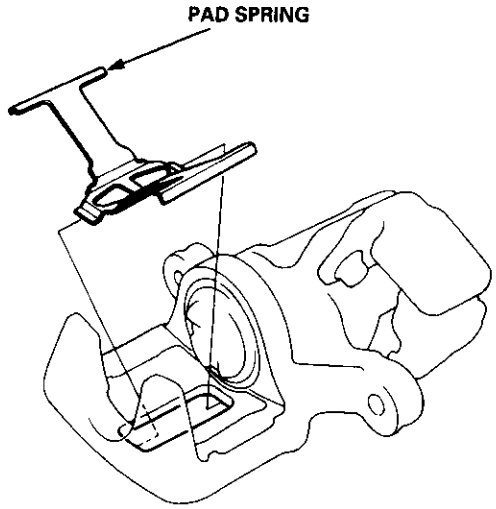

17. Apply the recommended pin grease in the caliper seal set to the sliding surface of the pins and inside of the new pin boots.

18. Install the pin boots into the grooves in the caliper bracket properly.

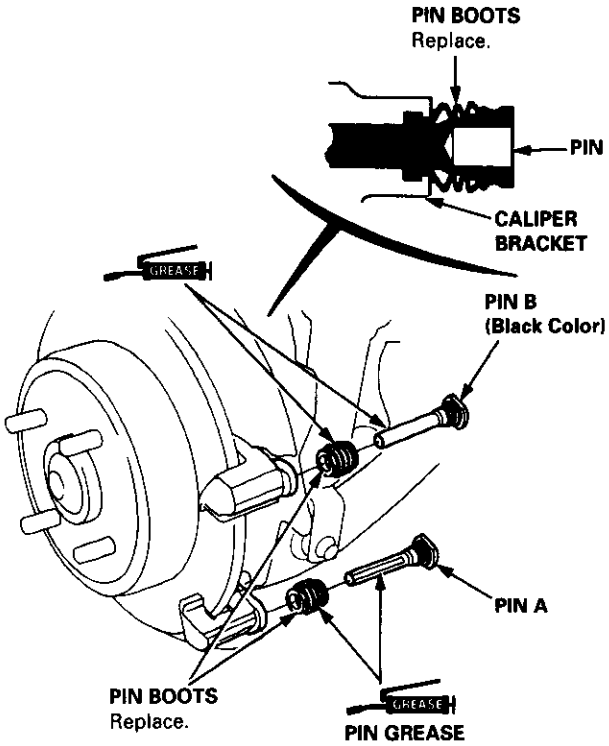

19. Insert pin A and pin B into the caliper bracket.

20. Install the pin boots into the grooves in the pins properly.

21. Install the brake pad retainers and brake pads (see page 19-25).
22. Align the cutout in the piston with the tab on the inner pad (see page 19-25).
23. Install the caliper onto the caliper bracket, and tighten the caliper mounting bolts.

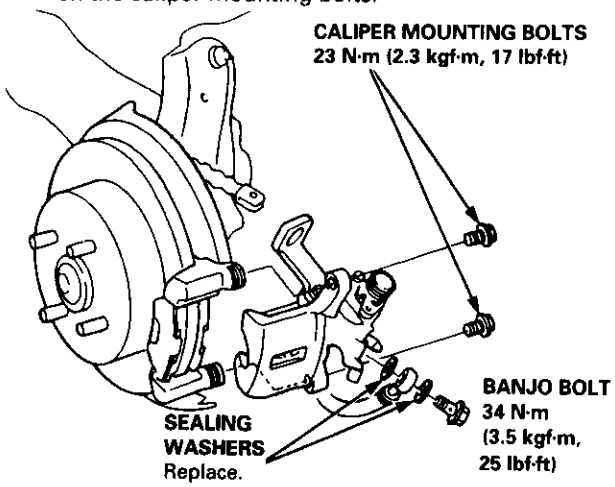

24. Connect the brake hose to the caliper with new sealing washers, and tighten the banjo bolt.
25. Insert the cable through the arm, and connect the cable to the lever with the clevis pin and lock pin. Install the cable clip securely.

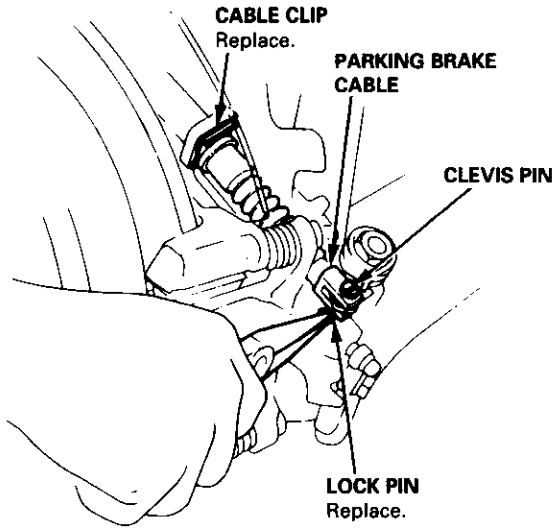

26. Install the caliper shield.
27. Fill the brake reservoir, and bleed the brake system (see page 19-7).
28. Operate the brake pedal several times, then adjust the parking brake (see page 19-6).
29. After installation, perform the following checks:
    - Check for leaks at hose and line joints and connections, and retighten if necessary.
    - Check the parking brake lever for operation, and adjust it if necessary.
    - Check for brake hose for interference or twisting.

Index/Inspection

⚠ WARNING

- **Never use an air hose or dry brush to clean brake assemblies.**
- **Use an OSHA approved vacuum cleaner to avoid breathing brake dust.**
- **Contaminated brake linings or drums reduce stopping ability.**
- **Block the front wheels before jacking up the rear of the vehicle.**

1. Block the front wheels, loosen the rear wheel nuts slightly, support the rear of the vehicle on safety stands, then remove the rear wheels.

2. Release the parking brake, and remove the rear brake drum.

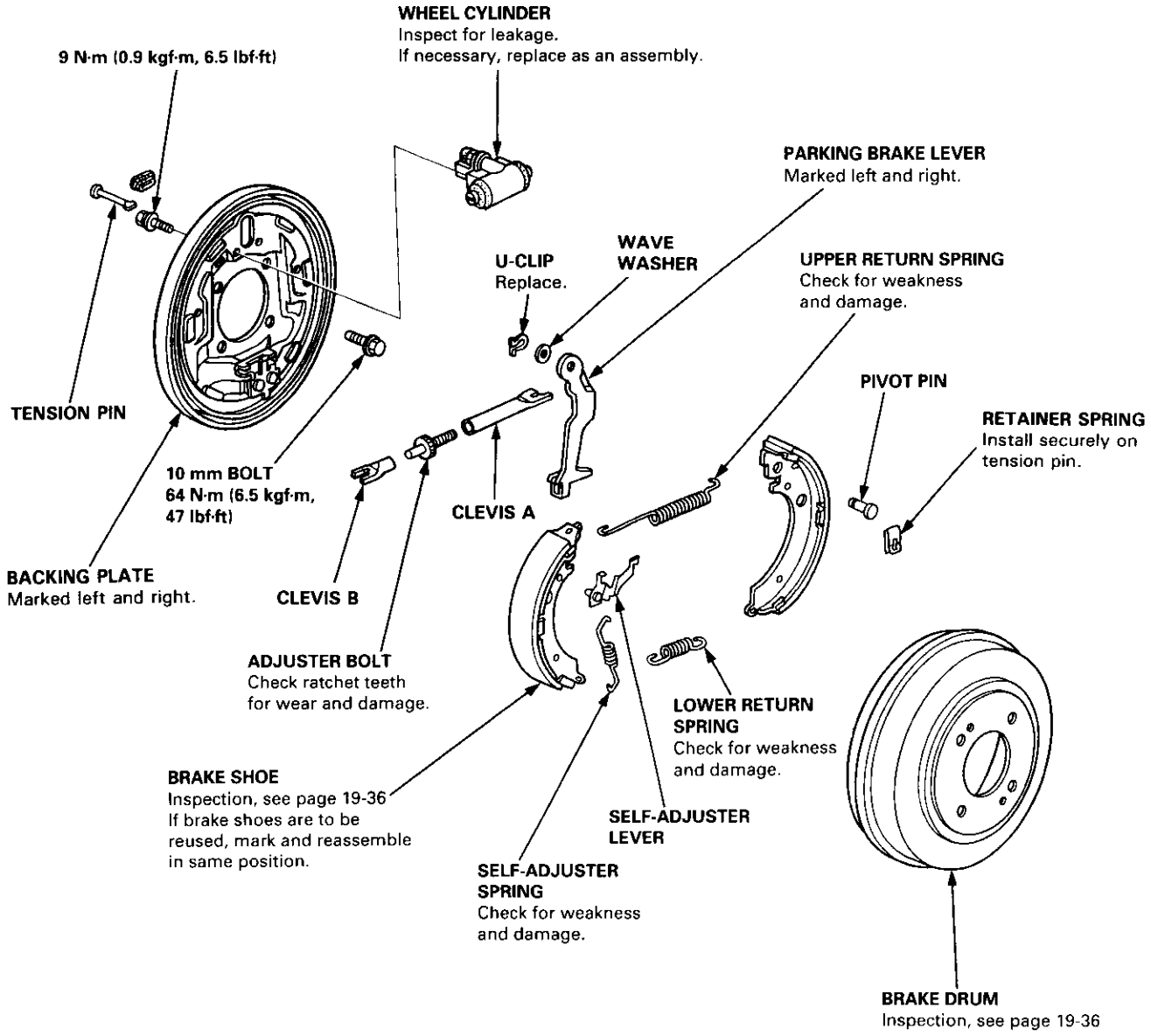

Inspection

1. Check the wheel cylinder for leakage.

2. Check the brake linings for cracking, glazing, wear, and contamination.

3. Measure the brake lining thickness.

   Brake Lining Thickness:
   Standard: 4.0 mm (0.157 in)
   Service Limit: 2.0 mm (0.08 in)

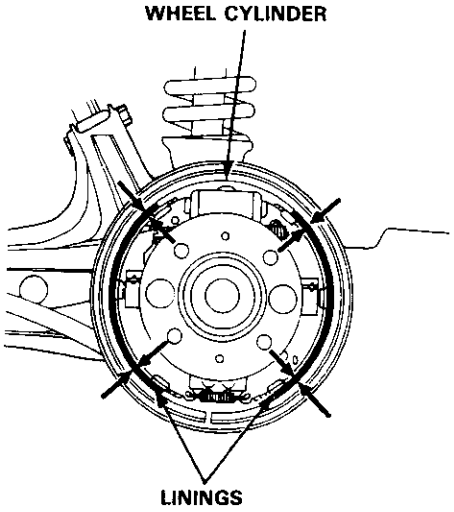

   NOTE: Measurement does not include brake shoe thickness.

4. If the brake lining thickness is less than the service limit, replace the brake shoes as a set.

5. Check the bearings in the hub unit for smooth operation. If defective, refer to section 18.

6. Measure the inside diameter of the brake drum using the inside vernier calipers.

   Drum Inside Diameter:
   Standard: 199.9 – 200.0 mm (7.870 – 7.874 in)
   Service Limit: 201.0 mm (7.913 in)

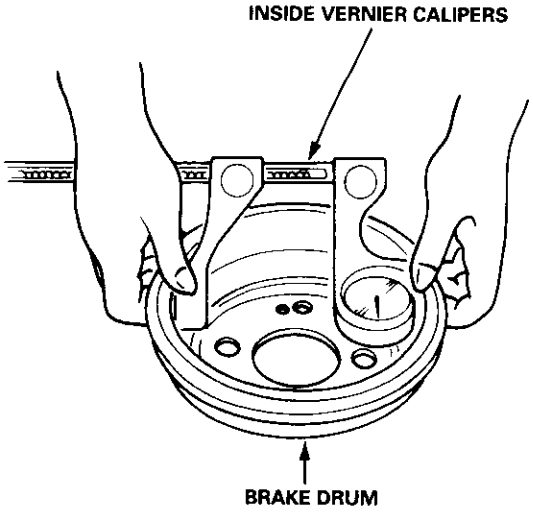

7. If the inside diameter of the brake drum is more than the service limit, replace the brake drum.

8. Check the brake drum for scoring, grooves, and cracks.

Brake Shoe Disassembly

1. Remove the tension pins by pushing the retainer springs and turning them.

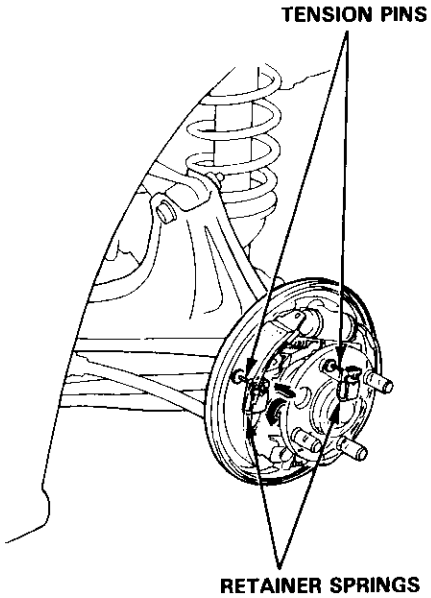

2. Lower the brake shoe assembly, and remove the lower return spring.

   NOTE: Be careful not to damage the dust cover on the wheel cylinder.

3. Remove the brake shoe assembly.

4. Disconnect the parking brake cable from the parking brake lever.

5. Remove the upper return spring, self-adjuster lever, and self-adjuster spring, and separate the brake shoes.

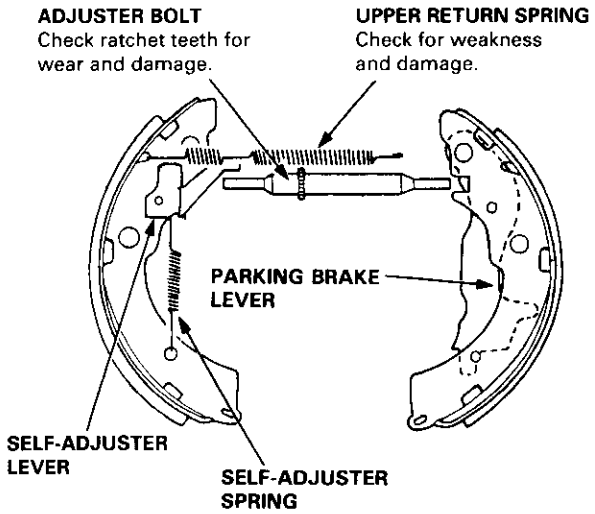

6. Remove the wave washer, parking brake lever, and pivot pin from the brake shoe by removing the U-clip.

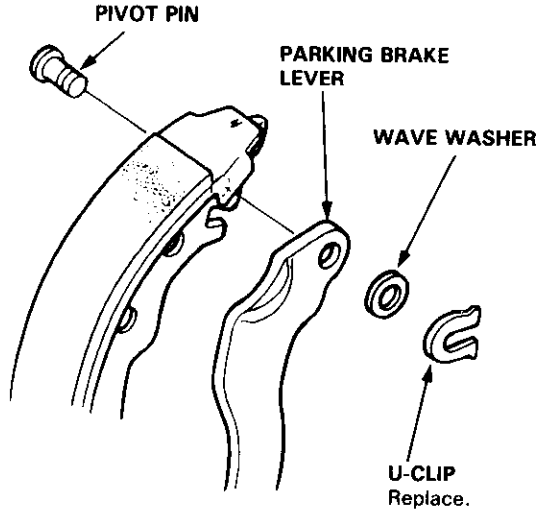

Brake Shoe Reassembly

1. Apply brake cylinder grease (P/N: 08733 – B020E) or equivalent rubber grease to the sliding surface of the pivot pin, and insert the pin into the brake shoe.

2. Install the parking brake lever and wave washer on the pivot pin and secure them with the U-clip.

   NOTE: Pinch the U-clip securely to prevent the pivot pin from coming out of the brake shoe.

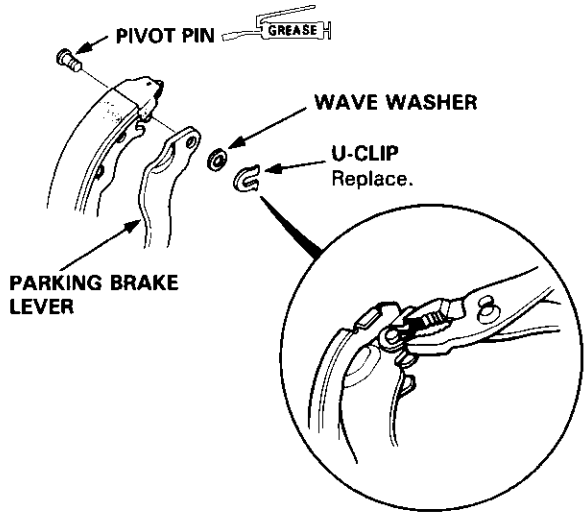

(cont'd)

Brake Shoe Reassembly (cont'd)

3. Connect the parking brake cable to the parking brake lever.

4. Apply grease on each sliding surface.

⚠WARNING Contaminated brake linings reduce stopping ability. Keep grease or oil off the brake linings. Wipe any excess grease off the parts.

- Apply brake cylinder grease (P/N: 08733 – B020E) or equivalent rubber grease to the sliding surfaces as shown.

➡● Sliding surface

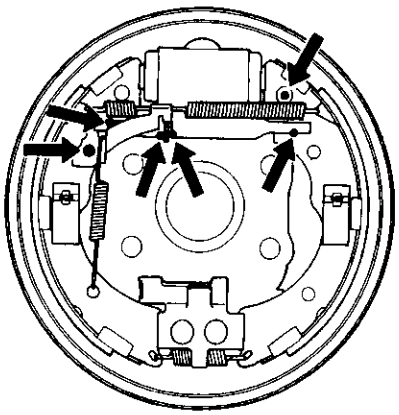

- Apply Molykote 44MA to the brake shoe ends and opposite edges of the shoes as shown.

➡● Opposite edge of the shoe
⇨○ Brake shoe ends

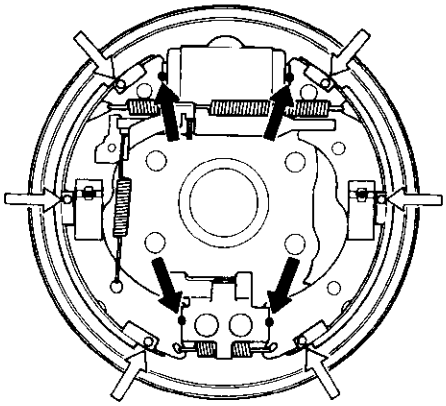

5. Clean the threaded portions of clevises A and B. Coat the threads of the clevises with grease. To *shorten the clevises, turn the adjuster bolt.*

6. Hook the self-adjuster spring to the self-adjuster lever first, then to the brake shoe.

7. Install the clevises and upper return spring, noting the installation direction.

   NOTE: Be careful not to damage the wheel cylinder dust covers.

8. Install the lower return spring.

9. Install the tension pins and retaining springs.

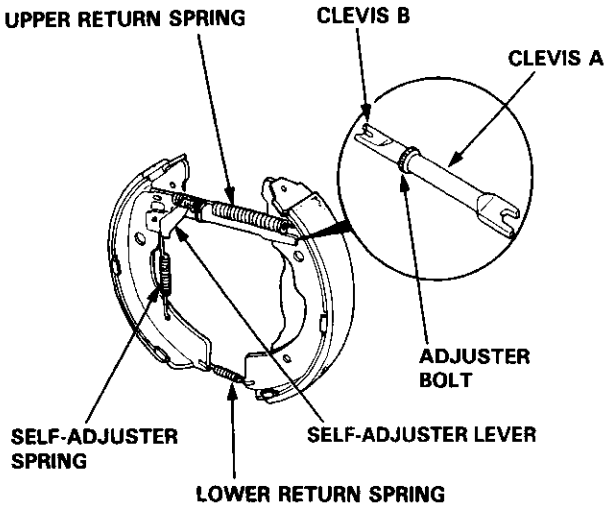

10. Install the brake drum.

11. If the wheel cylinder has been removed, bleed the brake system (see page 19-7), and check for leaks at brake line connections, and retighten if necessary.

12. Depress the brake pedal several times to set the self-adjusting brake.

13. Adjust the parking brake (see page 19-6).

Inspection/Torque Specifications

1. Inspect the brake hoses for damage, deterioration, leaks, interference, and twisting.
2. Check the brake lines for damage, rusting, and leakage. Also check for bent brake lines.
3. Check for leaks at hose and line joints and connections, and retighten if necessary.
4. Check the master cylinder and ABS modulator unit for damage and leakage.

CAUTION: Replace the brake hose clip whenever the brake hose is serviced.

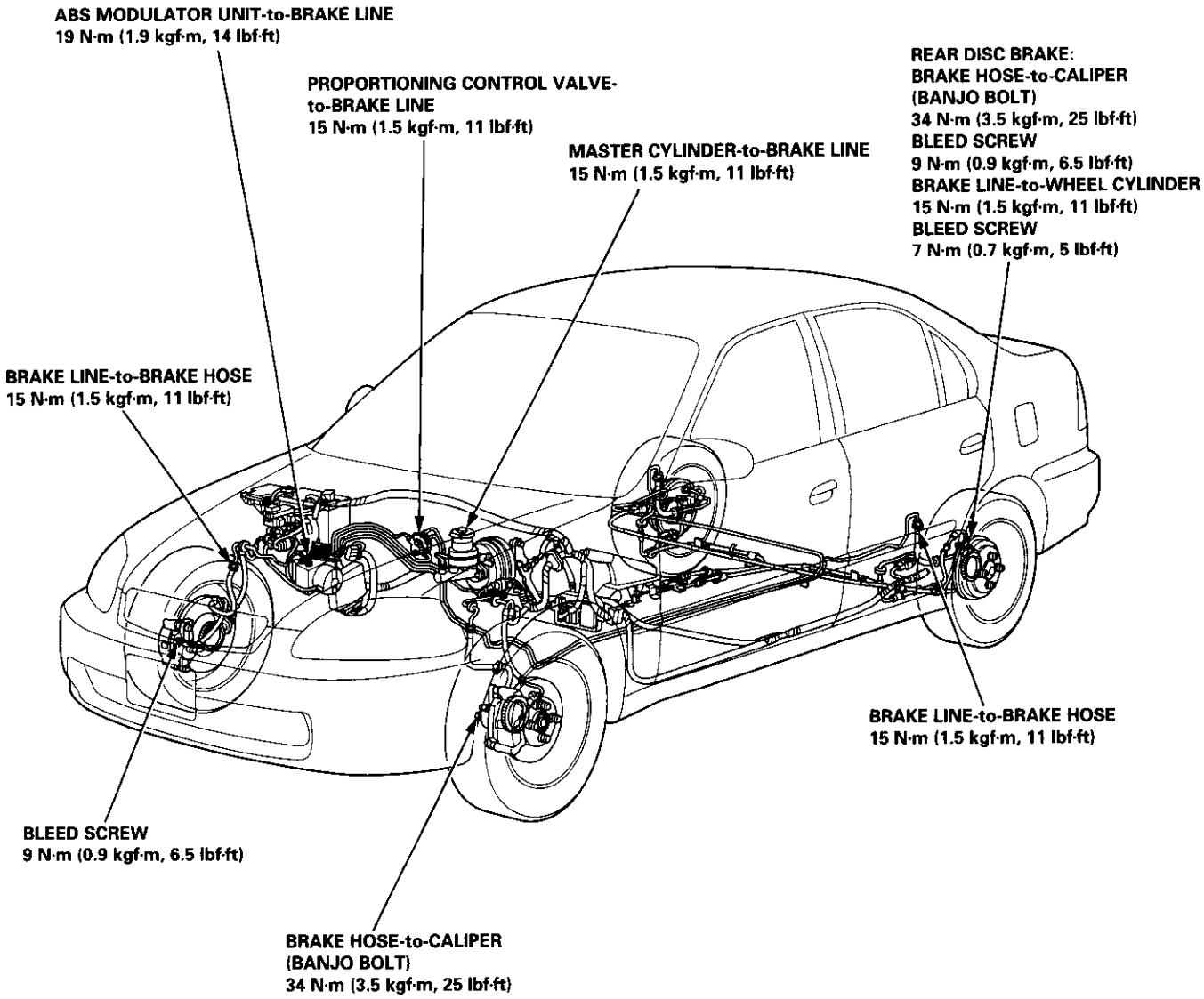

Hose Replacement

CAUTION:
- **Before reassembling, check that all parts are free of dust and other foreign particles.**
- **Replace parts with new ones whenever specified to do so.**
- **Do not spill brake fluid on the vehicle; it may damage the paint; if brake fluid does contact the paint, wash it off immediately with water.**

1. Replace the brake hose if the hose is twisted, cracked, or if it leaks.

2. Disconnect the brake hose from the brake line using a 10 mm flare nut wrench.

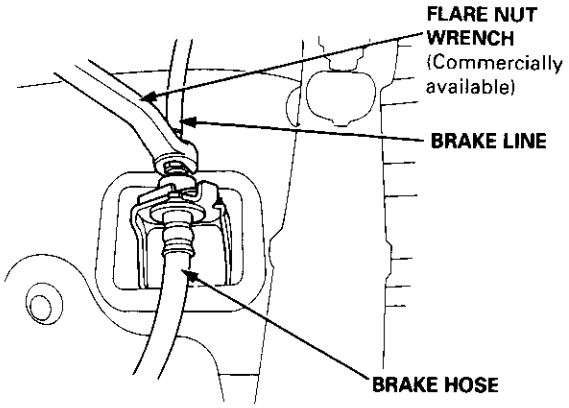

3. Remove and discard the brake hose clip from the brake hose.

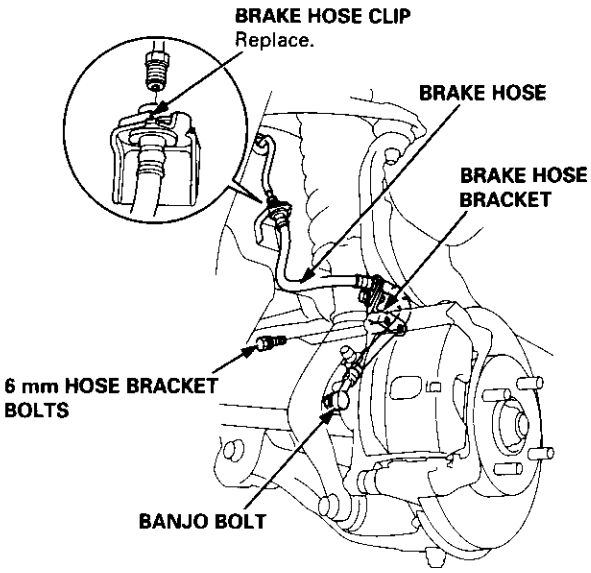

4. Remove the banjo bolt, and disconnect the brake hose from the caliper.

5. Remove the brake hose bracket from the knuckle.

6. Install the brake hose bracket and brake hose onto the knuckle first, then connect the brake hose to the caliper with the banjo bolt and new sealing washers.

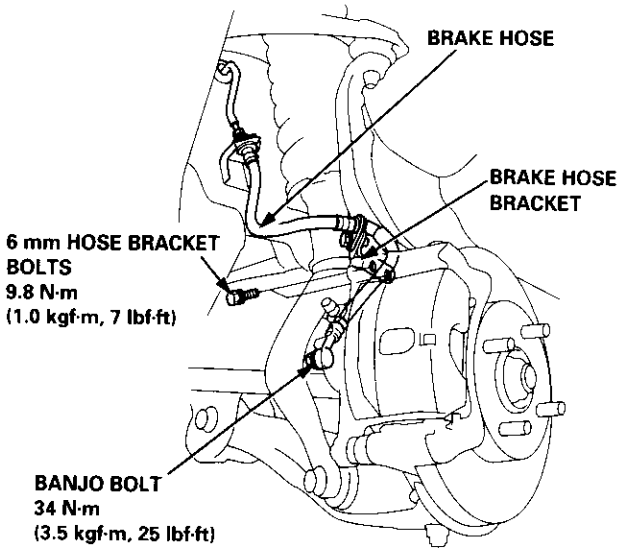

7. Install the brake hose onto the upper brake hose bracket with a new brake hose clip.

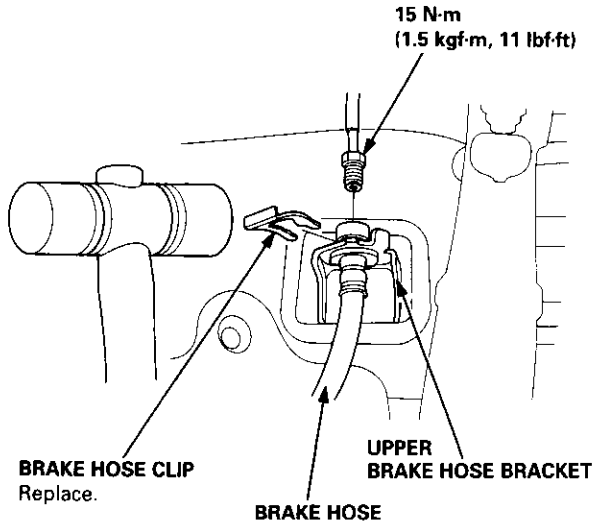

8. Connect the brake line to the brake hose.

9. After installing the brake hose, bleed the brake system (see page 19-7).

10. Perform the following checks:
    - Check the brake hose and line joint for leaks, and tighten if necessary.
    - Check the brake hoses for interference and twisting.

Inspection and Replacement

CAUTION: The parking brake cables must not be bent or distorted. This will lead to stiff operation and premature cable failure.

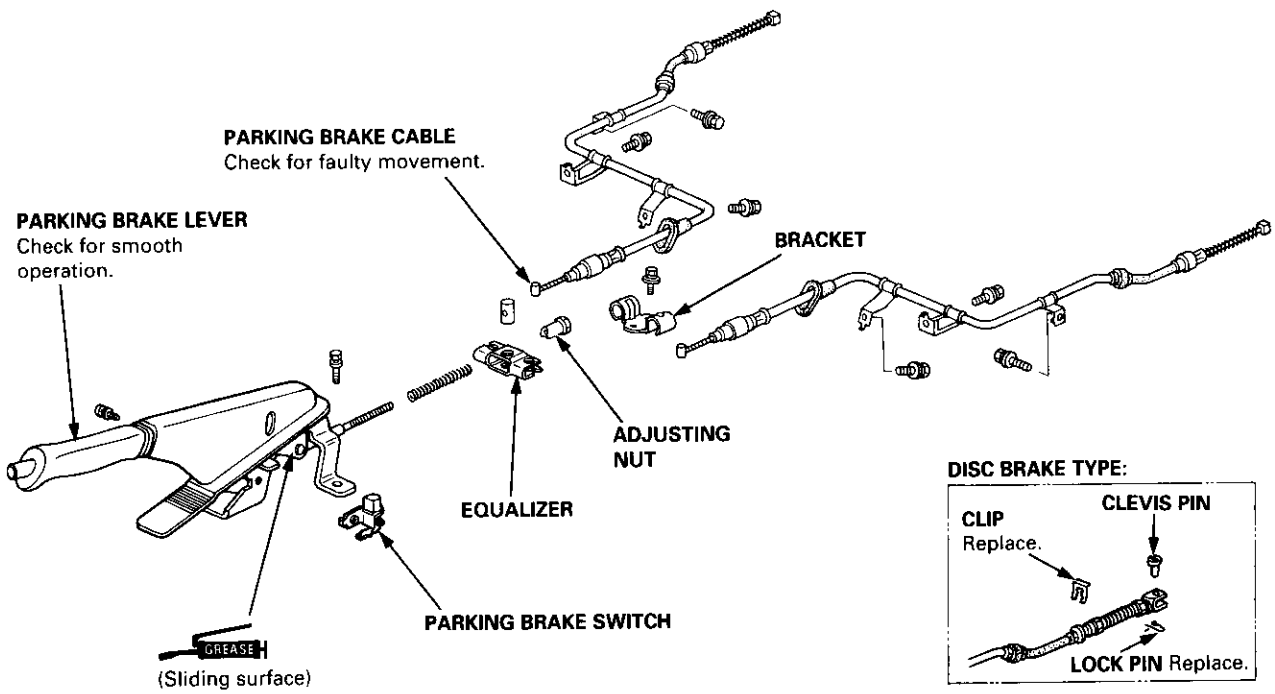

Disc Brake Type:
Disconnect the parking brake cable from the lever on the caliper by removing the lock pin and clevis pin, and remove the cable from the arm by removing the clip.

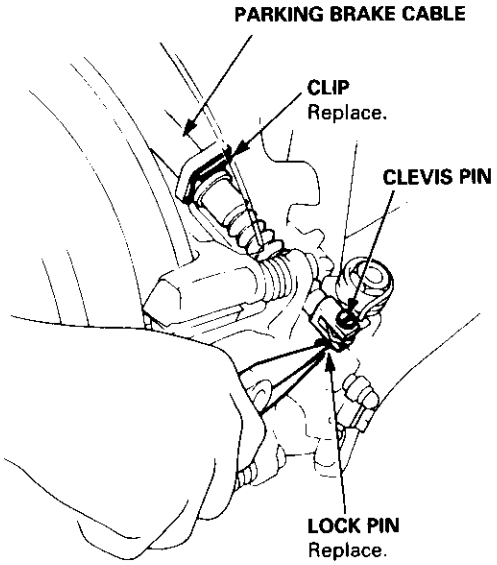

Drum Brake Type:
Remove the parking brake cable from the backing plate using a 12 mm offset wrench as shown.

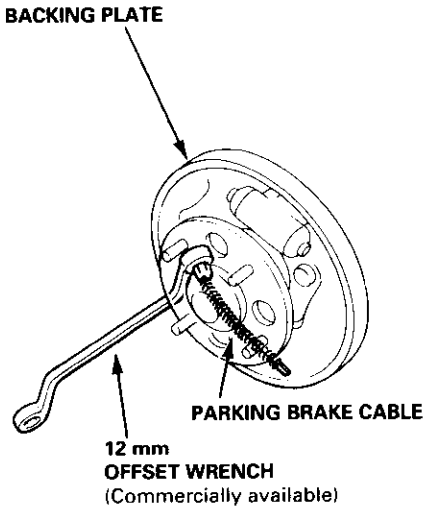

Anti-lock Brake System (ABS)

Special Tools 19-44
Component Locations 19-45
Anti-lock Brake System (ABS)
  Features/Construction 19-46
  Operation 19-47
Circuit Diagram 19-50
ABS Control Unit Terminal
  Arrangement 19-52
Troubleshooting Precautions 19-54
Diagnostic Trouble Code (DTC)
  Diagnostic Trouble Code (DTC)
    Indication 19-56
  DTC Erasure 19-57
  Symptom-to System Chart 19-58
Troubleshooting
  ABS Indicator Light Does Not
    Come On 19-60
  ABS Indicator Light Does Not
    Go Off 19-62
  Wheel Sensor 19-64
  Solenoid 19-60
  ABS Pump Motor 19-68
  Main Relay 19-71
  Ignition Voltage 19-73
  Central Processing Unit (CPU) 19-74
Modulator Unit
  Removal/Installation 19-75
ABS Control Unit
  Replacement 19-76
Pulsers/Wheel Sensors
  Inspection 19-76
  Wheel Sensor Replacement 19-77

Ref. No.	Tool Number	Description	Qty	Page Reference
①	07PAZ – 0010100	SCS Service Connector	1	19-56

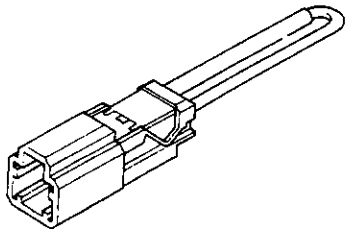

①

Component Locations

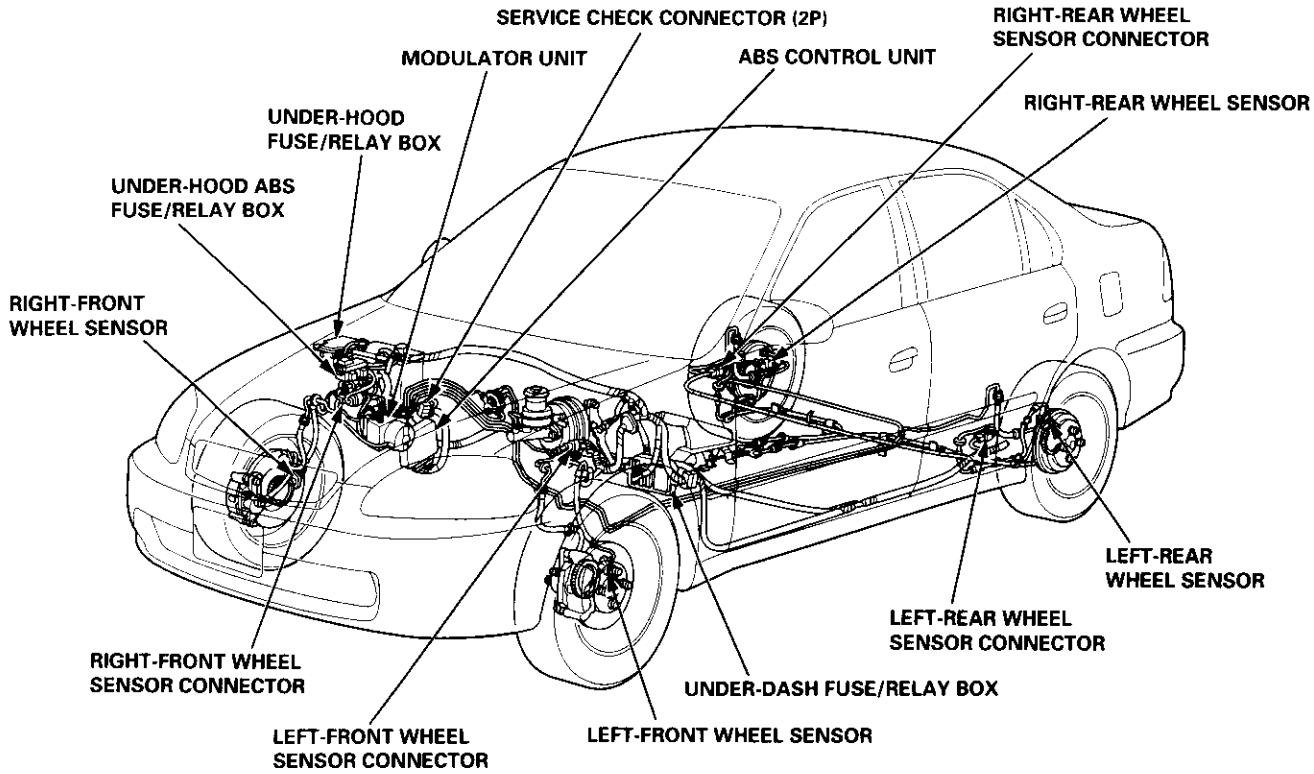

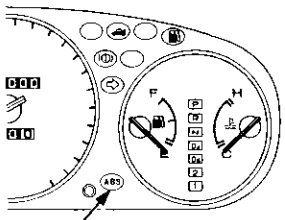

ABS INDICATOR LIGHT

UNDER-HOOD FUSE/RELAY BOX

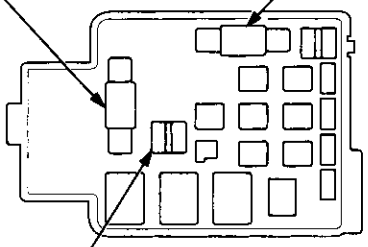

UNDER-DASH FUSE/RELAY BOX

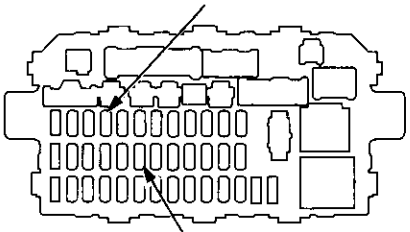

UNDER-HOOD ABS FUSE/RELAY BOX

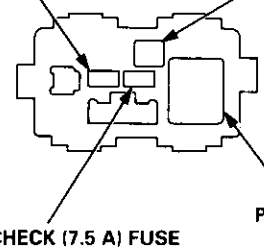

Features/Construction

When the brake pedal is depressed during driving, the wheels can lock before the vehicle comes to a stop. In such a case, the maneuverability of the vehicle is reduced if the front wheels are locked, and the stability of the vehicle is reduced if the rear wheels are locked, creating an extremely unstable condition. The ABS precisely controls the slip rate of the wheels to ensure the grip force of the tires, and it thereby ensures the maneuverbility and stability of the vehicle.
Judging the vehicle speed, the ABS calculates the slip rate of the wheels based on the vehicle speed and the wheel speed, then it controls the brake fluid pressure to attain the target slip rate.

Grip Force of Tire and Road Surface

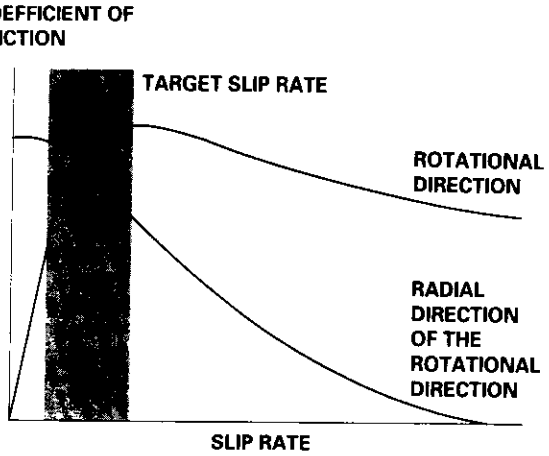

Slip Rate

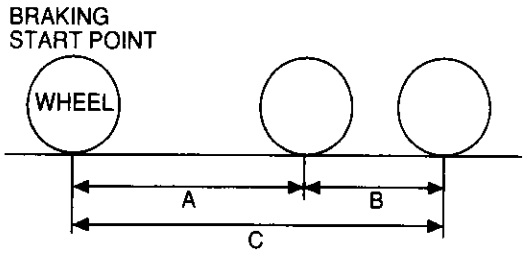

A: Distance without slip
B: Slipped distance
C: Actual distance

$$\text{SLIP RATE} = \frac{B}{C} = \frac{\text{VEHICLE SPEED} - \text{WHEEL SPEED}}{\text{VEHICLE SPEED}}$$

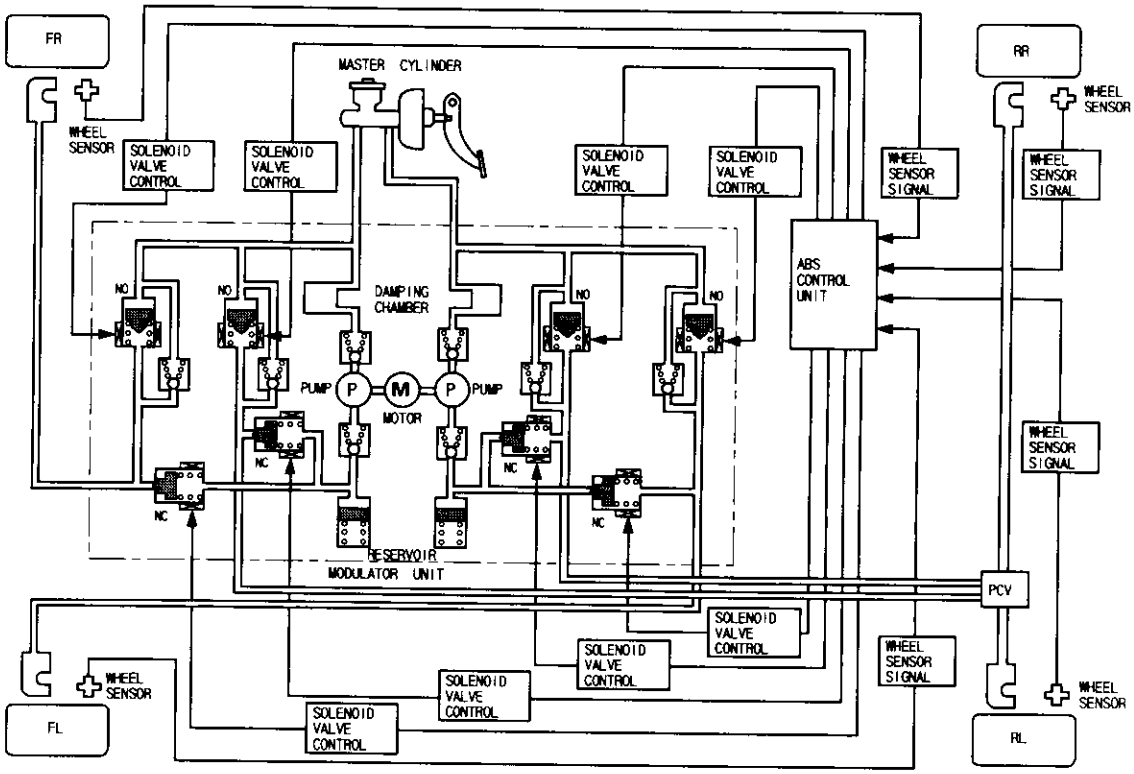

Operation

ABS Control Unit

Main Control

The ABS control unit detects the wheel speed based on the wheel sensor signal it received, then it calculates the vehicle speed based on the detected wheel speed. The control unit detects the vehicle speed during deceleration based on the rate of deceleration.
The ABS control unit calculates the slip rate of each wheel, and it transmits the control signal to the modulator unit solenoid valve when the slip rate is high.
The pressure reduction control is a three-mode system, that is pressure reduction, pressure retaining and pressure intensifying modes.

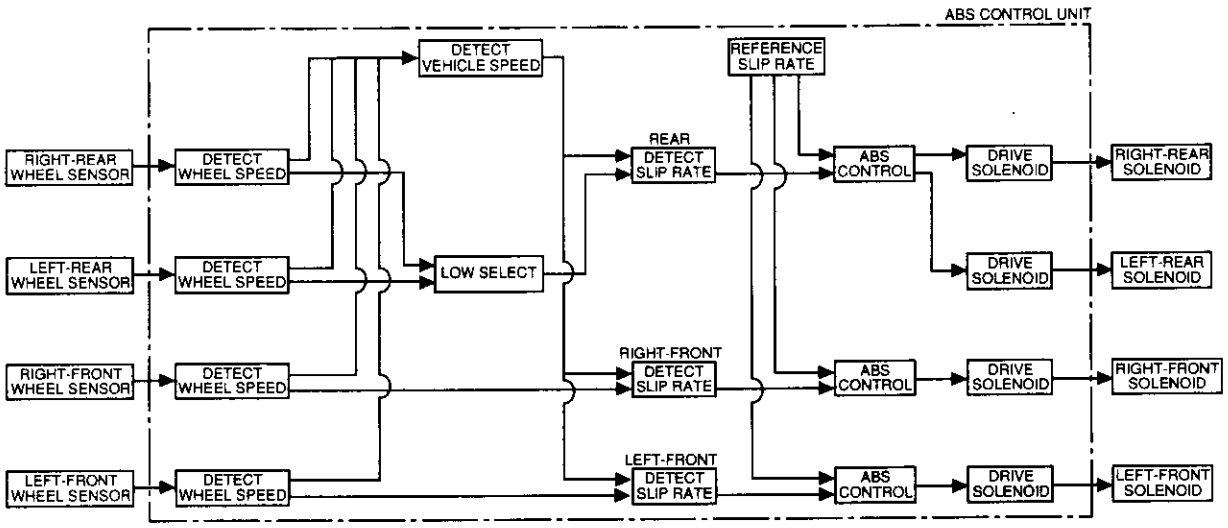

Self-diagnosis Function

The ABS control unit is equipped with a main CPU and a sub CPU, and the CPUs check each other.
The CPUs check the circuit of the system.
When the CPUs detect failure, they shift to the "system down mode" or the "control inhibition mode".

MODE	ABS INDICATOR LIGHT	MAIN RELAY	SOLENOID VALVE	CPU	Restart condition		DTC
SYSTEM DOWN	ON	No operation	Drive inhibition	Operation*1	Ignition switch	OFF → ON	Memory
CONTROL INHIBITION	ON	No operation	Drive inhibition	Operation	Automatic		Memory

*1: Except CPU failure

The self-diagnosis can be classifield into these four categories:
①: Initial diagnosis
②: Except ABS control
③: During ABS control
④: During warning

On-board Diagnosis Function

The ABS control unit is connected to the data link connector (16P).
The ABS system can be diagnosed with the Honda PGM Tester.

(cont'd)

Operation (cont'd)

ABS Modulator

The ABS modulator consists of the inlet solenoid valve, outlet solenoid valve, reservoir, pump, pump motor and the damping chamber.
The modulator reduces the caliper fluid pressure directly, and it is also referred to as a circulating type because the brake fluid circulates through the caliper, reservoir and the master cylinder.
The hydraulic control has three modes: pressure reducing, pressure retaining, and pressure intensifying.
The hydraulic circuit is the independent four channel type, one channel for each wheel.

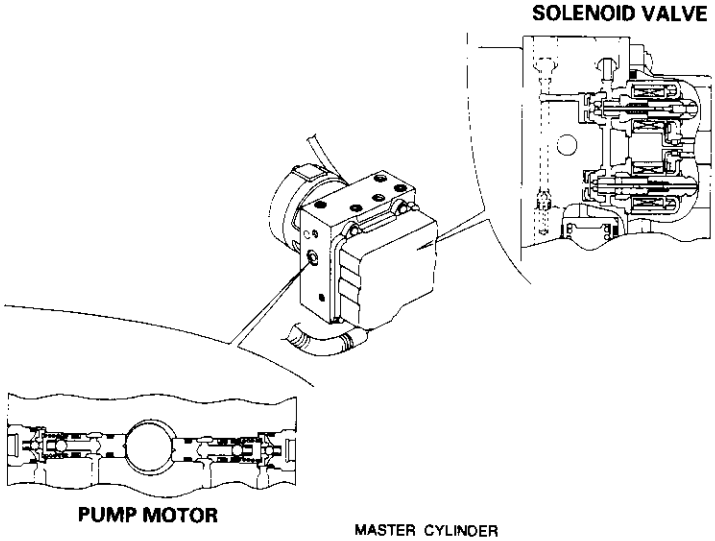

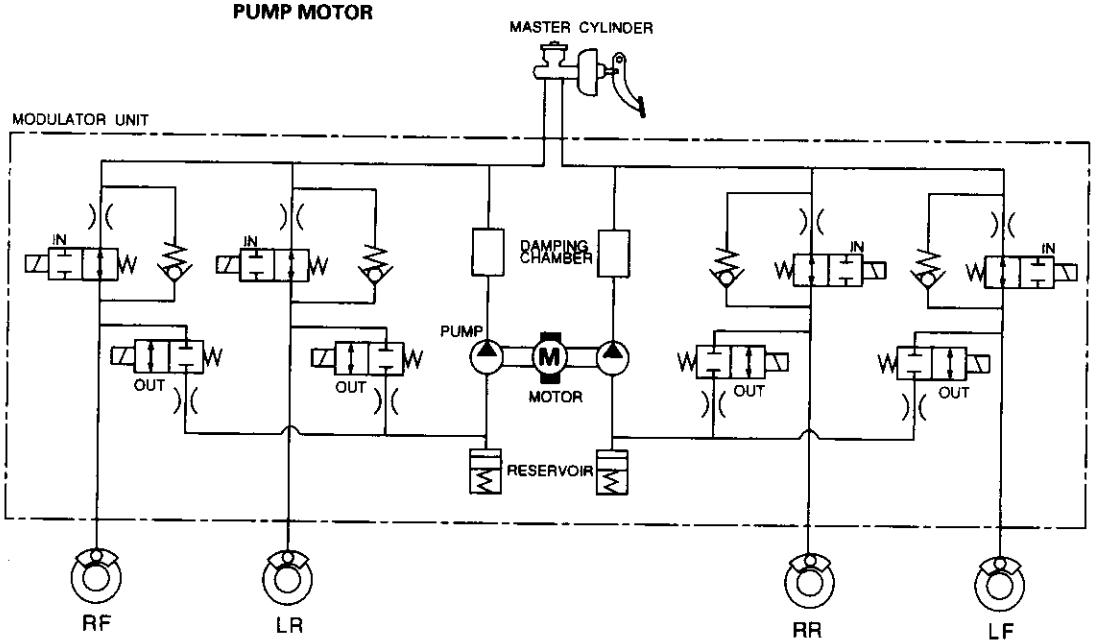

IN: INLET VALVE (NORMALLY OPEN)
OUT: OUTLET VALVE (NORMALLY CLOSED)

Pressure intensifying mode:	Inlet valve open, outlet valve closed Master cylinder fluid is pumped out to the caliper.
Pressure retaining mode:	Inlet valve closed, outlet valve closed Caliper fluid is retained by the inlet valve and outlet valve.
Pressure reducing mode:	Inlet valve closed, outlet valve open Caliper fluid flows through the outlet valve to the reservoir.
Motor operation mode:	When starting the pressure reducing mode, the pump motor is ON. When stopping ABS operation, the pump motor is OFF. The reservoir fluid is pumped out by the pump, through the damping chamber, to the master cylinder.

Wheel Speed and Modulator Control

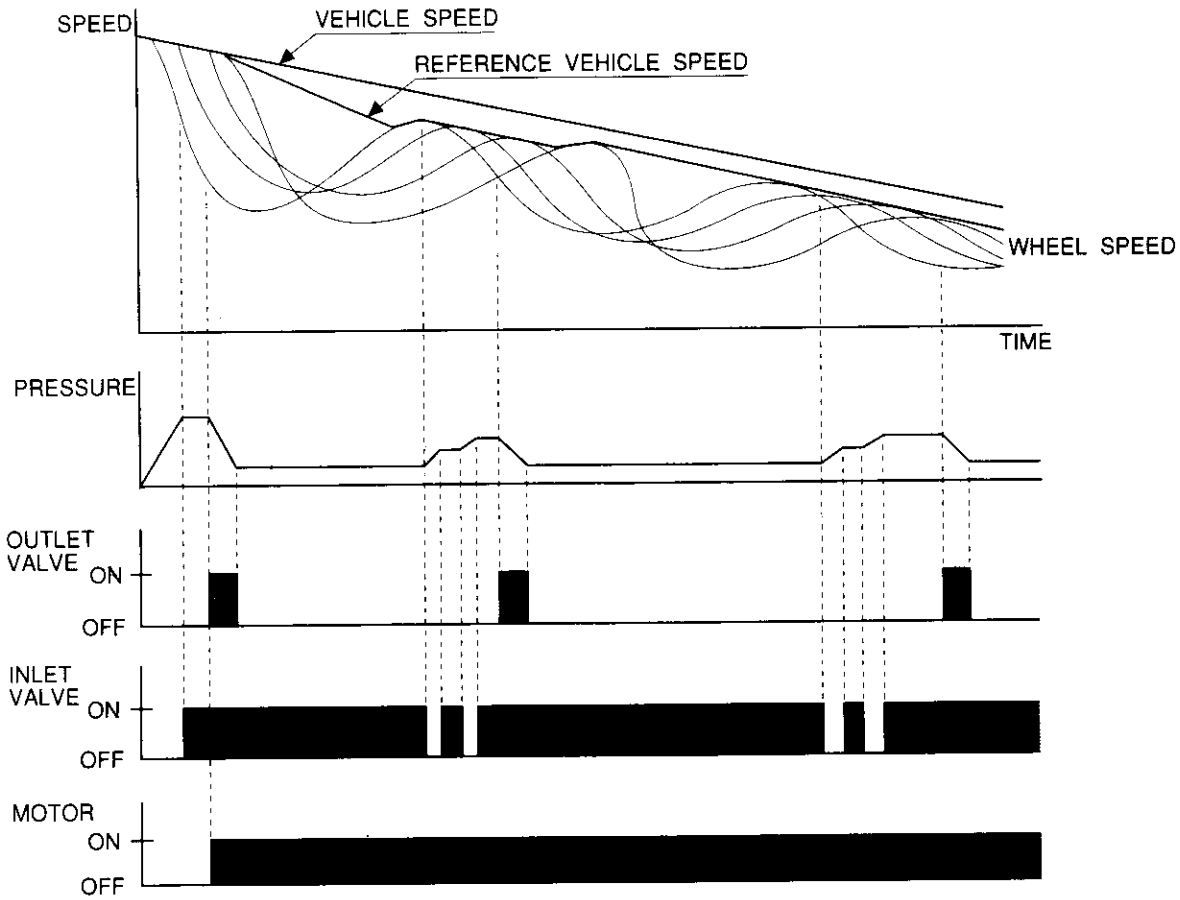

When the wheel speed drops sharply below the vehicle speed, the inlet valve closes to retain the caliper fluid pressure. When the wheel speed drops further, the outlet valve opens momentarily to reduce the caliper fluid pressure. The pump motor starts at this time.
As the wheel speed is restored, the inlet valve opens momentarily to increase the caliper fluid pressure.

Wheel Sensor

The wheel sensors are the magnetic contactless type.
As the gear pulser teeth rotate past the wheel sensor's magnetic coil, AC current is generated. The AC frequency changes in accordance with the wheel speed. The ABS control unit detects the wheel sensor signal frequency and thereby detects the wheel speed.
There are four wheel sensors, one for each wheel.
The gear pulser has 50 teeth.

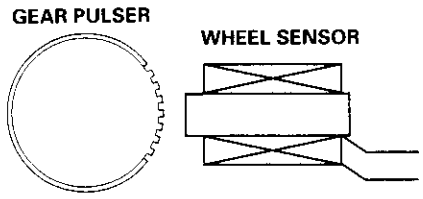

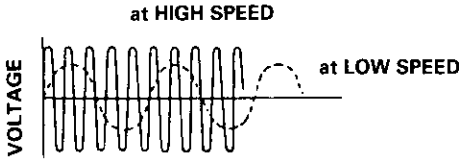

Circuit Diagram

BATTERY

UNDER-HOOD FUSE/RELAY BOX
HORN/STOP (15A)
BATTERY (80A)
IG 1(40A)

BRAKE SWITCH

IGNITION SWITCH
IG1
IG2

UNDER-DASH FUSE/RELAY BOX
METER (7.5A)
RR DEF RLY (7.5A)

GAUGE ASSEMBLY
ABS INDICATOR LIGHT CIRCUIT
ABS INDICATOR LIGHT

G401,G402

UNDER-HOOD ABS FUSE/RELAY BOX
ABS +B (20A)
PUMP MOTOR (40A)
PUMP MOTOR RELAY
MTR CHECK(7.5A)

WHT/GRN
GRN/WHT
WHT
BLK/YEL
YEL
BLU/RED
BLK
BLK/BLU
+B
PMR
YEL/RED
BRN/YEL
PCOM
MCK
BLK/WHT
緑/白
SCOM

MODULATOR UNIT
LEFT-FRONT SOLENOID
RIGHT-FRONT SOLENOID
LEFT-REAR SOLENOID
RIGHT-REAR SOLENOID
PUMP MOTOR

RED/WHT
RED
BLU
BLK
ORN
WHT
GRN
YEL
PUR
BRN
FL-IN
FL-OUT
FR-IN
FR-OUT
RL-IN
RL-OUT
RR-IN
RR-OUT
RED/BLK
YEL/BLK
RED/BLU
YEL/BLU
RED
YEL
RED/WHT
BLU

G403

UNDER-HOOD ABS FUSE/RELAY BOX 3P CONNECTOR (○ number)

UNDER-HOOD ABS FUSE/RELAY BOX 2P CONNECTOR (□ number)

UNDER-DASH FUSE/RELAY BOX 20P CONNECTOR (○ number)

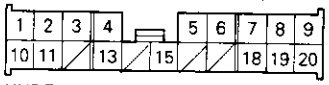

UNDER-DASH FUSE/RELAY BOX 18P CONNECTOR (□ number)

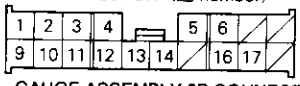

GAUGE ASSEMBLY 5P CONNECTOR (○ number)

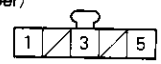

MODULATOR UNIT 10P CONNECTOR (○ number)

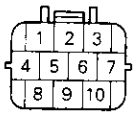

PUMP MOTOR 2P CONNECTOR (□ number)

Wire side of female terminals

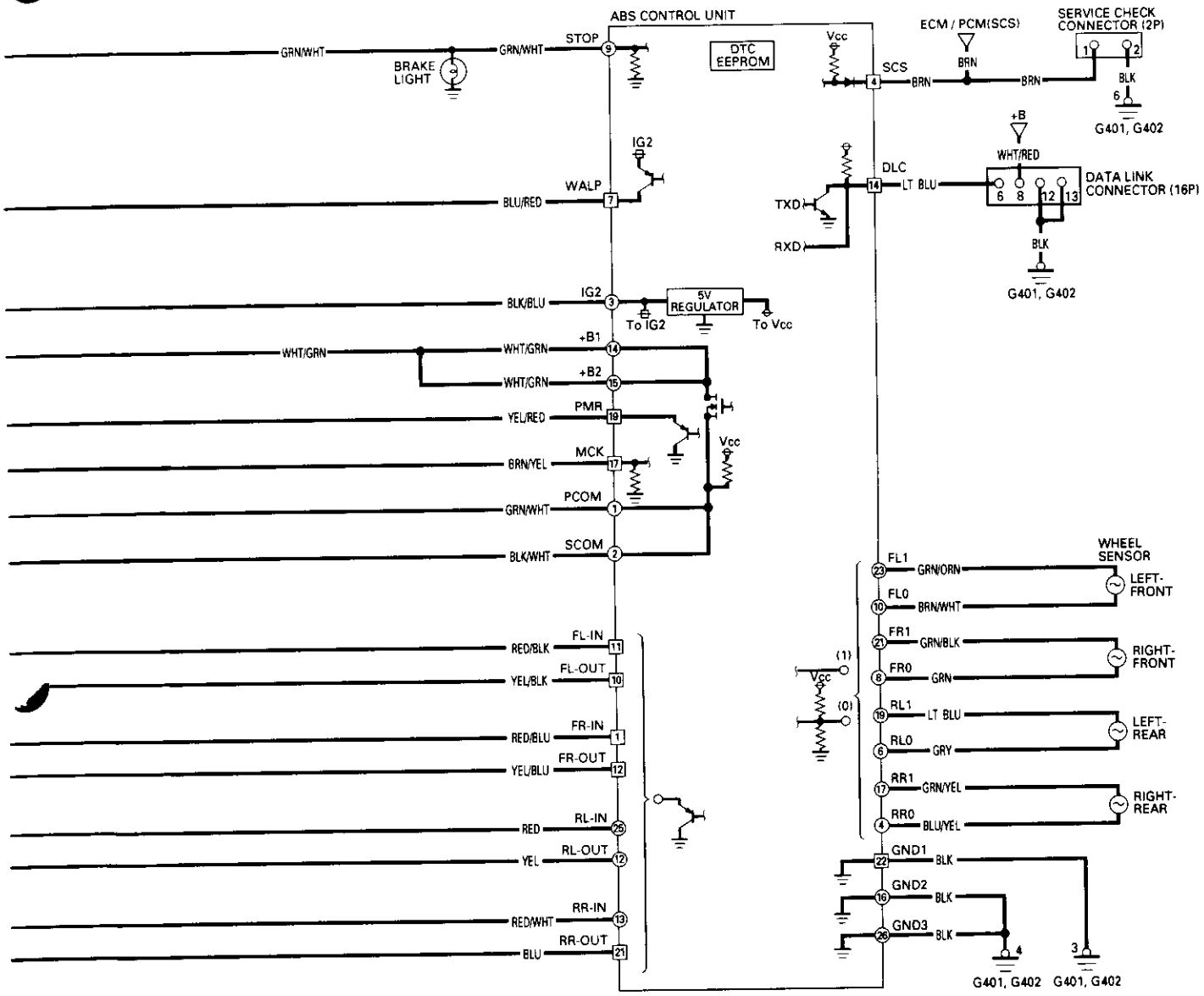

ABS CONTROL UNIT 26P CONNECTOR
(○ number)

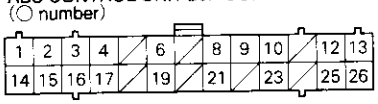

ABS CONTROL UNIT 22P CONNECTOR
(□ number)

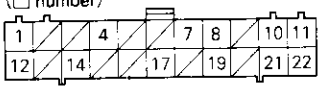

SERVICE CHECK CONNECTOR (2P)

DATA LINK CONNECTOR (16P)

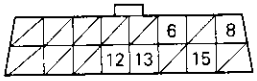

Wire side of female terminals

WHEEL SENSOR 2P CONNECTOR

FRONT

REAR

Terminal side of male terminals

ABS Control Unit Terminal Arrangement

ABS CONTROL UNIT 26P CONNECTOR

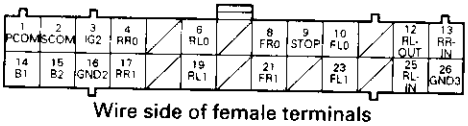

Wire side of female terminals

Terminal number	Wire color	Terminal sign (Terminal name)	Description	Voltage				
				Measurement terminals	Conditions (Ignition Switch ON (II))			Output voltage
1	GRN/WHT	PCOM (Primary common)	Power source for the solenoid valve and pump motor.	1-GND	Engine	ON	Solenoid ON	0 V
							Solenoid OFF	AC: 3~6 V
2	BLK/WHT	SCOM (Secondary common)	Power source for the solenoid valve.	2-GND	Engine	OFF (Connect the SCS service connector)		Approx. 3 V
3	BLK/BLU	IG2 (Ignition 2)	Detects ignition switch 2 signal. (System activate signal)	3-GND				Battery voltage
4	BLU/YEL	RR0 (Rear-right 0)	Detects right-rear wheel sensor signal.	4-17	When the wheel is turned at 1 turn/second.			53 mV or above on digital tester (AC range) (Referance) 150 mVp-p or above on oscilloscope
6	GRY	RL0 (Rear-left 0)	Detects left-rear wheel sensor signal.	6-19				
8	GRN	FR0 (Front-right 0)	Detects right-front wheel sensor signal.	8-21				
					Stops			Approx. 2.5 V
9	GRN/WHT	STOP (Stop)	Detects brake switch signal. (Prevents unnecessary ABS operation)	9-GND	Brake pedal depressed.			Battery voltage
					Brake pedal released.			0 V
10	BRN/WHT	FL0 (Front-left 0)	Detects left-front wheel sensor signal.	10-23	When the wheel is turned at 1 turn/ second.			53 mV or above on digital tester (AC range) (Referance) 150 mVp-p or above on oscilloscope
					Stops			Approx. 2.5 V
12	YEL	RL-OUT (Rear-left outlet)	Drives left-rear outlet solenoid valve.	12-GND	Engine	ON	Solenoid ON	0 V
							Solenoid OFF	AC: 3~6 V
13	RED/WHT	RR-IN (Rear-right inlet)	Drives right-rear inlet solenoid valve.	13-GND	Engine	OFF (Connect the SCS service connector)		Approx. 3 V
14	WHT/GRN	B1 (Battery 1)	Power source for the solenoid valve and pump motor.	14-GND				Battery voltage
15	WHT/GRN	B2 (Battery 2)	Power source for the solenoid valve and pump motor.	15-GND				
16	BLK	GND2 (Ground 2)	Ground for the ABS control unit.	16-GND				Below 0.3 V
17	GRN/YEL	RR1 (Rear-right 1)	Detects right-rear wheel sensor signal.	17-4	When the wheel is turned at 1 turn/second.			53 mV or above on digital tester (AC range) (Referance) 150 mVp-p or above on oscilloscope
19	LT BLU	RL1 (Rear-left 1)	Detects left-rear wheel sensor signal.	19-6				
21	GRN/BLK	FR1 (Front-right 1)	Detects right-front wheel sensor signal.	21-8				
23	GRN/ORN	FL1 (Front-left 1)	Detects left-front wheel sensor signal.	23-10				
					Stops			Approx. 2.5 V
25	RED	RL-IN (Rear-left inlet)	Drives left-rear inlet solenoid valve.	25-GND	Engine	ON	Solenoid ON	0 V
							Solenoid OFF	AC: 3~6 V
					Engine	OFF (Connect the SCS service connector)		Approx. 3 V
26	BLK	GND3 (Ground 3)	Ground for the ABS control unit.	26-GND				Below 0.3 V

ABS CONTROL UNIT 22P CONNECTOR

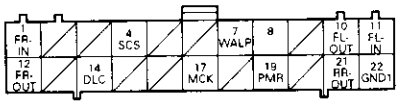

Wire side of female terminals

Terminal number	Wire color	Terminal sign (Terminal name)	Description	Voltage				
				Measurement terminals	Conditions (Ignition Switch ON (II))			Output voltage
1	RED/BLU	FR-IN (Front-right inlet)	Drives right-front inlet solenoid valve.	1-GND	Engine	ON	Solenoid ON	0 V
							Solenoid OFF	AC: 3~6 V
					Engine	OFF (Connect the SCS service connector)		Approx. 3 V
4	BRN	SCS (Service check signal)	Detects service check signal (Diagnostic trouble code indication)	4-GND	SCS service connector connected.			0 V
					SCS service connector disconnected.			Approx. 5 V
7	BLU/RED	WALP (Warning lamp)	Drives ABS indicator light (The indicator light goes off when ABS control unit outputs battery voltage).	7-GND	Indicator light ON			Approx. 2 V
					Indicator light OFF			Battery voltage
8	BLU/YEL		Not used.					
10	YEL/BLK	FL-OUT (Front-left outlet)	Drives left-front outlet solenoid valve.	10-GND	Engine	ON	Solenoid ON	0 V
							Solenoid OFF	AC: 3~6 V
11	RED/BLK	FL-IN (Front-left inlet)	Drives left-front inlet solenoid valve.	11-GND	Engine	OFF (Connect the SCS service connector)		Approx. 3 V
12	YEL/BLU	FR-OUT (Front-right outlet)	Drives right-front outlet solenoid valve.	12-GND				
14	LT BLU	DLC (Data link connector)	Communicates with Honda PGM Tester.	14-GND	———			Approx. 5 V
17	BRN/YEL	MCK (Motor check)	Detects pump motor drive signal.	17-GND	Pump motor relay	ON		Battery voltage
						OFF		0 V
19	YEL/RED	PMR (Pump motor relay)	Drives pump motor relay.	19-GND	Engine	ON	Solenoid ON	0 V
							Solenoid OFF	AC: 3~6 V
					Engine	OFF (Connect the SCS service connector)		Approx. 3 V
21	BLU	RR-OUT (Rear-right outlet)	Drives right-rear outlet solenoid valve.	21-GND	Engine	ON	Pump motor relay ON	0 V
							Pump motor relay OFF	AC: 3~6 V
					Engine	OFF (Connect the SCS service connector)		Approx. 3 V
22	BLK	GND2 (Ground 2)	Ground for the ABS control unit.	22-GND				Below 0.3 V

Troubleshooting Precautions

ABS Indicator Light

1. The ABS indicator light comes on when the ABS control unit detects a problem in the system. However, even though the system is normal, the ABS indicator light can come on, too, under the following conditions. To determine the actual cause of the problem, question the customer about the problem, taking the following conditions into consideration.
   - Signal disturbance
   - Wheel spin
   - Only drive wheels rotate
   - Battery voltage fluctuates
2. When a problem is detected and the ABS indicator light comes on, the indicator light can stay on until the ignition switch is turned off, or it can automatically go off, depending on the mode.
   - Light stays on until the ignition switch is turned off: When the system is in the system down mode.
   - Light automatically goes off: When the system is in the control inhibition mode. (refer to symptom-to-system chart)
3. The ABS indicator light stays on when the system is reactivated without erasing the DTC, but it goes off after starting the car.
   When the wheel sensor system is faulty and the ABS indicator light comes on, the algorithm of the system automatically turns off the ABS indicator light after the wheel speed signal returns to the normal speed. While, when the DTC is erased, the CPU is reset and the ABS indicator light goes off when the system checked out normal by the initial diagnosis.
   Therefore, test-drive the car after servicing the wheel sensor system, and be sure that the ABS indicator light does not come on.
4. When the ABS control unit outputs battery voltage to the gauge assembly, the ABS indicator light goes off.

Diagnostic Trouble Code (DTC)

1. The diagnostic trouble code (DTC) is memorized when a problem is detected and the ABS indicator light does not go off, or when the ABS indicator light comes on.
   The DTC is not memorized when the ABS indicator light comes on unless the CPU is activated.
2. The memory can hold any number of DTCs. However, when the same DTC is detected twice or more, the later one is written over the old one.
   Therefore, when the same problem is detected repeatedly, it is recorded as one DTC.
3. The DTCs are indicated in the order of ascending number, not in the order they occur.
4. The DTCs are memorized in the EEPROM (non-volatile memory).
   Therefore, the memorized DTCs cannot be canceled by disconnecting the battery. Perform the specified procedures to erase.

Self-diagnosis

1. The self-diagnosis can be classifield into these four categories:
   - Initial diagnosis: Performed right after the engine starts and until the ABS indicator light goes off.
   - Except ABS control: Performed when the ABS is not functioning.
   - During ABS control: Performed when the ABS is functioning.
   - During warning: Performed when the ABS indicator light is ON.
2. The system performs the following controls when a problem is detected by the self-diagnosis:
   - ABS indicator light ON
   - Memory of DTC
   - Mode change to the "system down mode" or the "control inhibition mode".

MODE	ABS INDICATOR LIGHT	MAIN RELAY	SOLENOID VALVE	CPU	Restart condition		DTC
SYSTEM DOWN	ON	No operation	Drive inhibition	Operation*1	Ignition switch	OFF → ON	Memory
CONTROL INHIBITION	ON	No operation	Drive inhibition	Operation	Automatic		Memory

*1: Except CPU failure

Kickback

1. The motor operates when the ABS is functioning, and the fluid in the reservoir is forced out to the master cylinder causing kickback at the brake pedal.

2. The ABS control unit operates the solenoid valve when the brake pedal is released after the initial diagnosis. You may hear the faint solenoid valve operation sound at this time, but it is normal.

Pump Motor

1. The pump motor operates when the ABS is functioning.

2. The ABS control unit checks the pump motor operation during acceleration. You may hear the faint operation sound at this time, but it is normal.

Brake Fluid Replacement/Air Bleeding

1. Brake fluid replacement and air bleeding procedures are the same as for conventional brakes.

Troubleshooting

1. The troubleshooting flowcharts explain the procedures on the assumption that the cause of the problem is still present and the ABS indicator light is still on.
   Note that troubleshooting following the flowchart when the ABS indicator light does not come on can result in incorrect judgment.

2. Question the customer about the conditions when the problem occurred, and try to reproduce the same conditions for troubleshooting.
   Self-diagnosis is made at various times such as the initial diagnosis, except ABS control, during ABS control, during acceleration, during the specified vehicle speed, etc. Therefore, the symptom cannot be checked unless the check conditions match with the problem conditions.

3. When the ABS indicator light does not come on during the test drive, but the troubleshooting is performed based on the DTC, check for the loose connectors, poor contact of the terminals, etc, before troubleshooting.

4. After troubleshooting, erase the DTC and test-drive the car. Be sure that the ABS indicator light does not come on.

5. The connector illustrations show the female connectors with a single outline and the male connectors with a double outline.

6. The connector terminal cavities containing female terminals are always numbered by looking at the connector from the wire side, and the cavities containing male terminals are always numbered by looking at the connector from the terminal side.

Diagnostic Trouble Code (DTC) Indication

NOTE: This operation can also be carried out with the Honda PGM Tester.

1. Connect the SCS service connector to the service check connector inside the passenger's side kick panel.
2. Turn the ignition switch ON (II), but do not start the engine.
   NOTE: Do not depress the brake pedal when turning the ignition switch.
3. Record the blinking frequency of the ABS indicator light. The blinking frequency indicates the DTC.
4. Turn the ignition switch OFF, and remove the SCS service connector.
   NOTE: The Malfunction Indicator Lamp (MIL) will stay on after the engine is started if the SCS service connector is connected.
5. Erase the DTC.

Conditions for DTC indication
- The vehicle is stopped.
- The SCS service connector is connected before the ignition switch is turned ON (II).
- The brake pedal is released.
- The SCS service connector remains connected during this procedure.

The DTC indication stops and the ABS control unit executes the software function if at least one of the following conditions is satisfied:
- The vehicle is not stopped.
- The ABS control unit receives the normal signal (which is for the ABS control unit) from a Honda PGM Tester.
- The SCS service connector is disconnected during this procedure.

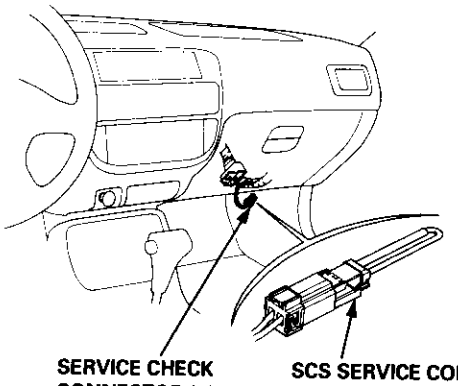

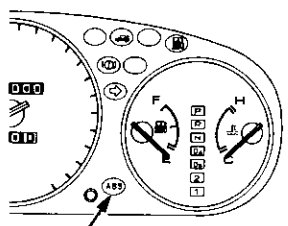

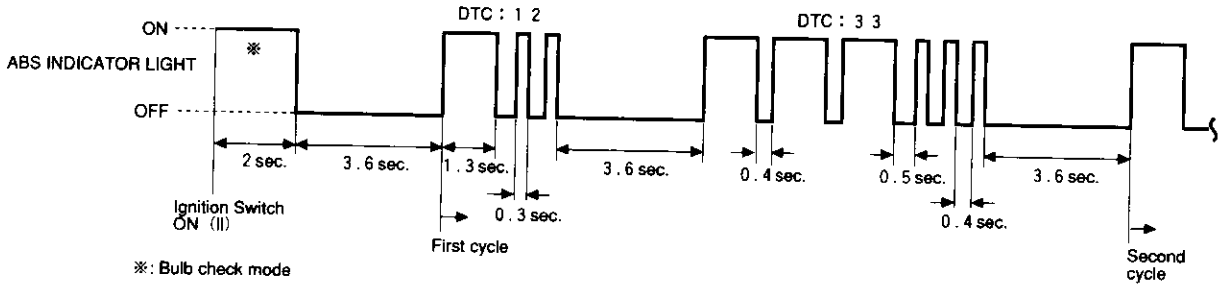

- When the ignition switch is turned ON (II), the ABS indicator light comes on to check the bulb. Do not count it as a DTC.
- The ABS control unit can memorize any number of DTCs.
- The new DTC is not memorized when the ABS control unit has already memorized the same DTC.
- If the DTC is not memorized, the ABS indicator light stays ON after it goes off for 3.6 seconds.

DTC Erasure

1. Connect the SCS service connector to the service check connector inside the passenger's side kick panel.
2. Depress the brake pedal.
3. Turn the ignition switch ON (II) while holding the brake pedal, but do not start the engine. The ABS indicator light goes off after two seconds.
4. After the indicator light goes off, release the brake pedal. The indicator light comes on after four seconds.
5. After the indicator light comes on, depress the brake pedal again. The indicator light goes off again after four seconds. The brake pedal is still depressed.
6. After the indicator light goes off, release the brake pedal again.
7. After four seconds, the indicator light blinks twice for 0.3 second and the DTC is erased.
8. Confirm the DTC indication, and check that the DTC was erased.

NOTE: Always maintain these steps. If you disconnect the SCS service connector and/or fail to operate the brake pedal according to the indicator light indication, the DTC will not be erased.

Conditions for DTC erasure
- The vehicle is stopped.
- The SCS service connector is connected before the ignition switch is turned ON (II).
- The brake pedal is depressed before the ignition switch is turned ON (II).
- The SCS service connector remains connected during this procedure.

The DTC erasure stops and ABS control unit executes the software function if at least one of the following conditions is satisfied:
- The vehicle is not stopped.
- The SCS service connector is disconnected during this service.
- The ABS control unit receives the normal signal (which is for the ABS control unit) from a Honda PGM Tester.
- The brake pedal is not operated according to the indicator light indication.
- The DTC erasure is finished.

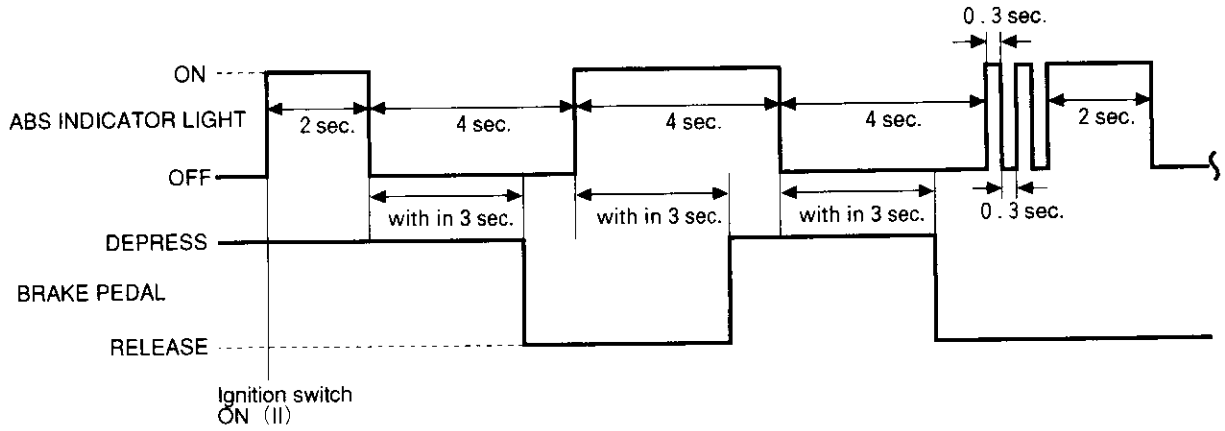

Symptom-to-System Chart

DTC	ABS INDICATOR LIGHT	DIAGNOSIS/ SYMPTOM	DETECTION TIMING: INITIAL DIAG-NOSIS	DETECTION TIMING: EXCEPT ABS CON-TROL	DETECTION TIMING: DURING ABS CONTROL	DETECTION TIMING: DURING WARN-ING	PROBLEM LOCATION	PROBABLE CAUSE
NO DTC	OFF	ABS indicator light does not come on when ignition switch is turned on (II)						• Open in the power source circuit for the ABS indicator light • Blown ABS indicator light bulb • Open in the ABS indicator light drive circuit. • Short to power in the WALP circuit • Faulty ABS control unit
	ON	ABS indicator light does not go off after engine is started						• Open in the IG2 circuit • Open in the +B circuit • Open and/or short to body ground in the WALP circuit • Faulty ABS control unit
11	ON*	Wheel sensor (open/short to body ground/ short to power)	○	○	○	○	FR	• Open, short to body ground and/or short to power in the wheel sensor circuit • Faulty wheel sensor • Faulty ABS control unit
13							FL	
15							RR	
17							RL	
12	ON*	Wheel sensor/Pulser (chipped pulser gear/noise)		○	○	○	FR	• Short to wheel sensor (0) circuit in the wheel sensor (1) circuit • Faulty wheel sensor installation • Chipped pulser gear • Faulty ABS control unit
14							FL	
16							RR	
18							RL	
31	ON	Solenoid (open/short to body ground/ short to power/stuck)	○	○	○		FR-IN	• Open, short to body ground and/or short to power in the solenoid drive circuit • Open in the COM circuit • Open solenoid • Faulty ABS control unit
32							FR-OUT	
33							FL-IN	
34							FL-OUT	
35							RR-IN	
36							RR-OUT	
37							RL-IN	
38							RL-OUT	
51	ON	Motor lock		○	○			• Open in the motor power source circuit • Open in the motor GND circuit • Faulty pump motor • Faulty ABS control unit
52	ON	Motor stuck OFF		○	○			• Open in the COM, PMR and/or MCK circuit • Open and/or blown fuse in the under-hood ABS fuse/relay box power source circuit • Faulty pump motor relay • Faulty ABS control unit
53	ON	Motor stuck ON		○				• Short to body ground in the PMR circuit • Short to power in the pump motor power source circuit • Faulty pump motor relay • Faulty ABS control unit
54	ON	Main relay stuck OFF	○	○	○			• Open, short to body ground and/or blown fuse in the B1 or B2 circuit • Short to body ground and/or short to power in the COM circuit • Faulty modulator unit • Faulty ABS control unit
61	ON	Ignition voltage (low voltage/high voltage)	○	○	○	○		• Connection of the 24 V battery for engine start • Faulty charging system • Open in the IG2 circuit • Faulty ABS control unit
81	ON	CPU	○	○	○	○		• External factor(s) can be the cause(s) of the problem • Faulty ABS control unit

*: If DTCs 11-18 (wheel sensor codes) were detected the last time the vehicle was driven, the ABS indicator light will stay on until the ignition switch is turned ON (II), and the control unit confirms that the wheel sensors are OK.

CONDITION FOR DETECTION	MANAGEMENT		REFER TO PAGE
	DURING ABS CONTROL	EXCEPT ABS CONTROL	
			19-60
			19-62
The ABS indicator light comes on when vehicle is stopped and wheel sensor a given voltage does not input.	System down	System down	19-64
The ABS indicator comes on under the following conditions. • When more than one of wheels are at a standstill and the velocity of the fastest wheel reaches a given speed. • When the velocity of the fastest wheel reaches or exceeds a given speed, and if there are some wheels whose velocity is slower than a certain percentage of the fastest wheel speed for a given period. • When there are temporary open or short circuits of the wheel sensor, chipped pulser gear, or signal disturbance.	System down	System down	19-64
The main relay repeats ON/OFF switching at all times. • When the main relay is ON, a short test pulse is sent to each valve. If there is some discrepancy, the ABS indicator light comes on. • When the main relay is OFF, a short test pulse is sent to each valve. If the solenoid drive voltage is out of a given range, the ABS indicator light comes on.	System down	System down	19-66
• The pump motor is activated once or twice after every ignition switch ON (II) operation while the vehicle accelerates, then the motor drive voltage is checked. When the voltage is abnormal, the ABS indicator light comes on. • After ABS control completion, the motor is switched off and the main CPU checks the motor drive voltage. When the voltage is abnormal, the ABS indicator light comes on.	——	System down	19-68
During an active motor test or ABS control, the main CPU checks the supply voltage to the motor. When the voltage is abnormal, the ABS indicator light comes on.	System down	System down	19-68
If the motor drive voltage indicates motor operation when the main CPU does not switch the motor ON, the ABS indicator comes on.	——	System down	19-68
• When a solenoid valve failure is detected, the CPU checks the voltage of the main relay output. If the voltage is lower than a given voltage, the ABS indicator light comes on. • The main relay repeats ON/OFF switching at all times. When the main relay is off, a short test pulse is sent to each valve. The CPU monitors the reference voltage. If the voltage is out of a given range, the ABS indicator light comes on.	System down	System down	19-71
When the ignition voltage is lower or higher than a given voltage, the CPU inhibits ABS control and switches off the main relay, and the ABS indicator light comes on. When the ignition voltage recovers to normal range, ABS inhibition is canceled.	Inhibit all wheels	Inhibit all wheels	19-73
The main CPU and sub CPU check each other under certain conditions. When the CPUs detect the following discrepanaies, the ABS indicator light comes on. • When there is discrepancy in the calculated wheel speed velocity that continues for more than a given period. • When there is discrepancy in the phase information that continues for more than a given period. • When there is discrepancy in the calculated control parameter. • When the watch dog control pulse fails for a given period. • When the check of the ROM fails. • When there is discrepancy in the data reading and writing procedure of RAM.	System down	System down	19-74

ABS Indicator Light Does Not Come On

The ABS indicator light does not come on when ignition switch is turned ON (II).

The ABS indicator light does not come on when ignition switch is turned ON (II).

Check the METER (7.5 A) fuse in the under-dash fuse/relay box.

NOTE: All indicator lights except the charging system light will not come on when the METER (7.5 A) fuse is blown.

Is the fuse OK?

NO → **Replace the fuse and recheck.**

YES
NOTE:
Reinstall the fuse if it is OK.

Check for an open in the IG1 circuit:
1. Disconnect the gauge assembly 5P connector.
2. Turn the ignition switch ON (II).
3. Measure the voltage between the gauge assembly 5P connector terminal No. 5 and body ground.

GAUGE ASSEMBLY 5P CONNECTOR

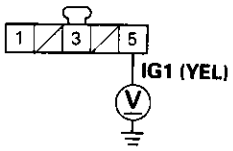

Wire side of female terminals

Is there battery voltage?

NO → **• Repair open in the wire between the METER (7.5 A) fuse and gauge assembly.**
• Replace the under-dash fuse/relay box. (Open circuit inside the box.)

YES

Check the ABS indicator light bulb in the gauge assembly.

Is the bulb OK?

NO → **Replace the ABS indicator light bulb.**

YES

Check for a short to power in the WALP circuit:
Measure the voltage between the gauge assembly 5P connector terminal No. 1 and body ground.

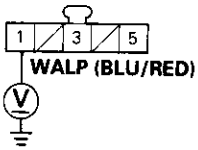

Is there battery voltage?

YES → **Repair short to power in the wire between the gauge assembly and ABS control unit.**

NO

(To page 19-61)

(From page 19-60)

Check the gauge assembly:
1. Turn the ignition switch OFF.
2. Connect the gauge assembly 5P connector.
3. Connect the terminal No. 3 to body ground with a jumper wire.
4. Turn the ignition switch ON (II).

Does the ABS indicator light come on?

NO → **Replace the ABS indicator light drive circuit in the gauge assembly.**

YES →

- **Repair open in the wire between the gauge assembly and body ground.**
- **Repair poor ground (G401, G402).**

GAUGE ASSEMBLY 5P CONNECTOR

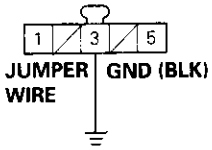

ABS Indicator Light Does Not Go Off

The ABS indicator light does not go off after the engine is started.

— With engine running, ABS indicator light is ON.
— With the SCS service connector connected (see page 19-56), no DTC is indicated.

Check the RR DEF RLY (7.5 A) fuse in the under-dash fuse/relay box.

Is the fuse OK?

NO → **Replace the fuse and recheck.**

YES NOTE: Reinstall the fuse if it is OK.

Check the ABS +B (20 A) fuse in the under-hood fuse/relay box.

Is the fuse OK?

NO → **Replace the fuse and recheck.**

YES NOTE: Reinstall the fuse if it is OK.

Check for an open in the IG2 circuit:
1. Turn the ignition switch ON (II).
2. Measure the voltage between the ABS control unit 26P connector terminal No. 3 and body ground.

ABS CONTROL UNIT 26P CONNECTOR

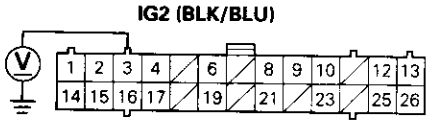

Wire side of female terminals

Is there battery voltage?

NO → **Repair open in the wire between the RR DEF RLY (7.5 A) fuse and ABS control unit.**

YES

Check for an open in the B1 and B2 circuit:
Measure the voltage between body ground and terminals No. 14 and No. 15 individually.

ABS CONTROL UNIT 26P CONNECTOR

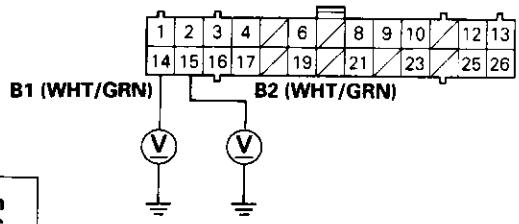

Wire side of female terminals

Is there battery voltage?

NO → **Repair open in the wire between the ABS +B (20 A) fuse and ABS control unit.**

YES

(To page 19-63)

(From page 19-62)

Check for a short to body ground in the WALP circuit:
1. Turn the ignition switch OFF.
2. Disconnect the ABS control unit 22P and gauge assembly 5P connectors.
3. Check for continuity between the ABS control unit 22P connector terminal No. 7 and body ground.

ABS CONTROL UNIT 22P CONNECTOR

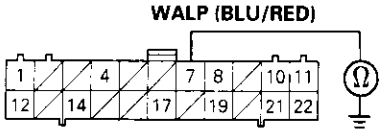

Wire side of female terminals

Is there continuity?

YES → **Repair short to body ground in the wire between the ABS control unit and gauge assembly.**

NO

Check the ABS control unit:
1. Connect the ABS control unit 22P connector.
2. Turn the ignition switch ON (II).
3. Measure the voltage between the ABS control unit 22P connector terminal No. 7 and body ground.

ABS CONTROL UNIT 22P CONNECTOR

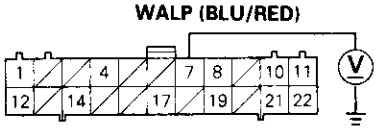

Wire side of female terminals

Is there battery voltage?

NO → **Check for an open in the GND2 circuit:**
1. Connect the ABS control unit 26P connector terminal No. 16 to body ground with a jumper wire.
2. Measure the voltage between the ABS control unit 22P connector terminal No. 7 and body ground.

ABS CONTROL UNIT 26P CONNECTOR

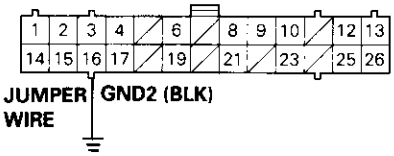

Wire side of female terminals

YES

Is there battery voltage?

YES → **• Repair open in the wire between the ABS control unit and body ground.**
• Repair poor ground (G401, G402).

NO → **Check for loose ABS control unit connectors. If necessary, substitute a known-good ABS control unit and recheck.**

Check for an open in the WALP circuit:
Measure the voltage between the gauge assembly 5P connector terminal No. 1 and body ground.

GAUGE ASSEMBLY 5P CONNECTOR

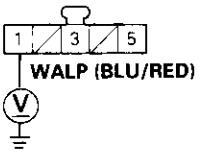

Wire side of female terminals

Is there battery voltage?

NO → **Repair open in the wire between the ABS control unit and gauge assembly.**

YES

Replace the ABS indicator light drive circuit in the gauge assembly.

Wheel Sensor

Diagnostic Trouble Code (DTC) 11~18: Wheel Sensor Diagnosis

NOTE: The ABS indicator light comes on when only the drive wheels are turning, signal disturbance is detected, etc. Therefore, test-drive the car at a speed of 12 mph (20 km/h) or more after turning the ignition switch from OFF to ON (II), and if the ABS indicator light does not come on, the system is OK.

— With the ignition switch ON (II), ABS indicator light does not go off.
— After driving, ABS indicator light comes on.
— With the SCS service connector connected (see page 19-56), DTCs 11~18 are indicated.

*

DTC	Appropriate Terminal	
	(0) SIDE	(1) SIDE
11, 12 (Right-front)	No. 8: FR0	No. 21: FR1
13, 14 (Left-front)	No. 10: FL0	No. 23: FL1
15, 16 (Right-rear)	No. 4: RR0	No. 17: RR1
17, 18 (Left-rear)	No. 6: RL0	No. 19: RL1

ABS CONTROL UNIT 26P CONNECTOR

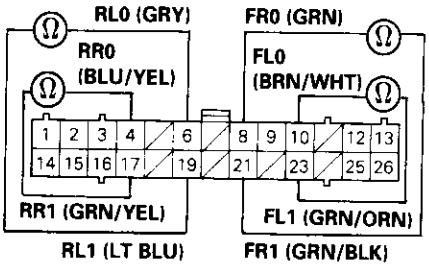

Wire side of female terminals

Check the wheel sensor circuit:
1. Disconnect the ABS control unit 26P connector.
2. Measure the resistance between the appropriate wheel sensor (0) and (1) circuit terminals*.

Is the resistance OK?
(Front: 750 – 1050 Ω/20°C, 68°F
Rear: 850 – 1150 Ω/20°C, 68°F)

NO →
- **Repair open in the (0) or (1) circuit wire, or short to the (0) circuit wire in the (1) circuit wire between the ABS control unit and appropriate wheel sensor.**
- **Replace the appropriate wheel sensor.**

YES ↓

Check for a short to body ground in the wheel sensor circuit:
Check for continuity between the ABS control unit 26P connector appropriate wheel sensor (0) circuit terminal* and body ground.

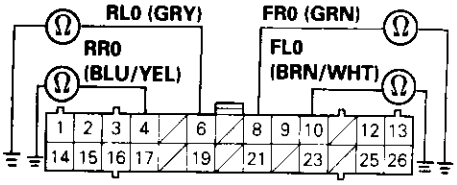

Is there continuity?

YES →
- **Repair short to body ground in the (0) or (1) circuit wire between the ABS control unit and appropriate wheel sensor.**
- **Replace the appropriate wheel sensor.**

NO ↓

Check for a short to power in the wheel sensor circuit:
1. Reconnect the ABS control unit 26P connector.
2. Start the engine.
3. Measure the voltage between the ABS control unit 26P connector appropriate wheel sensor (0) circuit terminal and body ground.

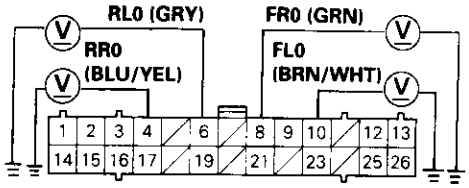

Is there 4 V or more?

YES →
Repair short to power in the (0) or (1) circuit wire between the ABS control unit and appropriate wheel sensor.

NO ↓

NOTE:
- Normal voltage: Approx. 2 V
- 0 V: Replace the ABS control unit.
- 4 V or more indicates a short to power.

(To page 19-65)

(From page 19-64)

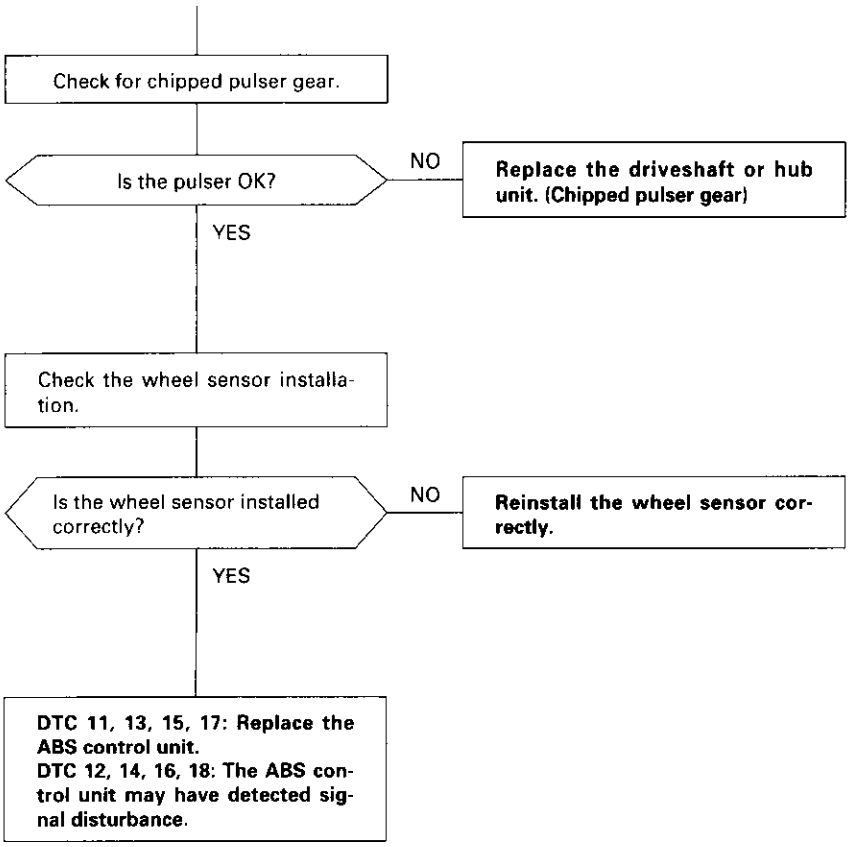

Solenoid

Diagnostic Trouble Code (DTC) 31~38: Solenoid Diagnosis

— With the ignition switch ON (II), ABS indicator light does not go off, or ABS indicator light comes on while ABS is functioning.
— With the SCS service connector connected (see page 19-56), DTCs 31~38 are indicated.

Check for a short to power in the solenoid circuit:
1. Disconnect the ABS control unit 22P and 26P connectors.
2. Start the engine.
3. Measure the voltage between the ABS control unit connector appropriate solenoid circuit terminal* and body ground.

Is there battery voltage?

YES → **Repair short to power in the appropriate solenoid circuit wire between the ABS control unit and modulator unit.**

NO

Check for a short to body ground in the solenoid circuit:
Check for continuity between the appropriate solenoid circuit terminal* and body ground.

Is there continuity?

YES → **• Repair short to body ground in the appropriate solenoid circuit wire between the ABS control unit and modulator unit.**
• Replace the modulator unit.

NO

Check the ABS control unit:
1. Turn the ignition switch OFF.
2. Connect the ABS control unit 22P and 26P connectors.
3. Connect the SCS service connector.
4. Turn the ignition switch ON (II).
5. Measure the voltage between the ABS control unit 26P connector appropriate COM circuit terminal** and body ground.

Is there approx. 3 V?

NO → **Check for loose ABS control unit connectors. If necessary, substitute a known-good ABS control unit and recheck.**

YES

(To page 19-67)

*

DTC	Appropriate Connector	Appropriate Terminal
31: FR-IN	22P	No. 1
32: FR-OUT	22P	No. 12
33: FL-IN	22P	No. 11
34: FL-OUT	22P	No. 10
35: RR-IN	26P	No. 13
36: RR-OUT	22P	No. 21
37: RL-IN	26P	No. 25
38: RL-OUT	26P	No. 12

ABS CONTROL UNIT 22P CONNECTOR

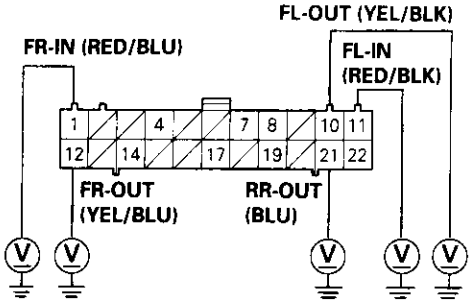

Wire side of female terminals

ABS CONTROL UNIT 26P CONNECTOR

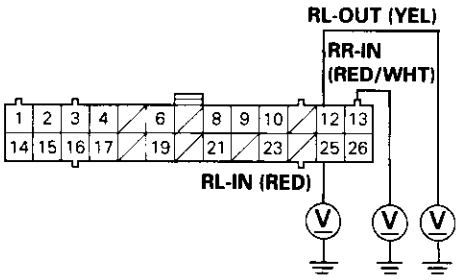

Wire side of female terminals

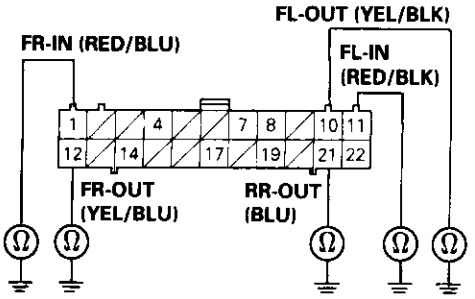

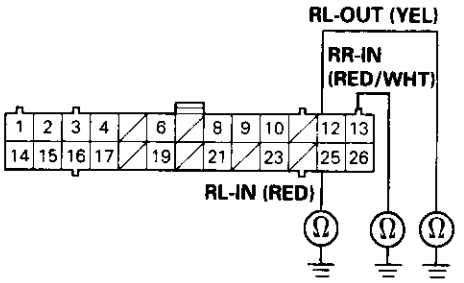

**

DTC	Appropriate Terminal
31: FR-IN	No. 2: SCOM
32: FR-OUT	No. 2: SCOM
33: FL-IN	No. 1: PCOM
34: FL-OUT	No. 1: PCOM
35: RR-IN	No. 1: PCOM
36: RR-OUT	No. 1: PCOM
37: RL-IN	No. 2: SCOM
38: RL-OUT	No. 2: SCOM

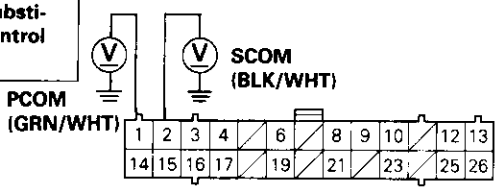

(From page 19-66)

Check for an open in the solenoid circuit:
Measure the voltage between the ABS control unit connector appropriate solenoid circuit terminal* and body ground.

Is there approx. 3 V?

NO

- **Repair open in the appropriate COM circuit wire between the ABS control unit and modulator unit.**
- **Repair open in the appropriate solenoid circuit wire between the ABS control unit and modulator unit.**
- **Replace the modulator unit.**

YES

Check for loose ABS control unit connectors. If necessary, substitute a known-good ABS control unit and recheck.

*

DTC	Appropriate Connector	Appropriate Terminal
31: FR-IN	22P	No. 1
32: FR-OUT	22P	No. 12
33: FL-IN	22P	No. 11
34: FL-OUT	22P	No. 10
35: RR-IN	26P	No. 13
36: RR-OUT	22P	No. 21
37: RL-IN	26P	No. 25
38: RL-OUT	26P	No. 12

ABS CONTROL UNIT 22P CONNECTOR

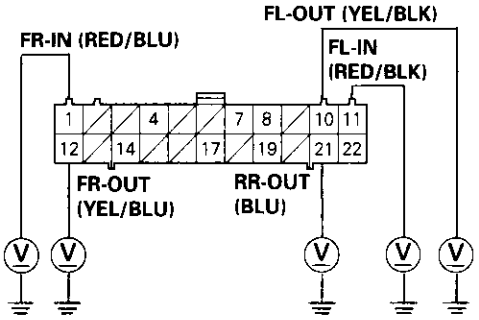

Wire side of female terminals

ABS CONTROL UNIT 26P CONNECTOR

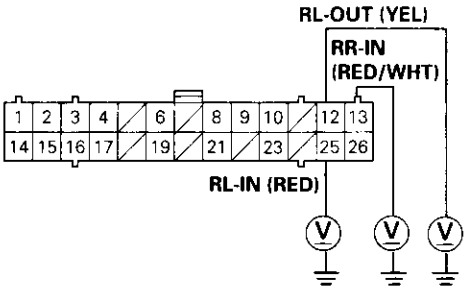

Wire side of female terminals

ABS Pump Motor

Diagnostic Trouble Code (DTC) 51~53: ABS Pump Motor Diagnosis

— With the ignition switch ON (II), ABS indicator light does not go off.
— With the SCS service connector connected (see page 19-56), DTCs 51~53 are indicated.

Check the MTR CHECK (7.5 A) fuse.

Is the fuse OK?

NO → **Replace the fuse and recheck.**

NOTE: Short the PMR terminal to body ground for a moment, and recheck the fuse. If the fuse is blown, check for a short to body ground in the MCK circuit.

YES
NOTE: Reinstall the fuse if it is OK.

Check the PUMP MOTOR (40 A) fuse.

Is the fuse OK?

NO → **Replace the fuse and recheck.**

NOTE: Short the PMR terminal to body ground for a moment, and recheck the fuse. If the fuse is blown, check for a short to body ground in the wire between the under-hood ABS fuse/relay box and pump motor.

YES
NOTE: Reinstall the fuse if it is OK.

Check the pump motor relay (see section 23).

Is the relay OK?

NO → **Replace the pump motor relay.**

YES

Check the pump motor power source circuit:
Turn the ignition switch ON (II).

Does the pump motor operate?

YES → **Check for a short to power in the pump motor power source circuit:** Remove the pump motor relay.

Does the pump motor operate?

YES → **Repair short to power in the wire between the under-hood ABS fuse/relay box and ABS pump motor.**

NO → **Check for loose ABS control unit connectors. If necessary, substitute a known-good ABS control unit and recheck.**

NO

(To page 19-69)

ABS CONTROL UNIT 22P CONNECTOR

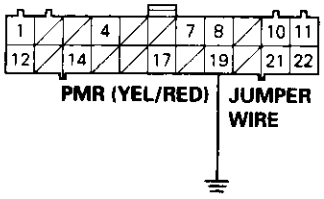

Wire side of female terminals

(From page 19-68)

Check the pump motor circuit:
1. Remove the pump motor relay.
2. Turn the ignition switch ON (II).
3. Connect the pump motor relay connector +B and MOTOR terminals with a jumper wire for a moment.

Does the pump motor operate?

NO →

Check for an open in the pump motor +B circuit:
1. Turn the ignition switch OFF.
2. Disconnect the pump motor 2P connector.
3. Turn the ignition switch ON (II).
4. Connect the pump motor relay connector +B and MOTOR terminals with a jumper wire.
5. Measure the voltage between the pump motor 2P connector terminal No. 1 and body ground.

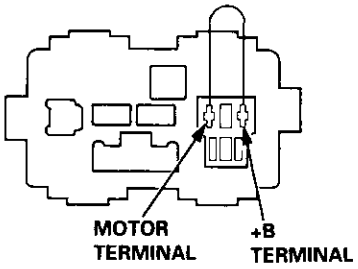

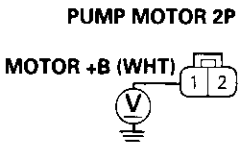

Wire side of female terminals

Is there battery voltage?

NO → **Repair open in the wire between the under-hood ABS fuse/relay box and pump motor.**

YES

Check the pump motor operation:
Connect the battery (+) terminal to the pump motor 2P connector terminal No. 1, and the (–) terminal to the terminal No. 2 for a moment.

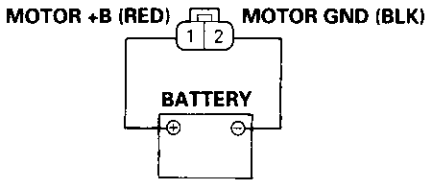

Does the pump motor operate?

NO → **Replace the modulator unit. (Faulty pump motor)**

YES

Repair open in the wire between the pump motor and body ground, or poor ground (G403).

Check for a short to body ground in the PMR circuit:
1. Turn the ignition switch OFF.
2. Disconnect the ABS control unit 22P connector.
3. Check for continuity between terminal No. 19 and body ground.

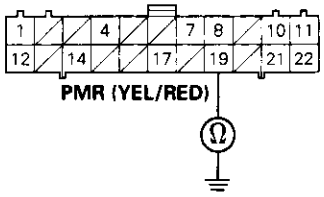

Wire side of female terminals

Is there continuity?

YES → **Repair short to body ground in the wire between the under-hood ABS fuse/relay box and ABS control unit.**

NO

(To page 19-70)

(cont'd)

ABS Pump Motor (cont'd)

(From page 19-69)

Check for an open in the PCOM circuit:
1. Turn the ignition switch OFF.
2. Reconnect the ABS control unit 22P connector.
3. Connect the SCS service connector.
4. Turn the ignition switch ON (II).
5. Measure the voltage between the pump motor relay connector PCOM terminal and body ground.

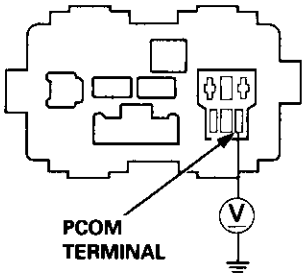

Is there approx. 3 V?

NO → **Repair open in the wire between the under-hood ABS fuse/relay box and ABS control unit.**

YES

Check for an open in the PMR circuit:
Measure the voltage between the ABS control unit 22P connector terminal No. 19 and body ground.

ABS CONTROL UNIT 22P CONNECTOR

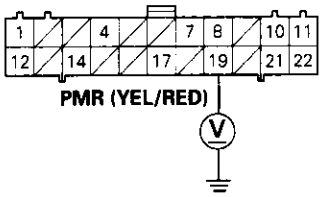

Wire side of female terminals

Is there approx. 3 V?

NO → **Repair open in the wire between the under-hood ABS fuse/relay box and ABS control unit.**

YES

Check for an open in the MCK circuit:
1. Turn the ignition switch OFF.
2. Disconnect the SCS service connector.
3. Turn the ignition switch ON (II).
4. Measure the voltage between the ABS control unit 22P connector terminal No. 17 and body ground while connecting the pump motor relay connector +B and MOTOR terminal with a jumper wire for moment.

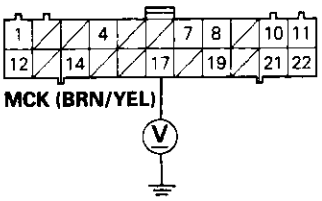

Is there battery voltage?

NO → **Repair open in the wire between the under-hood ABS fuse/relay box and ABS control unit.**

YES

Check for loose ABS control unit connectors. If necessary, substitute a known-good ABS control unit and recheck.

Main Relay

Diagnostic Trouble Code (DTC) 54: Main Relay Diagnosis

— With the ignition switch ON (II), ABS indicator light does not go off.
— With the SCS service connector connected (see page 19-56), DTC 54 is indicated.

Check the ABS +B (20 A) fuse.

Is the fuse OK?

NO → **Replace the fuse and recheck.**

YES
NOTE: Reinstall the fuse if it is OK.

Check for an open in the B1, B2 circuit:
Measure the voltage between body ground and the ABS control unit 26P connector terminal No. 14 and No. 15 individually.

ABS CONTROL UNIT 26P CONNECTOR

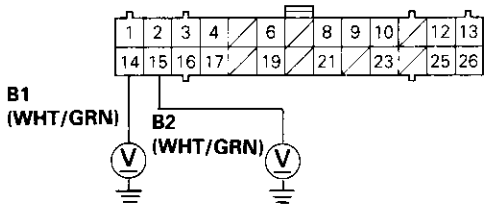

Wire side of female terminals

Is there battery voltage?

NO → **Repair open in the wire between the ABS control unit and underhood ABS fuse/relay box.**

YES

Check for a short to body ground in the PMR circuit:
1. Turn the ignition switch OFF.
2. Remove the pump motor relay.
3. Disconnect the ABS control unit 22P connector.
4. Check for continuity between terminal No. 19 and body ground.

ABS CONTROL UNIT 22P CONNECTOR

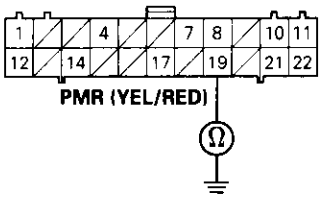

Wire side of female terminals

Is there continuity?

YES → **Repair short to body ground in the wire between the underhood ABS fuse/relay box and ABS control unit.**

NO

Check for a short to body ground in the PCOM, SCOM circuit:
1. Disconnect the ABS control unit 26P connector.
2. Check for continuity between body ground and the ABS control unit 26P terminals No. 1 and No. 2 individually.

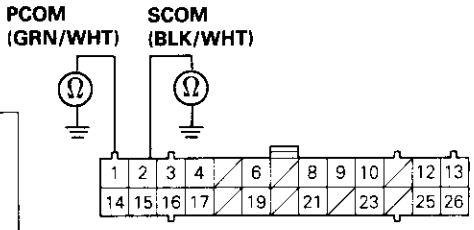

Is there continuity?

YES →
- **Repair short to body ground in the PCOM circuit wire between the ABS control unit and underhood ABS fuse/relay box.**
- **Repair short to body ground in the PCOM or SCOM circuit wire between the ABS control unit and modulator unit.**
- **Replace the modulator unit. (Short circuit inside the unit)**

NO

(To page 19-72)

(cont'd)

Main Relay (cont'd)

(From page 19-71)

Check for a short to power in the PCOM, SCOM circuit:
1. Turn the ignition switch ON (II).
2. Measure the voltage between body ground and ABS control unit 26P connector terminals No. 1 and No. 2 individually.

Is there voltage?

YES

- **Repair short to power in the PCOM circuit wire between the ABS control unit and under-hood ABS fuse/relay box.**
- **Repair short to power in the PCOM or SCOM circuit wire between the ABS control unit and modulator unit.**
- **Replace the modulator unit. (Short to power inside the unit)**

NO

Replace the ABS control unit.

NOTE: Voltage indicates a short to power.

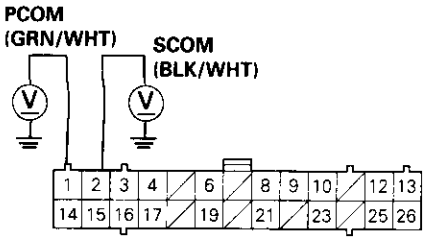

Ignition Voltage

Diagnostic Trouble Code (DTC) 61: Ignition Voltage Diagnosis

— With the engine running, ABS indicator light is ON.
— With the SCS service connector connected (see page 19-56), DTC 61 is indicated.

Problem verification:
1. Erase the DTC.
2. Start the engine.
3. Make sure that the ABS indicator light comes on and DTC 61 is indicated.

Is DTC 61 indicated?

NO → **The system is OK at this time.**

YES

Check the IG2 circuit:
Measure the voltage between the ABS control unit 26P connector terminal No. 3 and body ground.

Is there 18 V or above?

YES → **Check the charging system.**

NO

If the voltage is 0 V, check for an open in the IG2 circuit.
If there is 12 – 17 V, substitute a known-good ABS control unit and recheck.

ABS CONTROL UNIT 26P CONNECTOR

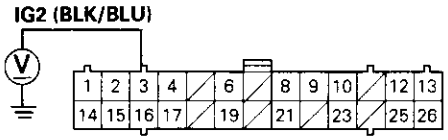

Wire side of female terminals

Central Processing Unit (CPU)

Diagnostic Trouble Code (DTC) 81: CPU Diagnosis

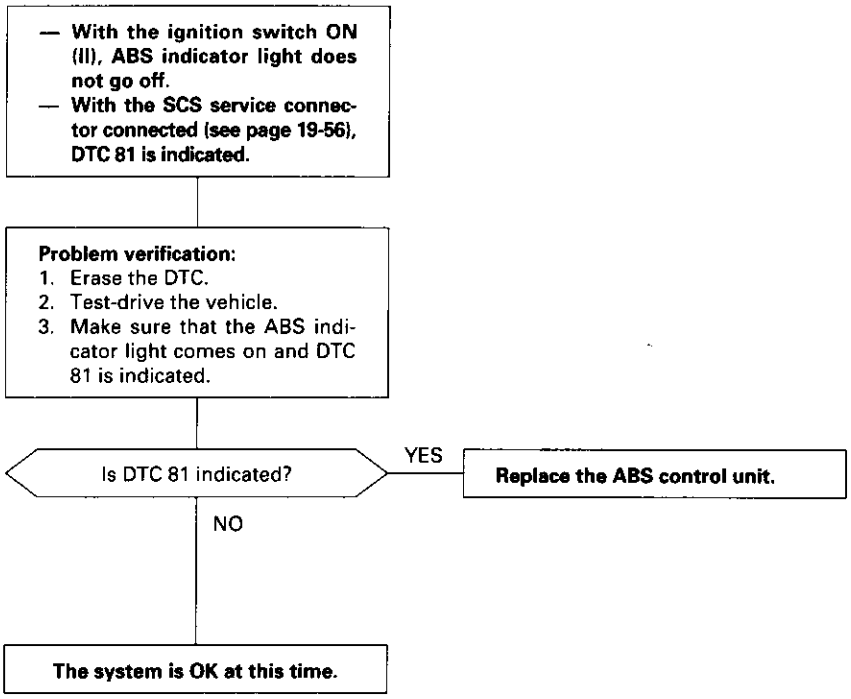

Removal/Installation

CAUTION:
- **Do not spill brake fluid on the car; it may damage the paint; if brake fluid does contact the paint, wash it off immediately with water.**
- **Take care not to damage or deform the brake lines during removal and installation.**
- **To prevent the brake fluid from flowing, plug and cover the hose ends and joints with a shop towel or equivalent material.**

NOTE: Tighten the flare nuts to 15 N·m (1.5 kgf·m, 11 lbf·ft).

Removal

1. Disconnect the modulator unit 10P and pump motor 2P connectors.
2. Disconnect the brake lines, then remove the modulator unit.

Installation

1. Install the modulator unit, then connect the brake lines.
2. Connect the modulator unit 10P and pump motor 2P connectors.
3. Bleed the brake system.
4. Start the engine, and check that the ABS indicator light goes off.

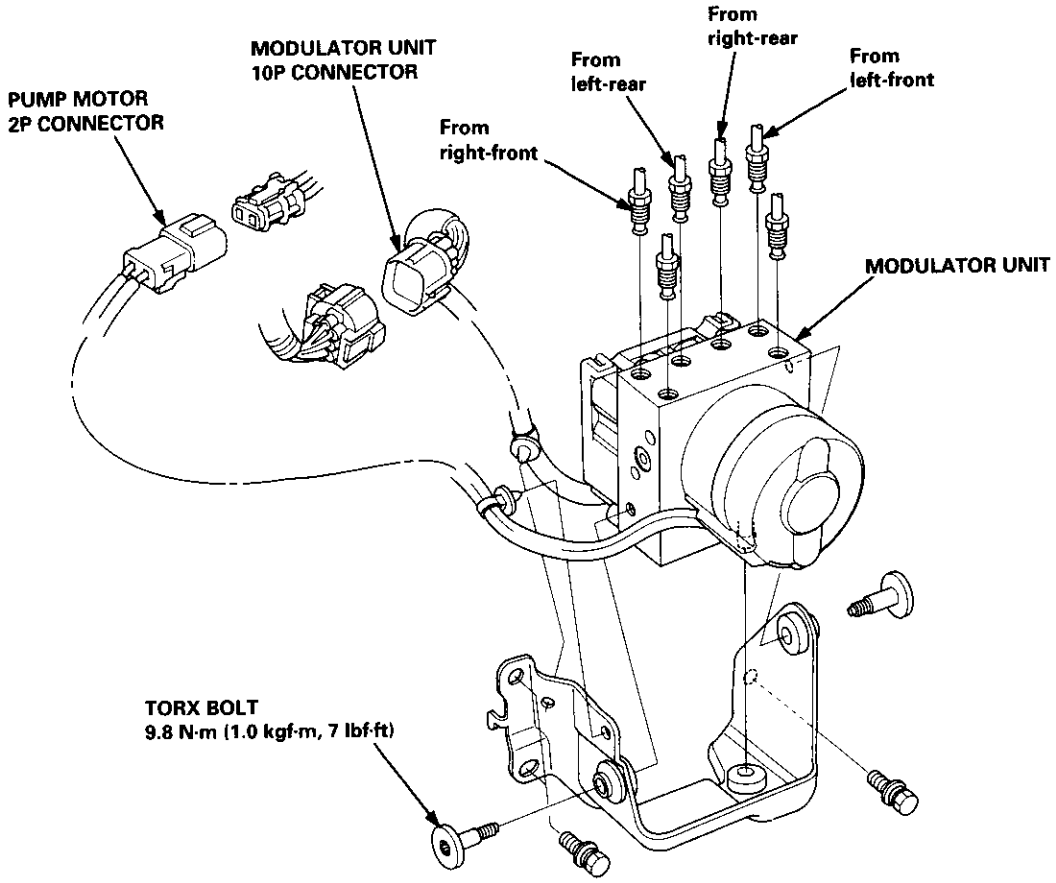

Replacement

1. Remove the right side kick panel.
2. Disconnect the ABS control unit connectors.
3. Remove the ABS control unit.
4. Install the ABS control unit in the reverse order of removal.

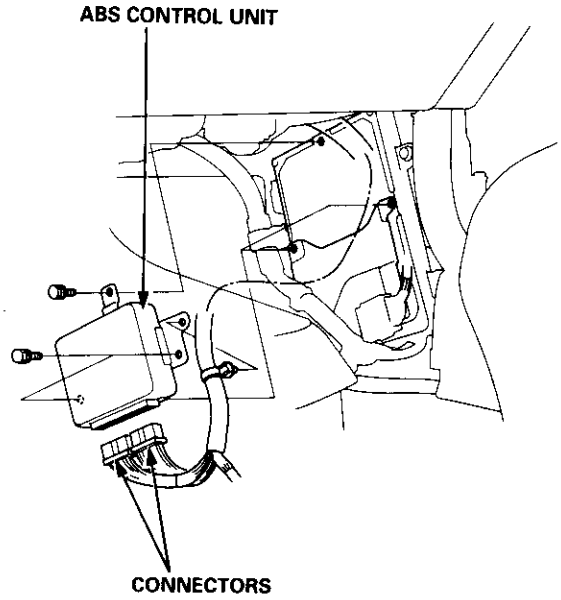

Pulsers/Wheel Sensors

Inspection

1. Check the front and rear pulser for chipped or damaged teeth.
2. Measure the air gap between the wheel sensor and pulser all the way around while rotating the pulser.

   Standard: 0.4 – 1.0 mm (0.02 – 0.04 in)

   NOTE: If the gap exceeds 1.0 mm (0.04 in), the probability is a distorted suspension arm which should be replaced.

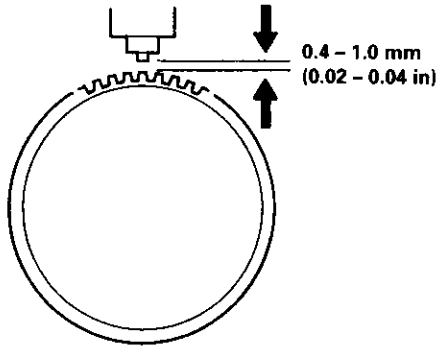

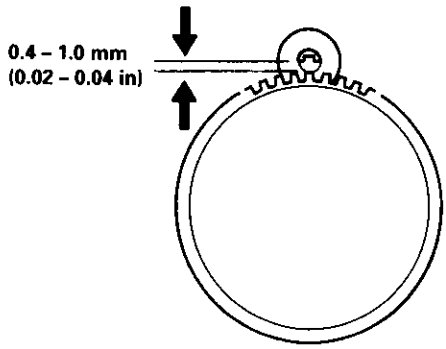

Wheel Sensor Replacement

NOTE:
- Be careful when installing the sensors to avoid twisting the wires.
- The torque value of the bolts is 9.8 N·m (1.0 kgf·m, 7 lbf·ft).

Front

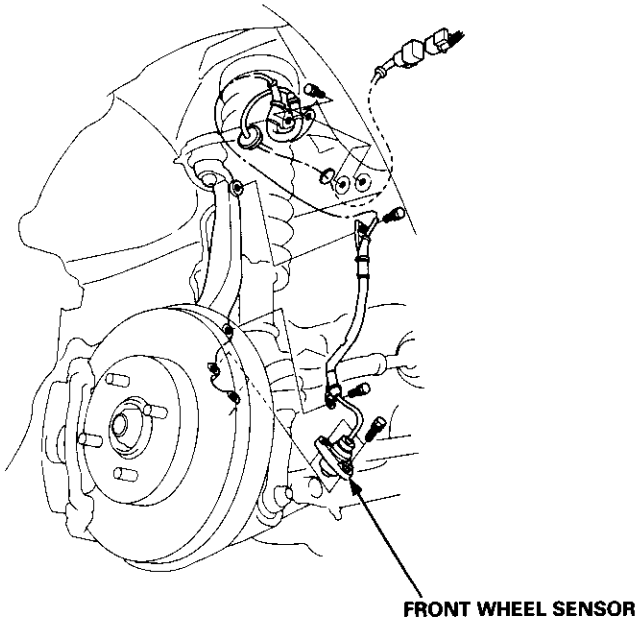

Rear

1. Remove the hub bearing unit (see section 18).
2. Remove the four backing plate bolts.
3. Pull the backing plate away from the trailing arm, then remove the wheel sensor. It is not necessary to disconnect the brake line.

NOTE: This illustration is drum brake type. The torque value of the disk type is same as drum type.

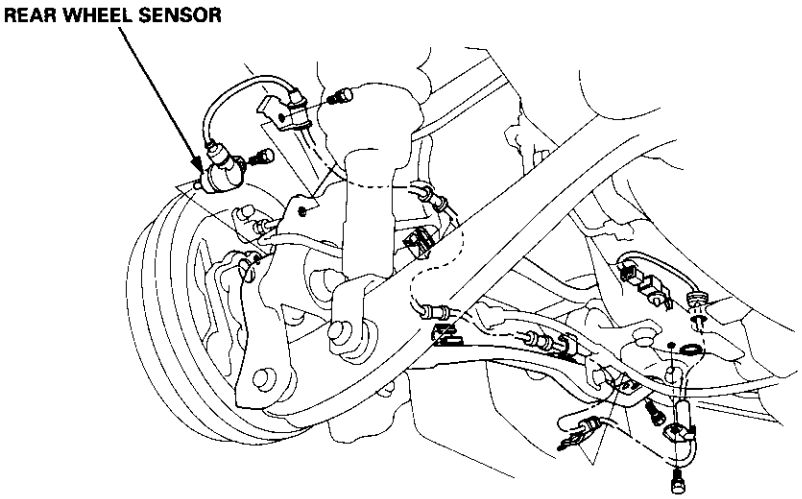

Body ('96 model)

Doors
- Front Door Index (4D) 20-2
- Rear Door Index (4D) 20-8
- Door Index (2D/3D) 20-14

Emblems
- Installation 20-118

Exterior
- Component Location Index 20-93

*Frame Repair Chart 20-120

*Interior
- Component Location Index 20-58

Mirrors
- Mirror Replacement 20-24
- Mirror Holder/Cover Replacement ... 20-25
- Rearview Mirror Replacement 20-25

Moonroof
- Index 20-50

Opener Cable/Opener and Latch/ Wiper and Washer
- Component Location Index 20-107

Seats and Seat Belts
- Component Location Index 20-73

Sub-frame 20-119

Windshield, Rear Window and Quarter Glass
- Index 20-26

Body ('97 model) 20-123

Body ('98 model) 20-131

Body ('99 model) 20-135

Body ('00 model) 20-141

Front Door Index

4D:

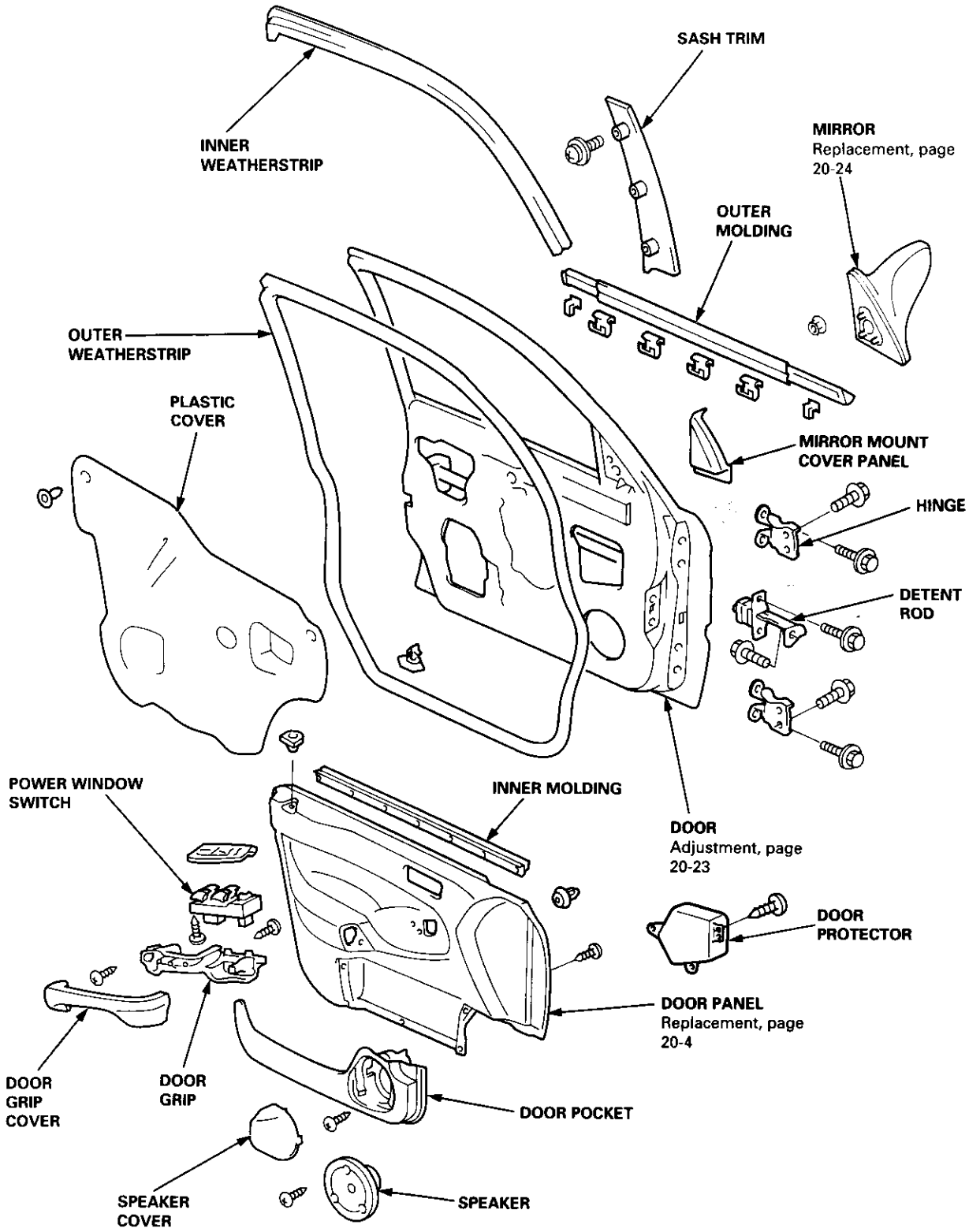

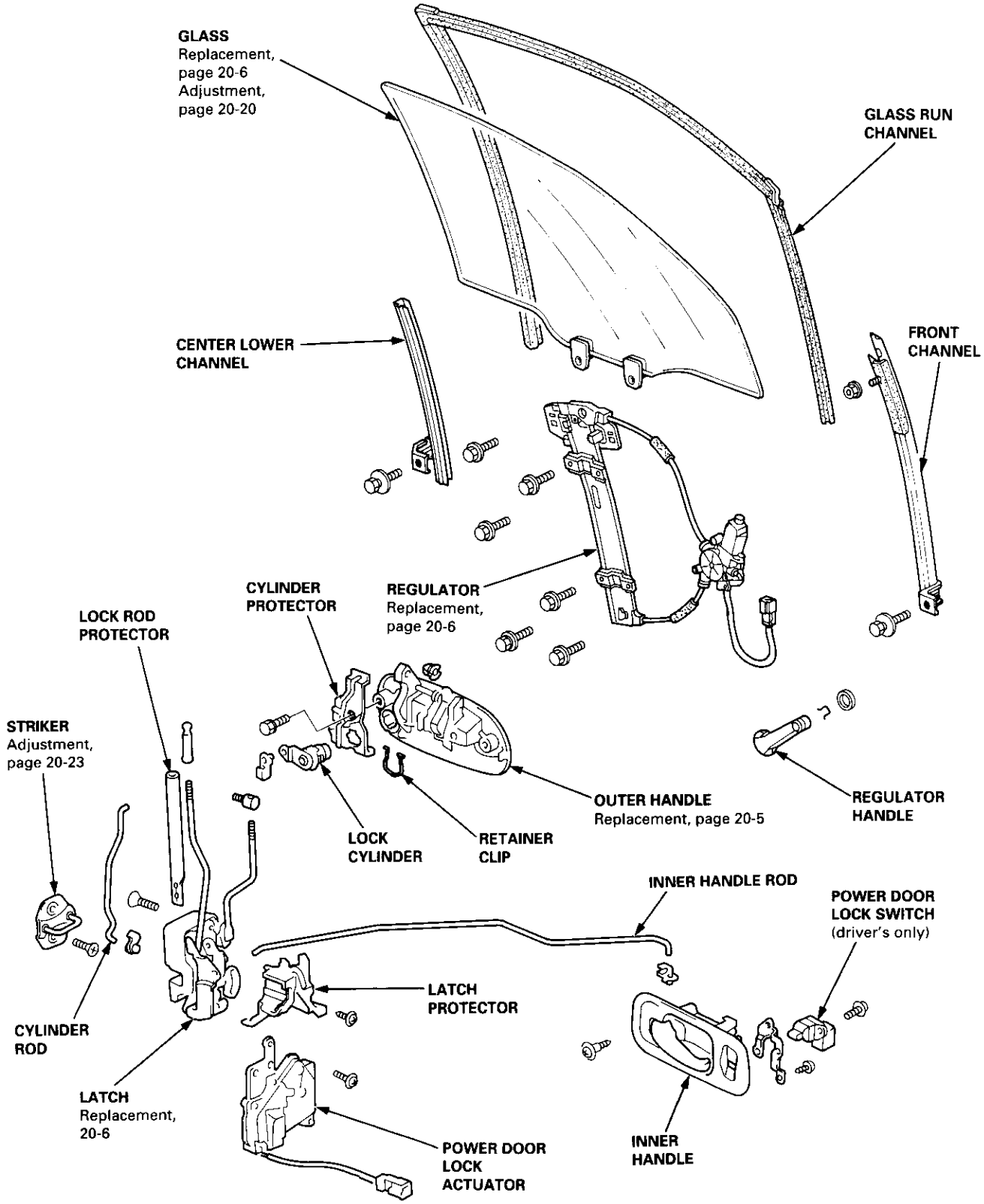
GLASS
Replacement, page 20-6
Adjustment, page 20-20
GLASS RUN CHANNEL
CENTER LOWER CHANNEL
FRONT CHANNEL
REGULATOR
Replacement, page 20-6
CYLINDER PROTECTOR
LOCK ROD PROTECTOR
STRIKER
Adjustment, page 20-23
OUTER HANDLE
Replacement, page 20-5
REGULATOR HANDLE
LOCK CYLINDER
RETAINER CLIP
INNER HANDLE ROD
POWER DOOR LOCK SWITCH
(driver's only)
LATCH PROTECTOR
CYLINDER ROD
LATCH
Replacement, 20-6
POWER DOOR LOCK ACTUATOR
INNER HANDLE

Door Panel Replacement

NOTE: Take care not to scratch the door panel and other parts.

1. Remove:
   - Inner handle (see page 20-3)
   - Mirror mount cover panel (see page 20-24)

2. If applicable, remove the regulator handle by pulling the clip out with a wire hook.

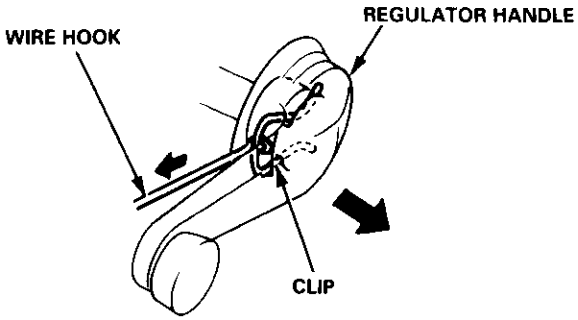

3. Remove the door grip cover and speaker cover, then remove the screws.

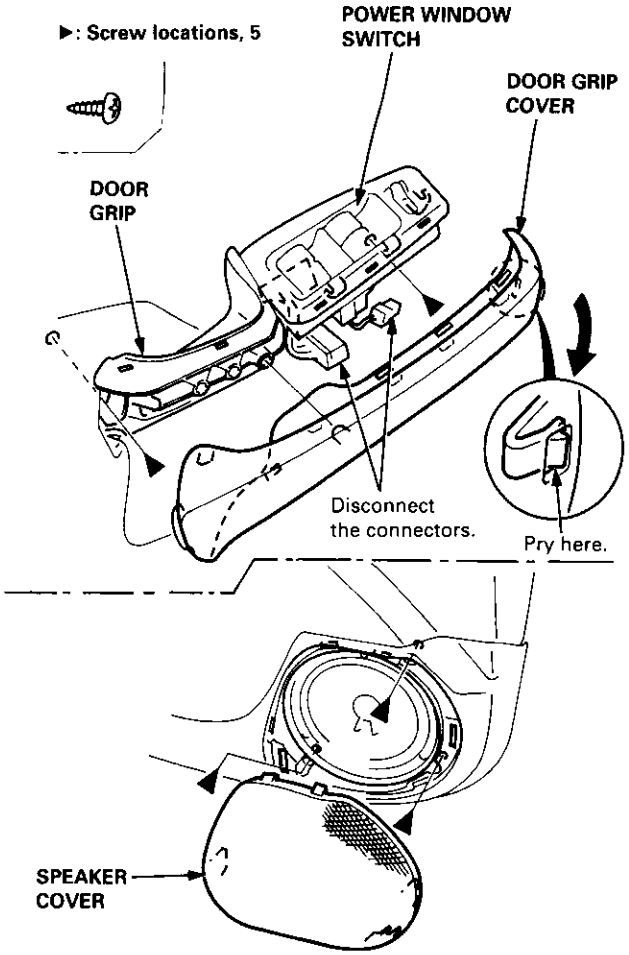

4. Release the clips that hold the door panel. Remove the door panel by pulling it upward.

   NOTE: Remove the door panel with as little bending as possible to avoid creasing or breaking it.

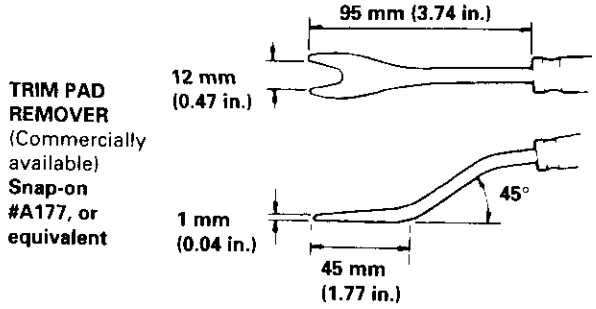

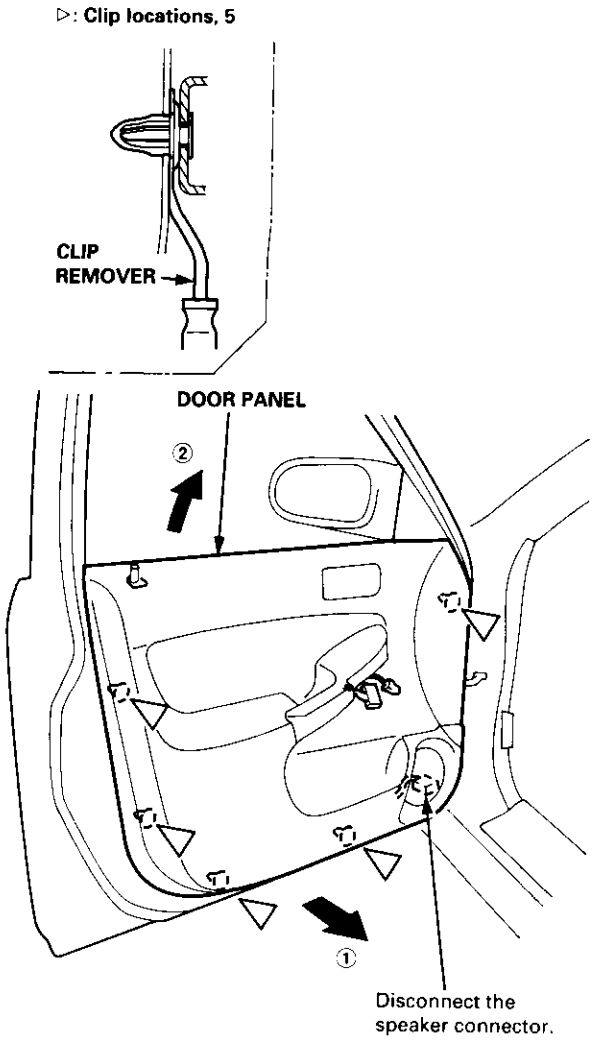

5. Installation is the reverse of the removal procedure.

Outer Handle Replacement

NOTE: Raise the glass fully.

1. Remove:
   - Door panel
   - Plastic cover (see page 20-2)

2. Pull out the retainer clip.

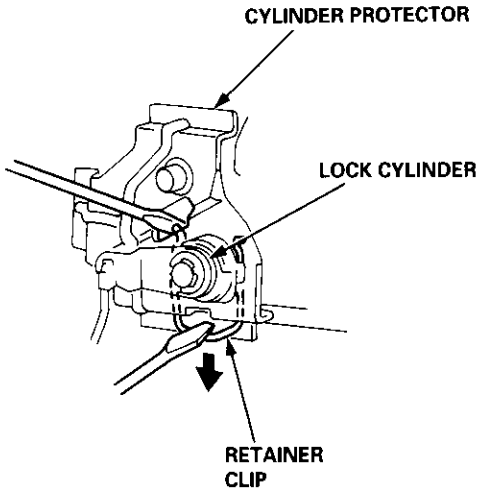

3. Remove the bolts, then remove the cylinder protector, lock cylinder and outer handle.

   ▶: Bolt locations, 2

6 x 1.0 mm
9.8 N·m (1.0 kgf·m, 7.2 lbf·ft)

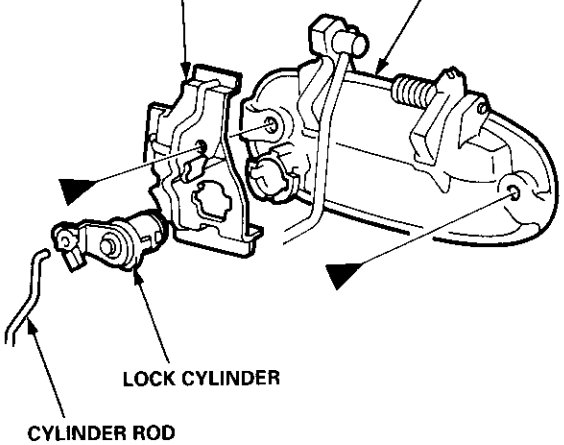

4. Pull out the outer handle. Pry the outer handle rod out of its joint using diagonal cutters.

   NOTE:
   - To ease reassembly, note location Ⓐ of the outer handle rod on the joint before disconnecting it.
   - Take care not to bend the outer handle rod.
   - Use a shop towel to protect the opening in the door.

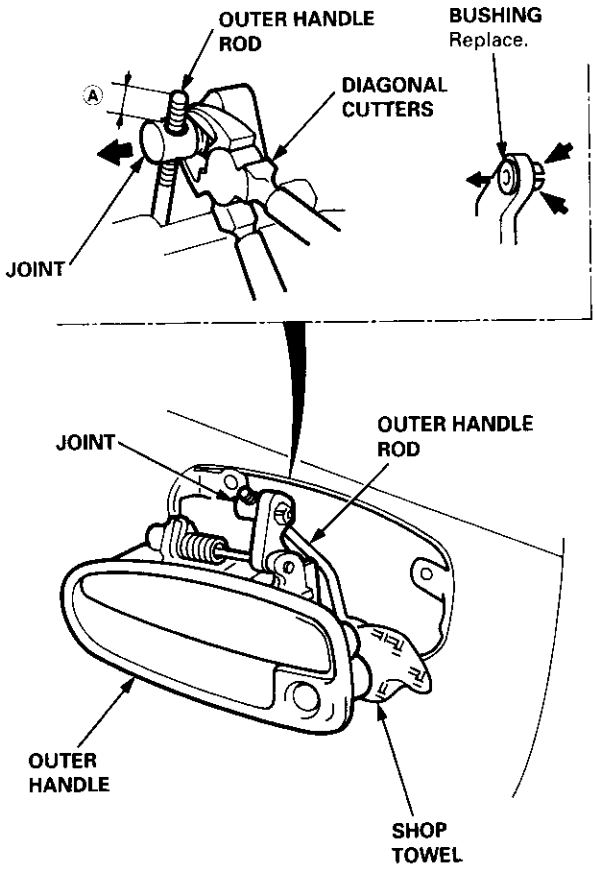

5. Installation is the reverse of the removal procedure.

   NOTE: Make sure the door locks and opens properly.

Latch Replacement

NOTE: Raise the glass fully.

1. Remove:
   - Door panel (see page 20-4)
   - Plastic cover (see page 20-2)
   - Outer handle (see page 20-5)

2. Remove the bolt, then move the center lower channel forward.

3. Disconnect the connector, and detach the harness clip from the door. Remove the latch through the hole in the door.

   NOTE: Take care not to bend the inner handle rod, outer handle rod, cylinder rod and lock rod.

   ▶: Screw locations, 3

   6 x 1.0 mm
   6 N·m (0.6 kgf·m, 4 lbf·ft)

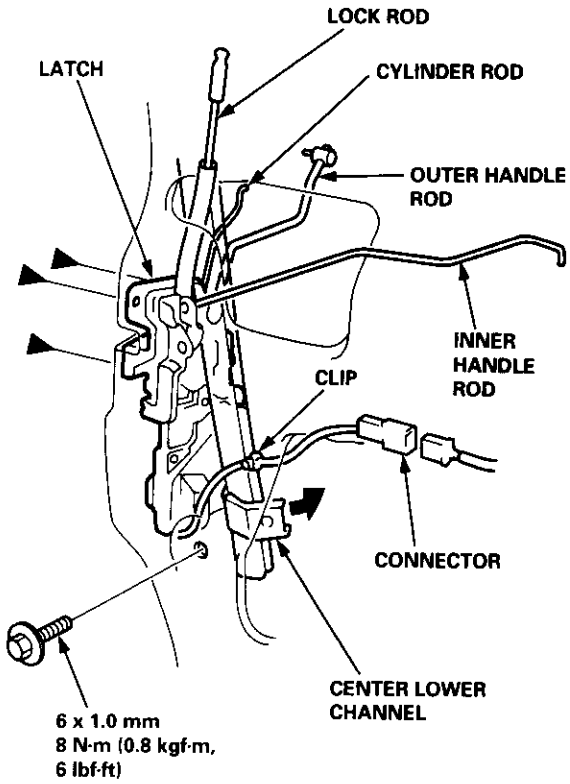

4. Installation is the reverse of the removal procedure.

   NOTE:
   - Make sure the inner handle rod and connector are connected properly.
   - Make sure the door locks and opens properly.

Glass/Regulator Replacement

1. Remove:
   - Door panel (see page 20-4)
   - Plastic cover (see page 20-2)

2. Carefully move the glass until you can see the bolts, then remove them. Carefully pull the glass out through the window slot.

   NOTE: Take care not to drop the glass inside the door.

   ▶: Bolt locations, 2

   6 x 1.0 mm
   9.8 N·m (1.0 kgf·m, 7.2 lbf·ft)

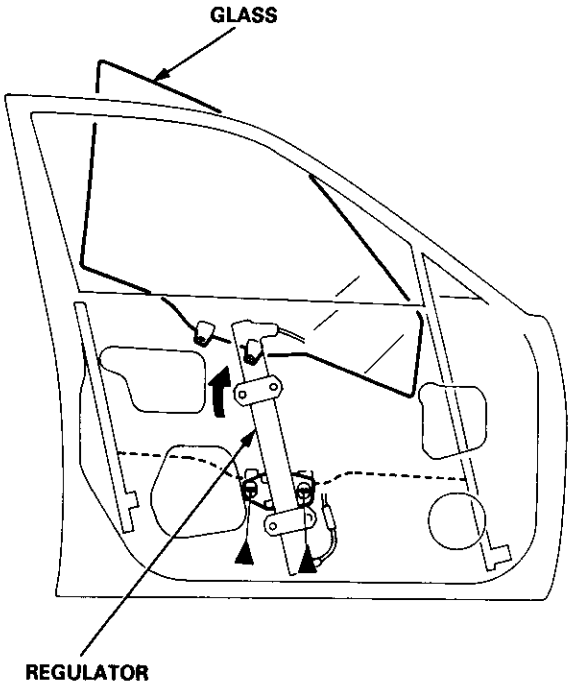

3. Disconnect the connector, and detach the harness clip, then remove the regulator through the hole in the door.

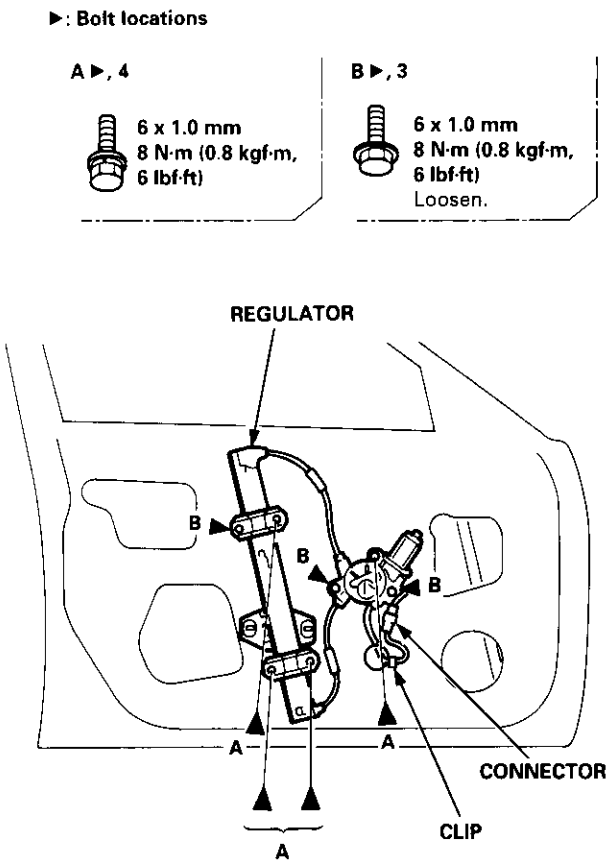

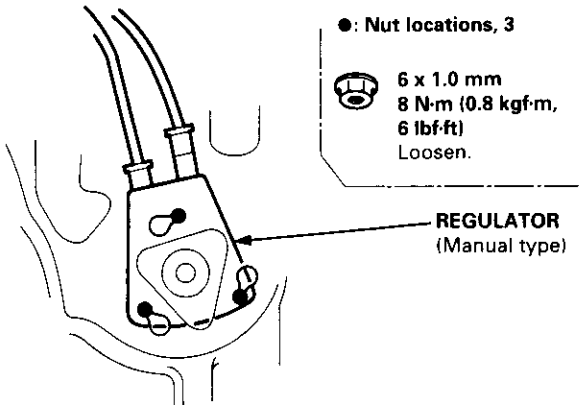

4. Grease all the sliding surfaces of the regulator where shown.

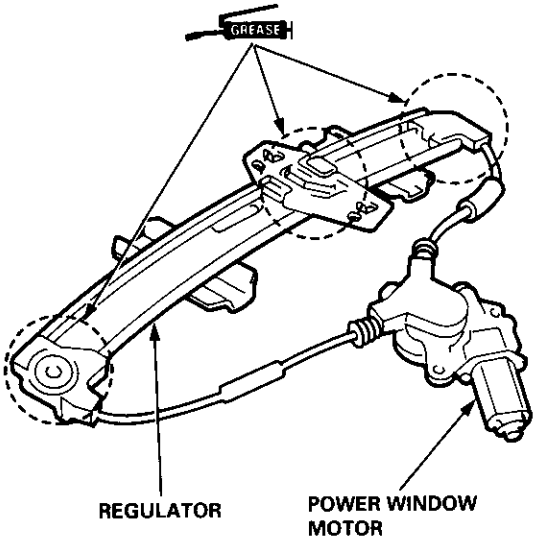

5. Installation is the reverse of the removal procedure.

NOTE: Roll the glass up and down to see if it moves freely without binding. Also make sure that there is no clearance between the glass and glass run channel when the glass is closed. Adjust the position of the glass as necessary (see page 20-20).

Rear Door Index

4D:

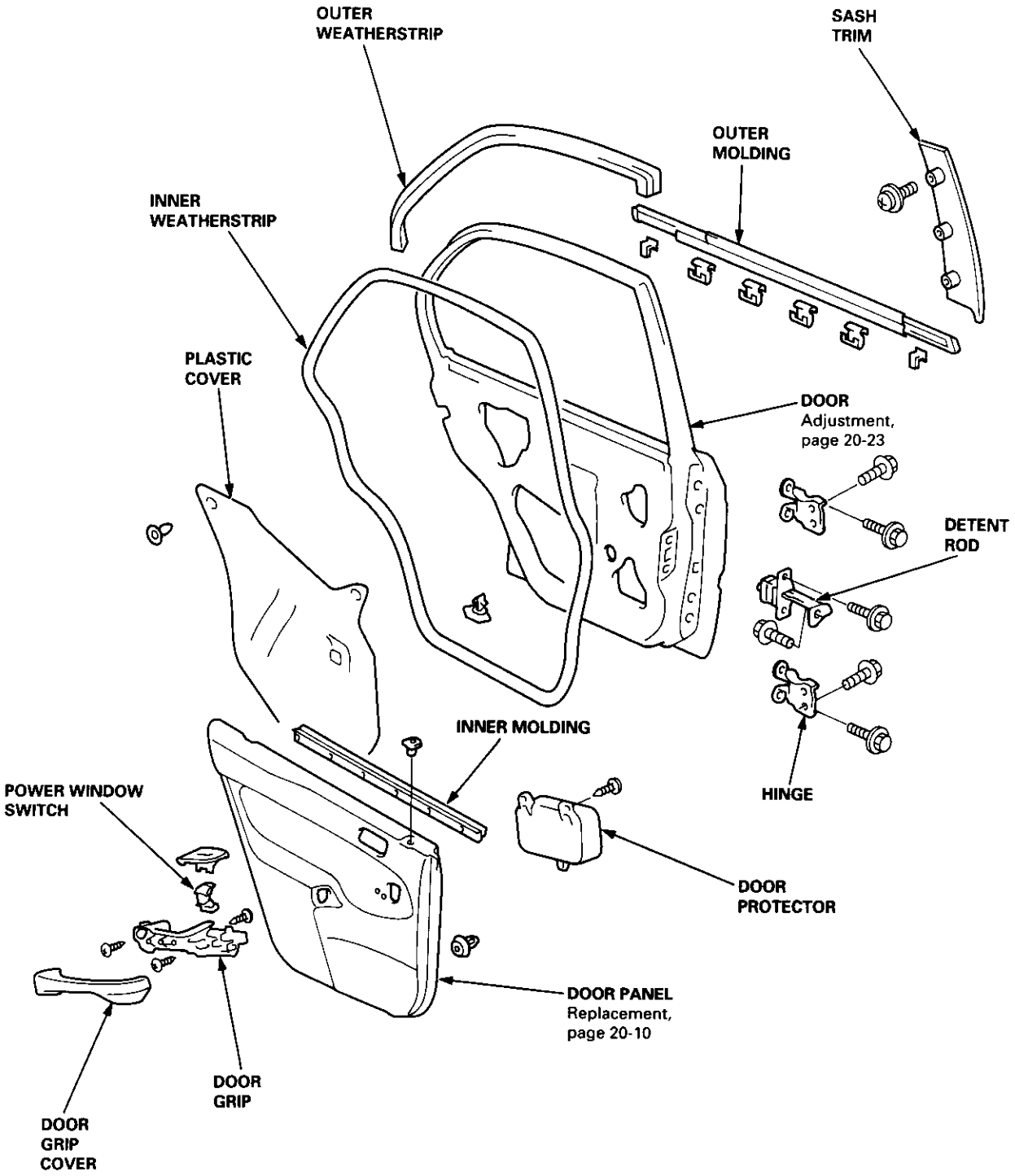

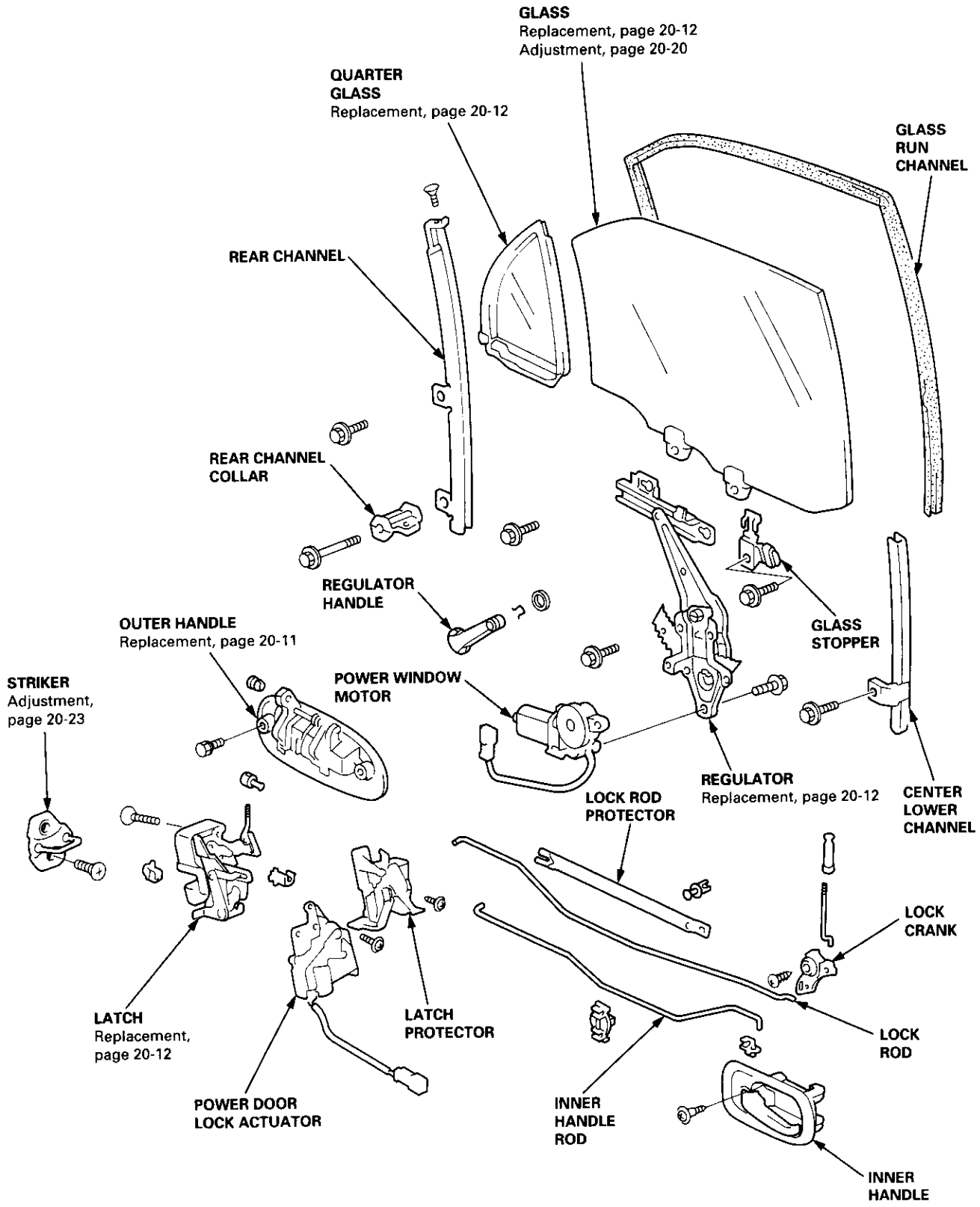
GLASS
Replacement, page 20-12
Adjustment, page 20-20
QUARTER GLASS
Replacement, page 20-12
GLASS RUN CHANNEL
REAR CHANNEL
REAR CHANNEL COLLAR
REGULATOR HANDLE
OUTER HANDLE
Replacement, page 20-11
GLASS STOPPER
STRIKER
Adjustment, page 20-23
POWER WINDOW MOTOR
REGULATOR
Replacement, page 20-12
CENTER LOWER CHANNEL
LOCK ROD PROTECTOR
LOCK CRANK
LATCH
Replacement, page 20-12
LATCH PROTECTOR
LOCK ROD
POWER DOOR LOCK ACTUATOR
INNER HANDLE ROD
INNER HANDLE

Door Panel Replacement

NOTE: Take care not to scratch the door panel and other parts.

1. Remove:
   - Inner handle (see page 20-9)
   - Regulator handle (see page 20-4)

2. Remove the door grip cover, then remove the screws.

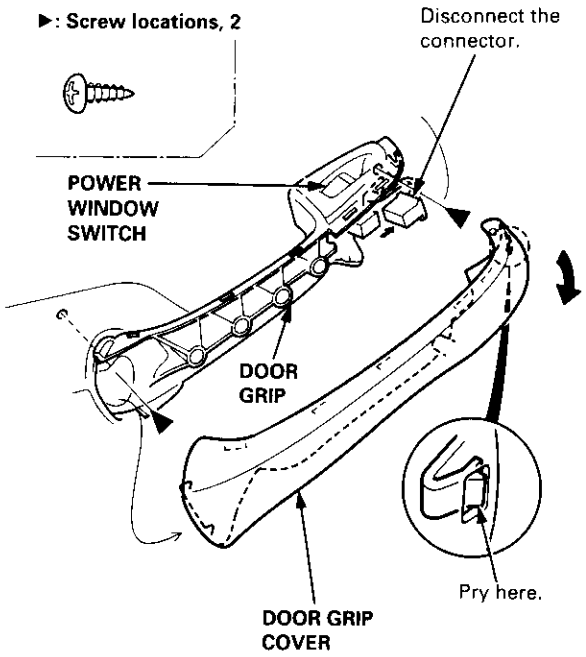

3. Release the clips that hold the door panel. Remove the door panel by pulling it upward.

   NOTE: Remove the door panel with as little bending as possible to avoid creasing or breaking it.

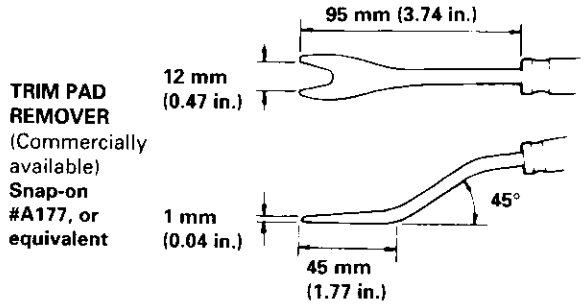

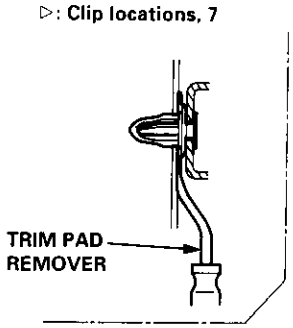

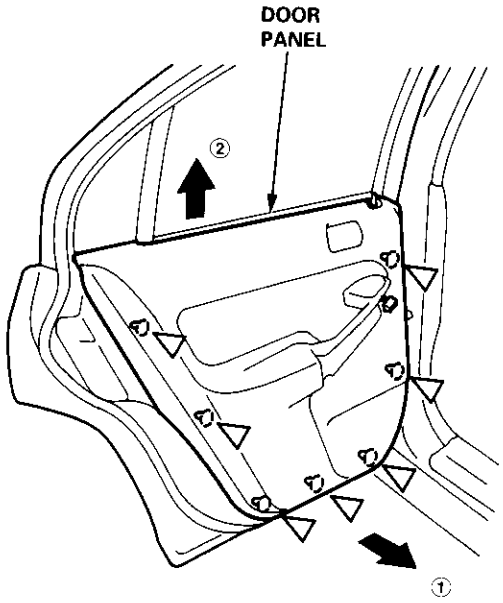

4. Installation is the reverse of the removal procedure.

Outer Handle Replacement

NOTE: Raise the glass fully.

1. Remove:
   - Door panel
   - Plastic cover (see page 20-8)

2. Remove the screws.

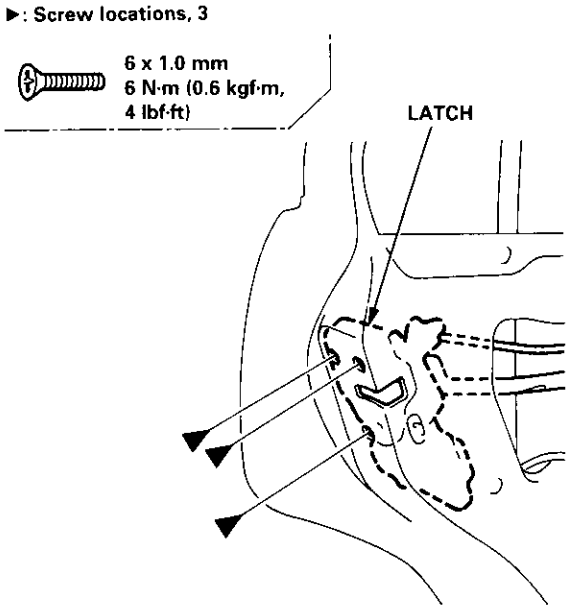

3. Move the latch down, and remove the bolts.

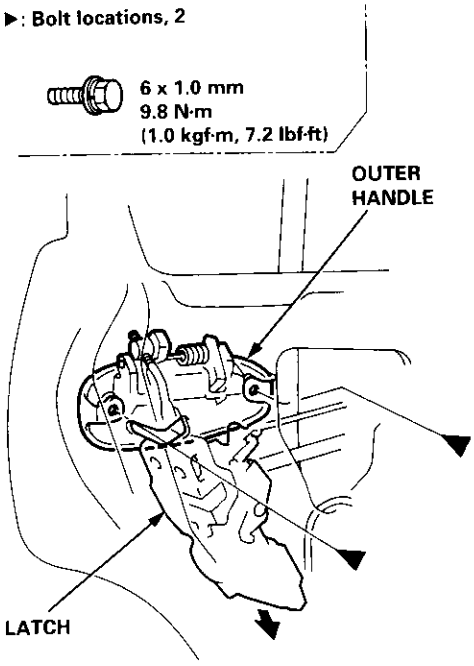

4. Pull out the outer handle. Pry the outer handle rod out of its joint using diagonal cutters.

   NOTE:
   - To ease reassembly, note location Ⓐ of the outer handle rod on the joint before disconnecting it.
   - Take care not to bend the outer handle rod.
   - Use a shop towel to protect the opening in the door.

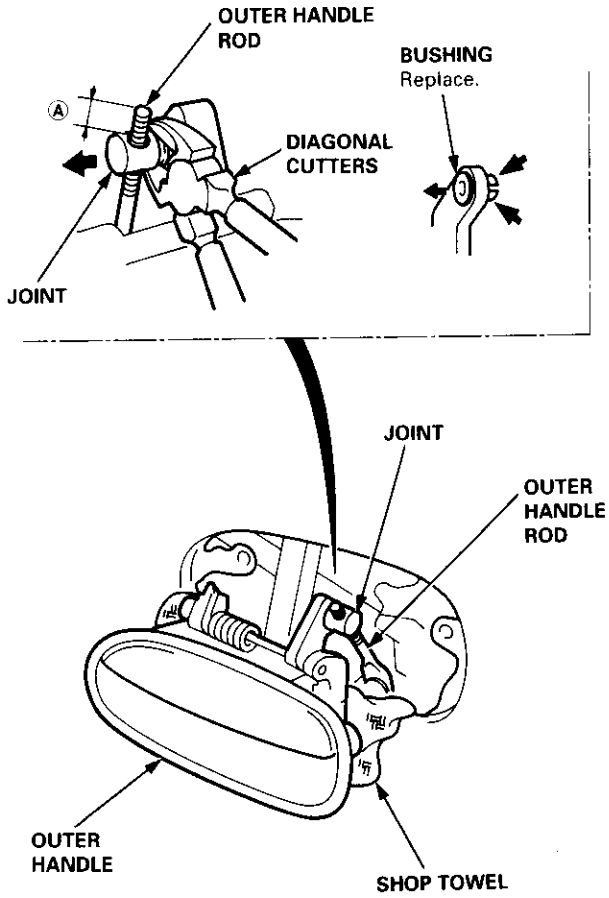

5. Installation is the reverse of the removal procedure.

   NOTE: Make sure the door locks and opens properly.

Latch Replacement

NOTE: Raise the glass fully.

1. Remove:
   - Door panel (see page 20-10)
   - Plastic cover (see page 20-8)
   - Outer handle (see page 20-11)

2. Remove the lock crank and clip.

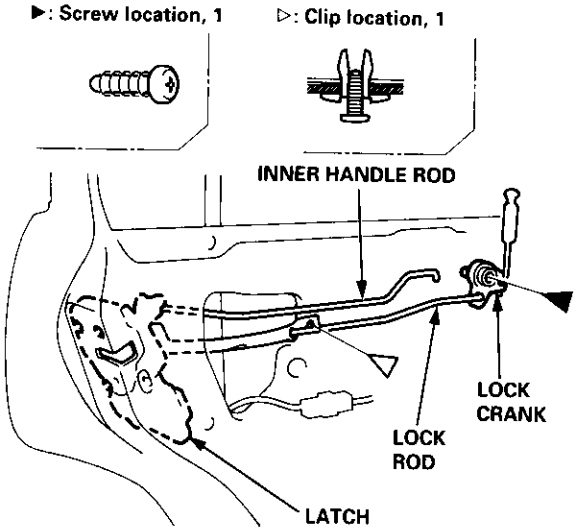

3. Remove the rear channel collar.

   NOTE: Take care not to bend the lock rod and inner handle rod.

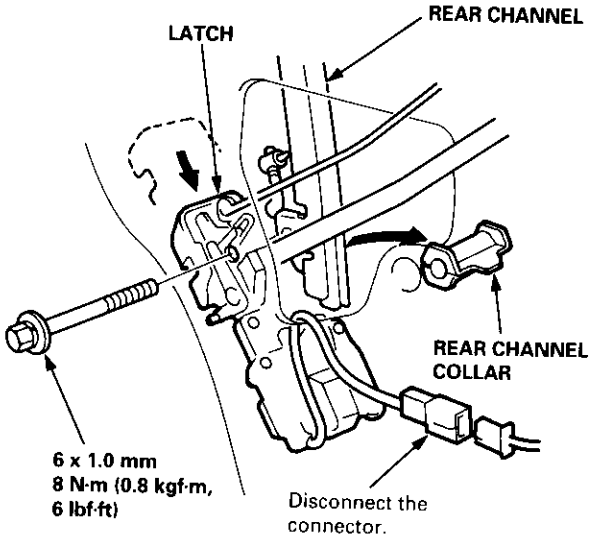

4. Remove the latch through the hole in the door.

5. Installation is the reverse of the removal procedure.

   NOTE: Make sure the door locks and opens properly.

Glass/Regulator Replacement

1. Remove:
   - Door panel (see page 20-10)
   - Plastic cover (see page 20-8)

2. Carefully move the glass until you can see the bolts, then remove them.

   NOTE: Take care not to drop the glass inside the door.

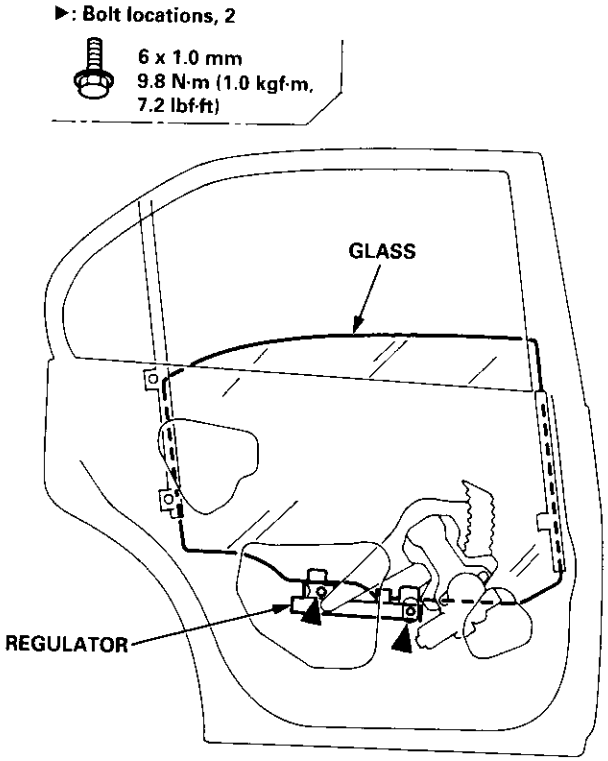

3. Carefully lower the glass. Remove the bolts and screw from the rear channel, then remove the glass from the rear channel.

   NOTE: Take care not to drop the glass inside the door.

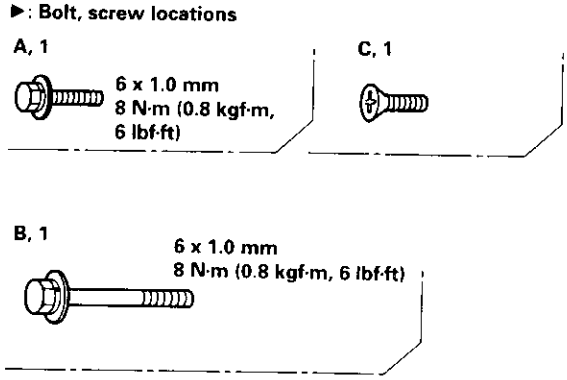

4. Carefully remove the glass from the window slot.

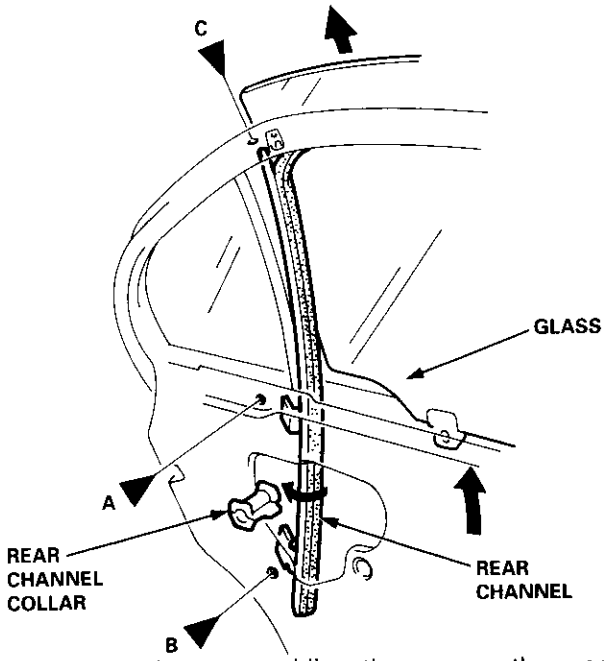

5. Remove the outer molding, then remove the quarter glass.

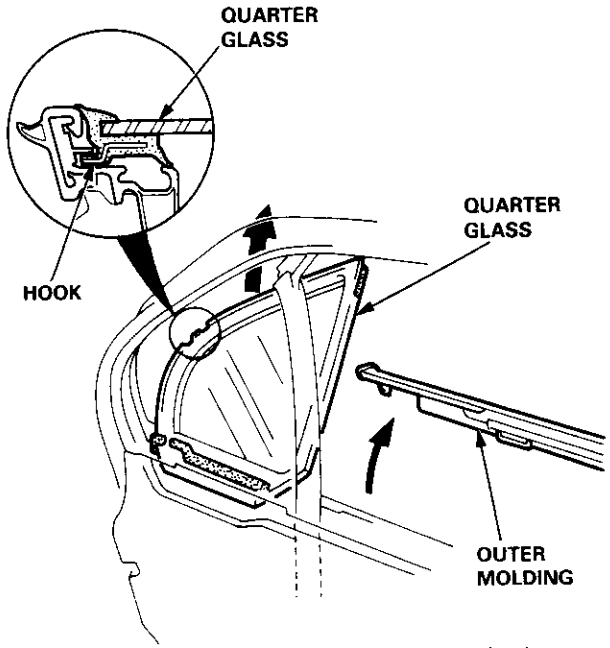

6. Disconnect the connector, and detach the harness clip, then remove the regulator through the hole in the door.

▶: Bolt locations

A ▶, 2 **6 x 1.0 mm** **8 N·m (0.8 kgf·m, 6 lbf·ft)**	**B ▶, 2** **6 x 1.0 mm** **8 N·m (0.8 kgf·m, 6 lbf·ft)** Loosen.

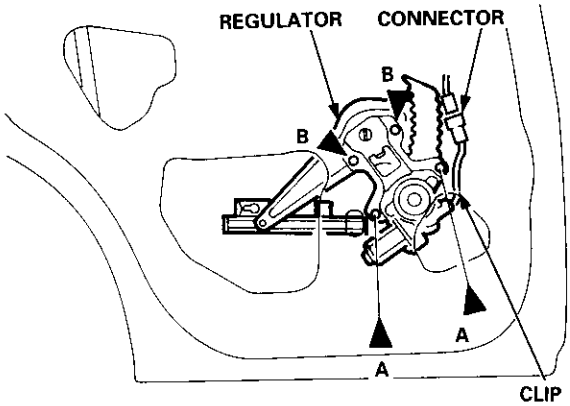

7. Grease all the sliding surfaces of the regulator where shown.

NOTE:
- If necessary, remove the power window motor from the regulator.
- Before removing the power window motor, scribe a line across the sector gear and regulator.

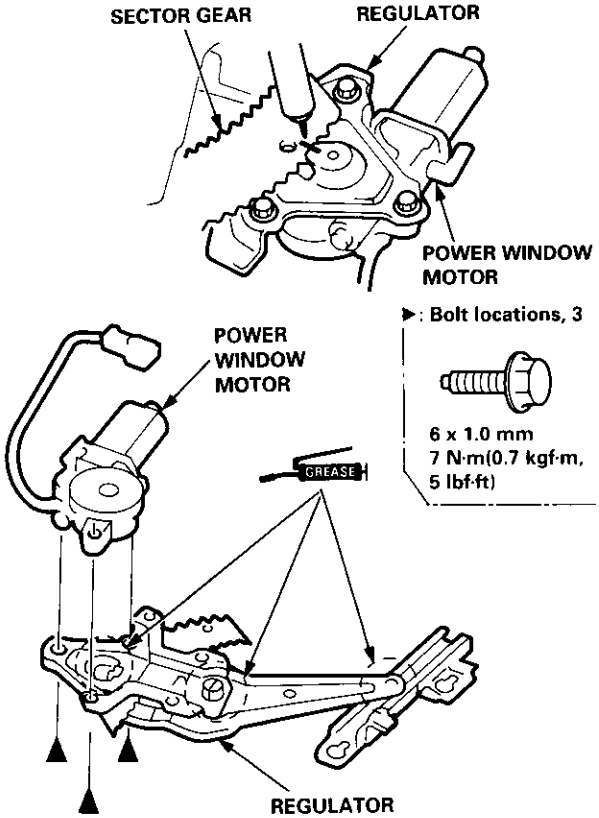

8. Installation is the reverse of the removal procedure.

NOTE: Roll the glass up and down to see if it moves freely without binding. Also make sure that there is no clearance between the glass and glass run channel when the glass is closed. Adjust the position of the glass as necessary (see page 20-20).

Door Index

2D/3D:

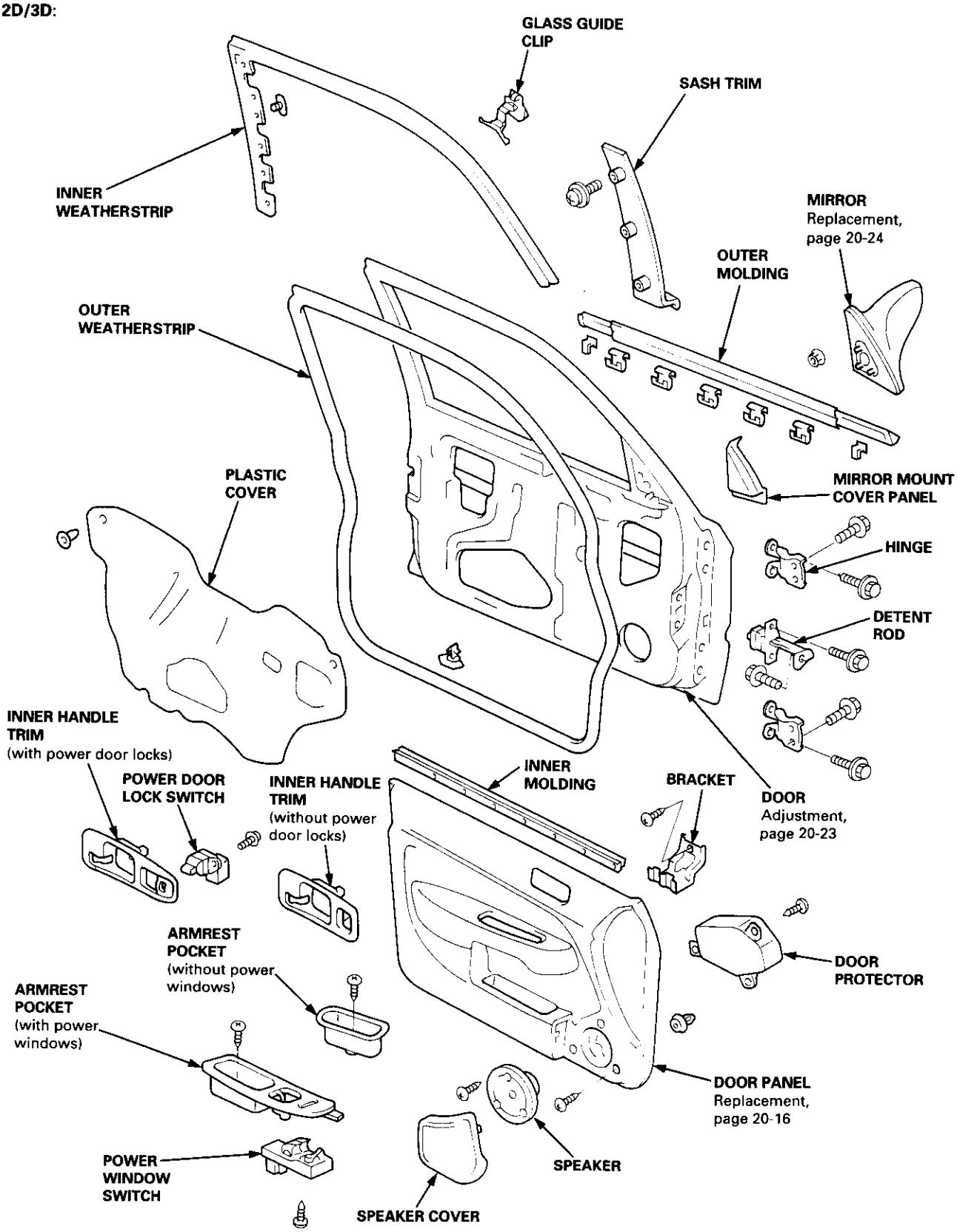

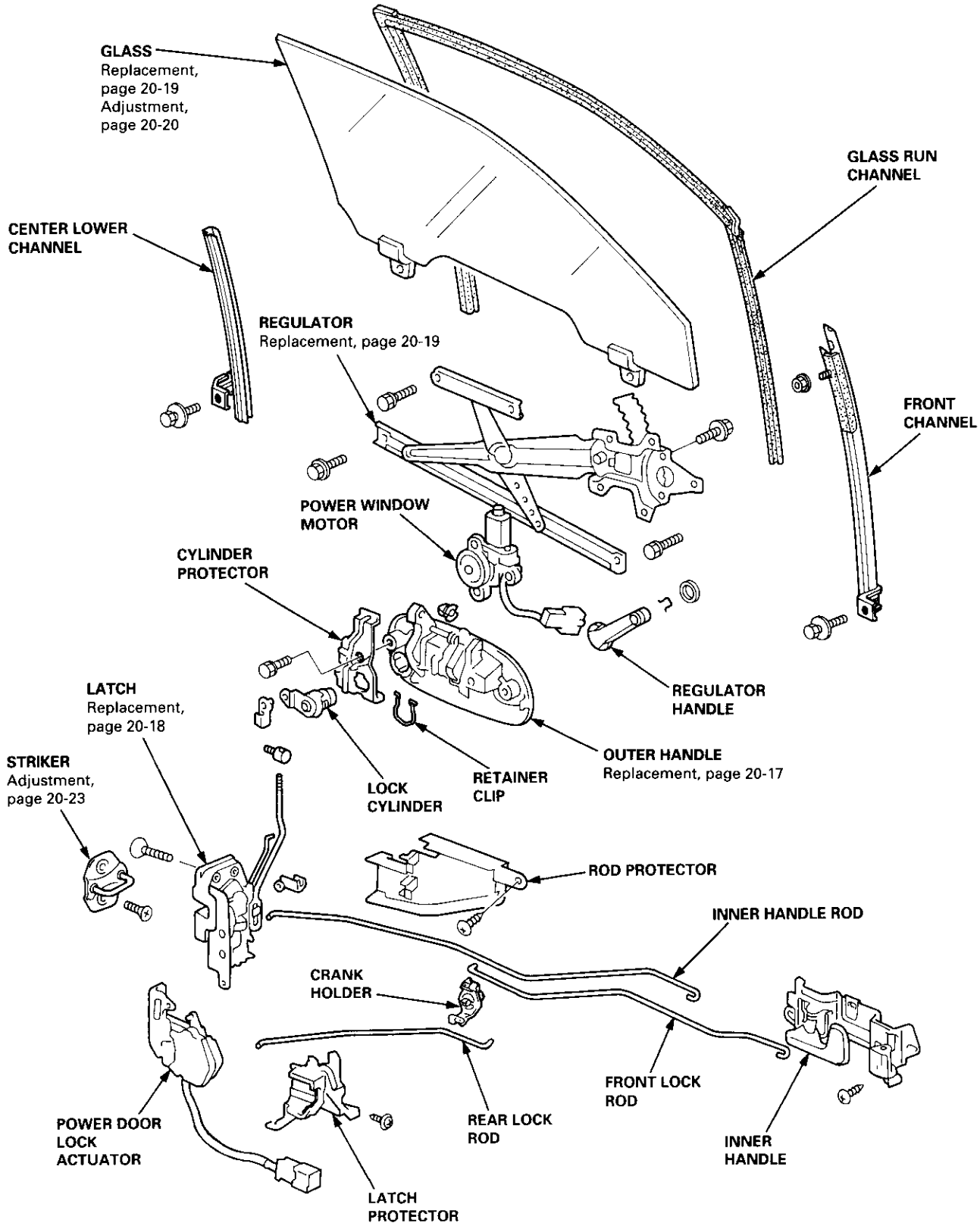
GLASS
Replacement, page 20-19
Adjustment, page 20-20
GLASS RUN CHANNEL
CENTER LOWER CHANNEL
REGULATOR
Replacement, page 20-19
FRONT CHANNEL
POWER WINDOW MOTOR
CYLINDER PROTECTOR
REGULATOR HANDLE
LATCH
Replacement, page 20-18
STRIKER
Adjustment, page 20-23
LOCK CYLINDER
RETAINER CLIP
OUTER HANDLE
Replacement, page 20-17
ROD PROTECTOR
INNER HANDLE ROD
CRANK HOLDER
FRONT LOCK ROD
REAR LOCK ROD
POWER DOOR LOCK ACTUATOR
INNER HANDLE
LATCH PROTECTOR

Door Panel Replacement

NOTE: Take care not to scratch the door panel and other parts.

1. Remove:
   - Inner handle trim (see page 20-14)
   - Mirror mount cover panel (see page 20-24)

2. If applicable, remove the regulator handle by pulling the clip out with a wire hook.

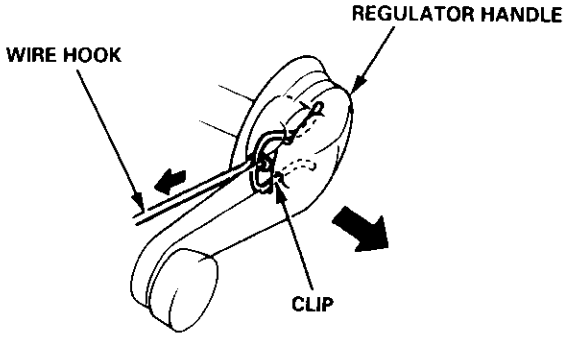

3. Remove the armrest pocket, then disconnect the power window switch connector.

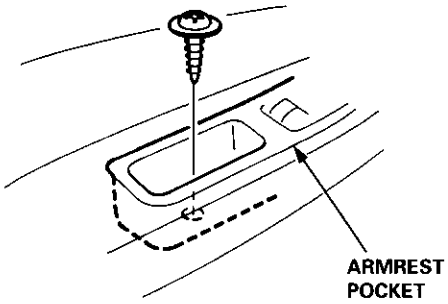

4. Remove the speaker cover, then remove the screws.

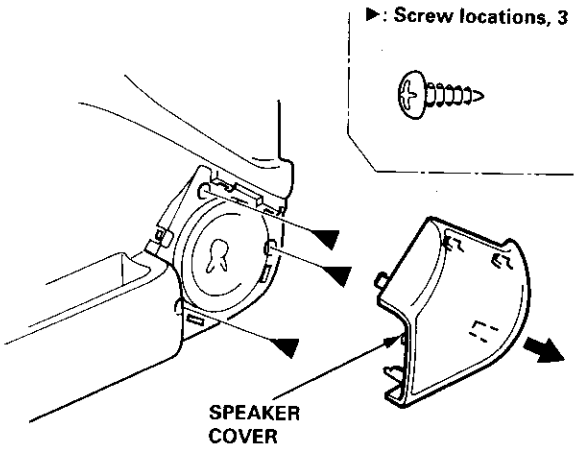

5. Release the clips that hold the door panel. Remove the door panel by pulling it upward. Disconnect the speaker connector.

   NOTE: Remove the door panel with as little bending as possible to avoid creasing or breaking it.

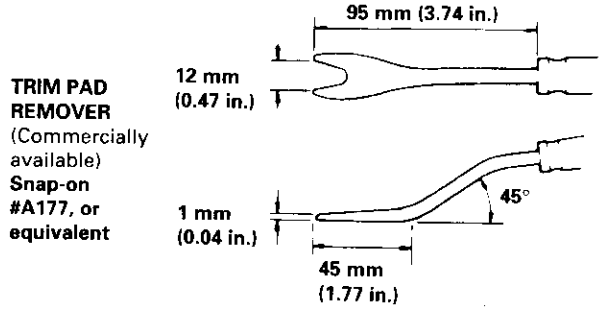

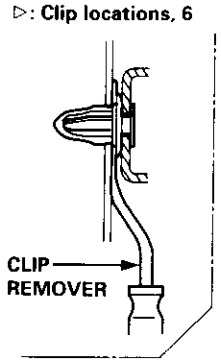

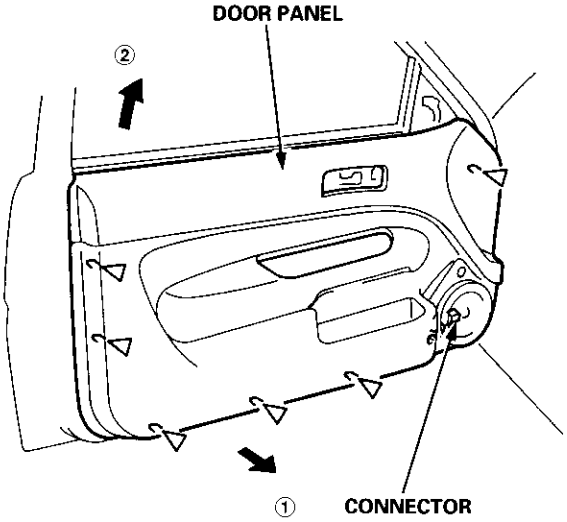

6. Installation is the reverse of the removal procedure.

Outer Handle Replacement

NOTE: Raise the glass fully.

1. Remove:
   - Door panel
   - Plastic cover (see page 20-14)

2. Pull out the retainer clip.

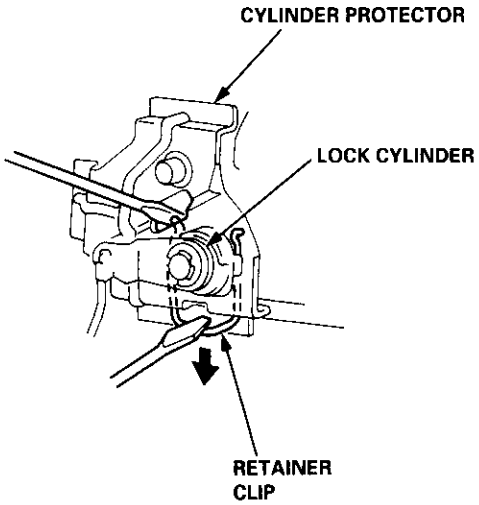

3. Remove the bolts, then remove the cylinder protector, lock cylinder and outer handle.

▶: Bolt locations, 2

6 x 1.0 mm
9.8 N·m (1.0 kgf·m, 7.2 lbf·ft)

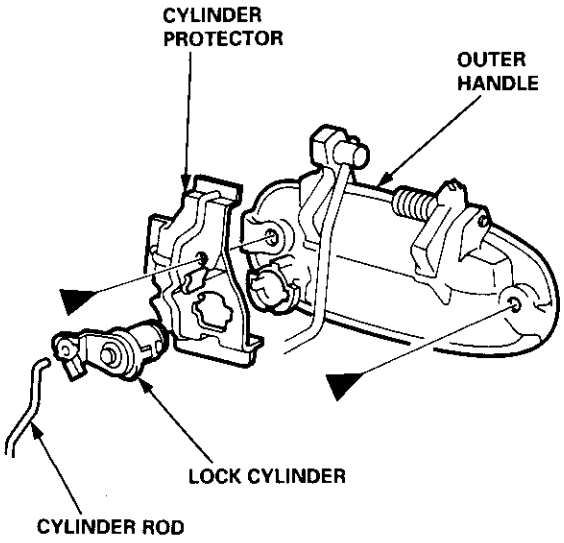

4. Pull out the outer handle. Pry the outer handle rod out of its joint using diagonal cutters.

   NOTE:
   - To ease reassembly, note location Ⓐ of the outer handle rod on the joint before disconnecting it.
   - Take care not to bend the outer handle rod.
   - Use a shop towel to protect the opening in the door.

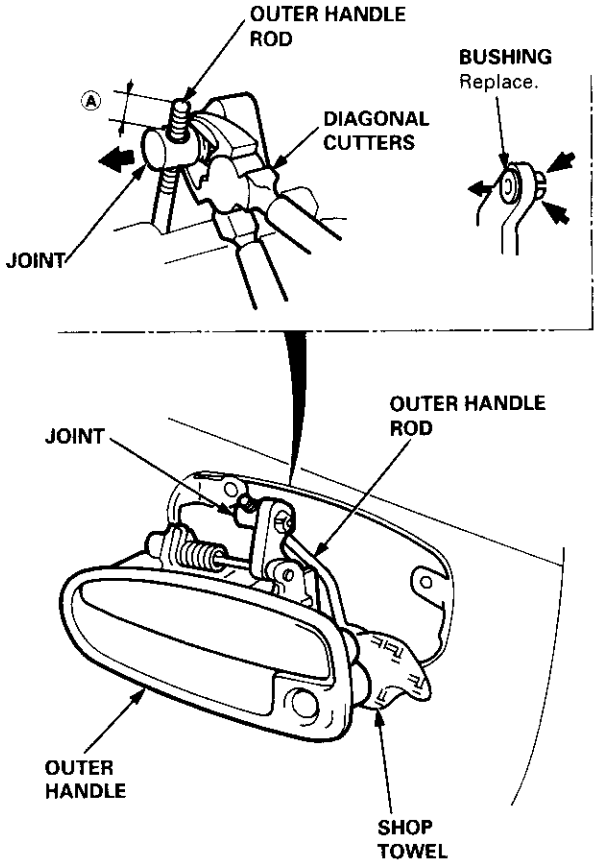

5. Installation is the reverse of the removal procedure.

   NOTE: Make sure the door locks and opens properly.

Latch Replacement

NOTE: Raise the glass fully.

1. Remove:
   - Door panel (see page 20-16)
   - Plastic cover (see page 20-14)
   - Outer handle (see page 20-17)

2. Remove the rod protector.

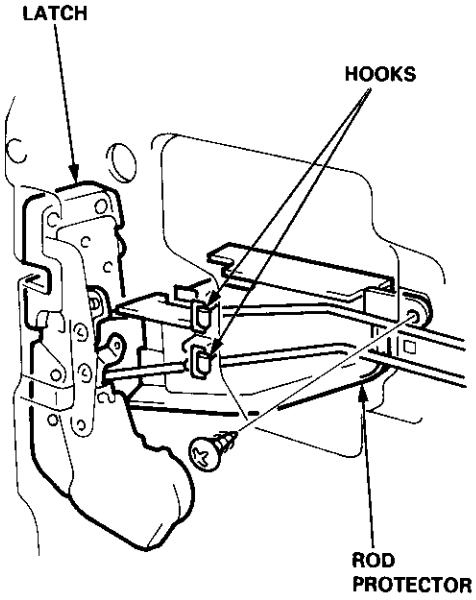

3. Remove the bolts and move the center lower channel.

   NOTE: Take care not to bend the inner handle rod and lock rods.

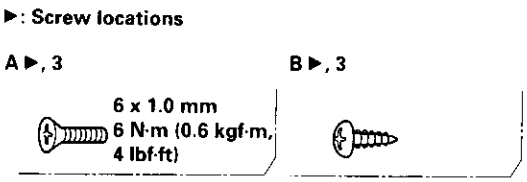

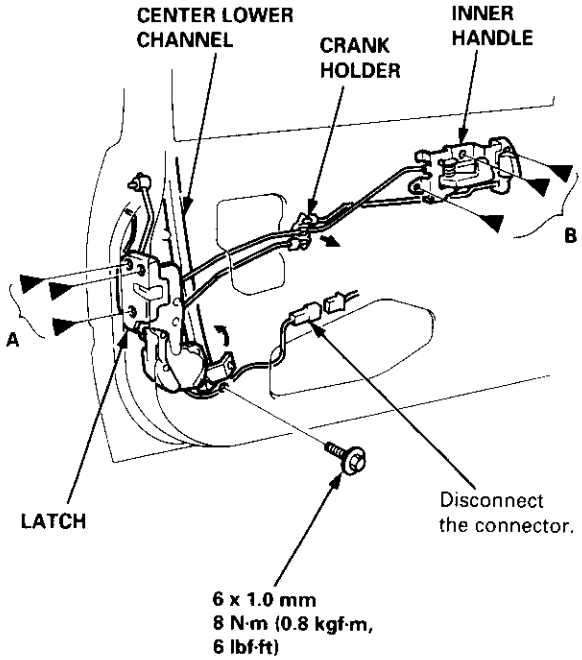

4. Remove the inner handle, then remove the latch through the hole in the door.

5. Installation is the reverse of the removal procedure.

   NOTE: Make sure the door locks and opens properly.

Glass/Regulator Replacement

1. Remove:
   - Door panel (see page 20-16)
   - Plastic cover (see page 20-14)

2. Carefully move the glass until you can see the bolts, then loosen them. Slide the guide rearward, remove the glass from the guide, and carefully pull the glass out through the window slot.

   NOTE: Take care not to drop the glass inside the door.

▶: Bolt locations, 2

6 x 1.0 mm
9.8 N·m (1.0 kgf·m, 7.2 lbf·ft)
Loosen.

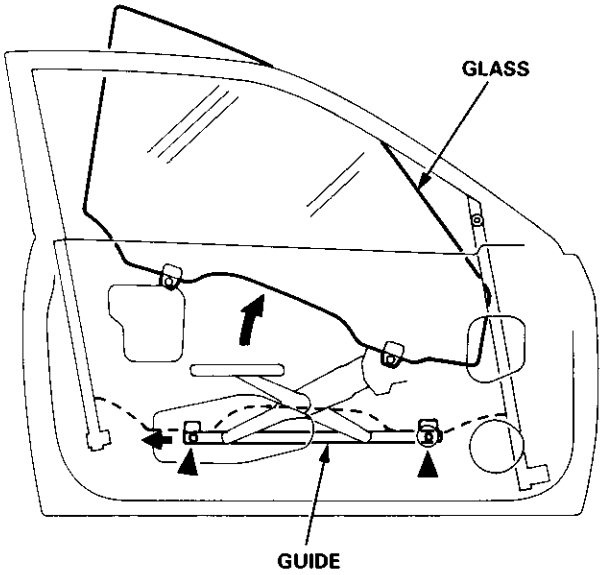

3. Disconnect the connector, and detach the harness clip, then remove the regulator through the hole in the door.

   NOTE: Scribe a line around the rear roller guide bolt to show the original adjustment.

▶: Bolt locations

A ▶, 4
6 x 1.0 mm
8 N·m (0.8 kgf·m, 6 lbf·ft)

B ▶, 2
6 x 1.0 mm
8 N·m (0.8 kgf·m, 6 lbf·ft
Loosen.

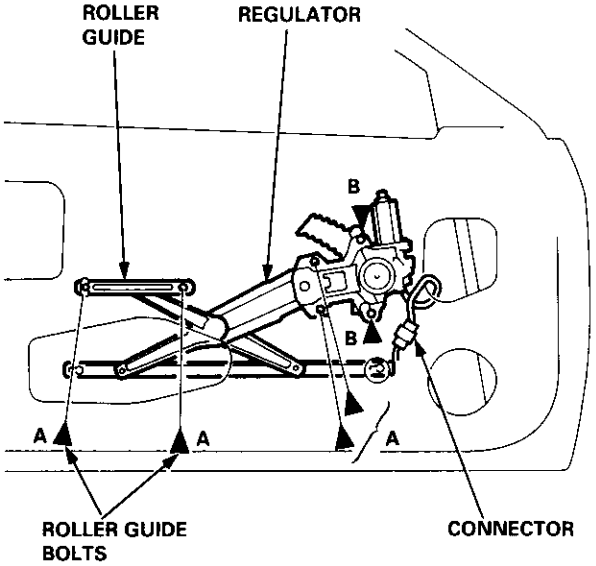

(cont'd)

Glass/Regulator Replacement (cont'd)

4. Grease all the sliding surfaces of the regulator where shown.

   NOTE:
   - If necessary, remove the power window motor from the regulator.
   - Before removing the power window motor, scribe a line across the sector gear and regulator.

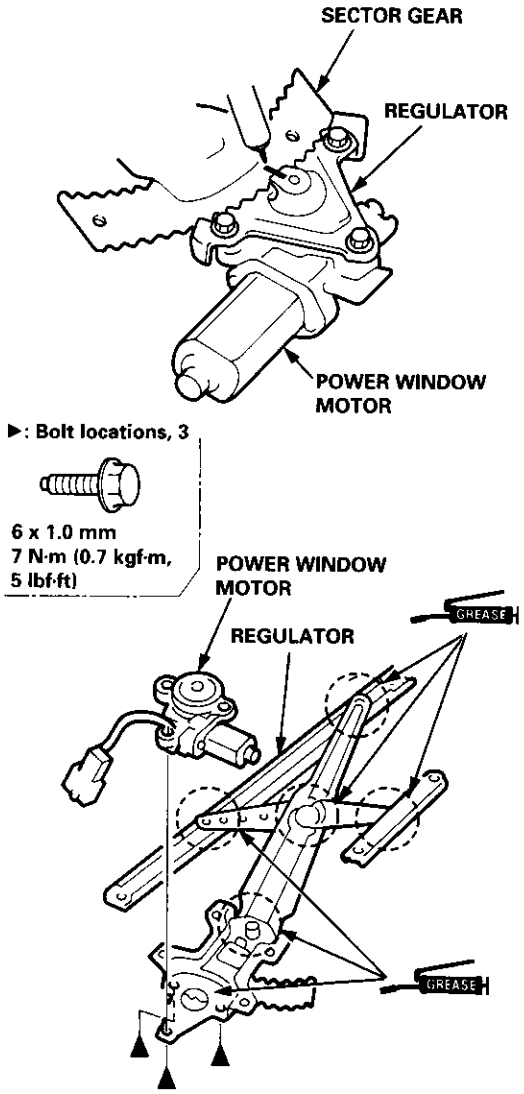

5. Installation is the reverse of the removal procedure.

   NOTE: Roll the glass up and down to see if it moves freely without binding. Also make sure that there is no clearance between the glass and glass run channel when the glass is closed. Adjust the position of the glass as necessary.

Glass Adjustment

NOTE:
- Place the vehicle on a firm, level surface when adjusting the glass.
- Check the weatherstrips and glass run channel for damage or deterioration, and replace them if necessary.

1. Remove:
   - Door panel (see pages 20-4, 10, 16)
   - Plastic cover (see pages 20-2, 8, 14)

2. Adjust the glass.

   4D:

   a. Raise the glass fully.

   b. Loosen the glass mounting bolts (front door) and regulator mounting bolts.

   c. Push the glass rearward (front door glass) or forward (rear door glass).

   d. Tighten the glass mounting bolts (front door) and regulator mounting bolts.

A ▶: Glass mounting bolt locations.
B ▶: Regulator mouting bolt locations.

Front:

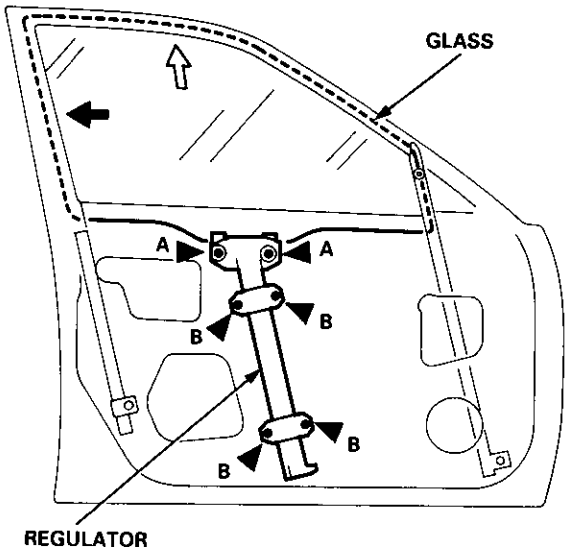

Rear:

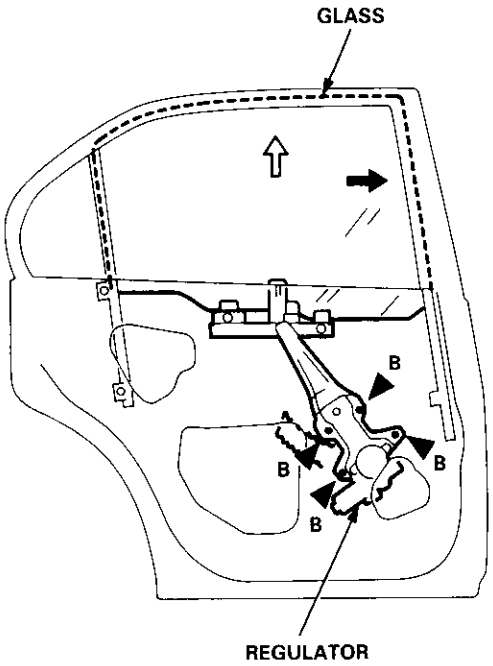

e. Loosen the front channel mounting bolts (front door) or rear channel mounting bolt (rear door).

f. Lower the glass.

g. Push the front or rear channels against the glass, then tighten the mounting bolts.

▶: Front and rear channel mounting bolt locations

Front:

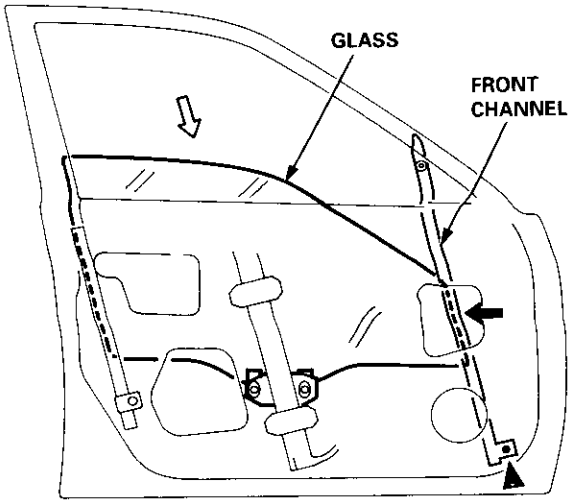

Rear:

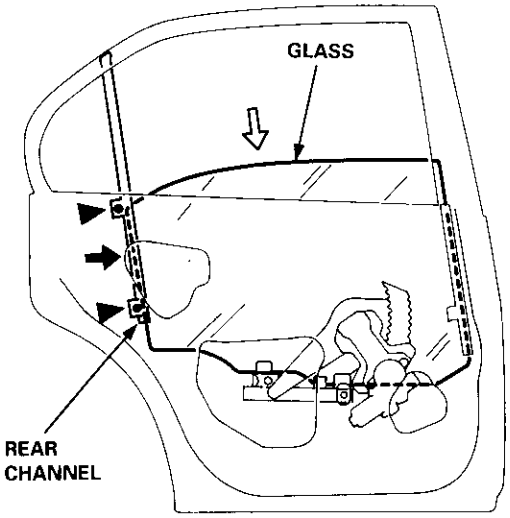

2D/3D:

a. Raise the glass as far up as possible, and hold it against the glass run channel.

b. Loosen the roller guide bolts, and adjust the glass so it is parallel with the glass run channel.

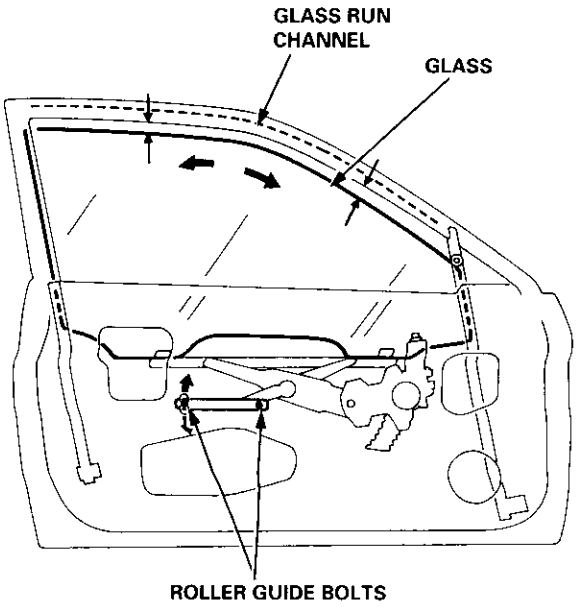

(cont'd)

Glass Adjustment (cont'd)

c. Tighten the roller guide bolts.

d. Loosen the front channel bolts.

e. Lower the glass.

f. Push the front channel against the glass, then tighten the mounting bolts.

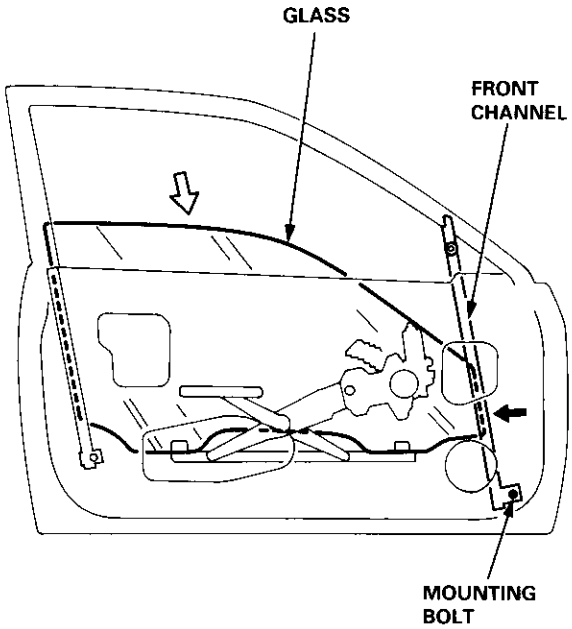

3. Check that the glass moves smoothly.

4. Raise the glass fully and check for gaps.

5. Check the glass operation.

   NOTE: Check that the glass contacts the glass run channel evenly.

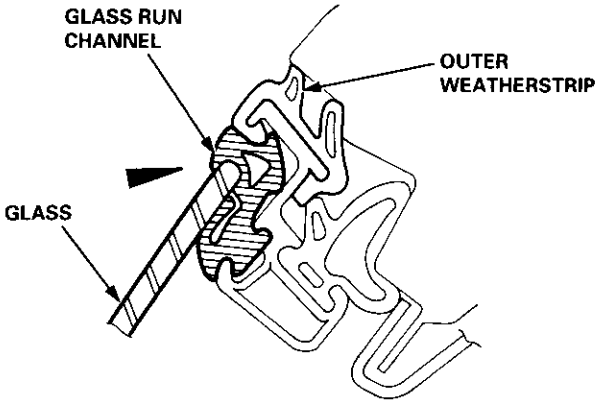

6. Check for water leaks.

   Spray water over the roof and on the sealing area as shown.

   NOTE:
   - Adjust the water pressure as shown.
   - Do not squeeze the tip of the hose.

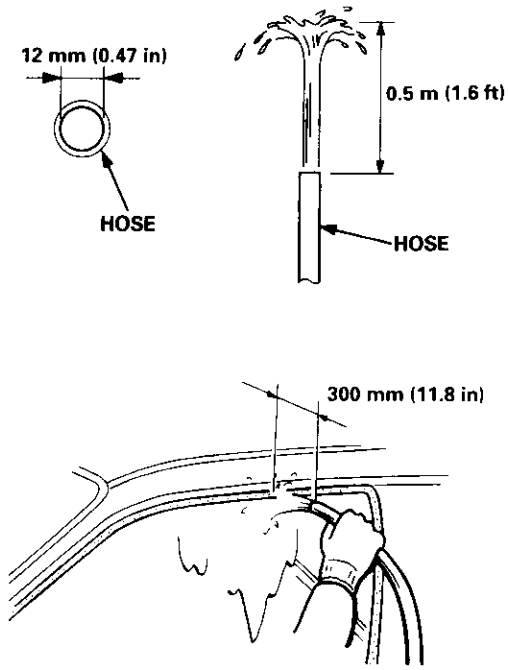

7. Attach the plastic cover, then install the door panel (see pages 20-4, 10, 16).

8. Install the regulator handle so it points forward and up at a 45 degree angle with the glass closed.

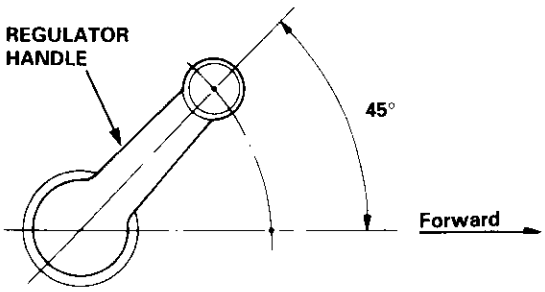

Position Adjustment

NOTE: Place the vehicle on a firm, level surface when adjusting the doors.

After installing the door, check for a flush fit with the body, then check for equal gaps between the front, rear, and bottom door edges and the body. The door and body edges should also be parallel. Adjust at the hinges as shown.

CAUTION: Place a shop towel on the jack to prevent damage to the door when loosening the door and hinge mounting bolts for adjustment.

DOOR MOUNTING BOLTS
8 x 1.25 mm
28 N·m (2.9 kgf·m, 21 lbf·ft)
Loosen the door mounting bolts slightly to move the door IN or OUT until it's flush with the body. If necessary, you can install a shim behind one hinge to make the door edges PARALLEL with the body.

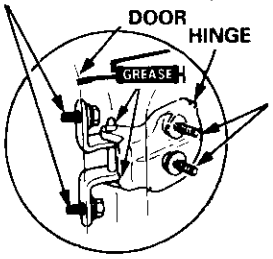

HINGE MOUNTING BOLTS
8 x 1.25 mm
28 N·m (2.9 kgf·m, 21 lbf·ft)
Remove the inner fender, loosen the hinge mounting bolts, and move the door BACKWARD or FORWARD, UP or DOWN as necessary to equalize the gaps. Lower the glass.

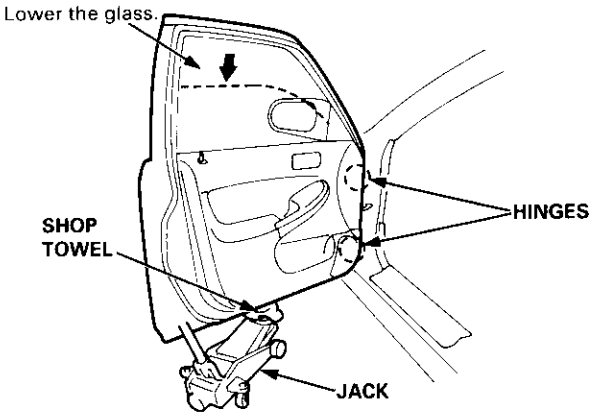

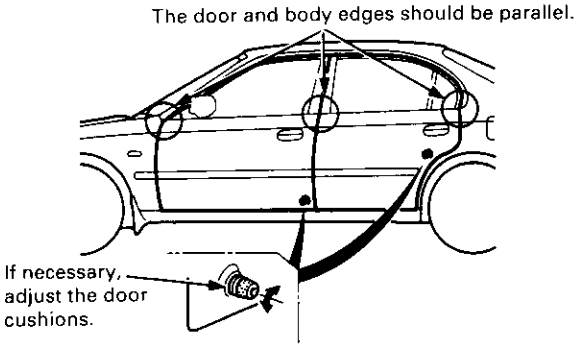

NOTE: Check for water leaks.

Striker Adjustment

Make sure the door latches securely without slamming. If it needs adjustment:

NOTE: The striker nuts are fixed, but the striker can be adjusted slightly up or down, and in or out.

1. Loosen the screws, then insert a shop towel between the body and striker.

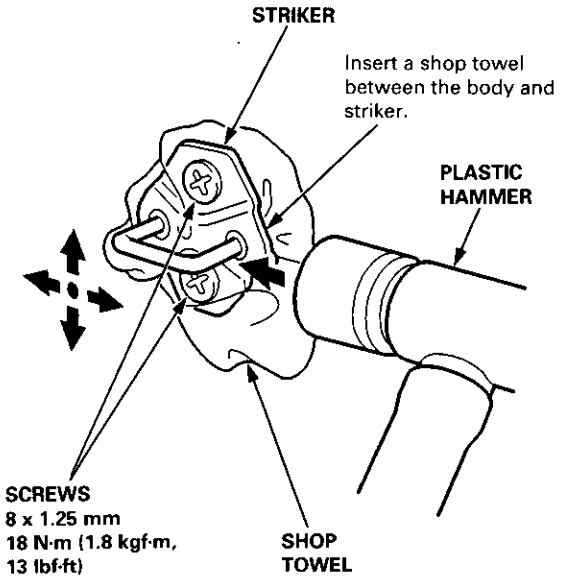

2. Lightly tighten the screws.
3. Wrap the striker with a shop towel, then adjust the striker by tapping it with a plastic hammer.

   CAUTION: Do not tap the striker too hard.

4. Loosen the screws, and remove the shop towel.
5. Lightly tighten the screws.
6. Hold the outer handle out, and push the door against the body to be sure the striker allows a flush fit. If the door latches properly, tighten the screws and recheck.

Mirror Replacement

NOTE: Take care not to scratch the mirror, mirror base cover and door.

1. Lower the door glass.

2. Carefully pry out the mirror mount cover panel by hand.

Power mirror:

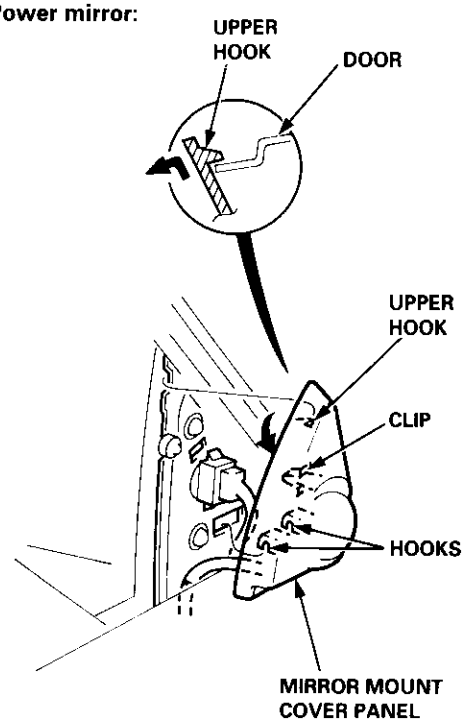

Manual mirror:

Remove the cap, screw and knob, then remove the mirror mount cover panel.

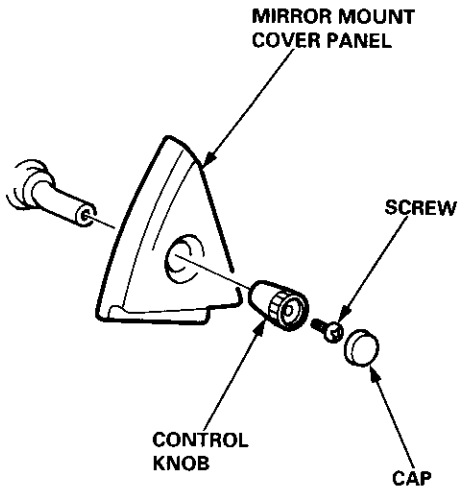

3. Remove the mirror mounting nuts while supporting the mirror.

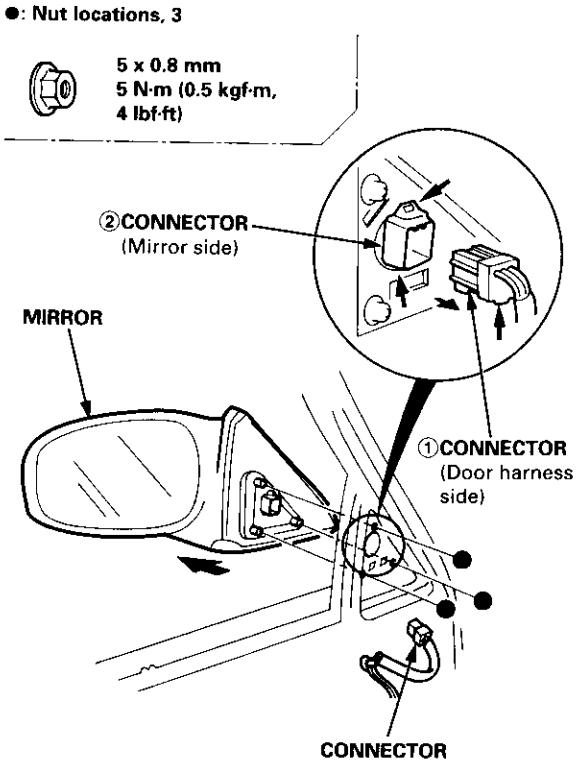

4. Installation is the reverse of the removal procedure.

   NOTE: Make sure the connector is connected properly.

Mirror Holder/Cover Replacement

CAUTION: Put on gloves to protect your hands.

1. Carefully pry out the mirror holder with a flat tip screwdriver as shown.

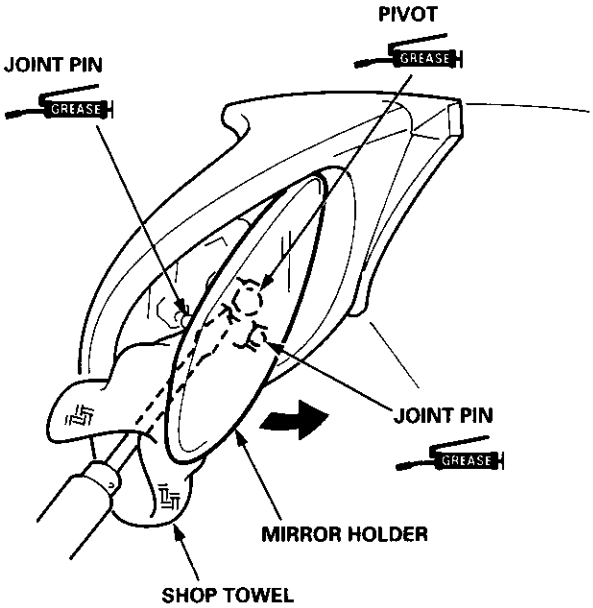

2. Installation is the reverse of the removal procedure.

   NOTE: Apply grease to the locations indicated by the arrows.

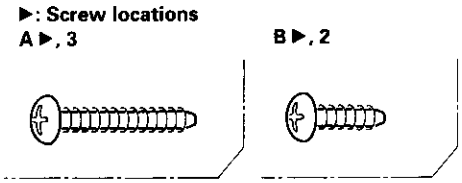

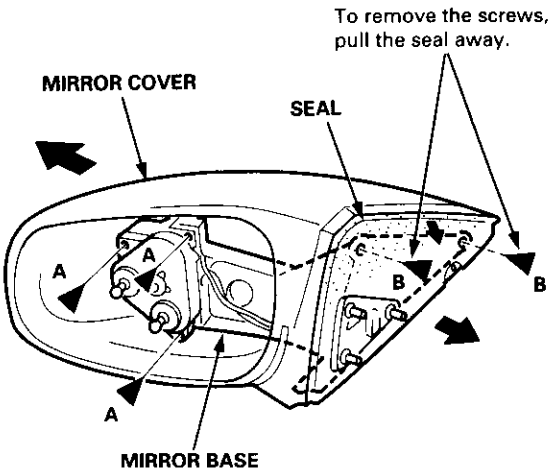

Rearview Mirror Replacement

1. Remove the rubber damper.
2. Pry the cover off using the end of a flat tip screwdriver.

   CAUTION: When prying with a flat-tip screwdriver, wrap it with a shop towel to prevent damage.

3. Remove the screws, then remove the rearview mirror.
4. Installation is the reverse of the removal procedure.

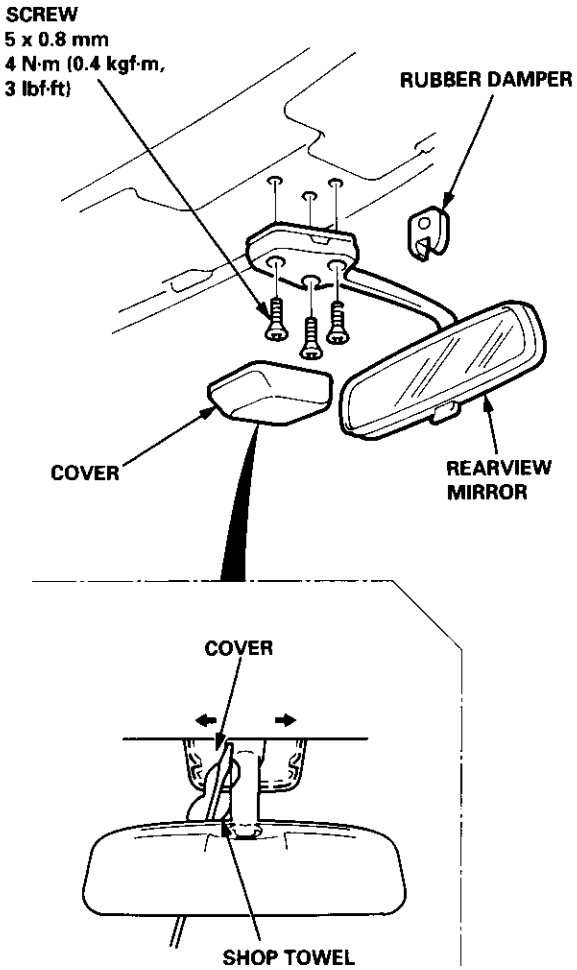

Index

NOTE: The numbers after the part names show the quantities of the parts used.

Windshield (2D/3D/4D):

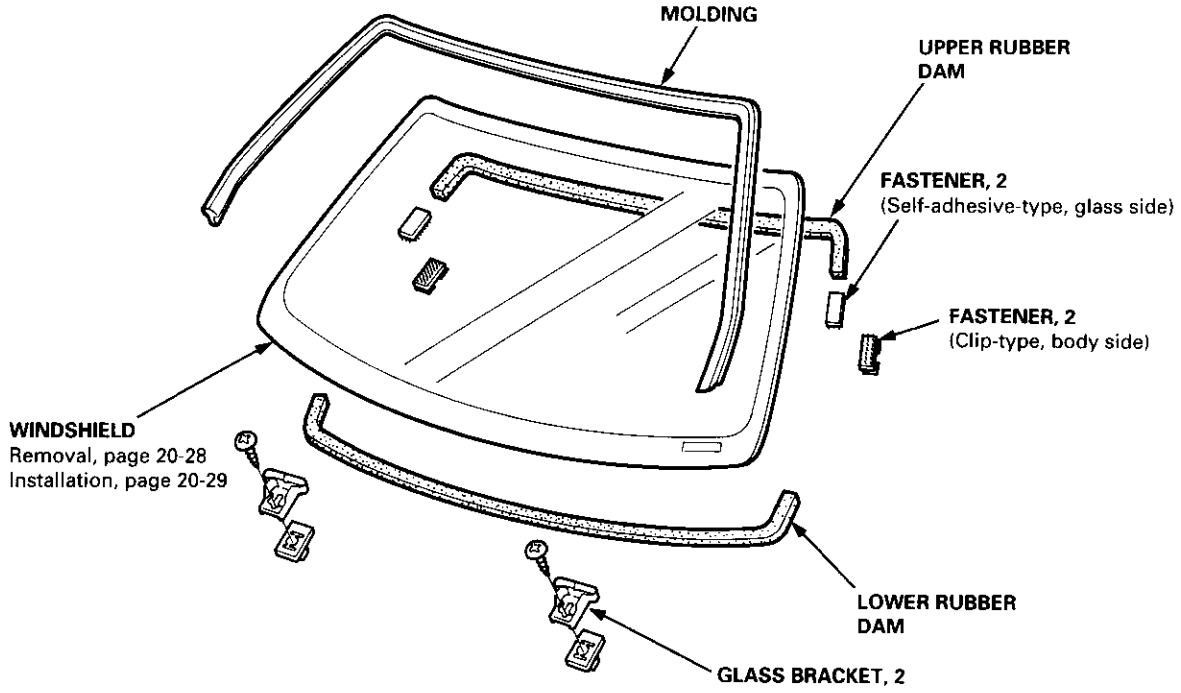

Rear Window (2D/4D):

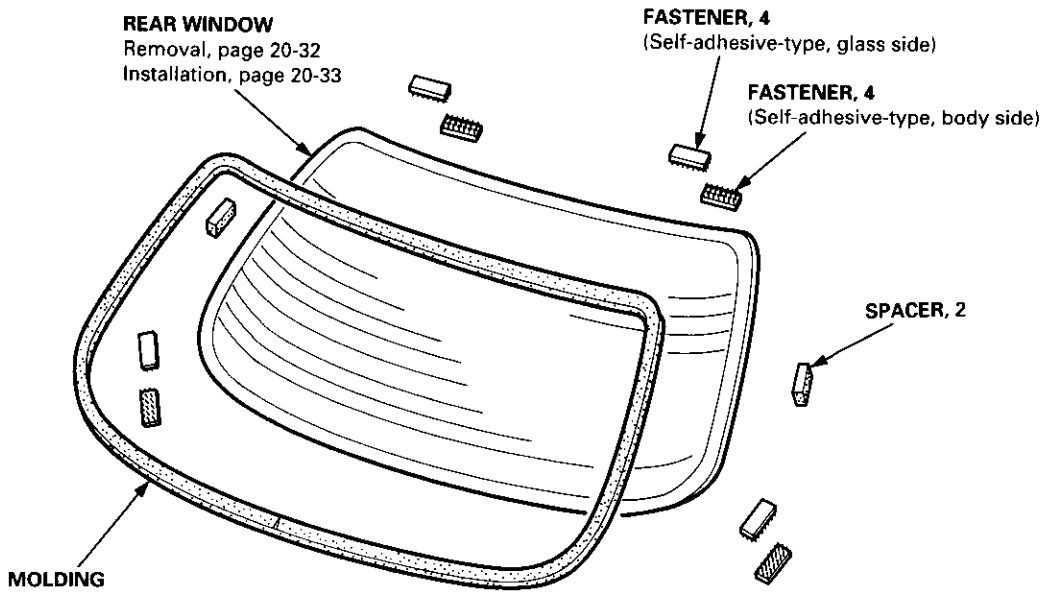

Rear Window (3D):

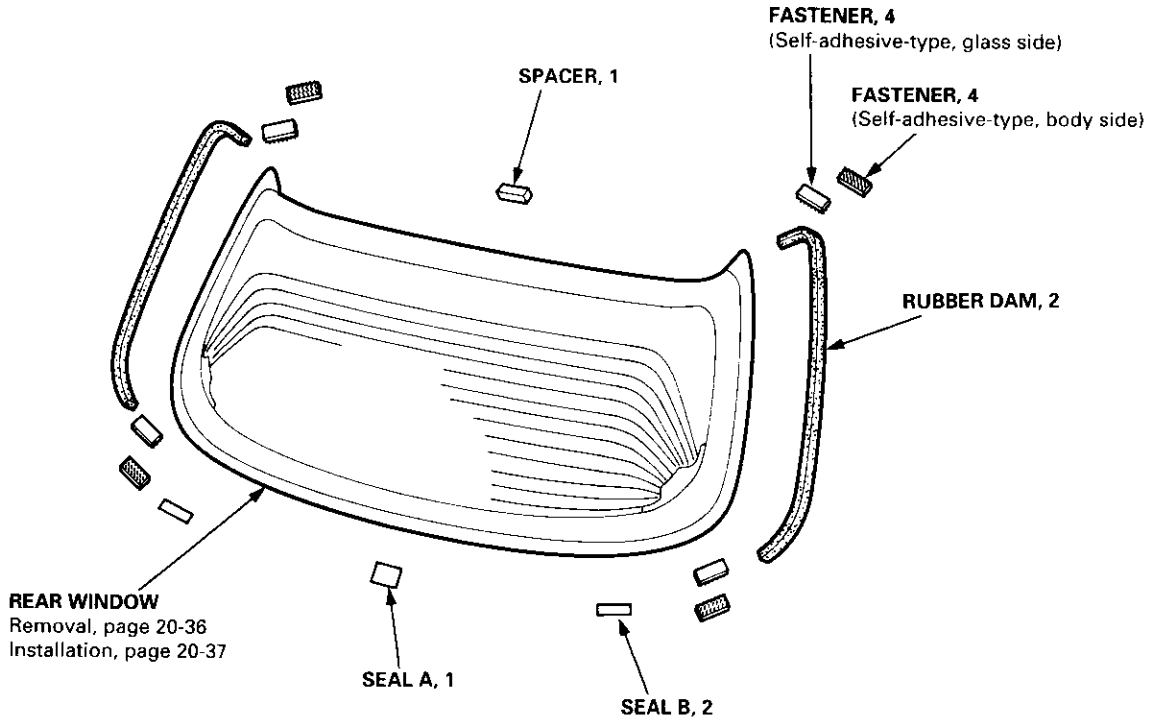

Quarter Glass:

3D:

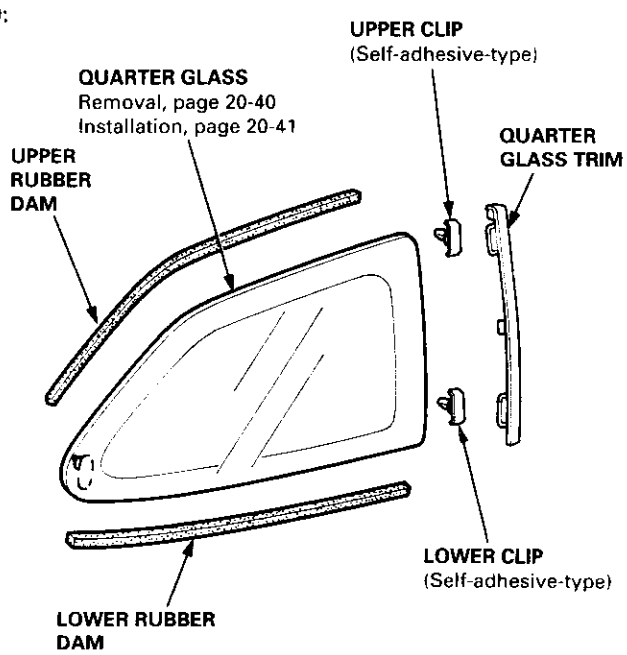

2D:

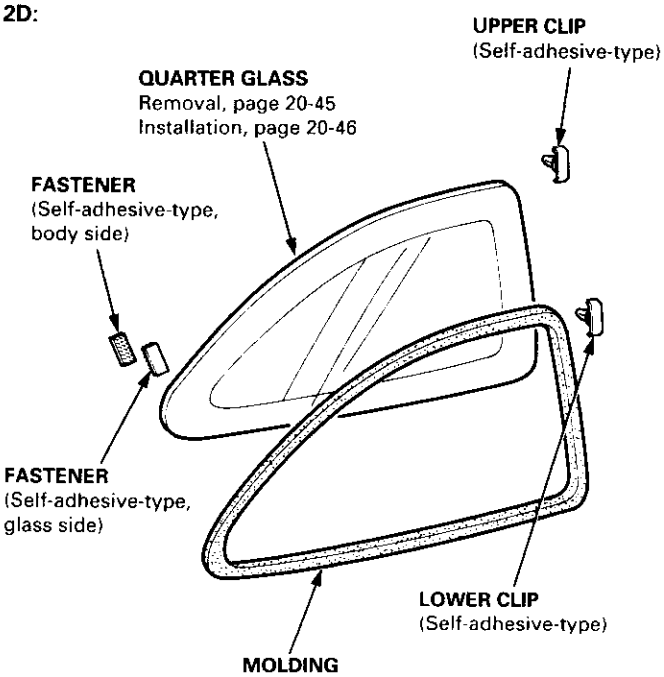

Removal

CAUTION:
- **Put on gloves to protect your hands.**
- **Use seat covers to avoid damaging any surfaces.**

1. To remove the windshield, first remove the:
   - Rearview mirror (see page 20-25)
   - Sunvisors and holders (see page 20-64)
   - Front pillar trim (see pages 20-59, 60, 61)
   - Windshield wiper arms and cowl cover (see page 20-113)

2. Peel off the molding, and remove the glass brackets.

   NOTE: When molding removal is difficult, cut the molding with a knife.

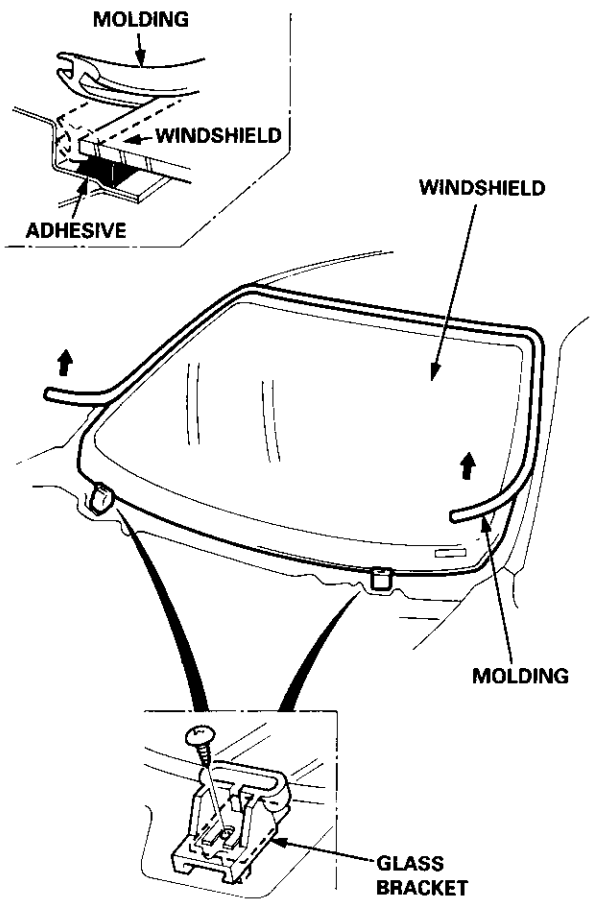

3. Pull down the front of the headliner (see page 20-64).

   CAUTION: Take care not to bend the headliner excessively.

4. Apply protective tape along the edge of the dashboard and body as shown. Using an awl, make a hole through the rubber dam and adhesive from inside the car. Push the piano wire through the hole, and wrap each end around a piece of wood.

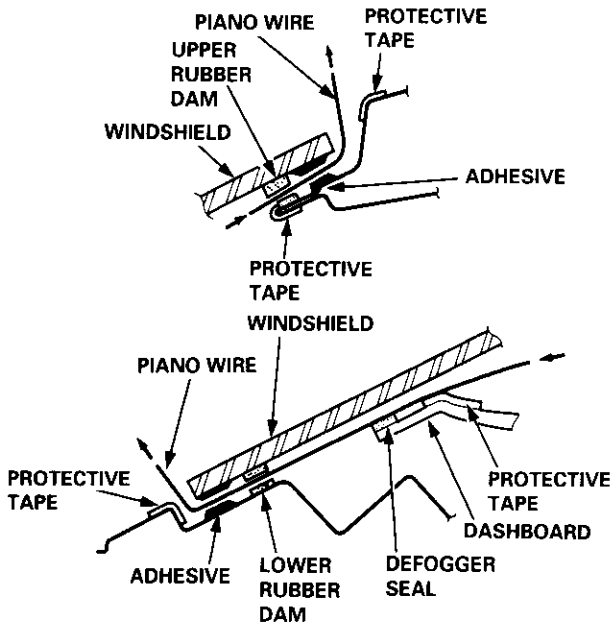

5. With a helper on the outside, pull the piano wire back and forth in a sawing motion, and carefully cut through the rubber dam and adhesive around the entire windshield.

   CAUTION: Hold the piano wire as close to the windshield as possible to prevent damage to the body and dashboard.

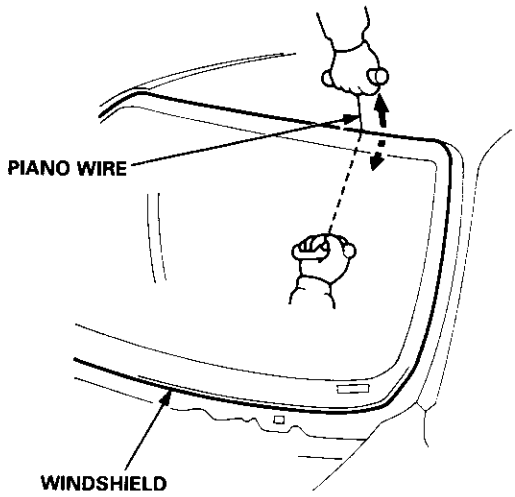

6. Carefully remove the windshield.

Installation

1. Using a knife, scrape the old adhesive smooth to a thickness of about 2 mm (0.08 in.) on the bonding surface around the entire windshield opening flange.

   NOTE:
   - Do not scrape down to the painted surface of the body; damaged paint will interfere with proper bonding.
   - Remove the rubber dams and fasteners from the body.
   - Mask off surrounding surfaces before painting.

2. Clean the body bonding surface with a sponge dampened in alcohol.

   NOTE: After cleaning, keep oil, grease and water from getting on the surface.

3. If the old windshield is to be reinstalled, use a putty knife to scrape off all traces of old adhesive, then clean the windshield surface with alcohol where new adhesive is to be applied.

   NOTE: Make sure the bonding surface is kept free of water, oil and grease.

   CAUTION: Avoid setting the windshield on its edges; small chips may later develop into cracks.

   NOTE:
   - Clean the shadowed area.
   - Clean area Ⓐ as shown.

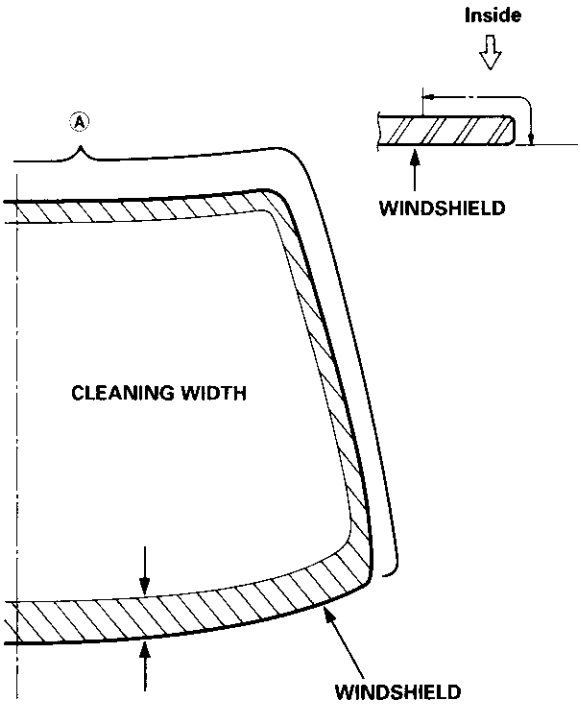

4. Glue the rubber dam and fasteners to the inside face of the windshield as shown.

   NOTE: Be careful not to touch the windshield where adhesive will be applied.

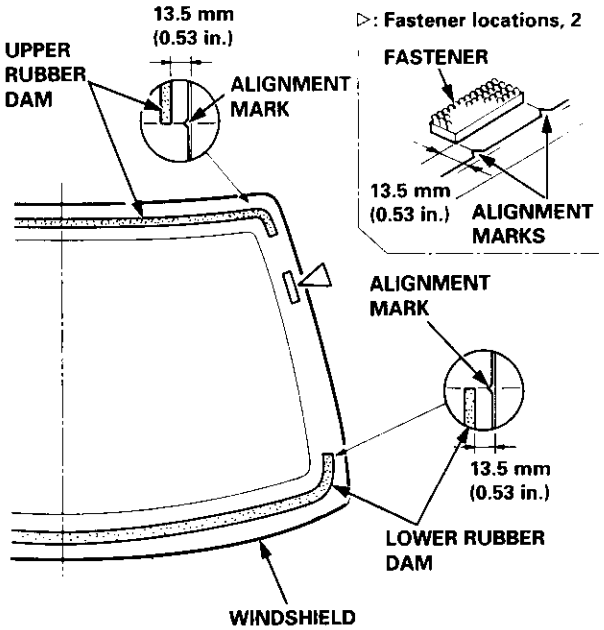

5. Align and glue the molding to the edge of the windshield.

   NOTE: Be careful not to touch the windshield where adhesive will be applied.

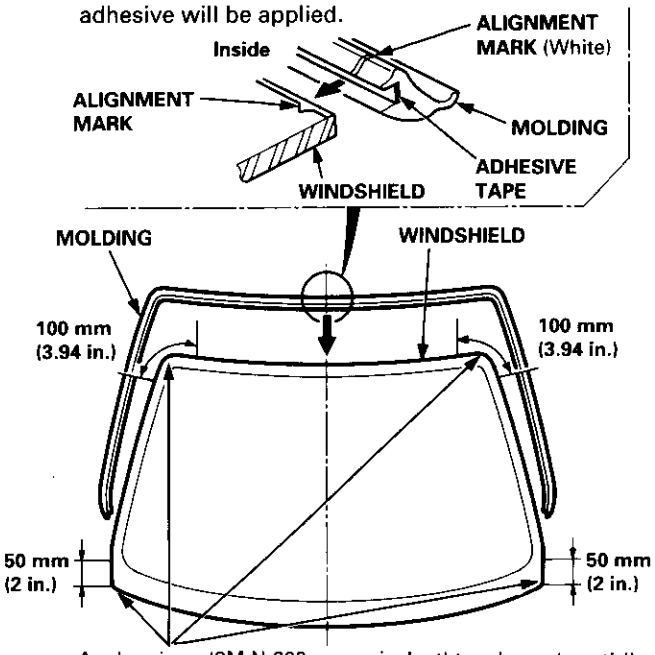

Apply primer (3M N-200, or equivalent) to edge of the windshield.

(cont'd)

Installation (cont'd)

6. Install the glass brackets and fasteners as shown.

   NOTE: The numbers after the part names show the quantities of the parts used.

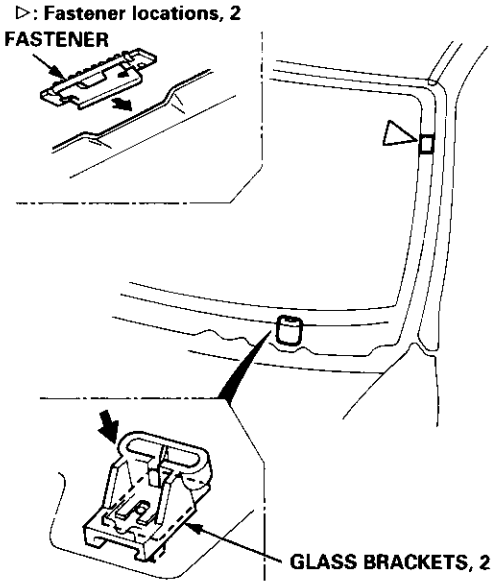

7. Set the windshield on the glass brackets, then center it in the opening. Make alignment marks across the windshield and body with a grease pencil at the four points shown.

   NOTE: Be careful not to touch the windshield where adhesive will be applied.

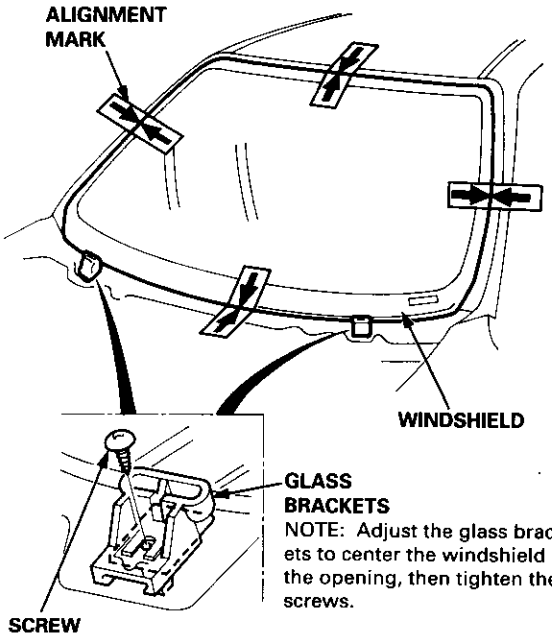

8. Remove the windshield.

9. With a sponge, apply a light coat of glass primer around the edge of the windshield as shown, then lightly wipe it off with gauze or cheesecloth.

   NOTE:
   - Do not apply body primer to the windshield, and do not get body and glass primer sponges mixed up.
   - Never touch the primed surfaces with your hands. If you do, the adhesive may not bond to the windshield properly, causing a leak after the windshield is installed.
   - Keep water, dust, and abrasive materials away from the primed surface.

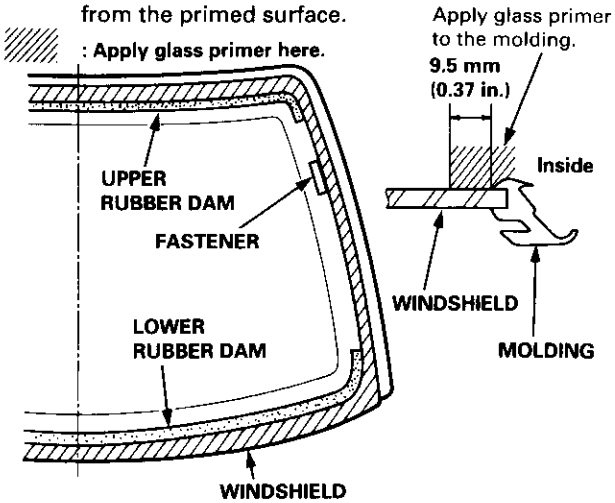

10. With a sponge, apply a light coat of body primer to the original adhesive remaining around the windshield opening flange. Let the body primer dry for at least 10 minutes.

    NOTE:
    - Do not apply glass primer to the body, and be careful not to mix up glass and body primer sponges.
    - Never touch the primed surfaces with your hands.
    - Mask off the dashboard before painting the flange.

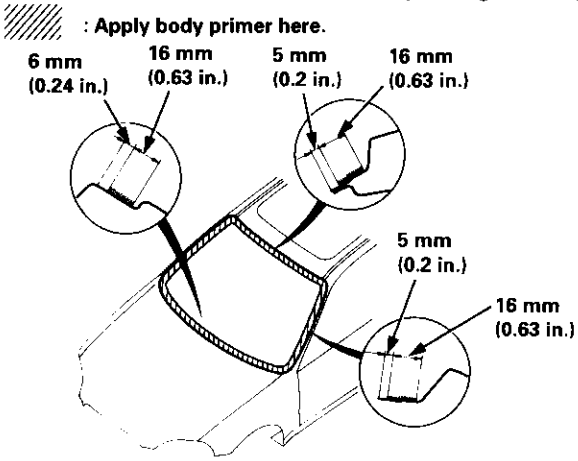

11. Thoroughly mix the adhesive and hardener together on a glass or metal plate with a putty knife.

    NOTE:
    - Clean the plate with a sponge and alcohol before mixing.
    - Follow the instructions that come with the adhesive.

12. Before filling a cartridge, cut the end of the nozzle as shown.

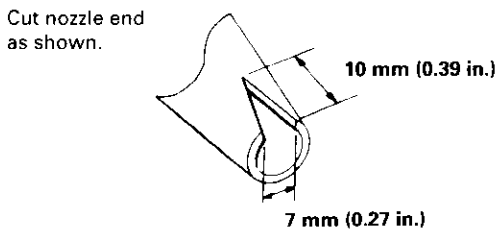

13. Pack adhesive into the cartridge without air pockets to ensure continuous delivery. Put the cartridge in a caulking gun, and run a bead of adhesive around the edge of the windshield as shown.

    NOTE: Apply the adhesive within 30 minutes after applying the glass primer.

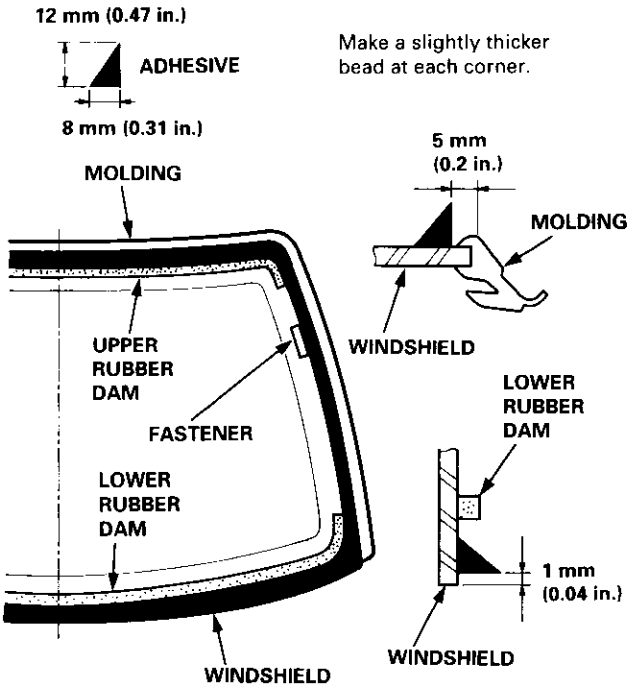

14. Use suction cups to hold the windshield over the opening, align it with the alignment marks made in step 7, and set it down on the adhesive. Lightly push on the windshield until its edge is fully seated on the adhesive all the way around.

    NOTE: Do not open or close the doors until adhesive is dry.

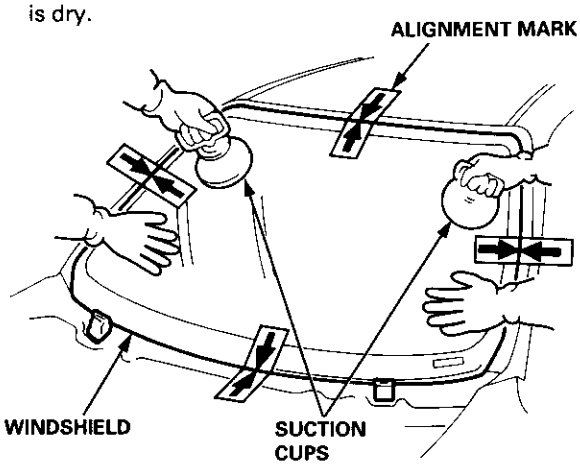

15. Scrape or wipe the excess adhesive off with a putty knife or towel.

    NOTE: To remove adhesive from a painted surface or the windshield, wipe with a soft shop towel dampened with alcohol.

16. Let the adhesive dry for at least one hour, then spray water over the windshield and check for leaks. Mark the leaking areas, let the windshield dry, then seal with sealant.

    NOTE:
    - Let the car stand for at least four hours after windshield installation. If the car has to be used within the first four hours, it must be driven slowly.
    - Keep the windshield dry for the first hour after installation.
    - Check that the ends of the side molding are set under the cowl cover.

17. Reinstall all remaining removed parts.

    NOTE:
    - Install the rearview mirror rubber damper after the adhesive has dried thoroughly.
    - Advise the customer not to do the following things for two to three days:
      — Slam the doors with all the windows rolled up.
      — Twist the body excessively (such as when going in and out of driveways at an angle or driving over rough, uneven roads).

Removal

2D/4D:

CAUTION:
- **Put on gloves to protect your hands.**
- **Use seat covers to avoid damaging any surfaces.**
- **Do not damage the rear window defogger grid lines, window antenna grid lines, and terminals.**

1. To remove the rear window, first remove the:
   - Trunk lid
   - Rear seat cushion (see pages 20-79, 81)
   - Rear seat side bolsters (4D, see page 20-79)
   - Rear seat-back (2D, see page 20-81)
   - Rear shelf (see pages 20-59, 61)
   - Rear pillar trim (4D, see page 20-59)
   - Side trim panel (2D, see page 20-61)
   - Quarter trim panel (2D, see page 20-61)
   - Rear roof trim (see page 20-65)

2. Disconnect the rear window defogger connector from each side.

3. Peel off the molding.

   NOTE: When molding removal is difficult, cut the molding with a knife.

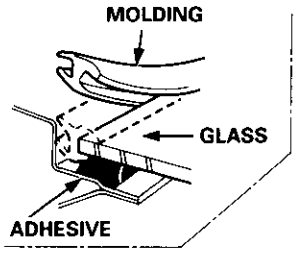

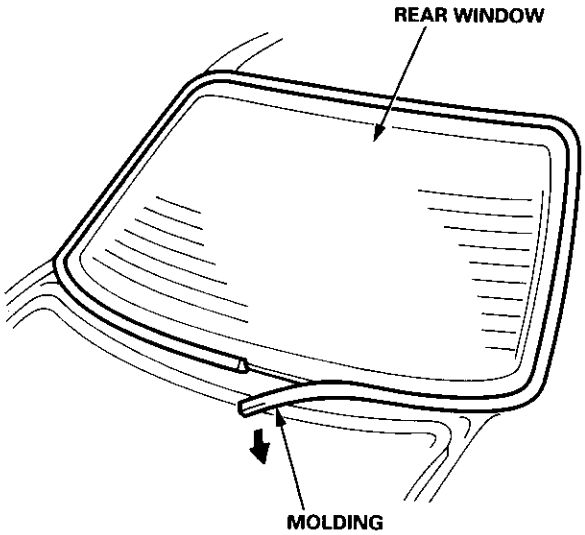

4. Apply protective tape along the edge of the body as shown. Using an awl, make a hole through the adhesive from inside the car. Push the piano wire through the hole, and wrap each end around a piece of wood.

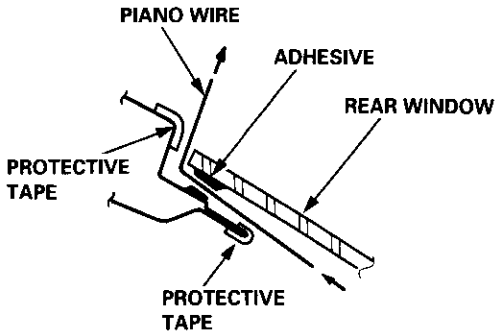

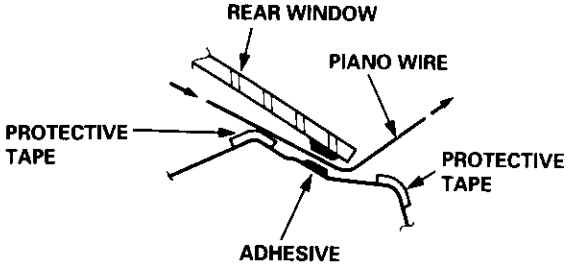

5. With a helper on the outside, pull the piano wire back and forth in a sawing motion, and carefully cut through the adhesive around the entire rear window.

   CAUTION: Hold the piano wire as close to the rear window as possible to prevent damage to the body.

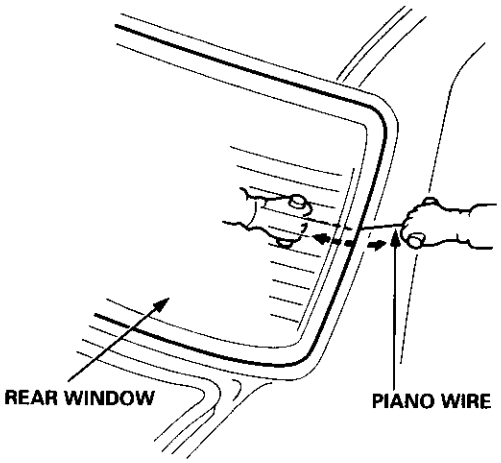

6. Carefully remove the rear window.

Installation

1. Using a knife, scrape the old adhesive smooth to a thickness of about 2 mm (0.08 in.) on the bonding surface around the entire rear window opening flange.

   NOTE:
   - Do not scrape down to the painted surface of the body; damaged paint will interfere with proper bonding
   - Mask off surrounding surfaces before painting.
   - Remove the fasteners and spacers from the body.

2. Clean the body bonding surface with a sponge dampened in alcohol.

   NOTE: After cleaning, keep oil, grease and water from getting on the surface.

3. If the old rear window is to be reinstalled, use a putty knife to scrape off all traces of old adhesive and the rubber dam, then clean the rear window surface with alcohol where new adhesive is to be applied.

   NOTE: Make sure the bonding surface is kept free of water, oil and grease.

   CAUTION: Avoid setting the rear window on its edges; small chips may later develop into cracks.

   NOTE: Clean the shadowed area.

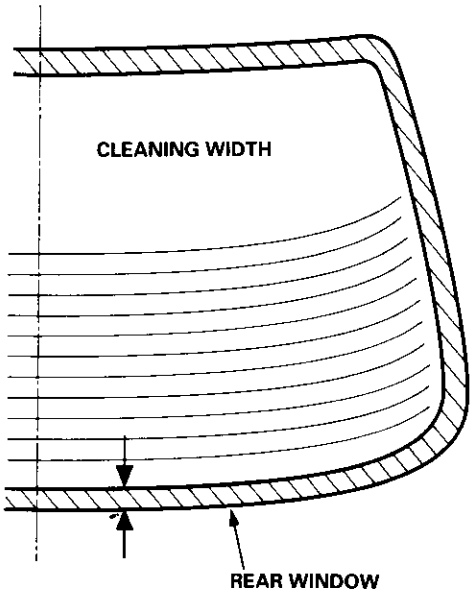

4. Apply the double-faced adhesive tape (NITTO 501, or equivalent) to the edge of the rear window, then install the molding around the edge of the rear window as shown.

   NOTE: Be careful not to touch the rear window where adhesive will be applied.

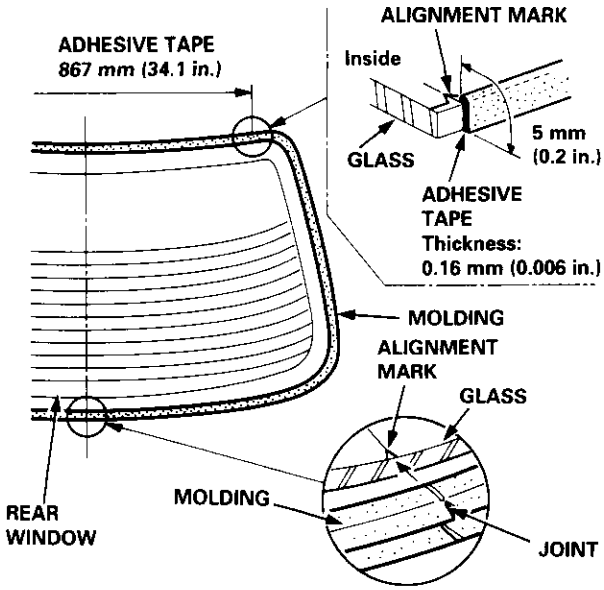

5. Glue the fasteners and spacers to the inside face of the rear window as shown.

   NOTE: Be careful not to touch the rear window where adhesive will be applied.

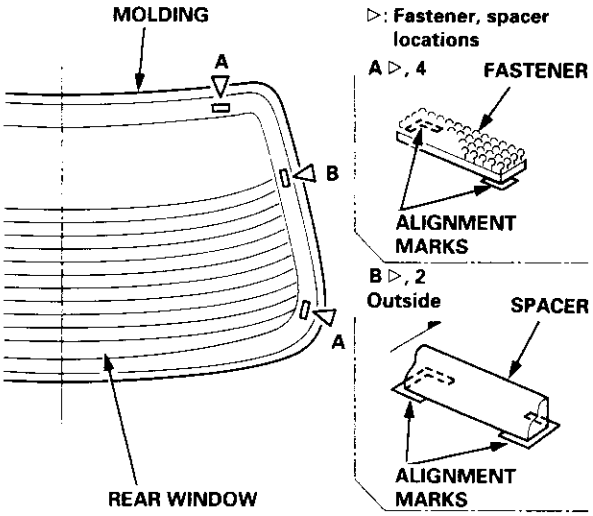

(cont'd)

Installation (cont'd)

6. Glue the fasteners to the body as shown.

▷: **Fastener locations, 4**

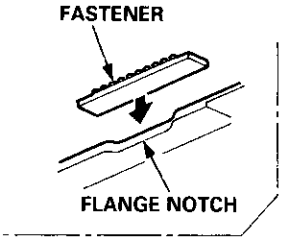

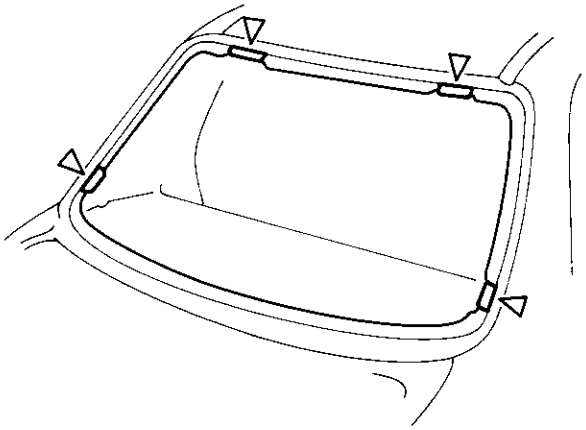

7. Set the rear window, then center it in the opening. Make alignment marks across the rear window and body with a grease pencil at the four points shown.

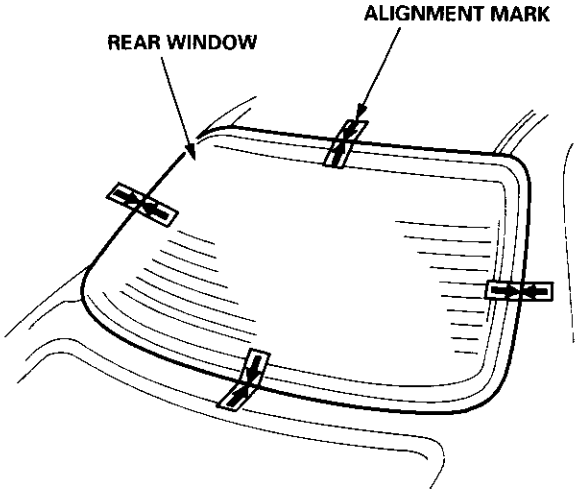

8. Remove the rear window.

9. With a sponge, apply a light coat of glass primer around the edge of the rear window as shown, then lightly wipe it off with gauze or cheesecloth.

NOTE:
- Do not apply body primer to the rear window, and do not get body and glass primer sponges mixed up.
- Never touch the primed surfaces with your hands. If you do, the adhesive may not bond to the rear window properly, causing a leak after the rear window is installed.
- Keep water, dust, and abrasive materials away from the primed surface.

: **Apply glass primer here.**

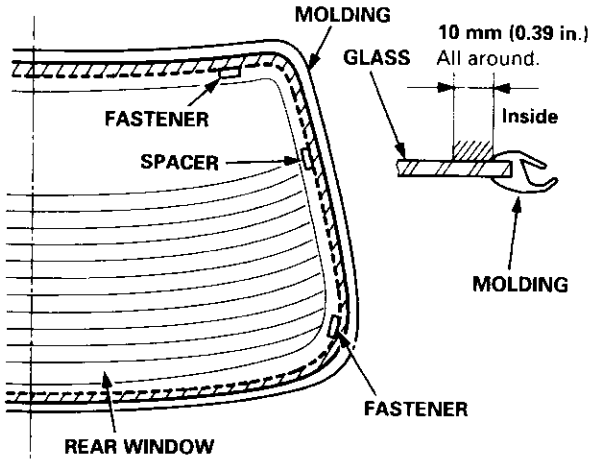

10. With a sponge, apply a light coat of body primer to the original adhesive remaining around the rear window opening flange. Let the body primer dry for at least 10 minutes.

NOTE:
- Do not apply glass primer to the body, and be careful not to mix up glass and body primer sponges.
- Never touch the primed surfaces with your hands.

: **Apply body primer here.**

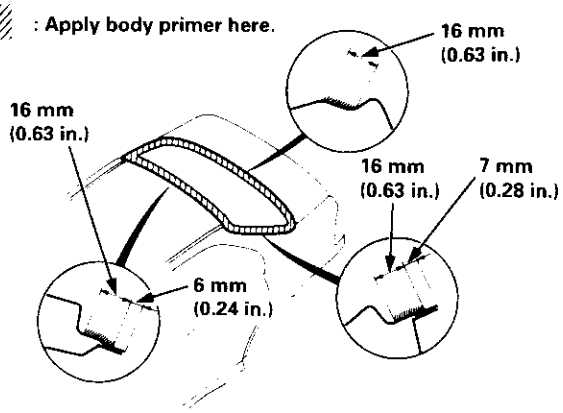

11. Thoroughly mix the adhesive and hardener together on a glass or metal plate with a putty knife.

    NOTE:
    - Clean the plate with a sponge and alcohol before mixing.
    - Follow the instructions that came with the adhesive.

12. Before filling a cartridge, cut the end of the nozzle as shown.

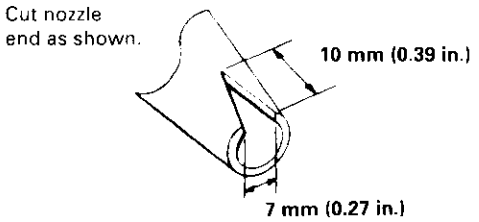

13. Pack adhesive into the cartridge without air pockets to ensure continous delivery. Put the cartridge in a caulking gun, and run a bead of adhesive around the edge of the rear window as shown.

    NOTE: Apply the adhesive within 30 minutes after applying the glass primer.

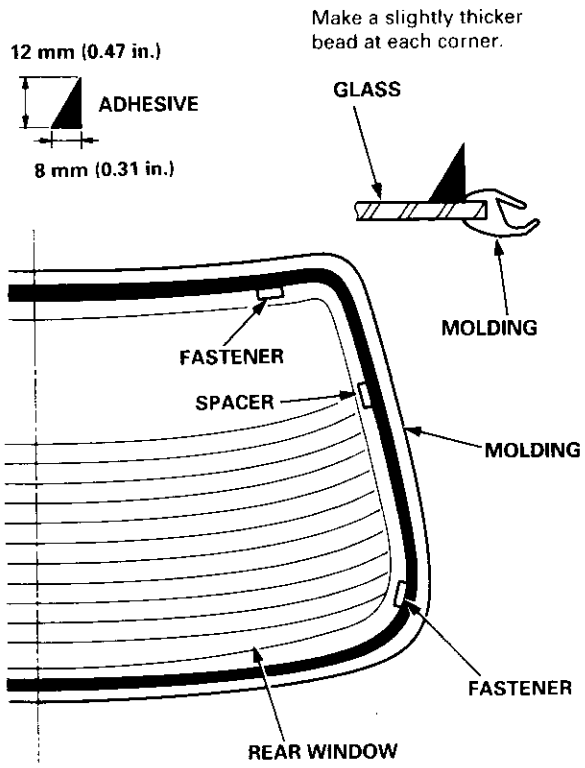

14. Use suction cups to hold the rear window over the opening, align it with the alignment marks made in step 7, and set it down on the adhesive. Lightly push on the rear window until its edges are fully seated on the adhesive all the way around.

    NOTE: Do not open or close the doors until the adhesive is dry.

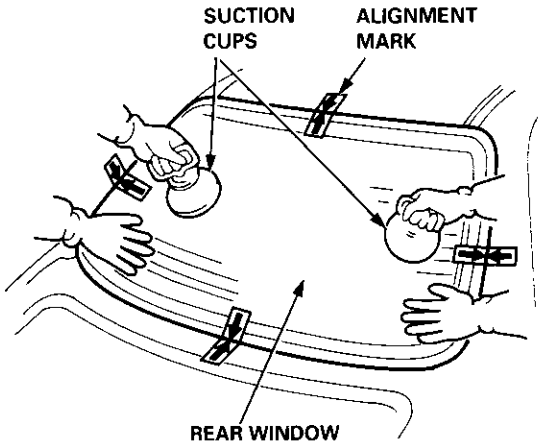

15. Scrape or wipe the excess adhesive off with a putty knife or towel.

    NOTE: To remove adhesive from a painted surface or the rear window, use a soft shop towel dampened with alcohol.

16. Let the adhesive dry for at least one hour, then spray water over the rear window and check for leaks. Mark the leaking areas, let the rear window dry, then seal with sealant.

    NOTE: Let the car stand for at least four hours after rear window installation. If the car has to be used within the first four hours, it must be driven slowly.

17. Reinstall all remaining removed parts.

    NOTE: Advise the customer not to do the following things for two to three days:

    - Slam the doors with all the windows rolled up.
    - Twist the body excessively (such as when going in and out of driveways at an angle or driving over rough, uneven roads).

Rear Window

Removal

3D:

CAUTION:
- **Put on gloves to protect your hands.**
- **Use seat covers to avoid damaging any surfaces.**
- **Do not damage the rear window defogger grid lines.**
- **Take care not scratch the rear window molding.**

1. To remove the rear window, first remove the:
   - Rear center shelf (see page 20-60)
   - Hatch upper trim, hatch trim panel and hatch side trim (see page 20-63)
   - Rear window wiper arm (see page 20-115)
   - Hatch spoiler (see page 20-101)

2. Disconnect the rear window defogger connector from each side.

3. Apply protective tape to the inner edge of the tailgate.

4. From inside the hatch, use a knife to cut through the rear window adhesive all the way around.

   NOTE:
   - If the rear window is to be reinstalled, take care not to damage the molding.
   - If the molding is damaged, replace the rear window and molding as an assembly.

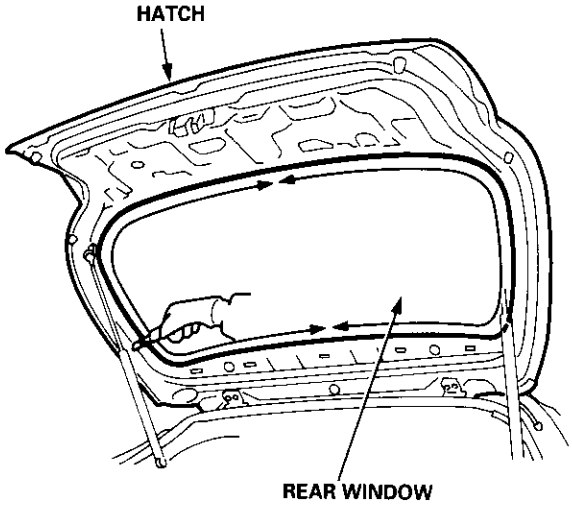

Upper portion:

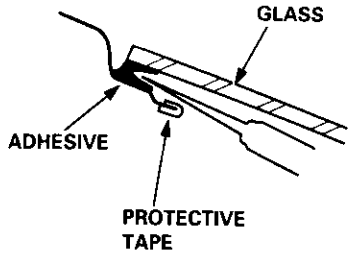

Side portion:

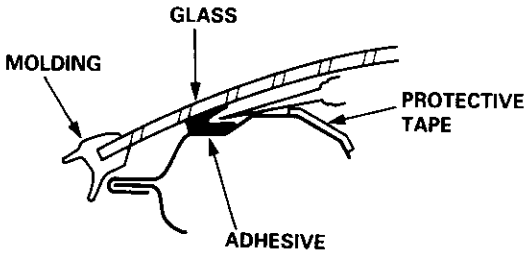

Lower portion:

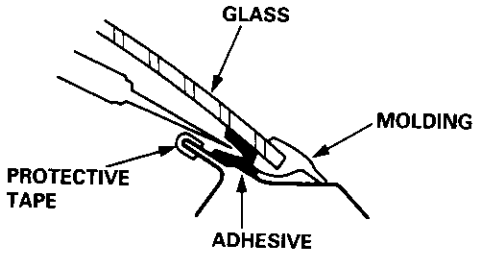

5. Carefully remove the rear window.

   NOTE: Check the molding for damage, and replace the rear window if necessary.

Installation

1. Using a knife, scrape the old adhesive smooth to a thickness of about 2 mm (0.08 in.) on the bonding surface around the entire rear window opening flange.

   NOTE:
   - Do not scrape down to the painted surface of the body; damaged paint will interfere with proper bonding.
   - Remove the rubber dams, spacers and fasteners from the hatch.
   - Mask off surrounding surfaces before applying primer.

2. Clean the hatch bonding surface with a sponge dampened in alcohol.

   NOTE: After cleaning, keep oil, grease or water from getting on the surface.

3. If the old rear window is to be reinstalled, use a putty knife to scrape off all traces of old adhesive, then clean the rear window surface with alcohol where new adhesive is to be applied.

   NOTE: Make sure the bonding surface is kept free of water, oil and grease.

   CAUTION: Avoid setting the rear window on its edges; the molding can be permanently deformed.

   NOTE: Clean the shadowed area.

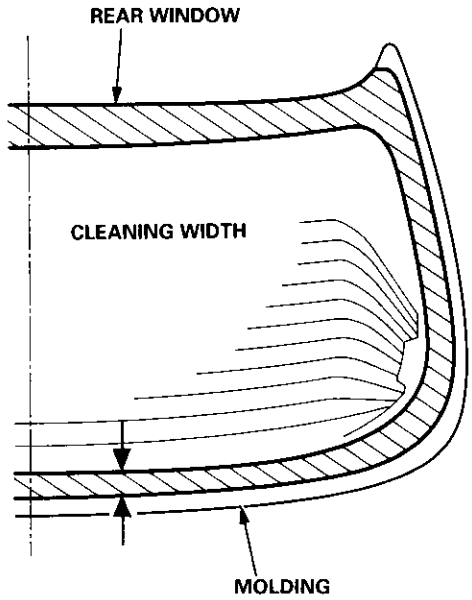

4. Glue the rubber dams to the inside face of the rear window, as shown, to contain the adhesive during installation, and glue the fasteners, spacer and seals as shown.

   NOTE:
   - Glue the rubber dams using the printed dots as a guide.
   - Be careful not to touch the rear window where adhesive will be applied.

   ▷: **Fastener, spacer and seal locations**

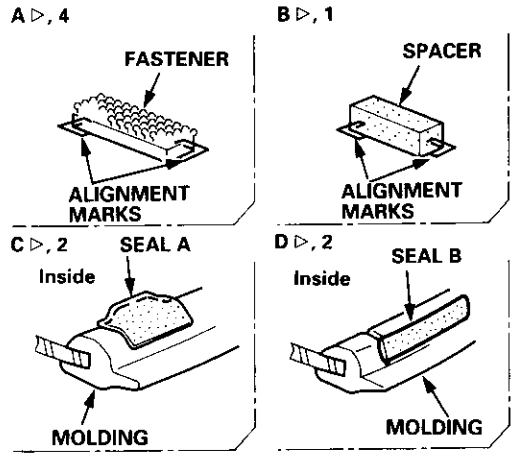

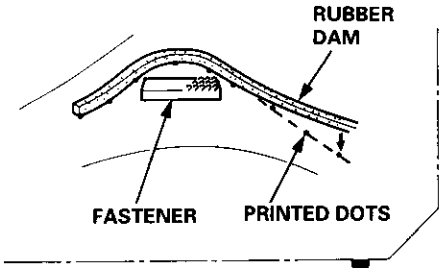

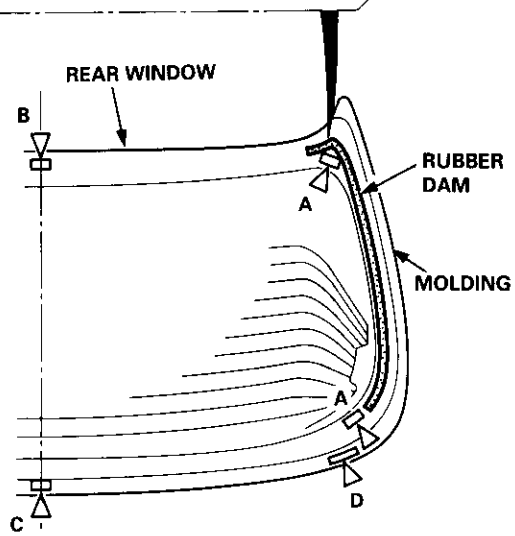

(cont'd)

Installation (cont'd)

5. Install the fasteners to the hatch as shown.

▷: **Fastener locations, 4**

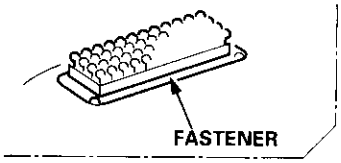

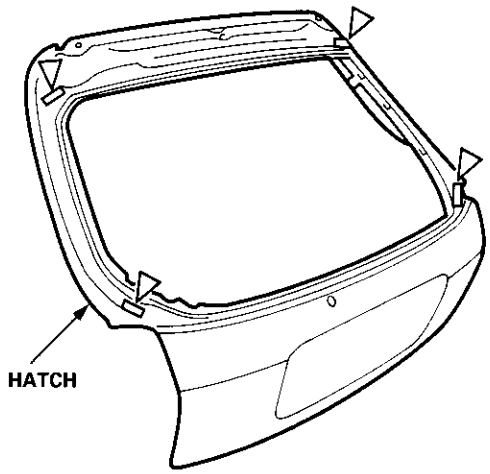

6. Set the rear window upright on the hatch, then center it in the opening. Make alignment marks across the rear window and body with a grease pencil at the four points shown.

NOTE: Be careful not to touch the rear window where adhesive will be applied.

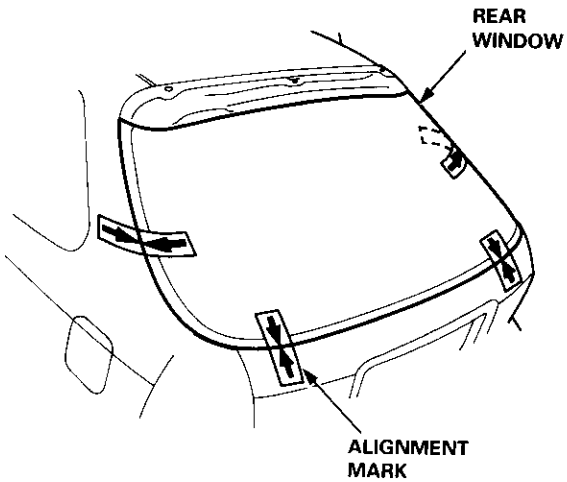

7. Remove the rear window.

8. With a sponge, apply a light coat of glass primer around the edge of the rear window, then lightly wipe it off with gauze or cheesecloth.

NOTE:
- Do not apply body primer to the rear window, and do not get body and glass primer sponges mixed up.
- Never touch the primed surfaces with your hands. If you do, the adhesive may not bond to the rear window properly, causing a leak after the rear window is installed.
- Keep water, dust, and abrasive materials away from the primed surface.

: **Apply glass primer here.**

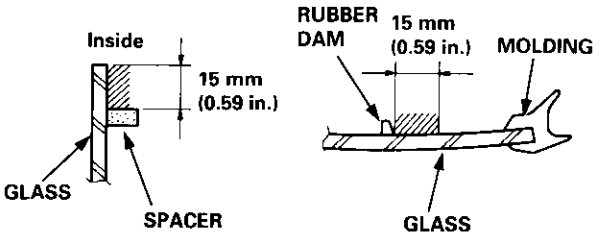

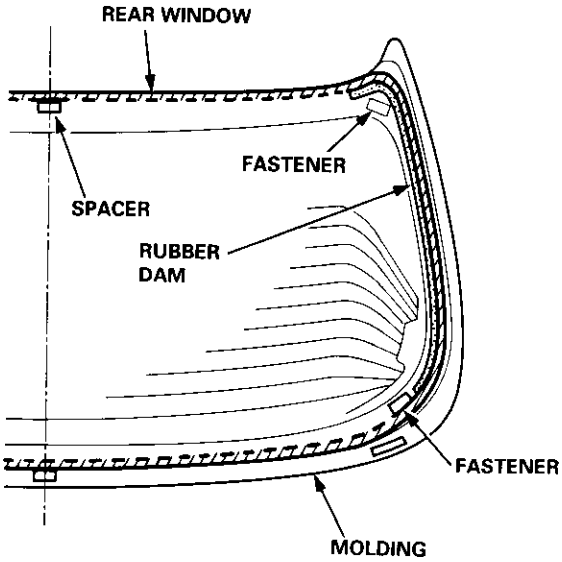

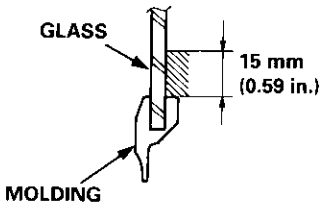

9. With a sponge, apply a light coat of body primer to the original adhesive remaining around the rear window opening flange. Let the body primer dry for at least 10 minutes.

   NOTE:
   - Do not apply glass primer to the body, and be careful not to mix up glass and body primer sponges.
   - Never touch the primed surfaces with your hands.

: Apply body primer here.

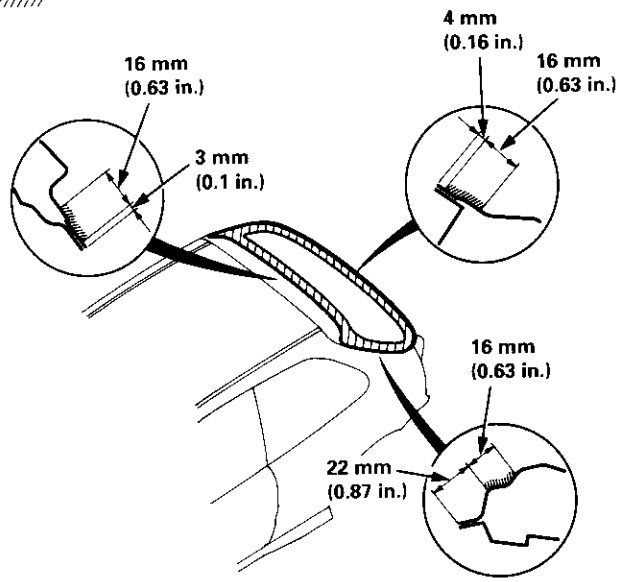

10. Thoroughly mix the adhesive and hardener together on a glass or metal plate with a putty knife.

    NOTE:
    - Clean the plate with a sponge and alcohol before mixing.
    - Follow the instructions that came with the adhesive.

11. Before filling a cartridge, cut the end of the nozzle as shown.

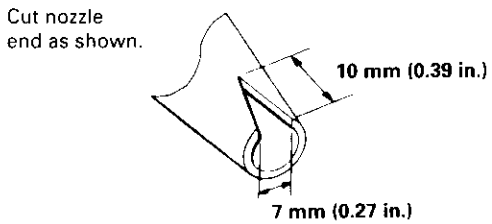

12. Pack adhesive into the cartridge without air pockets to ensure continuos delivery. Put the cartridge in a caulking gun, and run a bead of adhesive around the edge of the rear window as shown.

    NOTE: Apply the adhesive within 30 minutes after applying the glass primer.

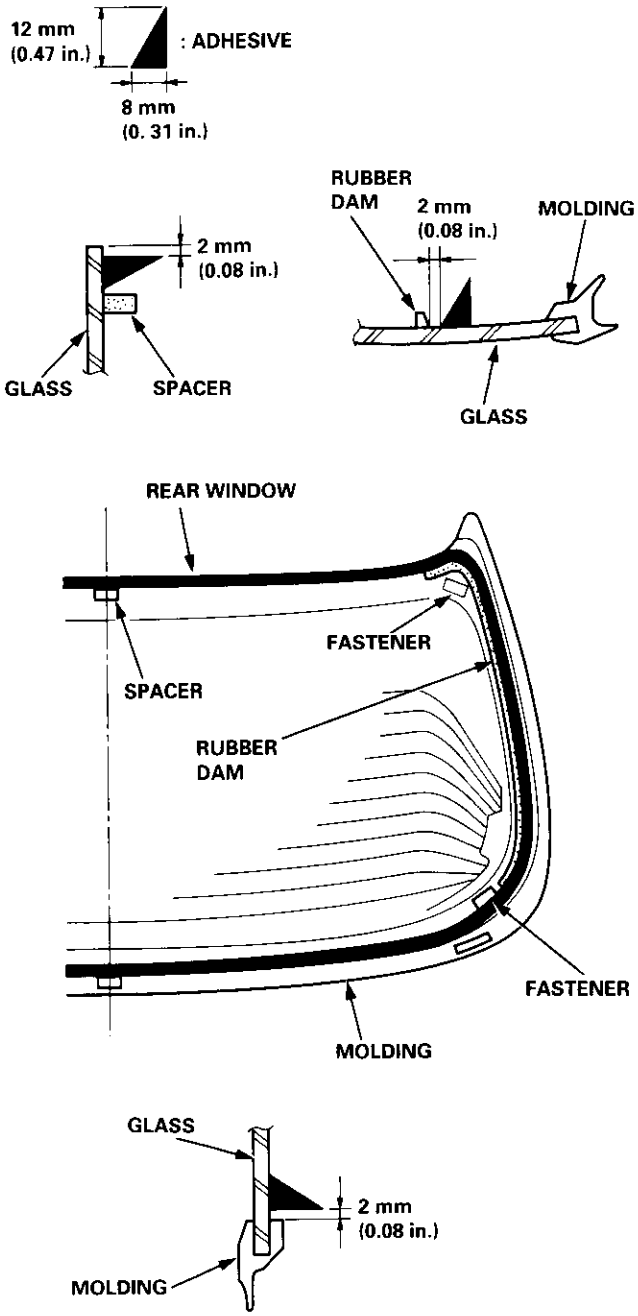

(cont'd)

Installation (cont'd)

13. Use suction cups to hold the rear window over the opening, align it with the alignment marks made in step 6, and set it down on the adhesive. Lightly push on the rear window until its edges are fully seated on the adhesive all the way around.

    NOTE: Do not open or close the doors until the adhesive is dry.

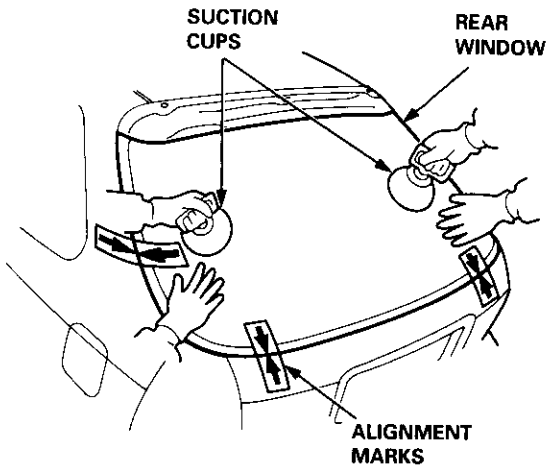

14. Scrape or wipe the excess adhesive off with a putty knife or towel.

    NOTE: To remove adhesive from a painted surface or the rear window, use a soft shop towel dampened with alcohol.

15. Let the adhesive dry for at least one hour, then spray water over the rear window and check for leaks. Mark the leaking areas, let the rear window dry, then seal with sealant.

    NOTE: Let the car stand for at least four hours after rear window installation. If the car has to be used within the first four hours, it must be driven slowly.

16. Reinstall all remaining removed parts.

    NOTE: Advise the customer not to do the following things for two to three days:

    - Slam the doors with all the windows rolled up.
    - Twist the body excessively (such as when going in and out of driveways at an angle or driving over rough, uneven roads).

Removal

3D:

CAUTION:
- **Put on gloves to protect your hands.**
- **Use seat covers to avoid damaging any surfaces.**

1. To remove the quarter glass, first remove the:
   - Rear seat-back and rear seat cushion (see page 20-80)
   - Rear center shelf and rear side shelf (see page 20-60)
   - Rear trim panel and side trim panel (see page 20-60)
   - Upper anchor bolts from the front and rear seat belts (see pages 20-86, 89)
   - Quarter trim panel (see page 20-60)

2. From inside the car, use a knife to cut through the quarter glass adhesive all the way around.

   NOTE:
   - If the clip on the rear edge is broken, the quarter glass can be reinstalled using butyl tape (see page 20-42).
   - Apply protective tape along the edge of the entire quarter glass opening flange.

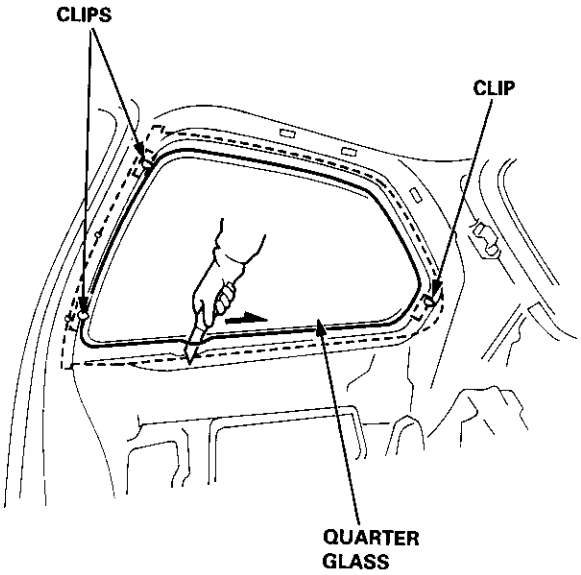

Upper portion:

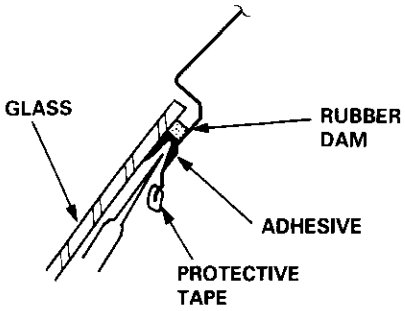

Lower portion:

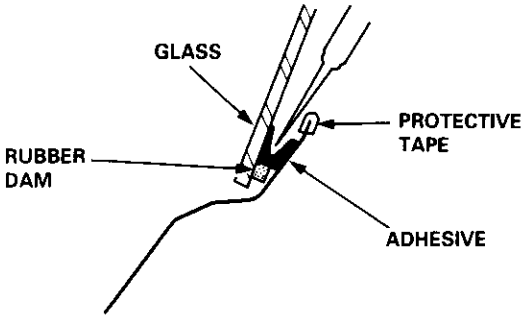

Pillar portion:

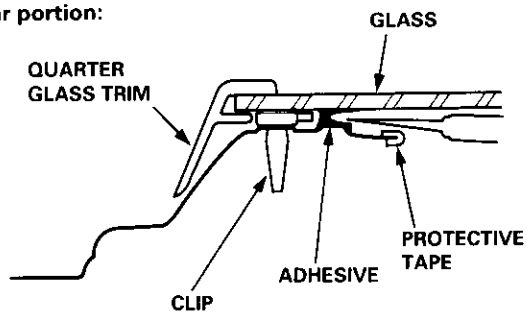

3. Carefully remove the quarter glass.

   NOTE: Check the quarter glass trim and clips for damage, and replace them if necessary.

Installation

1. Using a knife, scrape the old adhesive smooth to a thickness of about 2 mm (0.08 in.) on the bonding surface around the entire quarter glass opening flange.

   NOTE:
   - Do not scrape down to the painted surface of the body; damaged paint will interfere with proper bonding.
   - Remove the rubber dams from the body.
   - If any of the clips are broken, remove them from the body.
   - Mask off surrounding surfaces before applying primer.

2. Clean the body bonding surface with a sponge dampened in alcohol.

   NOTE: After cleaning, keep oil, grease and water from getting on the surface.

3. If the quarter glass is to be reinstalled, use a putty knife to scrape off all traces of old adhesive, then clean the quarter glass surface with alcohol where adhesive is to be applied.

   NOTE: Make sure the bonding surface is kept free of water, oil and grease.

   CAUTION: Avoid setting the quarter glass on its edges; small chips may later develop into cracks.

   NOTE: Clean the shadowed area.

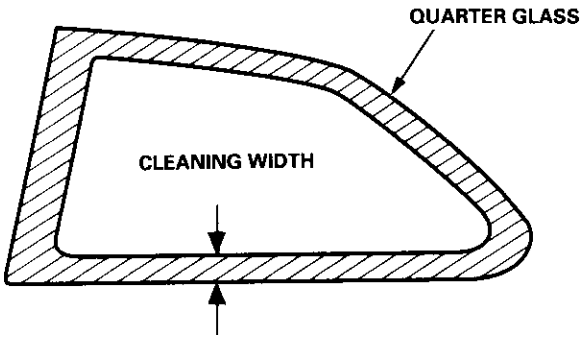

(cont'd)

Installation (cont'd)

4. Glue the upper and lower rubber dams to the inside face of the quarter glass, as shown, to contain the adhesive during installation.

   NOTE: Be careful not to touch the quarter glass where adhesive will be applied.

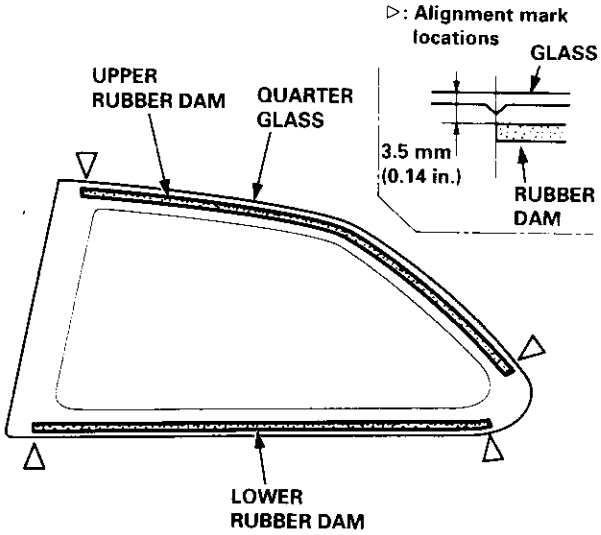

5. Install the quarter glass trim on the quarter glass, then glue the upper and lower clips as shown.

   NOTE: Be careful not to touch the quarter glass where adhesive will be applied.

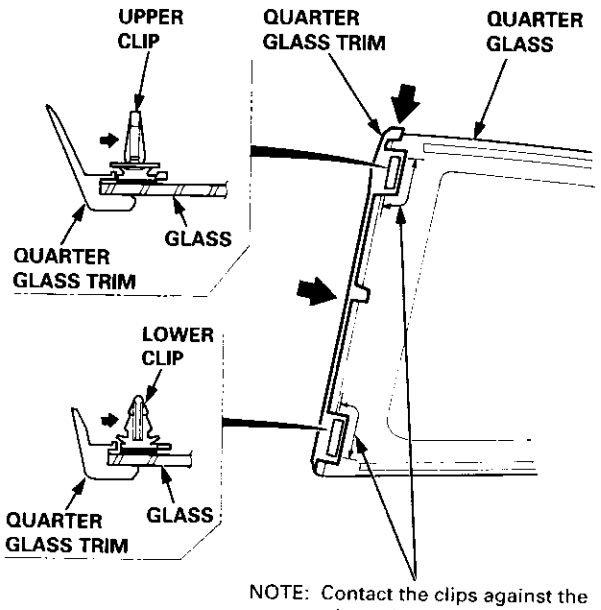

NOTE: Contact the clips against the quarter glass trim at the areas indicated by the arrows.

6. If the old quarter glass is to be reinstalled (and the clip on the rear edge is broken off), apply a light coat of primer (3M C-100, or equivalent), then apply butyl tape to the quarter glass, as shown, and seal the body hole with piece of urethane tape.

   NOTE:
   - Be careful not to touch the quarter glass where adhesive will be applied.
   - Do not peel the separator off the butyl tape.

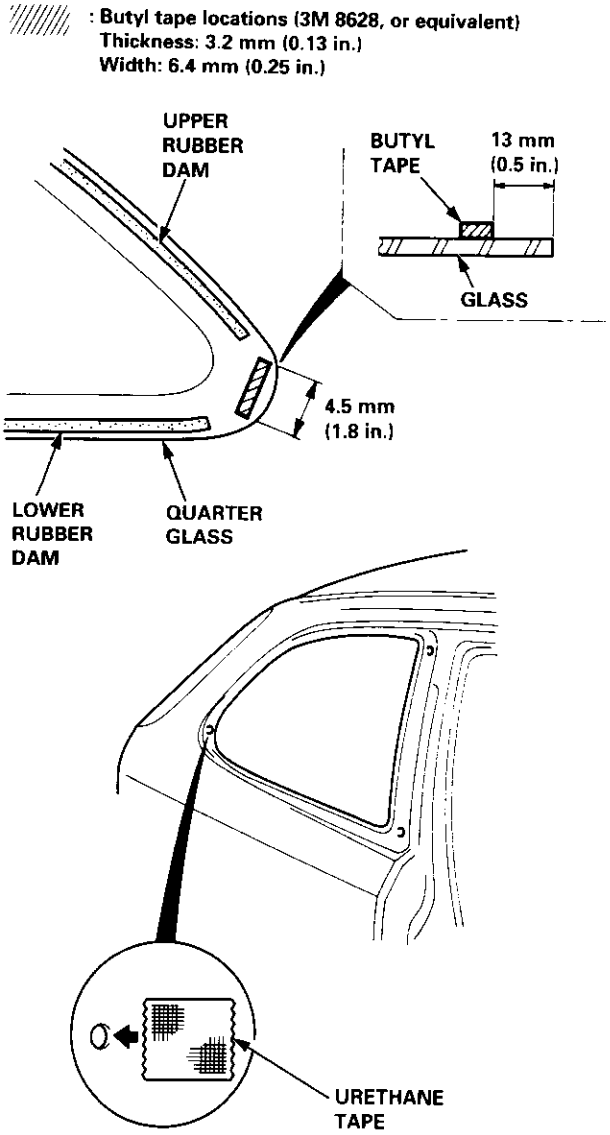

7. With a sponge, apply a light coat of glass primer to the inside face of the quarter glass, as shown, then lightly wipe it off with gauze or cheesecloth.

NOTE:
- Do not apply body primer to the quarter glass, and do not get body and glass primer sponges mixed up.
- Never touch the primed surfaces with your hands. If you do, the adhesive may not bond to the quarter glass properly, causing a leak after the quarter glass is installed.
- Keep water, dust, and abrasive materials away from the primed surface.

: Apply glass primer here.

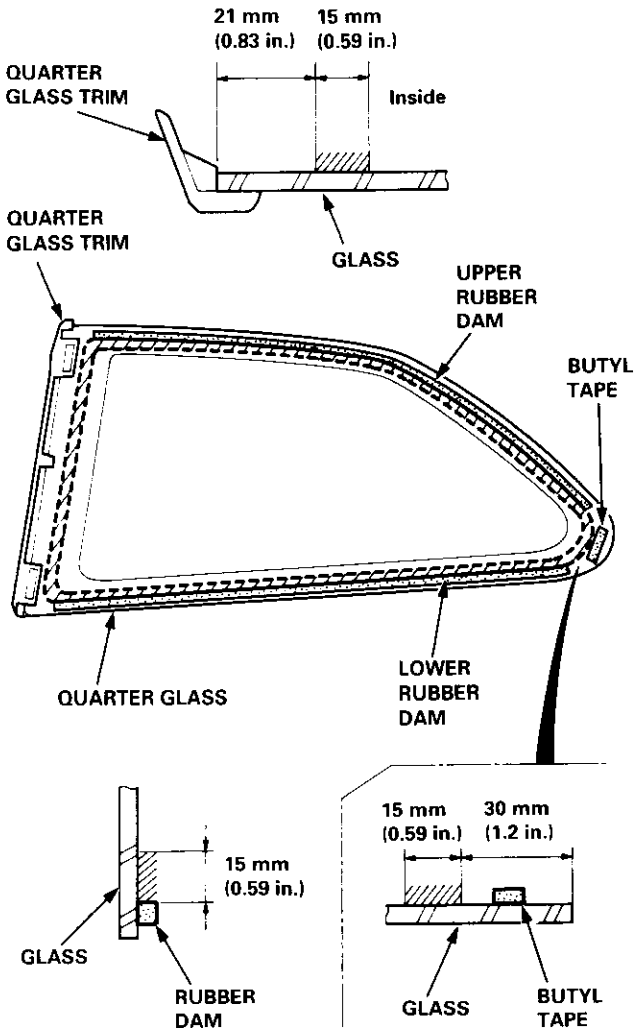

8. With a sponge, apply a light coat of body primer to the original adhesive remaining around the quarter glass opening flange. Let the body primer dry for at least 10 minutes.

NOTE:
- Do not apply glass primer to the body, and be careful not to mix up glass and body primer sponges.
- Never touch the primed surfaces with your hands.
- Mask off the rear side trim panel before painting the flange.

: Apply body primer here.

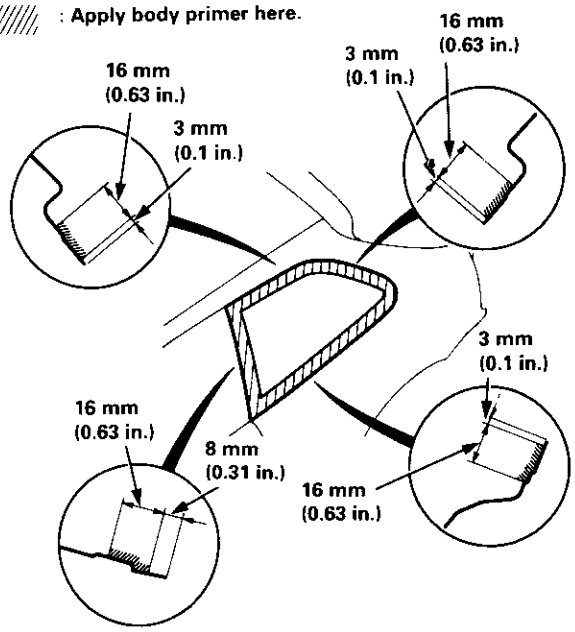

9. Thoroughly mix the adhesive and hardener together on a glass or metal plate with a putty knife.

NOTE:
- Clean the plate with a sponge and alcohol before mixing.
- Follow the instructions that came with the adhesive.

10. Before filling a cartridge, cut the end of the nozzle as shown.

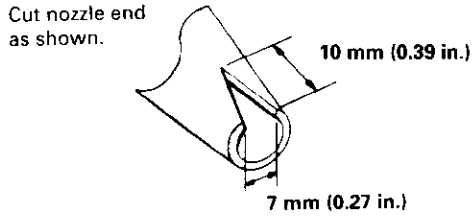

(cont'd)

Installation (cont'd)

11. Pack adhesive into the cartridge without air pockets to ensure continuous delivery. Put the cartridge in a caulking gun, and run a bead of adhesive around the edge of the quarter glass as shown.

    NOTE:
    - If the old quarter glass is to be reinstalled, peel the separator off the butyl tape after applying the adhesive.
    - Apply the adhesive within 30 minutes after applying the glass primer.

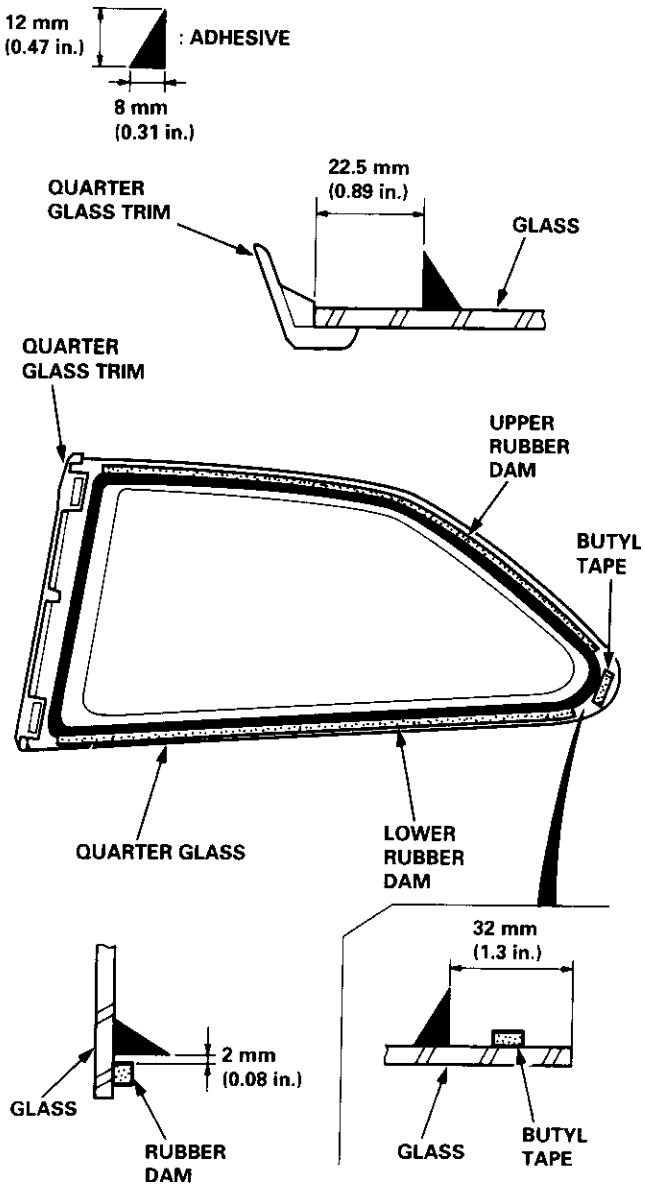

12. Use suction cups to hold the quarter glass over the opening, align the clips, and set it down on the adhesive. Lightly push on the quarter glass until its edges are fully seated on the adhesive all the way around.

    NOTE: Do not open or close the doors until the adhesive is dry.

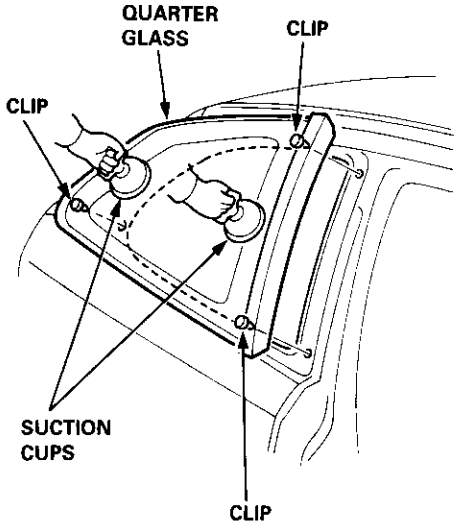

13. Scrape or wipe the excess adhesive off with a putty knife or towel.

    NOTE: To remove adhesive from a painted surface or the quarter glass, wipe with a soft shop towel dampened with alcohol.

14. Let the adhesive dry for at least one hour, then spray water over the quarter glass and check for leaks. Mark the leaking areas, let the quarter glass dry, then seal with sealant.

    NOTE: Let the car stand for at least four hours after quarter glass installation. If the car has to be used within the first four hours, it must be driven slowly.

15. Reinstall all remaining removed parts.

    NOTE: Advise the customer not to do the following things for two to three days:

    - Slam the doors with all the windows rolled up.
    - Twist the body excessively (such as when going in and out of driveways at an angle or driving over rough, uneven roads).

Removal

2D:

CAUTION:
- **Put on gloves to protect your hands.**
- **Use seat covers to avoid damaging any surfaces.**

1. To remove the quarter glass, first remove the:
   - Rear seat-back and rear seat cushion (see page 20-81)
   - Side trim panel (see page 20-61)
   - Rear shelf (see page 20-61)
   - Upper anchor bolt from the front seat belt (see page 20-86)
   - Quarter trim panel (see page 20-61)

2. From inside the car, use a knife to cut through the quarter glass adhesive all the way around.

   NOTE:
   - If the quarter glass is to be reinstalled, take care not to damage the molding.
   - Apply protective tape along the edge of the entire quarter glass opening flange.

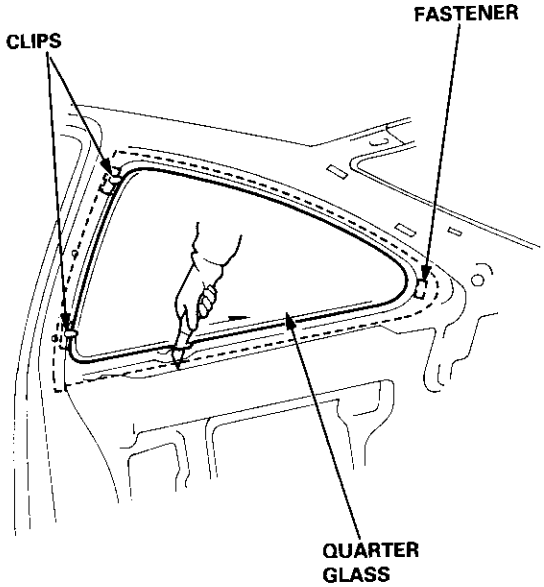

Upper portion:

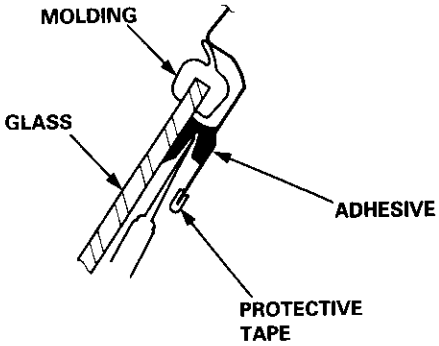

Rear edge portion:

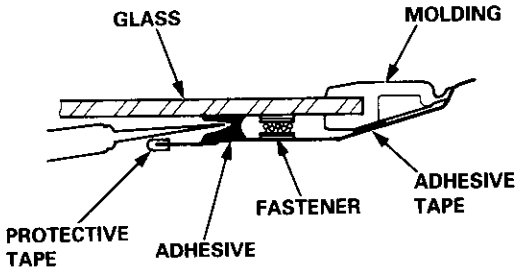

Pillar portion:

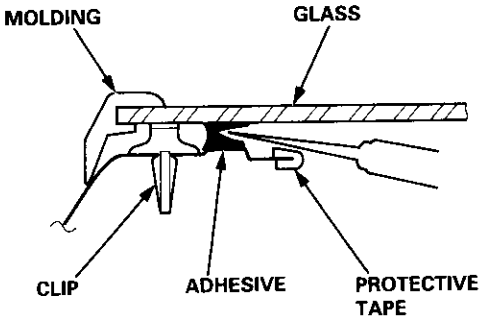

3. Carefully remove the quarter glass.

   NOTE: Check the molding for damage, and replace it if necessary.

Installation

1. Using a knife, scrape the old adhesive smooth to a thickness of about 2 mm (0.08 in.) on the bonding surface around the entire quarter glass opening flange.

   NOTE:
   - Do not scrape down to the painted surface of the body; damaged paint will interfere with proper bonding.
   - Remove the fastener from the body.
   - If any of the clips are broken, remove them from the body.
   - Mask off surrounding surfaces before applying primer.

2. Clean the body bonding surface with a sponge dampened in alcohol.

   NOTE: After cleaning, keep oil, grease and water from getting on the surface.

3. If the quarter glass is to be reinstalled, use a putty knife to scrape off all traces of old adhesive, then clean the quarter glass surface with alcohol where adhesive is to be applied.

   NOTE: Make sure the bonding surface is kept free of water, oil and grease.

   CAUTION: Avoid setting the quarter glass on its edges; small chips may later develop into cracks.

   NOTE: Clean the shadowed area.

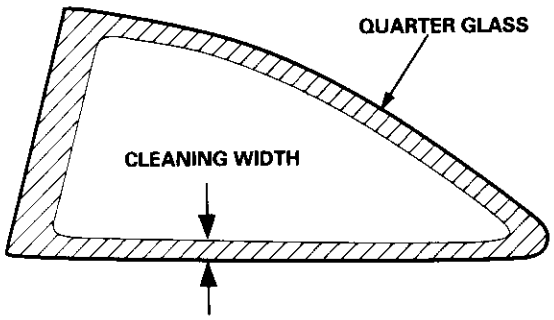

4. Install the molding around the edge of the quarter glass as shown.

   NOTE:
   - If the old molding is to be reinstalled, scrape off the old adhesive tape from the molding, and clean the molding surface with alcohol where new adhesive tape is to be applied. Apply the double-faced adhesive tape to the molding and quarter glass as shown.
   - Be careful not to touch the quarter glass where adhesive will be applied.

   Adhesive tape A (3M 4215, or equivalent)
   Thickness: 0.4 mm (0.02 in.)
   Width: 5 mm (0.2 in.)
   Length: 440 mm (17.3 in.)

   Adhesive tape B (NITTO 501, or equivalent)
   Thickness: 0.16 mm (0.006 in.)
   Width: 8 mm (0.3 in.)
   Length: 440 mm (17.3 in.)

   Adhesive tape C (3M 4213, or equivalent)
   Thickness: 0.8 mm (0.03 in.)
   Width: 5 mm (0.2 in.)
   Length: 30 mm (1.2 in.)

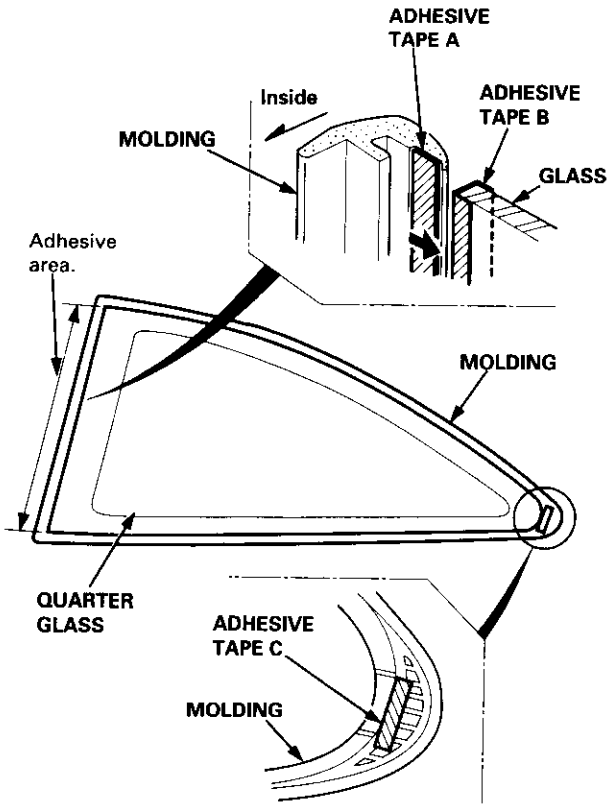

5. If the old quarter glass is to be reinstalled, glue the upper and lower clips and fastener as shown.

NOTE: Be careful not to touch the quarter glass where adhesive will be applied.

▷: Clip, fastener locations
A ▷, 2 B ▷, 1

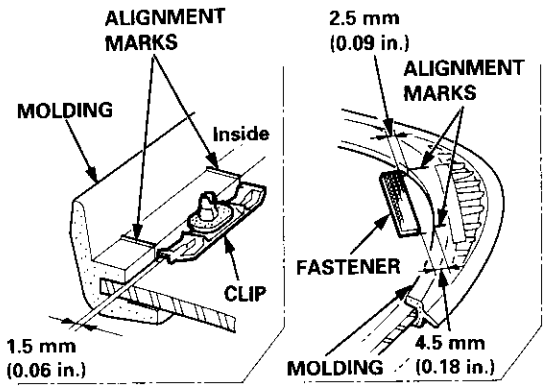

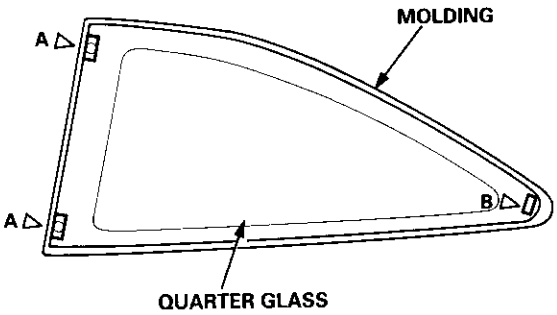

6. Glue the fastener to the body as shown.

▷: Fastener location, 1

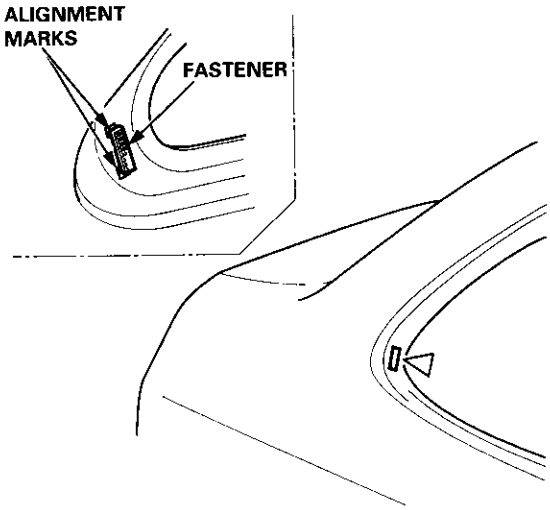

7. With a sponge, apply a light coat of glass primer to the inside face of the quarter glass, as shown, then lightly wipe it off with gauze or cheesecloth.

NOTE:
- Do not apply body primer to the quarter glass, and do not get body and glass primer sponges mixed up.
- Never touch the primed surfaces with your hands. If you do, the adhesive may not bond to the quarter glass properly, causing a leak after the quarter glass is installed.
- Keep water, dust, and abrasive materials away from the primed surface.

: Apply body primer here.

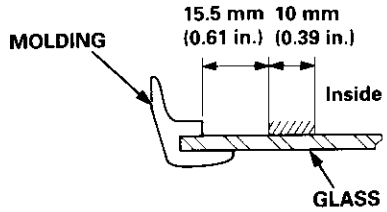

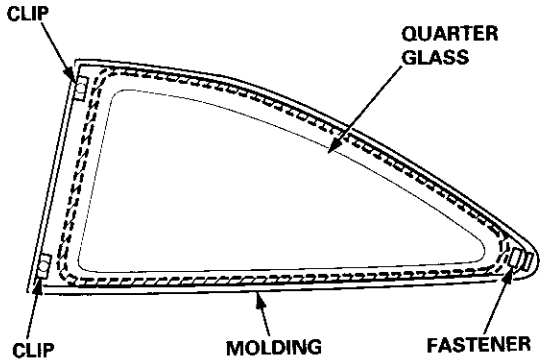

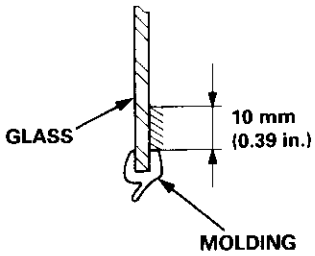

(cont'd)

Installation (cont'd)

8. With a sponge, apply a light coat of body primer to the original adhesive remaining around the quarter glass opening flange. Let the body primer dry for at least 10 minutes.

   NOTE:
   - Do not apply glass primer to the body, and be careful not to mix up glass and body primer sponges.
   - Never touch the primed surfaces with your hands.
   - Mask off the rear side trim panel before painting the flange.

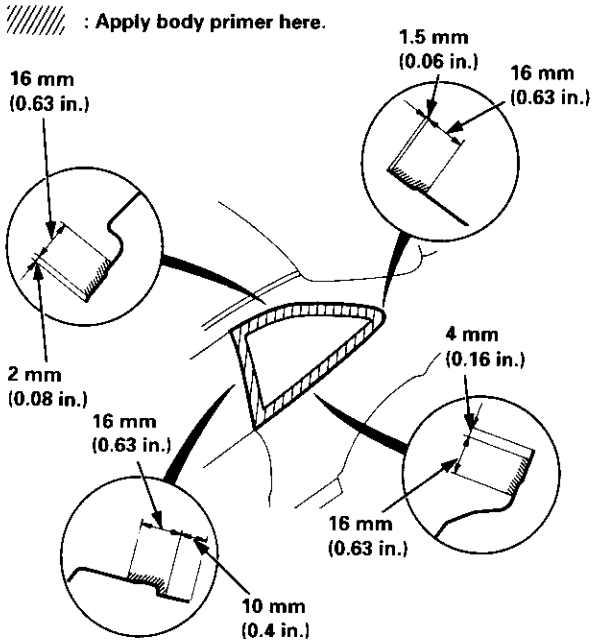

9. Thoroughly mix the adhesive and hardener together on a glass or metal plate with a putty knife.

   NOTE:
   - Clean the plate with a sponge and alcohol before mixing.
   - Follow the instructions that came with the adhesive.

10. Before filling a cartridge, cut the end of the nozzle as shown.

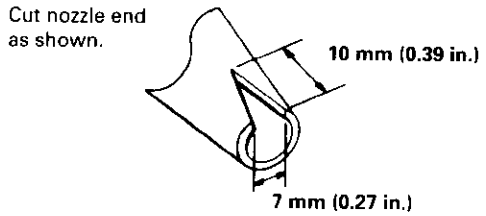

11. Pack adhesive into the cartridge without air pockets to ensure continuous delivery. Put the cartrige in a caulking gun, and run a bead of adhesive around the edge of the quarter glass as shown.

    NOTE:
    - If the old quarter glass is to be reinstalled, peel the separator off the butyl tape after applying the adhesive.
    - Peel the separator off the adhesive tape after applying the adhesive.
    - Apply the adhesive within 30 minutes after applying the glass primer.

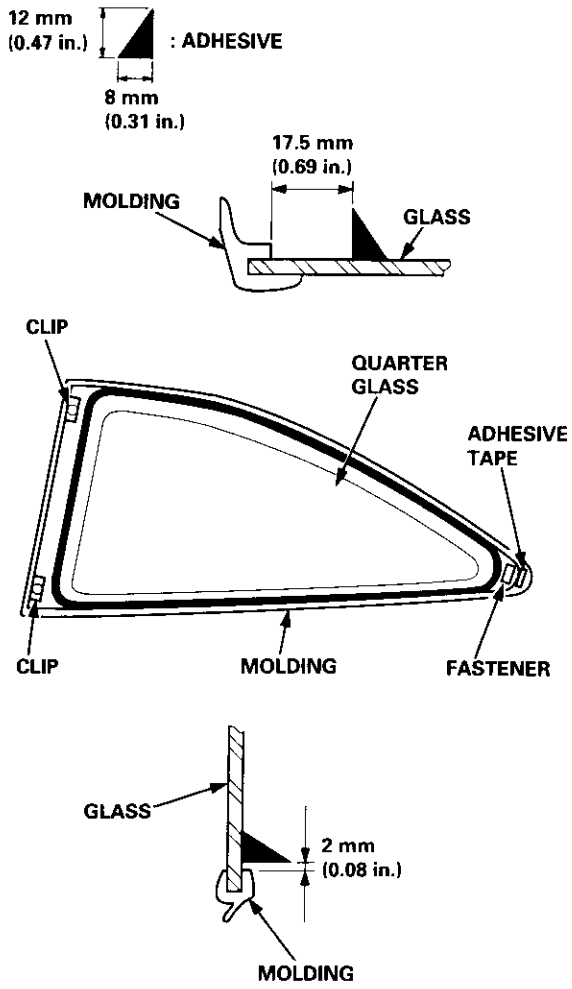

12. Use suction cups to hold the quarter glass over the opening, align the clips, and set it down on the adhesive. Lightly push on the quarter glass until its edges are fully seated on the adhesive all the way around.

    NOTE: Do not open or close the doors until the adhesive is dry.

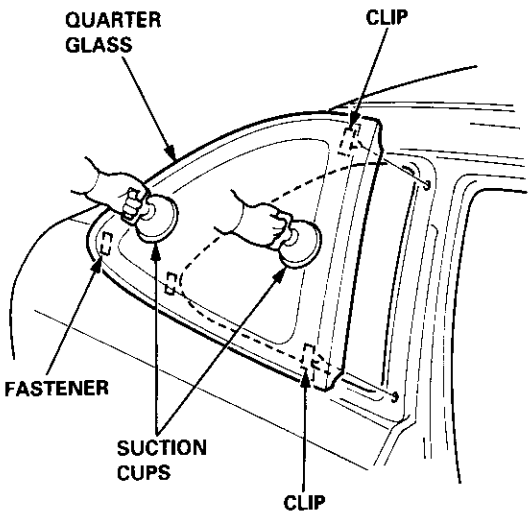

13. Scrape or wipe the excess adhesive off with a putty knife or towel.

    NOTE: To remove adhesive from a painted surface or the quarter glass, wipe with a soft shop towel dampened with alcohol.

14. Let the adhesive dry for at least one hour, then spray water over the quarter glass and check for leaks. Mark the leaking areas, let the quarter glass dry, then seal with sealant.

    NOTE: Let the car stand for at least four hours after quarter glass installation. If the car has to be used within the first four hours, it must be driven slowly.

15. Reinstall all remaining removed parts.

    NOTE: Advise the customer not to do the following things for two to three days:

    - Slam the doors with all the windows rolled up.
    - Twist the body excessively (such as when going in and out of driveways at an angle or driving over rough, uneven roads).

Index

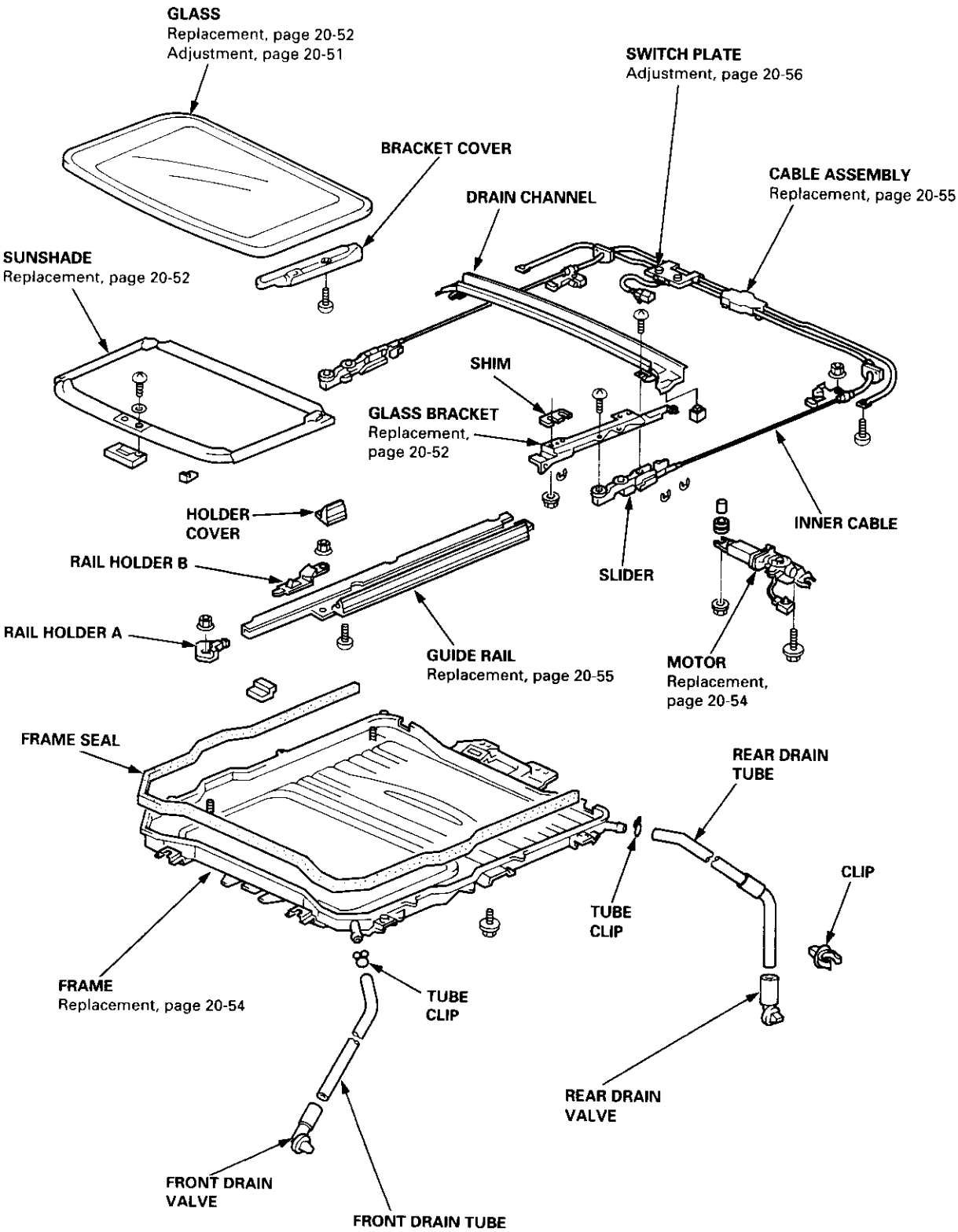
GLASS
Replacement, page 20-52
Adjustment, page 20-51
SWITCH PLATE
Adjustment, page 20-56
BRACKET COVER
CABLE ASSEMBLY
Replacement, page 20-55
DRAIN CHANNEL
SUNSHADE
Replacement, page 20-52
SHIM
GLASS BRACKET
Replacement, page 20-52
HOLDER COVER
INNER CABLE
RAIL HOLDER B
SLIDER
RAIL HOLDER A
GUIDE RAIL
Replacement, page 20-55
MOTOR
Replacement, page 20-54
FRAME SEAL
REAR DRAIN TUBE
CLIP
TUBE CLIP
FRAME
Replacement, page 20-54
TUBE CLIP
REAR DRAIN VALVE
FRONT DRAIN VALVE
FRONT DRAIN TUBE

Troubleshooting

Symptom	Probable Cause
Water leaks	1. Clogged drain tube. 2. Gap between glass weatherstrip and roof panel. 3. Defective or improperly installed glass weatherstrip. 4. Gap between drain seal and roof panel.
Wind noise	1. Excessive clearance between glass weatherstrip and roof panel.
Motor noise	1. Loose motor. 2. Worn gear or bearing. 3. Cable assembly deformed.
Glass does not move, but motor turns	1. Clutch out of adjustment. 2. Foreign matter stuck between guide rail and slider. 3. Inner cable loose. 4. Cable assembly not attached properly.
Glass does not move and motor does not turn (glass can be moved with moonroof wrench)	1. Blown fuse. 2. Faulty switch. 3. Battery run down. 4. Defective motor. 5. Faulty relay.

Glass Height Adjustment

The roof panel should be even with the glass weatherstrip, to within 1.7 $^{+0.5}_{-1.0}$ mm (0.07 $^{+0.02}_{-0.04}$ in.) all the way around. If not, open the glass fully, and:

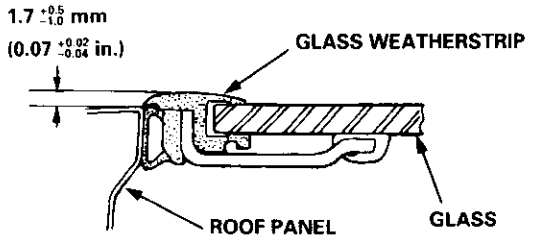

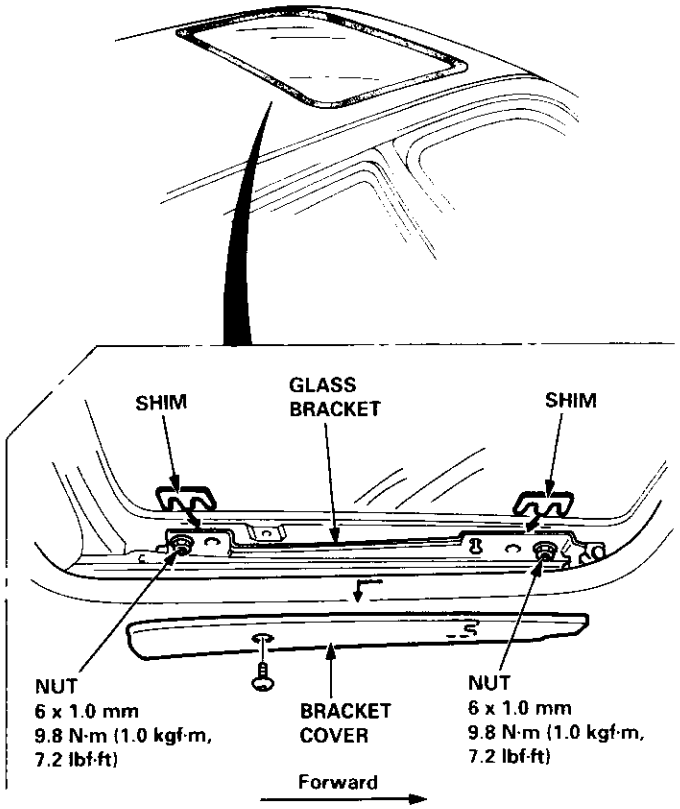

1. Remove the bracket cover.
2. Loosen the nuts, and install the shims between the glass frame and glass bracket as shown.

   Shim thickness: Front max. 3 mm (0.12 in.)
   Rear max. 2 mm (0.08 in.)

3. Repeat on opposite side if necessary.

Glass, Glass Bracket and Sunshade Replacement

1. Close the glass fully.
2. Slide the sunshade all the way back.
3. Remove both bracket covers.

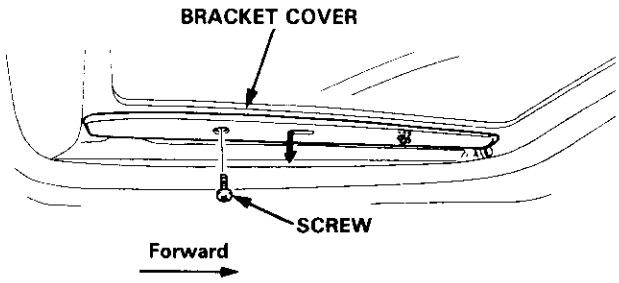

4. Remove the nuts from both glass brackets.

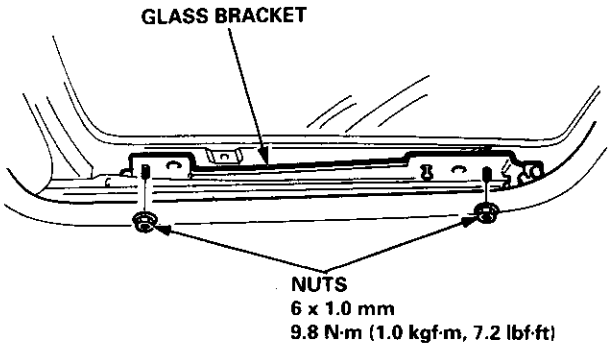

5. Remove the glass by lifting up and pulling forward as shown.

   NOTE: Do not damage the roof panel.

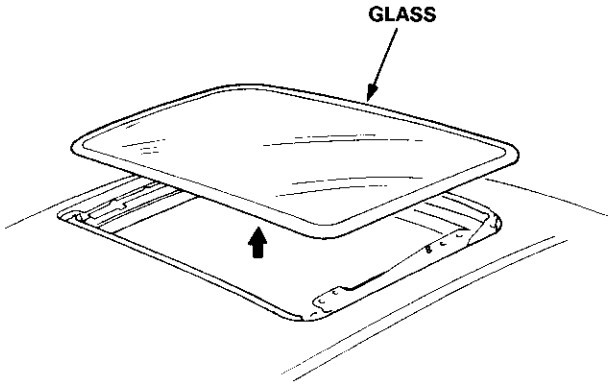

6. Remove the drain channel.

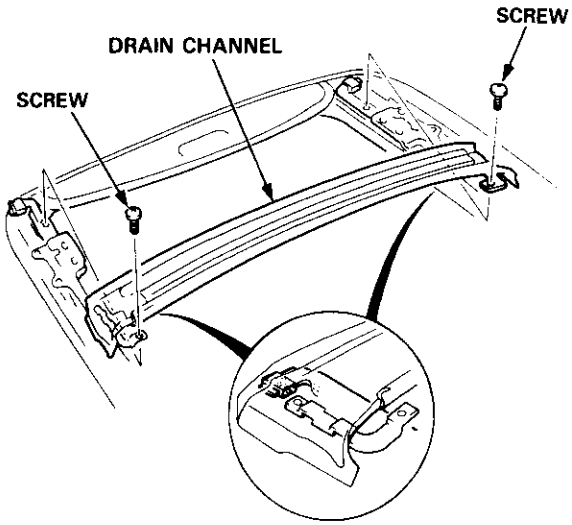

7. Remove the holder cover, then remove the rail holder B.

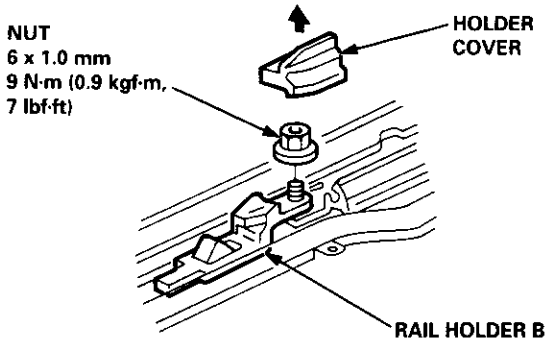

8. Using the moonroof wrench, move the glass bracket to the position where the moonroof normally pivots down, and remove the screws.

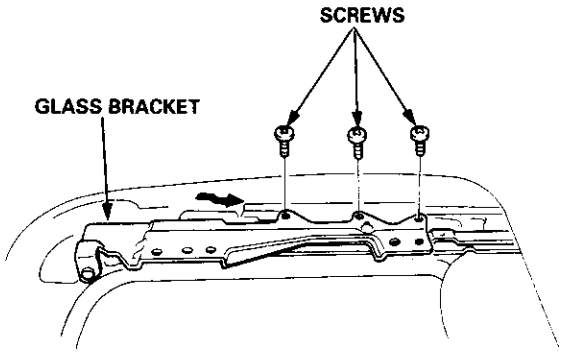

9. Remove the rail holder A.

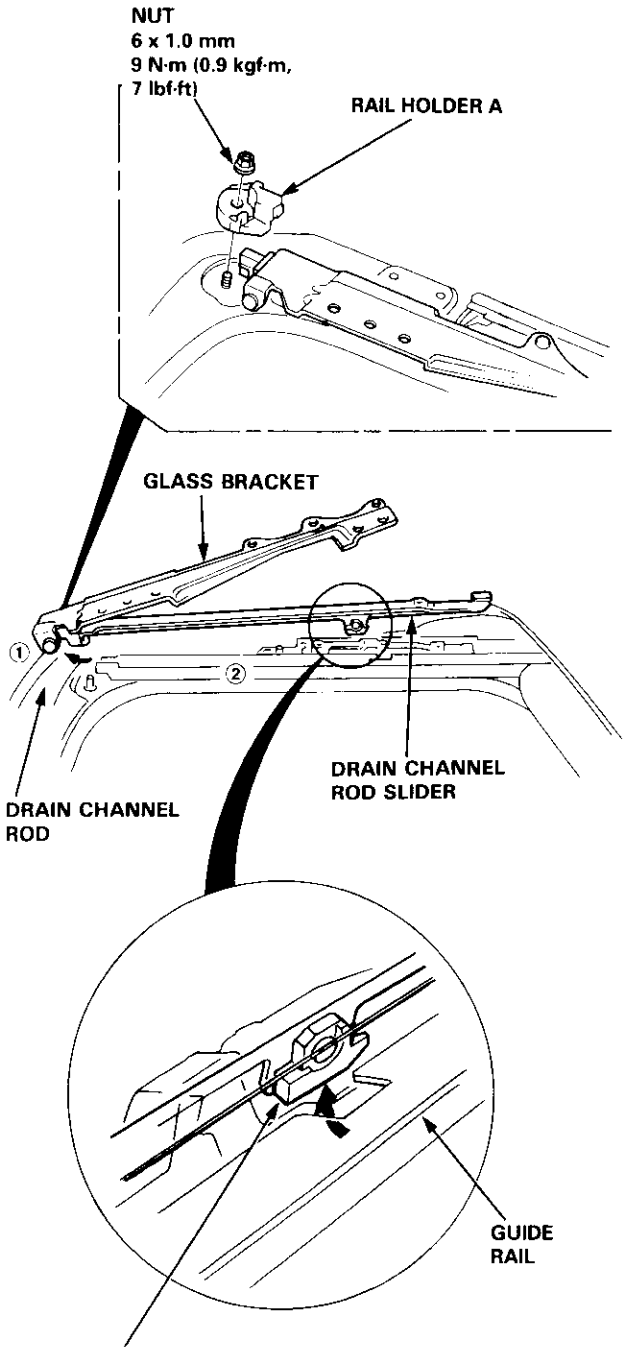

DRAIN CHANNEL ROD STOP
Rotate as shown to remove it from the guide rail.

10. Remove the drain channel rod slider by moving the cable slider forward using the moonroof wrench.

11. Detach the drain channel rod stop from the cutout of the guide rail as shown.

12. Slide the sunshade forward, then remove it.

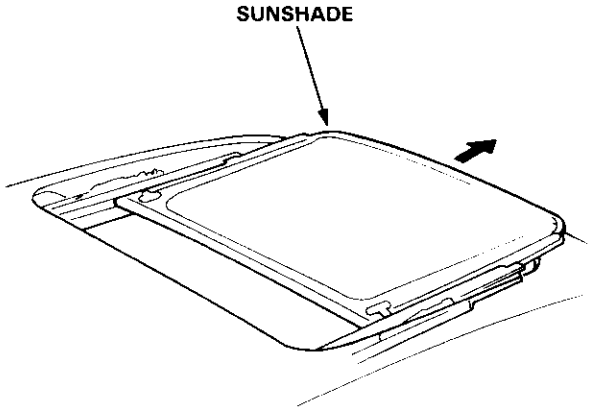

13. Installation is the reverse of the removal procedure.

    NOTE: Check the glass height (see page 20-51).

14. Check for water leaks.

    NOTE: Do not use high-pressure water.

Motor, Drain Tube and Frame Replacement

CAUTION:
- **Put on gloves to protect your hands.**
- **Be careful not to damage the seats, dashboard and other interior trim.**

1. Remove the headliner (see page 20-64).

2. Disconnect the motor connector and glass position switch connector.

   NOTE: When removing the motor, detach the connector from the frame, remove the bolts and nuts, then remove the motor.

3. Remove the glass (see page 20-52).

4. Disconnect the drain tubes, and detach the ceiling light harness.

5. Remove the frame mounting bolts.

   NOTE:
   - An assistant is helpful when removing the bolts.
   - Remove the front bolts last.

6. Detach the rear hooks by moving the frame forward, then remove the frame.

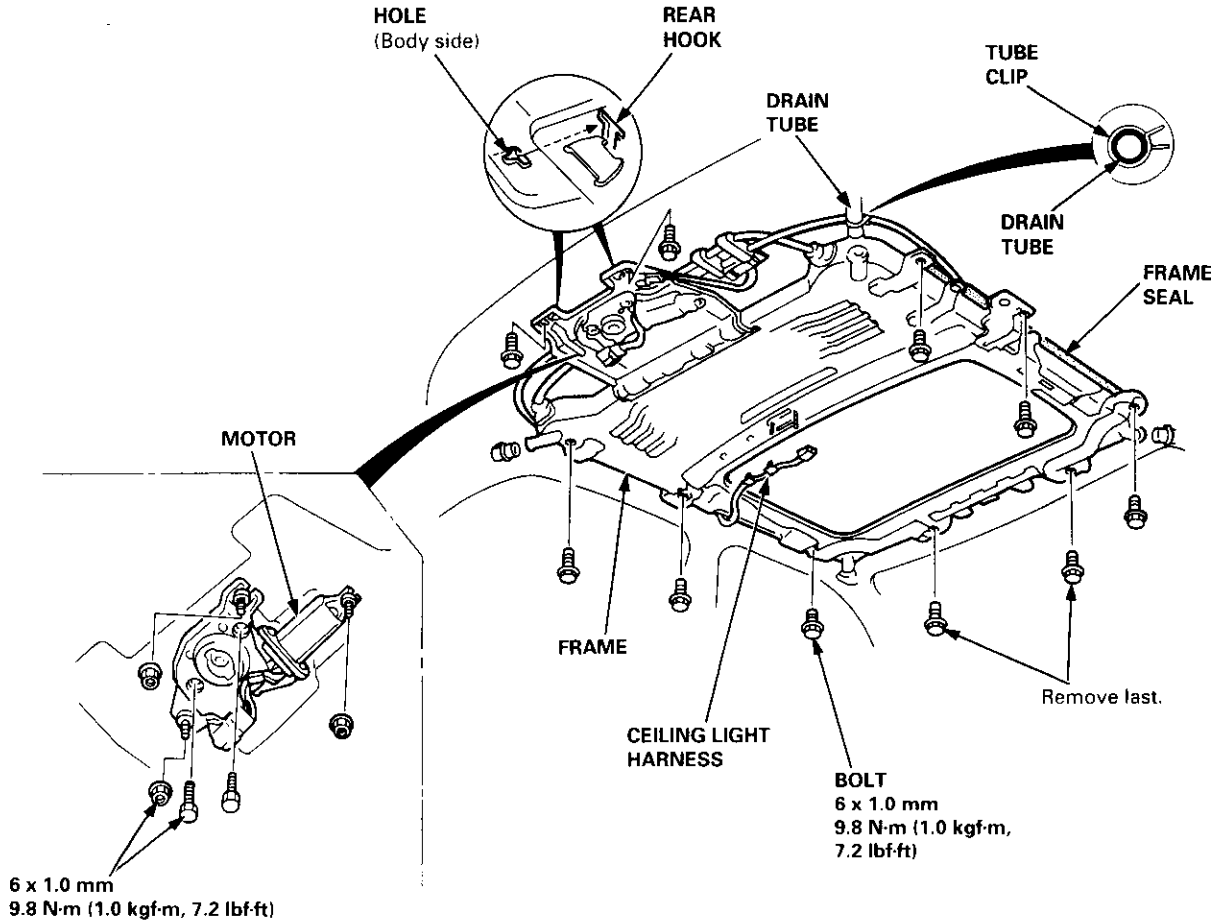

7. Pull the drain tubes out the front and rear pillars.

   NOTE: Before pulling out the drain tube, tie a string to the end of it so it can be reinstalled.

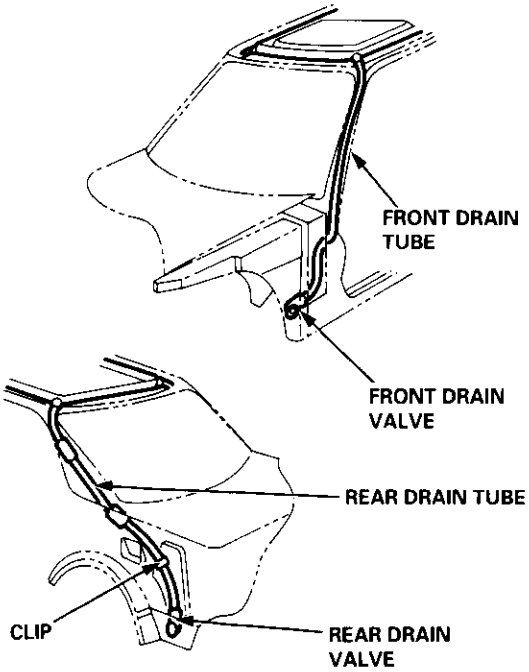

8. Installation is the reverse of the removal procedure.

   NOTE:
   - Before installing the frame, clear the drain tubes and drain valves by using compressed air.
   - Check the frame seal.
   - Clean the surface of the frame.
   - When installing the frame, first attach the rear hooks into the body holes.
   - When connecting the drain tube, slide it over the frame nozzle at least 10 mm (0.39 in.).
   - Install the tube clip as shown.

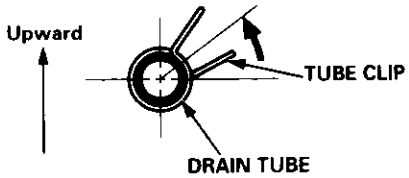

9. Check for water leaks.

   NOTE: Do not use high-pressure water.

Guide Rails/Cable Assembly Replacement

CAUTION: Put on gloves to protect your hands.

1. Remove the frame.

2. Remove the motor and glass bracket (see page 20-52).

3. Remove the nuts, and lift off each guide rail, then remove the cable assembly with sliders attached.

   NOTE: Take care not to bend the cable tubes and guide rails.

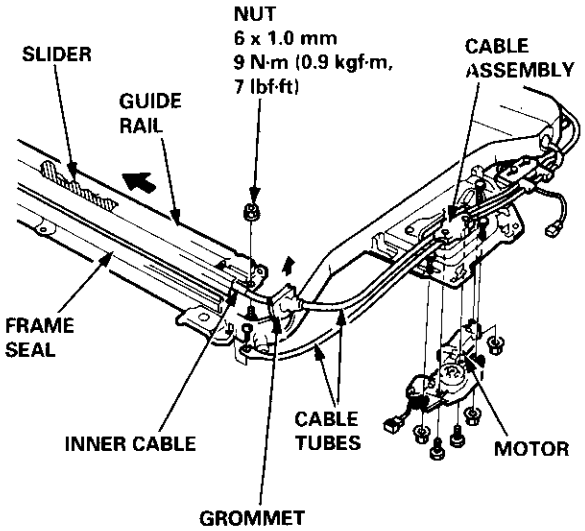

4. Installation is the reverse of the removal procedure.

   NOTE:
   - Damaged parts should be replaced.
   - Grease the sliding portion with Super High Temp Urea Grease, P/N 08758 – 9002.
   - Fill the groove in each grommet with sealant.

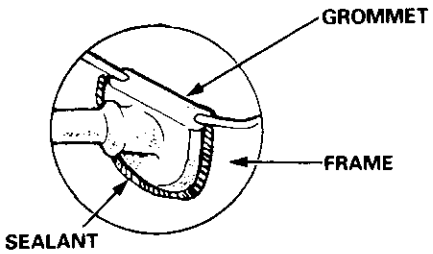

   - Install the frame seal securely.
   - Before installing the motor, make sure both sliders are parallel.
   - Before installing the motor, install the frame and glass, then check the opening drag (see page 20-57).

Switch Plate Adjustment (Fully Closed Position)

1. Remove the headliner (see page 20-64).
2. Using the moonroof wrench, close the glass fully.

   NOTE: Check the glass fit to the roof panel.
3. Using an open-end wrench, loosen the switch plate mounting bolts.
4. Adjust position of the switch plate (switch cam) as shown.
5. Check the operation of the glass (from tilt-up position to fully closed position, from the fully open position to the fully closed position) by operating the moonroof switch.

   NOTE: Check the glass height (see page 20-51).

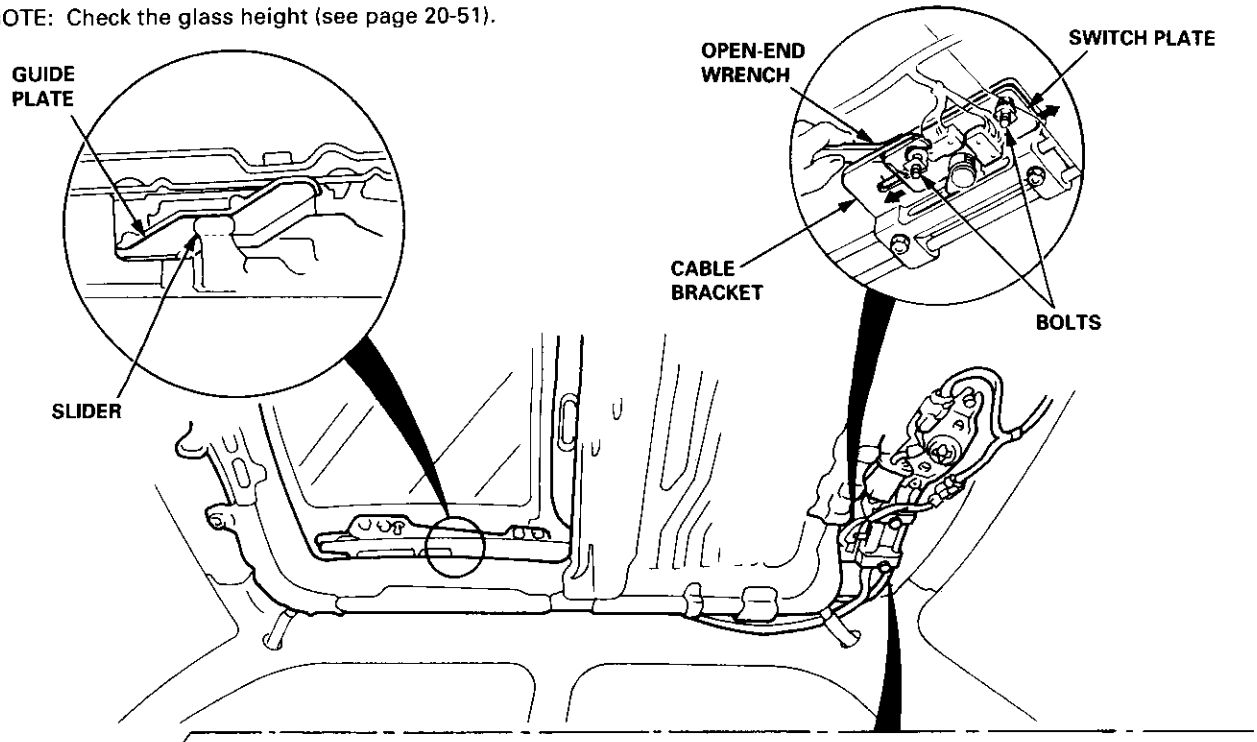

Check the switch plate contacts the cable bracket.

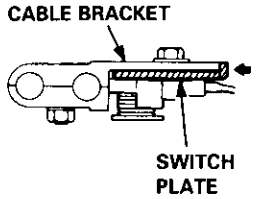

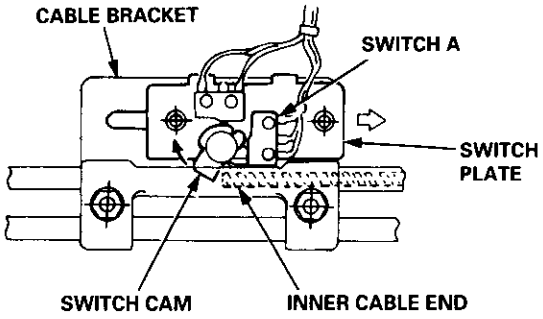

While moving the switch plate little by little, secure the switch plate at the position where the switch cam contacts the switch A (a faint click is heard).

6. Close the glass fully, and check for water leaks.

   NOTE: Do not use high-pressure water.

Opening Drag Check (Motor Removed)

Before installing the motor, measure the effort required to open the glass using a spring scale as shown.

CAUTION: When using a spring scale, protect the leading edge of the glass with a shop towel.

If load is over 40 N (4 kgf, 9 lbf), check the side clearance and glass height (see page 20-51).

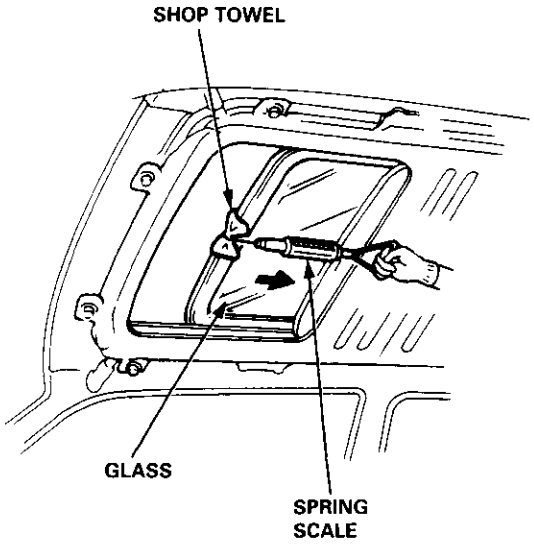

Closing Force Check (Motor Installed)

1. After installing all removed parts, have a helper hold the switch to close the glass while you measure the force required to stop it. Attach a spring scale as shown. Read the force as soon as the glass stops moving, then immediately release the switch and spring scale.

   CAUTION: When using a spring scale, protect the leading edge of the glass with a shop towel.

   Closing Force: 200 – 290 N (20 – 30 kgf, 44 – 66 lbf)

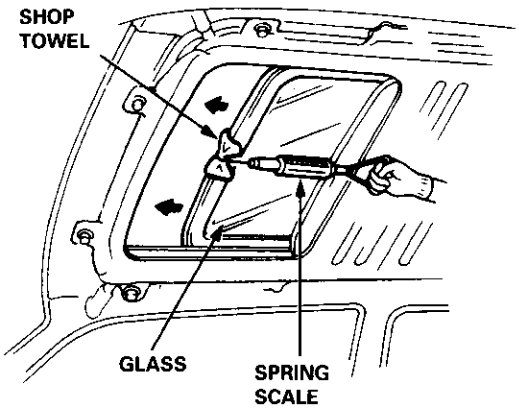

2. If the force in not within specification, install a new lock washer, adjust the tension by turning the motor clutch adjusting nut, and bend the lock washer against the motor clutch adjusting nut.

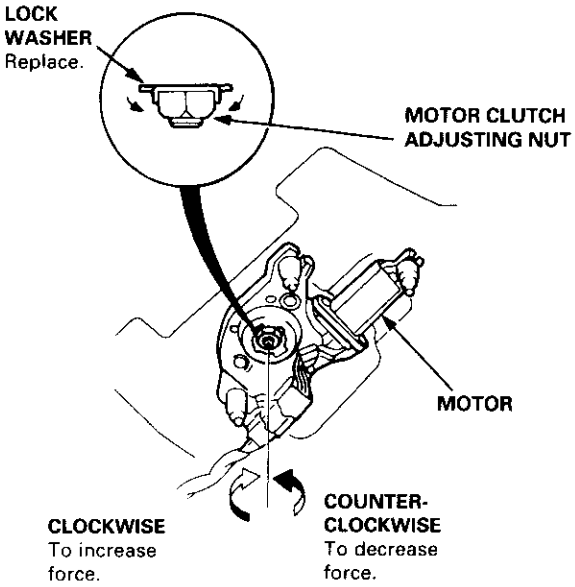

Component Location Index

SRS components are located in the parts areas marked with an asterisk (*). Review the SRS component locations, precautions, and procedures in the SRS section (24) before performing repairs or service.

2D/3D/4D:

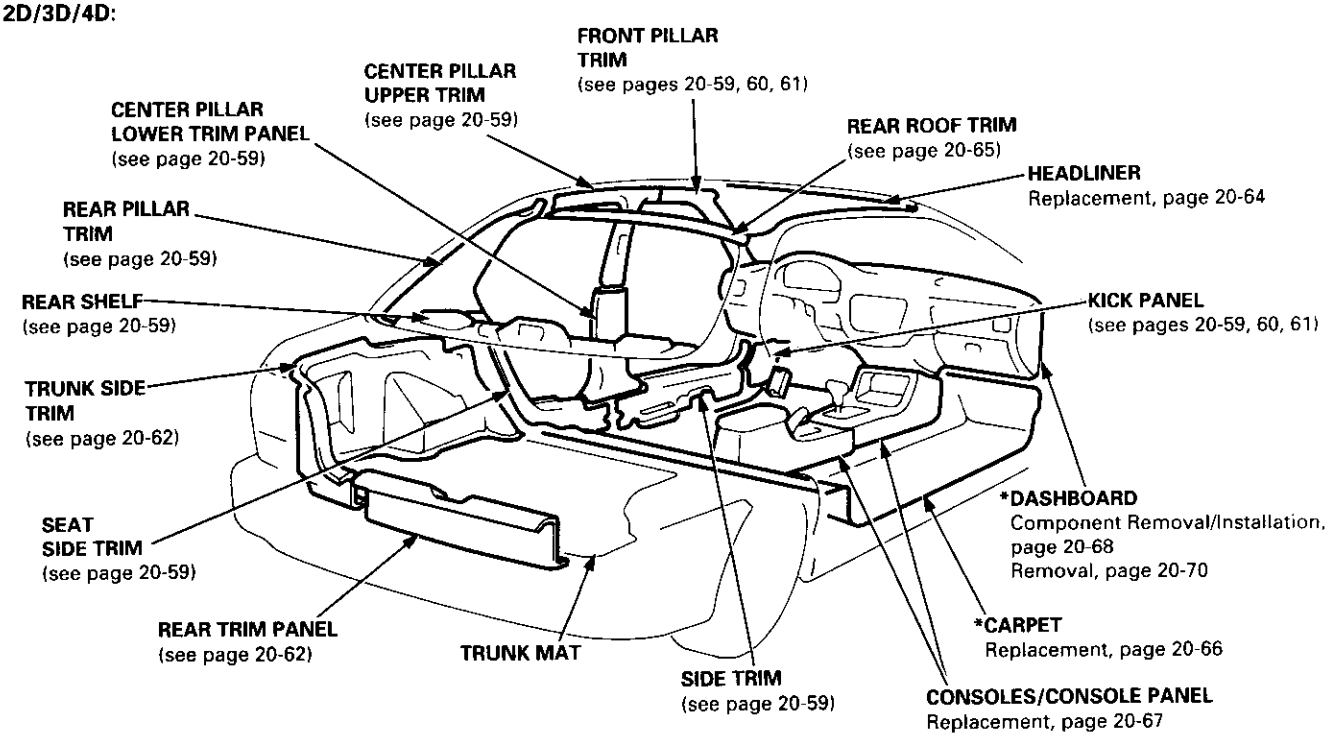

3D:

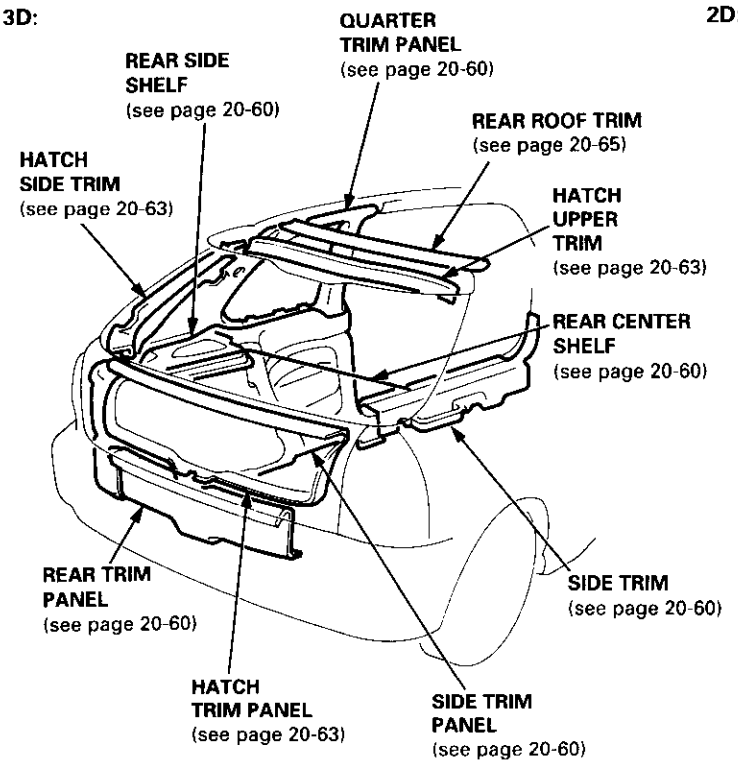

2D:

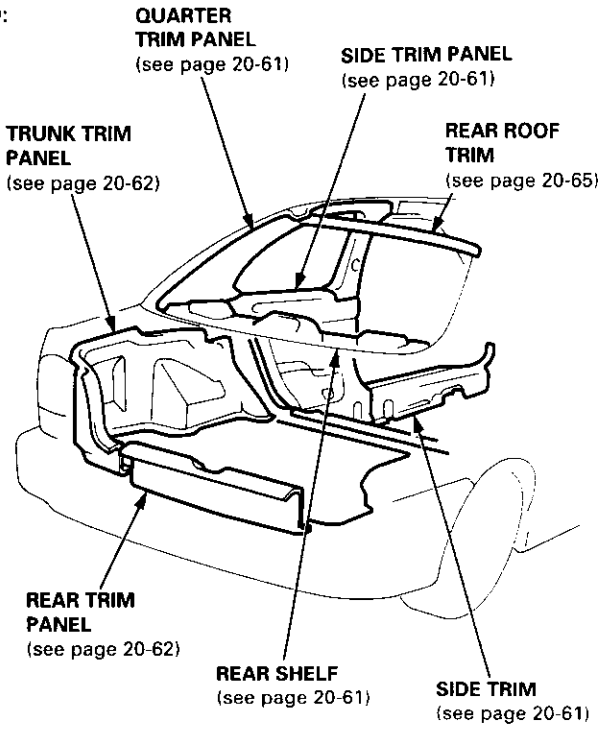

Replacement

CAUTION:
- **Put on gloves to protect your hands.**
- **When prying with a flat-tip screwdriver, wrap it with protective tape to prevent damage.**

NOTE: Take care not to bend or scratch the trim and panels.

4D:

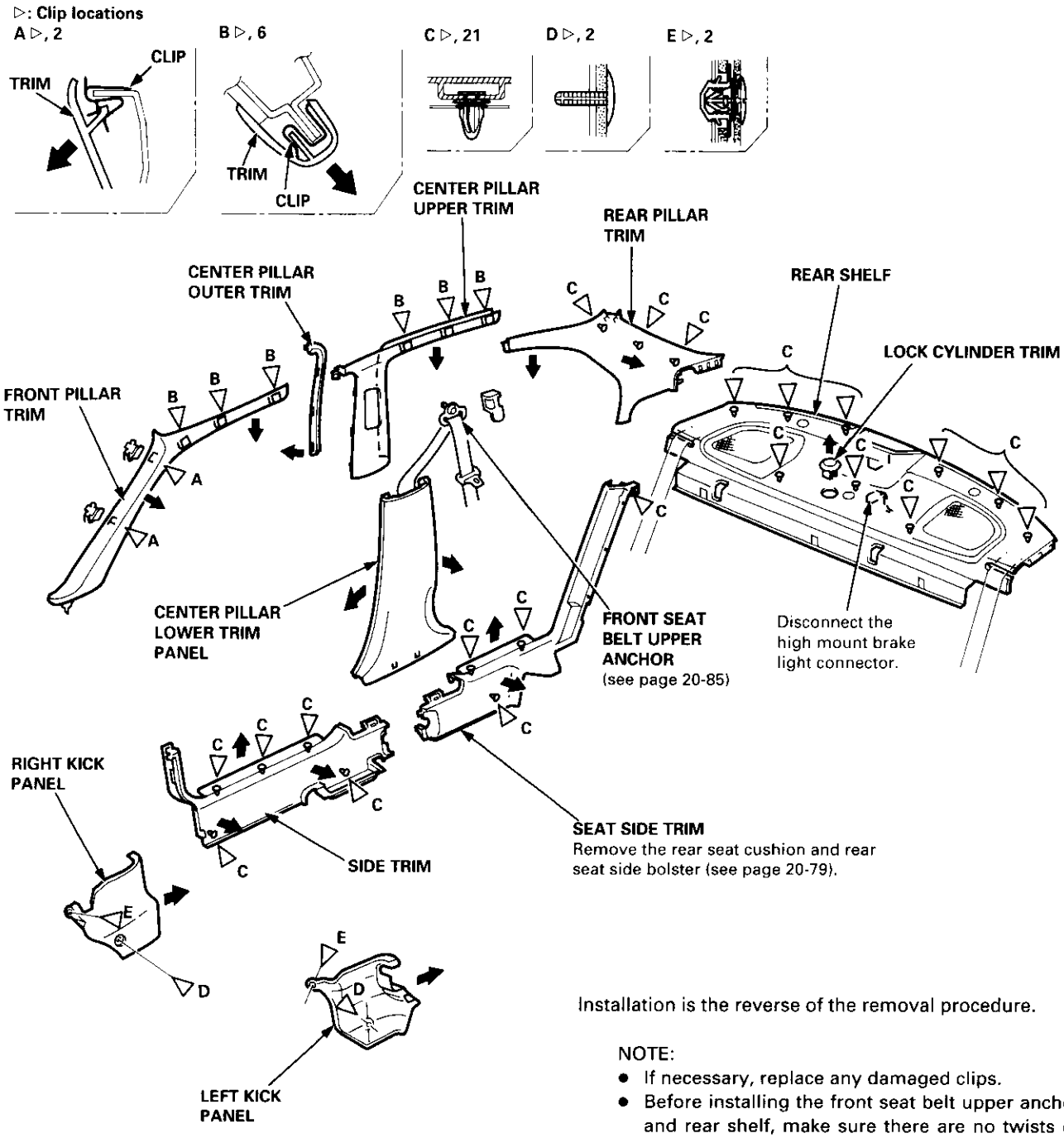

Installation is the reverse of the removal procedure.

NOTE:
- If necessary, replace any damaged clips.
- Before installing the front seat belt upper anchor and rear shelf, make sure there are no twists or kinks in the seat belts.

(cont'd)

Replacement (cont'd)

3D:

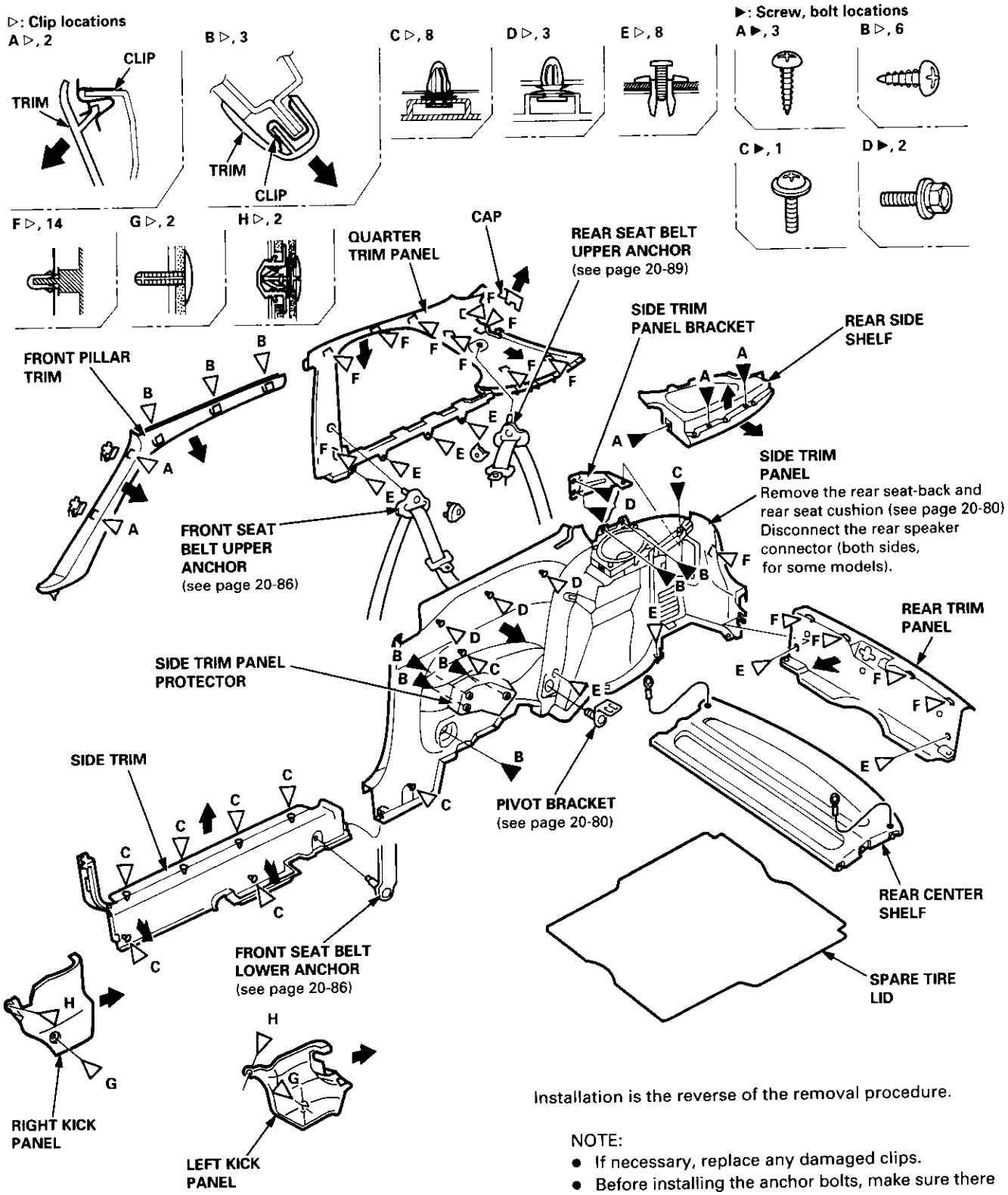

Installation is the reverse of the removal procedure.

NOTE:

- If necessary, replace any damaged clips.
- Before installing the anchor bolts, make sure there are no twists or kinks in the seat belts.

2D:

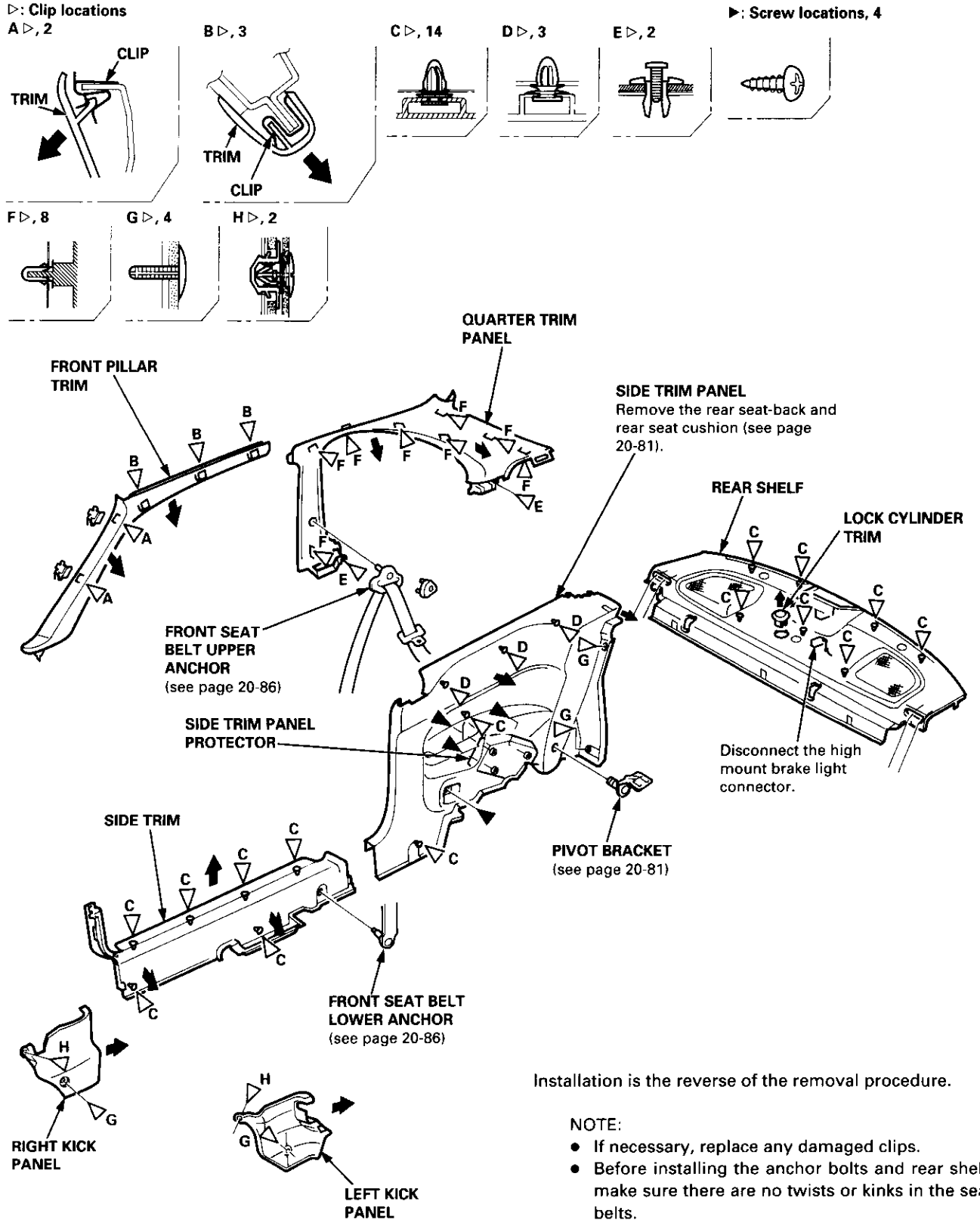

Installation is the reverse of the removal procedure.

NOTE:

- If necessary, replace any damaged clips.
- Before installing the anchor bolts and rear shelf, make sure there are no twists or kinks in the seat belts.

Replacement

CAUTION:
- **Put on gloves to protect your hands.**
- **When prying with a flat-tip screwdriver, wrap it with protective tape to prevent damage.**

NOTE:
- Take care not to bend or scratch the trim and panels.
- When removing the trunk side trim or trunk trim panel, fold the seat-back forward.

Japan-produced:

4D:

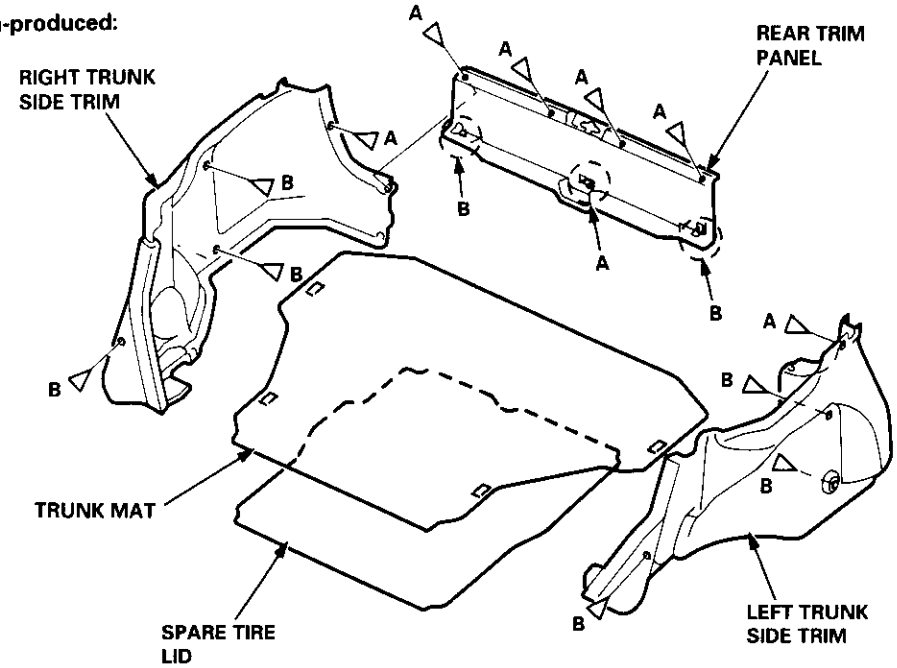

▷: **Clip locations**

A ▷, 6

NOTE: Do not push the inner clip in too far.

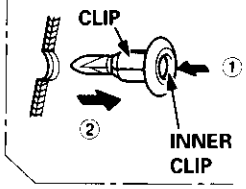

B ▷, 6

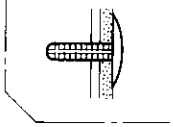

◯ :**Hook locations**

A ◯, 1

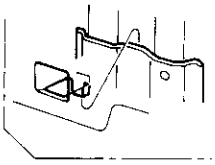

B ◯, 2

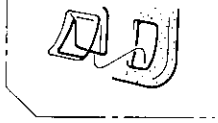

USA-produced:

4D:

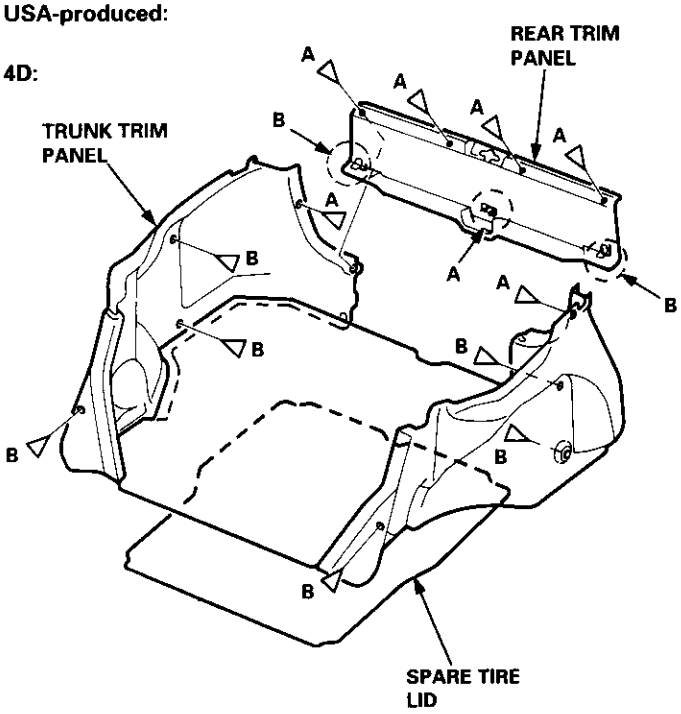

2D:

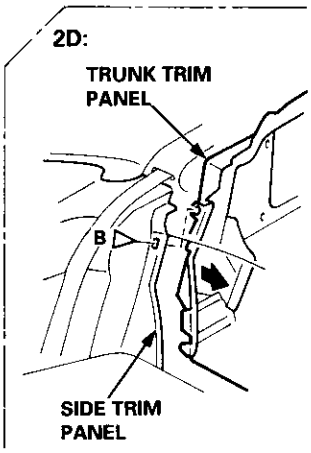

Installation is the reverse of the removal procedure.

NOTE:
- If necessary, replace any damaged clips.
- To install the A clips, pull the inner clip up, install the clip, then push the inner clip until it's flush.

Replacement

CAUTION:
- **Put on gloves to protect your hands.**
- **When prying with a flat-tip screwdriver, wrap it with protective tape to prevent damage.**

NOTE: Take care not to bend or scratch the trim and panel.

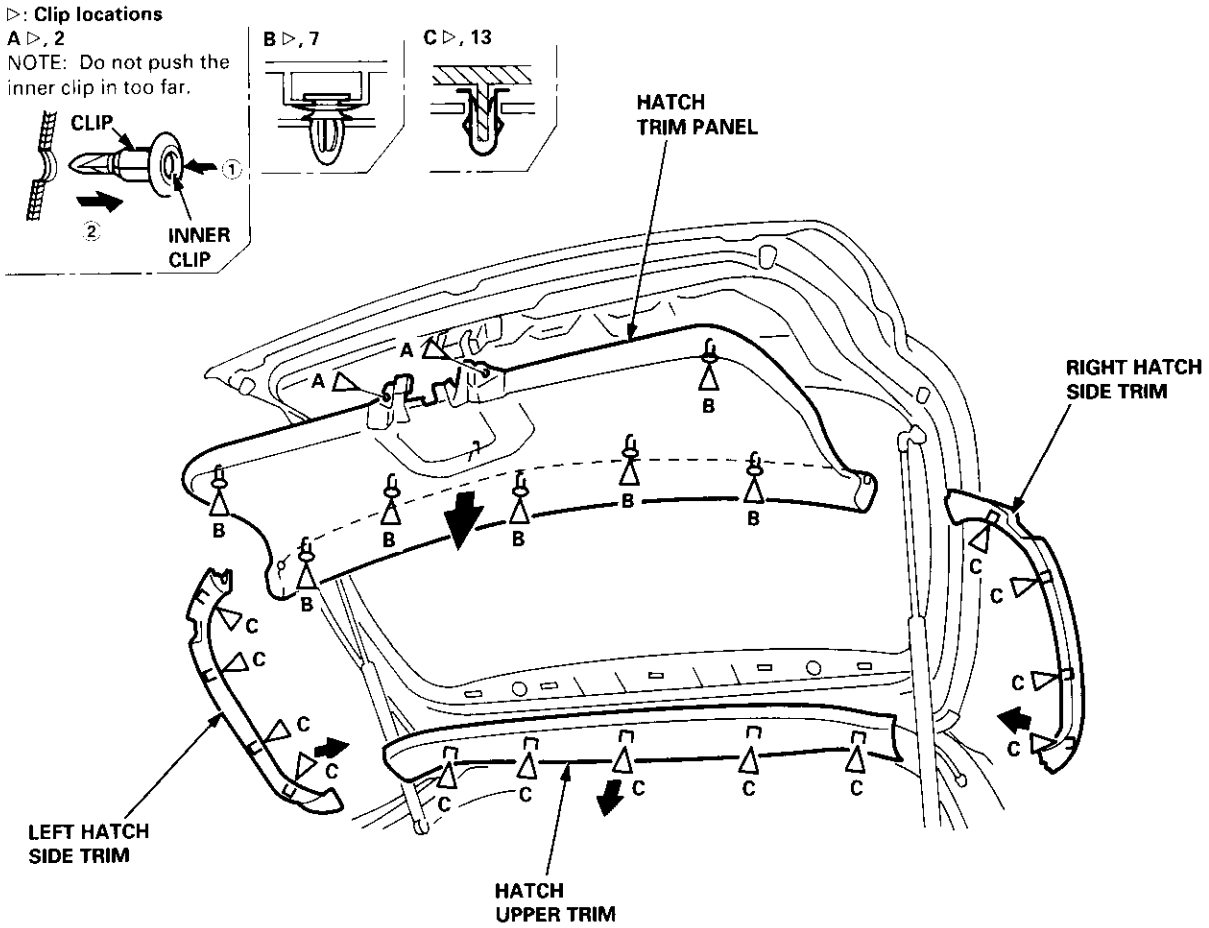

Installation is the reverse of the removal procedure.

NOTE:
- If necessary, replace any damaged clips.
- To install the A clips, pull the inner clip up, install the clip, then push the inner clip until it's flush.

Replacement

CAUTION: When prying with a flat-tip screwdriver, wrap it with protective tape to prevent damage.

NOTE:
- Take care not to bend and scratch the headliner.
- Be careful not to damage the dashboard and other interior trim.

1. Remove:

   4D:
   - Front pillar trim (both sides, see page 20-59)
   - Center pillar lower trim panel (both sides, see page 20-59)
   - Upper anchor bolt from the front seat belt (both sides, see page 20-85)
   - Center pillar outer trim and center pillar upper trim (both sides, see page 20-59)
   - Ceiling light (see section 23)
   - Rearview mirror (see page 20-25)

   3D:
   - Front pillar trim (both sides, see page 20-60)
   - Right rear seat-back and rear seat cushion (see page 20-80)
   - Rear center shelf (see page 20-60)
   - Rear side shelf and side trim panel (right side, see page 20-60)
   - Upper anchor bolts from the front and rear seat belts (right side, see pages 20-86, 89)
   - Quarter trim panel (right side, see page 20-60)
   - Ceiling light (see section 23)
   - Rearview mirror (see page 20-25)

   2D:
   - Front pillar trim (both sides, see page 20-61)
   - Right rear seat-back and rear seat cushion (see page 20-81)
   - Side trim panel (right side, see page 20-61)
   - Upper anchor bolt from the front seat belt (right side, see page 20-86)
   - Quarter trim panel (right side, see page 20-61)
   - Ceiling light (see section 23)
   - Rearview mirror (see page 20-25)

2. Remove the sunvisor and holder from each side.

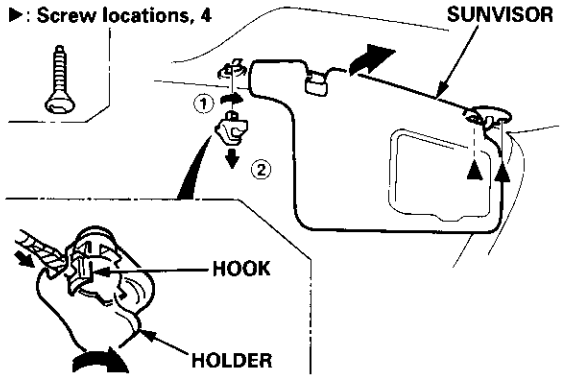

3. Remove the grab handles and coat hanger.

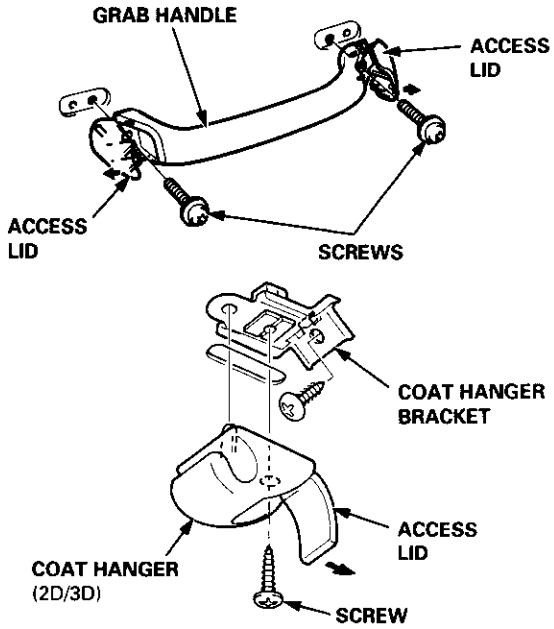

4. Remove the rear roof trim and clips, and remove the roof trim and socket plug (moonroof model).

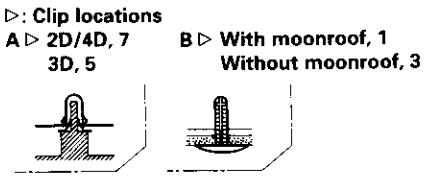

2D/3D/4D:

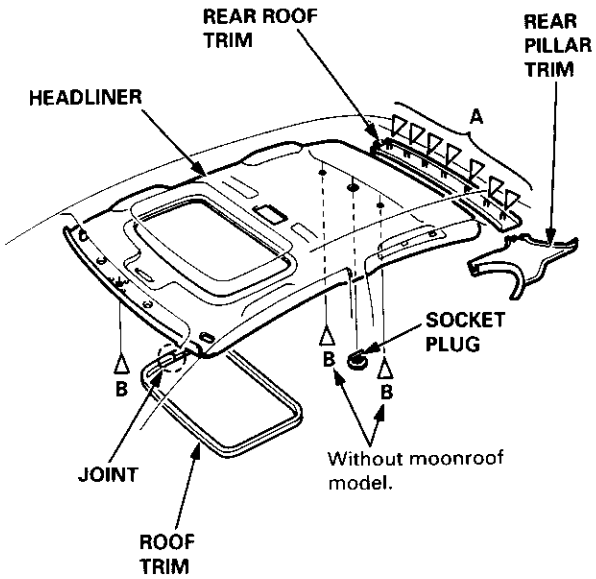

3D:

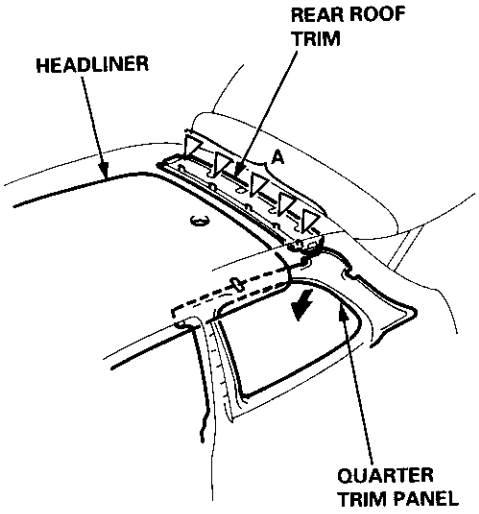

2D:

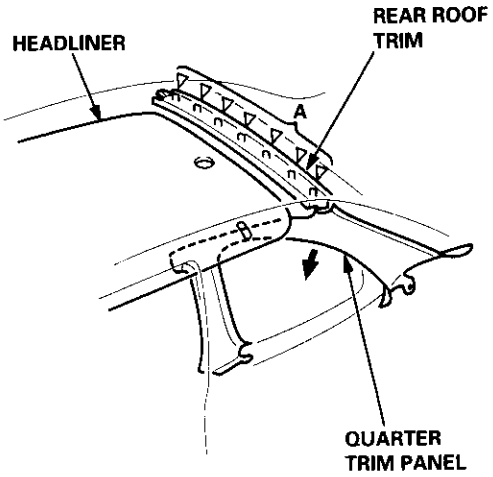

5. 4D: Lower the rear pillar trim on both sides.
   3D: Remove the upper anchor bolts from the front and rear seat belts (see pages 20-86, 89), then lower the quarter trim panel on left side.
   2D: Remove the upper anchor bolt from the front seat belt (see page 20-86), then lower the quarter trim panel on left side.

6. Lower the headliner.

7. Carefully remove the headliner through the passenger's door opening (2D/4D) or hatch opening (3D).

8. Installation is the reverse of the removal procedure.

   NOTE:
   - When inserting the headliner through the opening, be careful not to fold or bend it. Also, be careful not to scratch the body.
   - Check that both sides of the headliner are securely attached to the trim.
   - When installing the roof trim, install the joint toward the right side (moonroof model).

Replacement

SRS components are located in this area. Review the SRS component locations, precautions, and procedures in the SRS section (24) before performing repairs or service.

1. Remove:
   - Front seat (see page 20-74)
   - Rear seat cushion (see pages 20-79, 80, 81)
   - Kick panel (see pages 20-59, 60, 61)
   - Center pillar lower trim panel (4D, see page 20-59)
   - Front seat belt lower anchor (2D/3D, see page 20-86)
   - Side trim (see pages 20-59, 60, 61)
   - Front and rear consoles
   - Console panel

2. Remove the SRS unit covers.

3. Cut areas Ⓐ and Ⓑ in the carpet, then pull it back as shown.

▷: Clip locations, 2

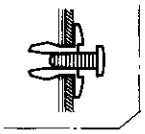

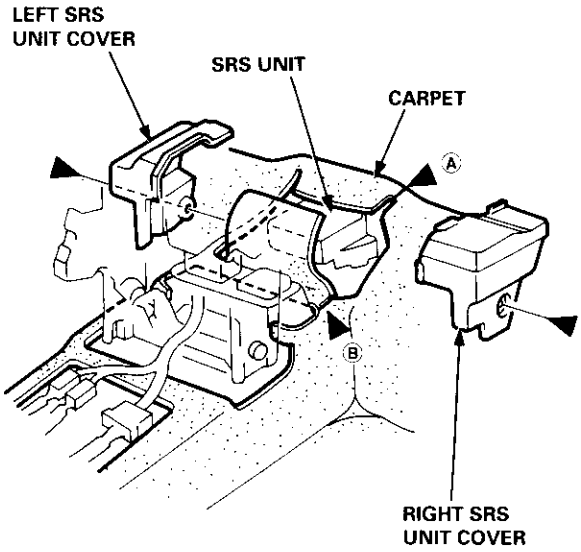

4. Remove the footrest and parking brake lever mounting bolts, and detach the clips, then remove the carpet.

▷: Clip locations, 3 ▶: Bolt locations A▶, 2 B▶, 2

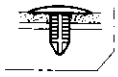

6 x 1.0 mm
9.8 N·m (1.0 kgf·m, 7.2 lbf·ft)

2D/3D/4D:

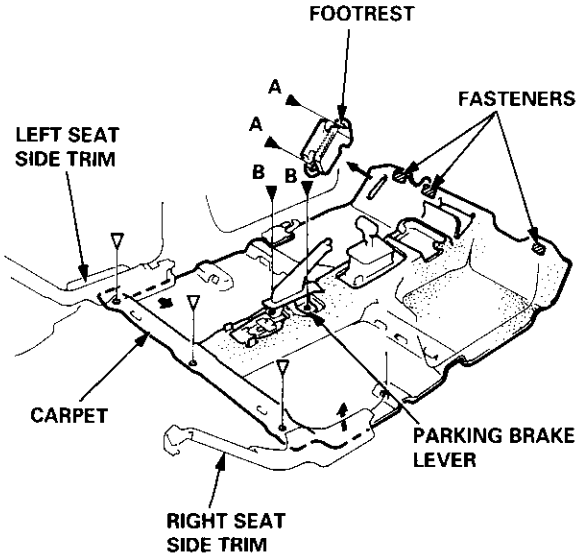

2D/3D:

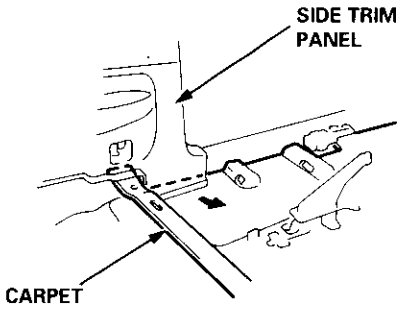

5. Installation is the reverse of the removal procedure.

   NOTE:
   - Take care not to damage, wrinkle or twist the carpet.
   - Make sure the wire harnesses are routed correctly.
   - If necessary, replace any damaged clips.
   - Slip the carpet under the seat side trim (4D) or side trim panel (2D/3D) on each side properly.
   - Reattach the cut areas Ⓐ and Ⓑ in the carpet with wire ties.

Replacement

NOTE: Take care not to scratch the front and rear consoles, front seat and related parts.

Disassemble in numbered sequence.

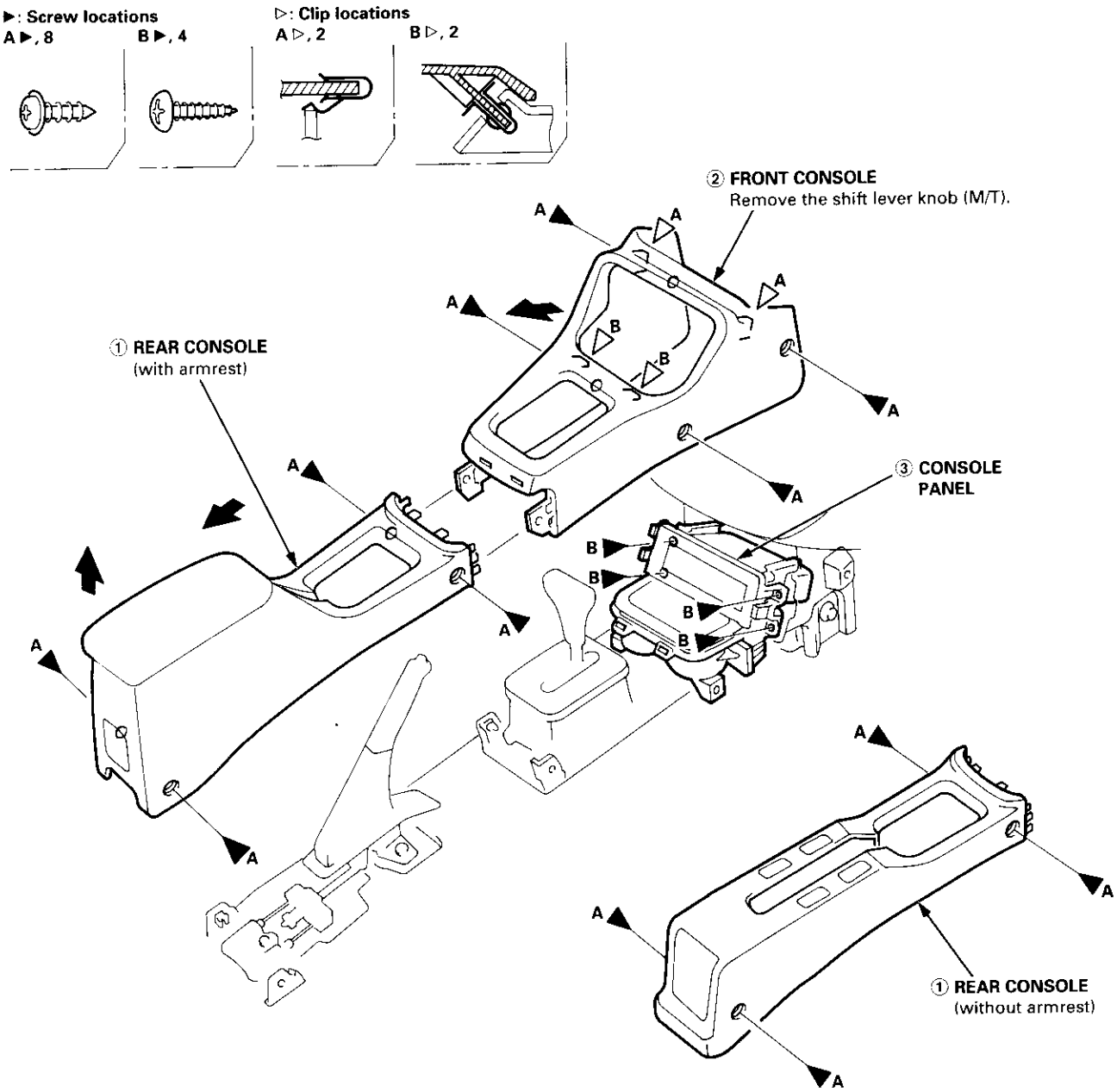

Installation is the reverse of the removal procedure.

NOTE:
- If necessary, replace any damaged clips.
- Make sure the wire harnesses are not pinched.
- Make sure the connector is connected properly.

Component Removal/Installation

CAUTION: When prying with a flat-tip screwdriver, wrap it with protective tape, and apply protective tape around the related parts, to prevent damage.

NOTE: Take care not to scratch the dashboard and related parts.

Instrument panel removal:

1. Lower the steering column.
2. Remove the screws, and detach the clips, then carefully remove the instrument panel.

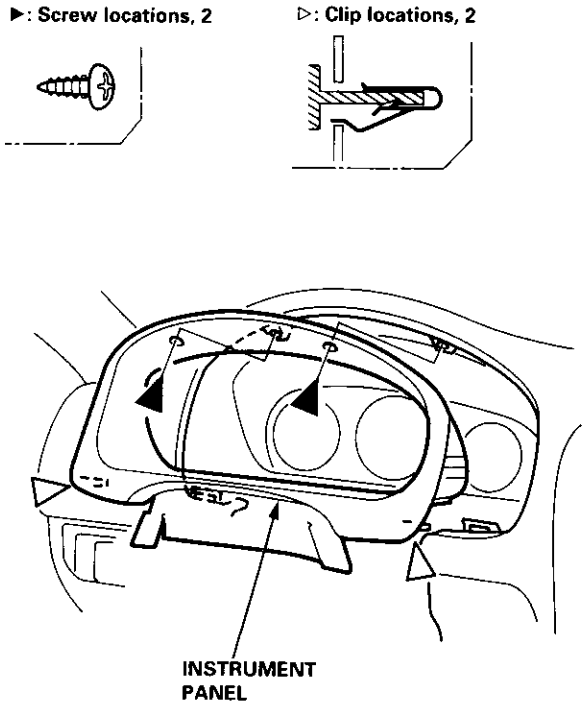

3. Installation is the reverse of the removal procedure.

Driver's dashboard lower cover and knee bolster removal:

SRS components are located in this area. Review the SRS component locations, precautions, and procedures in the SRS section (24) before performing repairs or service.

1. Remove the screws, and detach the clips, then remove the driver's dashboard lower cover. If equipped with power mirrors and moonroof, disconnect the connectors.

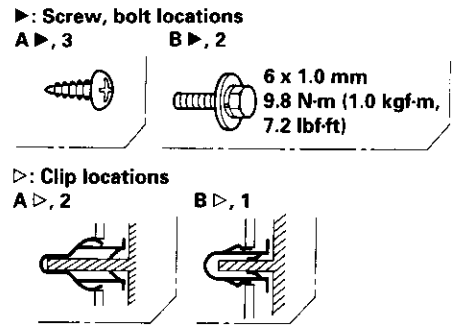

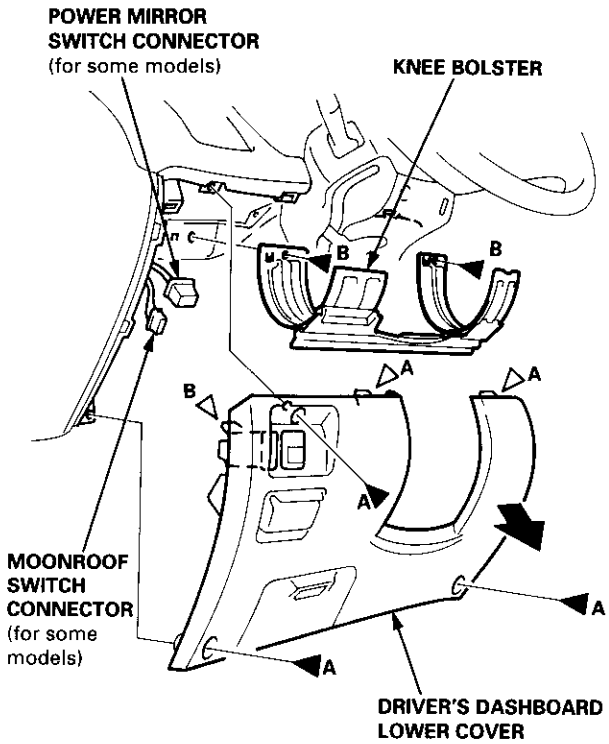

2. Remove the bolts, then remove the knee bolster.
3. Installation is the reverse of the removal procedure.

Glove box removal:

Remove the bolts, then remove the glove box.

▶: Bolt locations, 2

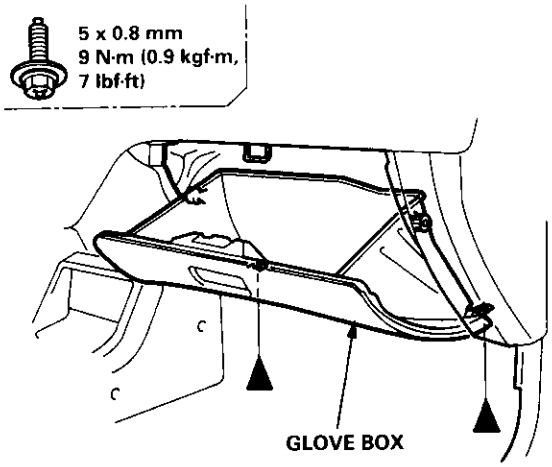

Installation is the reverse of the removal procedure.

Side air vent/Side defogger trim removal:

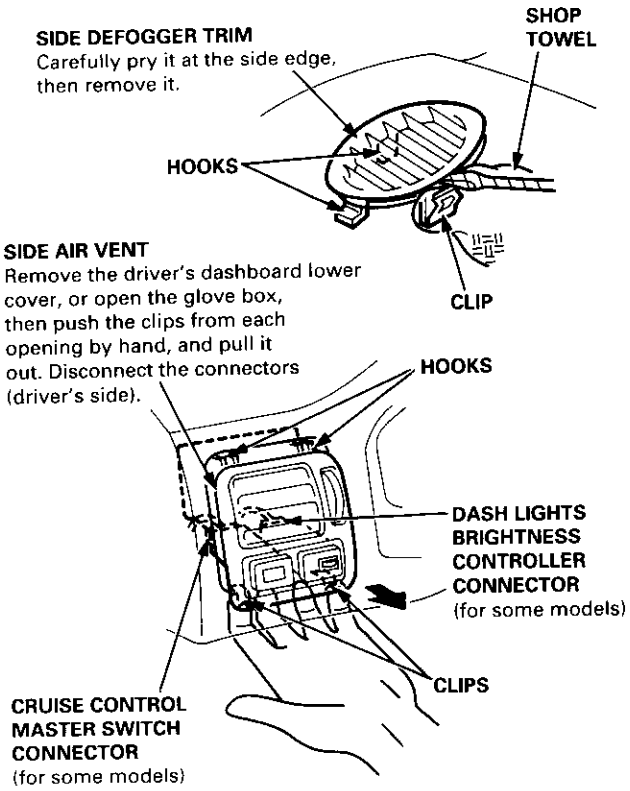

Center dashboard lower cover:

1. Remove:
   - Driver's dashboard lower cover
   - Glove box

2. Remove the screws and bolt, then remove the center dashboard lower cover. Disconnect the accessory socket connector.

▶: Bolt, screw locations
A ▶, 1 B ▶, 5

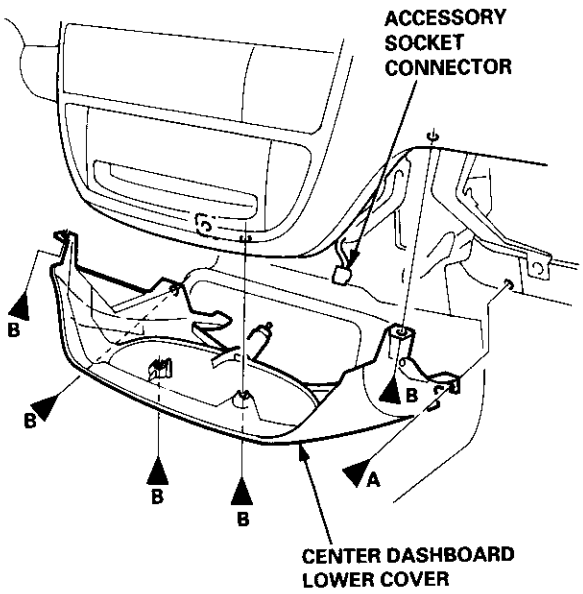

3. Installation is the reverse of the removal procedure.

(cont'd)

Component Removal/Installation (cont'd)

Center panel removal:

1. Remove:
   - Center dashboard lower cover (see page 20-69)
   - Radio (see section 23)

2. Remove the rear window defogger switch and hazard warning switch, then disconnect the connectors.

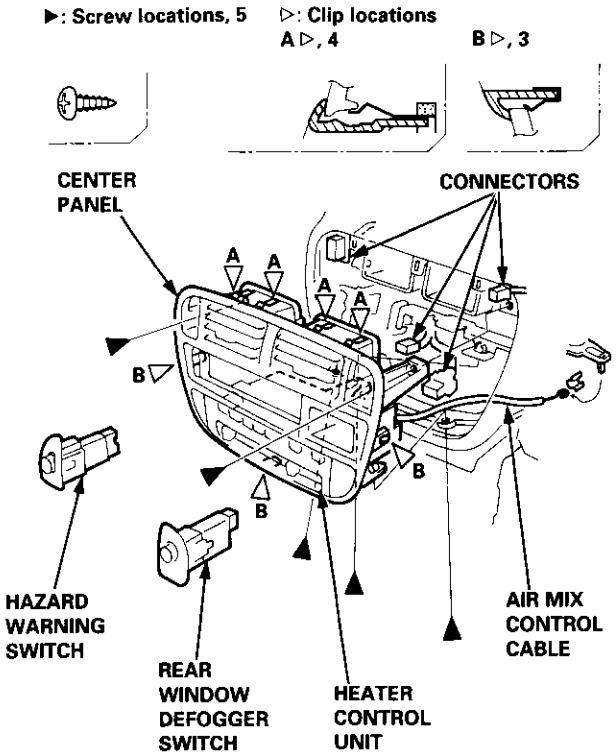

3. Disconnect the air mix control cable, and remove the screws, then pull out the center panel.

4. Disconnect the connectors from the heater control unit.

5. Installation is the reverse of the removal procedure.

   NOTE:
   - Make sure the connectors are connected properly.
   - Adjust the air mix control cable (see section 21).

Removal

SRS components are located in this area. Review the SRS component locations, precautions, and procedures in the SRS section (24) before preforming repairs or service.

NOTE:
- An assistant is helpful when removing and installing the dashboard.
- Take care not to scratch the dashboard, body and related parts.

1. Remove:
   - Front and rear consoles (see page 20-67)
   - Console panel (see page 20-67)
   - Driver's dashboard lower cover and knee bolster (see page 20-68)
   - Glove box (see page 20-69)
   - Center dashboard lower cover (see page 20-69)

2. Lower the steering column (see section 17).

   ⚠ WARNING To avoid accidental deployment and possible injury, always disconnect the driver's airbag connector before lowering the steering column (see section 24).

   NOTE: To prevent damage to the steering column, wrap it with a shop towel.

3. Disconnect the dashboard wire harness connectors, remove the nuts, then move the under-dash fuse/relay box. Disconnect the antenna lead and moonroof relay connectors.

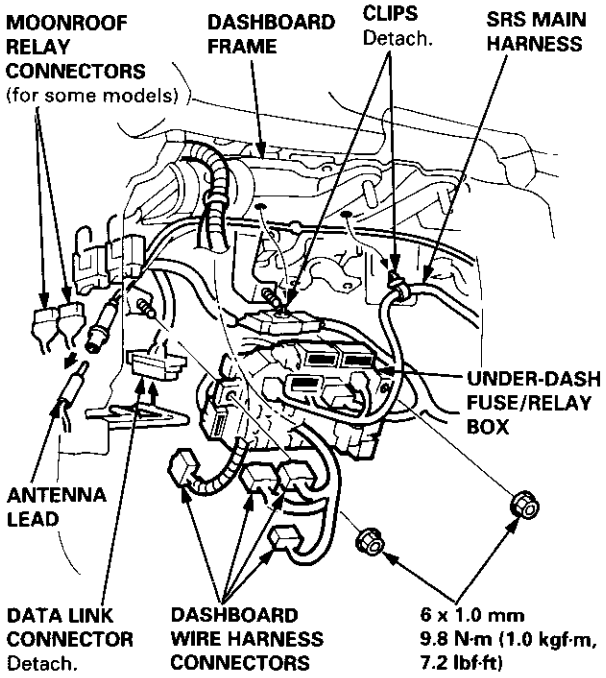

4. Remove the following parts from the dashboard.
   - Driver's dashboard side cover
   - Passenger's dashboard lower cover
   - Dashboard center lid

5. Disconnect the connectors and air mix control cable.

⚠ WARNING **To avoid accidental deployment and possible injury, always disconnect the front passenger's airbag connector when the SRS main harness is disconnected (see section 24).**

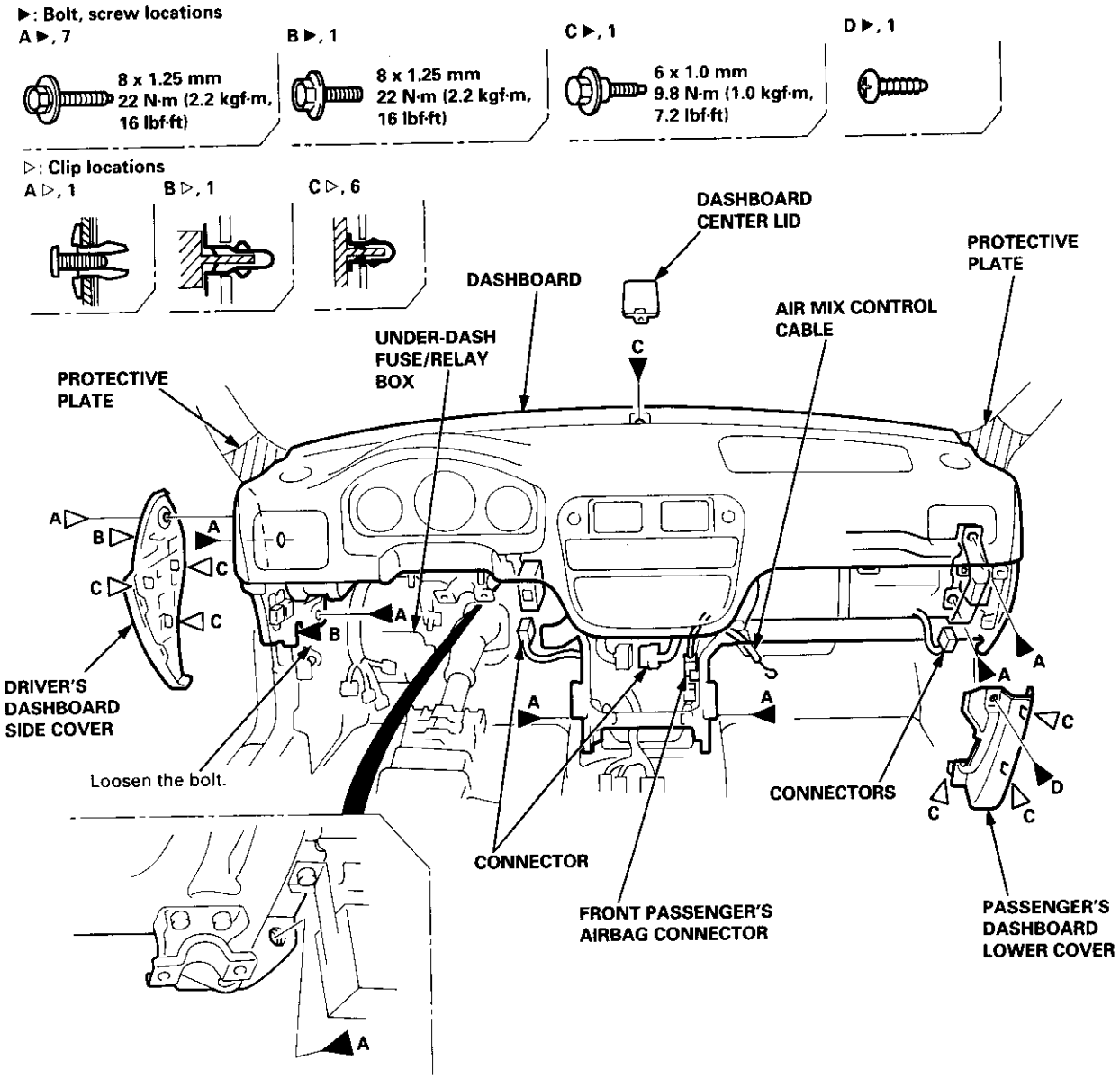

6. Remove the bolts, then lift and remove the dashboard.

CAUTION: Use protective plates on the bottom of the front pillar trim.

(cont'd)

Removal (cont'd)

7. If necessary, remove the dashboard frame from the dashboard.

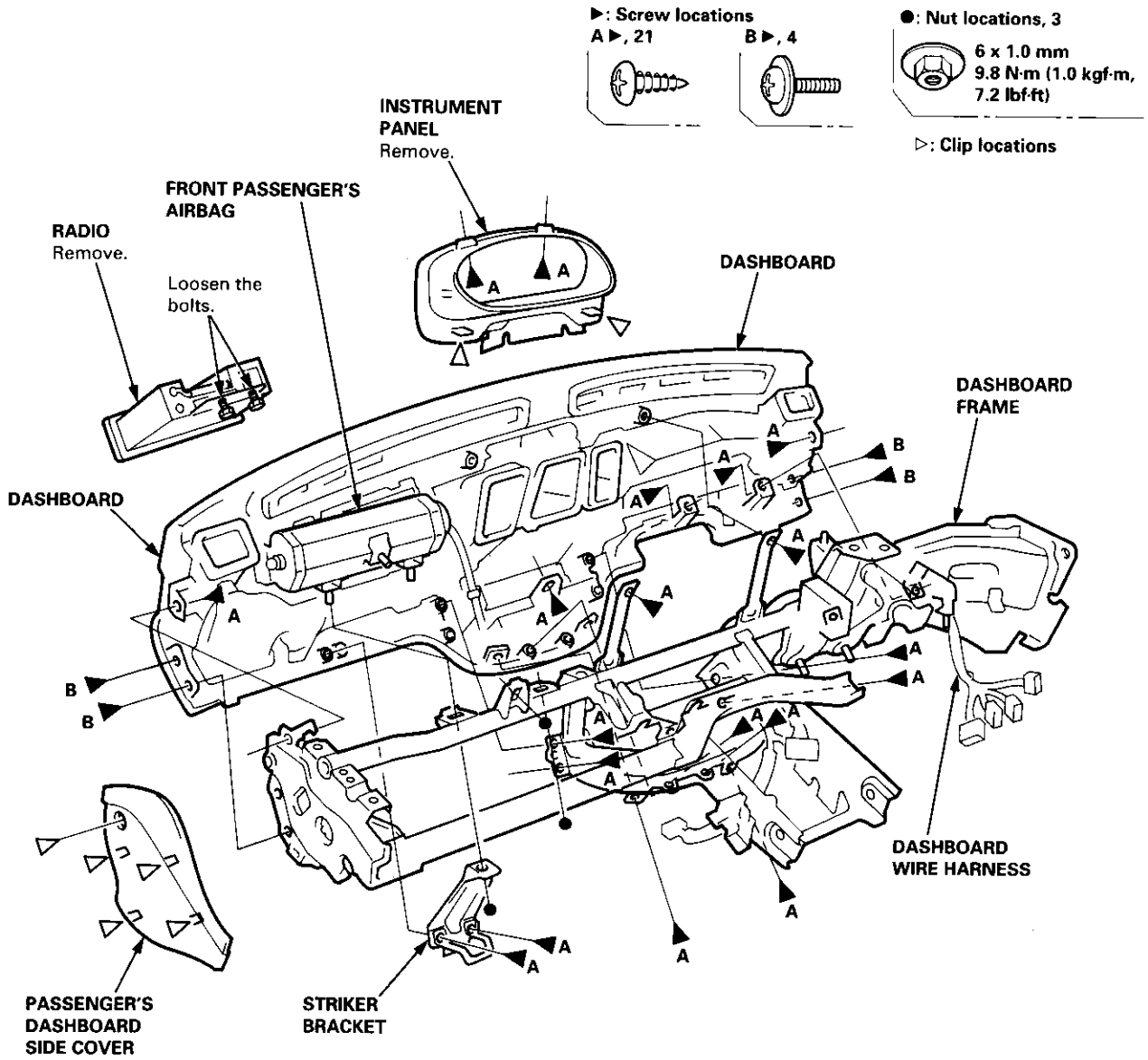

8. Installation is the reverse of the removal procedure.

NOTE:
- Before tightening the bolts, make sure the dashboard wire harnesses are not pinched.
- Make sure the connectors, antenna lead and air mix control cable are connected properly.

Component Location Index

2D/3D/4D:

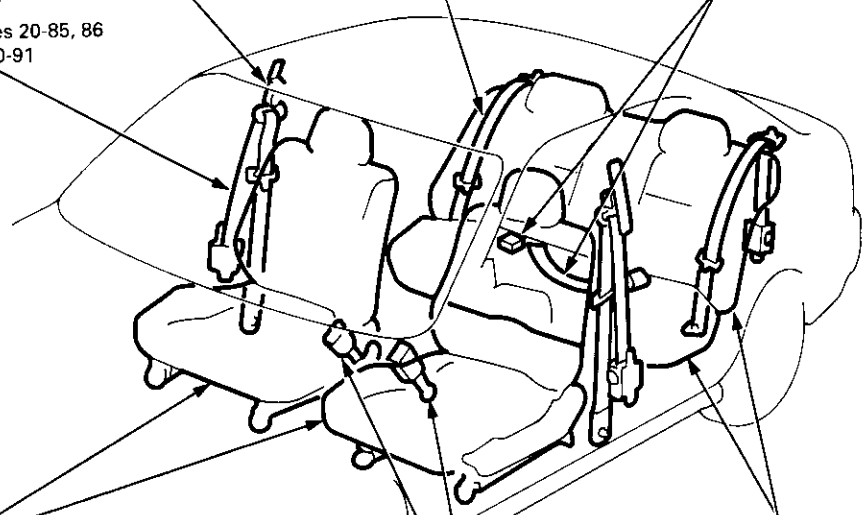

SHOULDER ANCHOR ADJUSTER (4D)
(see page 20-85)

REAR SEAT BELT (2D/4D)
Replacement, page 20-88
Inspection, page 20-91

REAR SEAT BELT BUCKLE/ CENTER BELT TONGUE (2D/4D)
(see page 20-90)

FRONT SEAT BELT
Replacement, pages 20-85, 86
Inspection, page 20-91

FRONT SEATS
Removal, page 20-74
Replacement, page 20-75
Harness Wiring and Recline Cable Locations, page 20-77
Seat Cover Replacement, page 20-77

REAR SEAT (2D/4D)
Removal, pages 20-79, 81
Seat-back Latch Replacement, page 20-82
Seat Cover Replacement, page 20-83

FRONT SEAT BELT BUCKLES
(see page 20-87)

3D:

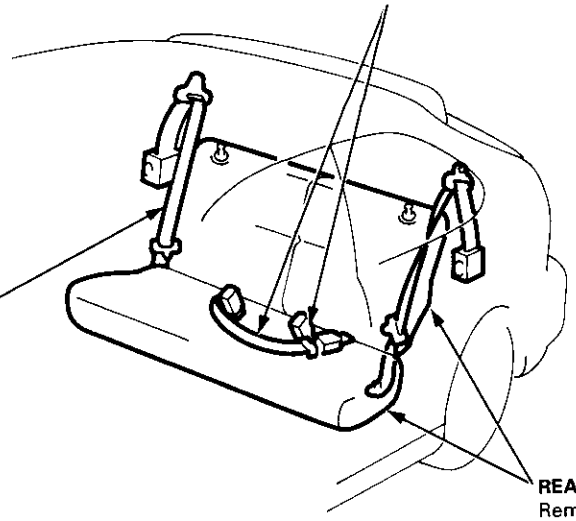

REAR SEAT BELT BUCKLE/ CENTER BELT TONGUE
(see page 20-90)

REAR SEAT BELT
Replacement, page 20-89
Inspection, page 20-91

REAR SEAT
Removal, page 20-80
Seat-back Latch Replacement, page 20-82
Seat Cover Replacement, page 20-83

Removal

CAUTION: When prying with a flat-tip screwdriver, wrap it with protective tape to prevent damage.

NOTE: Take care not to scratch the seat covers and body.

1. Remove the seat track end cover, then remove the bolts.

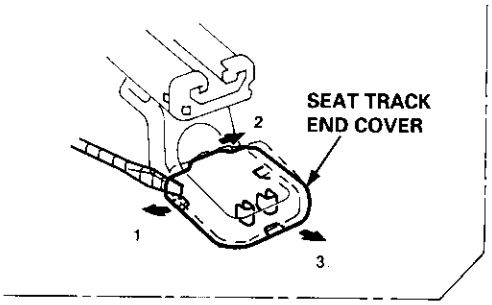

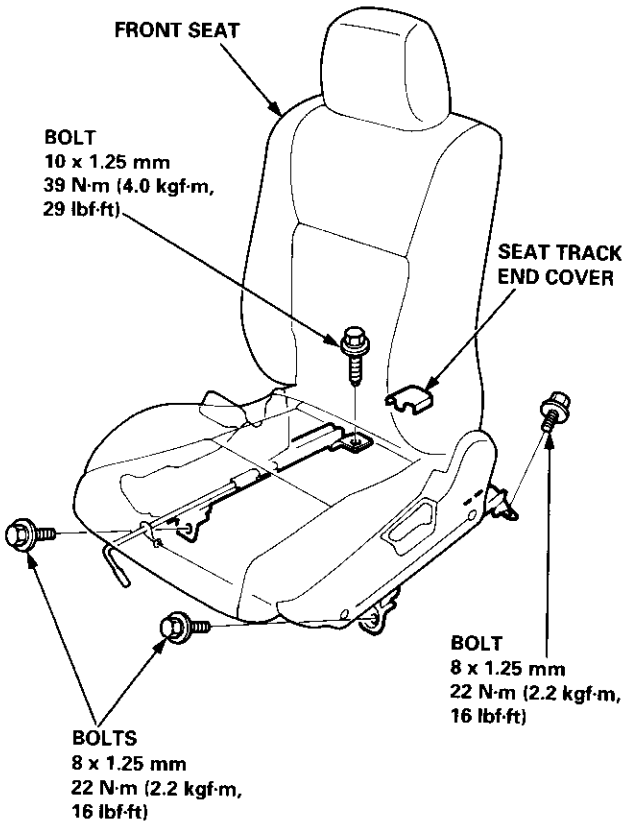

2. Lift the driver's front seat, then disconnect the seat belt switch connector.

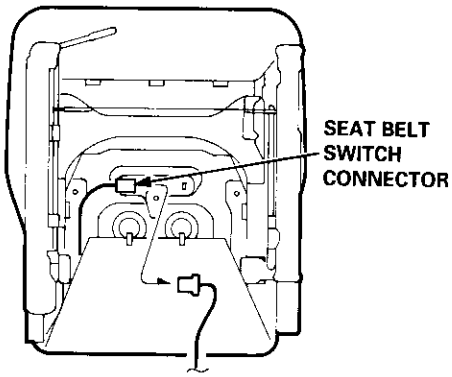

3. Remove the headrest.

4. Carefully remove the front seat through the door opening.

5. Installation is the reverse of the removal procedure.

   NOTE: Make sure the connector is connected properly.

Replacement

CAUTION: When prying with a flat-tip screwdriver, wrap it with protective tape to prevent damage.

NOTE:
- Take care not to scratch the seat covers and body.
- Remove the front seat through the door opening.

Driver's:

NOTE: Refer to page 20-77 for the seat belt switch harness wiring location.

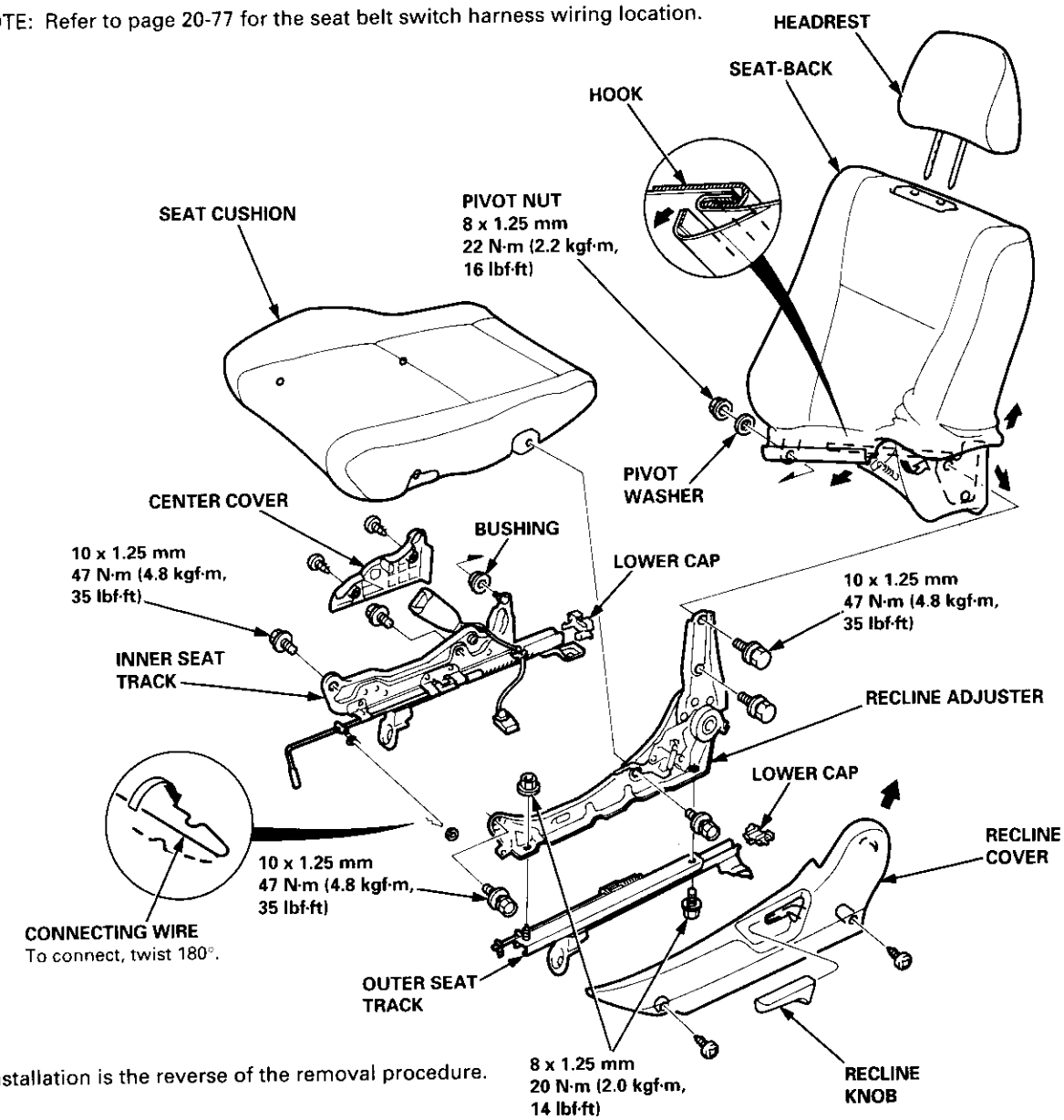

Installation is the reverse of the removal procedure.

NOTE:
- Make sure the bushing and pivot washer are installed properly.
- To prevent wrinkles when installing the seat-back cover, make sure the material is stretched evenly over the pad.
- Grease the sliding portion.

(cont'd)

Replacement (cont'd)

Passenger's (with recline cable):

NOTE: Refer to page 20-77 for the recline cable location.

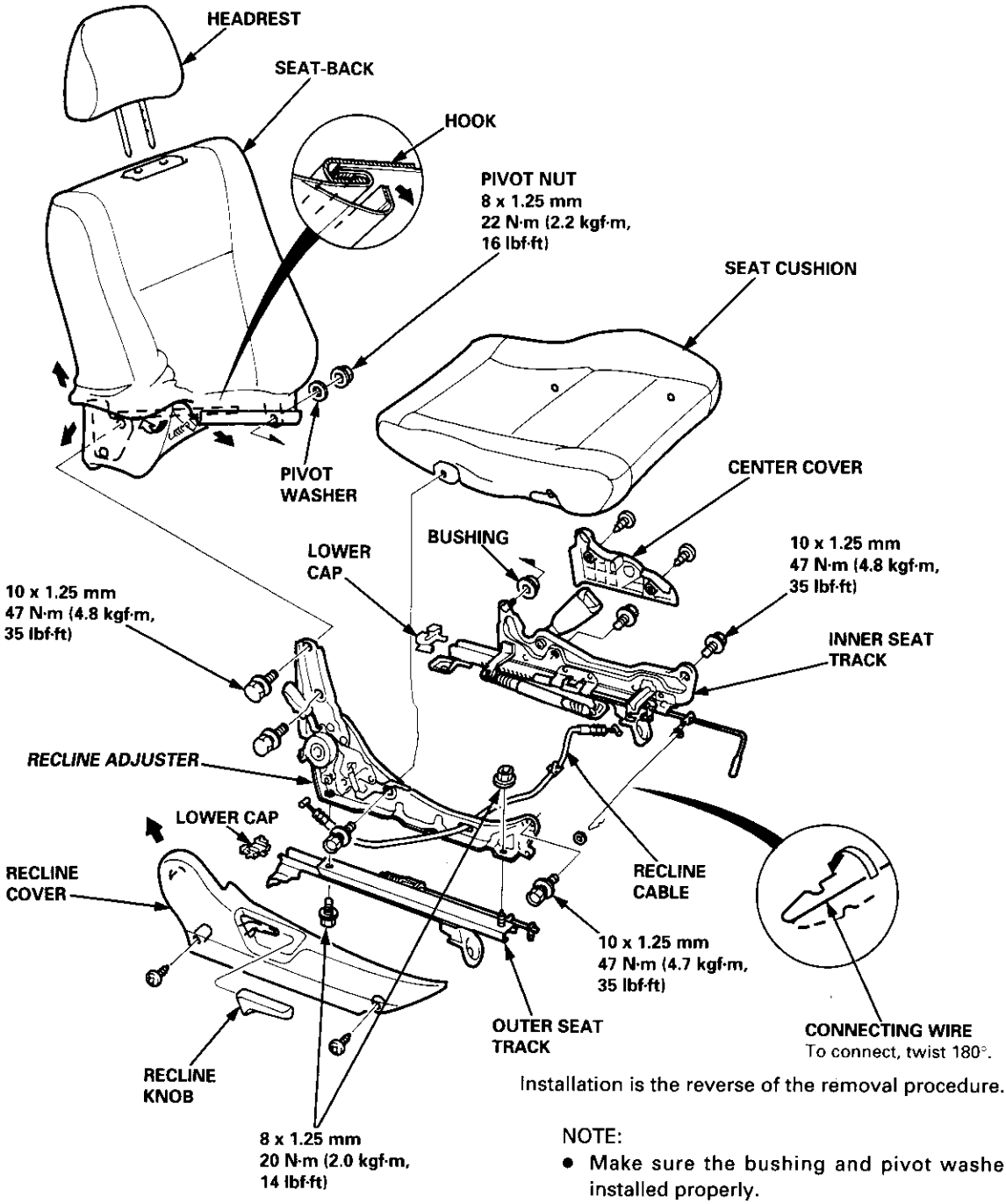

Installation is the reverse of the removal procedure.

NOTE:

- Make sure the bushing and pivot washer are installed properly.
- To prevent wrinkles when installing the seat-back cover, make sure the material is stretched evenly over the pad.
- Adjust the recline cable.
- Grease the sliding portion.

Harness Wiring and Recline Cable Locations

NOTE: When installing the seat cushion, make sure the seat belt switch harness, connector and recline cable are fastened correctly on the seat cushion frame.

Driver's: ▷: **Clip locations**

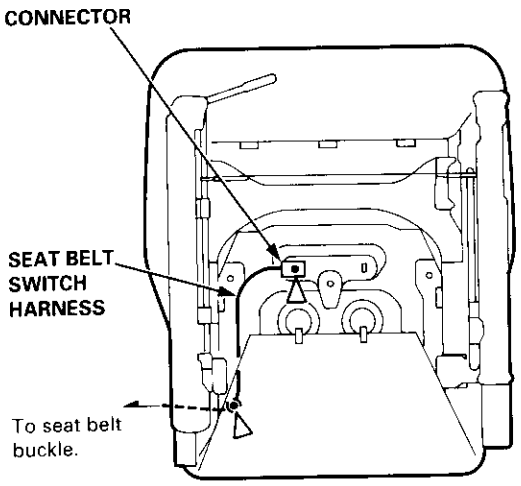

Passenger's (with recline cable):

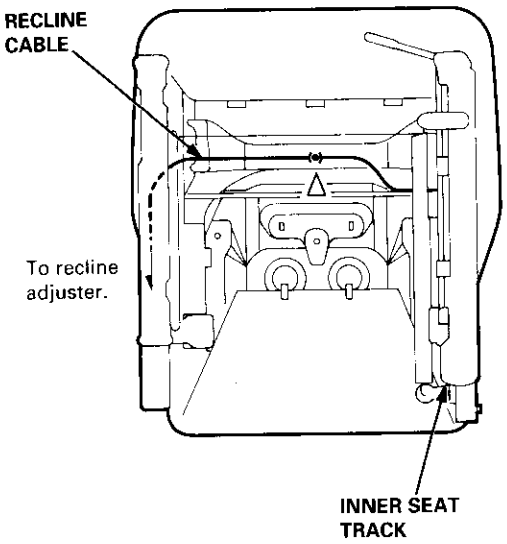

Seat Cover Replacement

CAUTION: Put on gloves to protect your hands.

NOTE: Take care not to tear the seams or damage the seat covers.

Seat-back cover removal:

1. Release the hook, and fold back the seat-back cover.

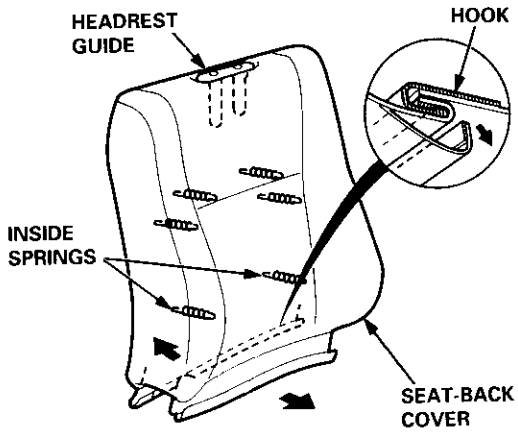

2. Release all inside springs, then fold back the seat-back cover.
3. Remove the headrest.
4. Remove the headrest guide, then remove the seat-back cover.

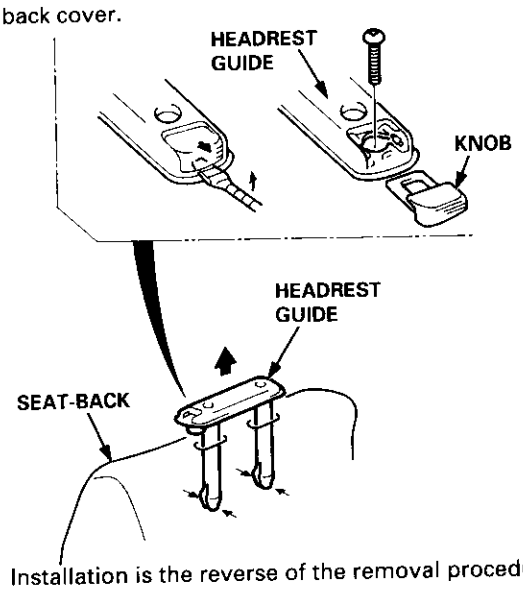

5. Installation is the reverse of the removal procedure.

   NOTE: To prevent wrinkles when installing a seat-back cover, make sure the material is stretched evenly over the pad before securing the inside springs and hook.

(cont'd)

Seat Cover Replacement (cont'd)

Seat cushion cover removal:

1. Remove the seat cushion (see pages 20-75, 76).

2. Remove the clips from under the seat cushion, then loosen the seat cushion cover.

   ▷: **Clip locations**

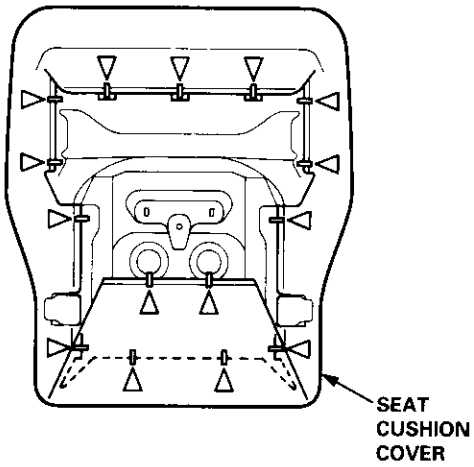

3. Pull back the edge of the seat cushion cover all the way around, then release the clips, and remove the seat cushion cover.

   ▷: **Clip locations**

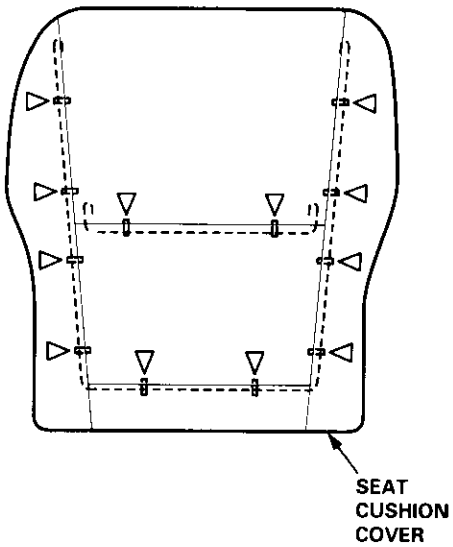

4. Installation is the reverse of the removal procedure.

   NOTE:
   - To prevent wrinkles when installing a seat cushion cover, make sure the material is stretched evenly over the pad before securing the clips.
   - Replace the released clips with new ones.

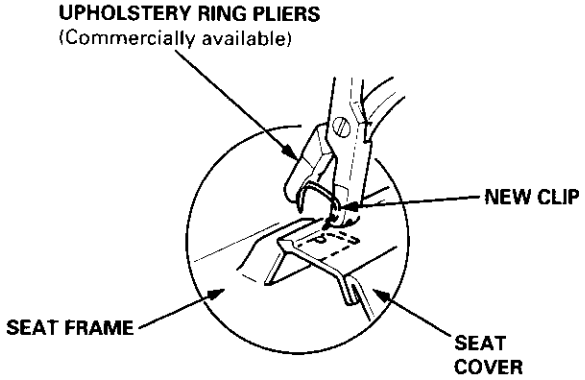

Removal

NOTE: Take care not to scratch the seat covers and body.

4D:

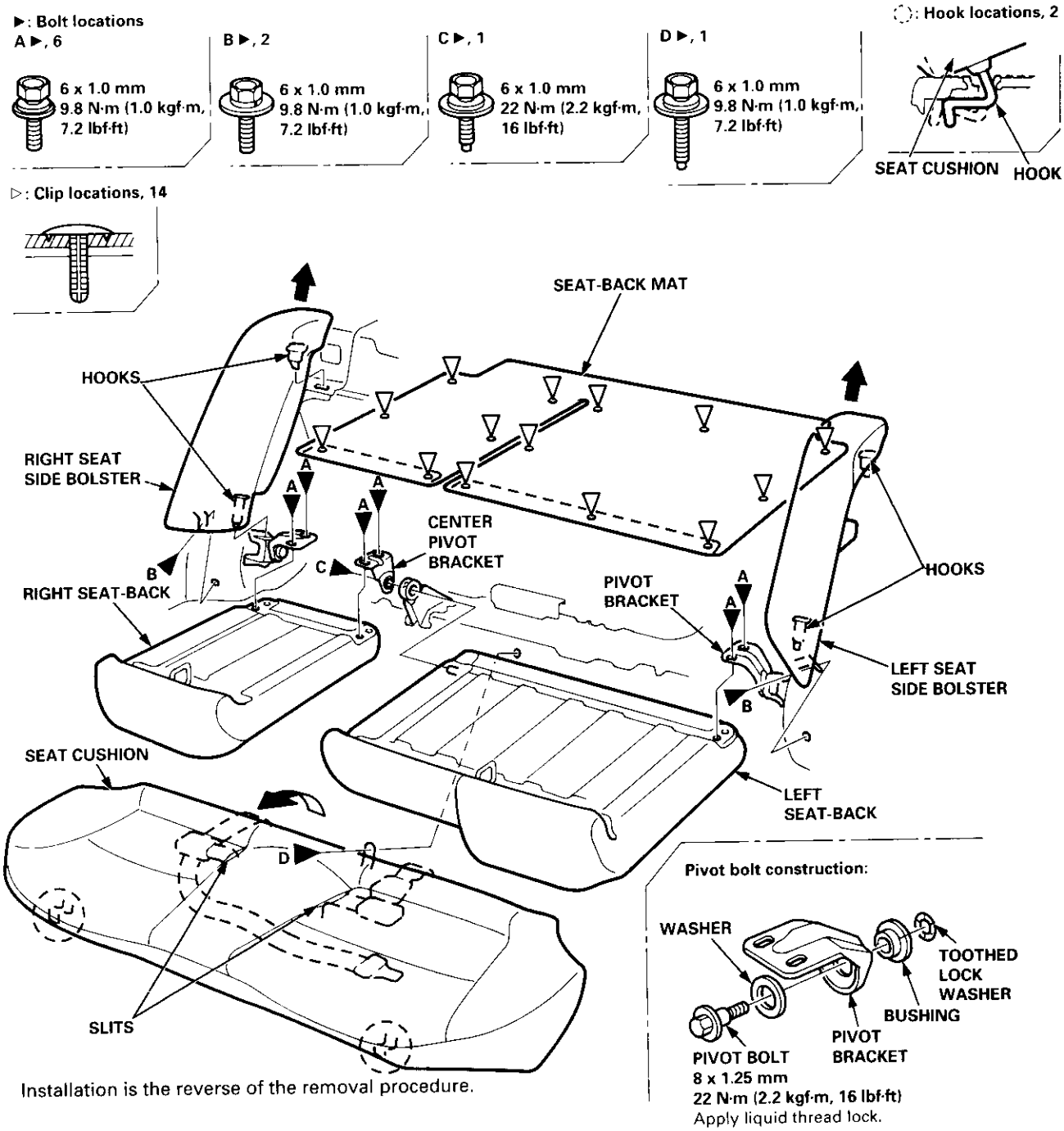

Installation is the reverse of the removal procedure.

NOTE:

- Before attaching the seat-back and seat cushion, make sure there are no twists or kinks in the rear seat belts and center belt.
- When installing the seat cushion, slip the seat belt buckles through the slits in the seat cushion.
- Make sure the seat-back locks securely.
- If necessary, adjust the seat-back latch (see page 20-82) and seat-back.

(cont'd)

Removal (cont'd)

3D:

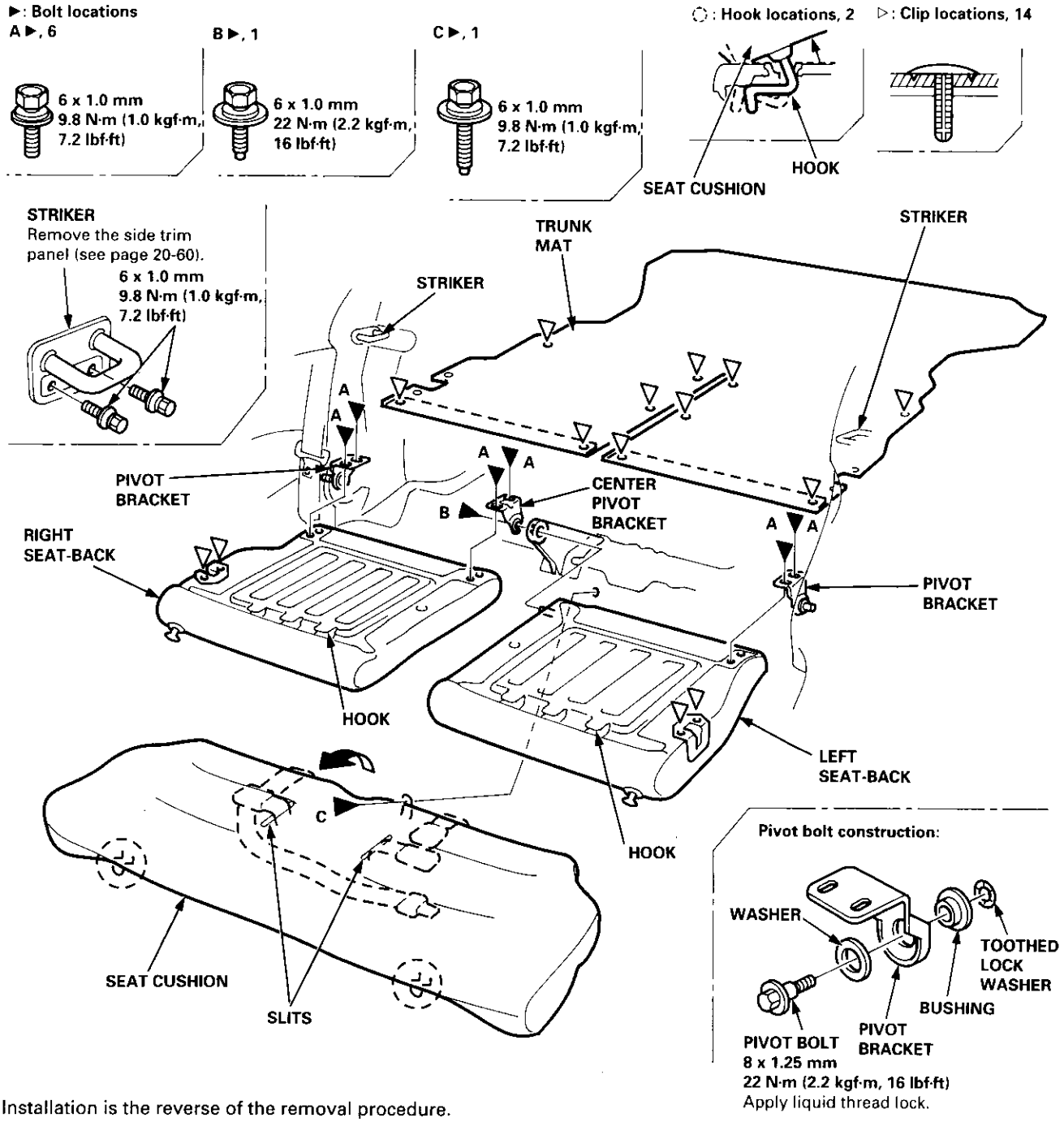

Installation is the reverse of the removal procedure.

NOTE:

- Before attaching the seat-back and seat cushion, make sure there are no twists or kinks in the rear seat belts and center belt.
- When installing the seat cushion, slip the seat belt buckles through the slits in the seat cushion.
- Make sure the seat-back locks securely.
- If necessary, adjust the striker and seat-back.

2D:

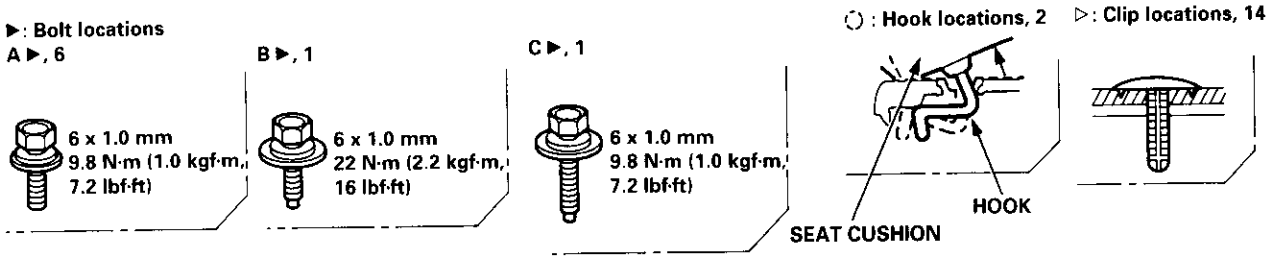

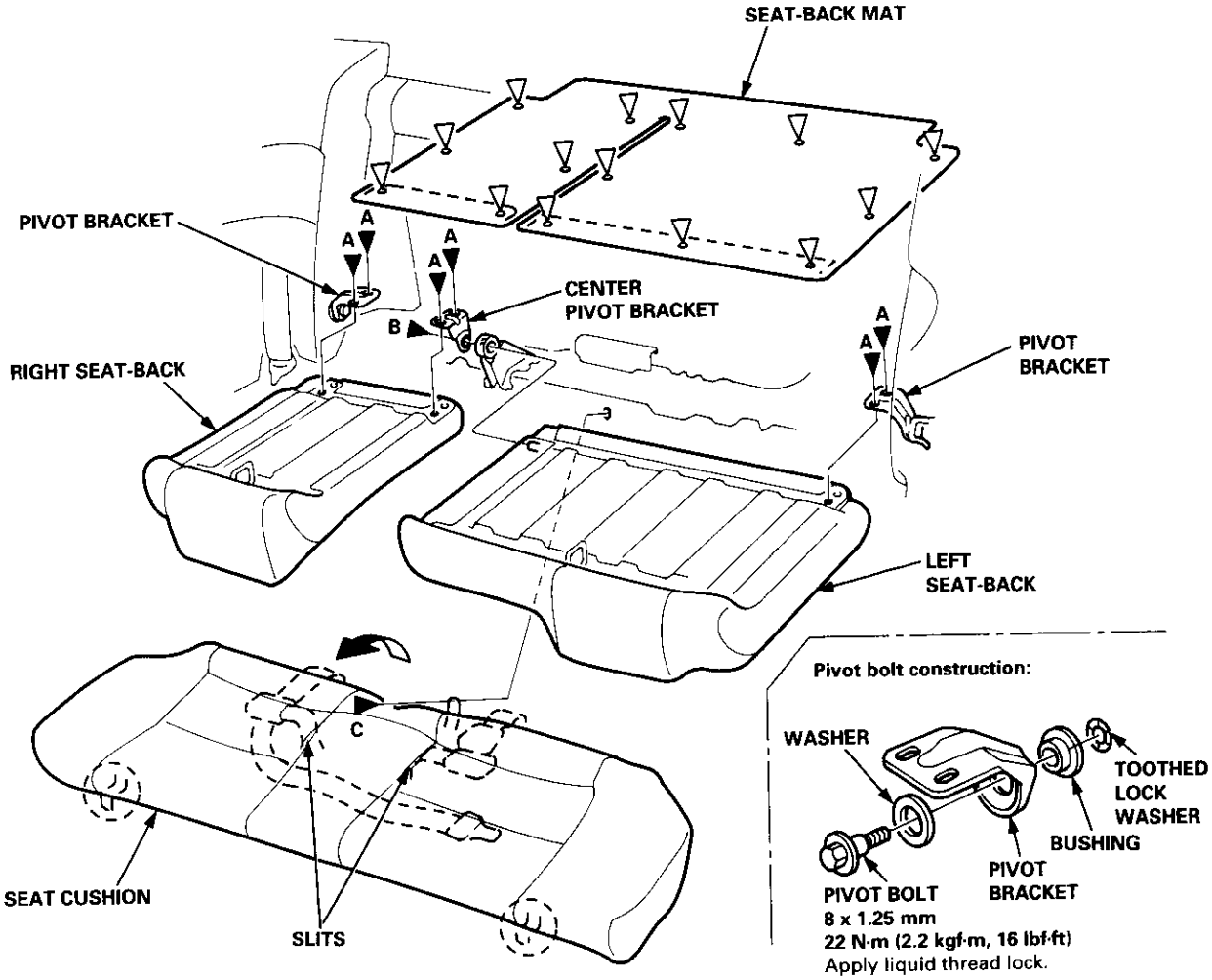

Installation is the reverse of the removal procedure.

NOTE:

- Before attaching the seat-back and seat cushion, make sure there are no twists or kinks in the rear seat belts and center belt.
- When installing the seat cushion, slip the seat belt buckles through the slits in the seat cushion.
- Make sure the seat-back locks securely.
- If necessary, adjust the seat-back latch (see page 20-82) and seat-back.

Seat-back Latch Replacement

2D/4D:

Remove the lock cylinder trim, then remove the rear shelf (see pages 20-59, 61).

NOTE: Take care not to bend each lock rod.

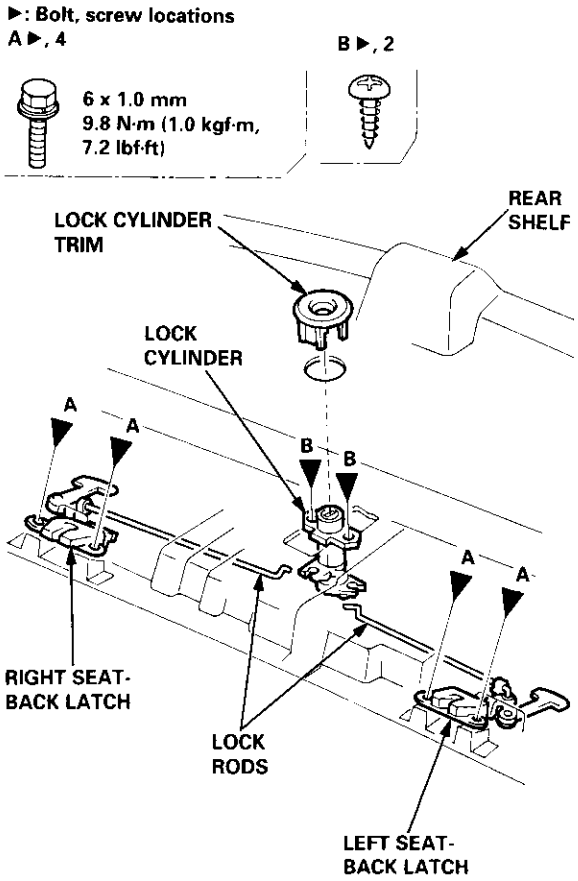

Installation is the reverse of the removal procedure.

NOTE:
- Make sure each lock rod is connected securely.
- Make sure each seat-back locks securely and opens properly.
- If necessary, adjust the seat-back latch.

3D:

Pull the trunk mat away from the seat-back (see page 20-80).

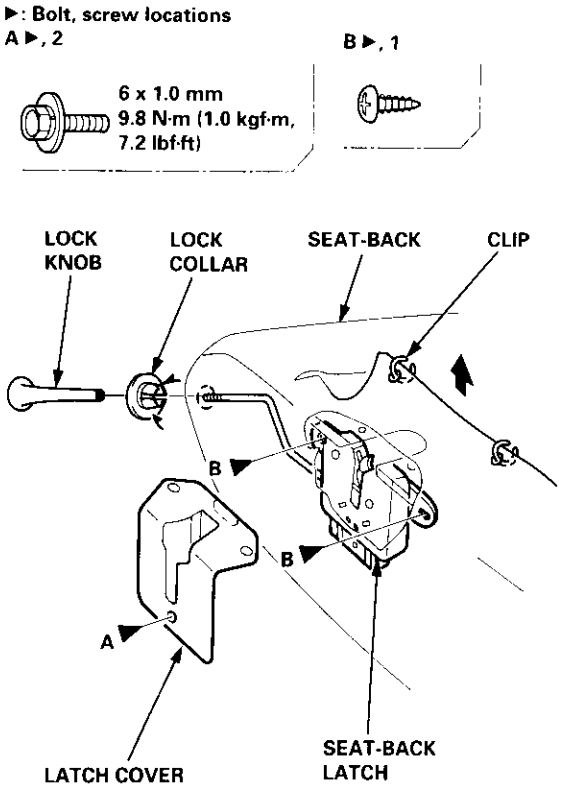

Installation is the reverse of the removal procedure.

NOTE:
- Replace the released clips with new ones.
- Make sure the seat-back locks securely and opens properly.

Seat Cover Replacement

CAUTION: Put on gloves to protect your hands.

NOTE: Take care not to tear the seams or damage the seat covers.

Seat-back cover removal:

2D/4D:

1. Remove the seat-back (see pages 20-79, 81).

2. Loosen the seat-back cover by releasing all the clips.

   ▷: **Clip locations**

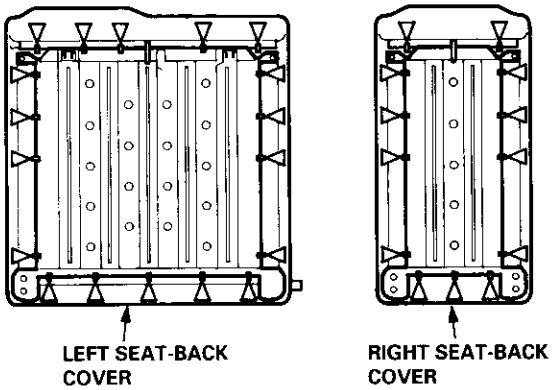

3. Pull back the edge of the seat-back cover all the way around, then release the clips.

   ▷: **Clip locations**

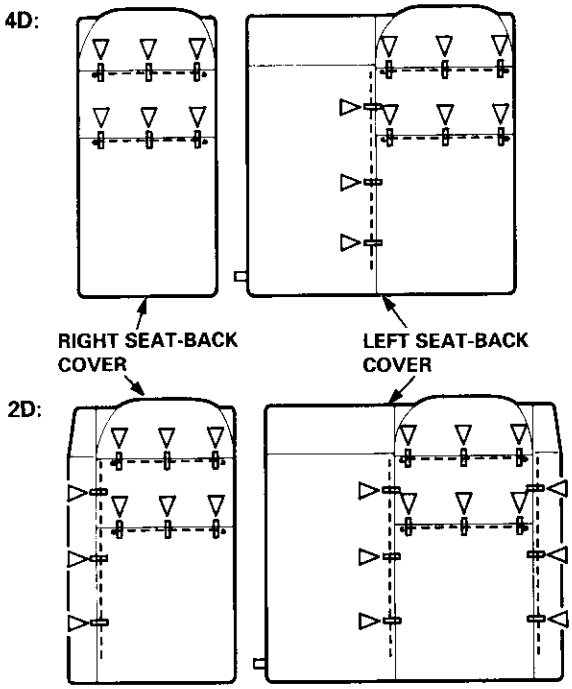

4. Installation is the reverse of the removal procedure.

   NOTE:
   - To prevent wrinkles when installing a seat cushion cover, make sure the material is stretched evenly over the pad before securing the clips.
   - Replace the released clips with new ones.

3D:

1. Remove the seat-back (see page 20-80).

2. Loosen the seat-back cover by releasing all the clips.

   NOTE: Remove the lock knob, lock collar and latch cover.

   ▷: **Clip locations**

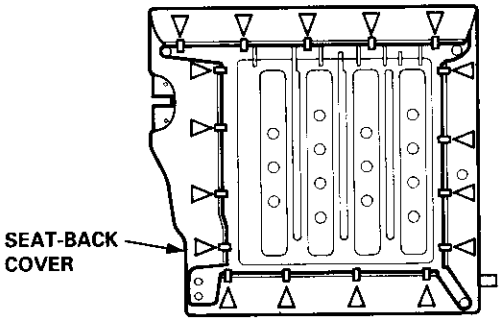

3. Pull back the edge of the seat-back cover all the way around, then release the clips.

   ▷: **Clip locations**

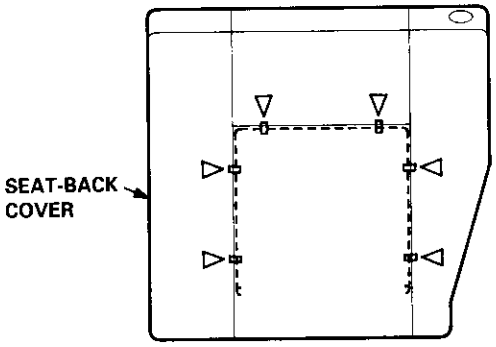

4. Installation is the reverse of the removal procedure.

   NOTE:
   - To prevent wrinkles when installing a seat-back cover, make sure the material is stretched evenly over the pad before securing the clips.
   - Replace the released clips with new ones.

(cont'd)

Seat Cover Replacement (cont'd)

Seat side bolster cover removal (4D):

1. Remove the seat side bolster (see page 20-79).

2. Loosen the seat side bolster cover by releasing all the clips, then remove it.

▷: **Clip locations**

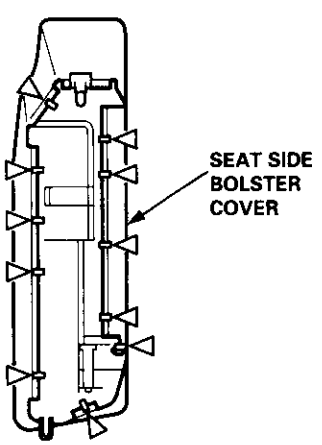

3. Installation is the reverse of the removal procedure.

NOTE:
- To prevent wrinkles when installing a seat side bolster cover, make sure the material is stretched evenly over the pad before securing the clips.
- Replace the released clips with new ones.

Seat cushion cover removal:

1. Remove the seat cushion (see pages 20-79, 80, 81).

2. Loosen the seat cushion cover by releasing all the clips.

▷: **Clip locations**

4D:

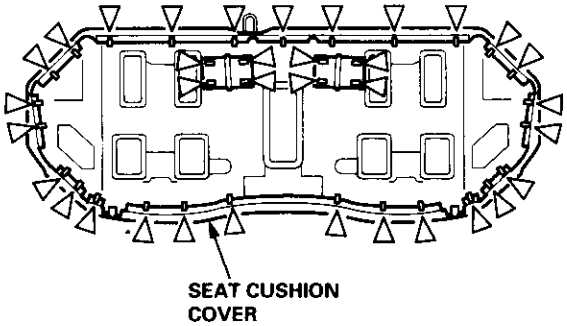

2D/3D:

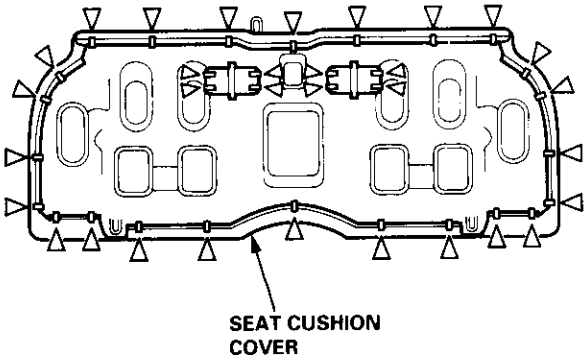

3. Pull back the edge of the seat cushion cover all the way around, release the clips, and remove the seat cushion cover.

▷: **Clip locations**

4D:

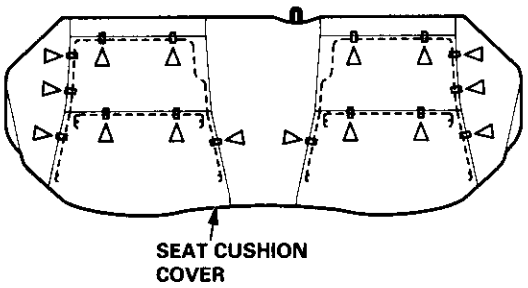

2D/3D:

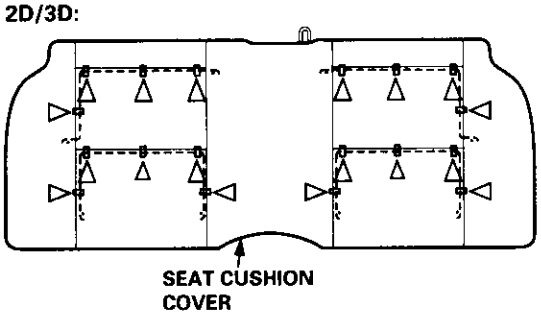

4. Installation is the reverse of the removal procedure.

NOTE:
- To prevent wrinkles when installing a seat cushion cover, make sure the material is stretched evenly over the pad before securing the clips.
- Replace the released clips with new ones.

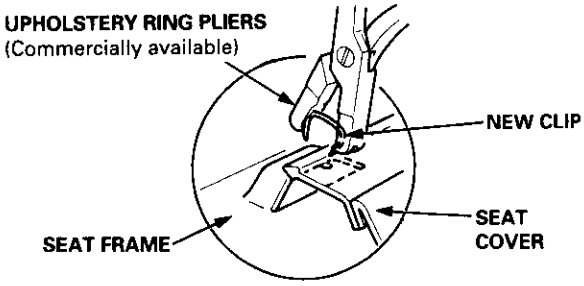

Replacement

CAUTION: Check the front seat belts for damage, and replace them if necessary. Be careful not to damage them during removal and installation.

Front seat belt removal (4D):

1. Slide the front seat forward fully.
2. Remove the center pillar lower trim panel (see page 20-59).
3. Remove the upper anchor cover and lower anchor cap.

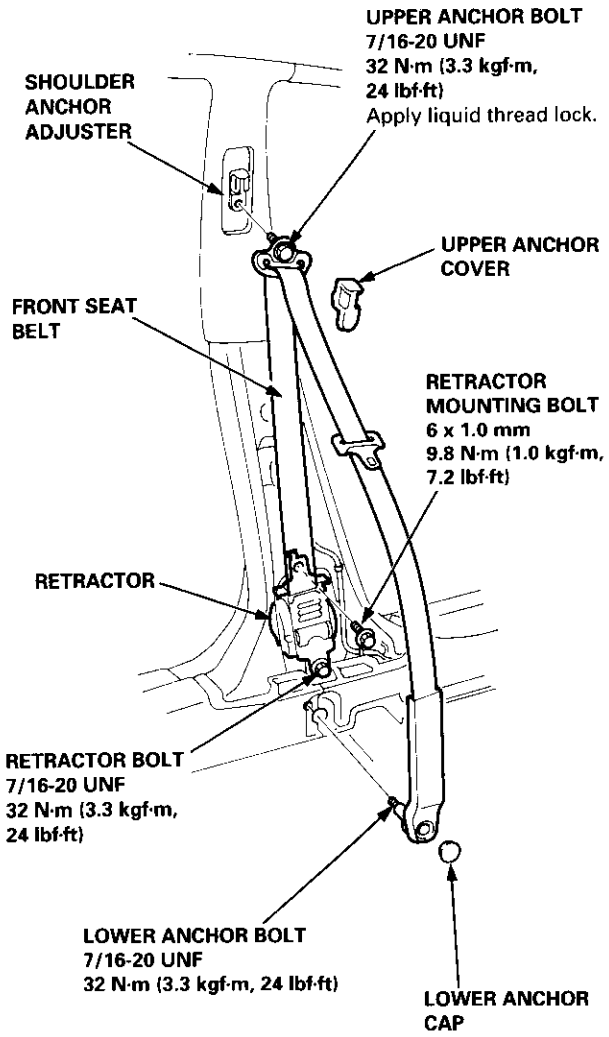

4. Remove all the anchor bolts and the retractor bolt, remove the retractor mounting bolt, then remove the front seat belt and retractor.
5. Remove the center pillar upper trim (see page 20-59).
6. Remove the shoulder anchor adjuster.

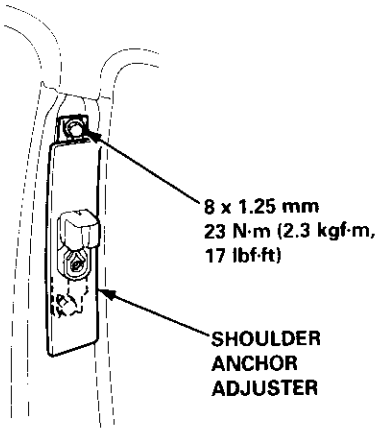

7. Installation is the reverse of the removal procedure.

NOTE:
- Check that the retractor locking mechanism functions as described on page 20-91.
- Make sure you assemble the washers and collars on the upper and lower anchor bolts as shown.
- Before installing the anchor bolts, make sure there are no twists or kinks in the front seat belt.

Upper anchor bolt construction:

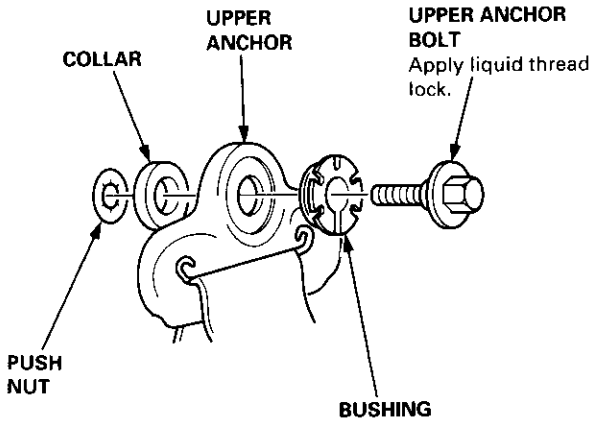

(cont'd)

Replacement (cont'd)

Lower anchor bolt construction:

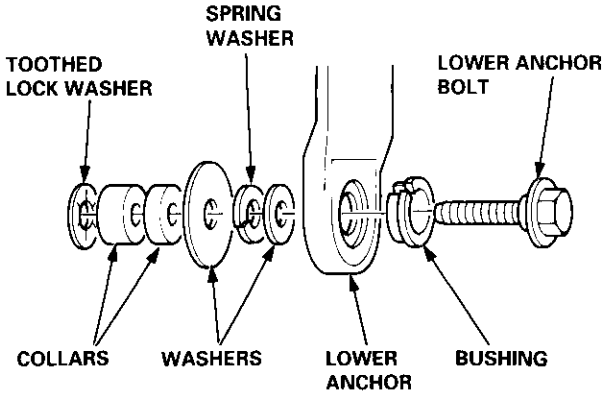

Retractor bolt construction:

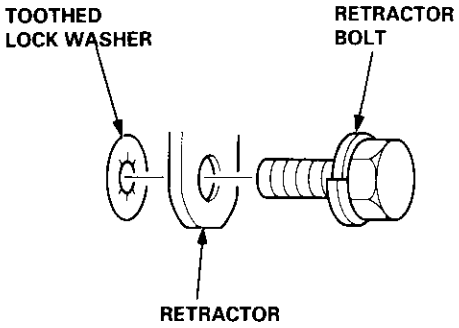

Front seat belt removal (2D/3D):

1. Slide the front seat forward fully.

2. Remove:
   - Rear seat-back and rear seat cushion (see pages 20-80, 81)
   - Rear center shelf and rear side shelf (3D, see page 20-60)
   - Rear trim panel (3D, see page 20-60)
   - Side trim panel (see pages 20-60, 61)

3. Remove the upper anchor cover and lower anchor cap.

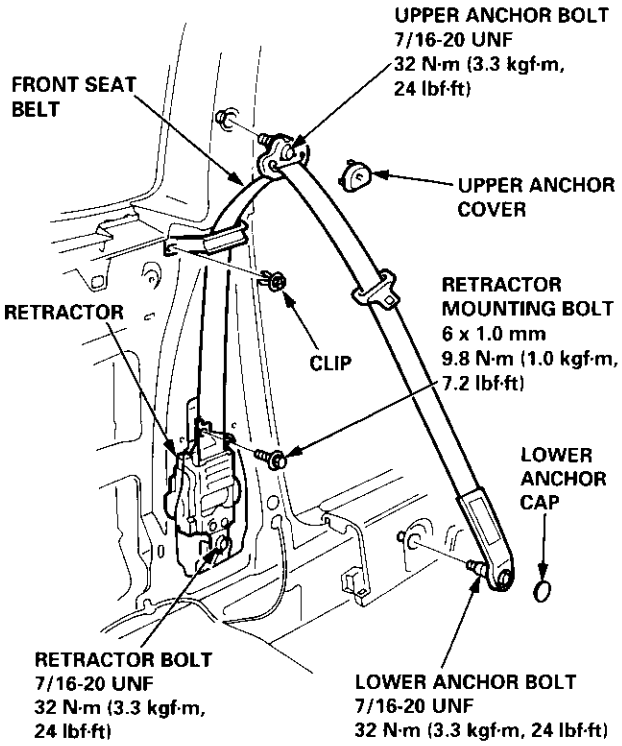

4. Remove all the anchor bolts and the retractor bolt, remove the retractor mounting bolt, then remove the front seat belt and retractor.

5. Installation is the reverse of the removal procedure.

NOTE:
- Check that the retractor locking mechanism functions as described on page 20-91.
- Make sure you assemble the washers and collars on the upper and lower anchor bolts as shown.
- Before installing the anchor bolts, make sure there are no twists or kinks in the front seat belt.

Upper anchor bolt construction:

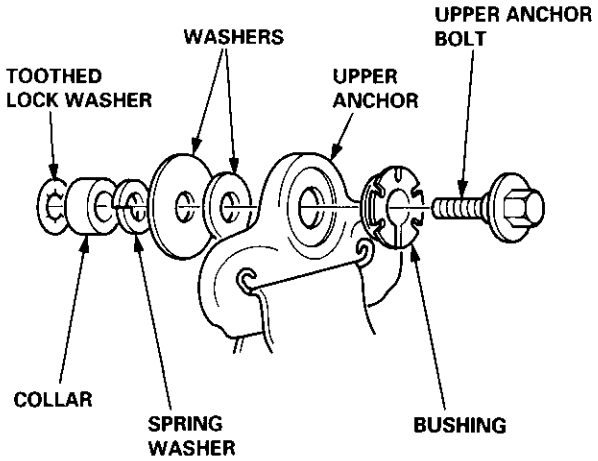

Lower anchor bolt construction:

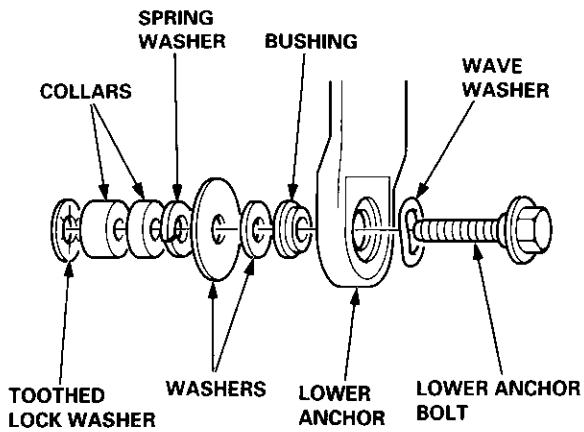

Retractor bolt construction:

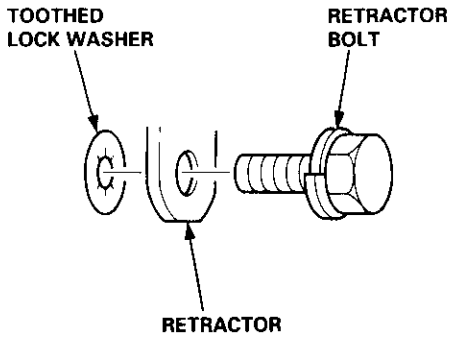

Seat belt buckle removal:

1. Remove the front seat through the door opening (see page 20-74).

2. Remove the center cover (see pages 20-75, 76).

3. Remove the center anchor bolt, then remove the seat belt buckle.

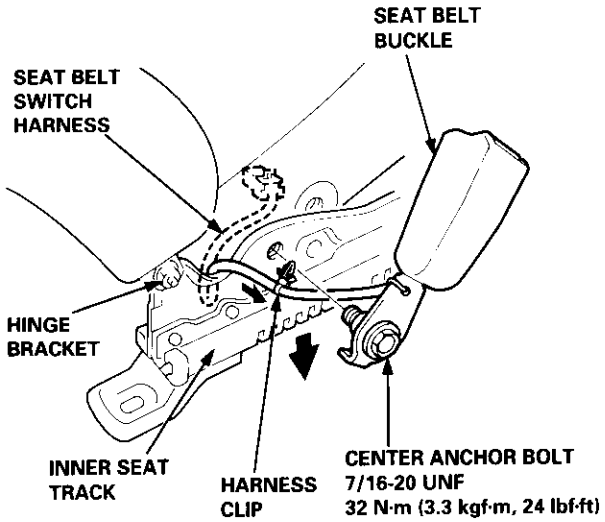

4. Driver's: Detach the seat belt switch connector and harness clip from the seat cushion (see page 20-77). Remove the seat cushion mounting bolts from the inner seat track (see page 20-75), and move the inner seat track, then pull the seat belt switch harness out.

   NOTE: Take care not to damage the hinge bracket.

Center anchor bolt construction:

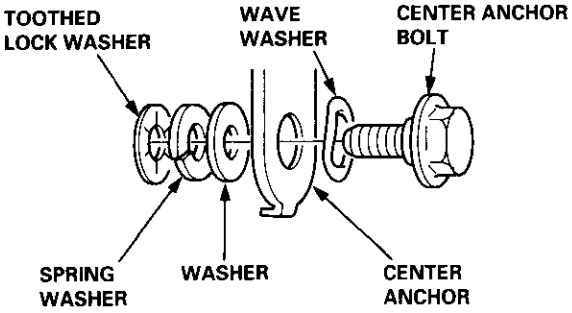

5. Installation is the reverse of the removal procedure.

   NOTE: Make sure you assemble the washers and bearing on the center anchor bolt as shown.

Replacement

CAUTION: Check the rear seat belts for damage, and replace them if necessary. Be careful not to damage them during removal and installation.

Rear seat belt removal (2D/4D):

1. Remove:
   - Rear seat cushion (see pages 20-79, 81)
   - Rear seat-back (2D, see page 20-81)
   - Side trim panel (2D, see page 20-61)
   - Rear shelf (see pages 20-59, 61)
   - Rear trim panel (see page 20-62)
   - Trunk side trim, Japan-produced (see page 20-62)
   - Trunk trim panel, USA-produced (see page 20-62)

2. Remove all the anchor bolts and retractor bolt, then remove the rear seat belt and retractor.

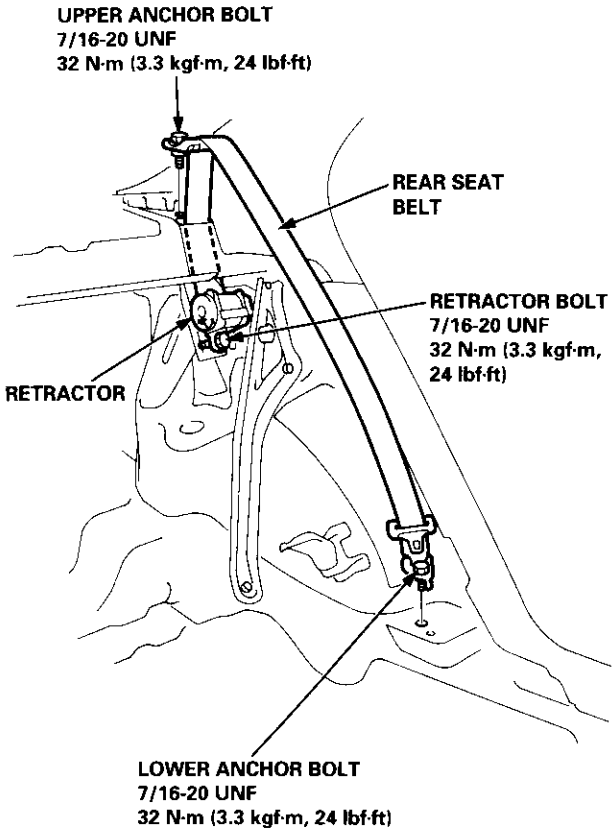

3. Installation is the reverse of the removal procedure.

   NOTE:
   - Check that the retractor locking mechanism functions as described on page 20-91.
   - Make sure you assemble the washers and collar on the upper anchor bolt as shown.
   - Before installing the anchor bolt, make sure there are no twists or kinks in the rear seat belt.

Upper anchor bolt construction:

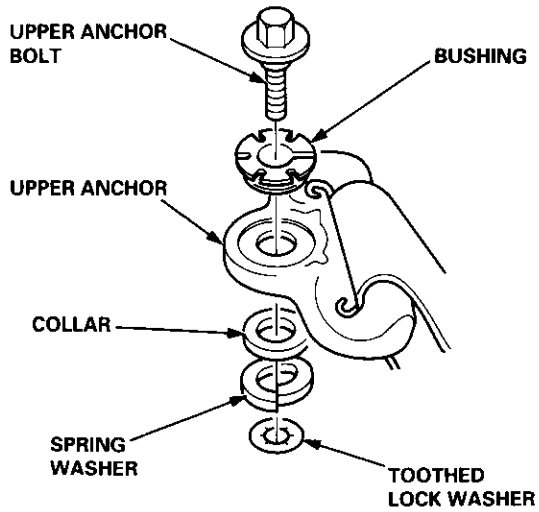

Lower anchor bolt construction:

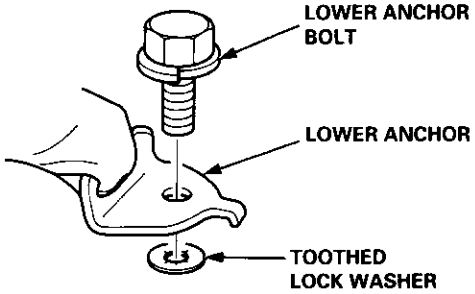

Retractor bolt construction:

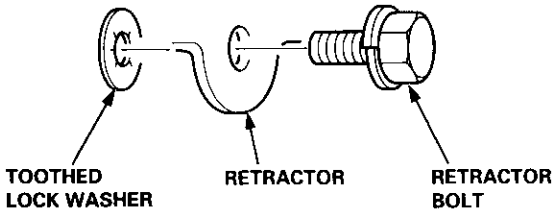

Rear seat belt removal (3D):

1. Remove:
   - Rear seat-back and rear seat cushion (see page 20-80)
   - Rear center shelf and rear side shelf (see page 20-60)
   - Rear trim panel and side trim panel (see page 20-60)

2. Remove the upper anchor cover.

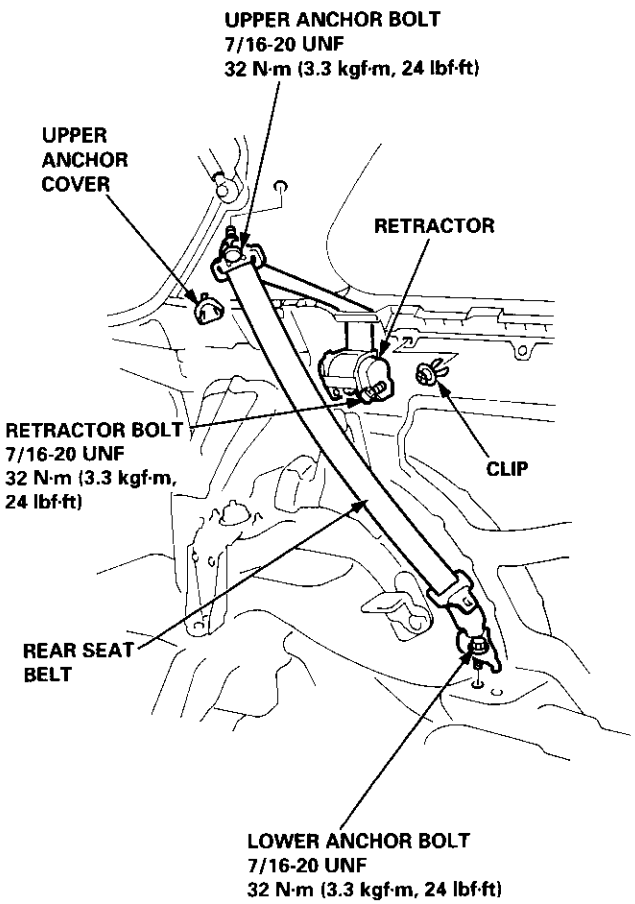

3. Remove all the anchor bolts and retractor bolt, then remove the rear seat belt and retractor.

4. Installation is the reverse of the removal procedure.

   NOTE:
   - Check that the retractor locking mechanism functions as described on page 20-91.
   - Make sure you assemble the washers and collars on the upper anchor bolt as shown.
   - Before installing the anchor bolt, make sure there are no twists or kinks in the rear seat belt.

Upper anchor bolt construction:

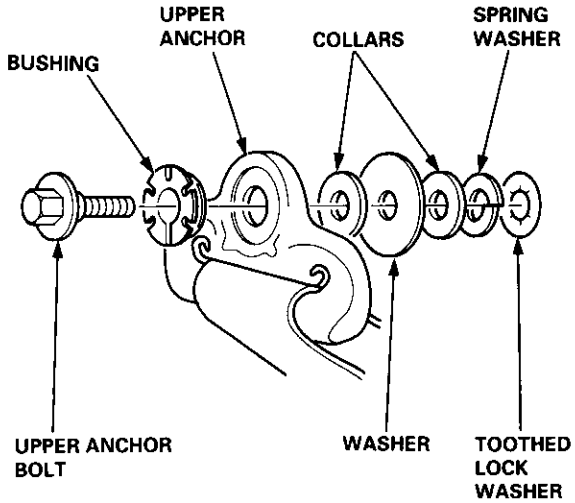

Lower anchor bolt construction:

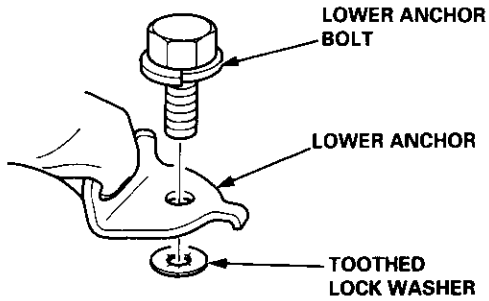

Retractor bolt construction:

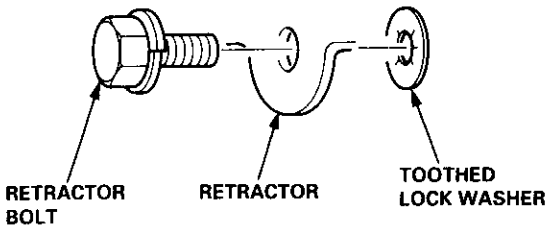

(cont'd)

Replacement (cont'd)

Seat belt buckle/Center belt tongue removal:

1. Remove the rear seat cushion (see pages 20-79, 80, 81).

2. Remove the center anchor bolts, then remove the seat belt buckles and center belt tongue.

2D/4D:

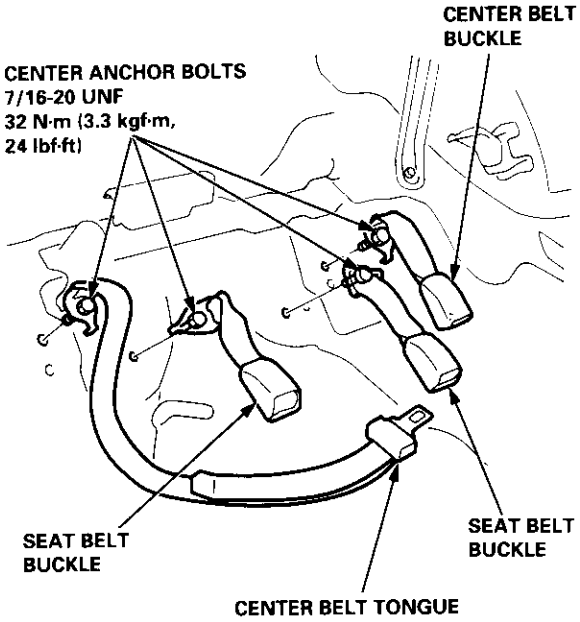

3D:

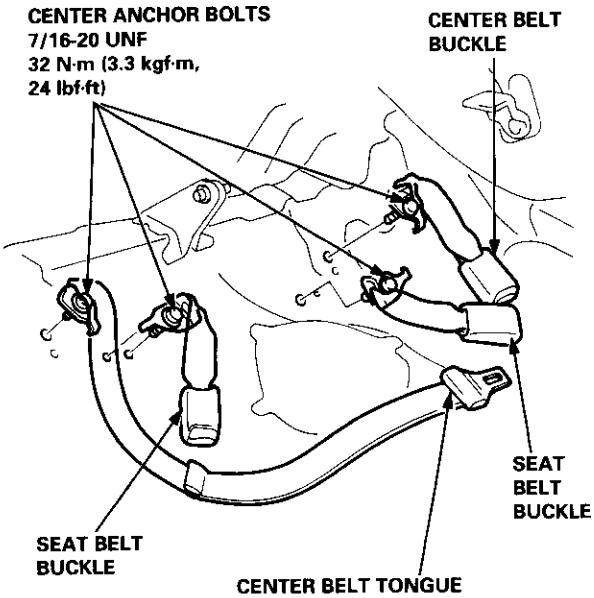

Center anchor bolt construction:

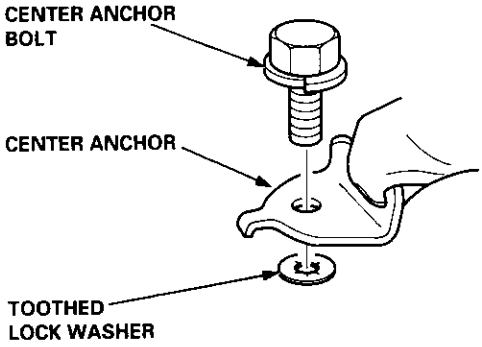

3. Installation is the reverse of the removal procedure.

   NOTE: Before attaching the seat-back and seat cushion, make sure there are no twists or kinks in the center belts.

Inspection

Retractor Inspection

1. Before installing the retractor, check that the seat belt can be pulled out freely.

2. Make sure that the seat belt does not lock when the retractor is leaned slowly up to 15° from the mounted position. The seat belt should lock when the retractor is leaned over 40°.

   CAUTION: Do not attempt to disassemble the retractor.

   ***: Mounted Position**

   Front:

   4D:

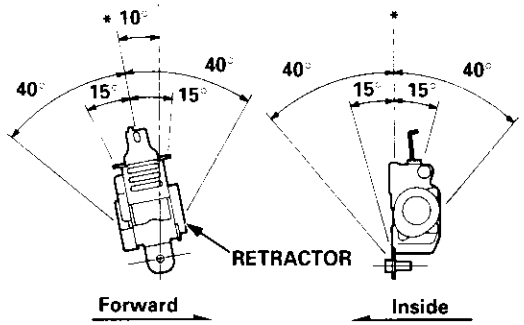

   2D/3D:

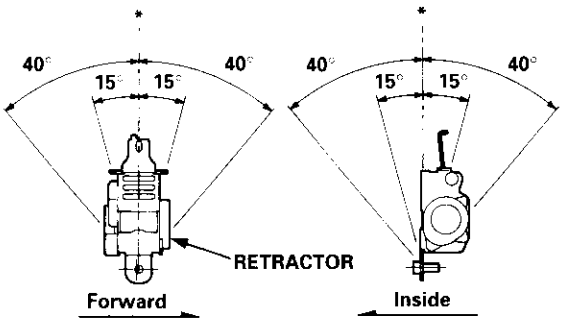

   Rear:

   2D/4D:

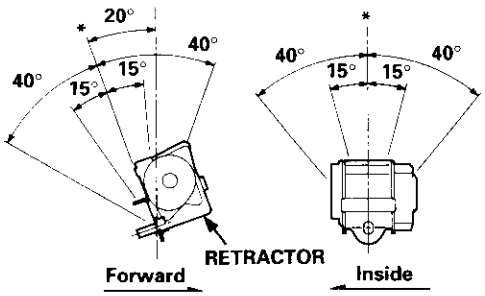

   3D:

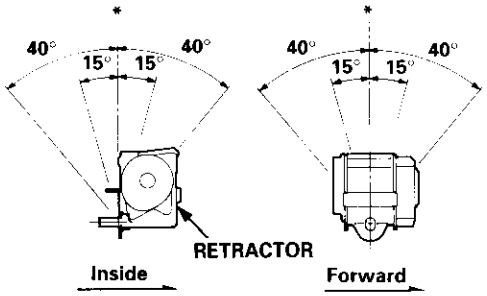

3. Replace the seat belt with a new one if there is any abnormality.

On-the-Car Seat Belt Inspection

1. Check that the seat belt is not twisted or caught on anything.

2. After installing the anchors, check for free movement on the anchor bolts. If necessary, remove the anchor bolts and check that the washers and other parts are not damaged or improperly installed.

3. Check the seat belts for damage or discoloration. Clean with a shop towel if necessary.

   CAUTION: Use only soap and water to clean.

   NOTE: Dirt build-up in the metal loops of the upper anchors can cause the seat belts to retract slowly. Wipe the inside of the loops with a clean cloth dampened in isopropyl alcohol.

4. Check that the seat belt does not lock when pulled out slowly. The seat belt is designed to lock only during a sudden stop or impact.

5. Make sure that the seat belt will retract automatically when released.

6. For each passenger's seat belt, make sure that the locking mechanism in the seat belt retractor will engage when the seat belt is pulled all the way out.

7. Replace the seat belt with a new one if there is any abnormality.

Child Seat Anchor Plate

Attachment points are provided for a rear seat mounted child restraint system which uses a top tether. The attachment points are located on the rear shelf or rear trim panel, just behind the rear seat-back. When using a child seat with a top tether, install the child seat anchor plates securely.

2D/4D:

NOTE: Remove the plug covers from the attachment points of the rear shelf.

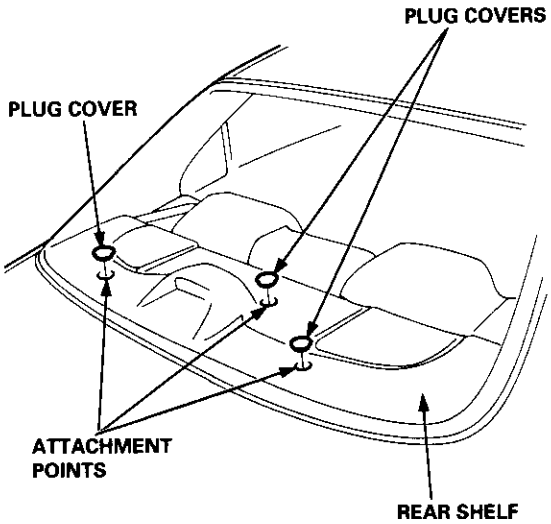

3D:

NOTE: The rear trim panel has perforations at each attachment point. Cut the rear trim panel along the perforations to make a hole.

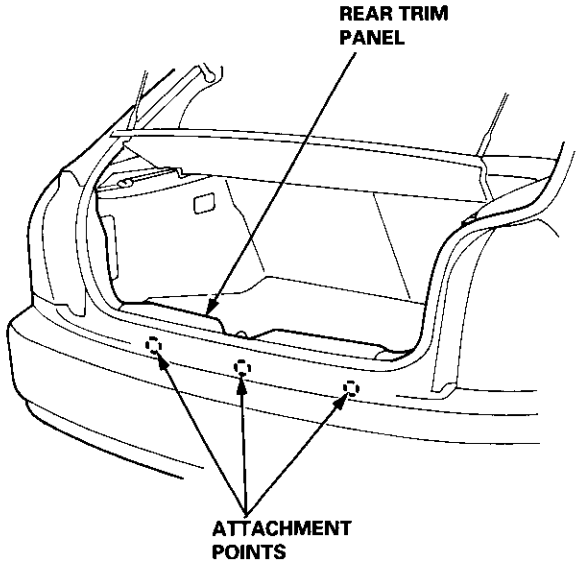

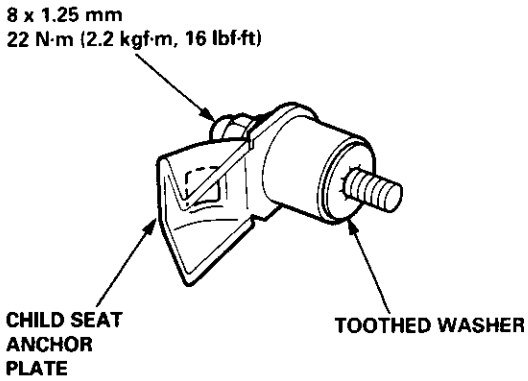

NOTE:

- Do not remove the toothed washer from the child seat anchor plate. Use the child seat anchor plate with the toothed washer attached to it.
- When installing a child seat on the rear seat, follow the instructions of the manufacturer of the child seat.
- Additional anchor plates are available.

⚠ WARNING

- **Do not use the child seat anchor plate for any other purpose; it is designed exclusively for installation of a child seat.**
- **Make sure the rear seat-back is locked firmly when installing a child seat.**

Component Location Index

NOTE: Refer to the Civic Body Repair Manual, 1996 Model Series, P/N. 61S0330, for the hood, trunk lid and hatch removal.

2D/3D/4D:

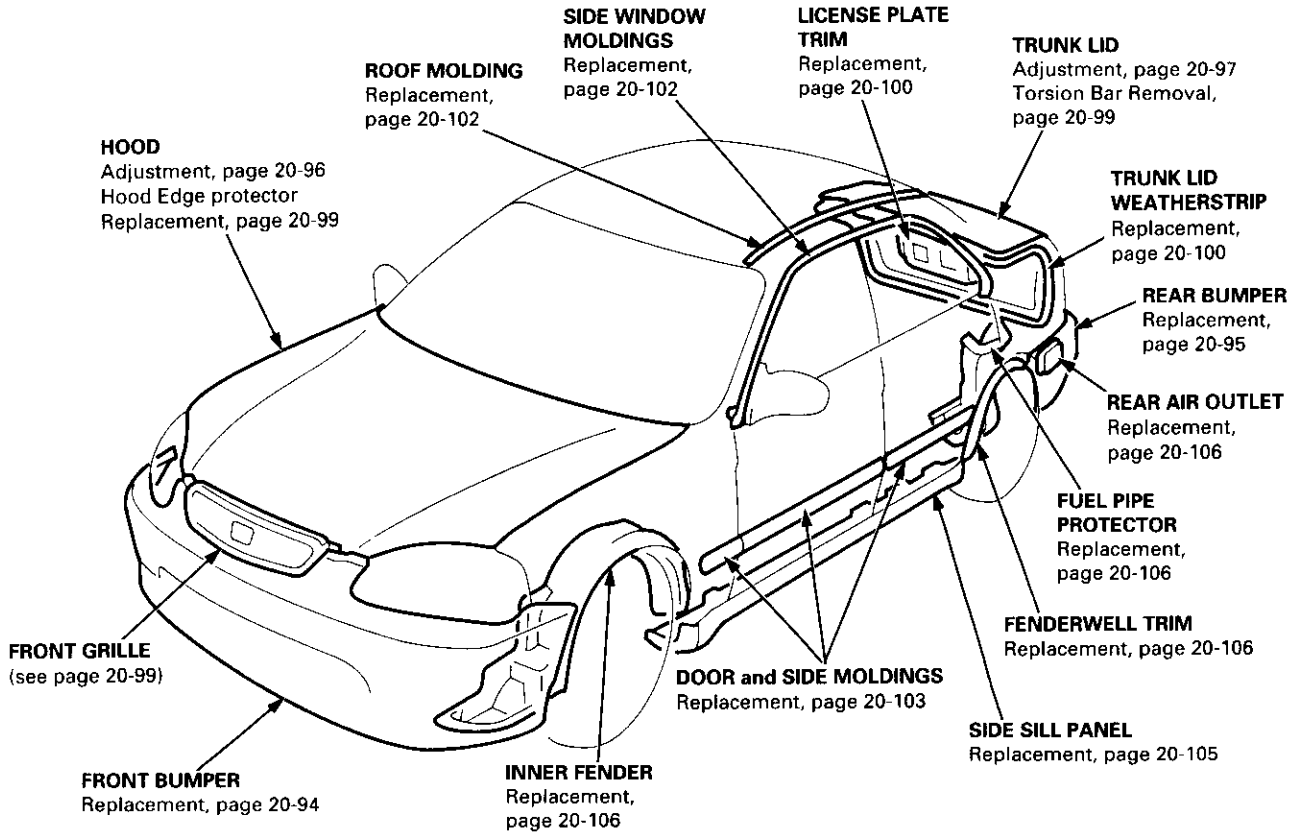

3D:

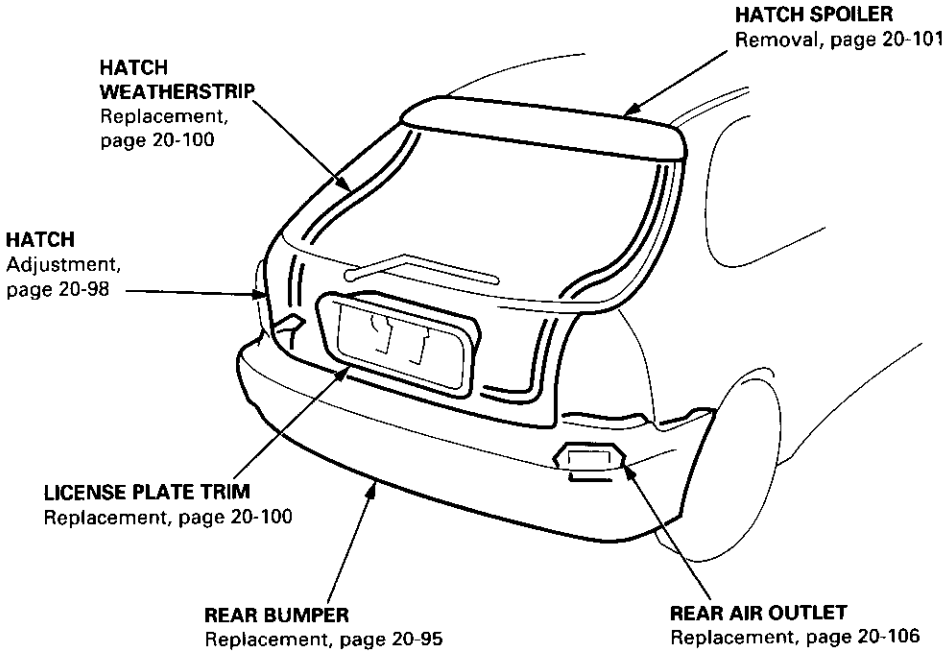

Front Bumper

Replacement

CAUTION: Put on gloves to protect your hands.

NOTE:
- An assistant is helpful when removing the front bumper.
- Take care not to scratch the front bumper and body.

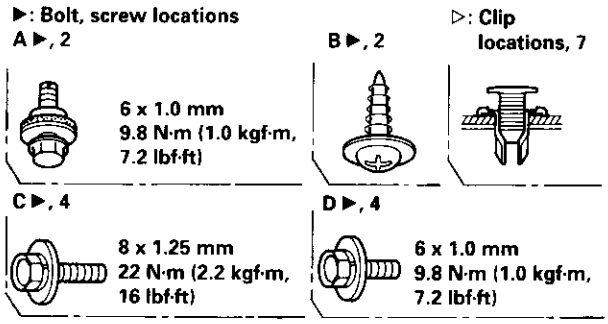

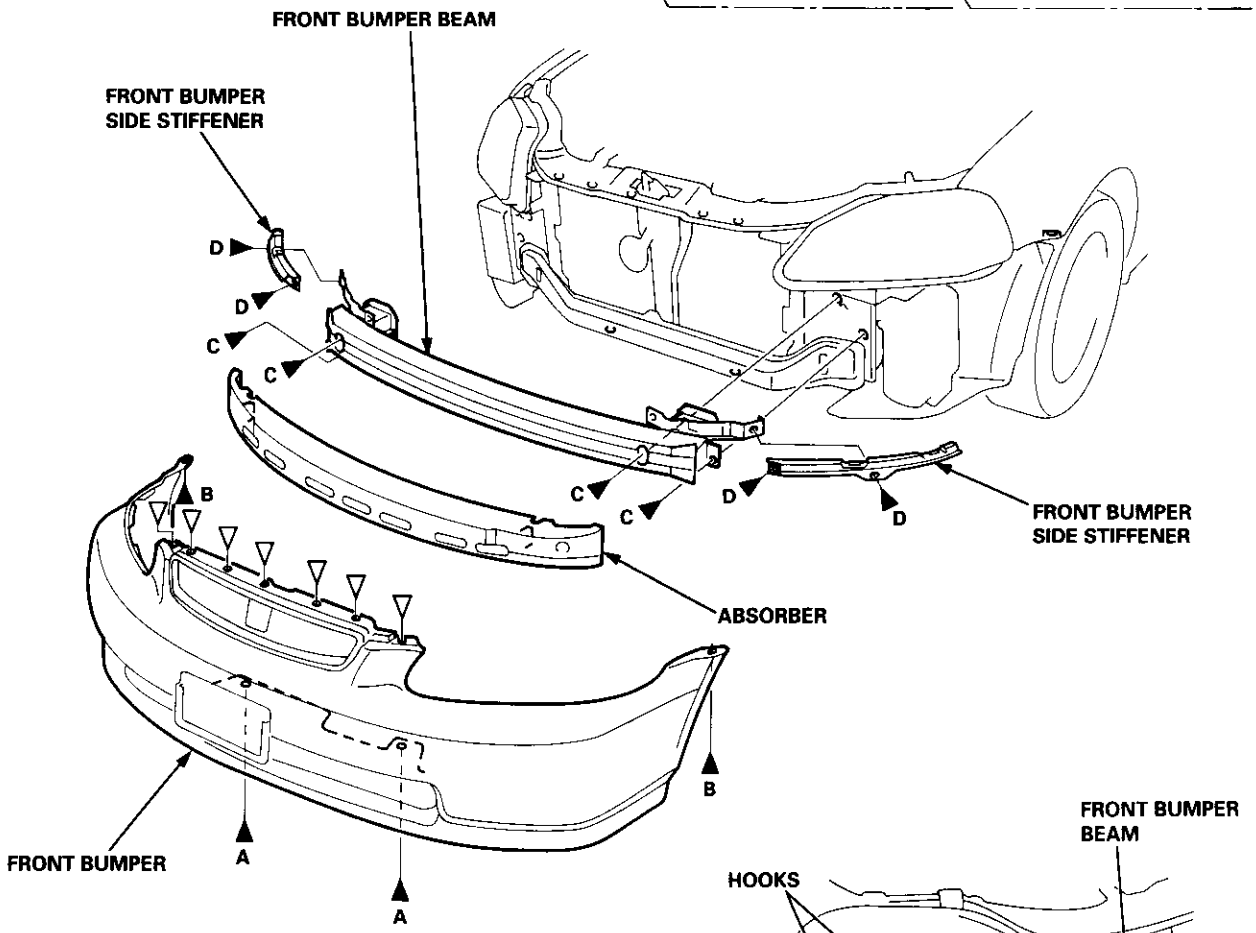

Installation is the reverse of the removal procedure.

NOTE:
- Make sure the front bumper engages the front bumper side stiffener on each side securely.
- If necessary, adjust the front bumper side stiffener to obtain the proper gap.

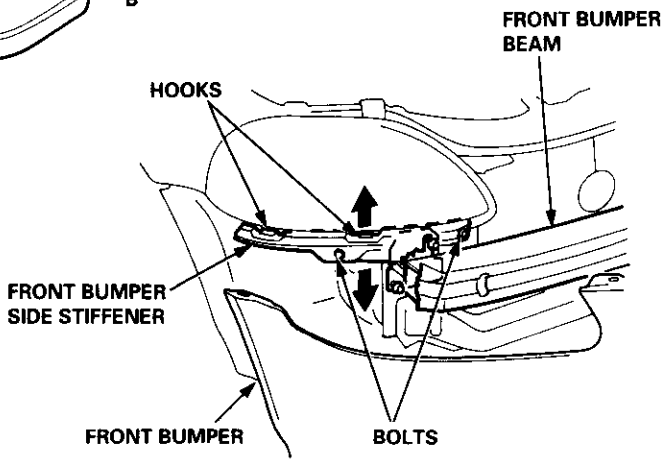

Replacement

CAUTION: Put on gloves to protect your hands.

NOTE:
- An assistant is helpful when removing the rear bumper.
- Take care not to scratch the rear bumper and body.
- 2D and 4D shown here; 3D removal procedures are the same as 4D.

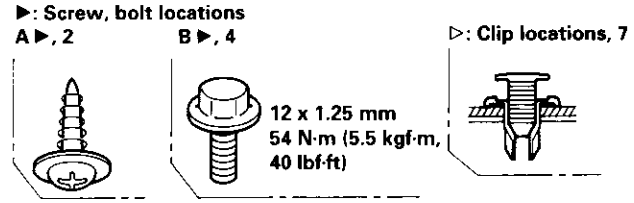

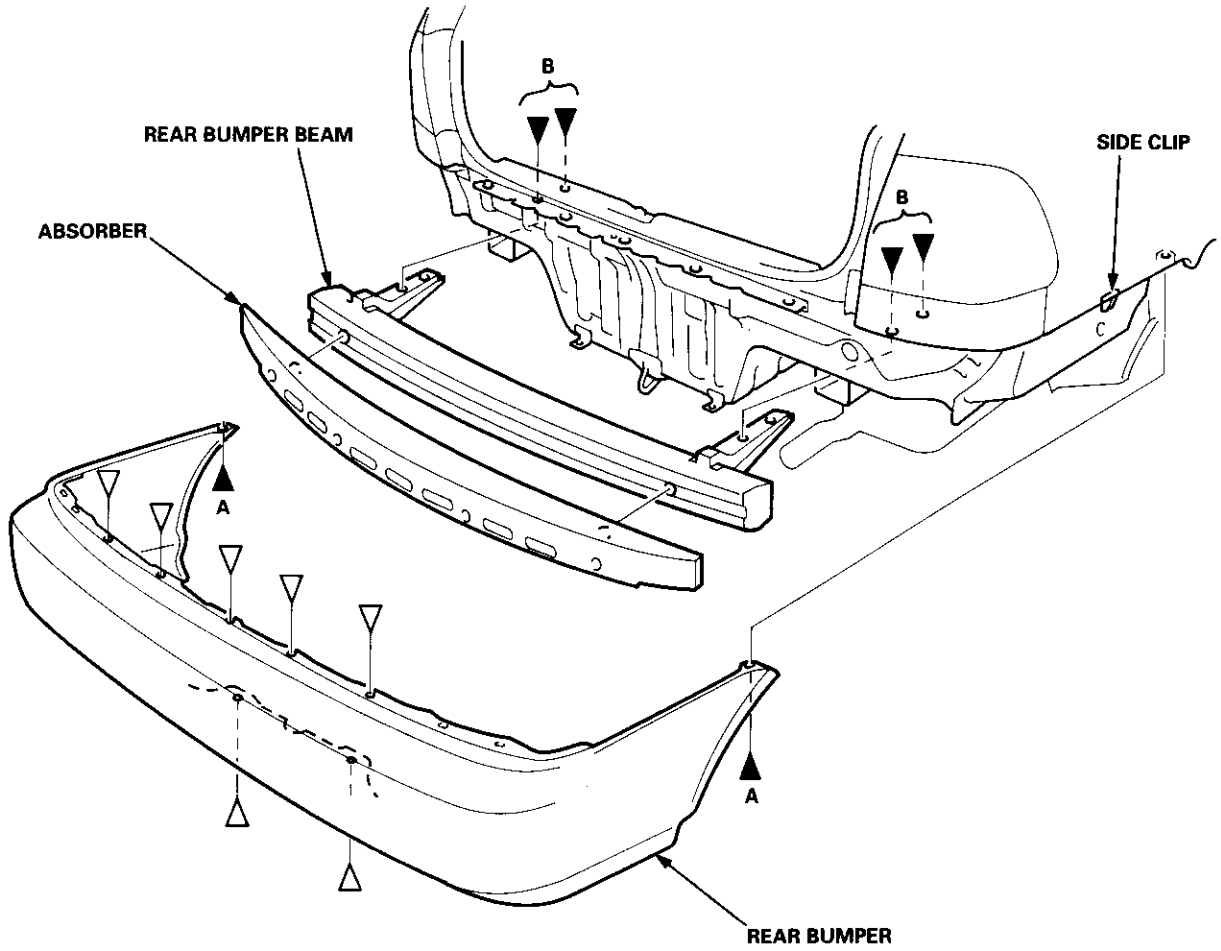

Installation is the reverse of the removal procedure.

NOTE:
- If necessary, replace any damaged clips.
- Make sure the rear bumper engages the side clip on each side securely.

Adjustment

NOTE: Before adjusting the hood, loosen each bolt slightly.

1. Adjust the hood hinges right and left, as well as fore and aft, by using the elongated holes.
2. Turn the hood edge cushions, as necessary, to make the hood fit flush with the body at front and side edges.
3. Adjust the hood latch to obtain the proper height at the forward edge.
4. After adjustment, tighten each bolt securely.

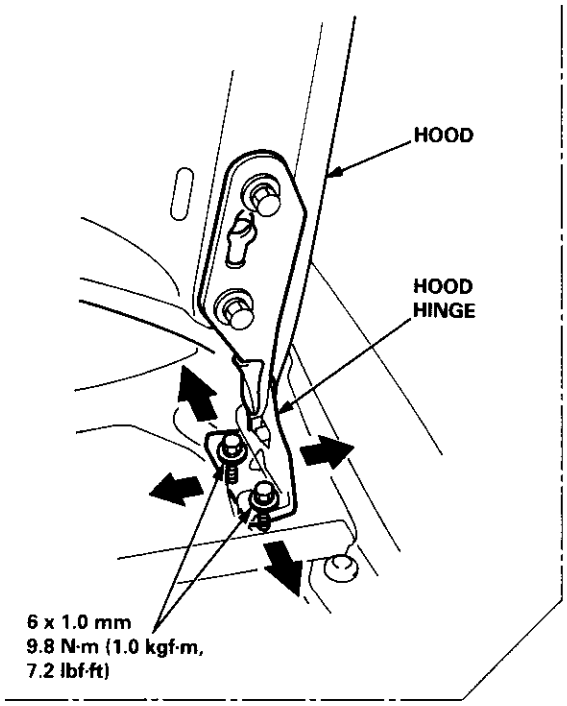

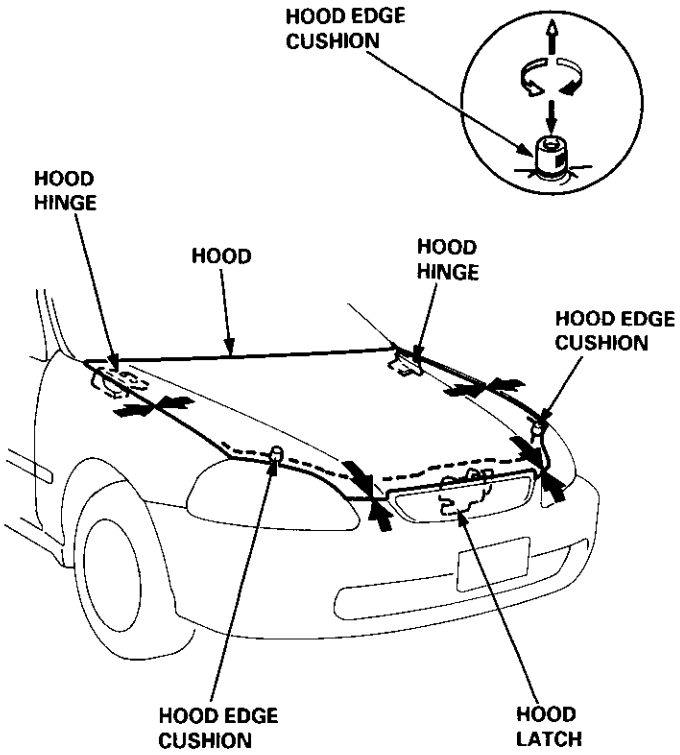

NOTE: Move the hood latch right or left until the striker is centered in the hood latch as shown.

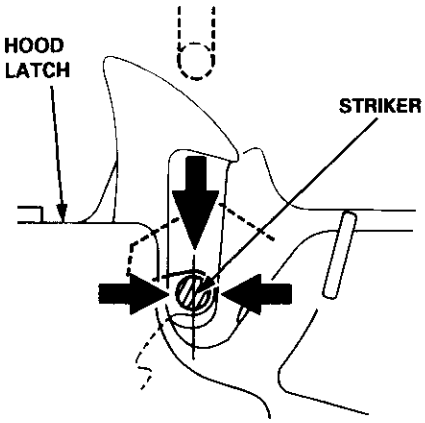

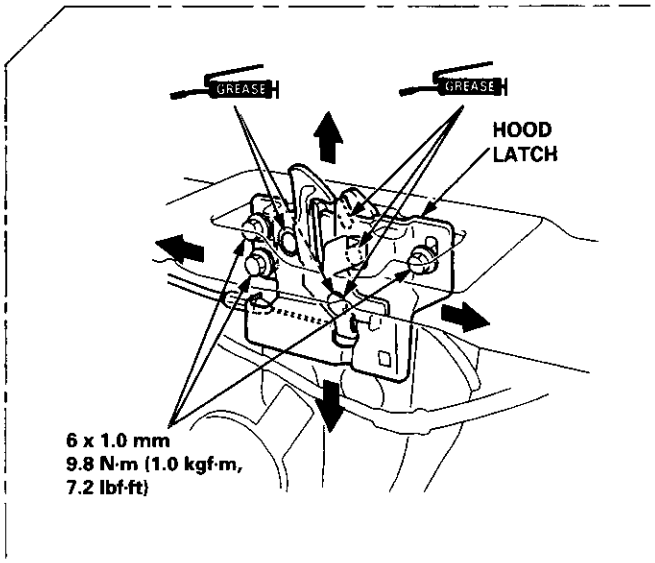

Adjustment

NOTE: Before adjusting the trunk lid, loosen each bolt slightly.

1. Adjust the trunk lid hinges right and left, as well as fore and aft, by using the elongated holes.
2. Turn the trunk lid edge cushions, as necessary, to make the trunk lid fit flush with the body at the rear and side edges.
3. Adjust the fit between the trunk lid and the trunk lid opening by moving the striker.
4. After adjustment, tighten each bolt securely.

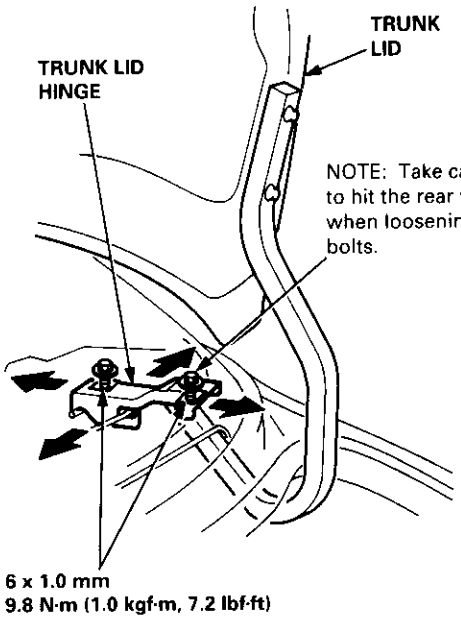

NOTE: Remove the rear shelf (see pages 20-59, 61).

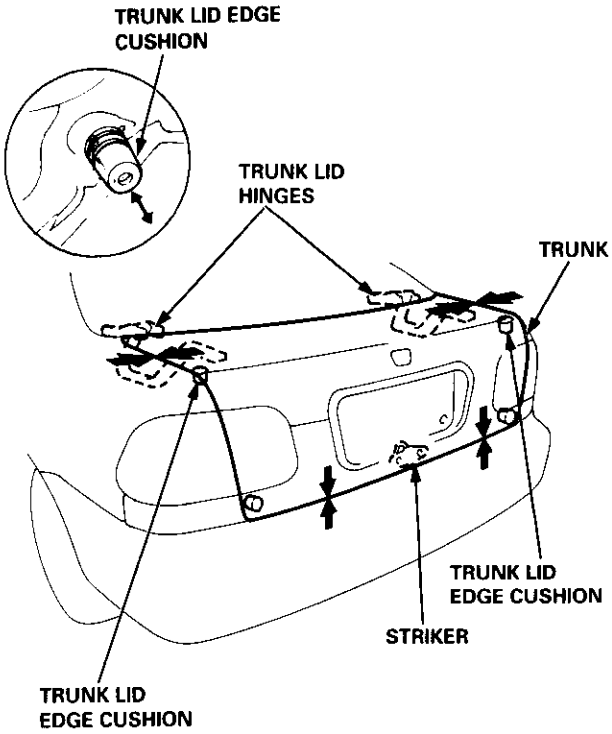

NOTE: Move the striker right or left until it's centered in the trunk lid latch as shown.

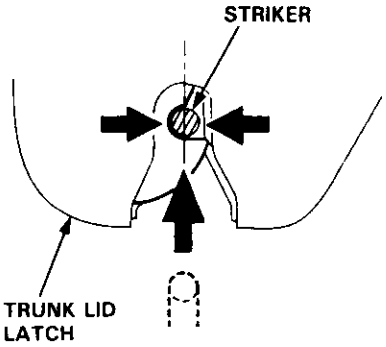

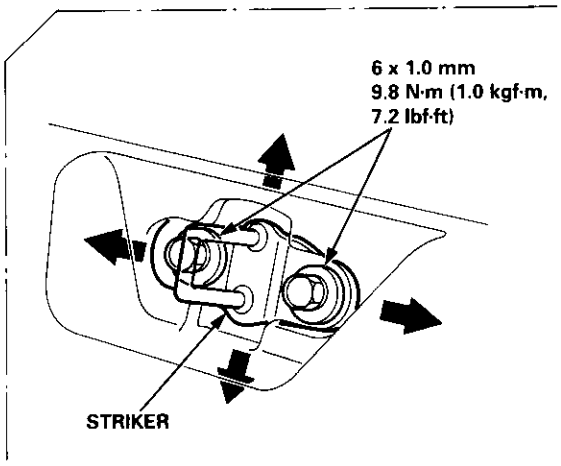

Adjustment

NOTE:
- Before adjusting the hatch, loosen each bolt and nut slightly.
- The support struts should be removed.
- To adjust, remove both hatch side trim (see page 20-63) and the rear roof trim (see page 20-65).

1. Adjust the hatch hinges right and left, as well as fore and aft, by using the elongated holes.
2. Turn the hatch edge cushions, as necessary, to make the hatch fit flush with the body at each side.
3. Adjust the hatch fit to the hatch opening by moving the striker.
4. After adjustment, tighten each bolt and nut securely.

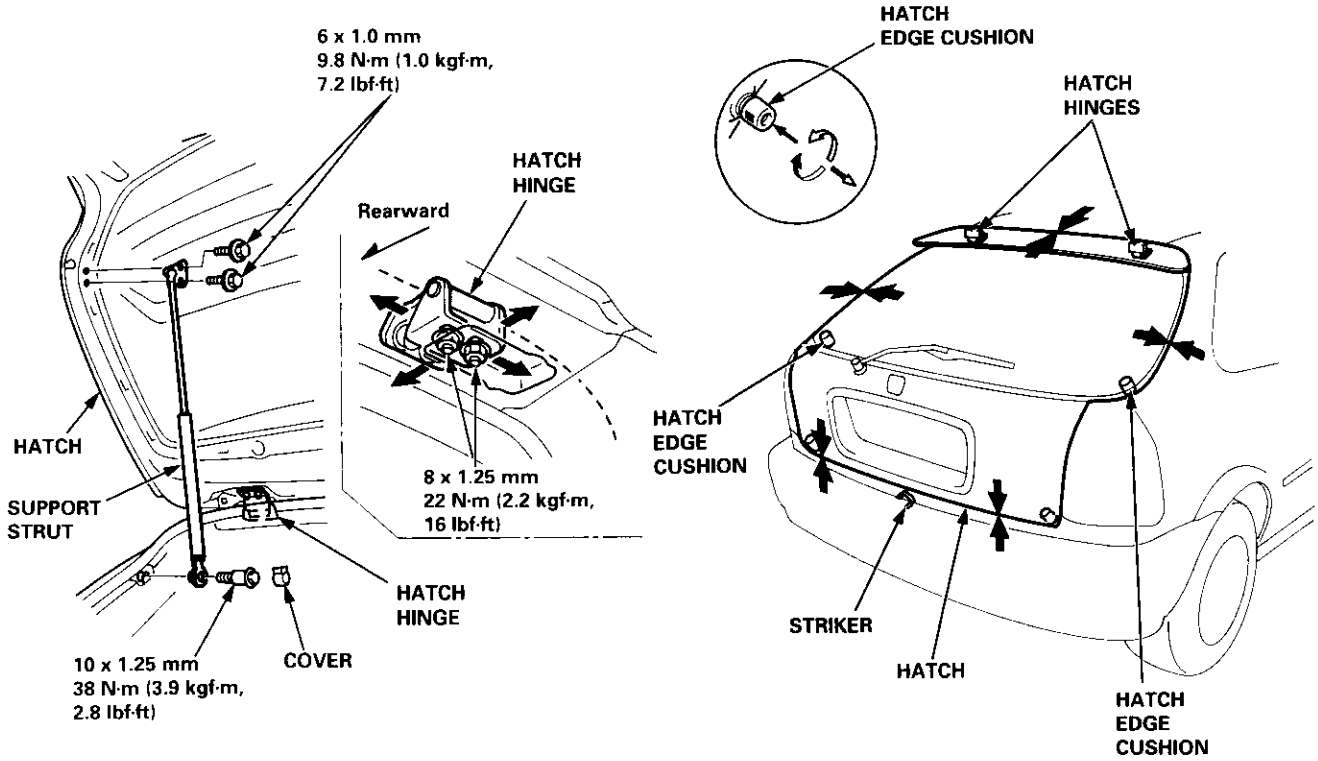

NOTE: Move the striker right or left until it's centered in the hatch latch, as shown.

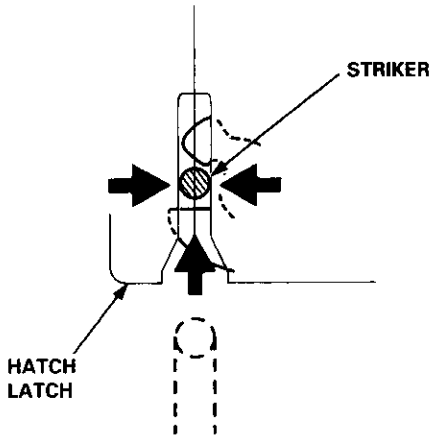

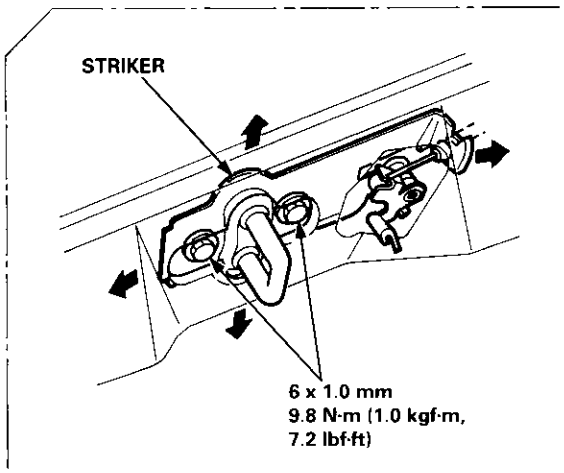

Front Grille/Hood Edge Protector

Replacement

Front grille:

NOTE: Take care not to scratch the front bumper.

Remove the front bumper (see page 20-94). Remove the clips and screws, then slide the front grille forward by detaching the hooks.

▶: Screw locations, 4

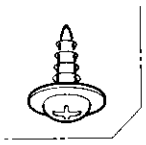

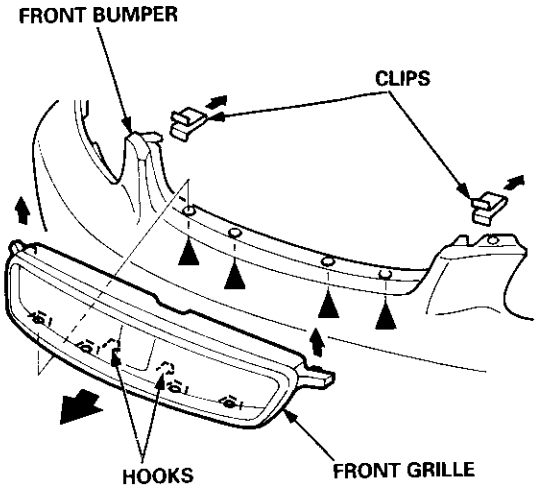

Hood edge protector:

NOTE:
- When removing the clips, use a clip remover.
- If necessary, replace any damaged clips.

▷: Clip locations, 18

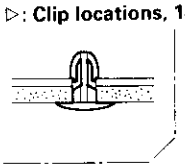

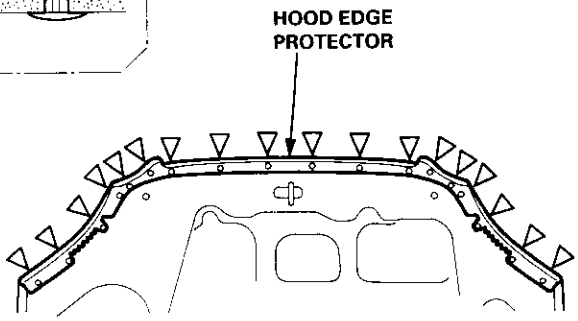

Trunk Lid Torsion Bars

Removal

CAUTION: Put on gloves to protect your hands.

NOTE: Take care not to damage the body.

Remove the torsion bars with the torsion bar assembly tool while holding the trunk lid as shown.

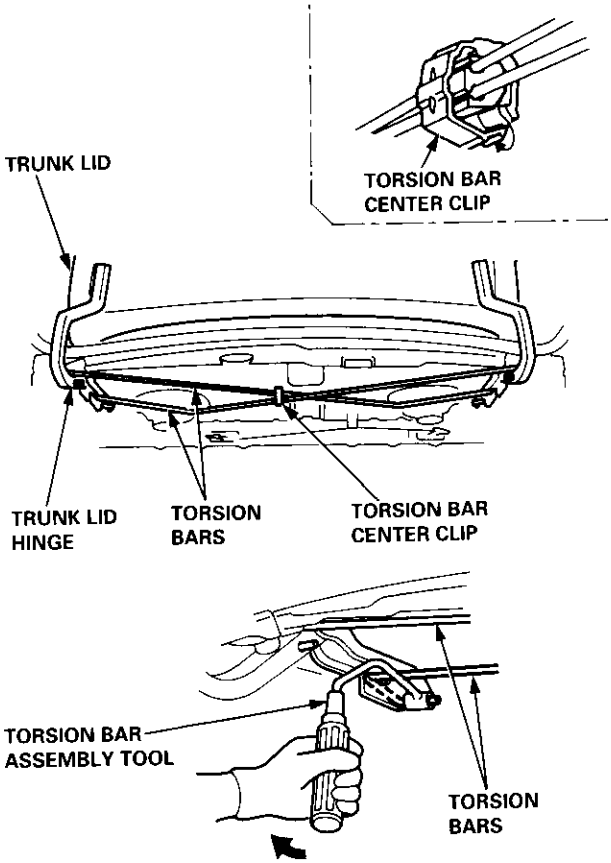

Installation is the reverse of the removal procedure.

NOTE:
- Adjust the torsion bars fore or aft with the torsion bar assembly tool as shown.

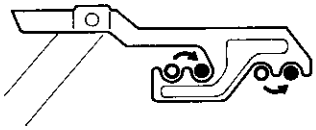

○ = Normal position
● = Higher tension

- Make sure the trunk lid opens properly.

Trunk Lid/Hatch Weatherstrip

Replacement

When installing the trunk lid/hatch weatherstrip, align it with the alignment mark on the trunk lid/hatch opening.

NOTE:
- Make sure there are no wrinkles in the weatherstrip.
- Check for water leaks.

2D/4D:

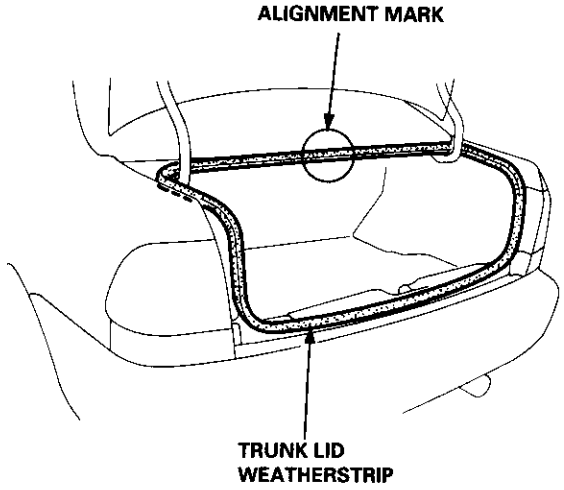

3D:

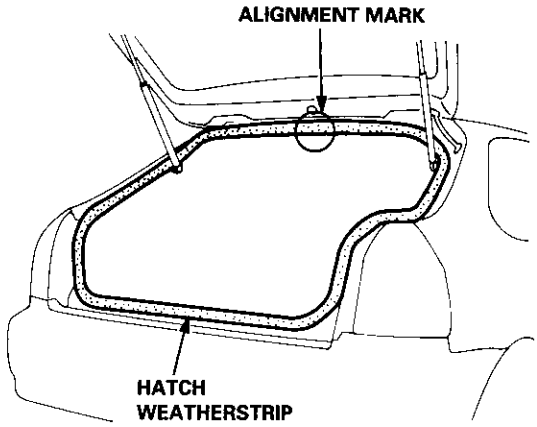

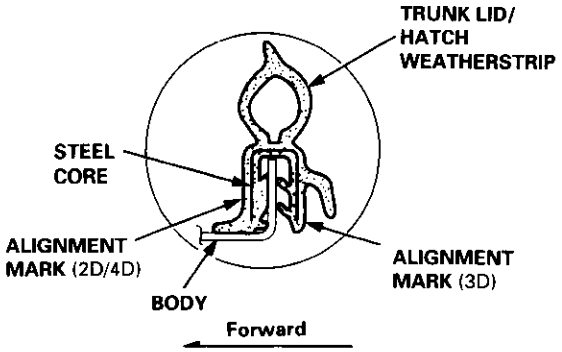

License Plate Trim

Replacement

CAUTION: Put on gloves to protect your hands.

NOTE: Take care not to scratch the trunk lid/hatch.

1. Remove the license plate.
2. 3D: Remove the hatch trim panel (see page 20-63).
3. Remove the nuts and clips, and detach the clip, then remove the license plate trim.

   NOTE: Take care not to drop the nuts inside the trunk lid/hatch.

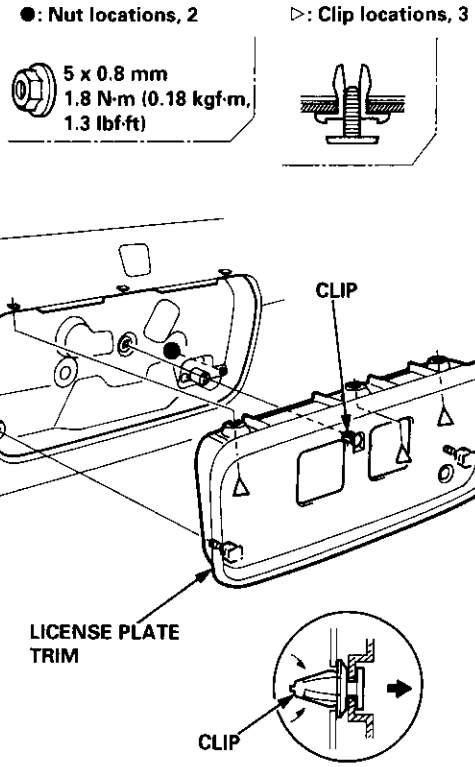

4. Installation is the reverse of the removal procedure.

   NOTE: If necessary, replace any damaged clips.

Hatch Spoiler

Removal

NOTE: Take care not to scratch the hatch and body.

1. Remove the hatch upper trim (see page 20-63).

2. Remove the nuts, and detach the clip, then lift the hatch spoiler up.

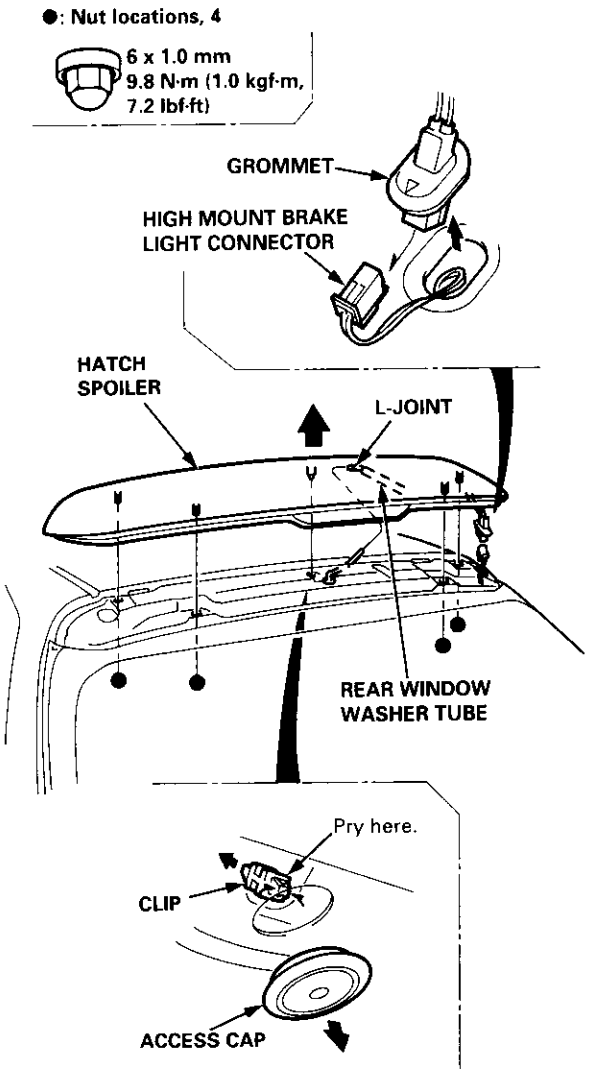

3. Disconnect the high mount brake light connector and rear window washer tube, then remove the hatch spoiler.

4. If necessary, remove the spoiler trim from the spoiler frame.

   NOTE: The hatch spoiler trim for Canada produced cars cannot be disassembled.

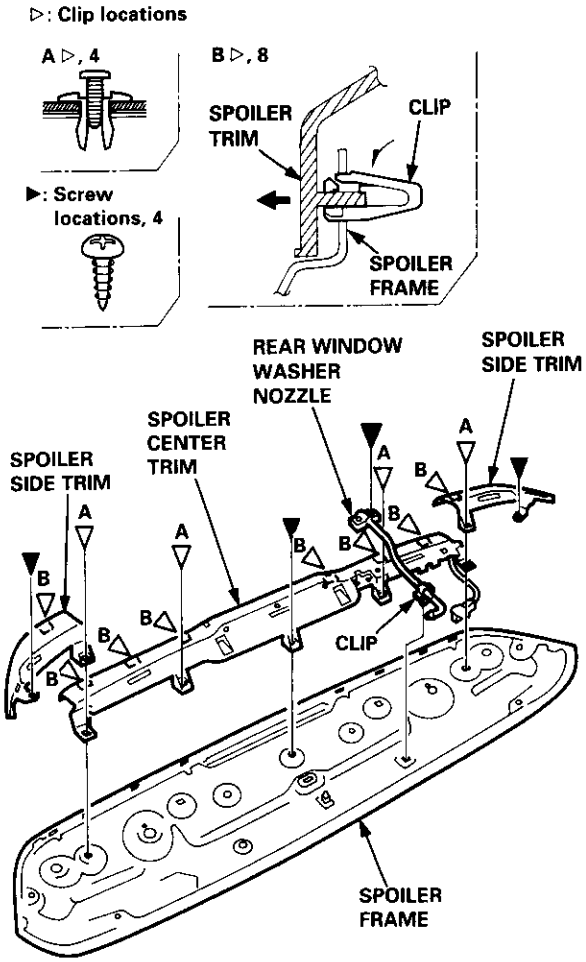

5. Installation is the reverse of the removal procedure.

   NOTE:
   - If necessary, replace any damaged clips.
   - Make sure the connector and washer tube are connected properly.

Side Window Moldings

Replacement

CAUTION: Put on gloves to protect your hands.

NOTE:
- Take care not to scratch the body.
- Remove the screw, and pull the side window molding by hand.

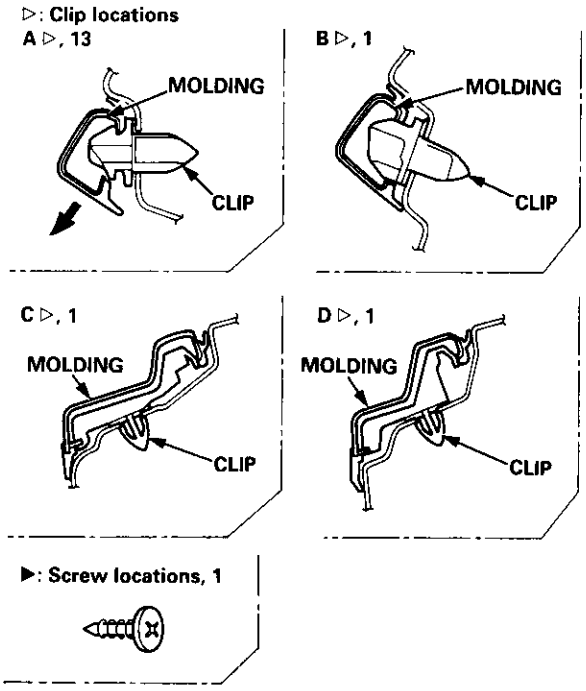

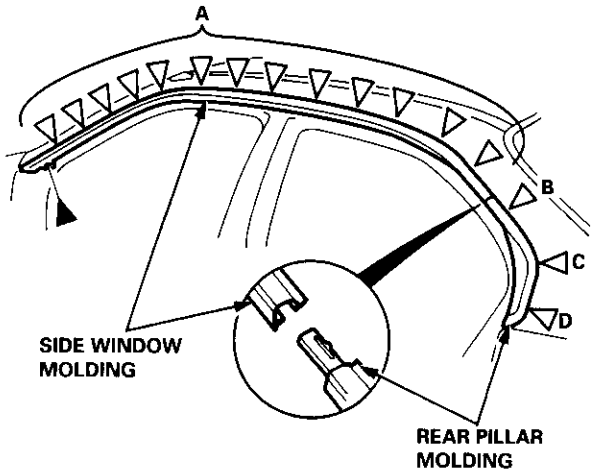

Installation is the reverse of the removal procedure.

NOTE: If necessary, replace any damaged clips.

Roof Molding

Replacement

CAUTION: When prying with a flat-tip screwdriver, wrap it with protective tape to prevent damage, and use protective tape on the body.

NOTE: Take care not to scratch the body.

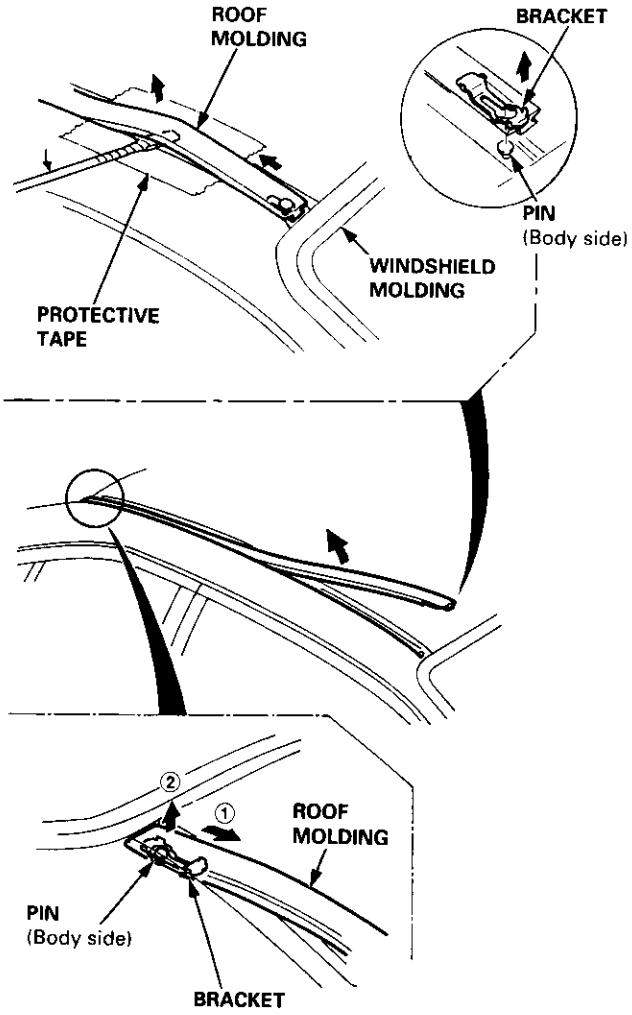

Installation is the reverse of the removal procedure.

NOTE:
- Take care not to damage the windshield molding.
- Make sure the roof molding is installed securely.

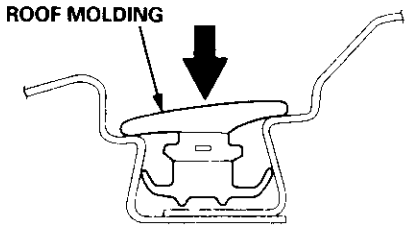

Replacement

CAUTION: When prying with a flat-tip screwdriver, wrap it with protective tape to prevent damage.

NOTE:
- To remove the front side molding, remove the inner fender (see page 20-106).
- To remove the door molding, remove the door panel (see pages 20-4, 10, 16) and plastic cover.
- To remove the rear side molding, remove the side trim panel (see pages 20-60, 61).
- Take care not to bend the door moldings.
- Before reassembling, clean the door bonding surface with a sponge dampened in alcohol.
- After cleaning, keep oil, grease and water from getting on the surface.
- If necessary, replace any damaged clips.

4D:

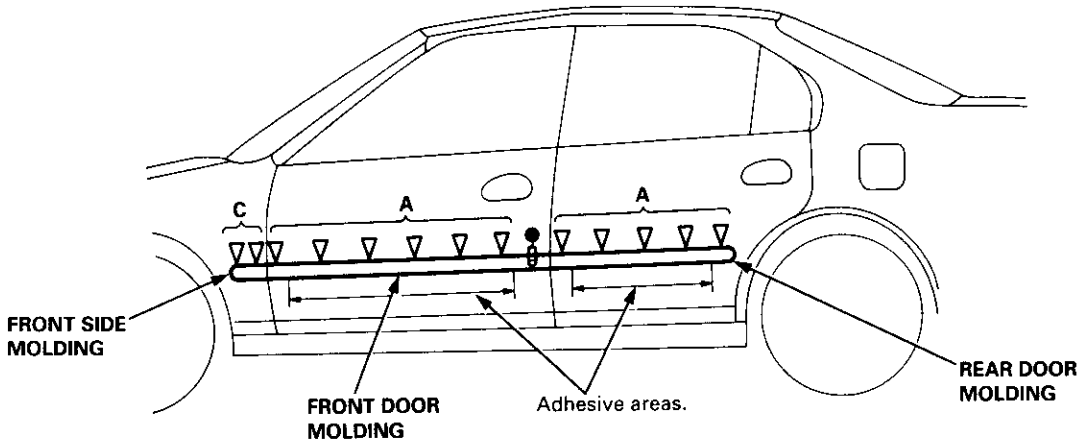

2D/3D:

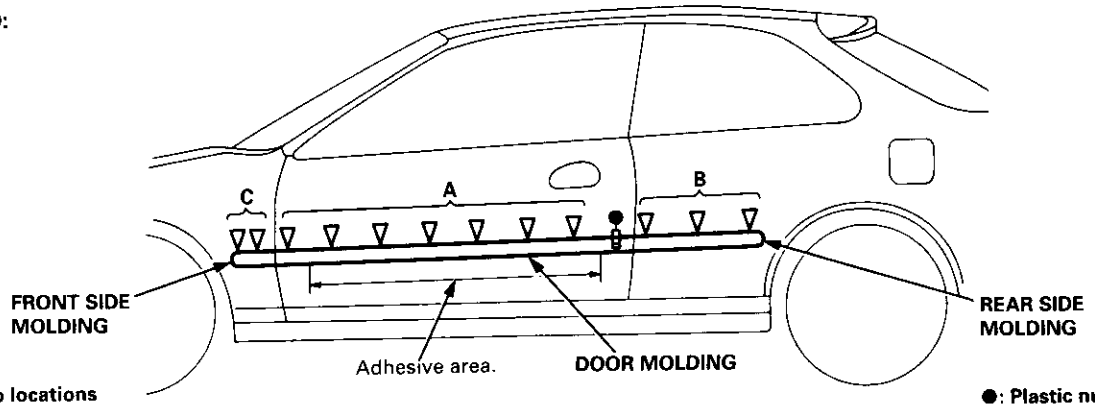

▷: Clip locations

A ▷: 4D, 11
2D/3D, 7

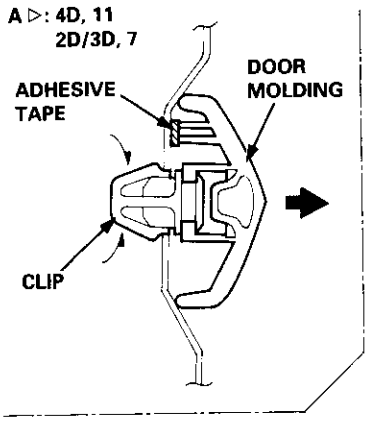

B ▷, 3

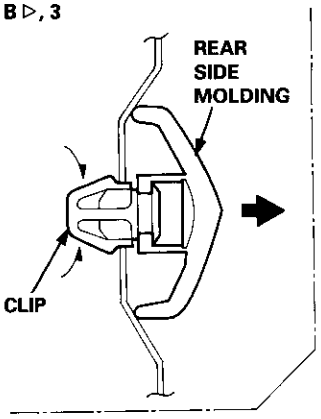

C ▷, 2

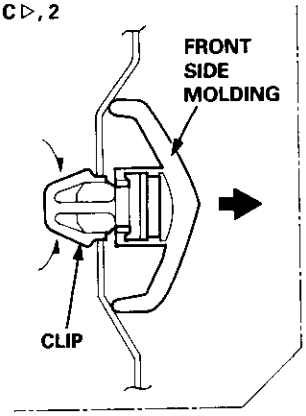

●: Plastic nut location, 1

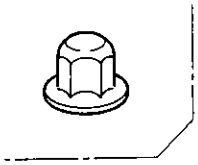

(cont'd)

Replacement (cont'd)

Door molding removal:

The following materials and tools are required to repair the door moldings.

NOTE: Follow the manufacturer's instructions.

Materials: (Reference)
- Stripe remover
  3M 08907
- Stripe adhesive remover
  3M 08908
- Adhesive tape
  3M Super Automotive Attachment Tape

Tools:
- Protective tape
- Knife or Cutter
- Sponge or Shop towel
- Infrared dryer
- Film
- Putty knife
- Alcohol

CAUTION: Put on gloves to protect your hands.

1. Remove the door panel, and pull back the plastic cover.

2. Apply protective tape on and around the molding.

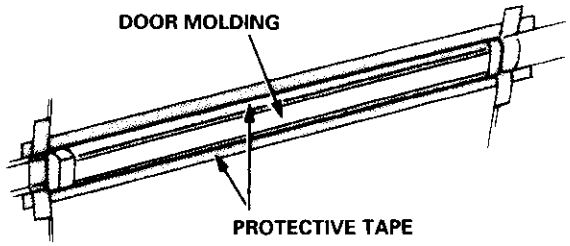

3. Release the clips from inside of the door. Carefully cut the adhesive tape with a knife or cutter while pulling the edge of the molding away from the door as shown.

   NOTE: Take care not to scratch or bend the molding.

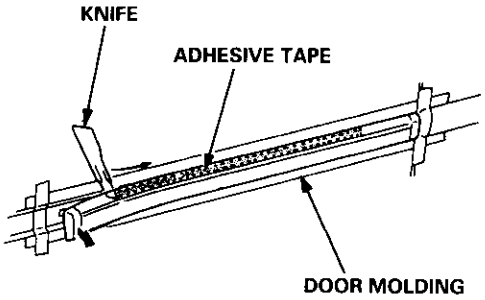

Door molding installation:

1. Glue the new adhesive tape to the moldings as shown.

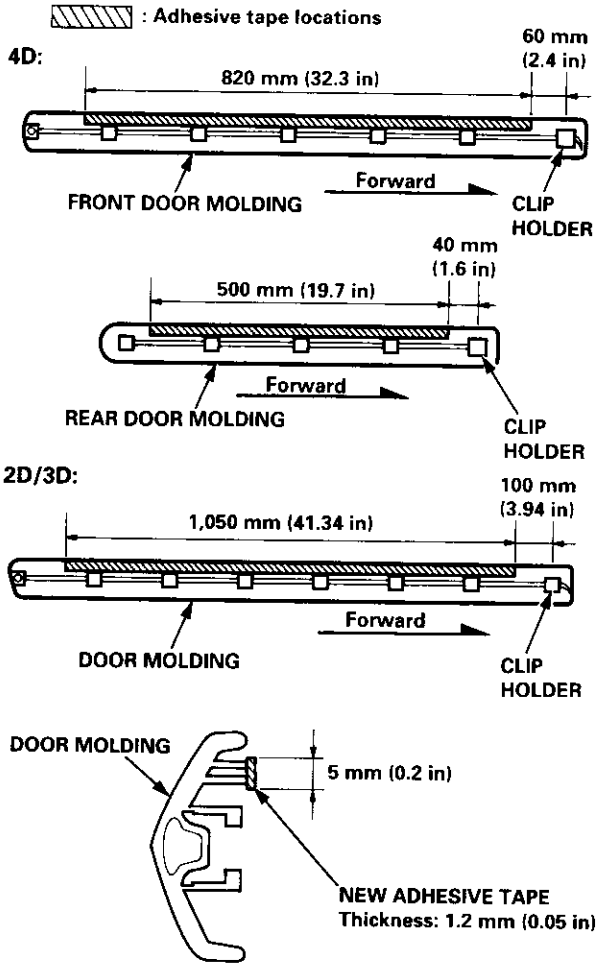

2. Install the clips on the molding.

3. Heat the bonding surface of the door and door molding with an infrared dryer.
   Door: 104 – 140°F (40 – 60°C)
   Molding: 68 – 86°F (20 – 30°C)

   NOTE: Use care when heating to prevent deformation of the molding.

4. Align the molding with the clip locations, and set the molding. Lightly push on the molding until its edge is fully seated on the adhesive tape.

   NOTE: Do not spray water on the molding within the first 24 hours after installation.

5. Reassemble all removed parts.

Replacement

NOTE:
- Take care not to scratch the body.
- 4D shown here; 2D and 3D removal procedure is the same as 4D.

▷: Clip locations

A ▷, 3

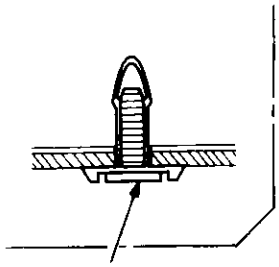

NOTE: Loosen the screw, then remove the lower clip using a clip remover.

B ▷, 7

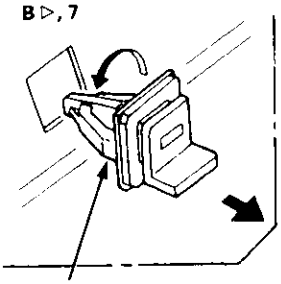

SIDE CLIP
Remove the side clips from the body by turning them 45°

▶: Screw locations, 4

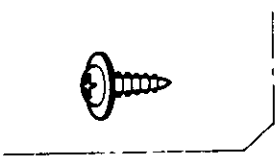

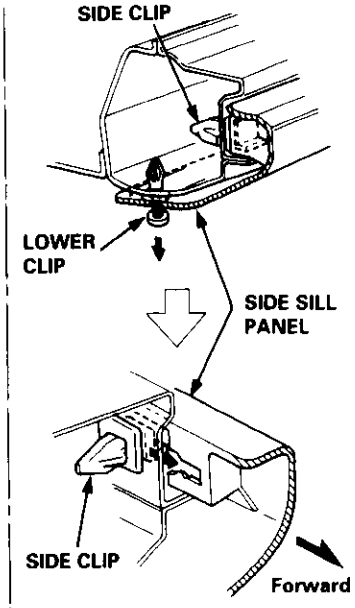

NOTE: When removing the side sill panel, the side clips will stay in the body.

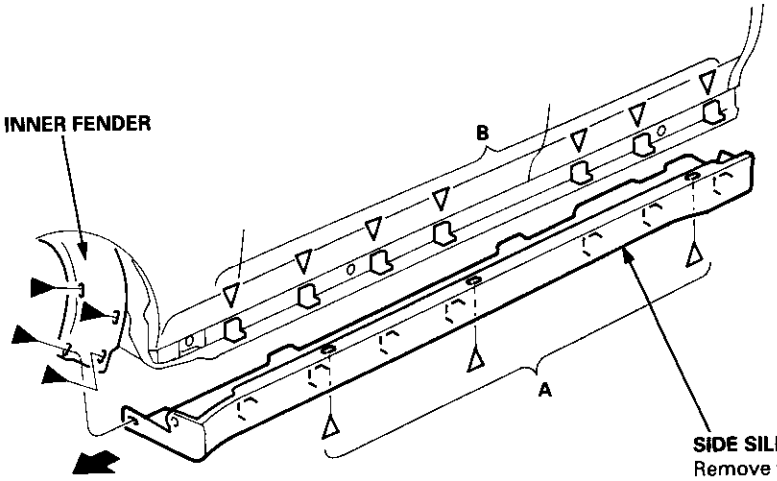

SIDE SILL PANEL
Remove the lower clips, then remove the side sill panel by sliding it forward.

To install the side sill panel, remove the side clips from the body, install them on the side sill panel, then install the side sill panel on the car.

NOTE:
- Take care not to twist the side sill panel.
- If necessary, replace any damaged side and lower clips.

Inner Fender, Fenderwell Trim, Fuel Pipe Protector and Rear Air Outlet

Replacement

NOTE: If necessary, replace any damaged clips.

Inner fender:

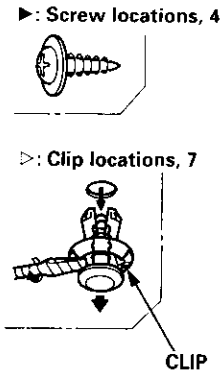

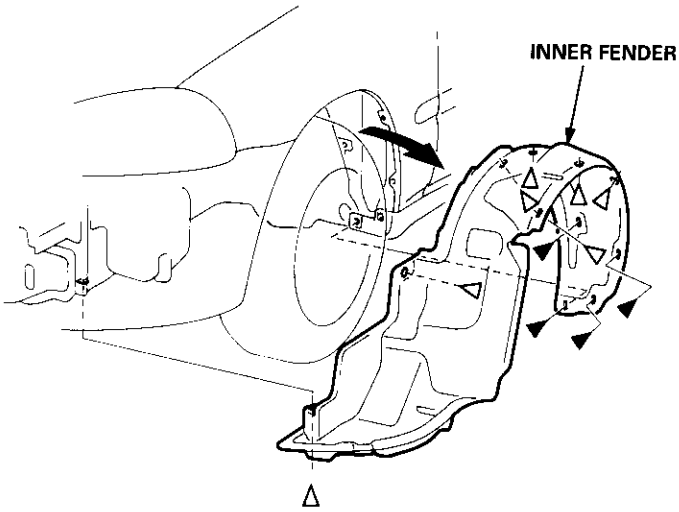

Fenderwell trim/Fuel pipe protector/Rear air outlet:

NOTE:
- Take care not to bend the fenderwell trim.
- Before installing the fenderwell trim, clean the body bonding surface with a sponge dampened in alcohol.
- After cleaning, keep oil, grease or water from getting on the surface.
- To remove the fuel pipe protector, first remove the rear wheel (see section 18).
- To remove the rear air outlet, first remove the rear bumper (see page 20-95).

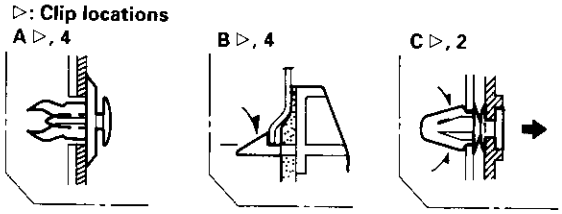

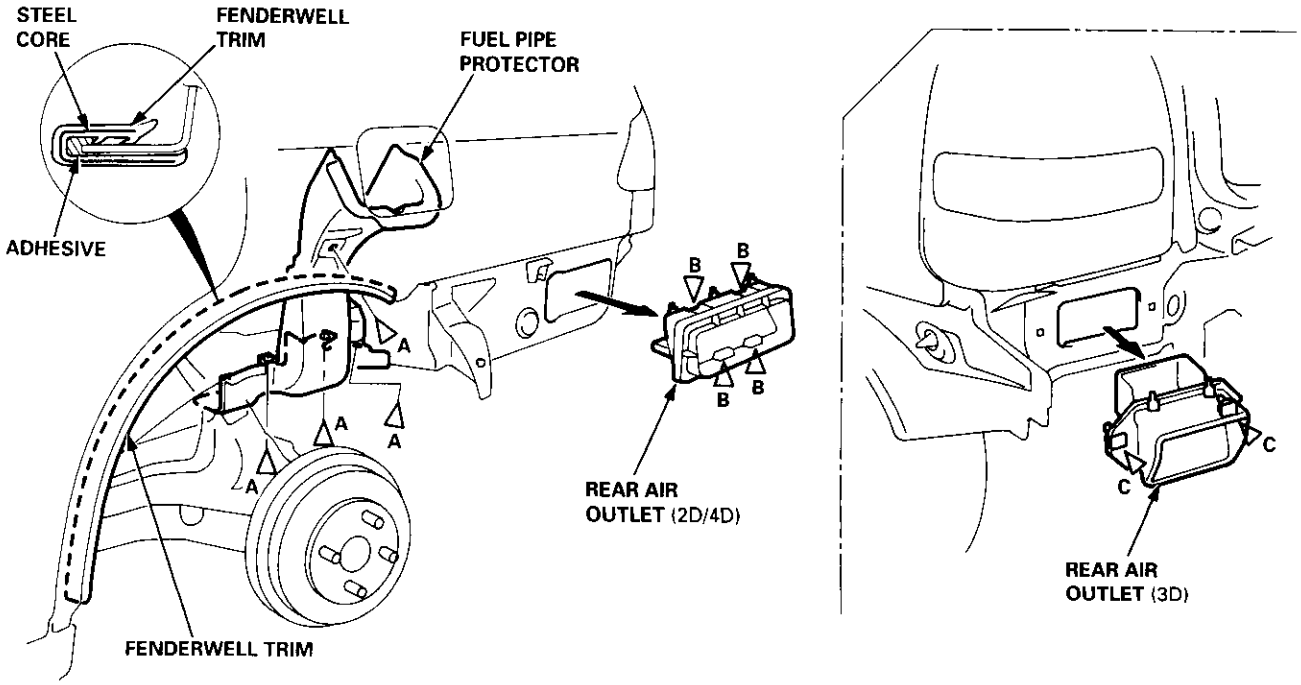

Component Location Index

2D/3D/4D:

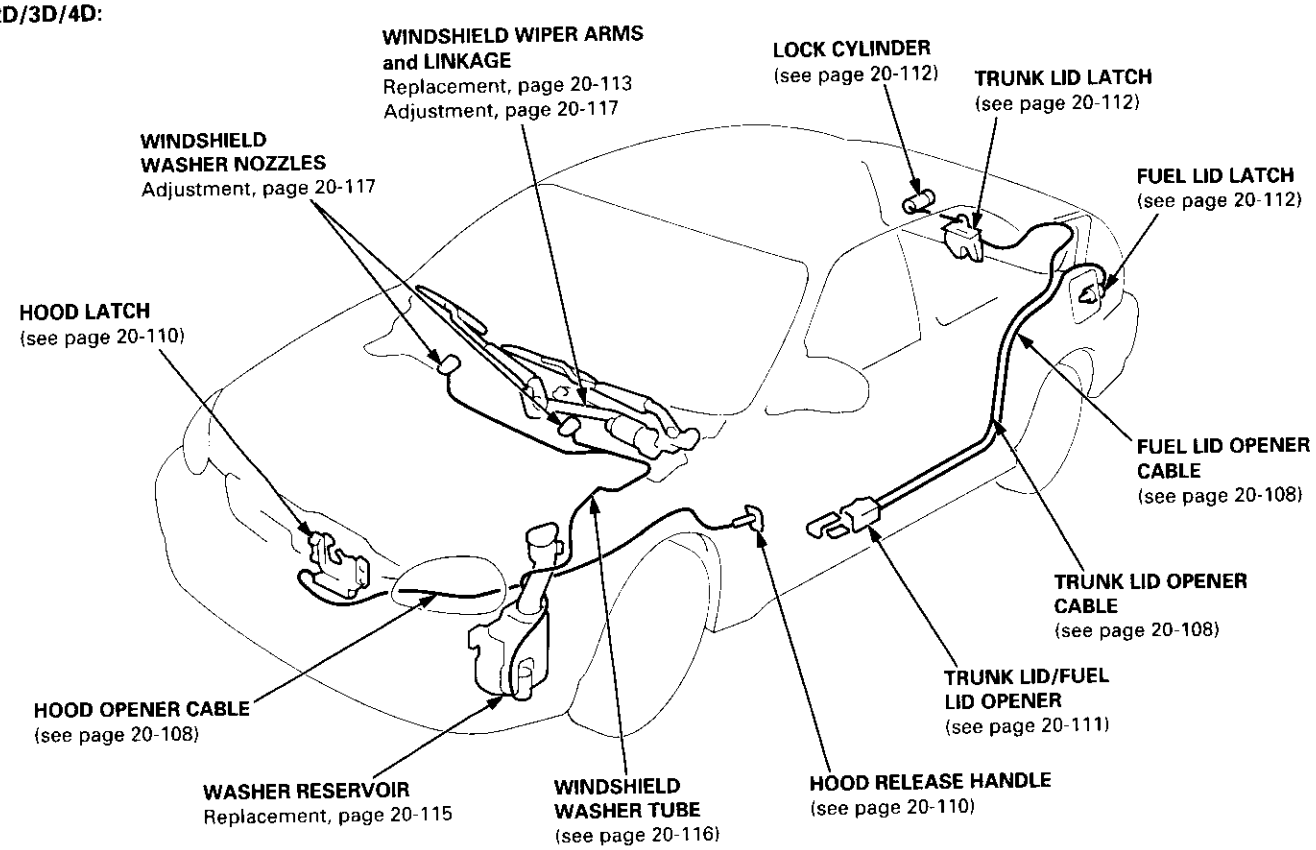

3D:

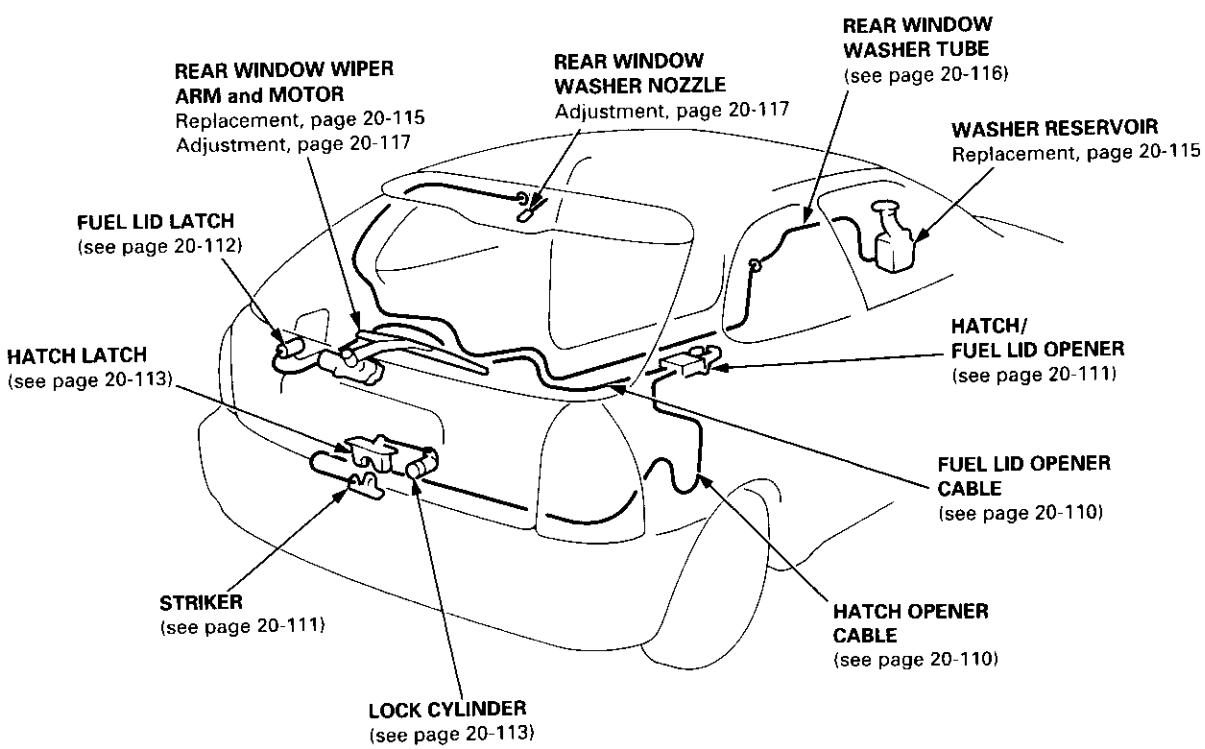

Opener Cables

Replacement

NOTE:
- When removing the clips, use a clip remover.
- Take care not to bend the opener cables.

Hood opener cable:

NOTE: Remove the front bumper (see page 20-94) and inner fender (see page 20-106).

▷: Clip locations
A ▷, 5

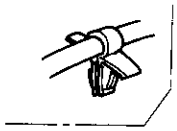

B ▷, 1

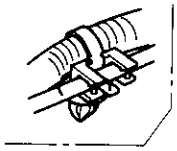

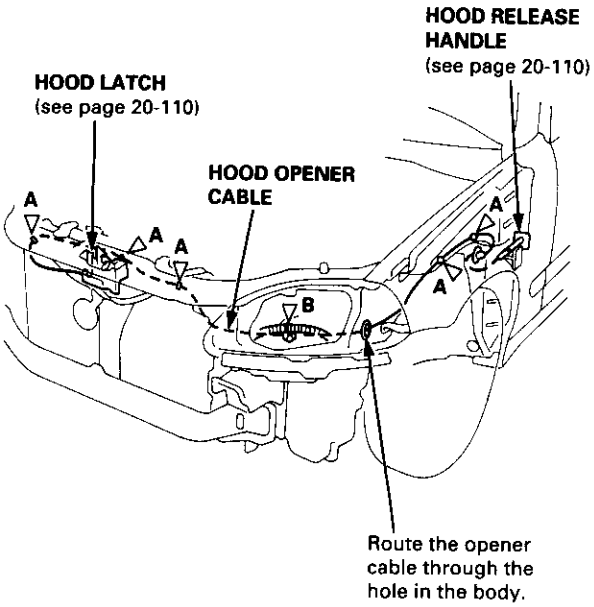

Installation is the reverse of the removal procedure.

NOTE:
- Make sure the hood opener cable is routed and connected properly.
- Make sure the hood opens properly.

Trunk lid/Fuel lid opener cable (2D/4D):

NOTE: Remove the following parts from the left side of the vehicle, then pull the carpet back, as necessary (see page 20-66).

- Rear seat cushion (see pages 20-79, 81)
- Rear seat side bolster (4D, see page 20-79)
- Rear seat-back (2D, see page 20-81)
- Center pillar lower trim panel (4D, see page 20-59)
- Lower anchor bolt from the front seat belt (2D, see page 20-86)
- Side trim (see pages 20-59, 61)
- Seat side trim (4D, see page 20-59)
- Side trim panel (2D, see page 20-61)
- Trunk mat and spare tire lid
- Rear trim panel (see page 20-62)
- Trunk side trim, Japan-produced (see page 20-62)
- Trunk trim panel, USA-produced (see page 20-62)

▷: Clip, cable cushion locations
A ▷, 4

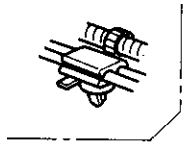

B ▷, 4D, 1
2D, 2

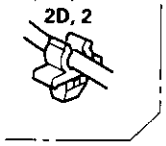

C ▷, 1 (4D)

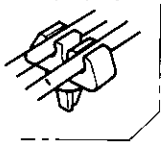

D ▷, 3

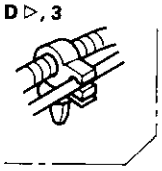

E ▷, 4D, 1
2D, 2

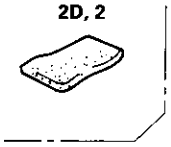

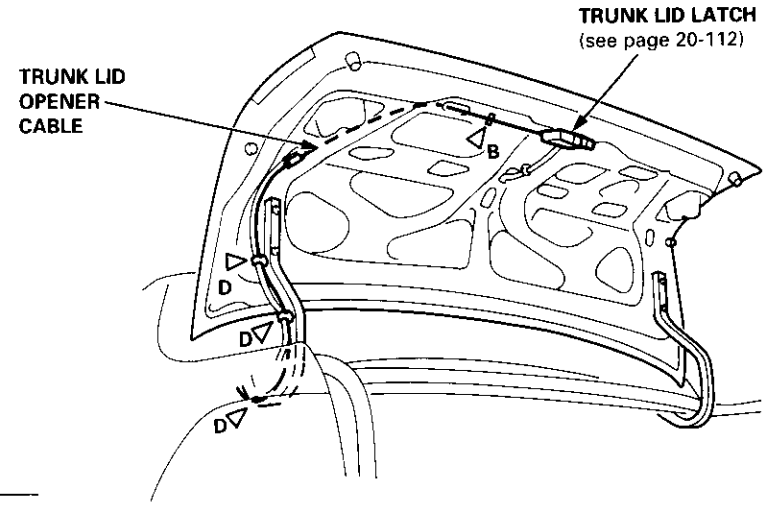
TRUNK LID LATCH
(see page 20-112)
TRUNK LID
OPENER
CABLE
B
D
D
D

4D:

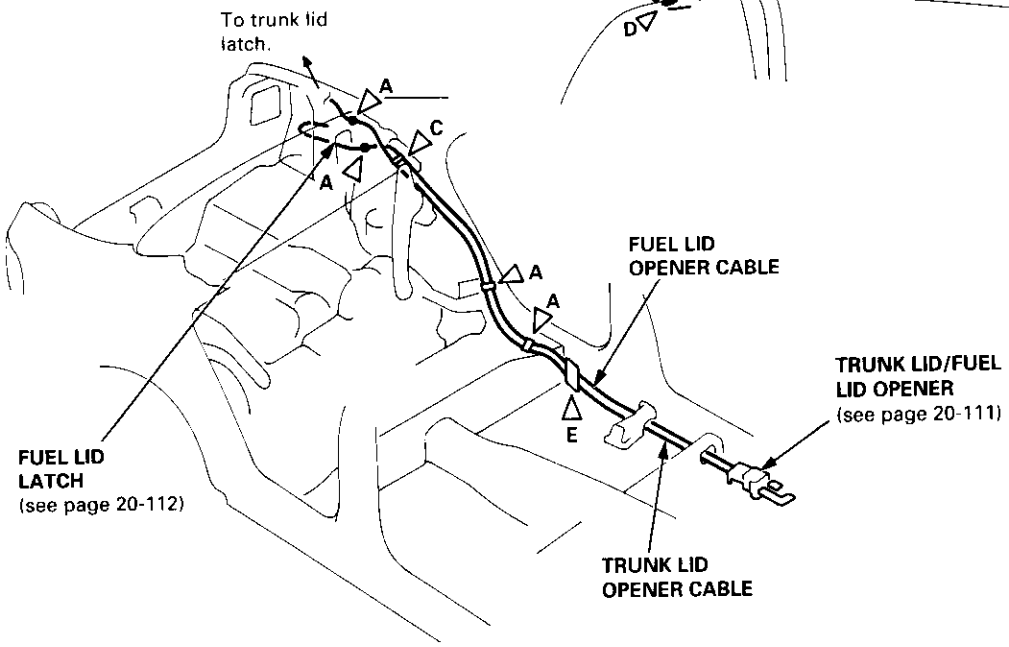
To trunk lid
latch.
A
C
A
A
A
FUEL LID
OPENER CABLE
TRUNK LID/FUEL
LID OPENER
(see page 20-111)
E
FUEL LID
LATCH
(see page 20-112)
TRUNK LID
OPENER CABLE

2D:

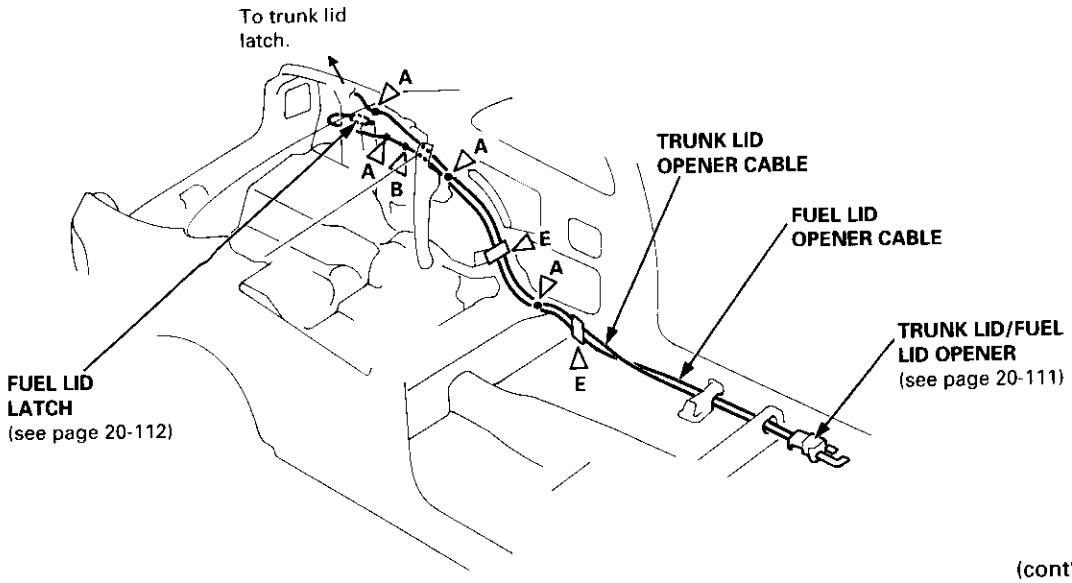
To trunk lid
latch.
A
A
A
B
TRUNK LID
OPENER CABLE
FUEL LID
OPENER CABLE
E
A
TRUNK LID/FUEL
LID OPENER
(see page 20-111)
E
FUEL LID
LATCH
(see page 20-112)

(cont'd)

Replacement (cont'd)

Hatch/Fuel lid opener cable (3D):

NOTE: Remove the following parts, then pull the carpet back as necessary (see page 20-66).

- Rear seat cushion and rear seat-back (see page 20-80)
- Lower anchor bolt from the front seat belt (see page 20-86)
- Side trim (see page 20-60)
- Spare tire lid
- Rear center shelf and rear side shelf (see page 20-60)
- Rear trim panel (see page 20-60)
- Side trim panel (see page 20-60)

▷: Clip, cable cushion locations

A ▷, 9 B ▷, 1 C ▷, 1 D ▷, 5

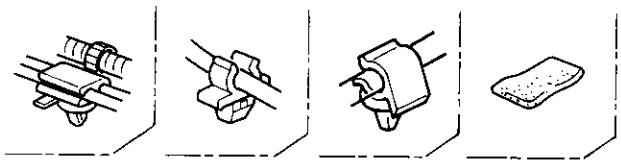

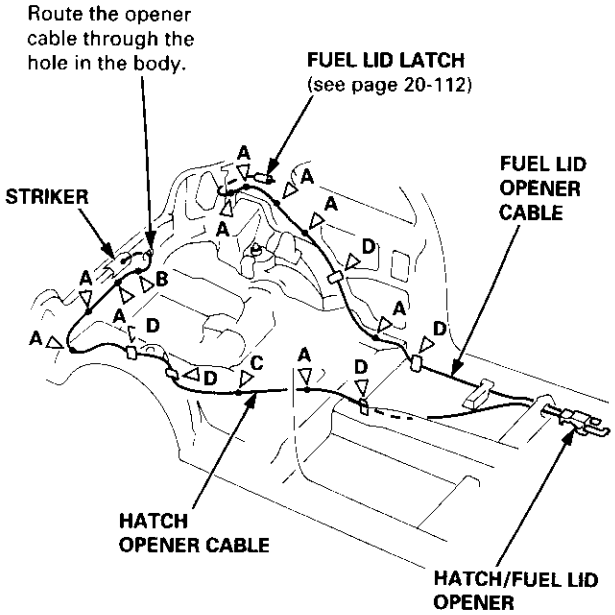

Installation is the reverse of the removal procedure.

NOTE:
- Make sure each opener cable is routed and connected properly.
- Make sure the hatch and fuel lid open properly.

Replacement

NOTE: Take care not to bend the opener cables.

Hood release handle:

NOTE: Remove the kick panel (see pages 20-59, 60, 61).

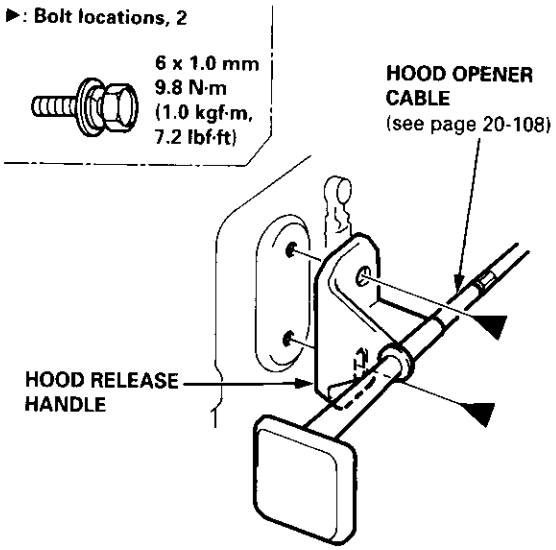

Hood latch:

NOTE: Remove the front bumper (see page 20-94).

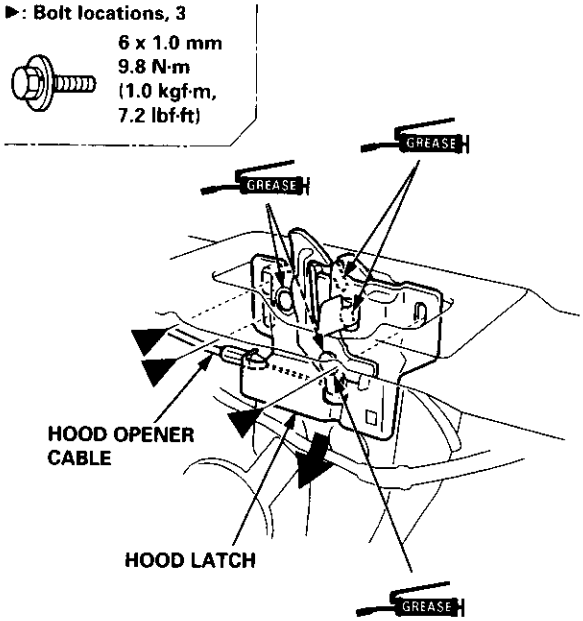

Installation is the reverse of the removal procedure.

NOTE:
- Make sure the opener cable is connected properly.
- Make sure the hood opens properly and locks securely.

Trunk lid or Hatch/Fuel lid opener:

NOTE: Remove the side trim (see pages 20-59, 60, 61).

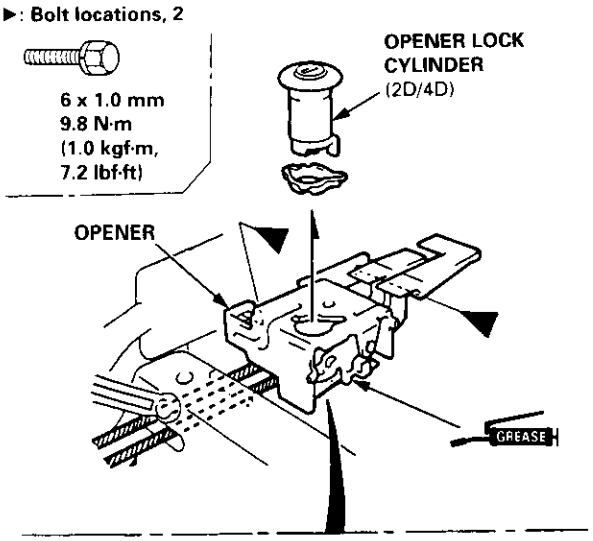

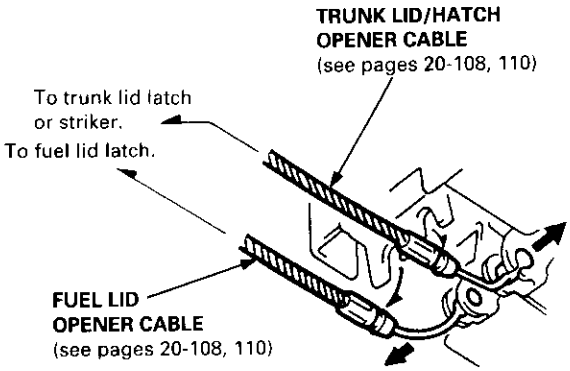

Installation is the reverse of the removal procedure.

NOTE:
- Make sure the opener cable is connected properly.
- Make sure the trunk lid or hatch and fuel lid open properly.

Striker (3D):

NOTE: Remove the rear trim panel (see page 20-60).

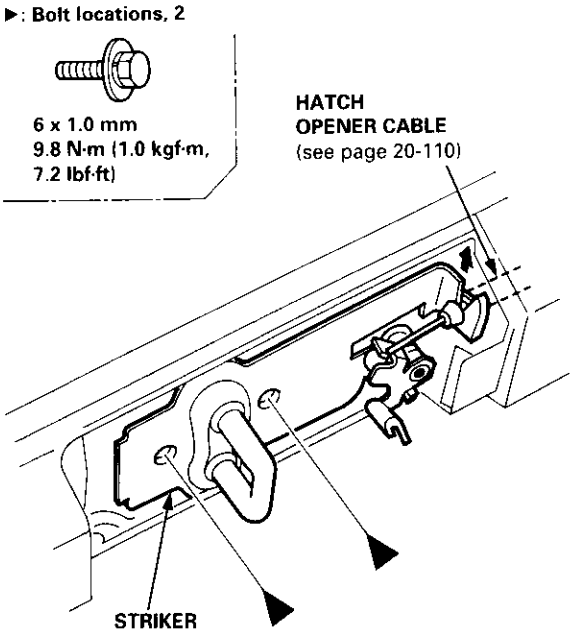

Installation is the reverse of the removal procedure.

NOTE:
- Make sure each opener cable is connected properly.
- Make sure the hatch opens properly and locks securely.

(cont'd)

Replacement (cont'd)

Fuel lid latch:

NOTE: Remove the following parts.

2D/4D:

- Rear trim panel (see page 20-62)
- Rear edge of the trunk side trim or trunk trim panel (left side, see page 20-62)

3D:

- Access panel on the side trim panel

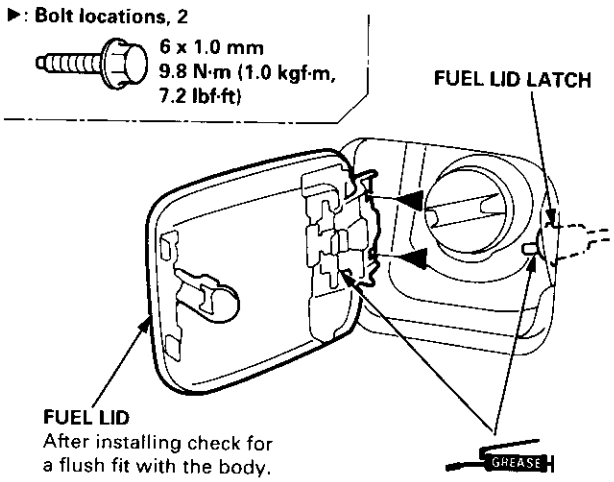

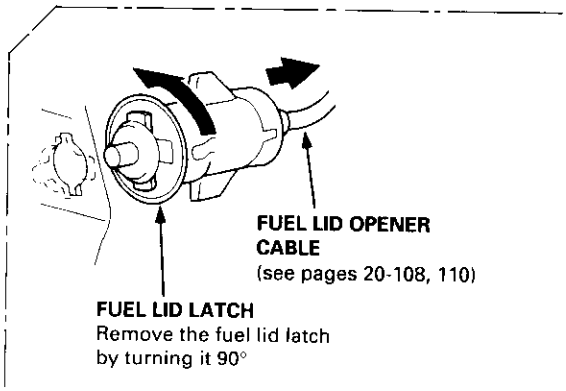

Installation is the reverse of the removal procedure.

NOTE:
- Make sure each opener cable is connected properly.
- Make sure the fuel lid opens properly and locks securely.

Trunk lid latch/Lock cylinder:

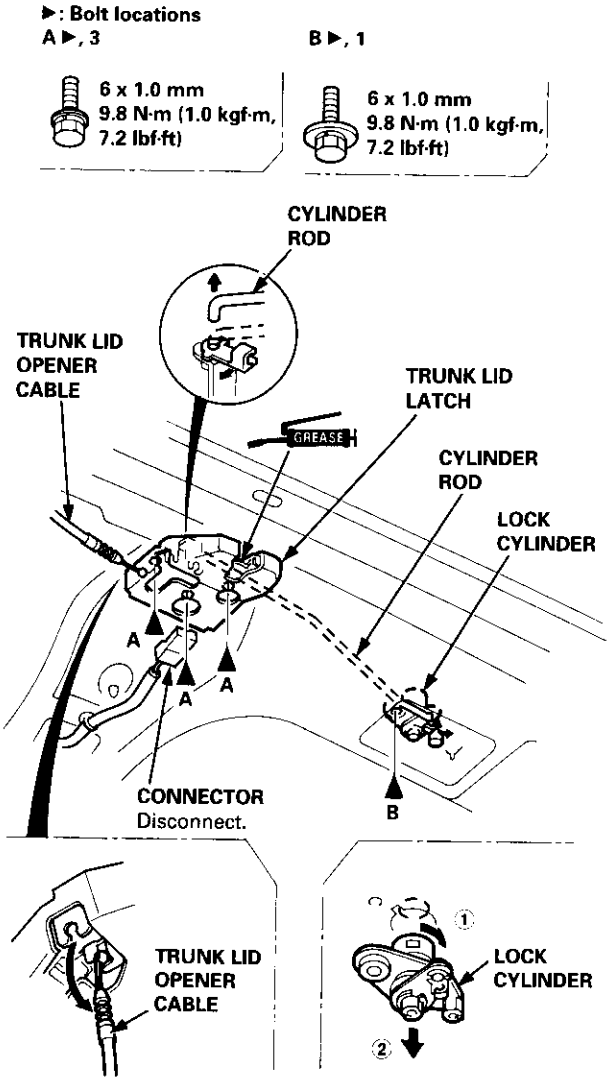

Installation is the reverse of the removal procedure.

NOTE:
- Grease the trunk lid latch.
- Make sure the trunk lid opens properly and locks securely.
- Make sure the connector and cylinder rod are connected properly.

Hatch latch/Lock cylinder:

NOTE: Remove the hatch trim panel (see page 20-63).

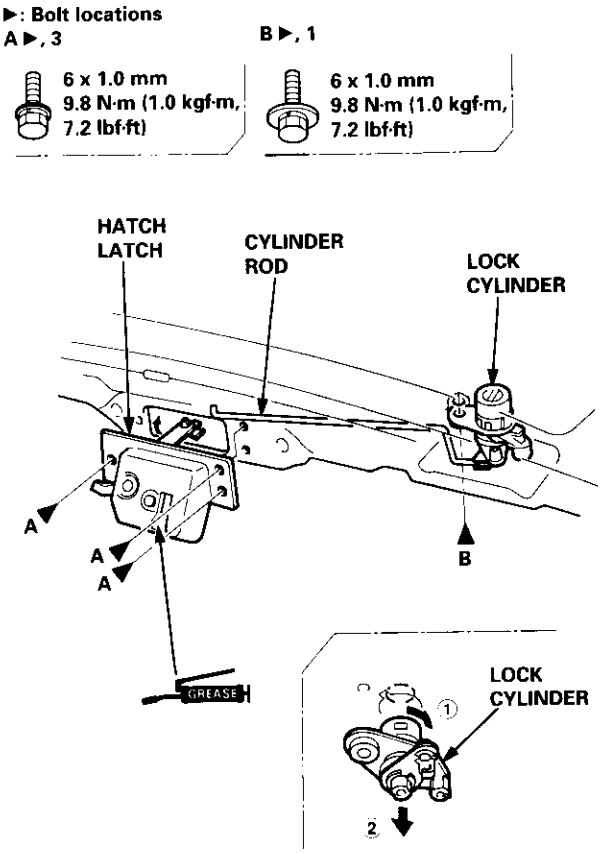

Installation is the reverse of the removal procedure.

NOTE:
- Grease the hatch latch.
- Make sure the hatch opens properly and locks securely.
- Make sure the cylinder rod is connected properly.

Replacement

CAUTION: Put on gloves to protect your hands.

NOTE: Take care not to scratch the hood and body.

1. Remove the windshield wiper arms, then remove the hood seal and cowl cover.

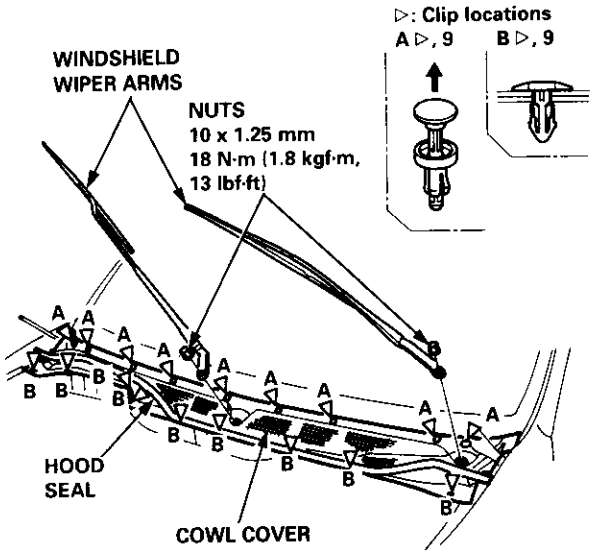

2. Disconnect the connector, then remove the windshield wiper linkage assembly.

Japan/Canada-produced:

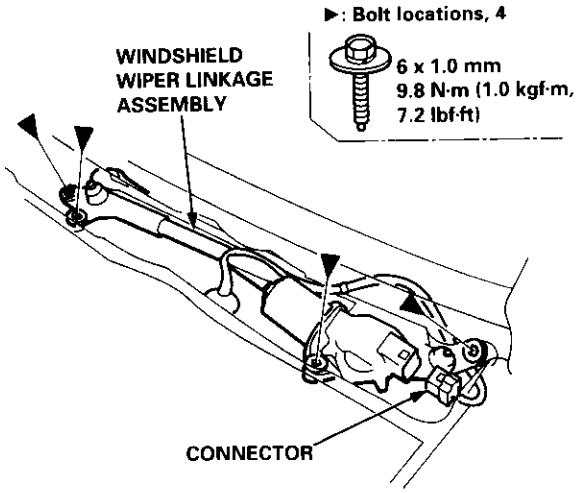

(cont'd)

Replacement (cont'd)

USA-produced:

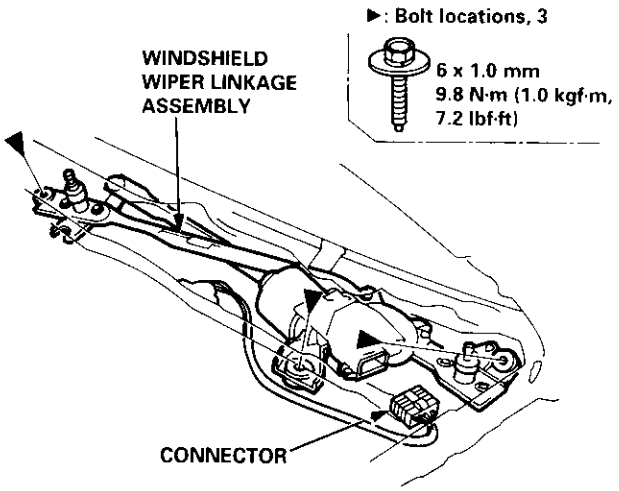

3. Separate the windshield wiper linkage and windshield wiper motor.

Japan/Canada-produced:

NOTE: Scribe a line across the link and windshield wiper linkage to show the original adjustment.

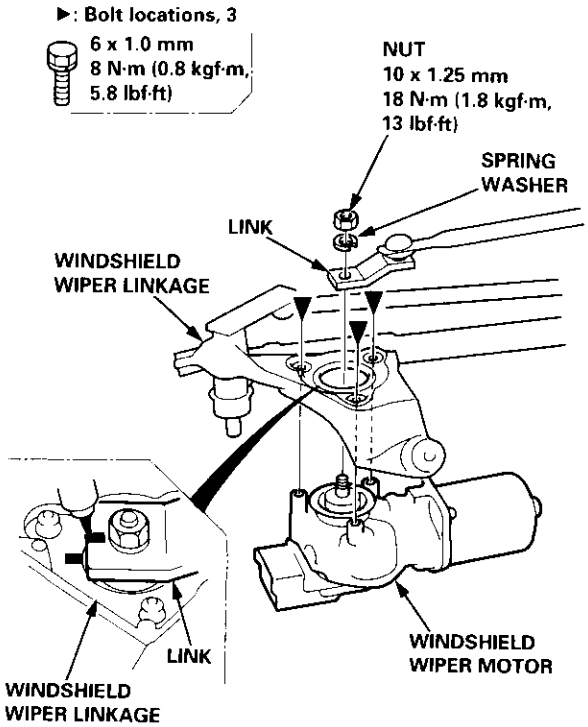

USA-produced:

NOTE: Scribe a line across the link and windshield wiper motor to show the original adjustment.

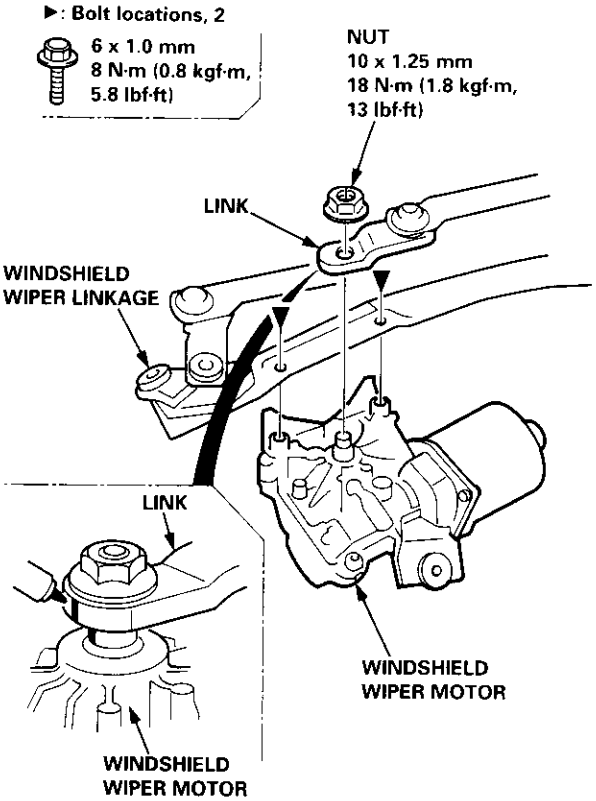

4. Installation is the reverse of the removal procedure.

NOTE:
- Make sure the connector is connected properly.
- If necessary, replace any damaged clips.
- Install the windshield wiper arms as described on page 20-117.
- Check the windshield wiper motor operation.
- Grease the moving parts.

Rear Window Wiper Arm and Motor

Replacement

1. Remove the hatch trim panel (see page 20-63).

2. Remove the rear window wiper arm and wiper motor as shown.

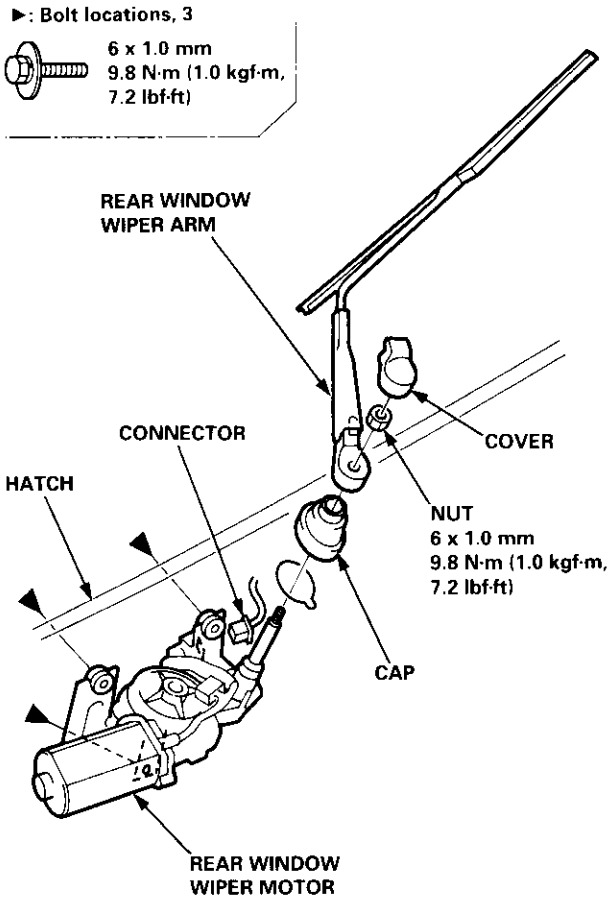

3. Installation is the reverse of the removal procedure.

NOTE:
- Make sure the connector is connected properly.
- Install the rear window wiper arm as described on page 20-117.
- Check the rear window wiper motor operation.
- Grease the moving parts.

Washer Reservoir

Replacement

1. Remove the front bumper (see page 20-94).

2. Disconnect the connectors and washer tubes from the washer motors.

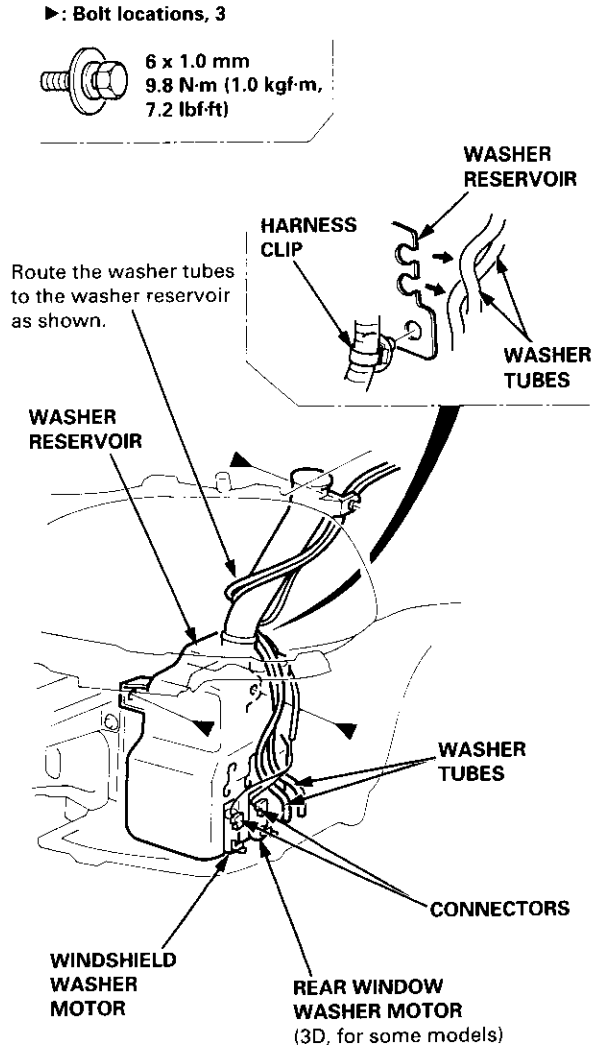

3. Remove the bolts, then remove the washer reservoir.

4. Installation is the reverse of the removal procedure.

NOTE:
- Make sure the washer motor connectors and washer tubes are connected properly.
- Check the washer motor operation.

Washer Tube

Replacement

NOTE:
- To remove the windshield washer tube, remove the left inner fender (see page 20-106).
- To remove the rear window washer tube (3D), remove the following parts from the left side of the vehicle.

  — Inner fender (see page 20-106)
  — Kick panel and side trim (see page 20-60)
  — Rear seat-back and rear seat cushion (see page 20-80)
  — Spare tire lid
  — Rear center shelf and rear side shelf (see page 20-60)
  — Rear trim panel and side trim panel (see page 20-60)
  — Quarter trim panel (see page 20-60)
  — Rear roof trim (see page 20-65)
  — Hatch spoiler (see page 20-101)

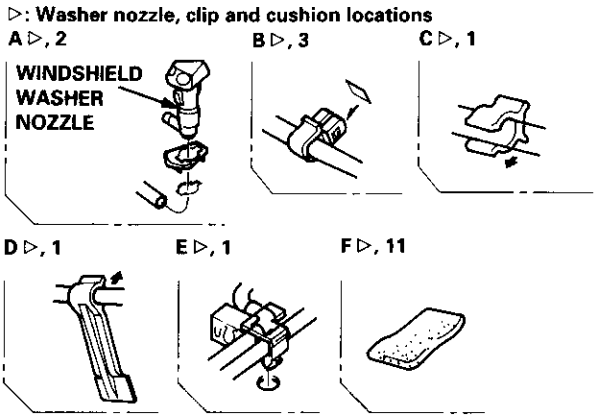

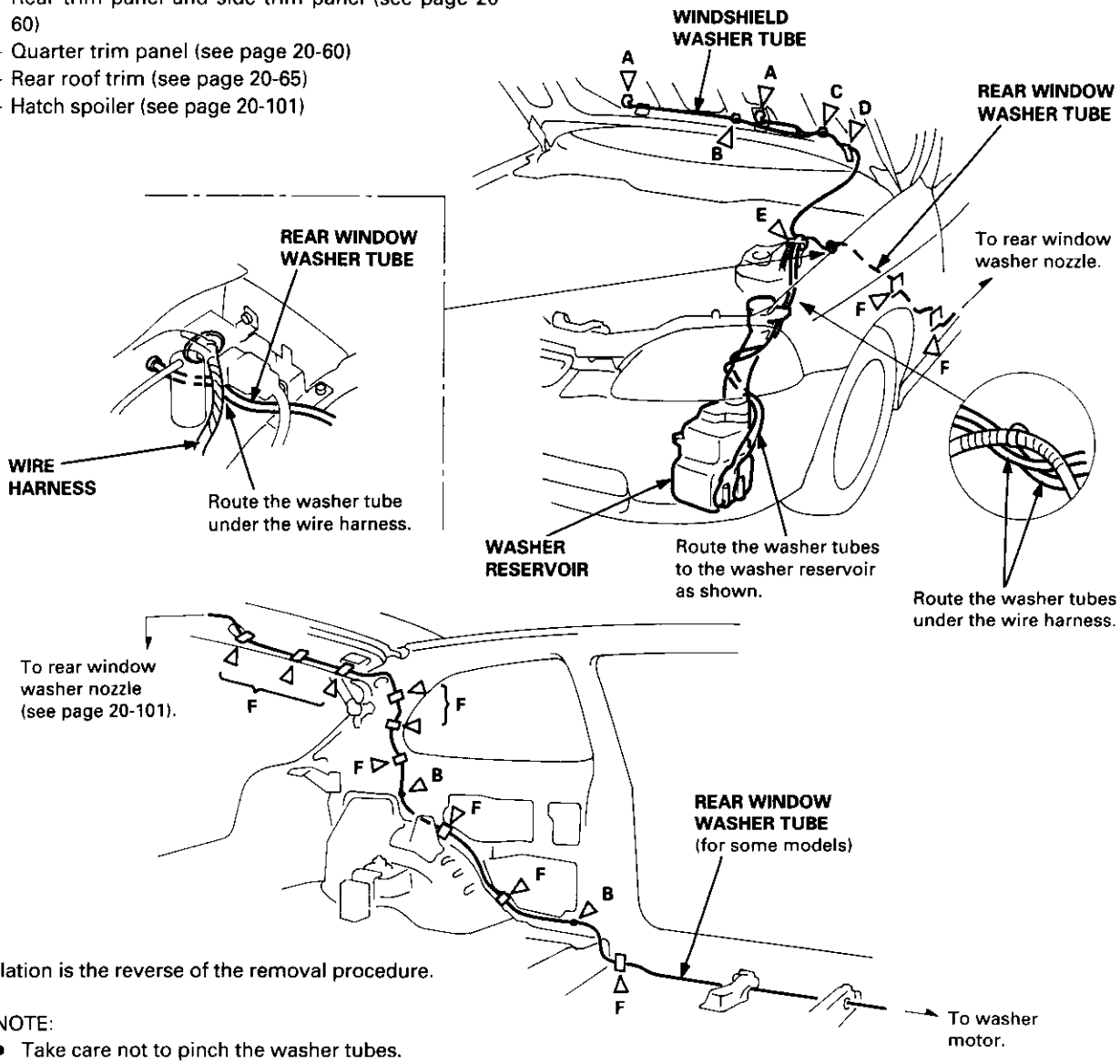

Installation is the reverse of the removal procedure.

NOTE:
- Take care not to pinch the washer tubes.
- If necessary, replace any damaged clips.
- After installing, adjust the aim of the washer nozzles (see page 20-117).

Adjustment

Windshield Wiper/Washer:

1. Adjust the wiper arms so that their park positions match the illustration.

View from front to rear

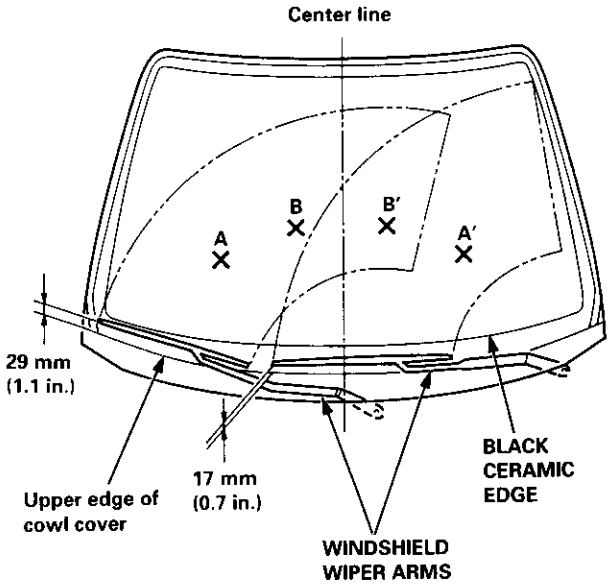

2. By inserting a tack and moving it as necessary, adjust the washer nozzles so that they aim at positions A, A', B, and B' shown in the illustration.

   NOTE: The fluid jets should hit within a 50 mm (2.0 in.) radius around each of points A, A', B, and B'.

Distance / Nozzle aim	from center line	from black ceramic edge
A and A'	400 mm (15.7 in.)	255 mm (10.0 in.)
B and B'	115 mm (4.5 in.)	322 mm (12.7 in.)

Rear Window Wiper/Washer (3D):

1. Adjust the rear window wiper arm so that its park position matches the illustration.

View from rear to front

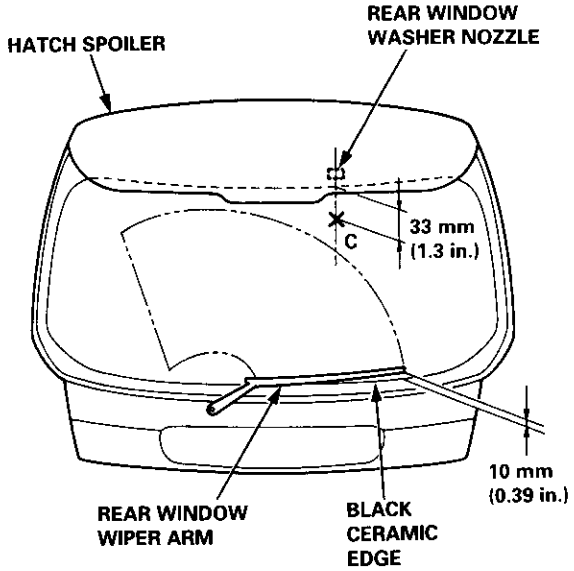

2. By inserting a tack and moving it as necessary, adjust the washer nozzle so that it aims at position C as shown in the illustration.

   NOTE: The fluid jet should hit within a 50 mm (2.0 in.) radius around point C.

Emblems

Installation

Apply the emblems where shown.

NOTE:
- Before applying, clean the body surface with a sponge dampened in alcohol.
- After cleaning, keep oil, grease and water from getting on the surface.

Attachment Points (Reference):

Unit: mm (in.)

4D:

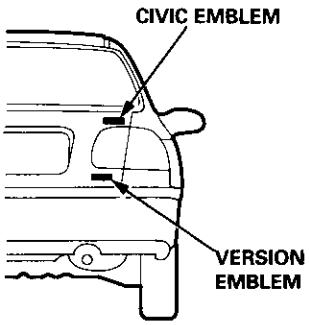

3D:

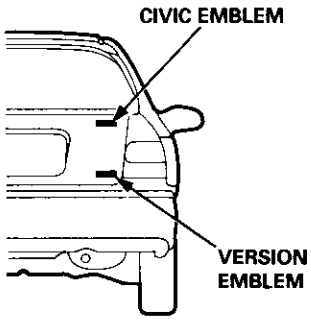

2D:

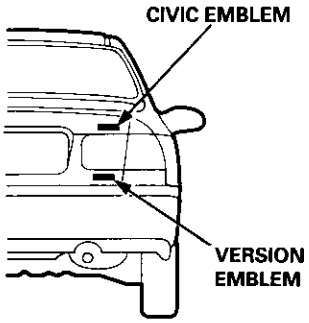

CIVIC emblem

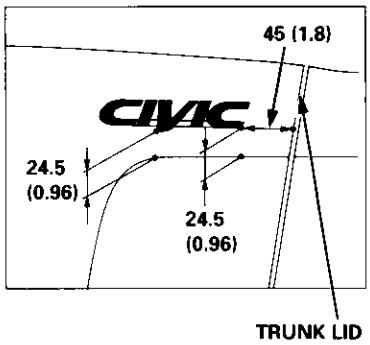

CIVIC emblem

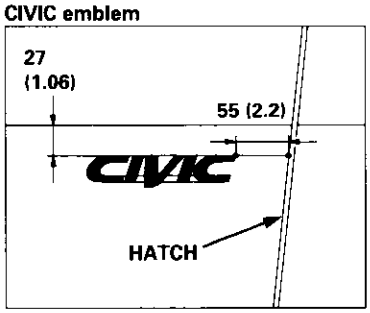

CIVIC emblem

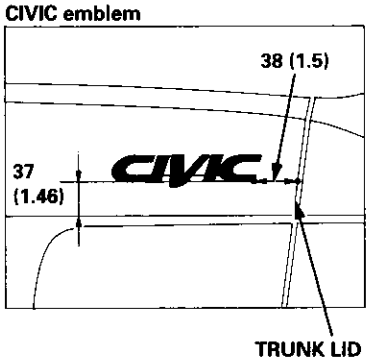

Version emblem

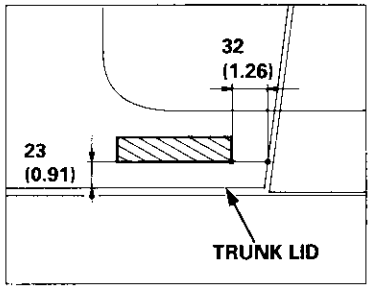

Version emblem

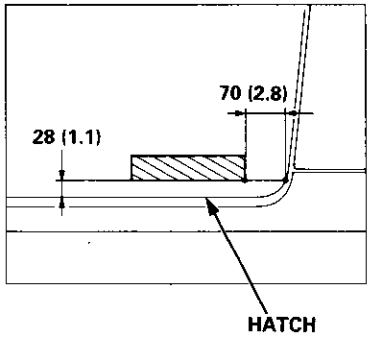

Version emblem

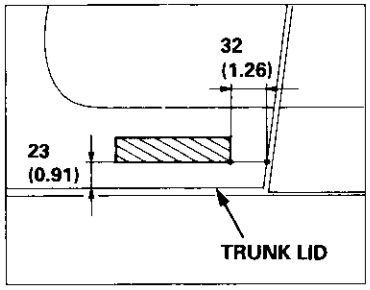

Sub-frame Torque Sequence:

CAUTION: After loosening the sub-frame mounting bolts, be sure to replace them with new ones.

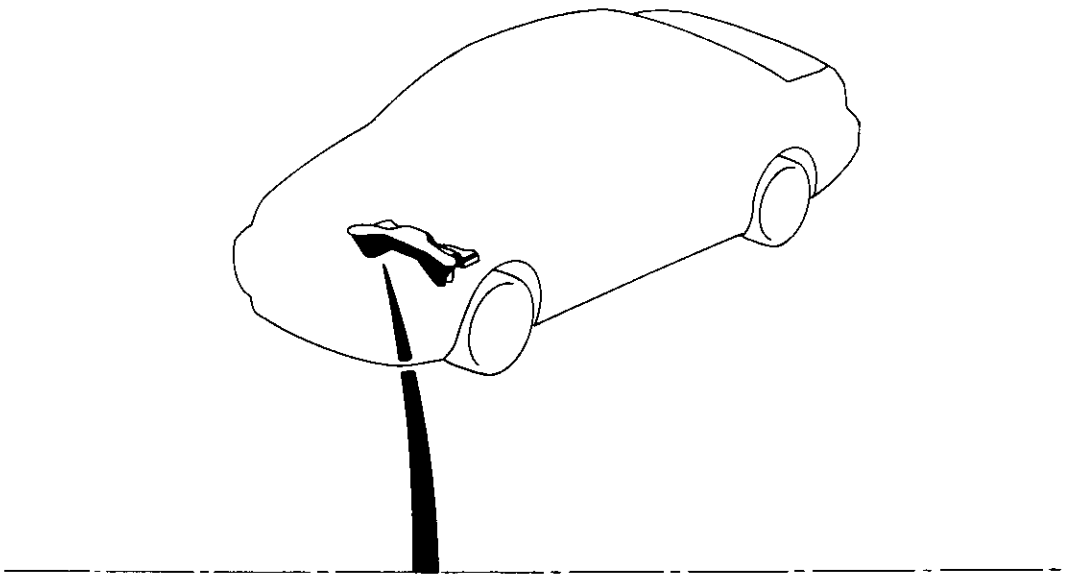

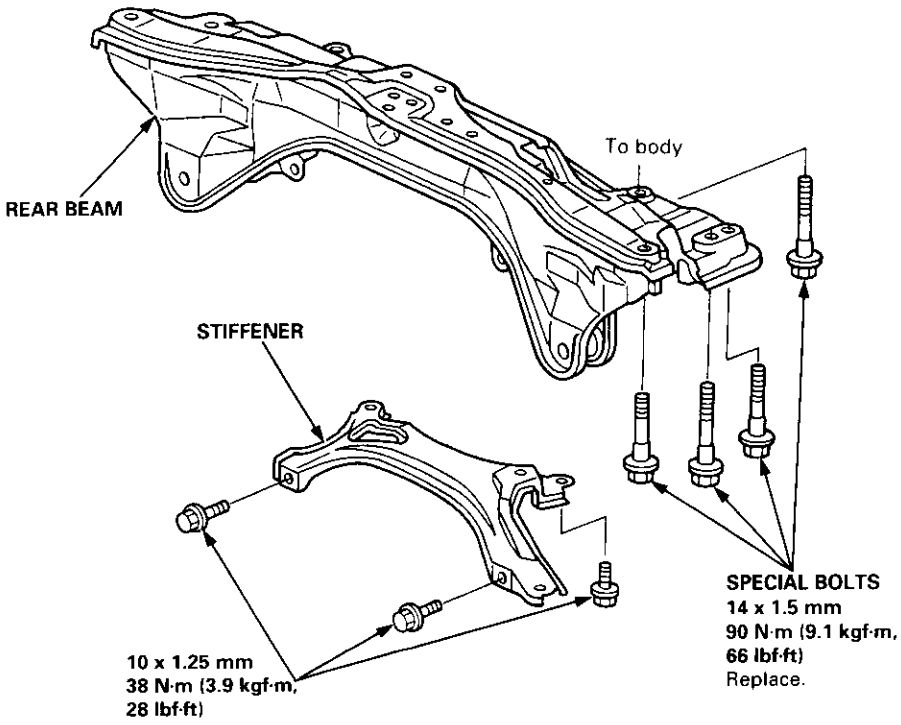

Frame Repair Chart

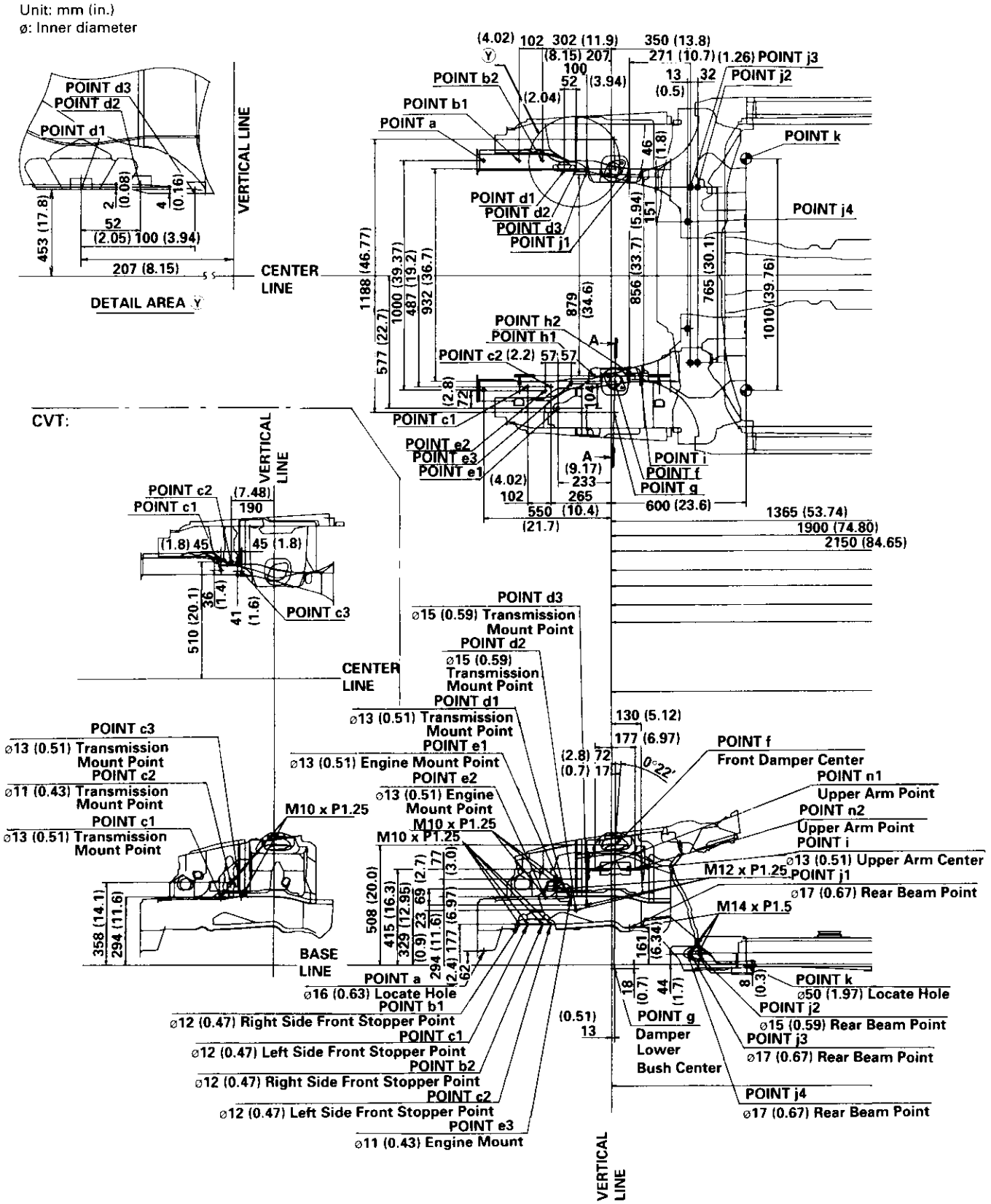

[ ]: 3D

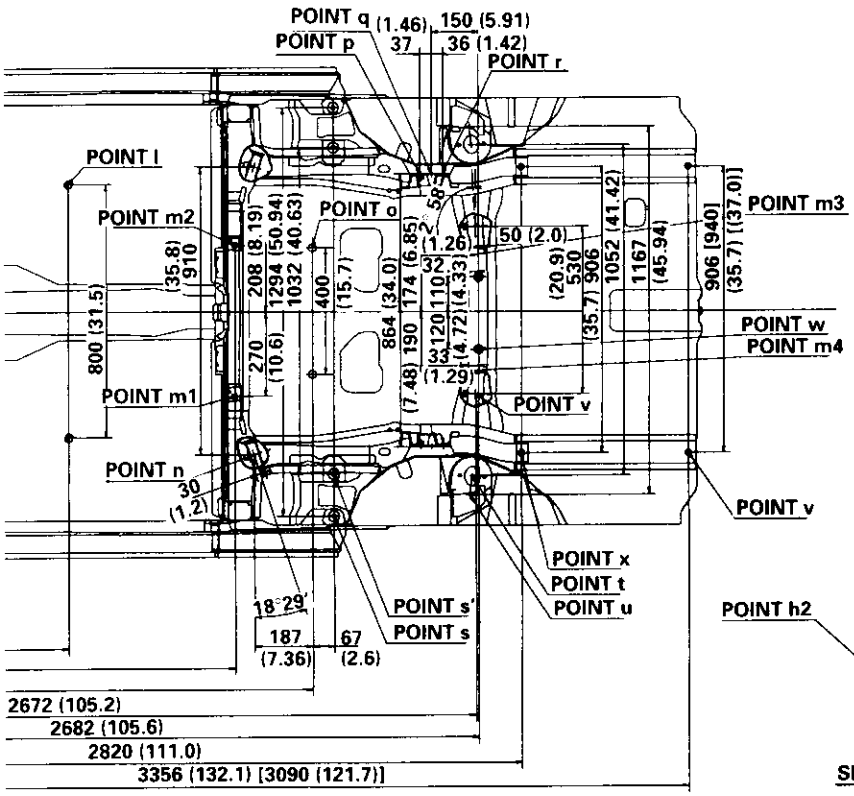

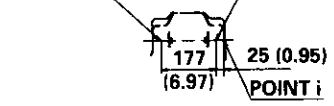

SECTION DD

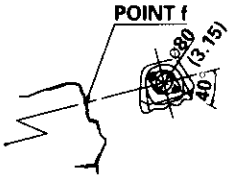

SECTION AA

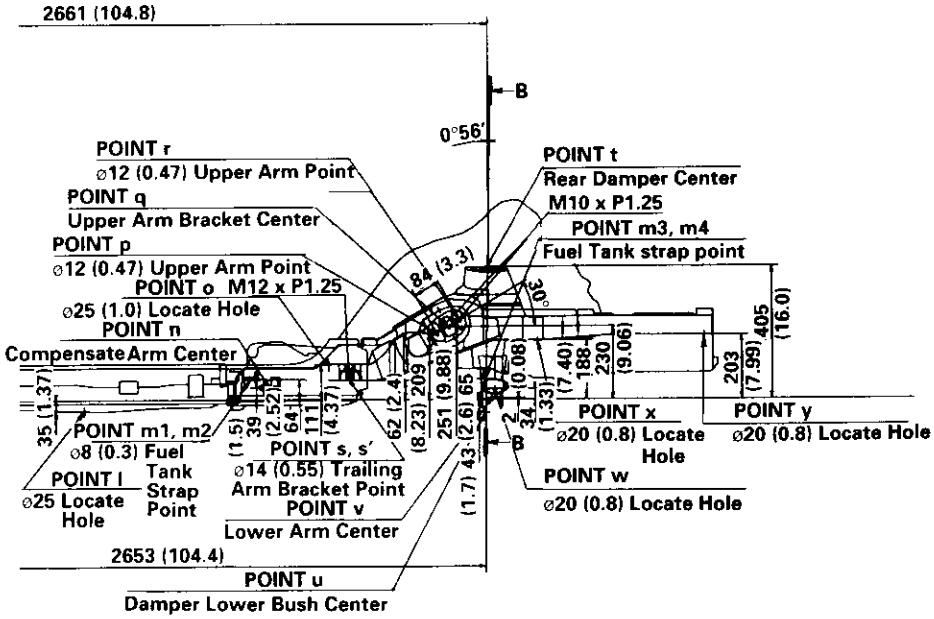

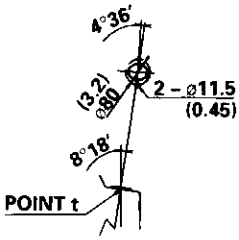

SECTION BB

Body ('97 model)

Front Seat Belt
Removal/Installation 20-128
Rear Seat
Removal/Installation 20-126
Washer Tube
Replacement 20-129
Windshield
Index 20-124

Outline of '97 Model Changes

- The molding side seal was added.
- The method of installing the rear seat cushion was changed (2D/3D).
- A middle floor gusset was added and the method of detaching the seat belt retractor was changed (2D/3D).
- The installation position of the washer tube was changed.

Index

NOTE: The numbers after the part names show the quantities of the parts used.

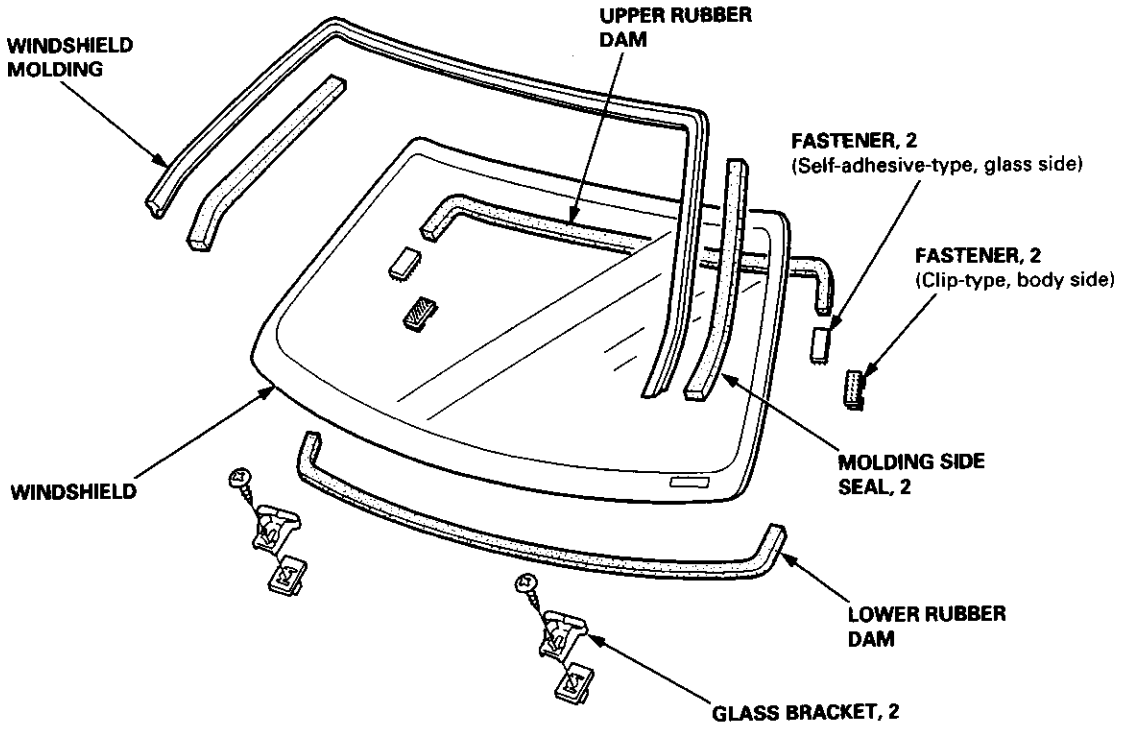

Installation

Glue the molding side seal to the windshield molding on each side.

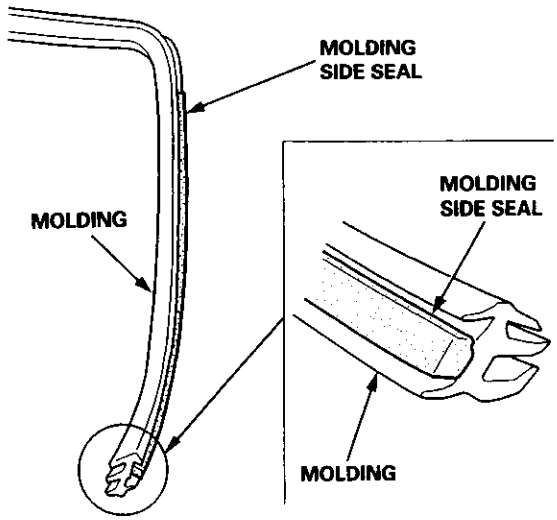

Removal/Installation

3D:

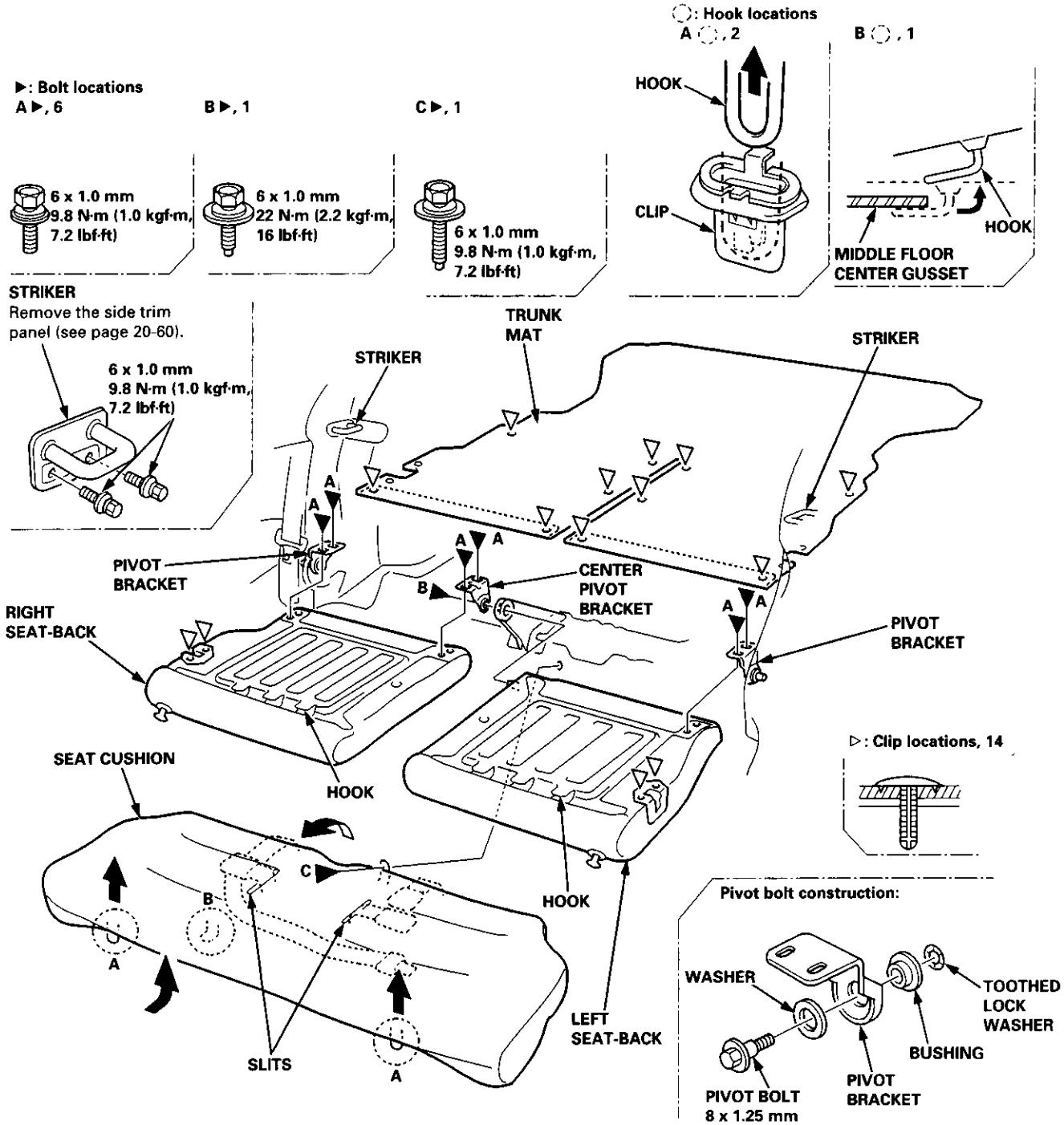

Installation is the reverse of the removal procedure.

NOTE:

- Before attaching the seat-back and seat cushion, make sure there are no twists or kinks in the rear seat belts and center belt.
- When installing the seat cushion, slip the seat belt buckles through the slits in the seat cushion.
- Make sure the seat-back locks securely.
- If necessary, adjust the striker and seat-back.

2D:

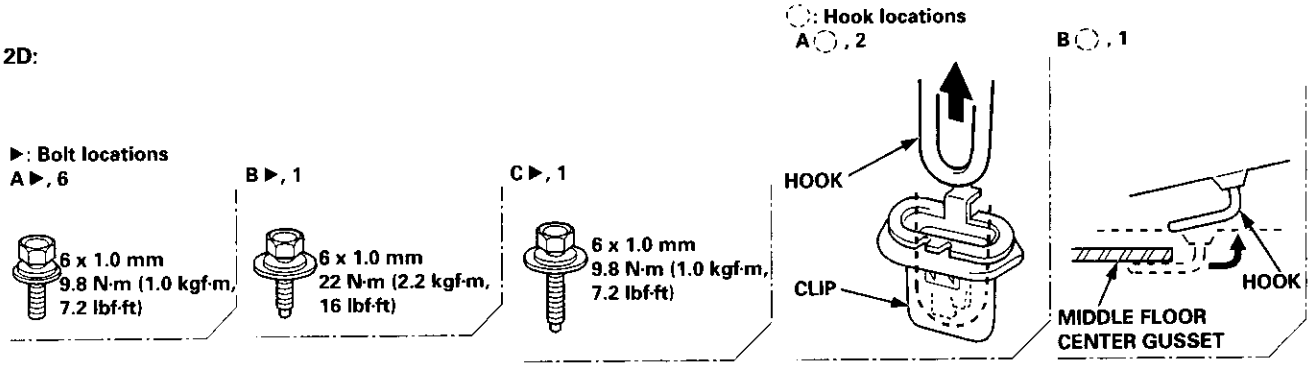

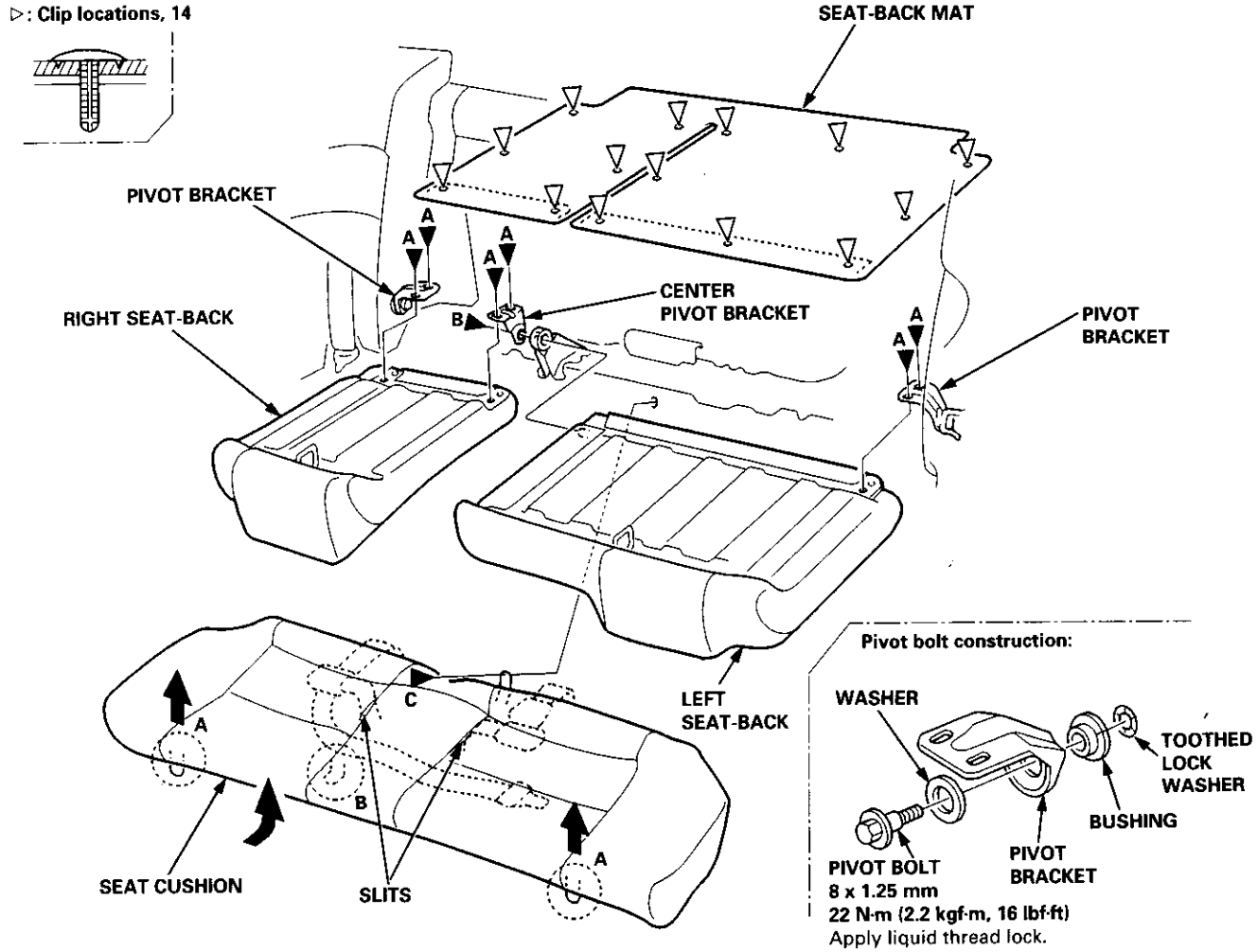

Installation is the reverse of the removal procedure.

NOTE:

- Before attaching the seat-back and seat cushion, make sure there are no twists or kinks in the rear seat belts and center belt.
- When installing the seat cushion, slip the seat belt buckles through the slits in the seat cushion.
- Make sure the seat-back locks securely.
- If necessary, adjust the seat-back latch and seat-back.

Removal/Installation

2D/3D:

1. Slide the front seat forward fully.

2. Remove:
   - Rear seat-back and rear seat cushion (see pages 20-126, 127)
   - Rear center shelf and rear side shelf (3D, see page 20-60)
   - Rear trim panel (3D, see page 20-60)
   - Side trim panel (see pages 20-60, 61)

3. Pull back the carpet as necessary, and remove the bolts, then remove the middle floor gusset.

▶: Bolt locations, 8

10 x 1.25 mm
38 N·m (3.9 kgf·m, 28 lbf·ft)

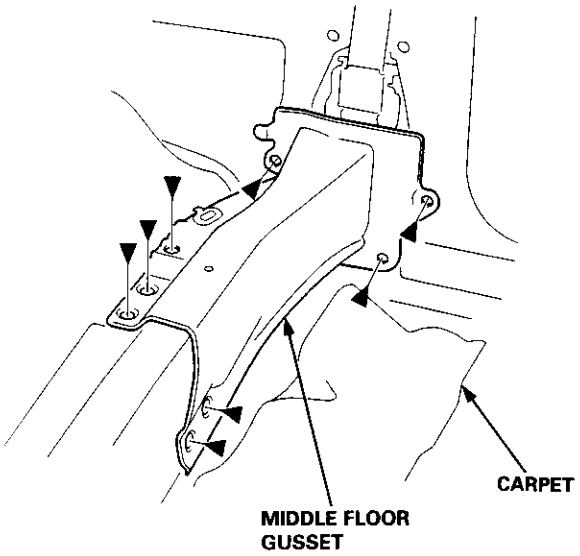

4. Remove the upper anchor cover and lower anchor cap.

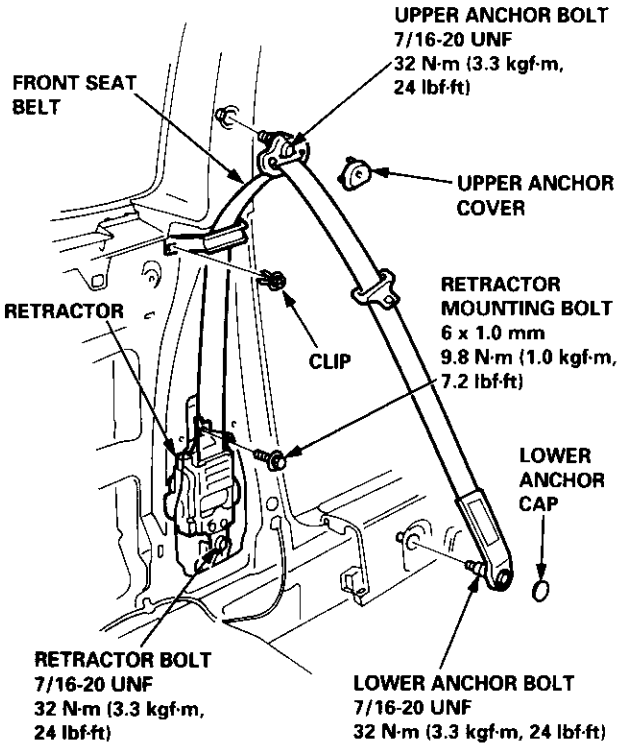

5. Remove all the anchor bolts and the retractor bolt, remove the retractor mounting bolt, then remove the front seat belt and retractor.

6. Installation is the reverse of the removal procedure.

   NOTE:
   - Check that the retractor locking mechanism functions as described on page 20-91.
   - Make sure you assemble the washers and collars on the upper and lower anchor bolts as shown.
   - Before installing the anchor bolts, make sure there are no twists or kinks in the front seat belt.

Replacement

NOTE: To remove the windshield washer tube, remove the left inner fender (see page 20-106).

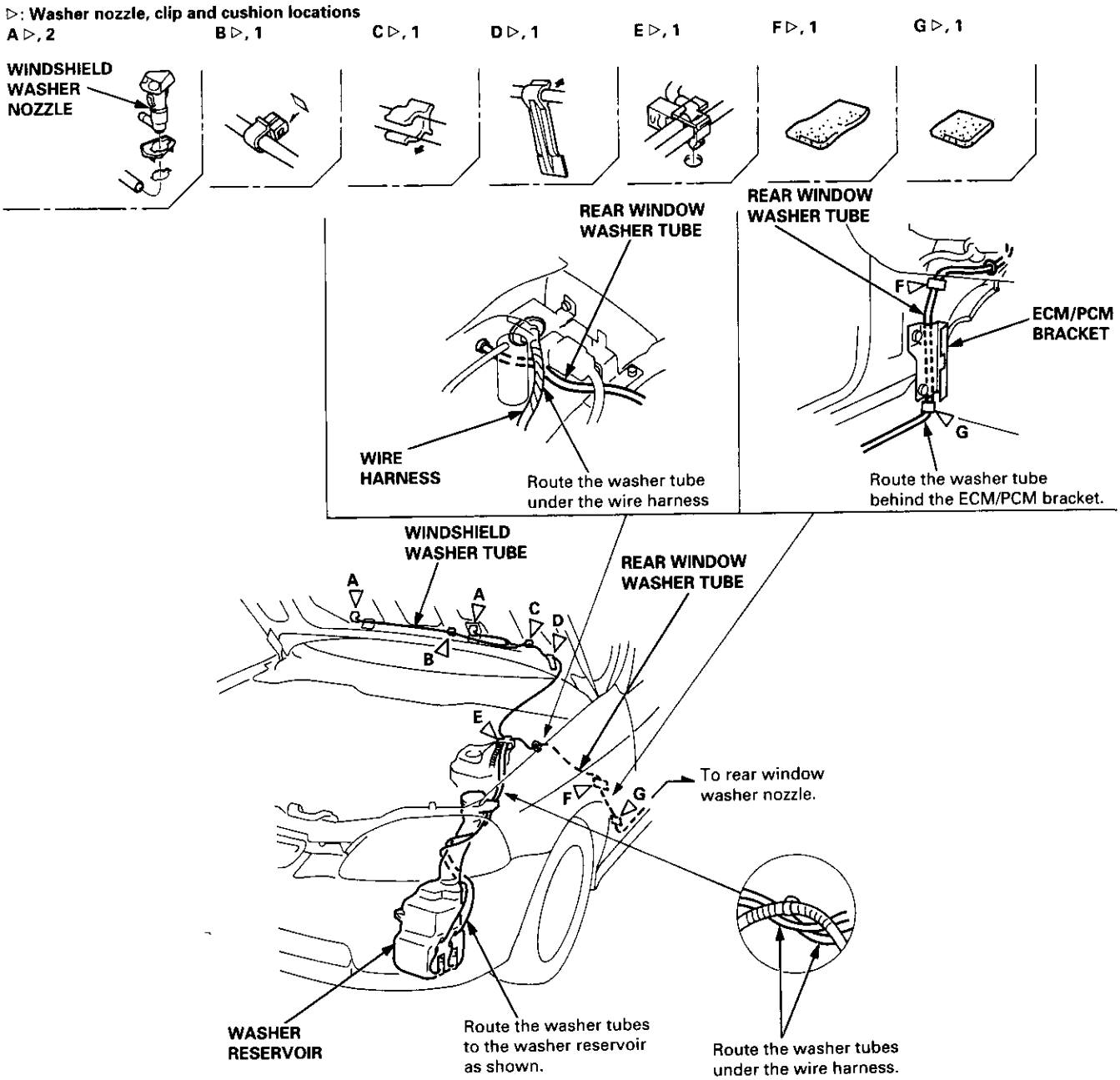

Installation is the reverse of the removal procedure.

NOTE:
- Take care not to pinch the washer tubes.
- If necessary, replace any damaged clips.
- After installing, adjust the aim of the washer nozzles (see page 20-117).

(cont'd)

Replacement (cont'd)

NOTE: To remove the rear window washer tube (3D), remove the following parts from the left side of the vehicle.

— Inner fender (see page 20-106)
— Kick panel and side trim (see page 20-60)
— Rear seat-back and rear seat cushion (see page 20-80)
— Spare tire lid
— Rear center shelf and rear side shelf (see page 20-60)
— Rear trim panel and side trim panel (see page 20-60)
— Quarter trim panel (see page 20-60)
— Rear roof trim (see page 20-65)
— Hatch spoiler (see page 20-101)

▷: Washer nozzle, clip and cushion locations

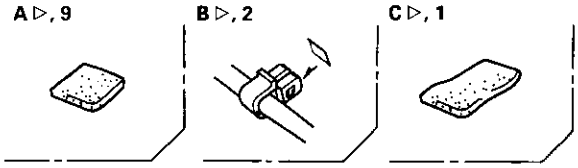

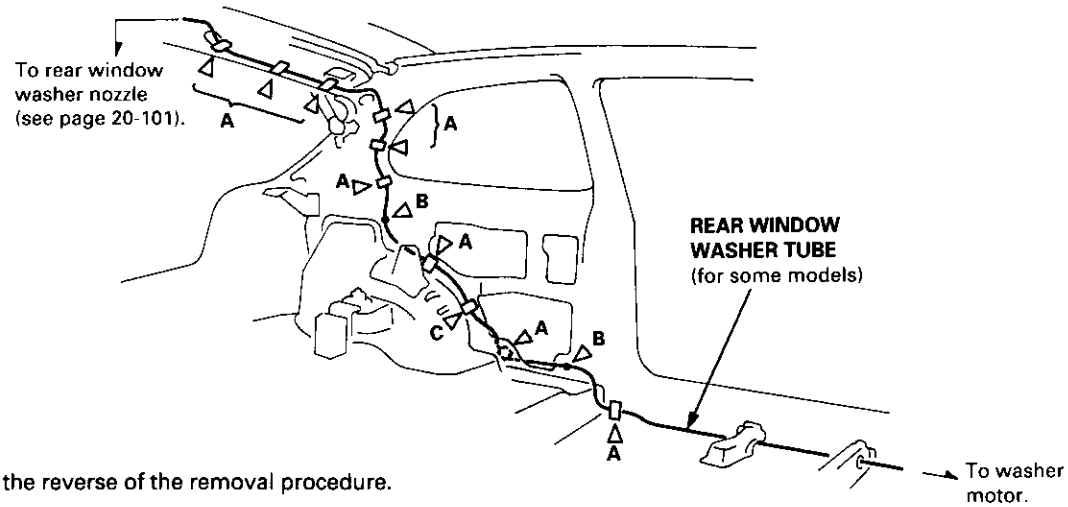

Installation is the reverse of the removal procedure.

NOTE:
- Take care not to pinch the washer tubes.
- If necessary, replace any damaged clips.
- After installing, adjust the aim of the washer nozzles (see page 20-117).

Body ('98 model)

Opener and Latch

Hood Latch Cover Replacement 20-132

Hatch Handle Replacement 20-132

Hatch Latch/Lock Cylinder Replacement 20-133

Outline of '98 Model Changes

- The hood latch cover was added.
- The hatch handle was added (3D).

Hood Latch Cover Replacement

NOTE: Take care not to the hood latch cover and body.

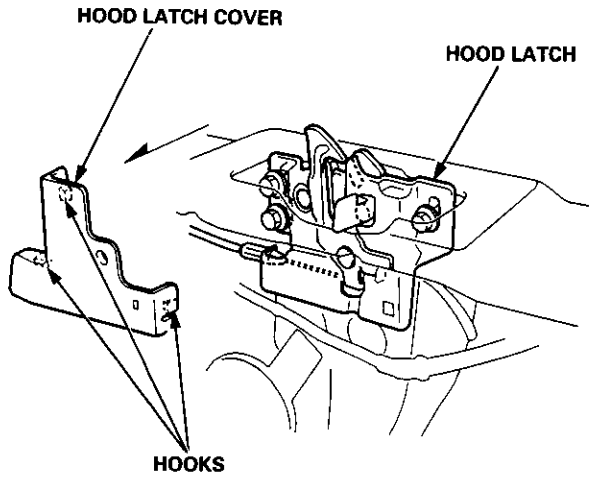

Hatch Handle Replacement

1. Remove the hatch trim panel (see page 20-63).
2. Remove the hatch handle bolts.

►: Bolt locations, 2

6 x 1.0 mm
9.8 N·m (1.0 kgf·m, 7.2 lbf·ft)

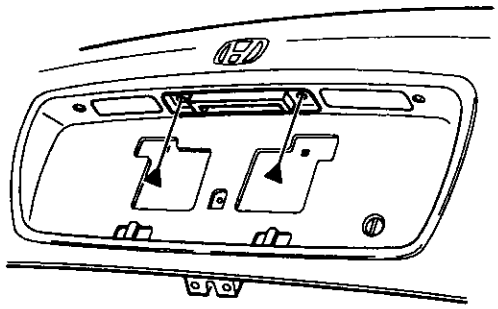

3. Remove the nut.

●: Nut location, 1

6 x 1.0 mm
9.8 N·m (1.0 kgf·m, 7.2 lbf·ft)

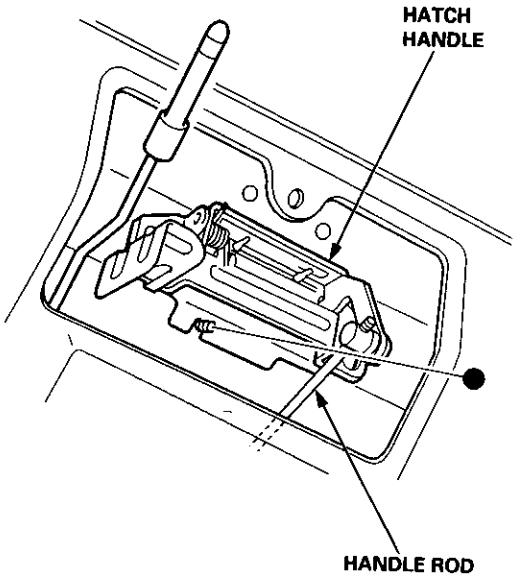

4. Note the position of the joint on the handle rod (A). Pry the handle rod of the joint using diagonal cutters; take care not to bend the rod. Remove the hatch handle.

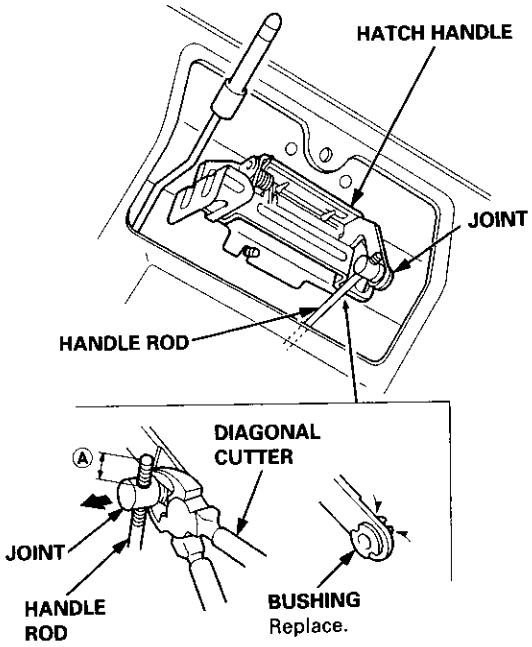

5. Install in the reverse order of removal, and note these items:

- Make sure the handle rod is connected properly.
- Before installing the hatch trim panel, make sure the hatch opens properly.

Hatch Latch/Lock Cylinder Replacement

1. Remove the hatch trim panel (see page 20-63).

2. Remove the hatch latch screws.

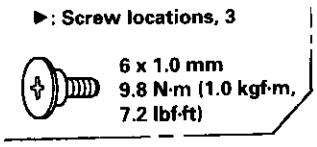

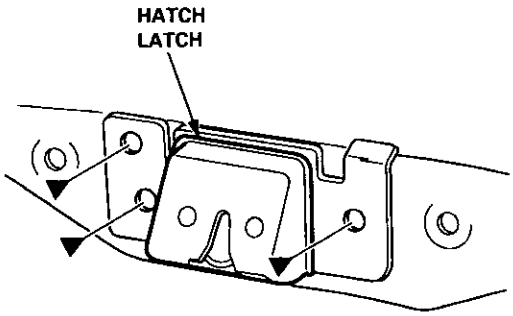

3. Disconnect the lock rod, the handle rod, the lock cylinder rod, and the connector, then remove the hatch latch.

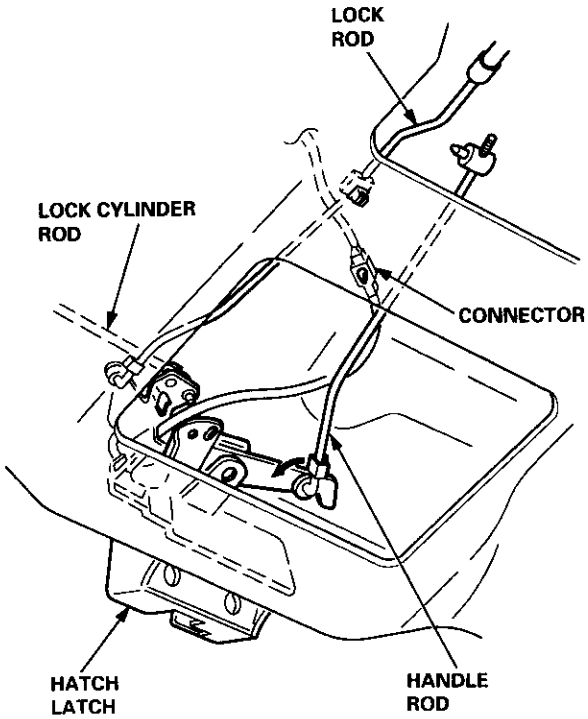

(cont'd)

Hatch Latch/Lock Cylinder Replacement (cont'd)

4. Pull the lock rod out.

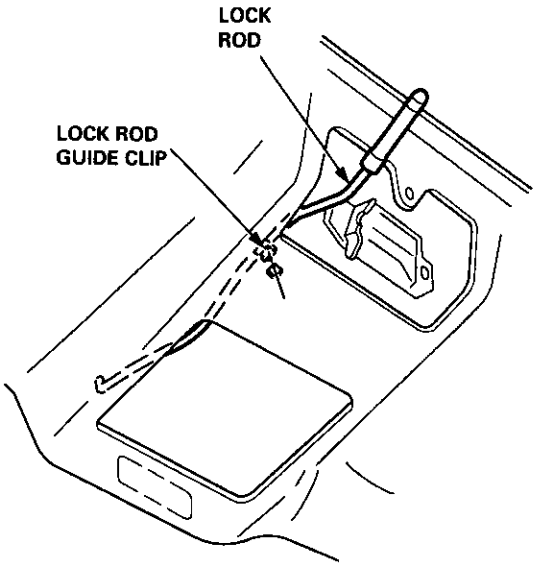

5. If necessary, remove the lock cylinder.

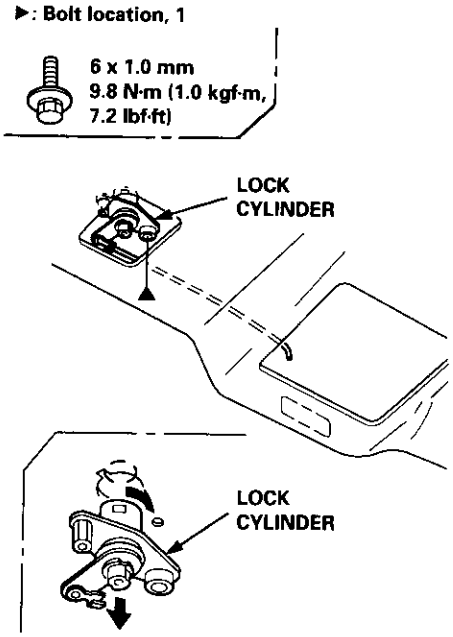

6. Install in the reverse order of removal, and note these items:

- Apply grease to the hatch latch.
- Make sure the connector is connected properly.
- Before installing the hatch trim panel, make sure the hatch opens properly and locks securely.

Body ('99 model)

Dashboard

Center Panel Removal and Installation 20-136

Bumpers

Front Grille Removal and Installation 20-136

Front Air Spoiler Replacement 20-137

Seats

Front Seat Disassembly and Reassembly 20-138

Front Seat Torsion Bar Replacement 20-139

Emblems

Installation 20-140

Outline of '99 Model Changes

- The center panel removal and installation procedures are different.
- The front grille removal and installation procedures are different.
- The front air spoiler has been added for some models of 2D.
- A height-adjustable driver's seat was added to some models.
- Emblems were added for some models of 2D.

Center Panel Removal and Installation

1. Remove the dashboard center lower cover.
2. Remove the screws, then pull out the center panel.

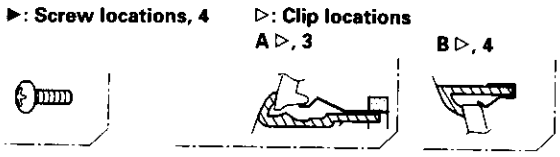

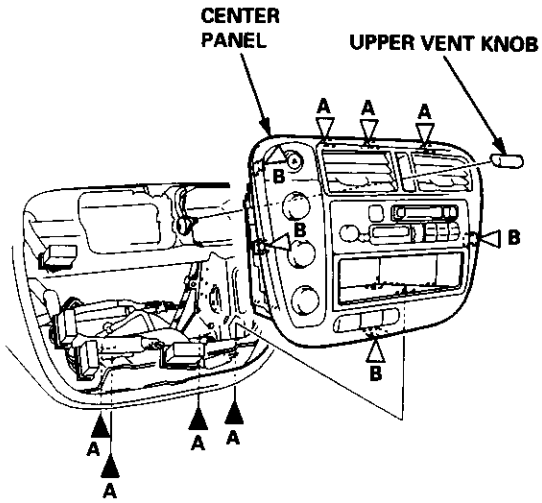

3. Disconnect the connectors from the heater control unit and hazard warning switch.
4. Installation is the reverse of the removal procedure.

   NOTE: Make sure the connectors are connected properly.

Front Grille Removal and Installation

NOTE: Take care not to scratch the front bumper.

Remove the front bumper. Remove the screws, then slide the front grille forward by detaching the hooks.

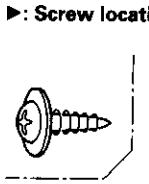

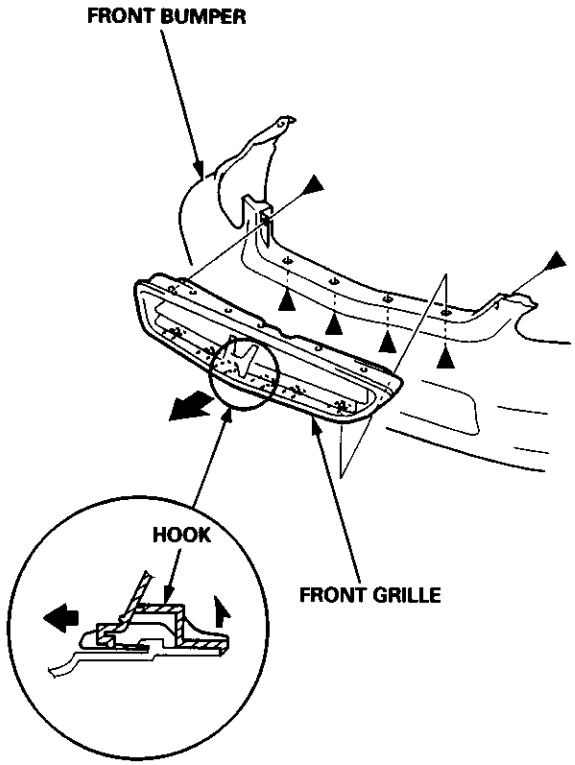

Installation is the reverse of the removal procedure.

Front Air Spoiler Replacement

CAUTION: Put on gloves to protect your hands.

NOTE:
- An assistant is helpful when removing the front bumper.
- Take care not to scratch the front bumper and body.

▶: Bolt, screw locations

A ▶, 9

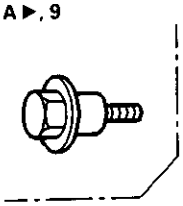

B ▶, 4

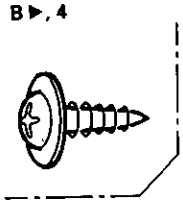

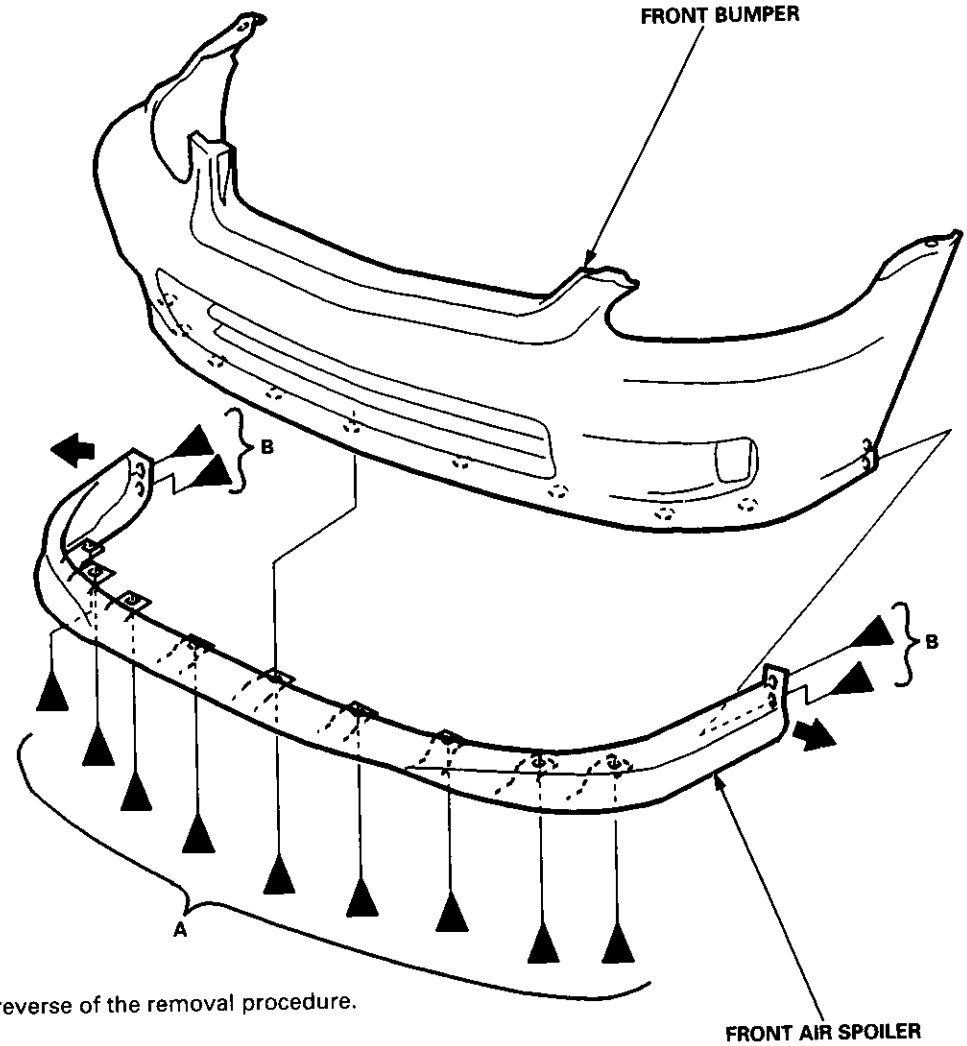

Installation is the reverse of the removal procedure.

NOTE:
- Make sure the front bumper engages the front bumper side stiffener on each side securely.
- If necessary, adjust the front bumper side stiffener to obtain the proper gap.

Front Seat Disassembly and Reassembly

CAUTION: When prying with a flat-tip screwdriver, wrap it with protective tape to prevent damage.

NOTE:
- Take care not to scratch the seat covers and body.
- Remove the front seat through the door opening.

Driver's:

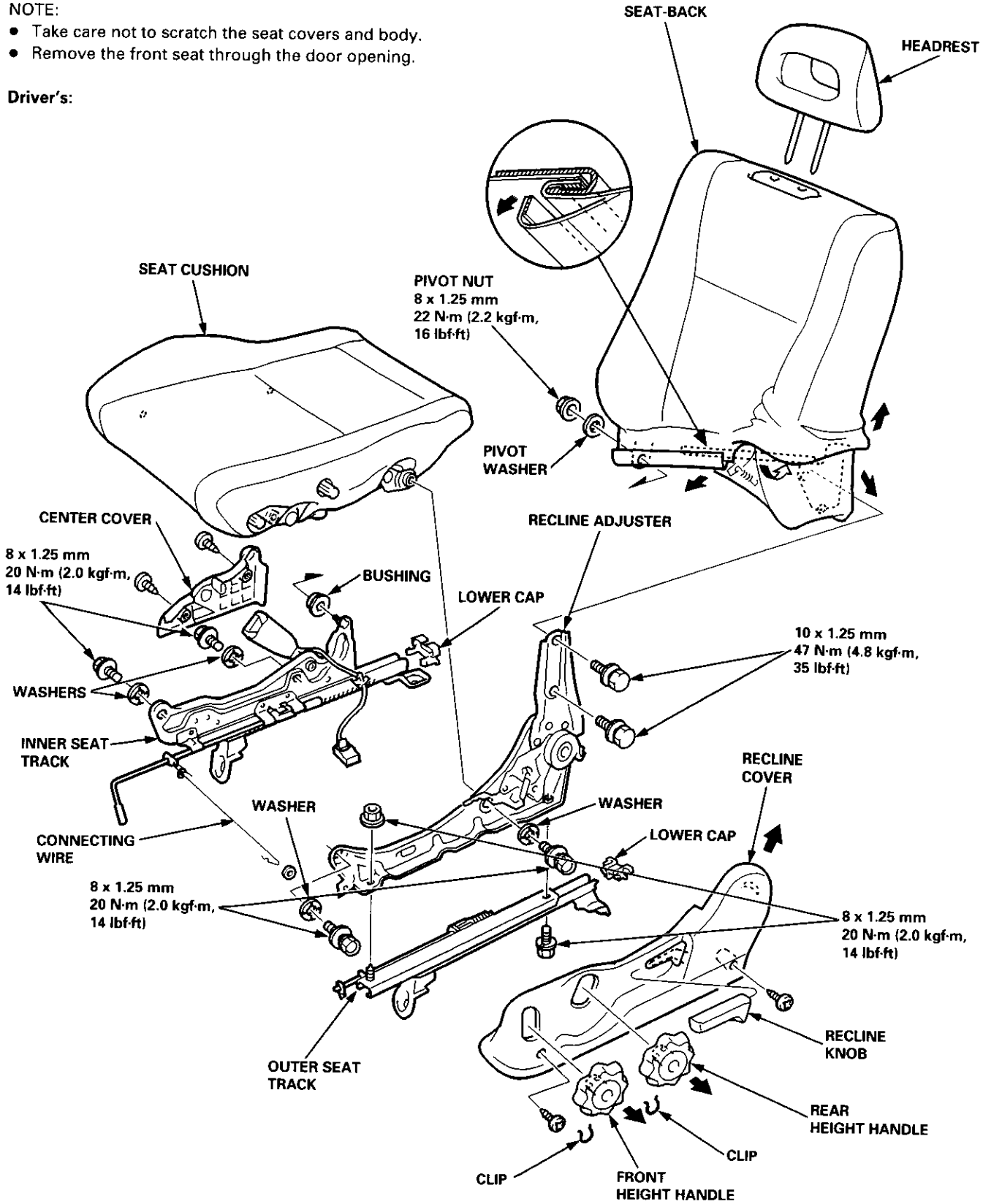

Reassemble in the reverse order of disassembly, and note these items:

- Make sure the bushing and pivot washer are installed properly.
- To connect the connecting wire, twist it 90°.
- Replace the back cover clips with new ones.
- To prevent wrinkles when installing the seat-back cover, make sure the material is stretched evenly over the pad.
- Apply multipurpose grease to the moving portion of the seat track.

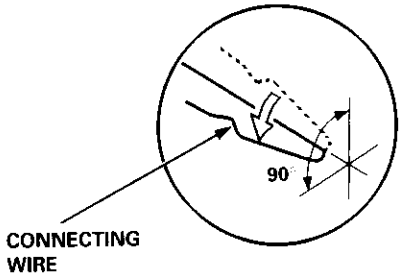

Front Seat Torsion Bar Replacement

NOTE: Take care not to tear the seams or damage the seat covers.

1. Remove the seat cushion.

2. Remove the torsion bar from the hook with a flat tip screwdriver, then pull out the torsion bar from the seat cushion frame. Put on gloves to protect your hands.

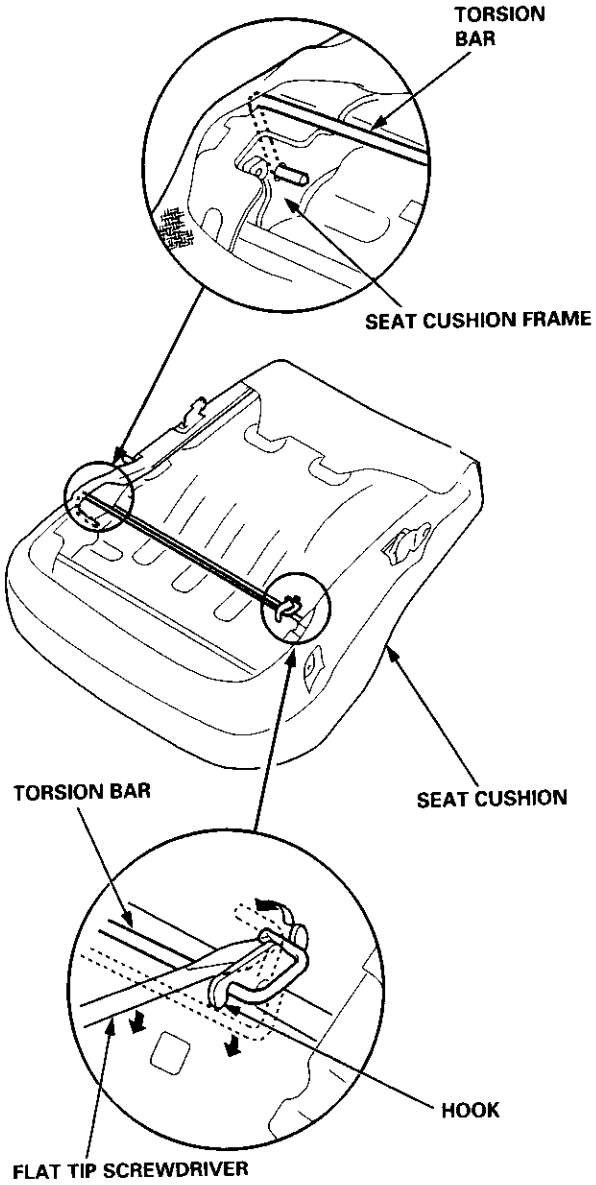

3. Install in the reverse order of removal.

Emblems

Installation

Align the application tape with the taillight and body, as shown, then press the emblem into place. Remove the application tape.

NOTE:
- Before applying, clean the body surface with a sponge dampened in alcohol.
- After cleaning, keep oil, grease and water from getting on the surface.
- When applying, make sure there are no wrinkles in the emblem.

Attachment Point:

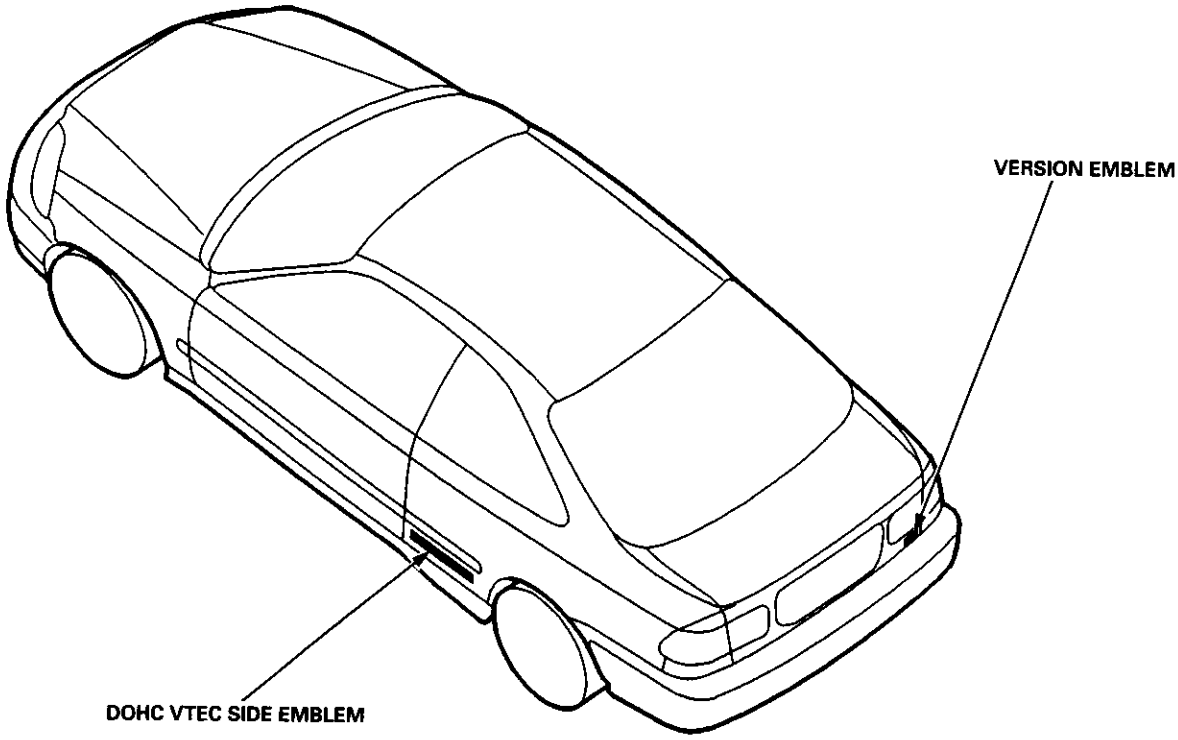

DOHC VTEC side emblem:

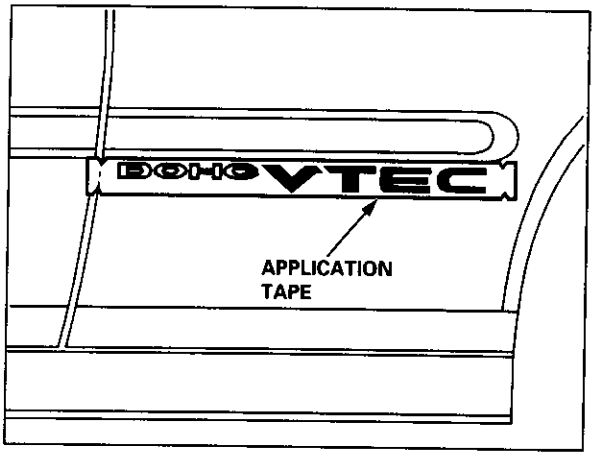

Version emblem:

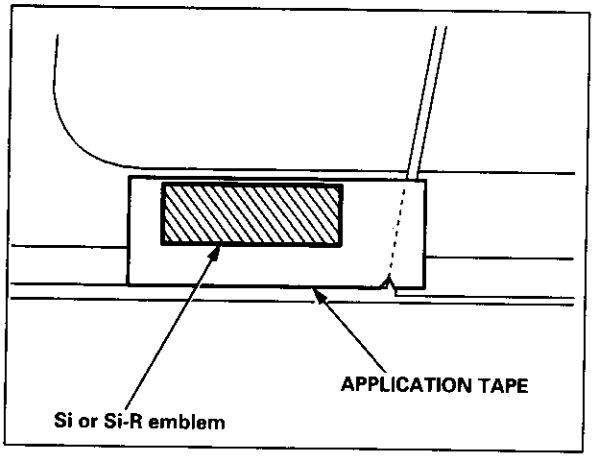

Body ('00 model)

Seat Belts

Child Seat Anchor Plate Removal/ Installation 20-142

Emblem

Installation 20-144

Outline of '00 Model Changes

- The child seat anchor plate removal and installation procedures are different.
- An emblem was added for some model of 3D.

Child Seat Anchor Plate Removal/Installation

2D/4D:

Attachment points are provided for a rear-seat-mounted child restraint system that uses a top tether. The attachment points are located on the rear shelf, just behind the rear seat-back.

The child seat anchor plates are installed in the middle and on both sides of the rear shelf. Each child seat anchor plate is covered with the child seat anchor plate cover.

NOTE:

- Do not remove the toothed washer from the child seat anchor plate. Use the anchor plate with the toothed washer attached to it.
- When installing a child seat on the rear seat, follow the instructions of the manufacturer of the child seat.
- When installing the anchor plates, the one with the shorter spacer goes in the middle.
- Make sure the rear seat-backs are locked firmly when installing a child seat.

Unit: mm (in.)

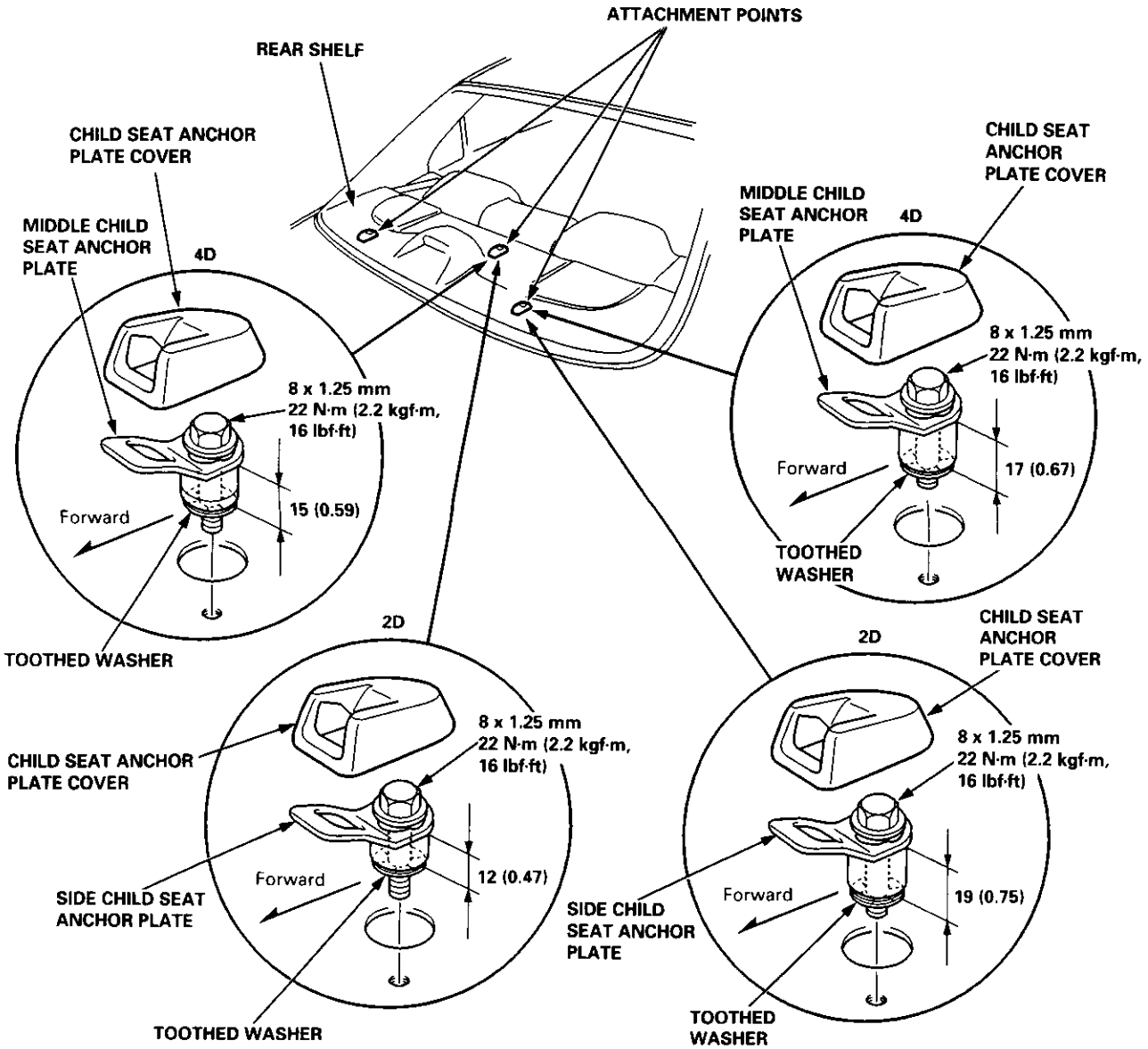

3D:
Attachment points are provided for a rear-seat-mounted child restraint system that uses a top tether. The attachment points are located on the rear trim panel.
The child seat anchor plates are installed in the middle and on both sides of the rear trim panel. Each child seat anchor plate is covered with the child seat anchor plate cover.

NOTE:
- Do not remove the toothed washer from the child seat anchor plate. Use the anchor plate with the toothed washer attached to it.
- When installing a child seat on the rear seat, follow the instructions of the manufacturer of the child seat.
- Make sure the rear seat-backs are locked firmly when installing a child seat.

Unit: mm (in.)

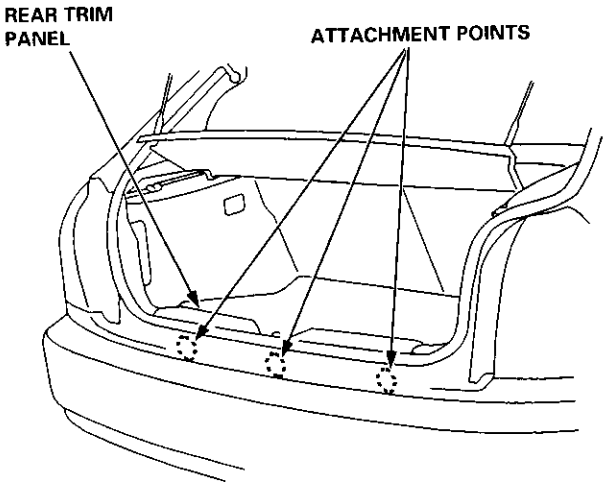

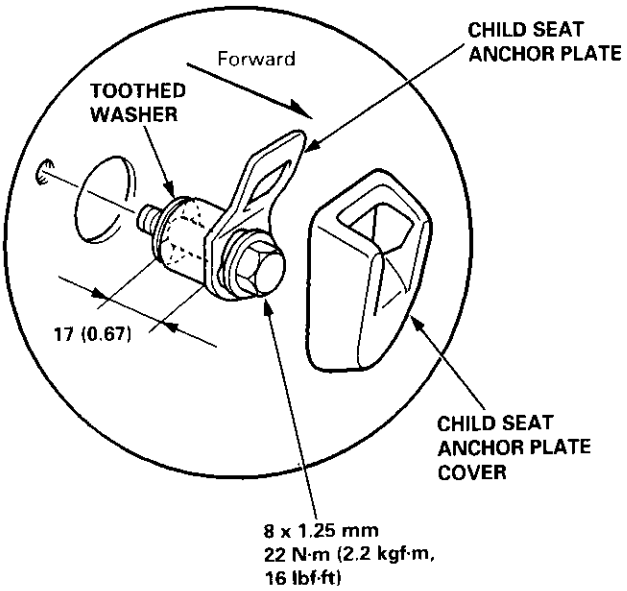

Emblem

Installation

Apply the emblem where shown.

NOTE:
- Before applying, clean the body surface with a sponge dampened in alcohol.
- After cleaning, keep oil, grease and water from getting on the surface.

Attachment Point (Reference):

Unit: mm (in.)

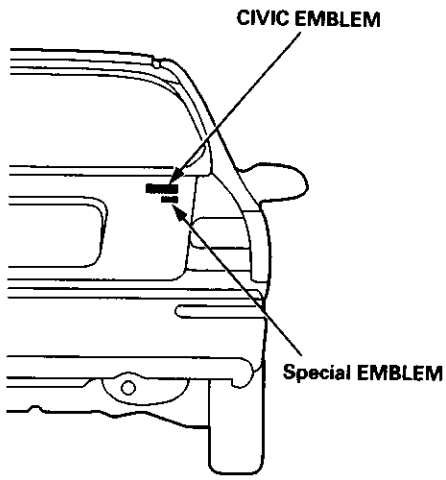

3D: Special emblem (for Canada Special Edition)

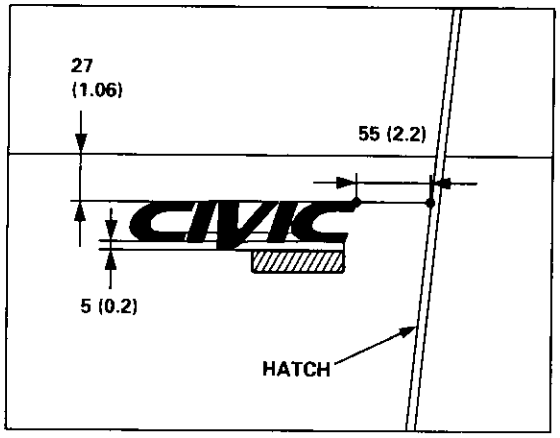

Heater and Air Conditioning

Heater 21-1
Air Conditioning 22-1

SUPPLEMENTAL RESTRAINT SYSTEM (SRS)

The Civic SRS includes a driver's airbag located in the steering wheel hub. In addition, all models (except some models for Canada) have a passenger's airbag located in the dashboard above the glove box.
Information necessary to safely service the SRS is included in this Service Manual. Items marked with an asterisk (*) on the contents page include, or are located near, SRS components. Servicing, disassembling or replacing these items will require special precautions and tools, and should therefore be done by an authorized Honda dealer.

⚠ WARNING

- **To avoid rendering the SRS inoperative, which could lead to personal injury or death in the event of a severe frontal collision, all SRS service work must be performed by an authorized Honda dealer.**
- **Improper service procedures, including incorrect removal and installation of the SRS, could lead to personal injury caused by unintentional deployment of the airbags.**
- **Do not bump the SRS unit. Otherwise, the system may fail in case of a collision, or the airbags may deploy when the ignition switch is ON (II).**
- **SRS electrical wiring harnesses are identified by yellow color coding. Related components are located in the steering column, front console, dashboard, dashboard lower panel, and in the dashboard above the glove box. Do not use electrical test equipment on these circuits.**

Heater

Illustrated Index
- '96 – 98 Models 21-2
- '99 – 00 Models 21-3

Circuit Diagram
- '96 – 98 Models 21-4
- '99 – 00 Models 21-5

Troubleshooting — '96 – 98 Models
- Symptom Chart 21-6
- Heater Control Panel Input/ Output Signals 21-7
- Flowcharts
  - Blower Motor Speed 21-8
  - Blower Motor 21-10
  - Mode Control Motor 21-13
  - Recirculation Control Motor 21-16
  - Heater Control Panel 21-18

Troubleshooting — '99 – 00 Models
- Symptom Chart 21-19
- Self-diagnosis Function 21-20
- Flowcharts
  - Air Mix Control Motor 21-21
  - Mode Control Motor 21-25
  - Recirculation Control Motor 21-27
  - Blower Motor Speed 21-29
  - Blower Motor 21-31
  - Heater Control Panel 21-35
- Heater Control Panel Input/ Output Signals 21-36

Blower Unit
- Replacement 21-37
- Overhaul 21-38

* Heater Unit
- Replacement 21-39
- Overhaul 21-41

Heater Control Panel
- Replacement 21-42
- Overhaul — '96 – 98 Models 21-43

Temperature Control
- Adjustment — '96 – 98 Models 21-44
- Adjustment — '99 – 00 Models 21-45

Air Mix Control Motor
- Test — '99 – 00 Models 21-46
- Replacement — '99 – 00 Models 21-46

Mode Control Motor
- Test 21-47
- Replacement 21-47

Recirculation Control Motor
- Test 21-48
- Replacement 21-48

Relays
- Test 21-49

Heater Fan Switch
- Test — '96 – 98 Models 21-49

Mode Control Switch
- Test — '96 – 98 Models 21-50

Power Transistor
- Test — '99 – 00 Models 21-50

*: Read SRS precautions before working in this area.

'96 – 98 Models

SRS components are located in this area. Review the SRS component locations, precautions, and procedures in the SRS section (24) before performing repairs or service.

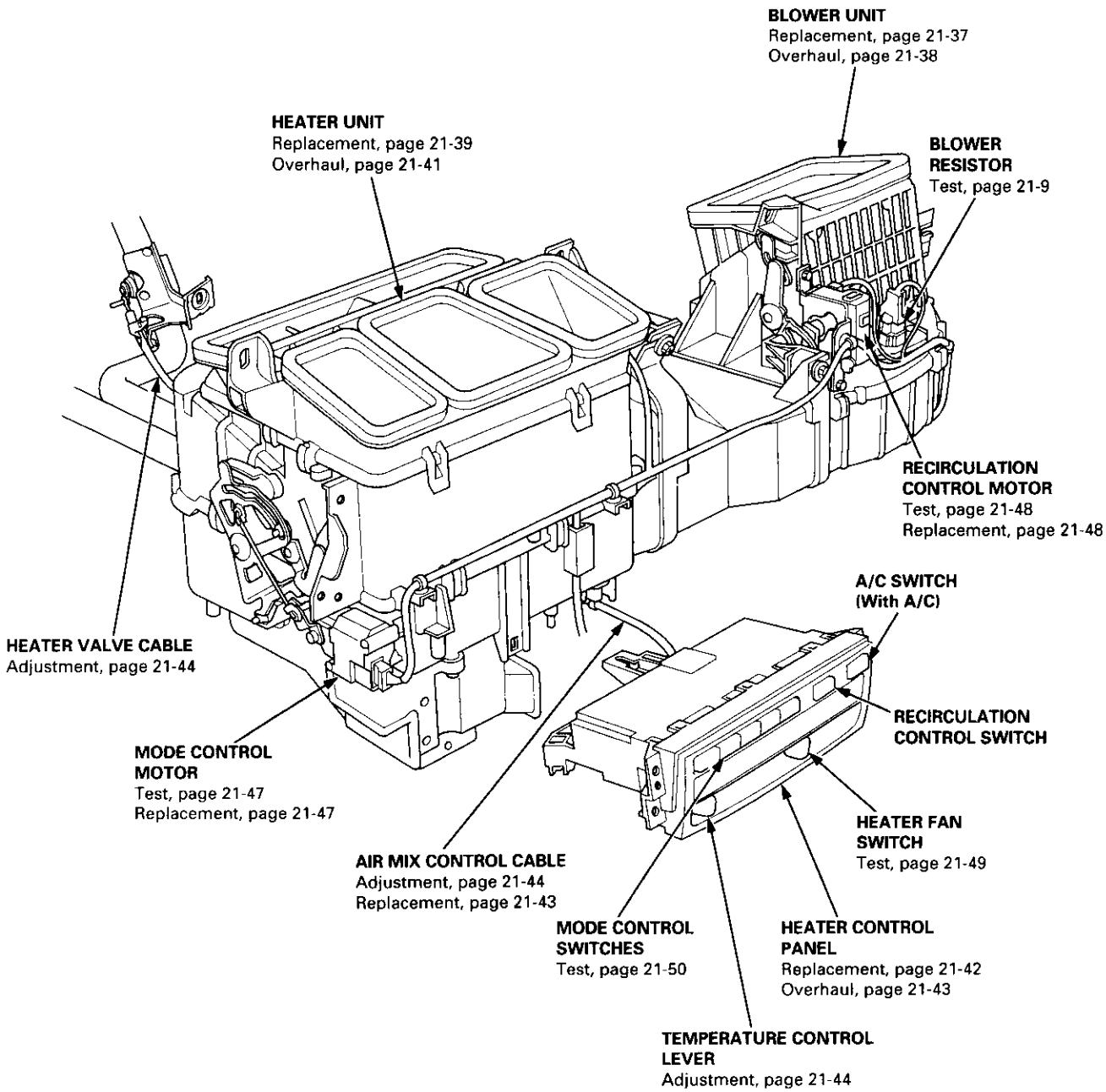

Defroster-activated A/C System

Turning the defroster on activates the A/C and sets the air flow mode to FRESH. It is possible to turn the A/C off or to change the air flow to RECIRCULATE by pressing the A/C button or the FRESH/RECIRCULATE button.

'99 – 00 Models

SRS components are located in this area. Review the SRS component locations, precautions, and procedures in the SRS section (24) before perfoming repairs or service.

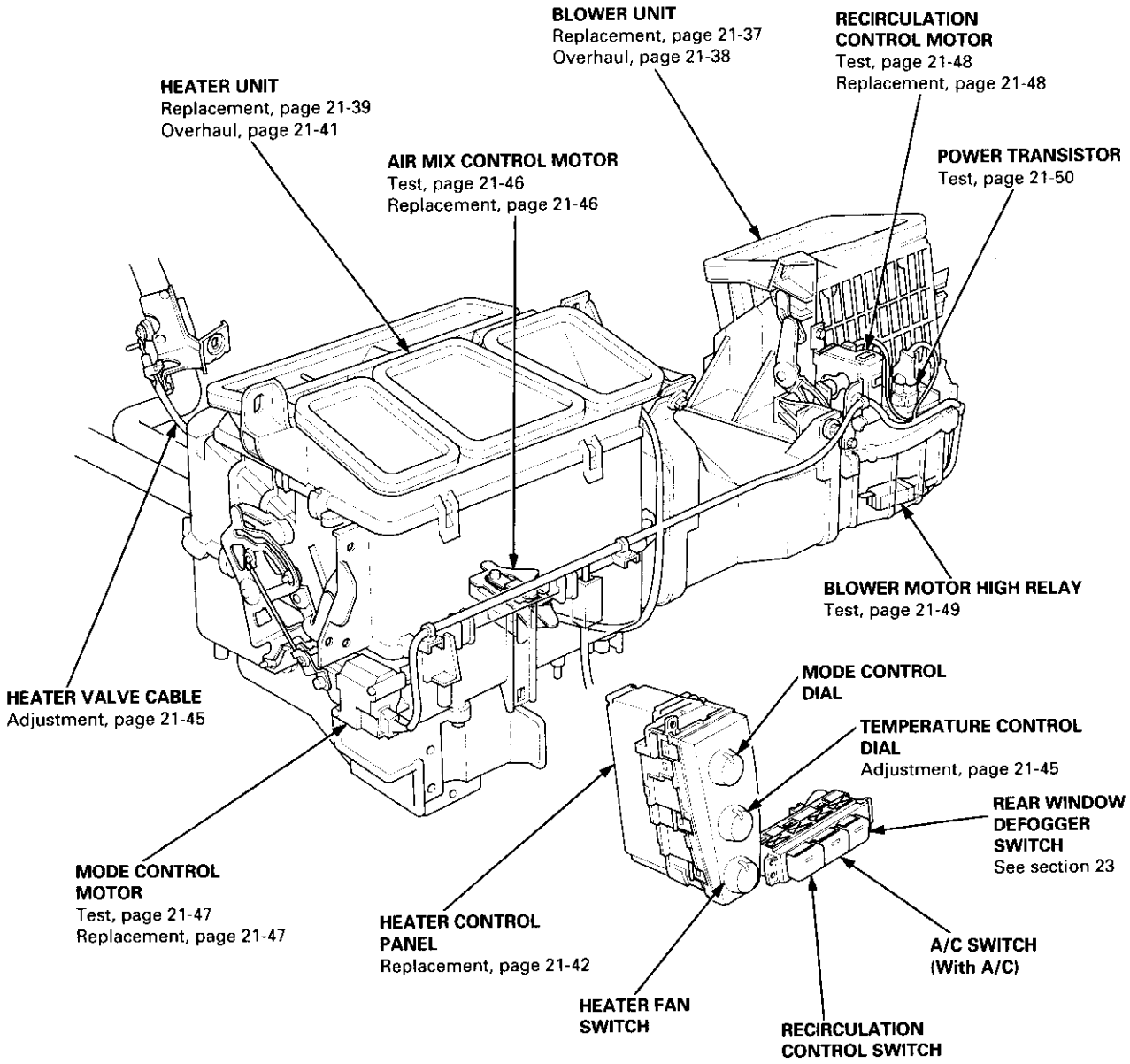

Circuit Diagram

'96 – 98 Models

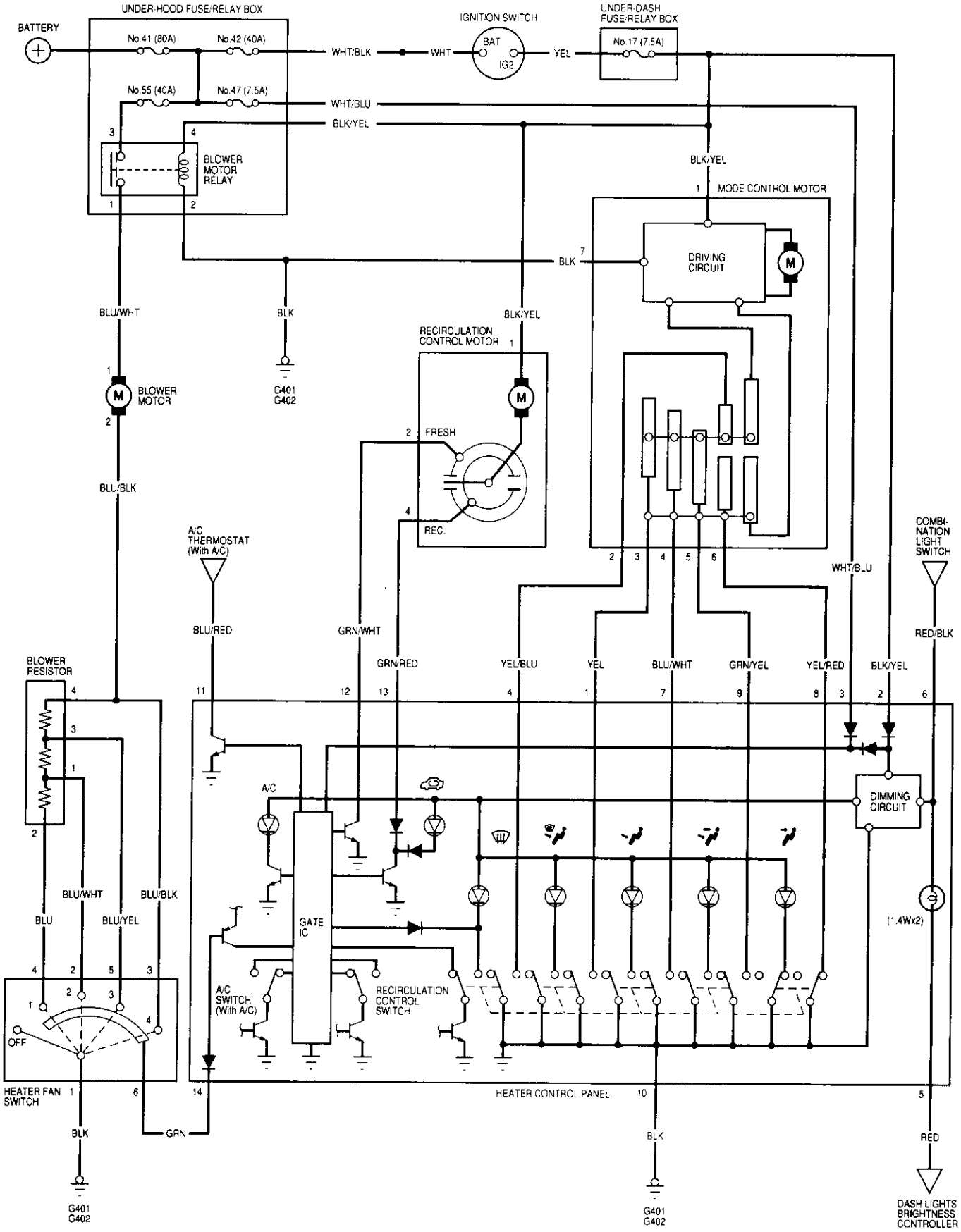

'99 – 00 Models

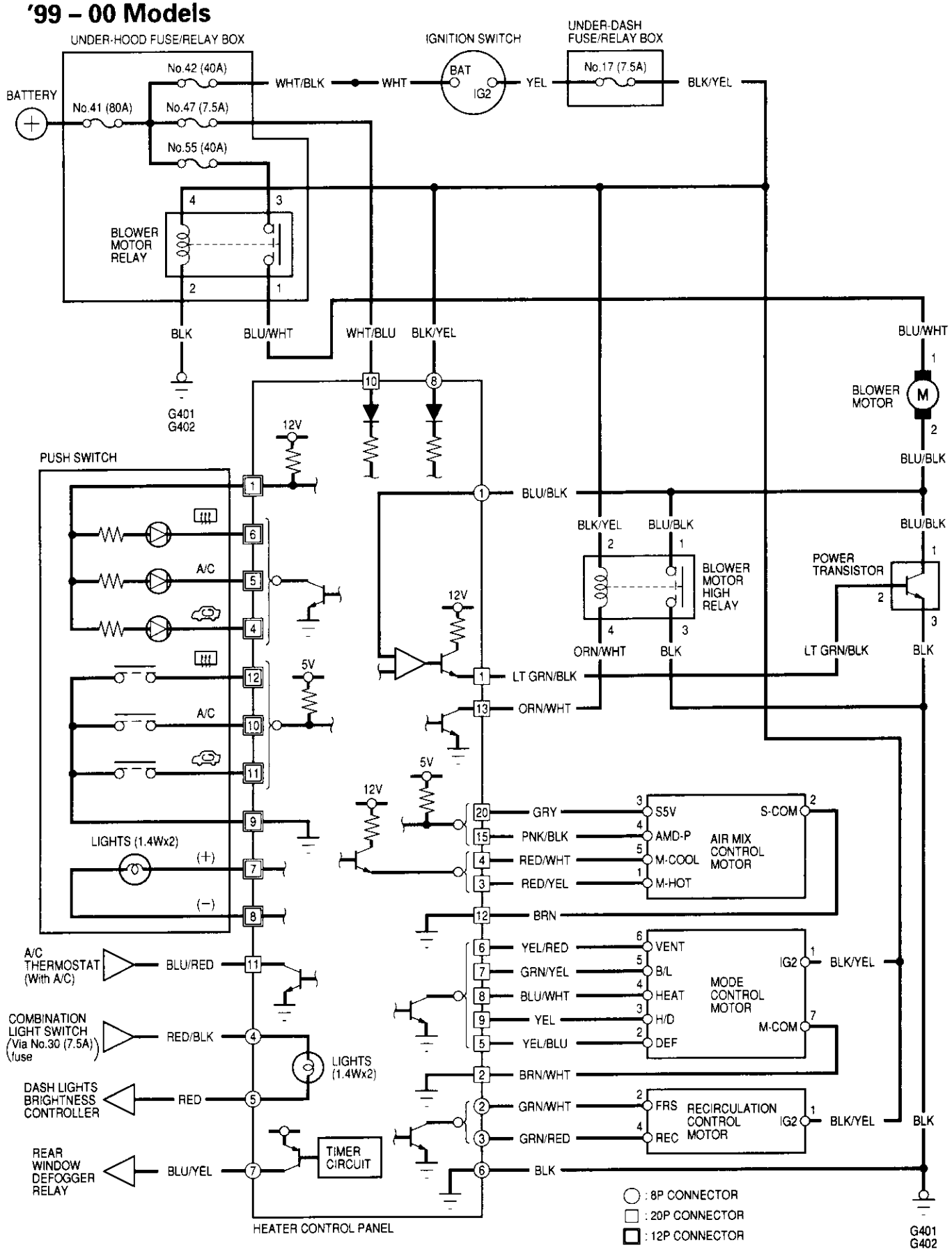
UNDER-HOOD FUSE/RELAY BOX
IGNITION SWITCH
UNDER-DASH FUSE/RELAY BOX
BATTERY
No.42 (40A)
No.41 (80A)
No.47 (7.5A)
No.55 (40A)
No.17 (7.5A)
WHT/BLK
WHT
BAT
IG2
YEL
BLK/YEL
BLOWER MOTOR RELAY
BLK
BLU/WHT
WHT/BLU
BLK/YEL
G401
G402
BLU/WHT
BLOWER MOTOR
BLU/BLK
PUSH SWITCH
12V
A/C
5V
LIGHTS (1.4Wx2)
(+)
(−)
BLU/BLK
BLK/YEL
BLU/BLK
BLOWER MOTOR HIGH RELAY
POWER TRANSISTOR
ORN/WHT
BLK
LT GRN/BLK
BLK
LT GRN/BLK
ORN/WHT
GRY
PNK/BLK
RED/WHT
RED/YEL
S5V
AMD-P
M-COOL
M-HOT
S-COM
AIR MIX CONTROL MOTOR
BRN
YEL/RED
GRN/YEL
BLU/WHT
YEL
YEL/BLU
VENT
B/L
HEAT
H/D
DEF
IG2
M-COM
MODE CONTROL MOTOR
BLK/YEL
A/C THERMOSTAT (With A/C)
BLU/RED
COMBINATION LIGHT SWITCH (Via No.30 (7.5A) fuse)
RED/BLK
LIGHTS (1.4Wx2)
BRN/WHT
DASH LIGHTS BRIGHTNESS CONTROLLER
RED
GRN/WHT
GRN/RED
FRS
REC
RECIRCULATION CONTROL MOTOR
BLK
REAR WINDOW DEFOGGER RELAY
BLU/YEL
TIMER CIRCUIT
BLK
HEATER CONTROL PANEL
: 8P CONNECTOR
: 20P CONNECTOR
: 12P CONNECTOR
G401
G402

Symptom Chart

NOTE:
- Check the engine coolant level, and allow the engine to warm up before troubleshooting.
- Any abnormality must be corrected before continuing the test.
- Because of the precise measurements needed, use a multimeter when testing.
- Before performing any troubleshooting procedures check:
  - — Fuses No. 47 (7.5 A), No. 55 (40 A) in the under-hood fuse/relay box, and No. 17 (7.5 A) in the under-dash fuse/relay box
  - — Grounds No. G401, G402
  - — Cleanliness and tightness of all connectors

Symptom		Remedy
Hot air flow is low.	Blower motor runs, but one or more speeds are inoperative.	Perform the procedures in the flowchart (see page 21-8).
	Blower runs properly.	Check for the following: • Clogged heater duct • Clogged heater outlet • Incorrect door position
No hot air flow.	Blower motor does not run at all.	Perform the procedures in the flowchart (see page 21-10).
	Blower motor runs.	Check for the following: • Clogged heater duct • Clogged blower outlet • Clogged heater valve • Faulty air mix door • Heater valve cable adjustment (see page 21-44) • Air mix control cable adjustment (see page 21-44) • Faulty cooling system thermostat (see section 10) • Clogged evaporator (with air conditioning) • Frozen evaporator (with air conditioning)
Mode control motor does not run, or one or more modes are inoperative.		Perform the procedures in the flowchart (see page 21-13).
Recirculation control door does not change between FRESH and RECIRCULATE.		Perform the procedures in the flowchart (see page 21-16).
Both heater and A/C do not work.		Perform the procedures in the flowchart (see page 21-18).

Heater Control Panel Input/Output Signals

HEATER CONTROL PANEL 14P CONNECTOR

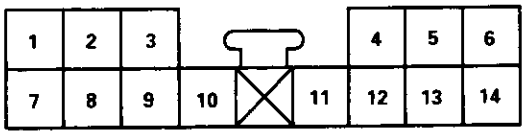

Wire side of female terminals

Terminal No.	Wire color	Signal		Terminal No.	Wire color	Signal	
1	YEL	HEAT/DEF	INPUT	8	YEL/RED	VENT	INPUT
2	BLK/YEL	IG2	INPUT	9	GRN/YEL	HEAT/VENT	INPUT
3	WHT/BLU	+B	INPUT	10	BLK	GROUND	OUTPUT
4	YEL/BLU	DEF	INPUT	11*	BLU/RED	A/C THERMOSTAT	INPUT
5	RED	DASH LIGHTS BRIGHTNESS CONTROLLER	OUTPUT	12	GRN/WHT	FRESH	INPUT
6	RED/BLK	COMBINATION LIGHT SWITCH	INPUT	13	GRN/RED	RECIRCULATE	INPUT
7	BLU/WHT	HEAT	INPUT	14	GRN	HEATER FAN SWITCH	OUTPUT

*: With A/C

Blower Motor Speed

Blower motor runs, but one or more speeds are inoperative.

Check for a short or an open in the wire(s):
Turn the ignition switch ON (II), and the heater fan switch OFF.

Does the blower motor run?

NO → To page 21-9

YES

Check for a short in the wire(s):
1. Turn the ignition switch OFF.
2. Disconnect the blower motor 2P connector.
3. Remove the center dashboard lower cover (see section 20), and disconnect the heater fan switch 6P connector.
4. Disconnect the blower resistor 4P connector.
5. Check for continuity between the No. 2, 3, 4 and 5 terminals of the heater fan switch 6P connector and body ground individually.

Is there continuity?

NO → **Replace the heater fan switch.**

YES

Repair short in the wire(s) between the blower resistor, the heater fan switch and the blower motor.

HEATER FAN SWITCH 6P CONNECTOR

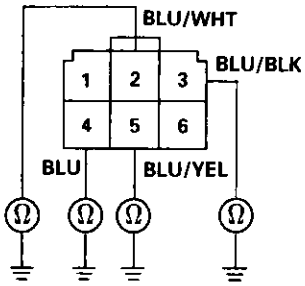

Wire side of female terminals

From page 21-8

Check the blower resistor:
1. Turn the ignition switch OFF.
2. Disconnect the blower resistor 4P connector.
3. Measure the resistance between the No. 2 and No. 4 terminals of the blower resistor.

Is there approx. 2 – 3 ohms?

NO → **Replace the blower resistor.**

YES

Check for an open in the wire(s):
1. Reconnect the blower resistor 4P connector.
2. Remove the center dashboard lower cover (see section 20), and disconnect the heater fan switch 6P connector.
3. Turn the ignition switch ON (II).
4. Ground each of these terminals individually in the following order: No. 4, 2, 5 and 3.

Does the blower motor run at progressively higher speeds?

YES → **Replace the heater fan switch.**

NO

Repair open or cause of excessive resistance in the appropriate wire(s) between the blower resistor and the heater fan switch.

BLOWER RESISTOR

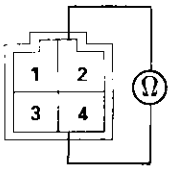

HEATER FAN SWITCH 6P CONNECTOR

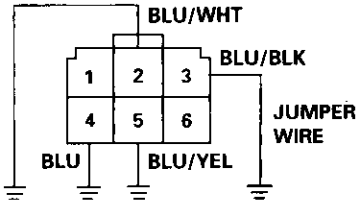

Wire side of female terminals

Blower Motor

Blower motor does not run at all.

Check the No. 55 (40 A) fuse in the under-hood fuse/relay box, and the No. 17 (7.5 A) fuse in the under-dash fuse/relay box.

Are the fuses OK?

NO → **Replace the fuse(s), and recheck.**

YES

Check the blower motor:
1. Connect the No. 2 terminal of the blower motor 2P connector to body ground with a jumper wire.
2. Turn the ignition switch ON (II).

Does the blower motor run?

YES → To page 21-11

NO

Check for an open in the wire:
1. Disconnect the jumper wire and the blower motor 2P connector.
2. Measure the voltage between the No. 1 terminal and body ground.

Is there battery voltage?

YES → **Replace the blower motor.**

NO

Check the blower motor relay:
1. Turn the ignition switch OFF.
2. Remove the blower motor relay from the under-hood fuse/relay box, and test it (see page 21-49).

Is the relay OK?

NO → **Replace the blower motor relay.**

YES

To page 21-12

BLOWER MOTOR 2P CONNECTOR

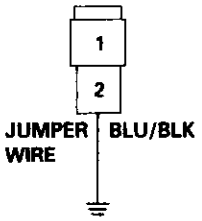

Wire side of female terminals

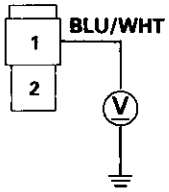

From page 21-10

Check for an open in the wire:
1. Turn the ignition switch OFF, and disconnect the jumper wire.
2. Remove the center dashboard lower cover (see section 20), and disconnect the heater fan switch 6P connector.
3. Turn the ignition switch ON (II).
4. Measure the voltage between the No. 3 terminal and body ground.

Is there battery voltage?

NO → **Repair open in the wire between the blower motor and the heater fan switch.**

YES

Check for an open in the wire:
1. Turn the ignition switch OFF.
2. Check for continuity between the No. 1 terminal of the heater fan switch 6P connector and body ground.

Is there continuity?

YES → **Replace the heater fan switch.**

NO

Check for an open in the wire between the heater fan switch and body ground. If the wire is OK, check for poor ground at G401 and G402.

HEATER FAN SWITCH 6P CONNECTOR

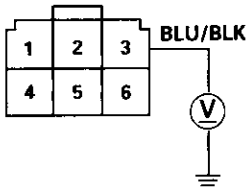

Wire side of female terminals

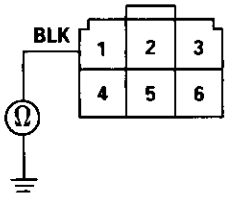

(cont'd)

Blower Motor (cont'd)

From page 21-10

Check the under-hood fuse/relay box:
Measure the voltage between the No. 3 terminal of the blower motor relay 4P socket and body ground.

Is there battery voltage?

- NO → **Replace the under-hood fuse/relay box.**
- YES ↓

Check for an open in the wire:
1. Turn the ignition switch ON (II).
2. Measure the voltage between the No. 4 terminal of the blower motor relay 4P socket and body ground.

Is there battery voltage?

- NO → **Repair open in the wire between the No. 17 fuse and the blower motor relay.**
- YES ↓

Check for an open in the wire:
1. Turn the ignition switch OFF.
2. Check for continuity between the No. 2 terminal of the blower motor relay 4P socket and body ground.

Is there continuity?

- NO → **Check for an open in the wire between the blower motor relay and body ground. If the wire is OK, check for poor ground at G401 and G402.**
- YES ↓

Repair open in the BLU/WHT wire between the blower motor relay and the blower motor.

BLOWER MOTOR RELAY 4P SOCKET

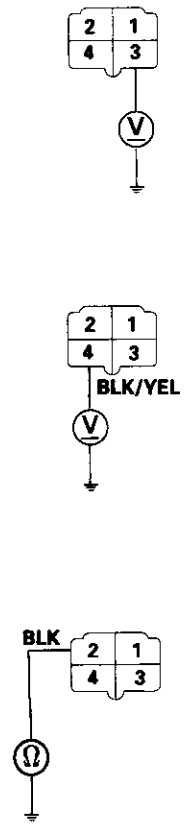

Mode Control Motor

Mode control motor does not run, or one or more modes are inoperative.

Check the No. 17 (7.5 A) fuse in the under-dash fuse/relay box.

Is the fuse OK?

NO → **Replace the fuse, and recheck.**

YES

Check for an open in the wire:
1. Disconnect the mode control motor 7P connector.
2. Turn the ignition switch ON (II).
3. Measure the voltage between the No. 1 terminal and body ground.

Is there battery voltage?

NO → **Repair open in the wire between the No. 17 fuse and the mode control motor.**

YES

Check for an open in the wire:
1. Turn the ignition switch OFF.
2. Check for continuity between the No. 7 terminal of the mode control motor 7P connector and body ground.

Is there continuity?

NO → **Check for an open in the wire between the mode control motor and body ground. If the wire is OK, check for poor ground at G401 and G402.**

YES

Test the mode control motor (see page 21-47).

Is the mode control motor OK?

NO → **Check the mode control linkage and doors:**
1. Remove the mode control motor (see page 21-47).
2. Check the mode control linkage and doors for smooth movement.

YES

To page 21-14

Do the mode control linkage and doors move smoothly?

NO → **Repair the mode control linkage or doors.**

YES → **Replace the mode control motor.**

MODE CONTROL MOTOR 7P CONNECTOR

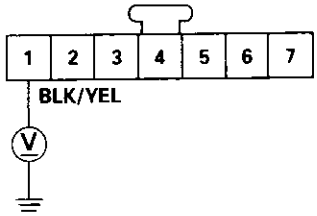

Wire side of female terminals

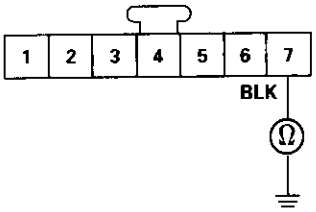

(cont'd)

Mode Control Motor (cont'd)

From page 21-13

Check for a short in the wire(s):
1. Remove the center dashboard lower cover (see section 20), and disconnect the heater control panel 14P connector.
2. Check for continuity between the No. 1, 4, 7, 8 and 9 terminals and body ground individually.

HEATER CONTROL PANEL 14P CONNECTOR

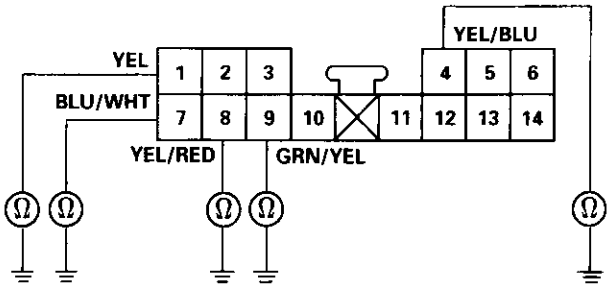

Wire side of female terminals

Is there continuity?

YES → **Repair any short in the wire(s) between the mode control motor and the heater control panel.**

NO

Check for a short to power:
Check the same wires for voltage.

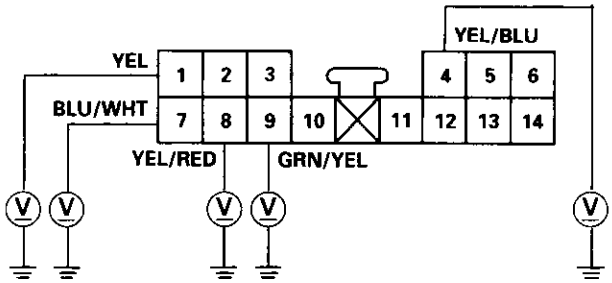

Is there any voltage?

YES → **Repair short to power in the wire(s) between the mode control motor and the heater control panel. This short also damages the heater control panel. Repair the short to power before replacing the heater control panel.**

NO

To page 21-15

From page 21-14

Check for an open in the wire(s): Check for continuity between the following terminals of the mode control motor 7P connector and the heater control panel 14P connector.

7P:	14P:
No. 2	No. 4
No. 3	No. 1
No. 4	No. 7
No. 5	No. 9
No. 6	No. 8

Is there continuity?

NO → **Repair any open in the wire(s) between the mode control motor and the heater control panel.**

YES → **Check for loose wires or poor connections at the heater control panel 14P connector, and at the mode control motor 7P connector. If the connections are good, replace the heater control panel.**

HEATER CONTROL PANEL 14P CONNECTOR

Wire side of female terminals

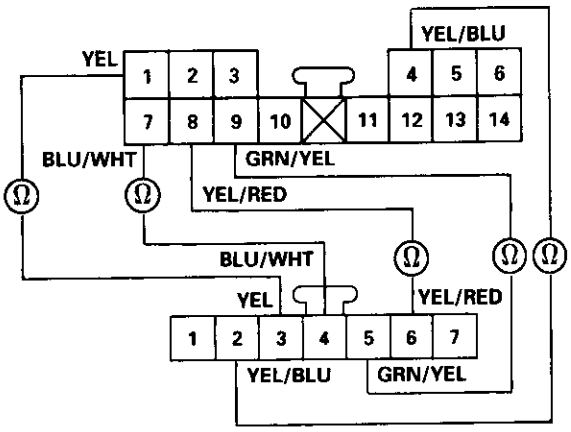

MODE CONTROL MOTOR 7P CONNECTOR

Wire side of female terminals

Recirculation Control Motor

Recirculation control door does not change between FRESH and RECIRCULATE.

Check the No. 17 (7.5 A) fuse in the under-dash fuse/relay box.

Is the fuse OK?

NO → **Replace the fuse, and recheck.**

YES

Check for an open in the wire:
1. Disconnect the recirculation control motor 4P connector.
2. Turn the ignition switch ON (II).
3. Measure the voltage between the No. 1 terminal and body ground.

Is there battery voltage?

NO → **Repair open in the wire between the No. 17 fuse and the recirculation control motor.**

YES

Check the recirculation control motor:
1. Turn the ignition switch OFF.
2. Test the recirculation control motor (see page 21-48).

Is the recirculation control motor OK?

NO →

Check the recirculation control linkage and door:
1. Remove the recirculation control motor (see page 21-48).
2. Check the recirculation control linkage and door for smooth movement.

Do the recirculation control linkage and door move smoothly?

NO → **Repair the recirculation control linkage or door.**

YES → **Replace the recirculation control motor.**

YES → To page 21-17

RECIRCULATION CONTROL MOTOR 4P CONNECTOR

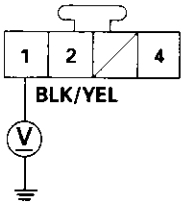

Wire side of female terminals

From page 21-16

Check for a short in the wire(s):
1. Remove the center dashboard lower cover (see section 20), and disconnect the heater control panel 14P connector.
2. Check for continuity between the No. 12 and No. 13 terminals and body ground individually.

Is there continuity?

YES → **Repair short in the wire(s) between the recirculation control motor and the heater control panel.**

NO

Check for a short to power:
Check the same wires for voltage.

Is there any voltage?

YES → **Repair short to power in the wire (s) between the recirculation control motor and the heater control panel. This short also damages the heater control panel. Repair the short to power before replacing the heater control panel.**

NO

Check for an open in the wire(s):
Check for continuity between the following terminals of the recirculation control motor 4P connector and the heater control panel 14P connector.

4P:	14P:
No. 2	No. 12
No. 4	No. 13

Is there continuity?

NO → **Repair open in the wire(s) between the recirculation control motor and the heater control panel.**

YES

Check for loose wires or poor connections at the heater control panel 14P connector, and at the recirculation control motor 4P connector. If the connections are good, replace the heater control panel.

HEATER CONTROL PANEL 14P CONNECTOR

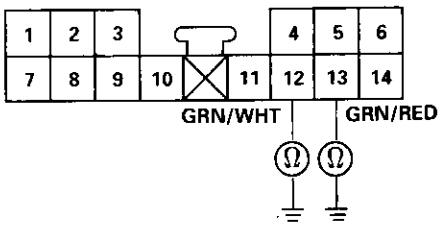

Wire side of female terminals

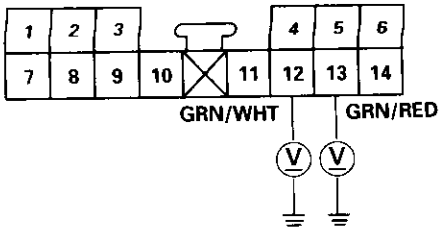

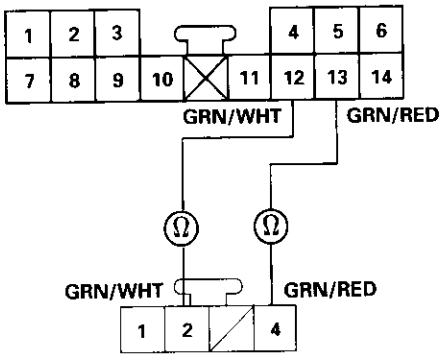

RECIRCULATION CONTROL MOTOR 4P CONNECTOR

Wire side of female terminals

Heater Control Panel

Both heater and A/C do not work.

Check the No. 17 (7.5 A) fuse in the under-dash fuse/relay box, and the No. 47 (7.5 A) fuse in the under-hood fuse/relay box.

Are the fuses OK?

NO → **Replace the fuse(s), and recheck.**

YES

Check for an open in the wire:
1. Remove the center dashboard lower cover (see section 20), and disconnect the heater control panel 14P connector.
2. Turn the ignition switch ON (II).
3. Measure the voltage between the No. 2 terminal of the heater control panel 14P connector and body ground.

Is there battery voltage?

NO → **Repair open in the wire between the No. 17 fuse and the heater control panel.**

YES

Check for an open in the wire:
1. Turn the ignition switch OFF.
2. Measure the voltage between the No. 3 terminal of the heater control panel 14P connector and body ground.

Is there battery voltage?

NO → **Repair open in the wire between the No. 47 fuse and the heater control panel.**

YES

Check for an open in the wire: Check for continuity between the No. 10 terminal of the heater control panel 14P connector and body ground.

Is there continuity?

NO → **Check for an open in the wire between the heater control panel and body ground. If the wire is OK, check for poor ground at G401 and G402.**

YES

Check for loose wires or poor connections at the heater control panel 14P connector. If the connections are good, substitute a known-good heater control panel, and recheck. If the symptom/indication goes away, replace the original heater control panel.

HEATER CONTROL PANEL 14P CONNECTOR

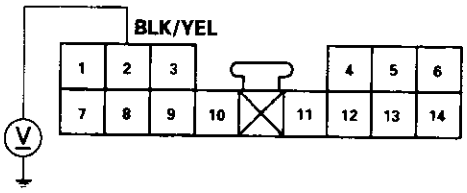

Wire side of female terminals

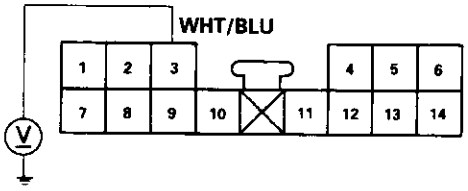

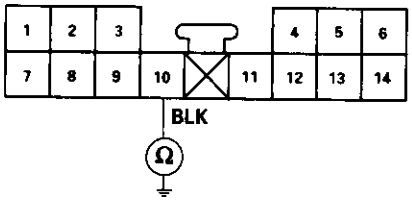

Symptom Chart

For electrical malfunctions which are indicated by the self-diagnostic system, refer to self-diagnosis function (see next page).

Note these items before troubleshooting a symptom.

- Check the engine coolant level, and allow the engine to warm up before troubleshooting.
- Any abnormality must be corrected before continuing the test.
- Because of the precise measurements needed, use a digital multimeter with an output of 1 mA or less at the 20 kΩ range when testing.
- Before performing any troubleshooting procedures check:
  - — Fuses No. 47 (7.5 A), No. 55 (40 A) in the under-hood fuse/relay box, and No. 17 (7.5 A) in the under-dash fuse/relay box.
  - — Grounds No. G401, G402
  - — Cleanliness and tightness of all connectors

Symptom	See page
Mode control motor does not run, or one or more modes are inoperative.	21-25
Recirculation control door does not change between Fresh and Recirculate.	21-27
Blower motor only runs on high speed position; it does not run in any other speed positions.	21-29
Blower motor does not run at all.	21-31
Both heater and A/C do not work.	21-35

Self-diagnosis Function

The heater control panel has a self-diagnosis function.

Running the Self-diagnosis Function
Set the mode control dial to the Vent position, and turn the ignition switch ON (II). Within six seconds after turning the ignition switch on, press the recirculation control switch the required number of times depending on the recirculation indicator light status:

- If the indicator light is ON, press the recirculation control switch five times.
- If the indicator light is OFF, press the recirculation control switch six times.

The recirculation indicator light will come on for two seconds, then blink the Diagnostic Trouble Code (DTC) to indicate a faulty component. If no DTC's are found, the indicator light will not blink after the initial two second light.

DTC Indication Pattern (See DTC 2):

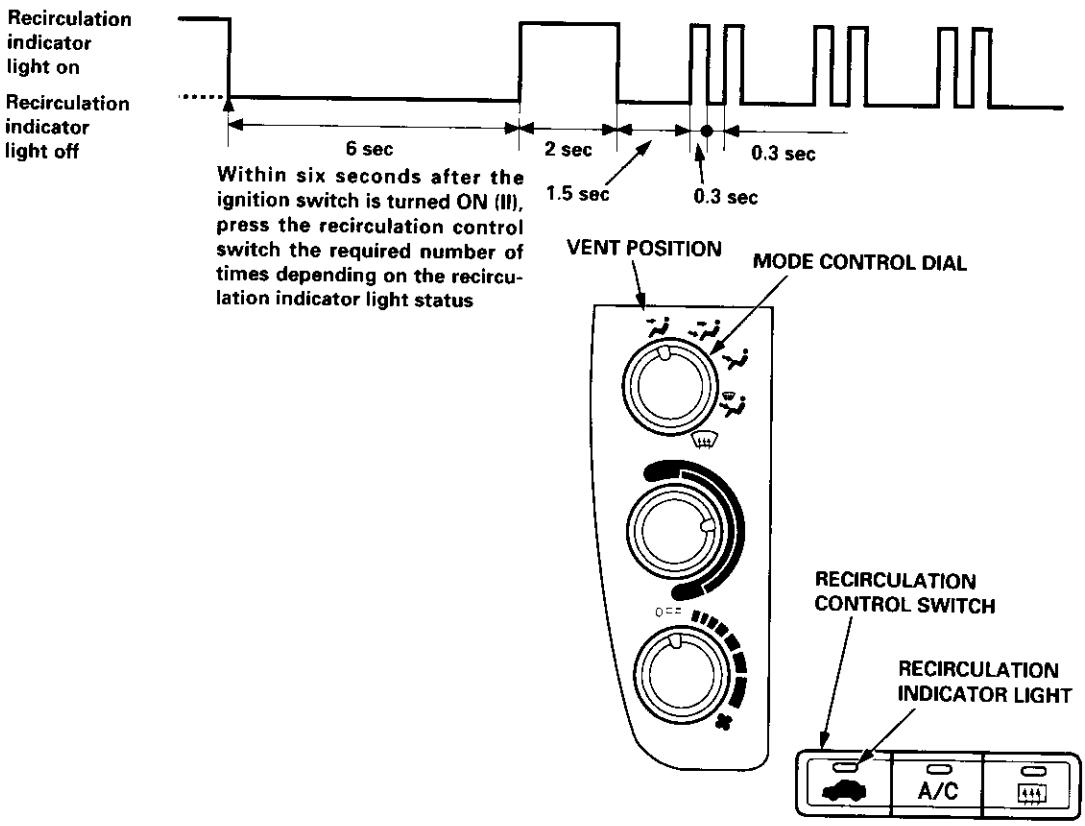

DTC Troubleshooting Index

Diagnostic trouble code (DTC)	Recirculation indicator light	Component with problem	Possible cause	See page
1	One blink	Air mix control motor	Obstructed door, faulty motor	21-21
2	Two blinks	Air mix control motor	Open or short circuit	21-23

In case of multiple problems, the recirculation indicator light will indicate only one DTC with the least number of blinks.

Resetting the Self-diagnosis Function
Turning the ignition switch OFF will cancel the self-diagnosis function. After completing repair work, run the self-diagnosis function again to make sure that there are no other malfunctions.

Air Mix Control Motor

Recirculation indicator light indicates Diagnostic Trouble Code (DTC) 1: A problem in the air mix control linkage, door and motor.

The air mix control motor regulates the mixture of cool/hot air according to outputs from the heater control panel.

Self-diagnosis circuit check indicates a problem in the air mix control motor circuit.

Check the air mix control motor:
1. Disconnect the air mix control motor 5P connector.
2. Test the air mix control motor (see page 21-46).

Is the air mix control motor OK?

NO

Check the air mix control linkage and doors:
1. Remove the air mix control motor (see page 21-46).
2. Check the air mix control linkage and doors for smooth movement.

Do the air mix control linkage and doors move smoothly?

NO

Repair the air mix control linkage or doors.

YES

Replace the air mix control motor.

YES

Check for a short in the wires:
1. Disconnect the heater control panel 20P connector.
2. Check for continuity between body ground and the heater control panel 20P connector terminals No. 3 and 4 individually.

HEATER CONTROL PANEL 20P CONNECTOR

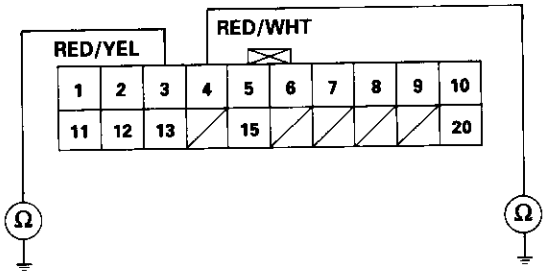

Wire side of female terminals

Is there continuity?

YES

Repair any short in the wire(s) between the heater control panel and the air mix control motor.

NO

To page 21-22

(cont'd)

Air Mix Control Motor (cont'd)

From page 21-21

Check for an open in the wires:
Check for continuity between following terminals of the heater control panel 20P connector and the air mix control motor 5P connector.

20P:		5P:
No. 3	———	No. 1
No. 4	———	No. 5

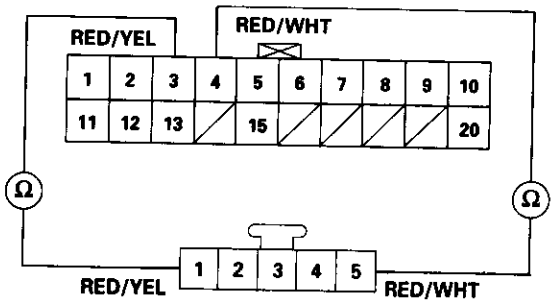

AIR MIX CONTROL MOTOR 5P CONNECTOR
Wire side of female terminals

Is there continuity?

NO → **Repair any open in the wire(s) between the heater control panel and air mix control motor.**

YES → **Check for loose wires or poor connections at the heater control panel 20P connector and at the air mix control motor 5P connector. If the connections are good, substitute a known-good heater control panel, and recheck. If the symptom/indication goes away, replace the original heater control panel.**

Recirculation indicator light indicates Diagnostic Trouble Code (DTC) 2: A problem in the air mix control motor circuit.

The air mix control motor regulates the mixture of cool/hot air according to outputs from the heater control panel.

Self-diagnosis circuit check indicates a problem in the air mix control motor circuit.

Check the air mix control motor:
1. Disconnect the air mix control motor 5P connector.
2. Test the air mix control motor (see page 21-46).

Is the air mix control motor OK?

NO

Check the air mix control linkage and doors:
1. Remove the air mix control motor (see page 21-46).
2. Check the air mix control linkage and doors for smooth movement.

Do the air mix control linkage and doors move smoothly?

NO

Repair the air mix control linkage or doors.

YES

Replace the air mix control motor.

YES

Check for a short in the wires:
1. Disconnect the heater control panel 20P connector.
2. Check for continuity between body ground and the heater control panel 20P connector terminals No. 3, 4, 12, 15 and 20 individually.

HEATER CONTROL PANEL 20P CONNECTOR

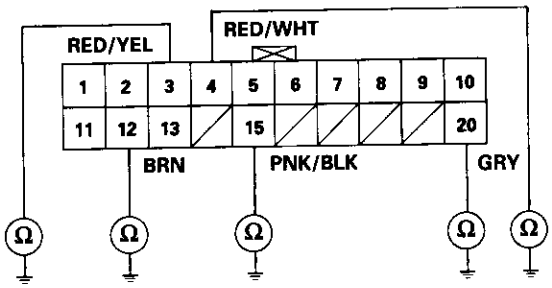

Wire side of female terminals

Is there continuity?

YES

Repair any short in the wire(s) between the heater control panel and the air mix control motor.

NO

To page 21-24

(cont'd)

Air Mix Control Motor (cont'd)

From page 21-23

Check for a short to power:
Check the same terminals for voltage.

HEATER CONTROL PANEL 20P CONNECTOR

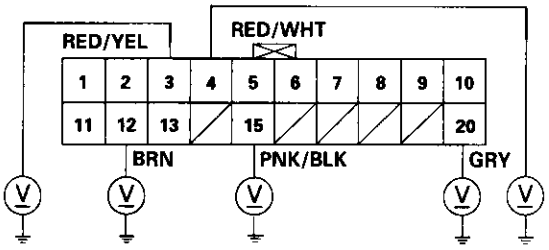

Wire side of female terminals

Is there any voltage?

YES — **Repair short to power in the wire(s) between the heater control panel and the air mix control motor. This short also damages the heater control panel. Repair the short to power before replacing the heater control panel.**

NO

Check for an open in the wires:
Check for continuity between following terminals of the heater control panel 20P connector and the air mix control motor 5P connector.

20P:		5P:
No. 3	———	No. 1
No. 4	———	No. 5
No. 12	———	No. 2
No. 15	———	No. 4
No. 20	———	No. 3

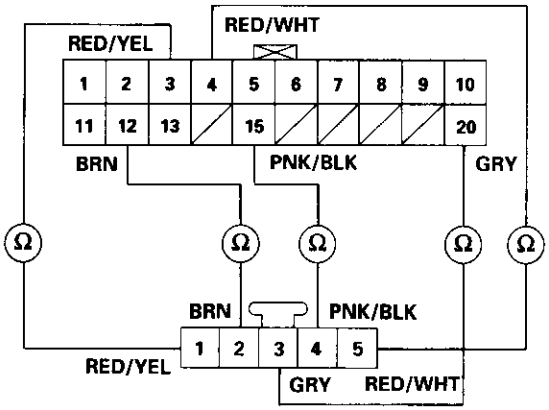

AIR MIX CONTROL MOTOR 5P CONNECTOR
Wire side of female terminals

Is there continuity?

NO — **Repair any open in the wire(s) between the heater control panel and air mix control motor.**

YES

Check for loose wires or poor connections at the heater control panel 20P connector and at the air mix control motor 5P connector. If the connections are good, substitute a known-good heater control panel, and recheck. If the symptom/indication goes away, replace the original heater control panel.

Mode Control Motor

Mode control motor does not run, or one or more modes are inoperative.

Check the No. 17 (7.5 A) fuse in the under-dash fuse/relay box.

Is the fuse OK?

NO → **Replace the fuse, and recheck.**

YES

Check for an open in the wire:
1. Disconnect the mode control motor 7P connector.
2. Turn the ignition switch ON (II).
3. Measure the voltage between the No. 1 terminal of the mode control motor 7P connector and body ground.

Is there battery voltage?

NO → **Repair open in the wire between the No. 17 fuse and the mode control motor.**

YES

Check the mode control motor:
1. Turn the ignition switch OFF.
2. Test the mode control motor (see page 21-47).

Is the mode control motor OK?

NO →

Check the mode control linkage and doors:
1. Remove the mode control motor (see page 21-47).
2. Check the mode control linkage and doors for smooth movement.

Do the mode control linkage and doors move smoothly?

NO → **Repair the mode control linkage or doors.**

YES → **Replace the mode control motor.**

YES

Check for a short to power in the wires:
1. *Turn the ignition switch ON (II).*
2. Disconnect the heater control panel 20P connector.
3. Check for voltage between the No. 2, 5, 6, 7, 8 and 9 terminals of the heater control panel 20P connector and body ground individually.

Is there any voltage?

YES → **Repair short to power in the wire(s) between the heater control panel and the mode control motor. This short also damages the heater control panel. Repair the short to power before replacing the heater control panel.**

NO

To page 21-26

MODE CONTROL MOTOR 7P CONNECTOR

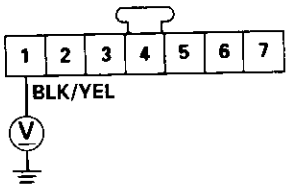

Wire side of female terminals

HEATER CONTROL PANEL 20P CONNECTOR

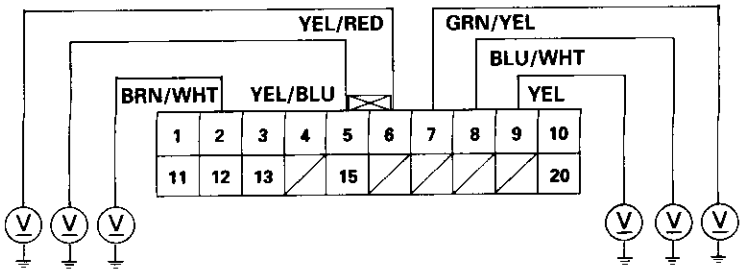

Wire side of female terminals

(cont'd)

Mode Control Motor (cont'd)

From page 21-25

Check for a short to ground:
1. Turn the ignition switch OFF.
2. Check the same terminals for continuity to body ground.

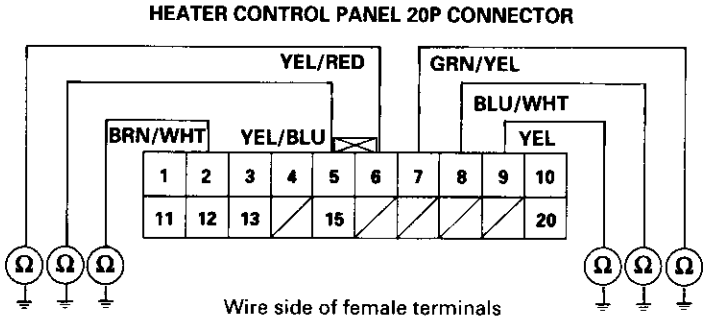

Is there continuity?

YES → **Repair any short in the wire(s) between the heater control panel and the mode control motor.**

NO

Check for an open in the wires:
1. Disconnect the mode control motor 7P connector.
2. Check for continuity between the following terminals of the heater control panel 20P connector and the mode control motor 7P connector.

20P:	7P:
No. 2	No. 7
No. 5	No. 2
No. 6	No. 6
No. 7	No. 5
No. 8	No. 4
No. 9	No. 3

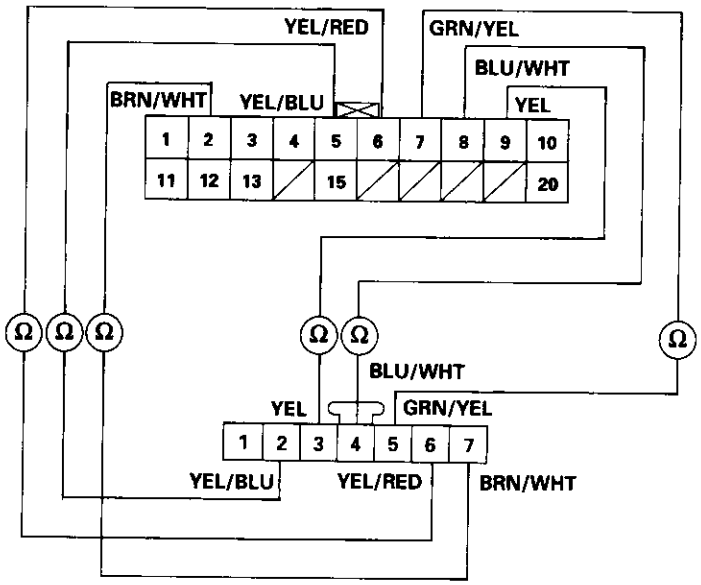

MODE CONTROL MOTOR 7P CONNECTOR
Wire side of female terminals

Is there continuity?

NO → **Repair any open in the wire(s) between the heater control panel and the mode control motor.**

YES

Check for loose wires or poor connections at the heater control panel 20P connector and at the mode control motor 7P connector. If the connections are good, substitute a known-good heater control panel, and recheck. If the symptom/indication goes away, replace the original heater control panel.

Recirculation Control Motor

Recirculation control door does not change between Fresh and Recirculate.

Check the No. 17 (7.5 A) fuse in the under-dash fuse/relay box.

Is the fuse OK?

NO → **Replace the fuse, and recheck.**

YES

Check for an open in the wire:
1. Disconnect the recirculation control motor 4P connector.
2. Turn the ignition switch ON (II).
3. Measure the voltage between the No. 1 terminal of the recirculation control motor 4P connector and body ground.

Is there battery voltage?

NO → **Repair open in the wire between the No. 17 fuse and the recirculation control motor.**

YES

Check the recirculation control motor:
1. Turn the ignition switch OFF.
2. Test the recirculation control motor (see page 21-48).

Is the recirculation control motor OK?

NO →

Check the recirculation control linkage and door:
1. Remove the recirculation control motor (see page 21-48).
2. Check the recirculation control linkage and door for smooth movement.

Do the recirculation control linkage and door move smoothly?

NO → **Repair the recirculation control linkage or door.**

YES → **Replace the recirculation control motor.**

YES

To page 21-28

RECIRCULATION CONTROL MOTOR 4P CONNECTOR

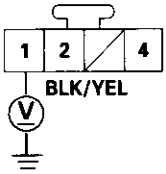

Wire side of female terminals

(cont'd)

Recirculation Control Motor (cont'd)

From page 21-27

Check for a short to power in the wires:
1. Turn the ignition switch ON (II).
2. Disconnect the heater control panel 8P connector.
3. Check for voltage between the No. 2 and No. 3 terminals of the heater control panel 8P connector and body ground individually.

Is there any voltage?

YES → **Repair short to power in the wire(s) between the heater control panel and the recirculation control motor. This short also damages the heater control panel. Repair the short to power before replacing the heater control panel.**

NO

Check for a short to ground:
1. Turn the ignition switch OFF.
2. Check the same terminals for continuity to ground.

Is there continuity?

YES → **Repair short in the wire(s) between the heater control panel and the recirculation control motor.**

NO

Check for an open in the wires:
1. Disconnect the recirculation control motor 4P connector.
2. Check for continuity between the following terminals of the recirculation control motor 4P connector and the heater control panel 8P connector.

8P:	4P:
No. 2	No. 2
No. 3	No. 4

Is there continuity?

NO → **Repair open in the wire(s) between the heater control panel and the recirculation control motor .**

YES

Check for loose wires or poor connections at the heater control panel 8P connector and at the recirculation control motor 4P connector. If the connections are good, substitute a known-good heater control panel, and recheck. If the symptom/indication goes away, replace the original heater control panel.

HEATER CONTROL PANEL 8P CONNECTOR

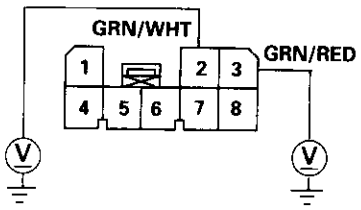

Wire side of female terminals

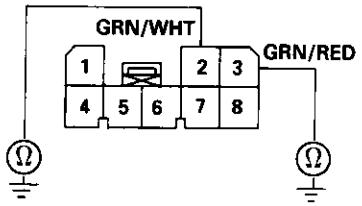

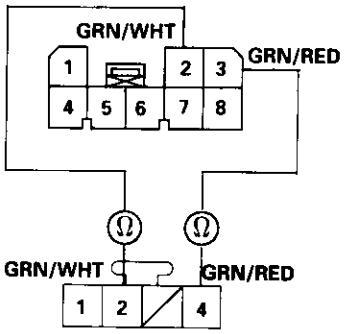

RECIRCULATION CONTROL MOTOR 4P CONNECTOR
Wire side of female terminals

Blower Motor Speed

Blower motor only runs on high speed position; it does not run in any other speed positions.

NOTE: If the blower motor does not run at all, refer to page 21-31.

Check for an open in the wire:
1. Disconnect the power transistor 3P connector.
2. Check for continuity between the No. 3 terminal of the power transistor 3P connector and body ground.

Is there continuity?

NO → **Check for an open in the wire between the power transistor and body ground. If the wire is OK, check for poor ground at G401 and G402.**

YES

Check for an open in the wire:
1. Connect the No. 1 and No. 3 terminals of the power transistor 3P connector with a jumper wire.
2. Turn the ignition switch ON (II).

Does the blower motor run at high speed?

NO → **Repair open in the wire between the blower motor and the power transistor.**

YES

Check for an open in the wire:
1. Turn the ignition switch OFF.
2. Disconnect the jumper wire.
3. Disconnect the heater control panel 20P connector.
4. Check for continuity between the No. 1 terminal of the heater control panel 20P connector and the No. 2 terminal of the power transistor 3P connector.

Is there continuity?

NO → **Repair open in the wire between the heater control panel and the power transistor.**

YES

To page 21-30

POWER TRANSISTOR 3P CONNECTOR

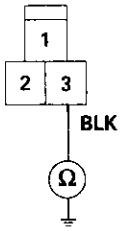

Wire side of female terminals

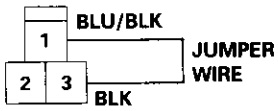

HEATER CONTROL PANEL 20P CONNECTOR
Wire side of female terminals

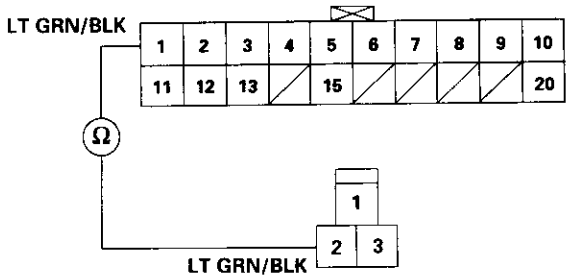

(cont'd)

Blower Motor Speed (cont'd)

From page 21-29

Check for a short in the wire:
Check for continuity between the No. 1 terminal of the heater control panel 20P connector and body ground.

HEATER CONTROL PANEL 20P CONNECTOR

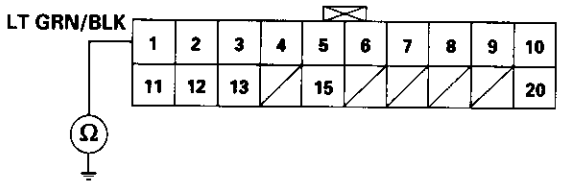

Wire side of female terminals

Is there continuity?

YES → **Repair short in the wire between the heater control panel and the power transistor.**

NO

Check for an open in the wire:
1. Disconnect the heater control panel 8P connector.
2. Turn the ignition switch ON (II).
3. Measure the voltage between the No. 1 terminal of the heater control panel 8P connector and body ground.

HEATER CONTROL PANEL 8P CONNECTOR

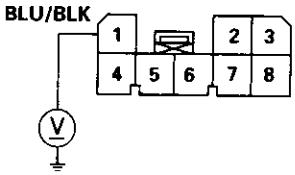

Wire side of female terminals

Is there battery voltage?

NO → **Repair open in the wire between the heater control panel and the blower motor.**

YES

Check the power transistor:
1. Turn the ignition switch OFF.
2. Reconnect the heater control panel 8P and 20P connectors.
3. Test the power transistor (see page 21-50).

Is the power transistor OK?

NO → **Replace the power transistor.**

YES

Check for loose wires or poor connections at the heater control panel 8P and 20P connectors and at the power transistor 3P connector. If the connections are good, substitute a known-good heater control panel, and recheck. If the symptom/indication goes away, replace the original heater control panel.

Blower Motor

Blower motor does not run at all.

Check the No. 55 (40 A) fuse in the under-hood fuse/relay box, and the No. 17 (7.5 A) fuse in the under-dash fuse/relay box.

Are the fuses OK?

NO → **Replace the fuse(s), and recheck.**

YES

Check the blower motor power supply circuit:
1. Disconnect the blower motor 2P connector.
2. Turn the ignition switch ON (II).
3. Measure the voltage between the No. 1 terminal of the blower motor 2P connector and body ground.

BLOWER MOTOR 2P CONNECTOR

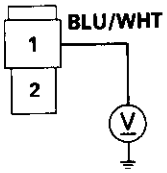

Wire side of female terminals

Is there battery voltage?

NO → To page 21-32

YES

Check the blower motor:
1. Turn the ignition switch OFF.
2. Reconnect the blower motor 2P connector.
3. Connect the No. 2 terminal of the blower motor 2P connector to body ground with a jumper wire.
4. Turn the ignition switch ON (II).

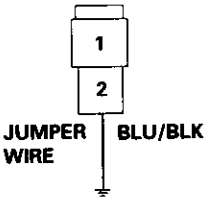

Does the blower motor run?

NO → **Replace the blower motor.**

YES

To page 21-33

(cont'd)

Blower Motor (cont'd)

From page 21-31

Check the blower motor relay:
1. Turn the ignition switch OFF.
2. Remove the blower motor relay from the under-hood fuse/relay box, and test it. (see page 21-49).

Is the relay OK?

NO → **Replace the blower motor relay.**

YES ↓

Check the under-hood fuse/relay box:
Measure the voltage between the No. 3 terminal of the blower motor relay 4P socket and body ground.

Is there battery voltage?

NO → **Replace the under-hood fuse/relay box.**

YES ↓

Check for an open in the wire:
1. Turn the ignition switch ON (II).
2. Measure the voltage between the No. 4 terminal of the blower motor relay 4P socket and body ground.

Is there battery voltage?

NO → **Repair open in the wire between the No. 17 fuse and the blower motor relay.**

YES ↓

Check for an open in the wire:
1. Turn the ignition switch OFF.
2. Check for continuity between the No. 2 terminal of the blower motor relay 4P socket and body ground.

Is there continuity?

NO → **Check for an open in the wire between the blower motor relay and body ground. If the wire is OK, check for poor ground at G401 and G402.**

YES ↓

Repair open in the BLU/WHT wire between the blower motor relay and the blower motor.

BLOWER MOTOR RELAY 4P SOCKET

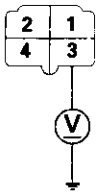

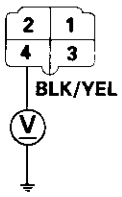

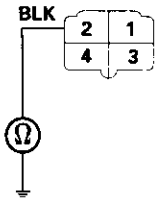

From page 21-31

Check the blower motor high relay:
1. Turn the ignition switch OFF, and disconnect the jumper wire.
2. Remove the blower motor high relay, and test it. (see page 21-49).

Is the relay OK?

NO → **Replace the blower motor high relay.**

YES

Check for an open in the wire:
1. Connect the No. 1 terminal of the blower motor high relay 4P connector to body ground with a jumper wire.
2. Turn the ignition switch ON (II).

Does the blower motor run?

NO → **Repair open in the wire between the blower motor and the blower motor high relay.**

YES

Check for an open in the wire:
1. Turn the ignition switch OFF, and disconnect the jumper wire.
2. Turn the ignition switch ON (II).
3. Measure the voltage between the No. 2 terminal of the blower motor high relay 4P connector and body ground.

Is there battery voltage?

NO → **Repair open in the wire between the No. 17 fuse and the blower motor high relay.**

YES

Check for an open in the wire:
1. Turn the ignition switch OFF.
2. Check for continuity between the No. 3 terminal of the blower motor high relay 4P connector and body ground.

Is there continuity?

NO → **Check for an open in the wire between the blower motor high relay and body ground. If the wire is OK, check for poor ground at G401 and G402.**

YES

To page 21-34

BLOWER MOTOR HIGH RELAY 4P CONNECTOR

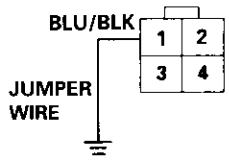

Wire side of female terminals

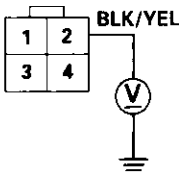

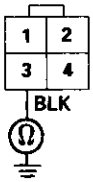

(cont'd)

Blower Motor (cont'd)

From page 21-33

Check for an open in the wire:
1. Disconnect the heater control panel 8P connector.
2. Check for continuity between the No. 1 terminal of the heater control panel 8P connector and the No. 1 terminal of the blower motor high relay 4P connector.

BLOWER MOTOR HIGH RELAY 4P CONNECTOR
Wire side of female terminals

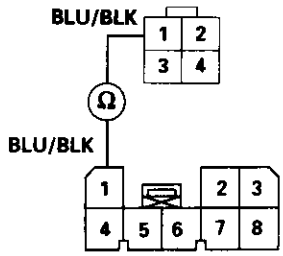

HEATER CONTROL PANEL 8P CONNECTOR
Wire side of female terminals

Is there continuity?

NO → **Repair open in the wire between the heater control panel and the blower motor high relay.**

YES

Check for an open in the wire:
1. Disconnect the heater control panel 20P connector.
2. Check for continuity between the No. 13 terminal of the heater control panel 20P connector and the No. 4 terminal of the blower motor high relay 4P connector.

HEATER CONTROL PANEL 20P CONNECTOR
Wire side of female terminals

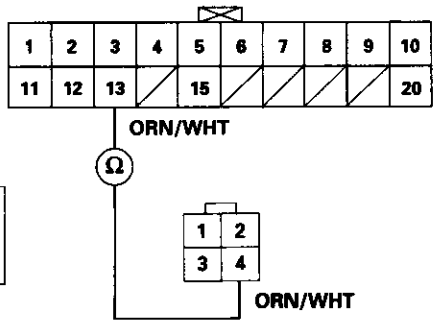

Is there continuity?

NO → **Repair open in the wire between the heater control panel and the blower motor high relay.**

YES

Check for loose wires or poor connections at the heater control panel 8P and 20P connectors and at the blower motor high relay 4P connector. If the connections are good, substitute a known-good heater control panel, and recheck. If the symptom/indication goes away, replace the original heater control panel.

Heater Control Panel

Both heater and A/C do not work.

Check the No. 47 (7.5 A) fuse in the under-hood fuse/relay box, and the No. 17 (7.5 A) fuse in the under-dash fuse/relay box.

Are the fuses OK?

NO → **Replace the fuse(s), and recheck.**

YES

Check for an open in the wire:
1. Disconnect the heater control panel 8P connector.
2. Turn the ignition switch ON (II).
3. Measure the voltage between the No. 8 terminal of the heater control panel 8P connector and body ground.

Is there battery voltage?

NO → **Repair open in the wire between the No. 17 fuse and the heater control panel.**

YES

Check for an open in the wire:
1. Turn the ignition switch OFF.
2. Disconnect the heater control panel 20P connector.
3. Measure the voltage between the No. 10 terminal of the heater control panel 20P connector and body ground.

Is there battery voltage?

NO → **Repair open in the wire between the No. 47 fuse and the heater control panel.**

YES

Check for an open in the wire:
Check for continuity between the No. 6 terminal of the heater control panel 8P connector and body ground.

Is there continuity?

NO → **Check for an open in the wire between the heater control panel and body ground. If the wire is OK, check for poor ground at G401 and G402.**

YES

Check for loose wires or poor connections at the heater control panel 8P and 20P connectors. If the connections are good, substitute a known-good heater control panel, and recheck. If the symptom/indication goes away, replace the original heater control panel.

HEATER CONTROL PANEL 8P CONNECTOR

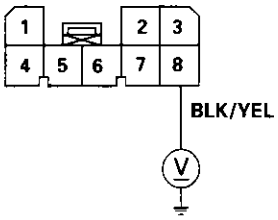

Wire side of female terminals

HEATER CONTROL PANEL 20P CONNECTOR

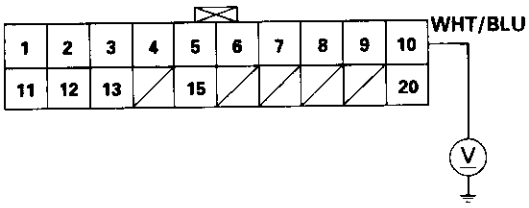

Wire side of female terminals

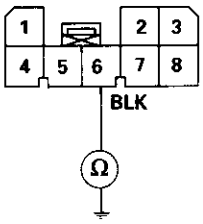

Heater Control Panel Input/Output Signals

HEATER CONTROL PANEL CONNECTORS

8P CONNECTOR

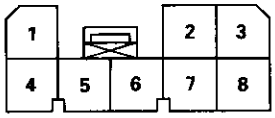

20P CONNECTOR

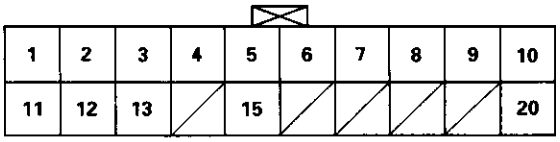

12P CONNECTOR

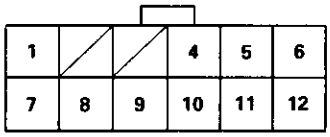

Wire side of female terminals

8P CONNECTOR (○ on Circuit Diagram)

Cavity	Wire color	Signal		Cavity	Wire color	Signal	
1	BLU/BLK	BLOWER FEEDBACK	INPUT	5	RED	DASH LIGHTS BRIGHTNESS CONTROLLER	OUTPUT
2	GRN/WHT	FRESH	INPUT	6	BLK	GROUND	OUTPUT
3	GRN/RED	RECIRCULATE	INPUT	7	BLU/YEL	REAR WINDOW DEFOGGER RELAY	OUTPUT
4	RED/BLK	COMBINATION LIGHT SWITCH (Via No. 30 (7.5 A) fuse)	INPUT	8	BLK/YEL	IG2 (Power)	INPUT

20P CONNECTOR (□ on Circuit Diagram)

Cavity	Wire color	Signal		Cavity	Wire color	Signal	
1	LT GRN/BLK	POWER TRANSISTOR BASE	OUTPUT	11*	BLU/RED	A/C THERMOSTAT	INPUT
2	BRN/WHT	MODE CONTROL MOTOR GROUND	INPUT	12	BRN	AIR MIX CONTROL MOTOR GROUND	INPUT
3	RED/YEL	AIR MIX HOT	OUTPUT	13	ORN/WHT	BLOWER MOTOR HIGH RELAY	INPUT
4	RED/WHT	AIR MIX COOL	OUTPUT	14			
5	YEL/BLU	MODE DEF	INPUT	15	PNK/BLK	AIR MIX POTENTIAL	OUTPUT
6	YEL/RED	MODE VENT	INPUT	16			
7	GRN/YEL	MODE HEAT/VENT	INPUT	17			
8	BLU/WHT	MODE HEAT	INPUT	18			
9	YEL	MODE HEAT/DEF	INPUT	19			
10	WHT/BLU	+B (Power)	INPUT	20	GRY	AIR MIX POTENTIAL +5 V	OUTPUT

*: With A/C

12P CONNECTOR (⊡ on Circuit Diagram)

Cavity	Wire color	Signal		Cavity	Wire color	Signal	
1		SWITCH LED COMMON	OUTPUT	7		SWITCH LIGHTS +	OUTPUT
2				8		SWITCH LIGHTS –	INPUT
3				9		SWITCH COMMON	INPUT
4		RECIRCULATION CONTROL SWITCH LED	INPUT	10		A/C SWITCH	OUTPUT
5		A/C SWITCH LED	INPUT	11		RECIRCULATION CONTROL SWITCH	OUTPUT
6		REAR WINDOW DEFOGGER SWITCH LED	INPUT	12		REAR WINDOW DEFOGGER SWITCH	OUTPUT

Replacement

NOTE: The blower motor, recirculation control motor and blower resistor can be replaced without removing the blower unit (see next page).

1. Move the temperature control to "HOT."
   '96-98: Slide the temperature control lever.
   '99-00: Turn the ignition switch ON (II), then turn the temperature contol knob. Turn the ignition switch off.

2. Remove the glove box (see section 20).

3. Remove the self-tapping screw and the passenger's dashboard lower cover. Remove the bolt, the nut and the knee bolster, then remove the five bolts and the glove box frame.

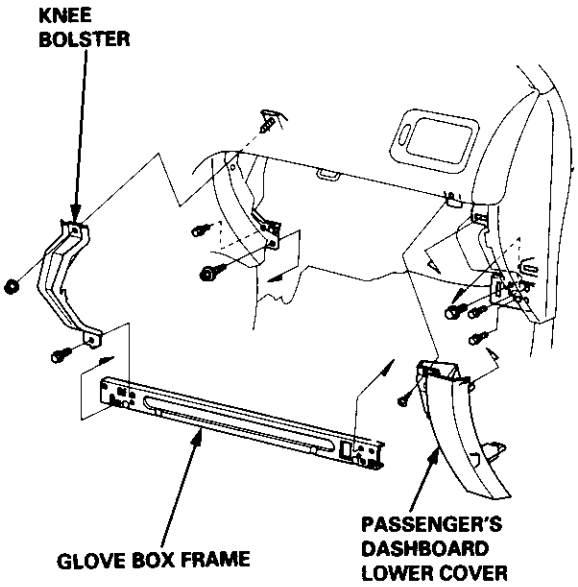

Without Air Conditioning

4-a. Remove the wire harness from the heater duct, then remove the two self-tapping screws and the heater duct.

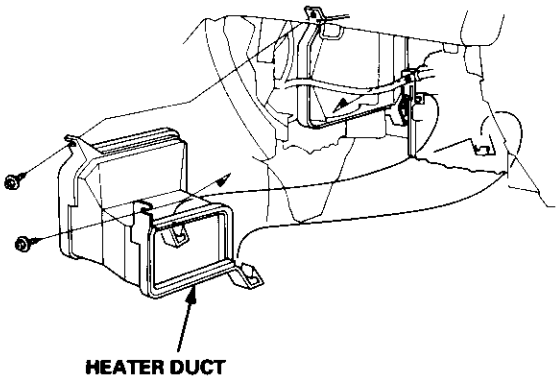

With Air Conditioning

4-b. Remove the evaporator (see page 22-28).

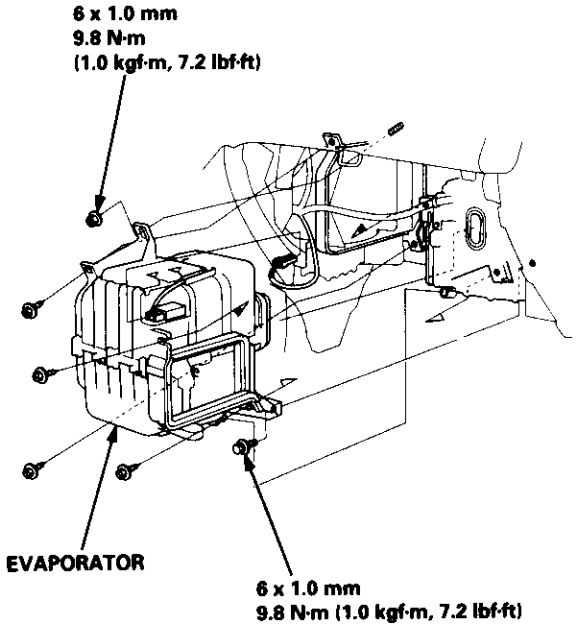

5. Disconnect the connectors from the blower motor, blower resistor ('96 – 98 models), power transistor ('99 – 00 models), blower motor high relay ('99 – 00 models) and recirculation control motor.
   Remove the wire harness clip from the recirculation control motor, and release the wire harness from the clamp on the blower unit. Remove the two mounting bolts, the mounting nut and the blower unit.

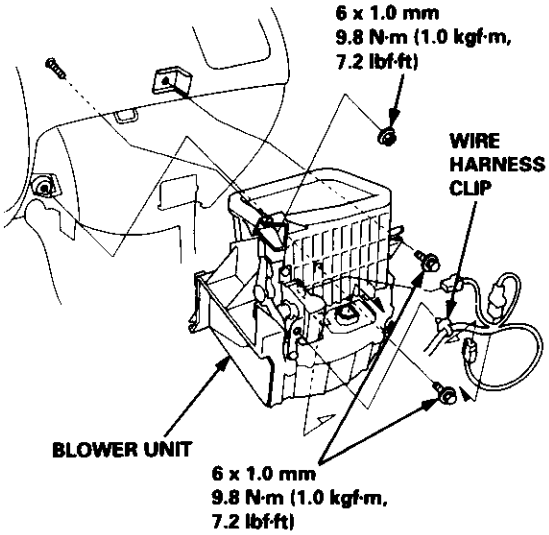

6. Install in the reverse order of removal. Make sure that there is no air leakage.

Overhaul

NOTE:
- Before reassembly, make sure that the recirculation control door and linkage move smoothly without binding.
- When attaching the recirculation control motor, make sure its positioning will not allow the recirculation control door to be pulled too far.
- After attaching the recirculation control motor, connect power and ground, and watch the movement of the recirculation control door.

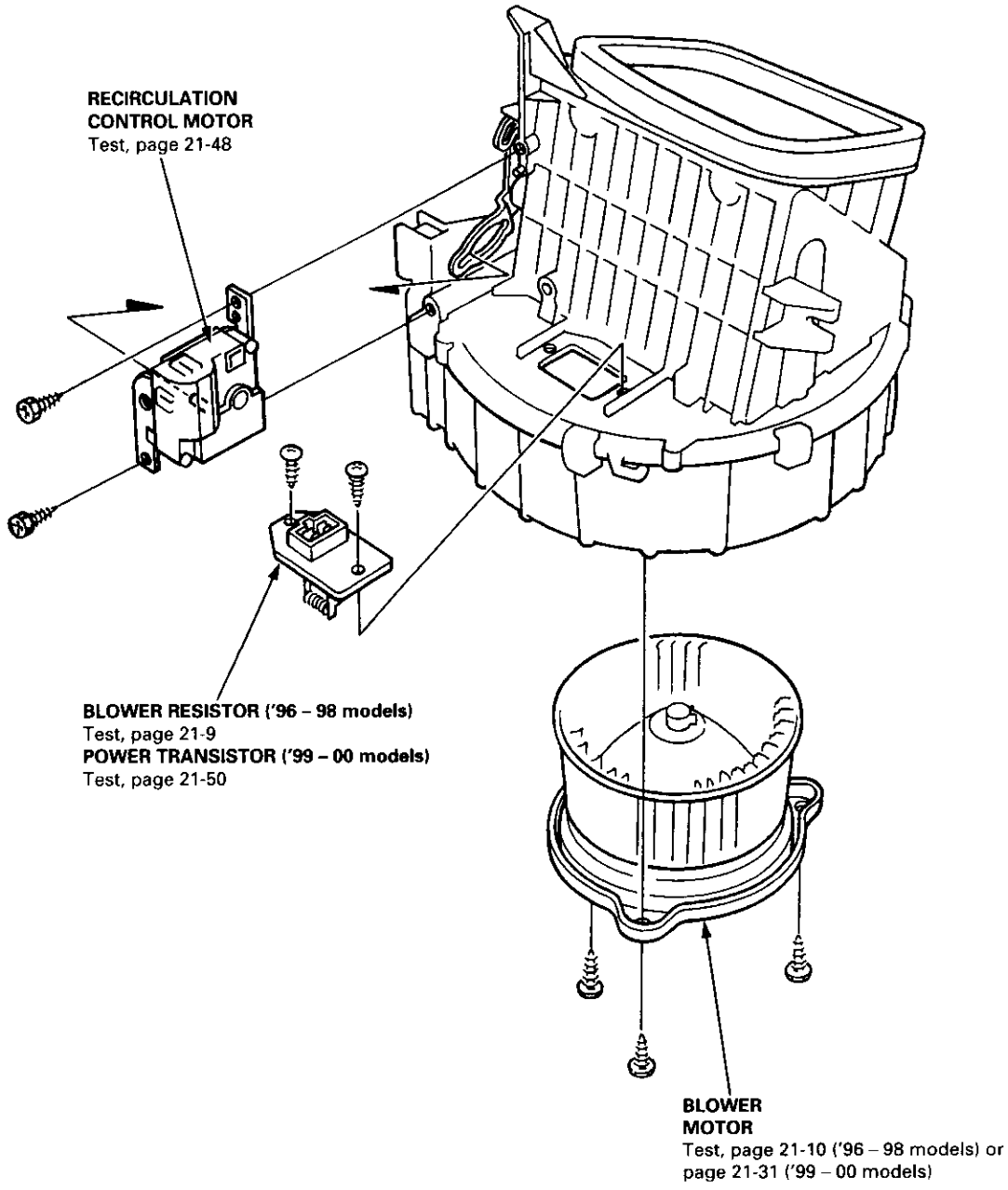

Replacement

SRS components are located in this area. Review the SRS component locations, precautions, and procedures in the SRS section (24) before performing repairs or service.

1. Disconnect the negative cable from the battery.

2. From under the hood, open the clamp, then disconnect the heater valve cable from the heater valve arm. Turn the heater valve arm to the fully opened position as shown.

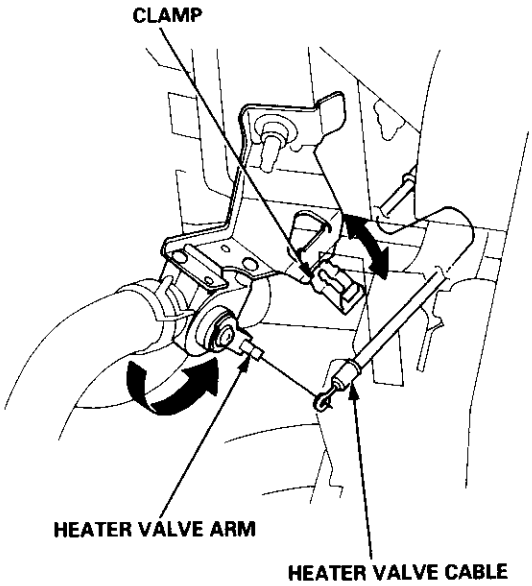

3. When the engine is cool, drain the engine coolant from the radiator (see section 10).

⚠WARNING Do not remove the radiator cap when the engine is hot; the engine coolant is under pressure and could severely scald you.

4. Disconnect the heater hoses from the heater unit.

CAUTION: Engine coolant will damage paint. Quickly rinse any spilled engine coolant from painted surfaces.

NOTE: Engine coolant will run out when the hoses are disconnected; drain it into a clean drip pan.

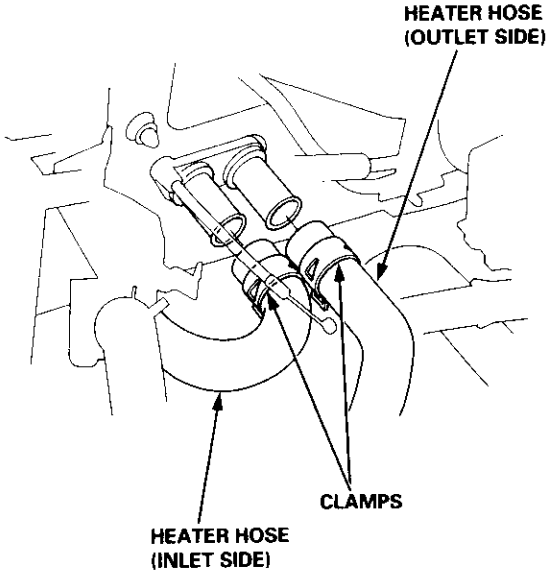

5. Remove the mounting nut from the heater unit.

NOTE: When removing the mounting nut, take care not to damage or bend the fuel lines, the brake lines, etc.

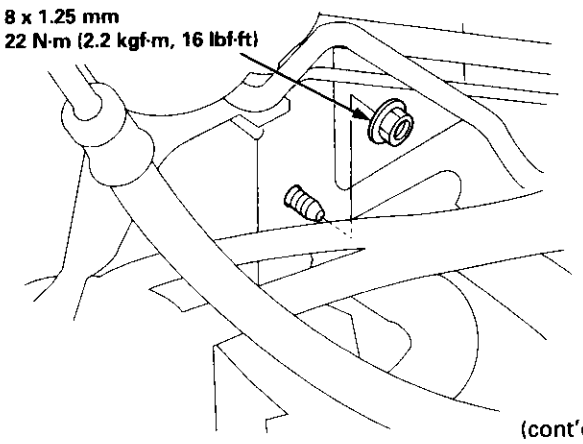

(cont'd)

Replacement (cont'd)

6. Remove the dashboard (see section 20).

7. Remove the heater duct (see page 21-37) or evaporator (see page 22-28).

8. Disconnect the connectors from the mode control motor and air mix control motor ('99 – 00 models), then remove the wire harness clips and wire harness from the heater unit. Remove the clip from the heater duct, then remove the two mounting nuts and the heater unit.

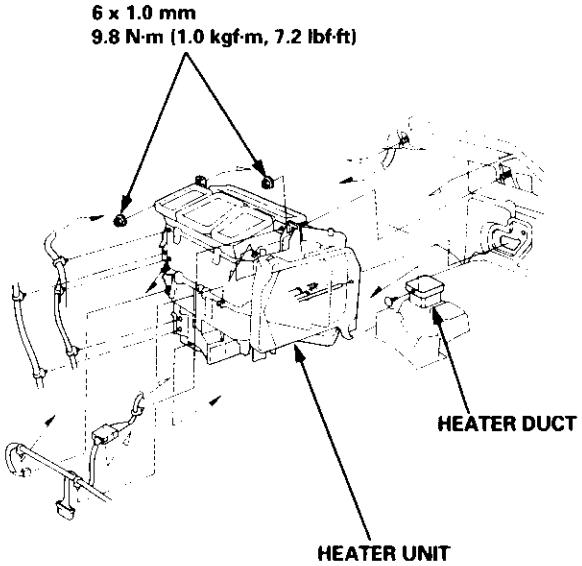

9. Install in the reverse order of removal. Make note of the following items.

   - Apply sealant to the grommets.
   - Do not interchange the inlet and outlet heater hoses. Make sure that the clamps are secure.
   - Refill the cooling system with engine coolant (see section 10).
   - Connect all cables, and make sure they are properly adjusted (see page 21-44 ('96 – 98 models) or page 21-45 ('99 – 00 models)).
   - Make sure that there is no air leakage.

Overhaul

1. Remove the two self-tapping screws and the heater core cover.
2. Pull out the grommet from the heater core pipes.
3. Remove the self-tapping screw and the clamp.
4. Pull out the heater core from the heater unit.

   NOTE: Be careful not to bend the inlet and outlet pipes during heater core removal.
5. Assemble in the reverse order of disassembly.

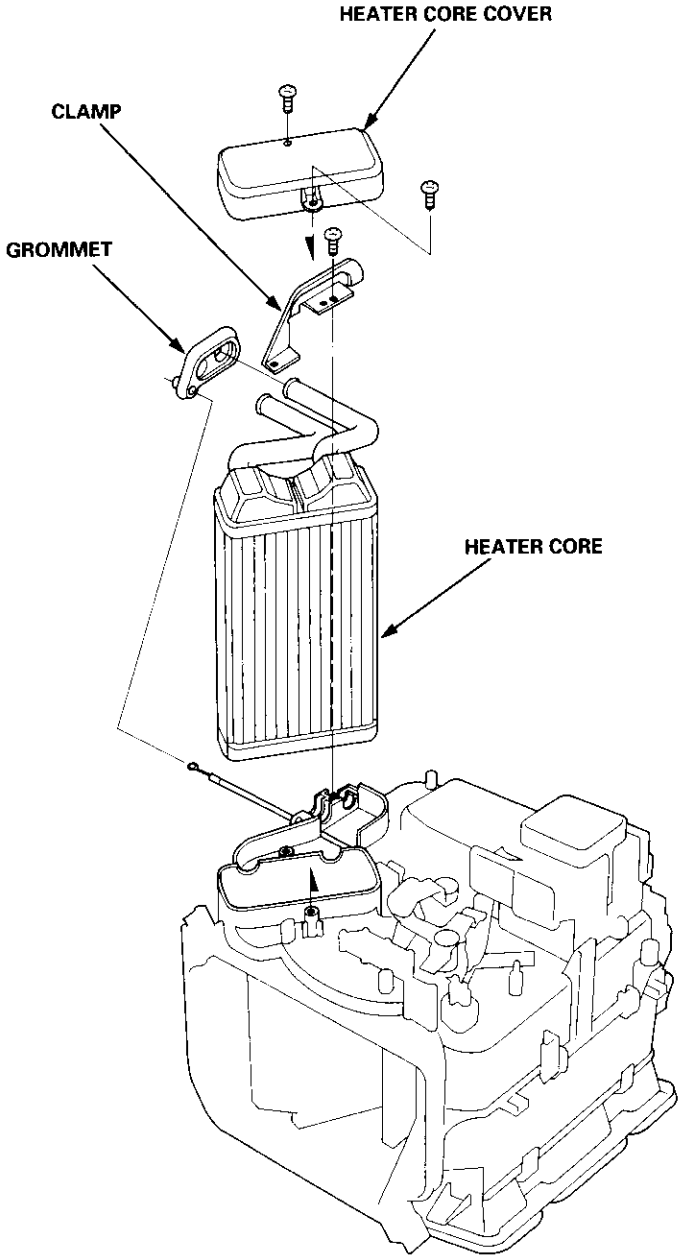

Replacement

'96 – 98 models:

1. Remove the driver's dashboard lower cover, the glove box and the center dashboard lower cover (see section 20).
2. Disconnect the air mix control cable from the heater unit (see page 21-44).
3. Remove the rear window defogger switch, the hazard warning switch and the audio unit (see section 23).
4. Disconnect the connectors from the heater control panel. Remove the five self-tapping screws and the center panel together with the heater control panel.

   NOTE: The locking tabs are on the bottom of the connectors.

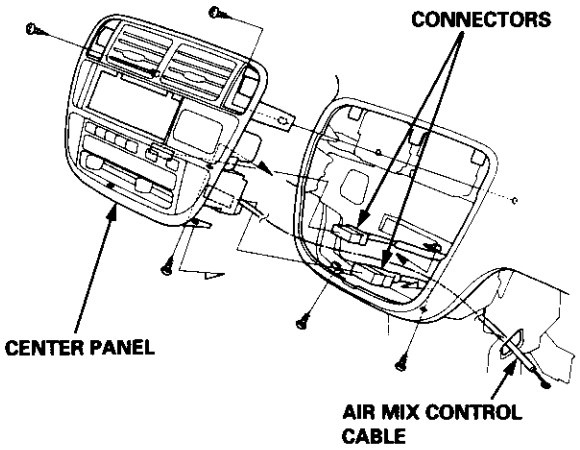

5. Remove the four self-tapping screws and the heater control panel.

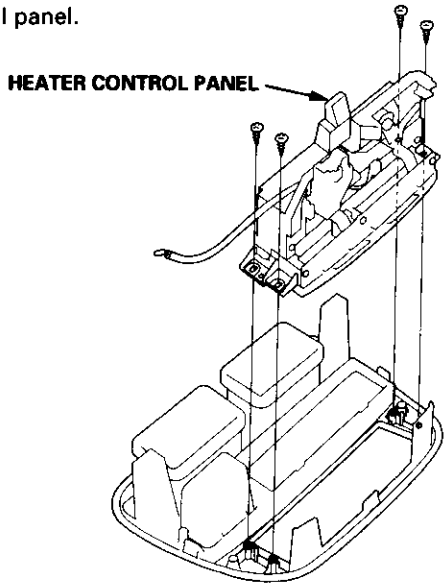

6. Install in the reverse order of removal. Adjust the air mix control cable and the heater valve cable (see page 21-44).

'99 – 00 models:

1. Remove the center panel together with the heater control panel (see section 20).
2. Remove the self-tapping screws and the heater control panel from the center panel.

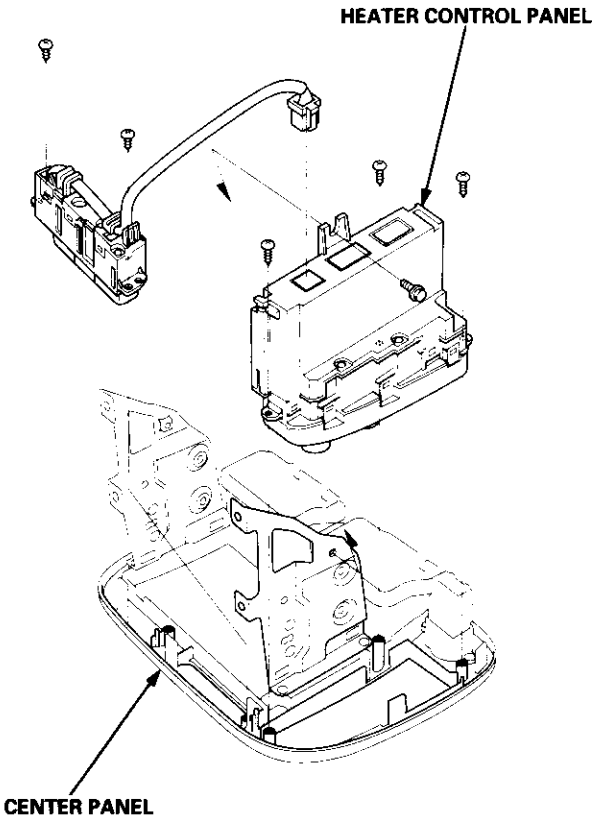

3. Install in the reverse order of removal. After installation, operate the heater control panel to see whether it works properly.

Overhaul — '96 – 98 Models

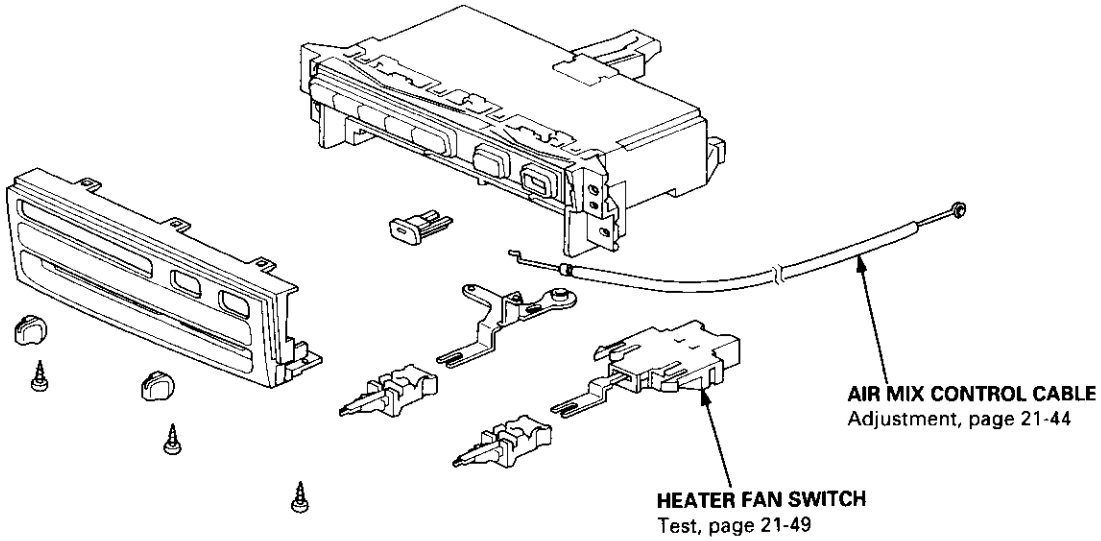

Air Mix Control Cable Replacement

1. Cut the inner cable on the lever side of the cable holder, then remove both pieces of the inner cable.

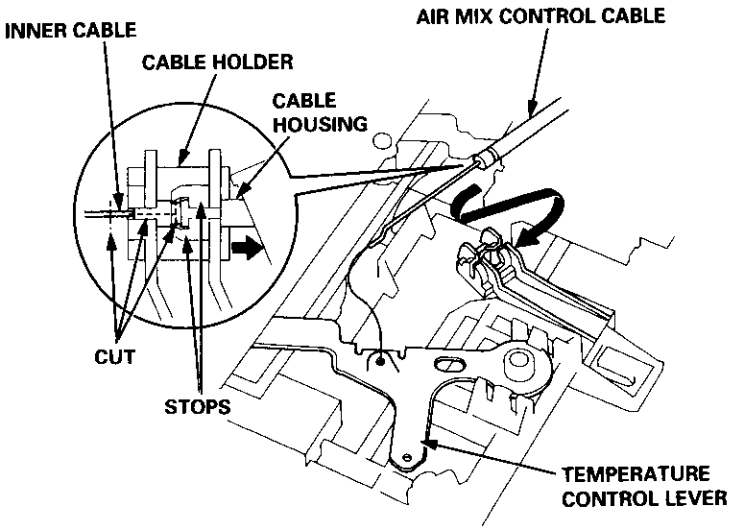

2. Using a sharp knife, cut completely through the end of the cable housing at the two locations.

3. Slide the large section of the cable housing out of the cable holder, being careful not to damage the cable stops.

4. Carefully remove the cut pieces of the cable housing with a small flat tip screwdriver.

5. Hook the tip of the new air mix control cable to the temperature control lever, then push the cable housing into the cable holder until it locks into place.

   NOTE: After assembly, check that the temperature control lever slides smoothly through the full stroke from right to left.

Adjustment — '96 - 98 Models

1. From under the hood, disconnect the heater valve cable from the heater valve.

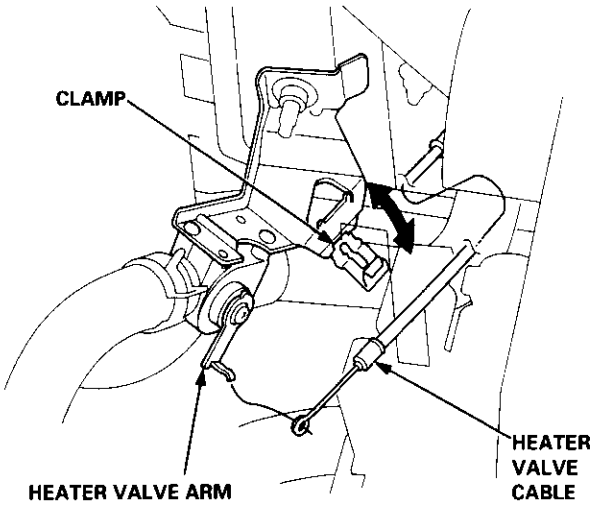

2. From under the dash, disconnect the air mix control cable housing from the cable clamp.

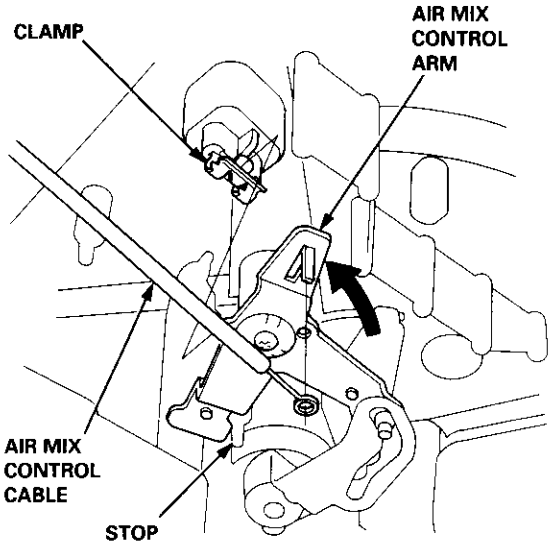

3. Set the temperature control lever to MAX. COOL.

4. With the air mix control cable attached to the air mix control arm, gently pull on the outer cable housing to fully close the door and to remove any slack in the cable. Don't pull to hard, or the temperature control lever will move.

5. Hold the air mix control arm against the stop, then snap the air mix control cable housing into the cable clamp.

6. From under the hood, move the heater valve arm to the fully closed position, then attach the heater valve cable to the heater valve arm.

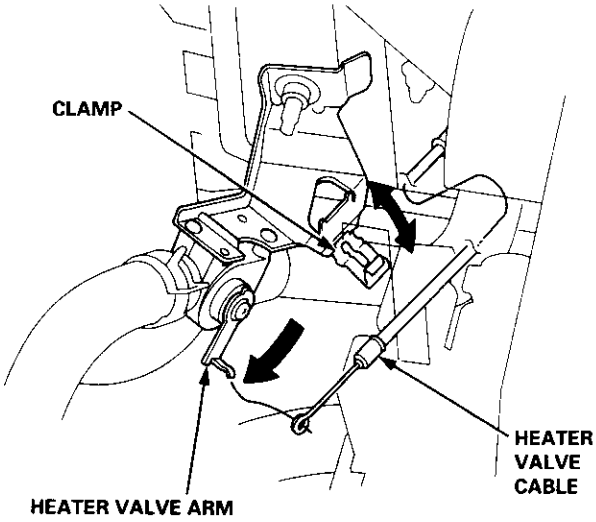

7. Hold the heater valve arm in the closed position, and gently pull on the heater cable outer housing to take up any slack, then install the heater valve cable housing into the cable clamp.

Adjustment — '99 – 00 Models

1. From under the hood, open the cable clamp, then disconnect the heater valve cable from the heater valve arm.

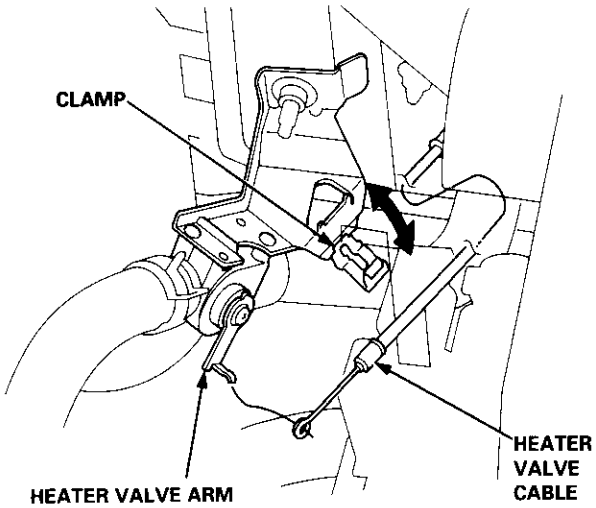

2. From under the dash, disconnect the heater valve cable housing from the cable clamp, and disconnect the heater valve cable from the air mix control arm.

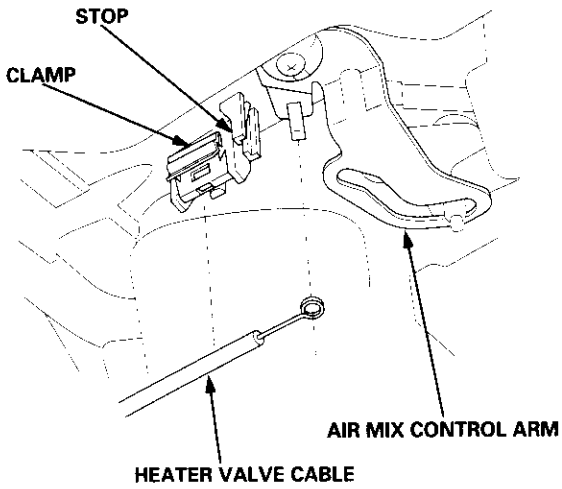

3. Set the temperature control dial on MAX COOL with the ignition switch ON (II).

4. Attach the heater valve cable to the air mix control arm as shown above. Hold the end of the heater valve cable housing against the stop, then snap the heater valve cable housing into the cable clamp.

5. From under the hood, turn the heater valve arm to the fully closed position as shown, and hold it. Attach the heater valve cable to the heater valve arm, and gently pull on the heater valve cable housing to take up any slack, then install the heater valve cable housing into the cable clamp.

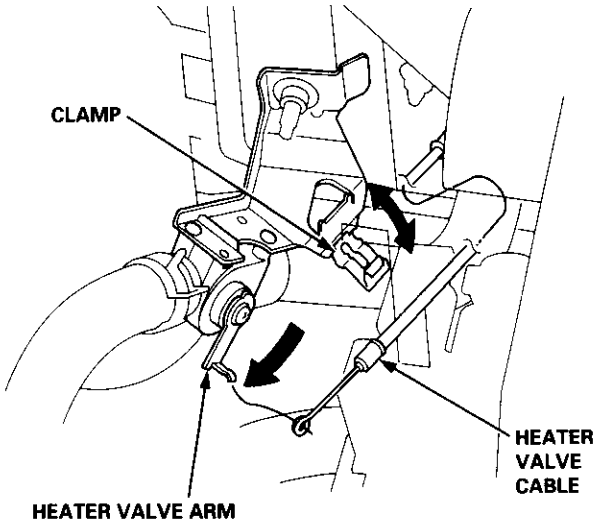

Air Mix Control Motor

Test — '99 – 00 Models

1. Disconnect the 5P connector from the air mix control motor.

2. Connect battery power to the No. 1 terminal of the air mix control motor, and ground the No. 5 terminal; the air mix control motor should run, and stop at MAX HOT. If it doesn't, reverse the connections; the air mix control motor should run, and stop at MAX COOL.

   - If the air mix control motor does not run, remove it, then check the air mix control linkage and doors for smooth movement.
   - If they move smoothly, replace the air mix control motor.

AIR MIX CONTROL MOTOR

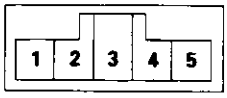

3. Measure the resistance between the No. 2 and No. 3 terminals. It should be approximately 4.8 to 7.2 kΩ.

4. Measure the resistance between the No. 2 and No. 4 terminals. It should be approximately 3.84 to 5.76 kΩ at MAX HOT and approximately 0.96 to 1.44 kΩ at MAX COOL.

Replacement — '99 – 00 Models

1. Disconnect the 5P connector from the air mix control motor. Remove the self-tapping screws, the air mix control motor and the flange collar.

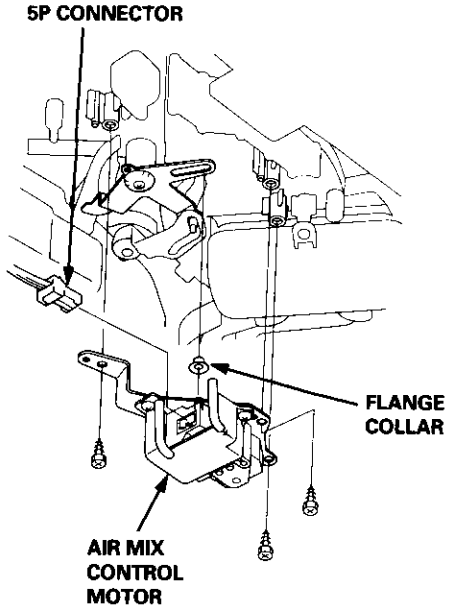

2. Install in the reverse order of removal. After installation, make sure the air mix control motor runs smoothly.

Mode Control Motor

Test

1. Disconnect the 7P connector from the mode control motor.

2. Connect battery power to the No. 1 terminal, and ground the No. 7 terminal.

   CAUTION: Never connect the battery in the opposite direction.

3. Using a jumper wire, connect the No. 7 terminal individually to the No. 2, 3, 4, 5 and 6 terminals in that order. Each time the connection is made, the mode control motor should run smoothly and stop.

   NOTE: If the mode control motor does not run when jumping the first terminal, jump that terminal again after jumping the other terminals. The mode control motor is OK if it runs when jumping the first terminal again.

MODE CONTROL MOTOR

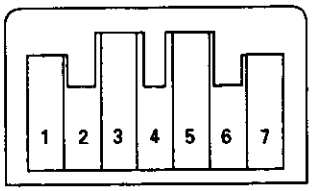

4. If the mode control motor does not run in step 3, remove it, then check the mode control linkage and doors for smooth movement. If they move smoothly, replace the mode control motor.

Replacement

1. Disconnect the 7P connector from the mode control motor.

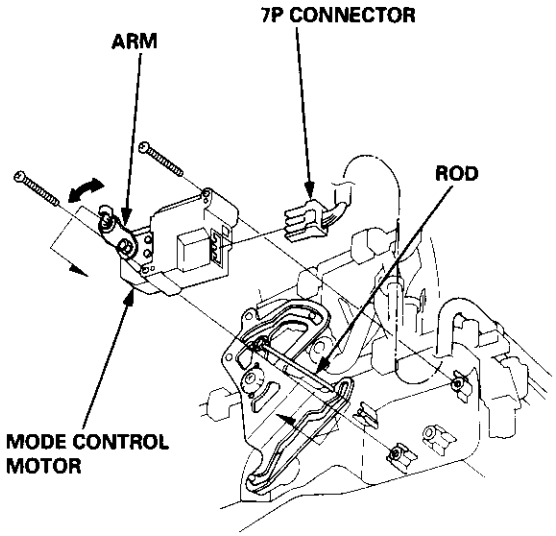

2. Remove the rod from the arm of the mode control motor.

3. Remove the two self-tapping screws and the mode control motor.

4. Install in the reverse order of removal. After installation, make sure the mode control motor runs smoothly.

Recirculation Control Motor

Test

1. Disconnect the 4P connector from the recirculation control motor.

2. Connect battery power to the No. 1 terminal, and ground the No. 2 and No. 4 terminals; the recirculation control motor should run smoothly.

   CAUTION: Never connect the battery in the opposite direction.

3. Disconnect the No. 2 or No. 4 terminals from ground; the recirculation control motor should stop at FRESH or RECIRCULATE.

   NOTE: Don't cycle the recirculation control motor for a long time.

RECIRCULATION CONTROL MOTOR

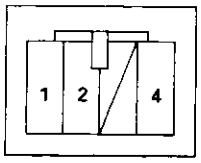

4. If the recirculation control motor does not run in step 2, remove it, then check the recirculation control linkage and door for smooth movement. If they move smoothly, replace the recirculation control motor.

Replacement

1. Disconnect the 4P connector from the recirculation control motor, and remove the wire harness clip from it.

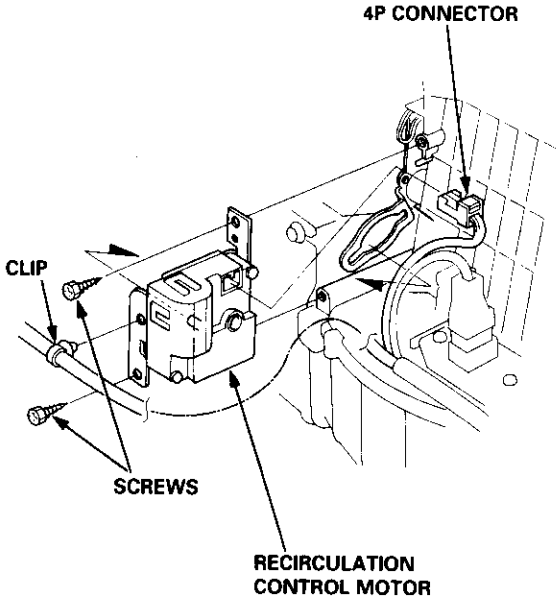

2. Remove the two self-tapping screws and the recirculation control motor.

3. Install in the reverse order of removal. After installation, make sure the recirculation control motor runs smoothly.

Test

There should be continuity between the No. 1 and No. 3 terminals when power and ground are connected to the No. 2 and No. 4 terminals, and there should be no continuity when power is disconnected.

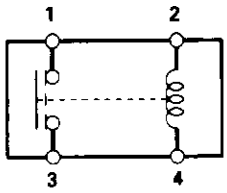

- Blower motor relay

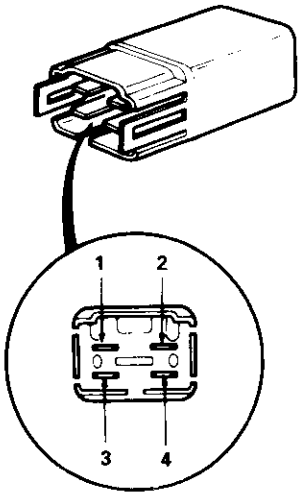

- Blower motor high relay ('99 – 00 models)

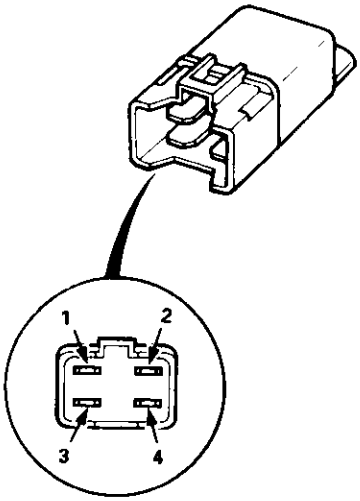

Test — '96 – 98 Models

Check for continuity between the terminals according to the table below.

Position \ Terminal	1	6	4	2	5	3
OFF						
1	○	○	○			
2	○	○		○		
3	○	○			○	
4	○	○				○

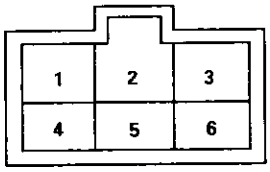

Mode Control Switch

Test — '96 – 98 Models

Check for continuity between the terminals according to the table below.

Position \ Terminal	10	7	1	4	8	9
Heat	○	○				
Heat/Def	○		○			
Def	○			○		
Vent	○				○	
Heat/Vent	○					○

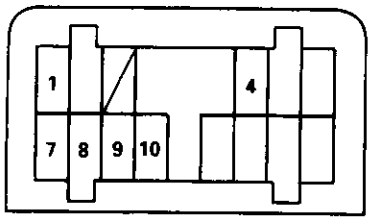

Power Transistor

Test — '99 – 00 Models

1. Disconnect the 3P connector from the power transistor.

2. Carefully release the lock tab on the No. 2 terminal in the 3P connector, then remove the terminal and insulate it from body ground.

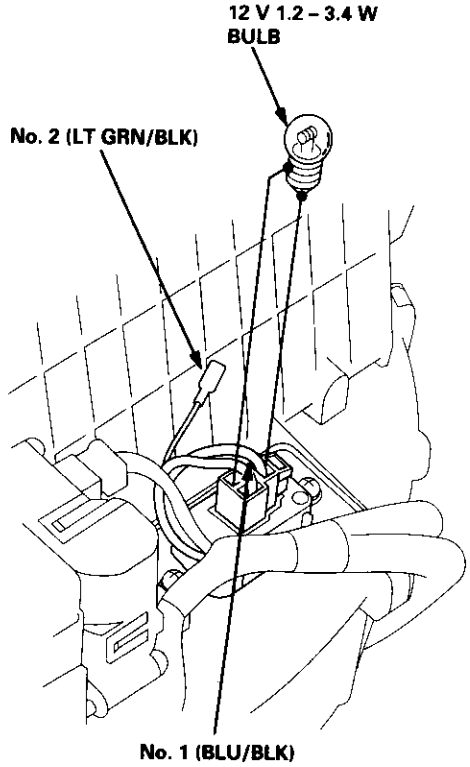

3. Connect a 1.2 – 3.4 W bulb between the No. 1 and the No. 2 cavity on the 3P connector.

4. Reconnect the 3P connector to the power transistor.

5. Turn the ignition switch ON (II), and check that the blower motor runs.

Air Conditioning

Special Tools 22-2
Illustrated Index 22-3
Wiring/Connector Locations 22-4
Description
  Outline 22-5
Circuit Diagram
  '96 – 98 Models 22-6
  '99 Model 22-7
Troubleshooting
  Symptom Chart 22-8
Flowcharts
  Condenser Fan 22-9
  Compressor 22-12
  A/C System 22-17
A/C Thermostat
  Test 22-21
Relays
  Test 22-21
A/C Service Tips and Precautions 22-22
A/C System Torque Specifications 22-23
A/C System Service
  Performance Test 22-24
  Pressure Test Chart 22-26
  Recovery 22-27
Evaporator
  Replacement 22-28
  Overhaul 22-29
Compressor (SANDEN)
  Replacement 22-30
  Illustrated Index 22-32
  Clutch Inspection 22-33
  Clutch Overhaul 22-34
  Thermal Protector Replacement 22-36
  Relief Valve Replacement 22-36
Compressor (DENSO)
  Replacement 22-37
  Illustrated Index 22-39
  Clutch Inspection 22-40
  Clutch Overhaul 22-41
  Relief Valve Replacement 22-42
A/C Compressor Belt
  Adjustment 22-43
Condenser
  Replacement 22-44
A/C System Service
  Evacuation 22-45
  Charging 22-46
  Leak Test 22-46

Special Tools

Ref. No.	Tool Number	Description	Qty	Page Reference
①	*07JGG – 001010A	Belt Tension Gauge	1	22-43
②	07SAZ – 001000A	Backprobe Set	2	22-14, 16
③	07947 – 6340300	Driver Attachment	1	22-34
④	07965 – 6920500	Hub Assembly Guide Attachment	1	22-35

* Included in the Belt Tension Gauge Set, 07TGG-001000A.

①

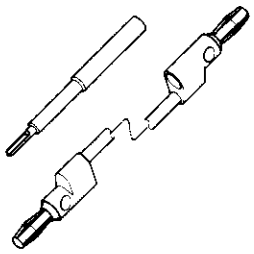

②

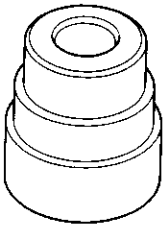

③

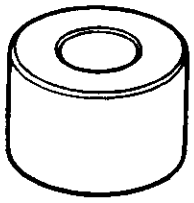

④

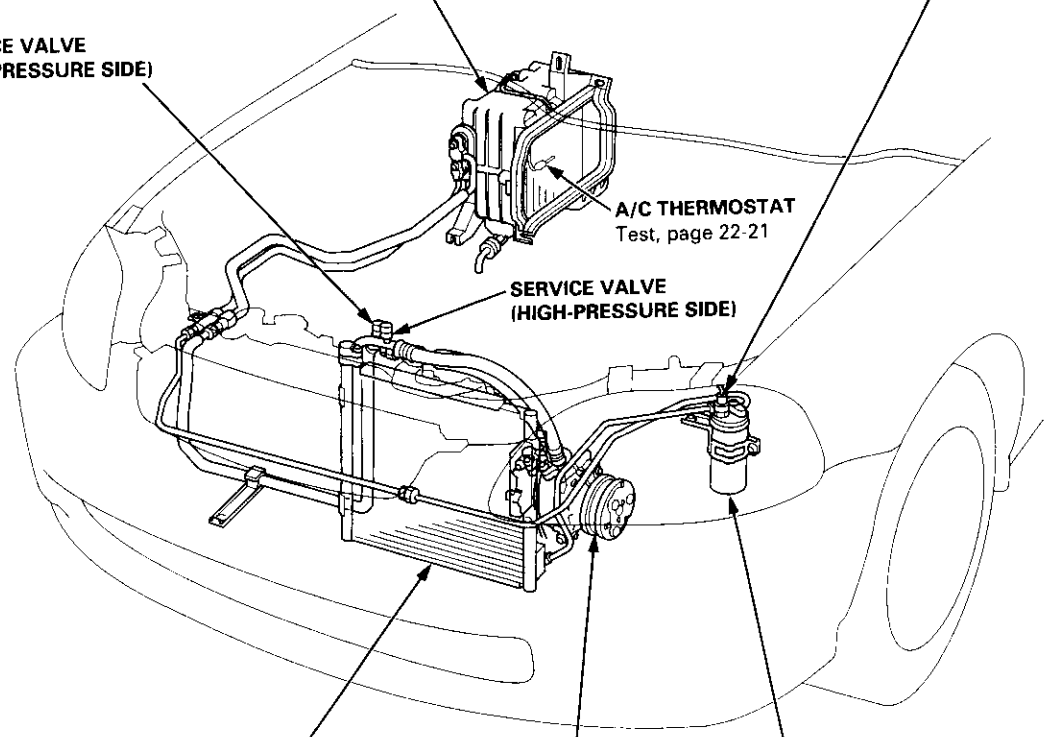

A/C PRESSURE SWITCH
When the refrigerant pressure is below 200 kPa (2.0 kgf/cm², 28 psi) due to refrigerant leakage or above 3200 kPa (32 kgf/cm², 455 psi) due to refrigerant blockage, the A/C pressure switch opens the circuit to the A/C switch and stops the air conditioning to protect the compressor.

EVAPORATOR
Replacement, page 22-28
Overhaul, page 22-29

SERVICE VALVE (LOW-PRESSURE SIDE)

A/C THERMOSTAT
Test, page 22-21

SERVICE VALVE (HIGH-PRESSURE SIDE)

CONDENSER
Replacement, page 22-44

RECEIVER/DRYER

COMPRESSOR
SANDEN:
Replacement, page 22-30
Clutch Inspection, page 22-33
Thermal Protector Inspection, page 22-33
Clutch Overhaul, page 22-34
Thermal Protector Replacement, page 22-36
Relief Valve Replacement, page 22-36
DENSO:
Replacement, page 22-37
Clutch Inspection, page 22-40
Clutch Overhaul, page 22-41
Relief Valve Replacement, page 22-42

Wiring/Connector Locations

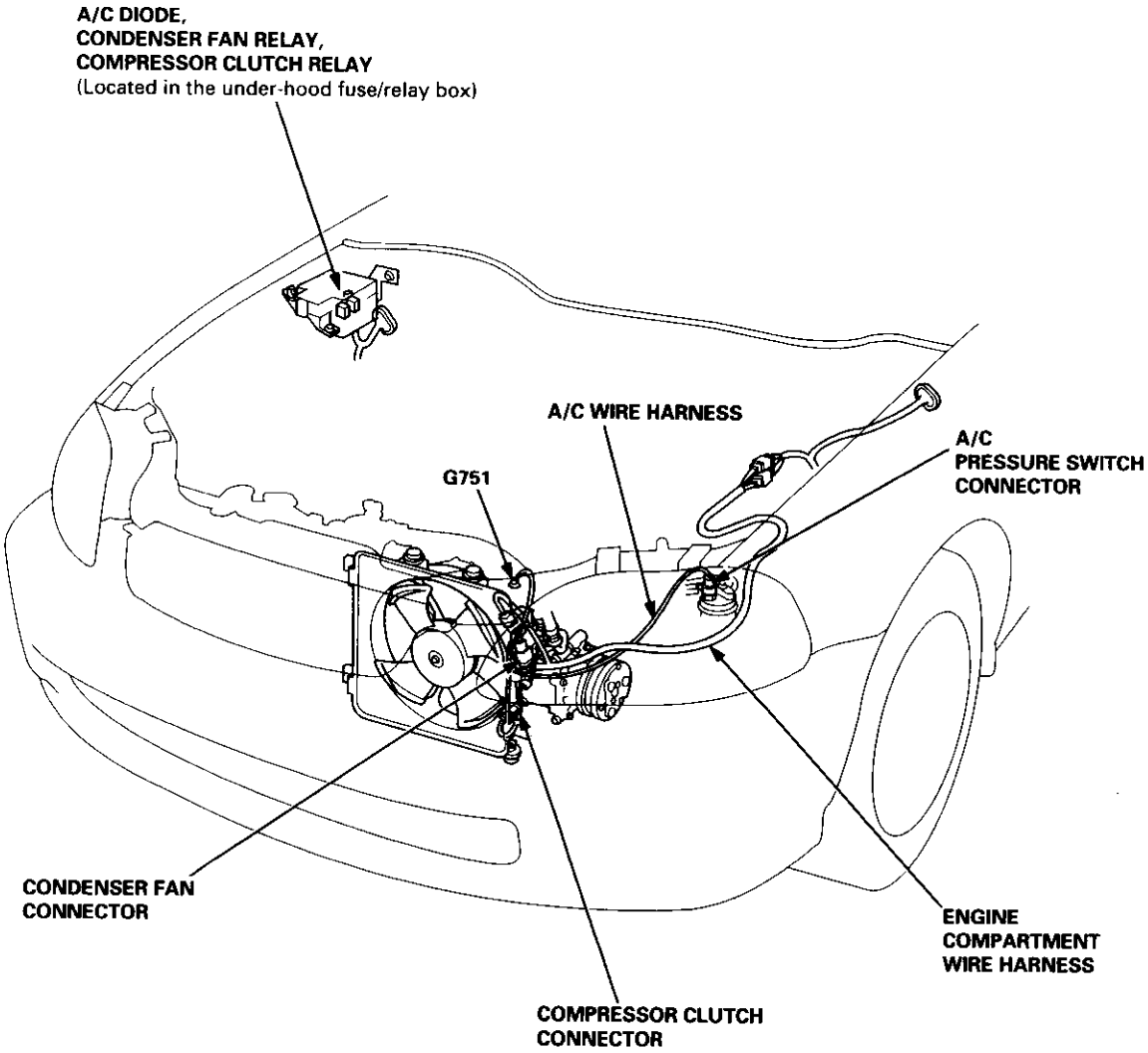

Description

Outline

The air conditioner system removes heat from the passenger compartment by circulating refrigerant through the system as shown below.

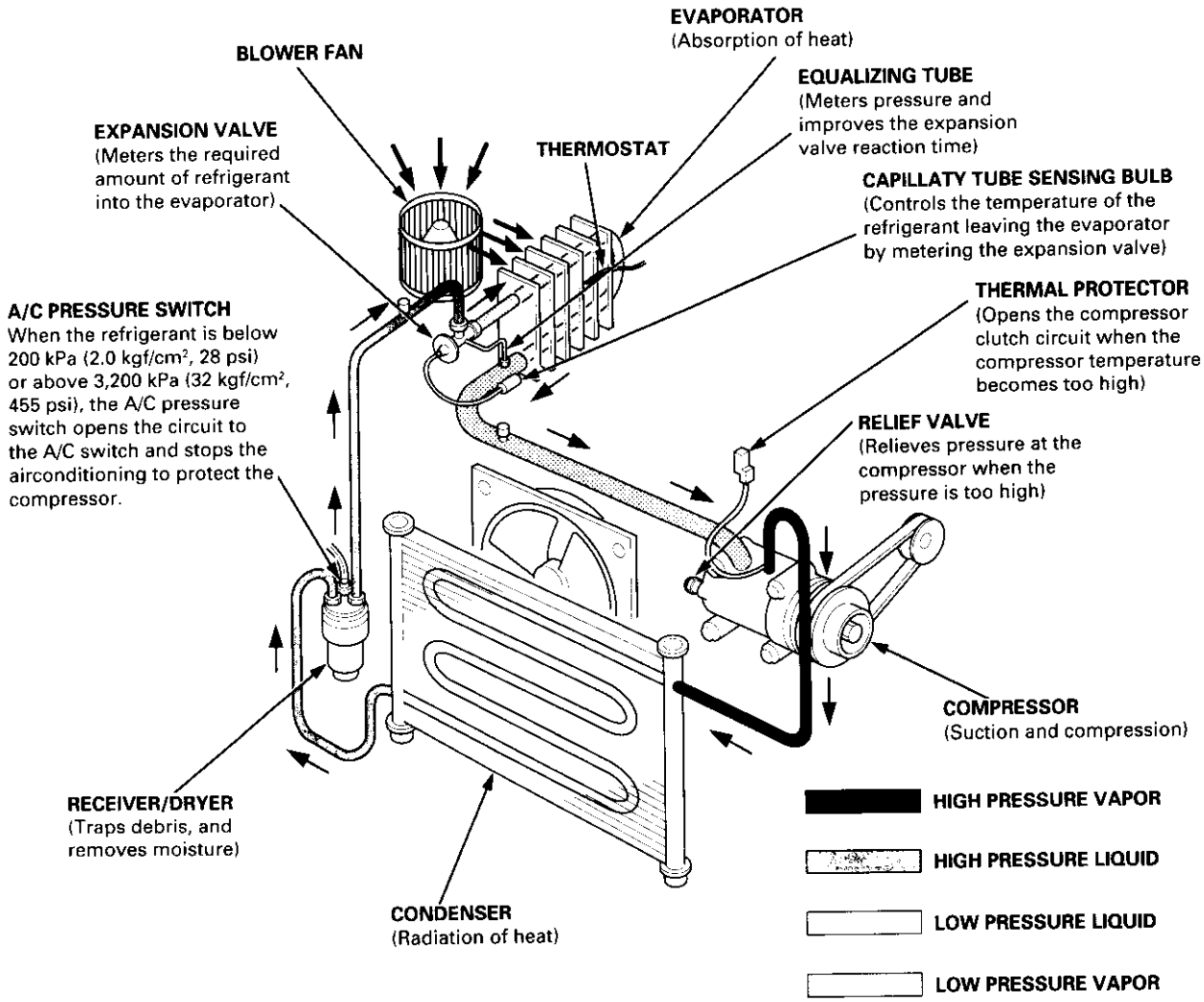

This car uses HFC-134a (R-134a) refrigerant which does not contain chlorofluorocarbons. Pay attention to the following service items:

- Do not mix refrigerants CFC-12 (R-12) and HFC-134a (R-134a). They are not compatible.
- Use only the recommended polyalkyleneglycol (PAG) refrigerant oil designed for the R-134a compressor (SANDEN: SP-10; DENSO: ND-OIL8). Intermixing the recommended (PAG) refrigerant oil with any other refrigerant oil will result in compressor failure.
- All A/C system parts (compressor, discharge line, suction line, evaporator, condenser, receiver/dryer, expansion valve, O-rings for joints) have to be proper for refrigerant R-134a. Do not confuse with R-12 parts.
- Use a halogen gas leak detector designed for refrigerant R-134a.
- R-12 and R-134a refrigerant servicing equipment are not interchangeable. Use only a recovery/recycling/charging station that is U.L.-listed and is certified to meet the requirements of SAE J2210 to service R-134a air conditioning systems.
- Always recover the refrigerant R-134a with an approved recovery/recycling/charging station before disconnecting any A/C fitting.

Circuit Diagram

'96 – 98 Models

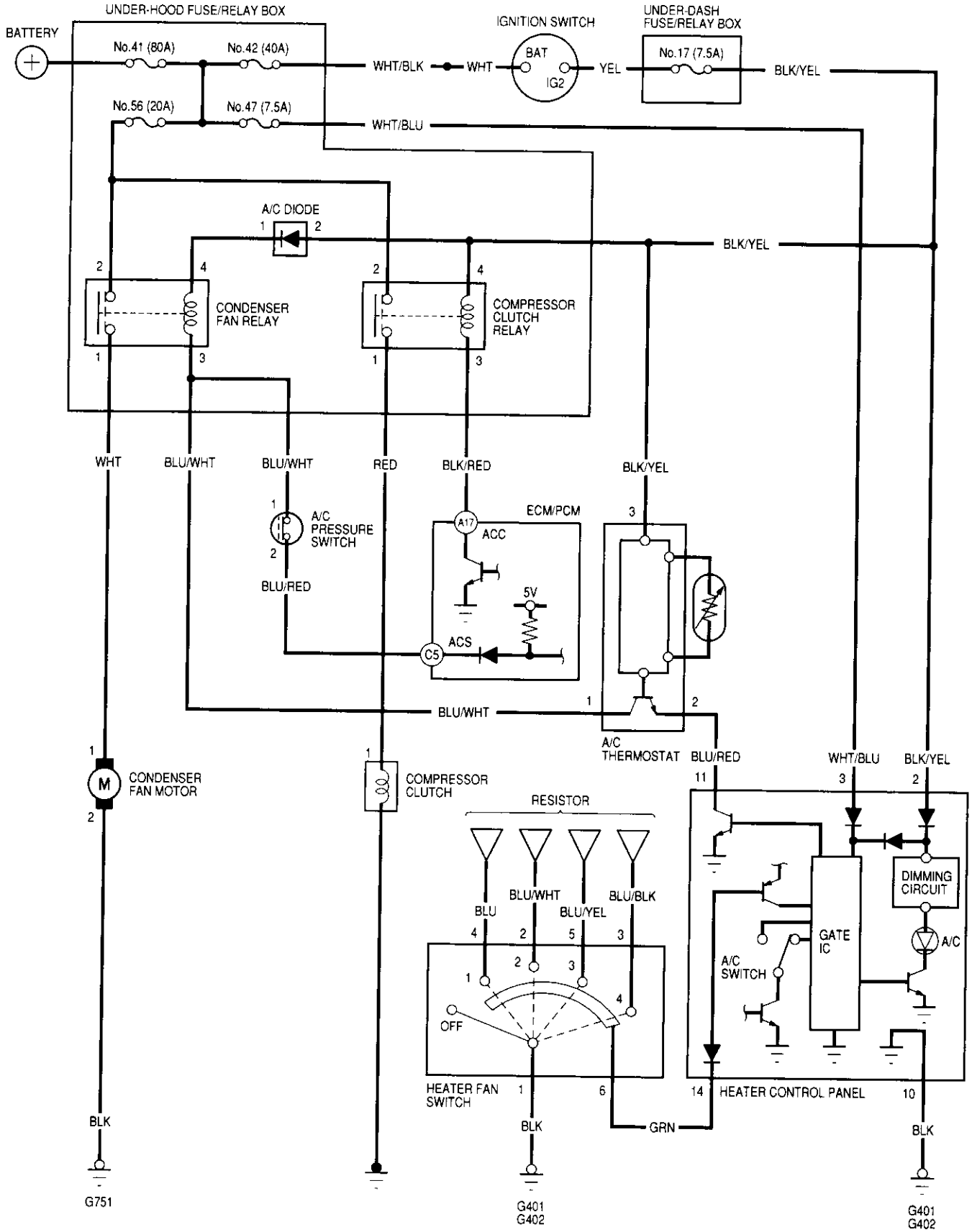

'99 – 00 Models

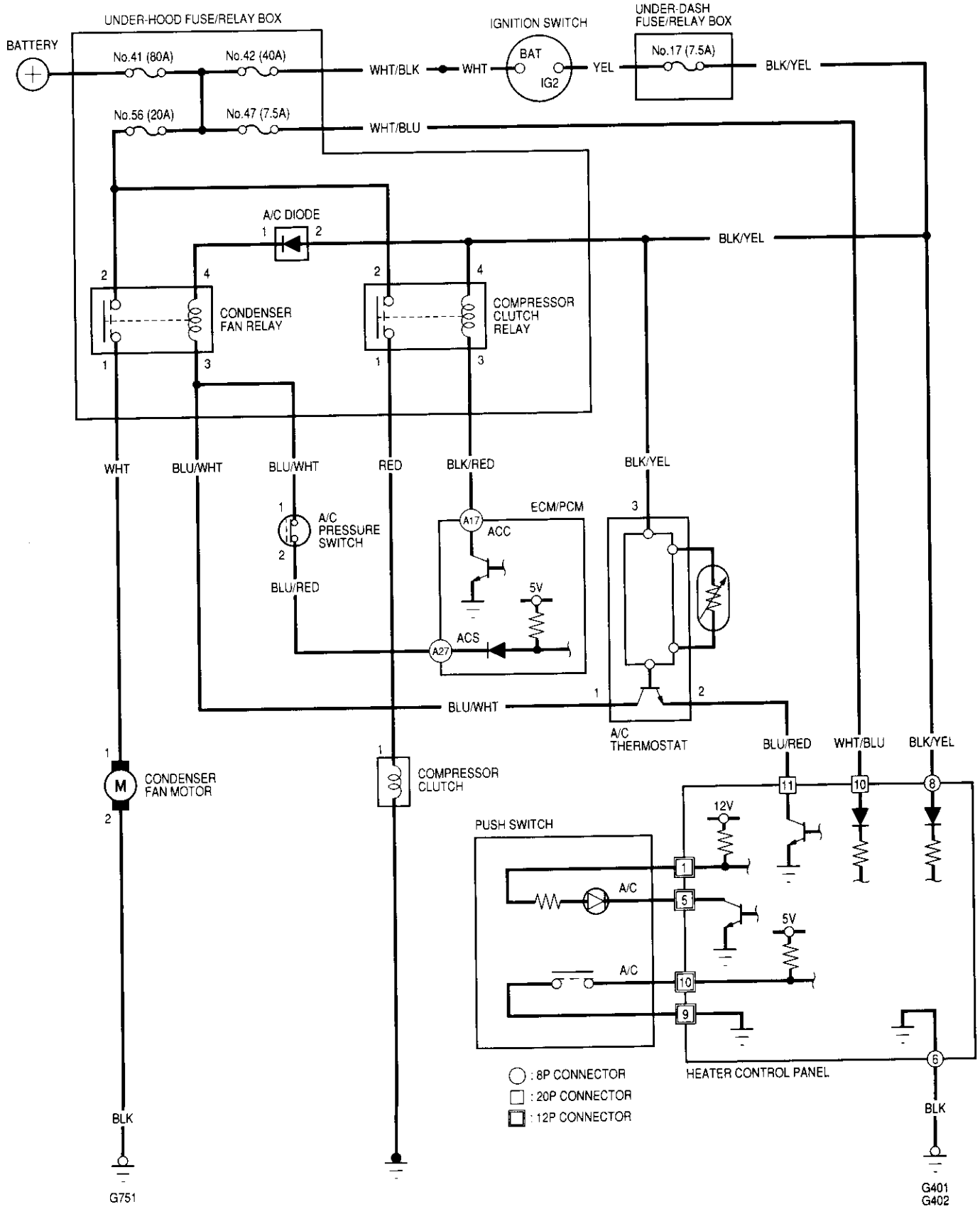
UNDER-HOOD FUSE/RELAY BOX
BATTERY
No.41 (80A)
No.42 (40A)
No.56 (20A)
No.47 (7.5A)
WHT/BLK
WHT
IGNITION SWITCH
BAT
IG2
YEL
UNDER-DASH FUSE/RELAY BOX
No.17 (7.5A)
BLK/YEL
WHT/BLU
A/C DIODE
BLK/YEL
CONDENSER FAN RELAY
COMPRESSOR CLUTCH RELAY
WHT
BLU/WHT
BLU/WHT
RED
BLK/RED
BLK/YEL
A/C PRESSURE SWITCH
BLU/RED
ECM/PCM
A17
ACC
5V
ACS
A27
BLU/WHT
A/C THERMOSTAT
BLU/RED
WHT/BLU
BLK/YEL
CONDENSER FAN MOTOR
COMPRESSOR CLUTCH
PUSH SWITCH
12V
A/C
5V
A/C
HEATER CONTROL PANEL
: 8P CONNECTOR
: 20P CONNECTOR
: 12P CONNECTOR
BLK
BLK
G751
G401
G402

Symptom Chart

NOTE:
- Any abnormality must be corrected before continuing the test.
- Because of the precise measurements needed, use a multimeter when testing.
- Before performing any troubleshooting procedures check:
  - — Fuses No. 47 (7.5 A), No. 56 (20 A) in the under-hood fuse/relay box, and No. 17 (7.5 A) in the under-dash fuse/relay box
  - — Grounds No. G401, G402, G751
  - — Cleanliness and tightness of all connectors

Symptom	Remedy
Condenser fan does not run at all.	Perform the procedures in the flowchart (see page 22-9).
Compressor clutch does not engage.	Perform the procedures in the flowchart (see page 22-12).
A/C system does not come on (compressor and fan).	Perform the procedures in the flowchart (see page 22-17).
Both heater and A/C do not work.	• '96 – 98 models-Perform the procedures in the flowchart (see page 21-18). • '99 – 00 models-Perform the procedures in the flowchart (see page 21-35).

Condenser Fan

Condenser fan does not run at all.

Check the No. 56 (20 A) fuse in the under-hood fuse/relay box, and the No. 17 (7.5 A) fuse in the under-dash fuse/relay box.

Are the fuses OK?

NO → **Replace the fuse(s), and recheck.**

YES

Remove the condenser fan relay, and test it (see page 22-21).

Is the relay OK?

NO → **Replace the condenser fan relay.**

YES

Check the under-hood fuse/relay box:
Measure the voltage between the No. 2 terminal of the condenser fan relay 4P socket and body ground.

Is there battery voltage?

NO → **Replace the under-hood fuse/relay box.**

YES

Check the condenser fan power supply circuit:
Connect the No. 1 and No. 2 terminals of the condenser fan relay 4P socket with a jumper wire.

Does the condenser fan run?

NO → To page 22-10

YES

To page 22-11

CONDENSER FAN RELAY 4P SOCKET

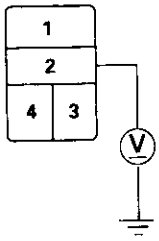

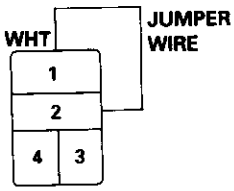

(cont'd)

Condenser Fan (cont'd)

From page 22-9

Check for an open in the wire:
1. Disconnect the jumper wire.
2. Disconnect the condenser fan 2P connector.
3. Check for continuity between the No. 1 terminal of the condenser fan relay 4P socket and the No. 1 terminal of the condenser fan 2P connector.

Is there continuity?

NO → **Repair open in the wire between the condenser fan relay and the condenser fan.**

YES ↓

Check for an open in the wire:
Check for continuity between the No. 2 terminal of the condenser fan 2P connector and body ground.

Is there continuity?

NO → **Check for an open in the wire between the condenser fan and body ground. If the wire is OK, check for poor ground at G751.**

YES ↓

Replace the condenser fan motor.

CONDENSER FAN RELAY 4P SOCKET

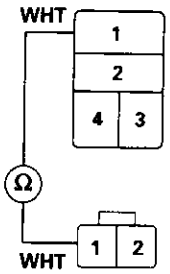

CONDENSER FAN 2P CONNECTOR
Wire side of female terminals

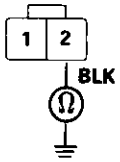

From page 22-9

Check the diode:
1. Disconnect the jumper wire.
2. Remove the A/C diode from the under-hood fuse/relay box.
3. Check for current flow in both directions between the A and B terminals.

Is there current flow in only one direction?

NO → **Replace the diode.**

YES

Check for an open in the wire:
1. Turn the ignition switch ON (II).
2. Measure the voltage between the No. 2 terminal of the A/C diode 2P socket and body ground.

Is there battery voltage?

NO → **Repair open in the wire between the No. 17 fuse and the A/C diode.**

YES

Replace the under-hood fuse/relay box.

A/C DIODE

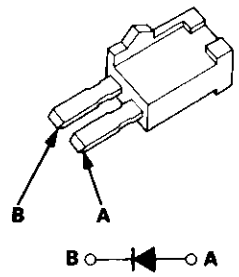

A/C DIODE 2P SOCKET

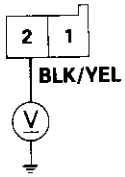

Compressor

Compressor clutch does not engage.

Check the No. 56 (20 A) fuse in the under-hood fuse/relay box, and the No. 17 (7.5 A) fuse in the under-dash fuse/relay box.

Are the fuses OK?

NO → **Replace the fuse(s), and recheck.**

YES

Remove the compressor clutch relay, and test it (see page 22-21).

Is the relay OK?

NO → **Replace the compressor clutch relay.**

YES

Check the under-hood fuse/relay box:
Measure the voltage between the No. 2 terminal of the compressor clutch relay 4P socket and body ground.

Is there battery voltage?

NO → **Replace the under-hood fuse/relay box.**

YES

Check the compressor clutch power supply circuit:
Connect the No. 1 and No. 2 terminals of the compressor clutch relay 4P socket with a jumper wire.

Does the compressor clutch click?

NO → To page 22-13

YES

To page 22-14

COMPRESSOR CLUTCH RELAY 4P SOCKET

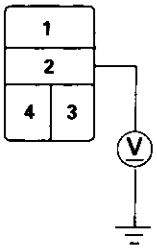

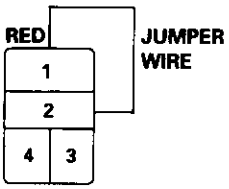

From page 22-12

Check for an open in the wire:
1. Disconnect the jumper wire.
2. Disconnect the compressor clutch 1P connector.
3. Check for continuity between the No. 1 terminal of the compressor clutch relay 4P socket and the terminal of the compressor clutch 1P connector.

COMPRESSOR CLUTCH RELAY 4P SOCKET

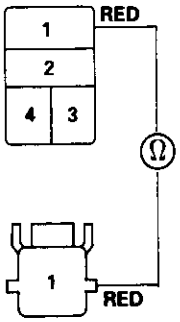

COMPRESSOR CLUTCH 1P CONNECTOR
Wire side of female terminals

Is there continuity?

NO → **Repair open in the wire between the compressor clutch relay and the compressor clutch.**

YES → **Inspect the compressor clutch clearance, the thermal protector (SANDEN), and the compressor clutch field coil (SANDEN: See page 22-33; DENSO: See page 22-40).**

(cont'd)

Compressor (cont'd)

From page 22-12

Check for an open in the wire:
1. Disconnect the jumper wire.
2. Turn the ignition switch ON (II).
3. Measure the voltage between the No. 4 terminal of the compressor clutch relay 4P socket and body ground.

Is there battery voltage?

NO → **Repair open in the wire between the No. 17 fuse and the compressor clutch relay.**

YES

COMPRESSOR CLUTCH RELAY 4P SOCKET

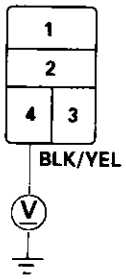

Check for an open in the wire:
1. Turn the ignition switch OFF, then reinstall the compressor clutch relay.
2. Make sure the A/C switch is OFF, then turn the ignition switch ON (II).
3. Using a *Backprobe Set (T/N 07SAZ – 001000A), measure the voltage between the No. 17 terminal of the ECM/PCM connector A (32P) and body ground with the ECM/PCM connectors connected.

ECM/PCM CONNECTOR A (32P)

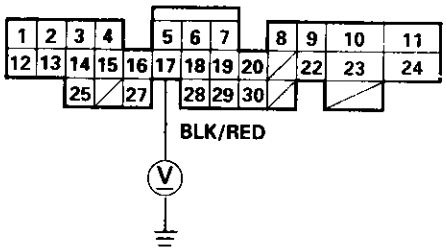

Wire side of female terminals

Is there battery voltage?

NO → **Repair open in the wire between the compressor clutch relay and the ECM/PCM.**

YES

To page 22-15

*How to use the backprobe sets
Connect the backprobe adapters to the stacking patch cords, and connect the cords to a multimeter. Using the wire insulation as a guide for the contoured tip of the backprobe adapter, gently slide the tip into the connector from the wire side until it comes in contact with the terminal end of the wire (see section 11).

From page 22-14

Check for an open in the wire:
1. Turn the ignition switch OFF.
2. Disconnect the A/C pressure switch 2P connector.
3. Turn th ignition switch ON (II).
4. Measure the voltage between the No. 1 terminal of the A/C pressure switch 2P connector and body ground.

Is there battery voltage?

NO → **Repair open in the wire between the condenser fan relay and the A/C pressure switch.**

YES

Check the A/C pressure switch:
1. Turn the ignition switch OFF.
2. Check for continuity between the No. 1 and No. 2 terminals of the A/C pressure switch.

Is there continuity?

YES → To page 22-16

NO

Check for A/C system pressure.

Is the pressure within specifications?

NO → **Repair the A/C pressure problem.**

YES

Replace the A/C pressure switch.

A/C PRESSURE SWITCH 2P CONNECTOR

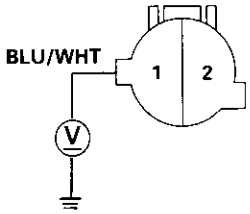

Wire side of female terminals

A/C PRESSURE SWITCH

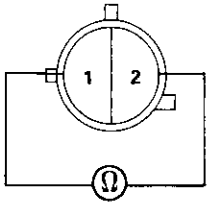

(cont'd)

Compressor (cont'd)

From page 22-15

Check for an open in the wire:
1. Reconnect the A/C pressure switch 2P connector.
2. Make sure the A/C switch is OFF, then turn the ignition switch ON (II).
3. Using a *Backprobe Set (T/N 07SAZ - 001000A), measure the voltage between the No. 5 terminal of the ECM/PCM connector C (31P) and body ground with the ECM/PCM connectors connected ('96 - 98 models), or between the No. 27 terminal of the ECM/PCM connector A (32P) and body ground with the ECM/PCM connectors connected ('99 - 00 models).

'96 - 98 models:

ECM/PCM CONNECTOR C (31P)

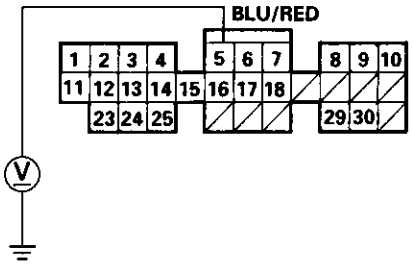

Wire side of female terminals

'99 - 00 models:

ECM/PCM CONNECTOR A (32P)

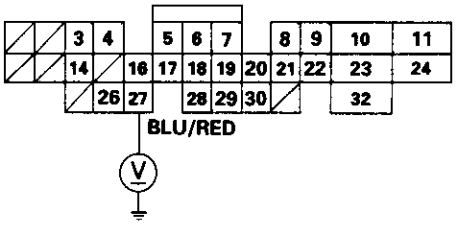

Wire side of female terminals

Is there battery voltage?

NO → **Repair open in the wire between the A/C pressure switch and the ECM/PCM.**

YES →

Check for loose wires or poor connections at the ECM/PCM connectors A (32P) and at the A/C pressure switch 2P connector. If the connections are good, substitute a known-good ECM/PCM, and recheck. If the symptom/indication goes away, replace the original ECM/PCM.

*How to use the backprobe sets
Connect the backprobe adapters to the stacking patch cords, and connect the cords to a multimeter. Using the wire insulation as a guide for the contoured tip of the backprobe adapter, gently slide the tip into the connector from the wire side until it comes in contact with the terminal end of the wire (see section 11).

A/C system does not come on (compressor and fan).

Check the No. 56 fuse in the under-hood fuse/relay box and the No. 17 fuse in the under-dash fuse/relay box.

Are the fuses OK?

NO → **Replace the fuse(s), and recheck.**

YES

Check for an open in the wire:
1. Remove the condenser fan relay from the under-hood fuse/relay box.
2. Turn the ignition switch ON (II).
3. Measure the voltage between the No. 4 terminal of the condenser fan relay 4P socket and body ground.

Is there battery voltage?

NO → **Repair open in the wire between the No. 17 fuse and the condenser fan relay.**

YES

Check the under-hood fuse/relay box:
Measure the voltage between the No. 2 terminal of the condenser fan relay 4P socket and body ground.

Is there battery voltage?

NO → **Replace the under-hood fuse/relay box.**

YES

To page 22-18

CONDENSER FAN RELAY 4P SOCKET

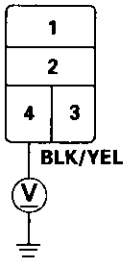

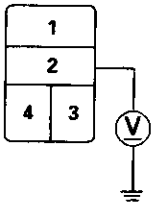

(cont'd)

A/C System (cont'd)

From page 22-17

Check for an open in the wire:
1. Turn the ignition switch OFF.
2. Disconnect the A/C thermostat 3P connector.
3. Turn the ignition switch ON (II).
4. Measure the voltage between the No. 3 terminal of the A/C thermostat 3P connector and body ground.

Is there battery voltage?

NO → **Repair open in the wire between the No. 17 fuse and the A/C thermostat.**

YES

Check for an open in the wire:
Measure the voltage between the No. 1 terminal of the A/C thermostat 3P connector and body ground.

Is there battery voltage?

NO → **Repair open in the wire between the condenser fan relay and the A/C thermostat.**

YES

Check the A/C thermostat:
1. Turn the ignition switch OFF.
2. Reconnect the A/C thermostat 3P connector.
3. Connect the No. 2 terminal to ground with a jumper wire.
4. Start the engine.

Do the fan run and the compressor clutch engage?

NO → **Replace the A/C thermostat.**

YES → To page 22-19 ('96 – 98 models)

To page 22-20 ('99 – 00 models)

A/C THERMOSTAT 3P CONNECTOR

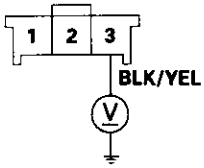

Wire side of female terminals

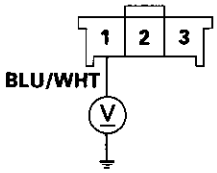

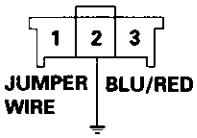

('96 – 98 models)

From page 22-18

Check for an open in the wire:
1. Turn the ignition switch OFF, then disconnect the jumper wire.
2. Remove the center dashboard lower cover (see section 20), and disconnect the heater control panel 14P connector.
3. Turn the ignition switch ON (II).
4. Measure the voltage between the No. 11 terminal and body ground.

HEATER CONTROL PANEL 14P CONNECTOR

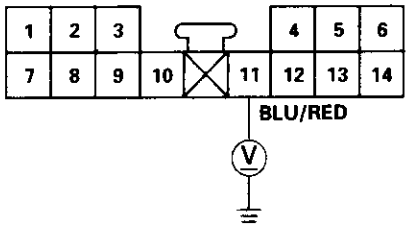

Wire side of female terminals

Is there battery voltage?

NO → **Repair open in the wire between the A/C thermostat and the heater control panel.**

YES

Check for an open in the wire:
1. Turn the ignition switch OFF.
2. Disconnect the heater fan switch 6P connector.
3. Check for continuity between the No. 14 terminal of the heater control panel 14P connector and the No. 6 terminal of the heater fan switch 6P connector.

HEATER CONTROL PANEL 14P CONNECTOR

Wire side of female terminals

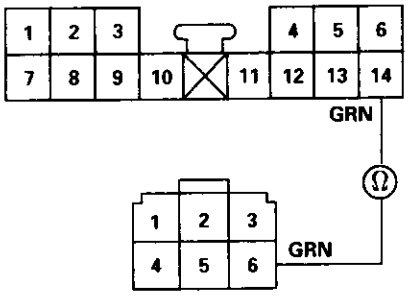

Is there continuity?

NO → **Repair open in the wire between the heater control panel and the heater fan switch.**

YES

Check for an open in the wire:
Check for continuity between the No. 1 terminal of the heater fan switch 6P connector and body ground.

HEATER FAN SWITCH 6P CONNECTOR

Wire side of female terminals

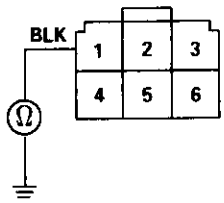

Is there continuity?

NO → **Check for an open in the wire between the heater fan switch and body ground. If the wire is OK, check for poor ground at G401 and G402.**

YES

Test the heater fan switch (see page 21-49).

Is the heater fan switch OK?

NO → **Replace the heater fan switch.**

YES

Check for loose wires or poor connections at the heater control panel 14P connector and heater fan switch 6P connector and at the A/C thermostat 3P connector. If the connections are good, replace the heater control panel.

(cont'd)

A/C System (cont'd)

('99 – 00 models)

From page 22-18

Check for an open in the wire:
1. Turn the ignition switch OFF, then disconnect the jumper wire.
2. Disconnect the heater control panel 20P connector.
3. Turn the ignition switch ON (II).
4. Measure the voltage between the No. 11 terminal of the heater control panel 20P connector and body ground.

Is there battery voltage?

NO → **Repair open in the wire between the A/C thermostat and the heater control panel.**

YES

Check the push switch:
1. Turn the ignition switch OFF.
2. Disconnect the push switch 12P connector.
3. Check for continuity between the No. 9 and No. 10 terminals of the push switch 12P connector with the A/C switch ON.

Is there continuity?

NO → **Replace the push switch.**

YES

Check for loose wires or poor connections at the heater control panel 20P connector and push switch 12P connector and at the A/C thermostat 3P connector. If the connections are good, substitute a known-good heater control panel, and recheck. If the symptom/indication goes away, replace the original heater control panel.

HEATER CONTROL PANEL 20P CONNECTOR

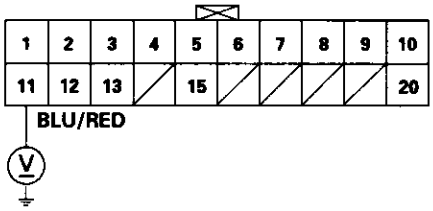

Wire side of female terminals

PUSH SWITCH 12P CONNECTOR

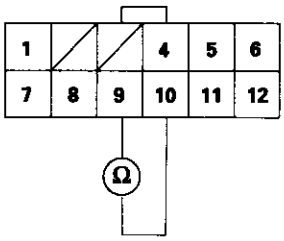

Wire side of female terminals

Test

1. Remove the A/C thermostat (see page 22-29).

2. Connect battery power to the No. 3 terminal, ground the No. 2 terminal, and connect a test light between the No. 1 and No. 3 terminals.

   NOTE: Use a 12 V, 3 W – 18 W test light.

3. Dip the A/C thermostat into a cup filled with ice water, and check the test light.

Serpentine-type evaporator
The light should go off at 36 – 39°F (2 – 4°C) or less, and should come on at 39 – 41°F (4 – 5°C) or more.

Laminate-type evaporator
The light should go off at 39 – 43°F (4 – 6°C) or less, and should come on at 43 – 45°F (6 – 7°C) or more.

If the light doesn't come on and go off as specified, replace the A/C thermostat.

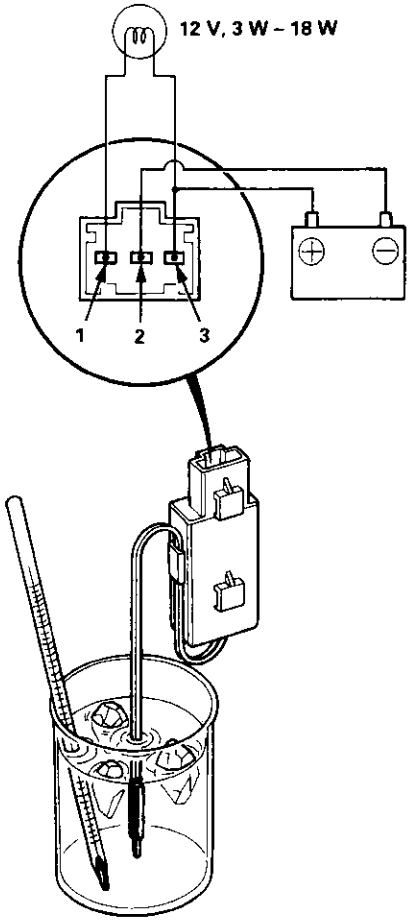

Test

There should be continuity between the No. 1 and No. 2 terminals when power and ground are connected to the No. 3 and No. 4 terminals, and there should be no continuity when power is disconnected.

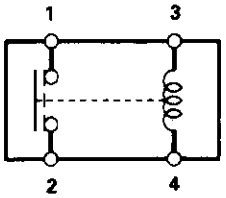

- Condenser fan relay
- Compressor clutch relay

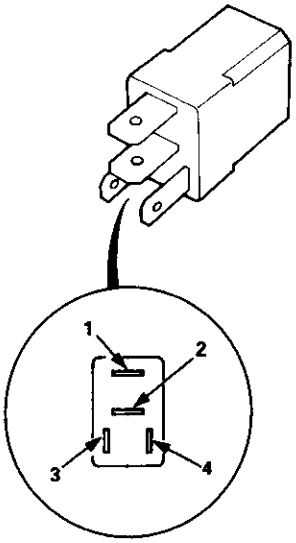

A/C Service Tips and Precautions

The air conditioner system uses HFC-134a (R-134a) refrigerant and polyalkyleneglycol (PAG) refrigerant oil*, which are not compatible with CFC-12 (R-12) refrigerant and mineral oil. Do not use R-12 refrigerant or mineral oil in this system, and do not attempt to use R-12 servicing equipment; damage to the air conditioner system or your servicing equipment will result.

*Sanden SP-10:

- P/N 38897 – P13 – A01AH: 120 mℓ (4 fl·oz, 4.2 Imp·oz)
- P/N 38899 – P13 – A01: 40 mℓ (1 1/3 fl·oz, 1.4 Imp·oz)

*DENSO ND-OIL 8:

- P/N 38897 – PR7 – A01AH: 120 mℓ (4 fl·oz)
- P/N 38899 – PR7 – A01: 40 mℓ (1 1/3 fl·oz)

Use only service equipment that is U.L.-listed and is certified to meet the requirements of SAE J2210 to remove R-134a from the air conditioner system.

CAUTION: Exposure to air conditioner refrigerant and lubricant vapor or mist can irritate eyes, nose and throat. Avoid breathing the air conditioner refrigerant and lubricant vapor or mist.

If accidental system discharge occurs, ventilate work area before resuming service.

R-134a service equipment or vehicle air conditioner systems should not be pressure tested or leak tested with compressed air.

⚠WARNING Some mixtures of air and R-134a have been shown to be combustible at elevated pressures and can result in fire or explosion causing injury or property damage. Never use compressed air to pressure test R-134a service equipment or vehicle air conditioner systems.

Additional health and safety information may be obtained from the refrigerant and lubricant manufacturers.

1. Always disconnect the negative cable from the battery whenever replacing air conditioning parts.
2. Keep moisture and dust out of the system. When disconnecting any lines, plug or cap the fittings immediately; don't remove the caps or plugs until just before you reconnect each line.
3. Before connecting any hose or line, apply a few drops of refrigerant oil to the O-ring.
4. When tightening or loosening a fitting, use a second wrench to support the matching fitting.
5. When discharging the system, use a R-134a refrigerant recovery/recycling/charging station; don't release refrigerant into the atmosphere.
6. Add refrigerant oil after replacing the following parts:
   NOTE:
   - To avoid contamination, do not return the oil to the container once dispensed, and never mix it with other refrigerant oils.
   - Immediately after using the oil, replace the cap on the container, and seal it to avoid moisture absorption.
   - Do not spill the refrigerant oil on the vehicle; it may damage the paint; if the refrigerant oil contacts the paint, wash it off immediately.

   Condenser ..... **20 mℓ (2/3 fl·oz, 0.7 Imp·oz)**
   Evaporator ..... **45 mℓ (1 2/3 fl·oz, 1.6 Imp·oz)**
   Line or hose ..... **10 mℓ (1/3 fl·oz, 0.4 Imp·oz)**
   Receiver/Dryer ..... **10 mℓ (1/3 fl·oz, 0.4 Imp·oz)**
   Leakage repair ..... **25 mℓ (5/6 fl·oz, 0.9 Imp·oz)**
   Compressor ..... **For compressor replacement, subtract the volume of oil drained from the removed compressor from A, and drain the calculated volume of oil from the new compressor: A — Volume of removed compressor = Volume to drain from new compressor.**
   A: SANDEN 130 mℓ (4 1/3 fl·oz, 4.6 Imp·oz); DENSO 140 mℓ (4 2/3 fl·oz, 4.9 Imp·oz),
   NOTE: Even if no oil is drained from the removed compressor, don't drain more than 50 mℓ (1 2/3 fl·oz, 1.8 Imp·oz) from the new compressor.

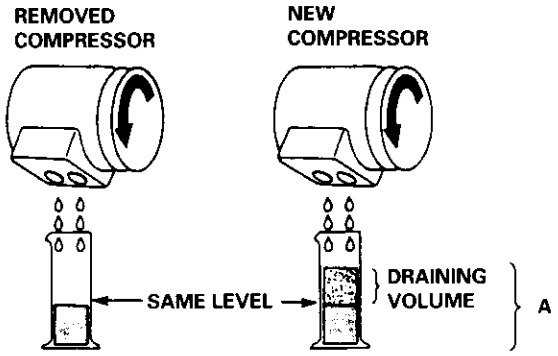

A/C System Torque Specifications

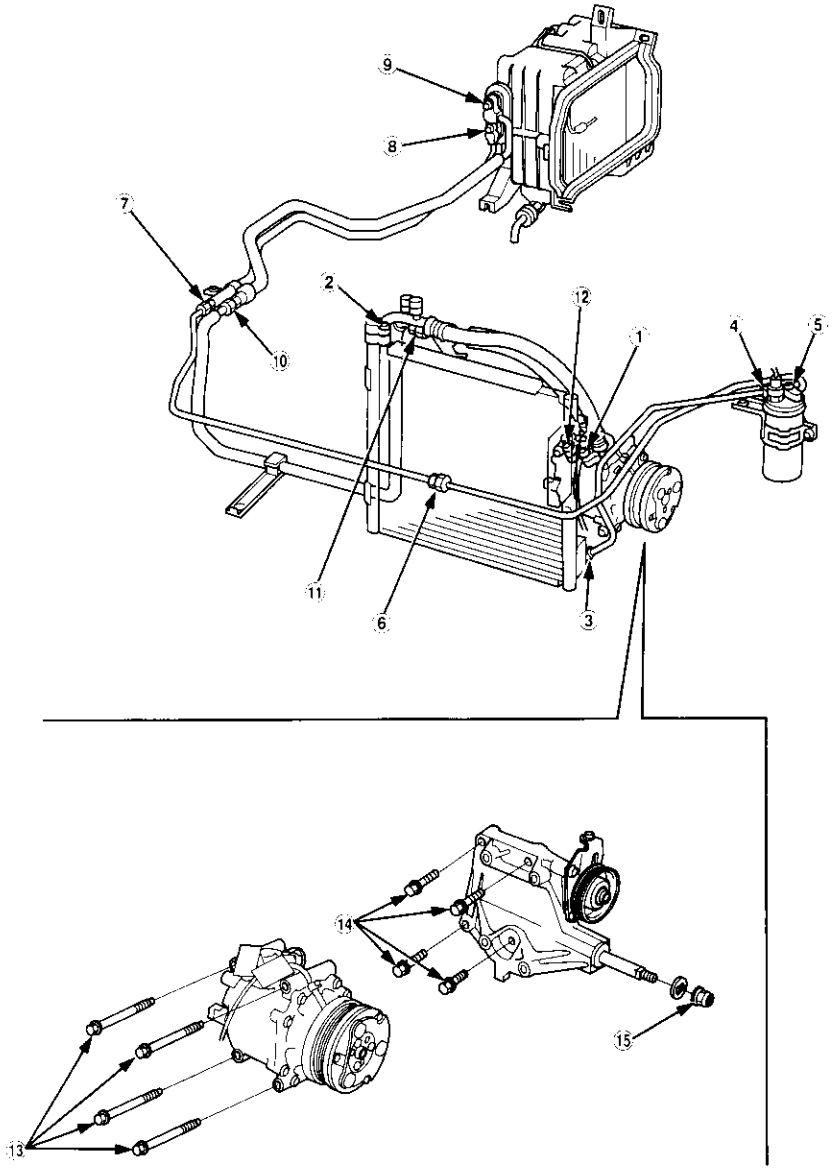

① Discharge hose to the compressor (6 x 1.0 mm) ..... 9.8 N·m (1.0 kgf·m, 7.2 lbf·ft)
② Discharge hose to the condenser (6 x 1.0 mm) ..... 9.8 N·m (1.0 kgf·m, 7.2 lbf·ft)
③ Condenser pipe to the condenser (6 x 1.0 mm) ..... 9.8 N·m (1.0 kgf·m, 7.2 lbf·ft)
④ Condenser pipe to the receiver/dryer (6 x 1.0 mm) ..... 9.8 N·m (1.0 kgf·m, 7.2 lbf·ft)
⑤ Receiver pipe A to the receiver/dryer (6 x 1.0 mm) ..... 9.8 N·m (1.0 kgf·m, 7.2 lbf·ft)
⑥ Receiver pipe B to the receiver pipe A ..... 13 N·m (1.3 kgf·m, 9.4 lbf·ft)
⑦ Receiver pipe C to the receiver pipe B ..... 13 N·m (1.3 kgf·m, 9.4 lbf·ft)
⑧ Receiver pipe C to the evaporator (6 x 1.0 mm) ..... 9.8 N·m (1.0 kgf·m, 7.2 lbf·ft)
⑨ Suction pipe B to the evaporator (6 x 1.0 mm) ..... 9.8 N·m (1.0 kgf·m, 7.2 lbf·ft)
⑩ Suction pipe A to the suction pipe B ..... 31 N·m (3.2 kgf·m, 23 lbf·ft)
⑪ Suction hose to the suction pipe A ..... 31 N·m (3.2 kgf·m, 23 lbf·ft)
⑫ Suction hose to the compressor (6 x 1.0 mm) ..... 9.8 N·m (1.0 kgf·m, 7.2 lbf·ft)
⑬ Compressor to the compressor bracket (8 x 1.25 mm) ..... 24 N·m (2.4 kgf·m, 17 lbf·ft)
⑭ Compressor bracket to the cylinder block (10 x 1.25 mm) ..... 44 N·m (4.5 kgf·m, 33 lbf·ft)
⑮ Compressor bracket to the left front engine mount (12 x 1.25 mm) ..... 59 N·m (6.0 kgf·m, 43 lbf·ft)

Performance Test

The performance test will help determine if the air conditioner system is operating within specifications.

Use only service equipment that is U.L.-listed and is certified to meet the requirements of SAE J2210 to remove HFC-134a (R-134a) from the air conditioner system.

CAUTION: Exposure to air conditioner refrigerant and lubricant vapor or mist can irritate eyes, nose and throat. Avoid breathing the air conditioner refrigerant and lubricant vapor or mist.

If accidental system discharge occurs, ventilate work area before resuming service.

R-134a service equipment or vehicle air conditioner systems should not be pressure tested or leak tested with compressed air.

⚠ WARNING Some mixtures of air and R-134a have been shown to be combustible at elevated pressures and can result in fire or explosion causing injury or property damage. Never use compressed air to pressure test R-134a service equipment or vehicle air conditioner systems.

Additional health and safety information may be obtained from the refrigerant and lubricant manufacturers.

1. Connect a R-134a refrigerant recover/recycling/charging station to the vehicle, as shown, following the equipment manufacturer's instructions.

2. Insert a thermometer in the center vent outlet. Determine the relative humidity and air temperature.

3. Test conditions:
   - Avoid direct sunlight.
   - Open hood.
   - Open front doors.
   - Set the temperature control lever or dial to MAX. COOL, the mode control switch or dial on VENT and the recirculation control switch on RECIRCULATE.
   - Turn the A/C switch on, and the heater fan switch on MAX.
   - Run the engine at 1,500 rpm.
   - No driver or passengers in vehicle

4. After running the air conditioning for 10 minutes under the above test conditions, read the delivery temperature from the thermometer in the dash vent and the high and low system pressure from the A/C gauges.

Recovery/Recycling/Charging Station

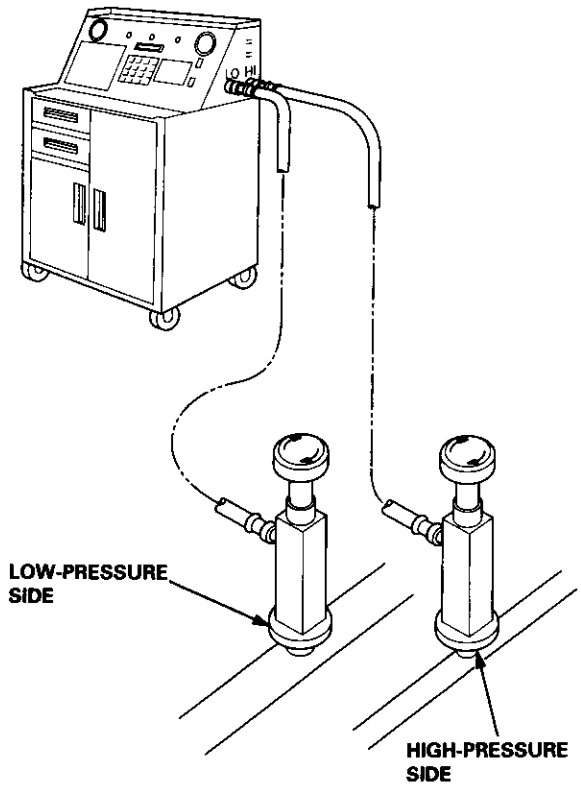

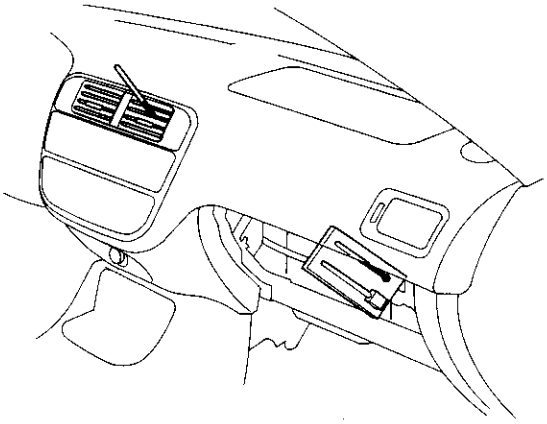

5. To complete the charts:
   - Mark the delivery temperature along the vertical line.
   - Mark the intake temperature (ambient air temperature) along the bottom line.
   - Draw a line straight up from the air temperature to the humidity.
   - Mark a point 10% above and 10% below the humidity level.
   - From each point, draw a horizontal line across the delivery temperature.
   - The delivery temperature should fall between the two lines.
   - Complete the low side pressure test and high side pressure test in the same way.
   - Any measurements outside the line may indicate the need for further inspection.

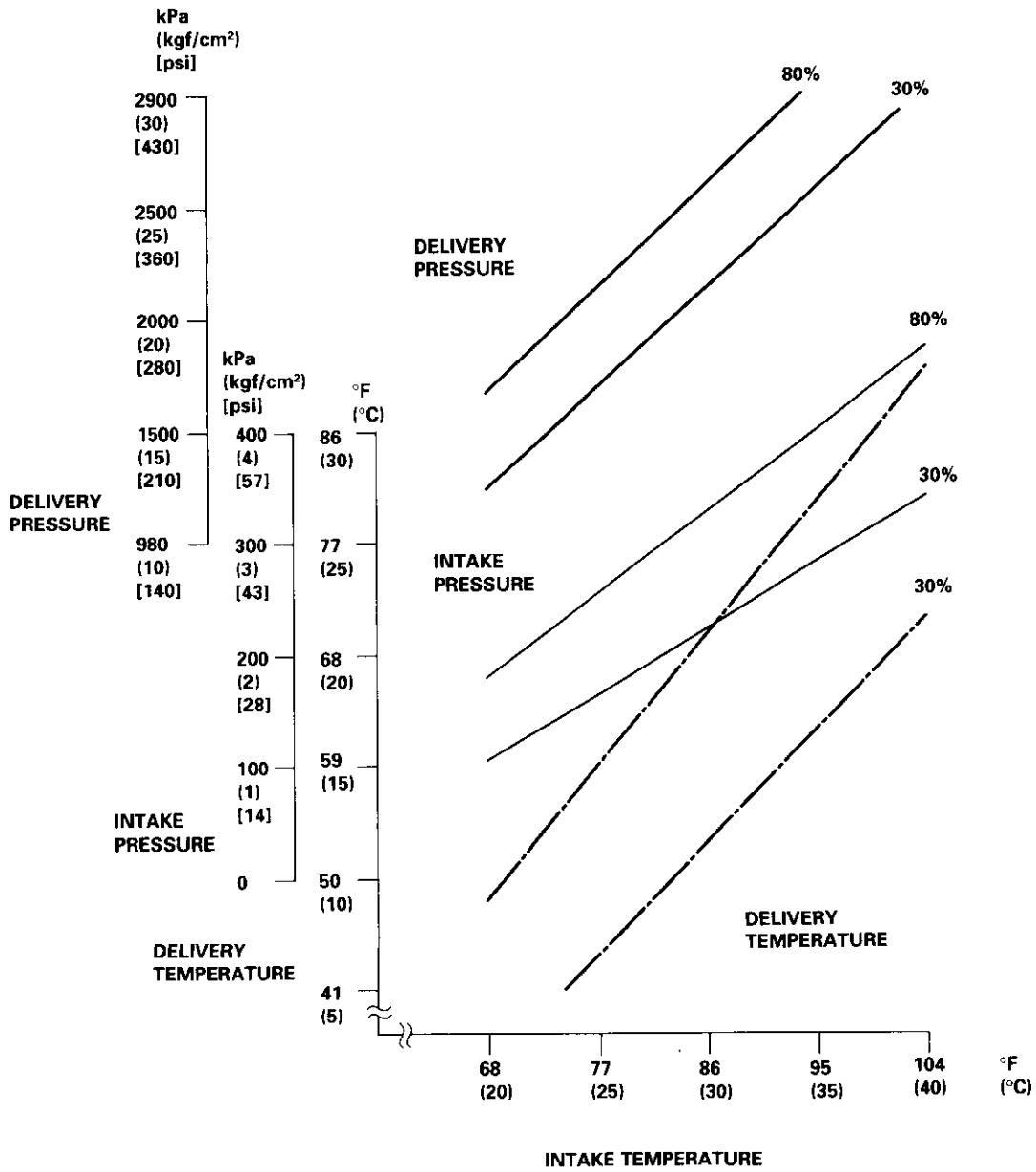

Pressure Test Chart

NOTE: Performance Test is on page 22-24.

Test results	Related symptoms	Probable cause	Remedy
Discharge (high) pressure abnormally high	After stopping compressor, pressure drops to about 200 kPa (2.0 kgf/cm², 28 psi) quickly, and then falls gradually.	Air in system	Recover, evacuate, and recharge with specified amount. Evacuation: see page 22-45 Charging: see page 22-46
	Reduced or no air flow through condenser	• Clogged condenser fins • Condenser fan not working properly	• Clean. • Check voltage and fan rpm. • Check fan direction.
	Line to condenser is excessively hot.	Restricted flow of refrigerant in system	Restricted lines
Discharge pressure abnormally low	High and low pressures are balanced soon after stopping compressor. Low side is higher than normal.	• Faulty compressor discharge valve • Faulty compressor seal	Replace the compressor.
	Outlet of expansion valve is not frosted, low pressure gauge indicates vacuum.	• Faulty expansion valve • Moisture in system	• Replace. • Recover, evacuate, and recharge with specified amount.
Suction (low) pressure abnormally low	Expansion valve is not frosted, and low pressure line is not cold. Low pressure gauge indicates vacuum.	• Frozen expansion valve • Faulty expansion valve	Replace the expansion valve.
	Discharge temperature is low, and the air flow from vents is restricted.	Frozen evaporator	Run the fan with compressor off, then check A/C thermostat.
	Expansion valve is frosted.	Clogged expansion valve	Clean or replace.
	Receiver/dryer outlet is cool, and inlet is warm (should be warm during operation).	Clogged receiver/dryer	Replace.
Suction pressure abnormally high	Low pressure hose and check joint are cooler than the temperature around evaporator.	• Expansion valve open too long • Loose expansion capillary tube	Repair or replace.
	Suction pressure is lowered when condenser is cooled by water.	Excessive refrigerant in system	Recover, evacuate, and recharge with specified amount.
	High and low pressure are equalized as soon as the compressor is stopped, and both gauges fluctuate while running.	• Faulty gasket • Faulty high pressure valve • Foreign particle stuck in high pressure valve	Replace the compressor.
Suction and discharge pressures abnormally high	Reduced air flow through condenser.	• Clogged condenser fins • Condenser fan not working properly	• Clean condenser. • Check voltage and fan rpm. • Check fan direction.
Suction and discharge pressure abnormally low	Low pressure hose and metal end areas are cooler than evaporator.	Clogged or kinked low pressure hose parts	Repair or replace.
	Temperature around expansion valve is too low compared with that around receiver/dryer.	Clogged high pressure line	Repair or replace.
Refrigerant leaks	Compressor clutch is dirty.	Compressor shaft seal leaking	Replace the compressor.
	Compressor bolt(s) are dirty.	Leaking around bolt(s)	Tighten bolt(s) or replace compressor.
	Compressor gasket is wet with oil.	Gasket leaking	Replace the compressor.

Recovery

Use only service equipment that is U.L.-listed and is certified to meet the requirements of SAE J2210 to remove HFC-134a (R-134a) from the air conditioner system.

CAUTION: Exposure to air conditioner refrigerant and lubricant vapor or mist can irritate eyes, nose and throat. Avoid breathing the air conditioner refrigerant and lubricant vapor or mist.

If accidental system discharge occurs, ventilate work area before resuming service.

R-134a service equipment or vehicle air conditioner systems should not be pressure tested or leak tested with compressed air.

⚠ WARNING Some mixtures of air and R-134a have been shown to be combustible at elevated pressures and can result in fire or explosion causing injury or property damage. Never use compressed air to pressure test R-134a service equipment or vehicle air conditioner systems.

Additional health and safety information may be obtained from the refrigerant and lubricant manufacturers.

1. Connect a R-134a refrigerant recovery/recycling/charging station to the vehicle, as shown, following the equipment manufacturer's instructions.

2. Measure the amount of refrigerant oil removed from the A/C system after the recovery process is completed.

   NOTE: Be sure to install the same amount of new refrigerant oil back into the A/C system before charging.

Recovery/Recycling/Charging Station

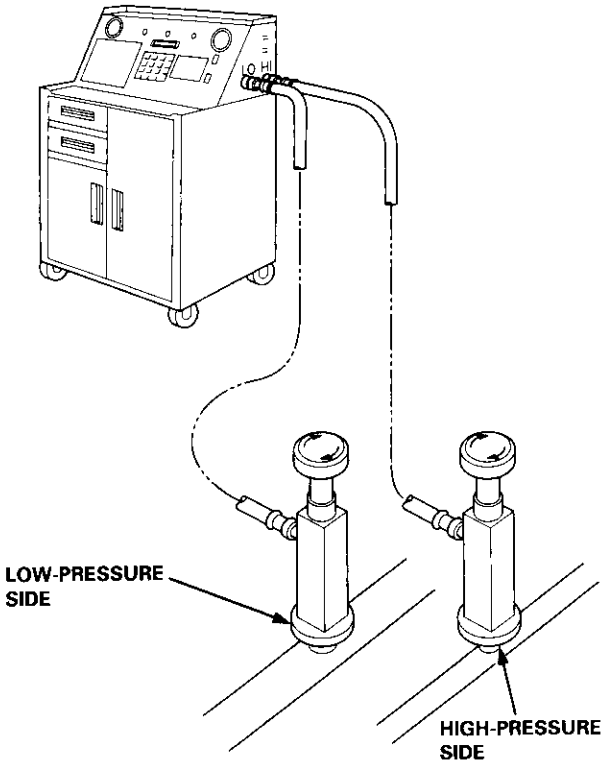

Replacement

1. Move the temperature control to "HOT."
   '96-98: Slide the temperature control lever.
   '99-00: Turn the ignition switch ON (II), then turn the temperature contol knob. Turn the ignition switch off.
2. Remove the battery.
3. Recover the refrigerant with a recovery/recycling/charging station (see page 22-27).
4. Remove the bolts, then disconnect the suction and receiver lines from the evaporator.

   NOTE: Plug or cap the lines immediately after disconnecting them to avoid moisture and dust contamination.

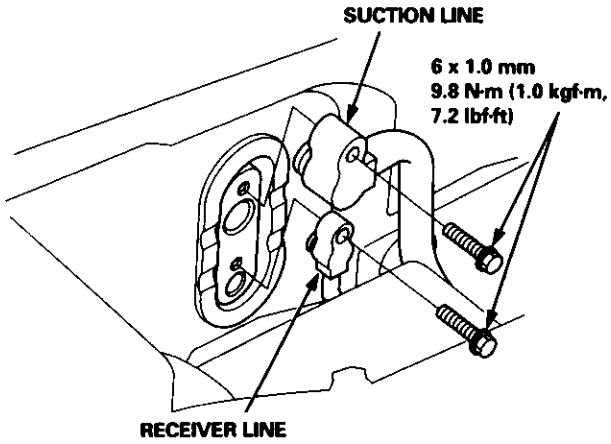

5. Remove the glove box (see section 20).
6. Remove the self-tapping screw and the passenger's dashboard lower cover. Remove the bolt, the nut and the knee bolster, then remove the five bolts and the glove box frame.

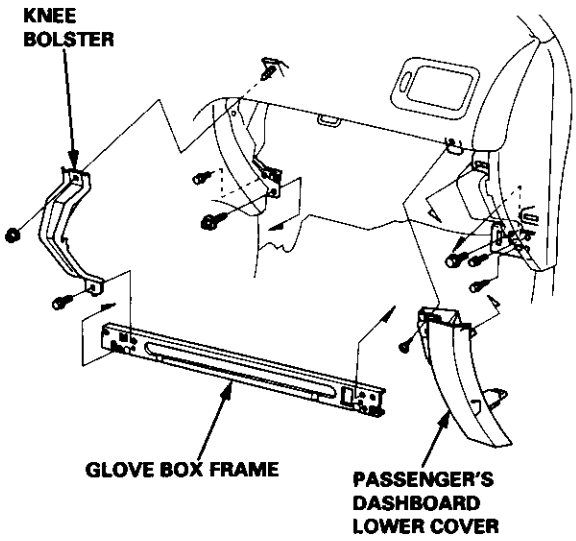

7. Disconnect the connector from the A/C thermostat, and remove the wire harness from the evaporator. Remove the four self-tapping screws, the mounting bolt and the mounting nut. Disconnect the drain hose, then remove the evaporator.

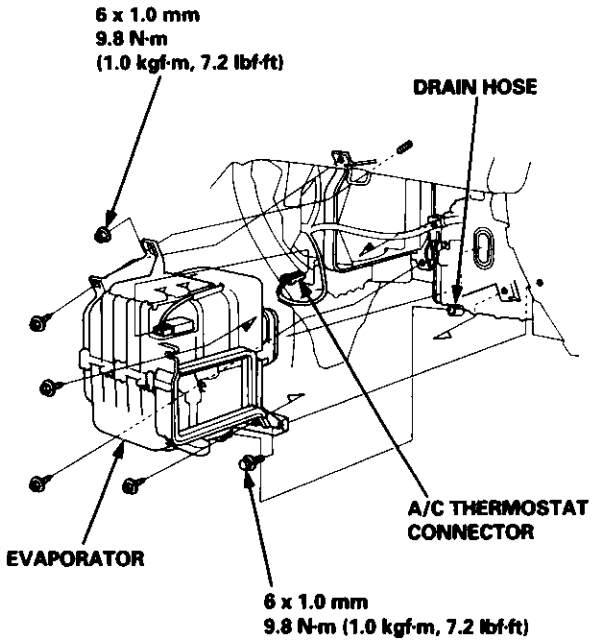

8. Install in the reverse order of removal. Make note of the following items.

   - If you're installing a new evaporator, add refrigerant oil (SANDEN, SP-10 or DENSO, ND-OIL 8) (see page 22-22).
   - Replace the O-rings with new ones at each fitting, and apply a thin coat of refrigerant oil before installing them.
     NOTE: Be sure to use the right O-rings for HFC-134a (R-134a) to avoid leakage.
   - Apply sealant to the grommets.
   - Make sure that there is no air leakage.
   - Charge the system (see page 22-46), and test its performance (see page 22-24).

Overhaul

1. Pull out the A/C thermostat sensor from the evaporator fins.

2. Remove the self-tapping screws and clamps from the housings.

3. Carefully separate the housings, then remove the evaporator.

4. If necessary, remove the expansion valve.

   NOTE: When loosening the expansion valve nuts, use a second wrench to hold the expansion valve or the evaporator pipe. Otherwise, they can be damaged.

5. Assemble in the reverse order of disassembly. Make note of following items.

   - Replace the O-rings with new ones at each fitting, and apply a thin coat of refrigerant oil before installing them.
     NOTE: Be sure to use the right O-rings for HFC-134a (R-134a) to avoid leakage.
   - Install the expansion valve capillary tube so that it is in direct contact with the suction line. Then wrap with tape.
   - Reinstall the A/C thermostat sensor to its original location.

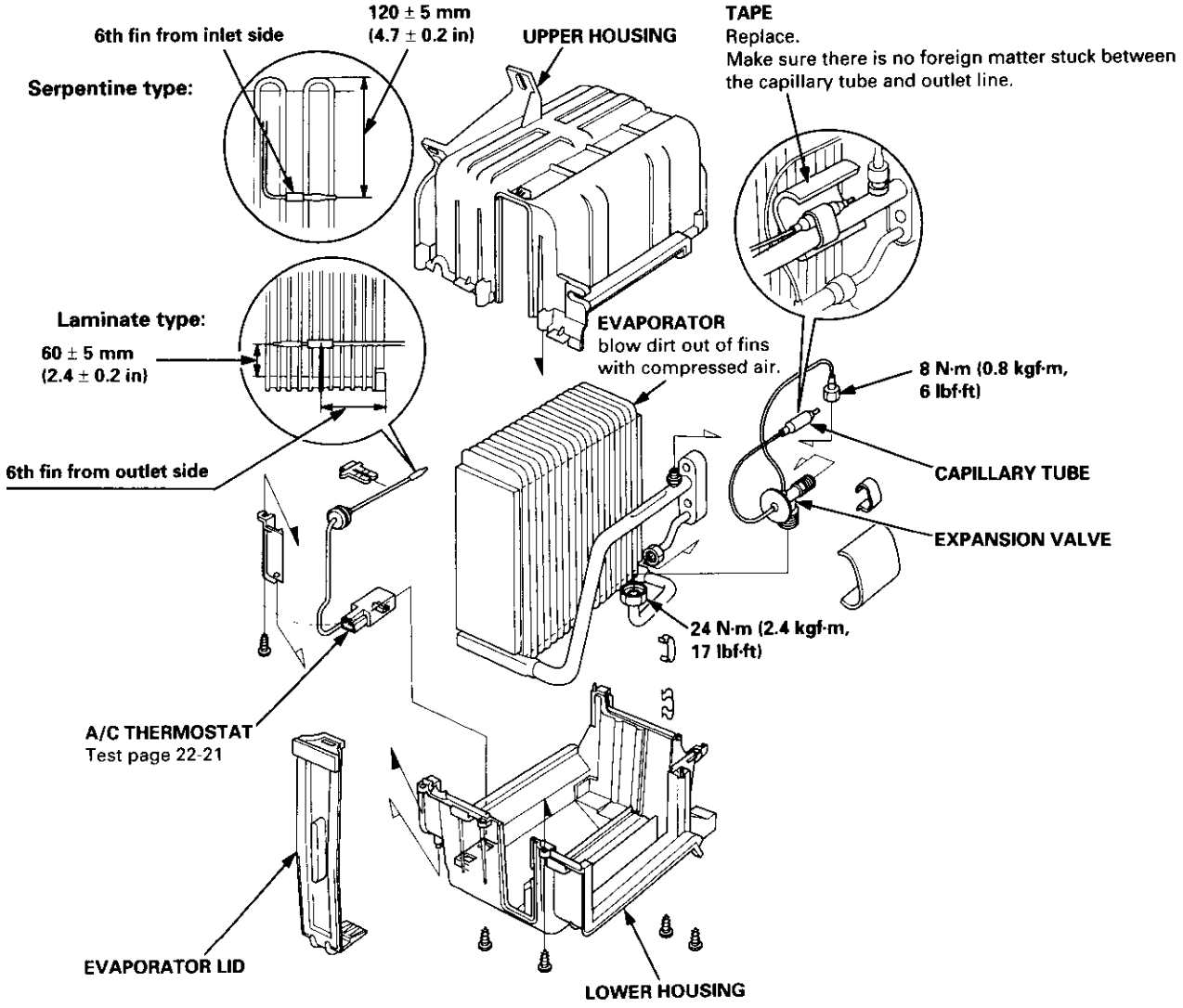

Replacement

1. If the compressor is marginally operable, run the engine at idle speed, and let the air conditioner work for a few minutes, then shut the engine off.

2. Disconnect the negative cable from the battery.

3. Recover the refrigerant with a recovery/recycling/charging station (see page 22-27).

4. Remove the bolts, then disconnect the suction and discharge lines from the compressor.

   NOTE: Plug or cap the lines immediately after disconnecting them to avoid moisture and dust contamination.

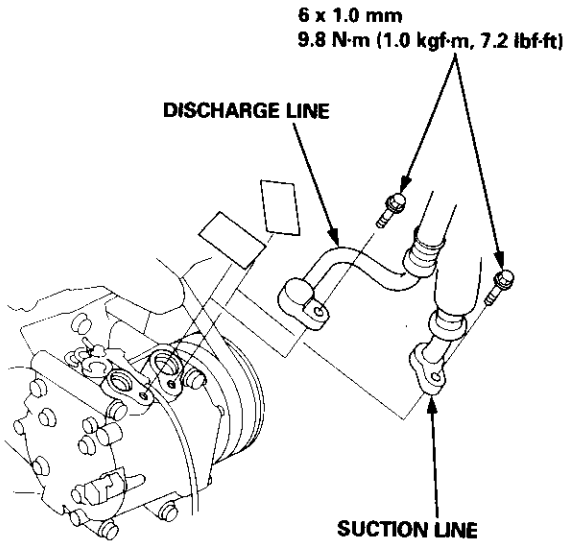

5. Remove the condenser (see page 22-44).

   NOTE: Do not disconnect the discharge hose from the condenser.

6. Remove the power steering pump belt (see section 17).

7. Loosen the center nut of the idler pulley and the adjusting bolt, then remove the A/C compressor belt from the pulleys. Remove the two mounting bolts from the left front mount, then remove the A/C compressor belt by passing it through the gap between the body and the left front mount.

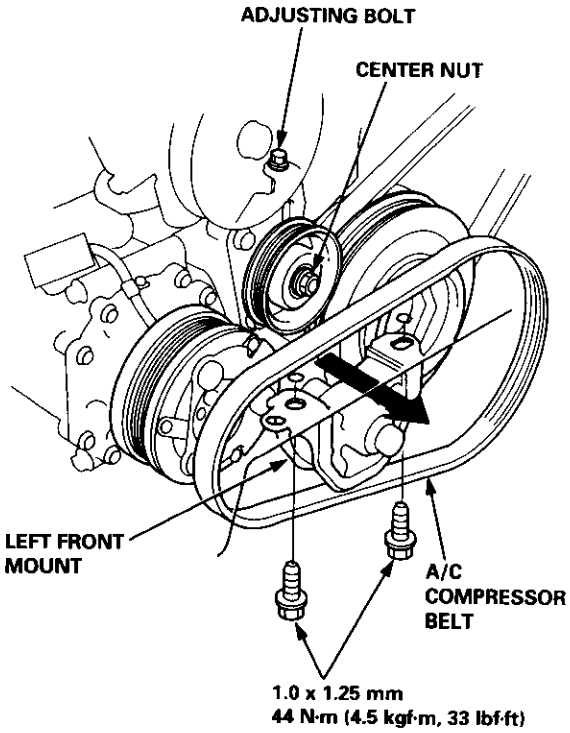

8. Remove the four mounting bolts and the compressor.

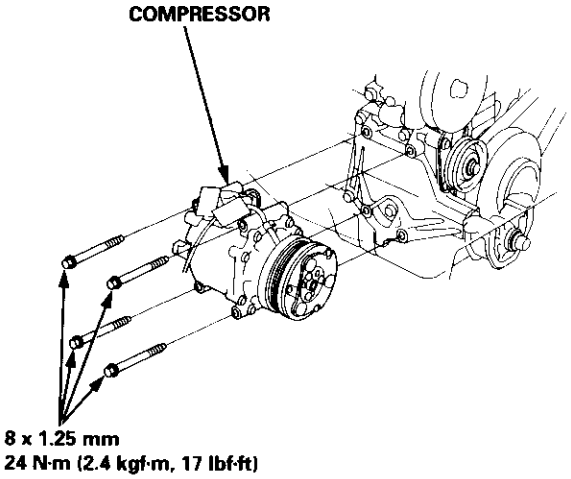

9. If necessary, remove the compressor bracket as follows.

   - Remove the nut and the washer.

     NOTE: When tightening the nut of the left front mount, make sure the washer is set properly on the left front engine mount as shown.

   - Remove the four mounting bolts and the compressor bracket.

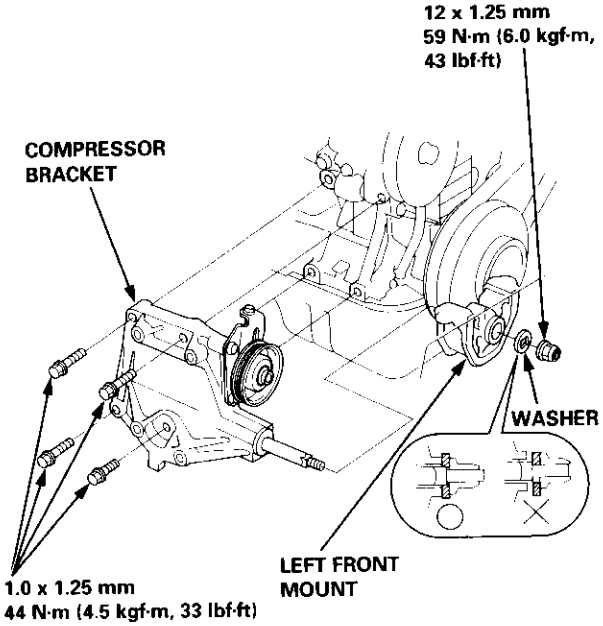

10. Install in the reverse order of removal. Make note of the following items.

    - If you're installing a new compressor, drain all the refrigerant oil from the removed compressor, and measure its volume. Subtract the volume of drained oil from 130mℓ (4 1/3 fl·oz, 4.6 Imp·oz); the result is the amount of oil you should drain from the new compressor (through the suction fitting).
    - Replace the O-rings with new ones at each fitting, and apply a thin coat of refrigerant oil before installing them.
      NOTE: Be sure to use the right O-rings for HFC-134a (R-134a) to avoid leakage.
    - Use refrigerant oil (SP-10) for R-134a Sanden and Hadsys spiral type compressors only.
    - To avoid contamination, do not return the oil to the container once dispensed, and never mix it with other refrigerant oils.
    - Immediately after using the oil, replace the cap on the container, and seal it to avoid moisture absorption.
    - Do not spill the refrigerant oil on the vehicle; it may damage the paint; if the refrigerant oil contacts the paint, wash it off immediately.
    - Adjust the A/C compressor belt (see page 22-43) and the power steering pump belt (see section 17).
    - Charge the system (see page 22-46), and test its performance (see page 22-24).

Illustrated Index

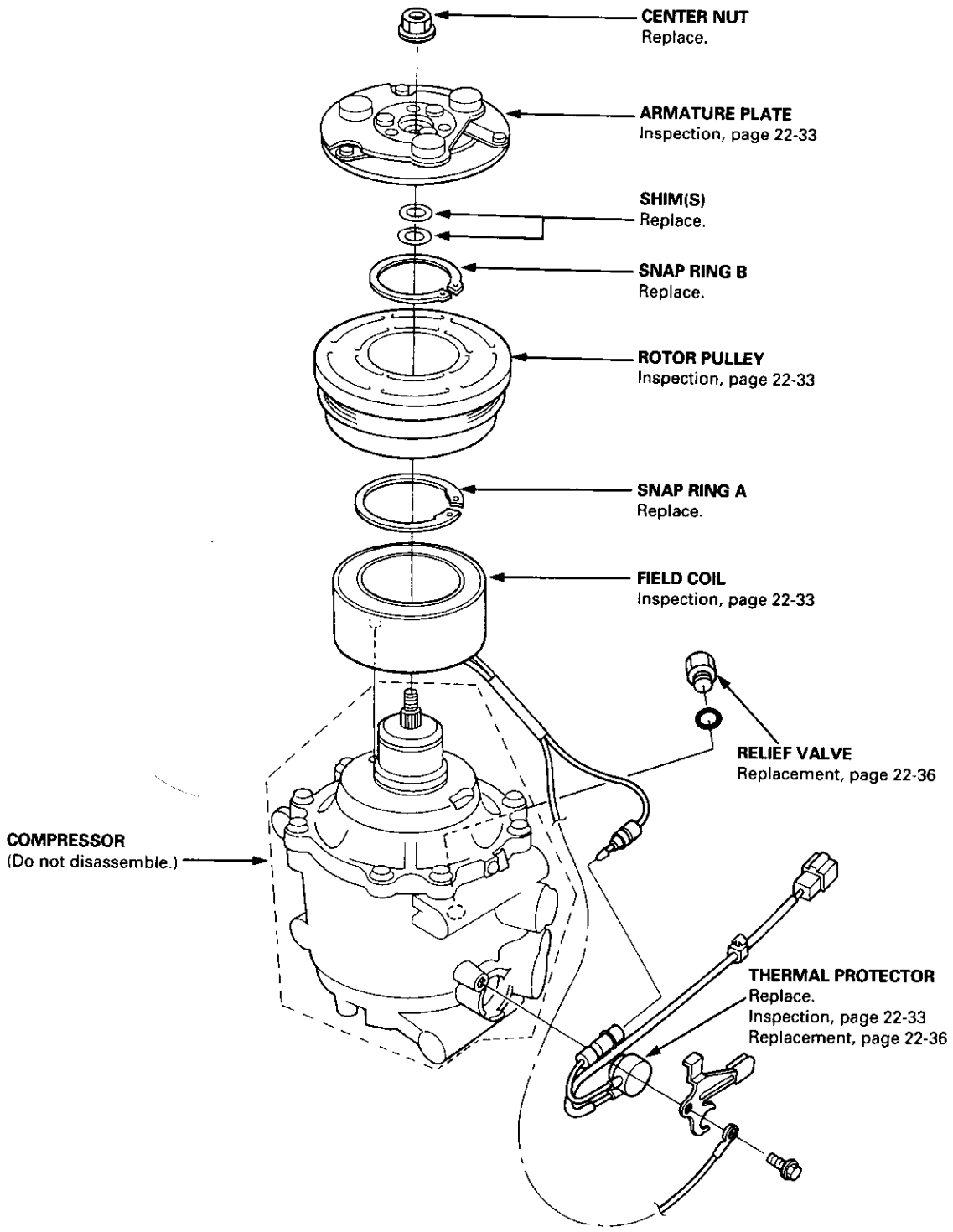

Clutch Inspection

- Check the plated parts of the armature plate for color changes, peeling or other damage. If there is damage, replace the clutch set.

- Check the rotor pulley bearing play and drag by rotating the rotor pulley by hand. Replace the clutch set with a new one if it is noisy or has excessive play/drag.

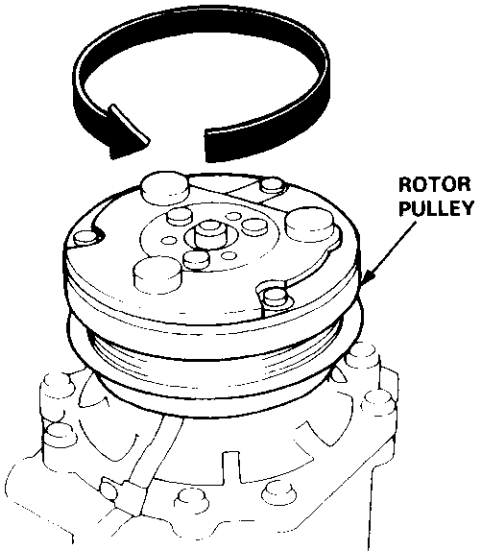

- Measure the clearance between the rotor pulley and the armature plate all the way around. If the clearance is not within specified limits, the armature plate must be removed and shims added or removed as required, following the procedure on page 22-34.

  Clearance: 0.5 ± 0.15 mm (0.020 ± 0.006 in)

  NOTE: The shims are available in four thicknesses: 0.1 mm, 0.2 mm, 0.4 mm and 0.5 mm

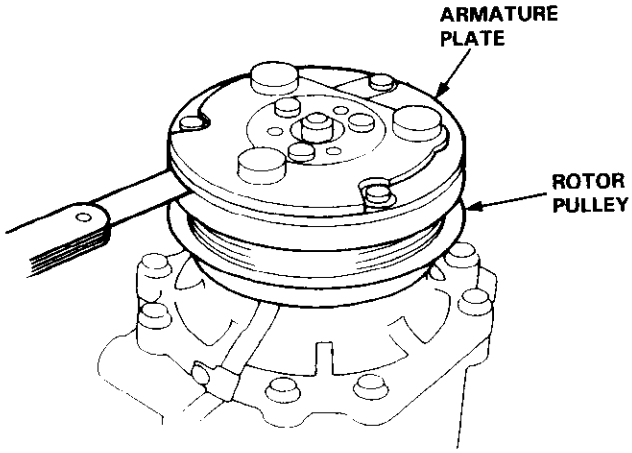

- Release the field coil connector from the holder, then disconnect it. Check the thermal protector for continuity. If there is no continuity, replace the thermal protector.

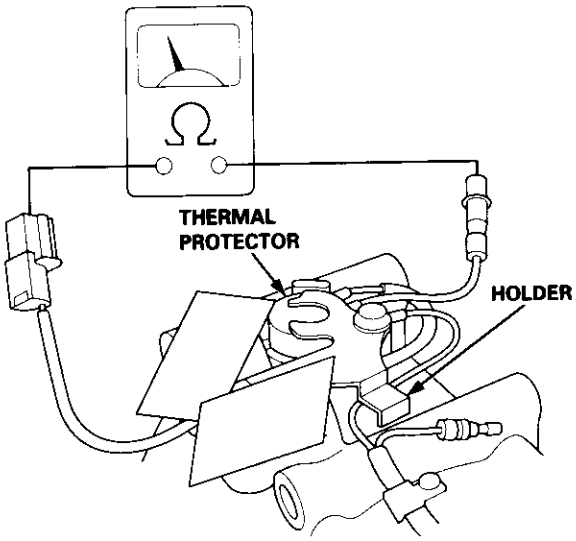

NOTE: The thermal protector will have no continuity above 251.6 to 262.4°F (122 to 128°C). When the temperature drops below 240.8 to 219.8°F (116 to 104°C), the thermal protector will have continuity.

- Check resistance of the field coil.

  Field Coil Resistance: 3.05 to 3.35 Ω at 68°F (20°C)

  If resistance is not within specifications, replace the field coil.

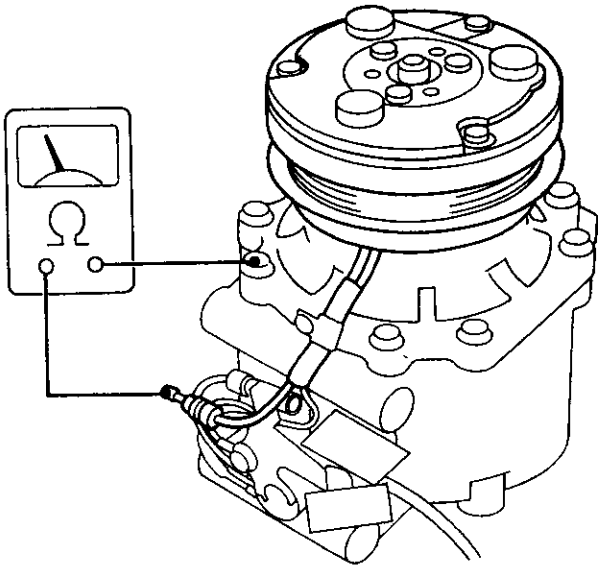

Clutch Overhaul

1. Remove the center nut while holding the armature plate with the tool.

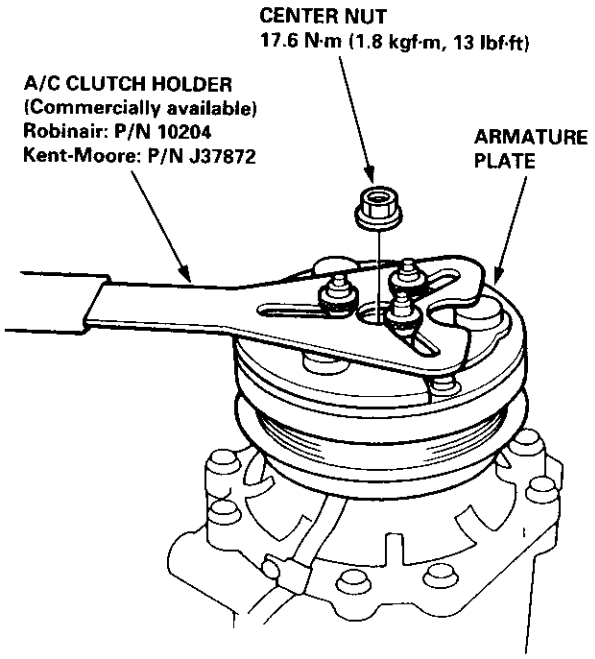

2. Remove the armature plate by pulling it up by hand.

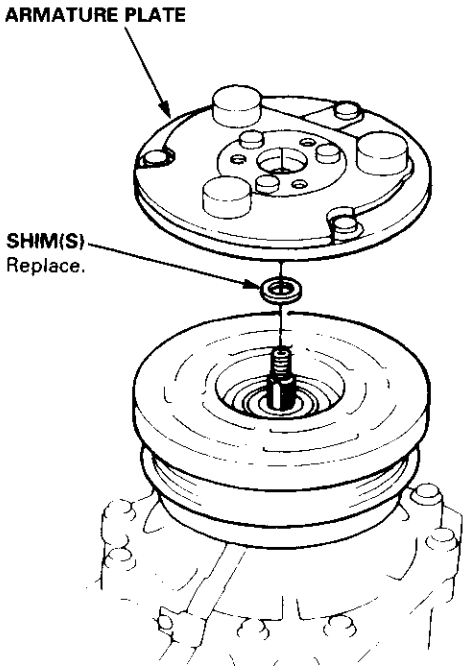

3. Remove snap ring B with snap ring pliers.

NOTE:
- Be careful not to damage the rotor pulley and compressor during removal/installation.
- Once snap ring B is removed, replace it with a new one.

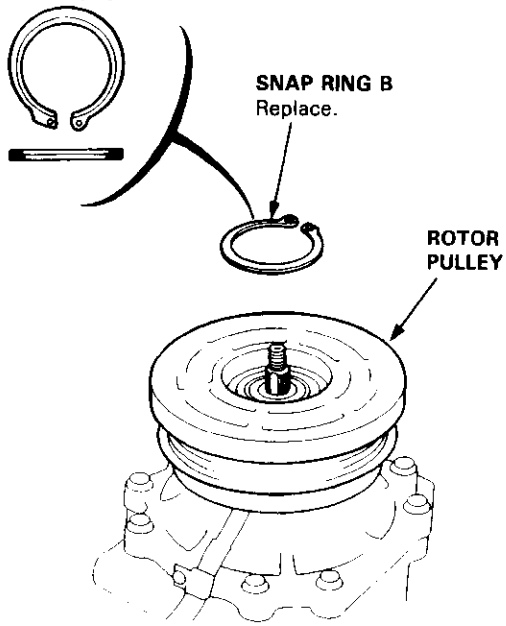

4. Remove the rotor pulley from the shaft with a puller and the special tool.

NOTE: Place the claws of the puller on the back of the rotor pulley, not on the belt area; otherwise the rotor pulley can be damaged.

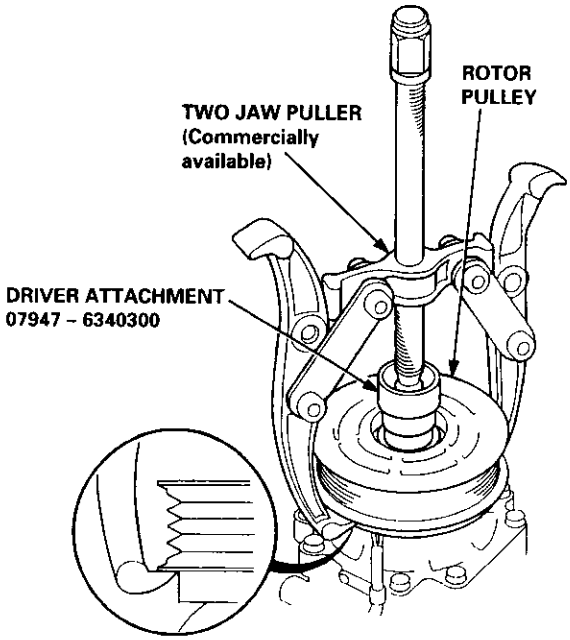

5. Remove the screw from the field coil ground terminal, then disconnect the field coil connector. Remove snap ring A with snap ring pliers, then remove the field coil.

NOTE:
- Be careful not to damage the field coil and compressor during remove/installation.
- Once snap ring A is removed, replace it with a new one.
- When installing the field coil, align the boss on the field coil with the hole in the compressor.

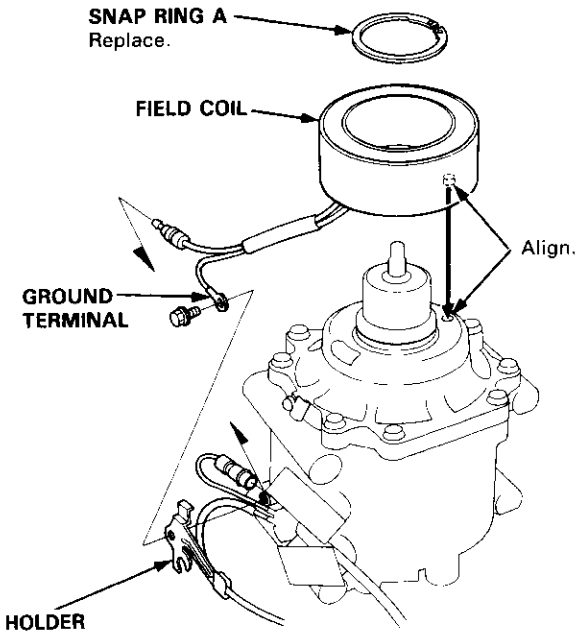

6. Position the rotor pulley squarely over the field coil. Press the rotor pulley onto the compressor boss with the special tool. If the rotor pulley does not press on straight, remove it, and check the rotor pulley and compressor boss for burrs or damage.

CAUTION: Maximum press load: 39,200 kPa (400 kgf/cm², 5,690 psi)

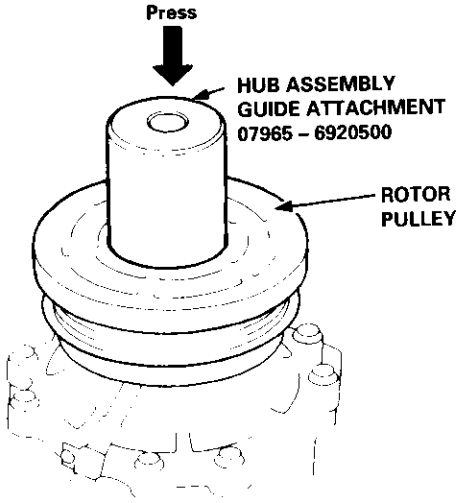

7. Assemble in the reverse order of disassembly. Make note of the following items.

- Install the field coil with the wire side facing down.
- Clean the rotor pulley and compressor sliding surfaces with non-petroleum solvent.
- Make sure the snap rings are fully seated in the groove.
- Make sure that the rotor pulley turns smoothly after it's reassembled.
- Route and clamp the wires properly or they can be damaged by the rotor pulley.

Thermal Protector Replacement

1. Remove the bolt, the ground terminal and the holder. Disconnect the field coil connector, then remove the thermal protector.

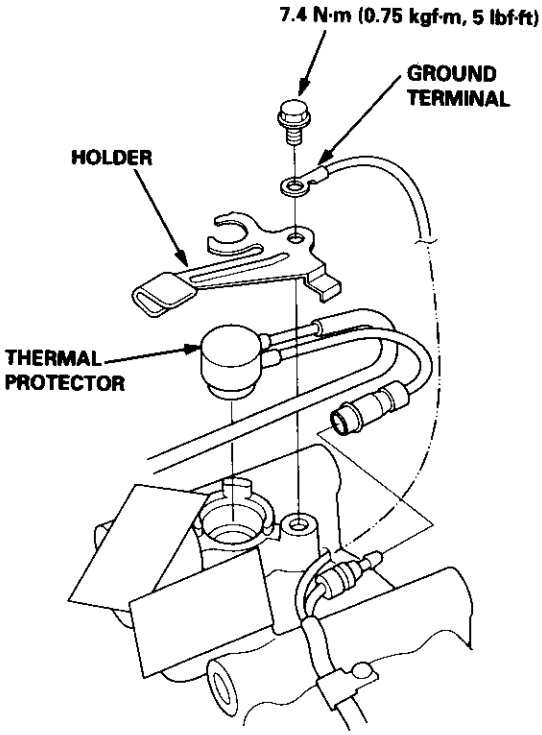

2. Replace the thermal protector with a new one, and apply silicone sealant to the top of the thermal protector.

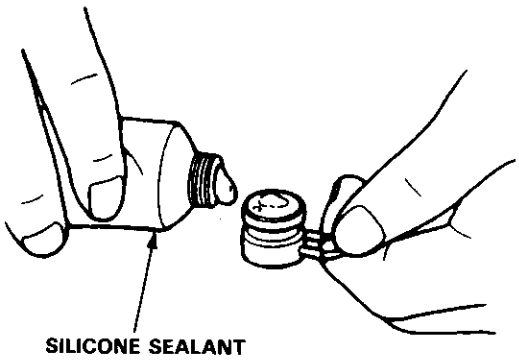

3. Install in the reverse order of removal.

Relief Valve Replacement

1. Remove the relief valve and the O-ring.

   NOTE:
   - Do not let the compressor oil run out.
   - Make sure that no foreign matter enters the system.

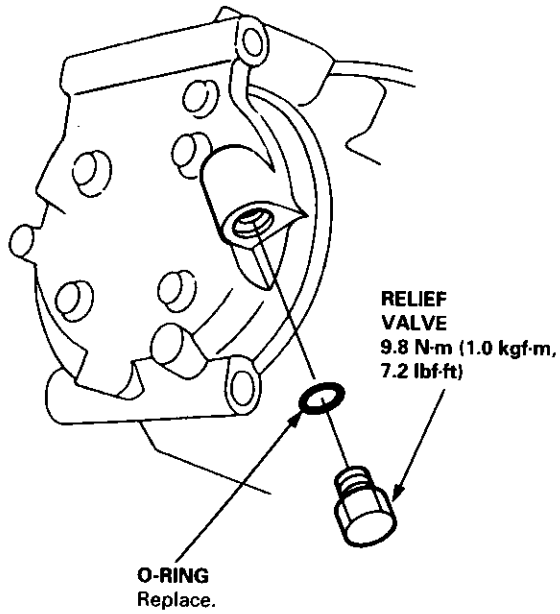

2. Clean the mating surfaces.

3. Replace the O-ring with a new one at the relief valve, and apply a thin coat of refrigerant oil before installing it.

   NOTE:
   - To avoid contamination, do not return the oil to the container once dispensed, and never mix it with other refrigerant oils.
   - Immediately after using the oil, replace the cap on the container, and seal it to avoid moisture absorption.
   - Do not spill the refrigerant oil on the vehicle; it may damage the paint; if the refrigerant oil contacts the paint, wash it off immediately.

4. Install and tighten the relief valve.

5. Charge the system (see page 22-46), and test its performance (see page 22-24).

Replacement

1. If the compressor is marginally operable, run the engine at idle speed, and let the air conditioning work for a few minutes, then shut the engine off.

2. Disconnect the negative cable from the battery.

3. Recover the refrigerant with a recovery/recycling/charging station (see page 22-27).

4. Remove the each bolt, then disconnect the suction and discharge lines from the compressor. Plug or cap the lines immediately after disconnecting them to avoid moisture and dust contamination.

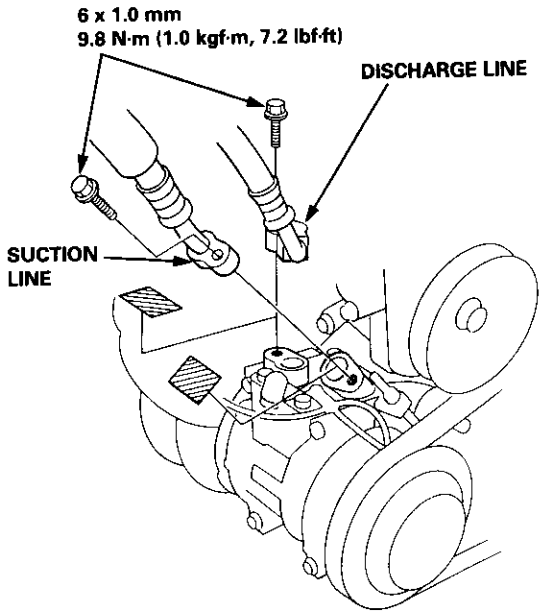

5. Remove the condenser, but do not disconnect the discharge hose from the condenser (see page 22-44).

6. Remove the power steering pump belt (see section 17).

7. Loosen the pivot bolt of the idler pulley bracket and the adjusting bolt, then remove the A/C compressor belt from the pulleys. If necessary, remove the mounting bolts from the left front mount, then remove the A/C compressor belt through the gap between the body and the left front mount.

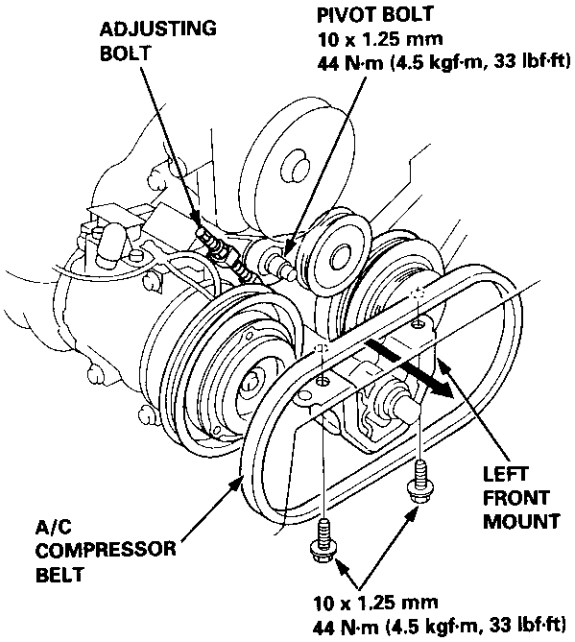

8. Disconnect the compressor clutch connector, then remove the mounting bolts and the compressor.

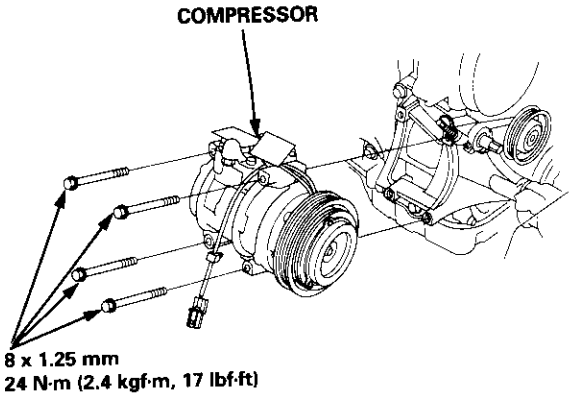

(cont'd)

Replacement (cont'd)

9. Remove the bolts, the suction service valve and the O-ring from the compressor.

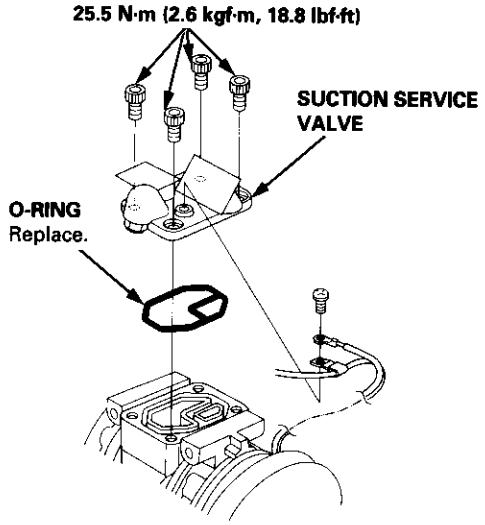

10. If necessary, remove the compressor bracket as follows.

- Remove the nut and the washer from the left front mount. When tightening the nut to the left front mount, make sure the washer is set properly on the left front mount as shown.
- Remove the mounting bolts and the compressor bracket.

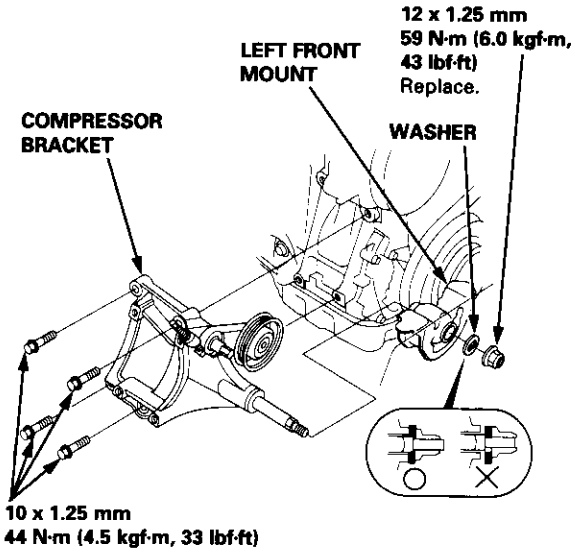

11. Install in the reverse order of removal, and note these items:

- If you're installing a new compressor, drain all the refrigerant oil from the removed compressor, and measure its volume. Subtract the volume of drained oil from 140 mℓ (4 2/3 fl·oz, 4.9 Imp·oz); the result is the amount of oil you should drain from the new compressor (through the suction fitting).
- Replace the O-rings with new ones at each fitting, and apply a thin coat of refrigerant oil before installing them. Be sure to use the right O-rings for HFC-134a (R-134a) to avoid leakage.
- Use refrigerant oil (DENSO, ND-OIL8) for HFC-134a DENSO piston type compressors only.
- To avoid contamination, do not return the oil to the container once dispensed, and never mix it with other refrigerant oils.
- Immediately after using the oil, replace the cap on the container, and seal it to avoid moisture absorption.
- Do not spill the refrigerant oil on the vehicle; it may damage the paint; if the refrigerant oil contacts the paint, wash it off immediately.
- Adjust the A/C compressor belt (see page 22-43) and the power steering pump belt (see section 17).
- Charge the system (see page 22-46), and test its performance (see page 22-24).

Illustrated Index

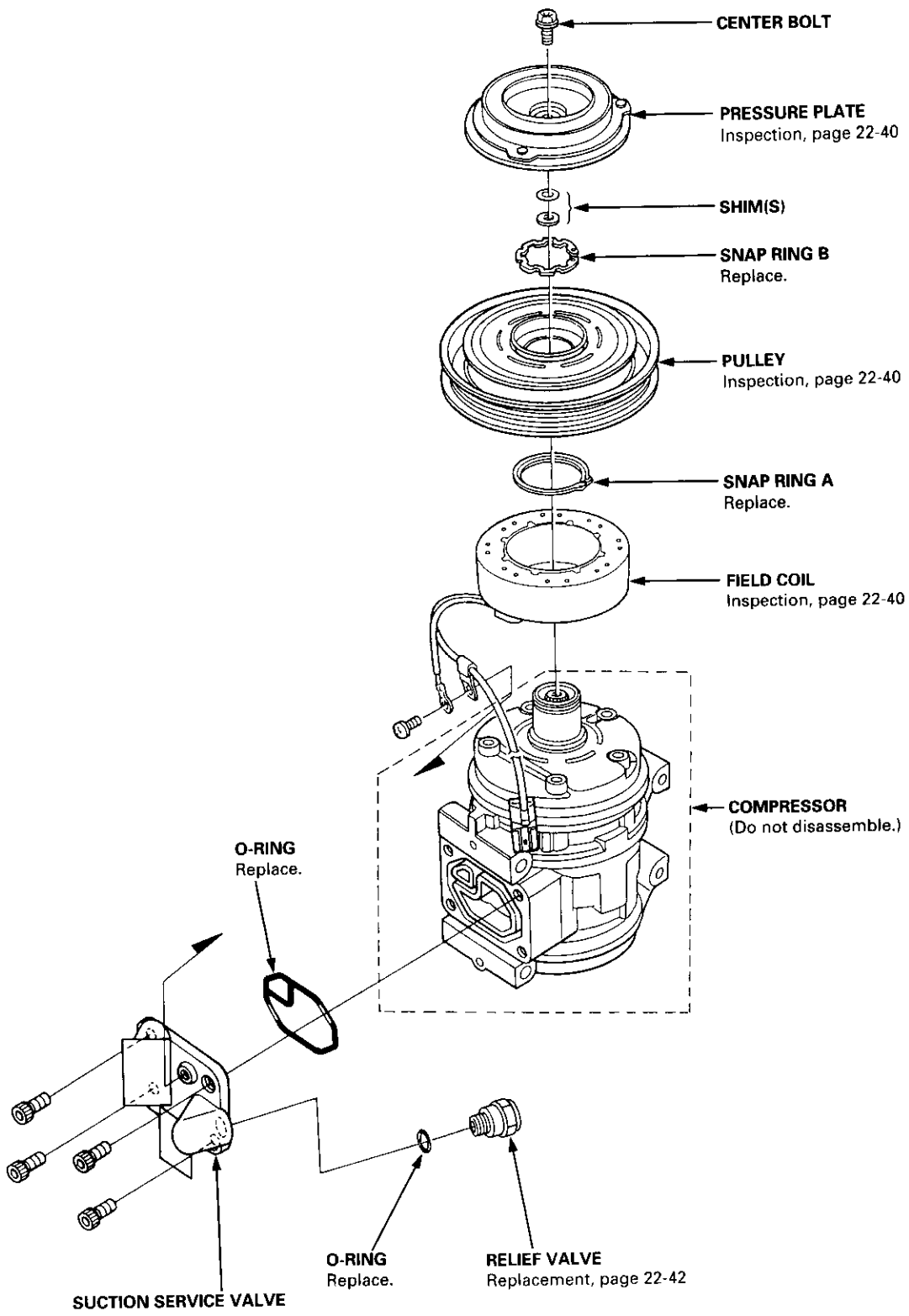

Clutch Inspection

- Check the plated parts of the pressure plate for color changes, peeling or other damage. If there is damage, replace the clutch set.
- Check the pulley bearing play and drag by rotating the pulley by hand. Replace the clutch set with a new one if it is noisy or has excessive play/drag.

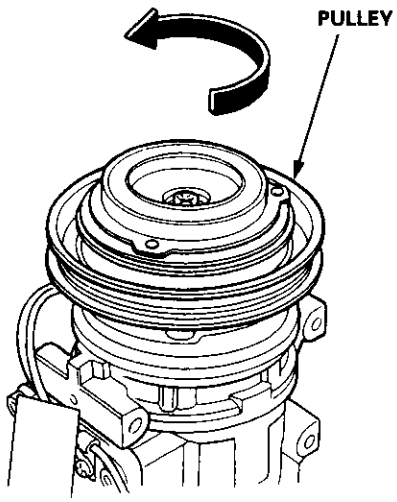

- Measure the clearance between the pulley and the pressure plate all the way around. If the clearance is not within specified limits, the pressure plate must be removed and shim(s) added or removed as required, following the procedure on page 22-41.

Clearance: 0.5 ± 0.15 mm (0.020 ± 0.006 in)

NOTE: The shims are available in three thicknesses: 0.1 mm, 0.3 mm and 0.5 mm.

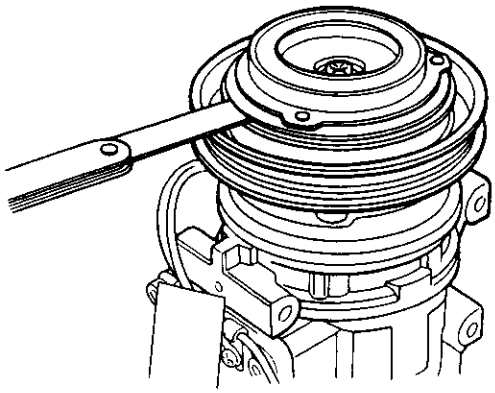

- Check resistance of the field coil. If resistance is not within specifications, replace the field coil.

Field Coil Resistance: 3.4 to 3.8 Ω at 20°C (68°F)

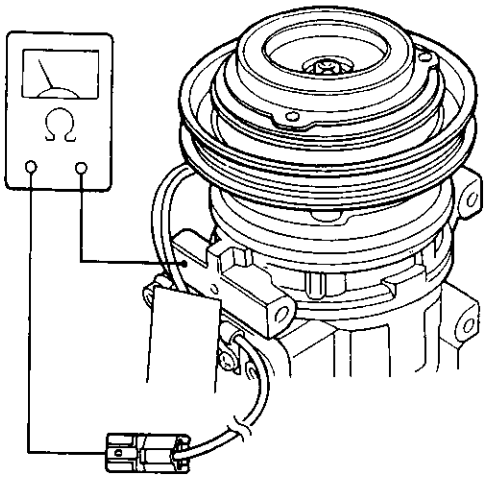

Clutch Overhaul

1. Remove the center bolt while holding the pressure plate with the special tool.

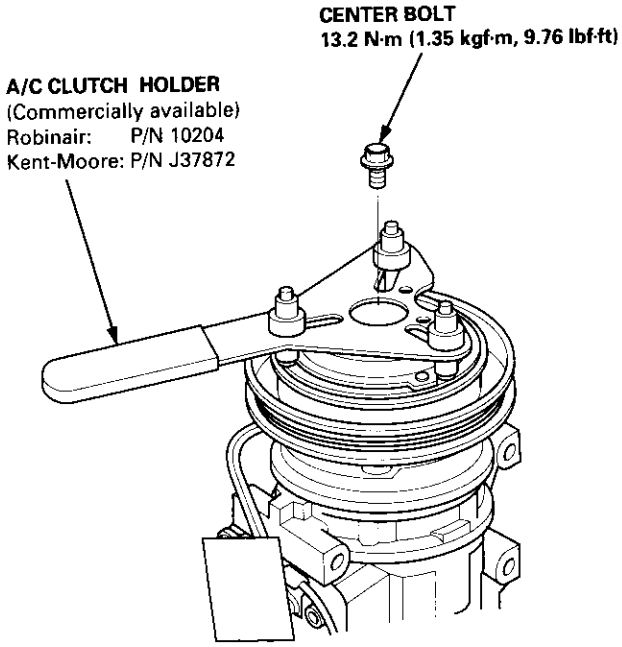

2. Remove the pressure plate and shim(s), taking care not to lose the shim(s).

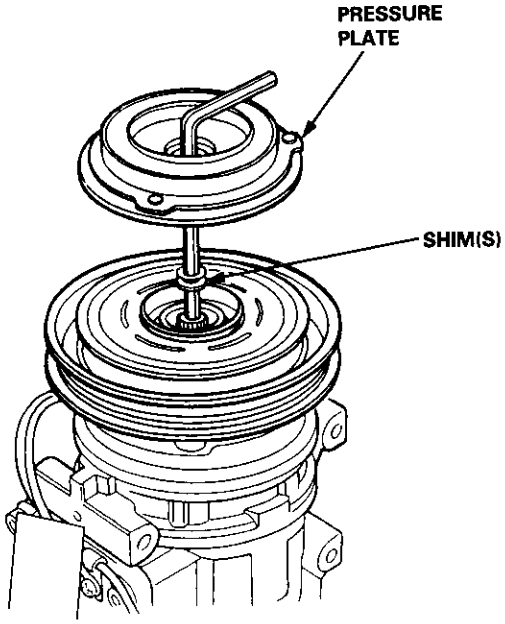

3. Remove the snap ring B with snap ring pliers, then remove the pulley. Be careful not to damage the pulley and compressor.

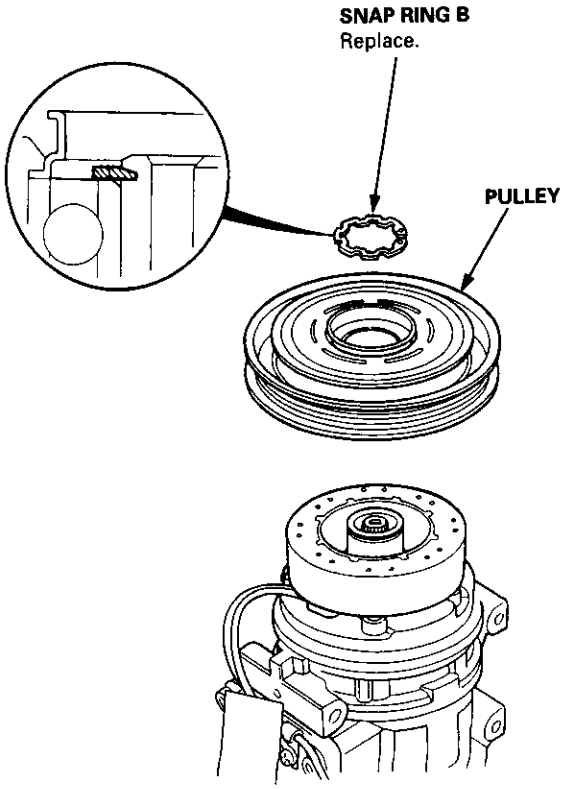

(cont'd)

Clutch Overhaul (cont'd)

4. Remove the screw from the field coil ground terminal. Remove the snap ring A with snap ring pliers, then remove the field coil. Be careful not to damage the field coil and compressor.

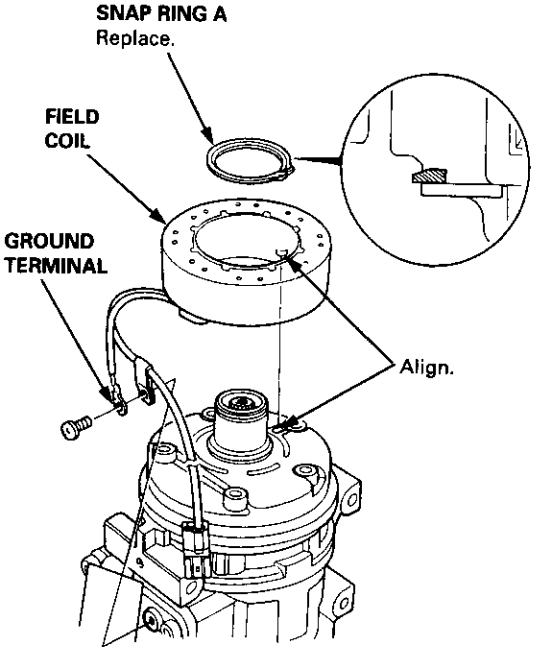

5. Reassemble the compressor clutch in the reverse order of disassembly, and note these items:

   - Install the field coil with the wire side facing down.
   - Clean the pulley and compressor sliding surfaces with non-petroleum solvent.
   - Install new snap rings, and make sure they are fully seated in the groove.
   - Make sure that the pulley turns smoothly after it's reassembled.
   - Route and clamp the wires properly or they can be damaged by pulley.

Relief Valve Replacement

1. Recover the refrigerant with a recovery/recycling/charging station (see page 22-27).

2. Remove the relief valve and the O-ring. Plug the opening to keep foreign matter from entering the system and the compressor oil from running out.

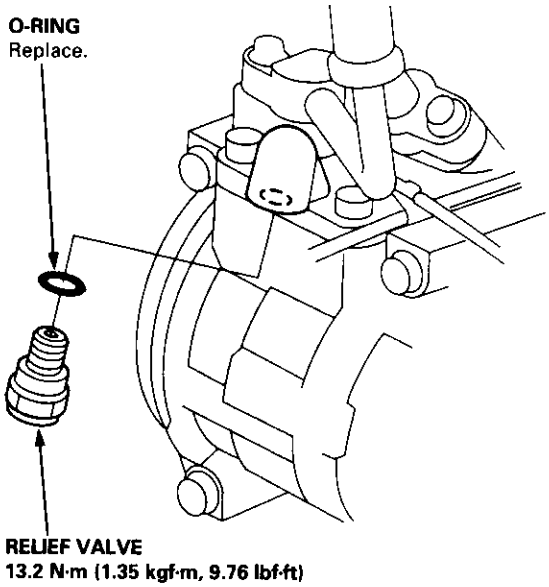

3. Clean the mating surfaces.

4. Replace the O-ring with a new one at the relief valve, and apply a thin coat of refrigerant oil before installing it.

5. Remove the plug, and install and tighten the relief valve.

6. Charge the system (see page 22-46), and test its performance (see page 22-24).

Adjustment

Deflection Method

1. Apply a force of 98 N (10 kgf, 22 lbf), and measure the deflection between the A/C compressor and the crankshaft pulley.

   A/C Compressor Belt
   Used Belt: B16A2 engine
   6.0 – 9.5 mm (0.24 – 0.37 in)
   Except B16A2 engine
   7.5 – 9.5 mm (0.30 – 0.37 in)
   New Belt: B16A2 engine
   4.5 – 6.5 mm (0.18 – 0.26 in)
   Except B16A2 engine
   5.0 – 6.5 mm (0.20 – 0.26 in)

   Note these items when adjusting belt tension:
   - If there are cracks or any damage evident on the belt, replace it with a new one.
   - "Used belt" means a belt which has been used for five minutes or more.
   - "New belt" means a belt which has been used for less than five minutes.

2. Loosen, the center nut of the idler pulley (SANDEN), or the pivot bolt of the idler pulley bracket and the lock nut of the adjusting bolt (DENSO).

3. Turn the adjusting bolt to get proper belt tension.

4. Retighten the center nut of the idler pulley (SANDEN), or the pivot bolt of the idler pulley bracket and the lock nut of the adjusting bolt (DENSO).

5. Recheck the deflection of the A/C compressor belt.

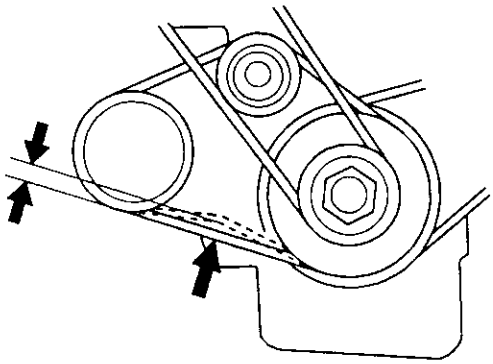

Tension Gauge Method

1. Attach the special tool to the A/C compressor belt as shown below, and measure the tension of the belt.

   A/C Compressor Belt
   Used Belt: B16A2 engine
   390 – 540 N (40 – 55 kgf, 88 – 120 lbf)
   Except B16A2 engine
   340 – 490 N (35 – 50 kgf, 77 – 110 lbf)
   New Belt: B16A2 engine
   740 – 880 N (75 – 90 kgf, 170 – 200 lbf)
   Except B16A2 engine
   690 – 830 N (70 – 85 kgf, 150 – 190 lbf)

   Note these items when adjusting belt tension:
   - Follow the manufacturer's instructions for the belt tension gauge.
   - If there are cracks or any damage evident on the belt, replace it with a new one.
   - "Used belt" means a belt which has been used for five minutes or more.
   - "New belt" means a belt which has been used for less than five minutes.

2. Loosen the center nut of the idler pulley (SANDEN), or the pivot bolt of the idler pulley bracket and the lock nut of the adjusting bolt (DENSO).

3. Turn the adjusting bolt to get proper belt tension.

4. Retighten the center nut of the idler pulley (SANDEN), or the pivot bolt of the idler pulley bracket and the lock nut of the adjusting bolt (DENSO).

5. Recheck the tension of the A/C compressor belt.

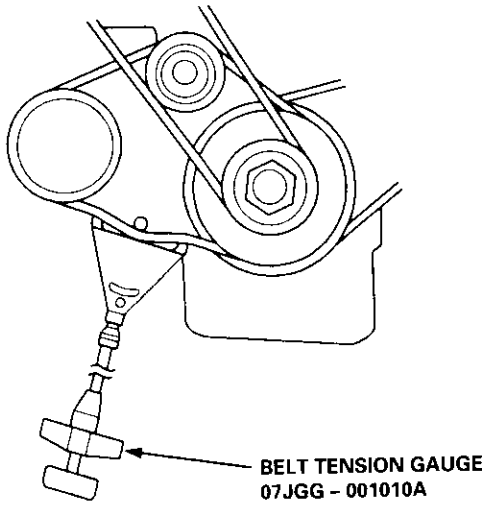

Replacement

1. Recover the refrigerant with a recovery/recycling/charging station (see page 22-27).

2. Disconnect the condenser fan connector from the A/C wire harness, then remove the A/C wire harness from the condenser fan shroud.

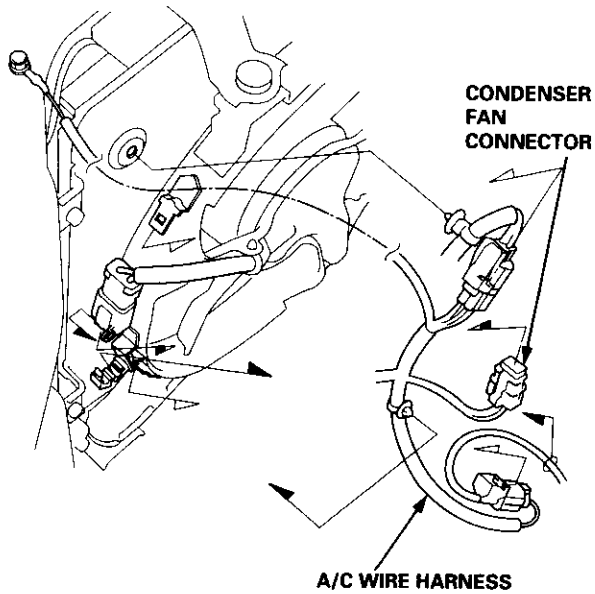

3. Remove the bolts, then disconnect the discharge and condenser lines from the condenser.

   NOTE: Plug or cap the lines immediately after disconnecting them to avoid moisture and dust contamination.

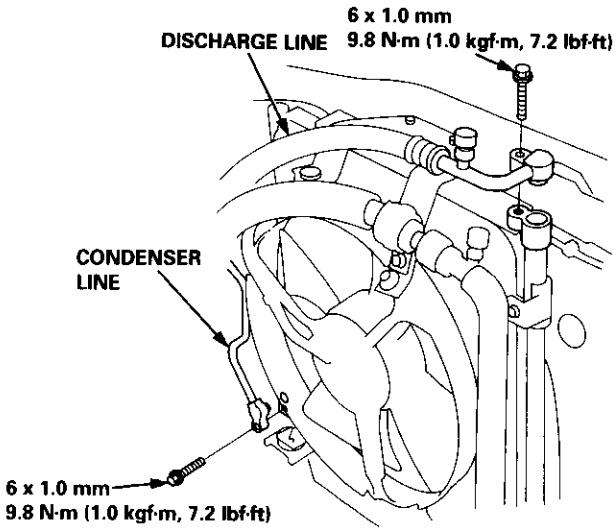

4. Remove the bolt from the suction hose bracket, and remove the two bolts and the upper mount bracket. Remove the condenser assembly by lifting it up.

   NOTE: Be careful not to damage the condenser fins when removing the condenser assembly.

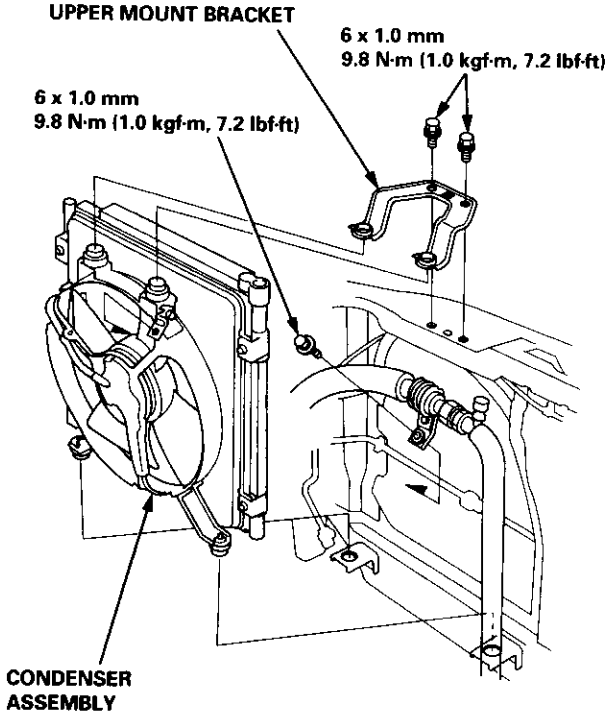

5. Install in the reverse order of removal. Make note of the following items.

   - If you're installing a new condenser, add refrigerant oil (SANDEN, SP-10 or DENSO, ND-OIL 8) (see page 22-22).
   - Replace the O-rings with new ones at each fitting, and apply a thin coat of refrigerant oil before installing them.
     NOTE: Be sure to use the right O-rings for HFC-134a (R-134a) to avoid leakage.
   - Be careful not to damage the condenser fins when installing the condenser assembly.
   - Charge the system (see page 22-46), and test its performance (see page 22-24).

Evacuation

Use only service equipment that is U.L.-listed and is certified to meet the requirements of SAE J2210 to remove HFC-134a (R-134a) from the air conditioner system.

CAUTION: Exposure to air conditioner refrigerant and lubricant vapor or mist can irritate eyes, nose and throat. Avoid breathing the air conditioner refrigerant and lubricant vapor or mist.

If accidental system discharge occurs, ventilate work area before resuming service.

R-134a service equipment or vehicle air conditioner systems should not be pressure tested or leak tested with compressed air.

⚠ WARNING Some mixtures of air and R-134a have been shown to be combustible at elevated pressures and can result in fire or explosion causing injury or property damage. Never use compressed air to pressure test R-134a service equipment or vehicle air conditioner systems.

Additional health and safety information may be obtained from the refrigerant and lubricant manufacturers.

1. When an A/C System has been opened to the atmosphere, such as during installation or repair, it must be evacuated using a R-134a refrigerant recovery/recycling/charging station. (If the system has been open for several days, the receiver/dryer should be replaced, and the system should be evacuated for several hours.)

2. Connect a R-134a refrigerant recovery/recycling/charging station to the vehicle, as shown, following the equipment manufacturer's instructions.

   NOTE: If low pressure does not reach more than 93.3 kPa (700 mmHg, 27.6 in.Hg) in 15 minutes, there is probably a leak in the system. Partially charge the system, and check for leaks (see Leak Test).

Recovery/Recycling/Charging Station

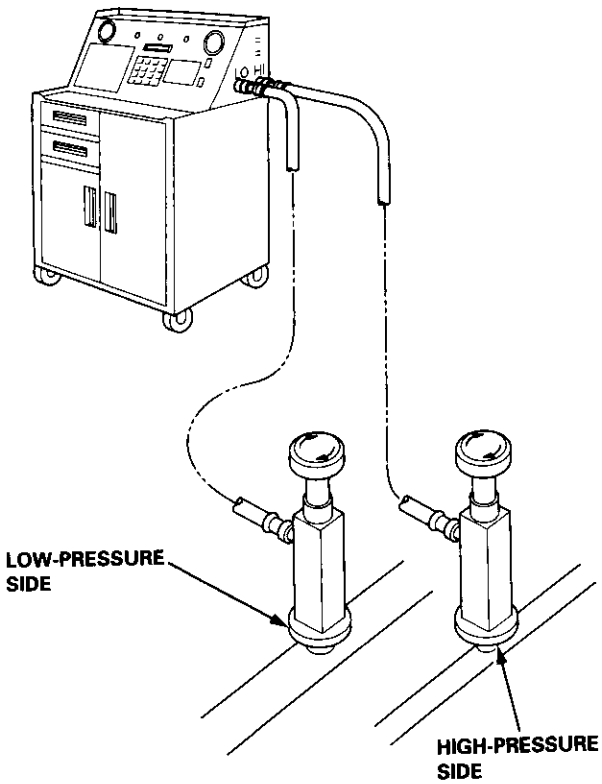

Charging

Use only service equipment that is U.L.-listed and is certified to meet the requirements of SAE J2210 to remove HFC-134a (R-134a) from the air conditioner system.

CAUTION: Exposure to air conditioner refrigerant and lubricant vapor or mist can irritate eyes, nose and throat. Avoid breathing the air conditioner refrigerant and lubricant vapor or mist.

If accidental system discharge occurs, ventilate work area before resuming service. Additional health and safety information may be obtained from the refrigerant and lubricant manufacturers.

Refrigerant capacity: 600 – 650 g (21.1 – 22.9 oz)

CAUTION: Do not overcharge the system; the compressor will be damaged.

Connect a R-134a refrigerant recovery/recycling/charging station to the vehicle, as shown, following the equipment manufacturer's instructions.

Recovery/Recycling/Charging Station

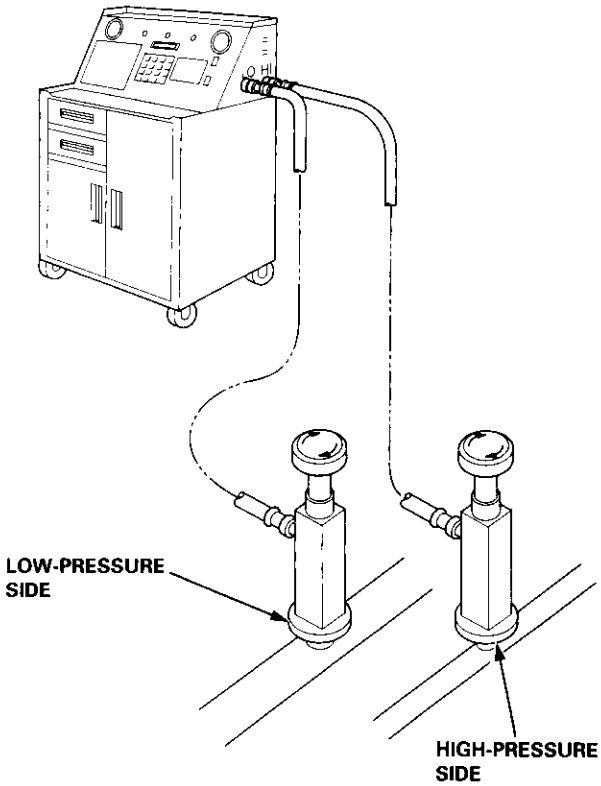

Leak Test

Use only service equipment that is U.L.-listed and is certified to meet the requirements of SAE J2210 to remove HFC-134a (R-134a) from the air conditioner system.

CAUTION: Exposure to air conditioner refrigerant and lubricant vapor or mist can irritate eyes, nose and throat. Avoid breathing the air conditioner refrigerant and lubricant vapor or mist.

If accidental system discharge occurs, ventilate work area before resuming service.

R-134a service equipment or vehicle air conditioner systems should not be pressure tested or leak tested with compressed air.

⚠WARNING Some mixtures of air and R-134a have been shown to be combustible at elevated pressures and can result in fire or explosion causing injury or property damage. Never use compressed air to pressure test R-134a service equipment or vehicle air conditioner systems.

Additional health and safety information may be obtained from the refrigerant and lubricant manufacturers.

1. Connect a R-134a refrigerant recovery/recycling/charging station to the vehicle, as shown in the previous column, following the equipment manufacturer's instructions.

   NOTE: Be sure to install the same amount of new refrigerant oil back into the A/C system before charging.

2. Open the high-pressure valve to charge the system to the specified capacity, then close the supply valve, and remove the charging system couplers.

   Refrigerant capacity: 600 – 650 g (21.1 – 22.9 oz)

3. Check the system for leaks using a R-134a refrigerant leak detector with an accuracy of 14 g (0.5 oz) per year or better.

4. If you find leaks that require the system to be opened (to repair or replace hoses, fittings, etc.), recover the system according to the Recovery Procedure on page 22-27.

5. After checking and repairing leaks, the system must be evacuated (see System Evacuation on page 22-45).

Electrical

Special Tools 23-2
Troubleshooting
  Tips and Precautions 23-3
  Five-step Troubleshooting 23-5
  Wire Color Codes 23-5
  Schematic Symbols 23-6
Relay and Control Unit Locations
  Engine Compartment 23-7
  Dashboard 23-8
  Dashboard/Door 23-12
*Airbags ..... Section 24
Air Conditioning ..... Section 21
Alternator 23-112
Anti-lock Brake System (ABS) ..... Section 19
*A/T Gear Position Indicator 23-149
Automatic Transmission System ..... Section 14
Battery 23-91
Blower Controls ..... Section 21
Charging System 23-112
Connector Identification and Wire Harness
  Routing 23-13
Cruise Control 23-240
Dash Lights Brightness Controller 23-180
Fan Controls 23-126
Fuel Pump ..... Section 11
Fuses/Relay 23-62
PGM-FI Control System ..... Section 11
*Gauges
  Circuit Diagram 23-131
  Fuel Gauge 23-142
  Gauge/Indicator 23-129
Ground Distribution 23-75
Heater Controls ..... Section 21
*Horn 23-196
*Ignition Switch 23-89
Ignition System 23-102
*Integrated Control Unit 23-156
Interlock System 23-144
Lighting System 23-161
Lights, Exterior
  Back-up Lights 23-177
  Brake Lights 23-178
  Daytime Running Lights (Canada) 23-166
  Front Parking Lights 23-167
  Front Turn Signal Lights 23-167
  Headlights 23-167
  High Mount Brake Light 23-179
  License Plate Lights 23-176
  Taillights 23-171
Interior Lights 23-182
Moonroof 23-235
Power Distribution 23-67
Power Door Locks 23-251
Power Mirrors 23-206
Power Relays 23-86
Power Windows 23-220
Rear Window Defogger 23-200
Spark Plugs 23-111
Starting System 23-93
*Stereo Sound System 23-187
*Supplemental Restraint System (SRS) ..... Section 24
Turn Signal/Hazard Flasher System 23-173
*Under-dash Fuse/Relay Box 23-85
Vehicle Speed Sensor (VSS) 23-140
*Wipers/Washers 23-214

NOTE: Unless otherwise specified, references to automatic transmission (A/T) in this section include the CVT.

Special Tools

Ref. No.	Tool Number	Description	Qty	Page Reference
①	A973X – 041 – XXXXX	Vacuum Pump Gauge, 0 – 30 in.Hg.	1	23-245
②*	07JGG – 001010A	Belt Tension Gauge	1	23-125
③	07LAJ – PT3020A	Test Harness	1	23-140, 141
④	07NAC – SR20100	Fuel Sender Wrench	1	23-142
⑤	07PAZ – 0010100	SCS Service Connector	1	23-105
⑥	07MAJ – SP00300	Keyless Entry Checker	1	23-264

*: Included in Belt Tension Gauge Set 07T66 – 001000A

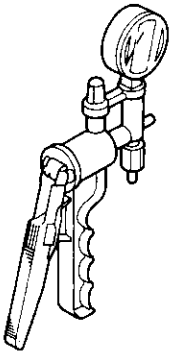

①

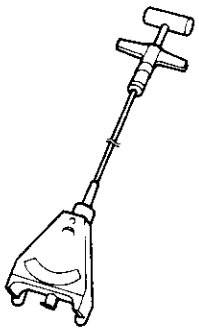

②

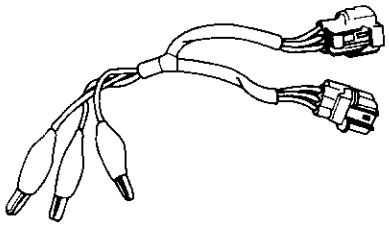

③

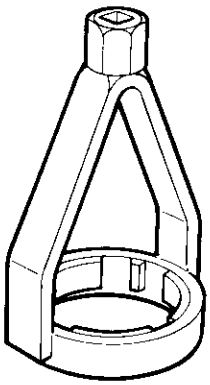

④

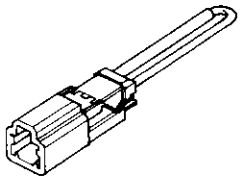

⑤

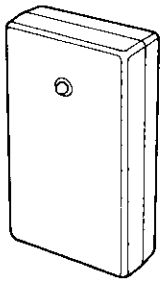

⑥

Tips and Precautions

Before Troubleshooting

- Check applicable fuses in the appropriate fuse/relay box.
- Check the battery for damage, state of charge, and clean and tight connections.
- Check the alternator belt tension.

CAUTION:

- **Do not quick-charge a battery unless the battery ground cable has been disconnected, otherwise you will damage the alternator diodes.**
- **Do not attempt to crank the engine with the battery ground cable loosely connected or you will severely damage the wiring.**

Handling Connectors

- Make sure the connectors are clean and have no loose wire terminals.
- Make sure multiple cavity connectors are packed with grease (except watertight connectors).
- All connectors have push-down release type locks.

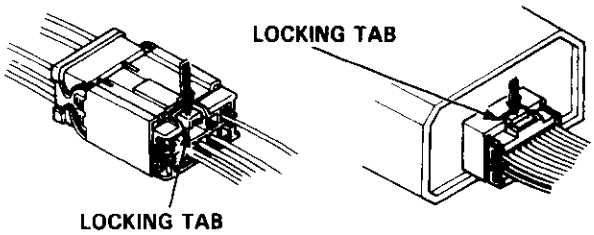

- Some connectors have a clip on their side used to attach them to a mount bracket on the body or on another component. This clip has a pull type lock.
- Some mounted connectors cannot be disconnected unless you first release the lock and remove the connector from its mount bracket.

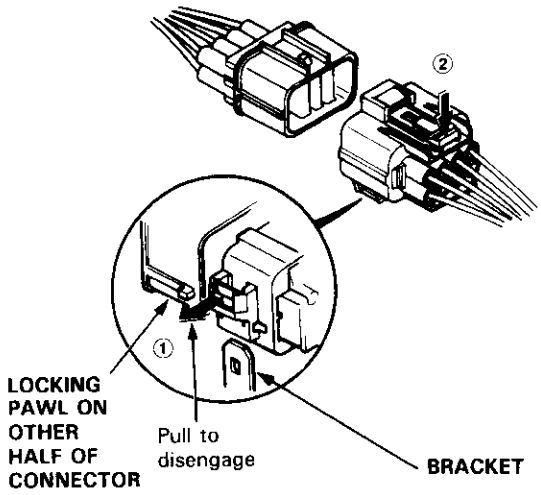

- Never try to disconnect connectors by pulling on their wires; pull on the connector halves instead.
- Always reinstall plastic covers.

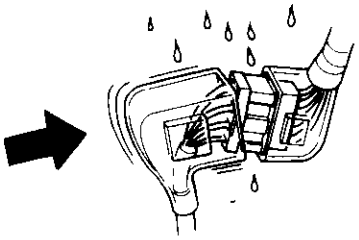

- Before connecting connectors, make sure the terminals are in place and not bent.

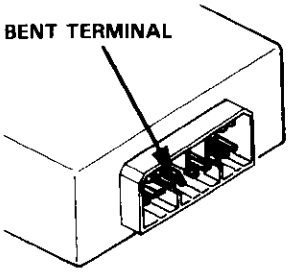

- Check for loose retainer and rubber seals.

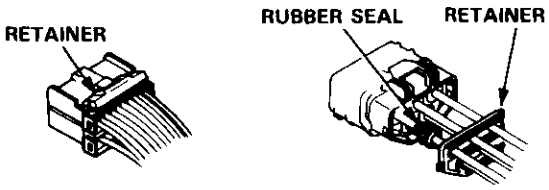

- The backs of some connectors are packed with grease. Add grease if necessary. If the grease is contaminated, replace it.

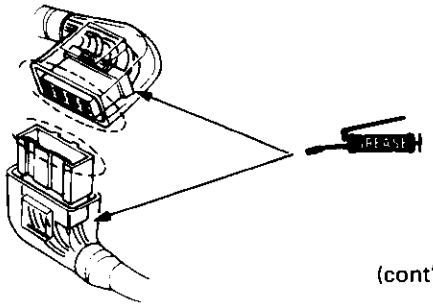

(cont'd)

Tips and Precautions (cont'd)

- Insert the connector all the way and make sure it is securely locked.
- Position wires so that the open end of the cover faces down.

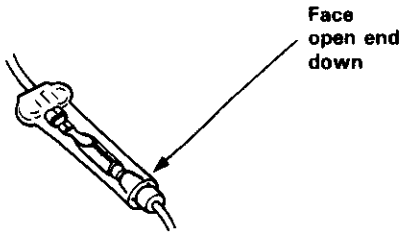

Handling Wires and Harnesses

- Secure wires and wire harnesses to the frame with their respective wire ties at the designated locations.
- Remove clips carefully; don't damage their locks.

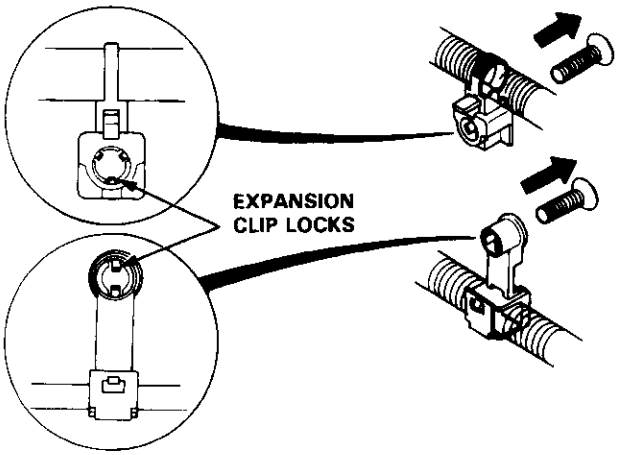

Slip pliers under the clip base and through the hole at an angle, then squeeze the expansion tabs to release the clip.

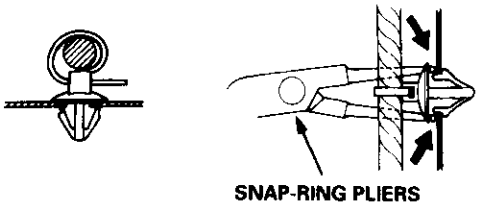

- After installing harness clips, make sure the harness doesn't interfere with any moving parts.
- Keep wire harnesses away from exhaust pipes and other hot parts, from sharp edges of brackets and holes, and from exposed screws and bolts.

- Seat grommets in their grooves properly.

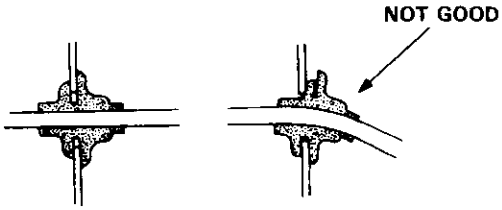

Testing and Repairs

- Do not use wires or harnesses with broken insulation. Replace them or repair them by wrapping the break with electrical tape.
- After installing parts, make sure that no wires are pinched under them.
- When using electrical test equipment, follow the manufacturer's instructions and those described in this manual.
- If possible, insert the probe of the tester from the wire side (except waterproof connector).

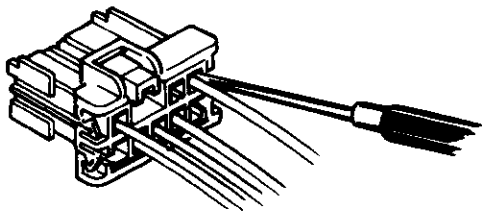

- Use a probe with a tapered tip.

- Refer to the instructions in the Honda Terminal Kit for identification and replacement of connector terminals.

Five-step Troubleshooting

1. Verify The Complaint
   Turn on all the components in the problem circuit to verify the customer complaint. Note the symptoms. Do not begin disassembly or testing until you have narrowed down the problem area.

2. Analyze The Schematic
   Look up the schematic for the problem circuit. Determine how the circuit is supposed to work by tracing the current paths from the power feed through the circuit components to ground. If several circuits fail at the same time, the fuse or ground is a likely cause.

   Based on the symptoms and your understanding of the circuit operation, identify one or more possible causes of the problem.

3. Isolate The Problem By Testing The Circuit
   Make circuit tests to check the diagnosis you made in step 2. Keep in mind that a logical, simple procedure is the key to efficient troubleshooting. Test for the most likely cause of failure first. Try to make tests at points that are easily accessible.

4. Fix The Problem
   Once the specific problem is identified, make the repair. Be sure to use proper tools and safe procedures.

5. Make Sure The Circuit Works
   Turn on all components in the repaired circuit in all modes to make sure you've fixed the entire problem. If the problem was a blown fuse, be sure to test all of the circuits on the fuse. Make sure no new problems turn up and the original problem does not recur.

Wire Color Codes

The following abbreviations are used to identify wire colors in the circuit schematics:

WHT	White
YEL	Yellow
BLK	Black
BLU	Blue
GRN	Green
RED	Red
ORN	Orange
PNK	Pink
BRN	Brown
GRY	Gray
PUR	Purple
LT BLU	Light Blue
LT GRN	Light Green

The wire insulation has one color or one color with another color stripe. The second color is the stripe.

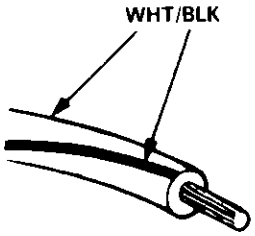

Schematic Symbols

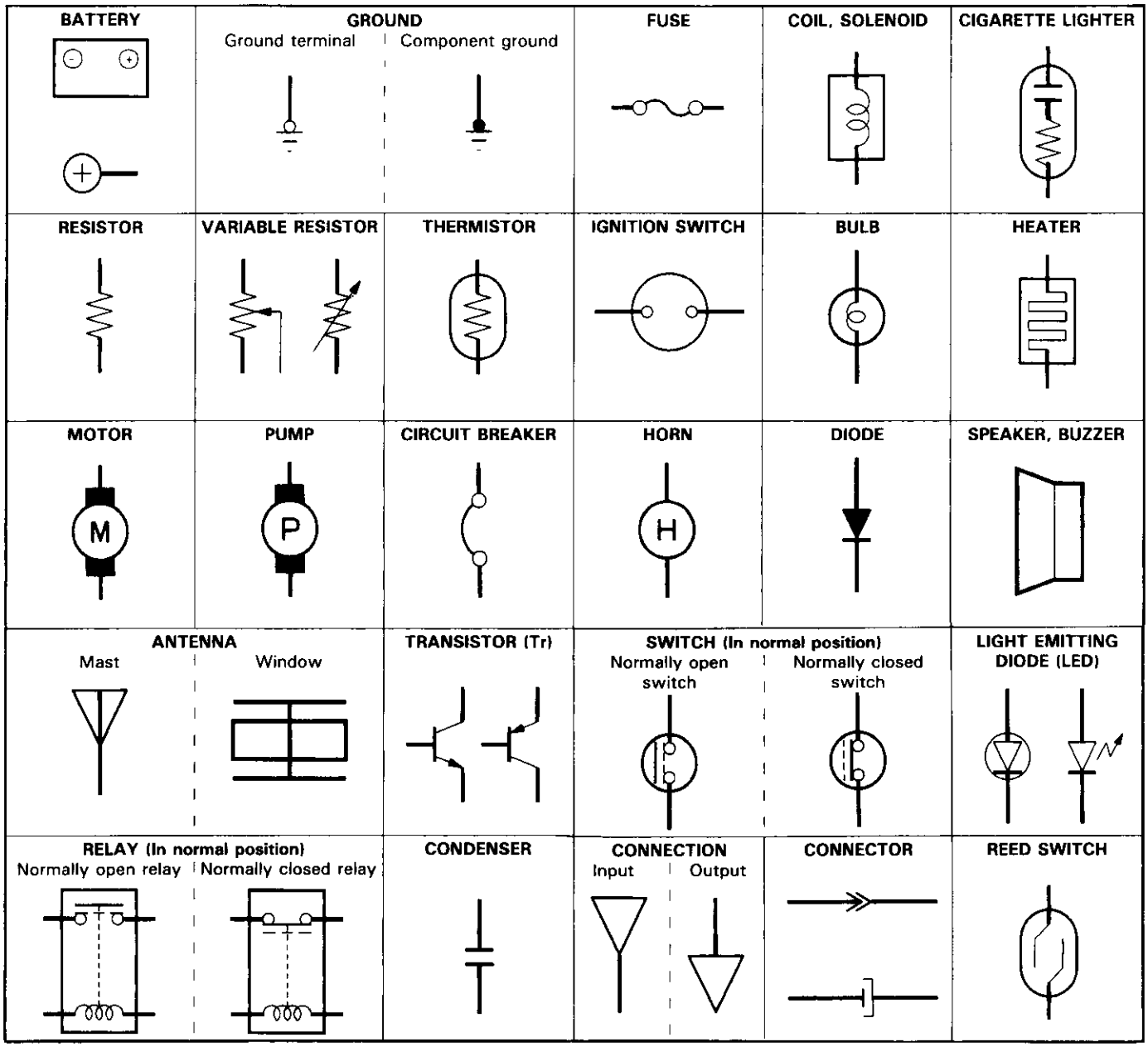

Relay and Control Unit Locations

Engine Compartment

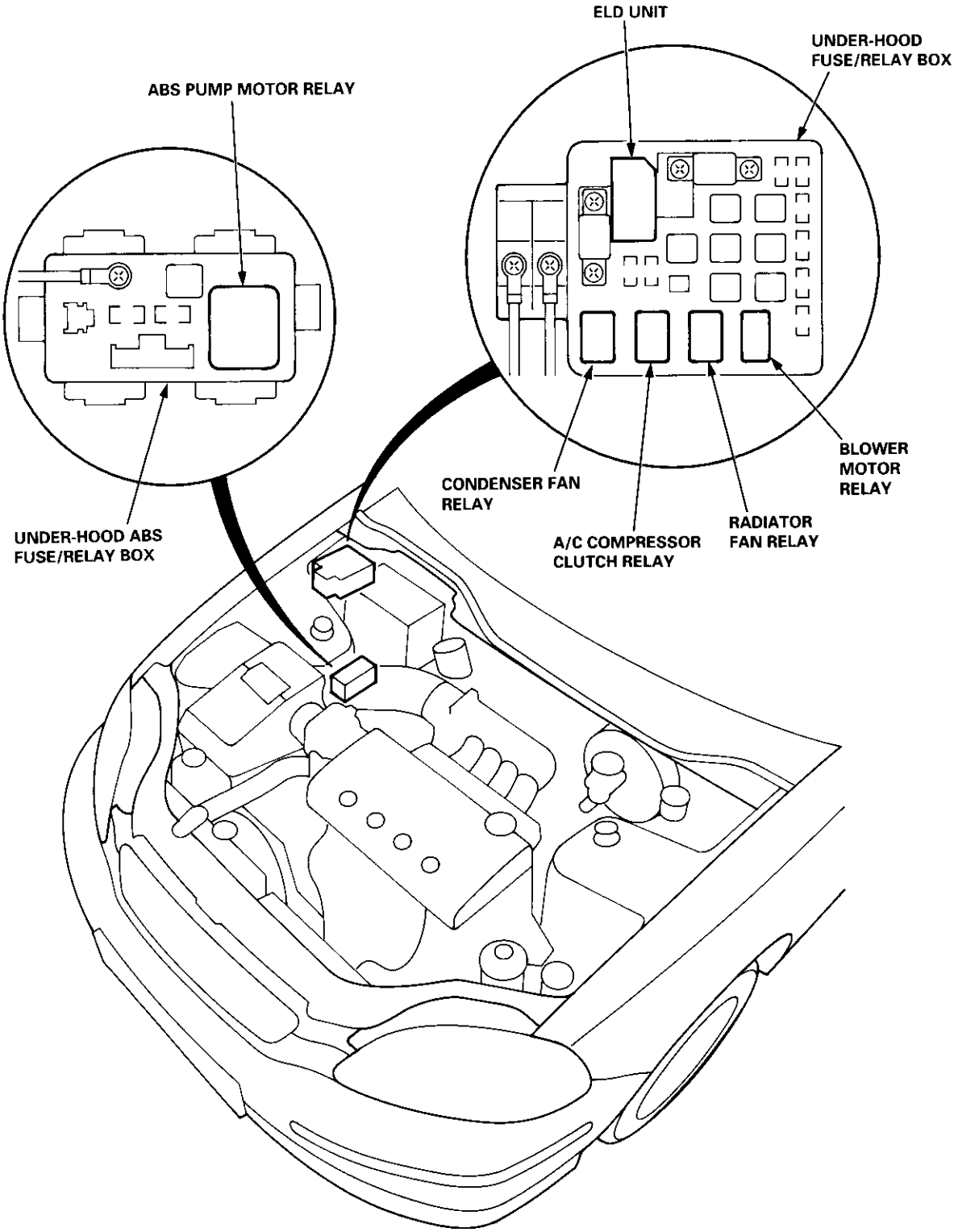

Relay and Control Unit Locations

Dashboard: '96 – 97 models

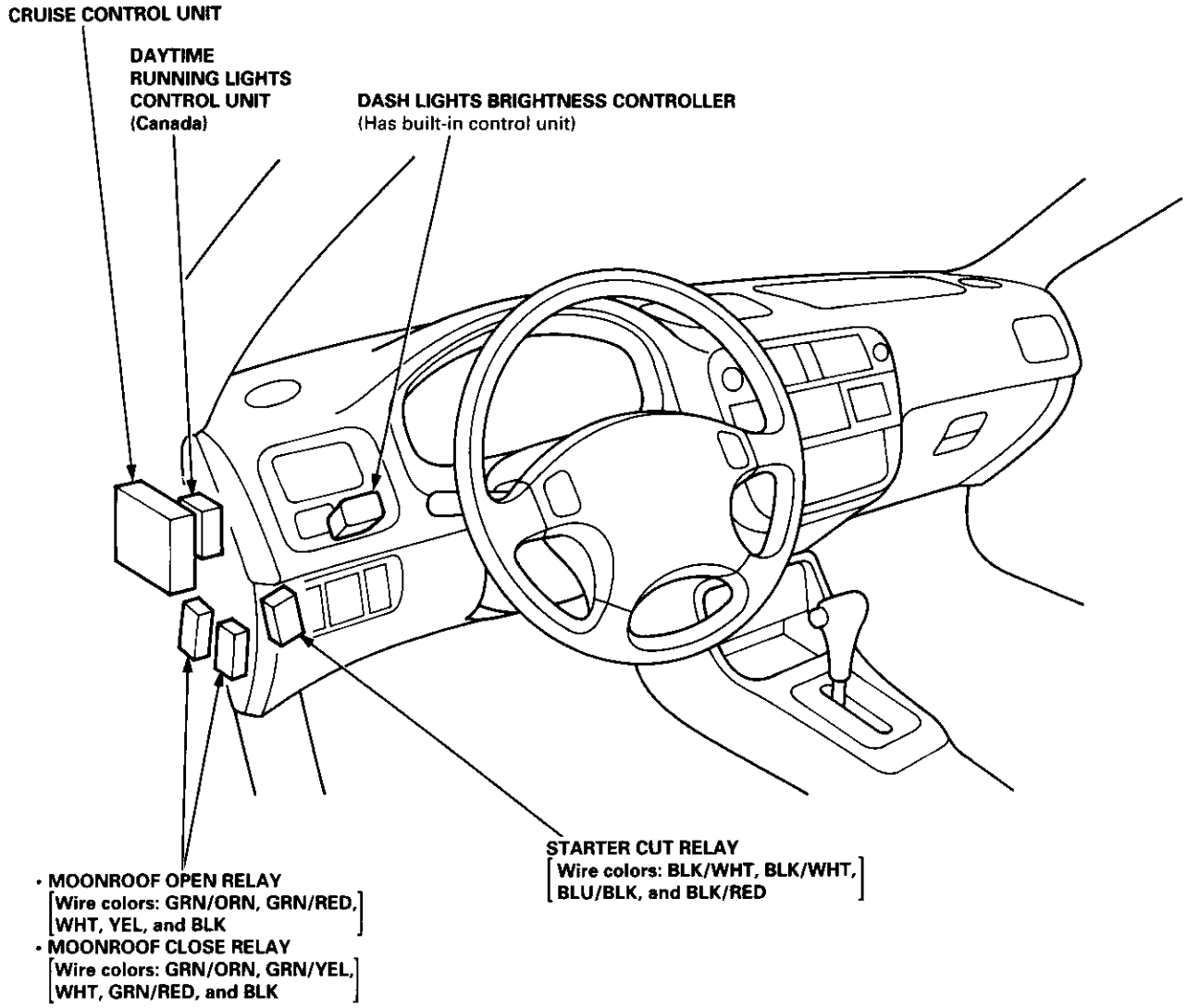

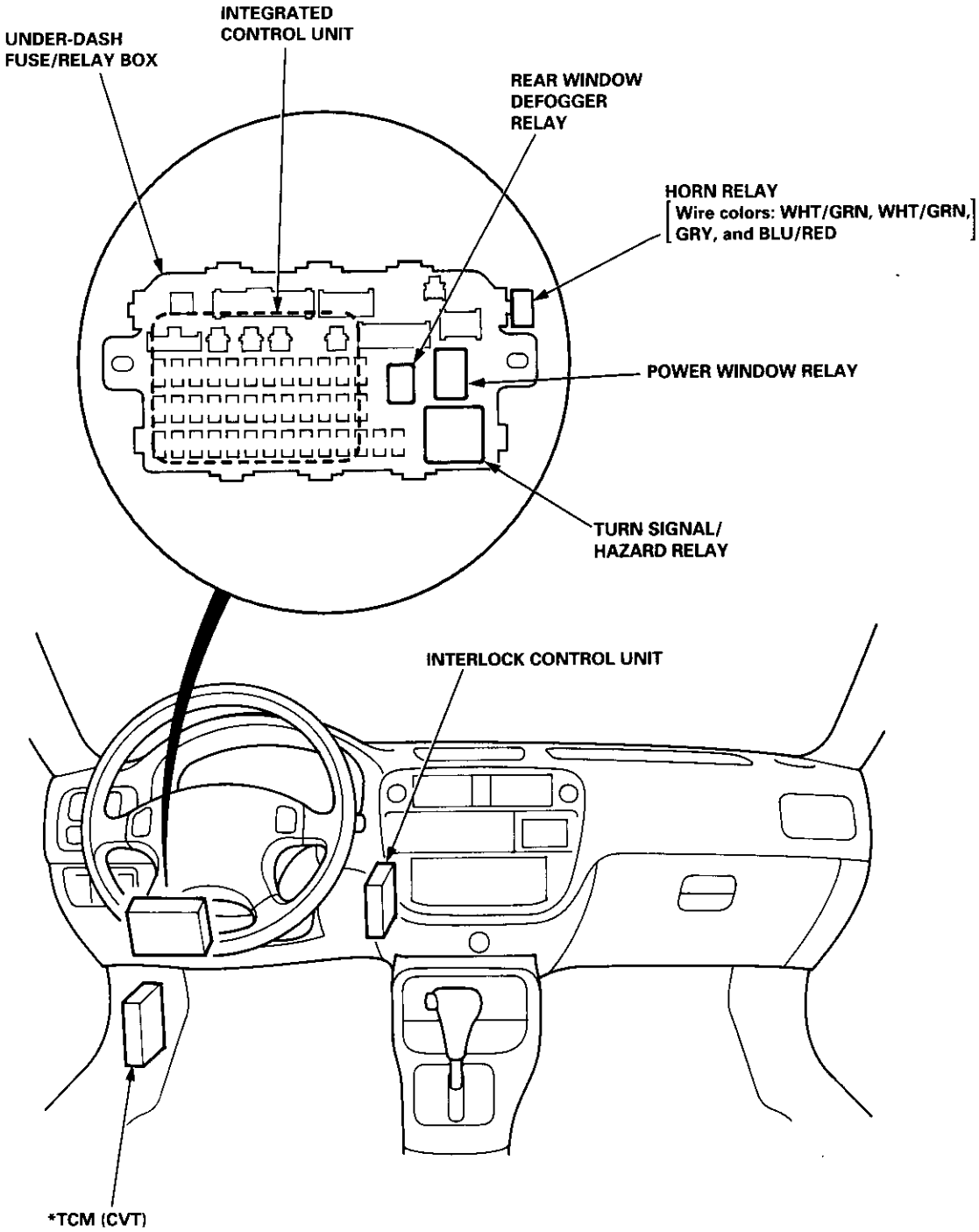
UNDER-DASH
FUSE/RELAY BOX
INTEGRATED
CONTROL UNIT
REAR WINDOW
DEFOGGER
RELAY
HORN RELAY
[Wire colors: WHT/GRN, WHT/GRN, GRY, and BLU/RED]
POWER WINDOW RELAY
TURN SIGNAL/
HAZARD RELAY
INTERLOCK CONTROL UNIT
*TCM (CVT)

*: Coupe

Relay and Control Unit Locations

Dashboard: '98 – 00 models

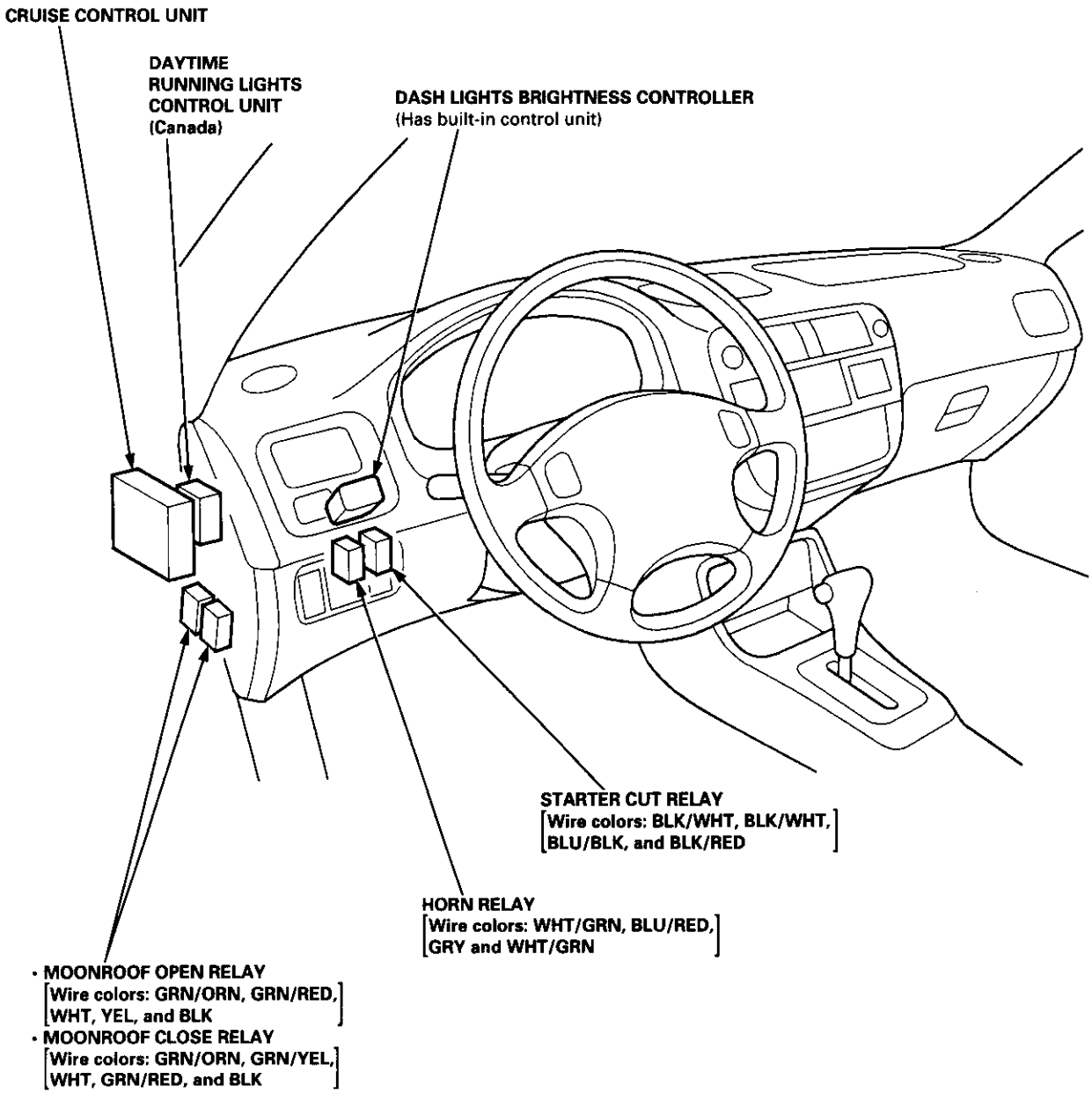

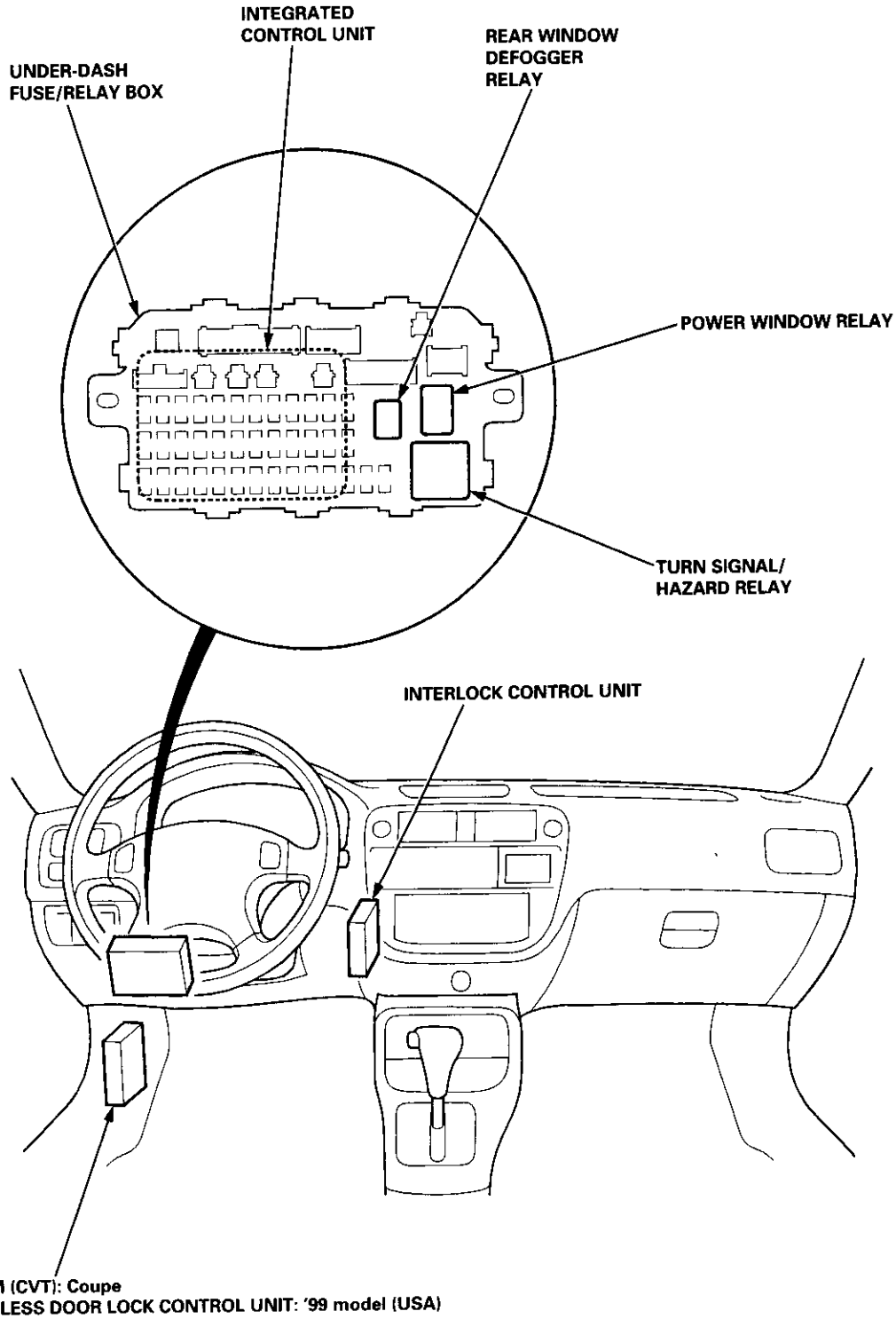

• TCM (CVT): Coupe
• KEYLESS DOOR LOCK CONTROL UNIT: '99 model (USA)

Relay and Control Unit Locations

Dashboard/Door

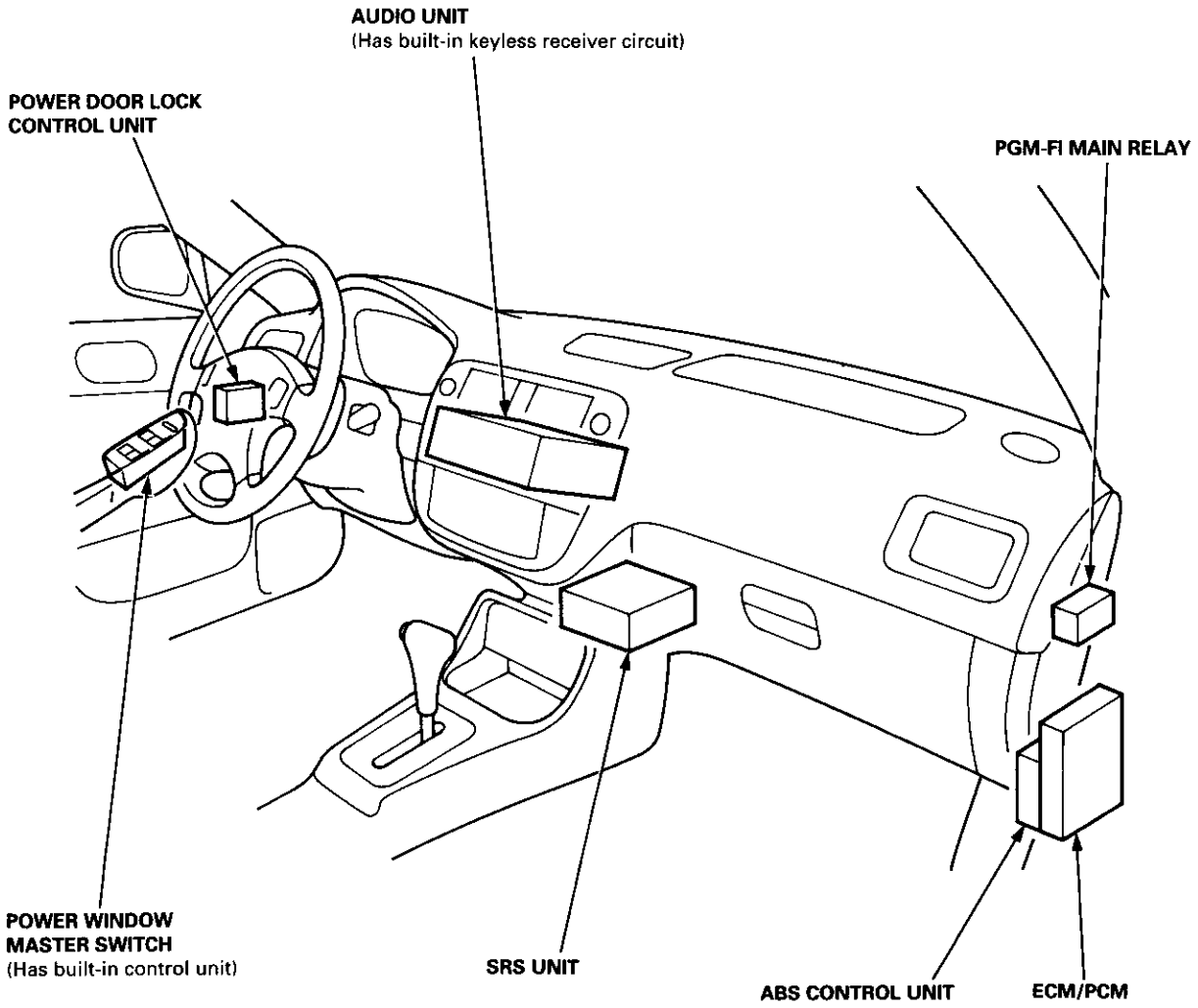

How to Identify Connectors:
Identification numbers have been assigned to all connectors. The number is preceded by the letter "C" for connectors, "G" for ground terminals or "T" for non-ground terminals.

Harness \ Location	Engine Compartment	Dashboard	Others (Floor, Door, Trunk/Hatch, and Roof)
Starter cables	T1, T2 and ⊕		
Battery ground cable	G1 and ⊖		
Engine ground cable A	T3 G2		
Engine ground cable B	T4 G3		
Under-hood ABS fuse/relay box wire harness (With ABS)	T5 and ⊕		
Engine wire harness	C101 thru C147 T101 and T102 G101		
Engine compartment wire harness	C201 thru C215 G201 and G202		
Main wire harness	C301 thru C310 C351 thru C361	C401 thru C452 G401 and G402	
Dashboard wire harness		C501 thru C520 G501	
Floor wire harness		C551 thru C573 G551 and G552	
Rear wire harness			C601 thru C621 G601 and G602
Driver's door wire harness			C631 thru C640
Passenger's door wire harness			C651 thru C657
Left rear door wire harness (Sedan)			C661 thru C664
Right rear door wire harness (Sedan)			C671 thru C674
Roof wire harness (Without moonroof)			C701 thru C719
Moonroof wire harness (With moonroof)			C711 thru C719
Heater sub-harness A		C721 thru C729	
Heater sub-harness B		C741 thru C744	
A/C wire harness	C751 thru C754 G751		
Hatch wire harness (Hatchback)			C761 thru C768 G761
Rear window defogger ground wire			C771 G771
Secondary heated oxygen sensor sub-harness			C781 and C782
Fuel tank pressure sensor sub-harness			C791 thru C793
SRS main harness			C801 thru C807 G801
Rear window defogger wire			C831 thru C833

Starter Cables

Connector or Terminal	Number of Cavities	Location	Connects to	Notes
T1 T2		Right side of engine compartment Right side of engine compartment	Under-hood fuse/relay box Starter motor	
⊕		Battery	Battery positive terminal	

Battery Ground Cable

Connector or Terminal	Number of Cavities	Location	Connects to	Notes
G1		Right front shock tower	Body ground, via battery ground cable	
⊖		Battery	Battery negative terminal	

Engine Ground Cable A

Connector or Terminal	Number of Cavities	Location	Connects to	Notes
T3		Left side of engine	Power steering pump bracket	
G2		Left side of engine compartment	Body ground, via engine ground cable A	

Engine Ground Cable B

Connector or Terminal	Number of Cavities	Location	Connects to	Notes
T4		Right side of engine compartment	Transmission	
G3		Right side of front frame	Body ground, via engine ground cable B	

Under-hood ABS Fuse/Relay Box Wire Harness

Connector or Terminal	Number of Cavities	Location	Connects to	Notes
T5		Right side of engine compartment	Under-hood fuse/relay box	
⊕		Battery	Battery positive terminal	

A/C Wire Harness

Connector or Terminal	Number of Cavities	Location	Connects to	Notes
C751	4	Right side of engine compartment	Engine compartment wire harness (C209)	
C752	1	Right side of engine compartment	Compressor clutch	
C753	2	Right side of engine compartment	Condenser fan motor	
C754	2	Right side of engine compartment	A/C pressure switch	
G751		Left side of engine compartment	Body ground, via A/C wire harness	

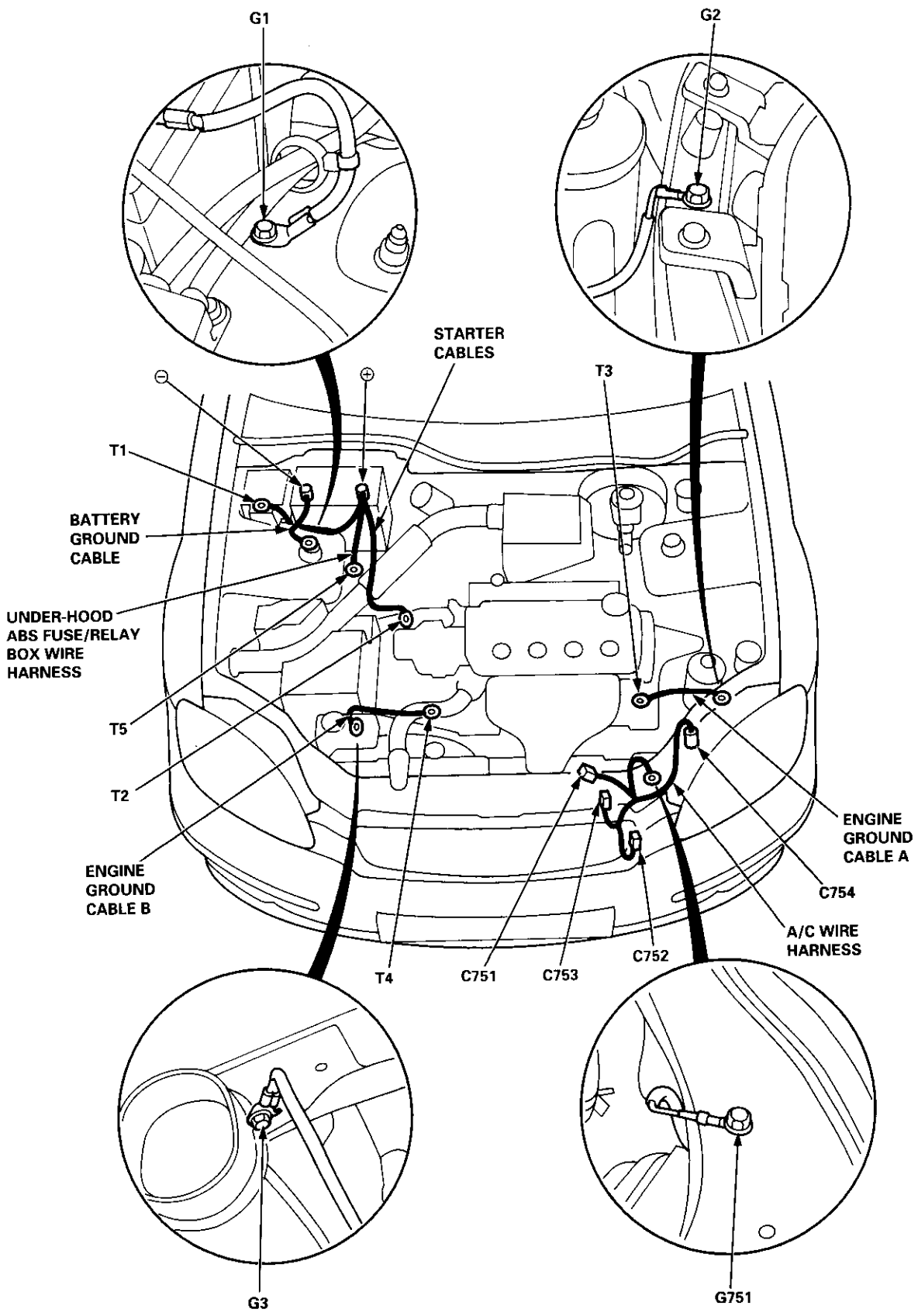
G1
G2
STARTER CABLES
T3
T1
BATTERY GROUND CABLE
UNDER-HOOD ABS FUSE/RELAY BOX WIRE HARNESS
T5
T2
ENGINE GROUND CABLE B
ENGINE GROUND CABLE A
C754
A/C WIRE HARNESS
C752
T4
C751
C753
G3
G751

Engine Wire Harness (D16Y5, D16Y8 engines): '96 – 98 models

Connector or Terminal	Number of Cavities	Location	Connects to	Notes
C101	10	Left side of engine compartment	Main wire harness (C303)	
C102	3	Middle of engine	Crankshaft speed fluctuation (CKF) sensor	
C103	1	Middle of engine	Engine oil pressure switch	
C104	4	Left side of engine compartment	Alternator	USA
C104	3	Left side of engine compartment	Alternator	Canada
C105	2	Middle of engine	No. 1 fuel injector	
C106	2	Middle of engine	No. 2 fuel injector	
C107	2	Middle of engine	No. 3 fuel injector	
C108	2	Middle of engine	No. 4 fuel injector	
C109	3	Middle of engine	IAC valve	A/T
C110	3	Middle of engine	Throttle position (TP) sensor	
C111	3	Middle of engine	Manifold absolute pressure (MAP) sensor	
C112	2	Middle of engine	Intake air temperature (IAT) sensor	
C113	2	Middle of engine	Power steering pressure (PSP) switch	USA
C114	2	Middle of engine	EVAP purge control solenoid valve	
C115	14	Middle of engine	Junction connector	
C116	14	Middle of engine	Junction connector	
C117	3	Left side of engine compartment	Vehicle speed sensor (VSS)	
C118	2	Middle of engine	Countershaft speed sensor	*2 (A/T)
C119	2	Middle of engine	Engine coolant temperature (ECT) switch A	
C120	10	Middle of engine	Distributor	
C121	1	Middle of engine	Engine coolant temperature (ECT) sending unit	
C122	2	Middle of engine	Engine coolant temperature (ECT) sensor	
C123	4	Middle of engine	Primary HO2S (sensor 1)	*3
C123	8	Middle of engine	Primary HO2S (sensor 1)	*1 (M/T)
C124	2	Middle of engine	Back-up light switch	M/T
C124	2	Middle of engine	Lock-up control solenoid valve	*2 (A/T)
C125	4	Middle of engine	Secondary HO2S (sensor 2)	*1
C126	2	Middle of engine	Mainshaft speed sensor	*2
C127	2	Middle of engine	Linear solenoid valve	*2
C128	2	Middle of engine	Shift control solenoid valve	*2
C129	1	Right side of engine compartment	Starter solenoid	
C130	20	Behind right kick panel	Junction connector	
C131	22	Under right side of dash	Main wire harness (C446)	
C132	32	Under right side of dash	ECM/PCM	
C133	25	Under right side of dash	PCM	*2 (A/T)
C134	31	Under right side of dash	ECM/PCM	
C135	16	Under right side of dash	ECM/PCM	
C136	14	Under right side of dash	Main wire harness (C305)	A/T: '96 model
C136	14	Under right side of dash	Main wire harness (C305)	*1 (A/T): '97 – 98 models
C136	8	Under right side of dash	Main wire harness (C305)	A/T: '97 – 98 models
C137	2	Middle of engine	Knock sensor (KS)	
C138	2	Middle of engine	IAC valve	M/T
C139	1	Middle of engine	VTEC solenoid valve	
C140	2	Middle of engine	VTEC pressure switch	
C141	2	Middle of engine	EVAP control canister vent shut valve	*2
C142	2	Middle of engine	EGR control solenoid valve	*1 (A/T)
C143	2	Left side of engine compartment	Secondary gear shaft speed sensor	*1 (A/T)
C144	3	Middle of engine	EGR valve	*1 (A/T)
C144	6	Middle of engine	EGR valve	*1 (M/T)
C145	2	Right side of engine compartment	Drive pulley speed sensor	*1 (A/T)
C146	8	Right side of engine compartment	Solenoid connector (CVT)	*1 (CVT)
C147	2	Right side of engine compartment	Driven pulley speed sensor	*1 (A/T)
T101		Left side of engine compartment	Alternator	
T102		Right side of engine compartment	Under-hood fuse/relay box	
G101		Middle of engine	Engine ground, via engine wire harness	

*1: D16Y5 engine
*2: D16Y8 engine
*3: D16Y5 (A/T), D16Y8 engines

'96 – 98 models:

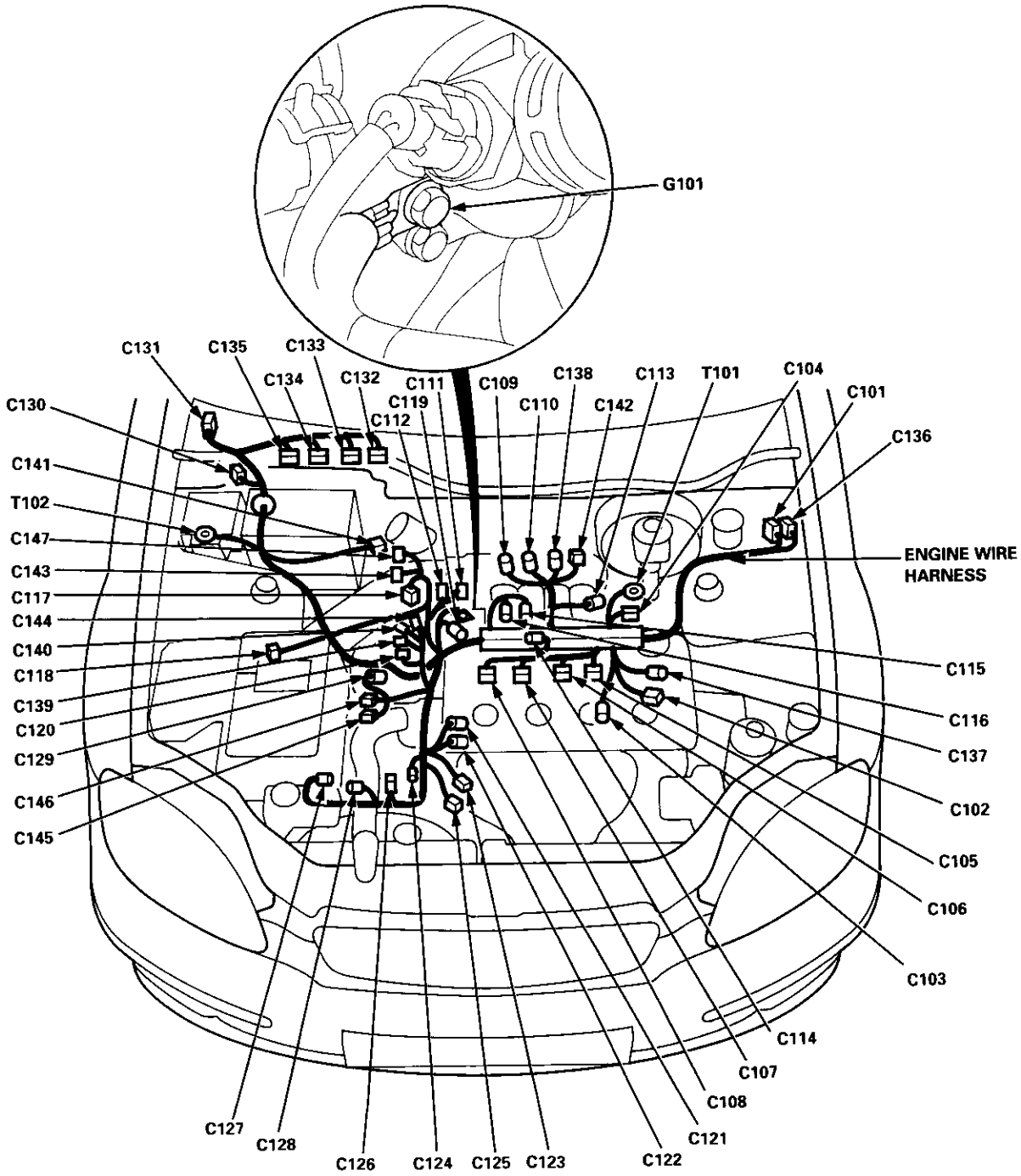
G101
C131
C135
C133
C134
C132
C111
C109
C138
C113
T101
C104
C101
C130
C119
C110
C142
C112
C136
C141
T102
C147
C143
C117
C144
C140
C118
C139
C120
C129
C146
C145
ENGINE WIRE HARNESS
C115
C116
C137
C102
C105
C106
C103
C114
C107
C108
C121
C122
C123
C125
C124
C126
C128
C127

Engine Wire Harness (D16Y5, D16Y8 engines): '99 – 00 models

Connector or Terminal	Number of Cavities	Location	Connects to	Notes
C101	10	Left side of engine compartment	Main wire harness (C303)	
C102	3	Middle of engine	Crankshaft speed fluctuation (CKF) sensor	
C103	1	Middle of engine	Engine oil pressure switch	
C104	4	Left side of engine compartment	Alternator	USA
C104	3	Left side of engine compartment	Alternator	Canada
C105	2	Middle of engine	No. 1 fuel injector	
C106	2	Middle of engine	No. 2 fuel injector	
C107	2	Middle of engine	No. 3 fuel injector	
C108	2	Middle of engine	No. 4 fuel injector	
C109	3	Middle of engine	IAC valve	A/T
C110	3	Middle of engine	Throttle position (TP) sensor	
C111	3	Middle of engine	Manifold absolute pressure (MAP) sensor	
C112	2	Middle of engine	Intake air temperature (IAT) sensor	
C113	2	Middle of engine	Power steering pressure (PSP) switch	USA
C114	2	Middle of engine	EVAP purge control solenoid valve	
C115	14	Middle of engine	Junction connector	
C116	14	Middle of engine	Junction connector	
C117	3	Middle of engine	Vehicle speed sensor (VSS)	
C118	2	Right side of engine compartment	Countershaft speed sensor	*2 (A/T)
C119	2	Middle of engine	Engine coolant temperature (ECT) switch A	
C120	10	Middle of engine	Distributor	*1
C120	8	Middle of engine	Distributor	*2
C121	1	Middle of engine	Engine coolant temperature (ECT) sending unit	
C122	2	Middle of engine	Engine coolant temperature (ECT) sensor	
C123	4	Middle of engine	Primary HO2S (sensor 1)	*1 (CVT)
C123	8	Middle of engine	Primary HO2S (sensor 1)	*1 (M/T)
C123	4	Middle of engine	Primary HO2S (sensor 1)	*2
C124	2	Middle of engine	Back-up light switch	M/T
C124	2	Middle of engine	Lock-up control solenoid valve	*2 (A/T)
C125	4	Middle of engine	Secondary HO2S (sensor 2)	*1
C126	2	Middle of engine	Mainshaft speed sensor	*2 (A/T)
C127	2	Middle of engine	Linear solenoid valve	*2 (A/T)
C128	2	Middle of engine	Shift control solenoid valve	*2 (A/T)
C129	1	Right side of engine compartment	Starter solenoid	
C130	20	Behind right kick panel	Junction connector	
C131	22	Under right side of dash	Main wire harness (C446)	
C132	32	Behind right kick panel	ECM/PCM	*1 (M/T)
C133	25	Behind right kick panel	ECM/PCM	*3
C134	31	Behind right kick panel	ECM/PCM	
C135	16	Behind right kick panel	PCM	A/T
C137	2	Middle of engine	Knock sensor (KS)	
C138	2	Middle of engine	IAC valve	M/T
C139	1	Middle of engine	VTEC solenoid valve	
C140	2	Middle of engine	VTEC pressure switch	
C142	2	Middle of engine	EGR control solenoid valve	*1 (CVT)
C143	2	Left side of engine compartment	Secondary gear shaft speed sensor	*1 (CVT)
C144	3	Middle of engine	EGR valve	*1 (CVT)
C144	6	Middle of engine	EGR valve	*1 (M/T)
C145	2	Right side of engine compartment	Drive pulley speed sensor	*1 (CVT)
C146	8	Right side of engine compartment	Solenoid connector (CVT)	*1 (CVT)
C147	2	Right side of engine compartment	Driven pulley speed sensor	*1 (CVT)
T101		Left side of engine compartment	Alternator	
T102		Right side of engine compartment	Under-hood fuse/relay box	
G101		Middle of engine	Engine ground, via engine wire harness	

*1: D16Y5 engine
*2: D16Y8 engine
*3: D16Y5 (CVT), D16Y8 engines

'99 – 00 models:

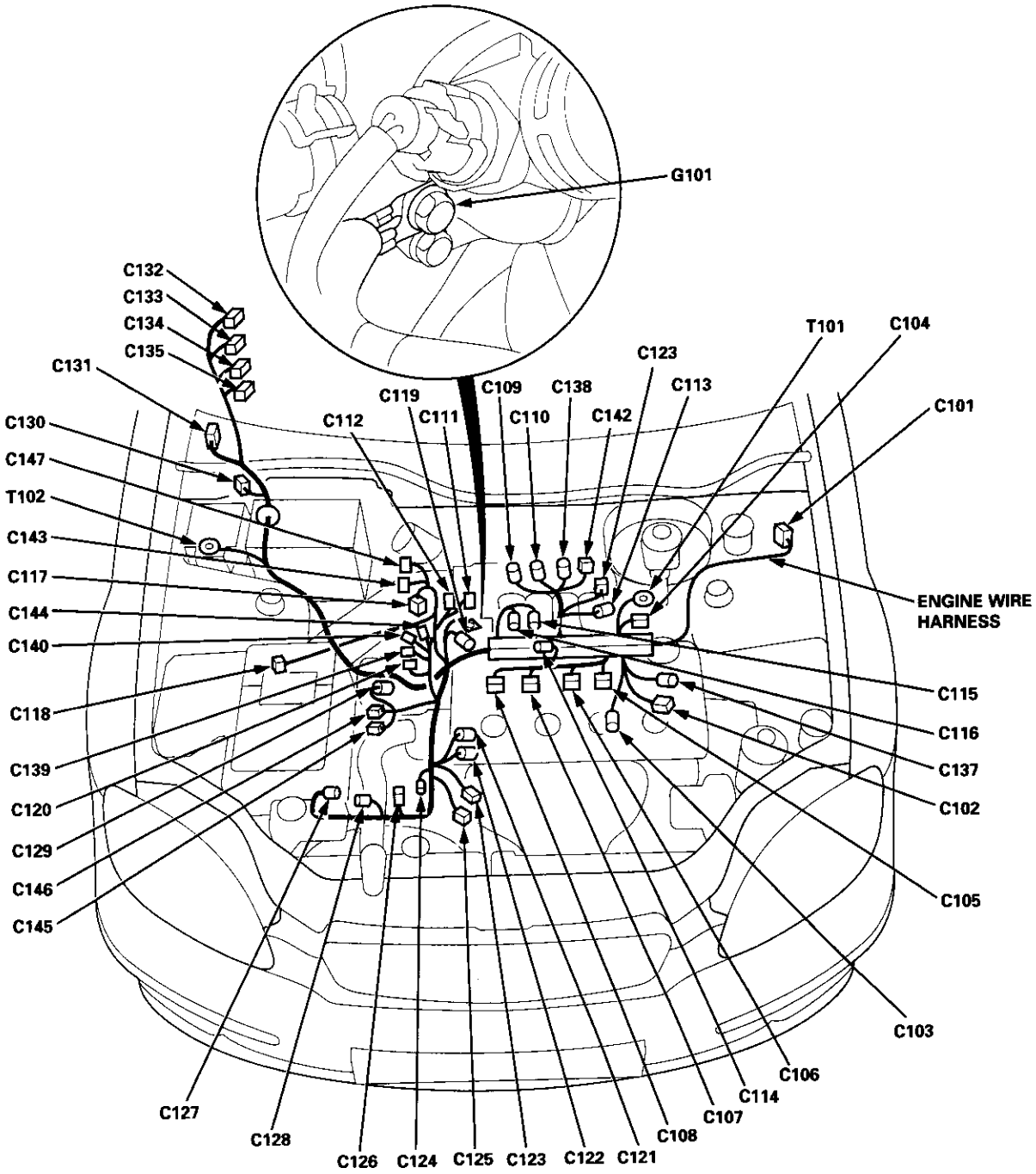
G101
C132
C133
C134
C135
C131
C130
C147
T102
C143
C117
C144
C140
C118
C139
C120
C129
C146
C145
C127
C128
C126
C124
C125
C123
C122
C121
C108
C107
C114
C106
C103
C105
C102
C137
C116
C115
ENGINE WIRE HARNESS
C101
C104
T101
C113
C123
C142
C138
C110
C109
C111
C119
C112

Engine Wire Harness (D16Y7 engine): '96 model

Connector or Terminal	Number of Cavities	Location	Connects to	Notes
C101	10	Left side of engine compartment	Main wire harness (C303)	
C102	3	Middle of engine	Crankshaft speed fluctuation (CKF) sensor	
C103	1	Middle of engine	Engine oil pressure switch	
C104	4	Left side of engine compartment	Alternator	USA
C104	3	Left side of engine compartment	Alternator	Canada
C105	2	Middle of engine	No. 1 fuel injector	
C106	2	Middle of engine	No. 2 fuel injector	
C107	2	Middle of engine	No. 3 fuel injector	
C108	2	Middle of engine	No. 4 fuel injector	
C109	3	Middle of engine	IAC valve	
C110	3	Middle of engine	Throttle position (TP) sensor	
C111	3	Middle of engine	Manifold absolute pressure (MAP) sensor	
C112	2	Middle of engine	Intake air temperature (IAT) sensor	
C113	2	Middle of engine	Power steering pressure (PSP) switch	USA
C114	2	Middle of engine	EVAP purge control solenoid valve	
C115	14	Middle of engine	Junction connector	
C116	14	Middle of engine	Junction connector	
C117	3	Left side of engine compartment	Vehicle speed sensor (VSS)	
C118	2	Middle of engine	Countershaft speed sensor	A/T
C119	2	Middle of engine	Engine coolant temperature (ECT) switch A	
C120	10	Middle of engine	Distributor	
C121	1	Middle of engine	Engine coolant temperature (ECT) sending unit	
C122	2	Middle of engine	Engine coolant temperature (ECT) sensor	
C123	4	Middle of engine	Primary HO2S (sensor 1)	
C124	2	Middle of engine	Back-up light switch	M/T
C124	2	Middle of engine	Lock-up control solenoid valve	A/T
C125	4	Middle of engine	Secondary HO2S (sensor 2)	
C126	2	Middle of engine	Mainshaft speed sensor	A/T
C127	2	Middle of engine	Linear solenoid valve	A/T
C128	2	Middle of engine	Shift control solenoid valve	A/T
C129	1	Right side of engine compartment	Starter solenoid	
C130	20	Behind right kick panel	Junction Connector	
C131	22	Under right side of dash	Main wire harness (C446)	
C132	32	Under right side of dash	ECM/PCM	
C133	25	Under right side of dash	PCM	A/T
C134	31	Under right side of dash	ECM/PCM	
C135	16	Under right side of dash	ECM/PCM	
T101		Left side of engine compartment	Alternator	
T102		Right side of engine compartment	Under-hood fuse/relay box	
G101		Middle of engine	Engine ground, via engine wire harness	

'96 model:

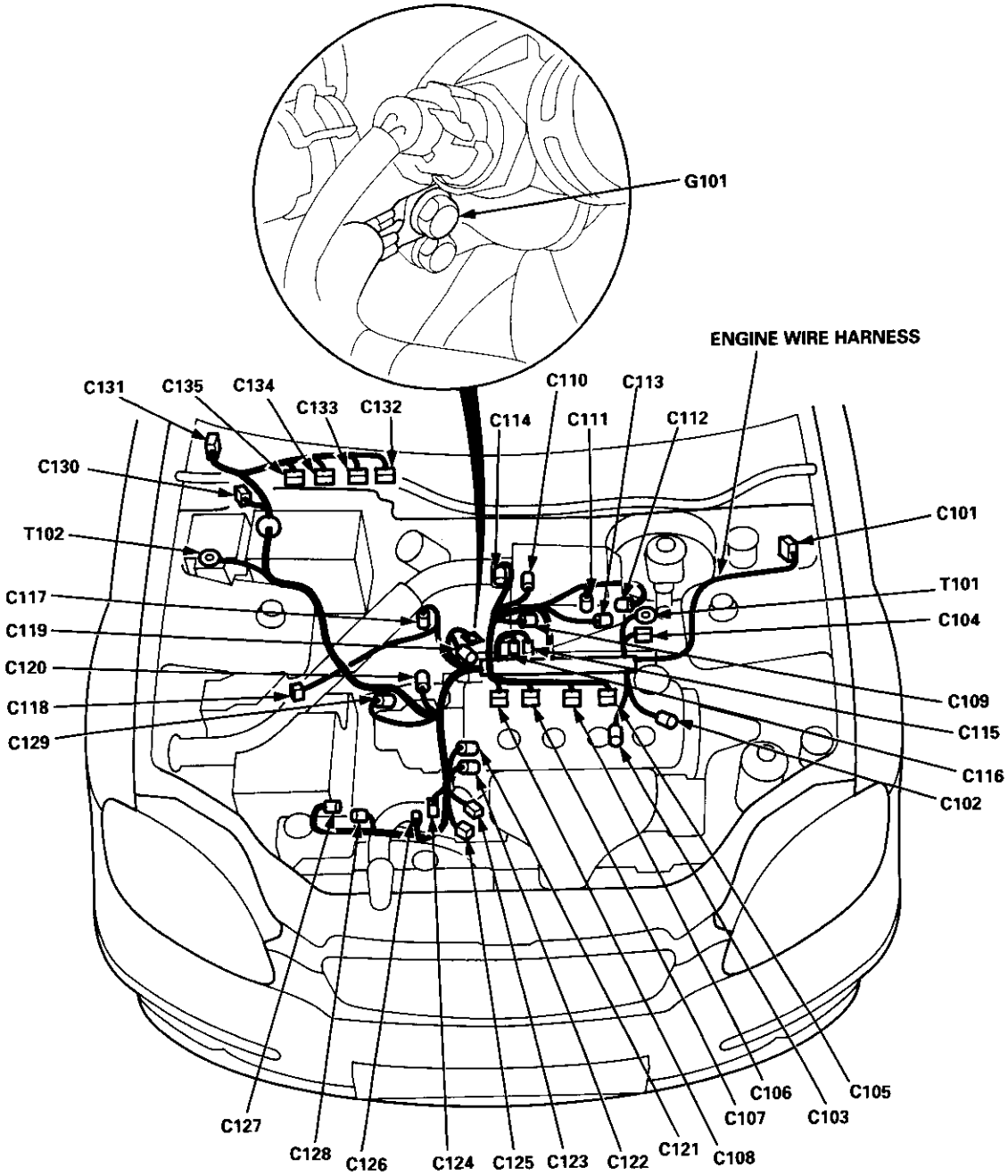
G101
ENGINE WIRE HARNESS
C131
C135
C134
C133
C132
C110
C113
C114
C111
C112
C130
T102
C101
T101
C117
C119
C104
C120
C118
C109
C129
C115
C116
C102
C127
C128
C126
C124
C125
C123
C122
C121
C108
C107
C106
C103
C105

Engine Wire Harness (D16Y7 engine): '97 – 98 models

Connector or Terminal	Number of Cavities	Location	Connects to	Notes
C101	10	Left side of engine compartment	Main wire harness (C303)	
C102	3	Middle of engine	Crankshaft speed fluctuation (CKF) sensor	
C103	1	Middle of engine	Engine oil pressure switch	
C104	4	Left side of engine compartment	Alternator	USA
C104	3	Left side of engine compartment	Alternator	Canada
C105	2	Middle of engine	No. 1 fuel injector	
C106	2	Middle of engine	No. 2 fuel injector	
C107	2	Middle of engine	No. 3 fuel injector	
C108	2	Middle of engine	No. 4 fuel injector	
C109	3	Middle of engine	IAC valve	
C110	3	Middle of engine	Throttle position (TP) sensor	
C111	3	Middle of engine	Manifold absolute pressure (MAP) sensor	
C112	2	Middle of engine	Intake air temperature (IAT) sensor	
C113	2	Middle of engine	Power steering pressure (PSP) switch	USA
C114	2	Middle of engine	EVAP purge control solenoid valve	
C115	14	Middle of engine	Junction connector	
C116	14	Middle of engine	Junction connector	
C117	3	Left side of engine compartment	Vehicle speed sensor (VSS)	
C118	2	Middle of engine	Countershaft speed sensor	A/T
C119	2	Middle of engine	Engine coolant temperature (ECT) switch A	
C120	10	Middle of engine	Distributor	
C121	1	Middle of engine	Engine coolant temperature (ECT) sending unit	
C122	2	Middle of engine	Engine coolant temperature (ECT) sensor	
C123	4	Middle of engine	Primary HO2S (sensor 1)	
C124	2	Middle of engine	Back-up light switch	M/T
C124	2	Middle of engine	Lock-up control solenoid valve	A/T
C125	4	Middle of engine	Secondary HO2S (sensor 2)	
C126	2	Middle of engine	Mainshaft speed sensor	A/T
C127	2	Middle of engine	Linear solenoid valve	A/T
C128	2	Middle of engine	Shift control solenoid valve	A/T
C129	1	Right side of engine compartment	Starter solenoid	
C130	20	Behind right kick panel	Junction connector	
C131	22	Under right side of dash	Main wire harness (C446)	
C132	32	Under right side of dash	ECM/PCM	
C133	25	Under right side of dash	PCM	A/T
C134	31	Under right side of dash	ECM/PCM	
C135	16	Under right side of dash	ECM/PCM	
C136	8	Left side of engine compartment	Main wire harness (C305)	A/T
C141	2	Middle of engine	EVAP control canister vent shut valve	
T101		Left side of engine compartment	Alternator	
T102		Right side of engine compartment	Under-hood fuse/relay box	
G101		Middle of engine	Engine ground, via engine wire harness	

'97 – 98 models:

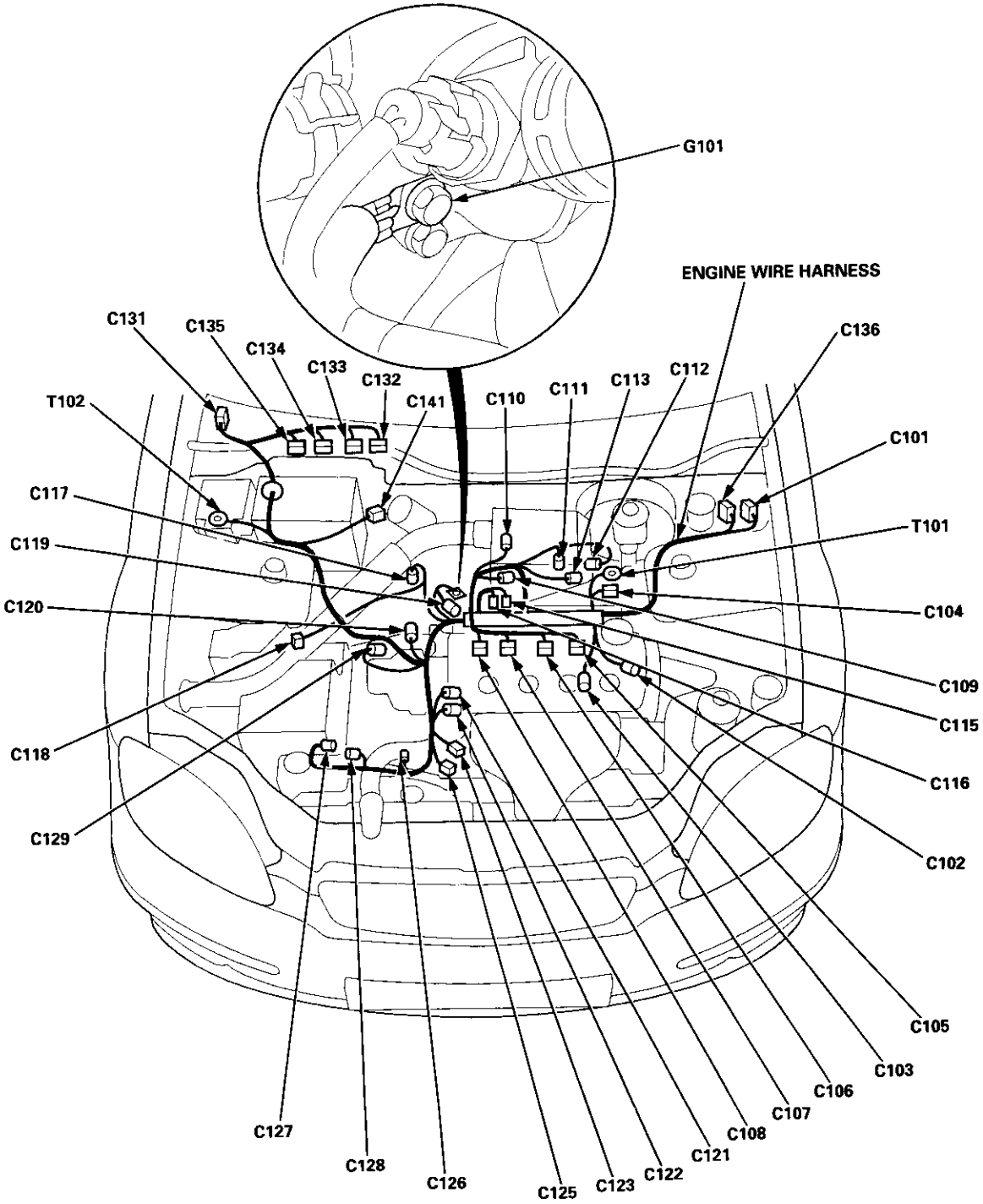
G101
ENGINE WIRE HARNESS
C131
C135
C134
C133
C132
C141
C110
C111
C113
C112
C136
T102
C101
C117
T101
C119
C104
C120
C109
C115
C118
C116
C129
C102
C105
C103
C106
C107
C108
C121
C122
C123
C125
C126
C128
C127

Engine Wire Harness (D16Y7 engine): '99 – 00 models

Connector or Terminal	Number of Cavities	Location	Connects to	Notes
C101	10	Left side of engine compartment	Main wire harness (C303)	
C102	3	Middle of engine	Crankshaft speed fluctuation (CKF) sensor	
C103	1	Middle of engine	Engine oil pressure switch	
C104	4	Left side of engine compartment	Alternator	USA
C104	3	Left side of engine compartment	Alternator	Canada
C105	2	Middle of engine	No. 1 fuel injector	
C106	2	Middle of engine	No. 2 fuel injector	
C107	2	Middle of engine	No. 3 fuel injector	
C108	2	Middle of engine	No. 4 fuel injector	
C109	3	Middle of engine	IAC valve	
C110	3	Middle of engine	Throttle position (TP) sensor	
C111	3	Middle of engine	Manifold absolute pressure (MAP) sensor	
C112	2	Middle of engine	Intake air temperature (IAT) sensor	
C113	2	Middle of engine	Power steering pressure (PSP) switch	USA
C114	2	Middle of engine	EVAP purge control solenoid valve	
C115	14	Middle of engine	Junction connector	
C116	14	Middle of engine	Junction connector	
C117	3	Middle of engine	Vehicle speed sensor (VSS)	
C118	2	Right side of engine compartment	Countershaft speed sensor	A/T
C119	2	Middle of engine	Engine coolant temperature (ECT) switch A	
C120	8	Middle of engine	Distributor	
C121	1	Middle of engine	Engine coolant temperature (ECT) sending unit	
C122	2	Middle of engine	Engine coolant temperature (ECT) sensor	
C123	4	Middle of engine	Primary HO2S (sensor 1)	
C124	2	Middle of engine	Back-up light switch	M/T
C124	2	Middle of engine	Lock-up control solenoid valve	A/T
C125	4	Middle of engine	Secondary HO2S (sensor 2)	
C126	2	Middle of engine	Mainshaft speed sensor	A/T
C127	2	Middle of engine	Linear solenoid valve	A/T
C128	2	Middle of engine	Shift control solenoid valve	A/T
C129	1	Right side of engine compartment	Starter solenoid	
C130	20	Behind right kick panel	Junction Connector	
C131	22	Under right side of dash	Main wire harness (C446)	
C133	25	Behind right kick panel	ECM/PCM	
C134	31	Behind right kick panel	ECM/PCM	
C135	16	Behind right kick panel	PCM	A/T
T101		Left side of engine compartment	Alternator	
T102		Right side of engine compartment	Under-hood fuse/relay box	
G101		Middle of engine	Engine ground, via engine wire harness	

'99 – 00 models:

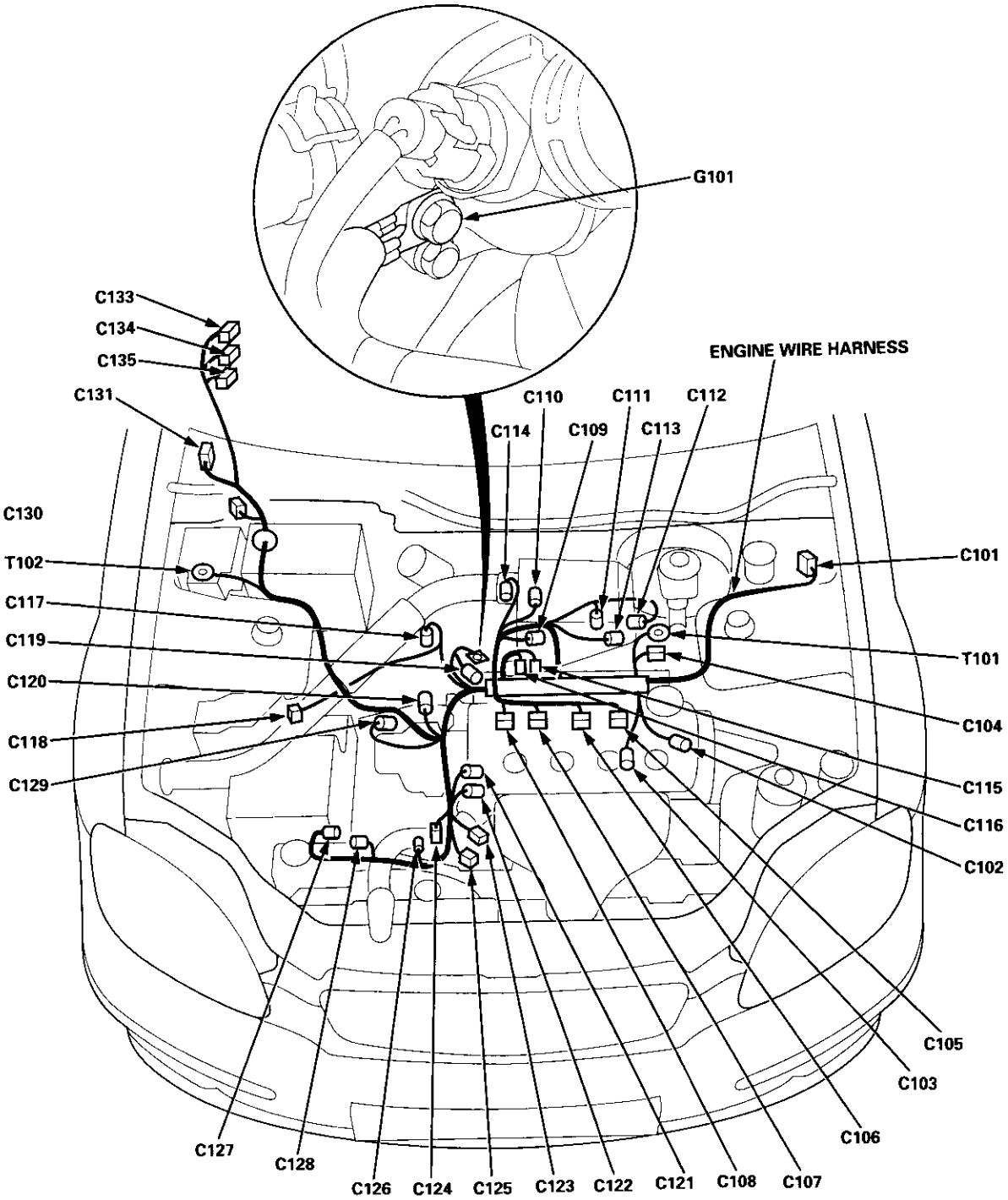
G101
C133
C134
C135
C131
C130
T102
C117
C119
C120
C118
C129
ENGINE WIRE HARNESS
C110
C111
C112
C114
C109
C113
C101
T101
C104
C115
C116
C102
C105
C103
C106
C127
C128
C126
C124
C125
C123
C122
C121
C108
C107

Engine Wire Harness (B16A2 engine): '99 – 00 models

Connector or Terminal	Number of Cavities	Location	Connects to	Notes
C101	10	Left side of engine compartment	Main wire harness (C303)	
C102	2	Middle of engine	Crankshaft speed fluctuation (CKF) sensor	
C103	1	Middle of engine	Engine oil pressure switch	
C104	4	Left side of engine compartment	Alternator	USA
C104	3	Left side of engine compartment	Alternator	Canada
C105	2	Middle of engine	No. 1 fuel injector	
C106	2	Middle of engine	No. 2 fuel injector	
C107	2	Middle of engine	No. 3 fuel injector	
C108	2	Middle of engine	No. 4 fuel injector	
C110	3	Middle of engine	Throttle position (TP) sensor	
C111	3	Middle of engine	Manifold absolute pressure (MAP) sensor	
C112	2	Middle of engine	Intake air temperature (IAT) sensor	
C113	2	Middle of engine	Power steering pressure (PSP) switch	USA
C114	2	Middle of engine	EVAP purge control solenoid valve	
C115	14	Middle of engine	Junction connector	
C116	14	Middle of engine	Junction connector	
C117	3	Middle of engine compartment	Vehicle speed sensor (VSS)	
C119	2	Middle of engine	Engine coolant temperature (ECT) switch A	
C120	10	Middle of engine	Distributor	
C121	1	Middle of engine	Engine coolant temperature (ECT) sending unit	
C122	2	Middle of engine	Engine coolant temperature (ECT) sensor	
C123	4	Middle of engine	Primary HO2S (sensor 1)	
C124	2	Middle of engine	Back-up light switch	
C129	1	Right side of engine compartment	Starter solenoid	
C130	20	Behind right kick panel	Junction connector	
C131	22	Under right side of dash	Main wire harness (C446)	
C133	25	Behind right kick panel	ECM	
C134	31	Behind right kick panel	ECM	
C137	2	Middle of engine	Knock Sensor (KS)	
C138	2	Middle of engine	IAC valve	
C139	1	Middle of engine	VTEC solenoid valve	
C140	2	Middle of engine	VTEC pressure switch	
T101		Left side of engine compartment	Alternator	
T102		Right side of engine compartment	Under-hood fuse/relay box	
G101		Middle of engine	Engine ground, via engine wire harness	

'99 – 00 models:

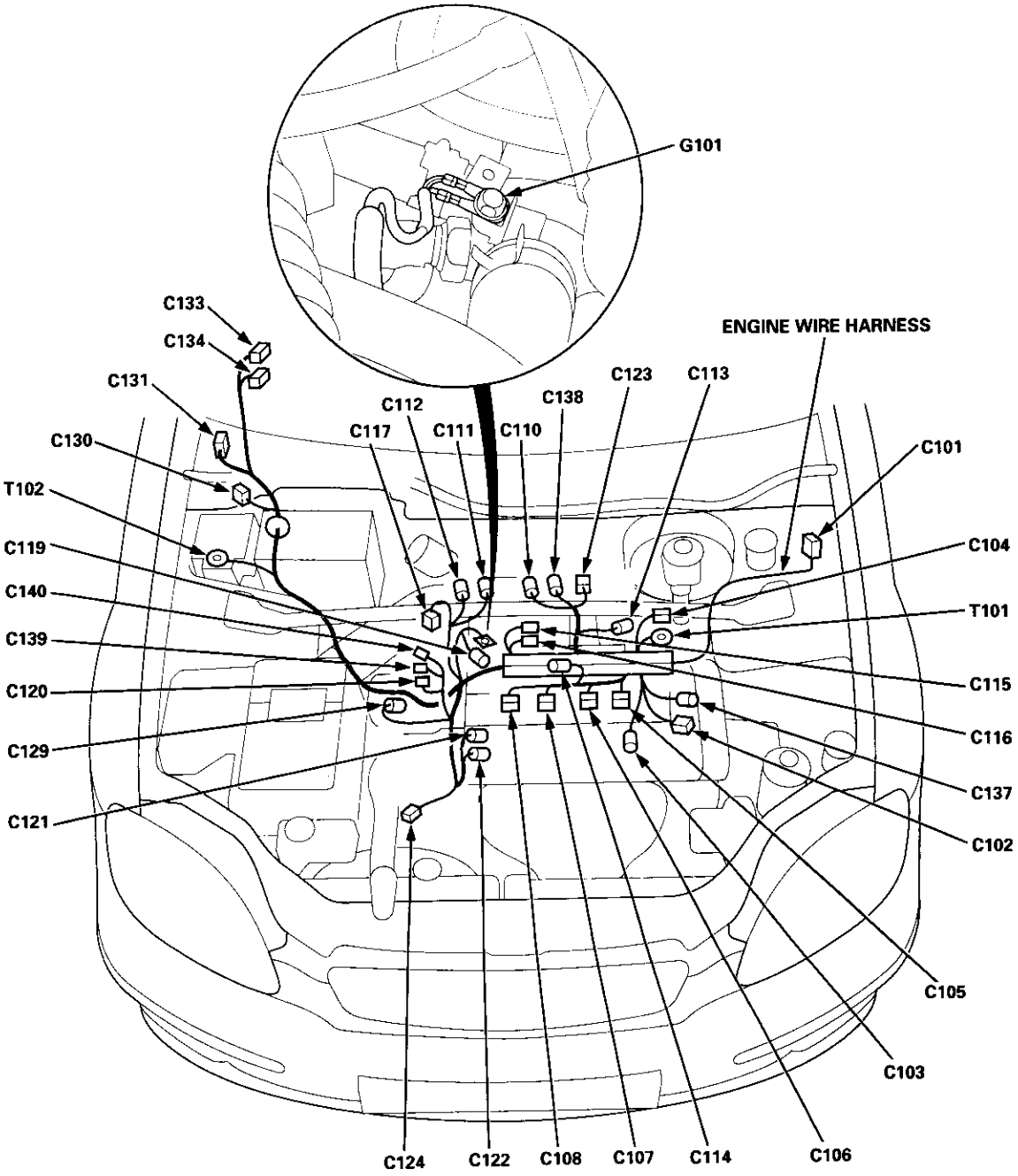
G101
C133
C134
C131
C130
T102
C119
C140
C139
C120
C129
C121
ENGINE WIRE HARNESS
C123
C113
C138
C112
C117
C111
C110
C101
C104
T101
C115
C116
C137
C102
C105
C103
C124
C122
C108
C107
C114
C106

Engine Compartment Wire Harness

Connector or Terminal	Number of Cavities	Location	Connects to	Notes
C201	10	Left side of engine compartment	Main wire harness (C308)	
C202	6	Left side of engine compartment	Main wire harness (C309)	*1
C202	2	Left side of engine compartment	Main wire harness (C309)	*2
C203	4	Left side of engine compartment	Cruise actuator	*1
C204	2	Behind front bumper	Windshield washer motor	
C205	2	Behind front bumper	Rear window washer motor	
C206	3	Left side of engine compartment	Left front turn signal/parking light	
C207	1	Behind front bumper	Front fog light	Optional
C208	3	Left side of engine compartment	Left headlight	
C209	4	Left side of engine compartment	A/C wire harness (C751)	
C210	2	Behind front bumper	Horn	'96 – 97 models
C210	1	Behind front bumper	Horn	'98 – 99 models
C211	2	Right side of engine compartment	Radiator fan motor	
C212	3	Right side of engine compartment	Right headlight	
C213	3	Right side of engine compartment	Right front turn signal/parking light	
C214	8	Right side of engine compartment	Main wire harness (C355)	
C215	2	Behind front bumper	Washer level switch	Canada '99 model
G201		Right side of engine compartment	Body ground, via engine compartment wire harness	
G202		Left side of engine compartment	Body ground, via engine compartment wire harness	

*1: With cruise control
*2: Without cruise control

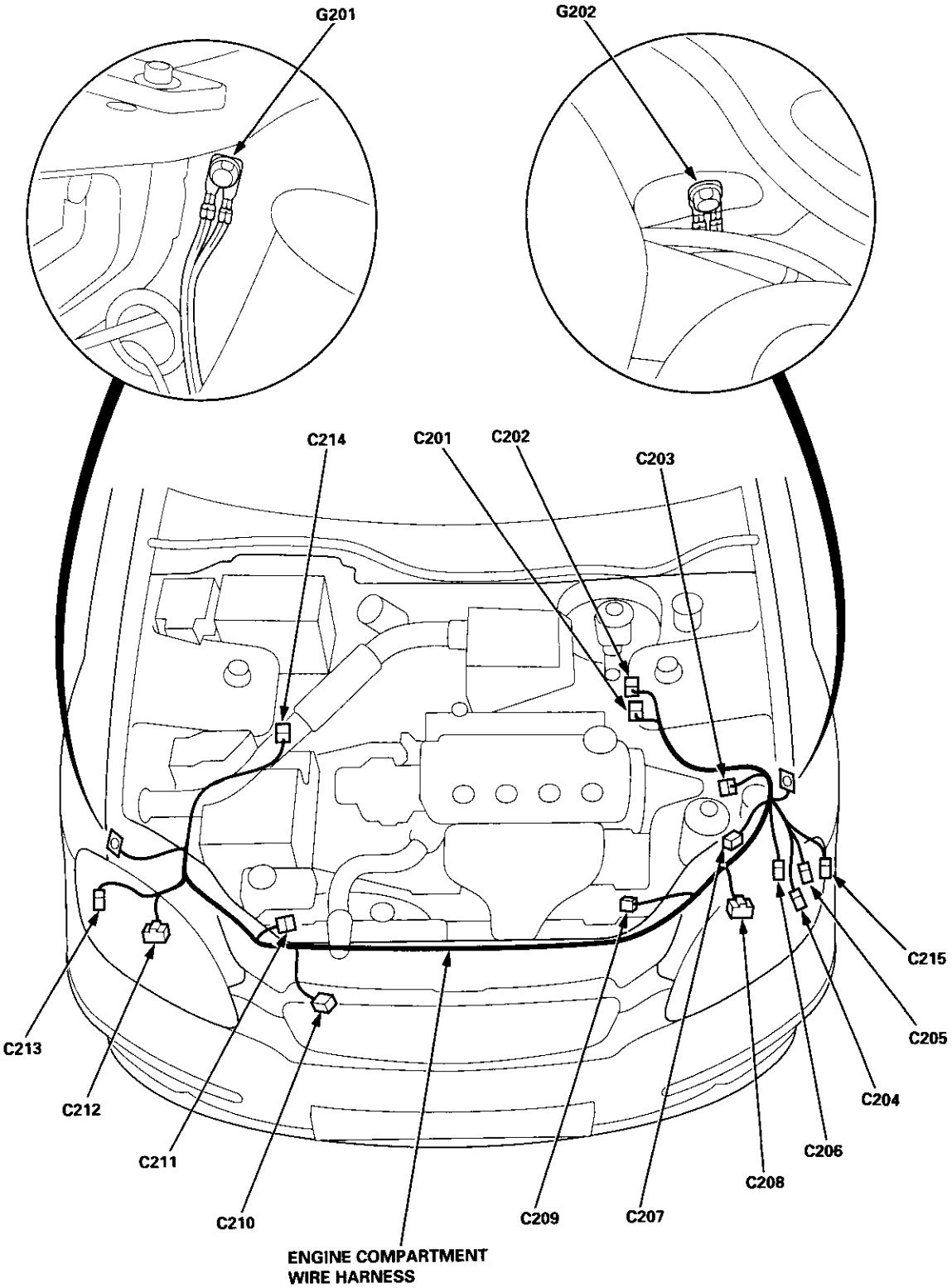
G201
G202
C214
C201
C202
C203
C215
C205
C204
C206
C208
C207
C209
C210
C211
C212
C213
ENGINE COMPARTMENT
WIRE HARNESS

Main Wire Harness (Left side of engine compartment branch)

Connector or Terminal	Number of Cavities	Location	Connects to	Notes
C301	5	Left side of engine compartment	Windshield wiper motor	
C302	2	Left side of engine compartment	Test tachometer connector	
C303	10	Left side of engine compartment	Engine wire harness (C101)	
C304	3	Left side of engine compartment	Daytime running lights resistor	Canada
C305	14	Left side of engine compartment	Engine wire harness (C136)	*1 *5
C305	8	Left side of engine compartment	Engine wire harness (C136)	*2 *5
C306	1	Left side of engine compartment	Brake fluid level switch (+)	
C307	1	Left side of engine compartment	Brake fluid level switch (–)	
C308	10	Left side of engine compartment	Engine compartment wire harness (C201)	
C309	6	Left side of engine compartment	Engine compartment wire harness (C202)	*3
C309	2	Left side of engine compartment	Engine compartment wire harness (C202)	*4
C310	2	Left side of engine compartment	Left front ABS wheel sensor	ABS

*1: D16Y5 engine
*2: D16Y8 engine
*3: With cruise control
*4: Without cruise control
*5: '96 – 98 models

Main Wire Harness (Right side of engine compartment branch)

Connector or Terminal	Number of Cavities	Location	Connects to	Notes
C351	11	Right side of engine compartment	Under-hood fuse/relay box (C908)	
C352	9	Right side of engine compartment	Under-hood fuse/relay box (C906)	
C353	5	Right side of engine compartment	Under-hood fuse/relay box (C905)	
C354	3	Right side of engine compartment	Under-hood fuse/relay box (C907)	USA
C355	8	Right side of engine compartment	Engine compartment wire harness (C214)	
C356	3	Right side of engine compartment	Under-hood ABS fuse/relay box (C927)	ABS
C357	2	Right side of engine compartment	Under-hood ABS fuse/relay box (C926)	ABS
C358	2	Right side of engine compartment	Right front ABS wheel sensor	ABS
C359	10	Right side of engine compartment	ABS solenoid	ABS
C360	2	Right side of engine compartment	ABS pump motor	ABS
C361	2	Right side of engine compartment	EVAP control canister vent shut valve	*1
G403		Right side of engine compartment	Body ground, via main wire harness	

*1: '99 – 00 models

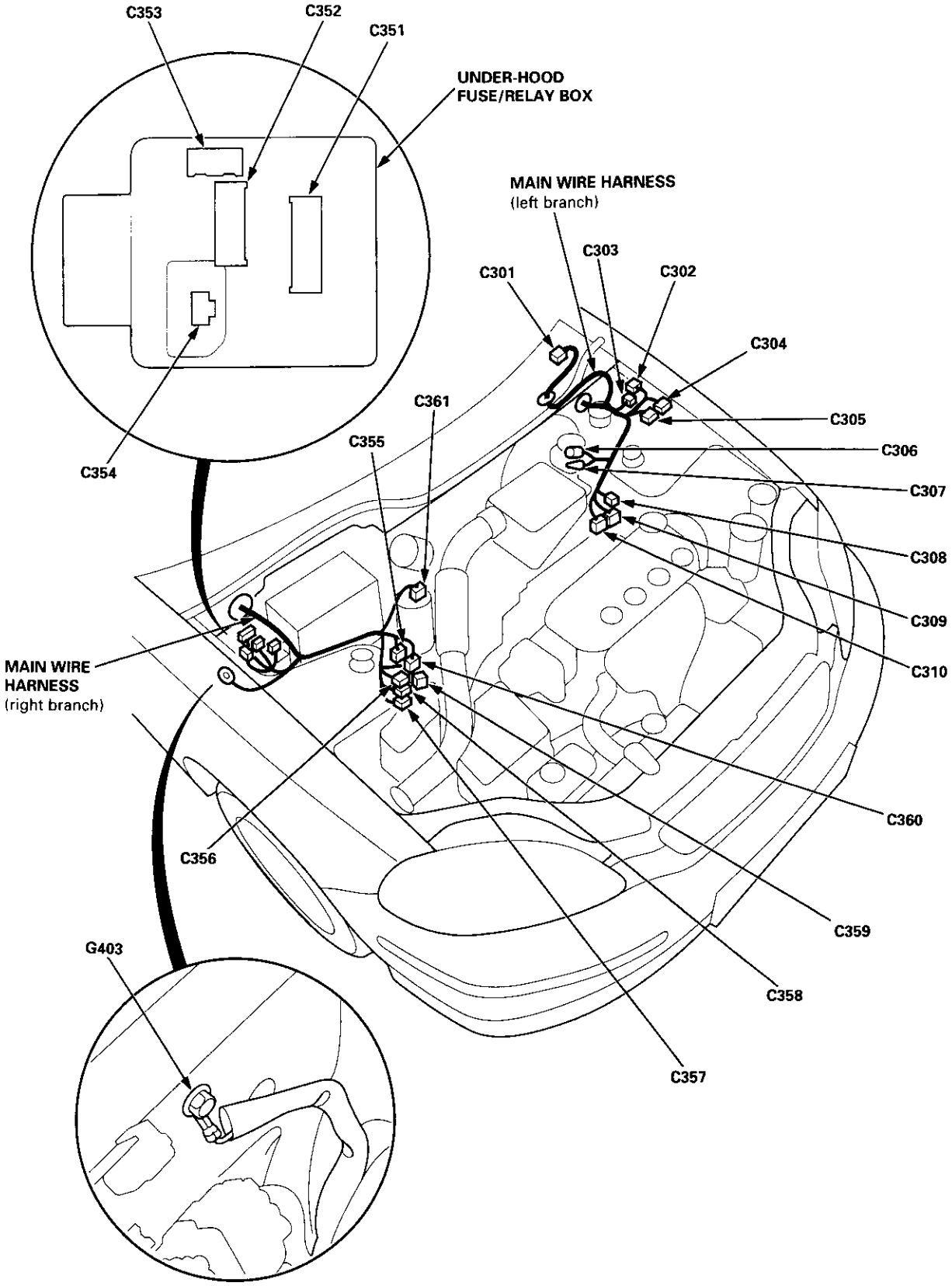
C353
C352
C351
UNDER-HOOD
FUSE/RELAY BOX
MAIN WIRE HARNESS
(left branch)
C303
C301
C302
C304
C361
C305
C355
C306
C354
C307
C308
C309
MAIN WIRE
HARNESS
(right branch)
C310
C360
C356
C359
G403
C358
C357

Main Wire Harness (Left side of dash and floor branch): '96 – 97 models

Connector or Terminal	Number of Cavities	Location	Connects to	Notes
C401	14	Above under-dash fuse/relay box	Floor wire harness (C555)	
C402	4	Under left side of dash	Floor wire harness (C554)	ABS
C403	4	Under left side of dash	Security system	Optional
C404	14	Under left side of dash	Cruise control unit	
C405	4	Under left side of dash	Daytime running lights control unit	Canada
C406	8	Under left side of dash	Daytime running lights control unit	Canada
C407	2	Under left side of dash	Roof wire harness (C701)	*2
C407	2	Under left side of dash	Moonroof wire harness (C711)	*4
C408	1	Under left side of dash	Front fog light connector	Optional
C409	10	Behind under-dash fuse/relay box	Integrated control unit	
C410	12	Under left side of dash	Dashboard wire harness (C504)	A/T
C411	24	Under left side of dash	Dashboard wire harness (C502)	
C412	3	Above under-dash fuse/relay box	SRS main harness (C802)	
C413	16	Under left side of dash	Data link connector	
C414	4	Under left side of dash	Starter cut relay	M/T
C415	7	Above under-dash fuse/relay box	Ignition switch	
C416	6	Under left side of dash	Security system	Optional
C417	2	Under left side of dash	Clutch switch	*5
C418	2	Under left side of dash	Clutch interlock switch	M/T
C419	18	Behind under-dash fuse/relay box	Under-dash fuse/relay box (C919)	
C420	20	Behind under-dash fuse/relay box	Under-dash fuse/relay box (C920)	
C421	18	Behind under-dash fuse/relay box	Under-dash fuse/relay box (C922)	
C422	7	Behind under-dash fuse/relay box	Under-dash fuse/relay box (C914)	
C423	6	Behind under-dash fuse/relay box	Under-dash fuse/relay box (C915)	
C424	4	Under left side of dash	Horn relay	
C425	4	Under left side of dash	Brake switch	
C426	8	In the steering column cover	Windshield wiper/washer switch	
C427	6	In the steering column cover	Rear window wiper/washer switch	
C428	4	In the steering column cover	Turn signal switch	
C429	7	In the steering column cover	Combination light/turn signal switch	
C430	3	Under left side of dash	Cable reel	
C431	8	Under left side of dash	Interlock control unit	A/T
C432	4	Under middle of dash	Secondary heated oxygen sensor sub-harness (C781)	*6
C433	14	Under middle of dash	A/T gear position switch	A/T
C434	2	Under middle of dash	Shift lock solenoid	A/T
C435	4	Under middle of dash	Park pin switch and A/T gear position console light	A/T
C437	26	Under left side of dash	Transmission control module (TCM)	CVT
C438	22	Under left side of dash	Transmission control module (TCM)	CVT
C439	1	Behind under-dash fuse/relay box	Under-dash fuse/relay box (C925)	Optional
G401		Left kick panel	Body ground, via main wire harness	

*2: Without moonroof
*4: With moonroof
*5: M/T (with cruise control or for D16Y5 engine)
*6: With secondary heated oxygen sensor (H02S)

'96 – 97 models:

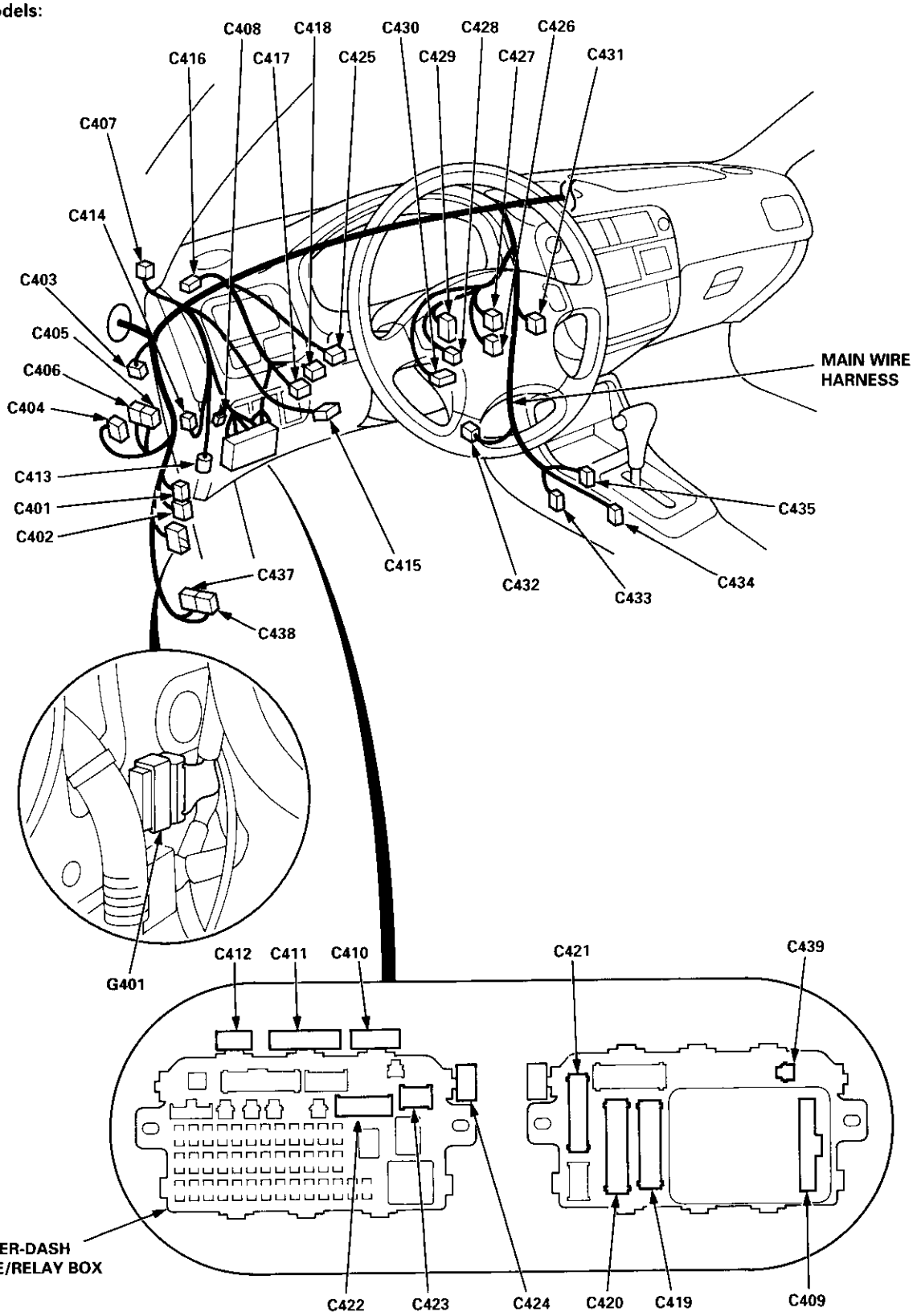
C408
C418
C430
C428
C426
C416
C417
C425
C429
C427
C431
C407
C414
C403
C405
C406
C404
MAIN WIRE HARNESS
C413
C401
C402
C435
C437
C415
C432
C433
C434
C438
G401
C412
C411
C410
C421
C439
UNDER-DASH FUSE/RELAY BOX
C422
C423
C424
C420
C419
C409

Main Wire Harness (Left side of dash and floor branch): '98 model

Connector or Terminal	Number of Cavities	Location	Connects to	Notes
C401	14	Above under-dash fuse/relay box	Floor wire harness (C555)	
C402	4	Under left side of dash	Floor wire harness (C554)	ABS
C403	4	Under left side of dash	Security system	Optional
C404	14	Under left side of dash	Cruise control unit	
C405	4	Under left side of dash	Daytime running lights control unit	Canada
C406	8	Under left side of dash	Daytime running lights control unit	Canada
C407	2	Under left side of dash	Roof wire harness (C701)	*2
C407	2	Under left side of dash	Moonroof wire harness (C711)	*4
C408	1	Under left side of dash	Front fog light connector	Optional
C409	10	Behind under-dash fuse/relay box	Integrated control unit	
C410	12	Under left side of dash	Dashboard wire harness (C504)	A/T
C411	24	Under left side of dash	Dashboard wire harness (C502)	
C412	3	Above under-dash fuse/relay box	SRS main harness (C802)	
C413	16	Under left side of dash	Data link connector	
C414	4	Under-dash relay box	Starter cut relay	M/T
C415	7	Above under-dash fuse/relay box	Ignition switch	
C416	6	Under left side of dash	Security system	Optional
C417	2	Under left side of dash	Clutch switch	*5
C418	2	Under left side of dash	Clutch interlock switch	M/T
C419	18	Behind under-dash fuse/relay box	Under-dash fuse/relay box (C919)	
C420	20	Behind under-dash fuse/relay box	Under-dash fuse/relay box (C920)	
C421	18	Behind under-dash fuse/relay box	Under-dash fuse/relay box (C922)	
C422	7	Behind under-dash fuse/relay box	Under-dash fuse/relay box (C914)	
C423	6	Behind under-dash fuse/relay box	Under-dash fuse/relay box (C915)	
C424	4	Under-dash relay box	Horn relay	
C425	4	Under left side of dash	Brake switch	
C426	8	In the steering column cover	Windshield wiper/washer switch	
C427	6	In the steering column cover	Rear window wiper/washer switch	
C428	4	In the steering column cover	Turn signal switch	
C429	7	In the steering column cover	Combination light/turn signal switch	
C430	3	Under left side of dash	Cable reel	
C431	8	Under left side of dash	Interlock control unit	A/T
C432	4	Under middle of dash	Secondary heated oxygen sensor sub-harness (C781)	*6
C433	14	Under middle of dash	A/T gear position switch	A/T
C434	2	Under middle of dash	Shift lock solenoid	A/T
C435	4	Under middle of dash	Park pin switch and A/T gear position console light	A/T
C437	26	Under left side of dash	Transmission control module (TCM)	CVT
C438	22	Under left side of dash	Transmission control module (TCM)	CVT
G401		Left kick panel	Body ground, via main wire harness	

*2: Without moonroof
*4: With moonroof
*5: M/T (with cruise control or for D16Y5 engine)
*6: With secondary heated oxygen sensor (H02S)

'98 model:

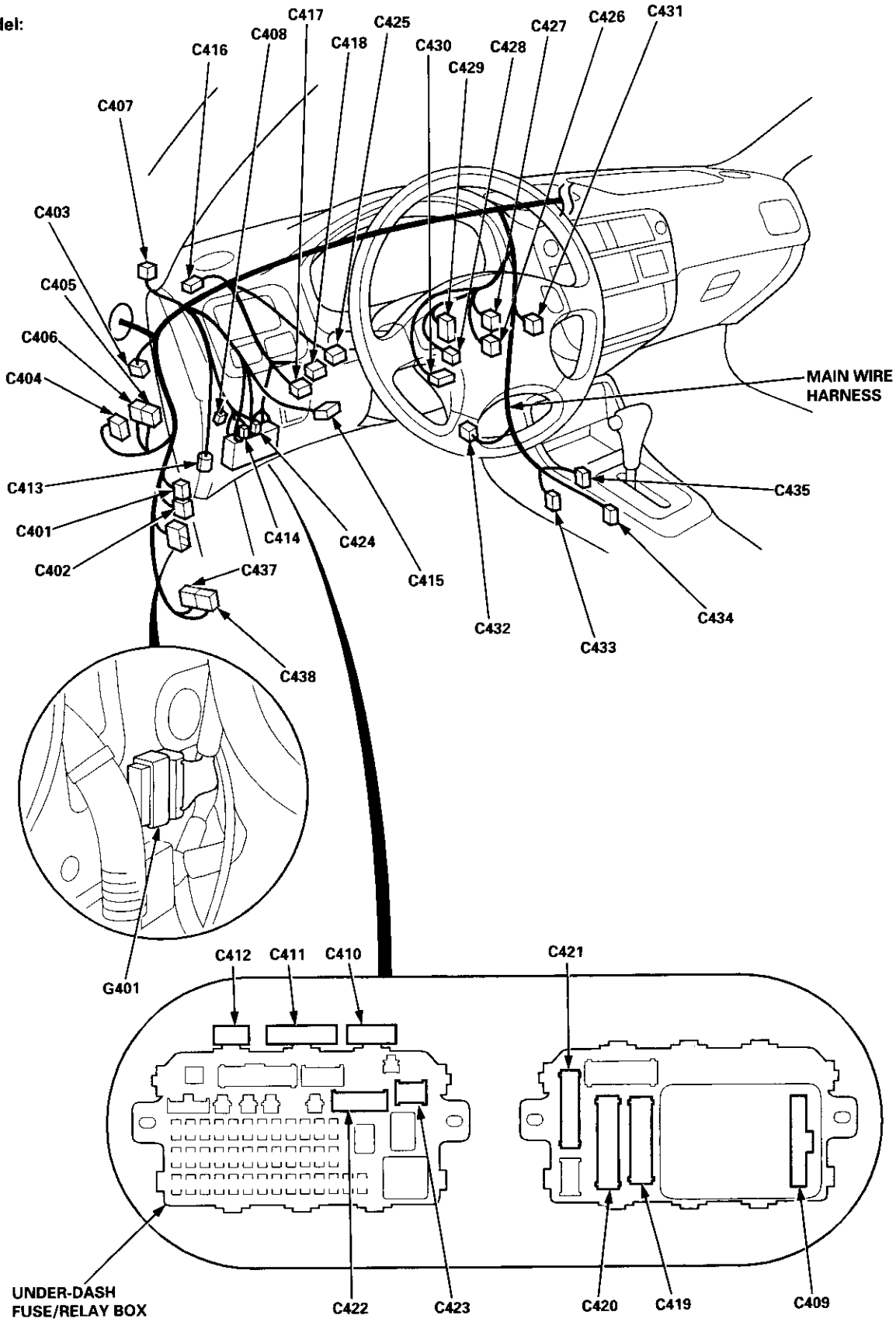
C417
C425
C431
C408
C427
C426
C416
C418
C430
C428
C429
C407
C403
C405
C406
C404
MAIN WIRE HARNESS
C413
C435
C401
C414
C424
C402
C437
C415
C434
C432
C433
C438
G401
C412
C411
C410
C421
UNDER-DASH FUSE/RELAY BOX
C422
C423
C420
C419
C409

Main Wire Harness (Left side of dash and floor branch): '99 – 00 models

Connector or Terminal	Number of Cavities	Location	Connects to	Notes
C401	20	Above under-dash fuse/relay box	Floor wire harness (C555)	
C402	4	Under left side of dash	Floor wire harness (C554)	ABS
C403	4	Under left side of dash	Security system	Optional
C404	14	Under left side of dash	Cruise control unit	
C405	4	Under left side of dash	Daytime running lights control unit	Canada
C406	8	Under left side of dash	Daytime running lights control unit	Canada
C407	6	Under left side of dash	Roof wire harness (C701)	*2
C407	6	Under left side of dash	Moonroof wire harness (C711)	*4
C408	1	Under left side of dash	Front fog light connector	Optional
C409	10	Behind under-dash fuse/relay box	Integrated control unit	
C410	12	Under left side of dash	Dashboard wire harness (C504)	A/T
C411	24	Under left side of dash	Dashboard wire harness (C502)	
C412	3	Above under-dash fuse/relay box	SRS main harness (C802)	
C413	16	Under left side of dash	Data link connector	
C414	4	Under-dash relay box	Starter cut relay	M/T
C415	7	Above under-dash fuse/relay box	Ignition switch	
C416	6	Under left side of dash	Security system	Optional
C417	2	Under left side of dash	Clutch switch	*5
C418	2	Under left side of dash	Clutch interlock switch	M/T
C419	18	Behind under-dash fuse/relay box	Under-dash fuse/relay box (C919)	
C420	20	Behind under-dash fuse/relay box	Under-dash fuse/relay box (C920)	
C421	18	Behind under-dash fuse/relay box	Under-dash fuse/relay box (C922)	
C422	7	Behind under-dash fuse/relay box	Under-dash fuse/relay box (C914)	
C423	6	Behind under-dash fuse/relay box	Under-dash fuse/relay box (C915)	
C424	4	Under-dash relay box	Horn relay	
C425	4	Under left side of dash	Brake switch	
C426	8	In the steering column cover	Windshield wiper/washer switch	
C427	6	In the steering column cover	Rear window wiper/washer switch	
C428	4	In the steering column cover	Turn signal switch	
C429	7	In the steering column cover	Combination light/turn signal switch	
C430	3	Under left side of dash	Cable reel	
C431	8	Under left side of dash	Interlock control unit	A/T
C432	4	Under middle of dash	Secondary heated oxygen sensor sub-harness (C781)	*6
C433	14	Under middle of dash	A/T gear position switch	A/T
C434	2	Under middle of dash	Shift lock solenoid	A/T
C435	4	Under middle of dash	Park pin switch and A/T gear position console light	A/T
C447	22	Under left side of dash	Security system	Optional
C448	2	Under left side of dash	Security system	Optional
C449	2	Under middle of dash	A/T gear position indicator trim light	
C450	3	Under left side of dash	Security system	Optional
C451	18	Under left side of dash	Keyless door lock control unit	
G401		Left kick panel	Body ground, via main wire harness	

*2: Without moonroof
*4: With moonroof
*5: M/T (with cruise control or for D16Y5 engine)
*6: With secondary heated oxygen sensor (H02S)

'99 – 00 models:

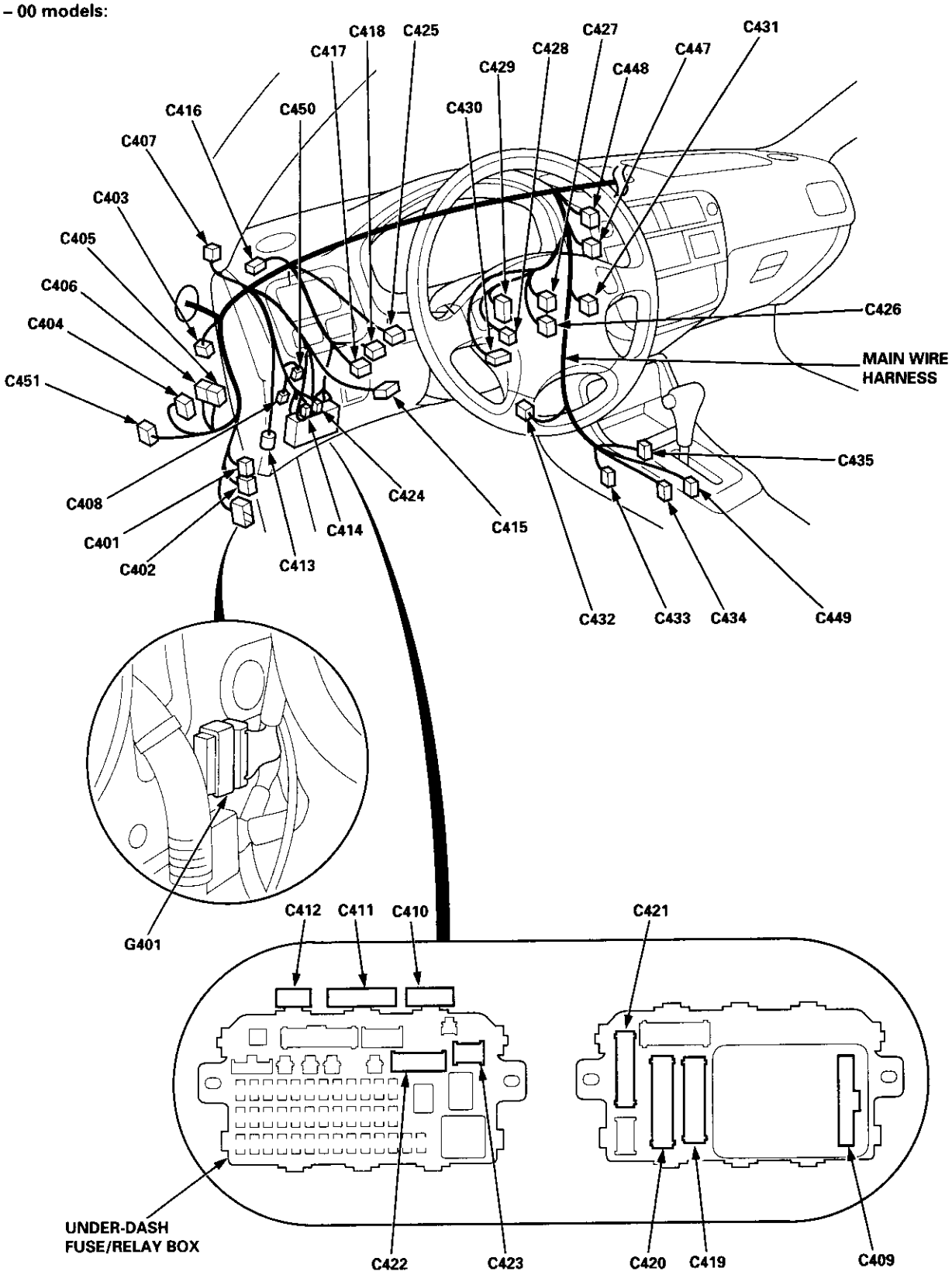
C418
C425
C427
C431
C417
C428
C447
C429
C448
C416
C450
C430
C407
C403
C405
C406
C404
C426
MAIN WIRE HARNESS
C451
C435
C408
C424
C401
C414
C415
C402
C413
C432
C433
C434
C449
G401
C412
C411
C410
C421
UNDER-DASH FUSE/RELAY BOX
C422
C423
C420
C419
C409

Main Wire Harness (Right side of dash branch)

Connector or Terminal	Number of Cavities	Location	Connects to	Notes
C440	16	Under middle of dash	Heater sub-harness A (C721)	
C441	2	Under right side of dash	Service check connector	
C442	20	Under right side of dash	Junction connector	
C443	7	Under right side of dash	PGM-FI main relay	
C444	22	Behind right side of kick panel	ABS control unit	
C445	26	Behind right side of kick panel	ABS control unit	
C446	22	Under right side of dash	Engine wire harness (C131)	
C452	32	Under right side of dash	ECM/PCM	*1
G402		Right kick panel	Body ground, via main wire harness	

*1: '99 – 00 models

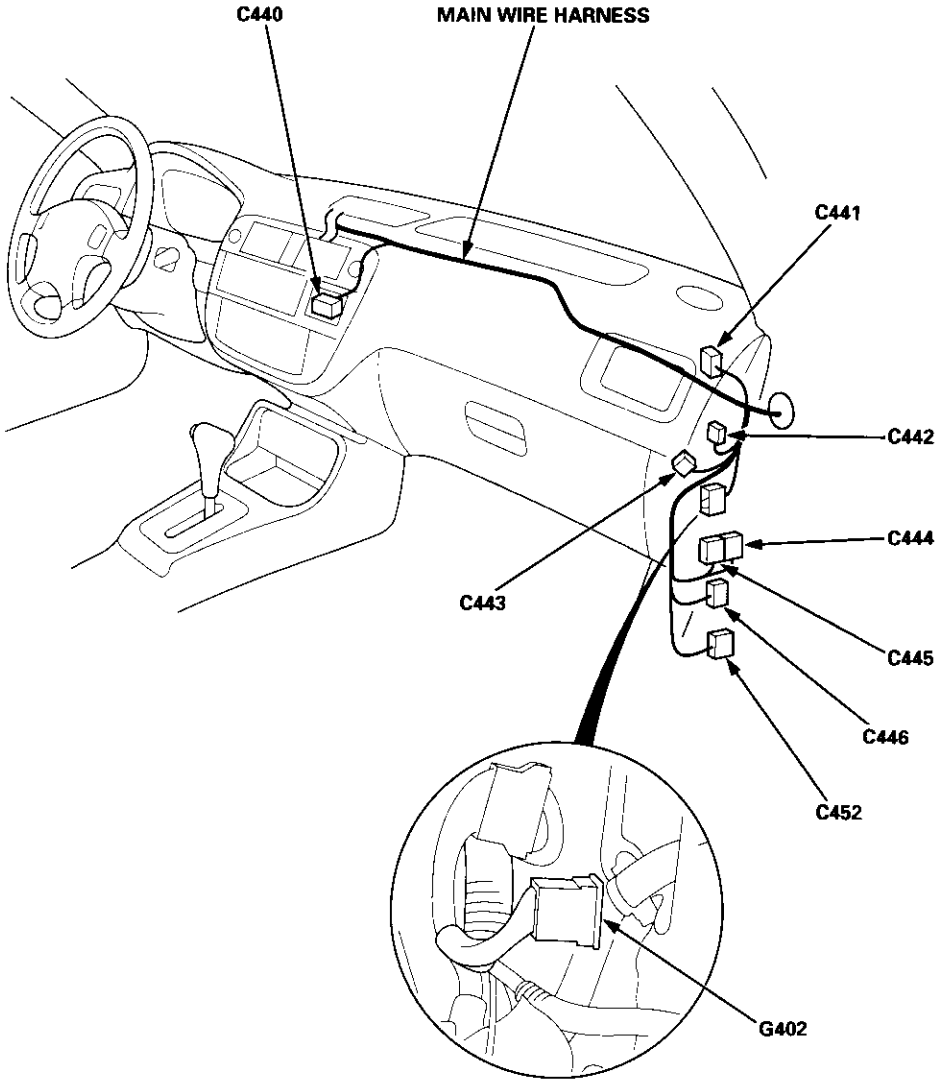

Dashboard Wire Harness

Connector or Terminal	Number of Cavities	Location	Connects to	Notes
C501	20	Behind dashboard lower panel	Under-dash fuse/relay box (C912)	
C502	24	Above under-dash fuse/relay box	Main wire harness (C411)	
C503	16	Above under-dash fuse/relay box	Floor wire harness (C553)	
C504	12	Above under-dash fuse/relay box	Main wire harness (C410)	A/T
C505	5	Left side of steering wheel	Cruise main switch	
C506	3	Left side of steering wheel	Dash lights brightness controller	
C507	20	Below gauges	Junction connector	
C508	5	Behind gauges	Gauge assembly	SRS
C509	5	Behind gauges	Gauge assembly	*1
C510	14	Behind gauges	Gauge assembly	A/T
C511	16	Behind gauges	Gauge assembly	
C512	13	Behind gauges	Gauge assembly	
C513	10	Right side of gauges	Hazard warning switch	
C514	5	Right side of gauges	Rear window defogger switch	*2
C515	16	Behind middle of dash	Audio unit (Keyless receiver circuit)	*2
C515	20	Behind middle of dash	Audio unit	*3
C516	22	Behind middle of dash	Security control unit	Optional*2
C517	16	Behind middle of dash	Audio unit	*2
C518	5	Behind middle of dash	Security system	Optional*2
C519	2	Behind middle of dash	Accessory power outlet	
C520	5	Behind gauges	Gauge assembly	ABS
G501		Under middle of dash	Body ground, via dashboard wire harness	

*1: With shift-up indicator or cruise control system ('96 – 97 models)
With cruise control system ('98 model)

*2: '96 – 98 models
*3: '99 – 00 models

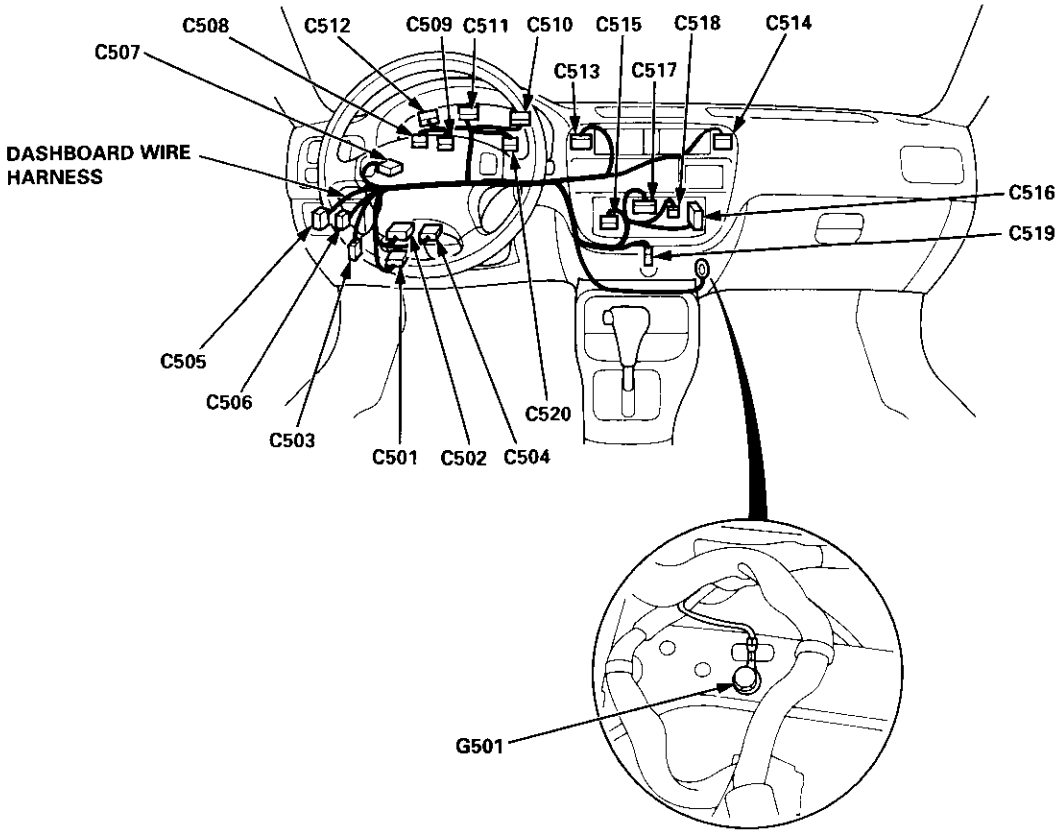

Floor Wire Harness (Coupe/Hatchback)

Connector or Terminal	Number of Cavities	Location	Connects to	Notes
C551	16	Behind under-dash fuse/relay box	Under-dash fuse/relay box (C923)	
C552	8	Behind under-dash fuse/relay box	Under-dash fuse/relay box (C921)	
C553	16	Above under-dash fuse/relay box	Dashboard wire harness (C503)	
C554	4	Under left side of dash	Main wire harness (C402)	ABS
C555	14	Above under-dash fuse/relay box	Main wire harness (C401)	*4
C555	20	Above under-dash fuse/relay box	Main wire harness (C401)	*5
C556	25	Driver's door	Driver's door wire harness (C631)	*1
C556	2	Driver's door	Driver's door wire harness (C631)	*2
C557	25	Passenger's door	Passenger's door wire harness (C651)	*1
C557	2	Passenger's door	Passenger's door wire harness (C651)	*2
C558	1	Middle of floor	Parking brake switch	
C559	2	Left side of floor	Driver's seat belt switch	
C560	1	Left B-pillar	Driver's door switch	
C561	2	Inside of left rear wheel	Left rear ABS wheel sensor	ABS
C562	14	Left C-pillar	Rear wire harness (C601)	*4
C562	20	Left C-pillar	Rear wire harness (C601)	*5
C563	2	Left C-pillar	Rear wire harness (C602)	*4
C564	3	Fuel tank	Fuel gauge sending unit	
C565	2	Fuel tank	Fuel pump	
C566	2	Inside of right rear wheel	Right rear ABS wheel sensor	ABS
C567	1	Right B-pillar	Passenger's door switch	
C568	6	Fuel tank	Fuel tank pressure sensor sub-harness (C791)	*3
C569	10	Left side of dash	Power mirror switch	
G551		Left kick panel	Body ground, via floor wire harness	
G552		Left side of floor	Body ground, via floor wire harness	

*1: With power windows
*2: Without power windows
*3: D16Y8 engine (Coupe)
*4: '96 – 98 models
*5: '99 – 00 models

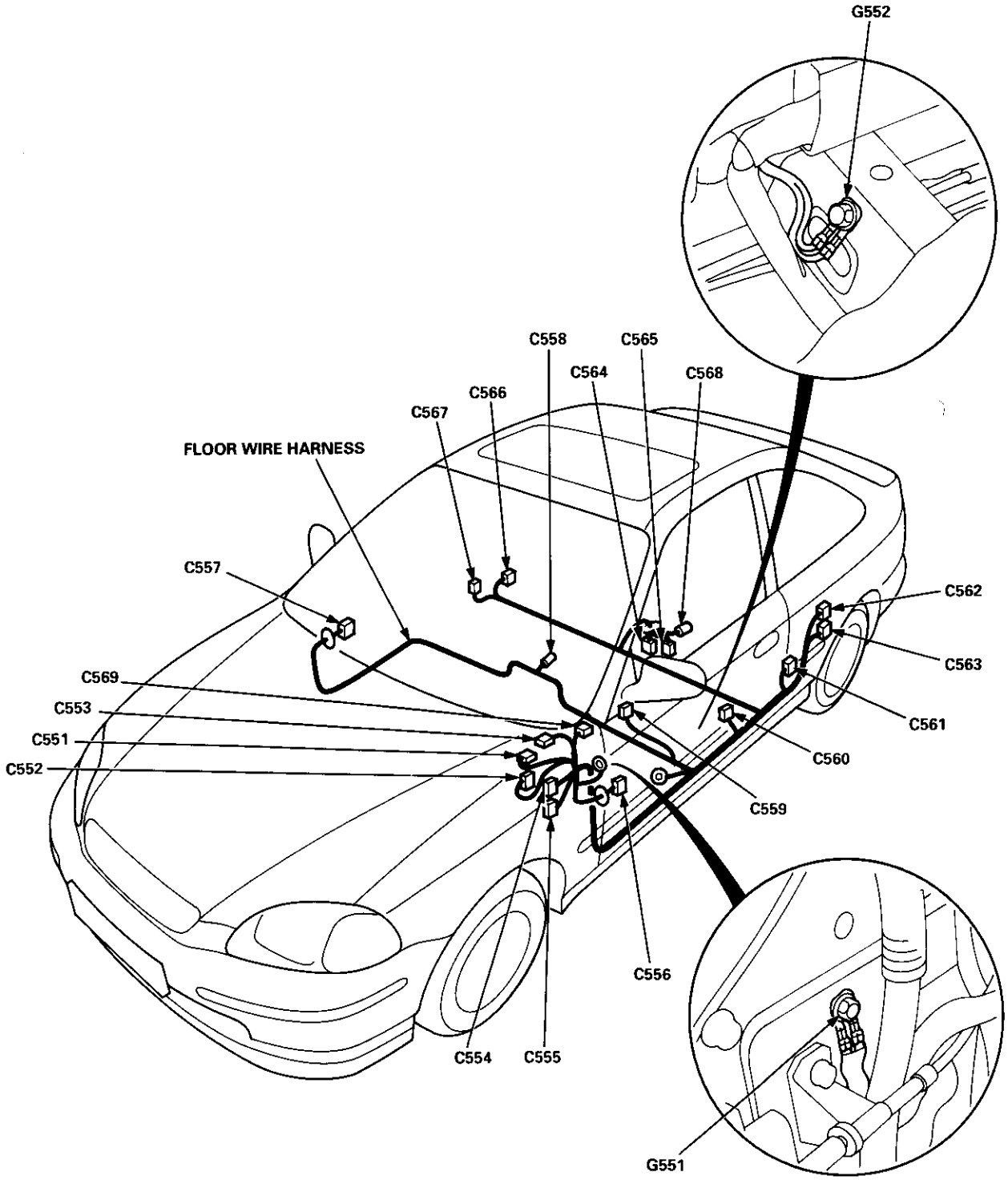
G552
C558
C565
C564
C568
C566
C567
FLOOR WIRE HARNESS
C557
C562
C563
C569
C553
C551
C552
C561
C560
C559
C556
C554
C555
G551

Floor Wire Harness (Sedan): '96 model

Connector or Terminal	Number of Cavities	Location	Connects to	Notes
C551	16	Behind under-dash fuse/relay box	Under-dash fuse/relay box (C923)	
C552	8	Behind under-dash fuse/relay box	Under-dash fuse/relay box (C921)	
C553	16	Above under-dash fuse/relay box	Dashboard wire harness (C503)	
C554	4	Under left side of dash	Main wire harness (C402)	ABS
C555	14	Above under-dash fuse/relay box	Main wire harness (C401)	
C556	25	Driver's door	Driver's door wire harness (C631)	*1
C556	2	Driver's door	Driver's door wire harness (C631)	*2
C557	25	Passenger's door	Front passenger's door wire harness (C651)	*1
C557	2	Passenger's door	Front passenger's door wire harness (C651)	*2
C558	1	Middle of floor	Parking brake switch	
C559	2	Left side of floor	Driver's seat belt switch	
C560	1	Right B-pillar	Front passenger's door switch	
C561	2	Inside of left rear wheel	Left rear ABS wheel sensor	ABS
C562	14	Left C-pillar	Rear wire harness (C601)	
C563	2	Left C-pillar	Rear wire harness (C602)	
C564	3	Fuel tank	Fuel gauge sending unit	
C565	2	Fuel tank	Fuel pump (FP)	
C566	2	Inside of right rear wheel	Right rear ABS wheel sensor	ABS
C567	1	Left B-pillar	Driver's door switch	
C569	10	Left side of steering wheel	Power mirror switch	
C570	6	Right B-pillar	Right rear door wire harness (C671)	
C571	6	Left B-pillar	Left rear door wire harness (C661)	
C572	1	Left quarter panel	Left rear door switch	
C573	1	Right quarter panel	Right rear door switch	
G551		Left kick panel	Body ground, via floor wire harness	
G552		Left side of floor	Body ground, via floor wire harness	

*1: With power windows
*2: Without power windows

'96 model:

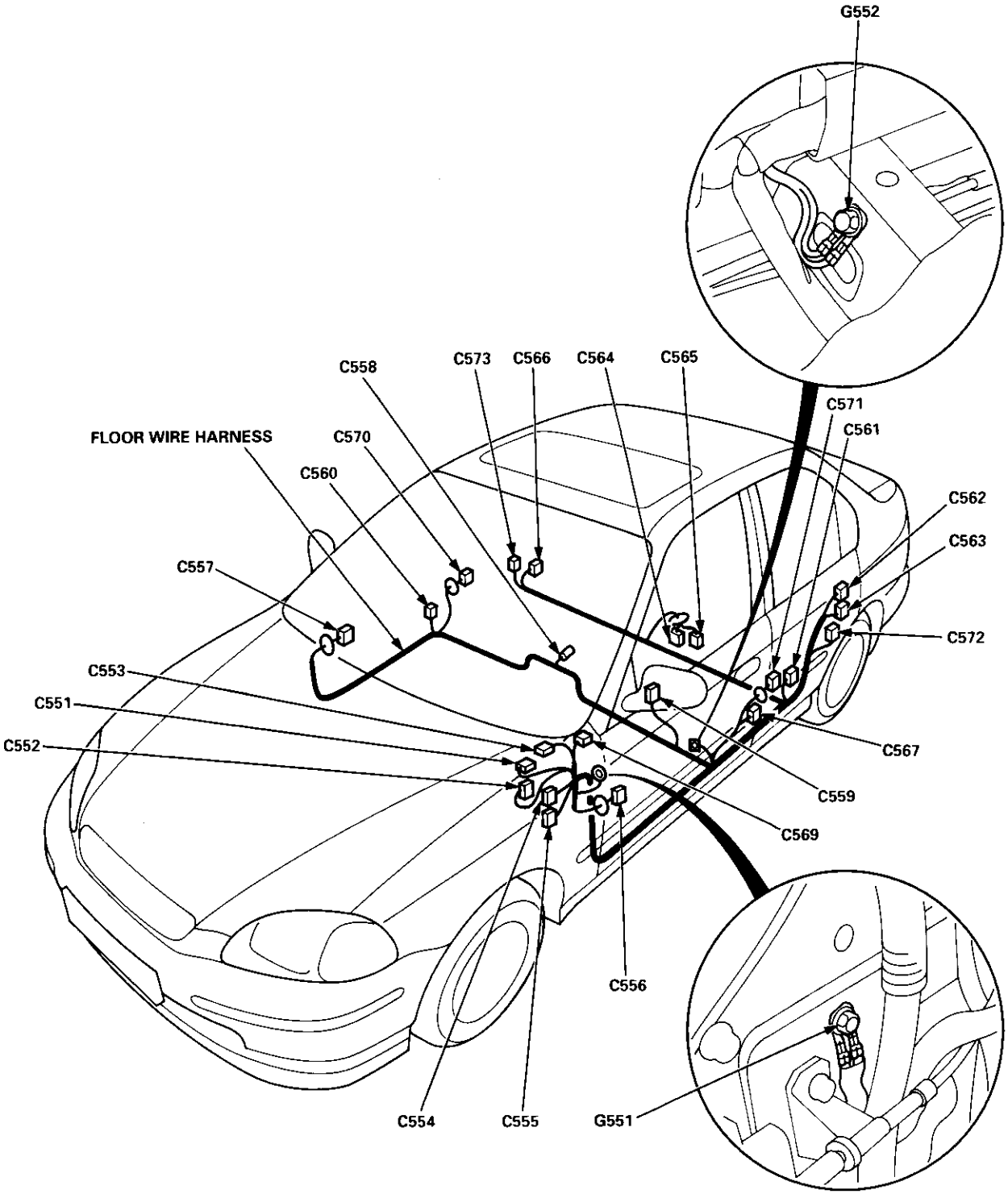
G552
C558
C573
C566
C564
C565
C571
C561
FLOOR WIRE HARNESS
C570
C560
C562
C563
C557
C572
C553
C551
C552
C567
C559
C569
C556
C554
C555
G551

Floor Wire Harness (Sedan): '97 – 00 models

Connector or Terminal	Number of Cavities	Location	Connects to	Notes
C551	16	Behind under-dash fuse/relay box	Under-dash fuse/relay box (C923)	
C552	8	Behind under-dash fuse/relay box	Under-dash fuse/relay box (C921)	
C553	16	Above under-dash fuse/relay box	Dashboard wire harness (C503)	
C554	4	Under left side of dash	Main wire harness (C402)	ABS
C555	14	Above under-dash fuse/relay box	Main wire harness (C401)	*3
C555	20	Above under-dash fuse/relay box	Main wire harness (C401)	*4
C556	25	Driver's door	Driver's door wire harness (C631)	*1
C556	2	Driver's door	Driver's door wire harness (C631)	*2
C557	25	Passenger's door	Front passenger's door wire harness (C651)	*1
C557	2	Passenger's door	Front passenger's door wire harness (C651)	*2
C558	1	Middle of floor	Parking brake switch	
C559	2	Left side of floor	Driver's seat belt switch	
C560	1	Right B-pillar	Front passenger's door switch	
C561	2	Inside of left rear wheel	Left rear ABS wheel sensor	ABS
C562	16	Left C-pillar	Rear wire harness (C601)	*3
C562	20	Left C-pillar	Rear wire harness (C601)	*4
C563	2	Left C-pillar	Rear wire harness (C602)	*3
C564	3	Fuel tank	Fuel gauge sending unit	
C565	2	Fuel tank	Fuel pump (FP)	
C566	2	Inside of right rear wheel	Right rear ABS wheel sensor	ABS
C567	1	Left B-pillar	Driver's door switch	
C568	6	Fuel tank	Fuel tank pressure sensor sub-harness (C791)	
C569	10	Left side of steering wheel	Power mirror switch	
C570	6	Right B-pillar	Right rear door wire harness (C671)	
C571	6	Left B-pillar	Left rear door wire harness (C661)	
C572	1	Left quarter panel	Left rear door switch	
C573	1	Right quarter panel	Right rear door switch	
G551		Left kick panel	Body ground, via floor wire harness	
G552		Left side of floor	Body ground, via floor wire harness	

*1: With power windows
*2: Without power windows
*3: '97 – '98 models
*4: '99 – 00 models

'97 – 00 models:

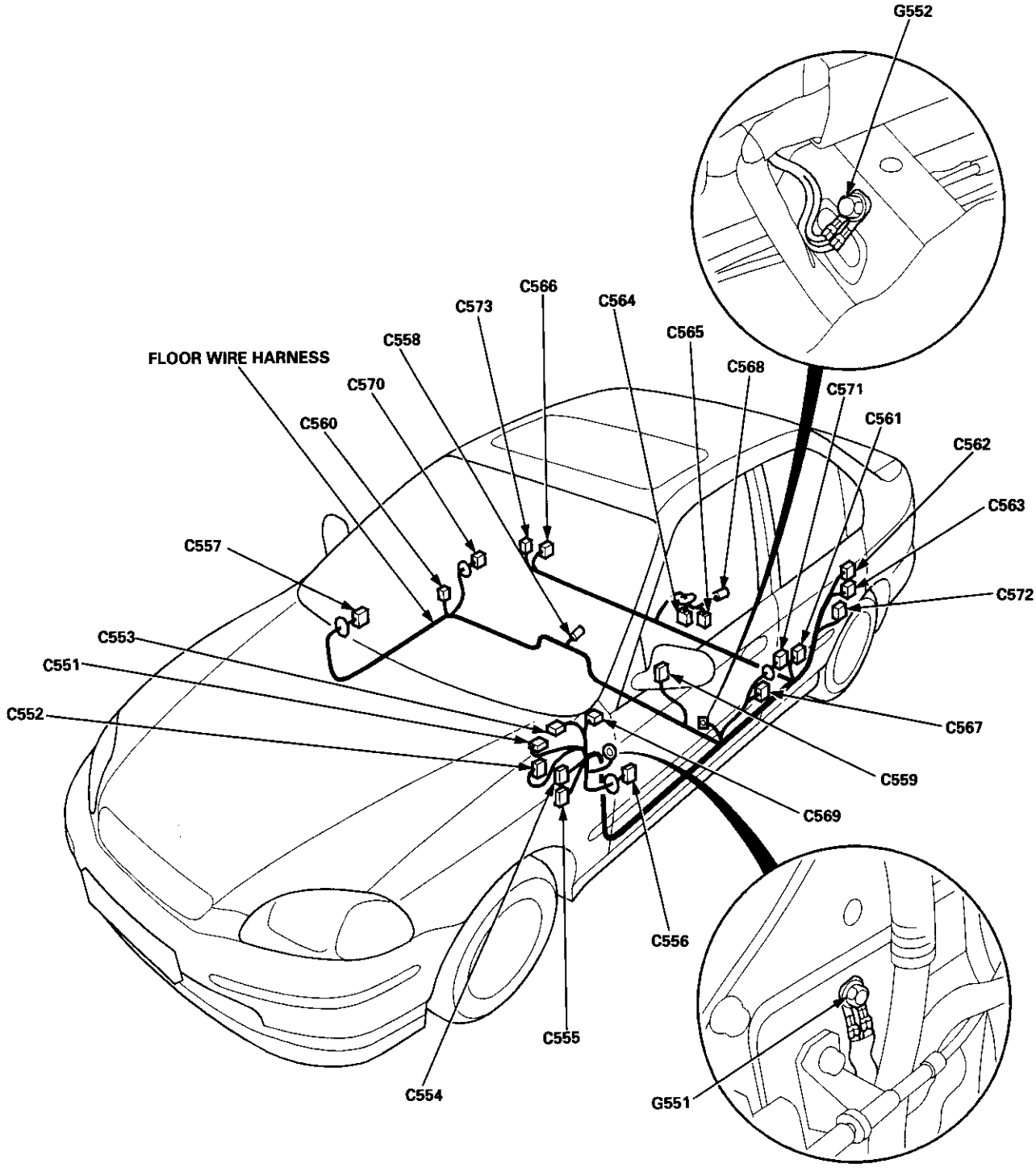
G552
C566
C573
C564
C565
C558
FLOOR WIRE HARNESS
C568
C570
C571
C560
C561
C562
C563
C557
C572
C553
C551
C567
C552
C559
C569
C556
C555
C554
G551

Rear Wire Harness (Hatchback)

Connector or Terminal	Number of Cavities	Location	Connects to	Notes
C601	14	Left quarter panel	Floor wire harness (C562)	*1
C601	20	Left quarter panel	Floor wire harness (C562)	*2
C602	2	Left quarter panel	Floor wire harness (C563)	*1
C603	2	Left quarter panel	Left rear speaker	Optional
C604	6	Left side of cargo area	Left outer taillight	
C605	6	Right side of cargo area	Right outer taillight	
C606	2	Right quarter panel	Right rear speaker	Optional
C607	6	Right quarter panel	Hatch wire harness (C761)	
C608	2	Right quarter panel	Hatch wire harness (C762)	
G601		Middle of cargo area	Body ground, via rear wire harness	

*1: '96 – 98 models
*2: '99 – 00 models

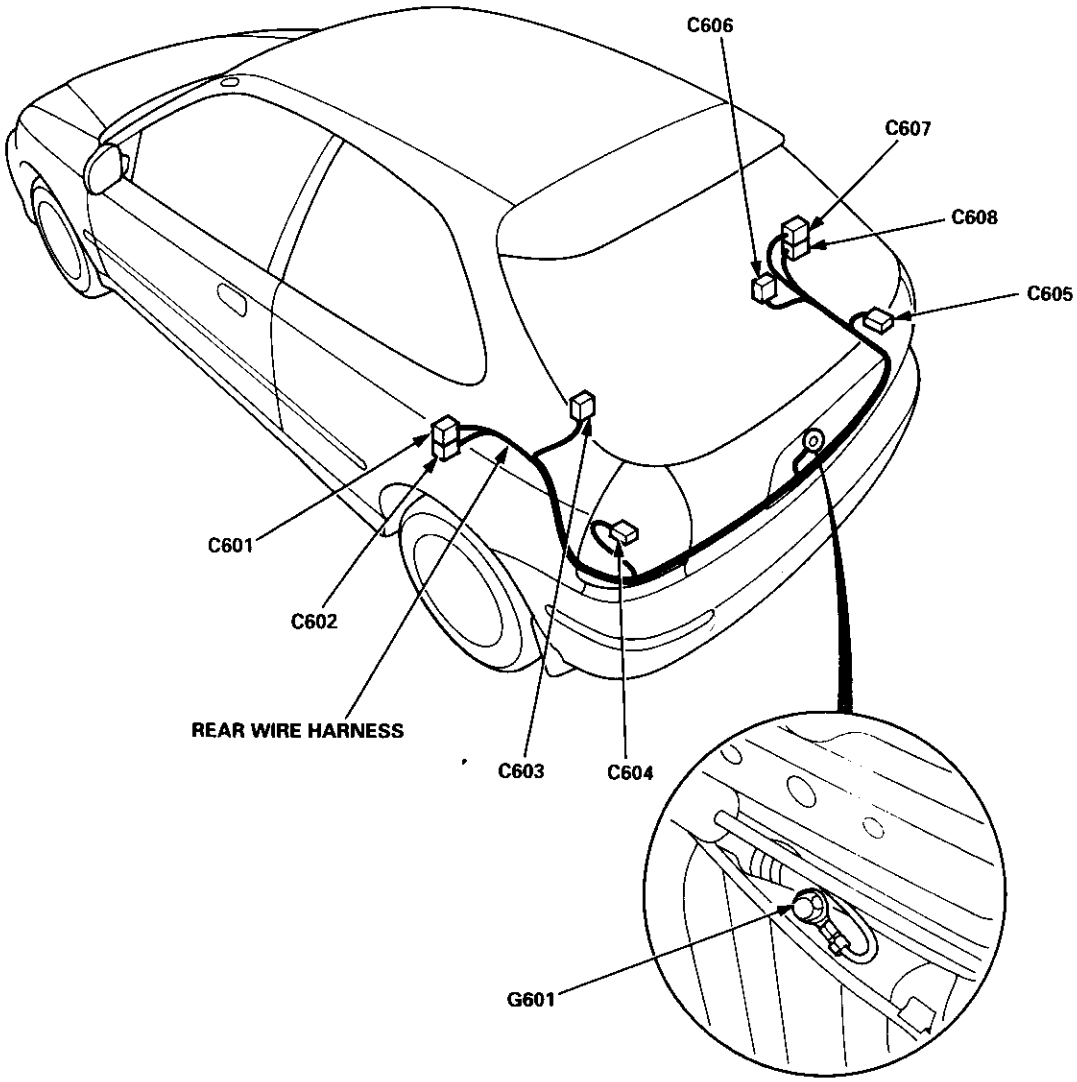

Rear Wire Harness (Coupe: '96 – 99 models/Sedan: '96 – 98 models)

Connector or Terminal	Number of Cavities	Location	Connects to	Notes
C601	16	Left quarter panel	Floor wire harness (C562)	
C601	20	Left quarter panel	Floor wire harness (C562)	*
C602	2	Left quarter panel	Floor wire harness (C563)	
C603	2	Left quarter panel	Left rear speaker	
C604	4	Left side of trunk	Left outer taillight	
C605	4	Right side of trunk	Right outer taillight	
C606	2	Right quarter panel	Right rear speaker	
C609	1	Left side of rear window	Rear window defogger (+)	
C610	2	Middle of rear shelf	High mount brake light	
C611	2	Middle of rear shelf	Trunk light	
C612	1	Right side of rear window	Rear window defogger (–)	
C613	4	Left side of trunk	Left inner taillight	
C614	2	Middle of trunk	Left license plate light	
C615	2	Middle of trunk	Trunk latch switch	
C616	2	Middle of trunk	Right license plate light	
C617	4	Right side of trunk	Right inner taillight	
G601		Middle of trunk	Body ground, via rear wire harness	

*: Coupe: '99 – 00 models

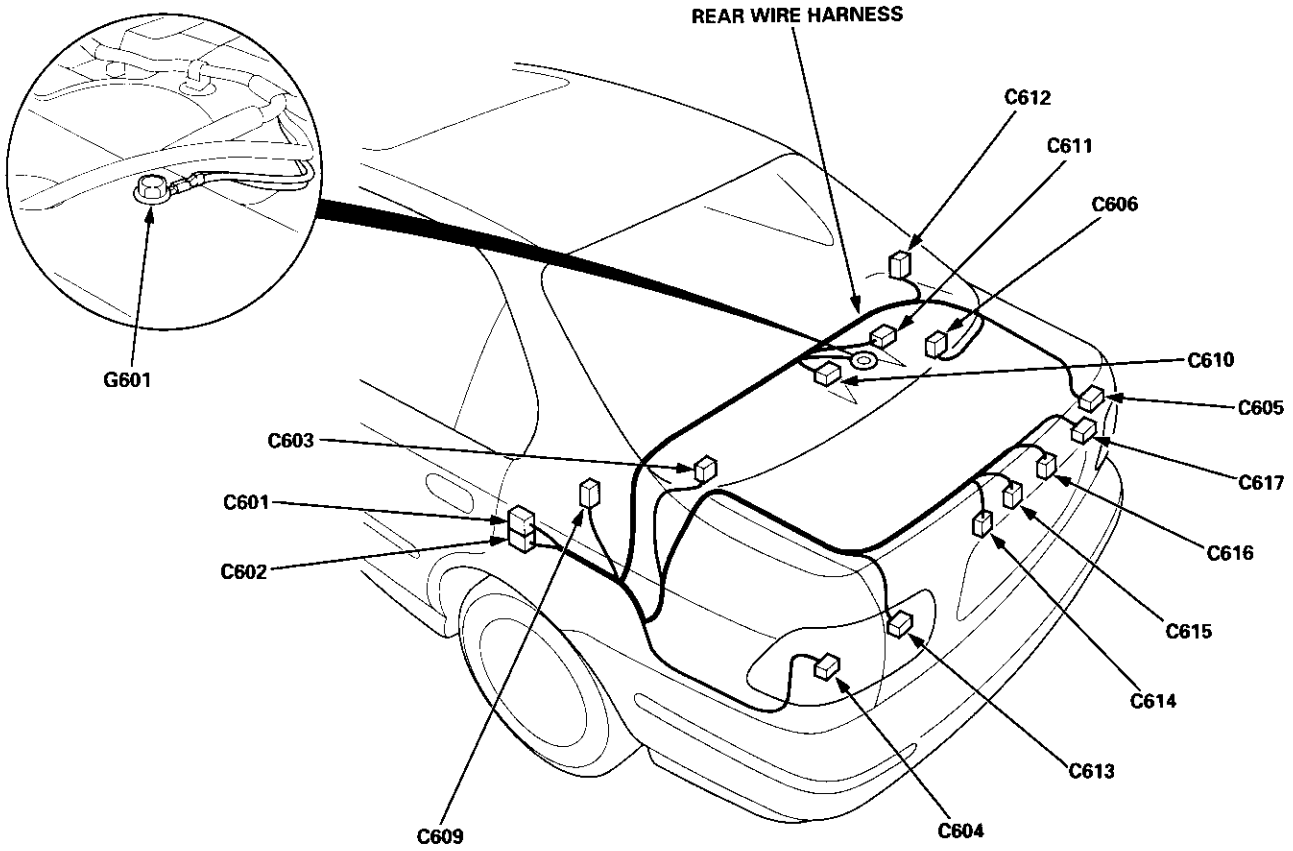

Rear Wire Harness (Sedan): '99 – 00 models

Connector or Terminal	Number of Cavities	Location	Connects to	Notes
C601	20	Left quarter panel	Floor wire harness (C562)	
C603	2	Left quarter panel	Left rear speaker	
C604	4	Left side of trunk	Left outer taillight	
C605	4	Right side of trunk	Right outer taillight	
C606	2	Right quarter panel	Right rear speaker	
C610	2	Middle of rear shelf	High mount brake light	
C611	2	Middle of rear shelf	Trunk light	
C613	3	Left side of trunk	Left inner taillight	
C614	2	Middle of trunk	Left license plate light	
C615	2	Middle of trunk	Trunk latch switch	
C616	2	Middle of trunk	Right license plate light	
C617	3	Right side of trunk	Right inner taillight	
C618	2	Left side of trunk	Left outer taillight	
C619	2	Right side of trunk	Right outer taillight	
C620	2	Left side of trunk	Left inner taillight	
C621	2	Right side of trunk	Right inner taillight	
C622	1	Middle of rear shelf	Window antenna coil	
C623	2	Middle of rear shelf	Window antenna coil	
G601		Middle of trunk	Body ground, via rear wire harness	
G602		Middle of rear shelf	Body ground, via rear wire harness	

Rear Window Defogger Wire

Connector or Terminal	Number of Cavities	Location	Connects to	Notes
C831	2	Middle of rear shelf	Window antenna coil	
C832	1	Left side of rear window	Rear window defogger ⊕	
C833	1	Right side of rear window	Rear window defogger ⊖	

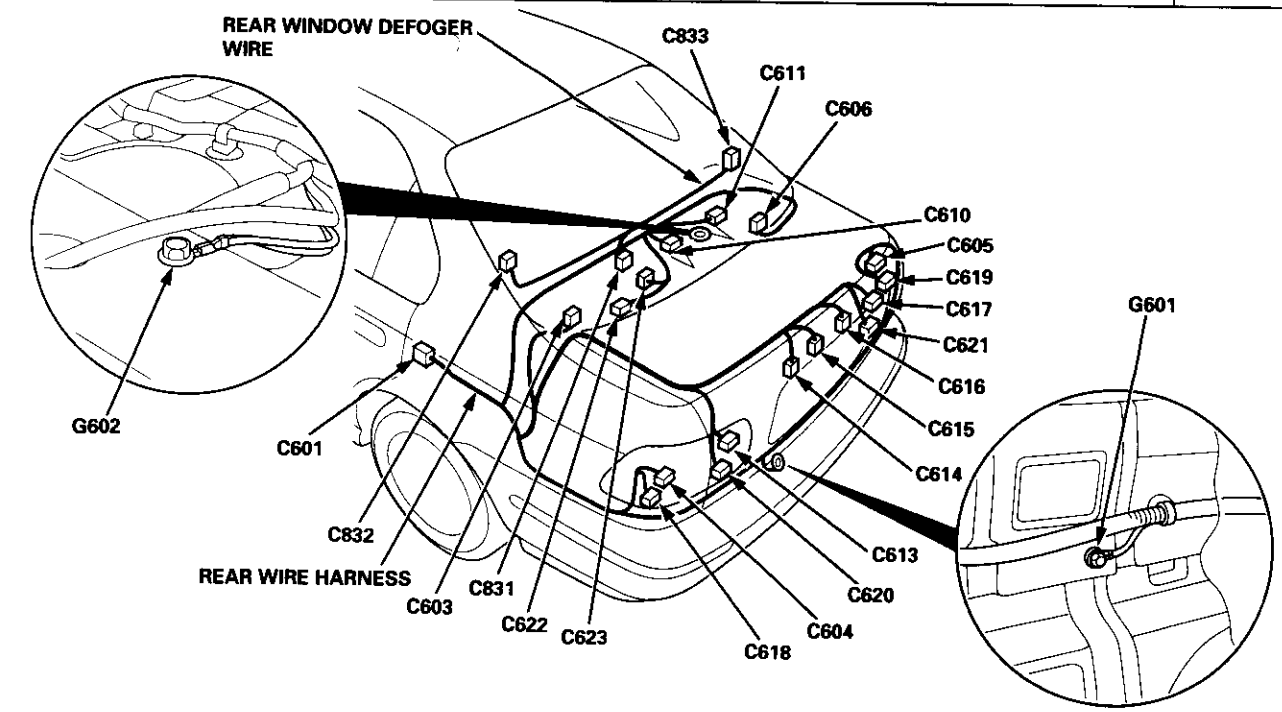

Driver's Door Wire Harness (Coupe/Hatchback)

Connector or Terminal	Number of Cavities	Location	Connects to	Notes
C631	25	Driver's door	Floor wire harness (C556)	*1
C631	2	Driver's door	Floor wire harness (C556)	*2
C632	2	Driver's door	Left front door speaker	
C633	4	Driver's door	Driver's power window motor	Coupe
C634	4	Driver's door	Driver's door lock actuator	Coupe
C635	2	Driver's door	Tweeter	Coupe
C636	12	Driver's door	Power window master switch	Coupe
C638	3	Driver's door	Driver's door lock switch	Coupe
C639	8	Inside of left power mirror	Left power mirror	Coupe
C640	12	Driver's door	Power door lock control unit	Coupe*3

*1: With power windows
*2: Without power windows
*3: Without keyless

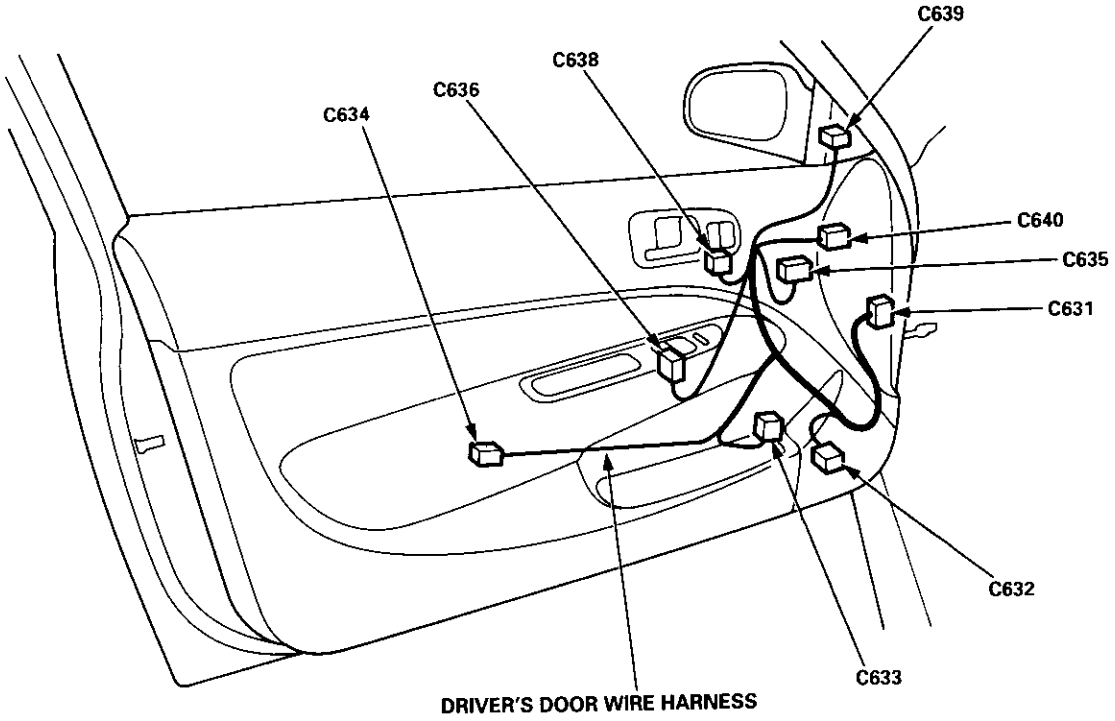

Passenger's Door Wire Harness (Coupe/Hatchback)

Connector or Terminal	Number of Cavities	Location	Connects to	Notes
C651	25	Passenger's door	Floor wire harness (C557)	*1
C651	2	Passenger's door	Floor wire harness (C557)	*2
C652	2	Passenger's door	Right front door speaker	
C653	2	Passenger's door	Front passenger's power window motor	Coupe
C654	2	Passenger's door	Front passenger's door lock actuator	Coupe
C655	5	Passenger's door	Front passenger's power window switch	Coupe
C656	8	Inside of right power mirror	Right power mirror	Coupe
C657	2	Passenger's door	Tweeter	Coupe

*1: With power windows
*2: Without power windows

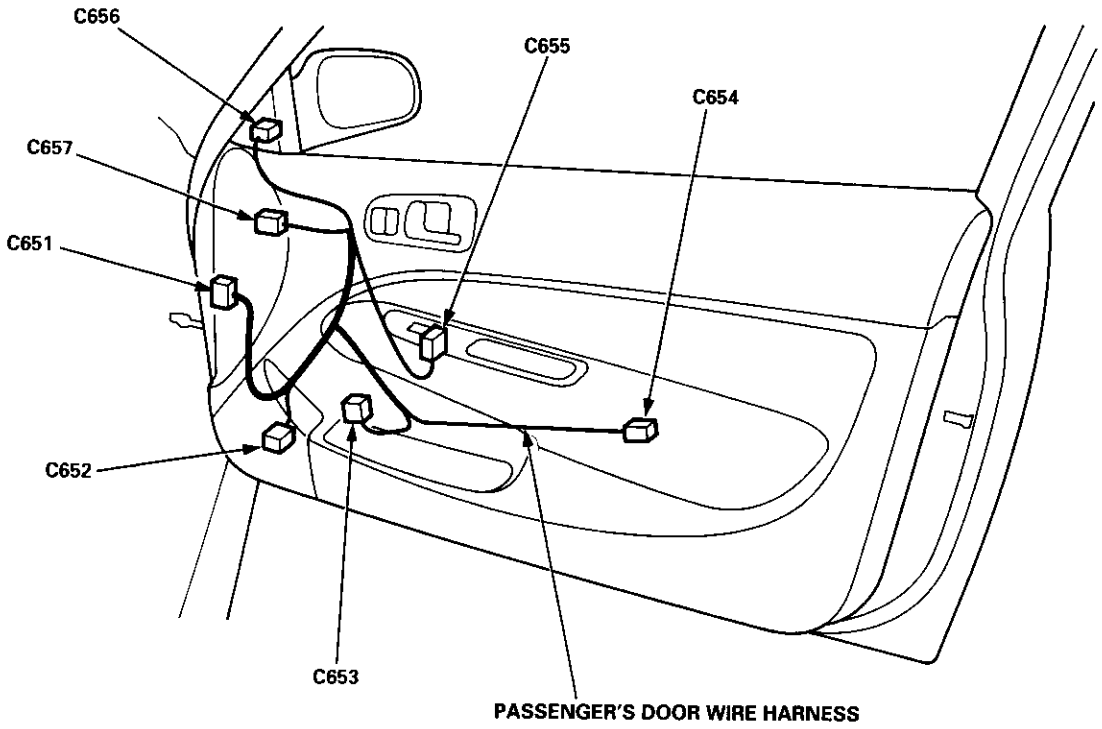

Driver's Door Wire Harness (Sedan)

Connector or Terminal	Number of Cavities	Location	Connects to	Notes
C631	25	Driver's door	Floor wire harness (C556)	*1
C631	2	Driver's door	Floor wire harness (C556)	*2
C632	2	Driver's door	Left front door speaker	
C633	4	Driver's door	Driver's power window motor	*1
C634	4	Driver's door	Driver's door lock actuator	*1
C636	16	Driver's door	Power window master switch	*1
C637	1	Driver's door	Power window master switch	*1
C638	3	Driver's door	Driver's door lock switch	*1
C639	8	Inside of left power mirror	Left power mirror	*1
C640	12	Driver's door	Power door lock control unit	*1

*1: With power windows
*2: Without power windows

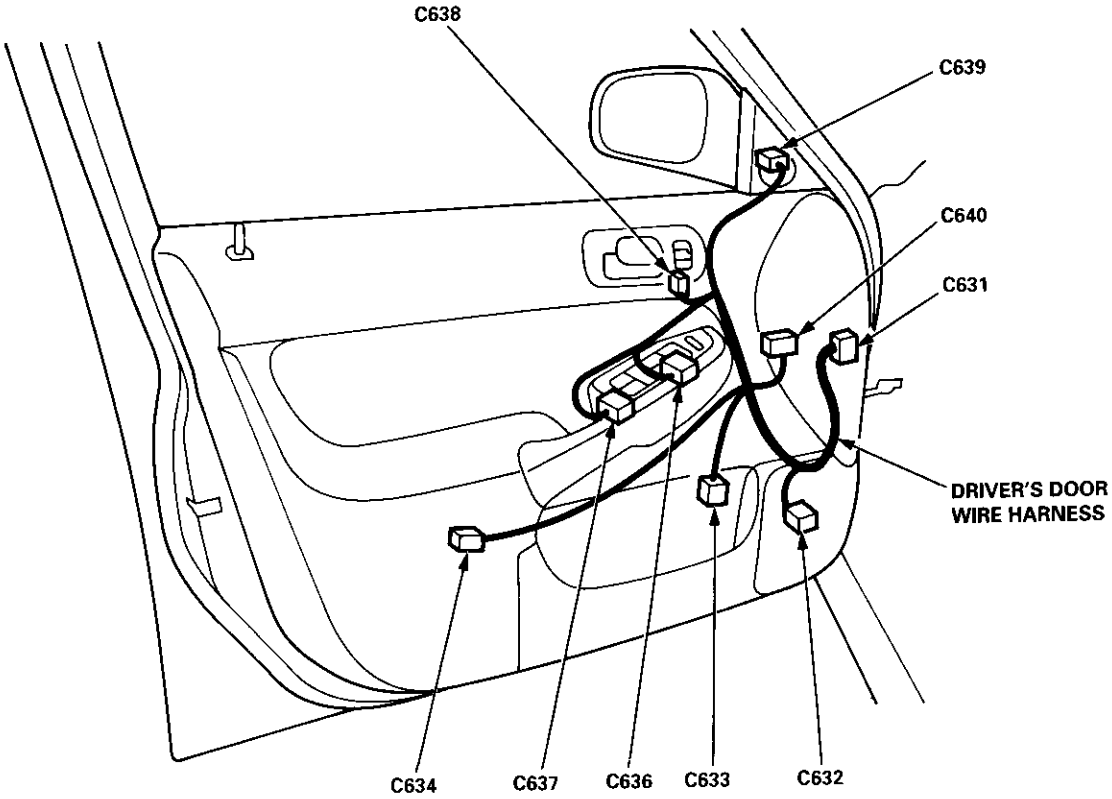

Front Passenger's Door Wire Harness (Sedan)

Connector or Terminal	Number of Cavities	Location	Connects to	Notes
C651	25	Passenger's door	Floor wire harness (C557)	*1
C651	2	Passenger's door	Floor wire harness (C557)	*2
C652	2	Passenger's door	Right front door speaker	
C653	2	Passenger's door	Front passenger's power window motor	*1
C654	2	Passenger's door	Front passenger's door lock actuator	*1
C655	5	Passenger's door	Front passenger's power window switch	*1
C656	8	Inside of right power mirror	Right power mirror	*1

*1: With power windows
*2: Without power windows

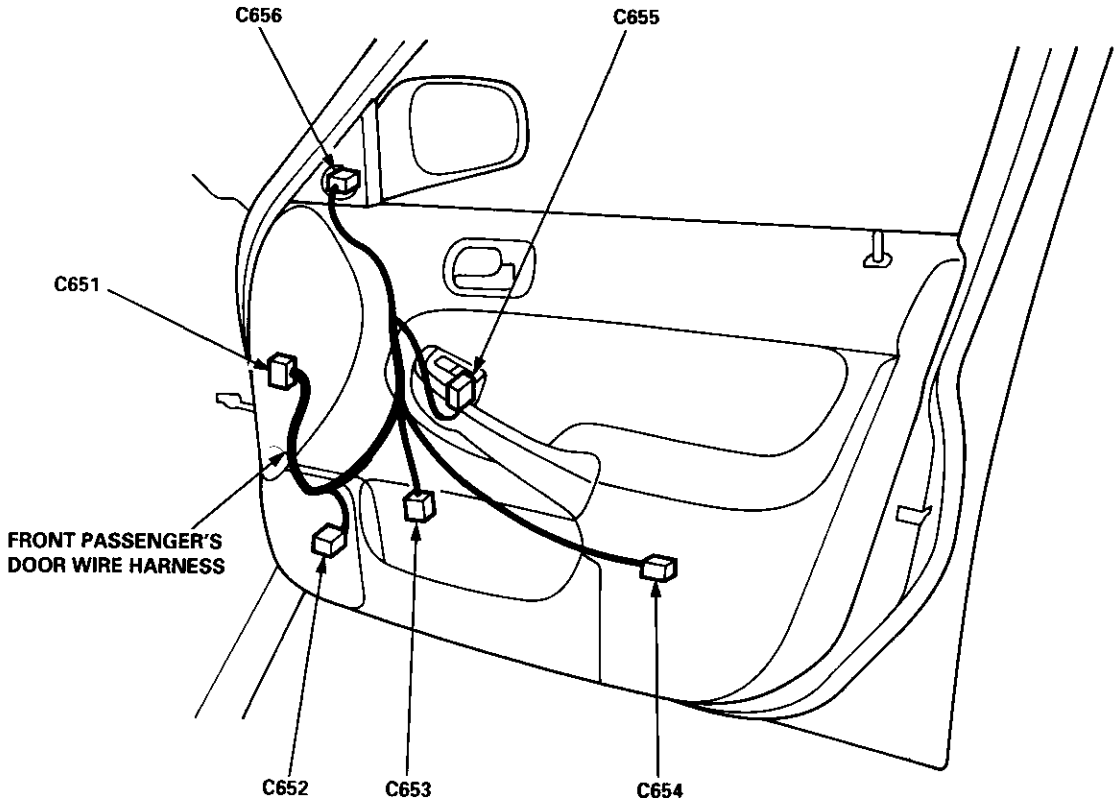

Left Rear Door Wire Harness (Sedan)

Connector or Terminal	Number of Cavities	Location	Connects to	Notes
C661	6	Left B-piller	Floor wire harness (C571)	
C662	2	Left rear door	Left rear power window motor	
C663	5	Left rear door	Left rear power window switch	
C664	2	Left rear door	Left rear door lock actuator	

Right Rear Door Wire Harness (Sedan)

Connector or Terminal	Number of Cavities	Location	Connects to	Notes
C671	6	Right B-piller	Floor wire harness (C570)	
C672	2	Right rear door	Right rear power window motor	
C673	5	Right rear door	Right rear power window switch	
C674	2	Right rear door	Right rear door lock actuator	

Left Rear Door:

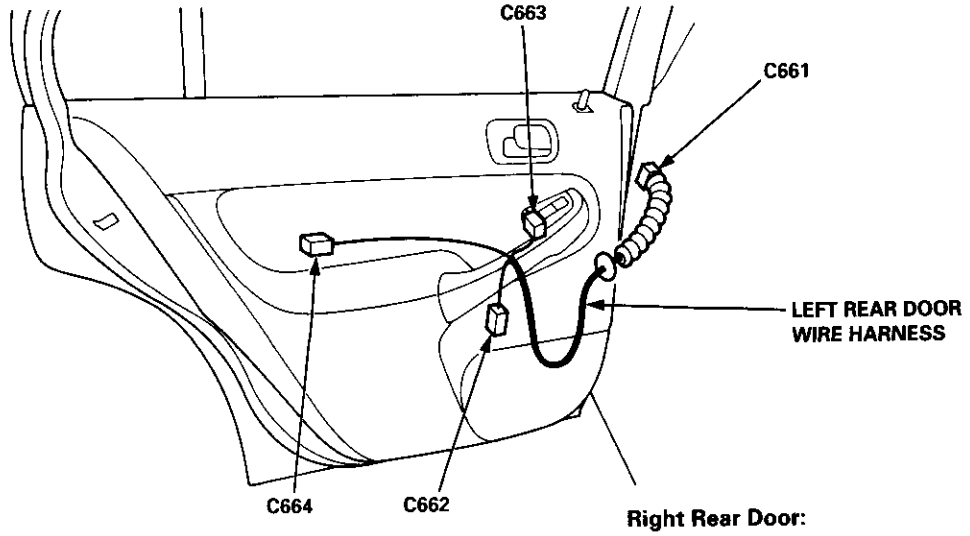

Right Rear Door:

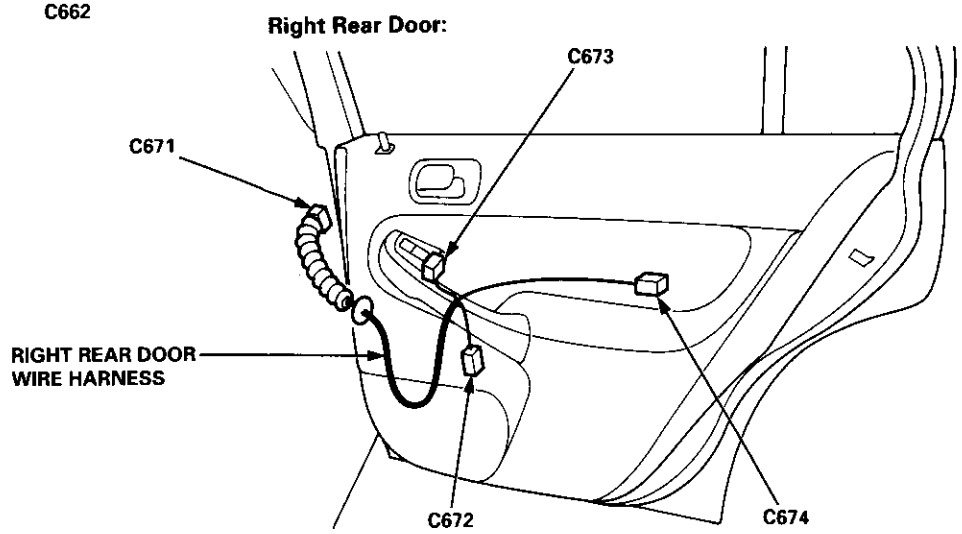

Roof Wire Harness (Coupe/Hatchback)

Connector or Terminal	Number of Cavities	Location	Connects to	Notes
C701	2	Under left side of dash	Main wire harness (C407)	*1
C701	6	Under left side of dash	Main wire harness (C407)	*2
C702	2	Middle of roof	Ceiling light	
C719	1	Front of roof	Spotlight	*2

*1: '96 – 98 models
*2: '99 – 00 models

Roof Wire Harness (Sedan)

Connector or Terminal	Number of Cavities	Location	Connects to	Notes
C701	2	Under left side of dash	Main wire harness (C407)	*1
C701	6	Under left side of dash	Main wire harness (C407)	*2
C702	1	Middle of roof	Ceiling light (Power)	
C703	1	Middle of roof	Ceiling light (Ground)	
C719	1	Front of roof	Spotlight	*2

*1: '96 – 98 models
*2: '99 – 00 models

Moonroof Wire Harness (Coupe/Sedan)

Connector or Terminal	Number of Cavities	Location	Connects to	Notes
C711	2	Under left side of dash	Main wire harness (C407)	*1, *2
C711	6	Under left side of dash	Main wire harness (C407)	*3
C712	3	Behind dashboard lower panel	Under-dash fuse/relay box (C910)	Optional *1, *2
C713	6	Left side of dashboard bracket	Moonroof open relay	*1, *2
C713	5	Left side of dashboard bracket	Moonroof open relay	*3
C714	6	Left side of dashboard bracket	Moonroof close relay	*1, *2
C714	5	Left side of dashboard bracket	Moonroof close relay	*3
C715	4	Left side of steering wheel	Moonroof switch	
C716	3	Middle of roof	Ceiling light	
C717	2	Rear of roof	Moonroof motor	
C718	4	Rear of roof	Moonroof motor (Tilt switch)	
C719	1	Front of roof	Spotlight	*2, *3

*1: '96 – 97 models
*2: '98 model
*3: '99 – 00 models

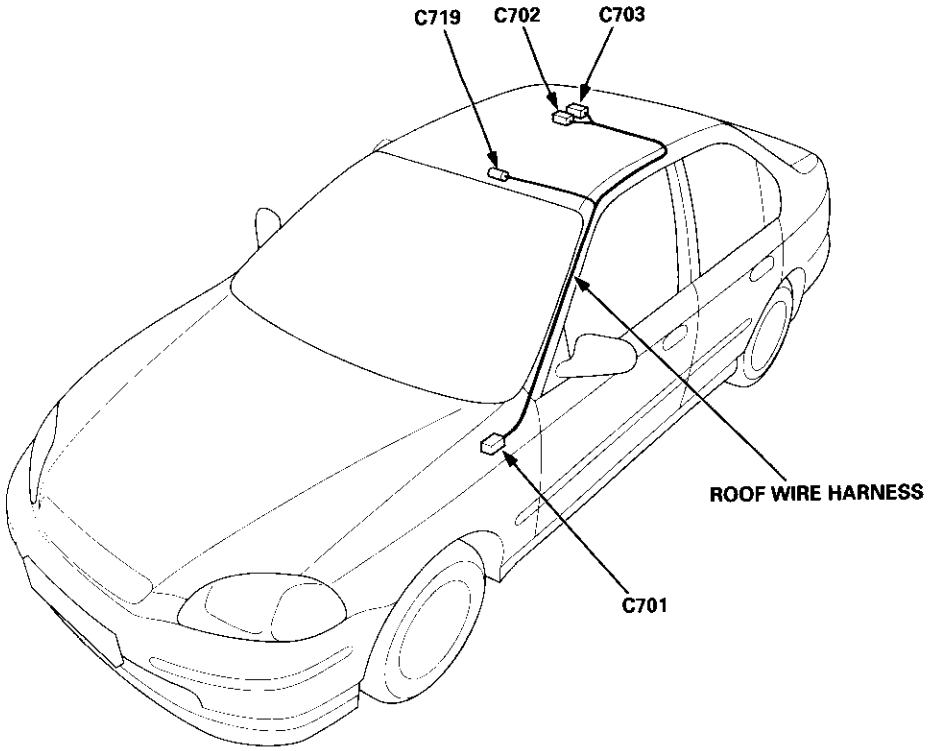
C719
C702
C703
ROOF WIRE HARNESS
C701

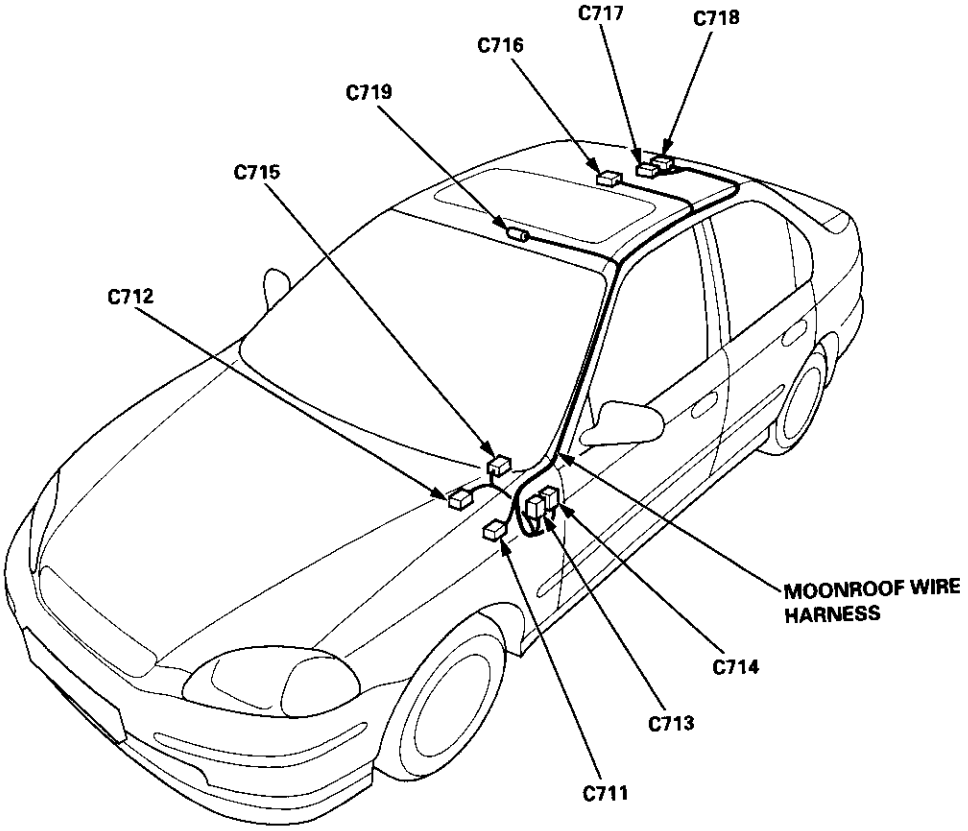
C717
C718
C716
C719
C715
C712
MOONROOF WIRE HARNESS
C714
C713
C711

Hatch Wire Harness (Hatchback)

Connector or Terminal	Number of Cavities	Location	Connects to	Notes
C761	6	Right quarter panel	Rear wire harness (C607)	
C762	2	Right quarter panel	Rear wire harness (C608)	
C763	2	Rear of roof	High mount brake light	
C764	1	Right side of hatch	Rear window defogger (+)	
C765	2	Middle of hatch	Right license light	
C766	2	Middle of hatch	Left license light	
C767	4	Middle of hatch	Rear window wiper motor	
C768	2	Middle of hatch	Hatch latch switch	
G761		Middle of tailgate	Body ground, via tailgate wire harness	

Rear Window Defogger Ground Wire (Hatchback)

Connector or Terminal	Number of Cavities	Location	Connects to	Notes
C771	1	Left side of hatch	Rear window defogger (–)	
G771		Left side of hatch	Body ground, via rear window defogger ground wire	

'96 – 97 models:

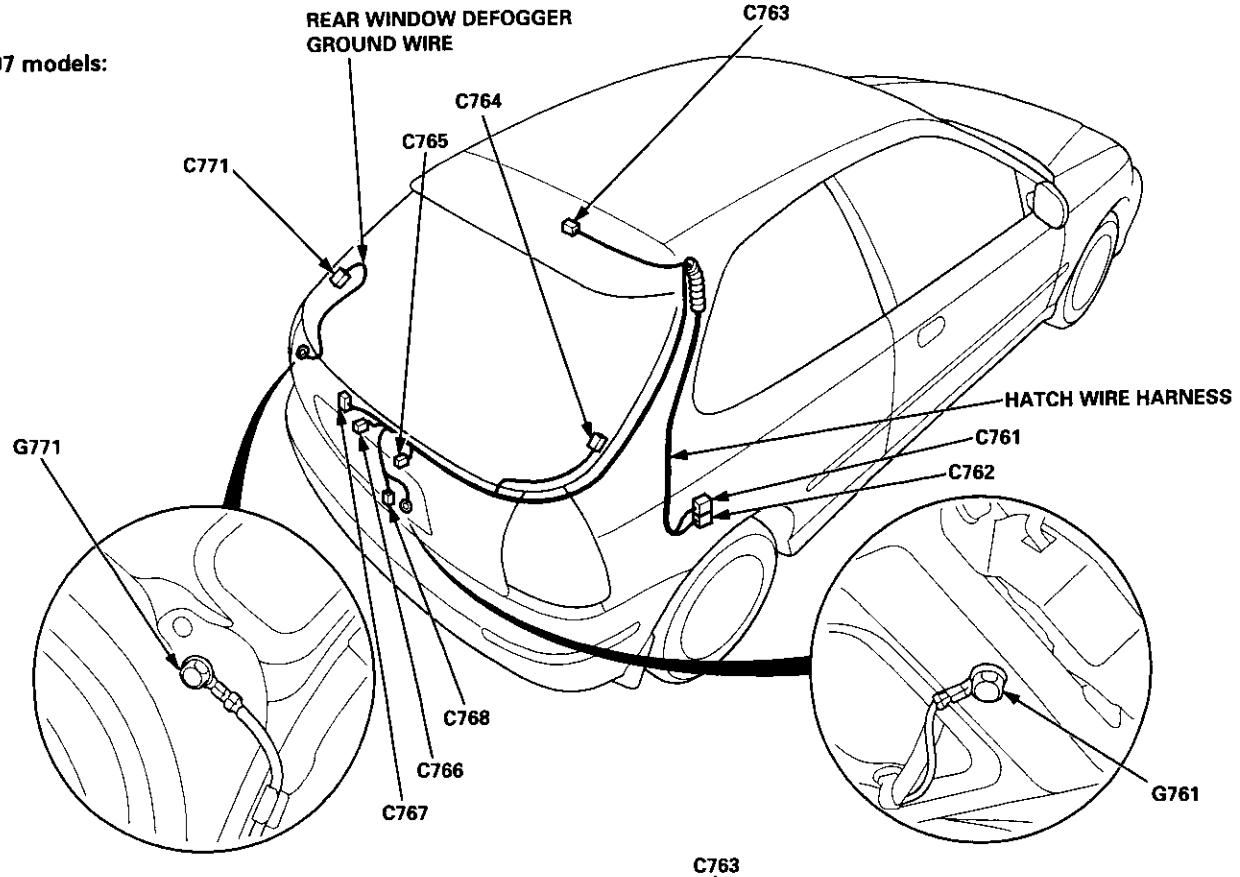

'98 – 00 models:

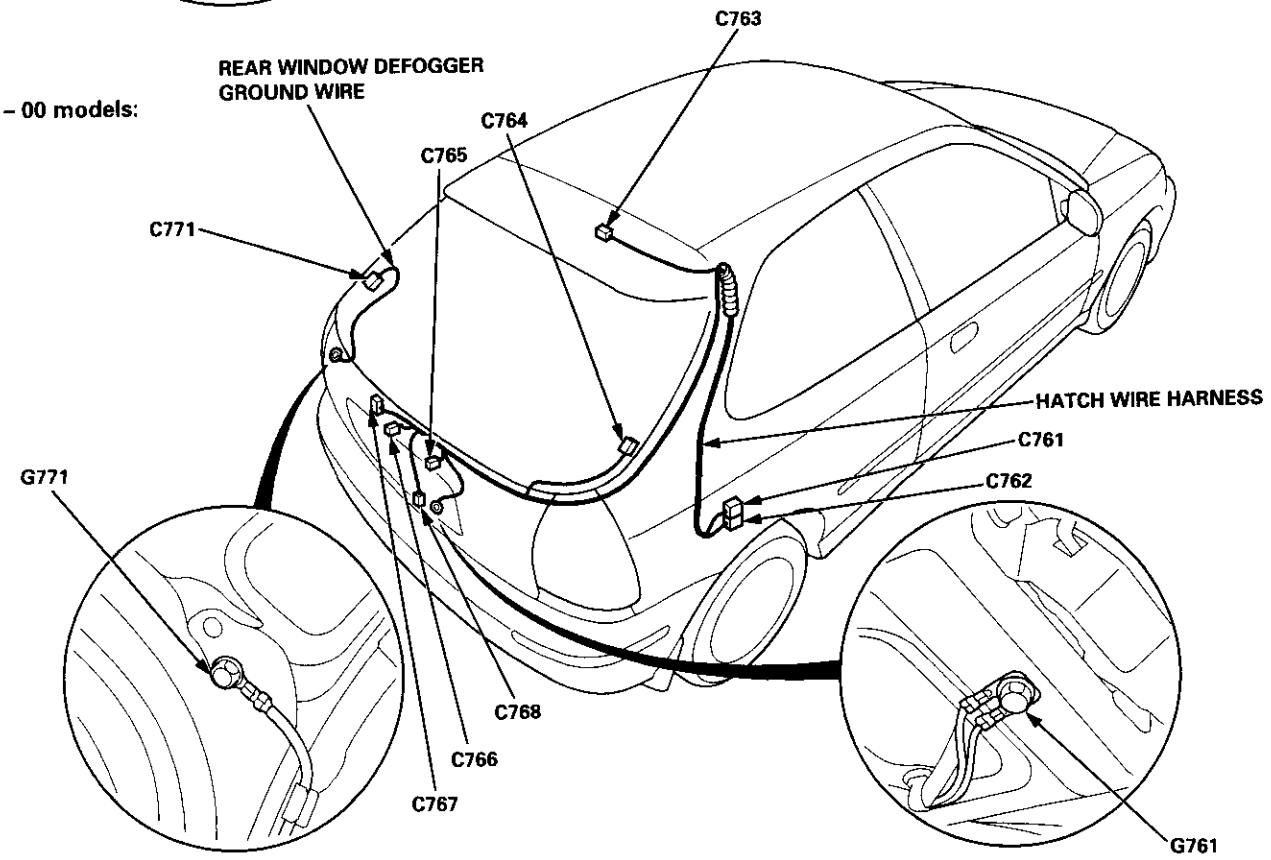

Heater Sub-harness A: '96 – 98 models

Connector or Terminal	Number of Cavities	Location	Connects to	Notes
C721	16	Under left side of dash	Main wire harness (C440)	
C722	7	Behind glove box	Mode control motor	
C723	20	Behind glove box	Heater sub-harness B (C741)	
C724	3	Behind glove box	A/C thermostat	
C725	2	Behind glove box	Blower motor	
C726	4	Behind glove box	Blower resister	
C727	4	Behind glove box	Recirculation control motor	

Heater Sub-harness B: '96 – 98 models

Connector or Terminal	Number of Cavities	Location	Connects to	Notes
C741	20	Behind glove box	Heater sub-harness A (C723)	
C742	6	Behind middle of dash	Heater fan switch	
C743	14	Behind middle of dash	Heater control panel	

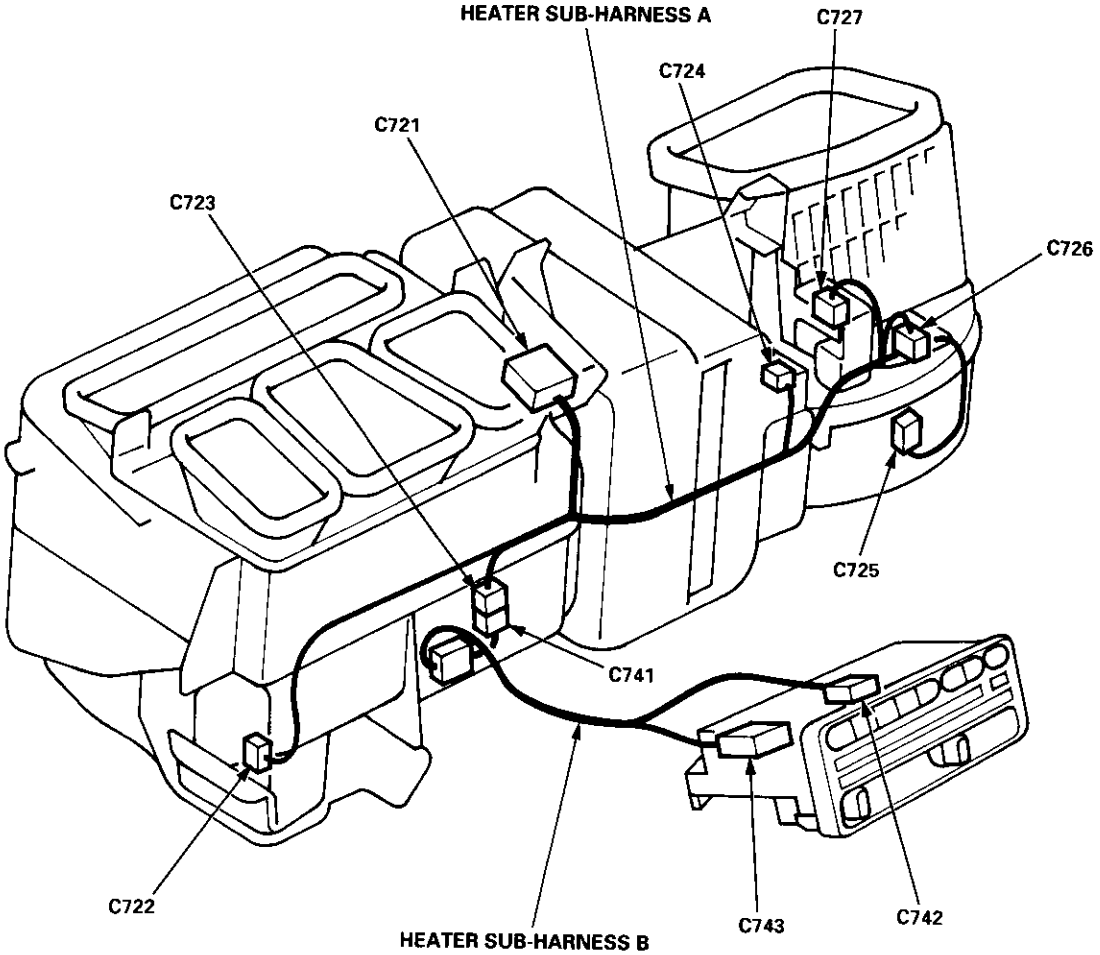

Heater Sub-harness A: '99 – 00 models

Connector or Terminal	Number of Cavities	Location	Connects to	Notes
C721	16	Under left side of dash	Main wire harness (C440)	
C722	7	Behind glove box	Mode control motor	
C723	24	Behind glove box	Heater sub-harness B (C741)	
C724	3	Behind glove box	A/C thermostat	
C725	2	Behind glove box	Blower motor	
C726	3	Behind glove box	Power transistor	
C727	4	Behind glove box	Recirculation control motor	
C728	1	Behind glove box	Heater sub-harness B (C744)	
C729	5	Behind glove box	Air mix control motor	
C730	4	Behind glove box	Blower motor high relay	

Heater Sub-harness B: '99 – 00 models

Connector or Terminal	Number of Cavities	Location	Connects to	Notes
C741	20	Behind glove box	Heater sub-harness A (C723)	
C742	8	Behind middle of dash	Heater control panel	
C743	20	Behind middle of dash	Heater control panel	
C744	1	Behind glove box	Heater sub-harness A (C728)	

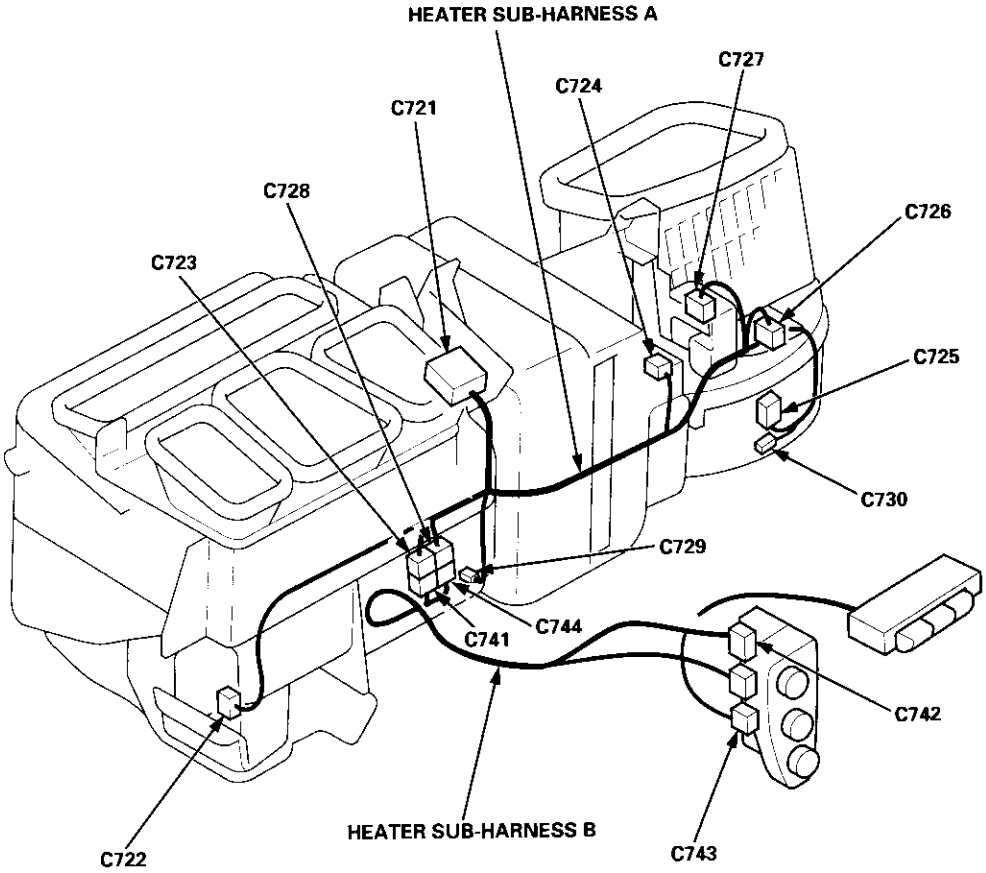

Rear Heated Oxygen Sensor Sub-harness

Connector or Terminal	Number of Cavities	Location	Connects to	Notes
C781 C782	4 4	Under middle of dash Under middle of dash	Main wire harness (C432) Secondary heated oxygen sensor (Secondary HO2S)	

Fuel Tank Pressure Sensor Sub-harness

Connector or Terminal	Number of Cavities	Location	Connects to	Notes
C791	6	Middle of floor	Floor wire harness (C568: Coupe/ Hatchback, C574: Sedan)	
C792	3	Left side of fuel tank	Fuel tank pressure sensor	
C793	2	Left side of fuel tank	EVAP two way valve	

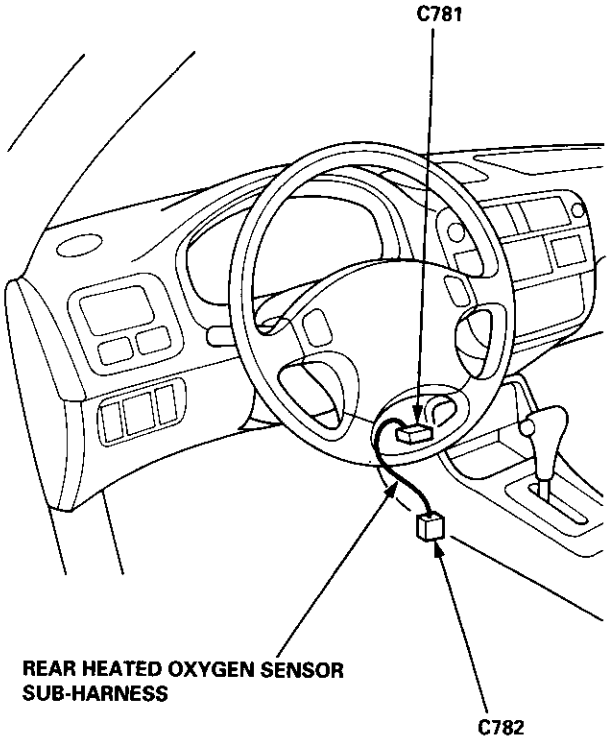

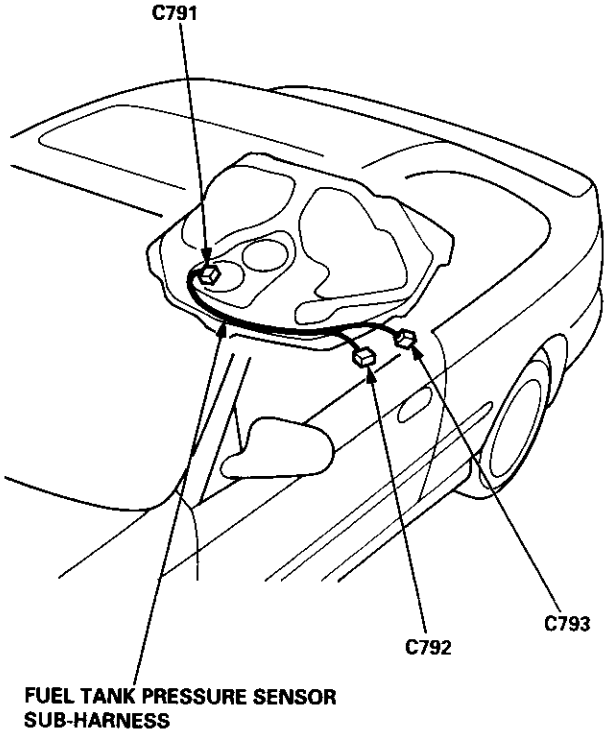

SRS Main Harness

Connector or Terminal	Number of Cavities	Location	Connects to	Notes
C801	2	Under left side of dash	Under-dash fuse/relay box (C911)	
C802	3	Above under-dash fuse/relay box	Main wire harness (C412)	
C803	2	Right side of under-dash fuse/relay box	Memory erase signal (MES) connector	
C804	2	Under left side of dash	Cable reel	
C805	2	Under right side of dash	Passenger's airbag assembly	USA
C806	2	Middle of floor	Dummy resistor connector	Canada
C807	18	Middle of floor	SRS unit	
G801		Middle of floor	Body ground, via SRS main harness	

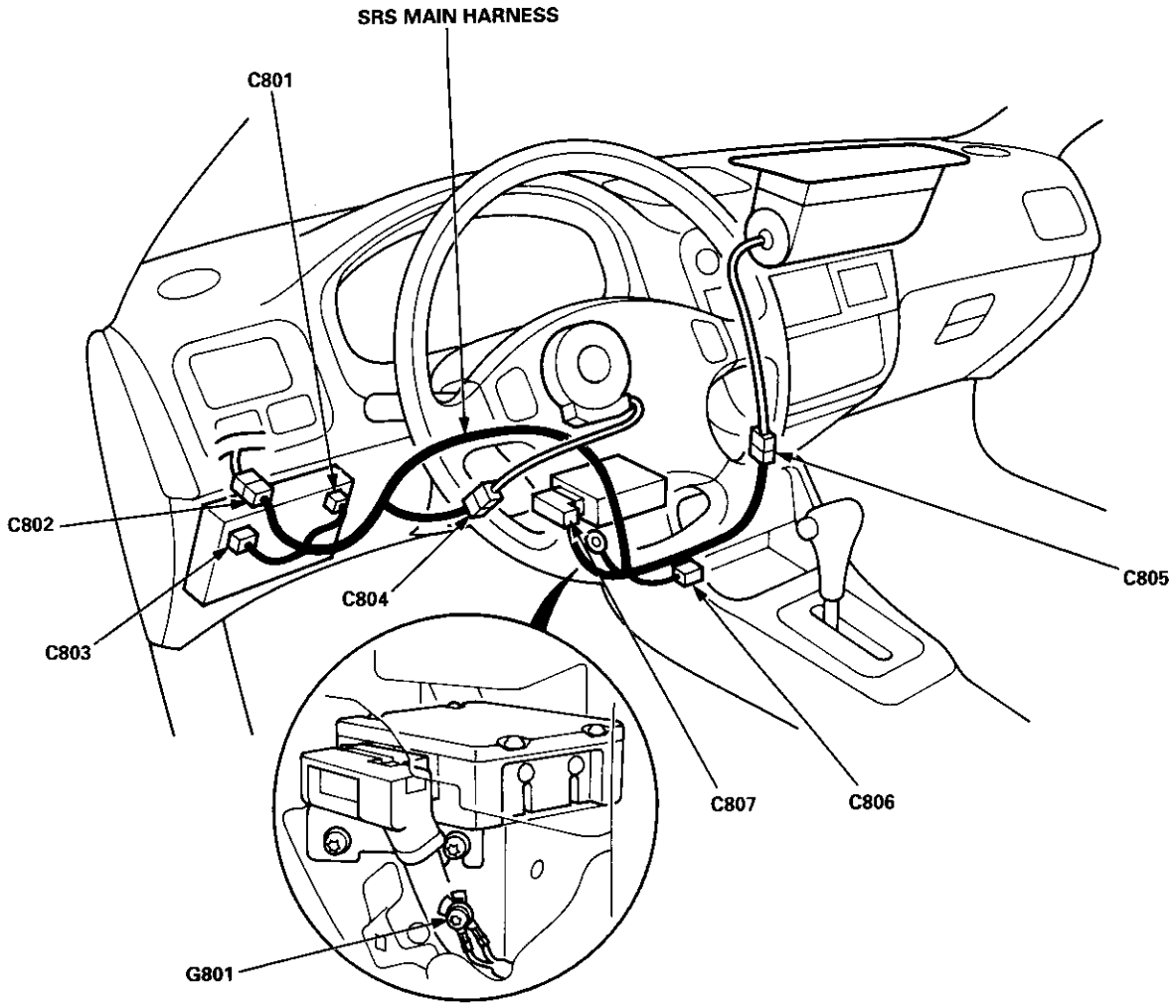

Under-hood Fuse/Relay Box

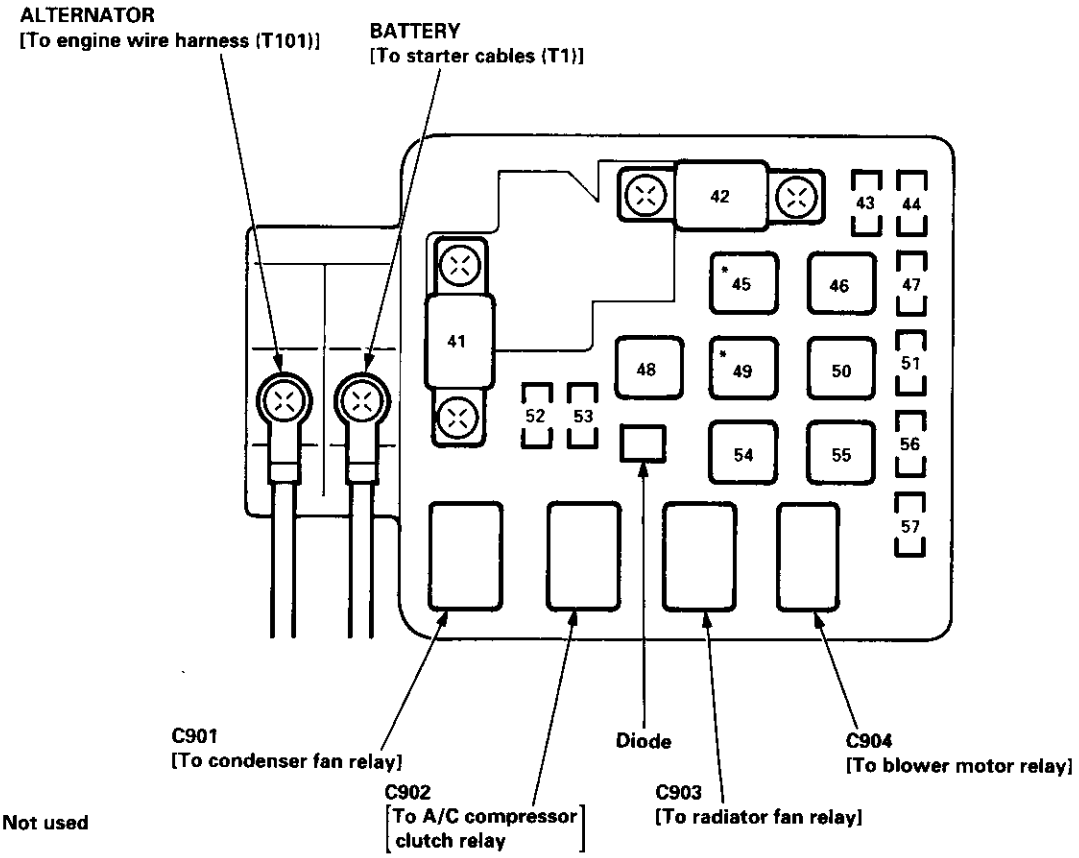

NOTE: View from the backside of the under-hood fuse/relay box.

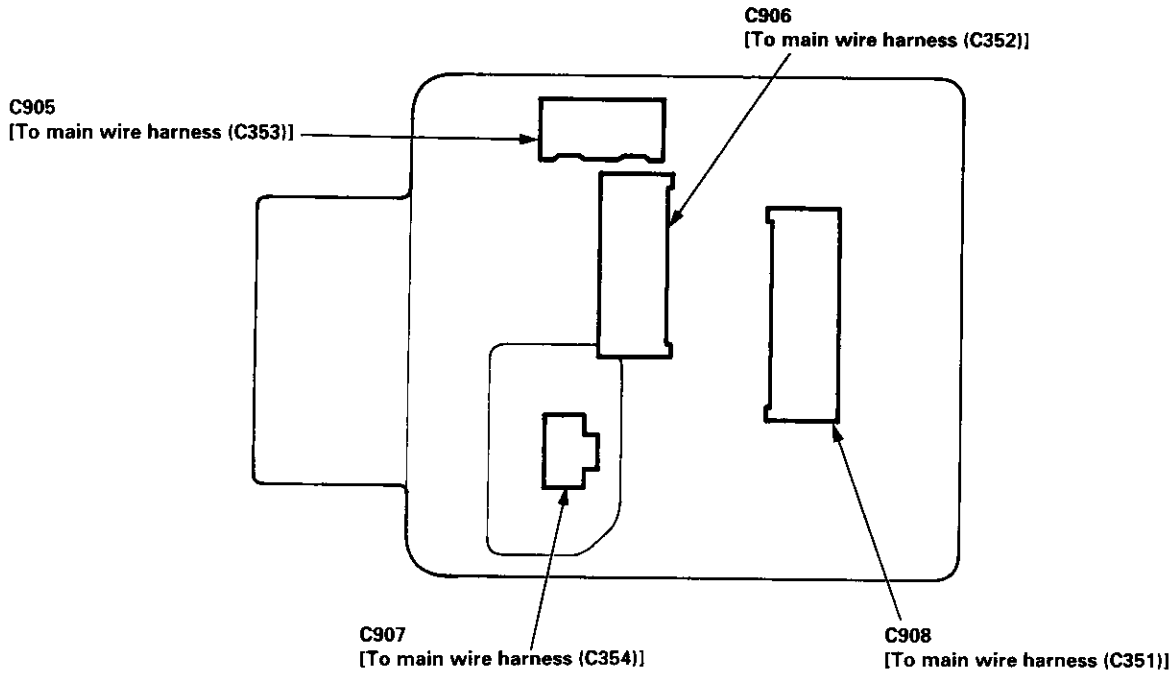

Fuse Number	Amps	Wire Color	Component(s) or Circuit(s) Protected
41	80 A	———	Power distribution
42	40 A	WHT/BLK	To ignition switch (BAT)
43	7.5 A	WHT/RED	Ceiling light, data link connector, trunk light
44	15 A	WHT/BLK	PGM-FI main relay
45	———	———	Not used
46	40 A	WHT/BLU	Power window motors (via power window relay)
47	7.5 A	WHT/BLU	Audio unit, clock, TCM (CVT), ECM/PCM (VBU)
48	30 A	WHT	No. 33 (7.5 A) fuse, To combination light switch (headlight)
49	———	———	Not used
50	30 A	WHT/GRN	Rear window defogger (via rear window defogger relay)
51	20 A	WHT/GRN	Power door lock control unit, moonroof motor
52	15 A	WHT/GRN	Horn system, brake lights, brake signal
53	10 A	WHT/BLK	Hazard warning light, turn signal/hazard relay
54	40 A	WHT/RED	Option (+B)
55	40 A	BLU/WHT	Blower motor (via blower motor relay)
56	20 A	WHT	Condenser fan motor (via condenser fan relay)
		RED	A/C compressor clutch (via A/C compressor clutch relay)
57	20 A	BLK/RED	Radiator fan motor (via radiator fan relay)

Under-dash Fuse/Relay Box

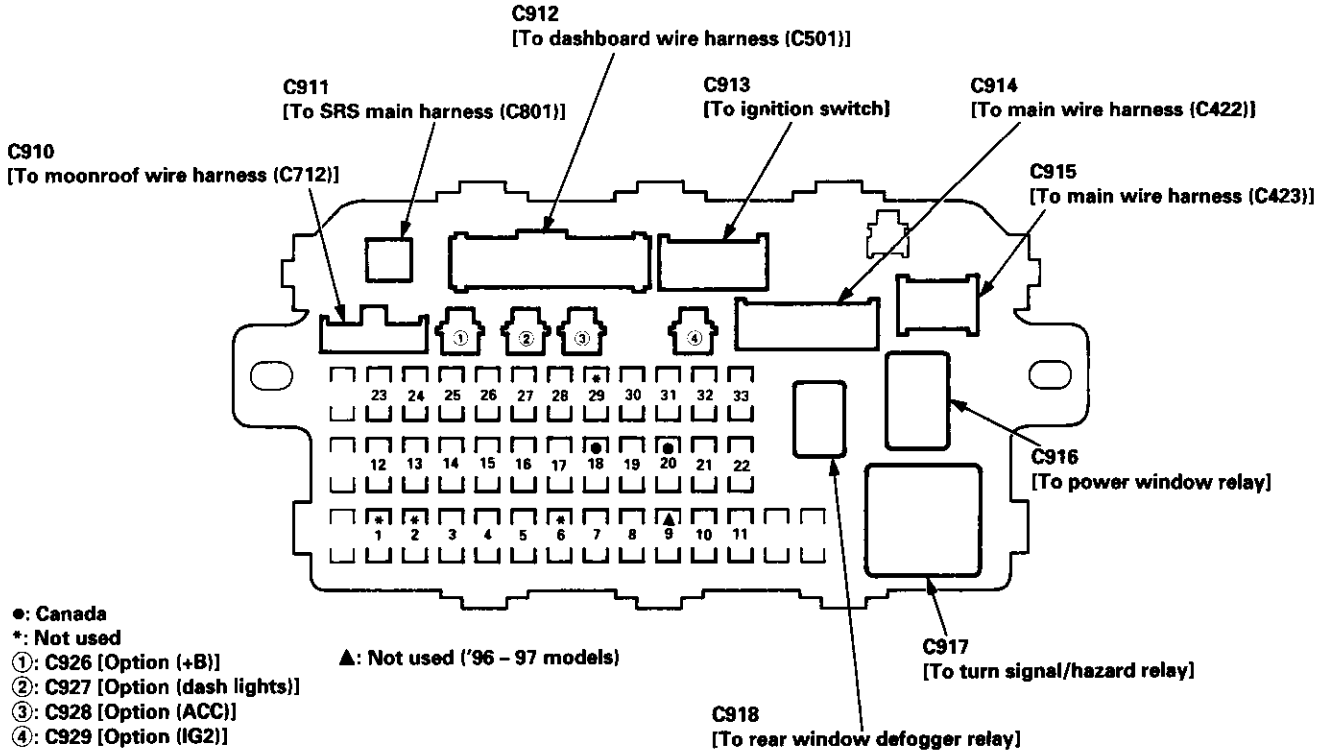

NOTE: View from the backside of the under-dash fuse/relay box.

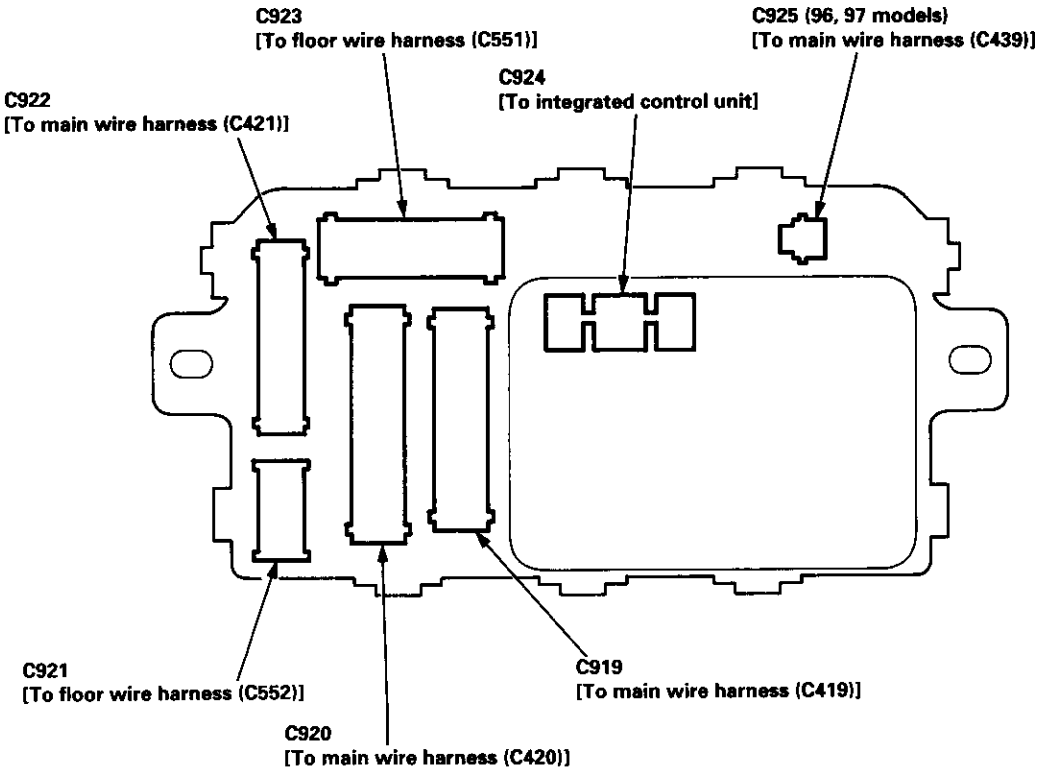

Fuse Number	Amps	Wire Color	Component(s) or Circuit(s) Protected
1	—	———	Not used
2	—	———	Not used
3	10 A	GRN	Rear window wiper motor, rear window washer motor
4	10 A	RED/BLU	Right headlight (high beam)
5	10 A	RED/GRN	Left headlight (high beam), high beam indicator light
6	—	———	Not used
7	20 A	RED/WHT	Left rear power window motor
8	20 A	YEL/BLK	Right rear power window motor
9	—	———	Not used ('96 – 97 models)
	15 A	RED	Distributor (ignition control module) ('98 – 99 models)
10	20 A	GRN/BLK	Front passenger's power window motor
11	20 A	BLU/BLK	Driver's power window motor
12	7.5 A	YEL/BLK	Turn signal/hazard relay (via turn signal/hazard switch)
13	15 A	YEL/GRN	PGM-FI main relay
		GRY or BLK/YEL	SRS unit (VA)
14	7.5 A	BLK/YEL	Cruise control system, audio unit*1, keyless door lock control unit*3
15	7.5 A	BLK/WHT	Alternator, VSS, ELD unit (USA), EVAP purge vent shut valve, oxygen sensors, TCM (CVT)*1
16	7.5 A	BLK/BLU	ABS pump motor, rear window defogger, power mirror*3, mirror defogger*3
17	7.5 A	BLK/YEL	A/C system, power mirror*1, option (IG2)
18	7.5 A	YEL/BLK	Daytime running lights relay (Canada)
19	7.5 A	YEL/RED	Back-up lights
20	10 A	BLK/WHT	Daytime running lights control unit (Canada)
21	10 A	RED/WHT	Right headlight (low beam)
22	10 A	RED/YEL	Left headlight (low beam)
23	10 A	GRY or PNK	SRS unit (VB)
24	7.5 A	GRN/ORN	Moonroof relays
25	7.5 A	YEL	Gauge and indicator lights, interlock control unit
26	20 A	GRN/BLK	Windshield wiper motor, windshield washer motor, integrated control unit (Canada)
27	15 A	YEL/GRN	Accessory socket (ACC)
28	10 A/15A*2	YEL/RED	Audio unit, option (ACC)
29	———	———	Not used
30	7.5 A	RED/BLK	Dash lights, option (dash lights)
31	7.5 A	BLU/WHT	ECM/PCM, PGM-FI main relay, integrated control unit
32	7.5 A	RED/BLK	Front parking lights, taillights, license plate lights
33	7.5 A	WHT/GRN	Interlock control unit, key interlock solenoid

*1: '96 – 98 models
*2: '98 model
*3: '99 – 00 models

Under-hood ABS Fuse/Relay Box

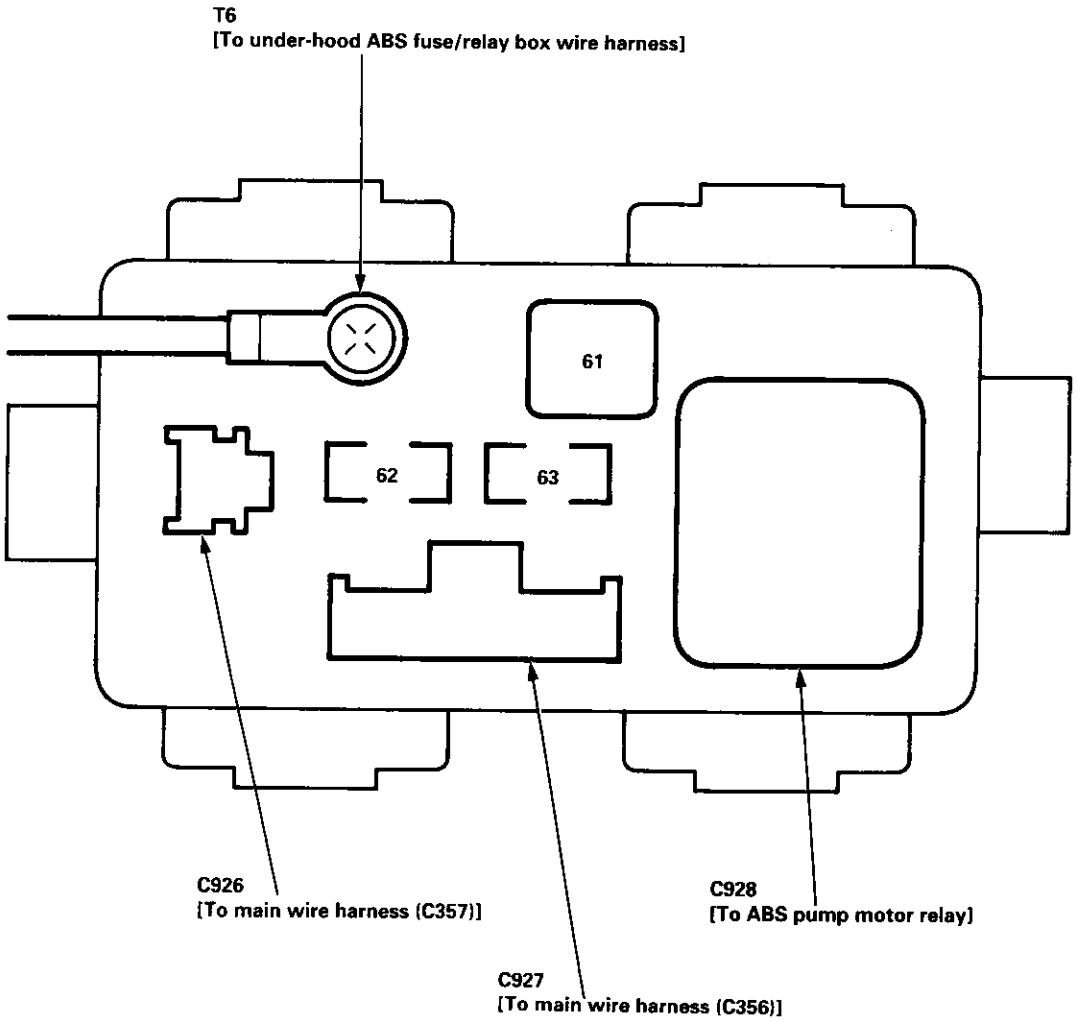

Fuse Number	Amps	Wire Color	Component(s) or Circuit(s) Protected
61	40 A	WHT	ABS pump motor (via ABS pump motor relay)
63	7.5 A	BRN/YEL	ABS control unit (motor check)
62	20 A	WHT/GRN	ABS control unit (+B1)

Circuit Identification

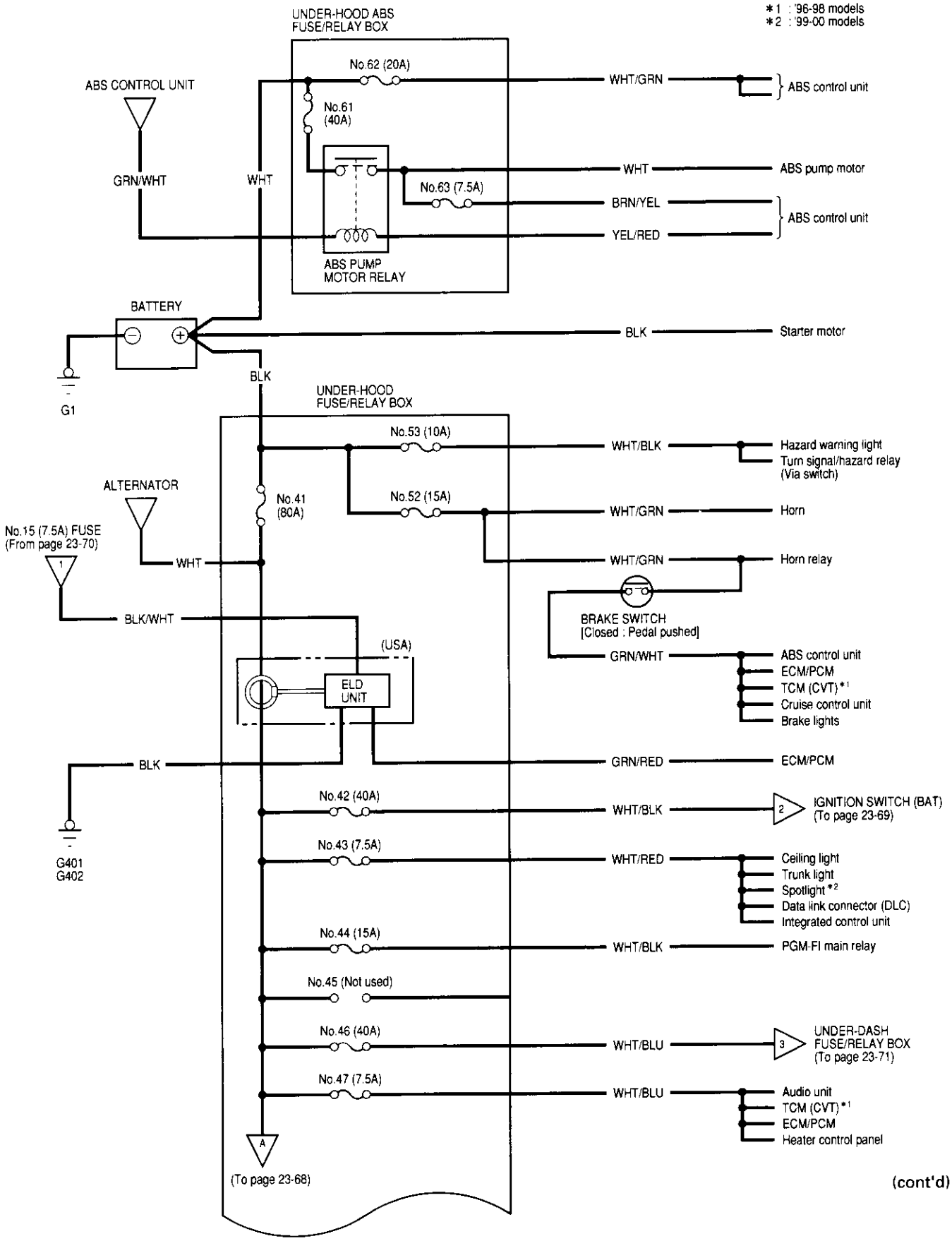

(cont'd)

Circuit Identification (cont'd)

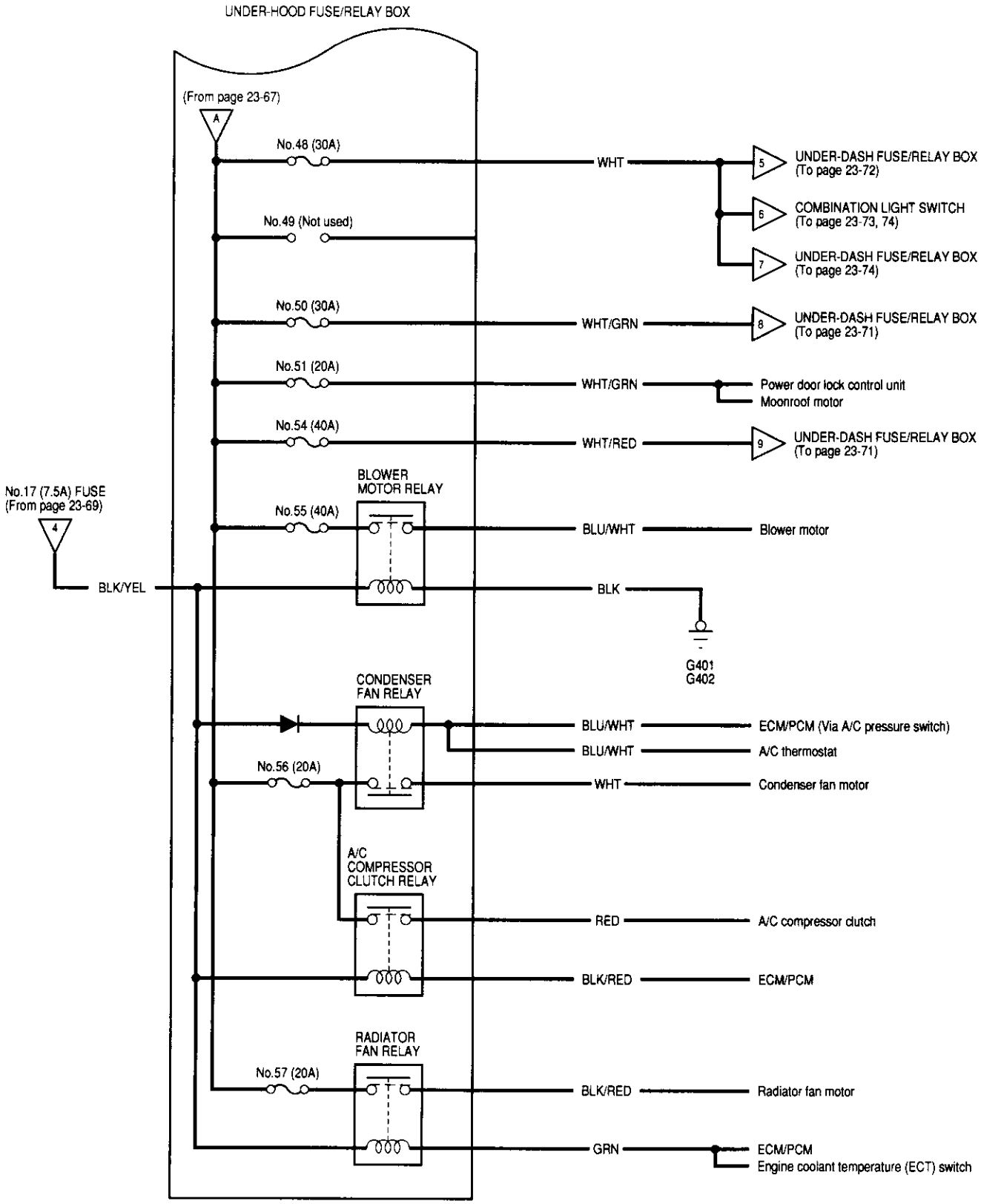

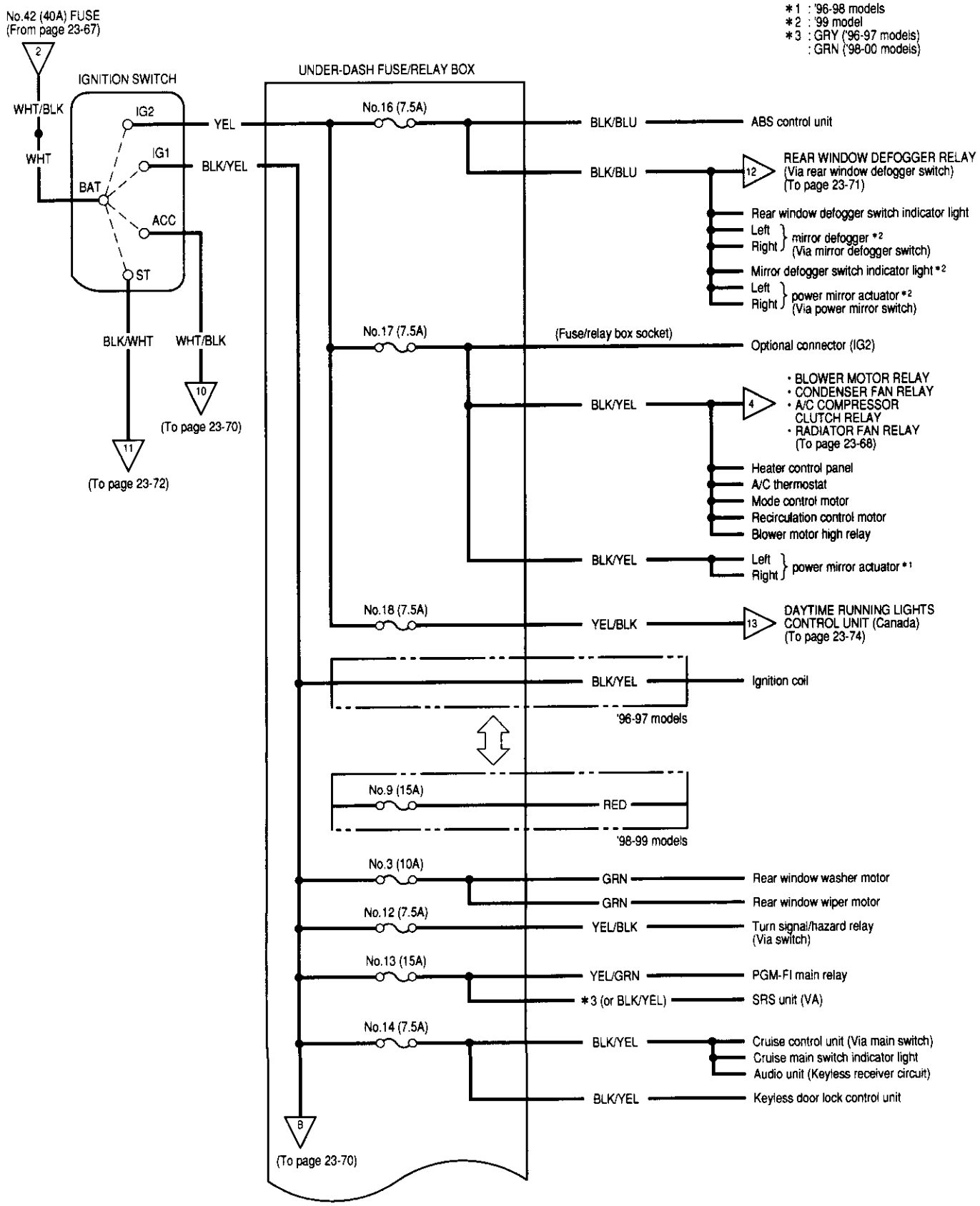
No.42 (40A) FUSE
(From page 23-67)
2
WHT/BLK
WHT
IGNITION SWITCH
IG2
IG1
BAT
ACC
ST
YEL
BLK/YEL
BLK/WHT
WHT/BLK
10
(To page 23-70)
11
(To page 23-72)
UNDER-DASH FUSE/RELAY BOX
*1 : '96-98 models
*2 : '99 model
*3 : GRY ('96-97 models)
: GRN ('98-00 models)
No.16 (7.5A)
BLK/BLU
ABS control unit
BLK/BLU
12
REAR WINDOW DEFOGGER RELAY
(Via rear window defogger switch)
(To page 23-71)
Rear window defogger switch indicator light
Left
Right
mirror defogger *2
(Via mirror defogger switch)
Mirror defogger switch indicator light *2
Left
Right
power mirror actuator *2
(Via power mirror switch)
No.17 (7.5A)
(Fuse/relay box socket)
Optional connector (IG2)
BLK/YEL
4
• BLOWER MOTOR RELAY
• CONDENSER FAN RELAY
• A/C COMPRESSOR CLUTCH RELAY
• RADIATOR FAN RELAY
(To page 23-68)
Heater control panel
A/C thermostat
Mode control motor
Recirculation control motor
Blower motor high relay
BLK/YEL
Left
Right
power mirror actuator *1
No.18 (7.5A)
YEL/BLK
13
DAYTIME RUNNING LIGHTS CONTROL UNIT (Canada)
(To page 23-74)
BLK/YEL
Ignition coil
'96-97 models
No.9 (15A)
RED
'98-99 models
No.3 (10A)
GRN
Rear window washer motor
GRN
Rear window wiper motor
No.12 (7.5A)
YEL/BLK
Turn signal/hazard relay
(Via switch)
No.13 (15A)
YEL/GRN
PGM-FI main relay
*3 (or BLK/YEL)
SRS unit (VA)
No.14 (7.5A)
BLK/YEL
Cruise control unit (Via main switch)
Cruise main switch indicator light
Audio unit (Keyless receiver circuit)
BLK/YEL
Keyless door lock control unit
8
(To page 23-70)

(cont'd)

Circuit Identification (cont`d)

*1 : '96-98 models
*2 : '99 model
*3 : GRY ('96-97 models)
: GRN ('98-00 models)

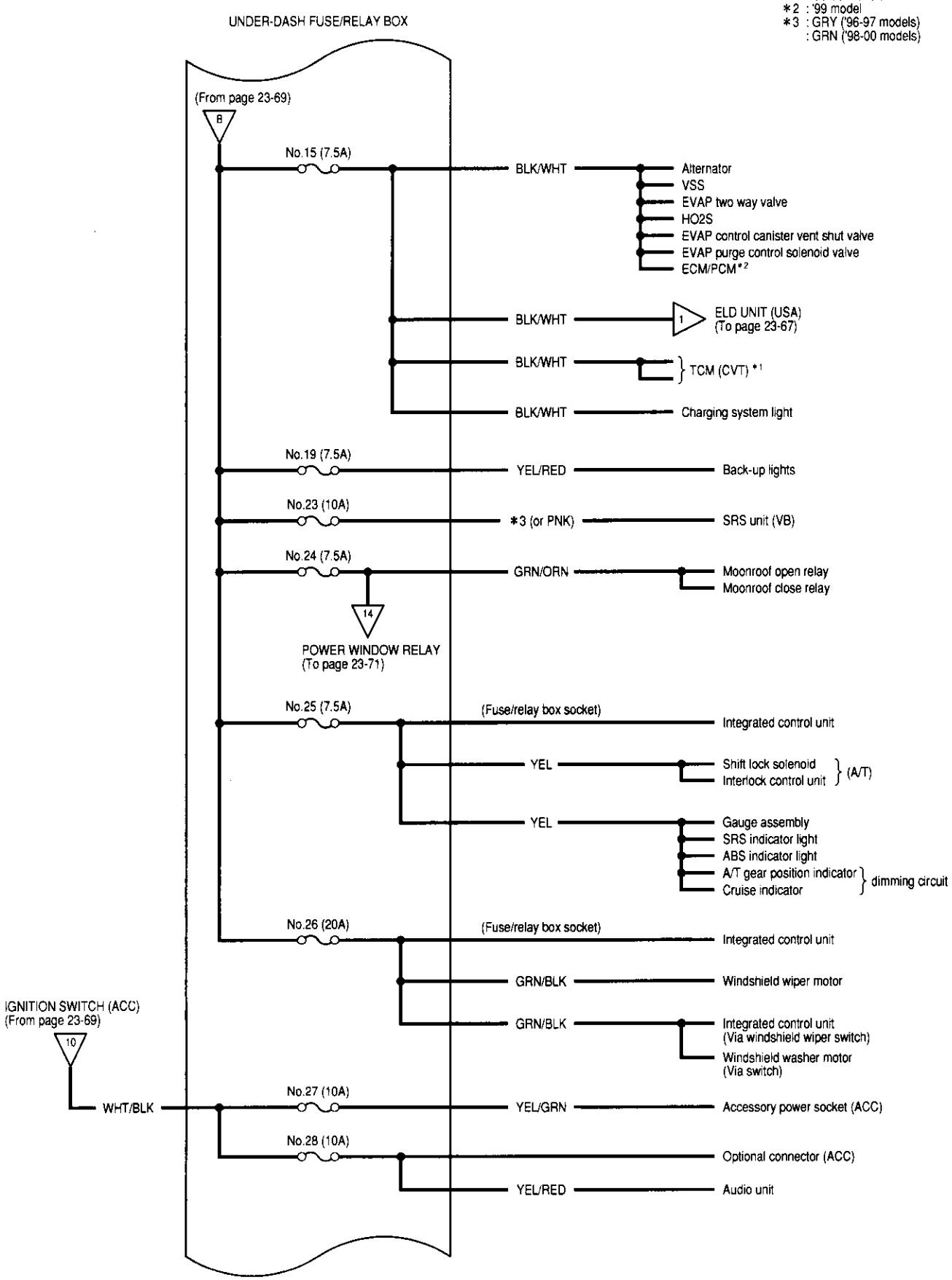

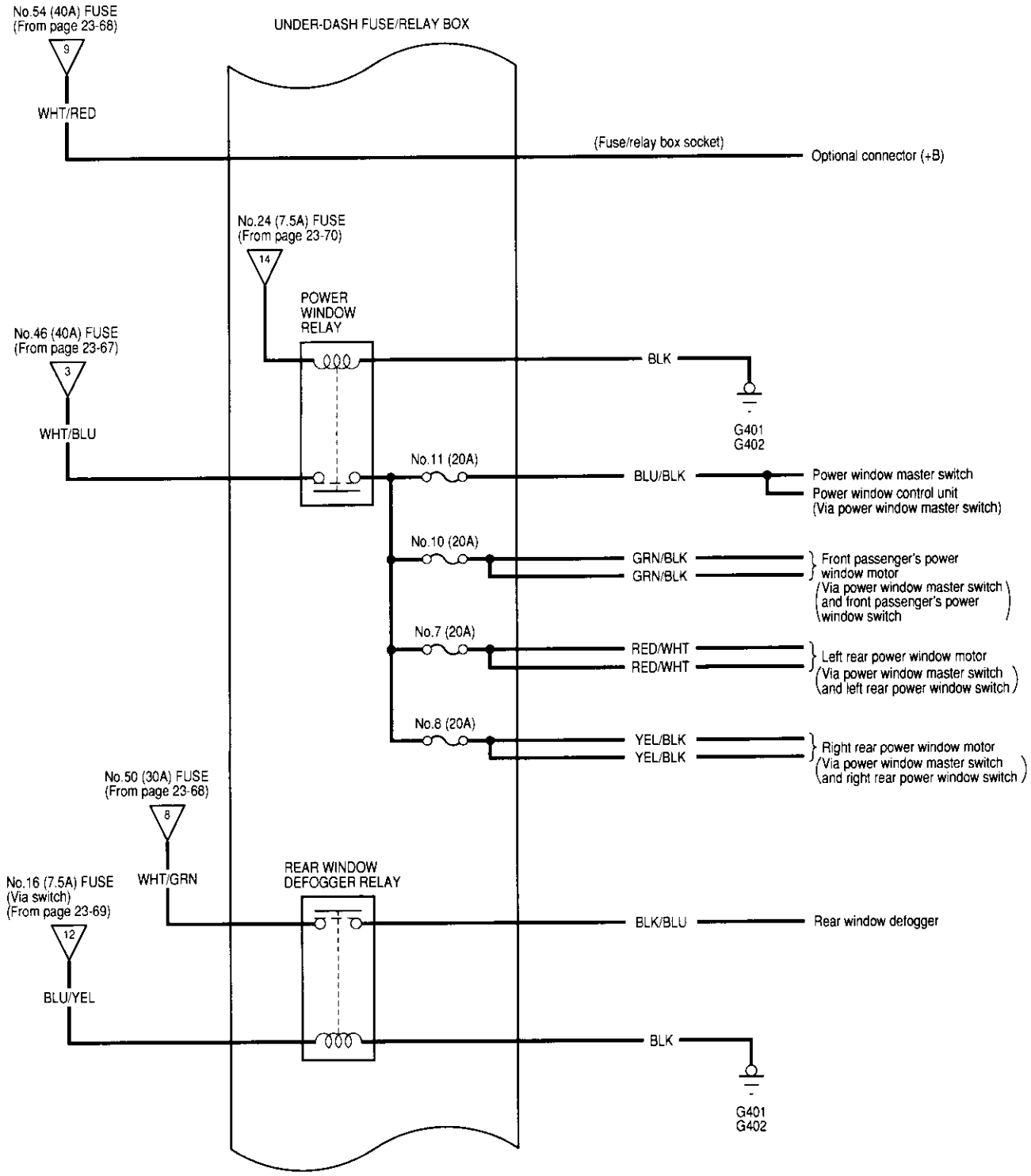
No.54 (40A) FUSE
(From page 23-68)
9
WHT/RED
UNDER-DASH FUSE/RELAY BOX
(Fuse/relay box socket)
Optional connector (+B)
No.24 (7.5A) FUSE
(From page 23-70)
14
POWER
WINDOW
RELAY
No.46 (40A) FUSE
(From page 23-67)
3
WHT/BLU
BLK
G401
G402
No.11 (20A)
BLU/BLK
Power window master switch
Power window control unit
(Via power window master switch)
No.10 (20A)
GRN/BLK
GRN/BLK
Front passenger's power window motor
(Via power window master switch and front passenger's power window switch)
No.7 (20A)
RED/WHT
RED/WHT
Left rear power window motor
(Via power window master switch and left rear power window switch)
No.8 (20A)
YEL/BLK
YEL/BLK
Right rear power window motor
(Via power window master switch and right rear power window switch)
No.50 (30A) FUSE
(From page 23-68)
8
WHT/GRN
No.16 (7.5A) FUSE
(Via switch)
(From page 23-69)
12
BLU/YEL
REAR WINDOW
DEFOGGER RELAY
BLK/BLU
Rear window defogger
BLK
G401
G402

(cont'd)

Circuit Identification (cont`d)

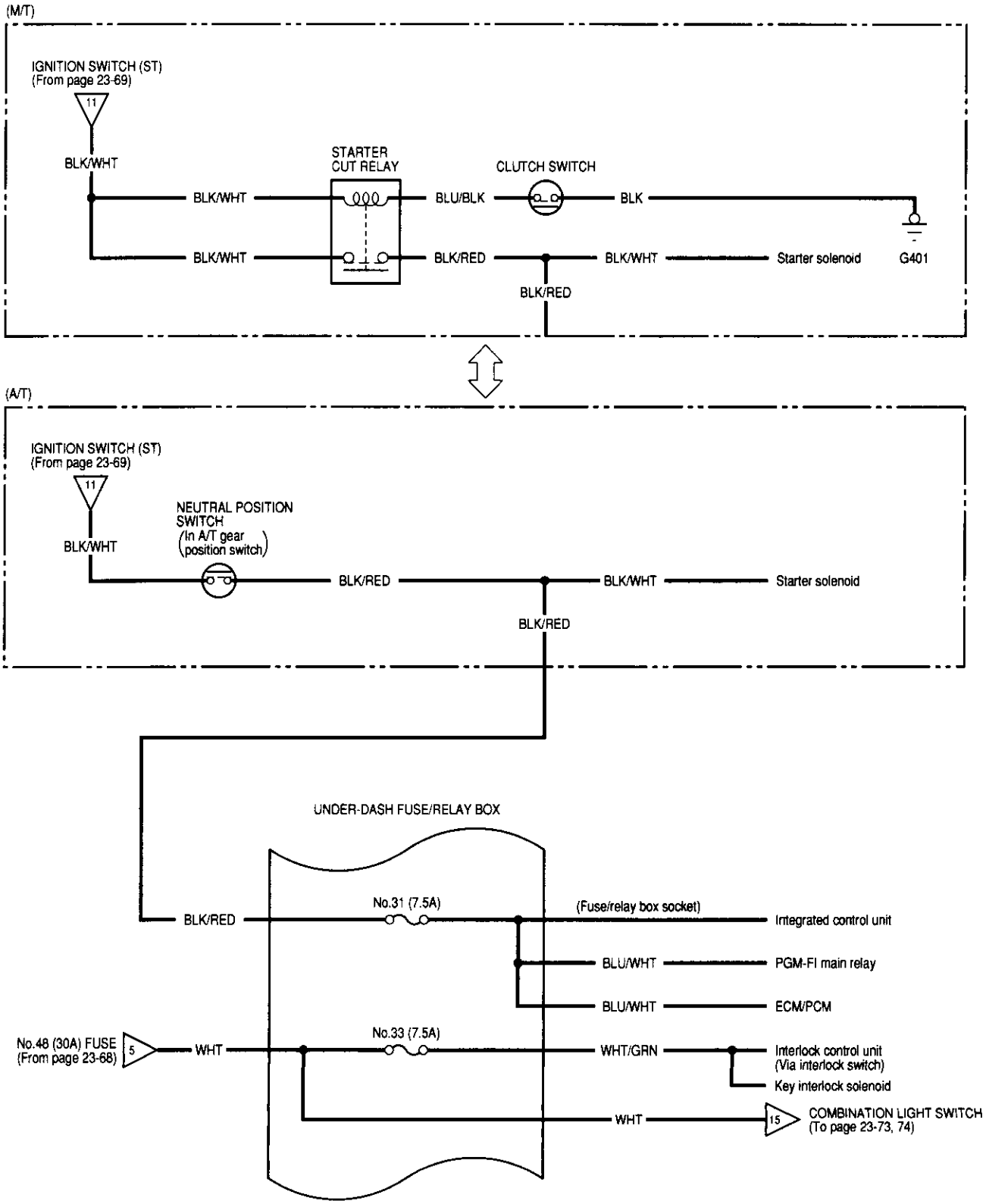

USA:

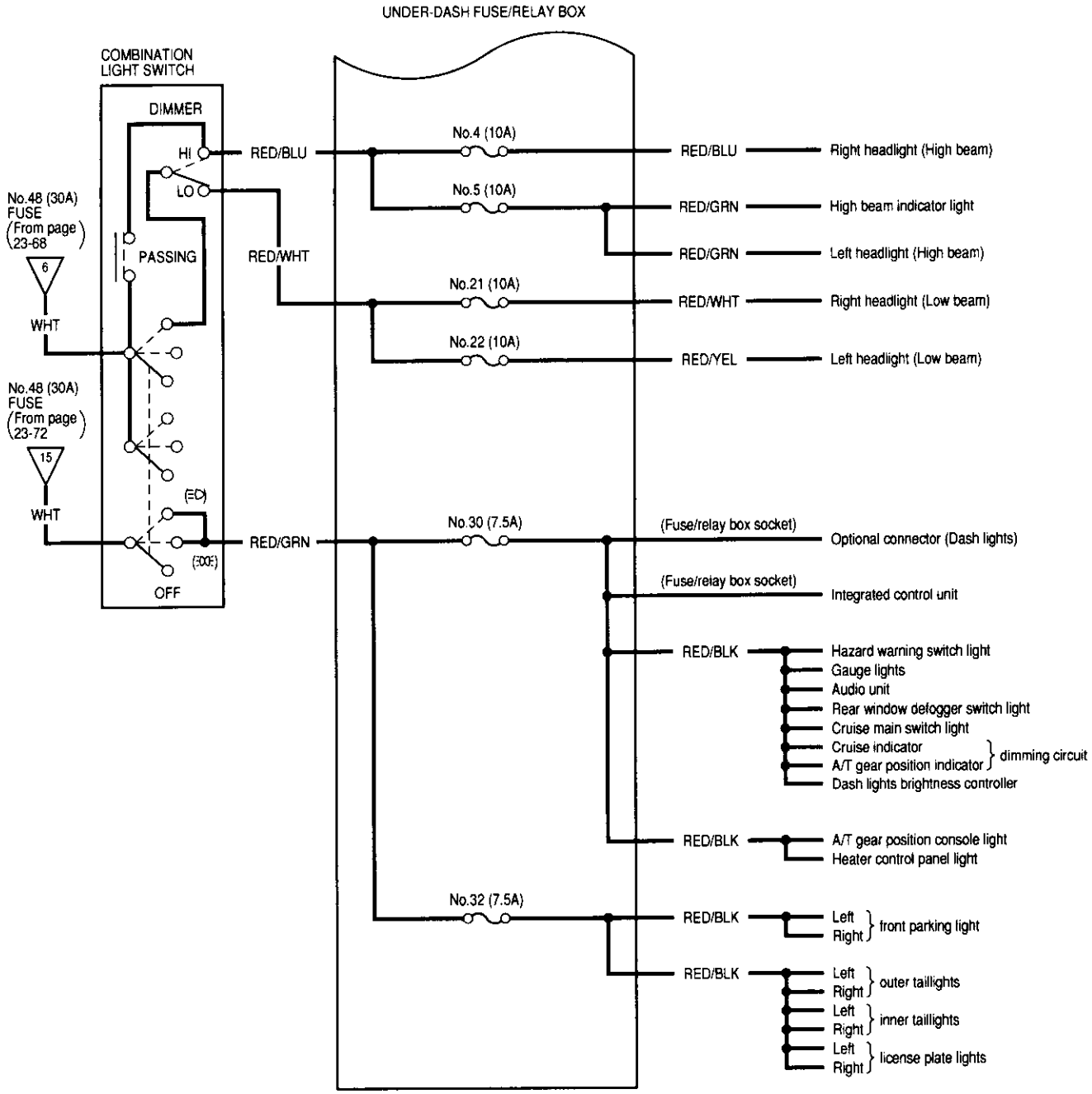
UNDER-DASH FUSE/RELAY BOX
COMBINATION LIGHT SWITCH
DIMMER
HI
LO
PASSING
OFF
No.48 (30A) FUSE (From page 23-68)
6
WHT
No.48 (30A) FUSE (From page 23-72)
15
WHT
RED/BLU
RED/WHT
RED/GRN
No.4 (10A)
No.5 (10A)
No.21 (10A)
No.22 (10A)
No.30 (7.5A)
No.32 (7.5A)
RED/BLU
RED/GRN
RED/GRN
RED/WHT
RED/YEL
(Fuse/relay box socket)
(Fuse/relay box socket)
RED/BLK
RED/BLK
RED/BLK
RED/BLK
Right headlight (High beam)
High beam indicator light
Left headlight (High beam)
Right headlight (Low beam)
Left headlight (Low beam)
Optional connector (Dash lights)
Integrated control unit
Hazard warning switch light
Gauge lights
Audio unit
Rear window defogger switch light
Cruise main switch light
Cruise indicator
A/T gear position indicator
dimming circuit
Dash lights brightness controller
A/T gear position console light
Heater control panel light
Left
Right
front parking light
Left
Right
outer taillights
Left
Right
inner taillights
Left
Right
license plate lights

(cont'd)

Circuit Identification (cont`d)

Canada:

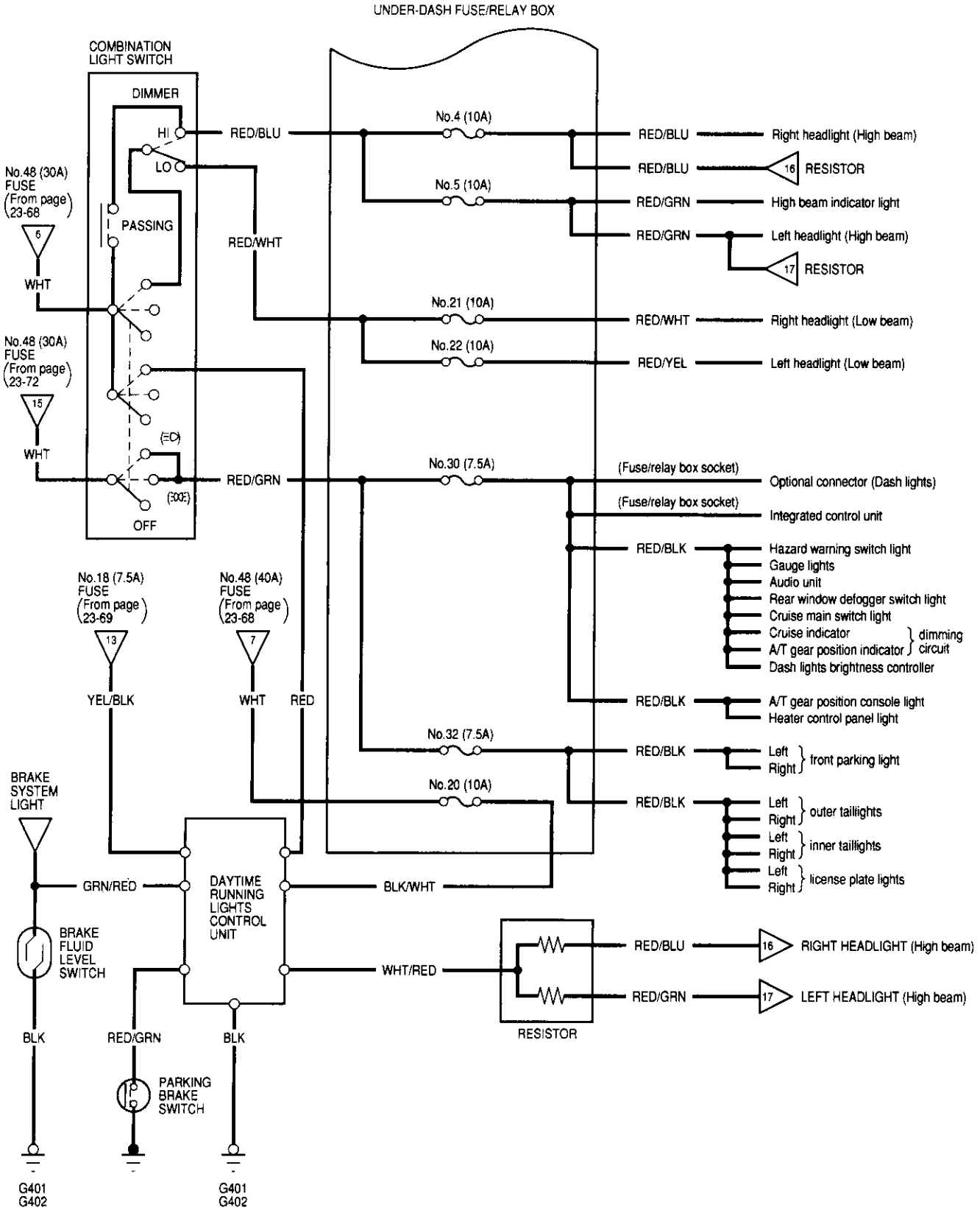

Circuit Identification

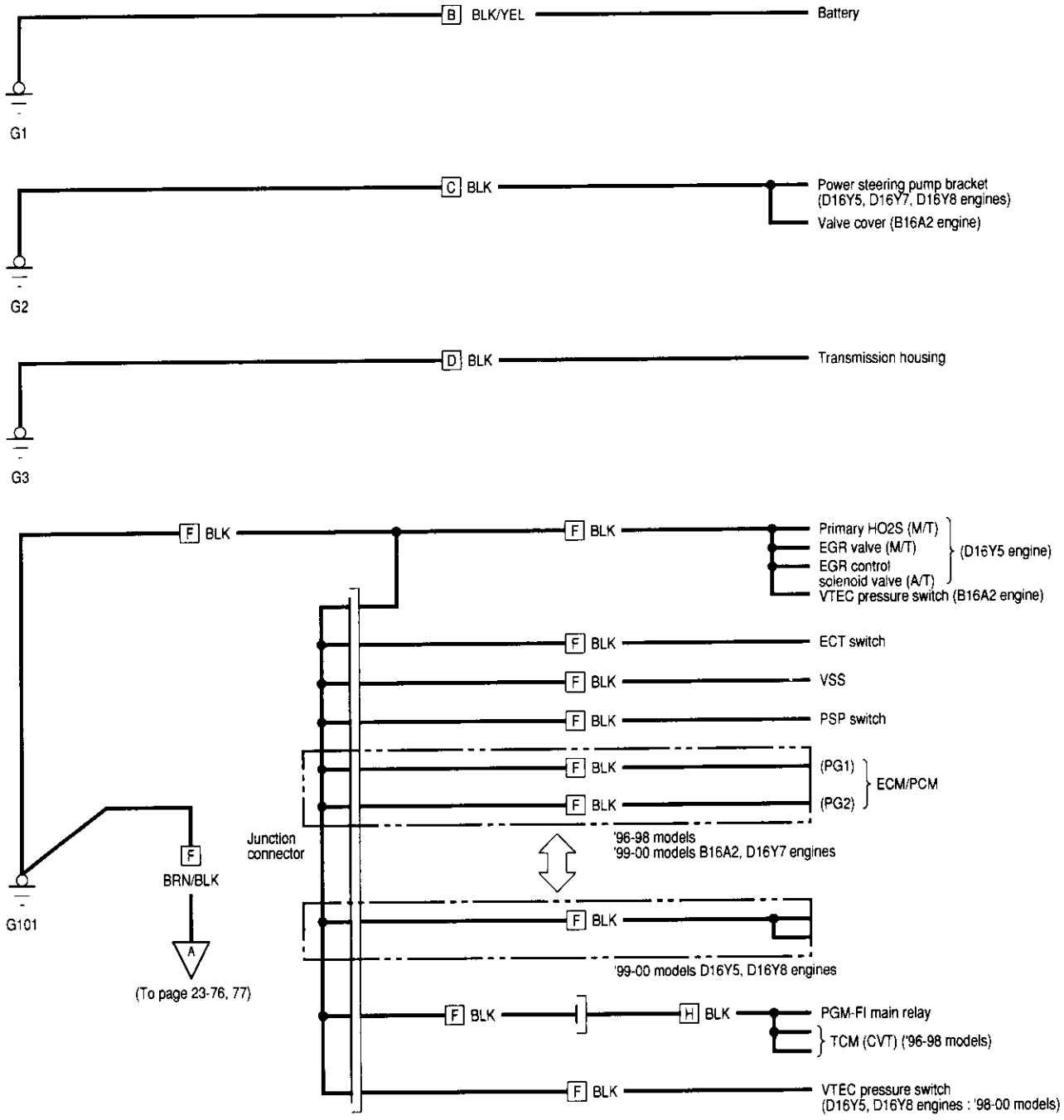

B : Battery ground cable
C : Engine ground cable A
D : Engine ground cable B
F : Engine wire harness
H : Main wire harness

(cont'd)

Circuit Identification (cont'd)

'96-98 models:

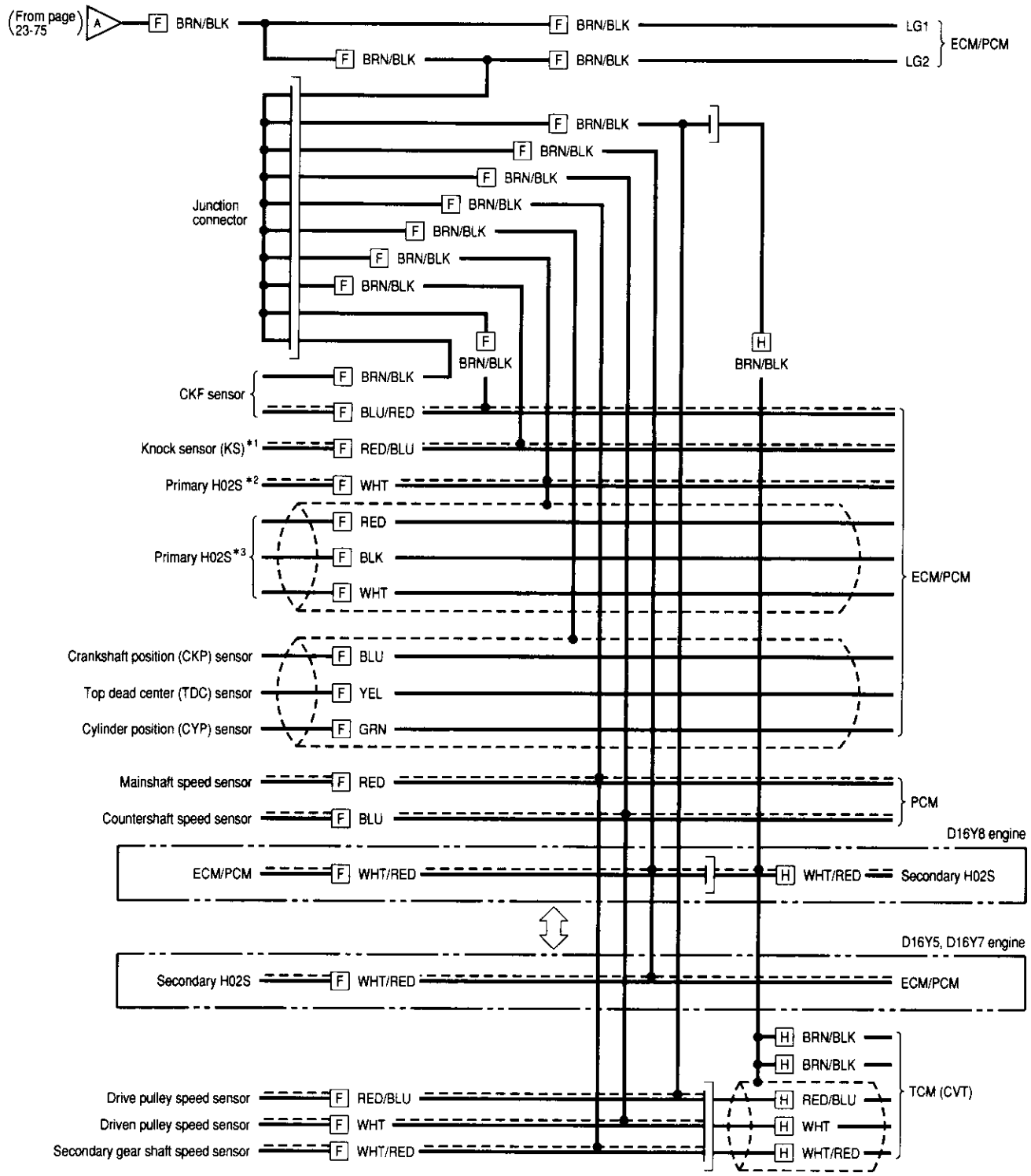

F : Engine wire harness
H : Main wire harness
- - - - - - : Shielding

*1 : D16Y5, D16Y8 engine
*2 : Except D16Y5 engine (M/T)
*3 : D16Y5 engine (M/T)

'99-00 models:

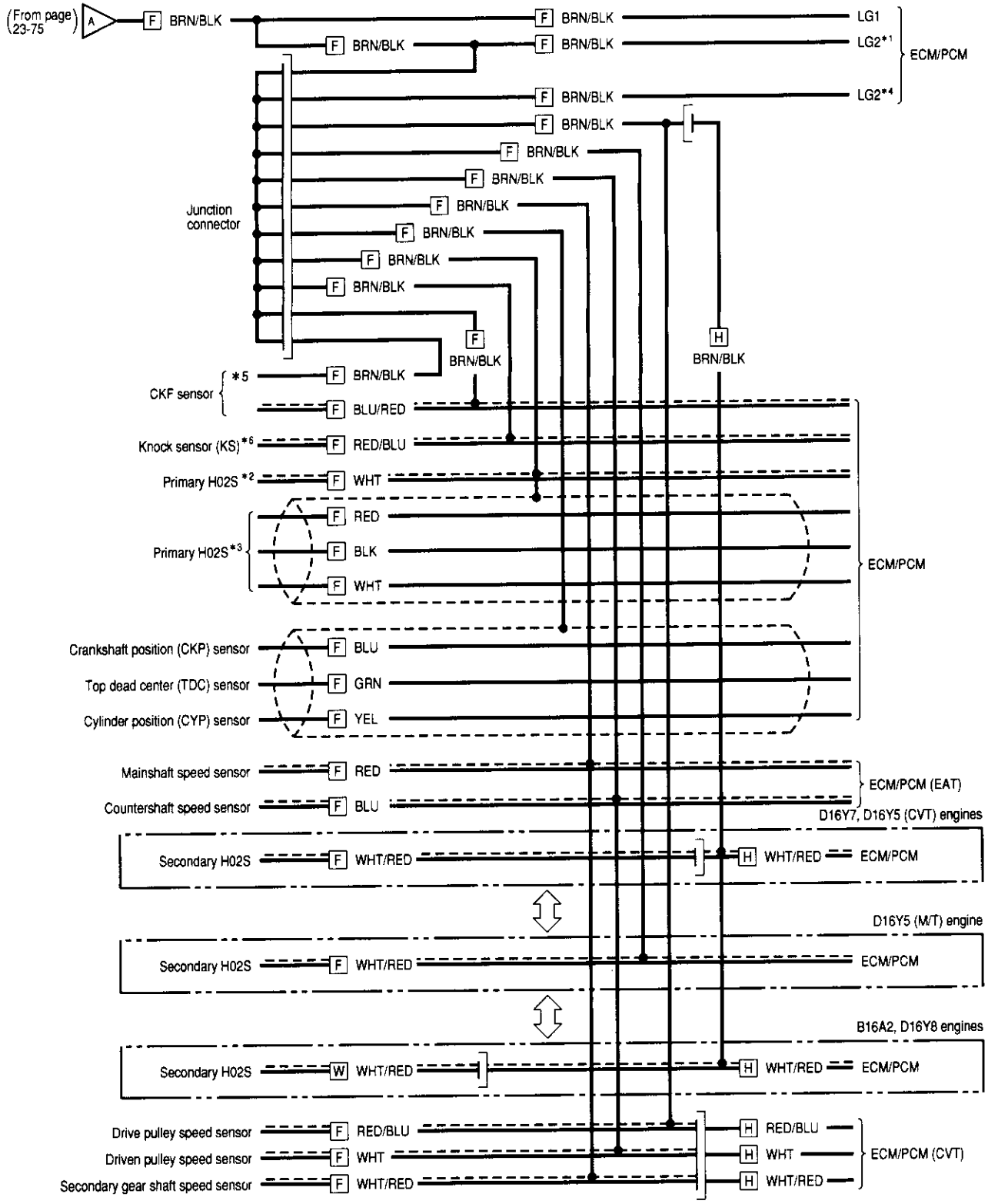

(cont'd)

F : Engine wire harness
H : Main wire harness
W : Rear heated oxygen sensor sub harness
- - - - - - : Shielding

*1 : D16Y5, D16Y8 engines
*2 : Except D16Y5 engine (M/T)
*3 : D16Y5 engine (M/T)
*4 : D16Y7, B16A2 engines
*5 : D16Y5, D16Y7, D16Y8 engines
*6 : B16A2, D16Y8, D16Y5 (CVT) engines

Ground Distribution

Circuit Identification (cont'd)

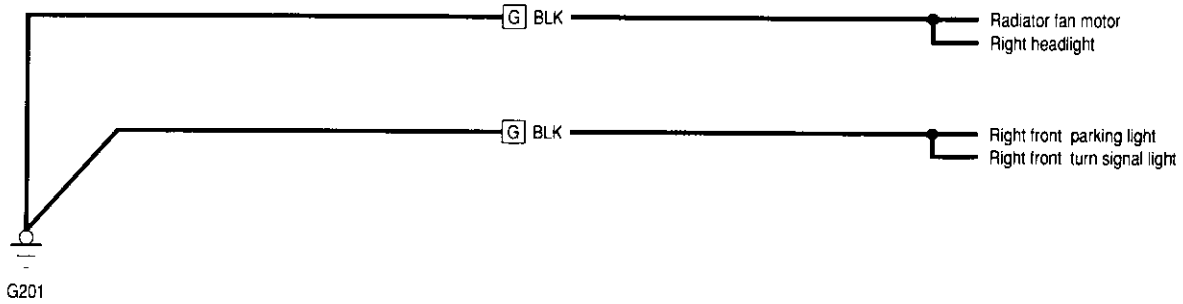

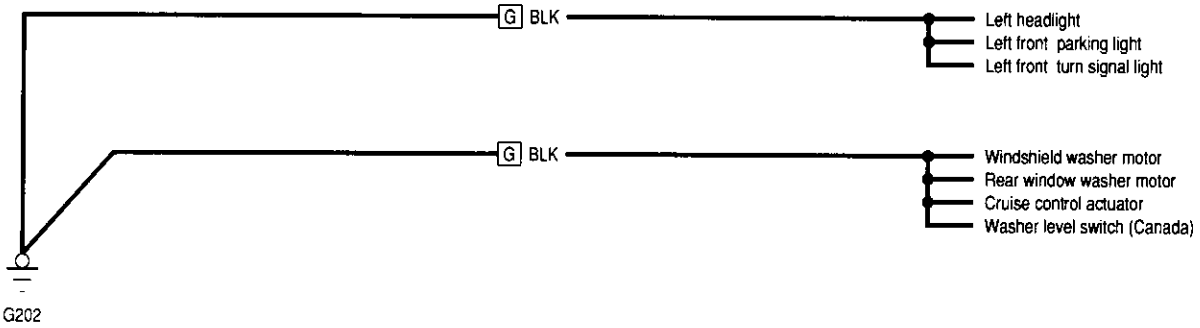

G : Engine compartment wire harness

'96-98 models:

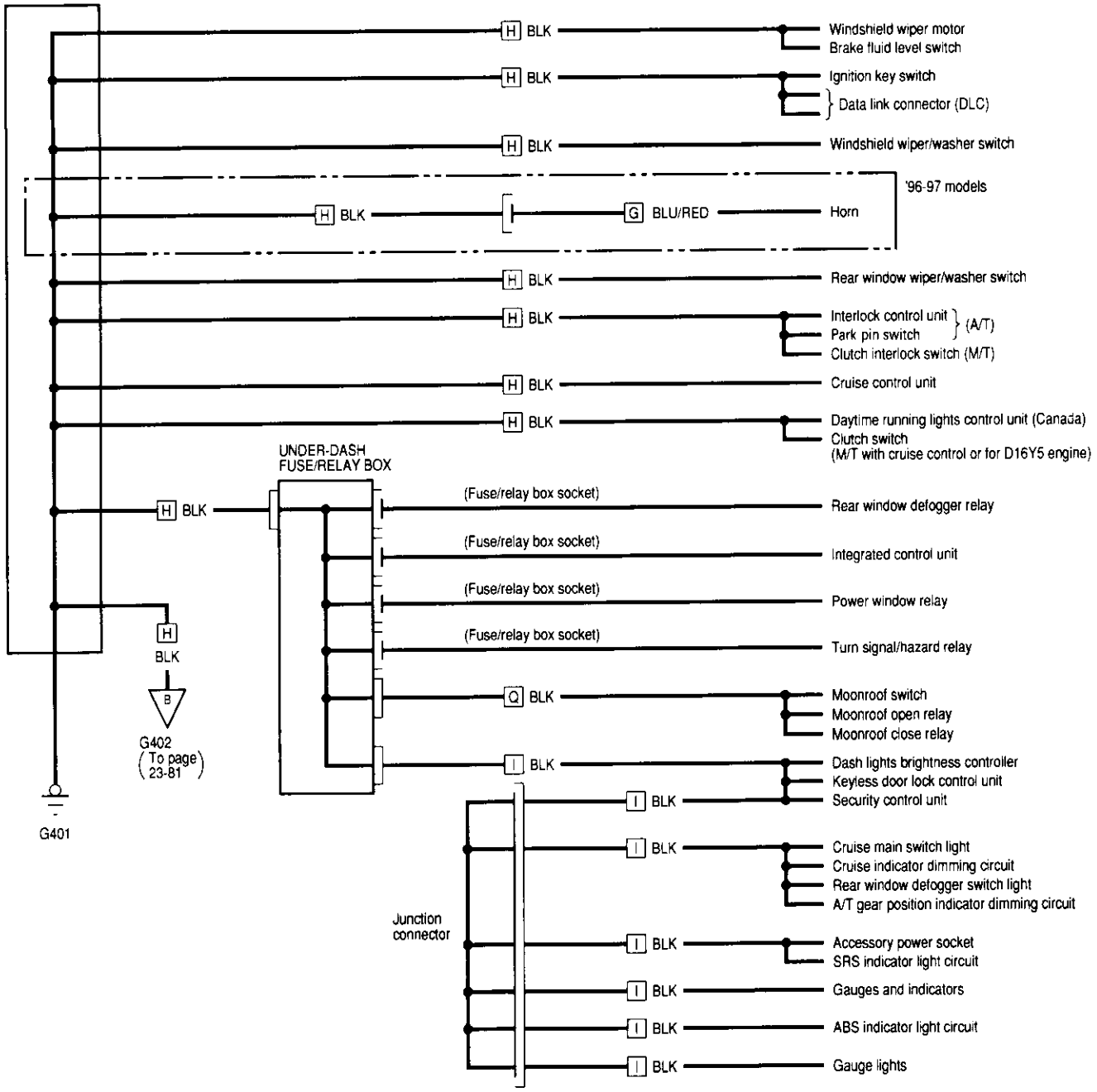

G : Engine compartment wire harness
H : Main wire haness
I : Dashboard wire harness
Q : Moonroof wire harness

(cont'd)

Circuit Identification (cont'd)

'99-00 models:

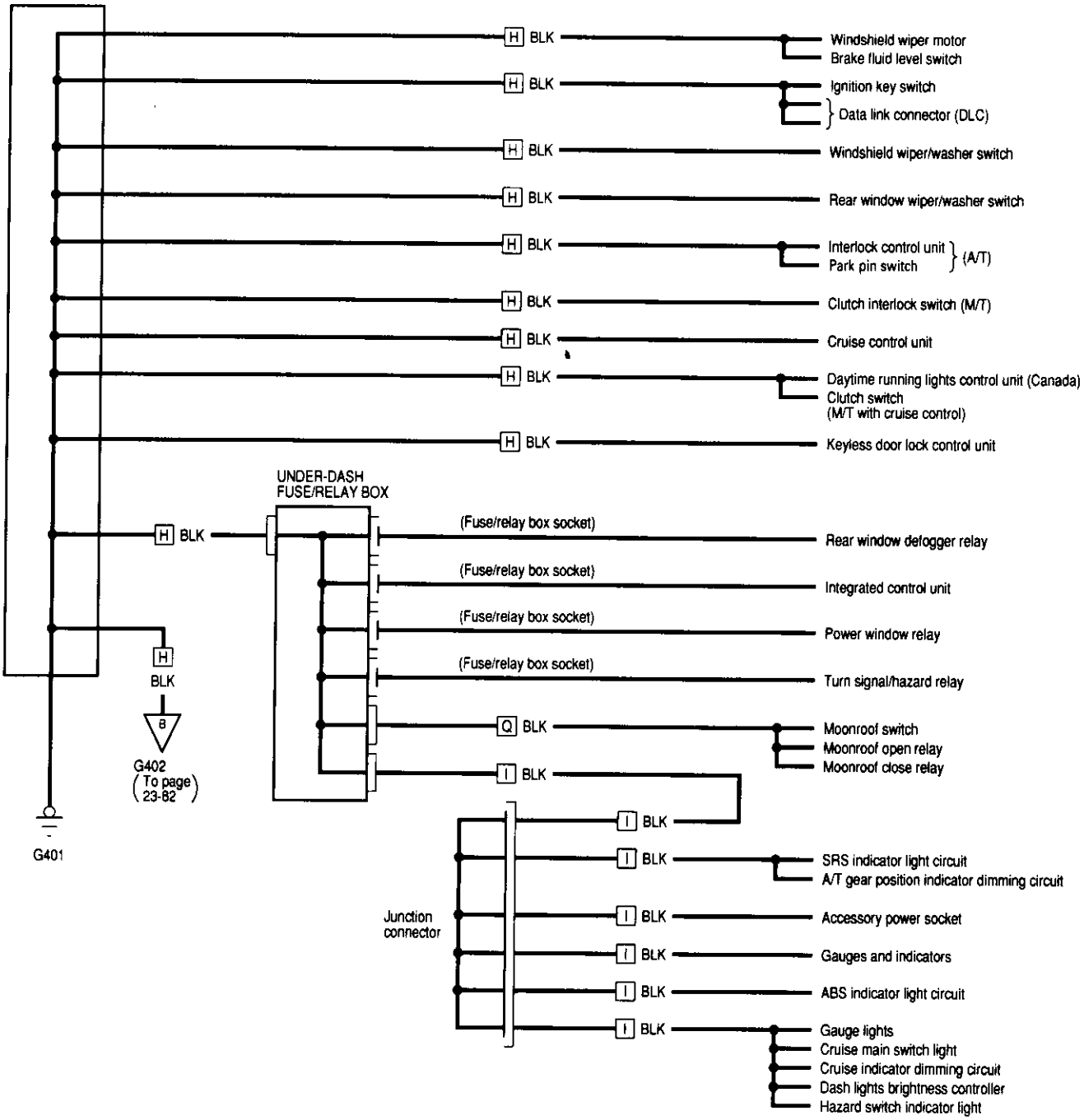

G : Engine compartment wire harness
H : Main wire harness
I : Dashboard wire harness
Q : Moonroof wire harness

'96-98 models:

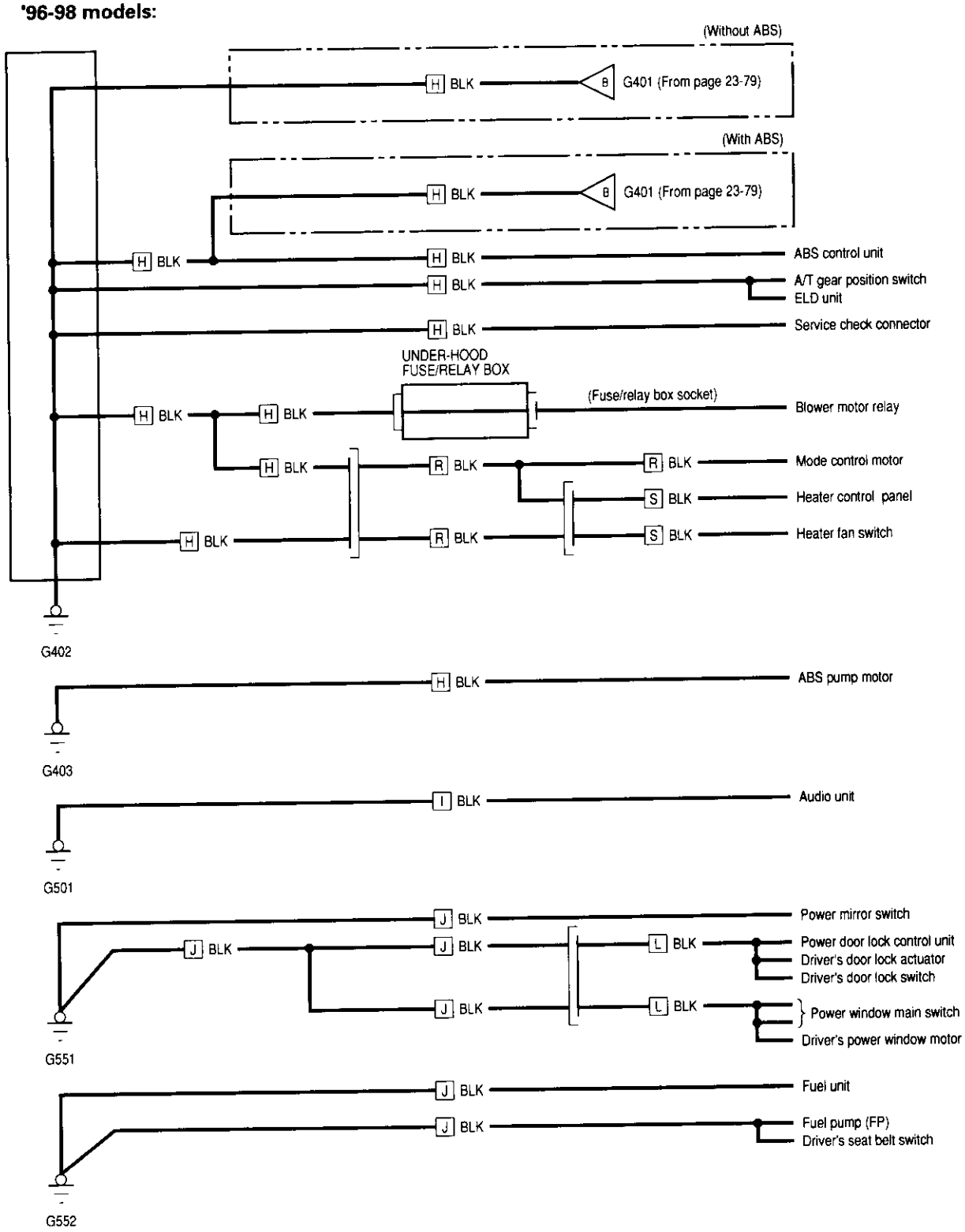

H : Main wire harness
I : Dashboard wire harness
J : Floor wire harness
L : Driver's door wire harness
R : Heater sub-harness A
S : Heater sub-harness B

(cont'd)

Circuit Identification (cont'd)

'99-00 models:

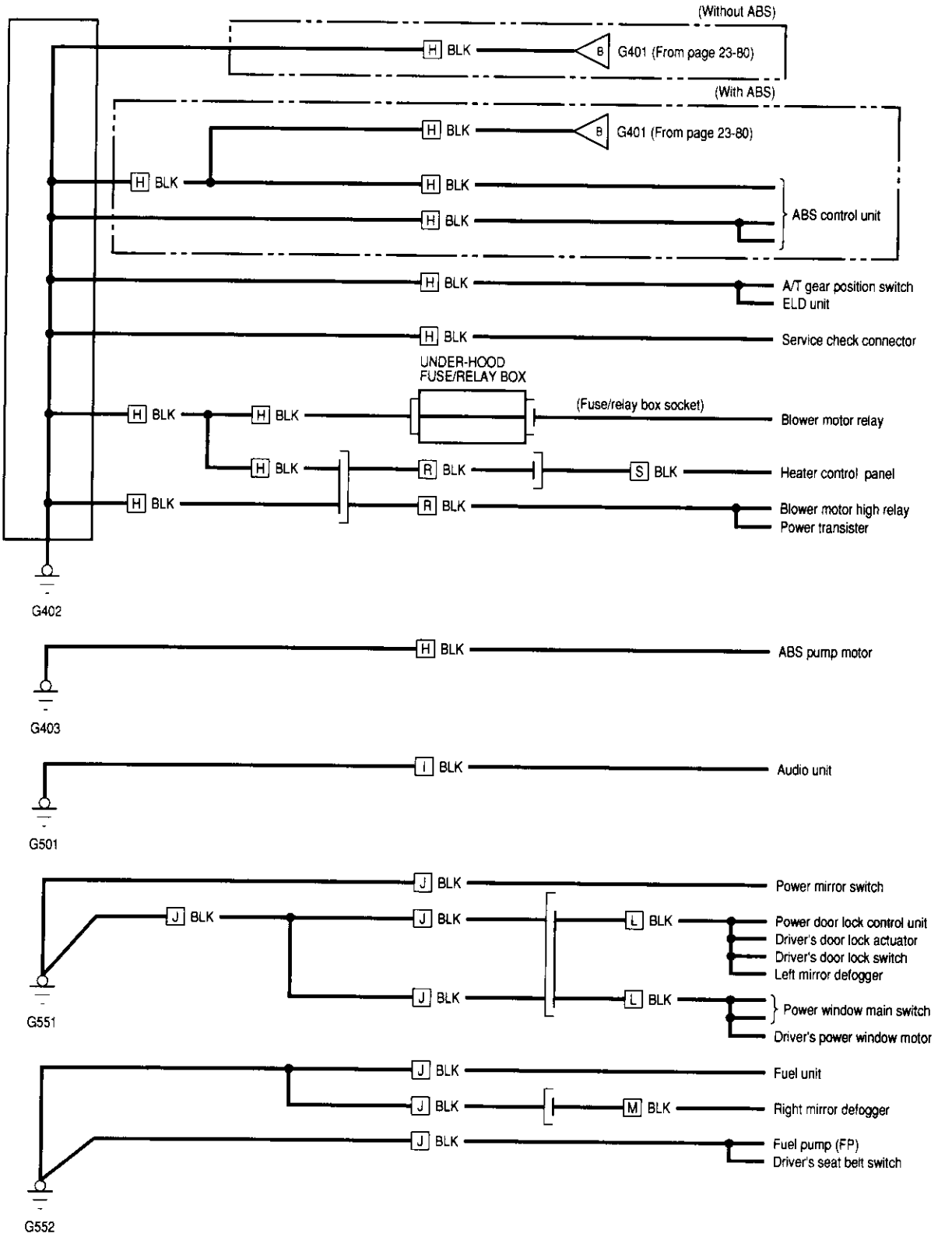

H : Main wire harness
I : Dashboard wire harness
J : Floor wire harness
L : Driver's door wire harness
R : Heater sub-harness A
S : Heater sub-harness B
M : Passenger's door wire harness

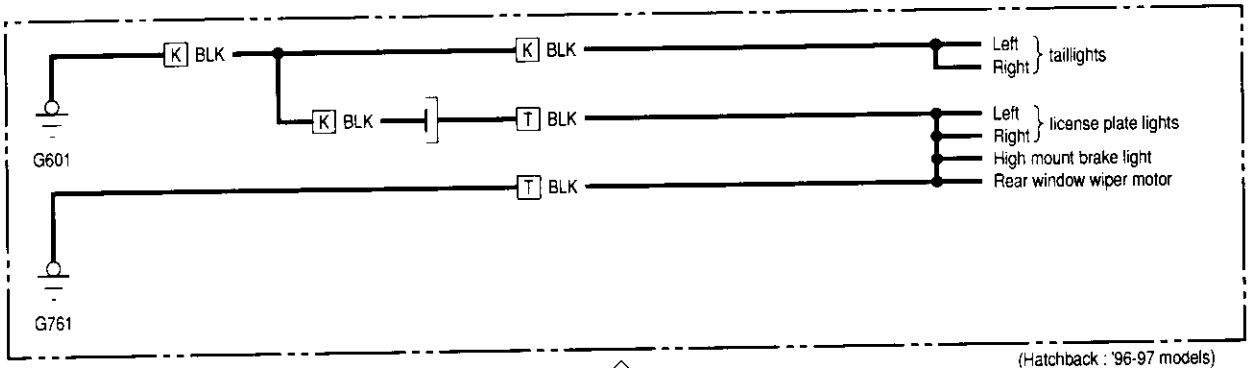

(Hatchback : '96-97 models)

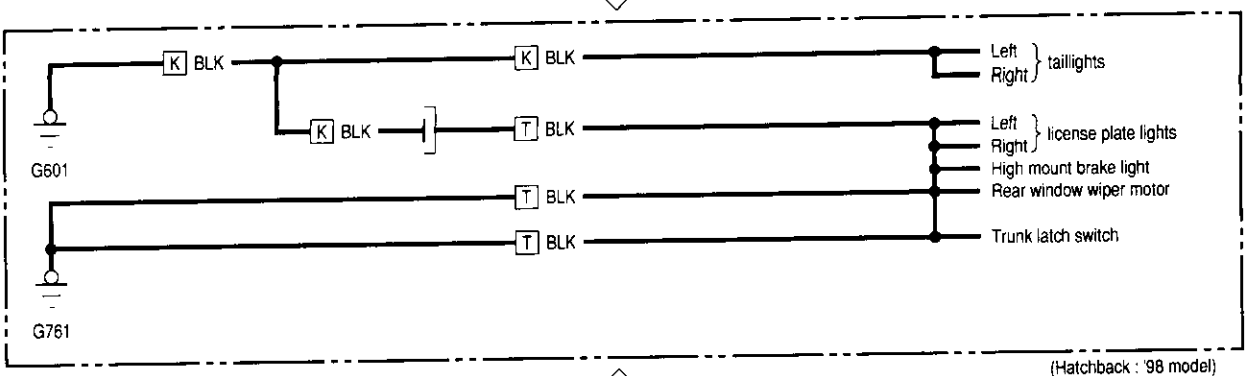

(Hatchback : '98 model)

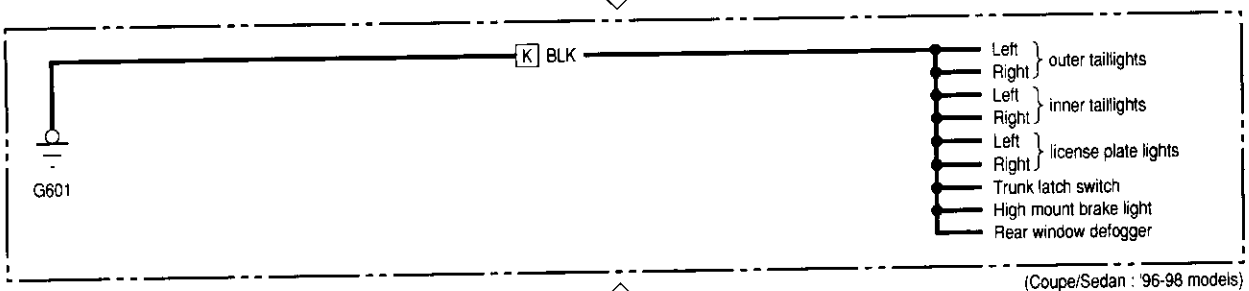

(Coupe/Sedan : '96-98 models)

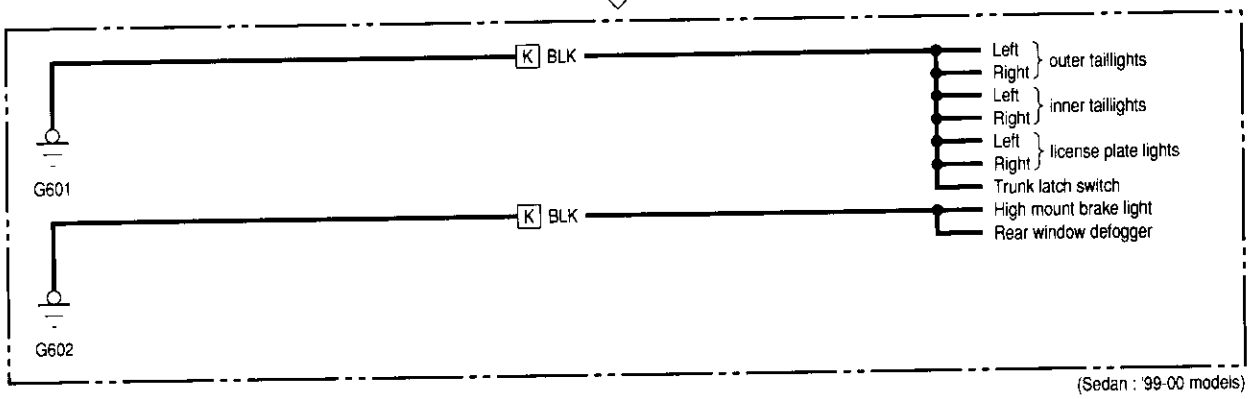

(Sedan : '99-00 models)

K : Rear wire harness

T : Hatch wire harness

(cont'd)

Circuit Identification (cont`d)

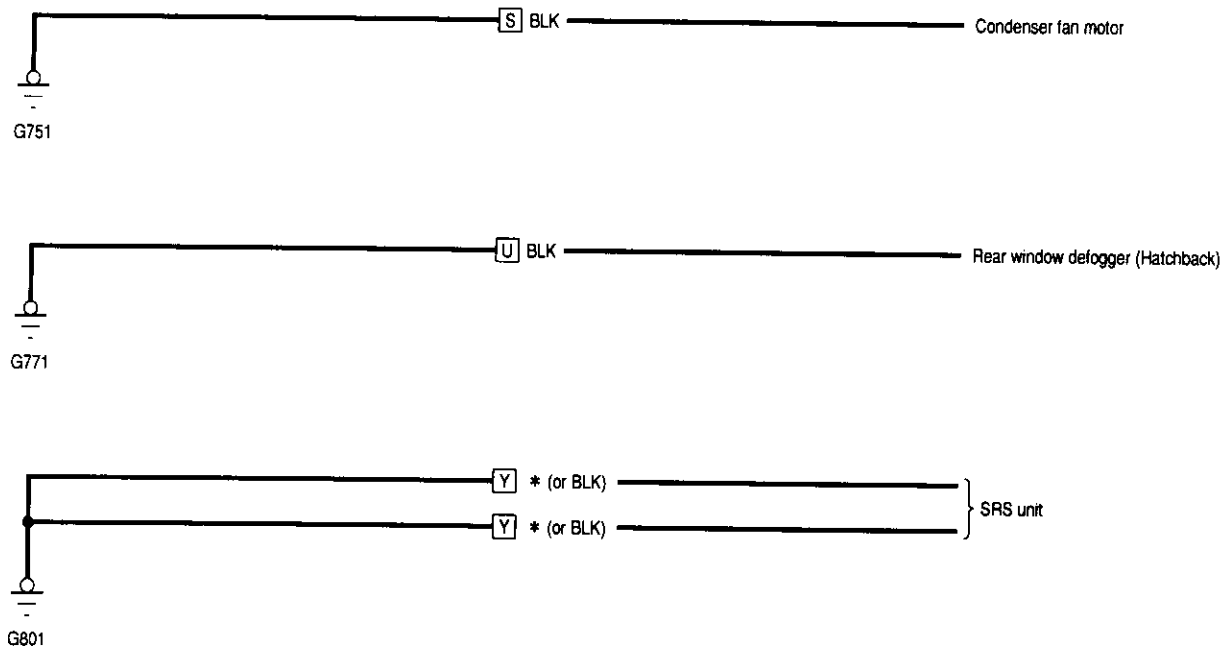

S : A/C wire harness
U : Rear window defogger ground wire
Y : SRS main harness

* GRY : '96-97 models
GRN : '98-00 models

Under-dash Fuse/Relay Box

Removal/Installation

SRS components are located in this area. Review the SRS component locations, precautions, and procedures in the SRS section (24) before performing repairs or service.

Removal:

1. Make sure you have the anti-theft code for the radio then write down the frequencies for the radio's preset buttons ('99 – 00 models).
2. Disconnect the battery negative cable, then disconnect the positive cable, and wait at least three minutes.
3. Disconnect the airbag connectors (see section 24).
4. Remove the driver's dashboard lower cover and knee bolster (see section 20).
5. Remove the two mounting nuts, and pull the under-dash fuse/relay box out from under the dash.

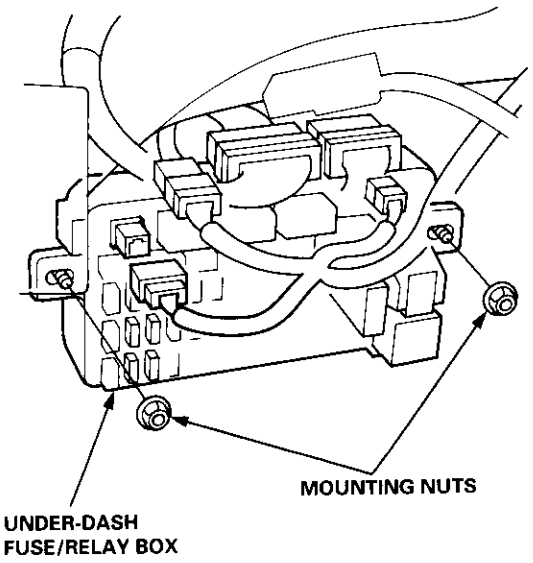

6. Disconnect the connectors from the under-dash fuse/relay box, and take out the under-dash fuse/relay box (see section 24).

Installation:

1. Connect the connectors to the under-dash fuse/relay box, then install the under-dash fuse/relay box in the reverse order of removal (see section 24).
2. Install the driver's dashboard lower cover (see section 20).
3. Connect the airbag connectors (see section 24).
4. Connect the battery positive cable, then connect the negative cable.
5. Enter the anti-theft code for the radio, then enter the customer's radio station presets ('99 – 00 models).
6. Confirm that all systems work properly.

Relay Test

Turn Signal/Hazard Relay:

See page 23-172

Normally-open type:

1. Check for continuity between the terminals.
   - There should be continuity between the No. 1 and No. 3 terminals when power and ground are connected to the No. 2 and No. 4 terminals.
   - There should be no continuity between the No. 1 and No. 3 terminals when power is disconnected.

Terminal / Power (No. 2 – No. 4)	1	3
Disconnected		
Connected	○	○

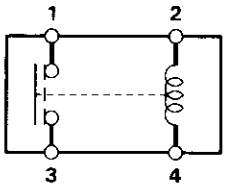

- Blower motor relay

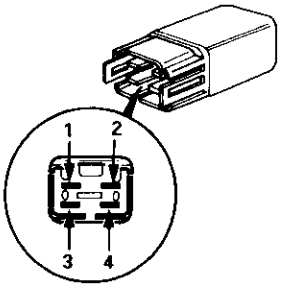

- ABS pump motor relay

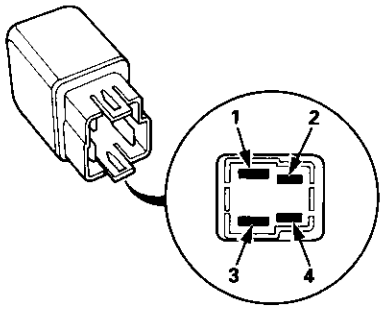

- Rear window defogger relay

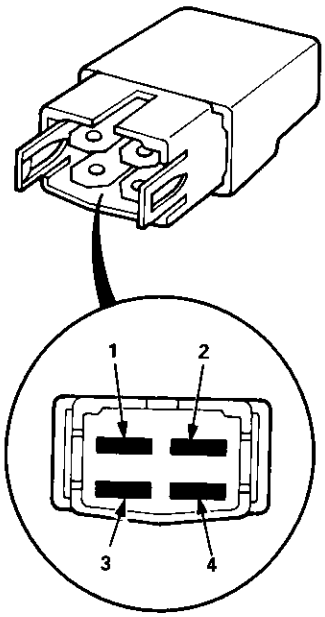

- Starter cut relay: '96 – 97 models
- Horn relay: '96 – 97 models
- Blower motor high relay: '99 – 00 models

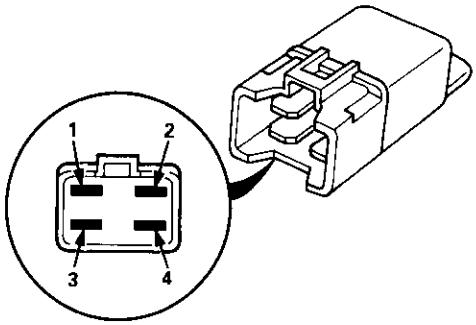

Normally-open type:

1. Check for continuity between the terminals.

   - There should be continuity between the No. 1 and No. 2 terminals when power and ground are connected to the No. 3 and No. 4 terminals.
   - There should be no continuity between the No. 1 and No. 2 terminals when power is disconnected.

Terminal / Power (No.3 – No.4)	1	2
Disconnected		
Connected	○	○

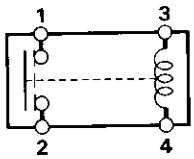

- Power window relay
- Radiator fan relay
- Condenser fan relay
- A/C compressor clutch relay
- Starter cut relay: '98 – 00 models
- Horn relay: '98 – 00 models

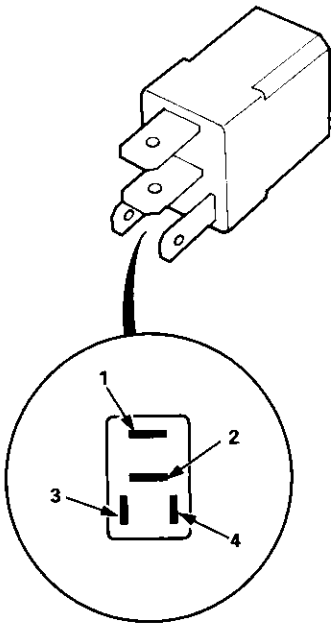

Five-terminal type:

1. Check for continuity between the terminals.

   - There should be continuity between the No. 1 and No. 2 terminals when power and ground are connected to the No. 3 and No. 5 terminals.
   - There should be continuity between the No. 2 and No. 4 terminals when power is disconnected.

Terminal / Power (No. 3 – No. 5)	1	2	4
Disconnected		○	○
Connected	○	○	

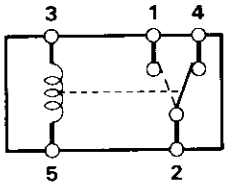

- Moonroof open relay: '96 – 97 models
- Moonroof close relay: '96 – 97 models

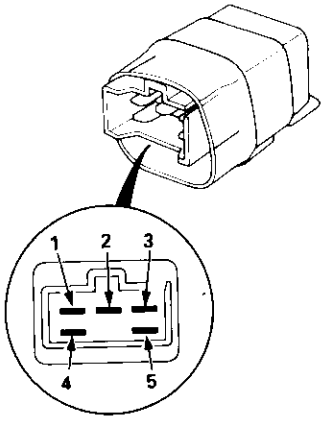

(cont'd)

Relay Test (cont'd)

Five-terminal type:

1. Check for continuity between the terminals.

   - There should be continuity between the No. 1 and No. 2 terminals when power and ground are connected to the No. 5 and No. 3 terminals.
   - There should be continuity between the No. 1 and No. 4 terminals when power is disconnected.

Terminal / Power (No. 5 – No. 3)	1	2	4
Disconnected	○		○
Connected	○	○	

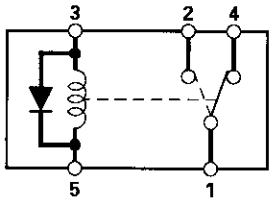

- Moonroof open relay: '98 – 00 models
- Moonroof close relay: '98 – 00 models

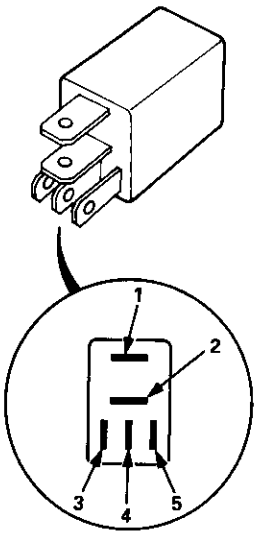

Test

SRS components are located in this area. Review the SRS component locations, precautions, and procedures in the SRS section (24) before performing repairs or service.

1. Make sure you have the anti-theft code for the radio, then write down the frequencies for the radio's preset buttons ('99 – 00 models).
2. Disconnect the battery negative cable.
3. Remove the driver's dashboard lower cover and knee bolster (see section 20).
4. Disconnect the 5P connector from the under-dash fuse/relay box and the 7P connector from the main wire harness.
5. Check for continuity between the terminals in each switch position according to the table.

Position \ Terminal	1 (ACC)	(3) (BAT)	5 (IG1)	3 (IG2)	(1) (ST)
O (LOCK)					
I (ACC)	○——	——○			
II (ON)	○——	——○——	——○——	——○	
III (START)		○——	——○——	———	——○

[ ] : 7P connector

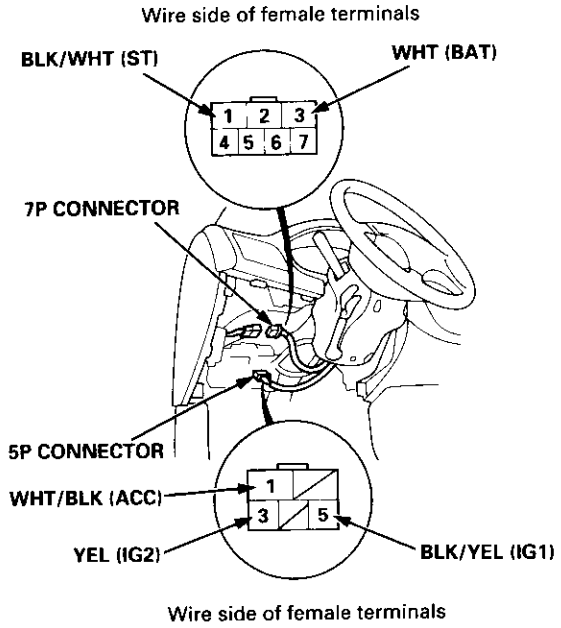

6. If the continuity checks do not agree with the table, replace the electrical switch.

Electrical Switch Replacement

SRS components are located in this area. Review the SRS component locations, precautions, and procedures in the SRS section (24) before performing repairs or service.

1. Make sure you have the anti-theft code for the radio, then write down the frequencies for the radio's preset buttons ('99 – 00 models).
2. Disconnect the battery negative cable.
3. Remove the driver's dashboard lower cover (see section 20).
4. Disconnect the 5P connector from the under-dash fuse/relay box and the 7P connector from the main wire harness (see left column).
5. Remove the steering column covers (see section 17).
6. Insert the ignition key, and turn it to "0 (LOCK)".
7. Remove the two screws and the electrical switch from the steering lock.

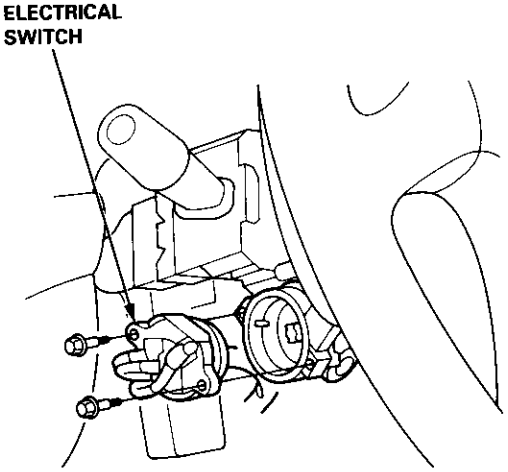

8. Install in the reverse order of removal.

Steering Lock Replacement

SRS components are located in this area. Review the SRS component locations, precautions, and procedures in the SRS section (24) before performing repairs or service.

Remove:

1. Make sure you have the anti-theft code for the radio, then wire down the frequencies for the radio's preset buttons ('99 – 00 models).
2. Disconnect the battery negative cable.
3. Remove the driver's dashboard lower cover and knee bolster (see section 20).
4. Disconnect the 5P connector from the under-dash fuse/relay box and the 7P connector from the main wire harness (see previous page).
5. Remove the steering column covers, then remove the mounting bolts and nuts from the steering column (see section 17).
6. Lower the steering column assembly.
7. Center-punch each of the two shear bolts, then drill their heads off with a 5 mm (3/16 in) drill bit.

   CAUTION: Do not damage the steering lock body.

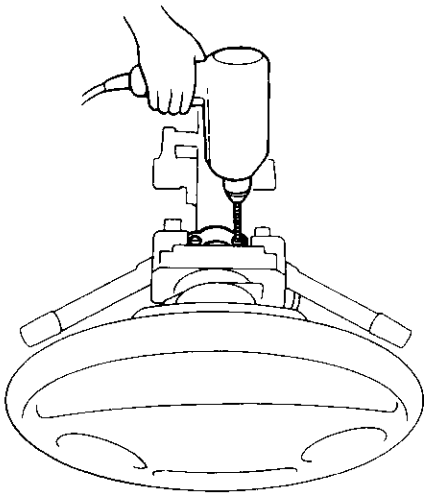

8. Remove the shear bolts and the steering lock assembly.

Installation:

1. Install the new steering lock assembly without the key inserted.
2. Loosely tighten the new shear bolts.
3. Insert the ignition key, and check for proper operation of the steering wheel lock and that the ignition key turns freely.
4. Tighten the shear bolts until the hex heads twist off.

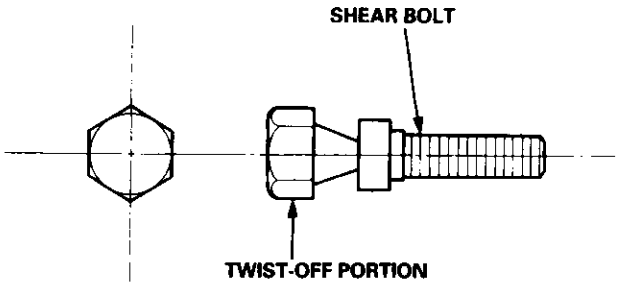

5. Install in the reverse order of removal.
6. Enter the anti-theft code for the radio, then enter the customer's radio station presets.

Test

⚠ WARNING

- **Battery fluid (electrolyte) contains sulfuric acid. It may cause severe burns if it gets on your skin or in your eyes. Wear protective clothing and a face shield.**
  - **— If electrolyte gets on your skin or clothes, rinse it off with water immediately.**
  - **— If electrolyte gets in your eyes, flush it out by splashing water in your eyes for at least 15 minutes; call a physician immediately.**
- **A battery gives off hydrogen gas. If ignited, the hydrogen will explode and could crack the battery case and splatter acid on you. Keep sparks, flames, and cigarettes away from the battery.**
- **Overcharging will raise the temperature of the electrolyte. This may force electrolyte to spray out of the battery vents. Follow the charger manufacturer's instructions, and charge the battery at a proper rate.**

Use either a JCI or Bear ARBST tester, and follow the manufacturer's procedures. If you don't have one of these computerized testers, follow this conventional test procedure:
To get accurate results, the temperature of the electrolyte must be between 70°F (21°C) and 100°F (38°C).

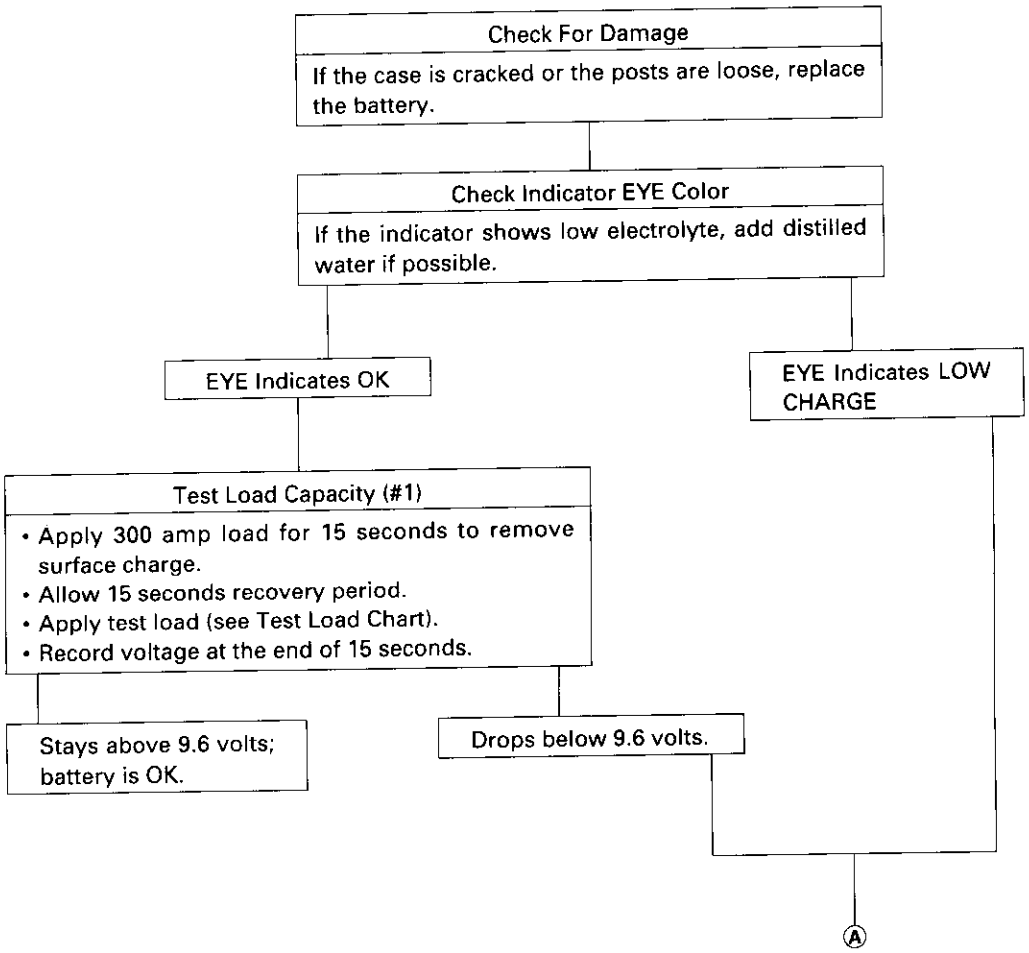

(cont'd)

Test (cont'd)

Ⓐ

Charge on High Setting (40 amps)

Charge until EYE shows charge is OK; plus an additional 30 minutes to assure full charge.
NOTE: If the battery charge is very low, it may be necessary to bypass the charger's polarity protection circuitry.
If the EYE does not show charge is OK within three hours, the battery is no-good; replace it. Write down how long the battery was charged.

Test Load Capacity (#2)

- Apply 300 amp load for 15 seconds to remove surface charge.
- Allow 15 seconds recovery period.
- Apply test load (see Test Load Chart).
- Record voltage at the end of 15 seconds.

Stays above 9.6 volts; battery is OK.

Drops below 9.6 volts; battery is no-good.

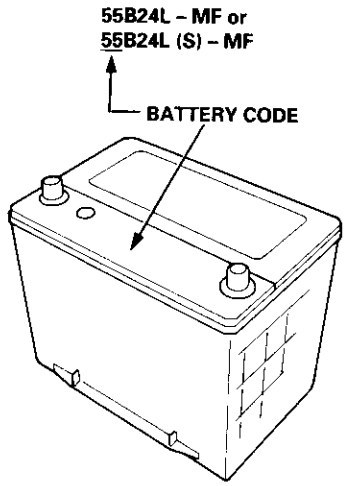

TEST LOAD CHART

Use the test load or 1/2 the cold cranking amps (CCA) printed on the label on the top of the battery. If neither is indicated, use the information below:

BATTERY CODE	COLD CRANKING AMPS (CCA)	LOAD (amps)
55	405 (*410)	200

*: 55B24L (S) – MF

Component Location Index

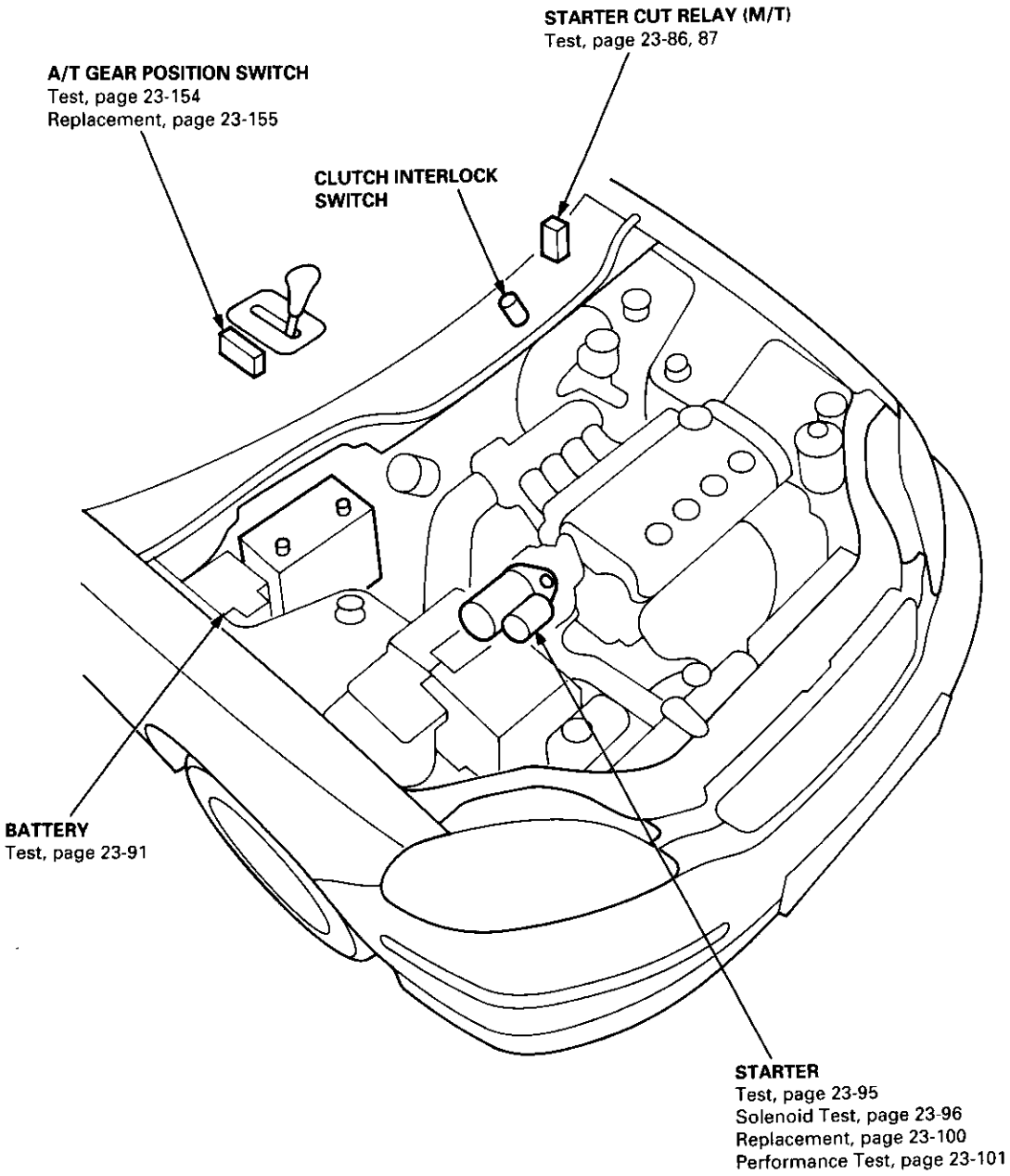

Component Location Index

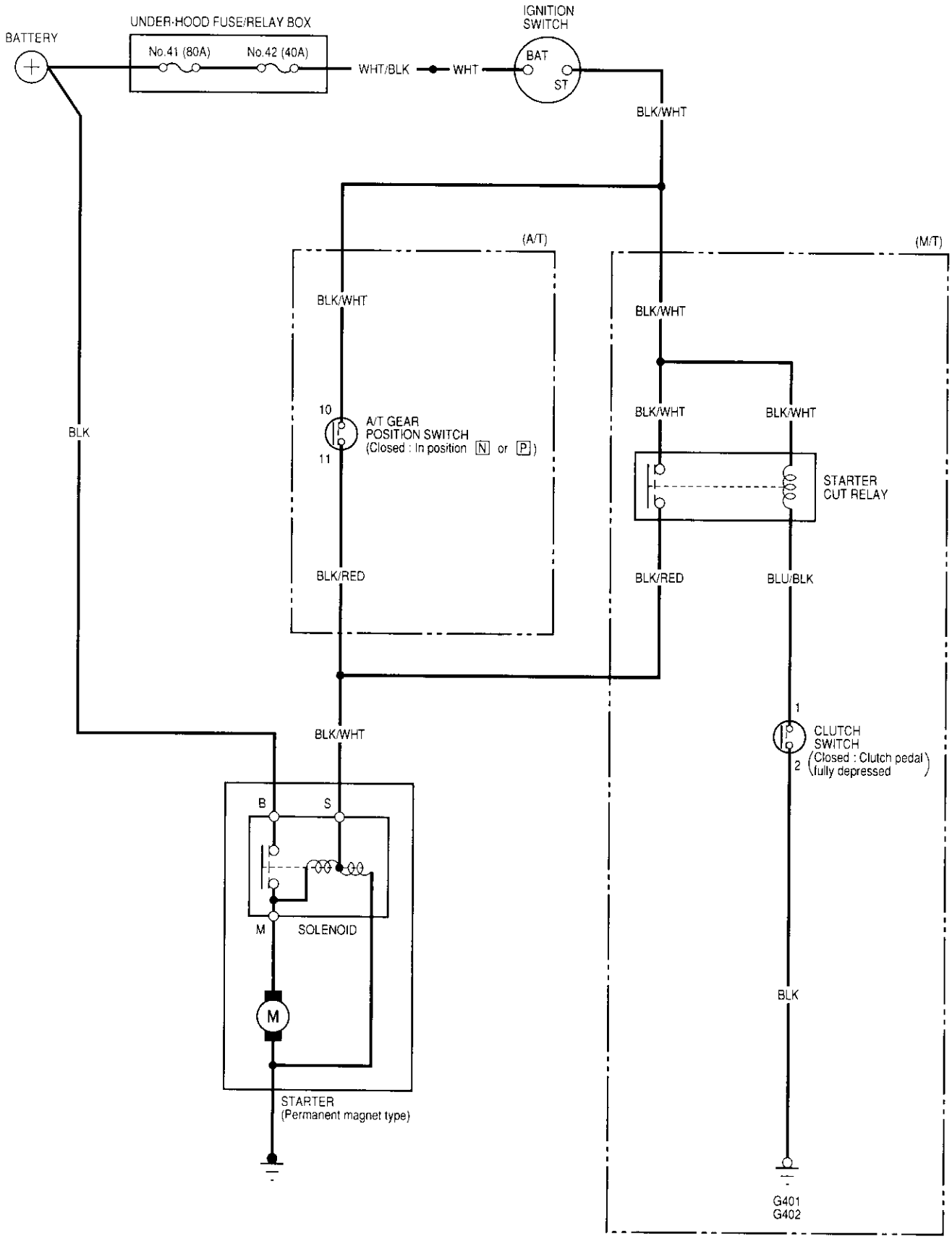

Starter Test

NOTE: The air temperature must be between 59 and 100°F (15 and 38°C) before testing.

Recommended Procedure:

- Use a starter system tester.
- Connect and operate the equipment in accordance with the manufacturer's instructions.
- Test and troubleshoot as described.

Alternate Procedure:

- Use the following equipment:
  — Ammeter, 0 – 400 A
  — Voltmeter, 0 – 20 V (accurate within 0.1 volt)
  — Tachometer, 0 – 1,200 rpm
- Hook up a voltmeter and ammeter as shown.

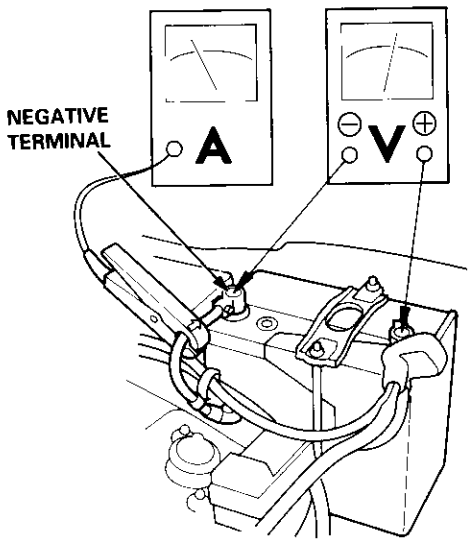

NOTE: After this test, or any subsequent repair, reset the ECM/PCM to clear any codes (see section 11).

Check the Starter Engagement:

1. Remove the No. 44 (15 A) fuse from the under-hood fuse/relay box.

2. Turn the ignition switch to START (III) with the shift lever in [N] or [P] position (A/T) or with the clutch pedal depressed (M/T). The starter should crank the engine.

   - If the starter does not crank the engine, go to step 3.
   - If it cranks the engine erratically or too slowly, go to "Check for Wear and Damage" on the next page.

3. Check the battery, battery positive cable, ground, starter cut relay, and the wire connections for looseness and corrosion. Test again.
   If the starter still does not crank the engine, go to step 4.

4. Unplug the connector (BLK/WHT wire and solenoid terminal) from the starter.

5. Connect a jumper wire from the battery positive (+) terminal to the solenoid terminal.
   The starter should crank the engine.

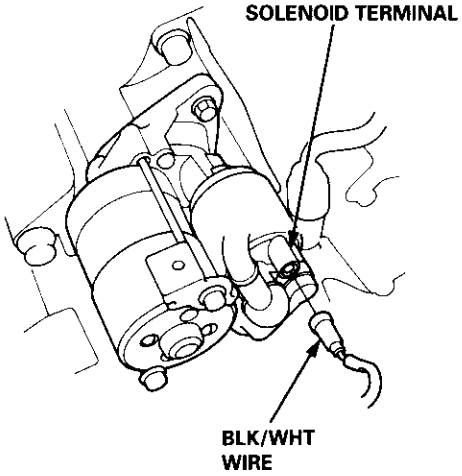

   - If the starter still does not crank the engine, remove it, and diagnose its internal problem.
   - If the starter cranks the engine, go to step 6.

6. Check the ignition switch (see page 23-89).

7. Check the starter cut relay and clutch interlock switch (see page 23-86, 87).

8. Check the A/T gear position switch (see page 23-154).

9. Check for an open in the wire between the ignition switch and starter.

(cont'd)

Starter Test (cont'd)

Check for Wear and Damage
The starter should crank the engine smoothly and steadily, If the starter engages, but cranks the engine erratically, remove it, and inspect the starter drive gear and torque converter or flywheel ring gear for damage.

- Check the drive gear overrunning clutch for binding or slipping when the armature is rotated with the drive gear held.
  — If damaged, replace the gears.

Check Cranking Voltage and Current Draw
Cranking voltage should be no less than 8.5 volts.
Current draw should be no more than 350 amperes.

If cranking voltage is too low, or current draw too high, check for:
- dead or low battery.
- open circuit in starter armature commutator segments.
- starter armature dragging.
- shorted armature winding.
- excessive drag in engine.

Check Cranking rpm
Engine speed during cranking should be above 100 rpm.
If speed is too low, check for:
- loose battery or starter terminals.
- excessively worn starter brushes.
- open circuit in commutator segments.
- dirty or damaged helical spline or drive gear.
- defective drive gear overrunning clutch.

Check Starter Disengagement

With the shift lever in [N] or [P] position (A/T) or with the clutch pedal depressed (M/T), turn the ignition switch to START (III), and release to ON (II).
The starter drive gear should disengage from the torque converter or flywheel ring gear when you release the key.

If the drive gear hangs up on the torque converter or flywheel ring gear, check for:
- solenoid plunger and switch malfunction.
- dirty drive gear assembly or damaged overrunning clutch.

Starter Solenoid Test

1. Check the hold-in coil for continuity between the S terminal and the armature housing (ground). The coil is OK if there is continuity.

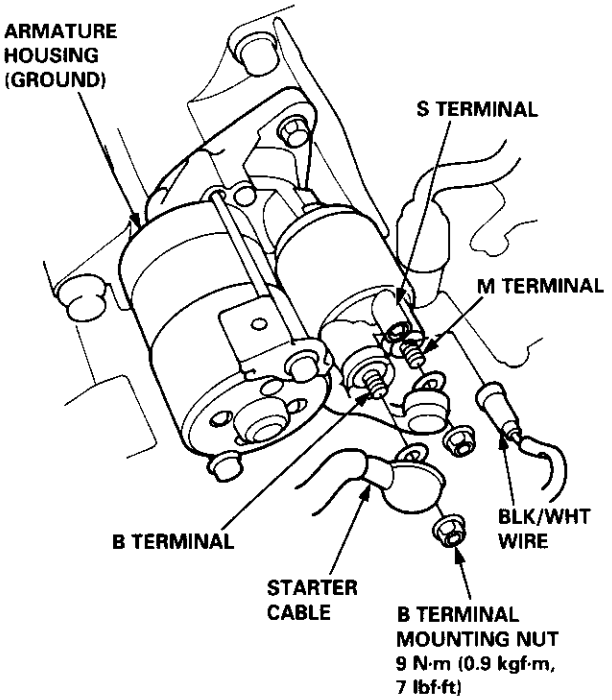

2. Check the pull-in coil for continuity between the S and M terminals. The coil is OK if there is continuity.

Armature Inspection and Test

1. Inspect the armature for wear or damage due to contact with the permanent magnet or field winding.

   - If there is wear or damage, replace the armature.

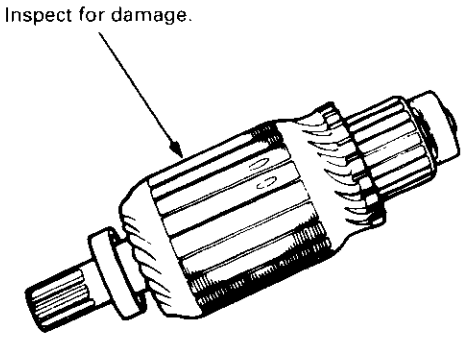

2. Check commutator surface and diameter.

   - If the surface is dirty or burnt, resurface with emery cloth or a lathe within the following specifications, or recondition with #500 or #600 sandpaper.
   - If commutator diameter is below the service limit, replace the armature.

Commutator Diameter

Standard (NEW)	Service Limit
28.0 – 28.1 mm (1.102 – 1.106 in)	27.5 mm (1.083 in)

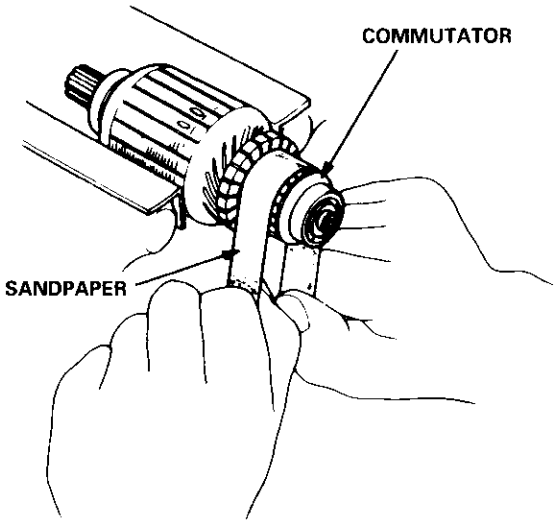

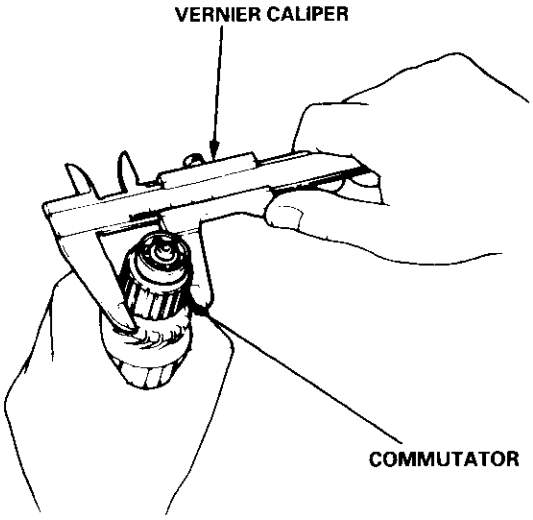

3. Measure the commutator runout.

   - If the commutator runout is within the service limit, check the commutator for carbon dust or brass chips between the segments.
   - If the commutator runout is not within the service limit, replace the armature.

Commutator Runout

Standard (NEW)	Service Limit
0 – 0.02 mm (0 – 0.0008 in)	0.05 mm (0.002 in)

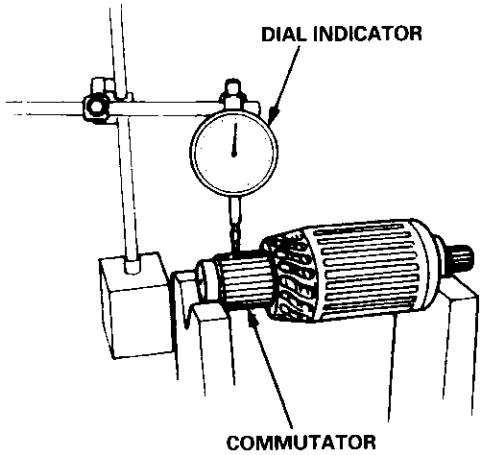

(cont'd)

Armature Inspection and Test (cont'd)

4. Check for mica depth. If necessary, undercut mica with a hacksaw blade to achieve proper depth. If service limit cannot be maintained, replace the armature.

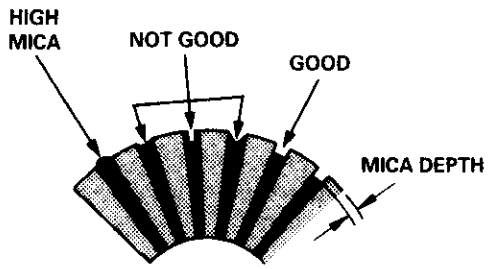

Commutator Mica Depth

Standard (NEW)	Service Limit
0.4 – 0.5 mm (0.016 – 0.02 in)	0.15 mm (0.006 in)

5. Check for continuity between the segments of the commutator. If an open circuit exists between any segments, replace the armature.

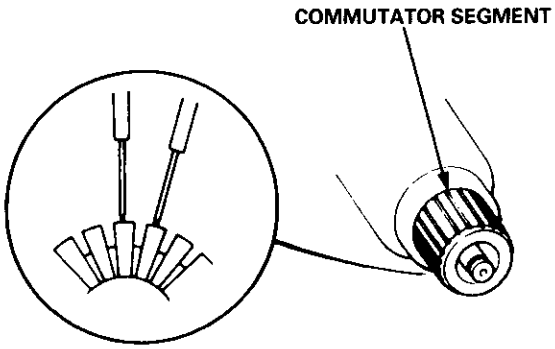

6. Place the armature on an armature tester. Hold a hacksaw blade on the armature core.

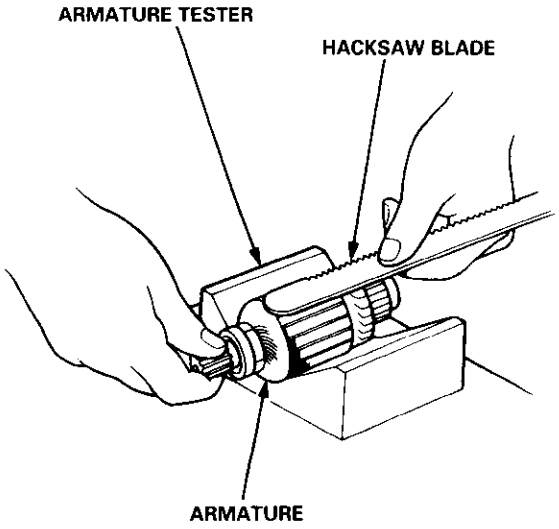

- If the blade is attracted to the core or vibrates while the core is turned, the armature is shorted. Replace the armature.

7. Check with an ohmmeter that no continuity exists between the commutator and armature coil core, and between the commutator and armature shaft. If there is continuity, replace the armature.

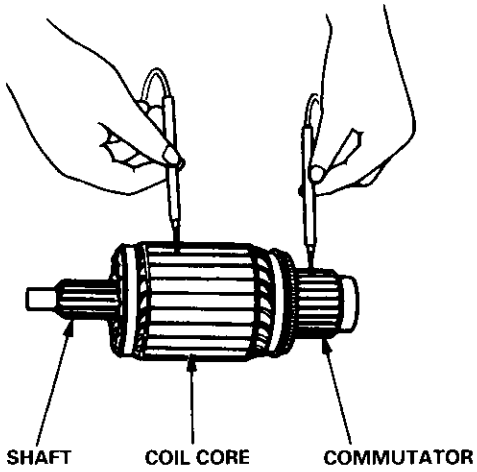

Brush Holder Test

1. Check that there is no continuity between the ⊕ and ⊖ brush holders.
   If there is continuity, replace the brush holder assembly.

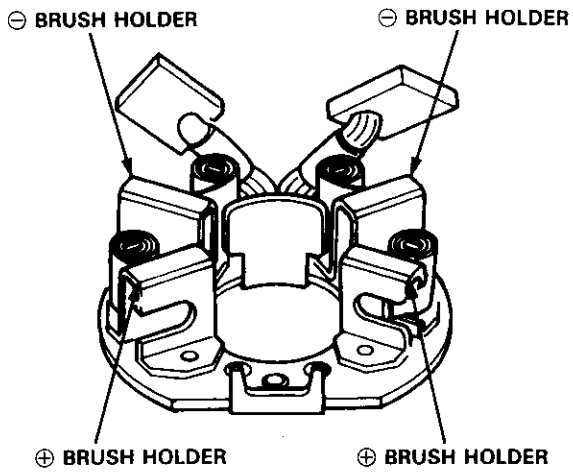

2. Insert the brush into the brush holder, and bring the brush into contact with the commutator, then attach a spring scale to the spring. Measure the spring tension at the moment the spring lifts off the brush.

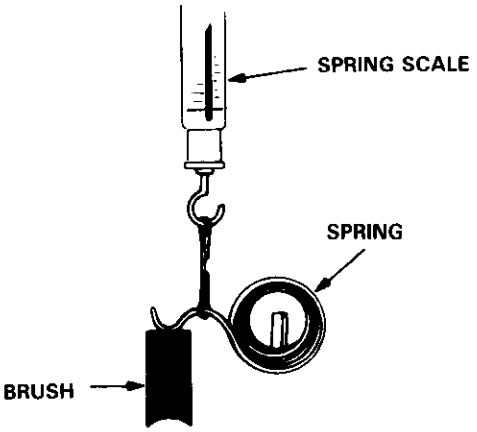

Spring Tension
15.7 – 17.7 N (1.60 – 1.80 kgf, 3.5 – 4.0 lbf)

Brush Inspection

Measure the brush length. If not within the service limit, replace the brush (or brush holder assembly).

Brush Length

Standard (NEW)	Service Limit
15.8 – 16.2 mm (0.62 – 0.64 in)	11.0 mm (0.43 in)

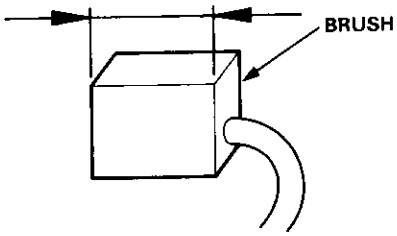

NOTE: To seat new brushes after installing them in their holders, slip a strip of #500 or #600 sandpaper, with the grit side up, over the commutator and smoothly rotate the armature. The contact surface of the brushes will be sanded to the same contour as the commutator.

Overrunning Clutch Inspection

1. Slide the overrunning clutch along the shaft. Does it move freely? If not, replace it.

2. Rotate the overrunning clutch both ways. Does it lock in one direction and rotate smoothly in reverse? If it does not lock in either direction or it locks in both directions, replace it.

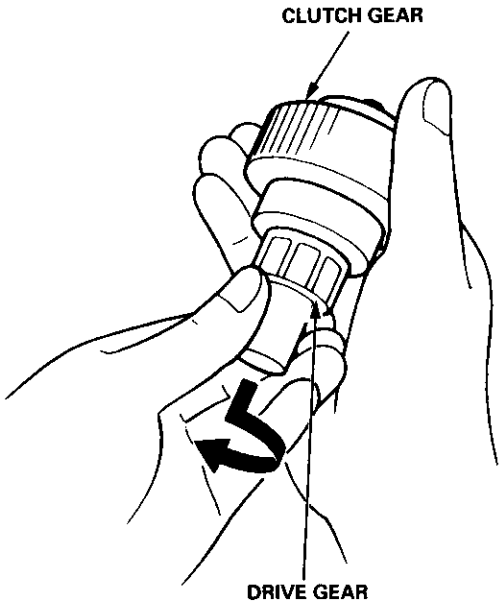

Starter Replacement

1. Make sure you have the anti-theft code for the radio, then write down the frequencies for the radio's preset buttons ('99 – 00 models).

2. Disconnect the battery negative cable.

3. Disconnect the starter cable from the B terminal on the solenoid, then disconnect the BLK/WHT wire from the S terminal.

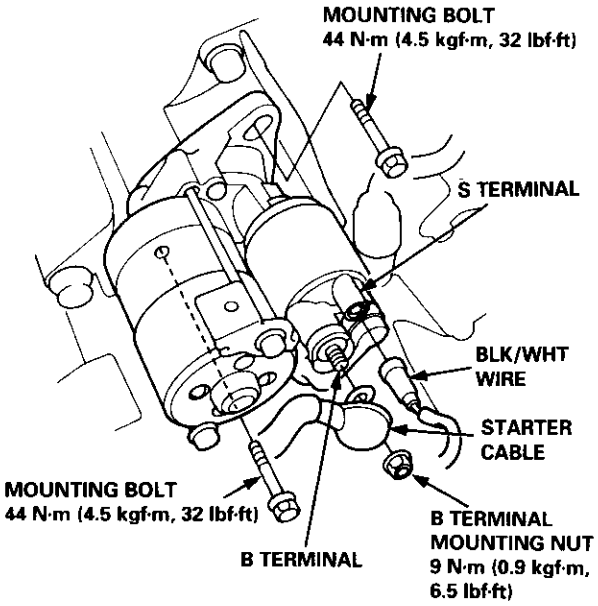

4. Remove the two bolts holding the starter, then remove the starter.

5. Install in the reverse order of removal.

   NOTE: When installing the starter cable, make sure that the crimped side of the ring terminal is facing out.

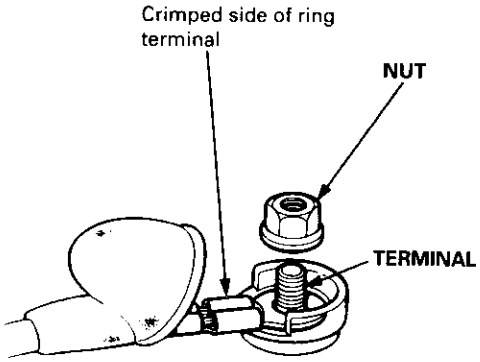

6. Connect the battery positive cable and negative cable to the battery.

7. Enter the anti-theft code for the radio, then enter the customer's radio station presets ('99 – 00 models).

Starter Reassembly

1. Pry back each brush spring with a screwdriver, then position the brush about halfway out of its holder, and release the spring to hold it there.

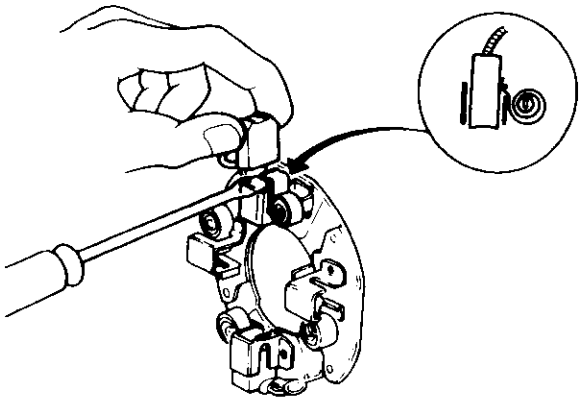

2. Install the armature in the housing. Next, pry back each brush spring again, and push the brush down until it seats against the commutator, then release the spring against the end of the brush.

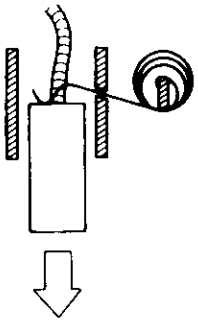

3. Install the end cover on the brush holder.

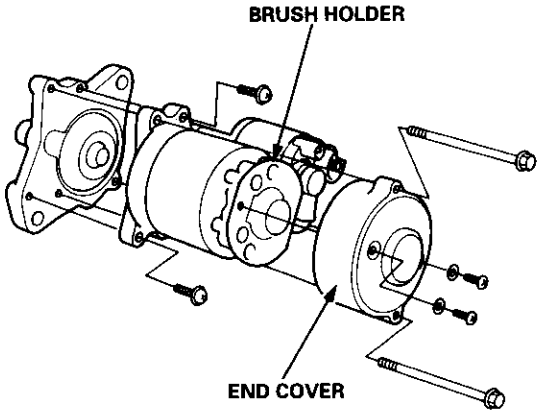

Performance Test

NOTE: Before starting the following checks, disconnect the wire from terminal M, and make a connection as described below using as heavy a wire as possible (preferably equivalent to the wire used for the car).

Pull-in Coil Test:

Connect the battery as shown. If the starter pinion pops out, it is working properly.

CAUTION: Do not leave the battery connected for more than 10 seconds.

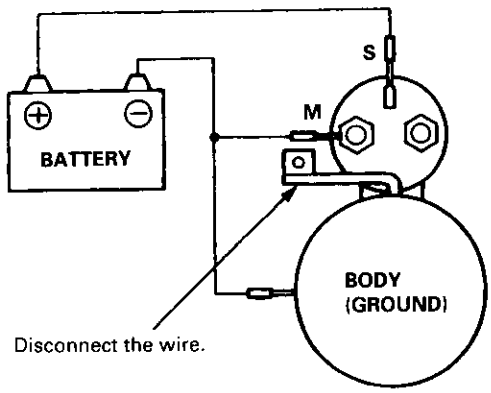

Hold-in Coil Test:

Disconnect the battery from the M terminal. If the pinion does not retract, the hold-in coil is working properly.

CAUTION: Do not leave the battery connected for more than 10 seconds.

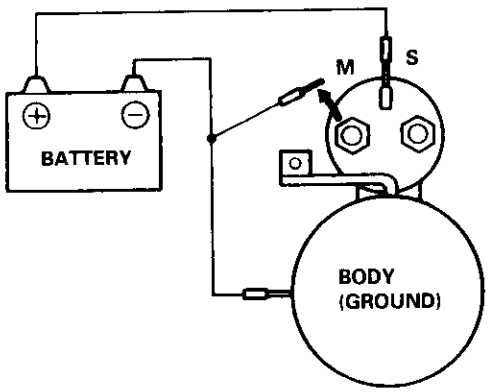

Retracting Test:

Disconnect the battery also from the body. If the pinion retracts immediately, it is working properly.

CAUTION: Do not leave the battery connected for more than 10 seconds.

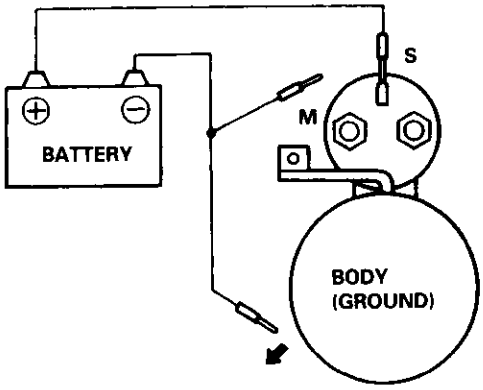

Starter No-load Test:

1. Clamp the starter firmly in a vise.
2. Connect the starter to the battery as described in the diagram below, and confirm that the motor starts and keeps rotating.

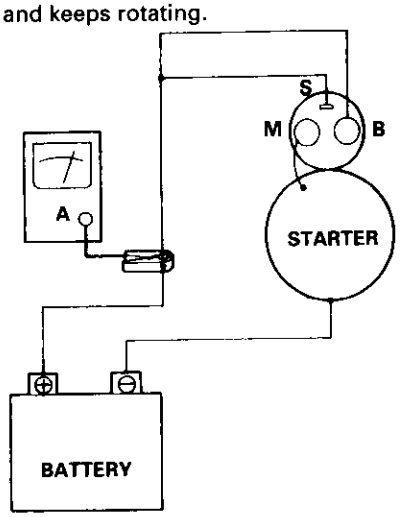

3. If the electric current and motor speed meet the specifications when the battery voltage is at 11.5 V, the starter is working properly.

Specifications:

80 A or less (Electric current), 2,600 rpm or more (Motor-speed)

Component Location Index

IGNITION TIMING CONTROL SYSTEM

- Troubleshooting, section 11
- Idle speed Inspection/Adjustment, section 11
- Inspection and Setting, page 23-105

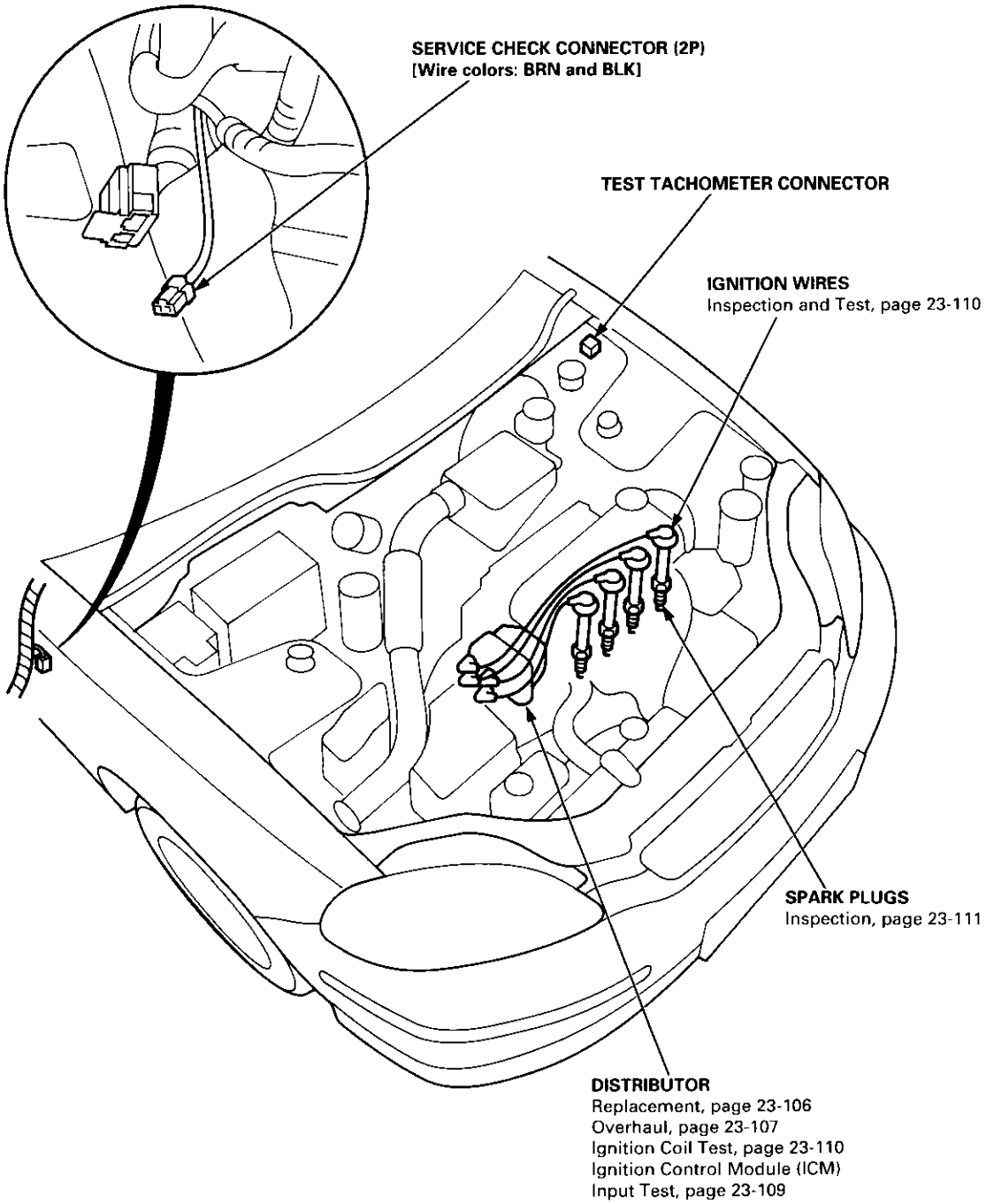

Circuit Diagram: '96 – 97 models

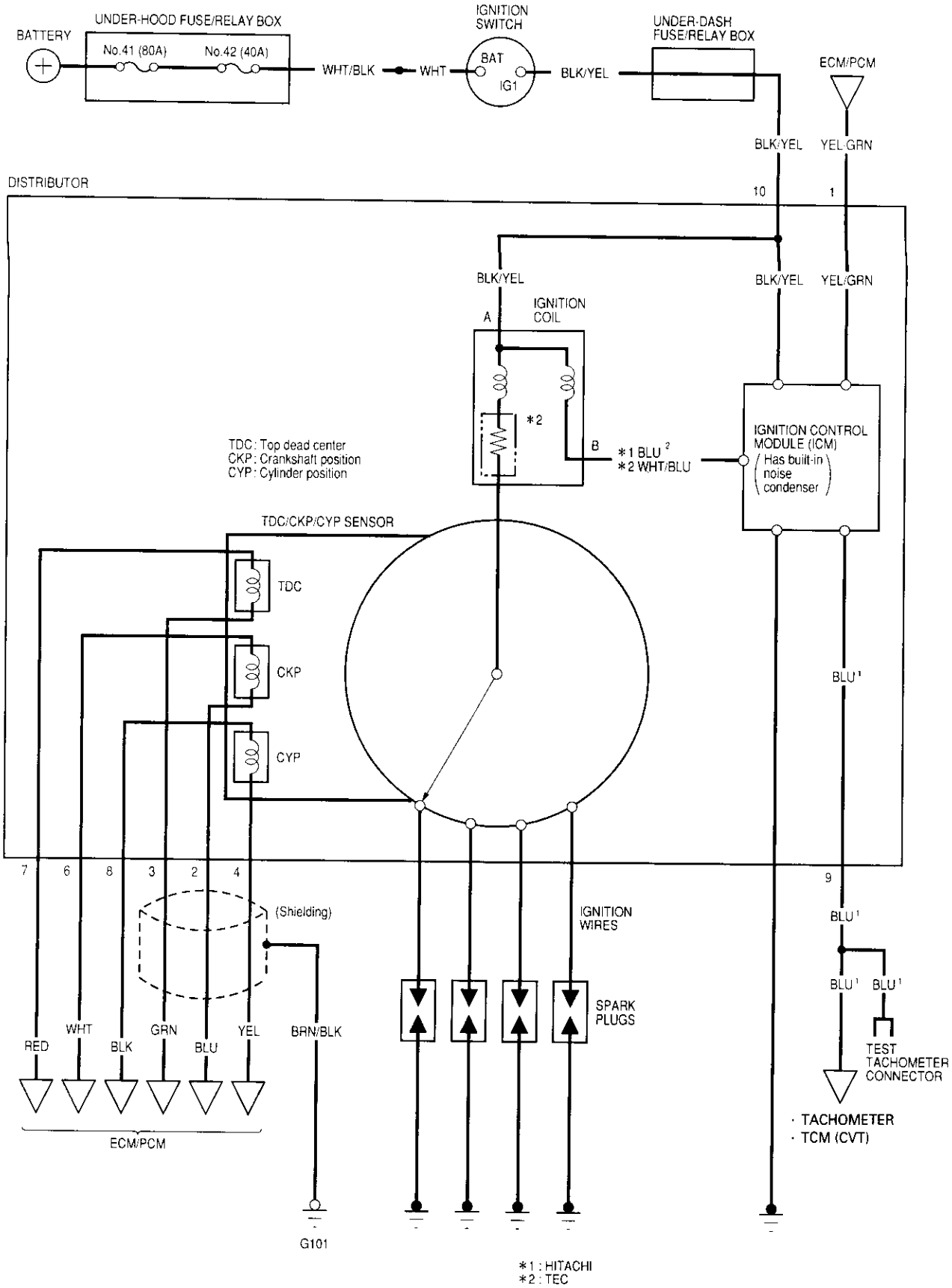

Circuit Diagram : '98-00 models

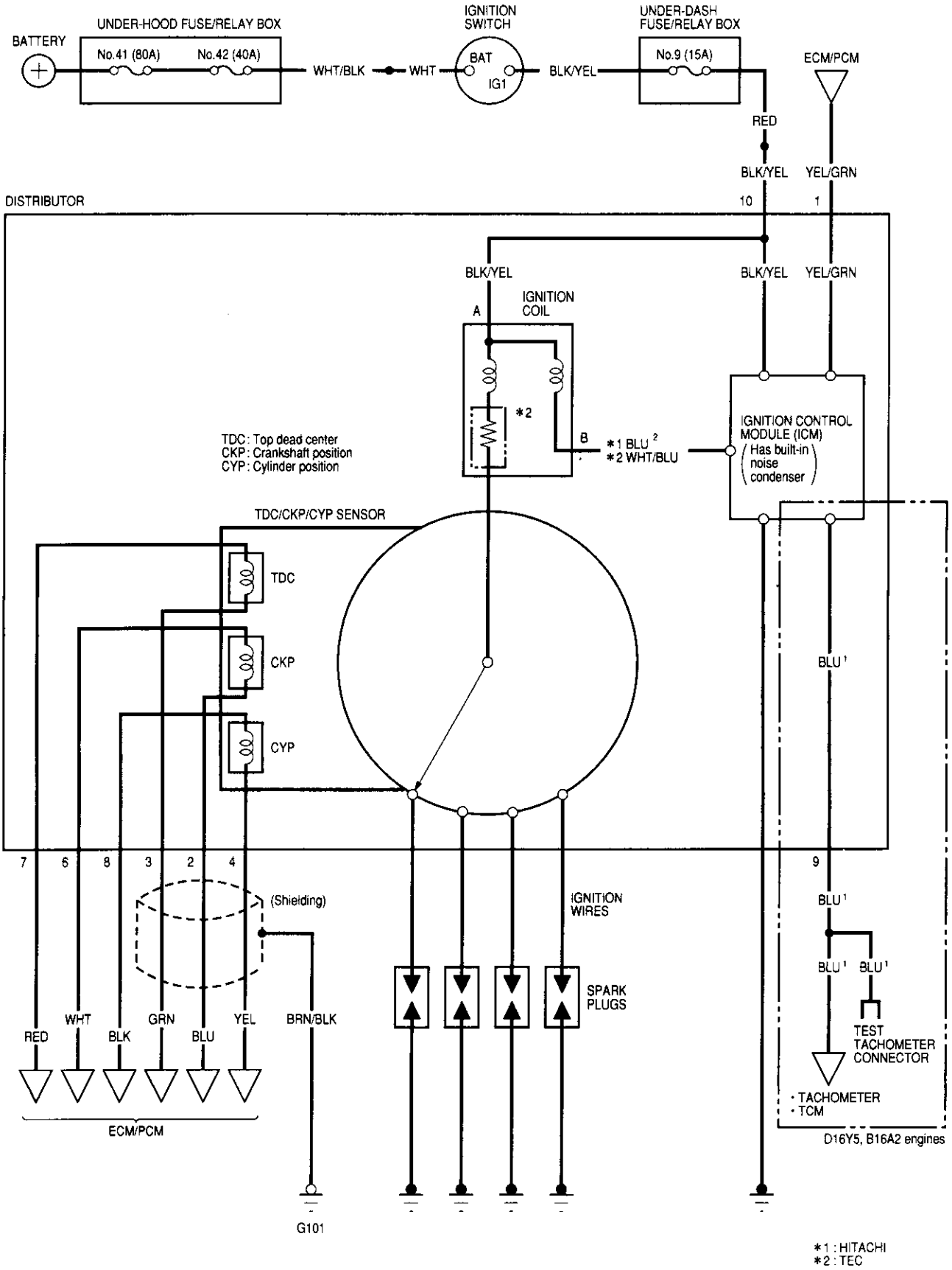

Ignition Timing Inspection and Setting

1. Check the idle speed, and adjust it if necessary (see section 11).

2. Pull out the service check connector 2P (BRN and BLK wires) from the connector holder located under the dash on the front passenger side, then connect the SCS service connector (T/N 07PAZ – 0010100) to it.

3. Start the engine. Hold the engine at 3,000 rpm with no load (A/T in N or P, M/T in neutral) until the radiator fan comes on, then let it idle.

4. Connect the timing light to the No. 1 ignition wire, then point the light toward the pointer on the timing belt cover.

5. Check the ignition timing in no load conditions: headlights, blower fan, rear window defogger, and air conditioner are not operating.

   Ignition Timing:

   D16Y5, D16Y7, D16Y8 engines

M/T	12° ± 2° BTDC (RED) during idling in neutral
A/T	12° ± 2° BTDC (RED) during idling in N or P

   B16A2 engine

M/T	16° ± 2° BTDC (RED) during idling in neutral

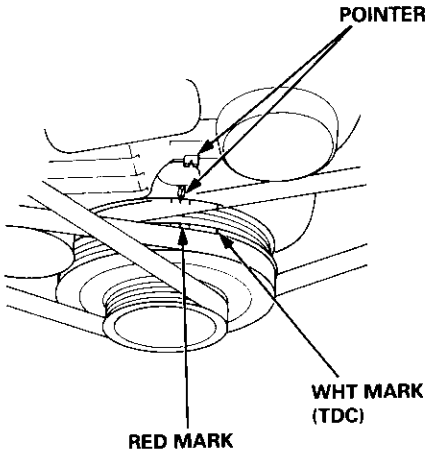

6. Adjust the ignition timing if necessary, as follows. Loosen the distributor mounting bolts, and turn the distributor ignition (DI) housing counterclockwise to advance the timing, or clockwise to retard the timing.

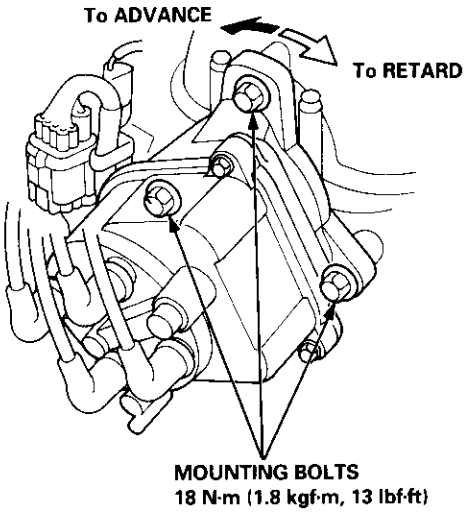

7. Tighten the distributor mounting bolts, and recheck the ignition timing.

8. Disconnect the SCS service connector from the service check connector.

Distributor Replacement

Removal:

1. Disconnect the connector from the distributor.
2. Disconnect the ignition wires from the distributor ignition (DI) cap.
3. Remove the mounting bolts from the distributor, then remove the distributor from the cylinder head.

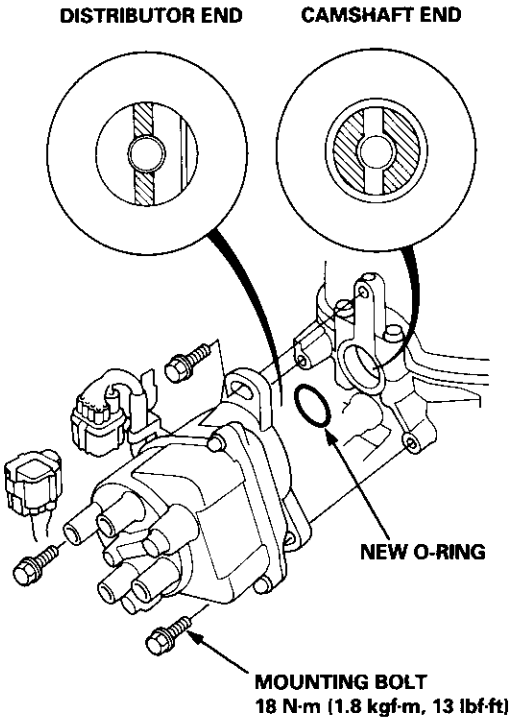

Installation:

NOTE: Before you install the distributor, bring the No. 1 piston to compression stroke TDC.

1. Coat a new O-ring with engine oil, then install it.
2. Slip the distributor into position.

   NOTE: The lug on the end of the distributor and its mating grooves in the camshaft end are both offset to eliminate the possibility of installing the distributor 180° out of time.

3. Install the mounting bolts, and tighten them lightly.
4. Connect the ignition wires to the distributor ignition (DI) cap as shown.

HITACHI:

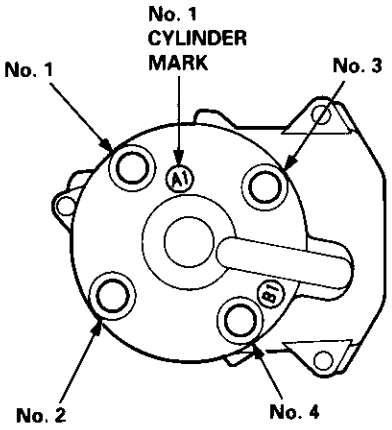

TEC:

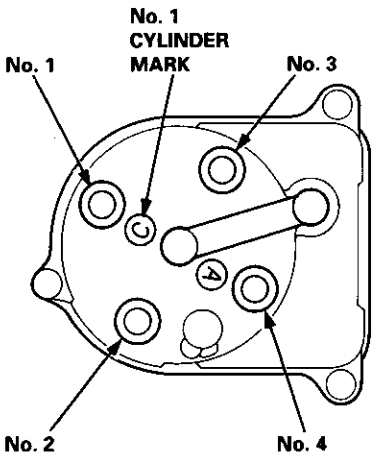

5. Connect the connector to the distributor.
6. Set the ignition timing (see previous page).
7. After setting the ignition timing, tighten the mounting bolts.

Distributor Overhaul

HITACHI:

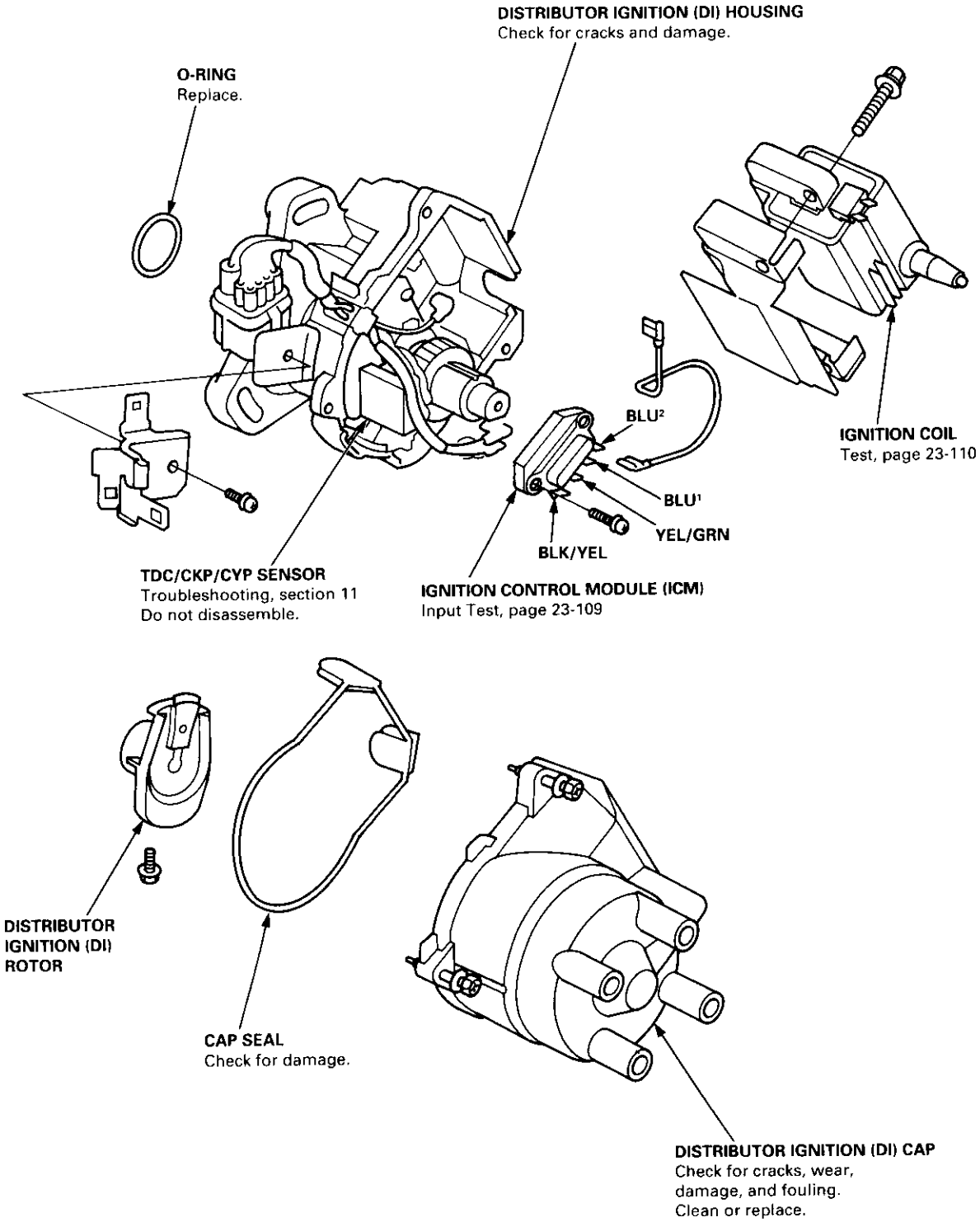

(cont'd)

Distributor Overhaul (cont'd)

TEC:

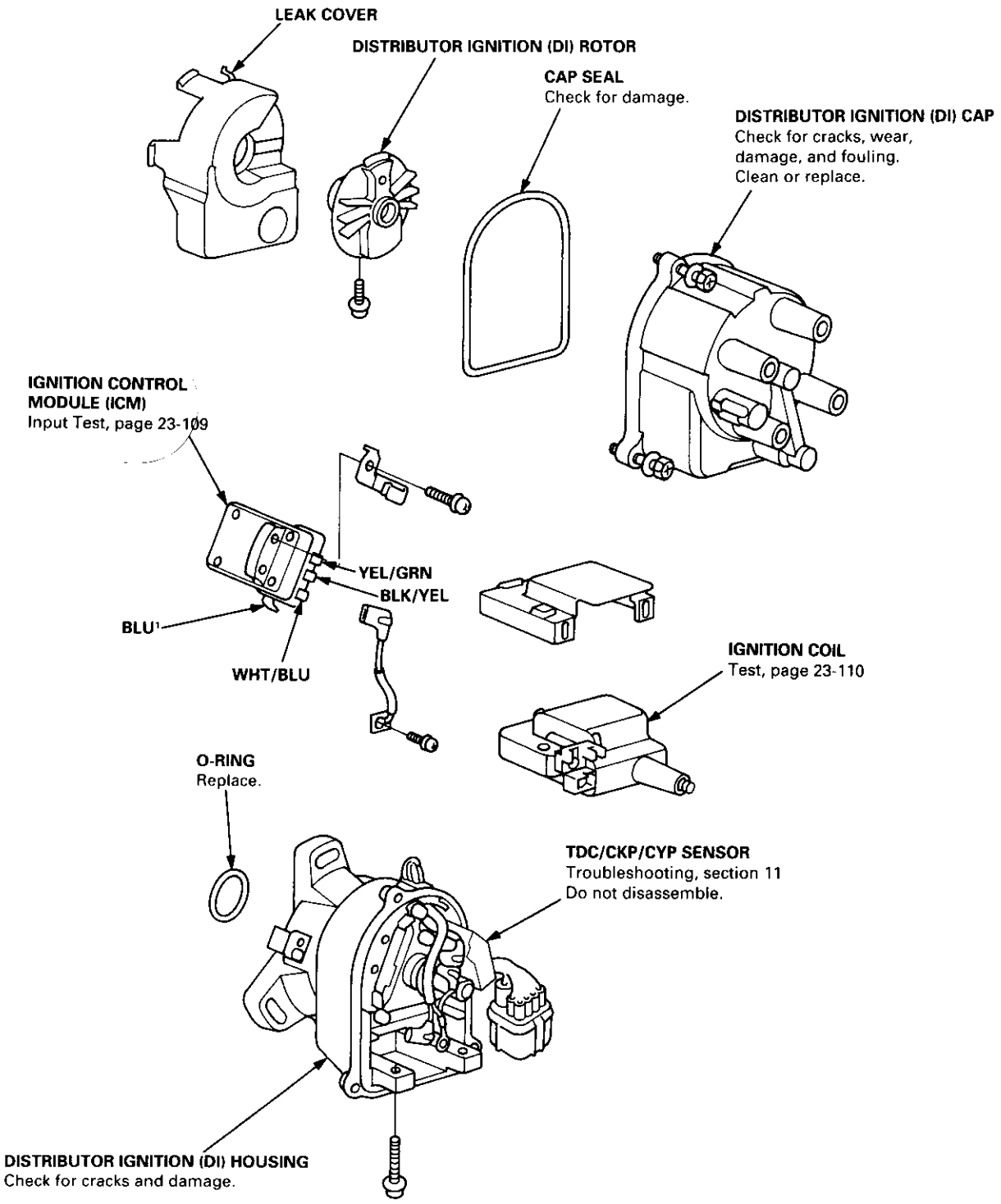

Ignition Control Module (ICM) Input Test

NOTE:
- See section 11 when the malfunction indicator lamp (MIL) turned on.
- Perform an input test for the ignition control module (ICM) after finishing the fundamental tests for the ignition system and the fuel and emissions systems.

1. Remove the distributor ignition (DI) cap, the distributor ignition (DI) rotor and the leak cover (TEC).

2. Disconnect the wires from the ICM.

HITACHI:

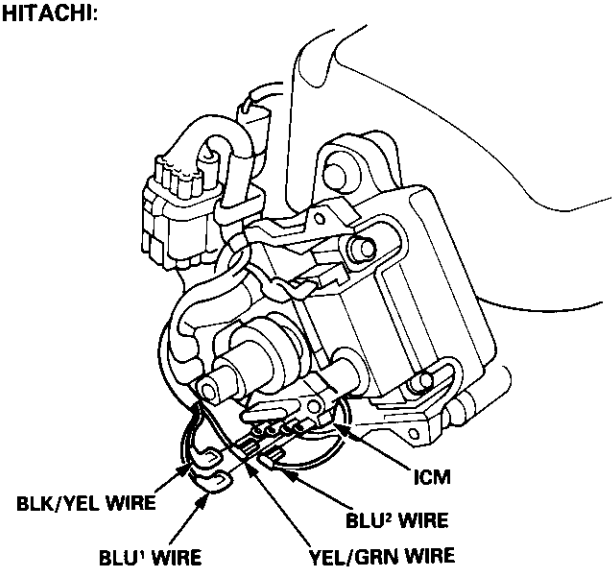

TEC:

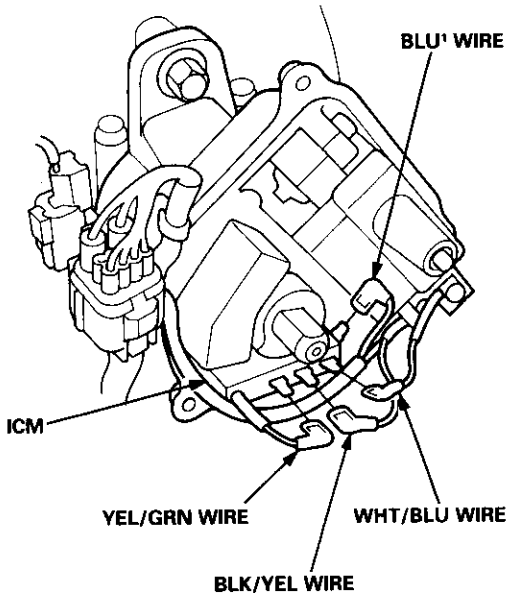

3. Turn the ignition switch ON (II). Check for voltage between the BLK/YEL wire and body ground.
   There should be battery voltage.

   - If there is no battery voltage, check the BLK/YEL wire between the under-dash fuse/relay box and the ICM.
   - If there is battery voltage, go to step 4.

4. Turn the ignition switch ON (II). Check for voltage between the wire*¹ and body ground.
   There should be battery voltage.

   - If there is no battery voltage, check:
     — the ignition coil.
     — the wire*¹ between the ignition coil and the ICM.
   - If there is battery voltage, go to step 5.

   *1: BLU² wire (HITACHI)
   WHT/BLU wire (TEC)

5. Disconnect the ECM/PCM connector A (32P). Check for continuity on the YEL/GRN wire between the ECM/PCM and the ICM.
   There should be continuity.

6. Check for continuity on the YEL/GRN wire to body ground.
   There should be no continuity.

7. Check for continuity on the BLU¹ wire between the test tachometer connector and the ICM.
   There should be continuity.

8. Check for continuity on the BLU¹ wire to body ground.
   There should be no continuity.

9. If all the tests are normal, replace the ICM.

Ignition Coil Test

Using an ohmmeter, measure resistance between the terminals. If the resistance is not within specifications, replace the ignition coil.

NOTE: Resistance will vary with the coil temperature; specifications are at 68°F (20°C).

HITACHI:
Primary Winding Resistance
(Between the A and B terminals):
0.45 – 0.55 Ω
Secondary Winding Resistance
(Between the A and secondary winding terminals):
22.4 – 33.6 kΩ

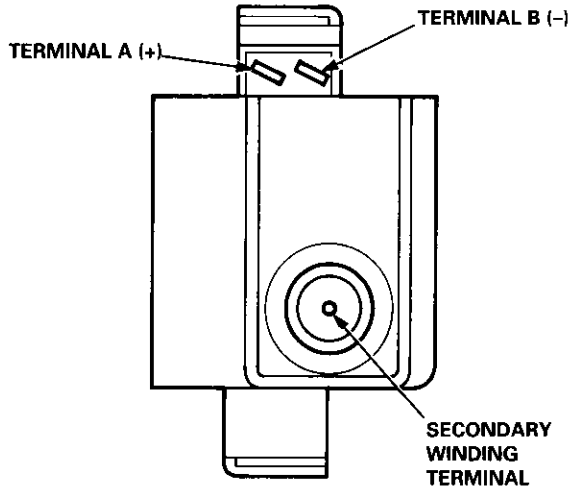

TEC:
Primary Winding Resistance
(Between the A and B terminals):
0.63 – 0.77 Ω
Secondary Winding Resistance
(Between the A and secondary winding terminals):
12.8 – 19.2 kΩ

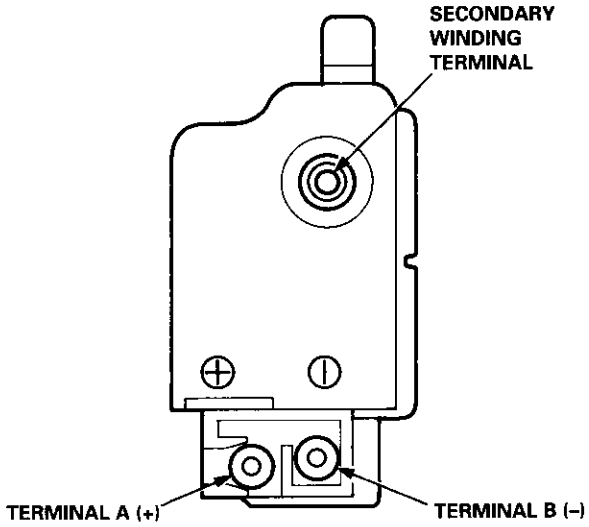

Ignition Wire Inspection and Test

CAUTION: Carefully remove the ignition wires by pulling on the rubber boots. Do not bend the wires; you might break them inside.

1. Check the condition of the ignition wire terminals. If any terminal is corroded, clean it, and if it is broken or distorted, replace the ignition wire.

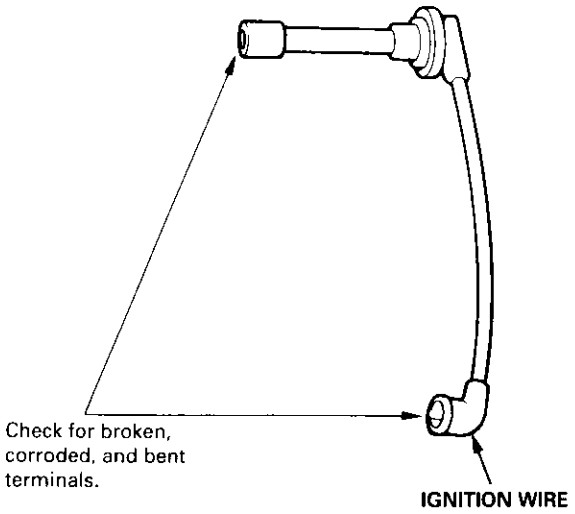

2. Connect ohmmeter probes and measure resistance.

   Ignition Wire Resistance:
   25 kΩ max. at 68°F (20°C)

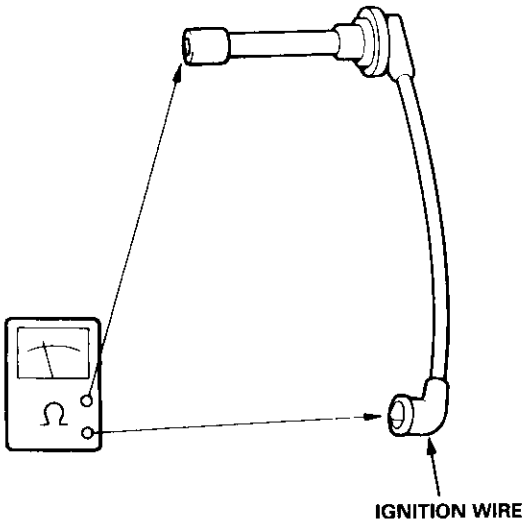

3. If resistance exceeds 25 kΩ, replace the ignition wire.

Spark Plug Inspection

1. Inspect the electrodes and ceramic insulator for:

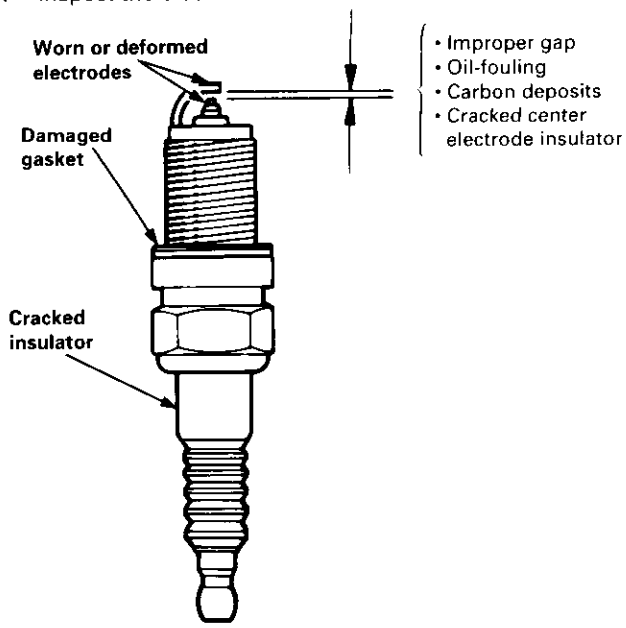

Burned or worn electrodes may be caused by:
- Advanced ignition timing
- Loose spark plug
- Plug heat range too low
- Insufficient cooling

Fouled plugs may be caused by:
- Retarded ignition timing
- Oil in combustion chamber
- Incorrect spark plug gap
- Plug heat range too high
- Excessive idling/low speed running
- Clogged air cleaner element
- Deteriorated ignition coil or ignition wires

2. D16Y5, D16Y7, D16Y8 engine:
   - Adjust the gap with a suitable gapping tool, and replace the plug if the center electrode is rounded as shown below.

Electrode Gap:

Standard	$1.1^{+0}_{-0.1}$ mm ($0.043^{+0}_{-0.004}$ in)

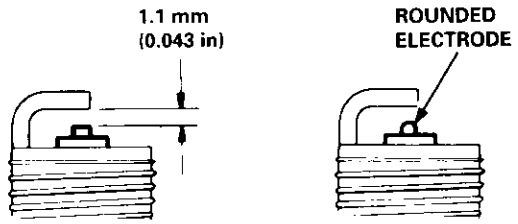

3. B16A2 engine:
   - Do not adjust the gap of a platinum tip plug; replace the spark plug if the center electrode is rounded or if the gap is not within the specifications.

Electrode Gap:

Standard	$1.3^{+0}_{-0.1}$ mm ($0.051^{+0}_{-0.004}$ in)

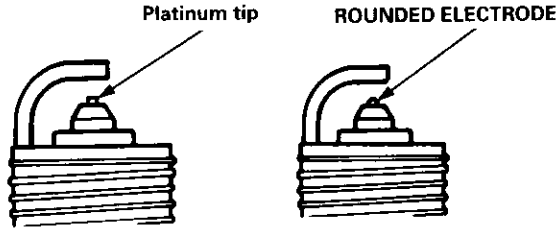

NOTE: Use only the spark plugs listed below.

Engine Types	Spark Plugs
D16Y5	ZFR4F-11 (NGK) KJ14CR-L11 (DENSO)
D16Y7, D16Y8	ZFR5F-11 (NGK) KJ16CR-L11 (DENSO)
B16A2	PFR6L-13 (NGK) PK20PR-L13 (DENSO)

4. Apply a small quantity of anti-seize compound to the plug threads, and screw the plugs into the cylinder head finger-tight. Then torque them to 18 N·m (1.8 kgf·m, 13 lbf·ft).

Component Location Index

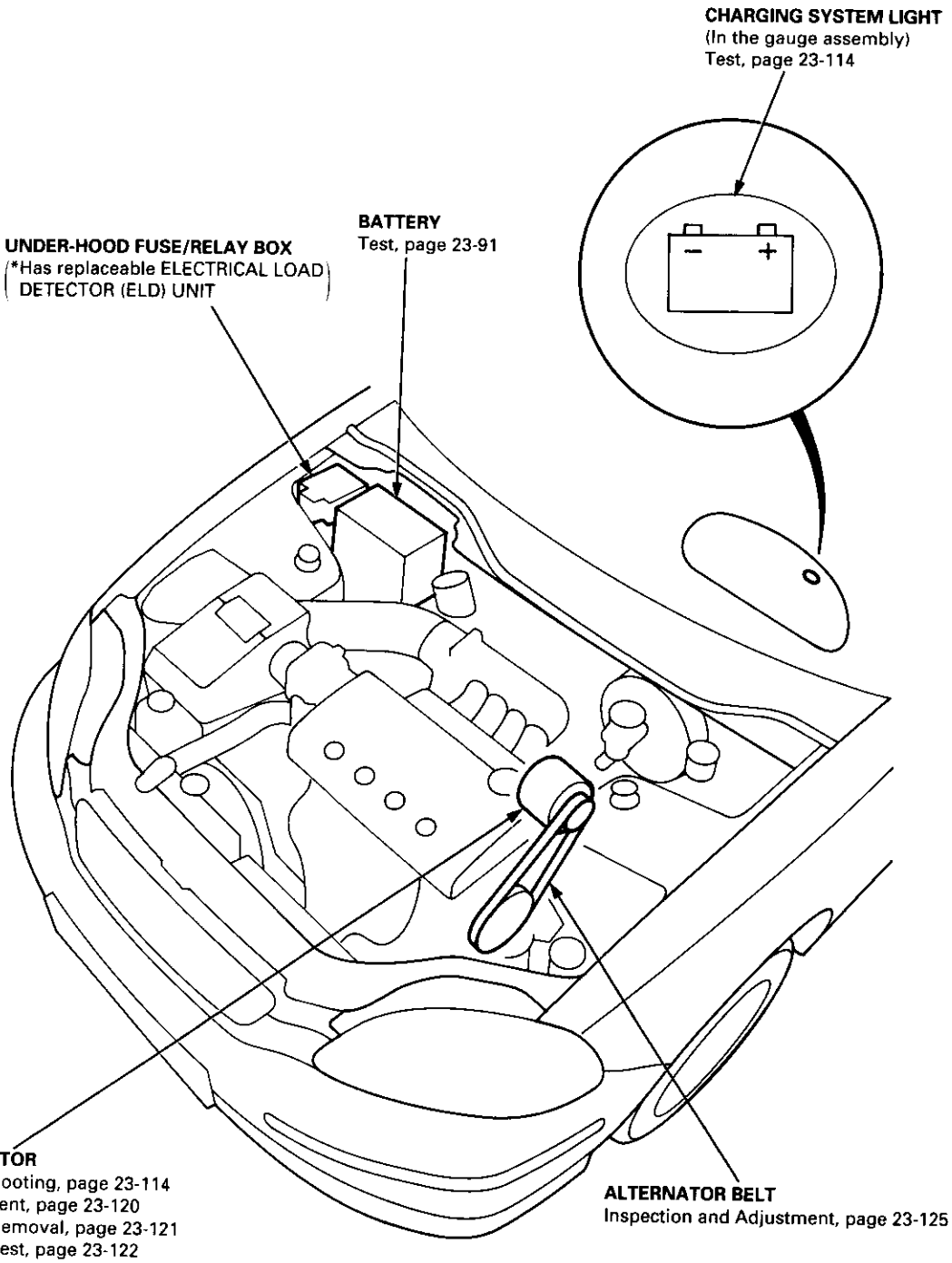

*ELD unit: USA

Circuit Diagram

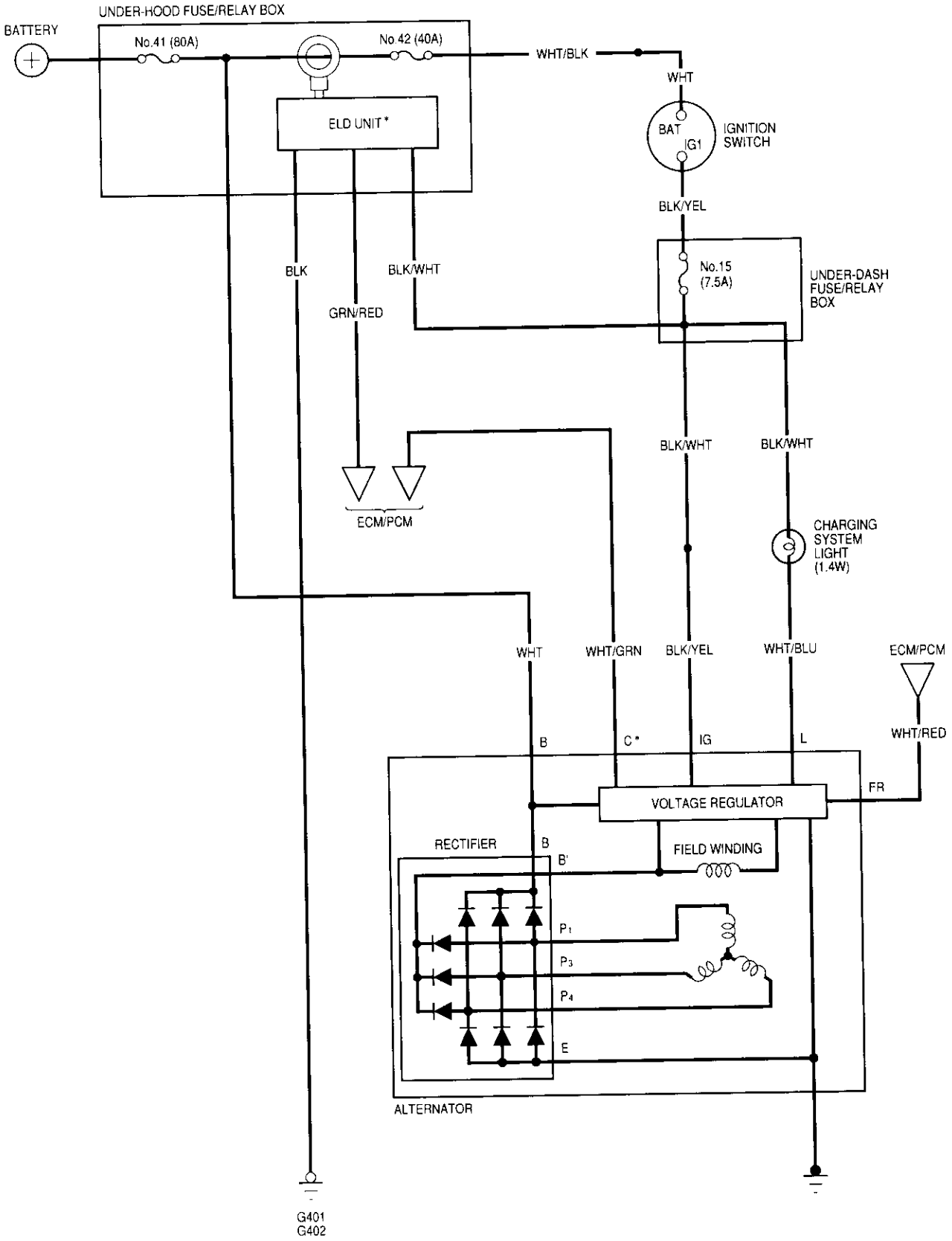

* : USA

Troubleshooting

If the charging system light does not come on or does not go off, or the battery is dead or low, test the following items in the order listed below:

1. Battery (see page 23-91)
2. Charging system light
3. Voltage
4. Alternator control system (USA)
5. Alternator/regulator

Charging System Light Test

Charging System Light Check-1:
Make sure the charging system light comes on.

Does the charging system light come on?

NO → **Check for a blown No. 15 (7.5 A) fuse and a blown charging system light bulb. If the fuse and bulb are OK, repair the open in the WHT/BLU wire.**

YES

Charging System Light Check-2:
Start the engine.

Does the charging system light go off?

YES → **Test and repair the alternator components.**

NO

Voltage Check:
Measure the voltage at the No. 1 [No. 2] terminal of the 4P [3P] connector with the ignition switch ON (II).

Is there battery voltage?

NO → **Repair the open in the BLK/YEL wire between the alternator and under-dash fuse/relay box.**

YES

(To next page)

ALTERNATOR 4P CONNECTOR (USA)

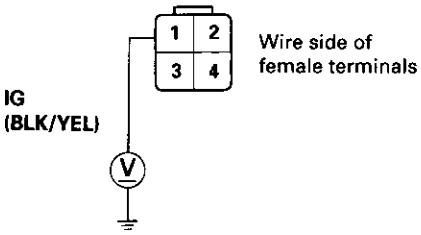

ALTERNATOR 3P CONNECTOR (Canada)

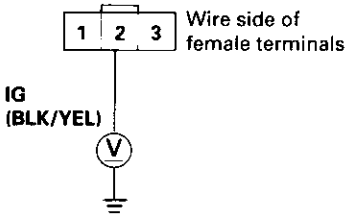

[ ]: Canada

(From previous page)

Check for an open in the L circuit-1:
1. Turn the ignition switch OFF.
2. Disconnect the 4P [3P] connector from the alternator.
3. Ground the No. 3 terminal of the 4P [3P] connector.
4. Turn the ignition switch ON (II).

Does the charging system light come on?

NO → **Turn the ignition switch OFF, and repair the open in the WHT/BLU wire.**

YES

Check for an open in the L circuit-2:
Disconnect the No. 3 terminal of the 4P [3P] connector from the ground.

Does the charging system light go off?

YES → **Test and repair the alternator components.**

NO

Turn the ignition switch OFF, and repair the short to ground in the WHT/BLU wire.

ALTERNATOR 4P CONNECTOR (USA)

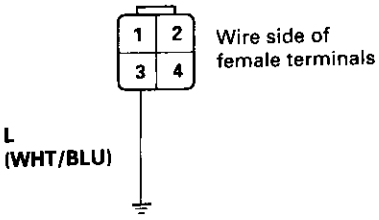

ALTERNATOR 3P CONNECTOR (Canada)

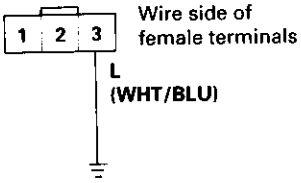

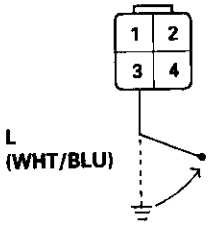

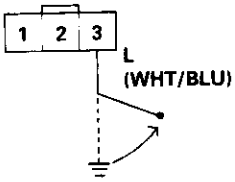

[ ]: Canada

(cont'd)

Troubleshooting (cont'd)

Alternator Control System Test (USA): '96 – 98 models, '99 – 00 D16Y5 (M/T) engine

NOTE: Before testing, check proper operation of the ELD by confirming with the MIL (see section 11).

Check for a short in the circuit (ALTC line):
1. Reconnect the 4P connector to the alternator.
2. Start the engine, and turn the headlights (high beam) ON.
3. Measure voltage between the 4P connector terminal No. 2 and the positive terminal of the battery.

CAUTION: Be sure to use a voltmeter with its plus terminal connected to battery plus and its minus terminal to the 4P connector temrinal No. 2.

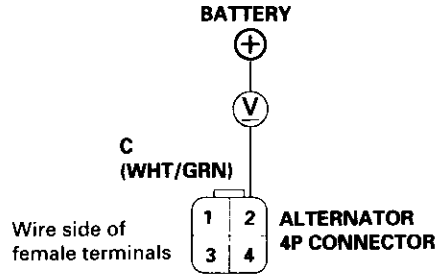

Is there 1 V or less?

YES

NO

Check for an open in the wire (ALTC line):
1. Turn the headlight and ignition switch OFF.
2. Disconnect the 32P connector from the ECM/PCM.
3. Check for continuity between the ECM/PCM 32P connector terminal No. 19 and alternator 4P connector terminal No. 2.

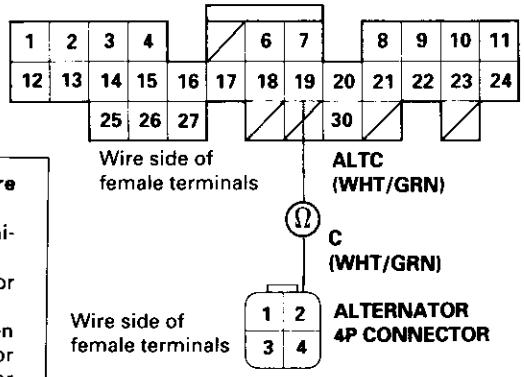

Is there continuity?

NO

Repair open in the wire between the alternator and ECM/PCM.

YES

Test and repair the alternator components.

Check for short in the wire (ALTC line):
1. Turn the headlight and ignition switch OFF.
2. Disconnect the 32P connector from the ECM/PCM.
3. Check for continuity between the ECM/PCM 32P connector terminal No. 19 and body ground.

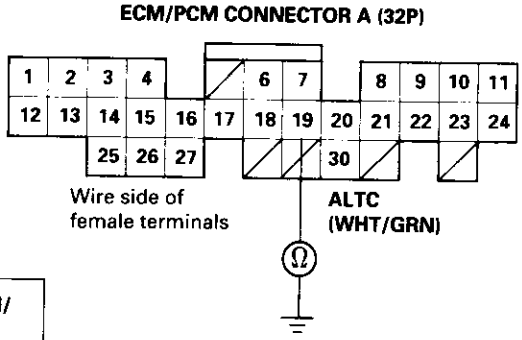

Is there continuity?

NO

Substitute a known-good ECM/PCM, and recheck.
If prescribed voltage is now available, replace the original ECM/PCM.

YES

Repair short in the wire between the alternator and ECM/PCM.

Alternator Control System Test (USA): '99 – 00 models, except D16Y5 (M/T) engine

NOTE: Before testing, check proper operation of the ELD by confirming with the MIL (see section 11).

Check for a short in the circuit (ALTC line):
1. Reconnect the 4P connector to the alternator.
2. Start the engine, and turn the headlights (high beam) ON.
3. Measure voltage between the 4P connector terminal No. 2 and the positive terminal of the battery.

CAUTION: Be sure to use a voltmeter with its plus terminal connected to battery plus and its minus terminal to the 4P connector temrinal No. 2.

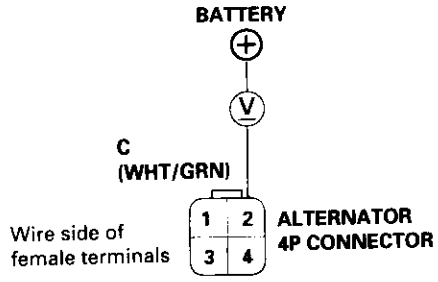

Is there 1 V or less?

YES

NO

Check for an open in the wire (ALTC line):
1. Turn the headlight and ignition switch OFF.
2. Disconnect the 31P connector from the ECM/PCM.
3. Check for continuity between the ECM/PCM 31P connector terminal No. 2 and alternator 4P connector terminal No. 2.

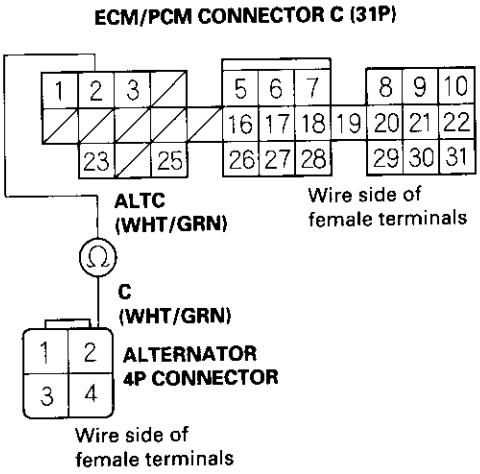

Is there continuity?

NO

Repair open in the wire between the alternator and ECM/PCM.

YES

Test and repair the alternator components.

Check for short in the wire (ALTC line):
1. Turn the headlight and ignition switch OFF.
2. Disconnect the 31P connector from the ECM/PCM.
3. Check for continuity between the ECM/PCM 31P connector terminal No. 2 and body ground.

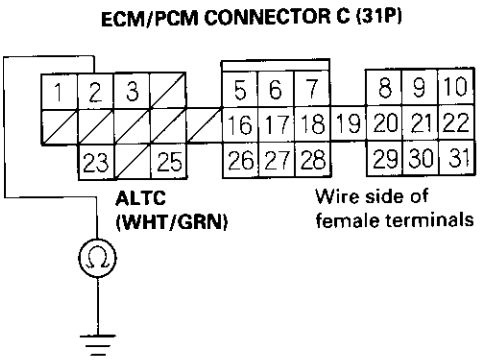

Is there continuity?

NO

Substitute a known-good ECM/PCM, and recheck.
If prescribed voltage is now available, replace the original ECM/PCM.

YES

Repair short in the wire between the alternator and ECM/PCM.

(cont'd)

Troubleshooting (cont'd)

Alternator/Regulator Test

NOTE: Make sure the battery is sufficiently charged (see page 23-91).

Alternator/Regulator Test-1:
1. Connect a Sun VAT-40 (or equivalent tester), and turn the selector switch to position 1 (starting).
2. Shift to neutral (A/T in P or N) position, and start the engine. Hold the engine at 3,000 rpm with no load until the radiator fan comes on, then let it idle.
3. Raise the engine speed to 2,000 rpm, and hold it there.

Is the voltage over 15.1 V?

YES → **Replace the voltage regulator.**

NO

Alternator/Regulator Test-2:
1. Release the accelerator pedal, and let the engine idle.
2. Make sure all accessories are turned off. Turn the selector switch to position 2 (charging).
3. Remove the inductive pick-up, and zero the ammeter.
4. Place the inductive pick-up over the battery ground cable so that the arrow points to the battery negative terminal.
5. Raise the engine speed to 2,000 rpm, and hold it there.

Is the voltage less than 13.5 V?

YES → **Test and repair the alternator components.**

NO

Alternator/Regulator Test-3:
Apply a load with a VAT-40 until the battery voltage drops to between 12 – 13.5 V.

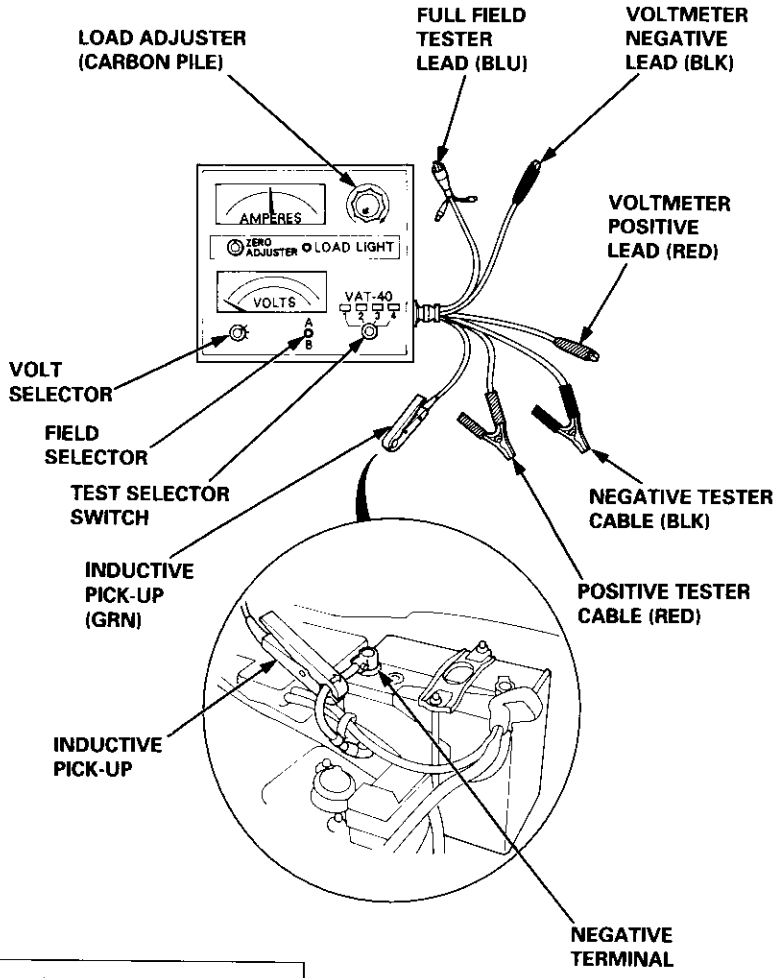

2

To next page

From previous page

2

Is the amperage 50 A or more?

YES → **The charging system is OK.**

NO

Alternator/Regulator Test-4:
With the engine speed still at 2,000 rpm, full-field the alternator.

CAUTION: The voltage will rise quickly when the alternator is full-fielded. Do not allow the voltage to exceed 18 V; it may damage the electrical system.

NOTE: Attach a probe to a VAT-40 full field test lead, and insert the probe into the full field access hole at the back of the alternator. Switch the field selector to the "A (Ground)" position momentarily, and check the amperage reading.

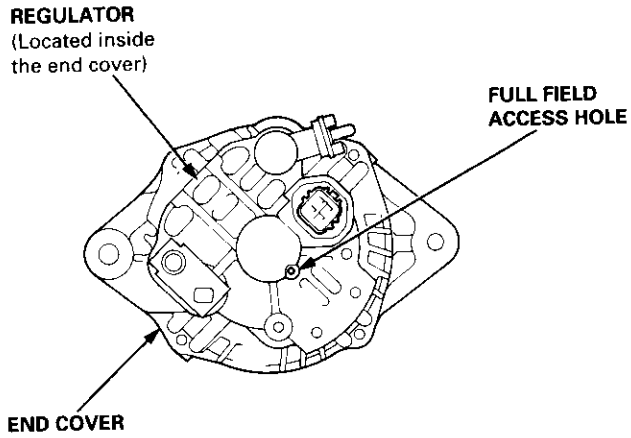

Is the alternator output 50 A or more?

NO → **Test and repair the alternator components.**

YES

Replace the voltage regulator.

Alternator Replacement

NOTE: Remove the alternator from below the vehicle.

1. Make sure you have the anti-theft code for the radio, then write down the frequencies for the radio's preset buttons ('99 – 00 models).

2. Remove the battery negative cable, then disconnect the positive cable.

3. Disconnect the 4P (or 3P) connector from the alternator.

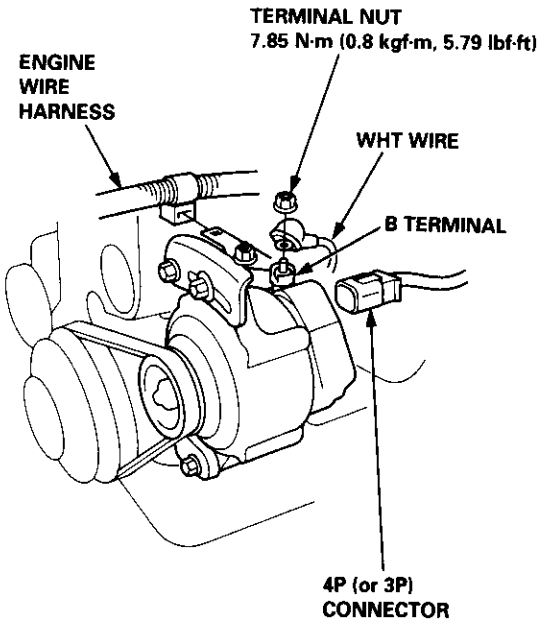

( ): Canada

4. Remove the terminal nut and the WHT wire from the B terminal.

5. Remove the adjusting bolt and through bolt nut, then remove the alternator belt from the pulley.

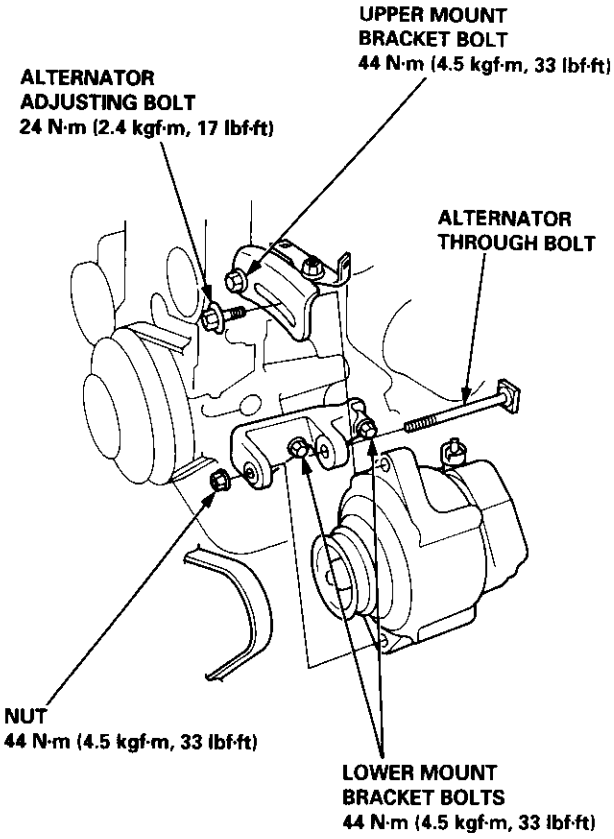

6. Pull out the alternator through bolt, then remove the alternator.

7. If necessary, remove the mount bracket bolts, and the upper and lower mount brackets.

8. Adjust the alternator belt tension after installation (see page 23-125).

9. Enter the anti-theft code for the radio, then enter the customer's radio station presets ('99 – 00 models).

Rectifier Removal

1. Remove the four through bolts.

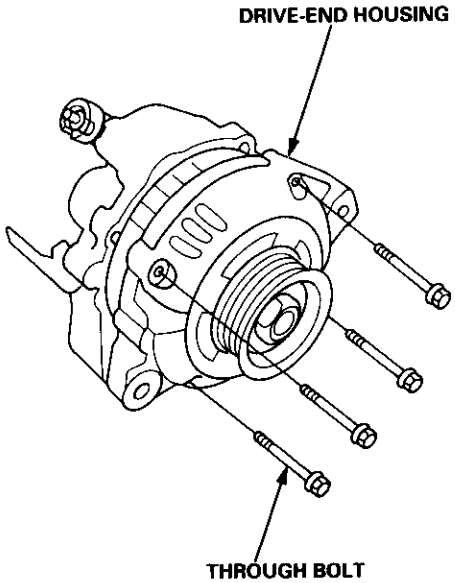

2. Heat the rear bearing seat with a 1,000 W hair drier for about five minutes (120 – 140°F, 50 – 60°C).

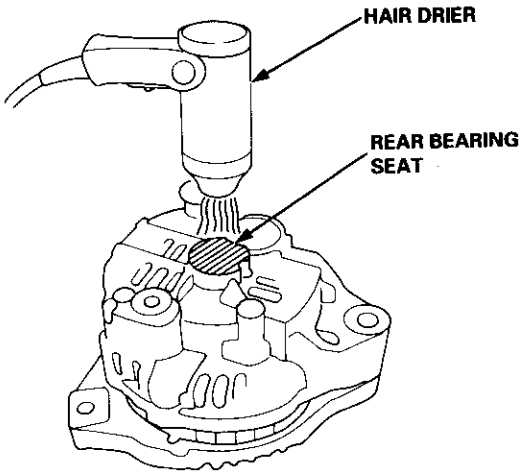

3. Separate the rear housing from the drive-end housing by inserting a flat tip screwdriver into the openings and prying them a part. Be careful not to damage the stator with the tip of the screwdriver.

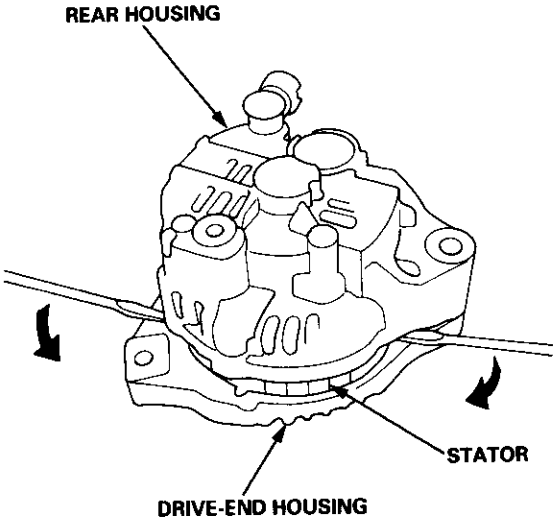

4. Separate the rear housing and drive-end housing with the stator attached to the rear housing.

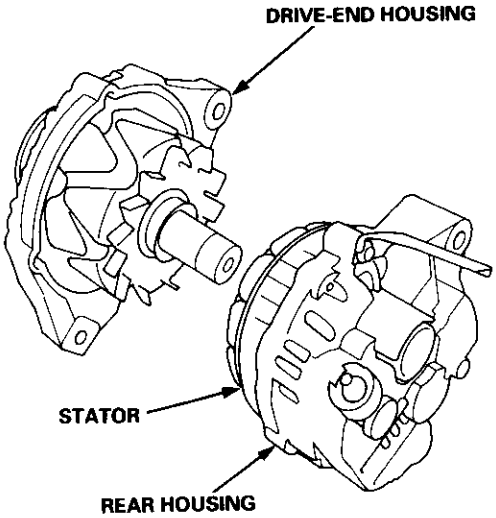

(cont'd)

Rectifier Removal (cont'd)

5. Separate the rear housing from the stator/rectifier assembly by removing the four screws and the terminal nut.

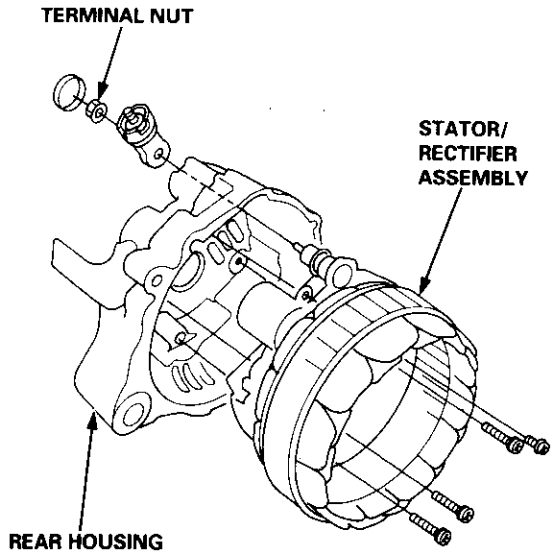

6. Unsolder the rectifier from the stator leads.
   - To avoid damaging the diodes with heat, pinch the stator leads between pliers to carry heat off, and apply the soldering iron only long enough to separate the leads from the rectifier.
   - Use a 100 W soldering iron.

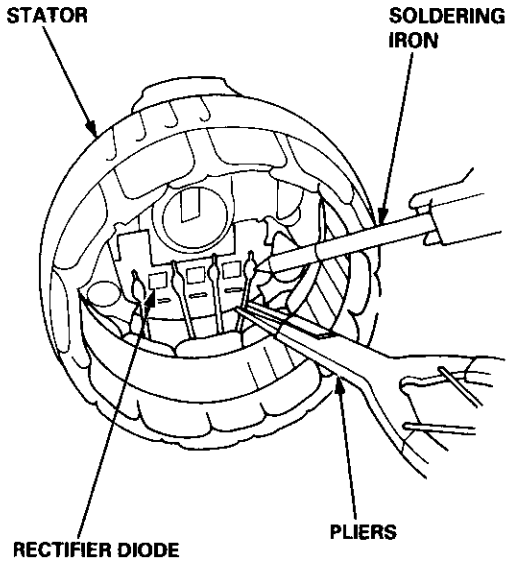

7. Install the new rectifier in the reverse order of removal.
   - Apply the soldering iron only long enough to ensure a good connection so the heat will not damage the diodes.
   - Use only a rosin core type solder or solder joints will corrode.

Rectifier Test

NOTE: The diodes are designed to allow current to pass in one direction while blocking it in the opposite direction. Since the alternator rectifier is made up of nine diodes, each diode must be tested for continuity in both directions with an ohmmeter that has diode checking capability; a total of 18 checks.

1. Check for continuity in each direction between
   — the B and P terminals.
   — the B' and P terminals.
   — E (ground) and the P terminals.
   All diodes should have continuity in only one direction.

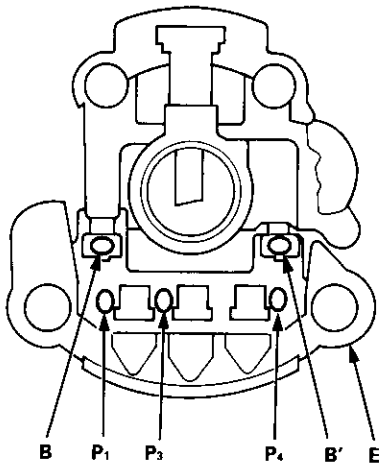

2. If any of the diodes fails, replace the rectifier assembly. (Diodes are not available separately.)

Rotor Slip Ring Test

1. Check the resistance between the slip rings. There should be 1.8 – 3.0 ohms.
   - If resistance meets the specification, go to step 2.
   - If resistance does not meet the specification, replace the alternator.

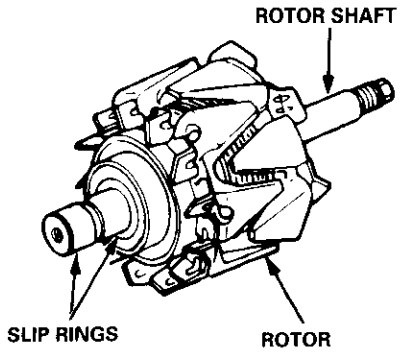

2. Check that there is no continuity between the slip rings and the rotor or rotor shaft.

3. If the rotor fails either continuity check, replace the alternator.

Stator Test

1. Check that there is continuity between each pair of leads.

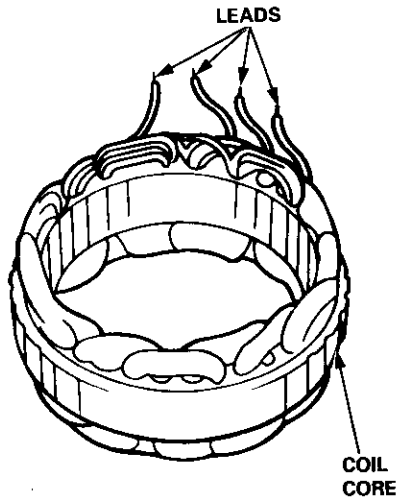

2. Check that there is no continuity between each lead and the coil core.

3. If the coil fails either continuity check, replace the alternator.

Alternator Brush Inspection

1. Separate the drive-end housing from the rear housing as described on page 23-121.

2. Separate the rear housing from the stator/rectifier assembly by removing the four screws and the terminal nut from the rear housing (see page 23-121).

3. Measure the length of the brushes with vernier calipers.

Alternator Brush Length:

① Standard (NEW)	② Service Limit
19.0 mm (0.75 in)	5.0 mm (0.20 in)

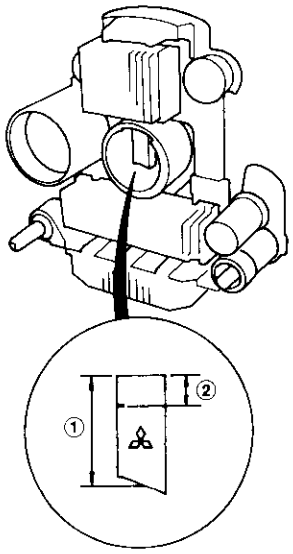

4. If the brushes are less than the service limit, replace them.

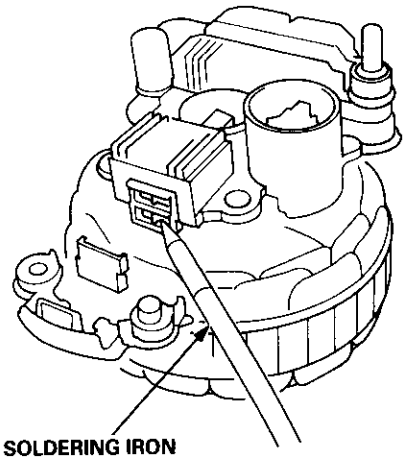

Rear Bearing Replacement

1. Pull off the rear bearing.
   - Make sure the tips of the bearing puller jaws are thin enough to fit between the bearing and the slip rings.
   - Do not reuse the bearing.

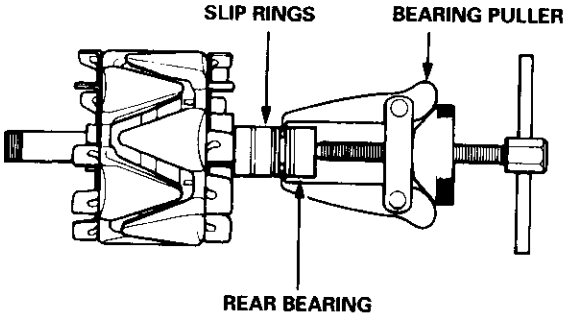

2. Use a hand press to install the new bearing. Apply pressure only on the inner race to avoid damaging the bearing.

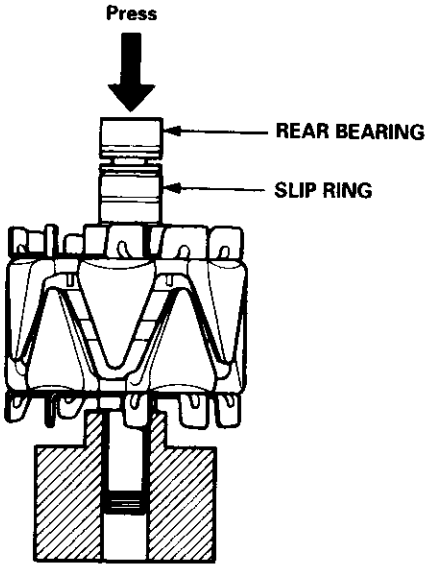

Alternator Reassembly

1. Push the brushes in, then insert a pin or drill bit (about 1.8 mm diameter) to hold them there.

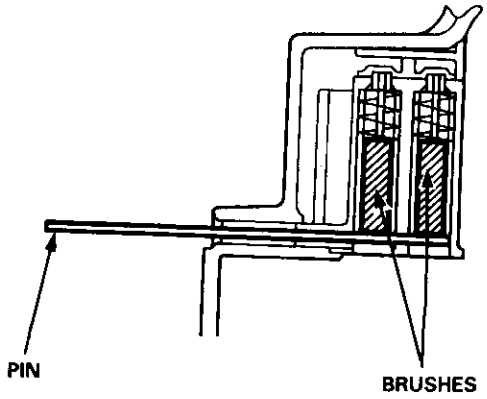

2. Heat the rear bearing seat in the rear housing as described on page 23-121. After heating, continue immediately with assembling before the rear bearing seat cools completely.

3. Put the rear housing/stator assembly and drive-end housing/rotor assembly together, tighten the four through bolts and pull out the pin.

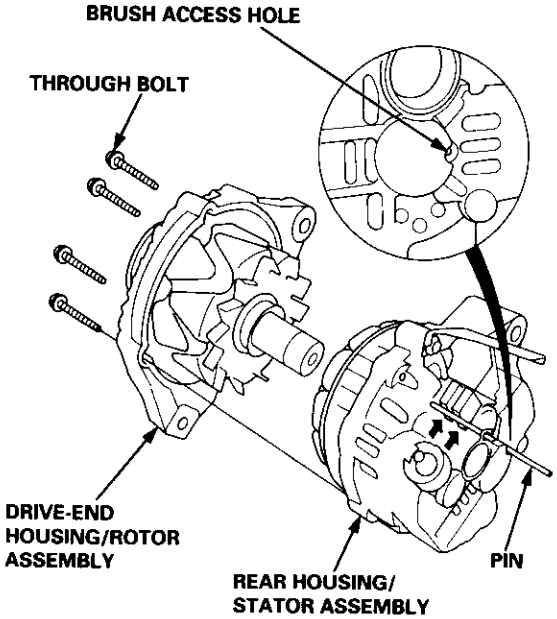

4. After assembling the alternator, turn the pulley by hand to make sure the rotor rotates smoothly and without noise.

Alternator Belt Inspection and Adjustment

Deflection Method:
Apply a force of 98 N (10 kgf, 22 lbf), and measure the deflection between the alternator and the crankshaft pulley.

Deflection	8.0 – 10.5 mm (0.31 – 0.41 in)

NOTE: On a brand-new belt (one that has been run for less than five minutes), the deflection should be 6.0 – 8.5 mm (0.26 – 0.33 in) when first measured. If the belt is worn or damaged, replace it.

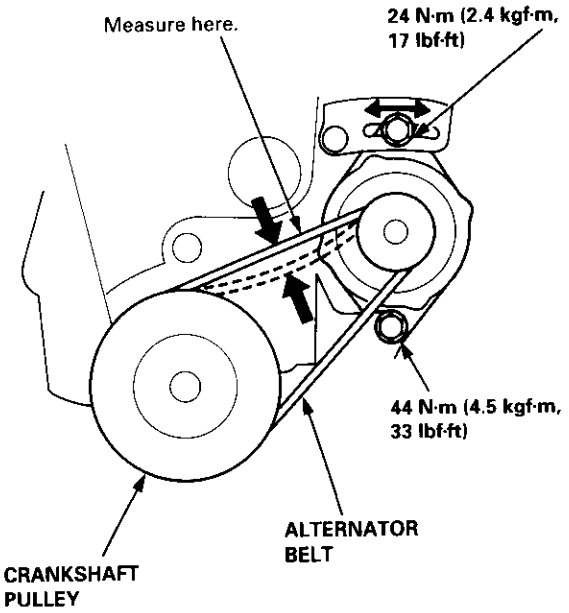

If adjustment is necessary:

1. Loosen the lower mounting nut and the upper mounting bolt.
2. Move the alternator to obtain the proper belt tension, then retighten the upper mounting bolt and the lower mounting nut to the specified torques.
3. Recheck the deflection of the belt.

Belt Tension Gauge Method:
Following the gauge manufacturer's instructions, attach the special tool to the belt, and measure the tension.

Tension	340 – 490 N (35 – 50 kgf, 77 – 110 lbf)

NOTE: On a brand-new belt (one that has been run for less than five minutes), the tension should be 540 –740 N (55 – 75 kgf, 121 – 165 lbf) when first measured. If the belt is worn or damaged, replace it.

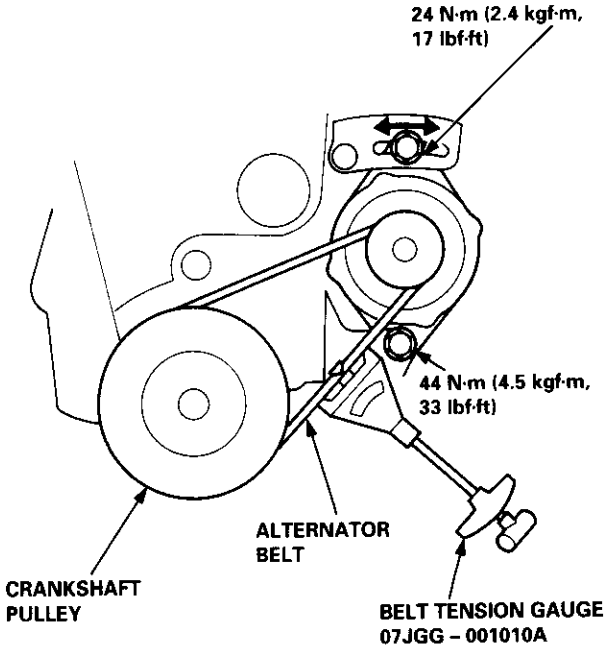

If adjustment is necessary:

1. Loosen the lower mounting nut and the upper mounting bolt.
2. Move the alternator to obtain the proper belt tension, then retighten the upper mounting bolt and the lower mounting nut to the specified torques.
3. Recheck the tension of the belt.

Component Location Index

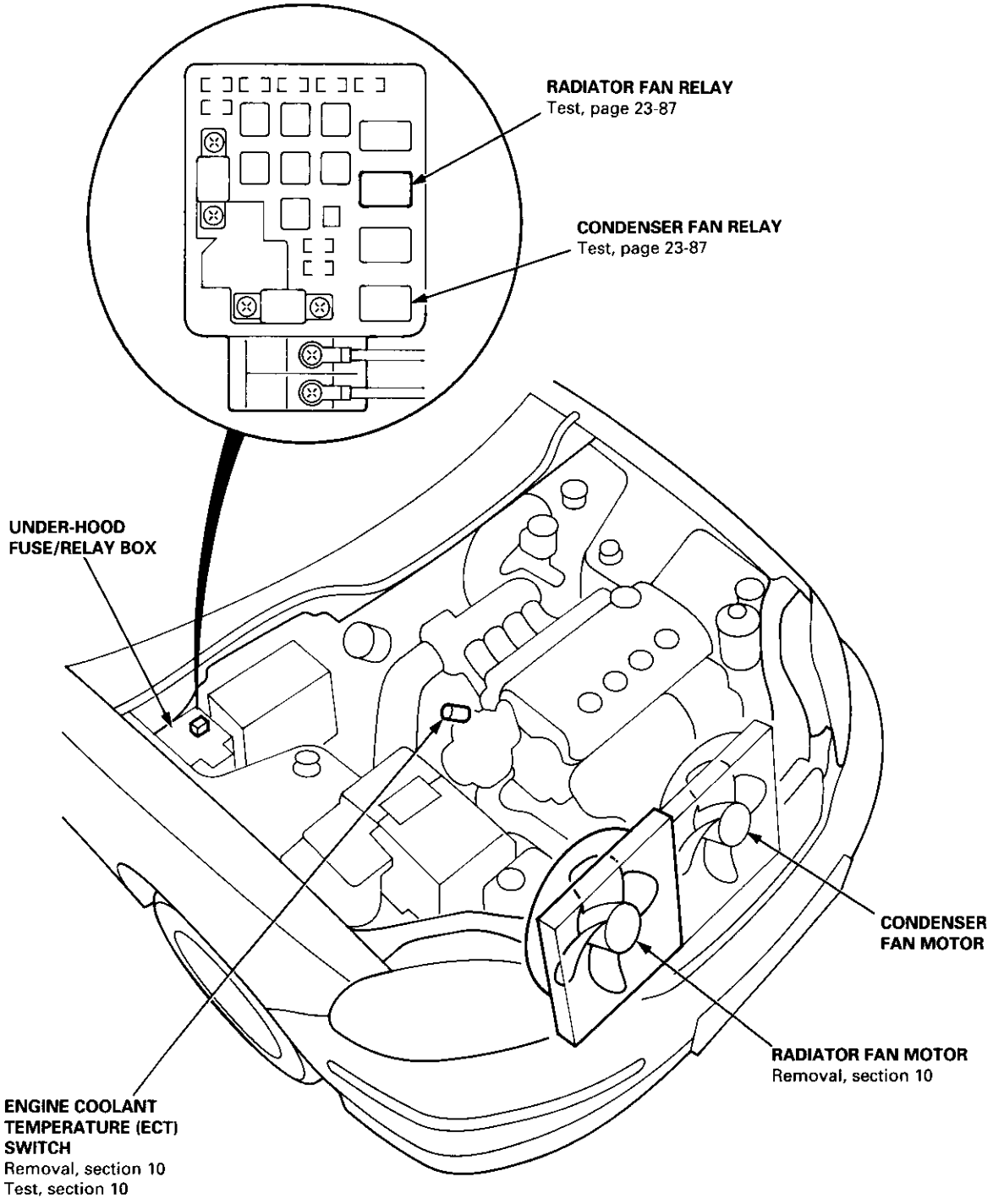

Circuit Diagram

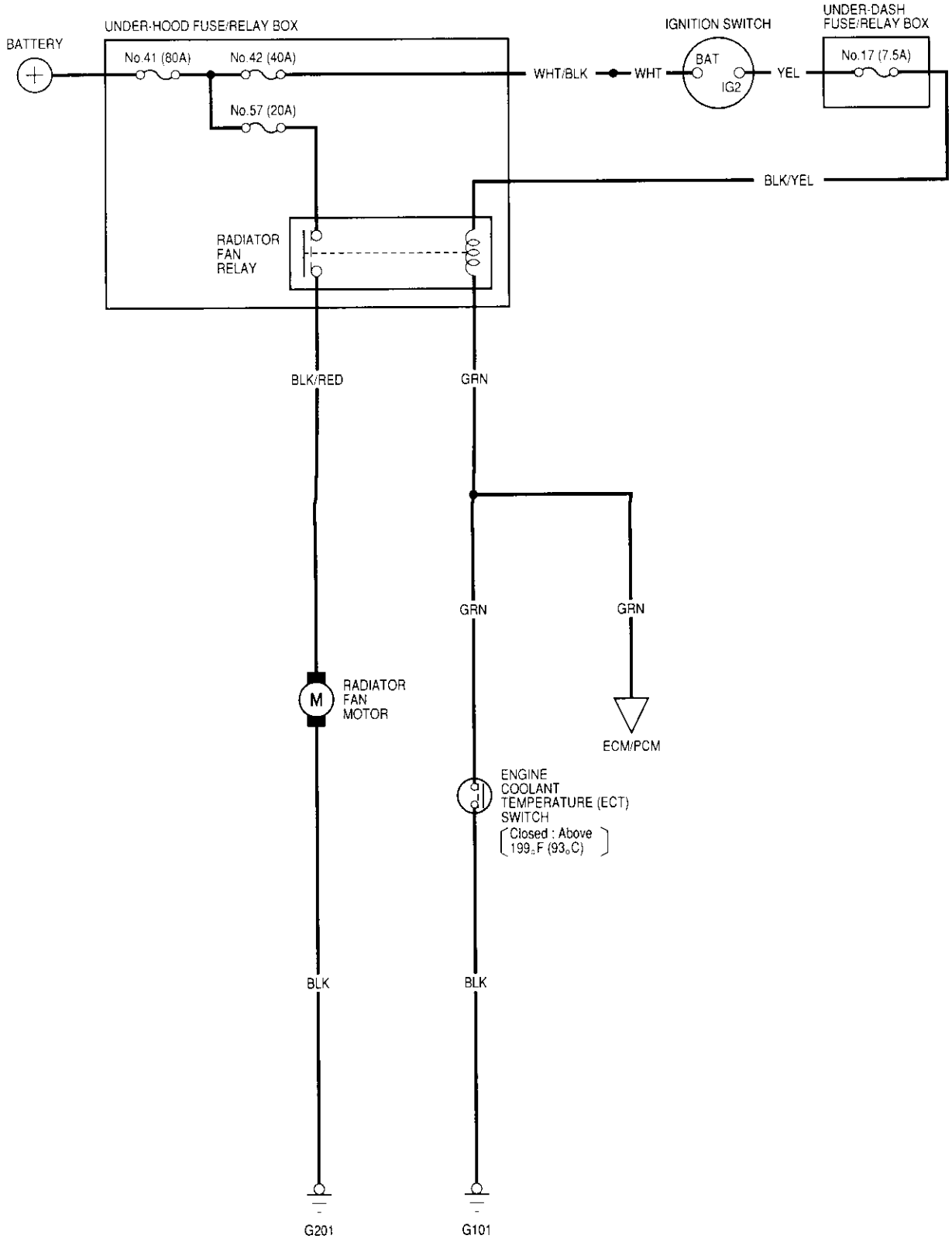

Gauge Assembly

Component Location Index

SRS components are located in this area. Review the SRS component locations, precautions, and procedures in the SRS section (24) before performing repairs or service.

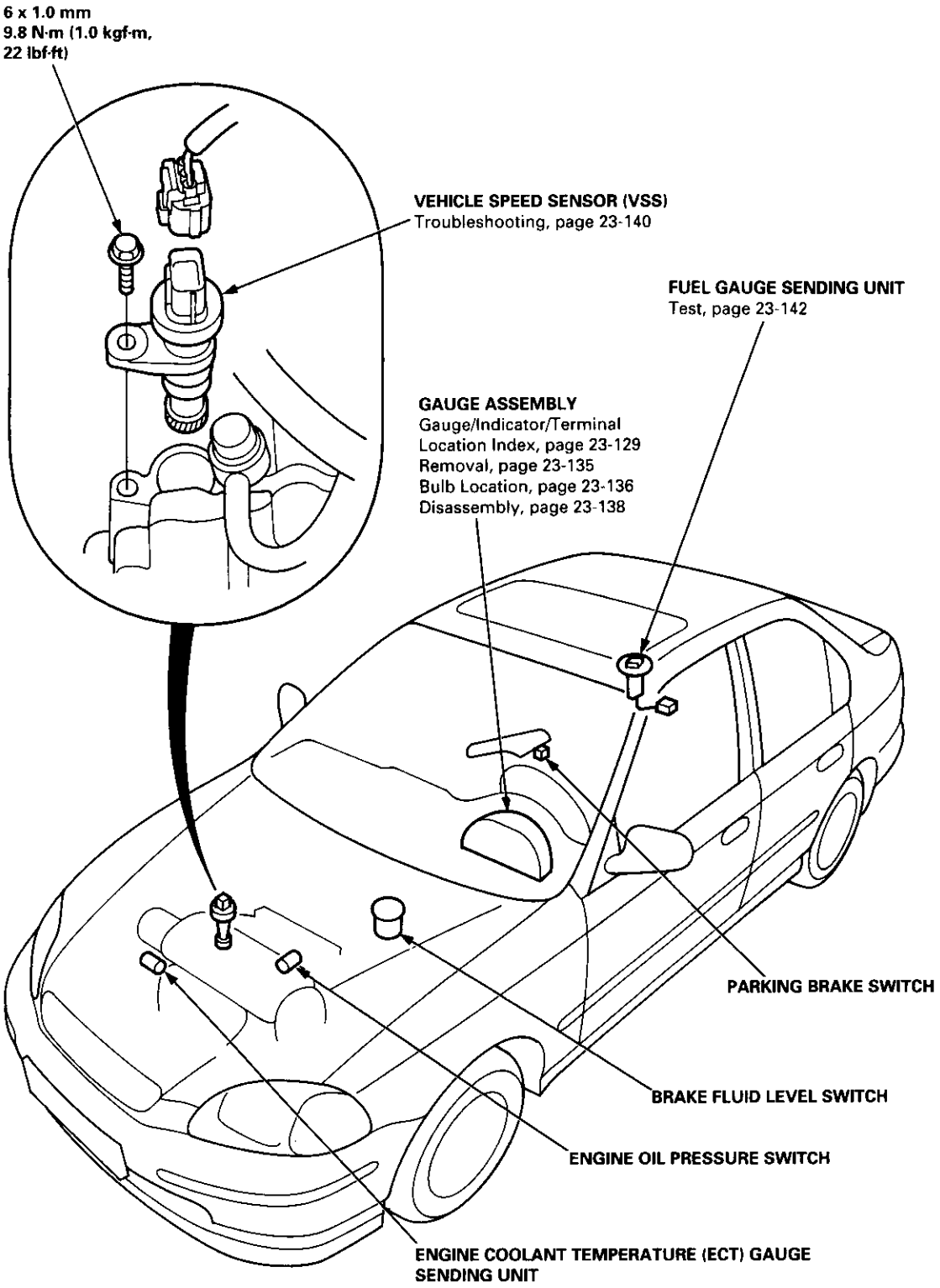

Gauge/Indicator/Terminal Location Index

With tachometer:

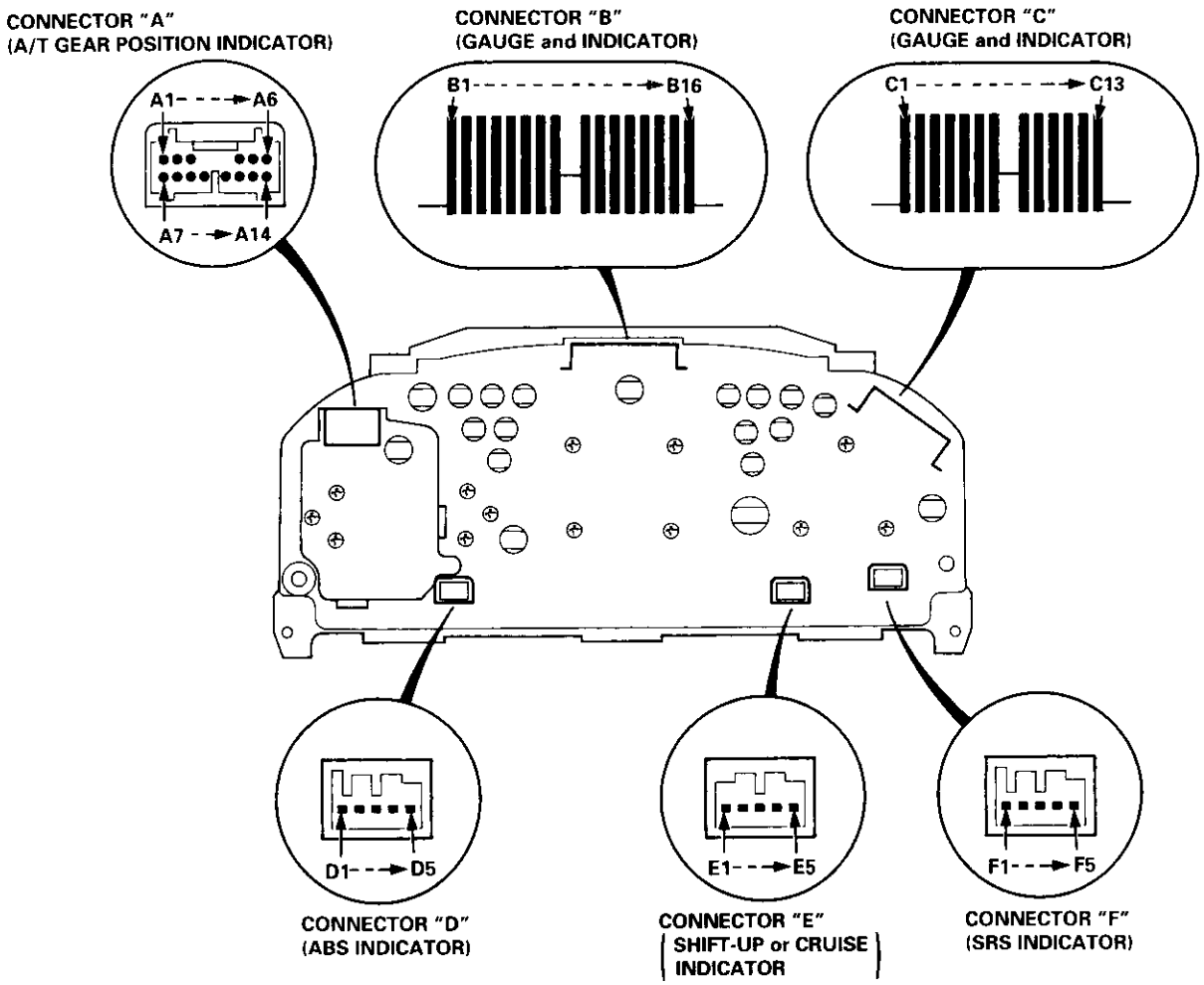

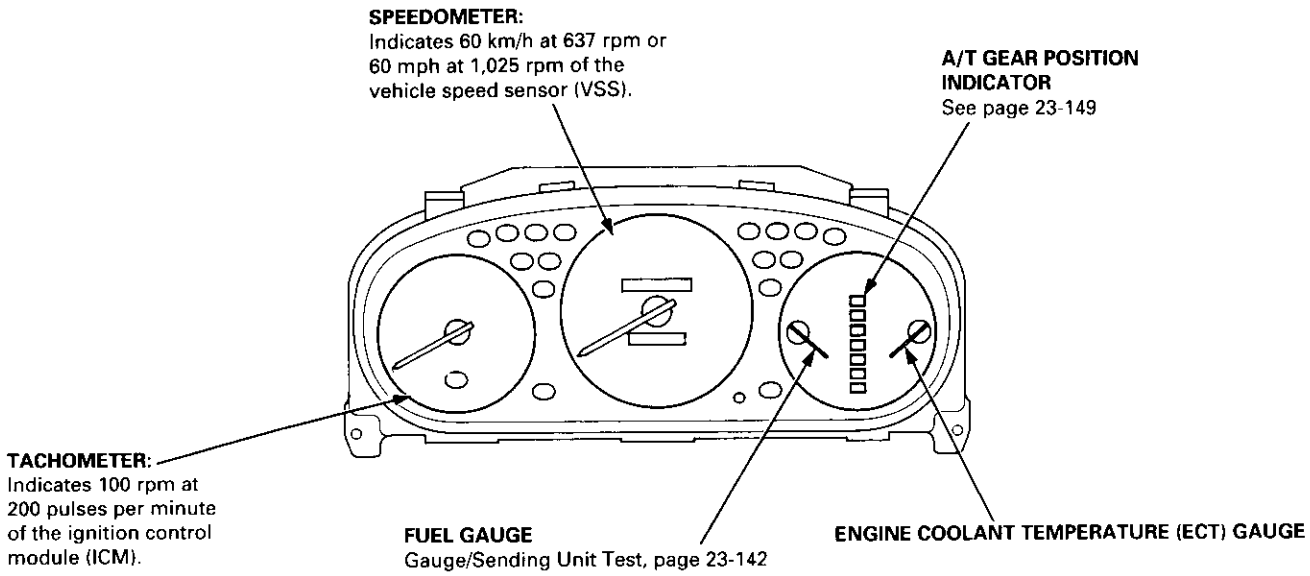

(cont'd)

Gauge/Indicator/Terminal Location Index (cont'd)

Without tachometer:

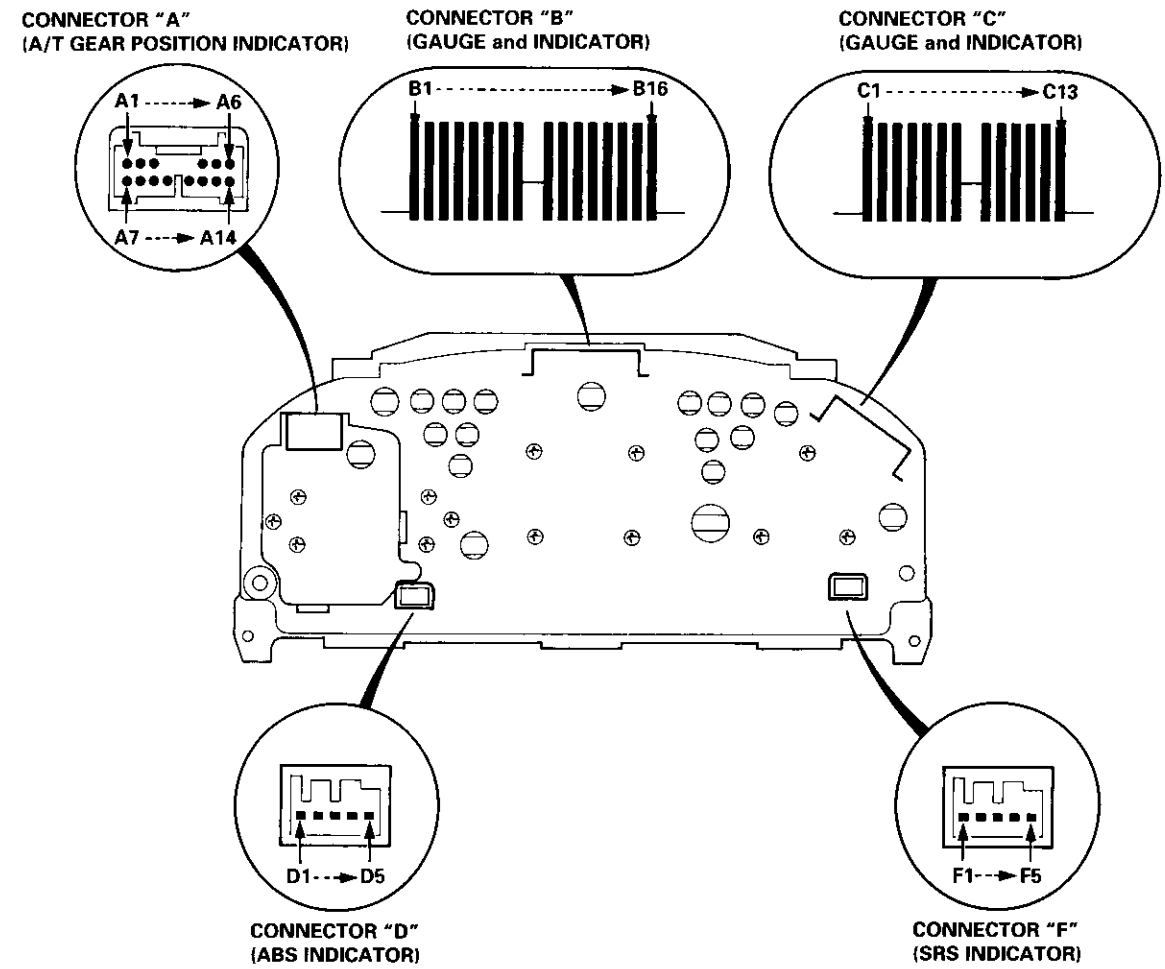

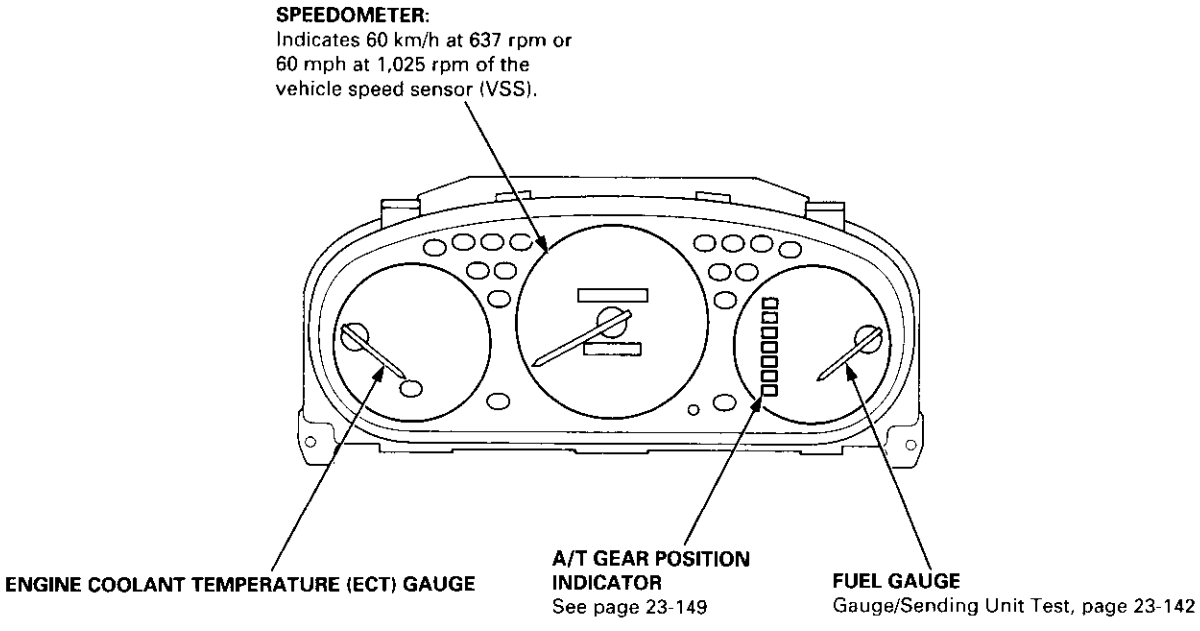

Circuit Diagram

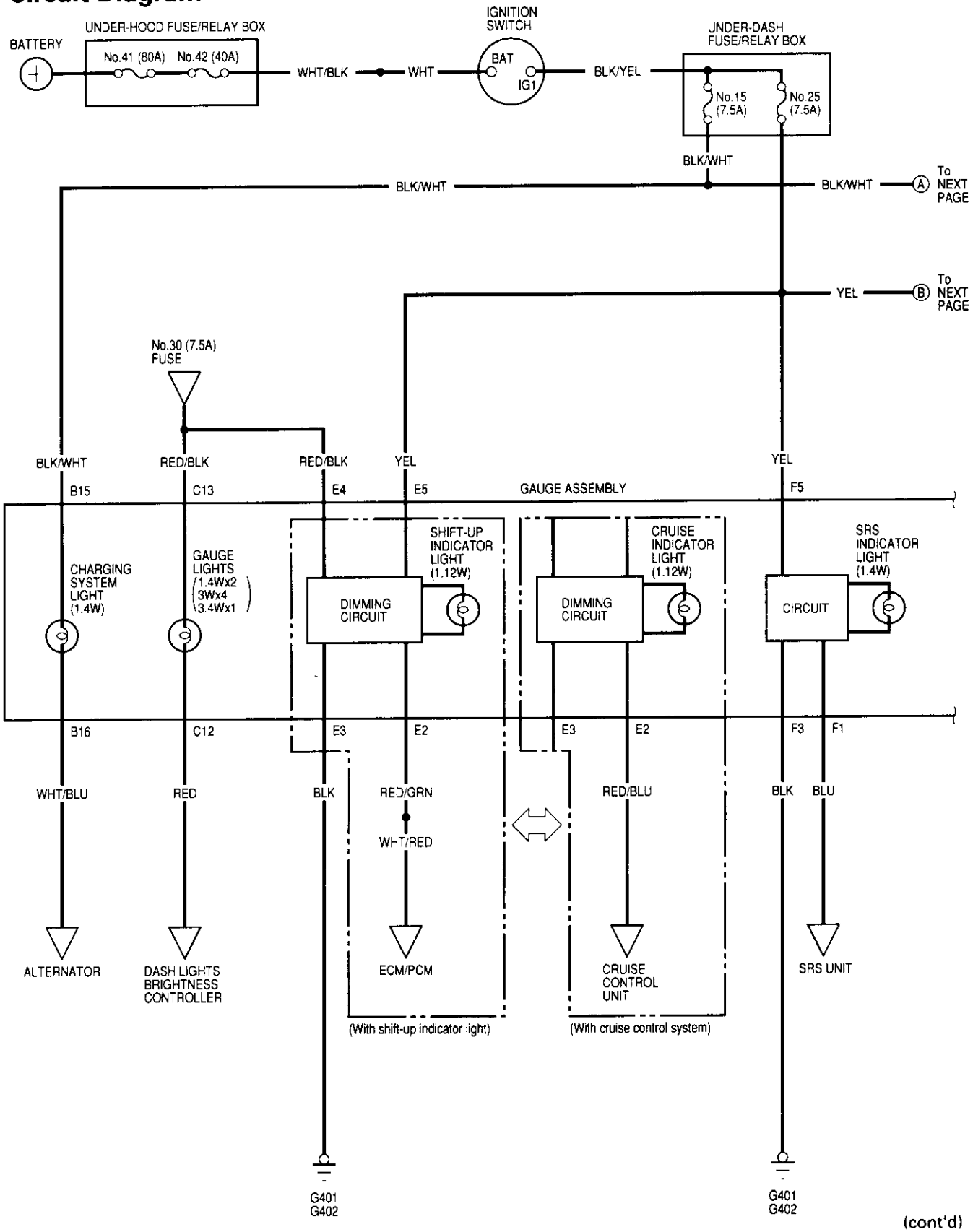

(cont'd)

Circuit Diagram (cont'd)

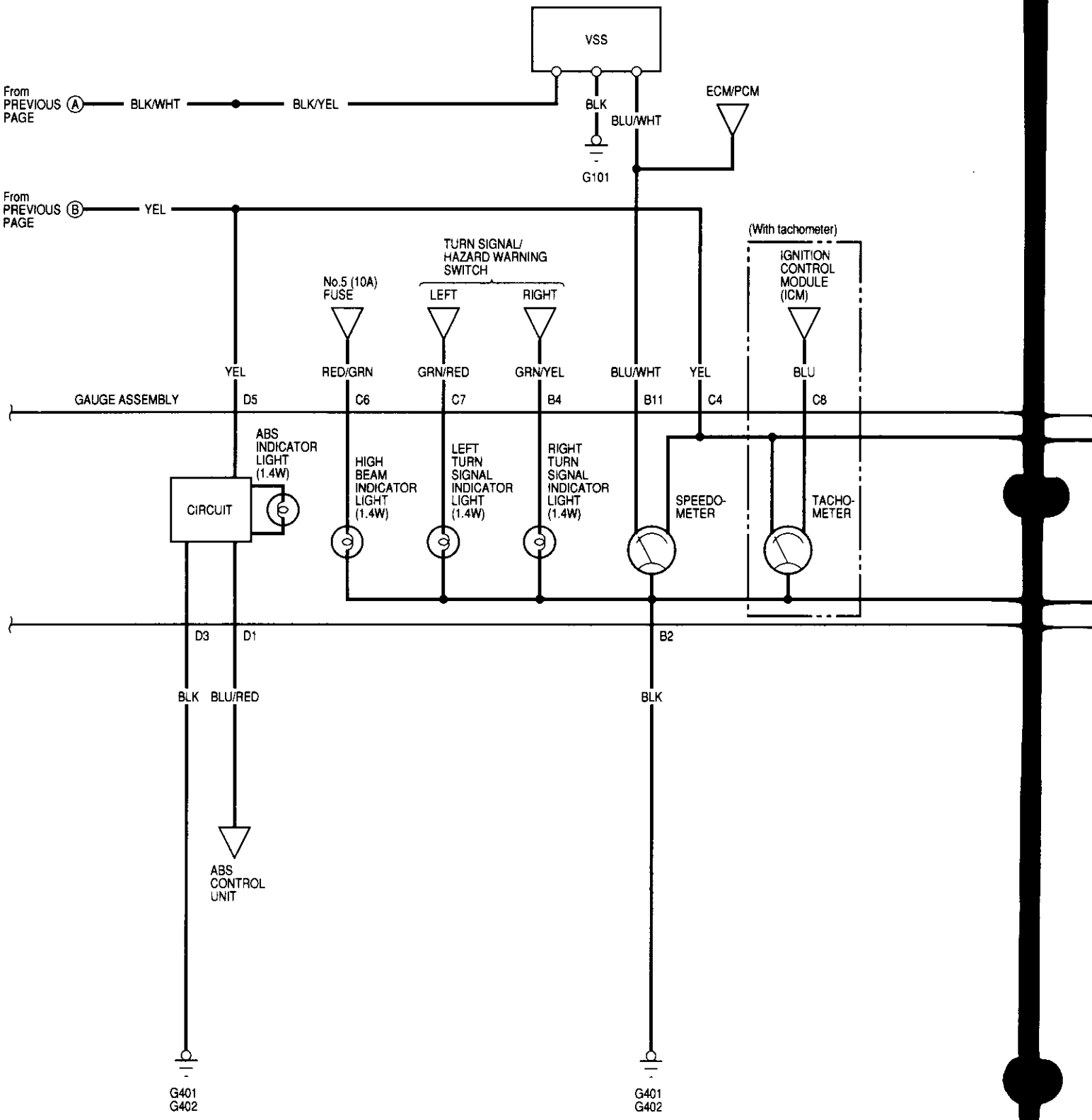

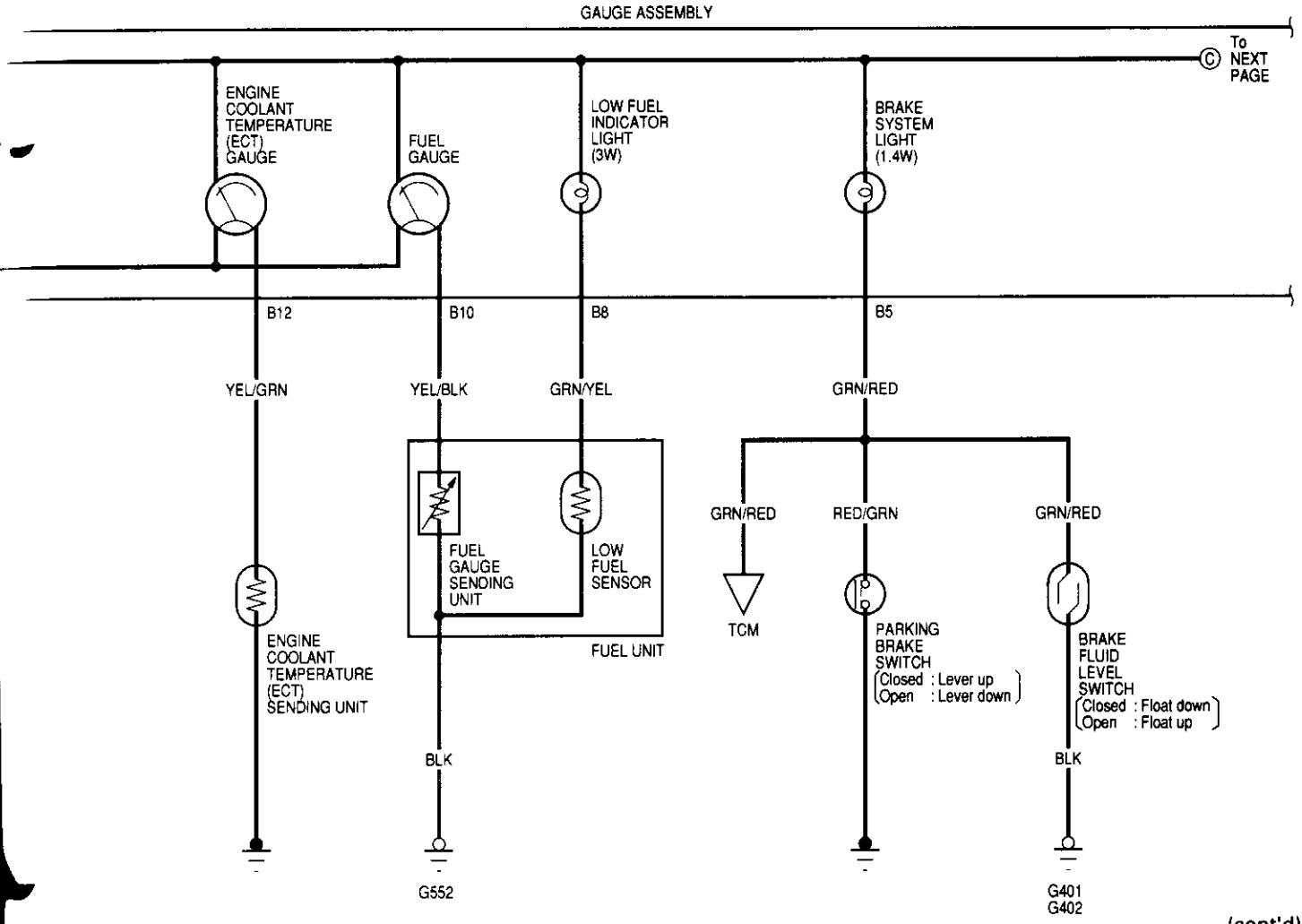
GAUGE ASSEMBLY
To NEXT PAGE
ENGINE COOLANT TEMPERATURE (ECT) GAUGE
FUEL GAUGE
LOW FUEL INDICATOR LIGHT (3W)
BRAKE SYSTEM LIGHT (1.4W)
B12
B10
B8
B5
YEL/GRN
YEL/BLK
GRN/YEL
GRN/RED
FUEL GAUGE SENDING UNIT
LOW FUEL SENSOR
FUEL UNIT
GRN/RED
RED/GRN
GRN/RED
TCM
PARKING BRAKE SWITCH
Closed : Lever up
Open : Lever down
BRAKE FLUID LEVEL SWITCH
Closed : Float down
Open : Float up
ENGINE COOLANT TEMPERATURE (ECT) SENDING UNIT
BLK
BLK
G552
G401
G402

(cont'd)

Circuit Diagram (cont'd)

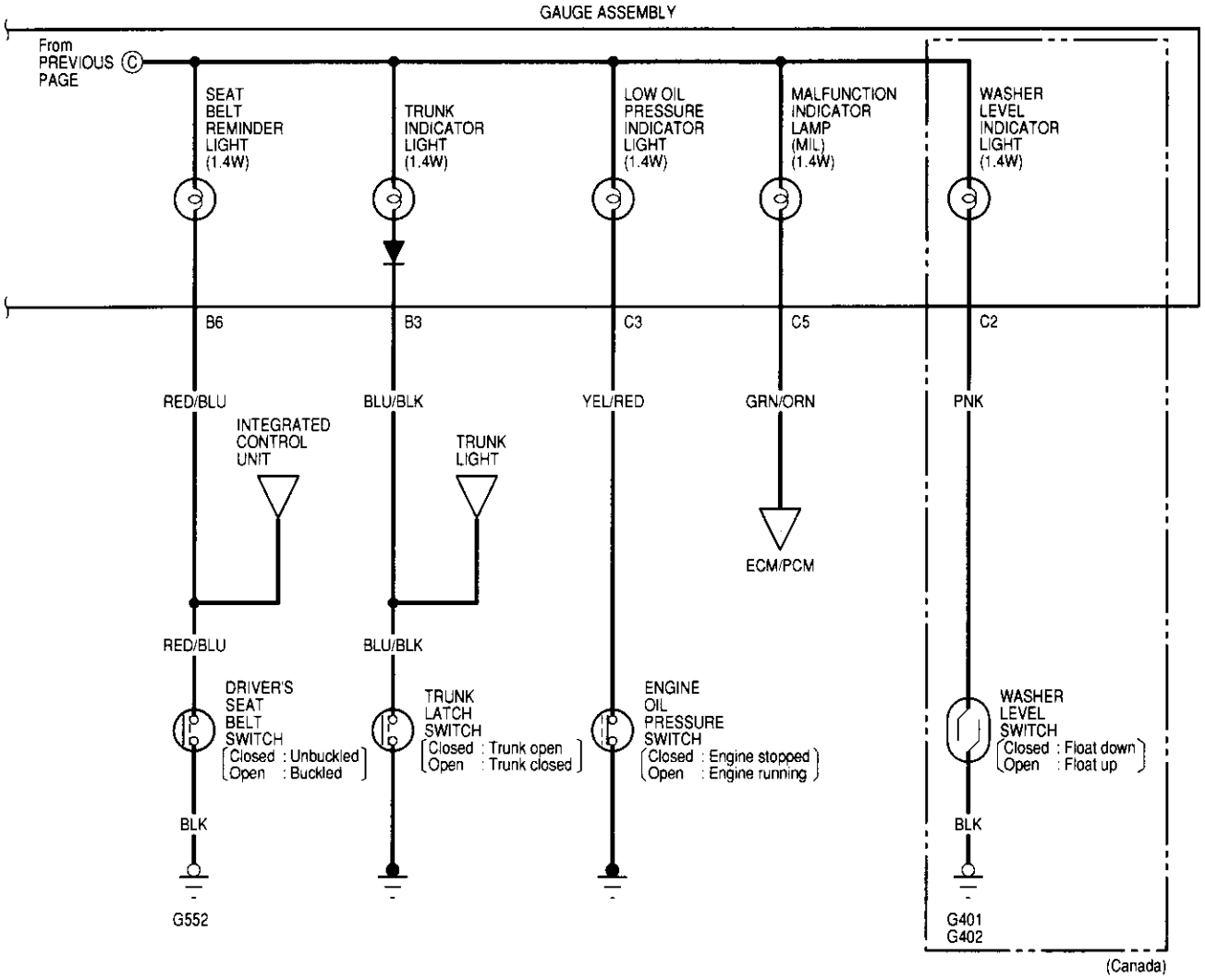

Removal

1. Remove the two screws from the instrument panel.
2. Remove the instrument panel.

   CAUTION: Carefully remove the instrument panel without damaging the clips.

3. Tilt the steering wheel down with the tilt adjustment lever.
4. Spread a protective cloth over the steering column.
5. Remove the four mounting screws from the gauge assembly.
6. Pry the gauge assembly out, and disconnect all connectors from it.
7. Take out the gauge assembly.

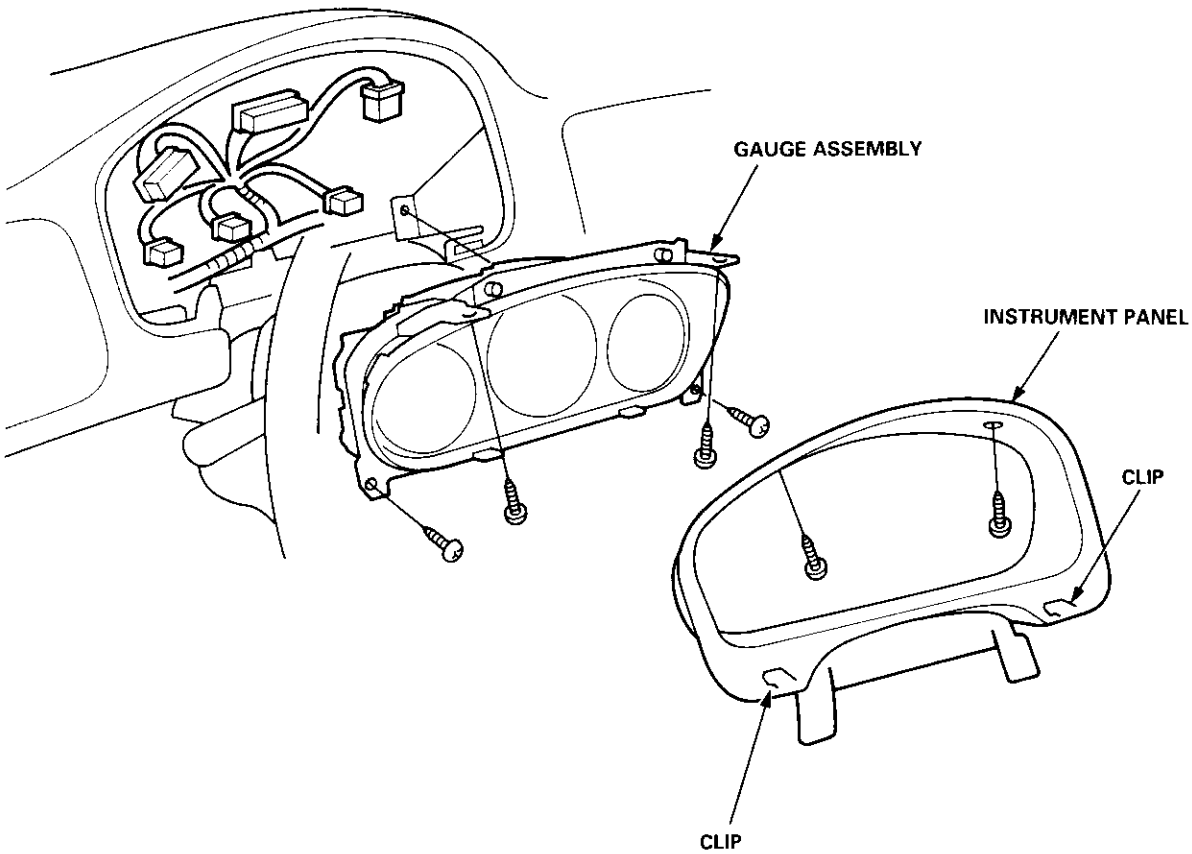

Bulb Locations (With Tachometer)

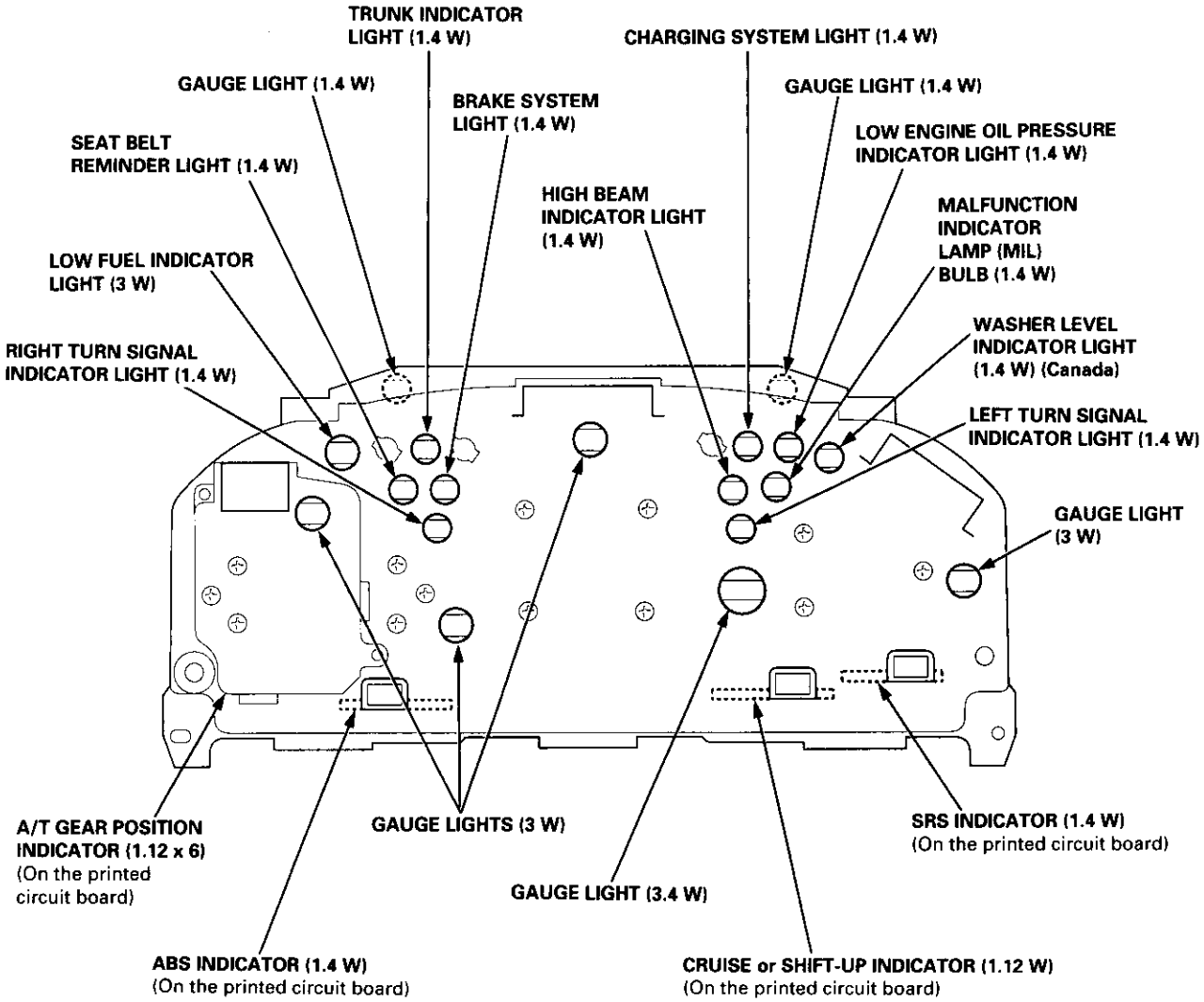

Bulb Locations (Without Tachometer)

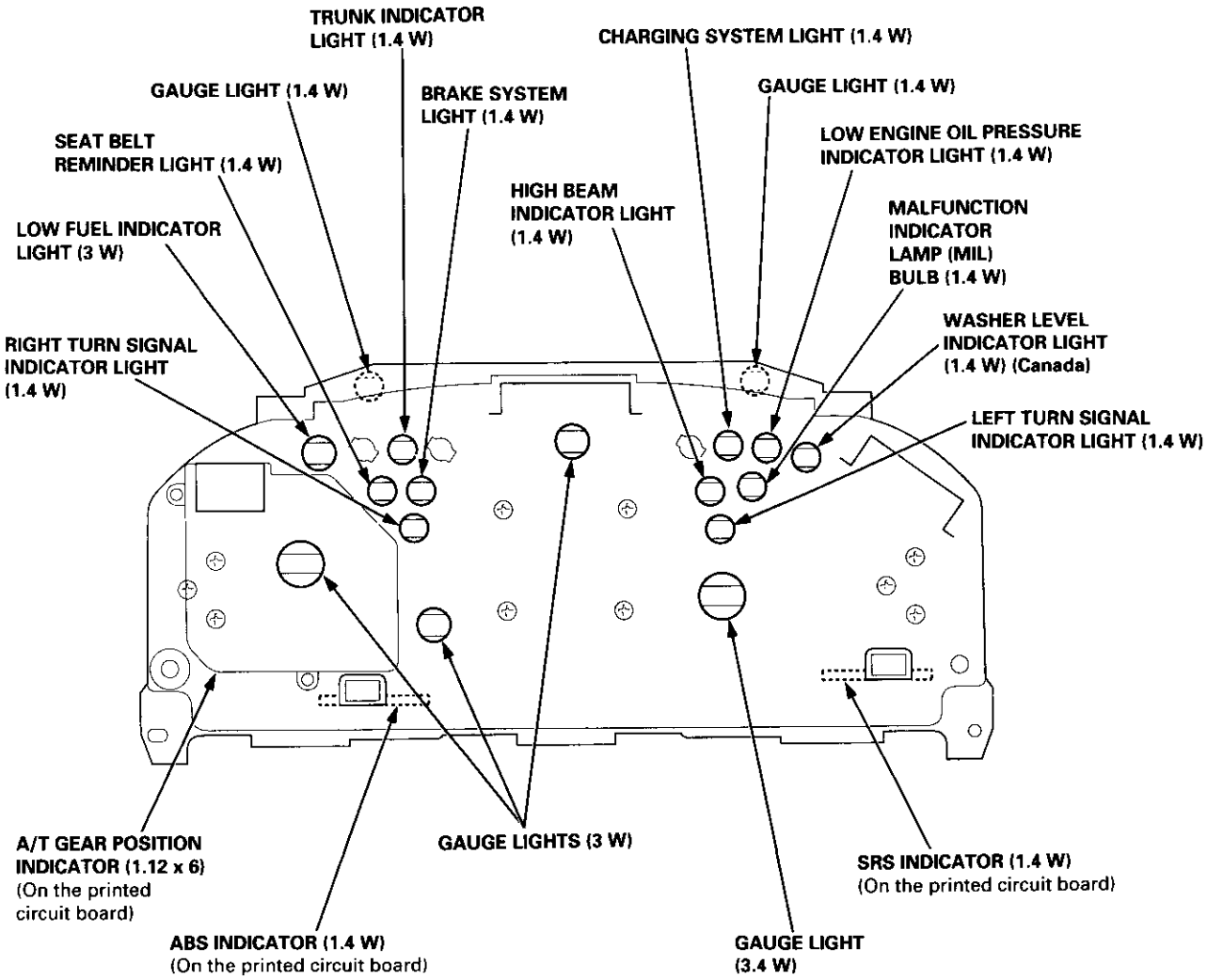

Disassembly (With Tachometer)

NOTE: Handle the terminals and printed circuit boards carefully to avoid damaging them.

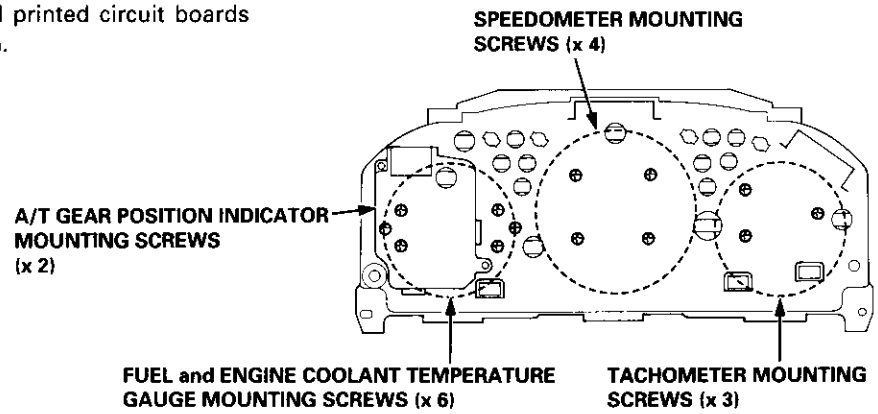

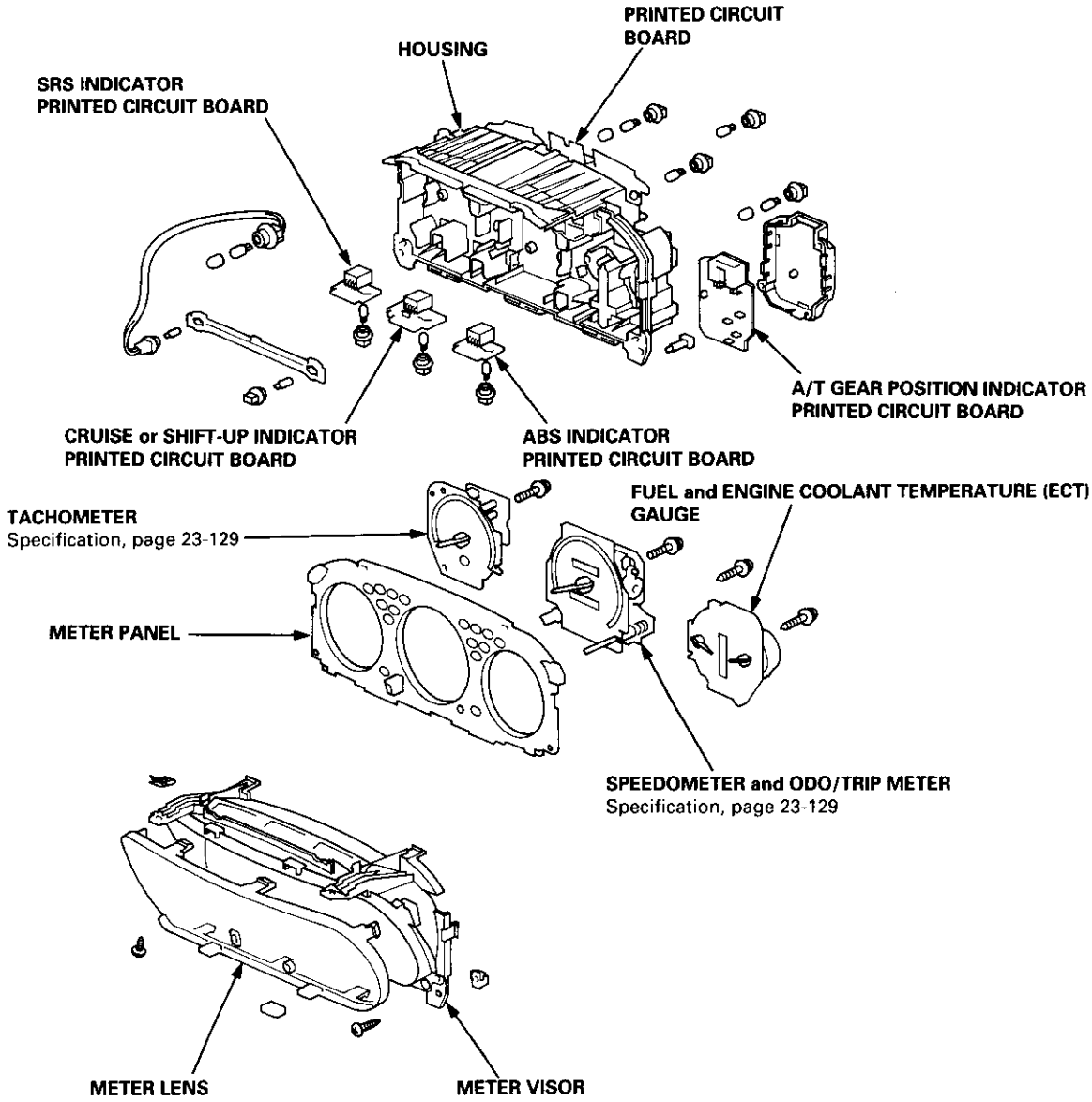

Disassembly (Without Tachometer)

NOTE: Handle the terminals and printed circuit boards carefully to avoid damaging them.

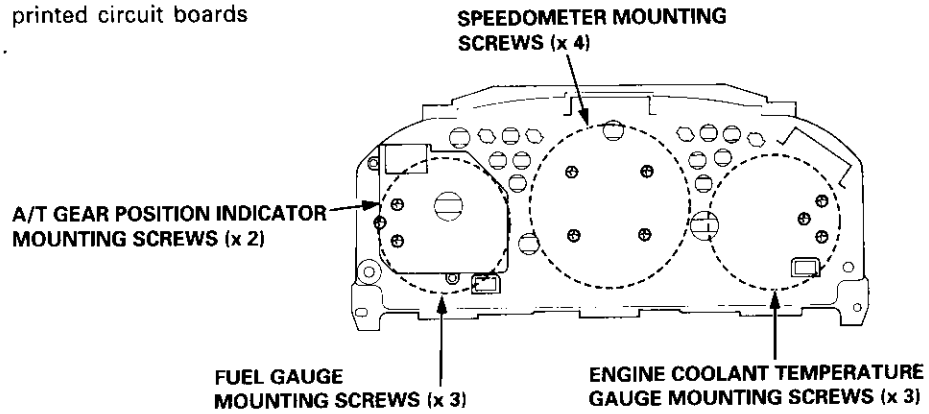

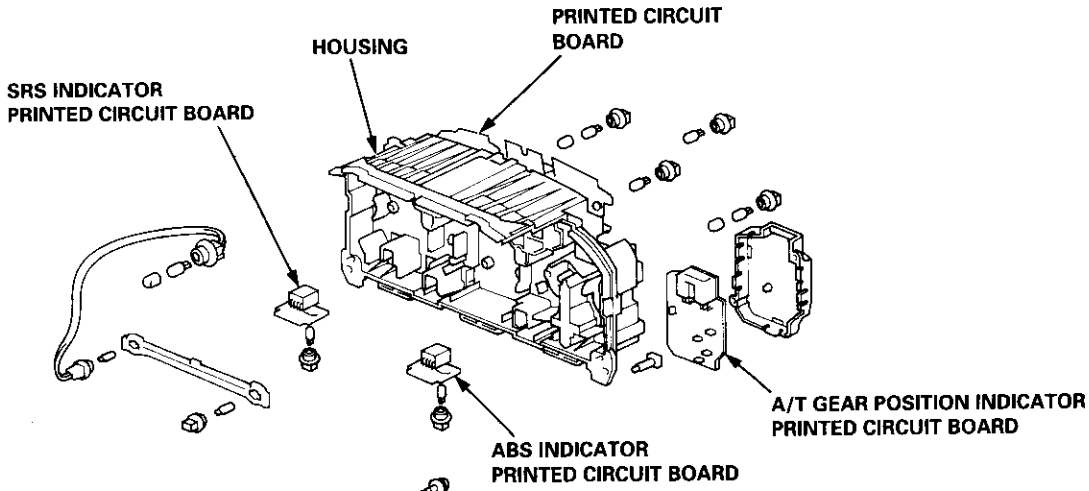

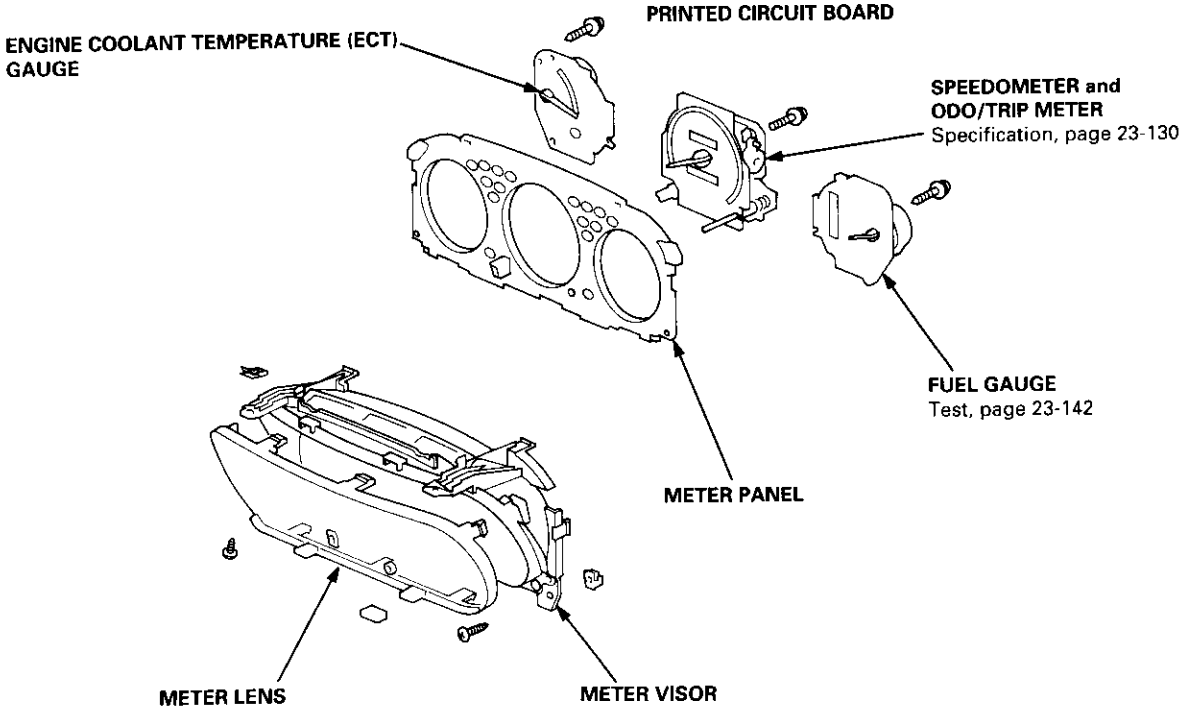

Troubleshooting

Before testing, inspect the No. 15 (7.5 A) fuse in the under-dash fuse/relay box.

Test the BLK wire:
1. Disconnect the 3P connector from the vehicle speed sensor (VSS).
2. Connect the test harness (07LAJ – PT30200) only to the engine wire harness.
3. Connect the RED test harness clip to the positive probe of a ohmmeter.
4. Check for continuity between the RED test harness clip and body ground.

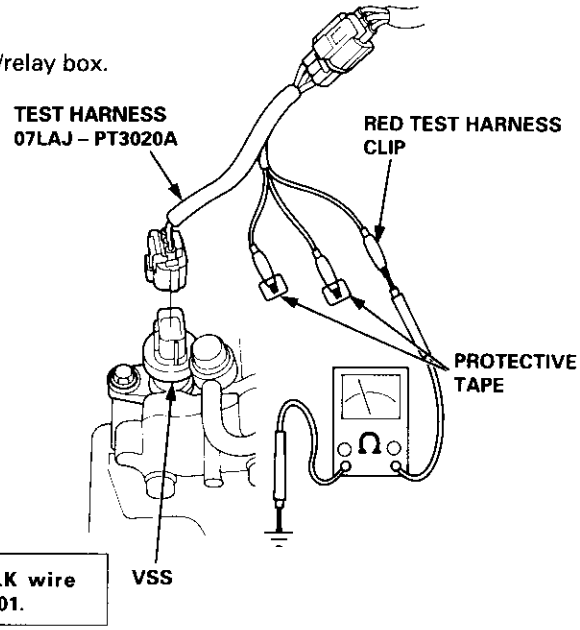

Is there continuity?

NO → **Repair open in the BLK wire between the VSS and G101.**

YES

Test the BLK/YEL wire:
1. Connect the WHT test harness clip to the positive probe of a voltmeter, and connect the RED test harness clip to the negative probe.
2. Turn the ignition switch ON (II).

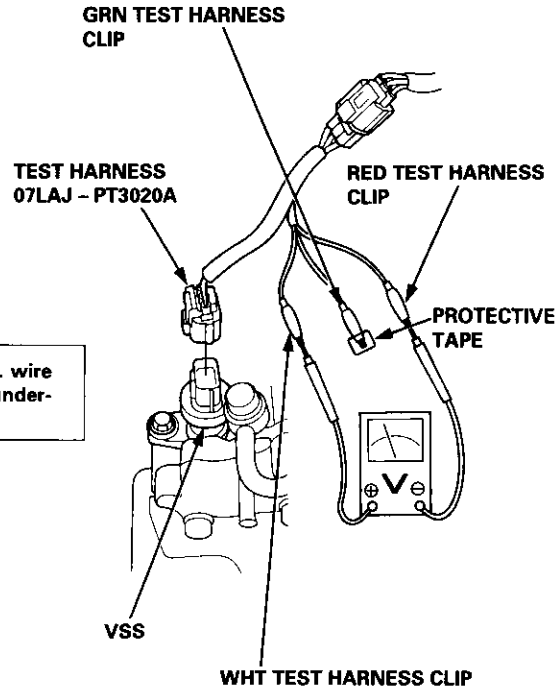

Is there battery voltage?

NO → **Repair open in the BLK/YEL wire between the VSS and the under-dash fuse/relay box.**

YES

A

(To next page)

(From previous page)

A

Test the BLU/WHT wire:
Connect the GRN test harness clip to the positive probe of a voltmeter, and connect the RED test harness clip to the negative probe.

Is there about 5 V or more ?

NO → **Repair open in the BLU/WHT wire between the VSS and ECM/PCM, TCM (CVT), and cruise control unit.**

YES

Test the VSS:
1. Turn the ignition switch OFF.
2. Connect the other test harness connector to the VSS.
3. Raise the front of the vehicle, and support it with safety stands.
4. Put the vehicle in neutral with the ignition switch ON (II).
5. Slowly rotate one wheel with the other wheel blocked.

Does voltage pulse from 0 to approx. 5 V or more ?

NO → **Replace the VSS.**

YES

Speedometer Test:
1. Disconnect the 16P connector "B" from the gauge assembly.
2. Touch a probe to the BLU/WHT wire, and connect it to body ground through a voltmeter.
3. Slowly rotate one wheel with the other wheel blocked.

Does the meter indicate pulsing voltage?

NO → **Repair open in the BLU/WHT wire between the VSS and the speedometer.**

YES

Replace the speedometer.

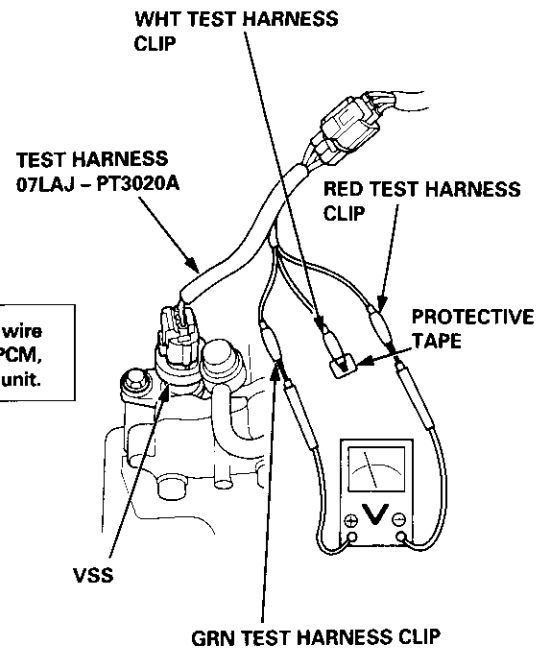

GAUGE ASSEMBLY 16P CONNECTOR "B"

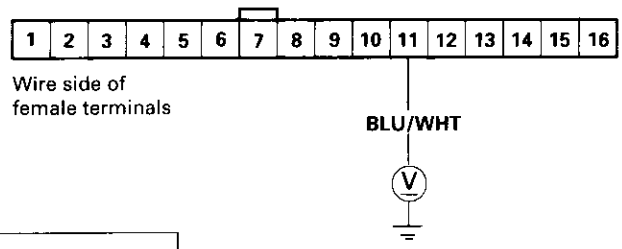

Gauge/Sending Unit Test

⚠WARNING Do not smoke while working on the fuel system. Keep open flame away from your work area.

NOTE: Refer to page 23-133 for the fuel gauge system circuit.

1. Check the No. 25 (7.5 A) fuse in the under-dash fuse/relay box before testing.

2. Remove the access panel from the floor.

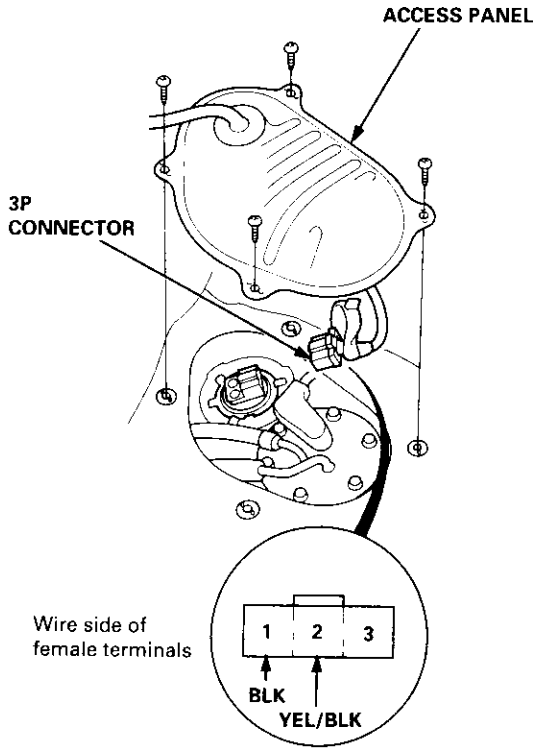

3. Disconnect the 3P connector from the fuel gauge sending unit.

4. Connect the voltmeter positive probe to the No. 2 terminal and the negative probe to the No. 1 terminal, then turn the ignition switch ON (II).
There should be between 5 and 8 V.

   - If the voltage is as specified, go to step 5.
   - If the voltage is not as specified, check for:
     — an open in the YEL/BLK or BLK wire.
     — poor ground (G552).

5. Turn the ignition switch OFF.

6. Attach a jumper wire between the No. 1 and No. 2 terminals, then turn the ignition switch ON (II).

7. Check that the pointer of the fuel gauge starts moving toward the "F" mark.

   CAUTION: Turn the ignition switch OFF before the pointer reaches "F" on the gauge dial. Failure to do so may damage the fuel gauge.

   NOTE: The fuel gauge is a bobbin (cross-coil) type, hence the fuel level is continuously indicated even when the ignition switch is OFF, and the pointer moves more slowly than that of a bimetal type.

   - If the pointer of the fuel gauge does not move at all, replace the gauge.
   - If the gauge is OK, inspect the fuel gauge sending unit.

8. Remove the fuel gauge sending unit as shown.

Japan-produced

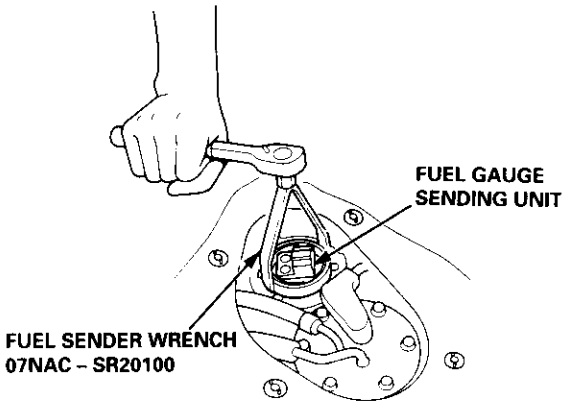

USA, Canada-produced

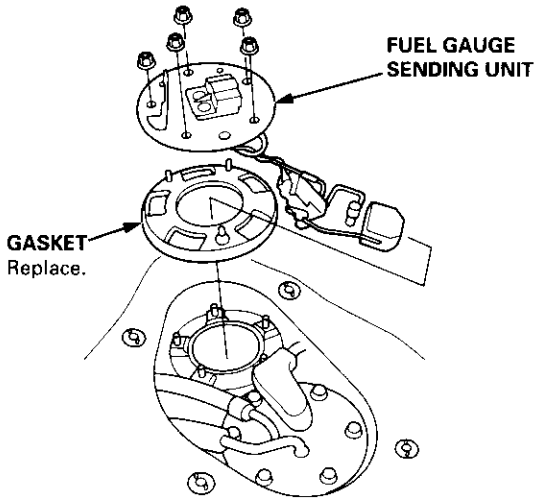

9. Measure the resistance between the No. 1 and No. 2 terminals at E (EMPTY), 1/2 (HALF FULL) and F (FULL) by moving the float.

USA, Canada-produced (Ceramic board type):

Float Position	E	1/2	F
Resistance (Ω)	105 – 108	29.5 – 35.5	3.5 – 5

Japan-Produced (Wire-wound type):

Float Position	E	1/2	F
Resistance (Ω)	105 – 110	25.5 – 39.5	2 – 5

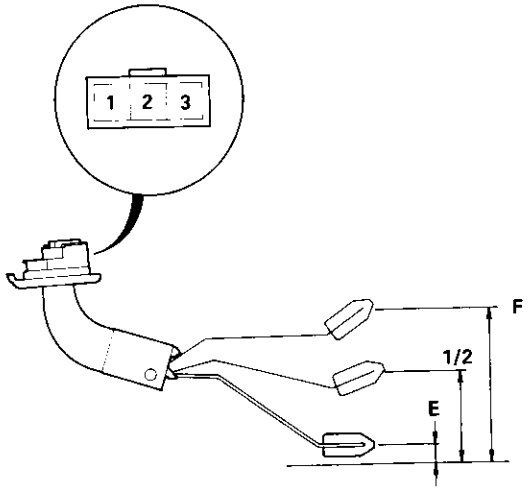

Top of the workbench (Bottom of the fuel tank)

If the resistance readings are beyond the range, replace the fuel gauge sending unit.

Low Fuel Indicator Light Test

NOTE: For the low fuel indicator circuit diagram, refer to the gauge assembly circuit diagram (see page 23-231).

1. Check the No. 25 (7.5 A) fuse in the driver's under-dash fuse/relay box before testing.

2. Park the vehicle on level ground.

3. Drain the fuel into an approved container. Reinstall the fuel tank drain bolt with a new washer.

4. Add less than 4L (1.1 U.S. Gal, 0.9 Imp. Gal) of fuel, and turn the ignition switch ON (II). The low fuel indicator light should come on within four minutes.
   - If the light comes on within four minutes, go to step 8.
   - If the light does not come on within four minutes, go to step 5.

5. Remove the access panel from the floor.

6. Turn the ignition switch OFF, then disconnect the fuel tank sending unit 3P connector.

7. Connect the fuel tank sending unit 3P terminals No. 1 and No. 3 with a jumper wire.
   - If the light comes on, replace the fuel gauge sending unit (see page 23-142).
   - If the light does not come on, check for:
     — An open in the GRN/YEL wire between the fuel gauge sending unit and the fuel gauge.
     — A blown bulb.
     — A poor ground (G552)

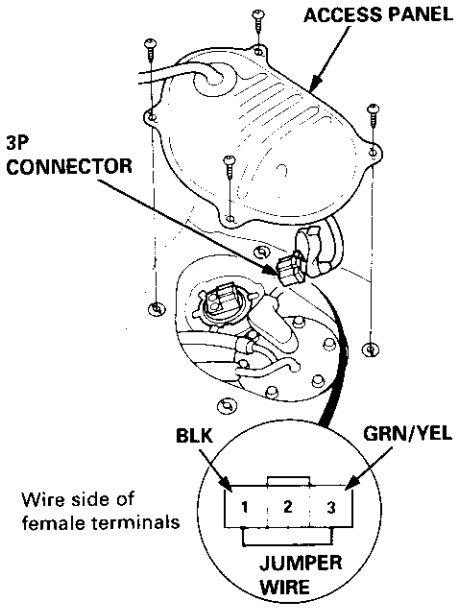

8. Add 4L (1.1 U.S. Gal, 0.9 Imp. Gal) of fuel. The light should go off within four minutes.

Component Location Index

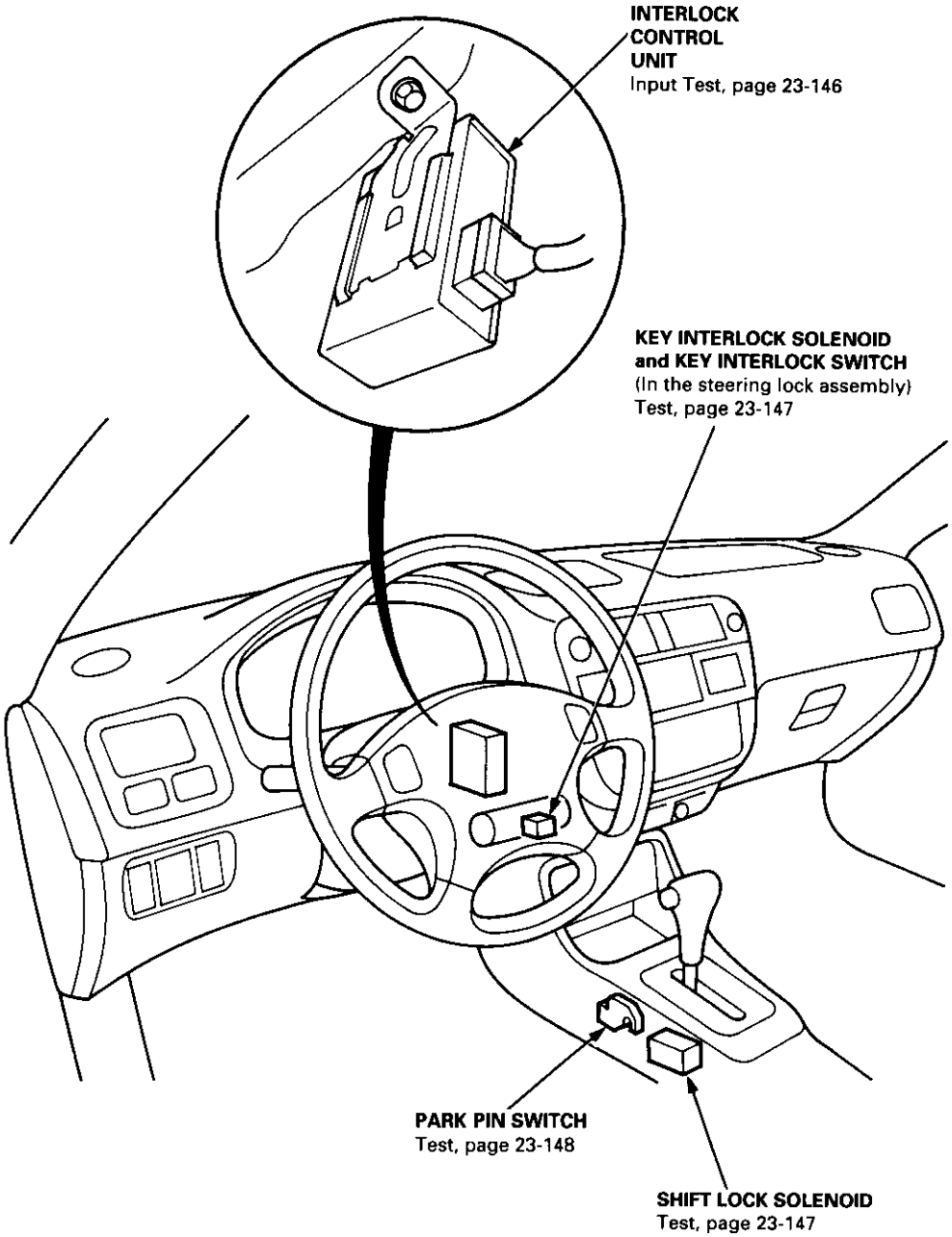

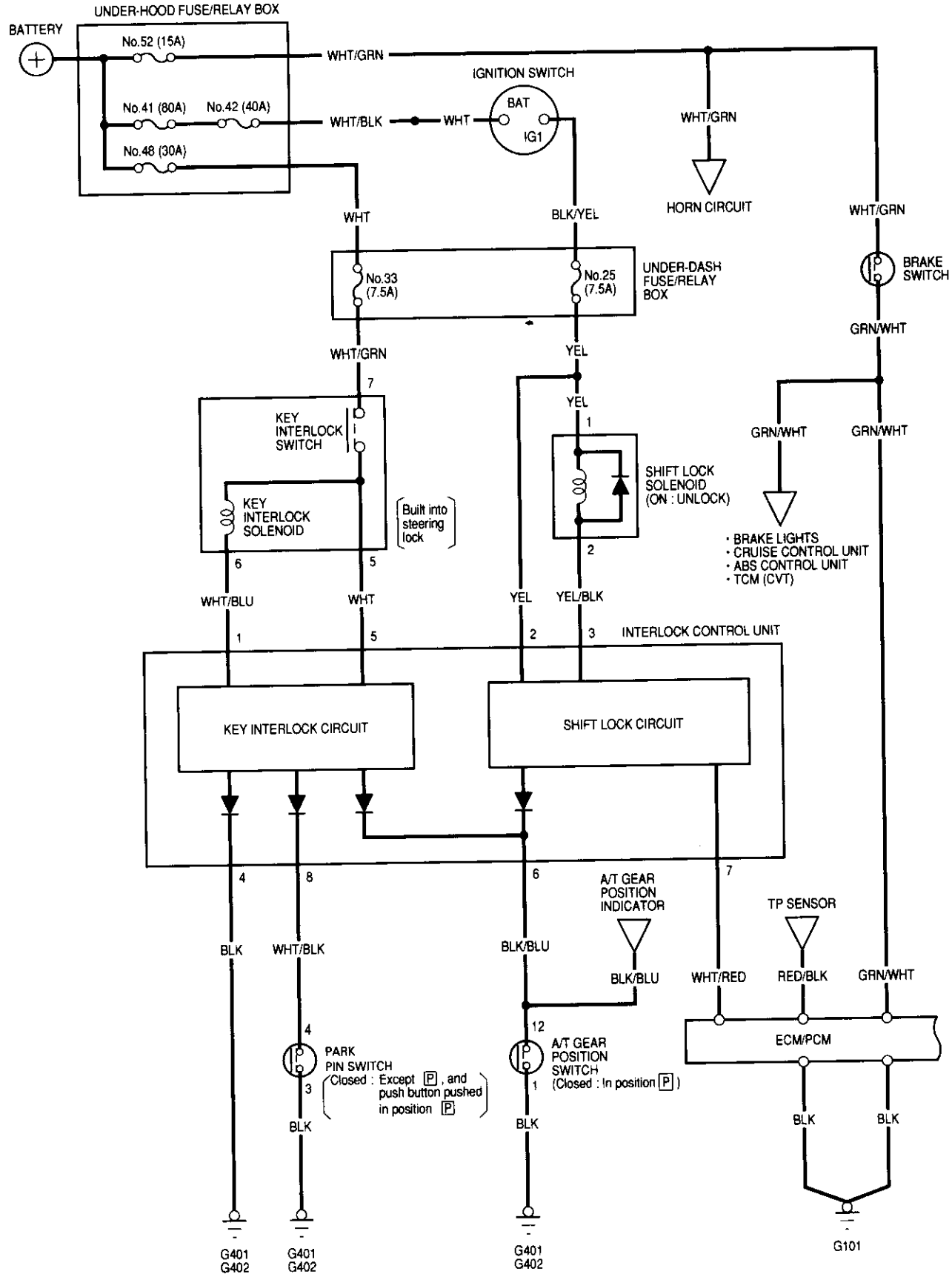
UNDER-HOOD FUSE/RELAY BOX
BATTERY
No.52 (15A)
No.41 (80A)
No.42 (40A)
No.48 (30A)
WHT/GRN
WHT/BLK
WHT
IGNITION SWITCH
BAT
IG1
WHT/GRN
HORN CIRCUIT
WHT/GRN
WHT
BLK/YEL
No.33 (7.5A)
No.25 (7.5A)
UNDER-DASH FUSE/RELAY BOX
BRAKE SWITCH
GRN/WHT
WHT/GRN
YEL
KEY INTERLOCK SWITCH
KEY INTERLOCK SOLENOID
Built into steering lock
SHIFT LOCK SOLENOID (ON : UNLOCK)
GRN/WHT
GRN/WHT
· BRAKE LIGHTS
· CRUISE CONTROL UNIT
· ABS CONTROL UNIT
· TCM (CVT)
WHT/BLU
WHT
YEL
YEL/BLK
INTERLOCK CONTROL UNIT
KEY INTERLOCK CIRCUIT
SHIFT LOCK CIRCUIT
A/T GEAR POSITION INDICATOR
TP SENSOR
BLK
WHT/BLK
BLK/BLU
BLK/BLU
WHT/RED
RED/BLK
GRN/WHT
ECM/PCM
PARK PIN SWITCH
(Closed : Except P, and push button pushed in position P)
A/T GEAR POSITION SWITCH
(Closed : In position P)
BLK
BLK
BLK
BLK
G401
G402
G401
G402
G401
G402
G101

Control Unit Input Test

1. Disconnect the 8P connector from the interlock control unit.
2. Inspect the connector and socket terminals to be sure they are all making good contact.
   - If the terminals are bent, loose or corroded, repair them as necessary, and recheck the system.
   - If the terminals look OK, make the following input tests at the connector.
     — If a test indicates a problem, find and correct the cause, then recheck the system.
     — If all the input tests prove OK, substitute a known-good control unit, and recheck the system. If the check is OK, the control unit must be faulty; replace it.

NOTE: If the shift lock solenoid clicks when the ignition switch is turned ON (II) and you step on the brake pedal (with the shift lever in P), the shift lock system is electronically normal; if the shift lever cannot be shifted from P, test the A/T gear position switch, park pin switch, and see section 14.

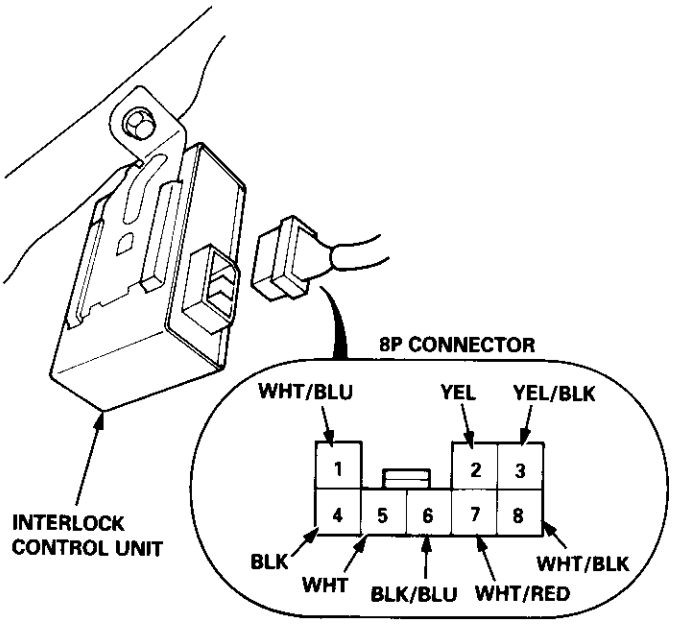

Wire side of female terminals

Key Interlock System:

Cavity	Wire	Test condition	Test: Desired result	Possible cause if result is not obtained
1	WHT/BLU	Ignition switch turned to ACC (I) and key pushed in	Check for voltage to ground: There should be battery voltage.	• Blown No. 48 (30 A) fuse in the underhood fuse/relay box • Blown No. 33 (7.5 A) fuse in the underdash fuse/relay box • Faulty steering lock assembly (key interlock solenoid) • An open in the wire
5	WHT			
4	BLK	Under all conditions	Check for continuity to ground: There should be continuity.	• Poor ground (G401, G402) • An open in the wire
6	BLK/BLU	Shift lever in P	Check for continuity to ground: There should be continuity.	• Poor ground (G401, G402) • Faulty A/T gear position switch • An open in the wire

Reconnect the 8P connector to the interlock control unit.

Shift Lock System:

Cavity	Wire	Test condition	Test: Desired result	Possible cause if result is not obtained
2	YEL	Ignition switch ON (II)	Check for voltage to ground: There should be battery voltage.	• Blown No. 25 (7.5 A) fuse in the underdash fuse/relay box • An open in the wire
3	YEL/BLK	Ignition switch ON (II)	Check for voltage to ground: There should be battery voltage.	• Blown No. 25 (7.5 A) fuse in the underdash fuse/relay box • Faulty shift lock solenoid • An open in the wire
6	BLK/BLU	Shift lever in P	Check for voltage to ground: There should be 1 V or less.	• Poor ground (G401, G402) • Faulty A/T gear position switch • An open in the wire
7	WHT/RED	Ignition switch ON (II) Brake pedal depressed	Check for voltage to ground: There should be 1 V or less.	• Blown No. 52 (15 A) fuse in the underhood fuse/relay box • Faulty PCM • Faulty brake switch (see section 11) • Faulty throttle position (TP) sensor (see section 11) • An open in the wire
		Ignition switch ON (II) Brake pedal and accelerator depressed at the same time	Check for voltage to ground: There should be battery voltage.	

Key Interlock Solenoid Test

1. Remove the driver's dashboard lower cover and knee bolster (see section 20).

2. Disconnect the 7P connector from the main wire harness.

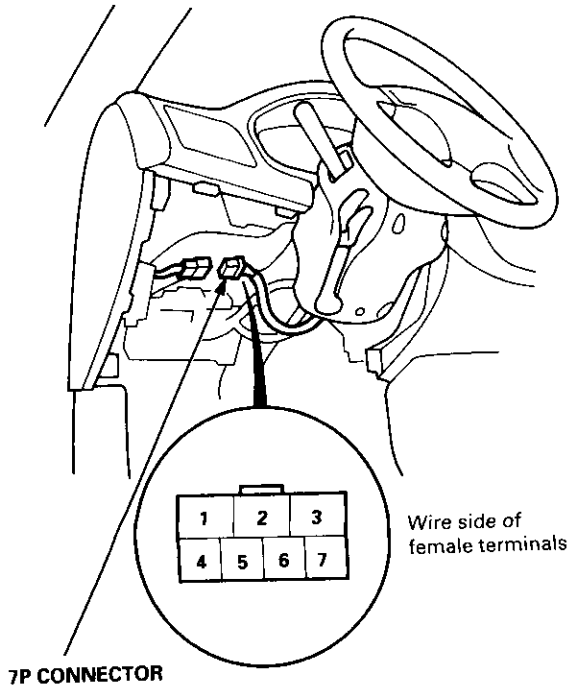

3. Check for continuity between the terminals in each key position according to the table.

Position \ Terminal		5	6	7
Ignition switch ACC (I)	Key pushed in	○	○	○
	Key released	○	○	

4. Check that the key cannot be removed with power and ground connected to the No. 7 and No. 6 terminals.

   - If the key cannot be removed, the key interlock solenoid is OK.
   - If the key can be removed, replace the steering lock assembly (the interlock solenoid is not available separately).

Shift Lock Solenoid Test

1. Remove the front console (see section 20).

2. Disconnect the shift lock solenoid 2P connector.

3. Connect battery power to the No. 1 terminal and ground to the No. 2 terminal of the solenoid momentarily.

   NOTE: Do not connect power to the No. 2 (–) terminal (reverse polarity) or you will damage the diode inside the solenoid.

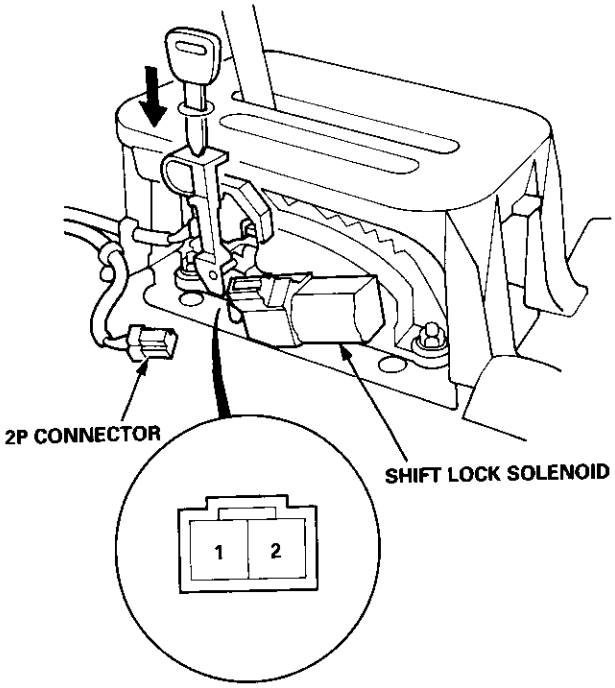

4. Check that the shift lock releases when the release lever is pushed, and check that it locks when the release lever is released.

5. If the solenoid does not work, replace the solenoid.

Park Pin Switch Test

1. Remove the front console (see section 20).

2. Disconnect the 4P connector from the park pin switch.

3. Check for continuity between the No. 3 and No. 4 terminals with:
   — the shift lever any position other than [P], or
   — the push button pushed in [P].
   There should be continuity.

4. Check for continuity between the No. 3 and No. 4 terminals with the shift lever in [P] and the push button released. There should be no continuity. If necessary, replace the park pin switch.

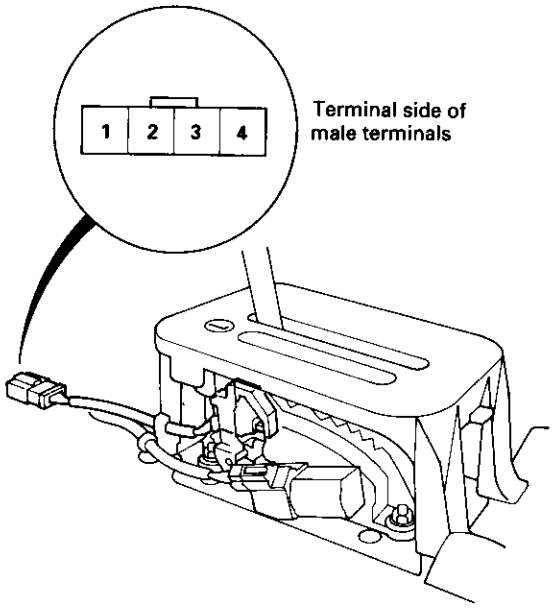

NOTE: Park pin switch 4P connector No. 1 and No. 2 terminals are for A/T gear position console light, refer to the circuit diagram on page 23-150.

A/T Gear Position Indicator

Component Location Index

SRS components are located in this area. Review the SRS component locations, precautions, and procedures in the SRS section (24) before performing repairs or service.

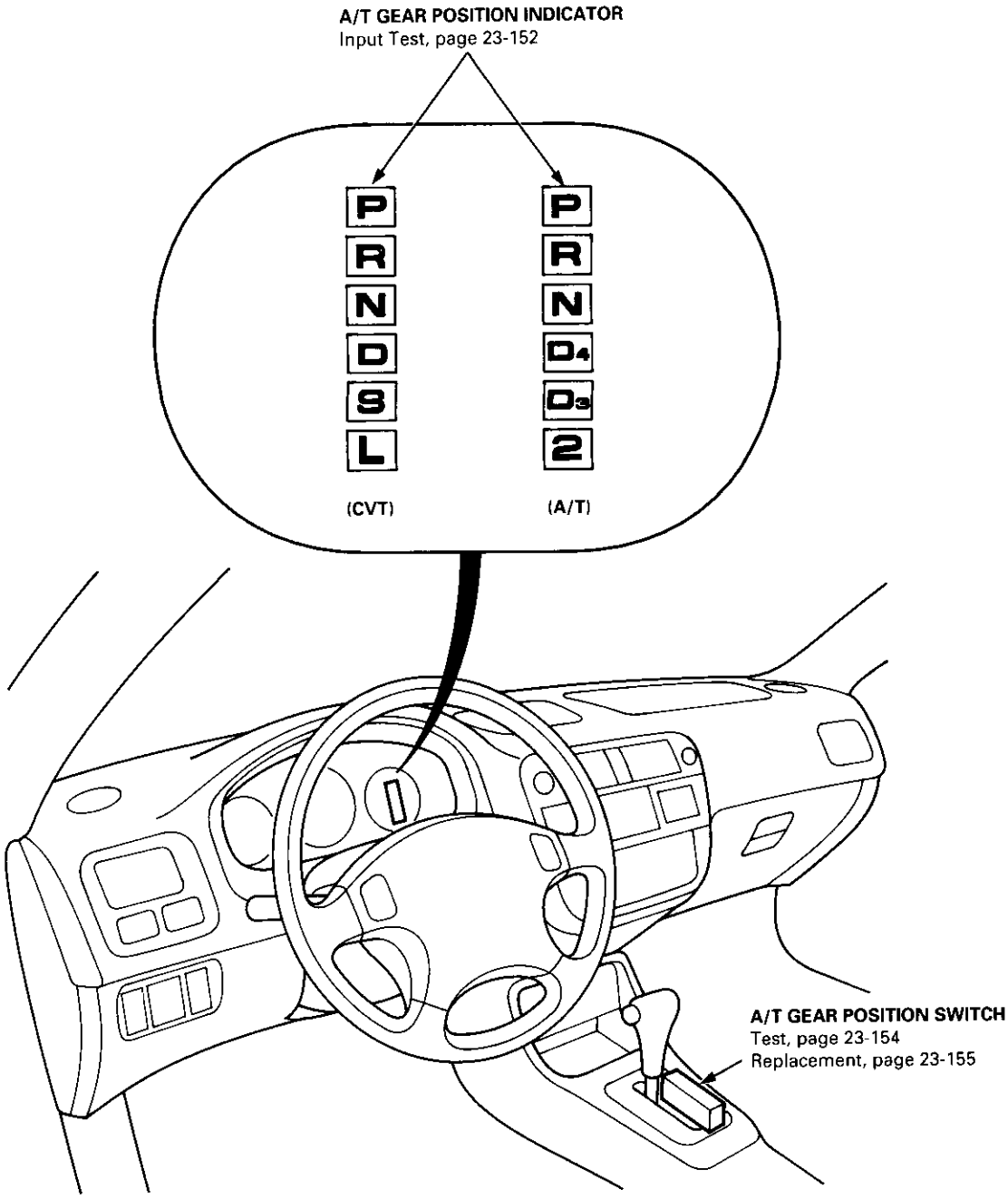

A/T Gear Position Indicator

Circuit Diagram

CVT:

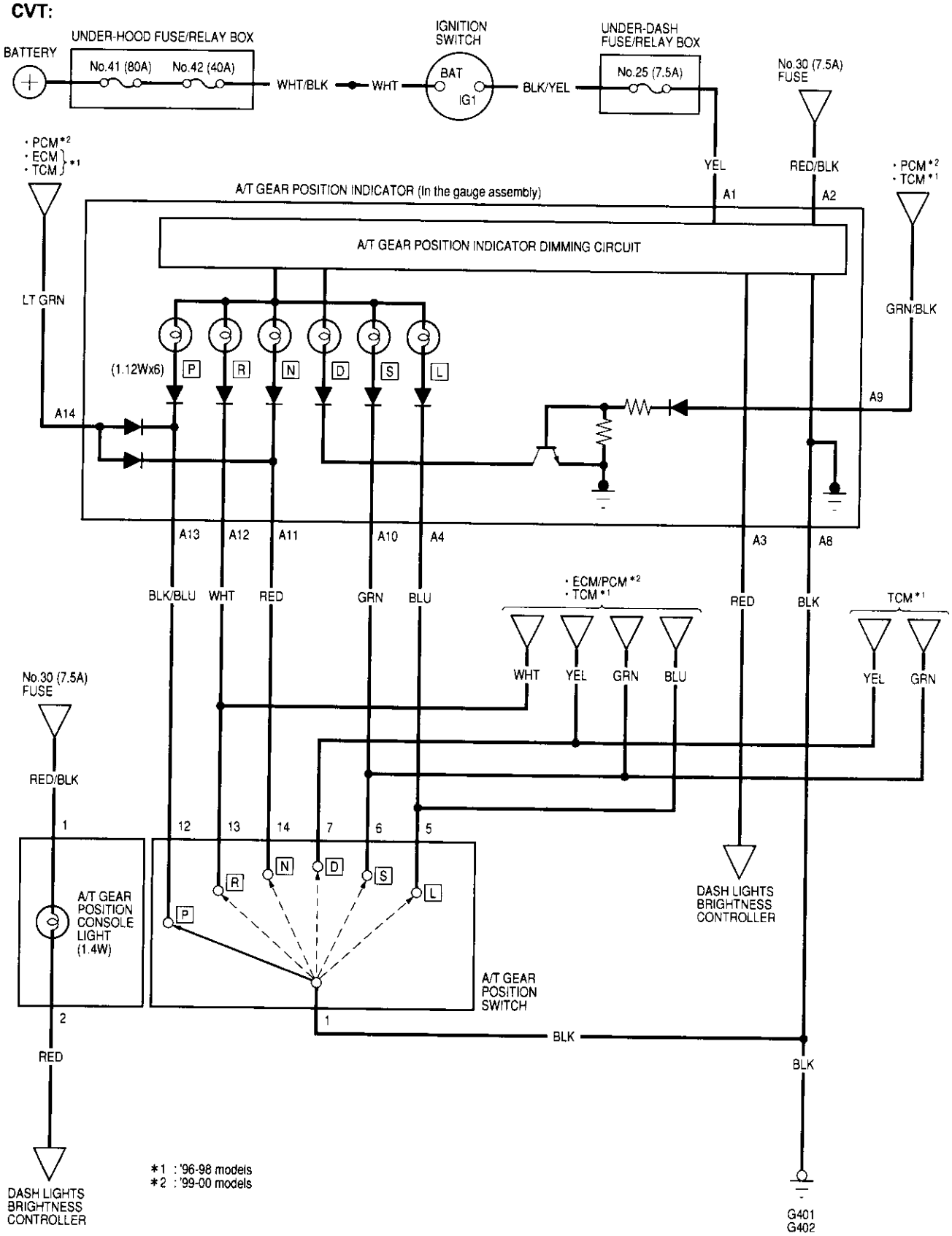

Circuit Diagram

A/T:

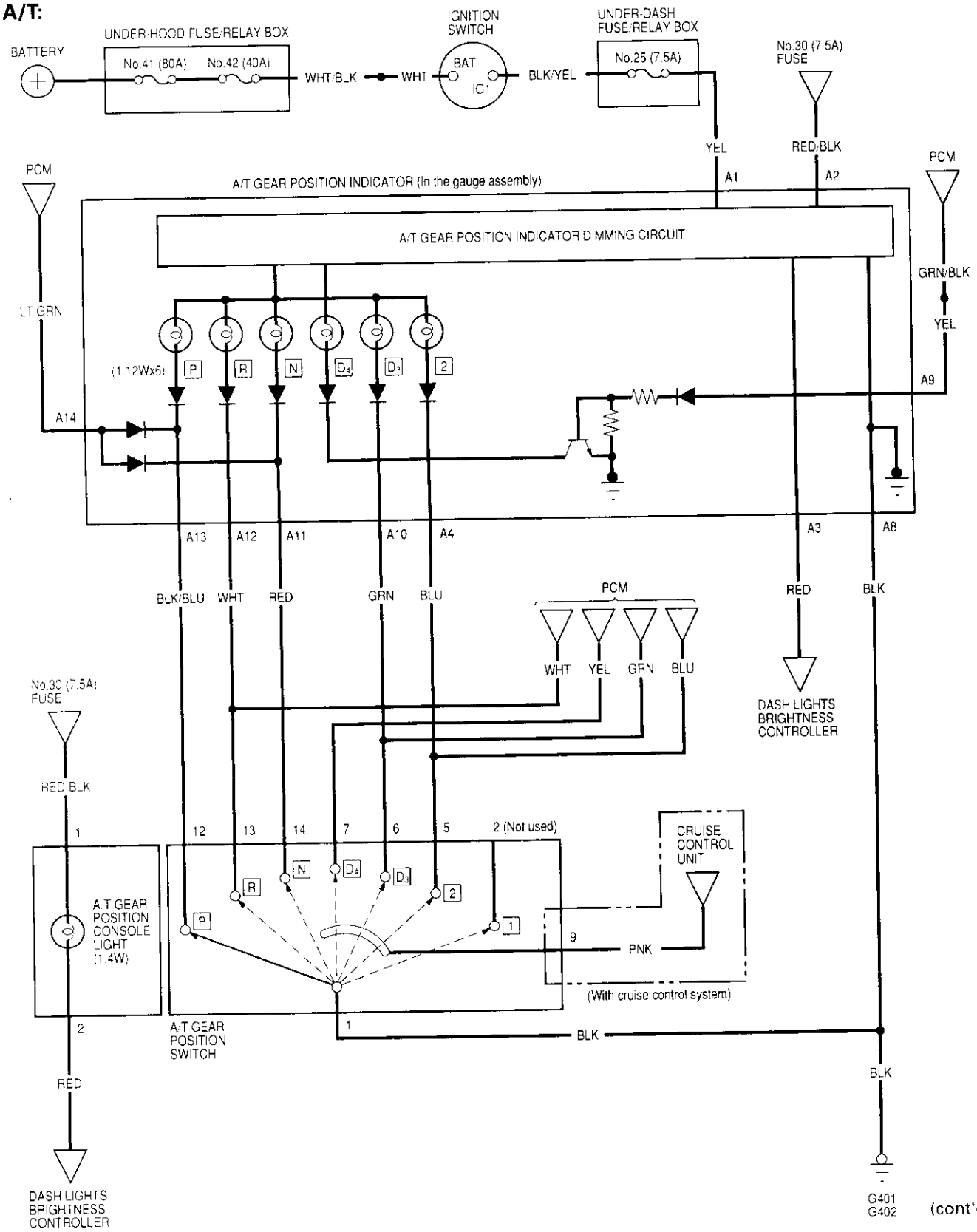

(cont'd)

Indicator Input Test

1. Remove the gauge assembly from the dashboard (see page 23-135), and disconnect the 14P connector from the gauge assembly.

2. Inspect the connector and socket terminals to be sure they are all making good contact.

   - If the terminals are bent, loose or corroded, repair them as necessary, and recheck the system.
   - If the terminals look OK, make the following input tests at the 14P connector.
     — If a test indicates a problem, find and correct the cause, then recheck the system.
     — If all the input tests prove OK, but the indicator is faulty, replace the printed circuit board.

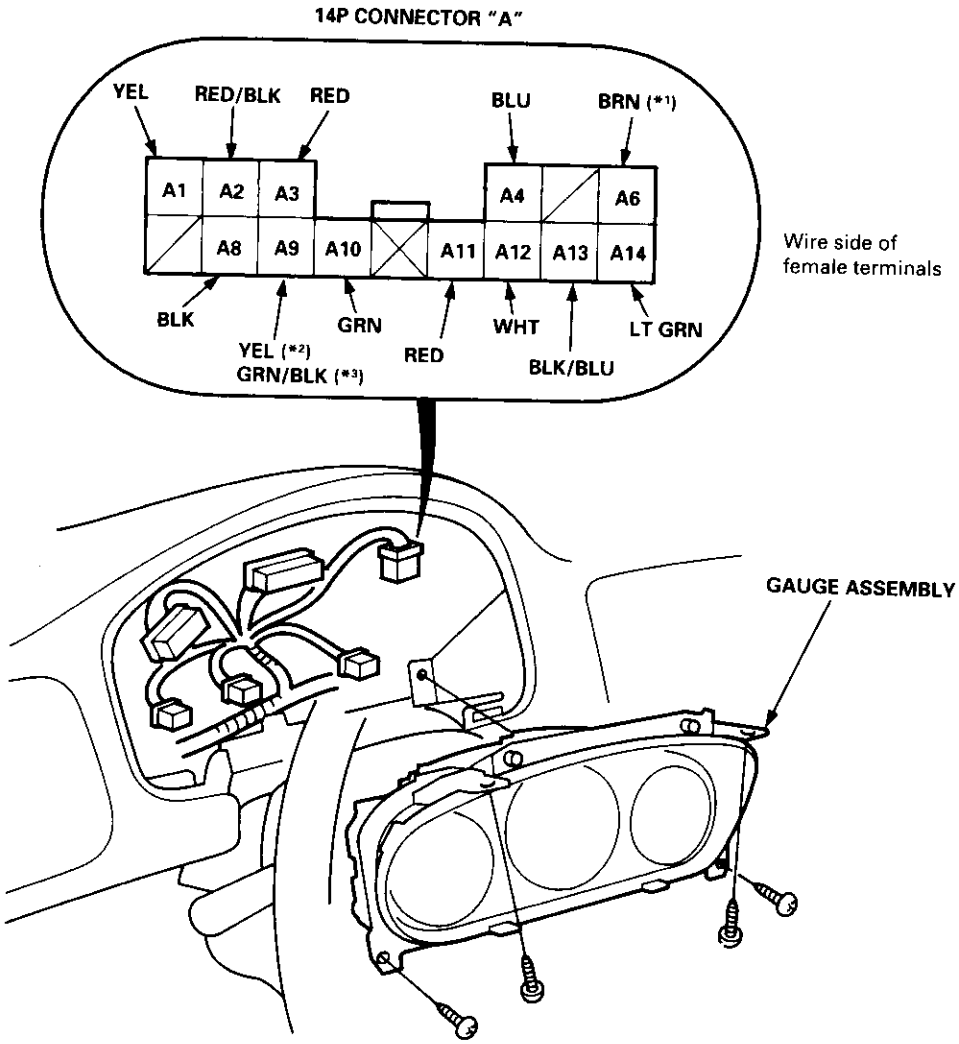

*1: Not used
*2: A/T
*3: CVT

Cavity	Wire	Test condition	Test: Desired result	Possible cause if result is not obtained
A1	YEL	Ignition switch ON (II)	Check for voltage to ground: There should be battery voltage.	• Blown No. 25 (7.5 A) fuse in the under-dash fuse/relay box • An open in the wire
A2	RED/BLK	Combination light switch ON and dash lights brightness control dial on full bright	Check for voltage between RED/BLK and RED terminals: There should be battery voltage.	• Blown No. 30 (7.5 A) fuse in the under-dash fuse/relay box • Faulty combination light switch • Faulty dash lights brightness controller • An open in the wire
A3	RED			
A4	BLU	Shift lever in 2 or L	Check for continuity to ground: There should be continuity. NOTE: There should be no continuity in any other position.	• Faulty A/T gear position switch • An open in the wire
A10	GRN	Shift lever in D_3 or S		
A11	RED	Shift lever in N		
A12	WHT	Shift lever in R		
A13	BLK/BLU	Shift lever in P NOTE: Don't depress the brake pedal.		
A9	YEL*1	Ignition switch ON (II) and shift lever in any position except D_4	Check for voltage to ground: There should be battery voltage for two seconds after the ignition switch is turned ON (II), and then less than 1 V.	• Faulty TCM*2, PCM*3 • Faulty PCM*1 • An open in the wire
	GRN/BLK*2	Ignition switch ON (II) and shift lever in any position except D		
A8	BLK	Under all conditions	Check for continuity to ground: There should be continuity.	• Poor ground (G401, G402) • An open in the wire
A14	LT GRN	Ignition switch ON (II)	Check for voltage to ground: • There should be battery voltage*2 • There should be about 5 V*1	• Faulty TCM*2, ECM/PCM*3 • Faulty PCM*1 • An open in the wire

*1: A/T
*2: CVT ('96 – 98 models)
*3: CVT ('99 – 00 models)

A/T Gear Position Switch Test

1. Remove the front console (see section 20).
2. Disconnect the 14P connector from the A/T gear position switch.
3. Check for continuity between the terminals in each switch position according to the table.
   - Move the shift lever back and forth without pushing the shift lever at each switch position, and check for continuity within the range of free play of the shift lever.
   - If there is no continuity within the range of free play, adjust the position of the switch as described on the next page.

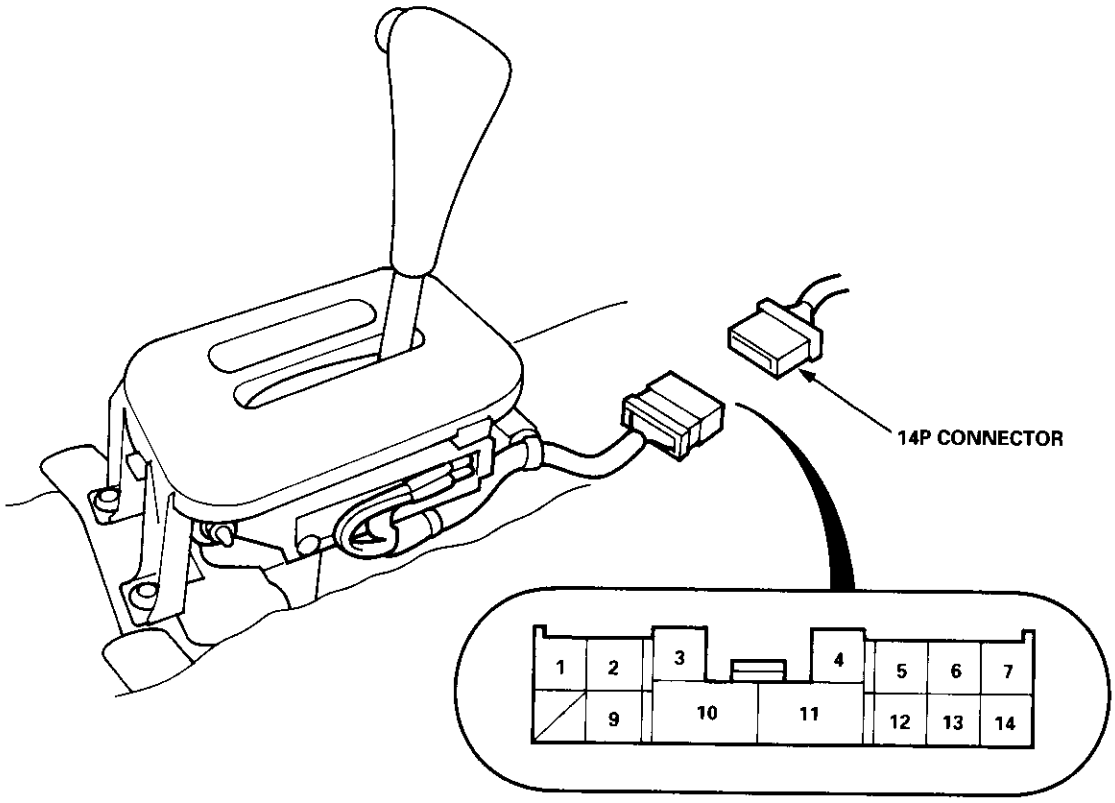

Terminal side of male terminals

A/T Gear Position Switch										Back – up Light Switch		Neutral Position Switch	
Position \ Terminal	1	2	5	6	7	*1 9	12	13	14	3	4	10	11
(Not used)	○	○											
2 L	○		○			○							
D3 S	○			○		○							
D4 D	○				○	○							
N N	○								○			○	○
R R	○							○		○	○		
P P	○						○					○	○

* 1 : With cruise control system

A/T Gear Position Switch Replacement

1. Remove the front console, then disconnect the 14P connector from the A/T gear position switch.

2. Remove the two mounting nuts.

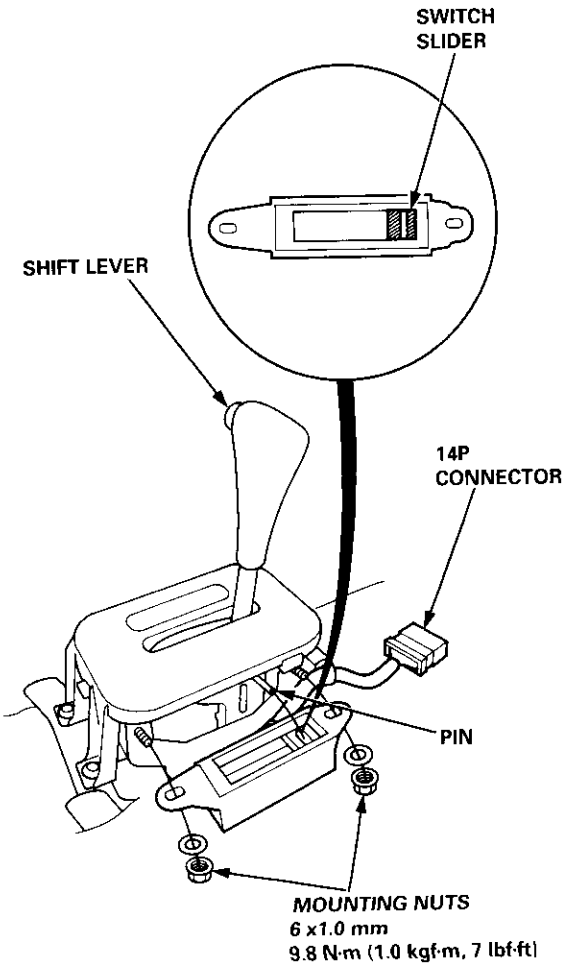

3. Position the switch slider to "Neutral" as shown above.

4. Move the shift lever to "Neutral", then slip the switch into position.

5. Attach the switch with the two mounting nuts.

6. Test the switch in the P and N position of the shift lever. The engine should start when the shift lever is in position P anywhere in the range of free play.

7. Connect the 14P connector, clamp the harness, and install the front console.

A/T Gear Position Switch Adjustment

1. Shift to the P position, and loosen the nuts.

2. Slide the switch in the direction of D4 or D position [within 2.0 mm (0.079 in.)] so that there is continuity between the No. 1 and No. 7 terminals in the range of free play of the shift lever.

3. Recheck for continuity between each of the terminals.

   NOTE:
   - If adjustment is not possible, check for damage to the shift lever detent and/or the bracket. If there is no damage, replace the console switch.
   - The engine should start when the shift lever is in position N in the range of free play.

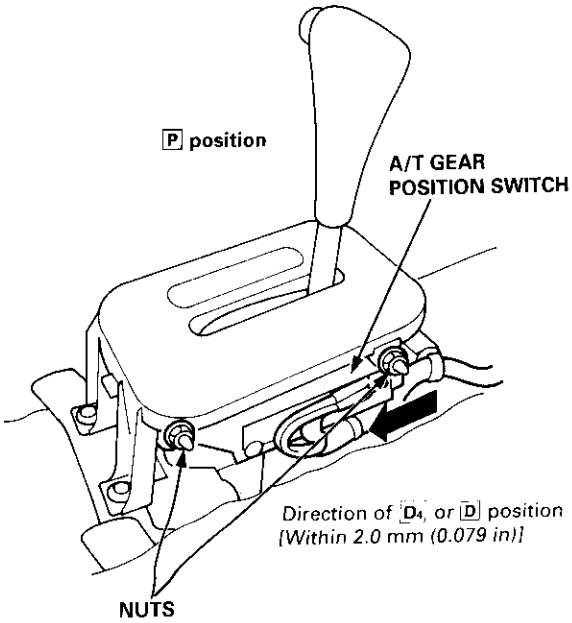

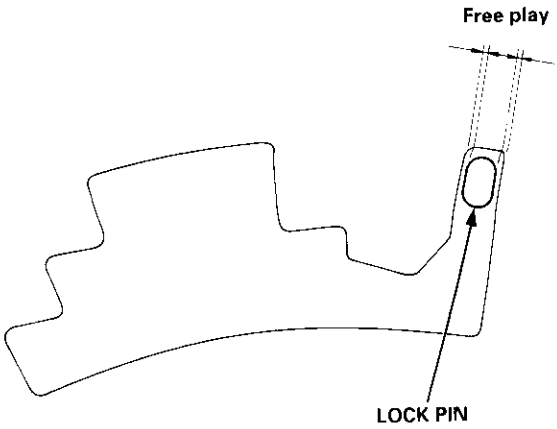

Integrated Control Unit

Circuit Diagram

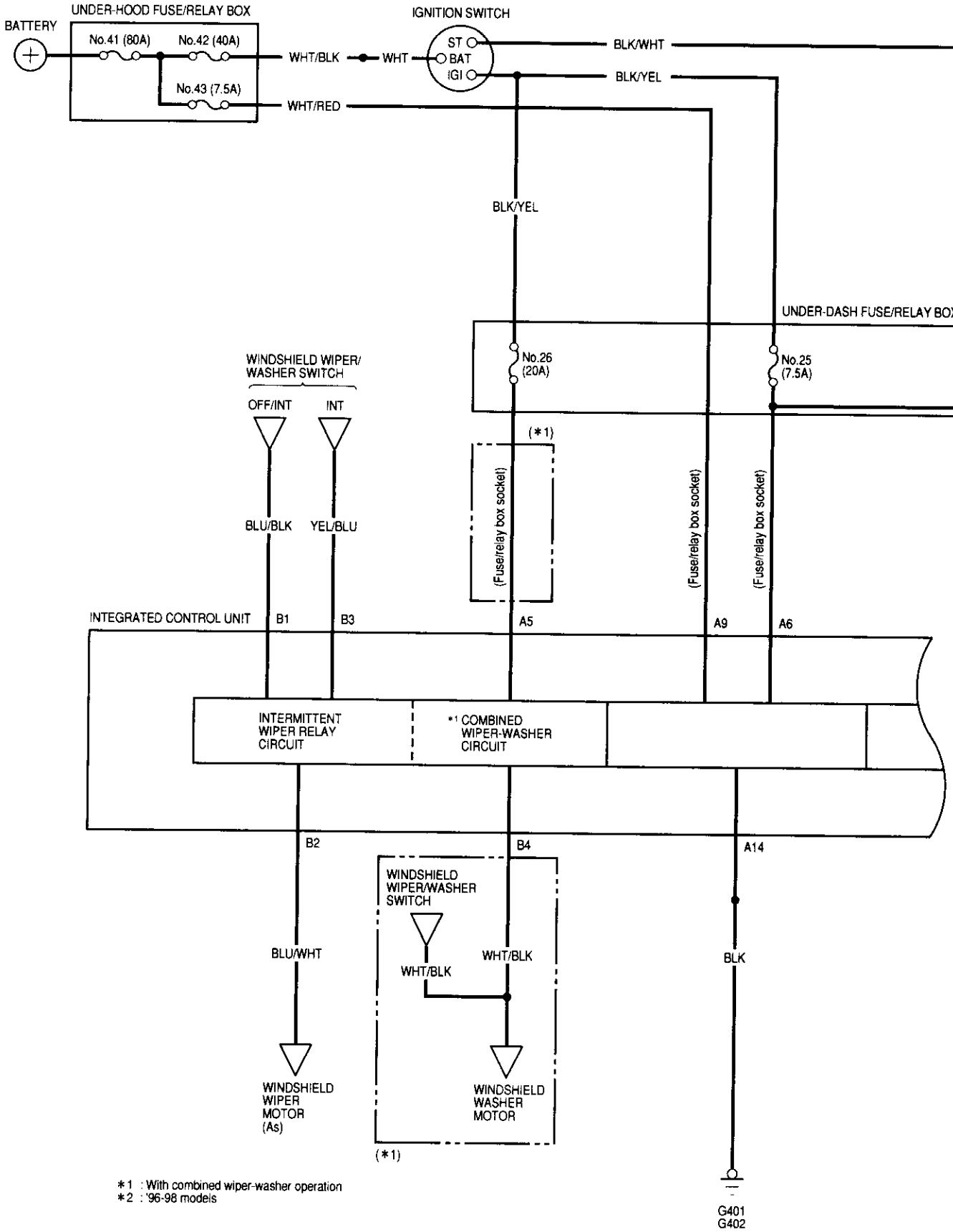

*1 : With combined wiper-washer operation
*2 : '96-98 models

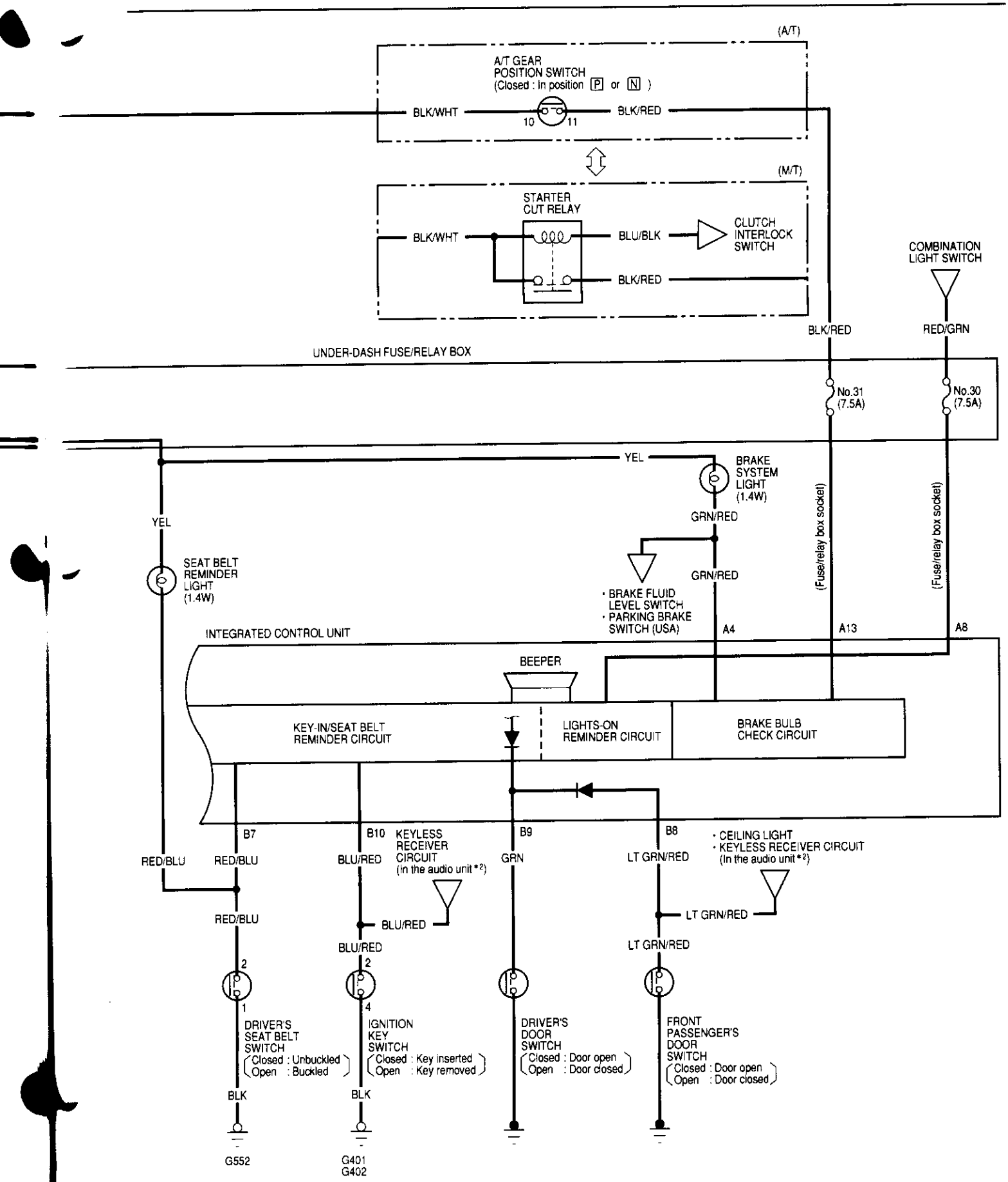
(A/T)
A/T GEAR POSITION SWITCH (Closed : In position P or N)
BLK/WHT
10
11
BLK/RED
(M/T)
STARTER CUT RELAY
BLK/WHT
BLU/BLK
CLUTCH INTERLOCK SWITCH
BLK/RED
COMBINATION LIGHT SWITCH
BLK/RED
RED/GRN
UNDER-DASH FUSE/RELAY BOX
No.31 (7.5A)
No.30 (7.5A)
YEL
BRAKE SYSTEM LIGHT (1.4W)
GRN/RED
YEL
SEAT BELT REMINDER LIGHT (1.4W)
GRN/RED
(Fuse/relay box socket)
(Fuse/relay box socket)
· BRAKE FLUID LEVEL SWITCH
· PARKING BRAKE SWITCH (USA)
A4
A13
A8
INTEGRATED CONTROL UNIT
BEEPER
KEY-IN/SEAT BELT REMINDER CIRCUIT
LIGHTS-ON REMINDER CIRCUIT
BRAKE BULB CHECK CIRCUIT
B7
B10
B9
B8
RED/BLU
RED/BLU
BLU/RED
KEYLESS RECEIVER CIRCUIT (In the audio unit *2)
GRN
LT GRN/RED
· CEILING LIGHT
· KEYLESS RECEIVER CIRCUIT (In the audio unit *2)
RED/BLU
BLU/RED
LT GRN/RED
BLU/RED
LT GRN/RED
2
2
1
4
DRIVER'S SEAT BELT SWITCH (Closed : Unbuckled Open : Buckled)
IGNITION KEY SWITCH (Closed : Key inserted Open : Key removed)
DRIVER'S DOOR SWITCH (Closed : Door open Open : Door closed)
FRONT PASSENGER'S DOOR SWITCH (Closed : Door open Open : Door closed)
BLK
BLK
G552
G401
G402

Integrated Control Unit

Input Test

SRS components are located in this area. Review the SRS component locations, precautions, and procedures in the SRS section (24) before performing repairs or service.

1. Remove the driver's dashboard lower cover and knee bolster (see section 20).

2. Disconnect the 10P connector from the integrated control unit.

3. Remove the integrated control unit from the under-dash fuse/relay box.

4. Inspect the connector and socket terminals to be sure they are all making good contact.

   - If the terminals are bent, loose or corroded, repair them as necessary, and recheck the system.
   - If the terminals look OK, make the following input tests at the connector and the fuse/relay box socket.
     — If any test indicates a problem, find and correct the cause, then recheck the system.
     — If all the input tests prove OK, the control unit must be faulty; replace it.

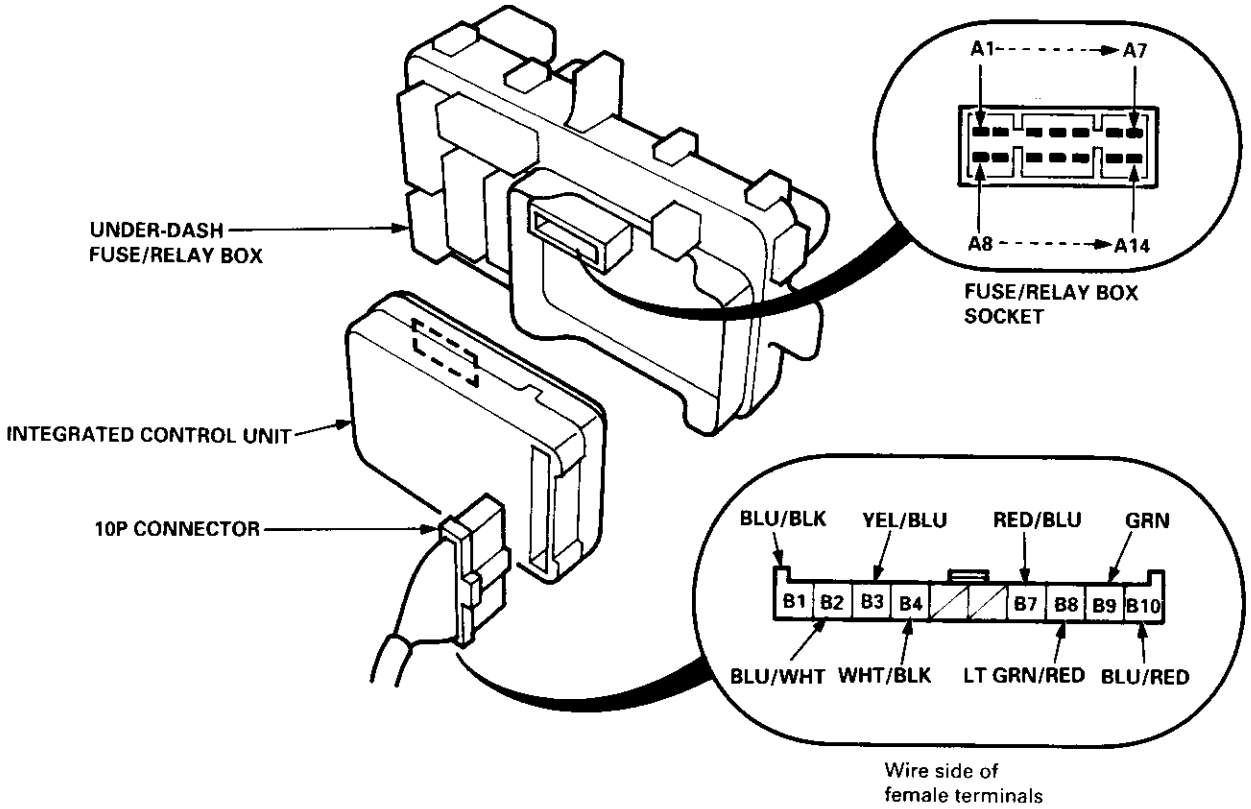

All Systems:

Cavity	Wire	Test condition	Test: Desired result	Possible cause if result is not obtained
A14	BLK	Under all conditions	Check for continuity to ground: There should be continuity.	• Poor ground (G401, G402) • An open in the wire
A9	——	Under all conditions	Check for voltage to ground: There should be battery voltage.	• Blown No. 43 (7.5 A) fuse in the under-hood fuse/relay box • An open in the wire
A6	——	Ignition switch ON (II)	Check for voltage to ground: There should be battery voltage.	• Blown No. 25 (7.5 A) fuse in the under-dash fuse/relay box • An open in the wire

Intermittent Wiper System:

Cavity	Wire	Test condition	Test: Desired result	Possible cause if result is not obtained
B1 • B2	BLU/BLK and BLU/WHT	Ignition switch ON (II), and windshield wiper switch at OFF or INT	Check for continuity between the BLU/BLK and BLU/WHT terminals: There should be continuity.	• Blown No. 26 (20 A) fuse in the under-dash fuse/relay box • Faulty windshield wiper switch • Faulty windshield wiper motor • An open in the wire
B3	YEL/BLU	Ignition switch ON (II), and windshield wiper switch at INT	Check for voltage to ground: There should be battery voltage.	• Blown No. 26 (20 A) fuse in the under-dash fuse/relay box • Faulty windshield wiper switch • An open in the wire
*A5	——	Ignition switch ON (II)	Check for voltage to ground: There should be battery voltage.	• Blown No. 26 (20 A) fuse in the under-dash fuse/relay box • An open in the wire
*B4	WHT/BLK	Ignition switch ON (II), and windshield washer switch ON	Check for voltage to ground: There should be battery voltage.	• Faulty windshield washer switch • An open in the wire

*: With combined wiper-washer operation

(cont'd)

Input Test (cont'd)

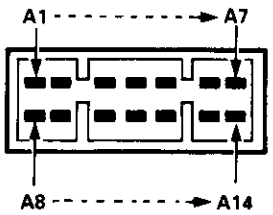

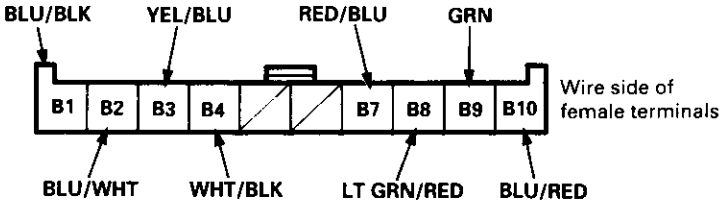

Key-in/Seat Belt Reminder, Lights-on Reminder System:

Cavity	Wire	Test condition	Test: Desired result	Possible cause if result is not obtained
A8	——	Combination light switch ON	Check for voltage to ground: There should be battery voltage.	• Blown No. 30 (7.5 A) fuse in the under-dash fuse/relay box • Faulty combination light switch • An open in the wire
B7	RED/BLU	Ignition switch ON (II), and driver's seat belt switch unbuckled	Check for voltage to ground: There should be 1 V or less.	• Poor ground (G552) • Faulty seat belt switch • An open in the wire
B9	GRN	Driver's door open	Check for voltage to ground: There should be 1 V or less.	• Faulty driver's door switch • An open in the wire
B10	BLU/RED	Ignition key inserted into the ignition key switch	Check for voltage to ground: There should be 1 V or less.	• Poor ground (G401, G402) • Faulty ignition key switch • An open in the wire

Bulb Check System (Brake System Light):

Cavity	Wire	Test condition	Test: Desired result	Possible cause if result is not obtained
A4	GRN/RED	Ignition switch ON (II), brake fluid reservoir full, and parking brake lever down	Connect to ground: Brake system light should come on.	• Blown No. 25 (7.5 A) fuse in the under-dash fuse/relay box • Blown brake system light bulb • An open in the wire
A13	BLU/WHT	Ignition switch at START (III)	Check for voltage to ground: There should be battery voltage.	• Blown No. 31 (7.5 A) fuse in the under-dash fuse/relay box • Faulty starter cut relay • An open in the wire

Component Location Index

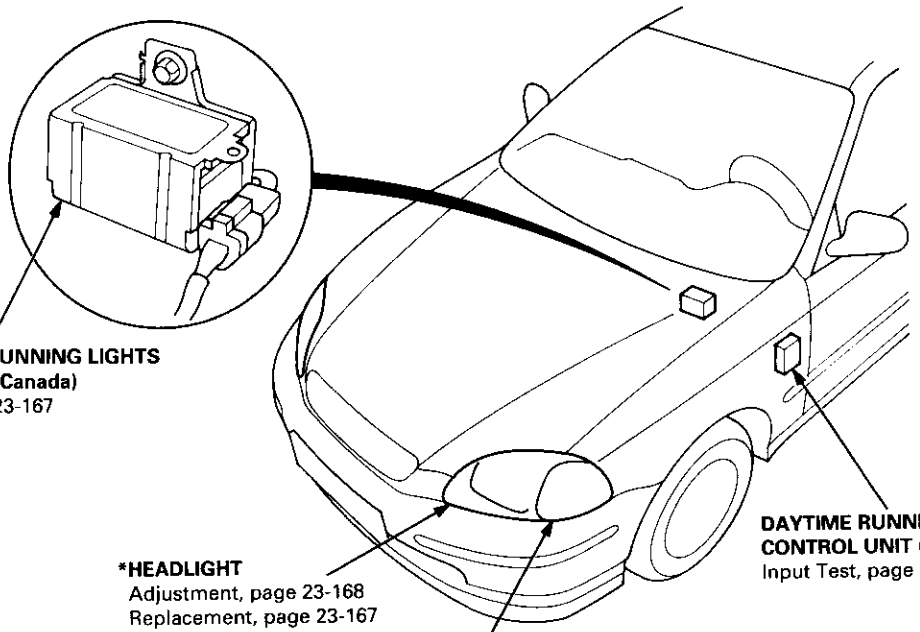

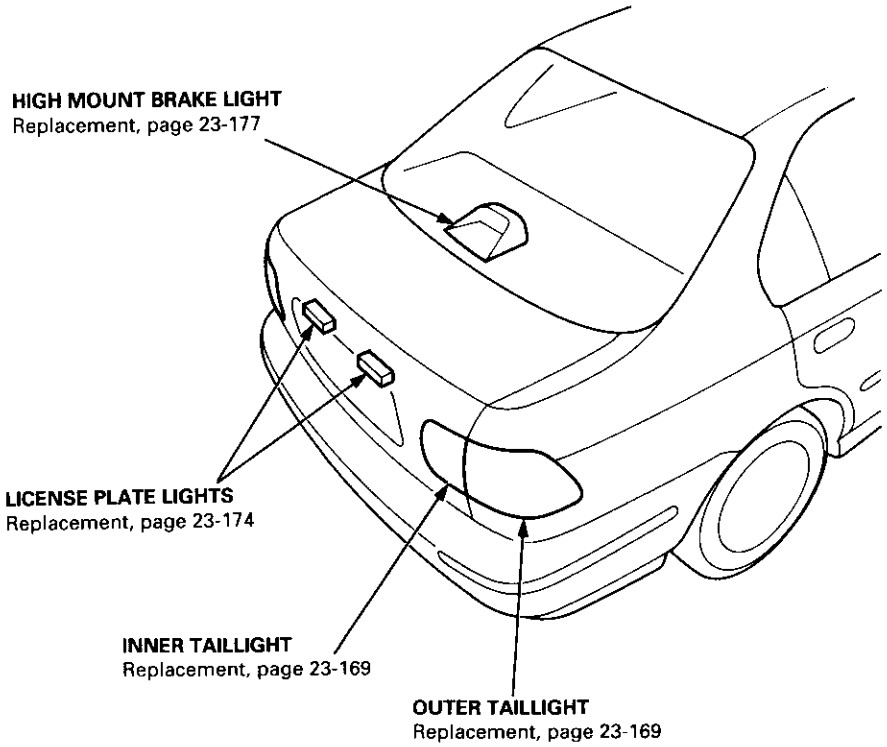

*: Headlight and front parking/front turn signal light cannot be separated.

(cont'd)

Component Location Index (cont'd)

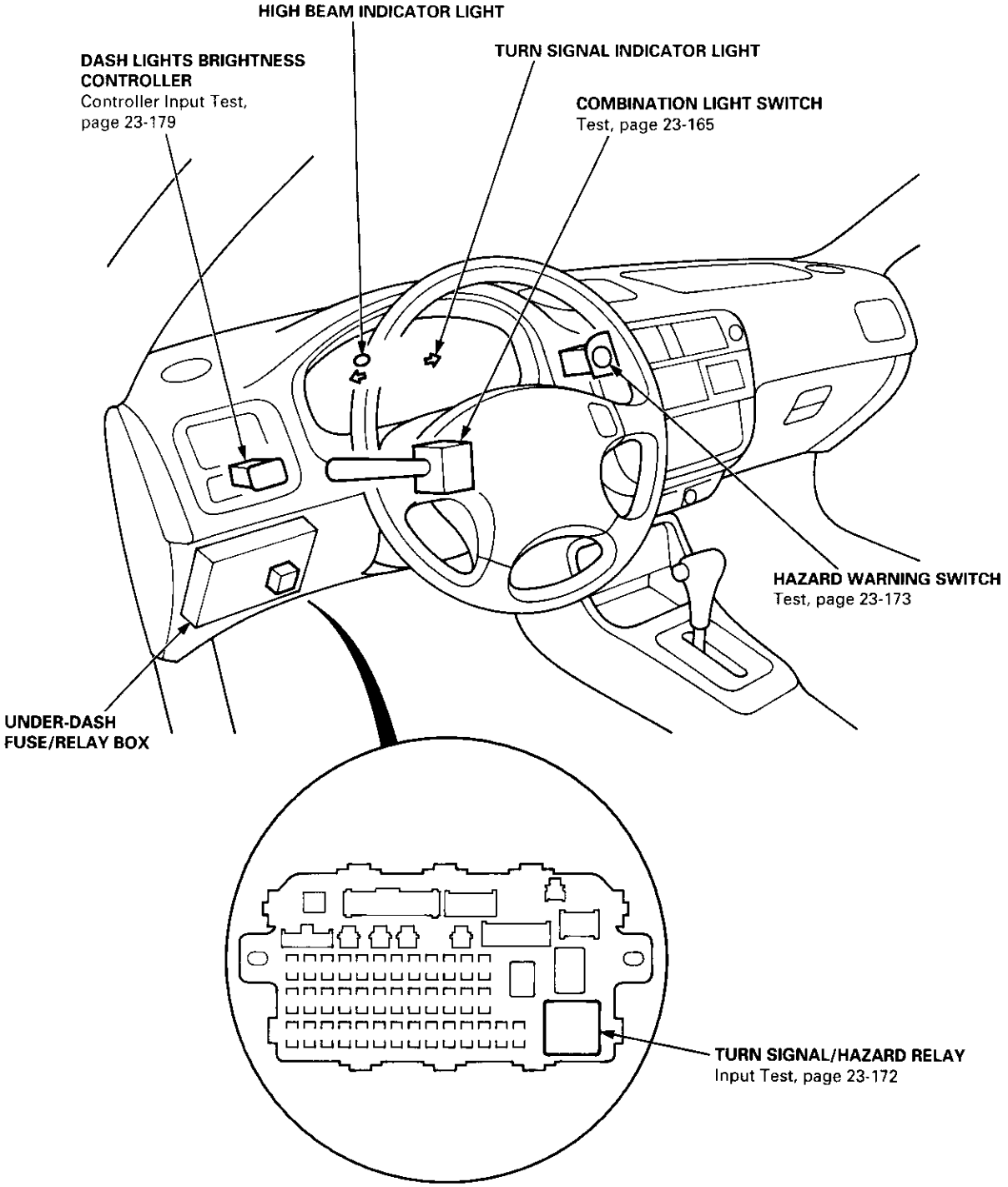

Circuit Diagram (USA)

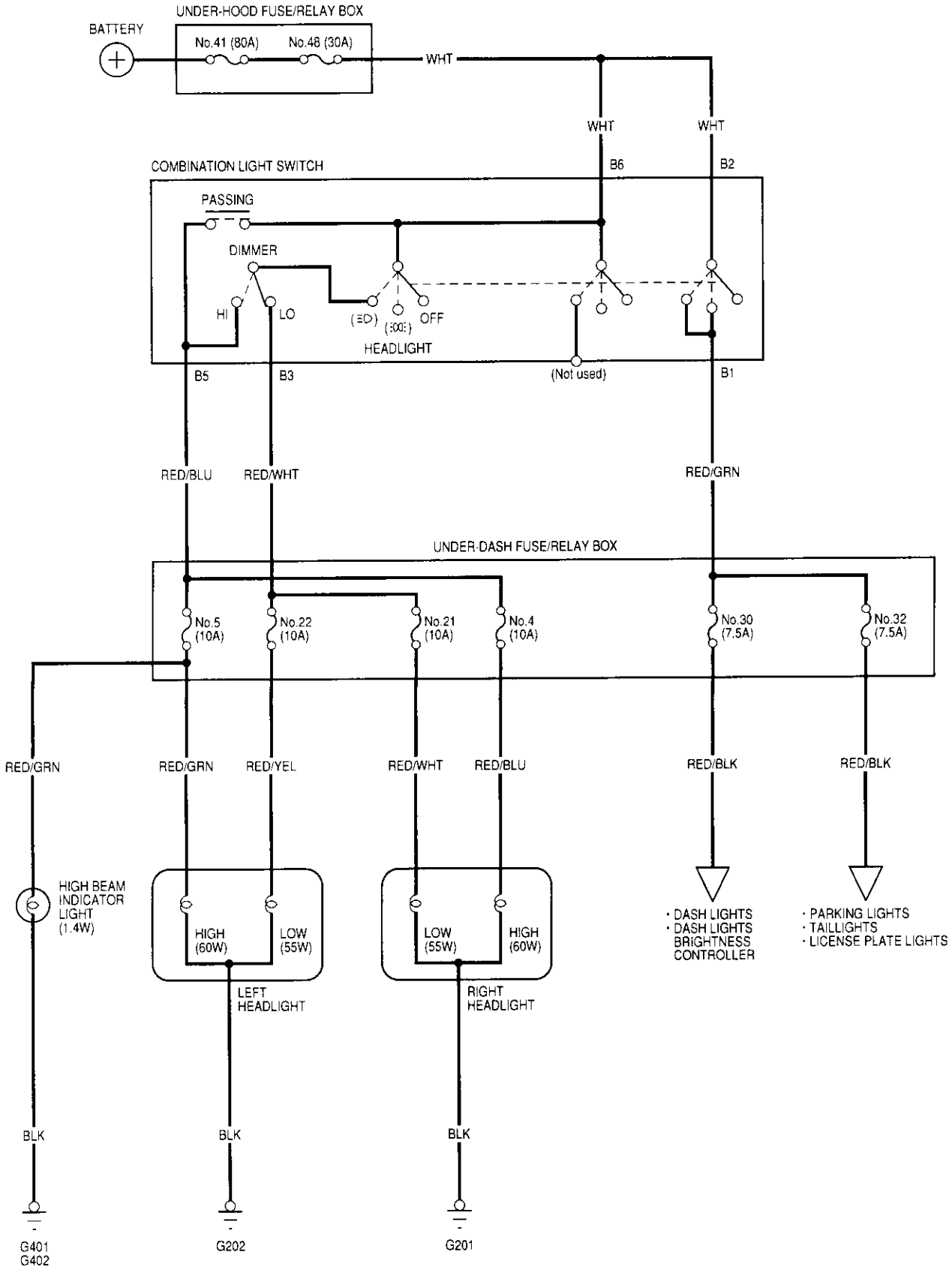

Circuit Diagram (Canada)

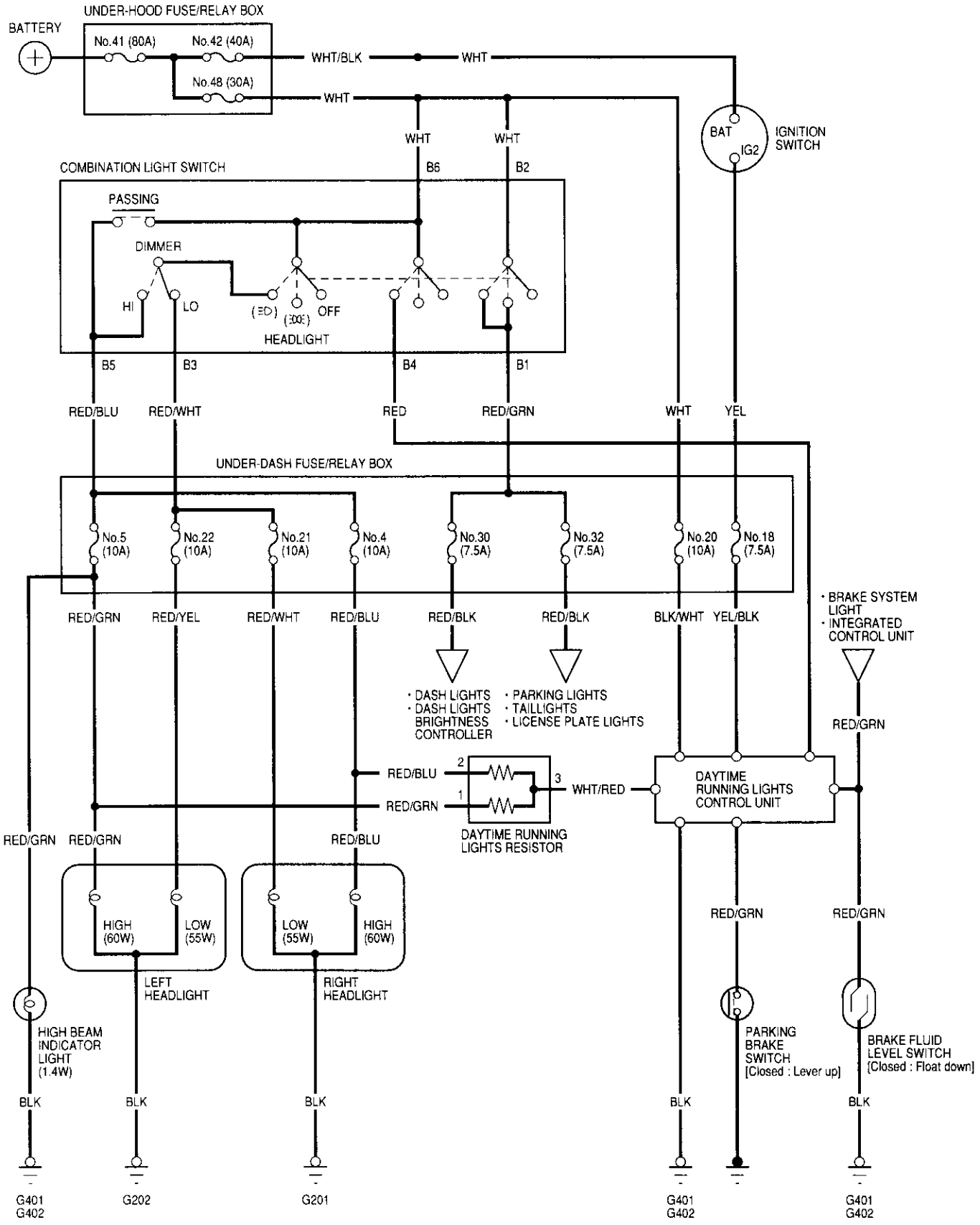

Combination Light Switch Test

1. Remove the driver's dashboard lower cover and steering column covers (see section 20).

2. Disconnect the 4P and 7P connectors from the switch.

3. Inspect the connector and socket terminals to be sure they are all making good contact.

   - If the terminals are bent, loose, or corroded, repair them as necessary, and recheck the system.
   - If the terminals look OK, check for continuity between them in each switch position according to the tables. If there is no continuity between any of them, check for continuity in the switch harness.
     — If there is continuity in the switch harness, replace the combination light switch.
     — If there is no continuity in the switch harness, replace it.

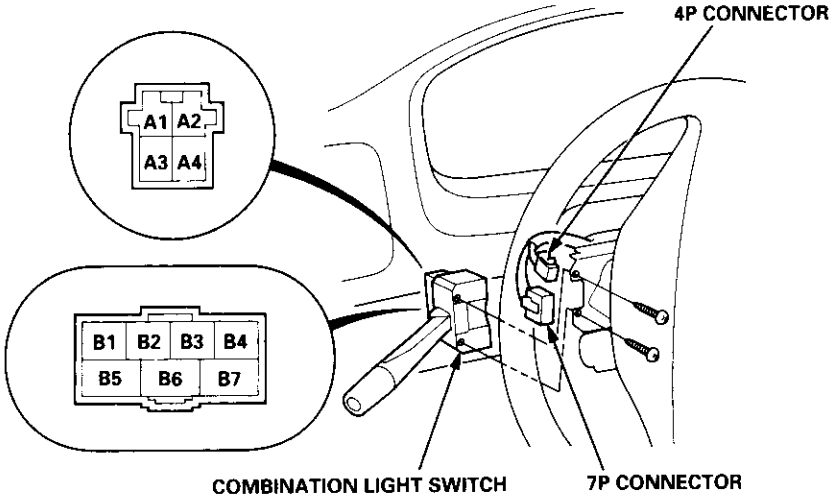

Headlight/Dimmer/Passing Switch :

Position \ Terminal			B1	B2	B3	* B4	B5	B6
Headlight switch	OFF							
	≡DO≡		○	○				
	≡D	LOW	○	○	○	○		○
		HIGH	○	○		○	○	○
Passing switch	OFF							
	ON						○	○

* : Canada

Turn Signal Switch :

Position \ Terminal	A1	A2	A4
RIGHT	○		○
NEUTRAL			
LEFT	○	○	

Daytime Running Lights Control Unit Input Test (Canada)

1. Remove the driver's dashboard lower cover and knee bolster (see section 20).

2. Disconnect the connectors from the daytime running lights control unit.

3. Inspect the connector and socket terminals to be sure they are all making good contact.

   - If the terminals are bent, loose or corroded, repair them as necessary, and recheck the system.
   - If the terminals look OK, make the following input tests at the connector.
     — If any test indicates a problem, find and correct the cause, then recheck the system.
     — If all the input tests prove OK, the control unit must be faulty; replace it.

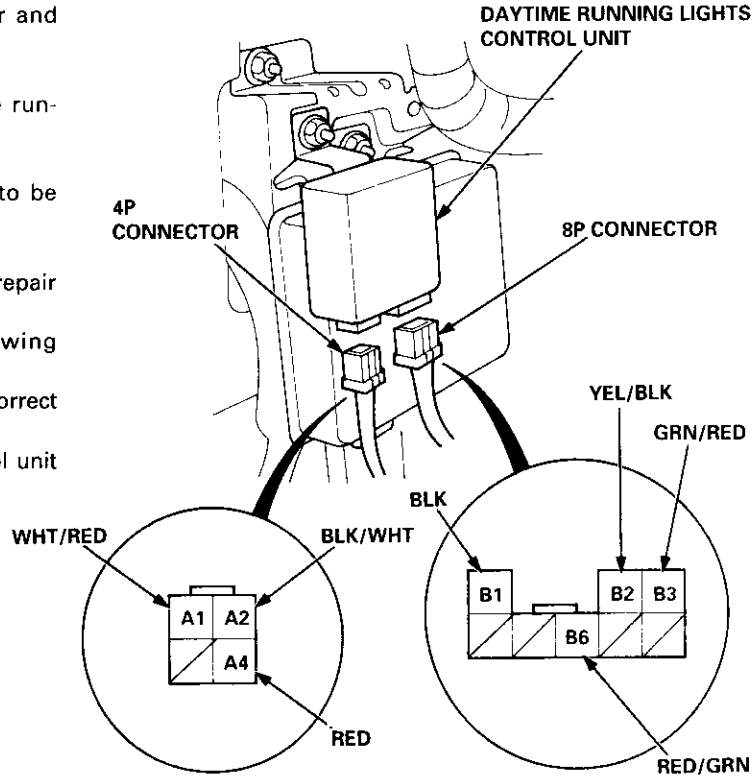

Cavity	Wire	Test condition	Test: Desired result	Possible cause if result is not obtained
B1	BLK	Under all conditions	Check for continuity to ground: There should be continuity.	• Poor ground (G401, G402) • An open in the wire
A2	BLK/WHT	Under all conditions	Check for voltage to ground: There should be battery voltage.	• Blown No. 20 (10 A) fuse in the under-dash fuse/relay box • An open in the wire
B2	YEL/BLK	Ignition switch ON (II)	Check for voltage to ground: There should be battery voltage.	• Blown No. 18 (7.5 A) fuse in the under-dash fuse/relay box • Faulty ignition switch • An open in the wire
A4	RED	Combination light switch in " ≡D " position	Check for voltage to ground: There should be battery voltage.	• Blown No. 48 (30 A) fuse in the under-hood fuse/relay box • Faulty combination light switch • An open in the wire
A1	WHT/RED	Combination light switch OFF; connect a jumper wire between the YEL/BLK and WHT/RED terminals, then turn the ignition switch ON (II)	Headlights (high beam) should come on, (and high beam indicator should come on).	• Poor ground (G201, G202, G401, G402) • Blown bulbs • Faulty daytime running lights resistor • An open in the wire
B3	GRN/RED	Ignition switch ON (II), brake fluid reservoir full, and parking brake lever down	Connect to ground: The brake system light should come on.	• Blown No. 25 (7.5 A) fuse in the under-dash fuse/relay box • Blown brake system light • An open in the wire
B6	RED/GRN	Parking brake lever up	Check for continuity to ground: There should be continuity.	• Faulty parking brake switch • An open in the wire

Daytime Running Lights Resistor Test (Canada)

CAUTION: The daytime running lights resistor becomes very hot when the daytime running lights are on; do not touch it or the attaching hardware immediately after the lights have been turned off.

1. Disconnect the 3P connector from the resistor.

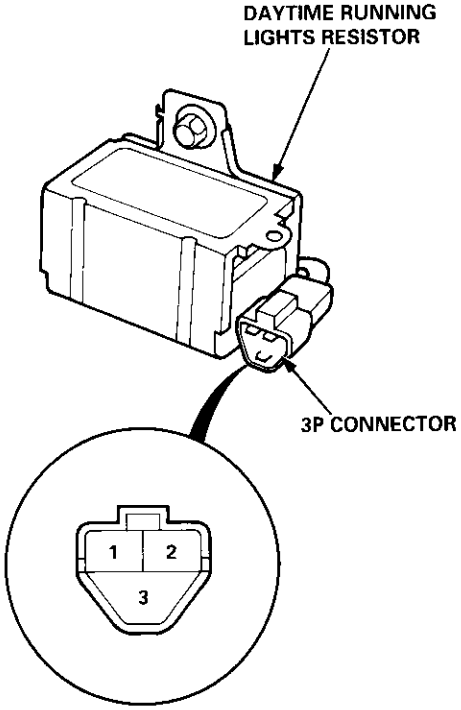

Terminal side of male terminals

2. Measure the resistance between the resistor terminals (No. 1 and No. 2) and the power terminal No. 3.

   Resistance: 1.6 Ω ± 0.08 Ω

3. Replace the resistor with a new one if any of the resistances are beyond specification.

Replacement

CAUTION: Halogen headlights become very hot in use; do not touch them or the attaching hardware immediately after they have been turned off.

1. Remove the front bumper (see section 20).
2. Remove the mounting bolts.
3. Disconnect each connector, then remove the headlight/front turn signal/parking light assembly.

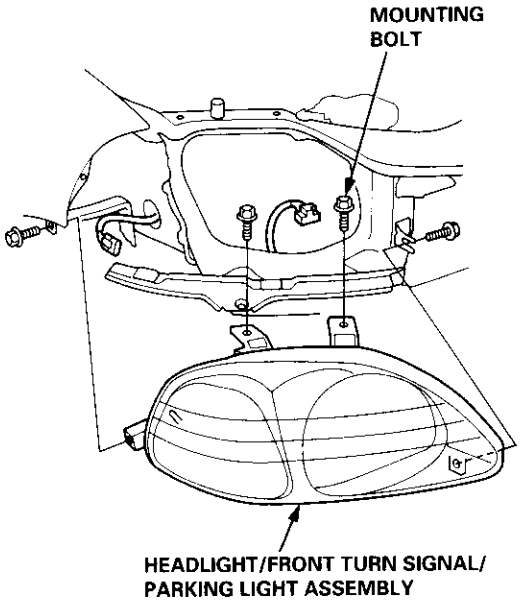

HEADLIGHT: 60/55 W
FRONT TURN SIGNAL/PARKING LIGHT: 21/5 W

Adjustment

⚠CAUTION

Headlight become very hot in use; do not touch them or any attaching hardware immediately after they have been turned off.

Before adjusting the headlights:

- Park the vehicle on level surface.
- Make sure the tire pressures are correct.
- The driver or someone who weighs the same should sit in the driver's seat.

'96 – 98 models

1. Open the hood.

2. Check the horizontal adjustment indicator.
   The "0" mark on the horizontal indicator gear should be aligned with the mark on the horizontal indicator.

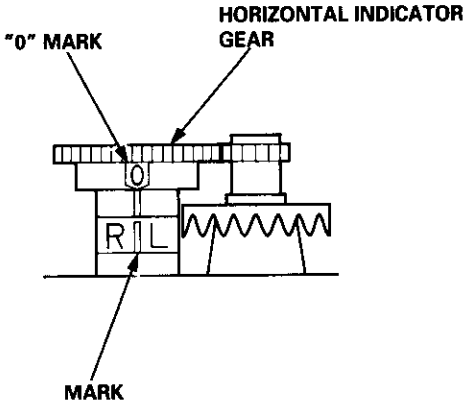

3. Check the vertical adjustment indicator. The bubble should be centered underneath the longest scribe mark on the gauge.

   VERTICAL INDICATOR:

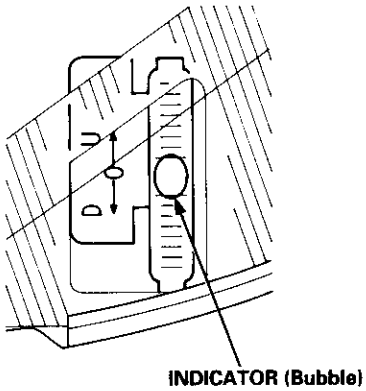

4. If either indicator is not aligned with its "0"mark as described left column, an adjustment can be made by using a Phillips screwdriver.

5. Adjust the headlights to local requirements by turning the adjusters.

6. After headlight replacement, it may be necessary to readjust the horizontal indicator gear.

   - First install the headlight, and adjust its horizontal and vertical aimings according to local requirements.
   - Then check that the arrow on the horizontal indicator gear is aligned with the mark on the horizontal indicator.
     — If they are not aligned, remove the screw, adjust the indicator gear, and retighten the screw.

   NOTE: As the outer lenses are made of an acrylicoated, polycarbonated material, do not cover the headlights when they are turned on.

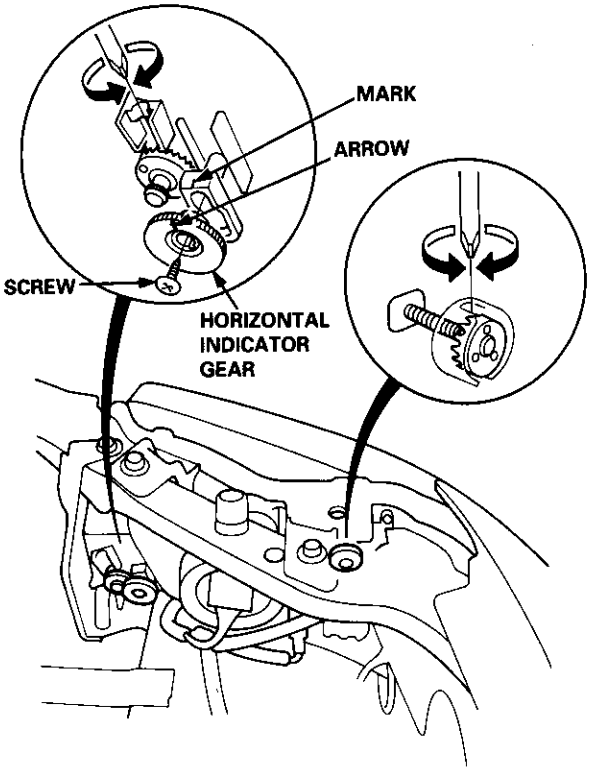

'99 – 00 models

1. Clean the outer lens so that you can see the center of the headlights (A).

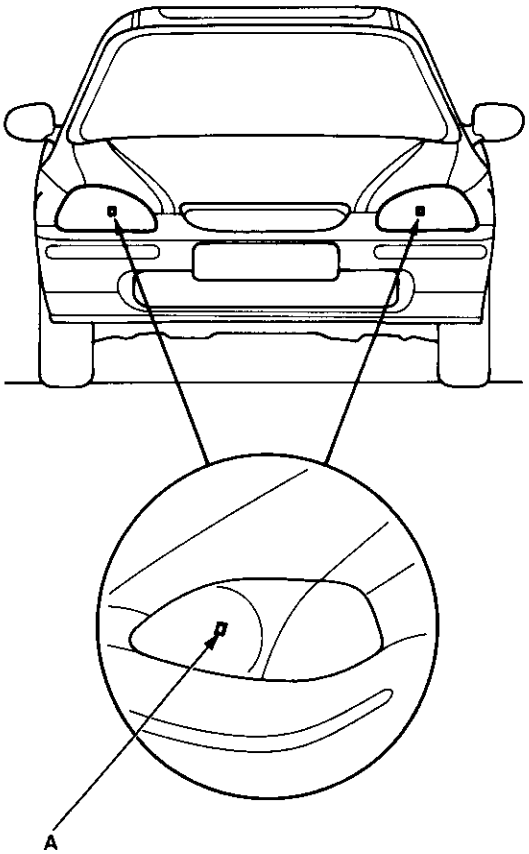

2. Park the vehicle in front of a wall or a screen (A).

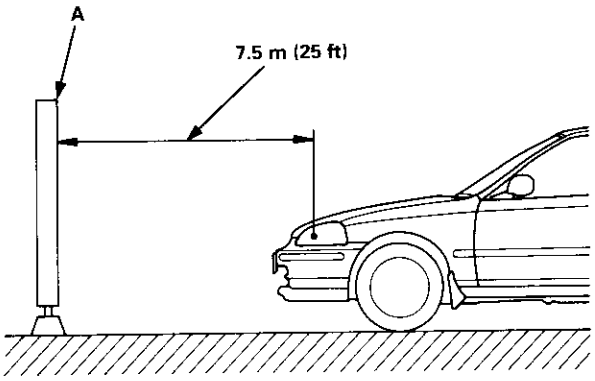

3. Open the hood.

4. Turn the horizontal adjuster so that the arrow on the horizontal indicator gear (A) is pointing up.

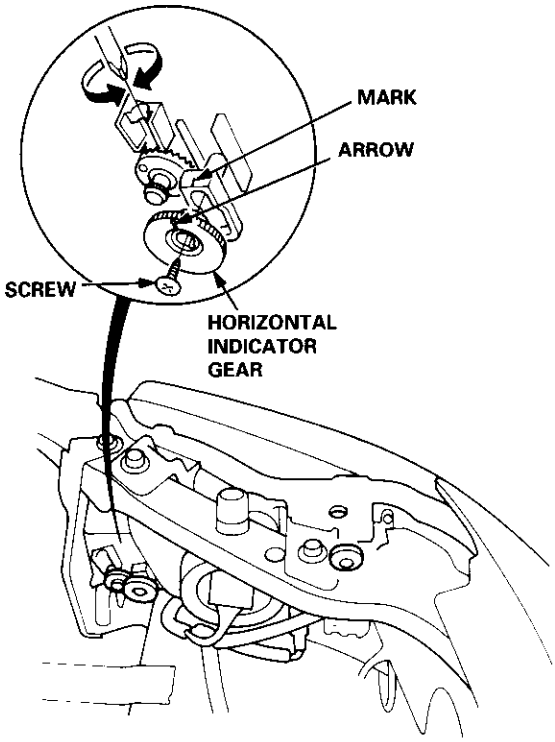

(cont'd)

Adjustment (cont'd)

5. Turn the low beams on.

6. Determine if the headlights are aimed properly.

   Vertical adjustment:
   Measure the height of the headlights (A). The lights should reflect 52 mm (2.1 in.) below (B) headlight height.

   Horizontal adjustment:
   The width of the refracting points (C) should be the same as the width of the headlight central points (D, E).

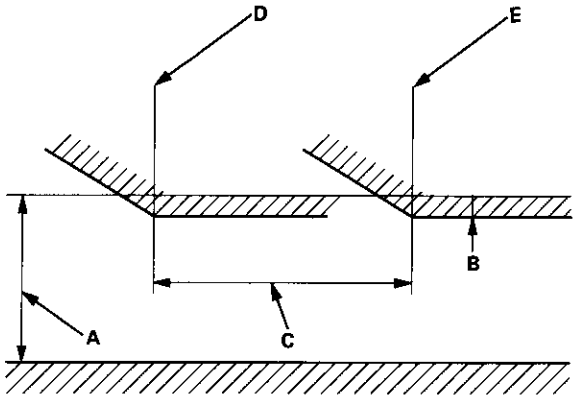

7. If necessary, adjust the headlights to local requirements by turning the horizontal adjuster (A) and the vertical adjuster (B).

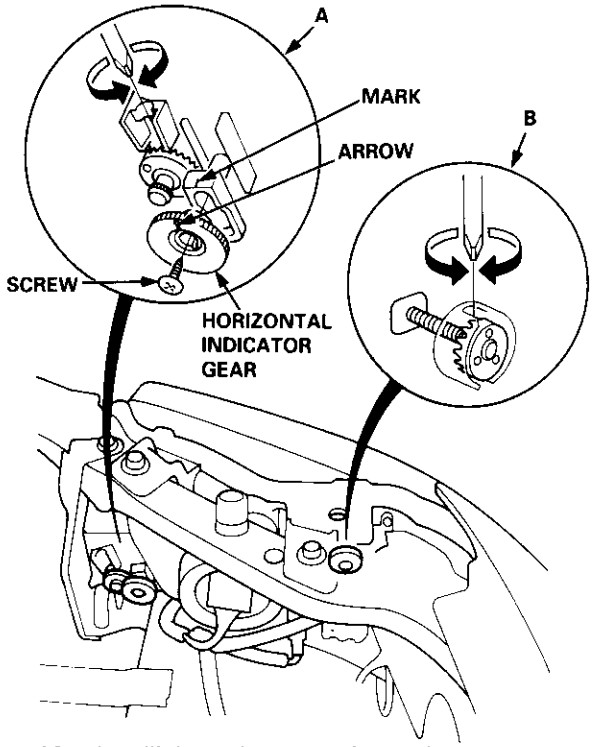

8. After headlight replacement, it may be necessary to readjust the horizontal indicator gear.

   - First install the headlight, and adjust its horizontal and vertical aimings according to local requirements.
   - Then check that the arrow on the horizontal indicator gear is aligned with the mark on the horizontal indicator.
     — If they are not aligned, remove the screw, adjust the indicator gear, and retighten the screw.

   NOTE: As the outer lenses are made of an acrylicoated, polycarbonated material, do not cover the headlights when they are turned on.

Replacement (Except '99 – 00 Sedan)

NOTE:
- Inspect the gasket; replace it if it is distorted or stays compressed.
- After installing the taillights, run water over them to make sure they do not leak.

Outer Taillights ('96 – 00 models, except '99 – 00 Sedan):

1. Open the trunk lid/hatch.
2. Disconnect the 4P or 6P connector from the outer taillight.
3. Remove the four mounting nuts, then pull out the outer taillight.

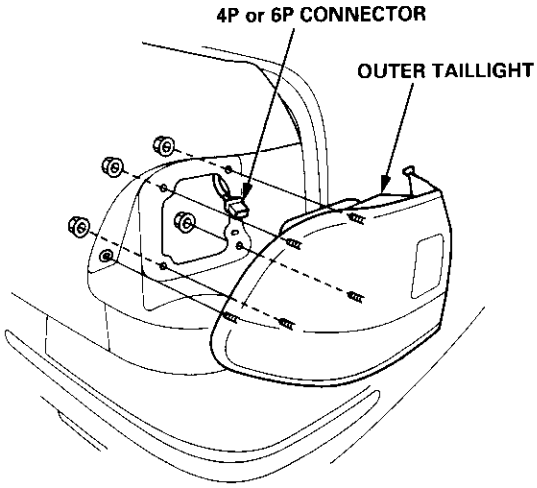

Hatchback:

BRAKE/TAILLIGHT: 21/5 W
TURN SIGNAL LIGHT: 21 W
BACK-UP LIGHT: 21 W

Coupe/Sedan:

BRAKE/TAILLIGHT: 21/5 W
TURN SIGNAL LIGHT: 21 W

Inner Taillights (Coupe '96 – 00 models/Sedan '96 – 98 models):

1. Open the trunk lid, then remove the access panel.
2. Disconnect the 4P connector from the inner taillight.
3. Remove the four [three] mounting nuts, then pull out the inner taillight.
   [ ]: Sedan

Coupe:

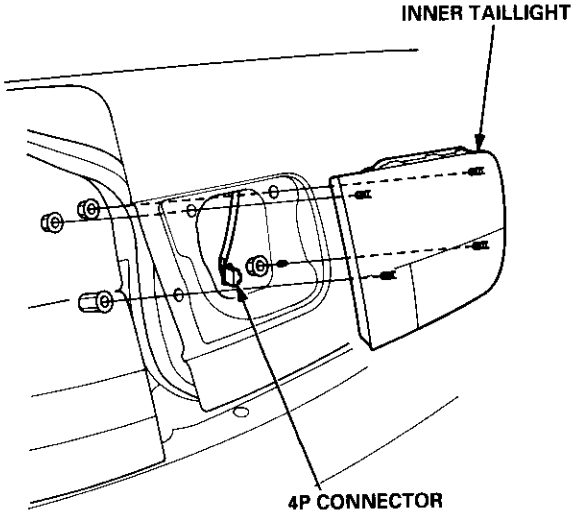

Sedan:

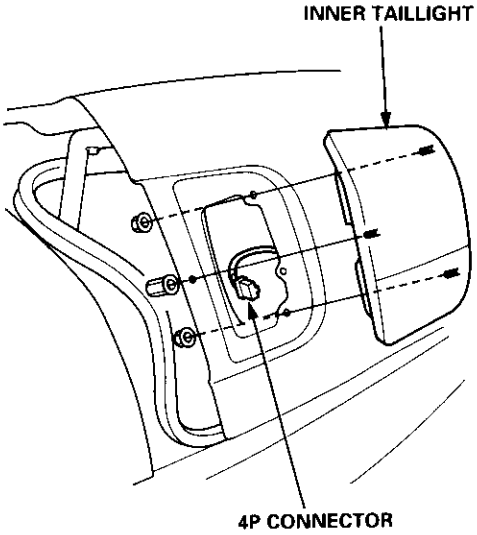

BRAKE/TAILLIGHT: 21/5 W
BACK-UP LIGHT: 21 W

Replacement ('99 – 00 Sedan)

NOTE:
- Inspect the gasket; replace it if it is distorted or stays compressed.
- After installing the taillights, run water over them to make sure they do not leak.

Outer Taillights:

1. Open the trunk lid/hatch.
2. Disconnect the 4P and 2P connector from the outer taillight.
3. Remove the four mounting nuts, then pull out the outer taillight.

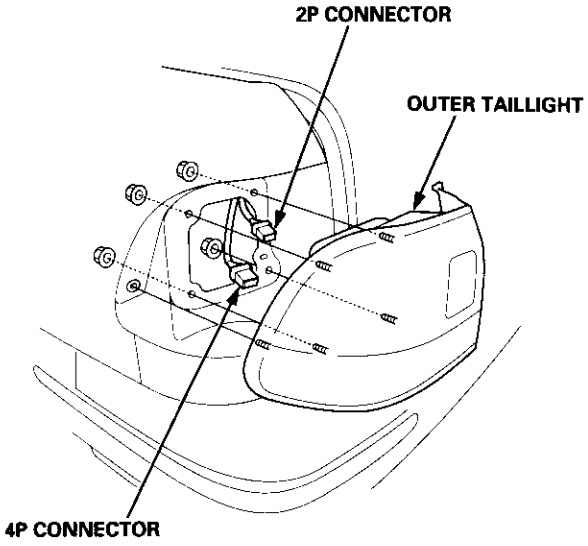

BRAKE/TAILLIGHT: 21/5 W
TURN SIGNAL LIGHT: 21 W

Inner Taillights:

1. Open the trunk lid, then remove the access panel.
2. Disconnect the 3P and 2P connector from the inner taillight.
3. Remove the three mounting nuts, then pull out the inner taillight.
   [ ]: Sedan

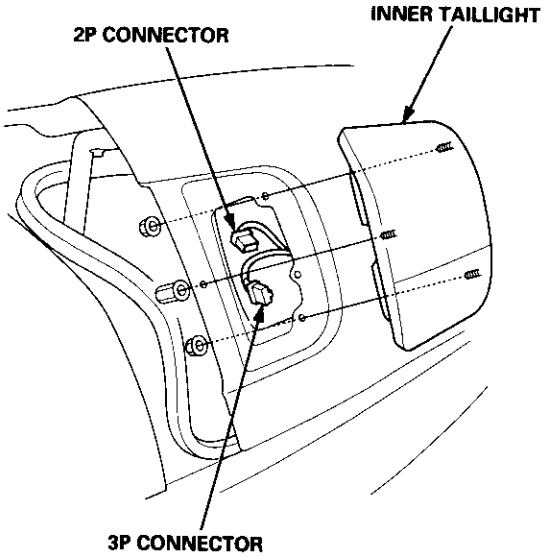

BRAKE/TAILLIGHT: 21/5 W
BACK-UP LIGHT: 21 W

Circuit Diagram

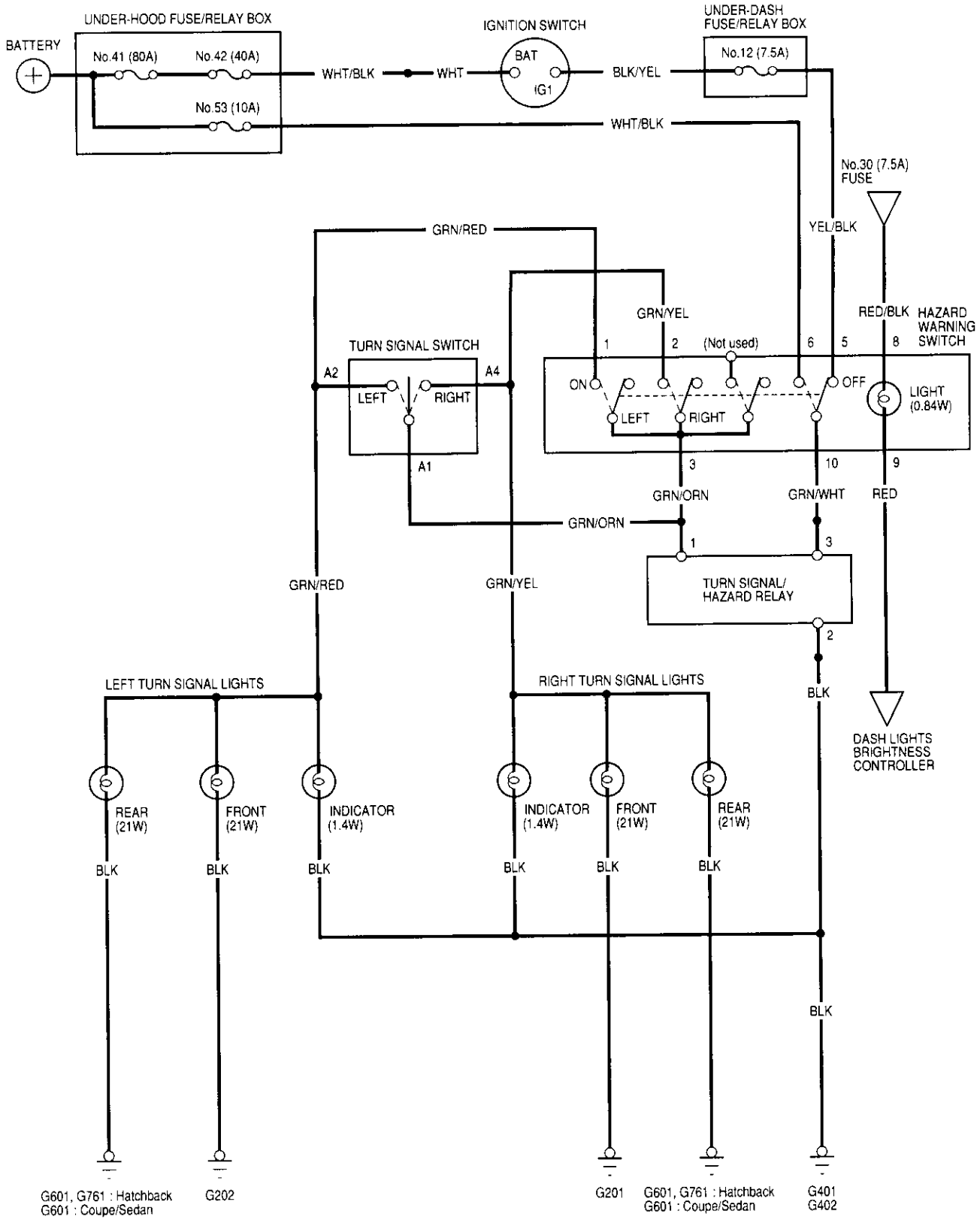

Turn Signal/Hazard Relay Input Test

SRS components are located in this area. Review the SRS component locations, precautions, and procedures in the SRS section (24) before performing repairs or service.

1. Remove the turn signal/hazard relay from the under-dash fuse/relay box.

2. Inspect the relay and fuse/relay box socket terminals to be sure they are all making good contact.

   - If the terminals are bent, loose or corroded, repair them as necessary, and recheck the system.
   - If the terminals look OK, make the following input tests at the fuse/relay box socket.
     — If any test indicates a problem, find and correct the cause, then recheck the system.
     — If all the input tests prove OK, the turn signal/hazard relay must be faulty; replace it.

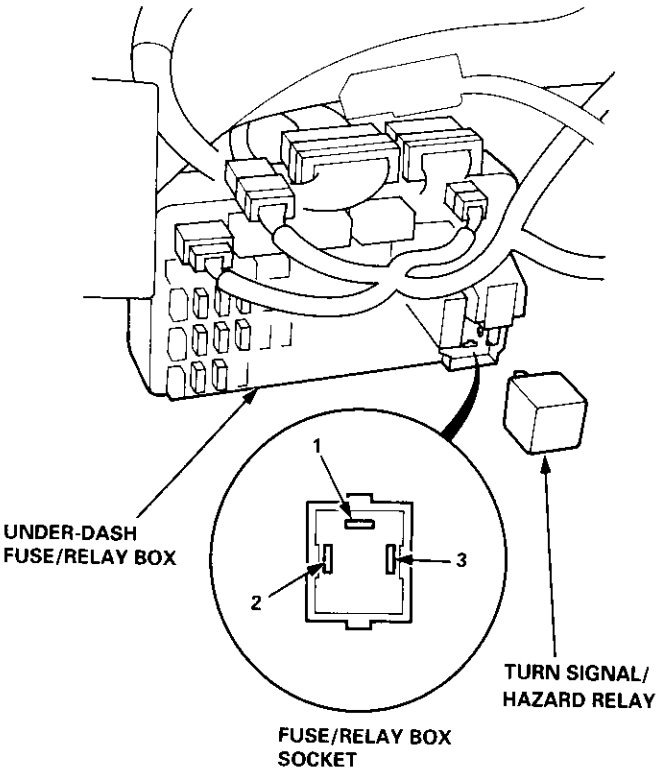

Cavity	Test condition	Test: Desired results	Possible cause if result is not obtained
1	Hazard warning switch ON; connect the No. 1 terminal to the No. 3 terminal.	Hazard lights should come on.	• Poor ground (G201, G202, G401, G402, G551, G552, G601, G761) • Faulty hazard warning switch • An open in the wire
	Ignition switch ON (II) and turn signal switch in right or left; connect the No. 1 terminal to the No. 3 terminal.	Right or left turn signal lights should come on.	• Faulty turn signal switch
2	Under all conditions	Check for continuity to ground: There should be continuity.	• Poor ground (G401, G402) • An open in the wire
3	Ignition switch ON (II)	Connect for voltage to ground: There should be battery voltage.	• Blown No. 12 (7.5 A) fuse in the under-dash fuse/relay box • Faulty hazard warning switch • An open in the wire
	Hazard warning switch ON	Connect for voltage to ground: There should be battery voltage.	• Blown No. 53 (10 A) fuse in the under-hood fuse/relay box • Faulty hazard warning switch • An open in the wire

Hazard Warning Switch Test

CAUTION: Be careful not to damage the hazard warning switch or the center outlet panel when prying the switch out.

'96 – 98 models:

1. Pry the hazard warning switch out of the center outlet panel.
2. Disconnect the 10P connector from the hazard warning switch.
3. Check for continuity between the terminals in each switch position according to the table.

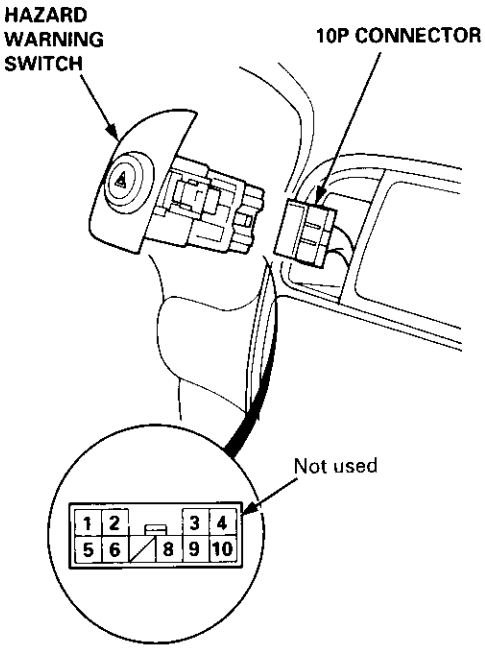

Terminal / Position	1	2	3	4	5	6	8		9	10
OFF					○		○	⊗	○	○
ON	○	○	○	○		○	○	⊗	○	○

Terminal No. 4 is not used.

'99 – 00 models:

1. Remove the center panel (see section 20).
2. Remove the two screws, then remove the switch from the center panel.

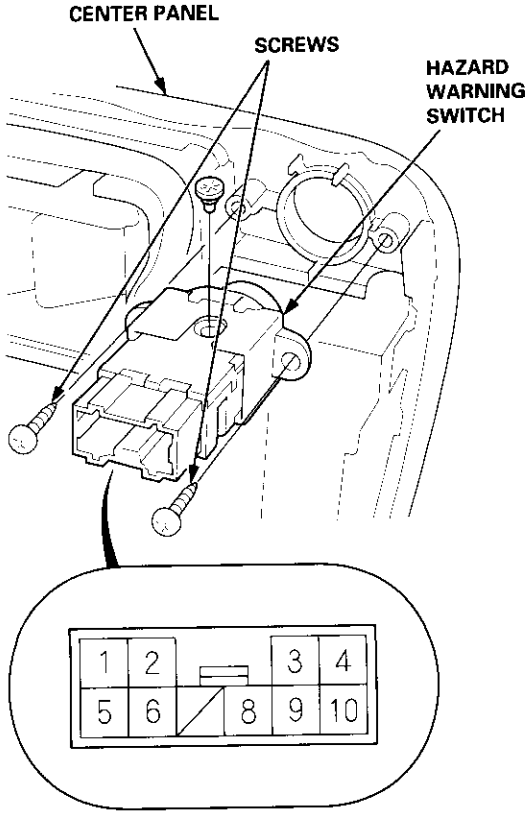

3. Check for continuity between the terminals in each switch position according to the table.

License Plate Lights

Replacement

'96 – 98 Sedan/Coupe:

1. Remove the two screws from the license plate light, and pull the light out part of the way.
2. Disconnect the 2P connector from the light.
3. Take the lens off, then replace the bulb.

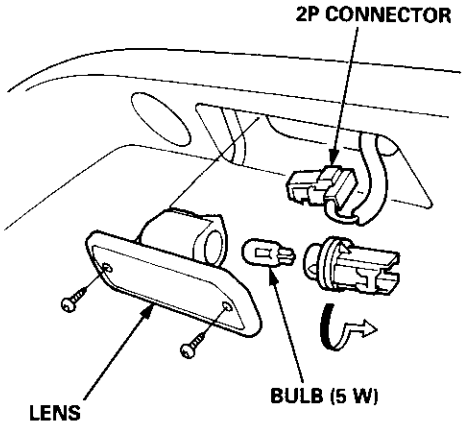

Hatchback/'99 – 00 Sedan:

1. Carefully pry the licence plate light out of the license plate trim.
2. Disconnect the 2P connector from the light.

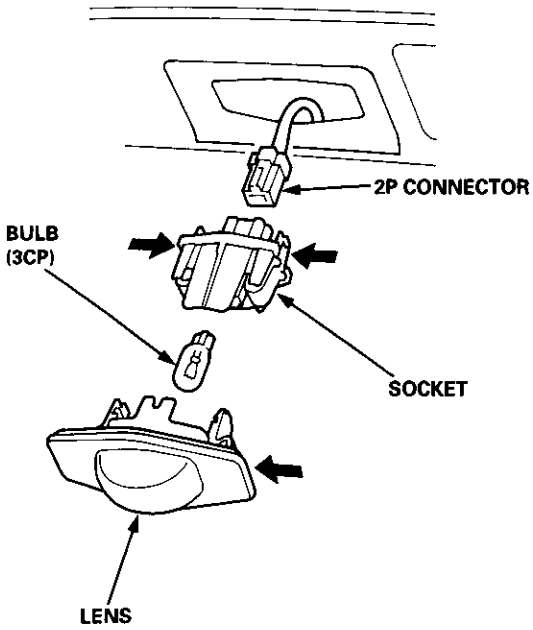

Circuit Diagram

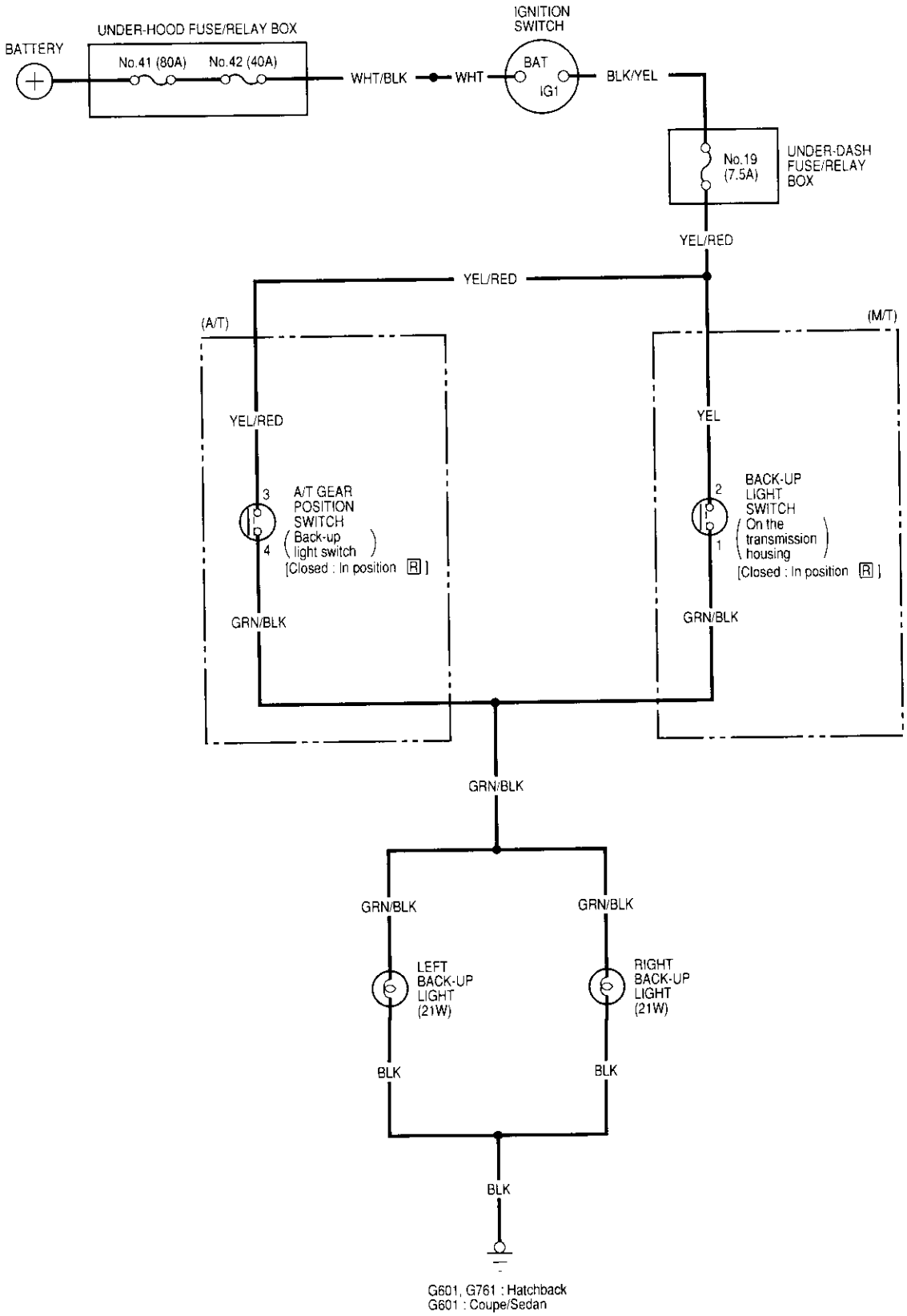

Brake Lights

Circuit Diagram

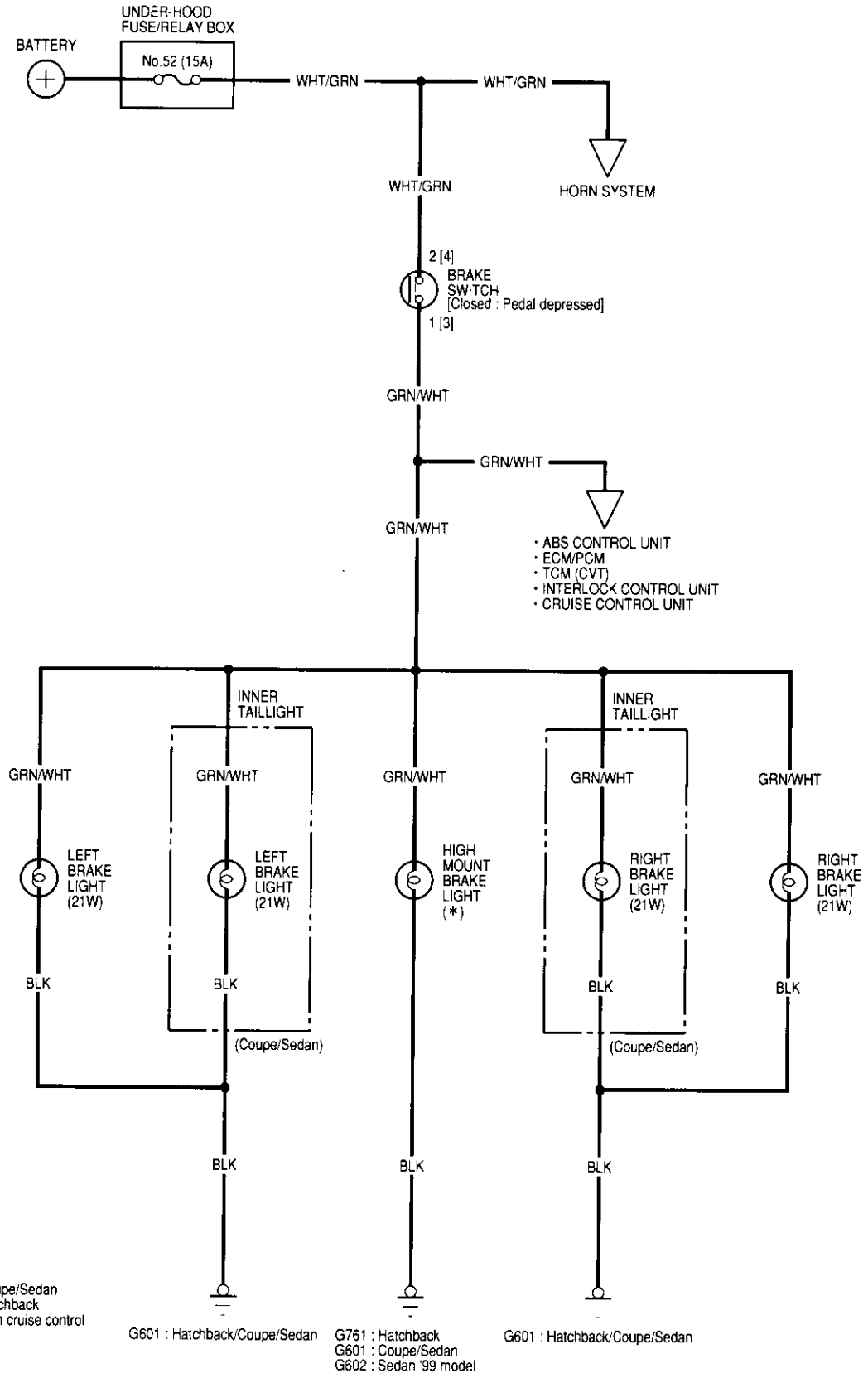

High Mount Brake Light Replacement

Hatchback:

1. Loosen the two screws, then remove the high mount brake light. Be careful not to damage the hatch spoiler.

2. Remove the bulb socket from the light.

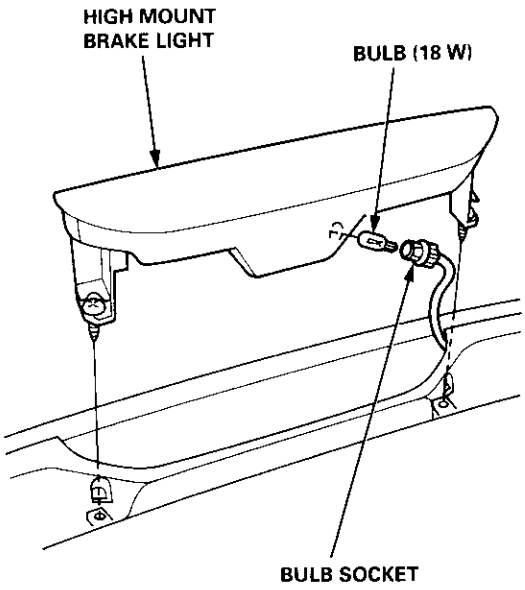

Coupe/Sedan:

1. Remove the rear shelf (see section 20).

2 Remove the two screws, then remove the high mount brake light from the rear shelf.

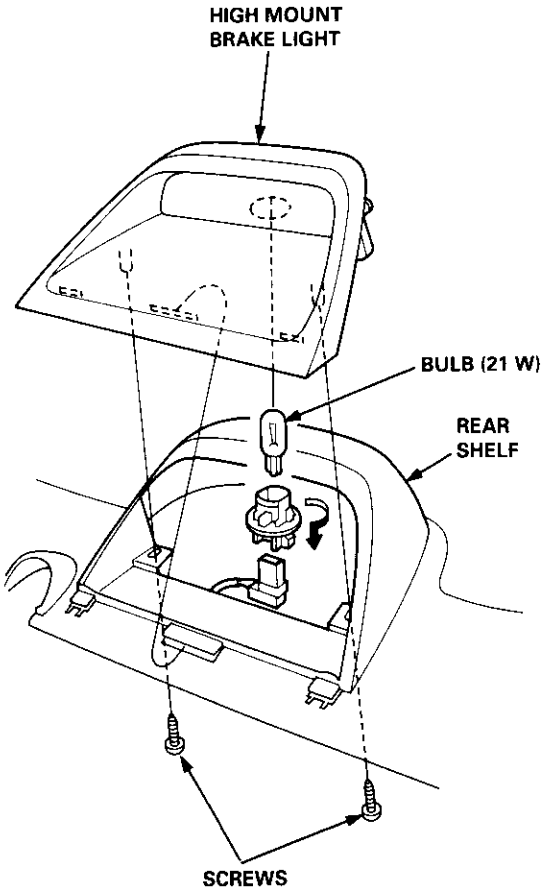

Dash Lights Brightness Controller

Circuit Diagram

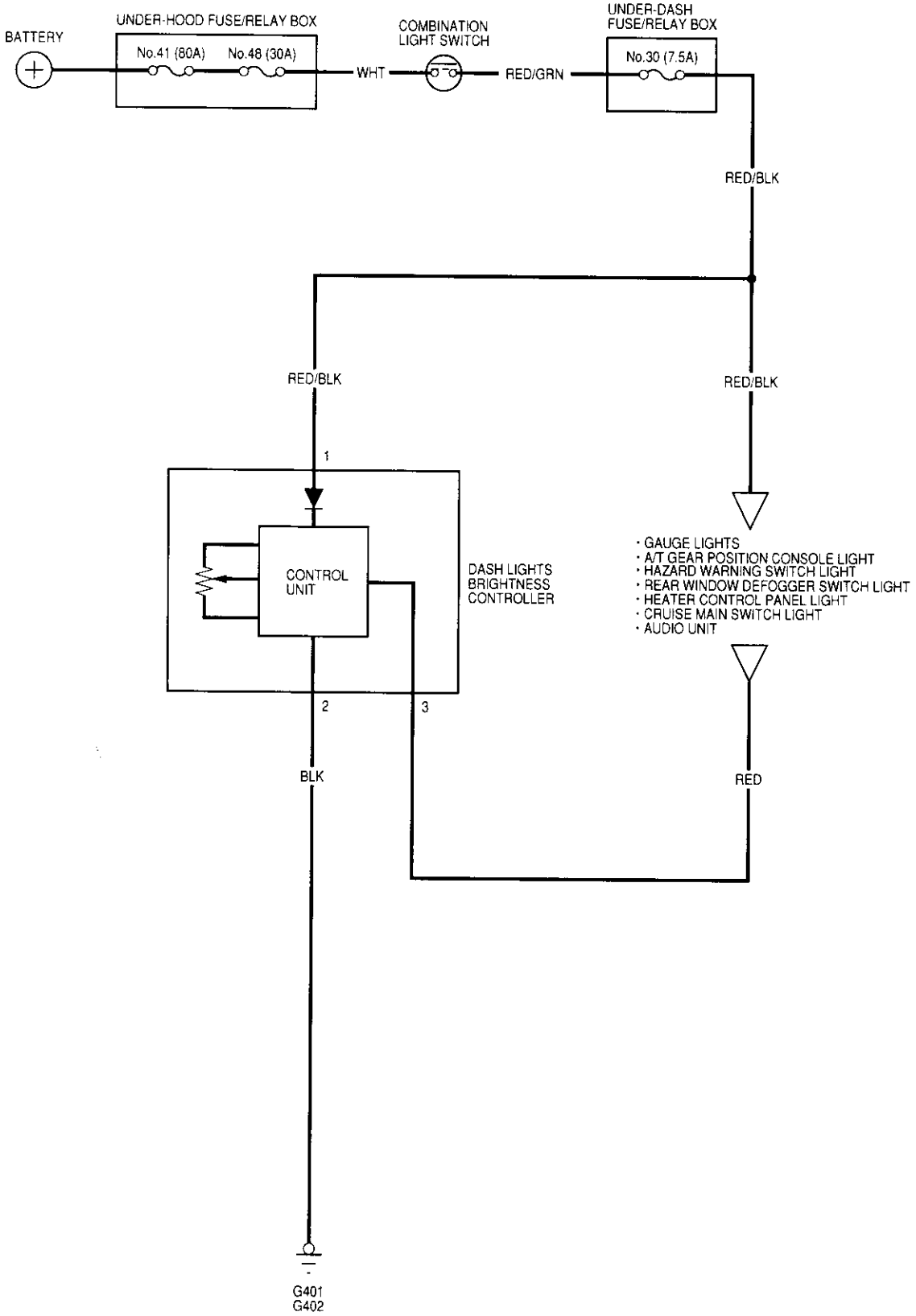

Controller Input test

NOTE: The control unit is built into the dash lights brightness controller.

1. Carefully pry the controller out of the dashboard.
2. Disconnect the 3P connector from the controller.
3. Inspect the connector terminals to be sure they are all making good contact.
   - If the terminals are bent, loose, or corroded, repair them as necessary, and recheck the system.
   - If the terminals look OK, make the following input tests at the connector.
     — If any test indicates a problem, find and correct the cause, then recheck the system.
     — If all the input tests prove OK, the controller must be faulty; replace it.

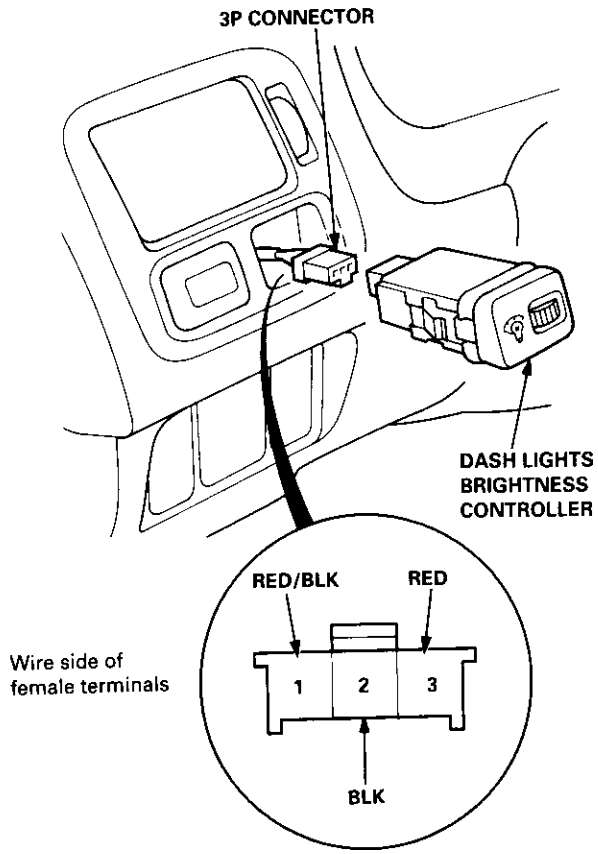

Cavity	Wire	Test condition	Test: Desired results	Possible cause if result is not obtained
1	RED/BLK	Combination light switch ON	Check for voltage to ground: There should be battery voltage.	• Blown No. 30 (7.5 A) fuse in the under-dash fuse/relay box • Faulty combination light switch • An open in the wire
2	BLK	Under all conditions	Check for continuity to ground: There should be continuity.	• Poor ground (G401, G402) • An open in the wire
3	RED	Combination light switch ON	Connect to ground: Dash lights should come on full bright.	• An open in the wire

Component Location Index

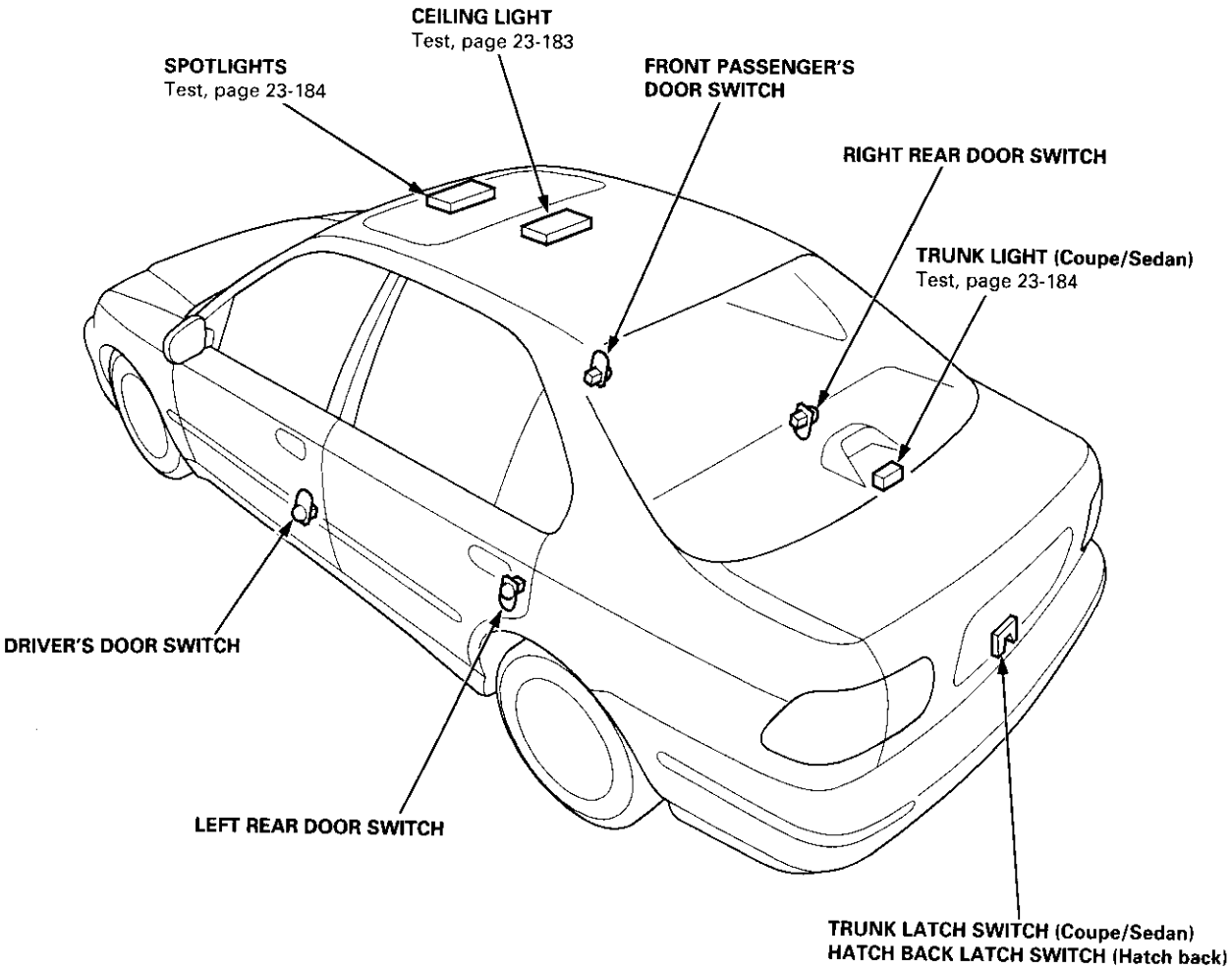

Circuit Diagram (Without Spotlights)

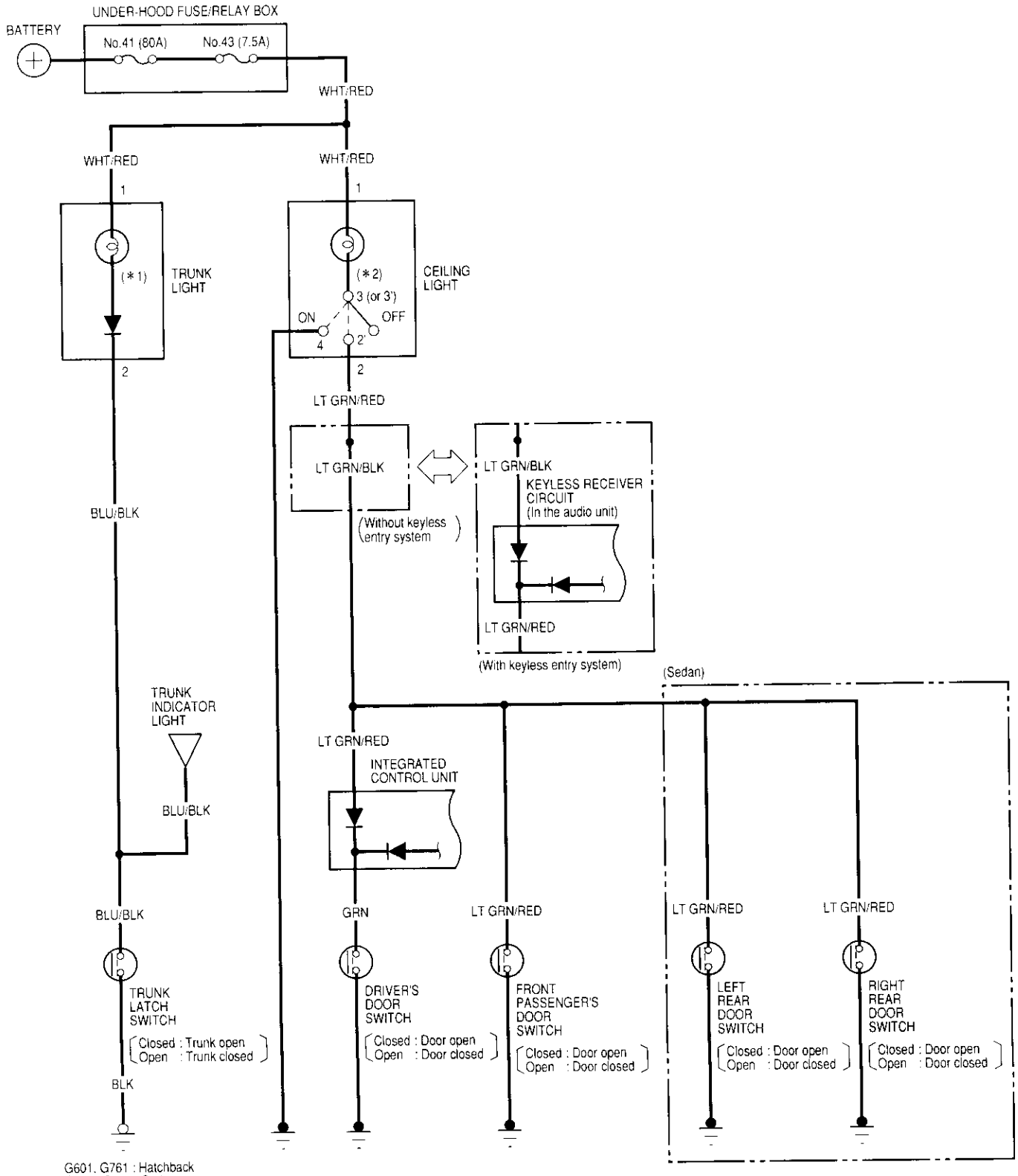

G601, G761 : Hatchback
G601 : Coupe/Sedan

*1 3.4W : USA , Canada-produced
5W : Japan-produced
*2 8W : With moonroof
5W : Without moonroof

Circuit Diagram (With Spotlights)

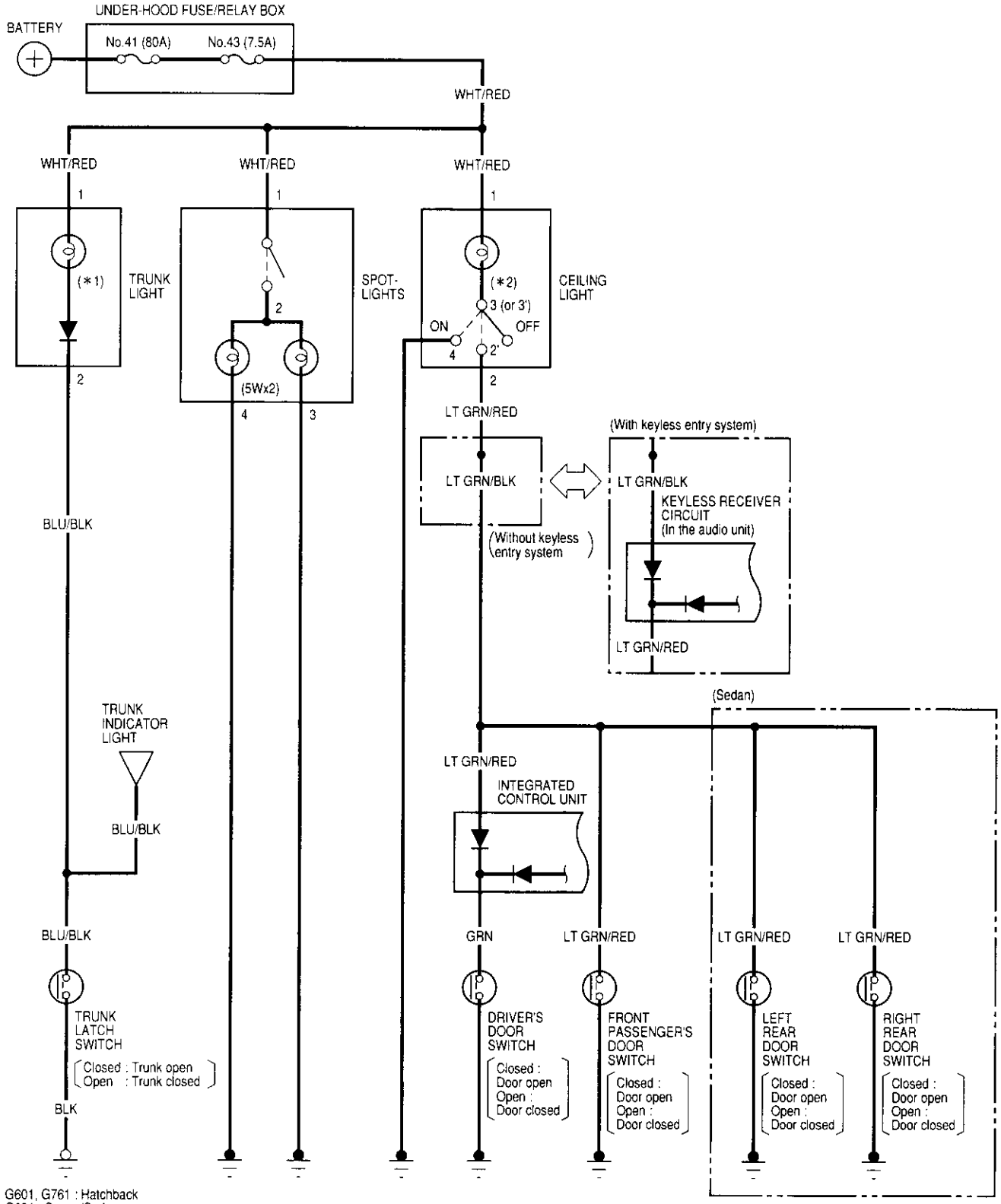

G601, G761 : Hatchback
G601 : Coupe/Sedan

*1 3.4W : USA , Canada-produced
5W : Japan-produced
*2 8W : With moonroof
5W : Without moonroof

Ceiling Light Test

1. Turn the light switch OFF.
2. Pry off the lens.
3. Remove the two mounting nuts (or a bolt) from the housing, then remove the housing.
4. Disconnect the connector(s) from the housing.
5. Check for continuity between the terminals in each switch position according to the table.

Terminal / Position	1		2 or 2′	3 or 3′	4
OFF	○	⊖		○	
MIDDLE	○	⊖	○	○	
ON	○	⊖		○	○

With moonroof:

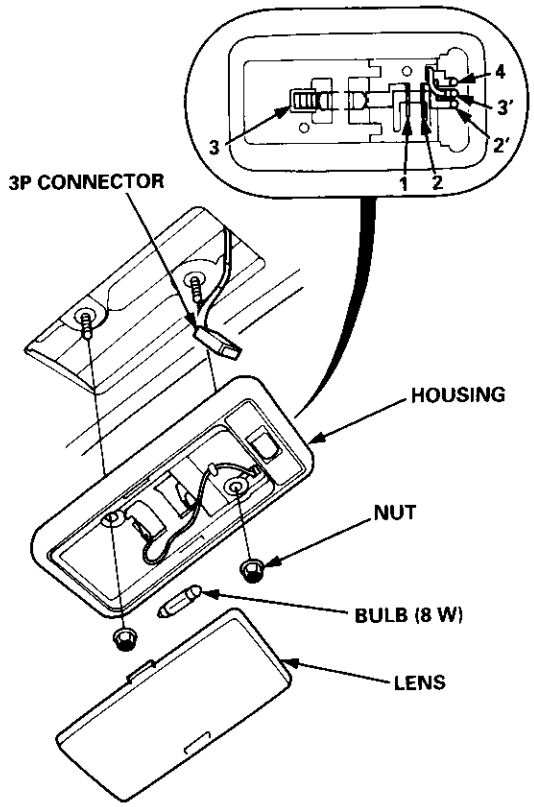

Without moonroof:

Coupe/Hatchback:

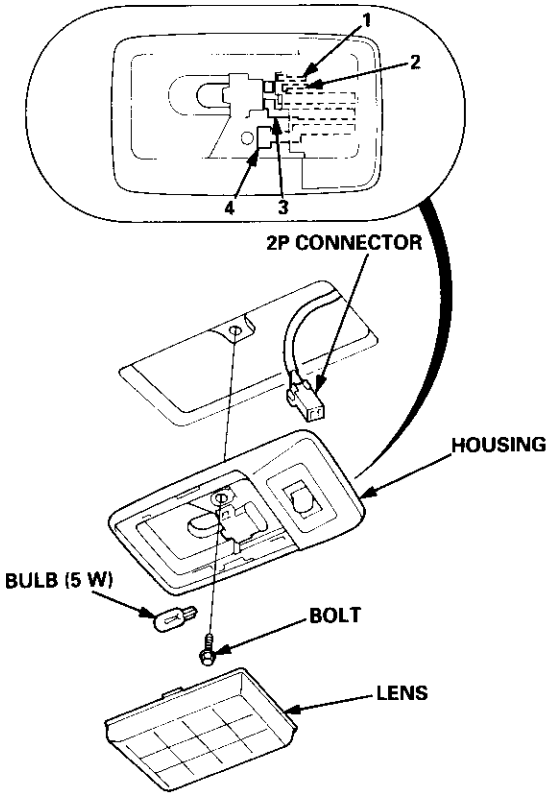

Sedan:

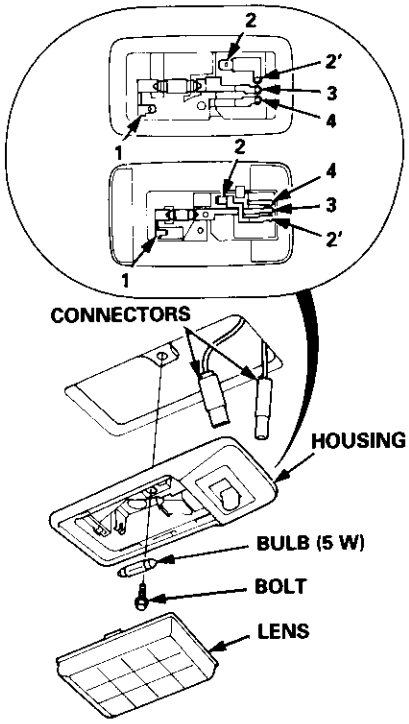

Spotlights Test

1. Turn the spotlight switch OFF.
2. Pry off the lens.
3. Remove the two screws and the housing.
4. Disconnect the 1P connector from the housing.
5. Check for continuity between the terminals in each switch position according to the table.

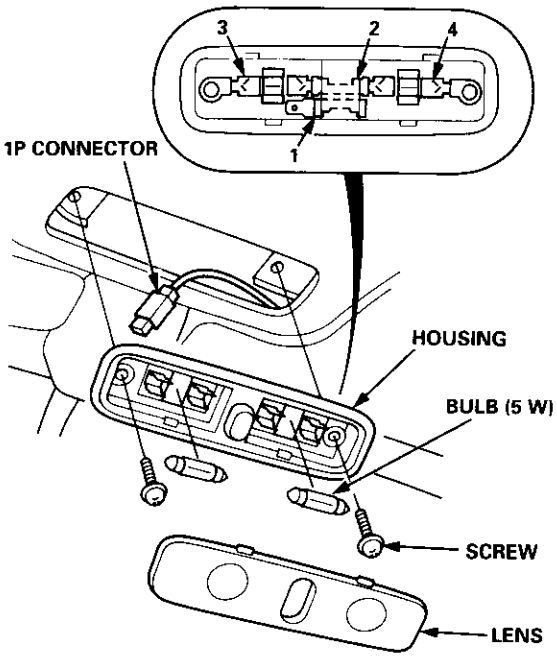

Terminal / Position	1	2		3	4
OFF					
ON					

Trunk Light Test

1. Open the trunk light cover from the housing.
2. Pry out the light assembly.
3. Disconnect the 2P connector from the housing.
4. Make sure that the bulb is OK. Check for continuity between the No. 1 (+) and No. 2 (–) terminals.

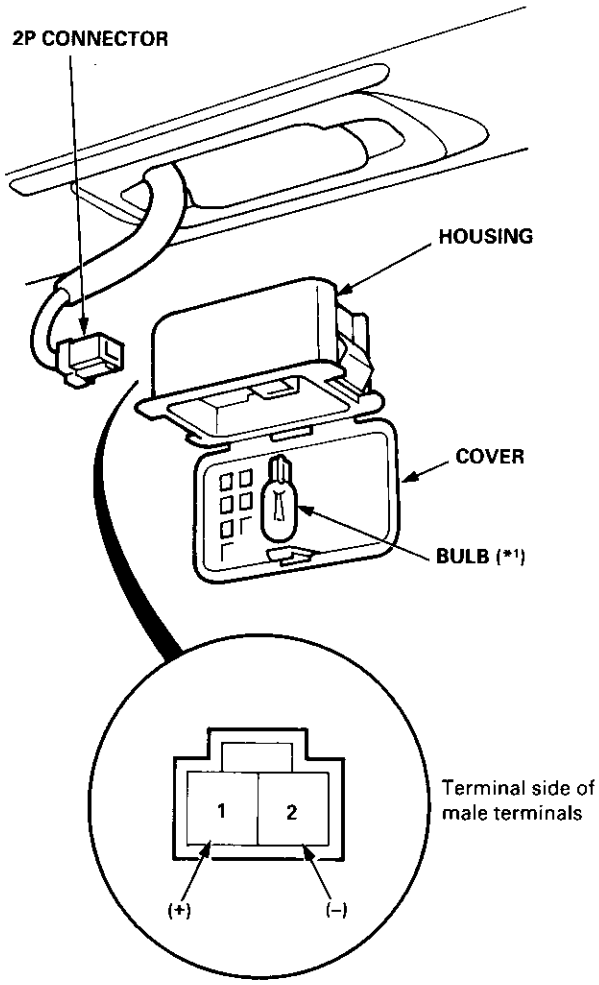

*1 3.4 W: USA, Canada-produced
5 W: Japan-produced

Component Location Index

SRS components are located in this area. Review the SRS component locations, precautions, and procedures in the SRS section (24) before performing repairs or service.

'96 – 98 models

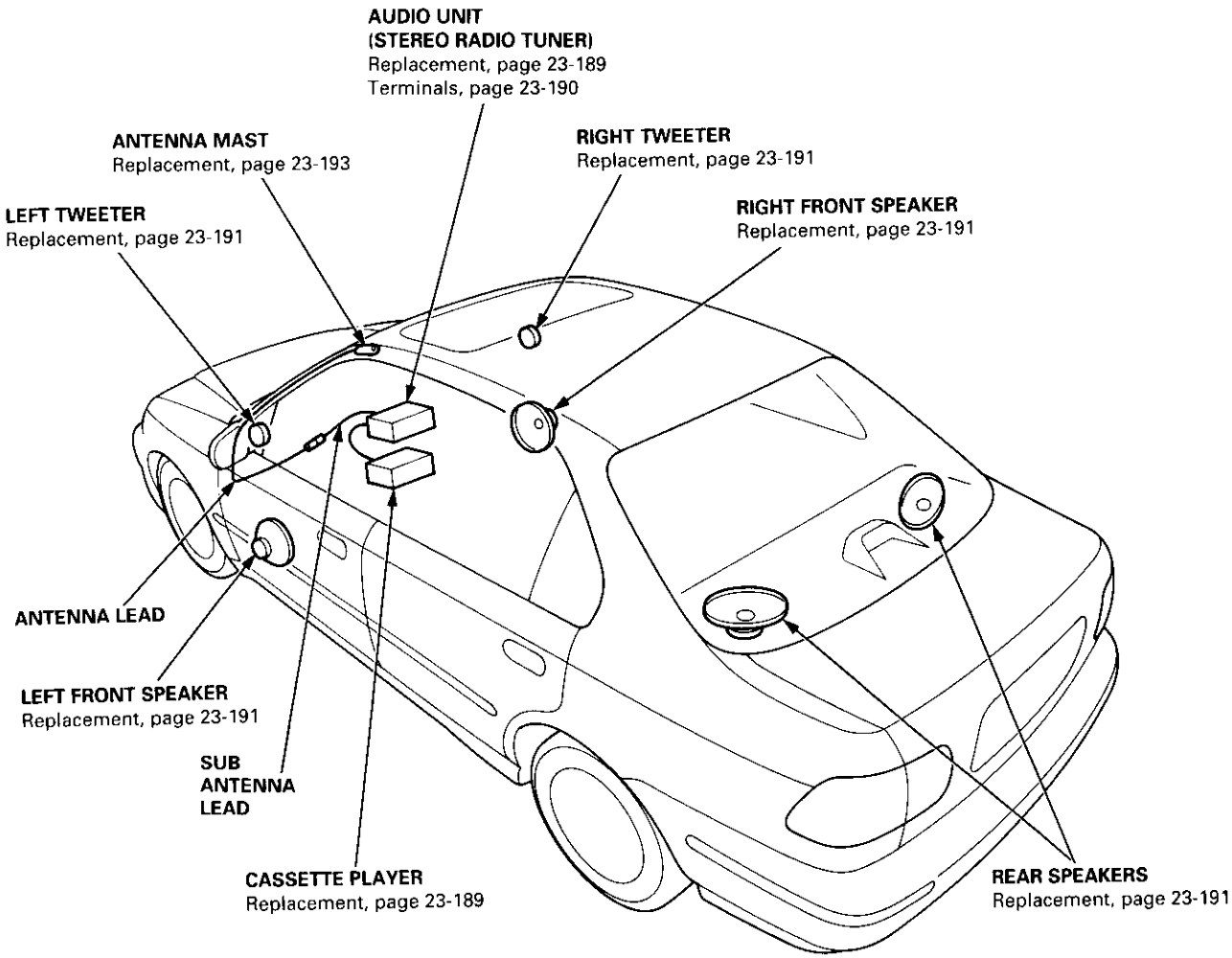

(cont'd)

Component Location Index (cont'd)

SRS components are located in this area. Review the SRS component locations, precautions, and procedures in the SRS section (24) before performing repairs or service.

'99 – 00 models

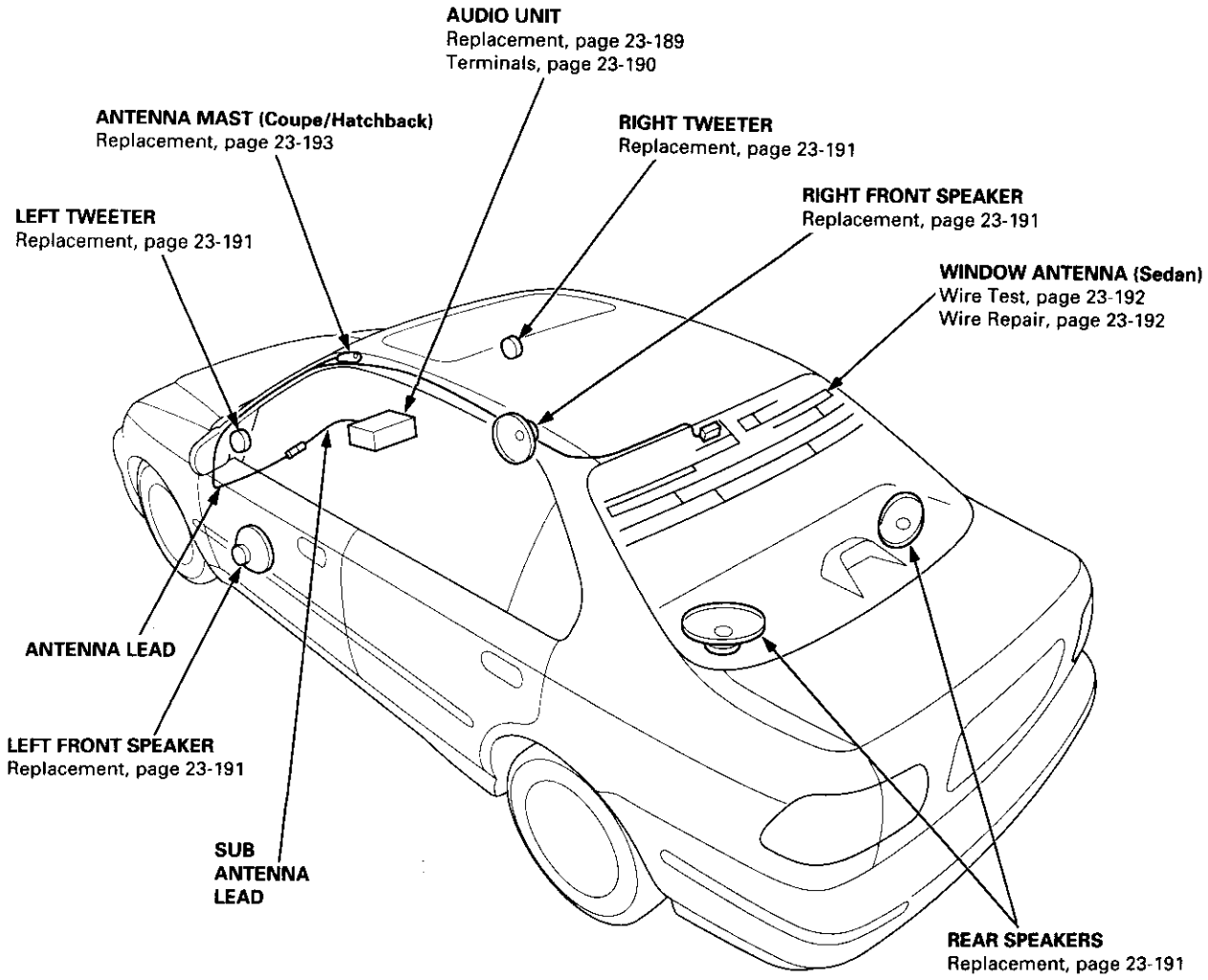

Circuit Diagram ('96 – 98 models)

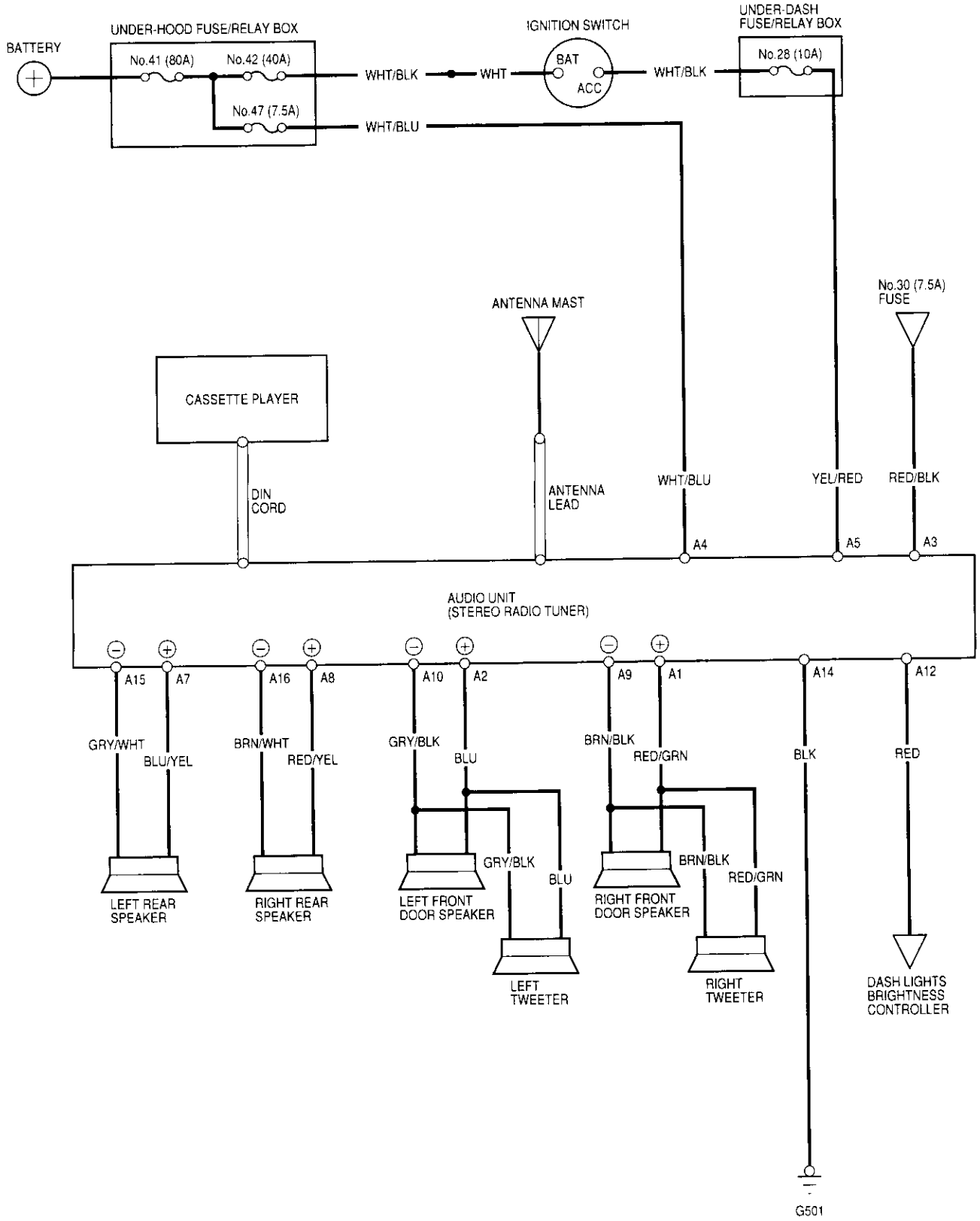

Circuit Diagram ('99 – 00 models)

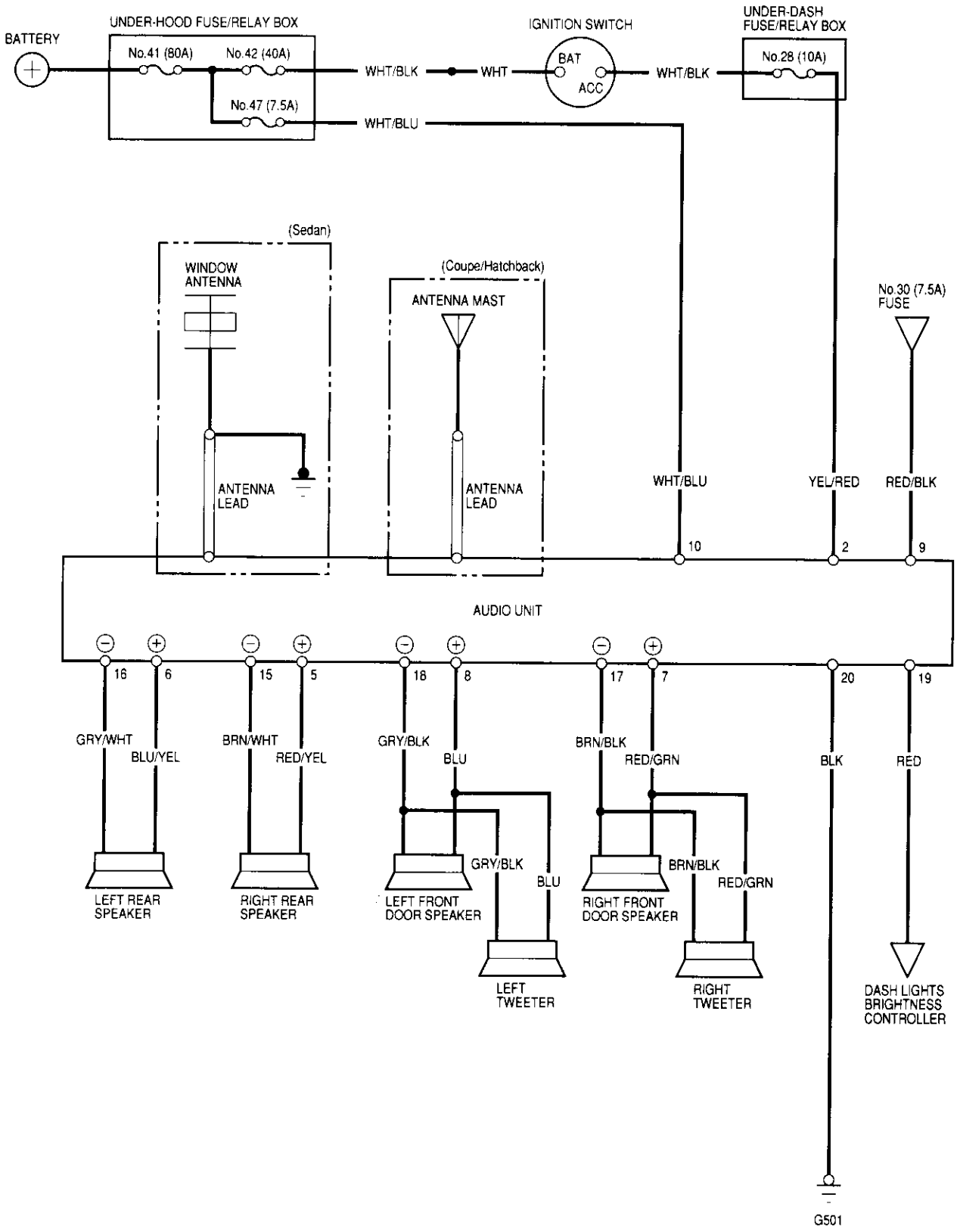

Removal

Stereo Radio Tuner ('96 – 98 models):

1. Remove the center dashboard lower cover (see section 20).
2. Remove the two mounting bolts, and pull the stereo radio tuner out.
3. Disconnect the 16P connectors, sub antenna lead and DIN cord (with cassette player), then remove the stereo radio tuner.

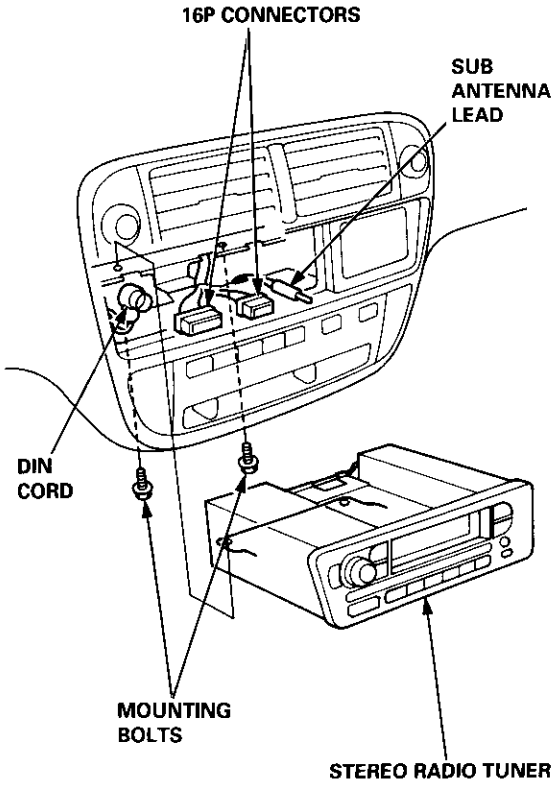

Cassette Player ('96 – 98 models):

1. Remove the front console panel (see section 20).
2. Remove the DIN cord from the stereo radio tuner.
3. Remove the four mounting bolts, then remove the cassette player.

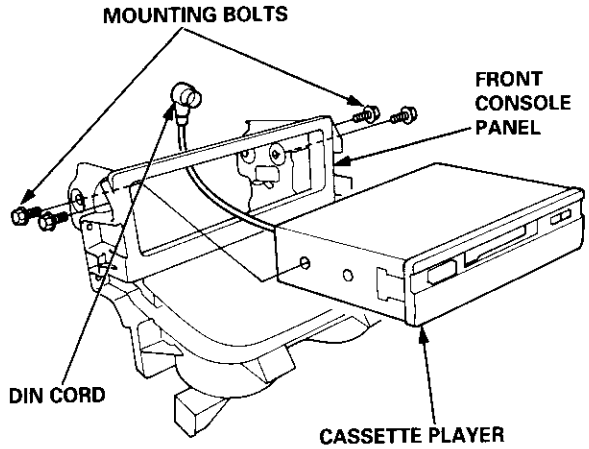

Stereo Radio/Cassette Player ('99 – 00 models):

1. Make sure you have the anti-theft code for the radio, then write down the frequencies for the radio's preset buttons.
2. Remove the center panel (see section 20).
3. Remove the four mounting screws, and disconnect the 20P connector and antenna lead, then remove the stereo radio/cassette player.

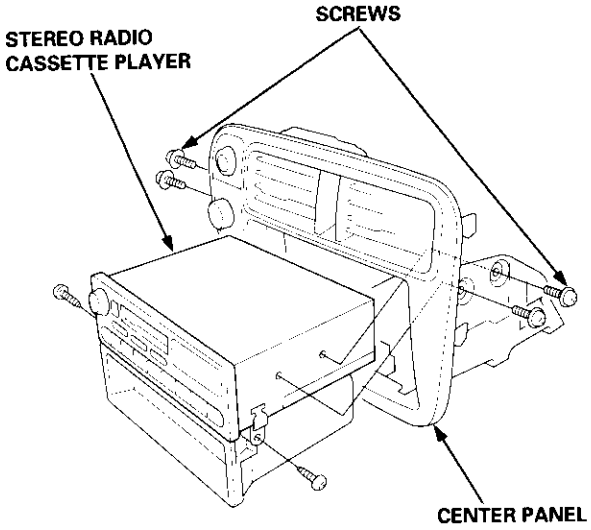

4. Enter the anti-theft code for the radio, then enter the customer's radio station presets.

Stereo Radio Tuner Terminals

'96 – 98 models:

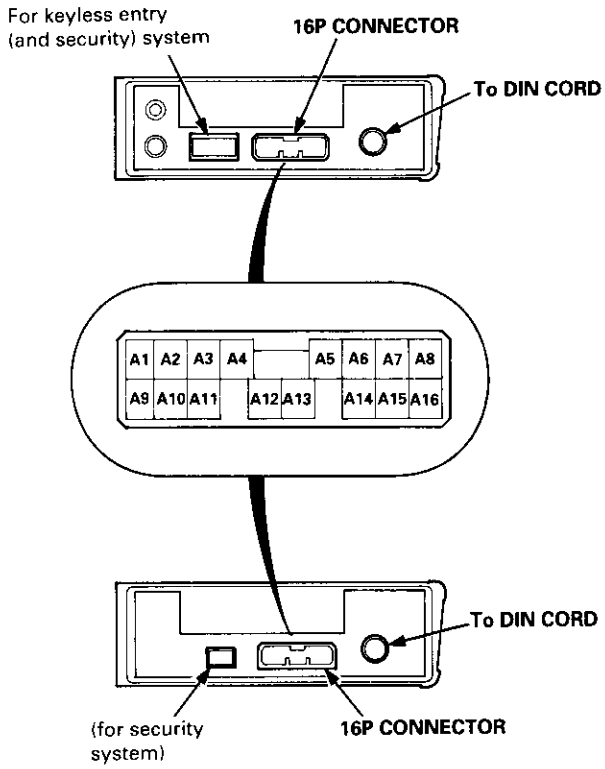

Cavity	Wire	Connects to
A1	RED/GRN	Right front door speaker ⊕, right tweeter ⊕
A2	BLU	Left front door speaker ⊕, left tweeter ⊕
A3	RED/BLK	Lights-on signal
A4	WHT/BLU	Constant power (tuning memory)
A5	YEL/RED	ACC (main stereo power supply)
A7	BLU/YEL	Left rear speaker ⊕
A8	RED/YEL	Right rear speaker ⊕
A9	BRN/BLK	Right front door speaker ⊖, right tweeter ⊖
A10	GRY/BLK	Left front door speaker ⊖, left tweeter ⊖
A12	RED	Dash lights brightness controller
A14	BLK	Ground (G501)
A15	GRY/WHT	Left rear speaker ⊖
A16	BRN/WHT	Right rear speaker ⊖

Terminals A6, A11 and A13: Not used

'99 – 00 models:

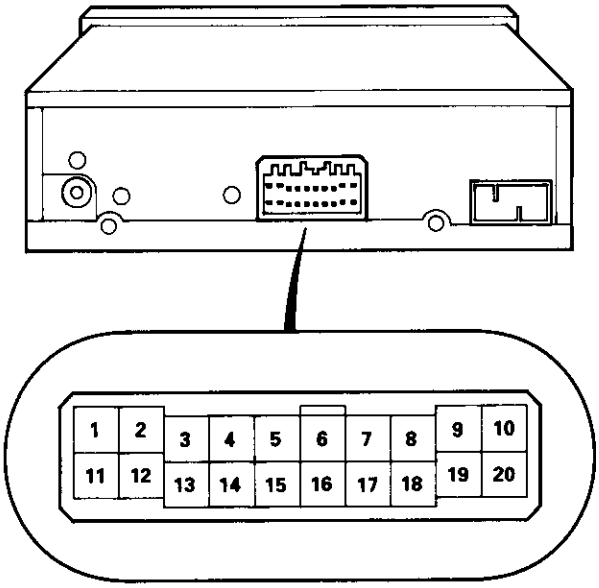

Cavity	Wire	Connects to
2	YEL/RED	ACC (main stereo power supply)
5	RED/YEL	Right rear speaker ⊕
6	BLU/YEL	Left rear speaker ⊕
7	RED/GRN	Right front door speaker ⊕, right tweeter ⊕
8	BLU	Left front door speaker ⊕, left tweeter ⊕
9	RED/BLK	Lights-on signal
10	WHT/BLU	Constant power (tuning memory)
15	BRN/WHT	Right rear speaker ⊖
16	GRY/WHT	Left rear speaker ⊖
17	BRN/BLK	Right front door speaker ⊖, right tweeter ⊖
18	GRY/BLK	Left front door speaker ⊖, left tweeter ⊖
19	RED	Dash lights brightness controller
20	BLK	Ground (G501)

Terminals No. 1, 3, 4, 11, 12, 13, and 14: Not used

Speaker Replacement

Front speaker:

1. Remove the speaker cover.
2. Remove the three screws from the speaker.
3. Disconnect the 2P connector, and remove the door speaker.

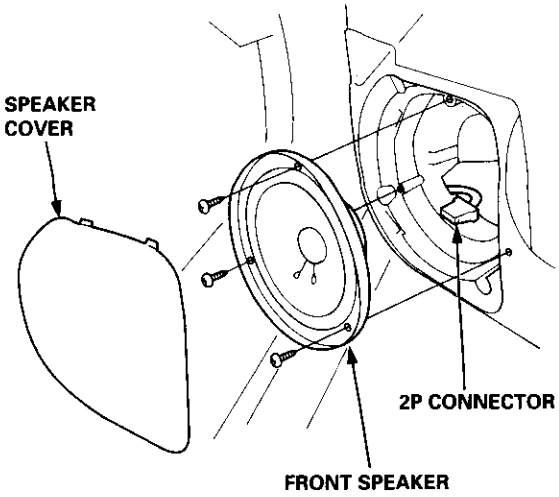

Tweeter:

1. Remove the door panel (see section 20).
2. Disconnect the 2P connector from the tweeter.
3. Remove the mirror garnish.
4. Remove the two screws, then remove the tweeter.

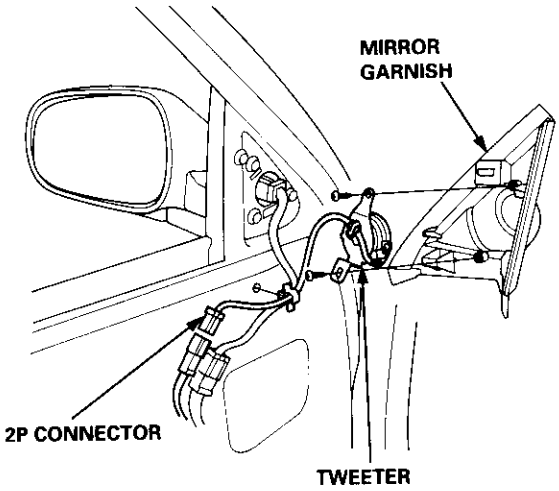

Rear speaker:

1. Remove the rear side shelf or rear shelf (see section 20).
2. Disconnect the 2P connector from the speaker.
3. Remove the four screws, then remove the speaker.

Hatchback:

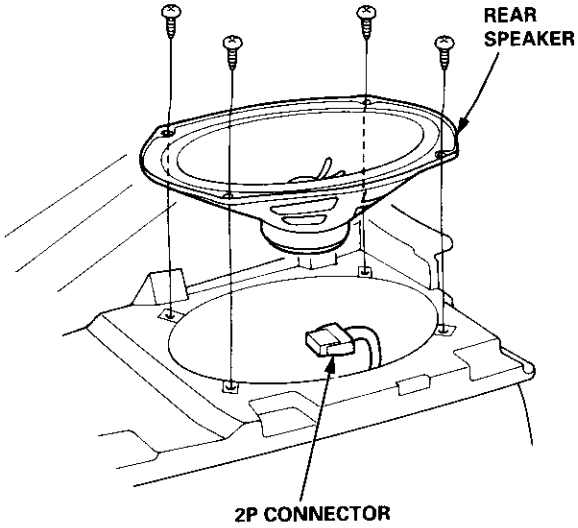

Coupe/Sedan:

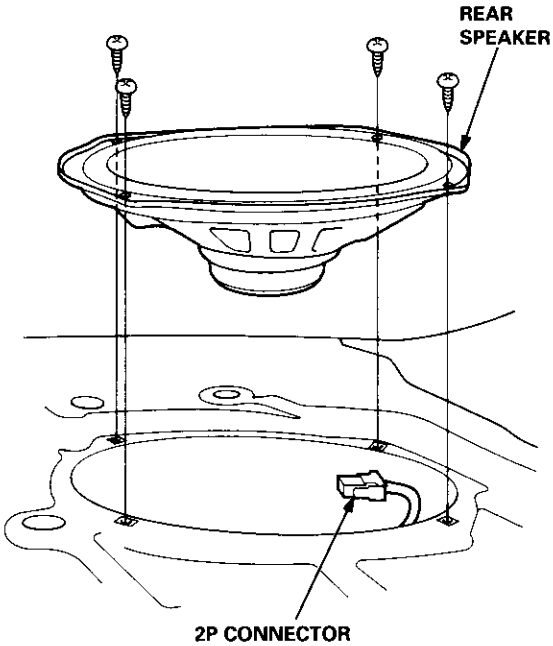

Window Antenna Wire Test

1. Wrap aluminum foil around the tip of the tester probe as shown.

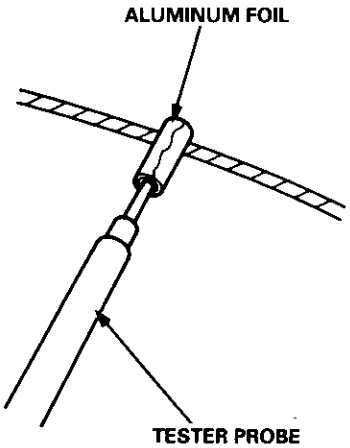

2. Touch one tester probe to the window antenna terminal near, and move the other tester probe along the antenna wires to check that continuity exists.

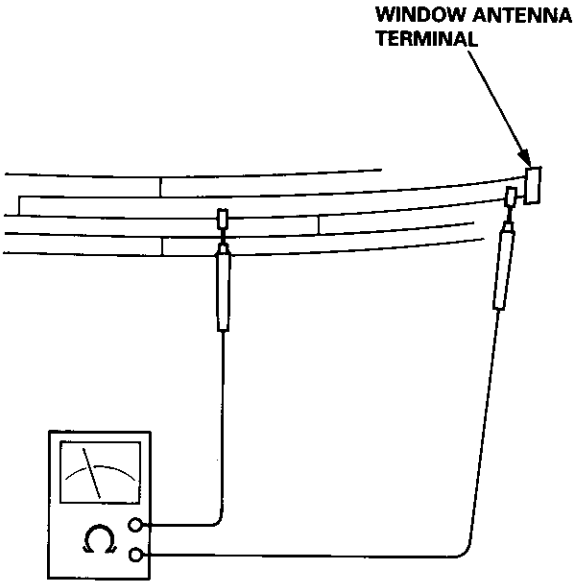

Window Antenna Wire Repair

NOTE: To make an effective repair, the broken section must be no longer than one inch.

1. Lightly rub the area around the broken section with fine steel wool, then clean it with alcohol.

2. Carefully mask above and below the broken portion of the window antenna wire with cellophane tape.

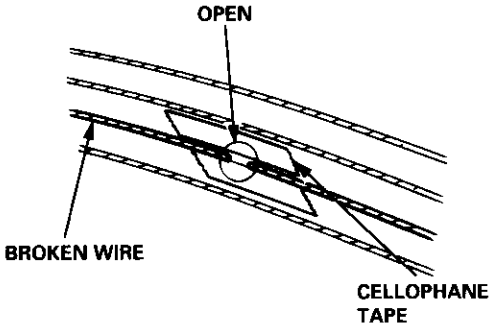

3. Using a small brush, apply a heavy coat of silver conductive paint extending about 1/8" on both sides of the break. Allow 30 minutes to dry.

   NOTE: Thoroughly mix the paint before use.

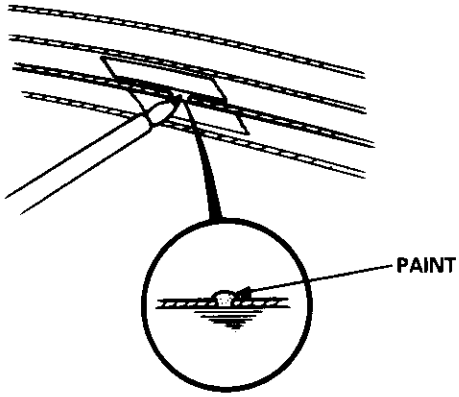

4. Check for continuity in the repaired wire.

5. Apply a second coat of paint in the same way. Let it dry three hours before removing the tape.

Window Antenna Coil Test

1. Remove the rear shelf (see section 20).
2. Disconnect the 2P and 1P connectors from the window antenna coil.

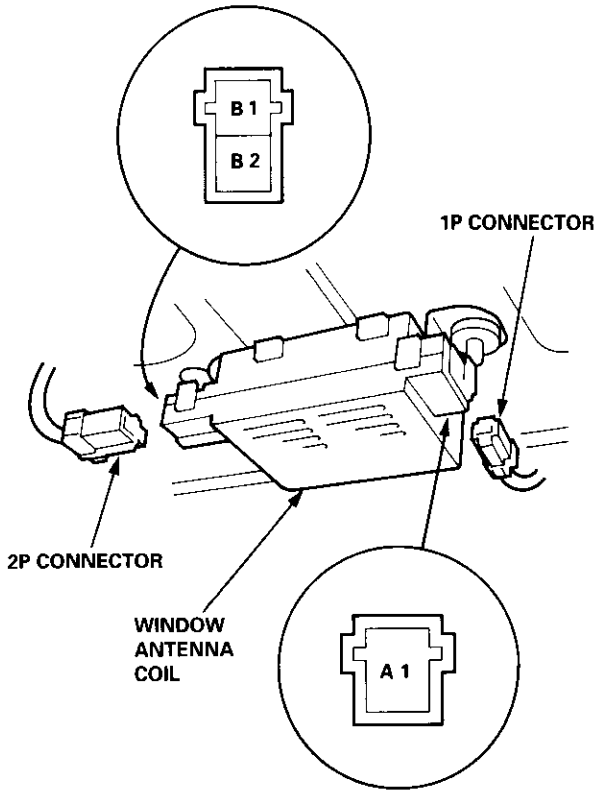

3. Check for continuity between terminal A1 and body ground and between terminals A1 and B1.
   If there is no continuity at either check, replace the window antenna coil.

Mast Antenna Replacement

1. Disconnect the connector between the antenna lead and sub antenna lead.
2. Remove the two mounting screws, then remove the mast antenna.

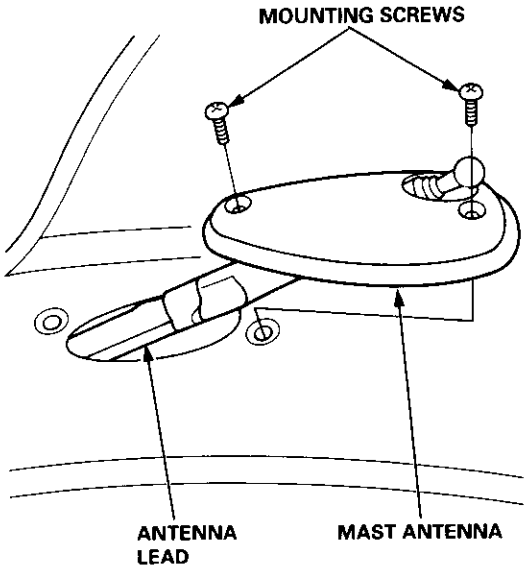

Component Location Index

SRS components are located in this area. Review the SRS component locations, precautions, and procedures in the SRS section (24) before performing repairs or service.

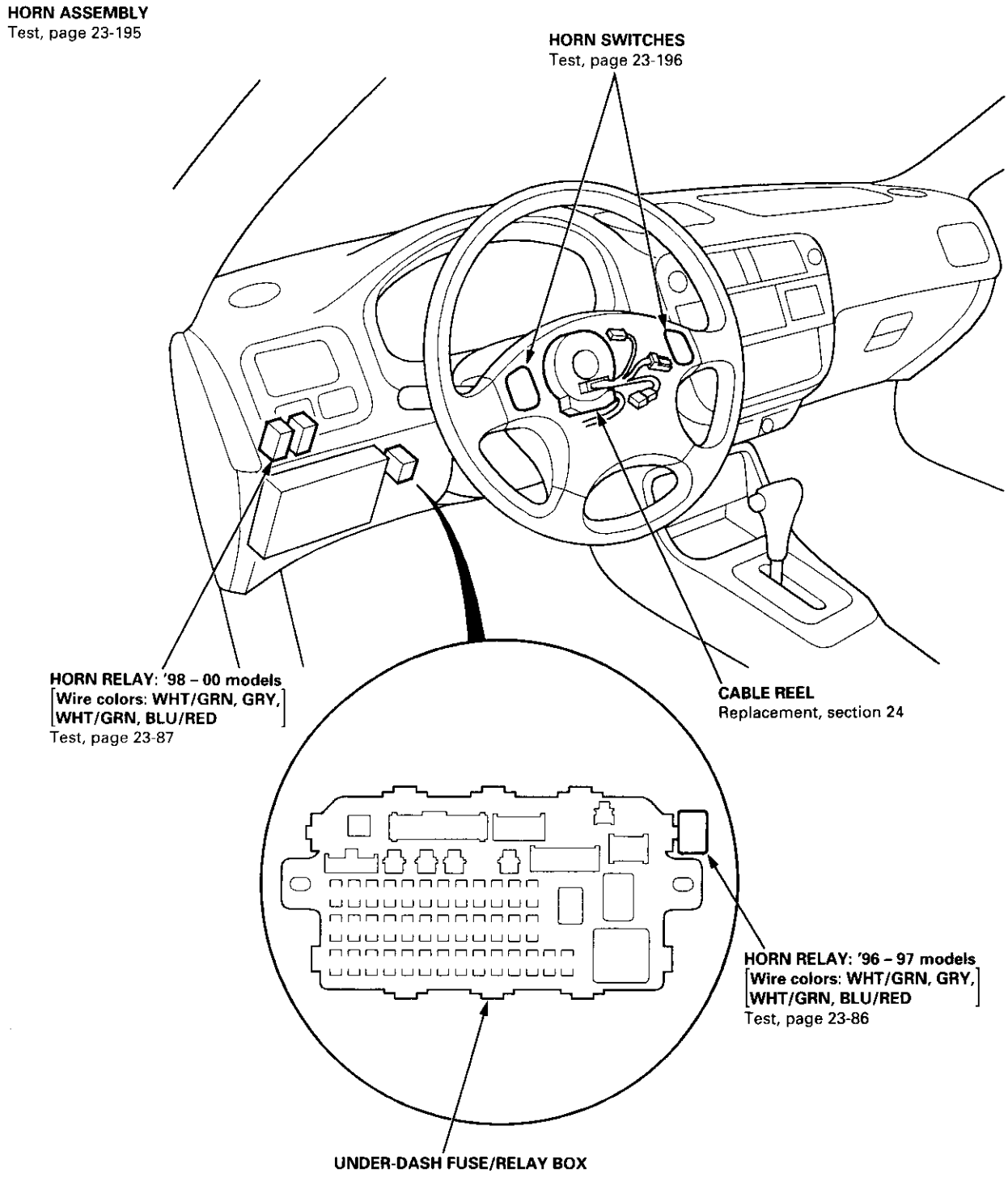

Circuit Diagram: '96 – 97 models

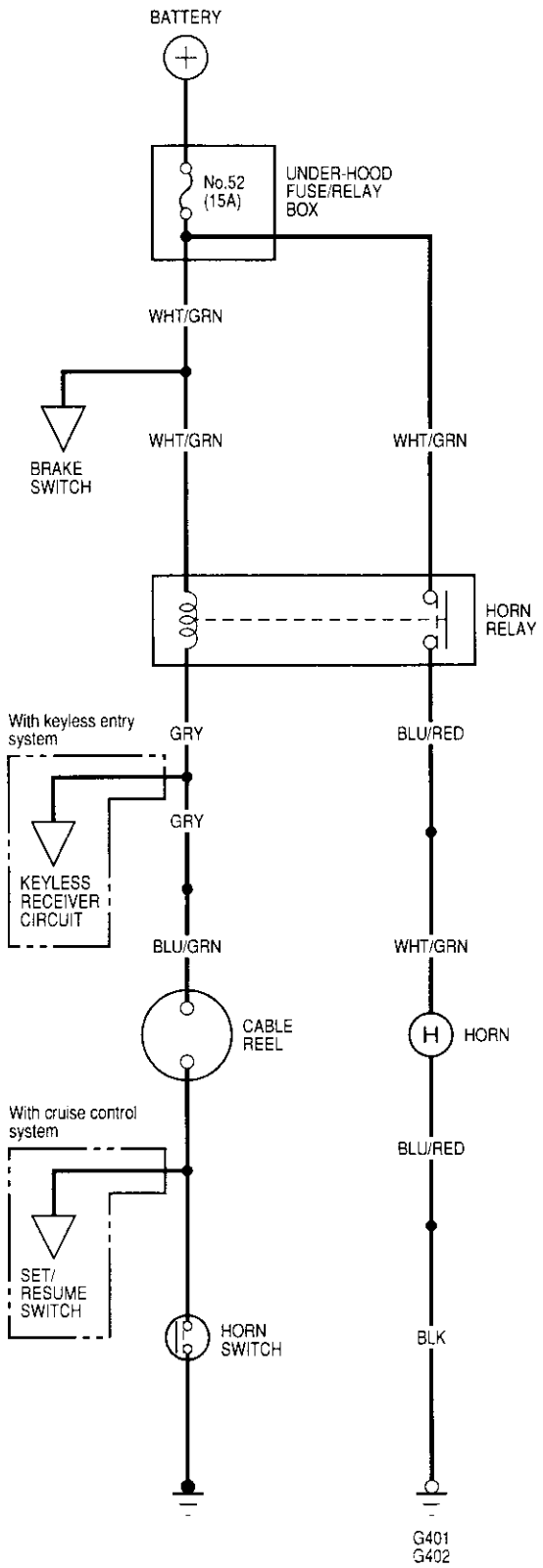

Horn Test: '96 – 97 models

1. Remove the front bumper (see section 20).
2. Disconnect the 2P connector from the horn.

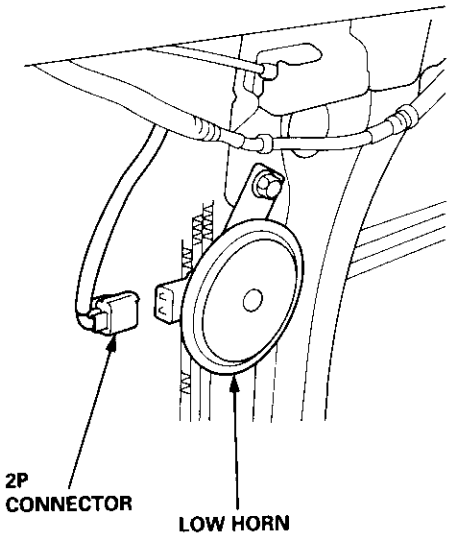

3. Remove the horn.
4. Test the horn by connecting battery power to one terminal and grounding the other. If the horn fails to sound, replace it.

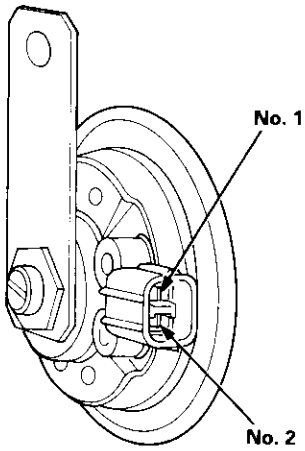

Circuit Diagram: '98 – 00 models

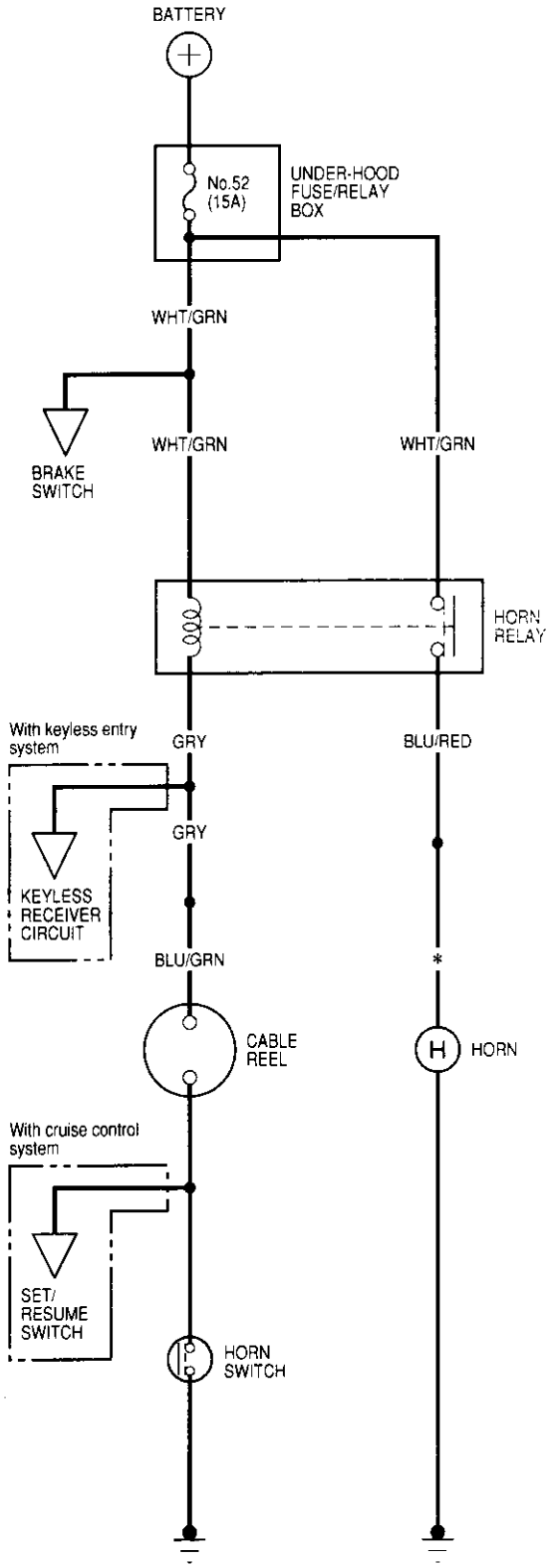

*** '98 model: WHT/GRN**
'99 – 00 models: BLU/RED

Horn Test: '98 – 00 models

1. Remove the front bumper (see section 20).
2. Disconnect the 1P connector from the horn.

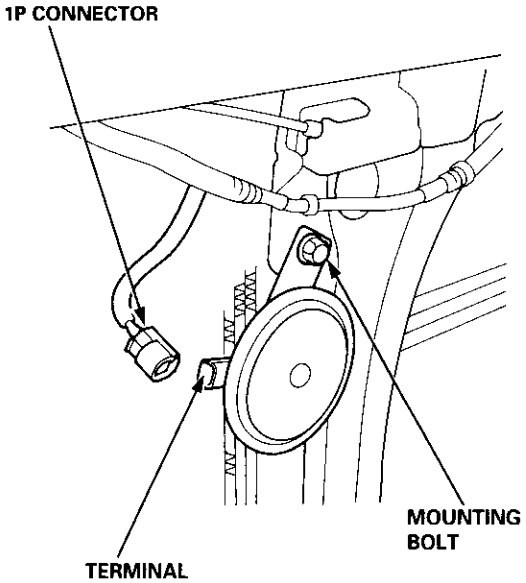

3. Test the horn by connecting battery power to the terminal and grounding the mounting bolt. If the horn fails to sound, replace it.

Switch Test

1. Make sure you have the anti-theft code for the radio, then write down the frequencies for the radio's preset buttons ('99 – 00 models).

2. Disconnect the battery negative cable, then disconnect the positive cable, and wait at least three minutes.

3. Disconnect the driver's airbag connector (see section 24).

4. Remove the driver's dashboard lower cover (see section 20).

5. Disconnect the cable reel sub-harness 3P connector from the main wire harness.

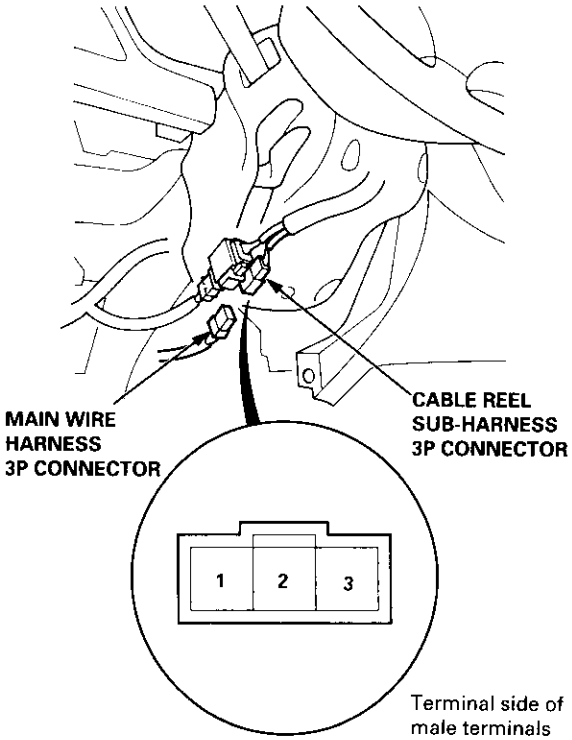

6. Check for continuity between the No. 2 terminal of the cable reel sub-harness and body ground with the horn switch pressed.

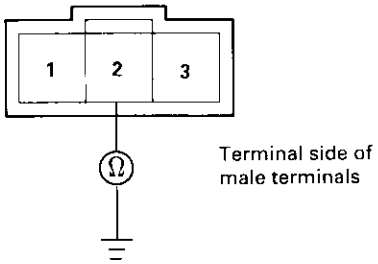

- If there is continuity, the horn switch is OK.
- If there is no continuity, go to step 6.

7. Remove the driver's airbag assembly (see section 24), then disconnect the horn connector from the steering wheel.

8. Check for continuity between the No. 2 terminal of the cable reel sub-harness 3P connector and horn positive terminal.

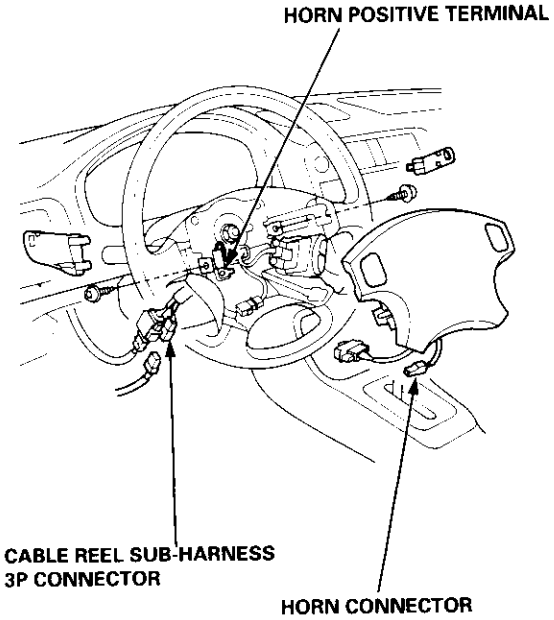

- If there is no continuity, replace the cable reel (see section 24).
- If there is continuity, repair or replace the horn switch.

9. If all tests prove OK, reinstall the driver's airbag assembly (see section 24), and reconnect the cable reel sub-harness connector.

10. Reconnect the driver's airbag connector, and reinstall the access panel on the steering wheel.

11. Reconnect the battery positive cable, then the negative terminal.

12. After installing the airbag assembly, confirm proper system operation:

    - Turn the ignition switch ON (II); the SRS indicator light should come on for about six seconds and then go off.
    - Make sure both horn buttons work.

13. Enter the anti-theft code for the radio, then enter the customer's radio station presets ('99 – 00 models).

Component Location Index

'96 – 98 models:

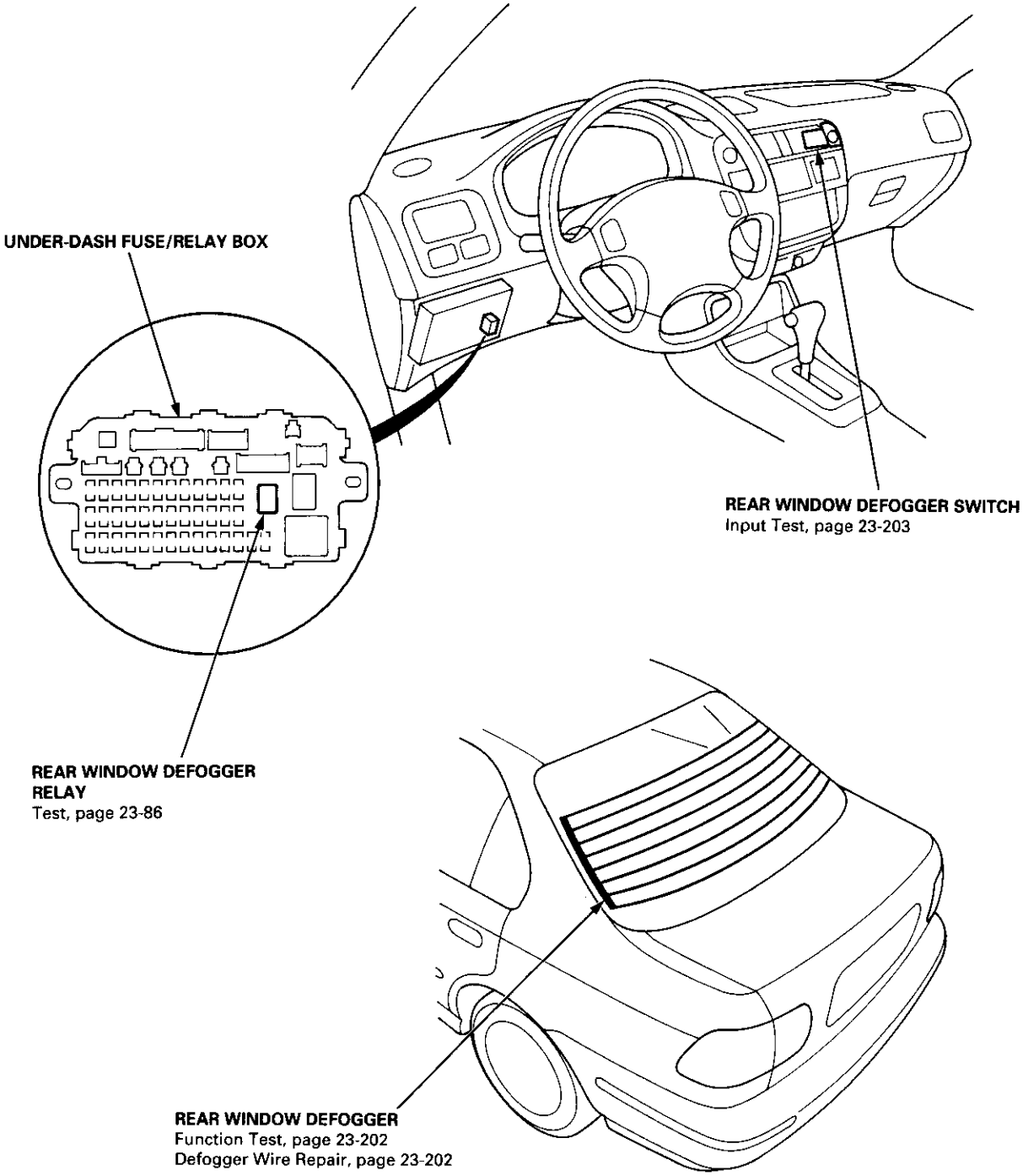

'99 – 00 models:

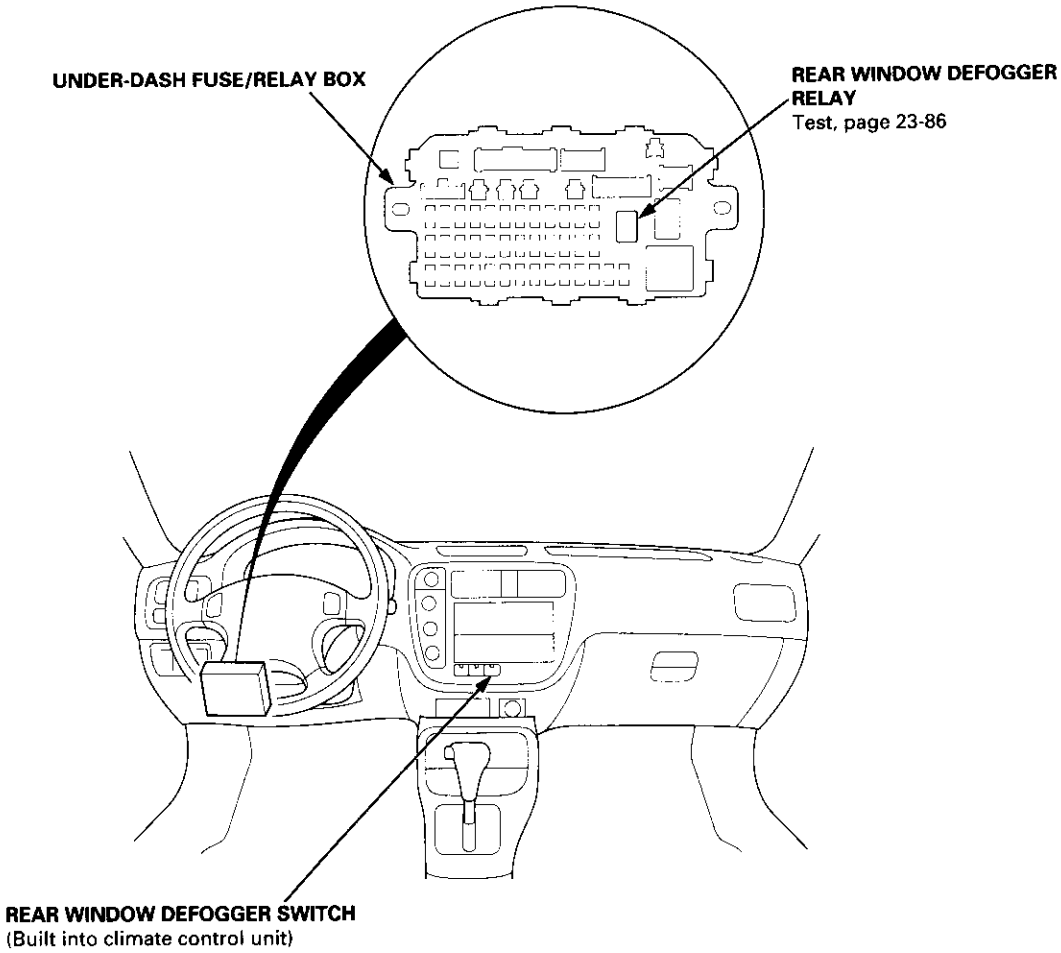
UNDER-DASH FUSE/RELAY BOX
REAR WINDOW DEFOGGER RELAY
Test, page 23-86
REAR WINDOW DEFOGGER SWITCH
(Built into climate control unit)

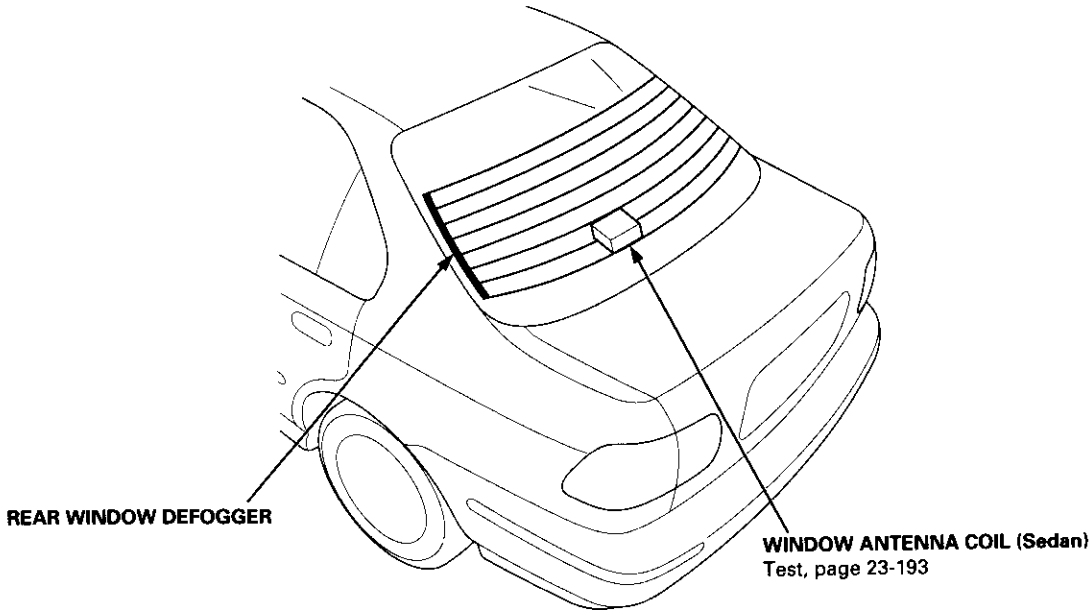
REAR WINDOW DEFOGGER
WINDOW ANTENNA COIL (Sedan)
Test, page 23-193

Circuit Diagram

'96 – 98 models:

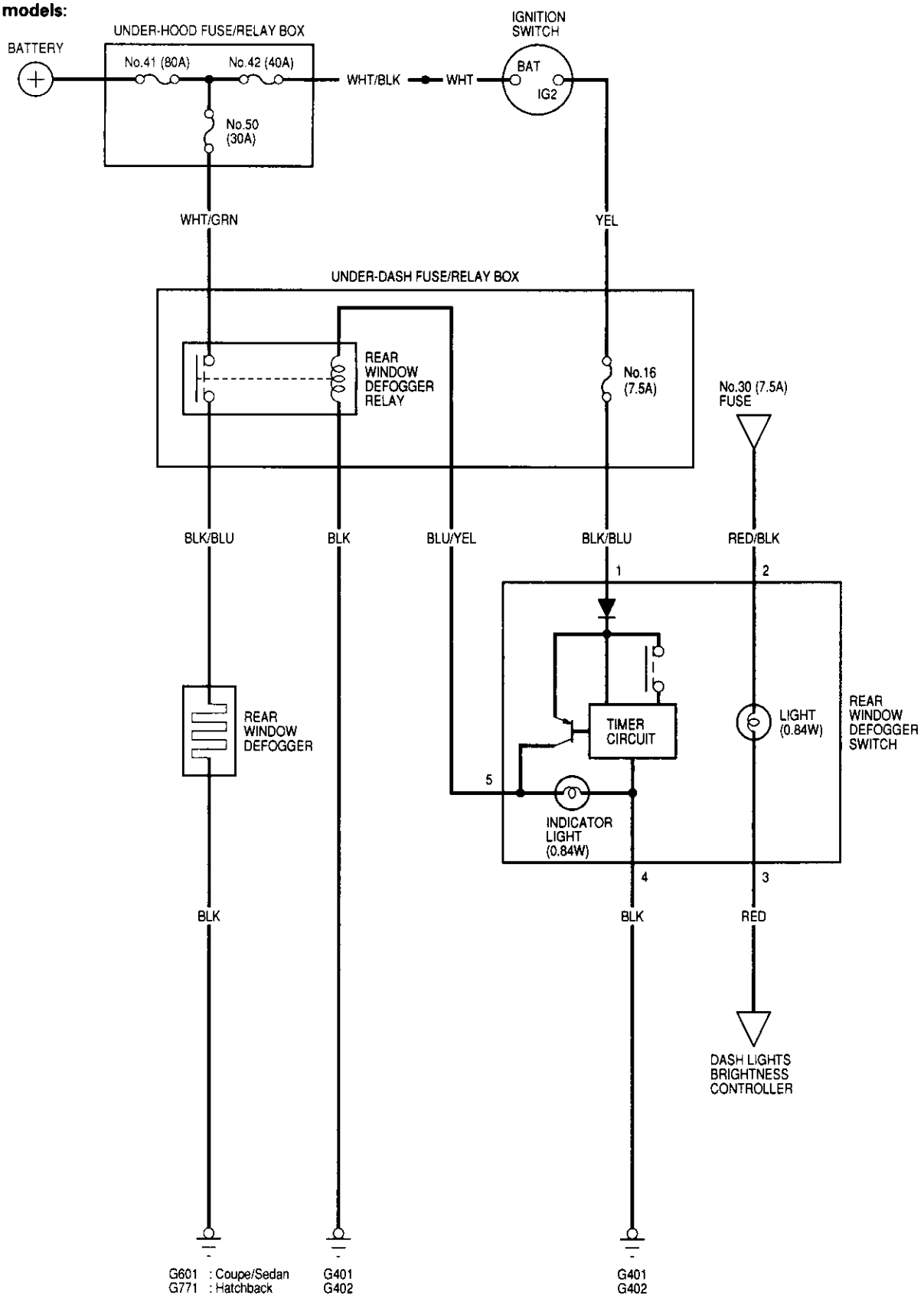

'99 – 00 models

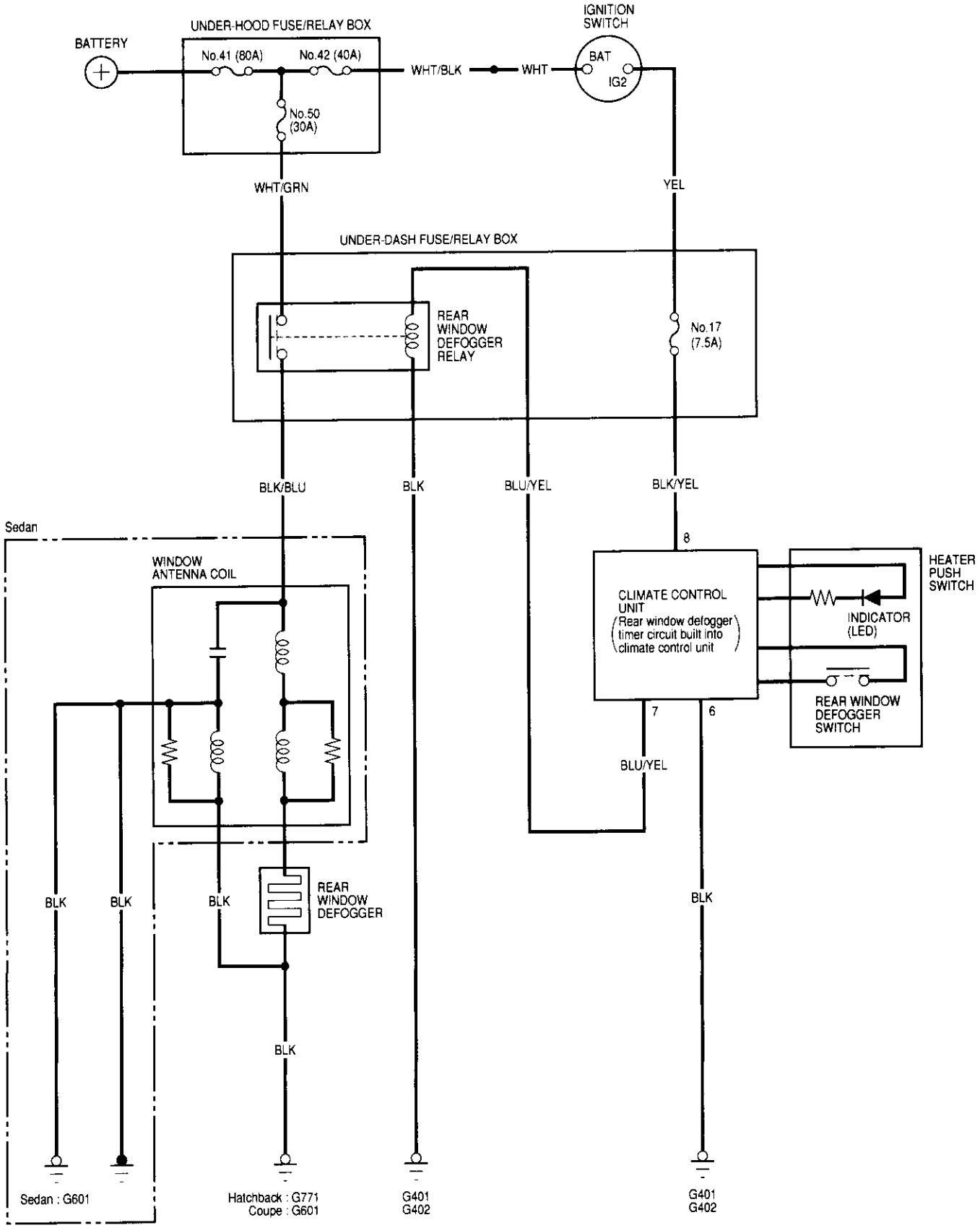
BATTERY
UNDER-HOOD FUSE/RELAY BOX
No.41 (80A)
No.42 (40A)
No.50 (30A)
WHT/BLK
WHT
IGNITION SWITCH
BAT
IG2
WHT/GRN
YEL
UNDER-DASH FUSE/RELAY BOX
REAR WINDOW DEFOGGER RELAY
No.17 (7.5A)
BLK/BLU
BLK
BLU/YEL
BLK/YEL
Sedan
WINDOW ANTENNA COIL
8
CLIMATE CONTROL UNIT
(Rear window defogger timer circuit built into climate control unit)
HEATER PUSH SWITCH
INDICATOR (LED)
REAR WINDOW DEFOGGER SWITCH
7
6
BLU/YEL
BLK
BLK
BLK
REAR WINDOW DEFOGGER
BLK
BLK
Sedan : G601
Hatchback : G771
Coupe : G601
G401
G402
G401
G402

Rear Window Defogger

Function Test

CAUTION: Be careful not to scratch or damage the defogger wires with the tester probe.

1. Check for voltage between the positive terminal and body ground with the ignition switch and defogger switch ON.
   There should be battery voltage.

   - If there is no voltage, check for:
     — faulty defogger relay.
     — faulty defogger switch.
     — an open in the BLK/BLU wire.
   - If there is battery voltage, go to step 2.

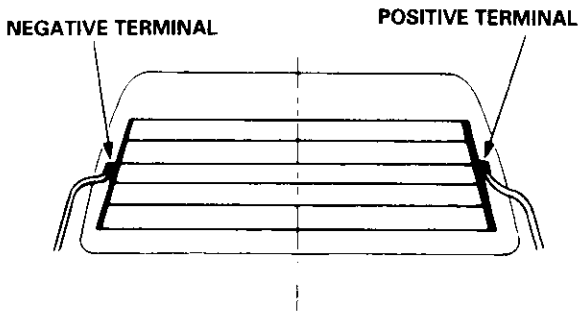

2. Check for continuity between the negative terminal and body ground.
   If there is no continuity, check for an open in the defogger ground wire.

3. Touch the voltmeter positive probe to the halfway point of each defogger wire, and the negative probe to the negative terminal.
   There should be approximately 6 V with the ignition switch and the defogger switch ON.

   - If the voltage is as specified, the defogger wire is OK.
   - If the voltage is not as specified, repair the defogger wire.
     — If it is more than 6 V, there is a break in the negative half of the wire.
     — If it is less than 6 V, there is a break in the positive half of the wire.

Defogger Wire Repair

NOTE: To make an effective repair, the broken section must be no longer than one inch.

1. Lightly rub the area around the broken section with fine steel wool, then clean it with alcohol.

2. Carefully mask above and below the broken portion of the defogger wire with cellophane tape.

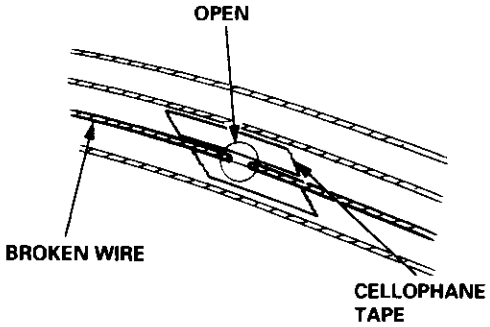

3. Using a small brush, apply a heavy coat of silver conductive paint extending about 1/8" on both sides of the break. Allow 30 minutes to dry.

   NOTE: Thoroughly mix the paint before use.

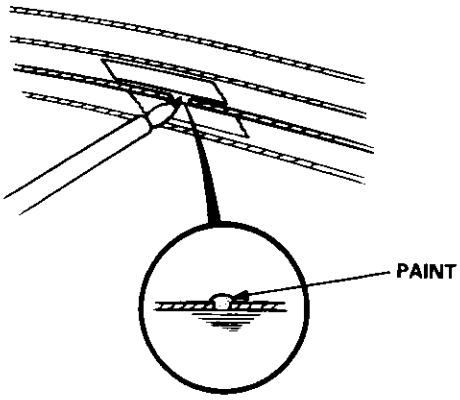

4. Check for continuity in the repaired wire.

5. Apply a second coat of paint in the same way. Let it dry three hours before removing the tape.

Switch Input Test

CAUTION: Be careful not to damage the rear window defogger switch or the center panel when prying the switch out.

NOTE: Before testing, check for blown No. 16 (7.5 A) fuse in the under-dash fuse/relay box.

1. Pry the switch out of the center panel (see section 20).

2. Disconnect the 5P connector from the switch.

3. Turn the ignition switch ON (II), and check the voltage between the BLK/BLU (+) and the BLK (–) terminals. There should be battery voltage.

   - If there is no voltage, check for an open in the BLK/BLU wire.
   - If there is battery voltage, go to step 4.

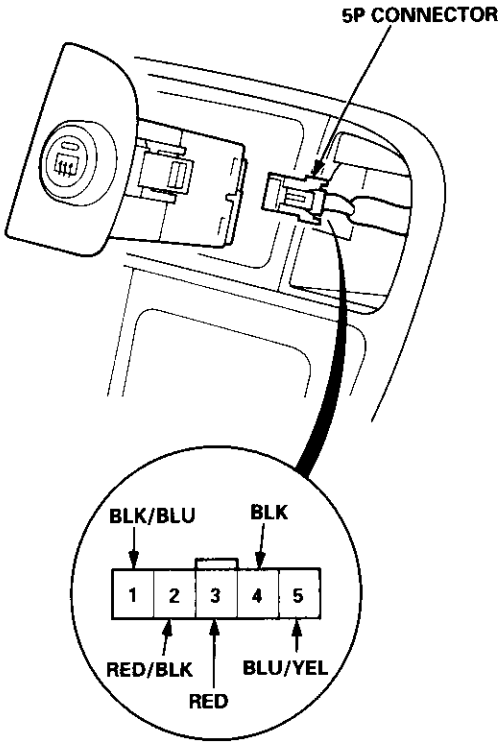

Wire side of famale terminals

4. Connect a jumper wire between the BLK/BLU and the BLU/YEL terminals.

5. Turn the ignition switch ON (II), and check that the rear window defogger works; if it does, replace the defogger switch.

Component Location Index

Power Mirror
Function Test, page 23-207
Power Mirror Test, page 23-210
Replacement, section 20
Actuator Replacement, page 23-210

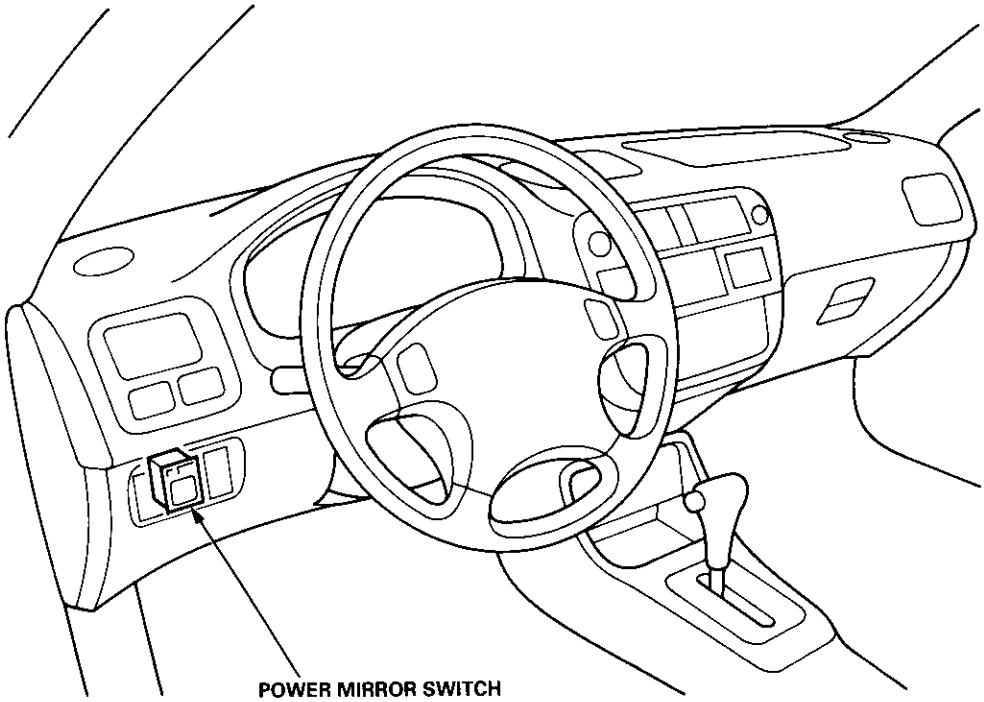

POWER MIRROR SWITCH
Test, page 23-209

Circuit Diagram (Without Defogger)

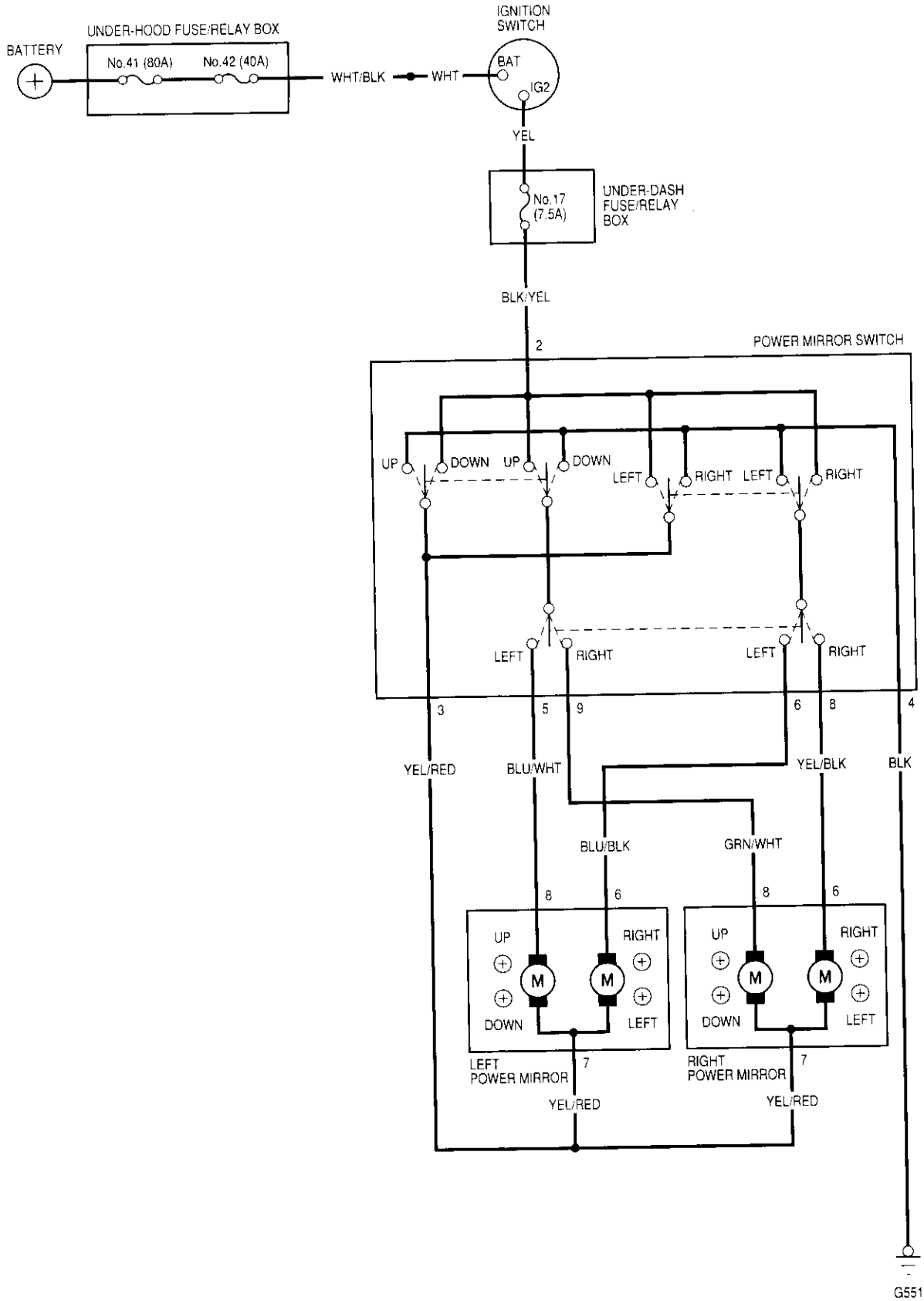

Circuit Diagram (With Defogger)

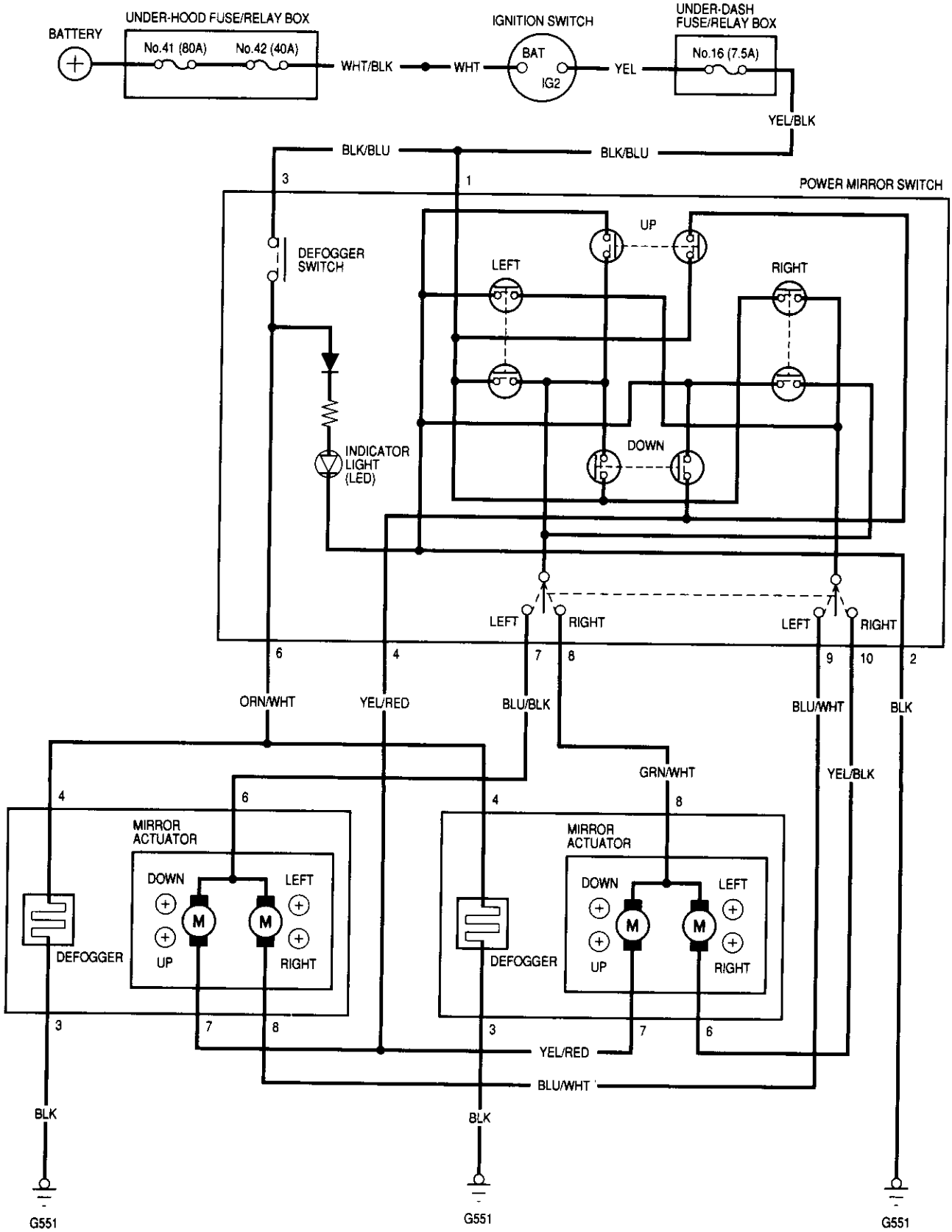

Function Test

CAUTION: Be careful not to damage the mirror switch or the dashboard driver's lower cover when prying the switch out.

Without defogger:

1. Pry the switch out of the driver's dashboard lower cover.
2. Disconnect the 10P connector from the switch.

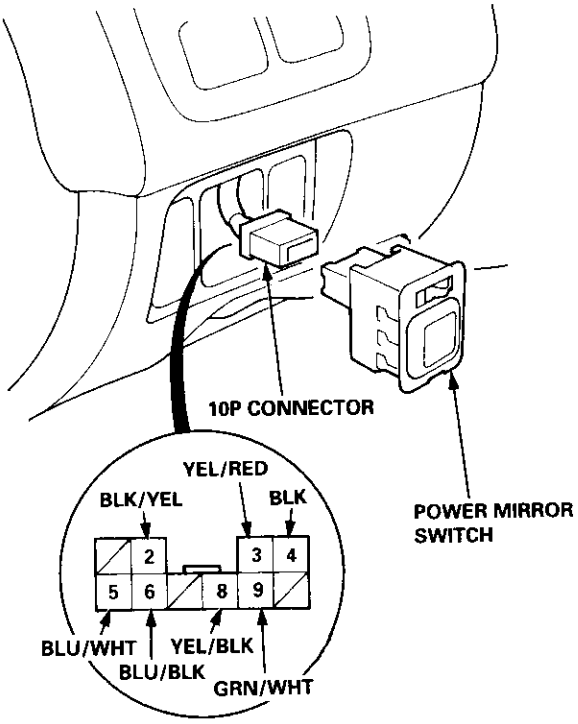

Wire side of female terminals

Mirror Test

Both inoperative:

1. Check for voltage between the No. 2 (BLK/YEL) terminal and body ground with the ignition switch ON (II).
   There should be battery voltage.
   - If there is no voltage, check for:
     — blown No. 17 (7.5 A) fuse in the under-dash fuse/relay box.
     — an open in the BLK/YEL wire.
   - If there is battery voltage, go to step 2.
2. Check for continuity between the No. 4 (BLK) terminal and body ground.
   There should be continuity.
   - If there is no continuity, check for:
     — an open in the BLK wire.
     — poor ground (G551).

Left mirror inoperative:

Connect the No. 2 (BLK/YEL) terminal of the 10P connector to the No. 3 (YEL/RED) terminal and the No. 5 (or No. 6) terminal to body ground with jumper wires. The left mirror should tilt down (or swing left) when the ignition switch is turned ON (II).

- If the mirror does not tilt down (or does not swing left), remove the left door panel, and check for an open in the BLU/WHT (or BLU/BLK) wire between the left power mirror and the switch.
  — If the wire is OK, check the left power mirror actuator.
- If the mirror neither tilts down nor swings left, repair the YEL/RED wire.
- If the mirror operates properly, check the mirror switch.

Right mirror inoperative:

Connect the No. 2 (BLK/YEL) terminal of the 10P connector to the No. 3 (YEL/RED) terminal and the No. 9 (or No. 8) terminal to body ground with jumper wires. The right mirror should tilt down (or swing left) when the ignition switch is turned ON (II).

- If the mirror does not tilt down (or does not swing left), remove the right door panel, and check for an open in the GRN/WHT (or YEL/BLK) wire between the right power mirror and the switch.
  — If the wire is OK, check the right power mirror actuator.
- If the mirror neither tilts down nor swings left, repair the YEL/RED wire.
- If the mirror operates properly, check the mirror switch.

(cont'd)

Function Test (cont'd)

With defogger:

1. Pry the switch out of the driver's dashboard lower cover.

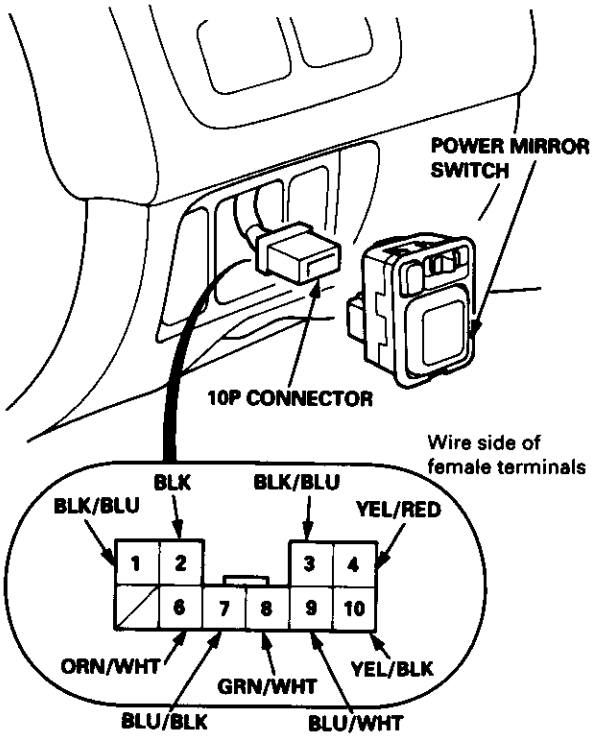

2. Disconnect the 10P connector from the power mirror switch.

Mirror Test

Both inoperative:

1. Check for voltage between the No. 1 terminal and body ground with the ignition switch ON (II).
   There should be battery voltage.
   - If there is no battery voltage, check for:
     — blown No. 16 (7.5 A) fuse in the under-dash fuse/relay box.
     — an open in the BLK/BLU wire.
   - If there is battery voltage, go to step 2.

2. Check for continuity between the No. 2 terminal and body ground.
   There should be continuity.
   - If there is no continuity, check for:
     — an open in the BLK wire.
     — poor ground (G551).
   - If there is continuity, check both mirrors individually as described in the next column.

Left mirror inoperative:

Connect the No. 1 terminal to the No. 7 terminal, and the No. 4 (or No. 9) terminal to body ground with jumper wires. The left mirror should tilt down (or swing left) with the ignition switch ON (II).

- If the mirror does not tilt down (or does not swing left), check for an open in the YEL/RED (or BLU/WHT) wire between the left mirror and the 10P connector. If the wire is OK, check the left mirror actuator.
- If the mirror neither tilts down nor swings left, repair the BLU/BLK wire.
- If the mirror works properly, check the mirror switch.

Right mirror inoperative:

Connect the No. 1 terminal to the No. 8 terminal, and the No. 4 (or No. 10) terminal to body ground with jumper wires. The right mirror should tilt down (or swing left) with the ignition switch ON (II).

- If the mirror does not tilt down (or does not swing left), check for an open in the YEL/RED (or YEL/BLK) wire between the right mirror and the 10P connector. If the wire is OK, check the right mirror actuator.
- If the mirror neither tilts down nor swings left, repair the GRN/WHT wire.
- If the mirror works properly, check the mirror switch.

Defogger inoperative:

1. Check for voltage between the No. 3 terminal and body ground with the ignition switch ON (II).
   There should be battery voltage.
   - If there is no battery voltage, check for;
     — blown No. 16 (7.5 A) fuse in the under-dash fuse/relay box.
     — An open in the BLK/BLU wire.
   - If there is battery voltage, go to step 2.

2. Connect the No. 3 terminal to the No. 6 terminal with a jumper wire. Both mirrors should gradually warm up when the ignition switch ON (II).
   - If neither mirror warms up, check for an open in the ORN/WHT wire.
   - If only one fails to warm up, check its mirror defogger element.
   - If both mirrors warm up, check the switch.

Switch Test

Without defogger:

1. Remove the switch as described in Function Test (see page 23-207).

2. Check for continuity between the terminals in each switch position according to the table.

Mirror Switch:

Position \ Terminal		2	3	4	5	6	8	9
L	UP	○	○	○	○			
	DOWN	○	○	○	○			
	LEFT	○	○	○		○		
	RIGHT	○	○	○		○		
R	UP	○	○	○				○
	DOWN	○	○	○				○
	LEFT	○	○	○			○	
	RIGHT	○	○	○			○	

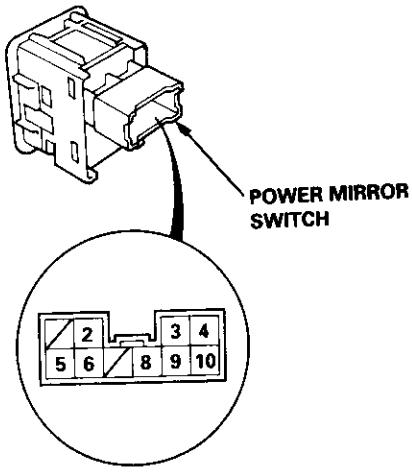

With defogger:

1. Pry the switch out of the dashboard driver's lower cover.

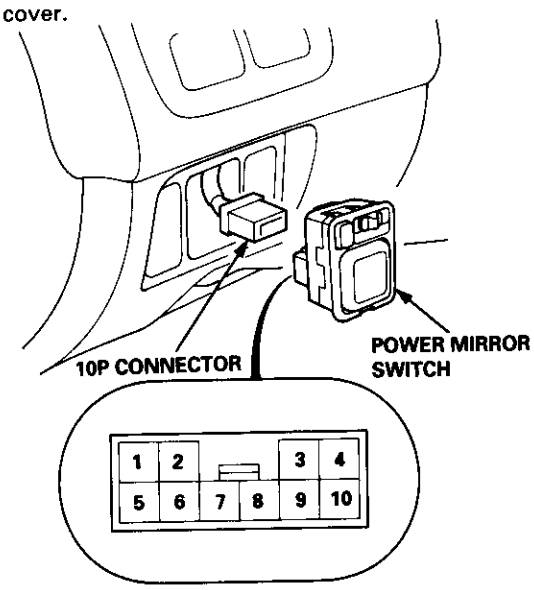

2. Disconnect the 10P connector from the switch.

3. Check for continuity between the terminals in each switch position according to the table.

Mirror Switch:

Position \ Terminal		1	2	4	7	8	9	10
L	UP	○	○	○	○			
	DOWN	○	○	○	○			
	LEFT	○	○		○		○	
	RIGHT	○	○		○		○	
R	UP	○	○	○		○		
	DOWN	○	○	○		○		
	LEFT	○	○			○		○
	RIGHT	○	○			○		○

Defogger Switch:

Position \ Terminal	2		3	6
ON	○	⊠	○	○
OFF	○	⊠	○	

Power Mirror Test

1. Pry out the cover panel (see section 20).

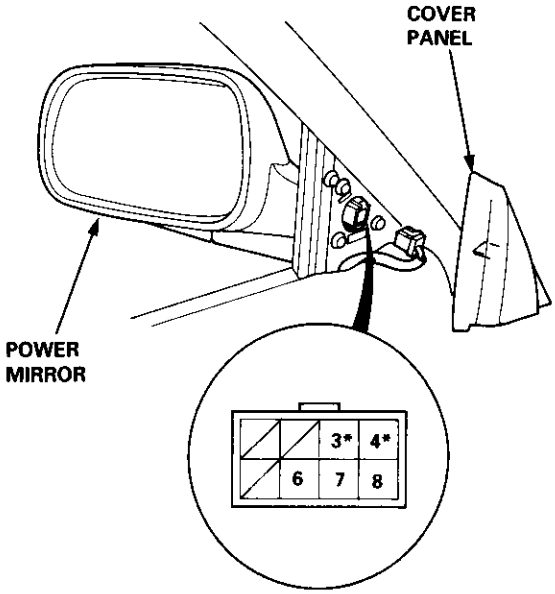

*: Canada '99 – 00 models

2. Disconnect the 8P connector from the power mirror.

3. Check actuator operation by connecting power and ground according to the tables.

Terminal / Position	6	7	8
TILT UP		⊖	⊕
TILT DOWN		⊕	⊖
SWING LEFT	⊖	⊕	
SWING RIGHT	⊕	⊖	

Defogger Test:

4. Check for continuity between the No. 3 and No. 4 terminals of the 8P connector.
   There should be continuity.

Mirror Actuator Replacement (Donnelly Type)

1. Remove the power mirror from the door (see section 20), and disconnect the 8P connector.

2. Remove the mirror base cover from the mirror housing.

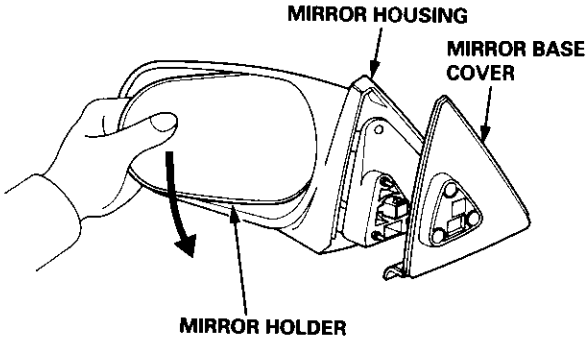

3. Remove the mirror holder from the mirror housing. Gently pull it out by hand.

4. Remove the three screws from the actuator and the two screws from the bracket at the base of the assembly.

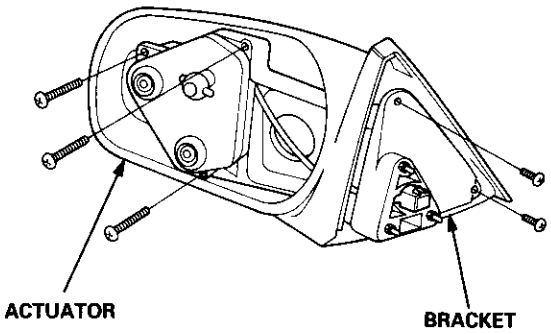

5. Remove the bracket from the housing.

6. Remove the two screws, cut the wire harness, and remove the actuator.

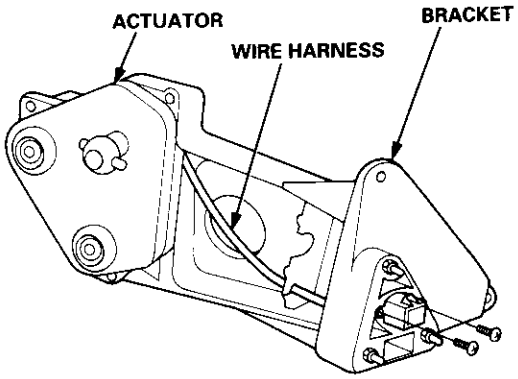

7. Record the terminal locations and wire colors.

8. Route the wire harness of the new actuator through the hole in the bracket. Be sure to pass the wire under the bracket clip.

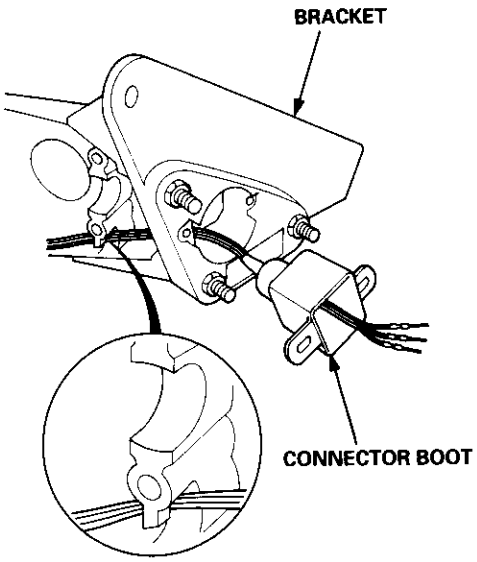

9. Pass the connector boot over the wire harness.

10. Insert the terminals into the connector in the original arrangement (recorded in step 7), as shown below.

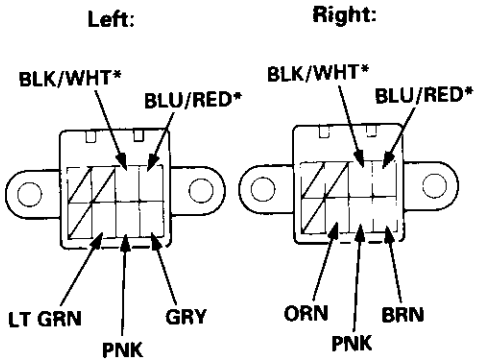

*: Canada '99 – 00 models

11. Apply tape to seal the intersection of the connector boot and the wire harness.

12. Reassemble in the reverse order of disassembly. Be careful not to break the mirror when reinstalling it to the actuator.

13. Reinstall the mirror assembly to the door.

14. Operate the power mirror to check that the actuator works smoothly.

Component Location Index

SRS components are located in this area. Review the SRS component locations, precautions, and procedures in the SRS section (24) before performing repairs or service.

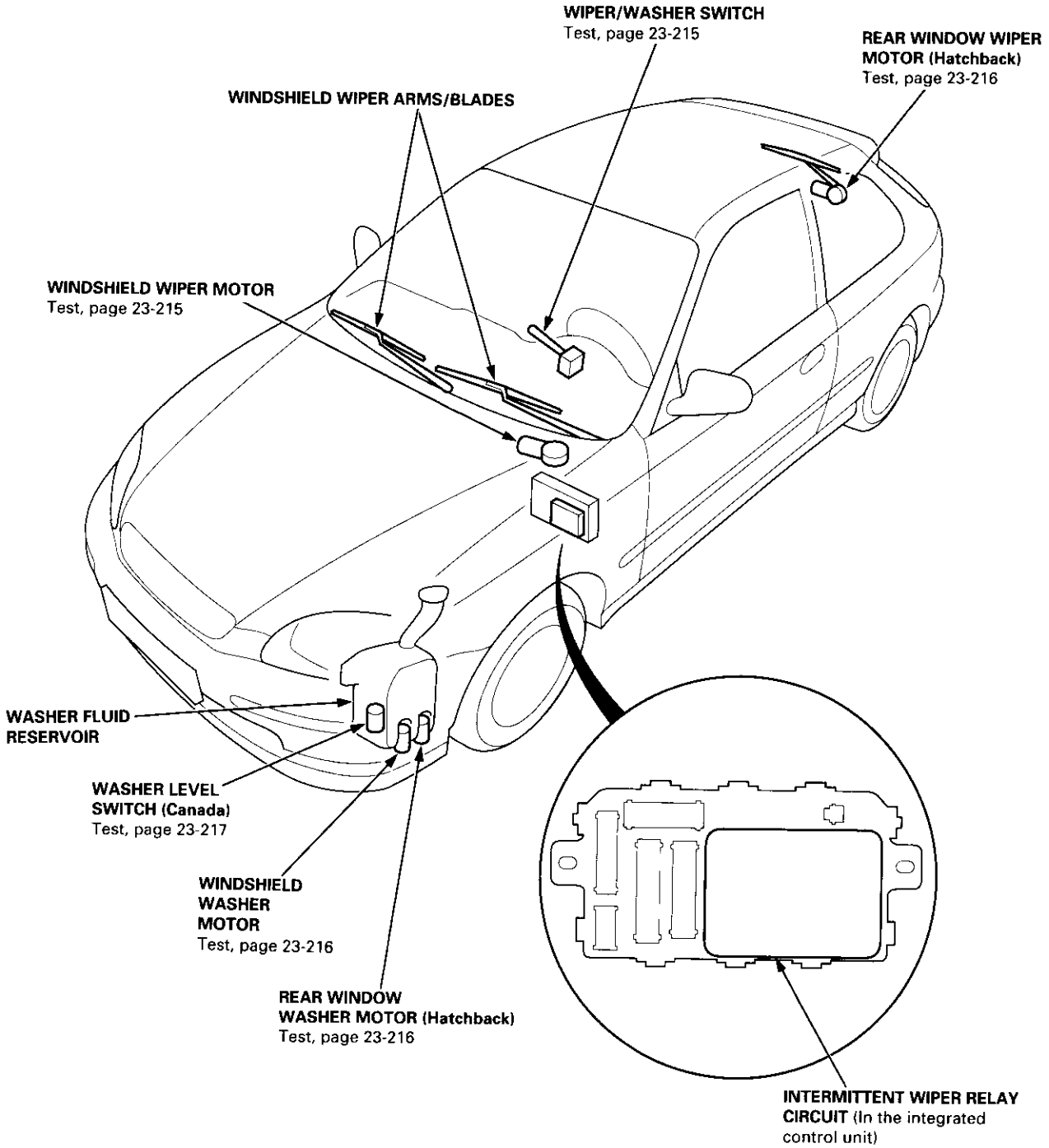

Circuit Diagram (Windshield)

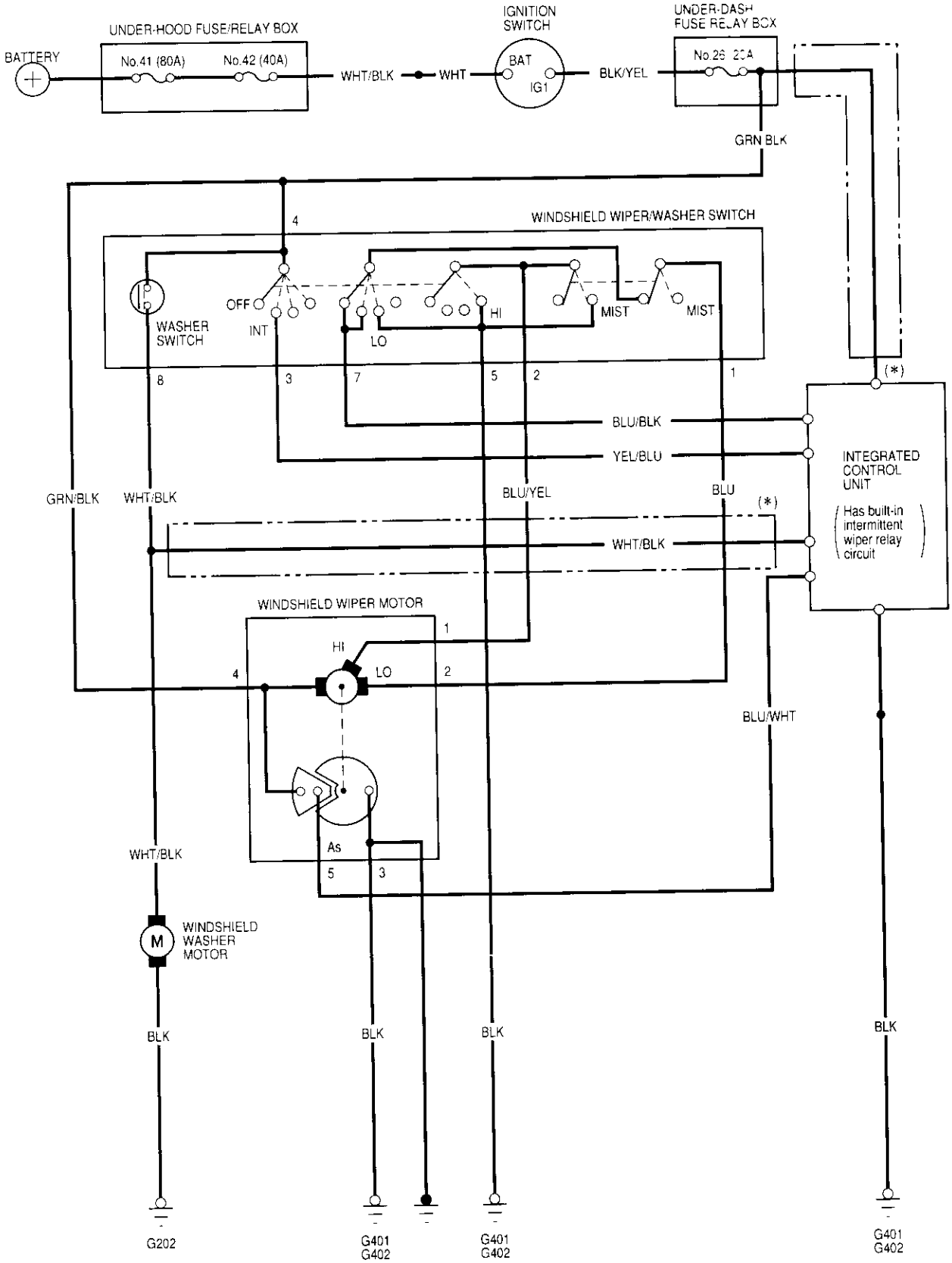

* : With COMBINED OPERATION WIPER/WASHER

Circuit Diagram (Rear Window)

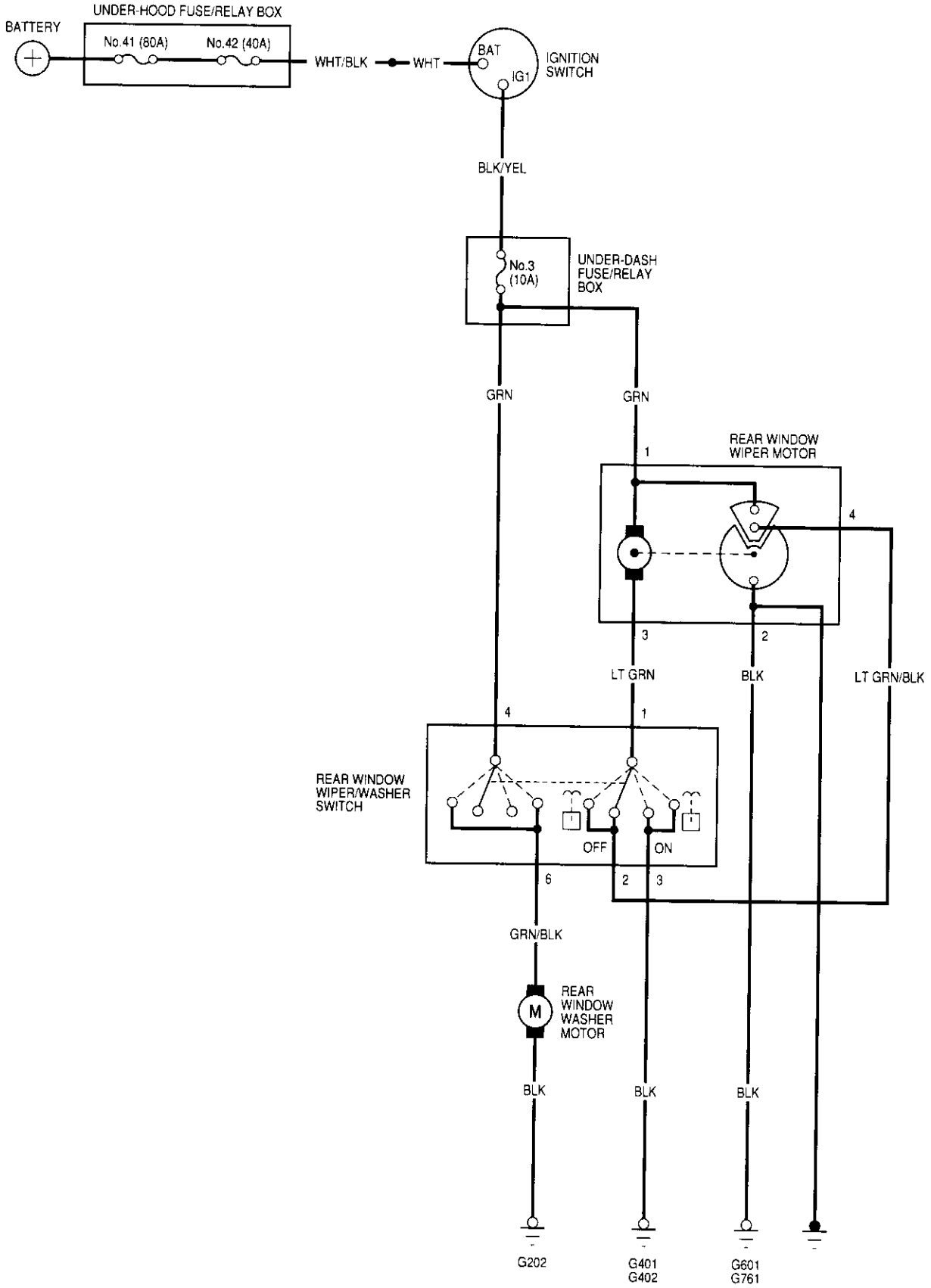

Wiper/Washer Switch Test

1. Remove the driver's dashboard lower cover (see section 20).
2. Remove the steering column covers.
3. Disconnect the 8P and 6P connectors from the switch, remove the two screws, and pull out the switch.

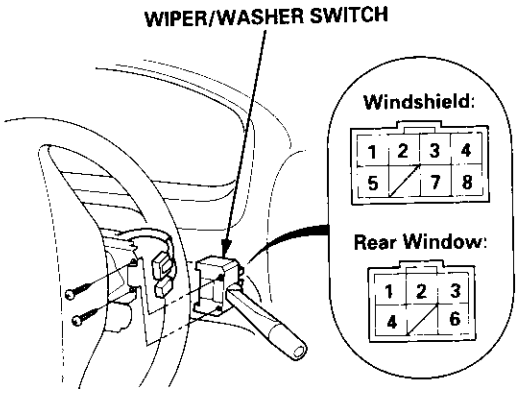

4. Check for continuity between the terminals in each switch position according to the table.

Windshield Wiper/Washer Switch:

Position \ Terminal	1	2	3	4	5	7	8
OFF	○					○	
INT	○					○	
			○	○			
LO	○				○		
HI		○			○		
Mist switch "ON"		○			○		
Washer switch "ON"				○			○

Rear Window Wiper/Washer Switch:

Position \ Terminal	1	2	3	4	6
Washer switch "ON" (Wiper switch "OFF")	○	○		○	○
OFF	○	○			
ON	○		○		
Washer switch "ON" (Wiper switch "ON")	○		○	○	○

Windshield Wiper Motor Test

1. Open the hood, and remove the cap nuts. Carefully remove the wiper arms so that they do not touch the hood.

2. Remove the cowl cover by prying out the trim clips (see section 20).

3. Disconnect the 5P connector from the windshield wiper motor.

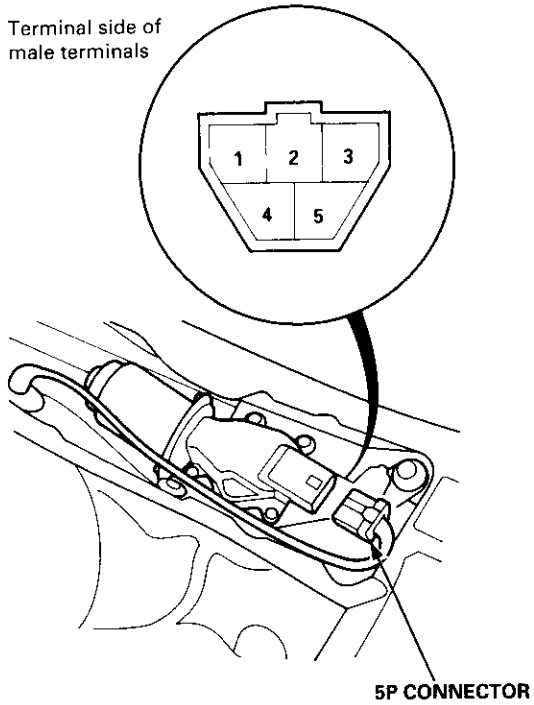

4. Test the motor by connecting battery power and ground according to the table.

Position \ Terminal	1	2	4
LOW SPEED		⊖	⊕
HIGH SPEED	⊖		⊕

If the motor does not run or fails to run smoothly, replace it.

5. Connect an analog voltmeter between the No. 5 (+) and No. 3 (–) terminals, and run the motor at low or high speed.

The voltmeter should indicate 0 V and 4 V or less alternately.

Rear Wiper Motor Test (Hatchback)

1. Remove the hatch lower trim panel (see section 20).
2. Disconnect the 4P connector from the wiper motor assembly.

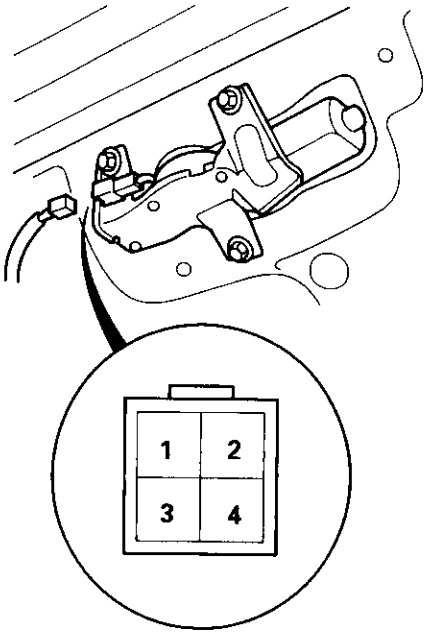

3. Test the motor by connecting battery power to the No. 1 terminal and ground to the No. 3 terminal.

   If the motor does not run or fails to run smoothly, replace it.

4. Reconnect the 4P connector to the wiper motor.
5. Connect an analog voltmeter between the No. 4 (+) and No. 2 (–) terminals.
6. Run the motor by turning the wiper switch ON.

   The voltmeter should indicate 0 V and 4 V or less alternately.

Washer Motor Test

1. Remove the front bumper (see section 20).
2. Disconnect the 2P connectors from the washer.

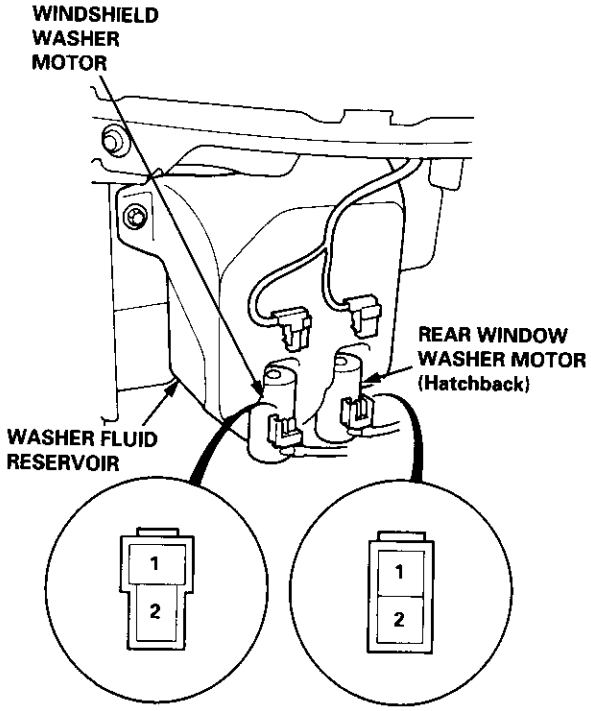

3. Test the washer motor by connecting battery power and ground according to the table.

Terminal / Battery	1	2
Disconnected		
Connected	⊕	⊖

- If the motor fails to run smoothly, replace it.
- If the motor runs smoothly, but little or no washer fluid is pumped, check for a disconnected or blocked washer hose, or a clogged pump outlet in the motor.

Washer Level Switch Test (Canada)

1. Remove the front bumper (see section 20).
2. Disconnect the 2P connectors from the washer.

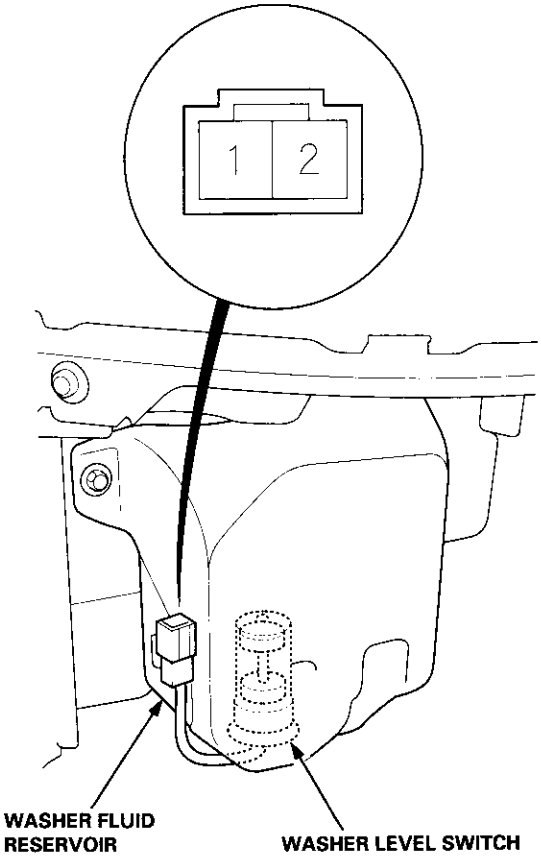

3. Check for continuity between the terminals in each float position according to the table.

Terminal / Position	1	2
FLOAT UP		
FLOAT DOWN	○———	———○

Component Location Index

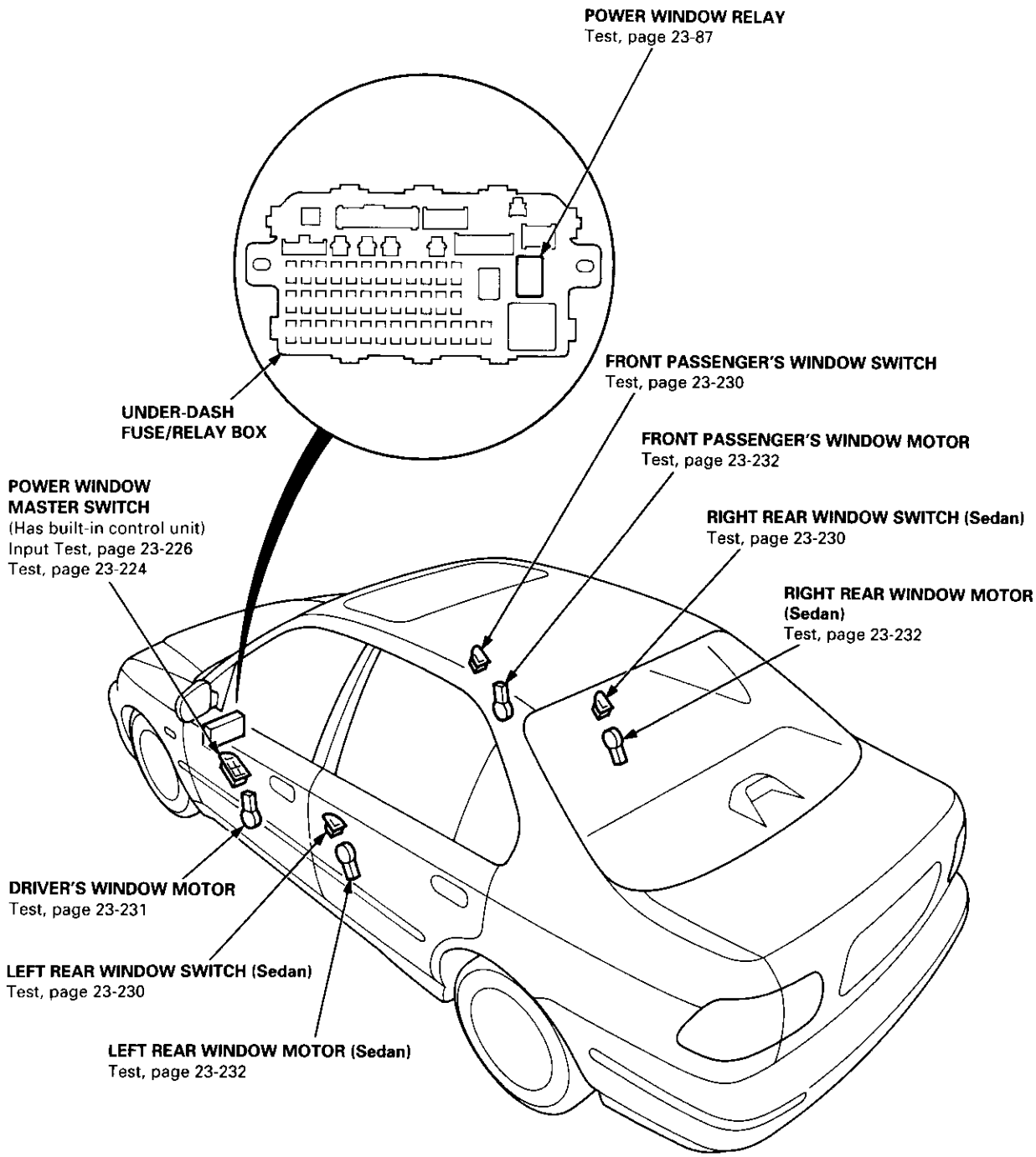

Circuit Diagram ('96-98 Coupe/Hatchback)

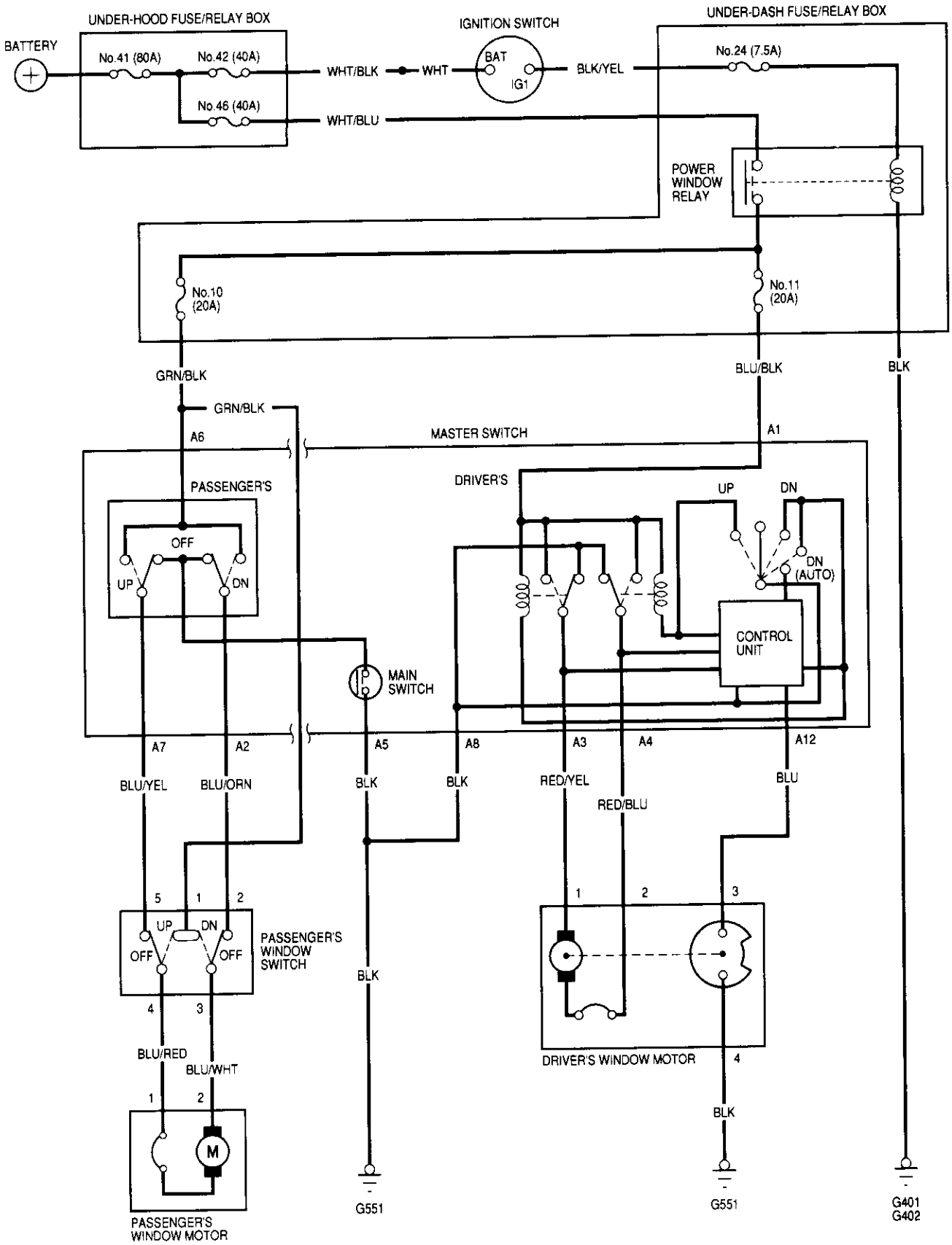

Circuit Diagram ('96-98 Sedan)

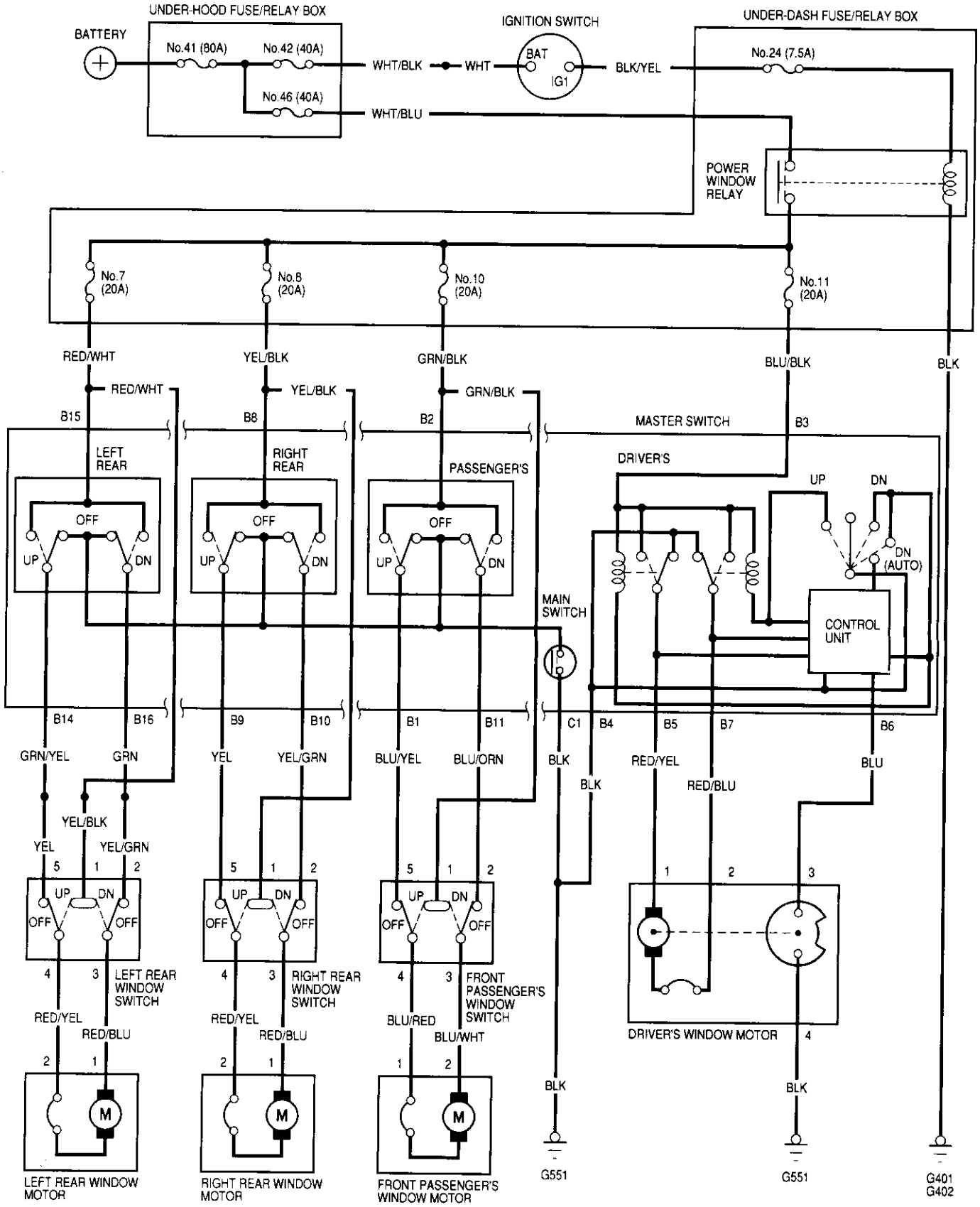

Circuit Diagram ('99-00 Coupe/Hatchback)

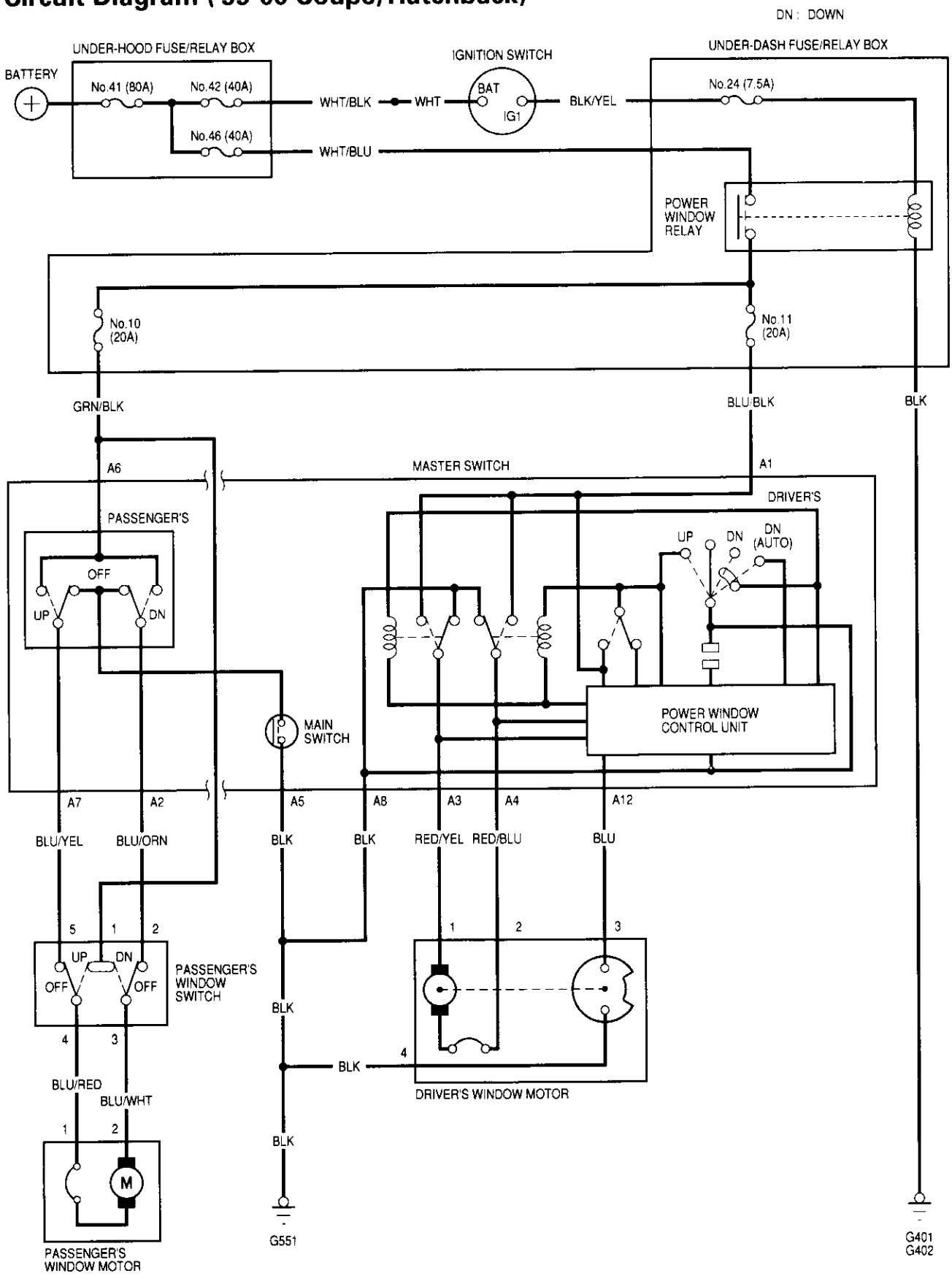

Circuit Diagram ('99-00 Sedan)

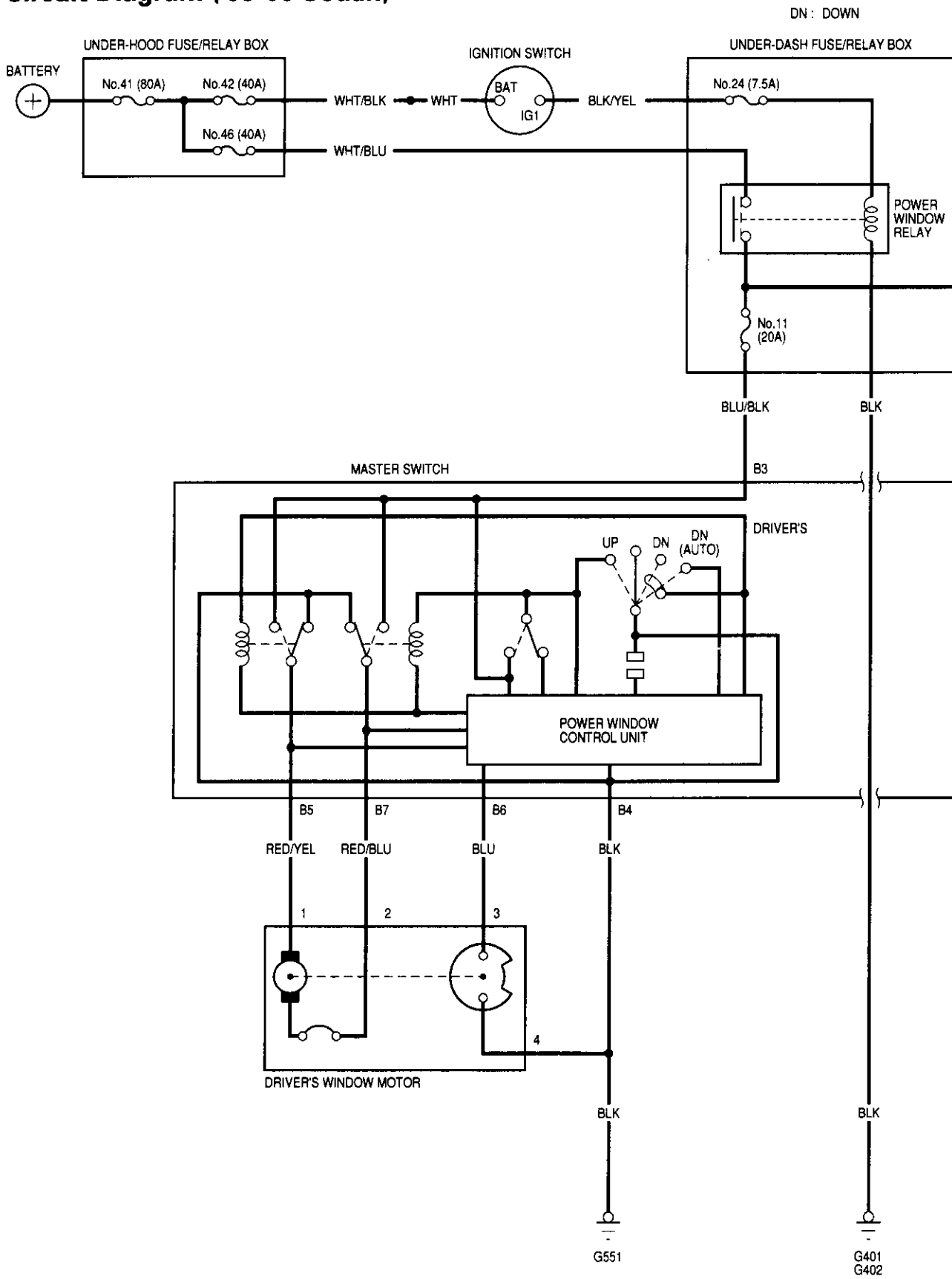

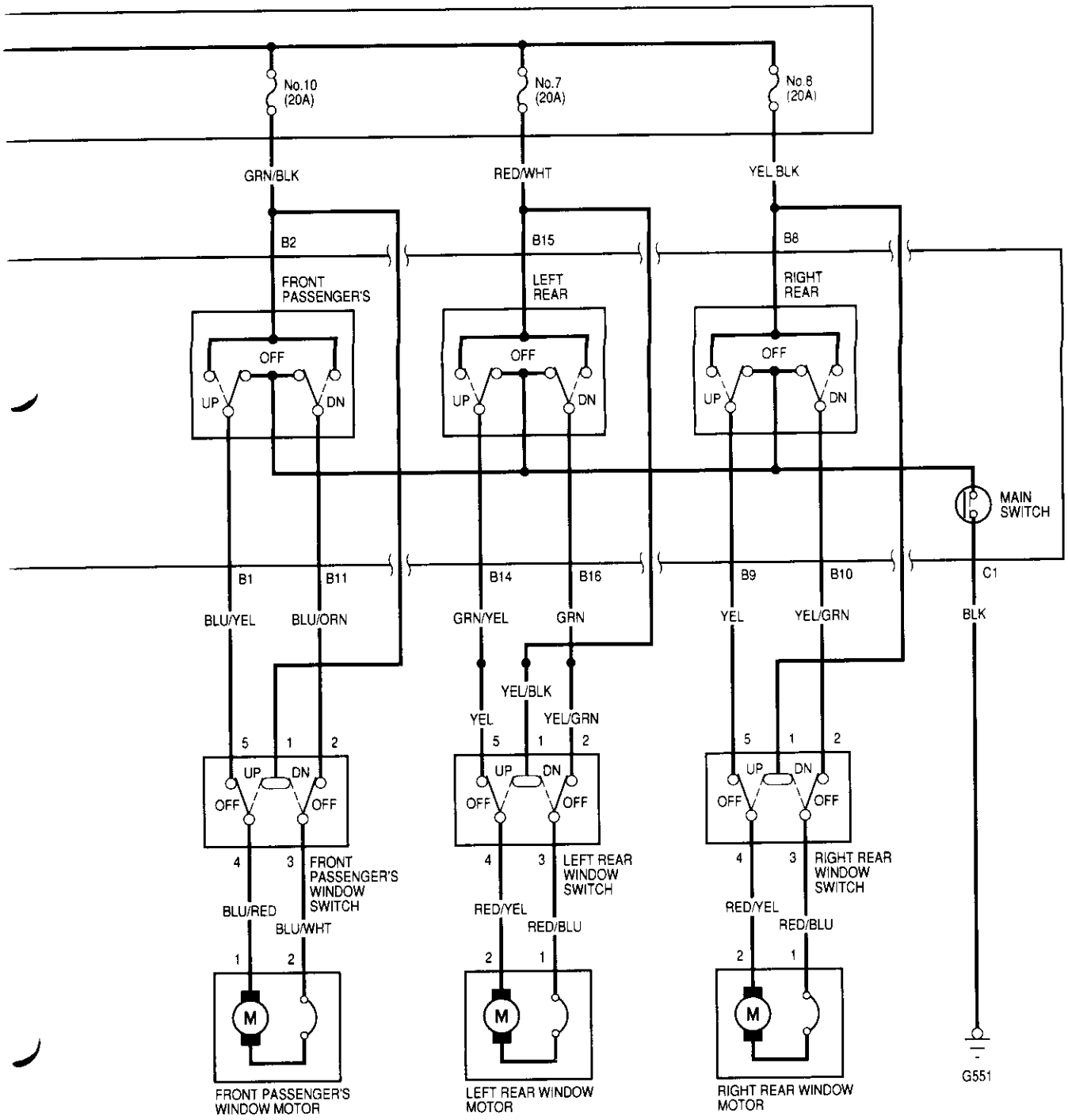
No.10 (20A)
No.7 (20A)
No.8 (20A)
GRN/BLK
RED/WHT
YEL BLK
B2
B15
B8
FRONT PASSENGER'S
LEFT REAR
RIGHT REAR
OFF
UP
DN
MAIN SWITCH
B1
B11
B14
B16
B9
B10
C1
BLU/YEL
BLU/ORN
GRN/YEL
GRN
YEL
YEL/GRN
BLK
YEL/BLK
5
1
2
4
3
FRONT PASSENGER'S WINDOW SWITCH
LEFT REAR WINDOW SWITCH
RIGHT REAR WINDOW SWITCH
BLU/RED
BLU/WHT
RED/YEL
RED/BLU
M
FRONT PASSENGER'S WINDOW MOTOR
LEFT REAR WINDOW MOTOR
RIGHT REAR WINDOW MOTOR
G551

Master Switch Test (Coupe/Hatchback)

1. Remove the master switch from the driver's door panel (see page 23-228).

2. Disconnect the 12P connector from the master switch.

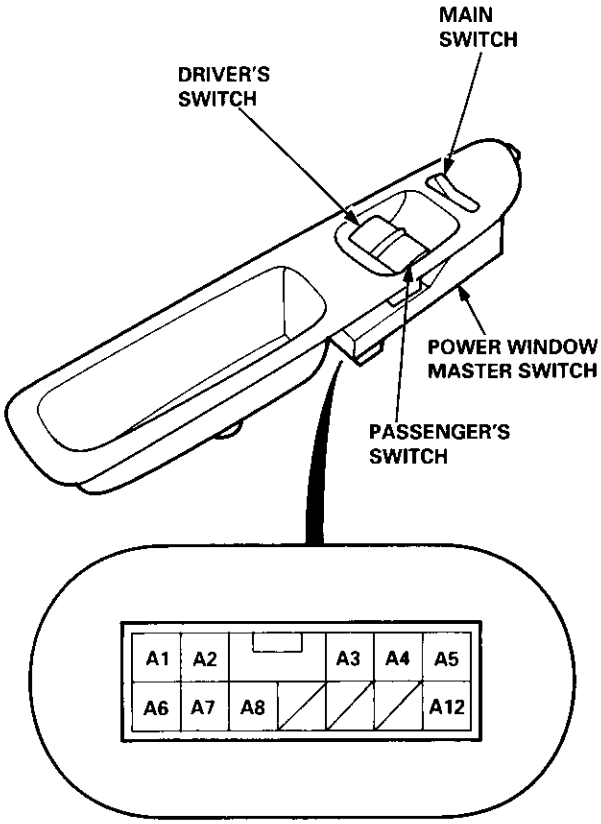

Terminal side of male terminals

3. Check for continuity between the terminals in each switch position according to the table.

Driver's Switch:

The driver's switch is combined with the control unit so you cannot isolate the switch to test it. Instead, run the master switch input test procedures at terminals A1, A3, A4, A8 and A12 on page 23-226. If the tests are normal, the driver's switch must be faulty.

Passenger's Switch:

Position	Main Switch \ Terminal	A2	A5	A6	A7
OFF	ON	○	○		○
	OFF	○			○
UP	ON	○	○	○	○
	OFF			○	○
DOWN	ON	○		○	
			○		○
	OFF	○		○	

Master Switch Test (Sedan)

1. Remove the armrest from the driver's door panel (see page 23-228).

2. Disconnect the 16P and 1P connectors from the master switch.

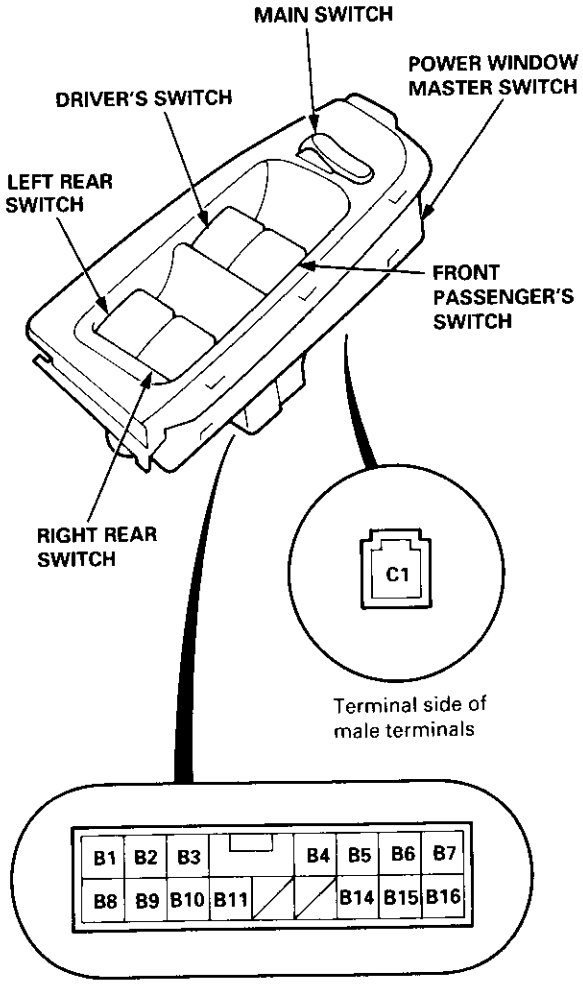

3. Check for continuity between the terminals in each switch position according to the tables.

Driver's Switch:

The driver's switch is combined with the control unit so you cannot isolate the switch to test it. Instead, run the master switch input test procedures at terminals B3, B4, B5, B6 and B7 on page 23-228. If the tests are normal, the driver's switch must be faulty.

Front Passenger's Switch:

Position	Terminal / Main Switch	B1	B2	B11	C1
OFF	ON	○	—	○	○
	OFF	○	—	○	
UP	ON	○	○		
				○	○
	OFF	○	○		
DOWN	ON		○	○	
		○			○
	OFF		○	○	

Left Rear Switch:

Position	Terminal / Main Switch	B14	B15	B16	C1
OFF	ON	○	—	○	○
	OFF	○	—	○	
UP	ON	○	○		
				○	○
	OFF	○	○		
DOWN	ON		○	○	
		○			○
	OFF		○	○	

Right Rear Switch:

Position	Terminal / Main Switch	B8	B9	B10	C1
OFF	ON		○	○	○
	OFF		○	○	
UP	ON	○	○		
				○	○
	OFF	○	○		
DOWN	ON	○	—	○	
			○	—	○
	OFF	○	—	○	

Master Switch Input Test (Coupe/Hatchback)

NOTE: The control unit is built into the power window master switch, and only controls driver's door window operations.

1. Remove the driver's door panel, and disconnect the 12P connector from the master switch.

2. Inspect the connector and socket terminals to be sure they are all making good contact.

   - If the terminals are bent, loose or corroded, repair them as necessary, and recheck the system.
   - If the terminals look OK, make the following input tests at the connector.
     — If a test indicates a problem, find and correct the cause, then recheck the system.
     — If all the input tests prove OK, the power window master switch must be faulty; replace it.

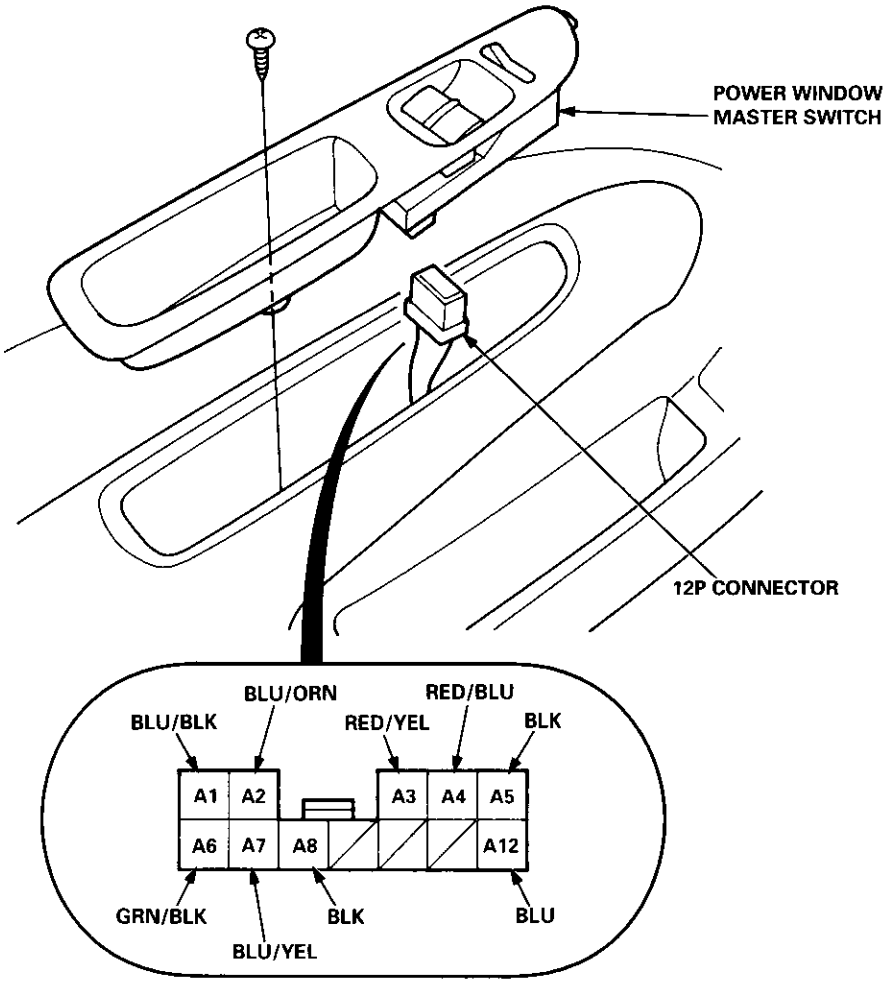

Wire side of female terminals

Cavity	Wire	Test condition	Test: Desired result	Possible cause if result is not obtained
A5	BLK	Under all conditions	Check for continuity to ground: There should be continuity.	• Poor ground (G551) • An open in the wire
A8				
A1	BLU/BLK	Ignition switch ON (II)	Check for voltage to ground: There should be battery voltage.	• Blown No. 10 or 11 (20 A) fuse in the under-dash fuse/relay box • Faulty power window relay • An open in the wire
A6	GRN/BLK			
A4	RED/BLU	Connect the BLU/BLK terminal to the RED/YEL terminal, and the RED/BLU terminal to the BLK terminal, then turn the ignition switch ON (II).	Check the driver's window motor: It should run (the window moves down).	• Faulty driver's window motor • An open in the wire
A3	RED/YEL			
A7	BLU/YEL	Connect the GRN/BLK terminal to the BLU/YEL terminal, and the BLU/ORN terminal to the BLK terminal, then turn the ignition switch ON (II).	Check the passenger's window motor: It should run (the window moves down).	• Faulty passenger's window motor • Faulty passenger's window switch • An open in the wire
A2	BLU/ORN			
A12	BLU	Connect the BLU/BLK terminal to the RED/YEL terminal, and the BLK terminal to the RED/BLU terminal, then turn the ignition switch ON (II).	Check for voltage between the BLU and BLK terminals: Approx. 6 V should be indicated as the driver's window motor runs.	• Faulty pulser • Faulty driver's window motor • An open in the wire
A8	BLK			

Master Switch Input Test (Sedan)

NOTE: The control unit is built into the power window master switch, and only controls driver's door window operations.

1. Remove the driver's armrest, and disconnect the 16P and 1P connectors from the master switch.

2. Inspect the connector and socket terminals to be sure they are all making good contact.

   - If the terminals are bent, loose or corroded, repair them as necessary, and recheck the system.
   - If the terminals look OK, make the following input tests at the connector.
     — If a test indicates a problem, find and correct the cause, then recheck the system.
     — If all the input tests prove OK, the power window maser switch must be faulty; replace it.

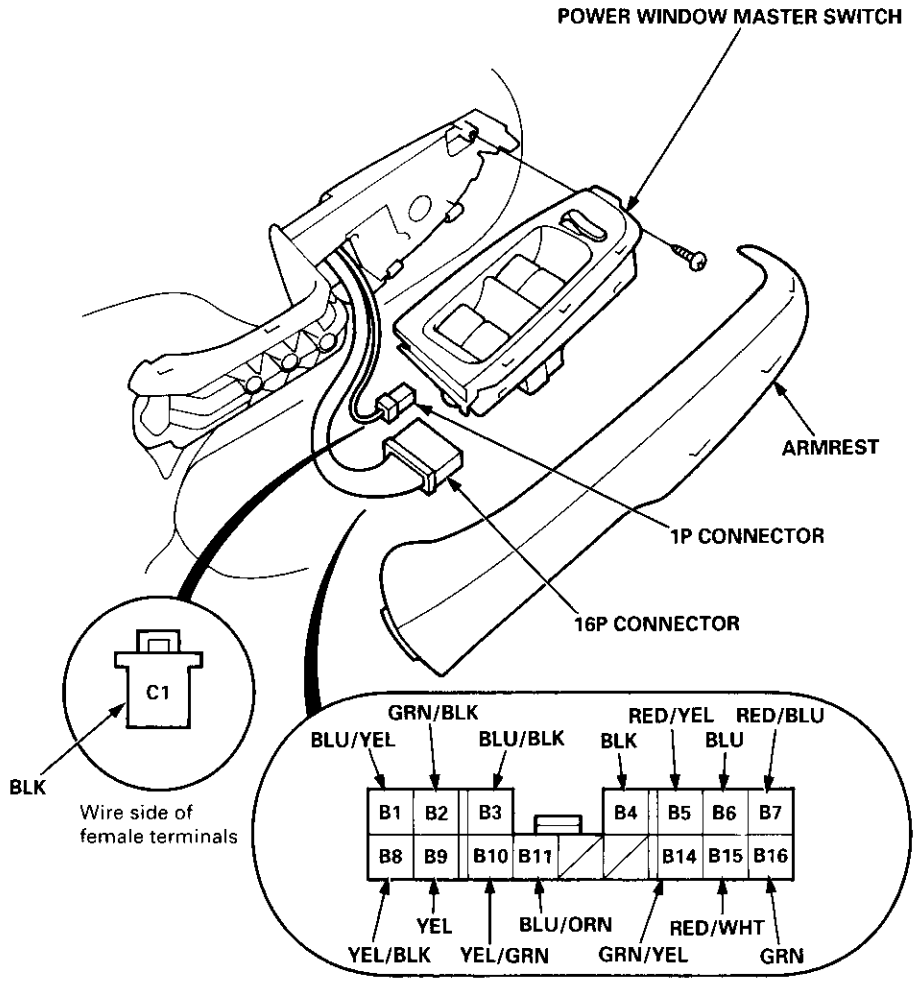

Cavity	Wire	Test condition	Test: Desired result	Possible cause if result is not obtained
B4 C1	BLK	Under all conditions	Check for continuity to ground: There should be continuity.	• Poor ground (G55) • An open in the wire
B3	BLU/BLK	Ignition switch ON (II)	Check for voltage to ground: There should be battery voltage.	• Blown No. 7, 8, 10 or 11 (20 A) fuse in the under-dash fuse/relay box • Faulty power window relay • An open in the wire
B2	GRN/BLK			
B8	YEL/BLK			
B15	RED/WHT			
B7 B5	RED/BLU RED/YEL	Connect the BLU/BLK terminal to the RED/YEL terminal, and the RED/BLU terminal to the BLK terminal, then turn the ignition switch ON (II).	Check the driver's window motor: It should run (the window moves down).	• Faulty driver's window motor • An open in the wire
B1 B11	BLU/YEL BLU/ORN	Connect the GRN/BLK terminal to the BLU/YEL terminal, and the BLU/ORN terminal to the BLK terminal, then turn the ignition switch ON (II).	Check the front passenger's window motor: It should run (the window moves down).	• Faulty front passenger's window motor • Faulty front passenger's window switch • An open in the wire
B9 B10	YEL YEL/GRN	Connect the YEL/BLK terminal to the YEL terminal, and the YEL/GRN terminal to the BLK terminal, then turn the ignition switch ON (II).	Check the right rear motor: It should run (the window moves down).	• Faulty right rear window motor • Faulty right window switch • An open in the wire
B14 B16	GRN/YEL GRN	Connect the RED/WHT terminal to the GRN/YEL terminal, and the GRN terminal to the BLK terminal, then turn the ignition switch ON (II).	Check the left rear motor: It should run (the window moves down).	• Faulty left rear window motor • Faulty left rear window switch • An open in the wire
B6 B4	BLU BLK	Connect the BLU/BLK terminal to the RED/YEL terminal, and the BLK terminal to the RED/BLU terminal, then turn the ignition switch ON (II).	Check for voltage between the BLU and BLK terminals: Approx. 6 V should be indicated as the driver's window motor runs.	• Faulty pulser • Faulty driver's window motor • An open in the wire

Passenger's Window Switch Test

Coupe/Hatchback:

1. Remove the armrest pocket from the door panel (see section 20).

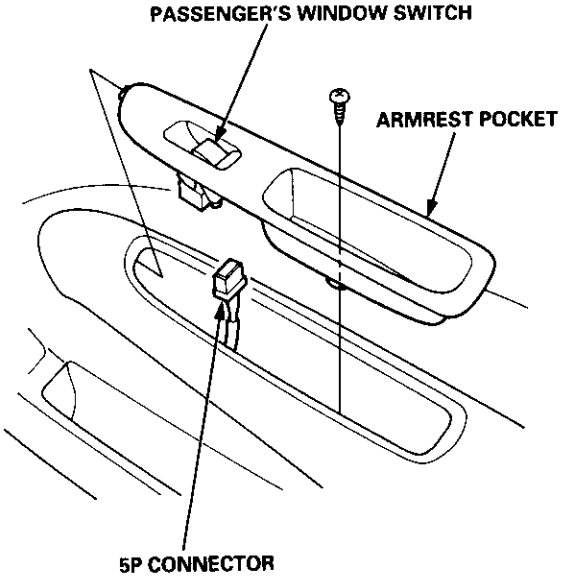

2. Disconnect the 5P connector from the passenger's window switch.

Sedan:

1. Remove the armrest (see section 20).

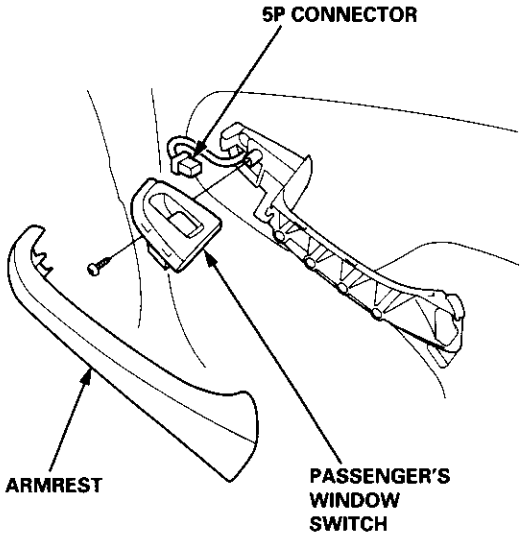

2. Disconnect the 5P connector, then remove the mounting screw from the passenger's switch.

Switch side of 5P terminal:

Terminal side of male terminals

3. Check for continuity between the terminals in each switch position according to the table.

Position \ Terminal	1	2	3	4	5
UP	○	○	○	○	
OFF		○	○	○	○
DOWN	○		○	○	○

Driver's Window Motor Test

Motor Test:

1. Remove the driver's door panel (see section 20).

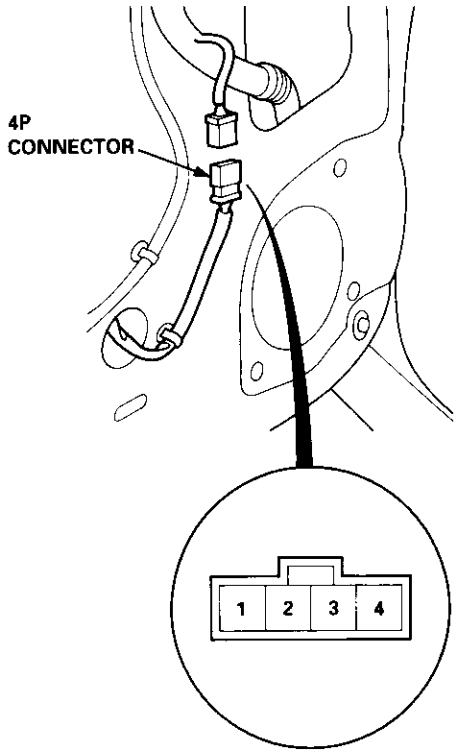

Terminal side of male terminals

2. Disconnect the 4P connector from the motor.

3. Test the motor in each direction by connecting battery power and ground according to the table.

Terminal / Direction	1	2
UP	⊖	⊕
DOWN	⊕	⊖

CAUTION: When the motor stops running, disconnect one lead immediately.

4. If the motor does not run or fails to run smoothly, replace it.

Pulser Test:

5. Connect the test leads of an analog ohmmeter to the No. 3 and No. 4 terminals.

6. Run the motor by connecting power and ground to the No. 1 and No. 2 terminals. The ohmmeter needle should move back and forth alternately.

Passenger's Window Motor Test

Front:

1. Remove the passenger's door panel (see section 20).

2. Disconnect the 2P connector from the window motor.

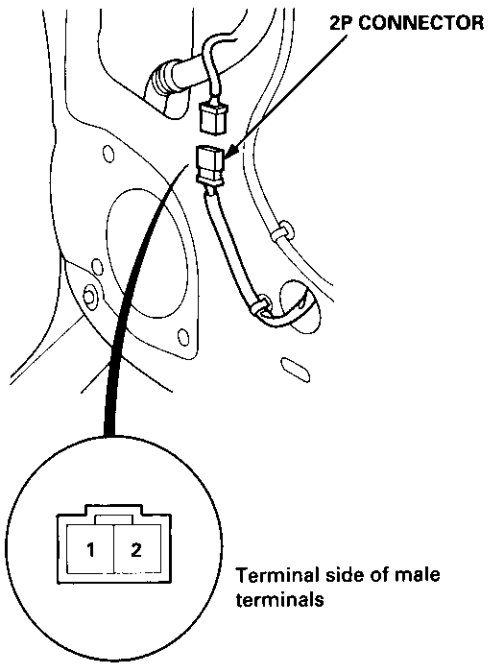

3. Check window motor operation by connecting power and ground according to the table.

Terminal / Direction	1	2
UP	⊕	⊖
DOWN	⊖	⊕

CAUTION: When the motor stops running, disconnect one lead immediately.

4. If the motor does not run or fails to run smoothly, replace it.

Rear:

1. Remove the passenger's door panel (see section 20).

2. Disconnect the 2P connector from the window motor.

NOTE: The illustration shows the right rear window motor; the left rear window motor is symmetrical.

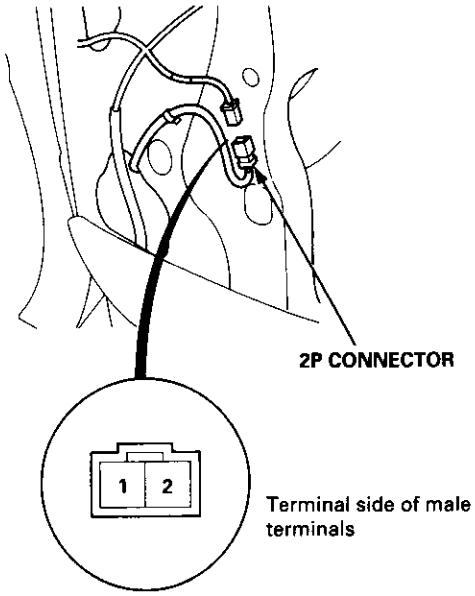

3. Check window motor operation by connecting power and ground according to the table.

Terminal / Direction	1	2
UP	⊖	⊕
DOWN	⊕	⊖

CAUTION: When the motor stops running, disconnect one lead immediately.

4. If the motor does not run or fails to run smoothly, replace it.

Component Location Index

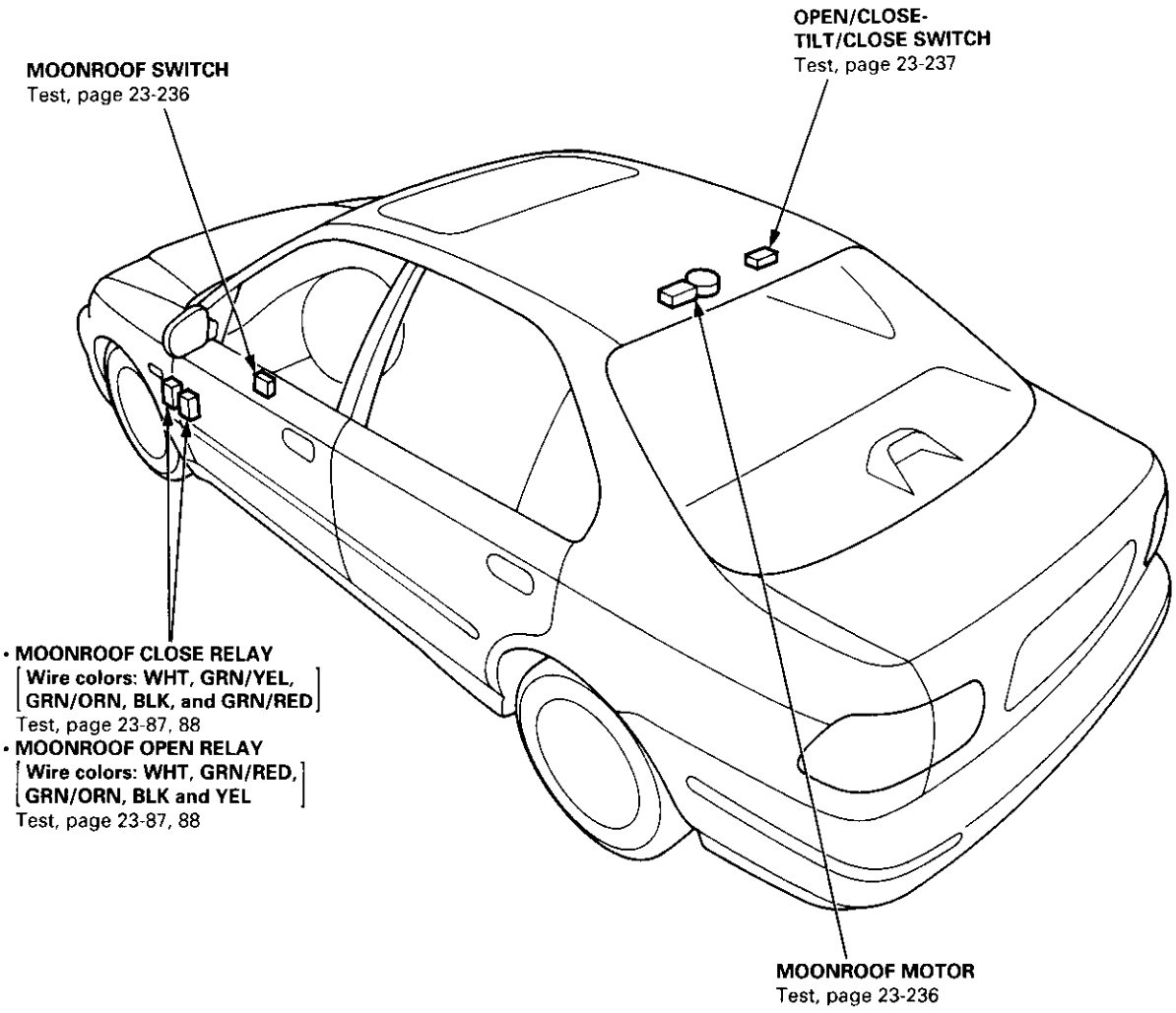

Circuit Diagram

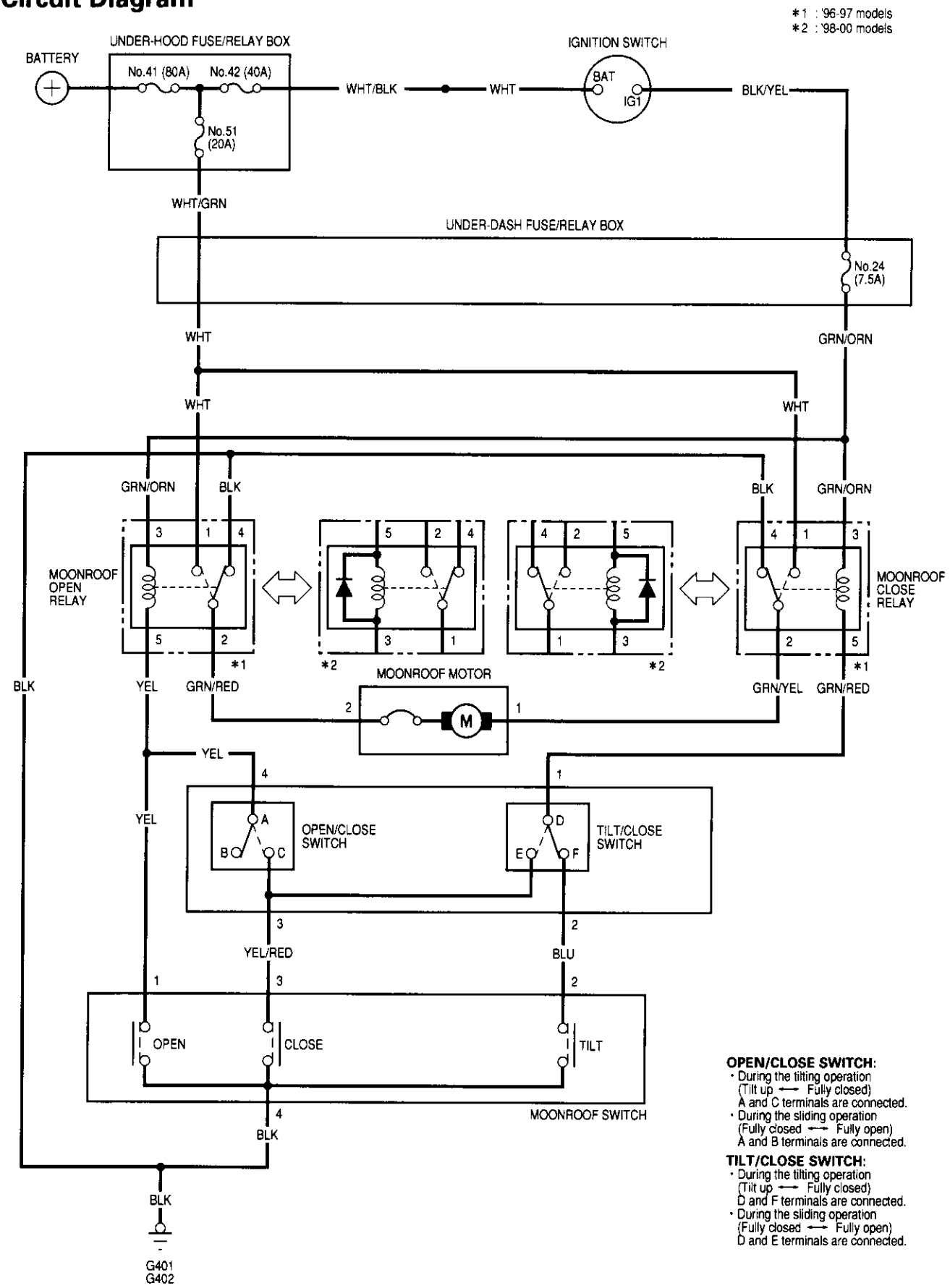

OPEN/CLOSE SWITCH:
- During the tilting operation
  (Tilt up ⟷ Fully closed)
  A and C terminals are connected.
- During the sliding operation
  (Fully closed ⟷ Fully open)
  A and B terminals are connected.

TILT/CLOSE SWITCH:
- During the tilting operation
  (Tilt up ⟷ Fully closed)
  D and F terminals are connected.
- During the sliding operation
  (Fully closed ⟷ Fully open)
  D and E terminals are connected.

Function Test

CAUTION: Be careful not to damage the moonroof switch or the driver's dashboard lower cover when prying the switch out.

NOTE: Check the No. 51 (20 A) fuse in the under-hood fuse/relay box and No. 24 (7.5 A) fuse in the under-dash fuse/relay box, before testing.

1. Pry the switch out of the driver's dashboard lower cover.

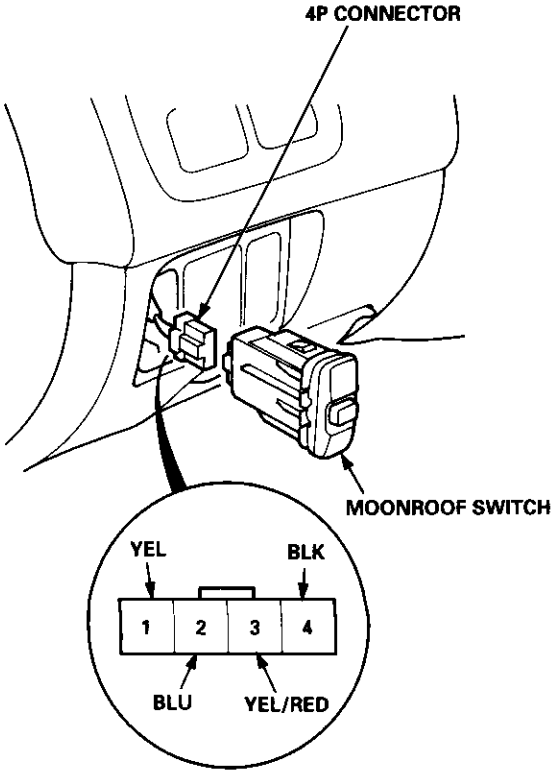

Wire side of female terminals

2. Disconnect the 4P connector from the switch.

3. Connect the No. 1 (YEL) terminal to body ground with a jumper wire, then turn the ignition switch ON (II). The moonroof should open.

   - If the moonroof opens, check the switch.
   - If the moonroof does not open, check for:
     — an open in the YEL wire.
     — faulty moonroof open relay.
     — faulty moonroof close relay.
     — poor ground (G401, G402).
     — faulty open/close switch.

4. Connect the No. 3 (YEL/RED) terminal to body ground with a jumper wire, then turn the ignition switch ON (II). The moonroof should close.

   - If the moonroof closes, check the switch.
   - If the moonroof does not close, check for:
     — an open in the YEL/RED or GRN/RED wire.
     — faulty moonroof close relay.
     — faulty moonroof open relay.
     — faulty tilt/close switch.

5. Connect the No. 2 (BLU) terminal to body ground with a jumper wire, then turn the ignition switch ON (II). The moonroof should tilt up.

   - If the moonroof tilts up, check the switch.
   - If the moonroof does not tilt up, check for:
     — an open in the BLU wire.
     — faulty tilt/close switch.

6. Connect the No. 3 (YEL/RED) terminal to body ground with a jumper wire, then turn the ignition switch ON (II). The moonroof should tilt down.

   If the moonroof does not tilt down, the open/close relay must be faulty.

7. Check for continuity to body ground on the No. 4 (BLK) terminal.
   There should be continuity.

   - If there is continuity, check the switch.
   - If there is no continuity, check for:
     — an open in the BLK wire.
     — poor ground (G401, G402).

Switch Test

1. Carefully remove the switch from the driver's dashboard lower cover (see page 23-205).

2. Check for continuity between the terminals in each switch position according to the table.

Position \ Terminal	1	2	3	4
OFF				
OPEN	○			○
CLOSE			○	○
TILT		○		○

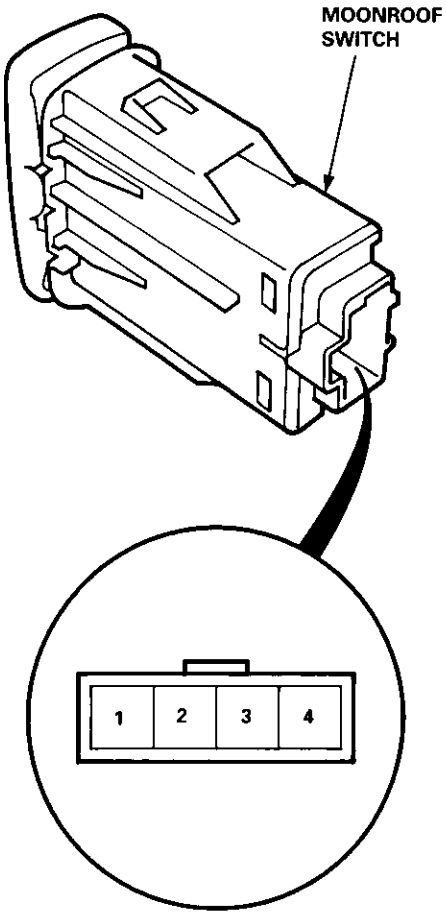

Motor Test

1. Remove the headliner (see section 20).

2. Disconnect the 2P connector from the moonroof motor.

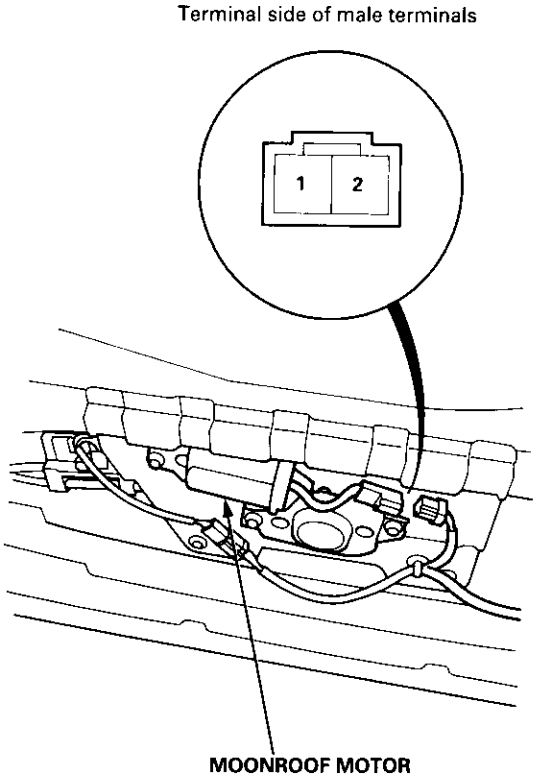

3. Check the motor by connecting power and ground according to the table.

Position \ Terminal	1	2
OPEN	⊖	⊕
CLOSE	⊕	⊖

4. If the motor does not run, replace it (see section 20).

   NOTE: See Closing Force Check in section 20 for motor clutch test.

Open/Close-Tilt/Close Switch Test

1. Remove the headliner (see section 20).

2. Disconnect the 2P and 4P connectors from the moonroof motor and the switch.

3. Check for continuity between the terminals in each switch position according to the table.

Position \ Terminal	1	2	3	4
CLOSE ←→ TILT	○	○	○	○
CLOSE ←→ OPEN	○		○	

4. If there is no continuity, adjust or replace the switch.

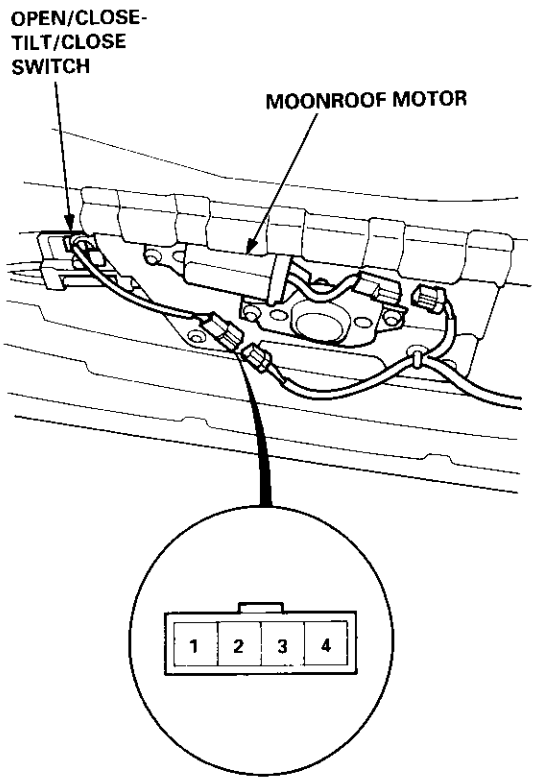

Terminal side of male terminals

Component Location Index

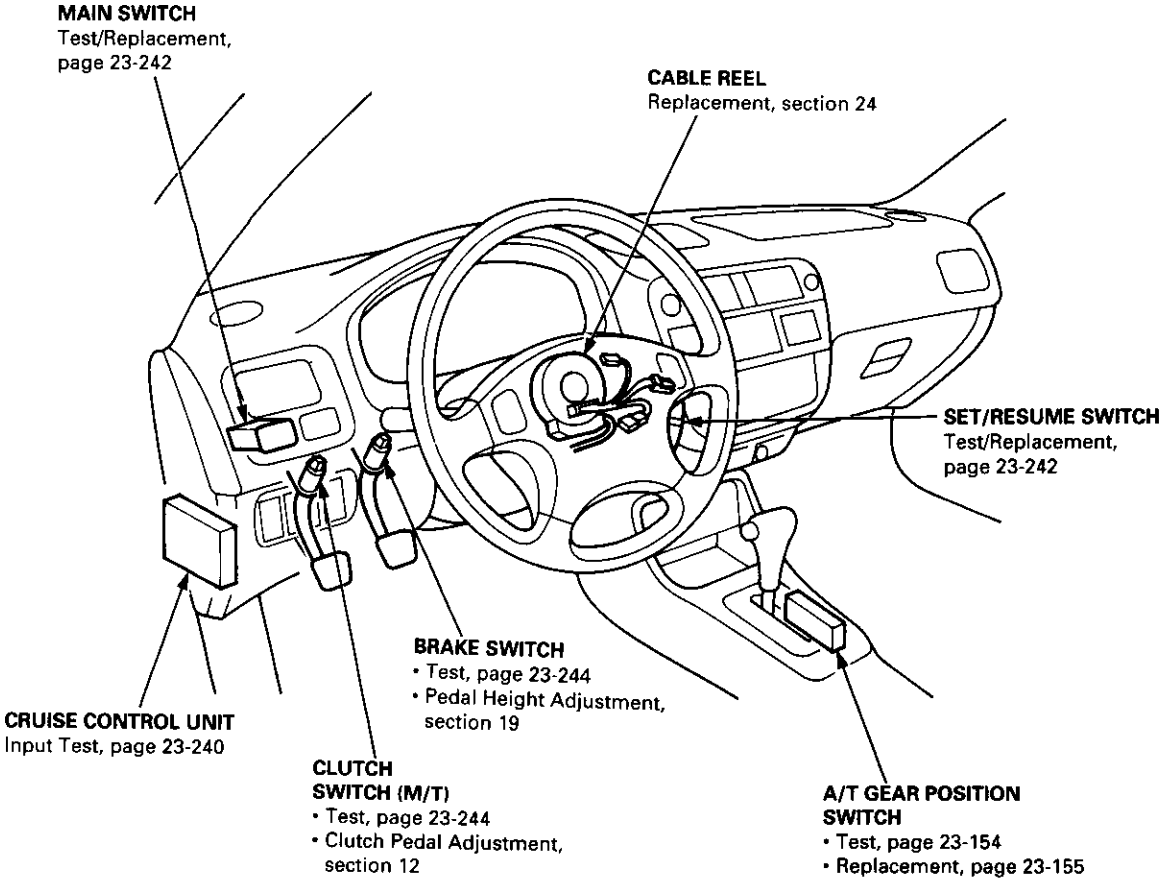

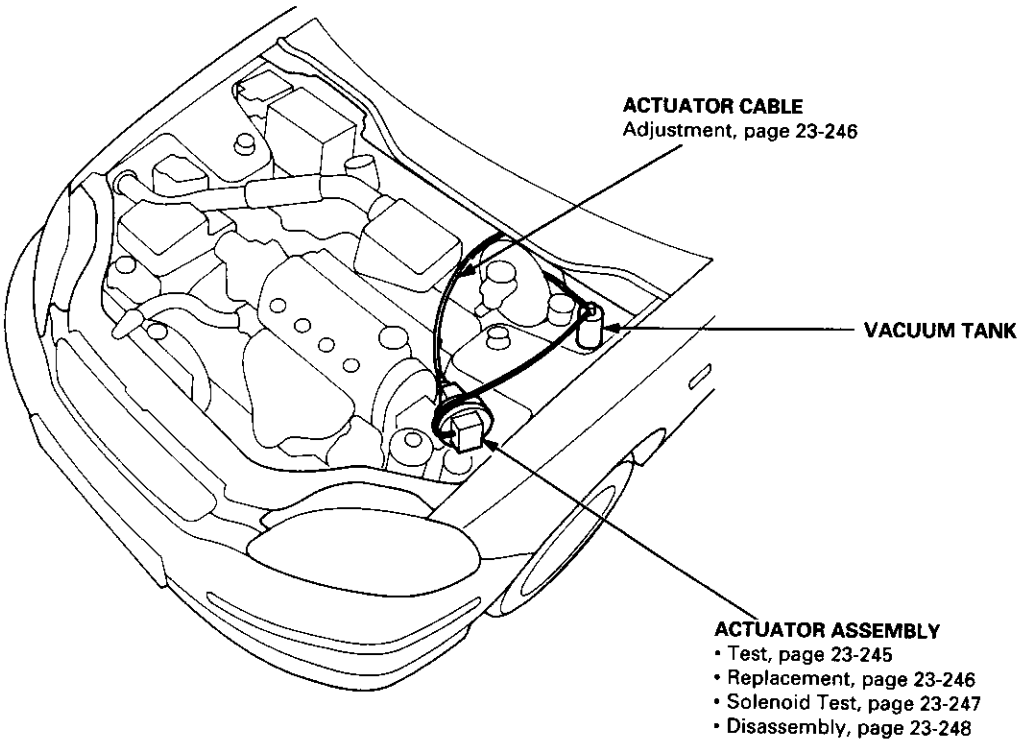

Circuit Diagram

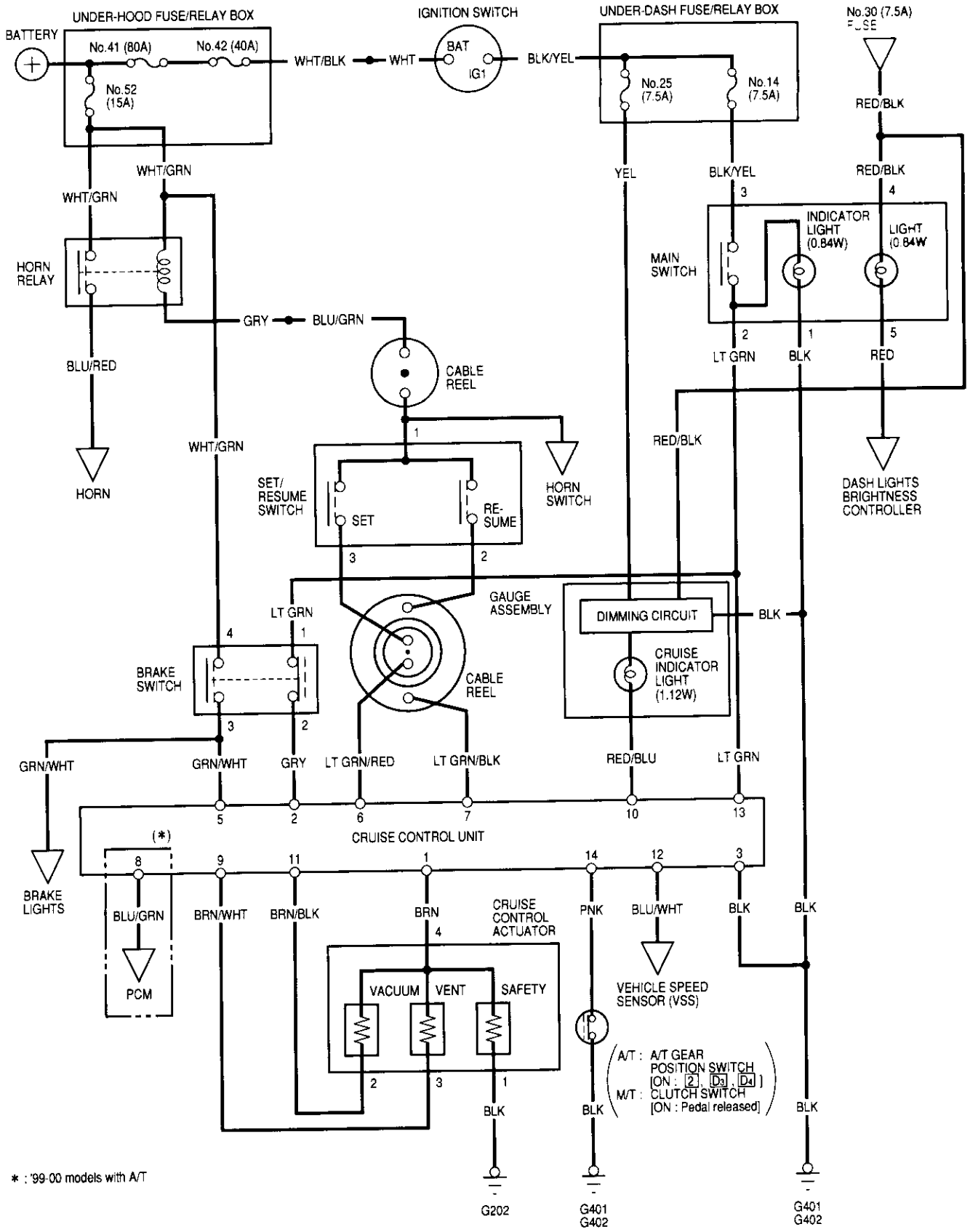

* : '99-00 models with A/T

Control Unit Input Test

SRS components are located in this area. Review the SRS component locations, precautions, and procedures in the SRS section (24) before performing repairs or service.

1. Remove the driver's dashboard lower cover and knee bolster (see section 20).

2. Disconnect the 14P connector from the control unit.

3. Inspect the connector and socket terminals to be sure they are all making good contact.

   If the terminals are bent, loose, or corroded, repair them as necessary, and recheck the system.
   If the terminals look OK, make the following input tests at the connector.
   — If any test indicates a problem, find and correct the cause, then recheck the system.
   — If all the input tests prove OK, the control unit must be faulty; replace it.

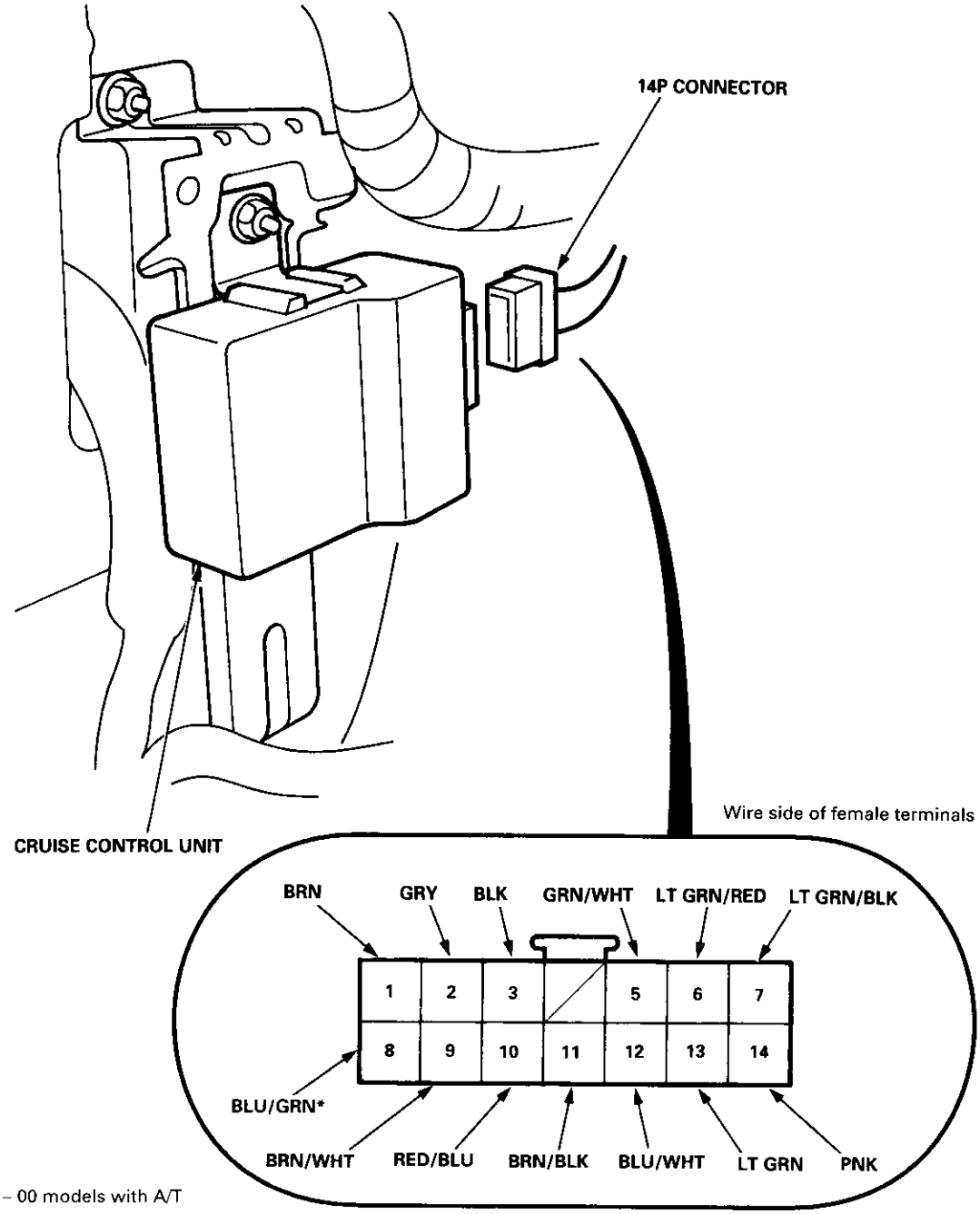

*: '99 – 00 models with A/T

Cavity	Wire	Test condition	Test: Desired result	Possible cause if result is not obtained
9	BRN/WHT	Under all conditions	Check for resistance to ground: There should be 80 – 120 Ω.	• Faulty actuator solenoid • Poor ground (G202) • An open in the wire
1	BRN	Under all conditions	Check for resistance to ground: There should be 40 – 60 Ω.	
11	BRN/BLK	Under all conditions	Check for resistance to ground: There should be 70 – 110 Ω.	
2	GRY	Ignition switch ON (II), main switch ON and brake pedal pushed, then released	Check for voltage to ground: There should be 0 V with the pedal pushed and battery voltage with the pedal released.	• Faulty brake switch • An open in the wire
3	BLK	Under all conditions	Check for continuity to ground: There should be continuity.	• Poor ground (G401, G402) • An open in the wire
5	GRN/WHT	Brake pedal pushed, then released	Check for voltage to ground: There should be battery voltage with the pedal pushed, and 0 V with the pedal released.	• Blown No. 52 (15 A) fuse in the under-hood fuse/relay box • Faulty brake switch • An open in the wire
6	LT GRN/ RED	Set button pushed	Check for voltage to ground: There should be battery voltage.	• Blown No. 52 (15 A) fuse in the under-hood fuse/relay box • Faulty horn relay • Faulty set/resume switch • Faulty cable reel • An open in the wire
7	LT GRN/ BLK	Resume button pushed		
10	RED/BLU	Ignition switch ON (II)	Attach to ground: Cruise indicator light in the gauge assembly should come on.	• Blown bulb • Blown No. 25 (7.5 A) fuse in the under-dash fuse/relay box • Faulty dimming circuit in the gauge assembly • An open in the wire
12	BLU/WHT	Ignition switch ON (II) and main switch ON; raise the front of the car, and rotate one wheel slowly with the other wheel blocked.	Check for voltage between the BLU/WHT ⊕ and BLK ⊖ terminals: There should be 0 – 5 V or more –0 – 5 V or more repeatedly.	• Faulty vehicle speed sensor (VSS) • An open in the wire
13	LT GRN	Ignition switch ON (II) and main switch ON	Check for voltage to ground: There should be battery voltage.	• Blown No. 14 (7.5 A) fuse in the under-dash fuse/relay box • Faulty main switch • An open in the wire
14	PNK	A/T: Shift lever in 2, D3 or D4 M/T: Clutch pedal released	Check for continuity to ground: There should be continuity. NOTE: There should be no continuity when the clutch pedal is depressed or when the shift lever is in other positions.	• Faulty A/T gear position switch • Faulty or misadjusted clutch switch (M/T) • Poor ground (G401, G402) • An open in the wire
8*	BLU/GRN	Under all conditions	Check for continuity between No. 8 terminal and No. 5 terminal of the PCM connector A. There should be continuity.	• An open in the wire

*: '99 – 00 models with A/T

Main Switch Test/Replacement

1. Remove the driver's dashboard lower cover (see section 20).
2. Carefully push out the switch from behind the dashboard.
3. Disconnect the connector from the switch.

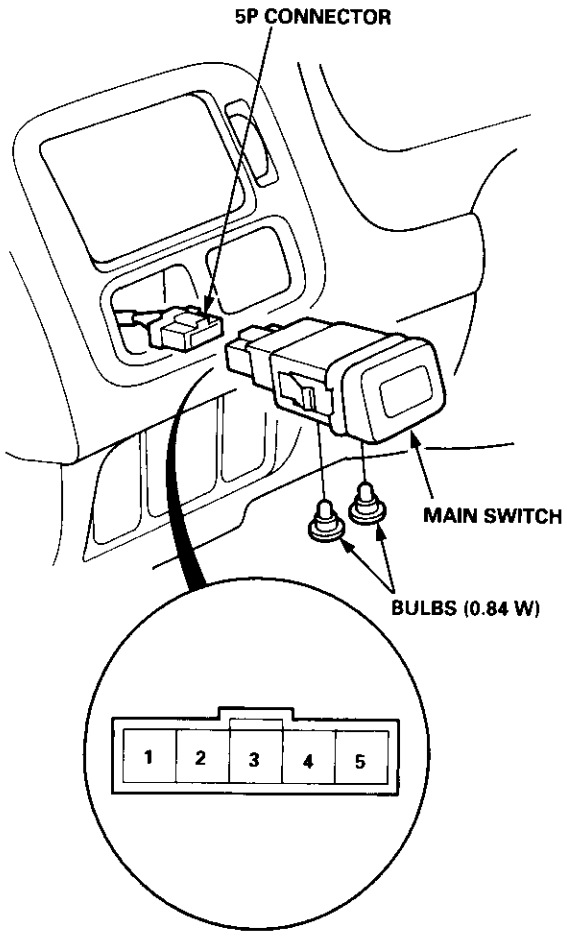

4. Check for continuity between the terminals in each switch position according to the table.

Position \ Terminal	1		2	3	4		5
OFF	○	⊖	○		○	⊖	○
ON	○	⊖	○	○	○	⊖	○

If there is no continuity, replace the switch.

Set/Resume Switch Test/Replacement

1. Make sure you have the anti-theft code for the radio, then write down the frequencies for the radio's preset buttons. ('99 – 00 models).
2. Disconnect the battery negative cable, then disconnect the positive cable, and wait at least three minutes.
3. Disconnect the driver's airbag connector (see section 24).
4. Remove the dashboard driver's lower cover (see section 20).
5. Disconnect the cable reel sub-harness 3P connector from the main wire harness.

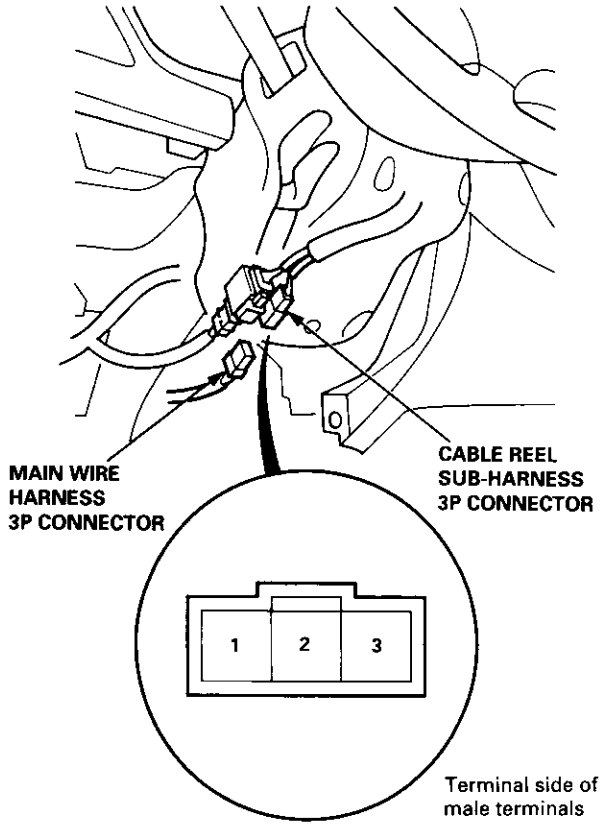

6. Check for continuity between the terminals of the cable reel sub-harness 3P connector in each switch position according to the table.

Position \ Terminal	1	2	3
SET (ON)	○	○	
RESUME (ON)		○	○

- If there is continuity, and it matches the table, the switch is OK.
- If there is no continuity in one or both positions, go to step 7.

7. Remove the two screws, then remove the switch.

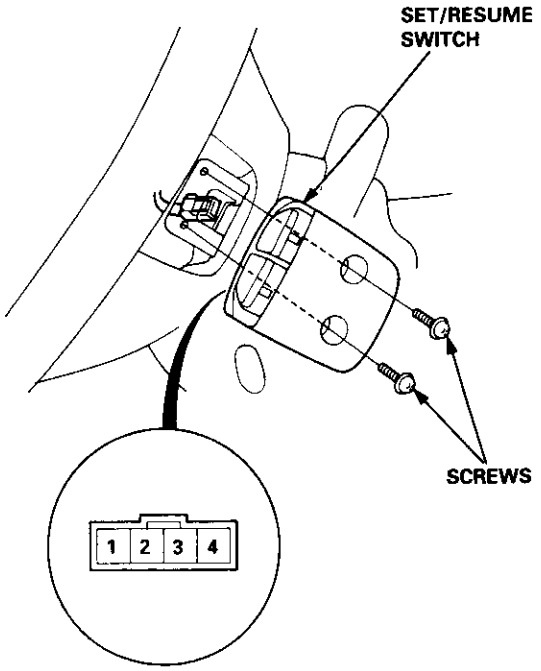

8. Check for continuity between the terminals in switch position according to the table.

Terminal / Position	1	2	3
SET (ON)	○	—	○
RESUME (ON)	○	○	

- If there is continuity, and it matches the table, replace the cable reel.
- If there is no continuity in one or both positions, replace the switch.

9. If all tests prove OK, reconnect the cable reel and cable reel sub-harness connector, then reinstall the steering column covers.

10. Reconnect the driver's airbag connector, and reinstall the access panel on the steering wheel.

11. Reconnect the battery positive cable, then the negative cable.

12. After connecting the airbag connectors, confirm proper system operation: Turn the ignition switch ON (II); the SRS indicator light should come on for about six seconds and then go off.

13. Enter the anti-theft code for the radio, then enter the customer's radio station presets. ('99 – 00 models).

Brake Switch Test

1. Disconnect the 4P connector from the switch.

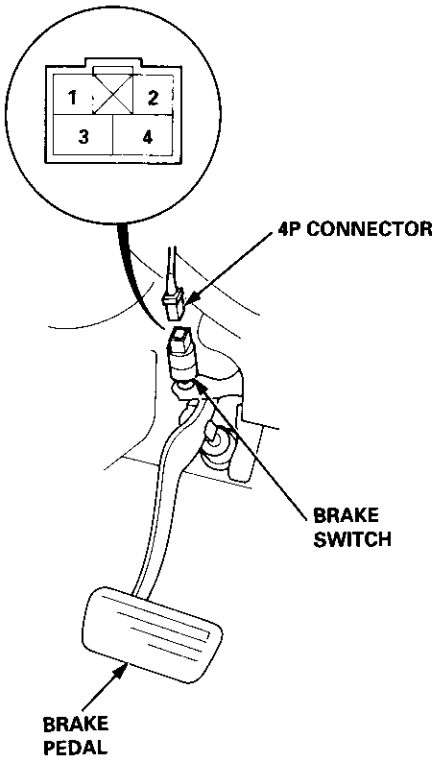

2. Check for continuity between the terminals according to the table.

Terminal / Brake pedal	1	2	3	4
RELEASED	○——	——○		
DEPRESSED			○——	——○

3. If necessary, replace the switch or adjust pedal height (see section19).

Clutch Switch Test (M/T)

1. Disconnect the 2P connector from the switch.

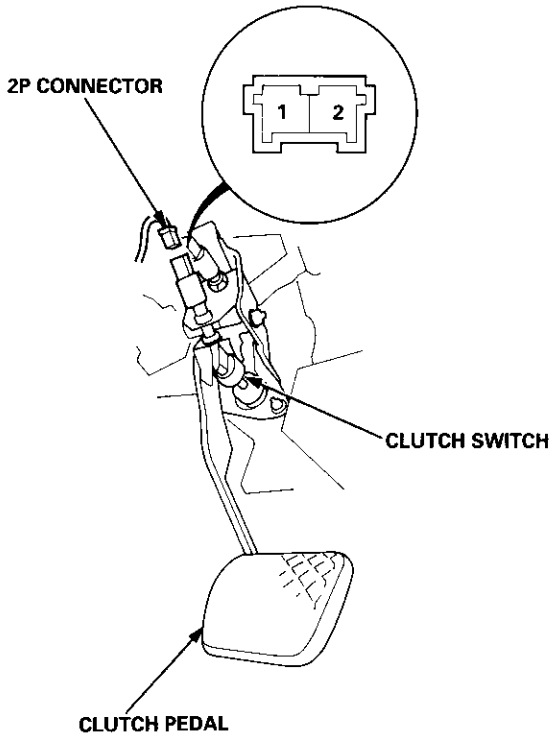

2. Check for continuity between the terminals according to the table.

Terminal / Clutch pedal	1	2
RELEASED		
DEPRESSED	○——	——○

3. If necessary, replace the switch or adjust pedal height (see section 12).

Actuator Test

1. Disconnect the actuator cable from the actuator rod and the 4P connector.

2. Connect battery power to the No. 4 terminal and ground to the No. 1, No. 2 and No. 3 terminals.

3. Connect a vacuum pump to the vacuum hose. Then apply vacuum to the actuator.

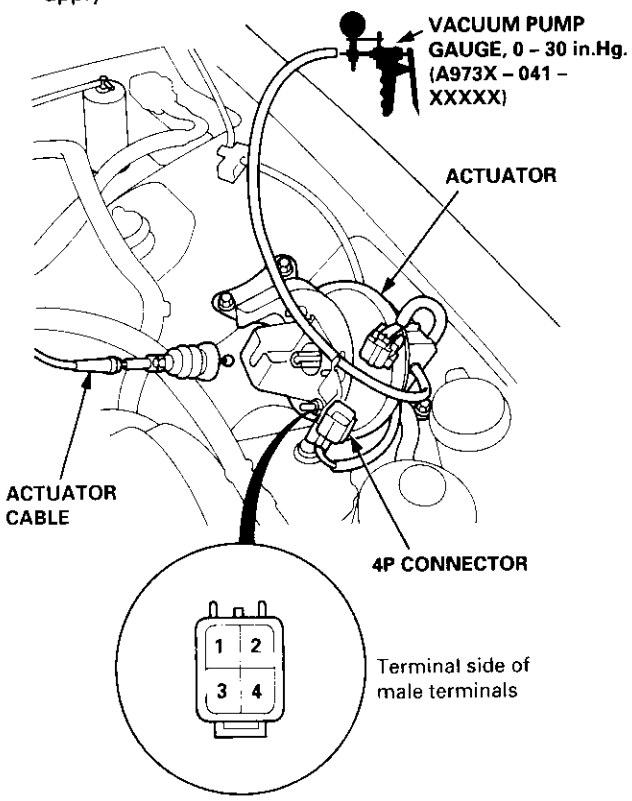

4. The actuator rod should pull in completely. If the rod pulls in only part-way or not at all, check for a leaking vacuum line or defective solenoid.

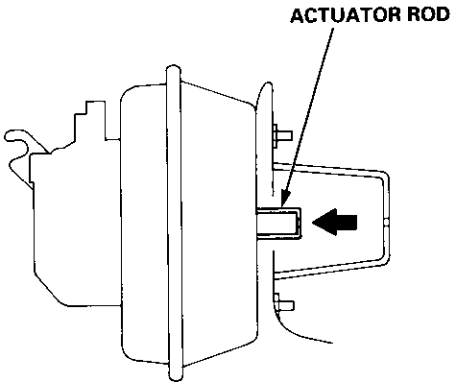

5. With voltage and vacuum still applied, try to pull the actuator rod out by hand. You should not be able to pull it out. If you can, it is defective.

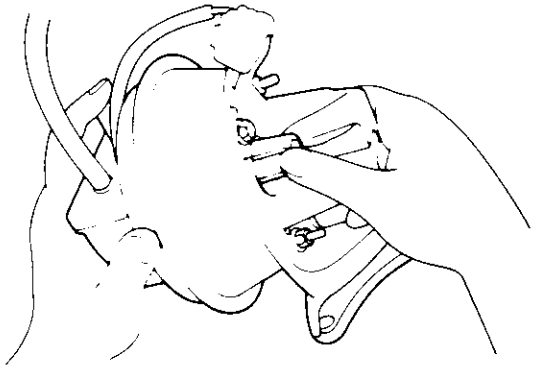

6. Disconnect ground from the No. 3 terminal. The actuator rod should return. If it does not return, but the vent hose and filter are not plugged, the solenoid valve assembly is defective.

7. Repeat steps 2 through 5, and disconnect ground from the No. 1 terminal. The actuator rod should return. If it does not return, but the vent hose and filter are not plugged, the solenoid valve assembly is defective.

8. If you replace the solenoid valve assembly, be sure to use new O-rings on each solenoid.

9. Disconnect power and ground from the 4P connector. Disconnect the vent hose from the actuator. Connect a vacuum pump to the actuator vent hose port, and apply vacuum. The actuator rod should pull in completely. If not, the vacuum valve is stuck open. Replace the actuator.

Actuator Replacement

1. Pull back the boot, and loosen the locknut. Then disconnect the cable from the bracket.

2. Disconnect the cable end from the actuator rod.

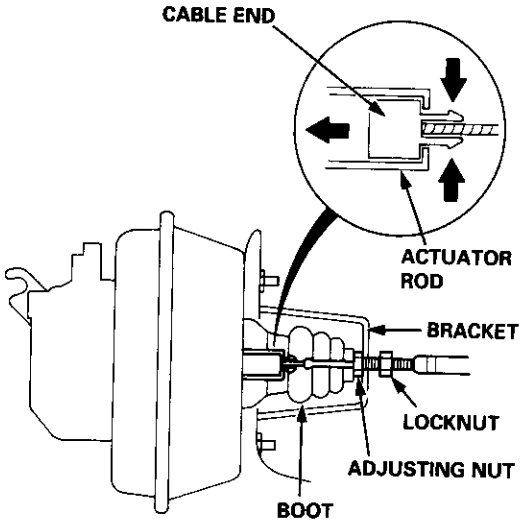

3. Disconnect the 4P connector from the actuator.

4. Disconnect the vacuum hose from the vacuum tank. Pull out the vent hose.

5. Remove the three mounting bolts and the actuator with the bracket.

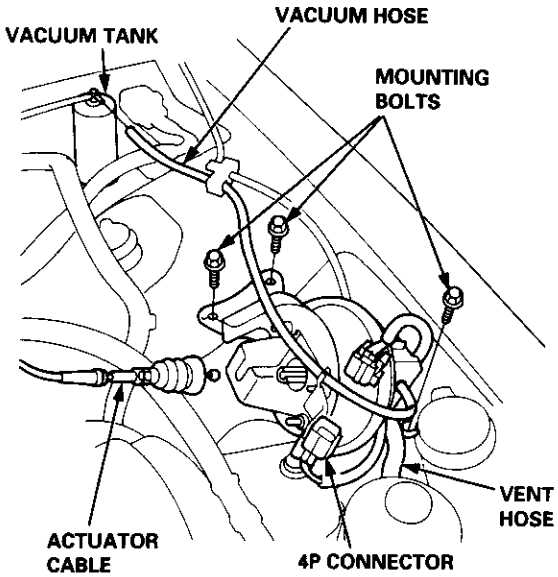

6. If necessary, disconnect the cable end from the linkage over the accelerator pedal, then turn the grommet 90° in the bulkhead, and remove the cable.

7. Install in the reverse order of removal, and adjust free play at the actuator rod after connecting the cable (see next column).

Actuator Cable Adjustment

1. Check that the actuator cable operates smoothly with no binding or sticking.

2. Start the engine. Hold the engine at 3,000 rpm with no load (A/T in N or P , M/T in neutral) until the radiator fan comes on, then let it idle.

3. Measure the amount of movement of the actuator rod until the cable pulls on the accelerator lever (engine speed starts to increase). Free play should be 11 ± 1.0 mm (0.43 ± 0.04 in).

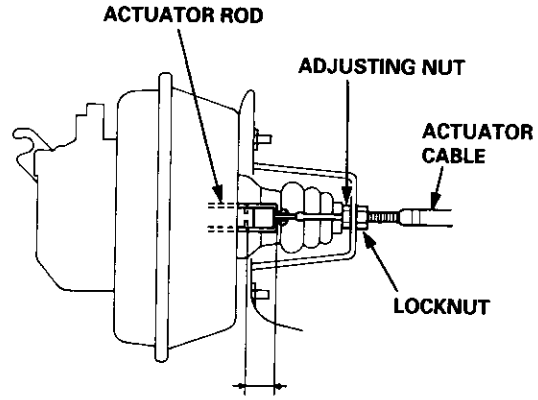

LOCKNUT FREE PLAY: 11 ± 1.0 mm (0.43 ± 0.04 in)

4. If free play is not within specs, loosen the locknut, and turn the adjusting nut as required.

   NOTE: If necessary, check the throttle cable free play (see section 11), then recheck the actuator rod free play.

5. Retighten the locknut, and recheck the free play.

Actuator Solenoid Test

1. Disconnect the 4P connector from the actuator.

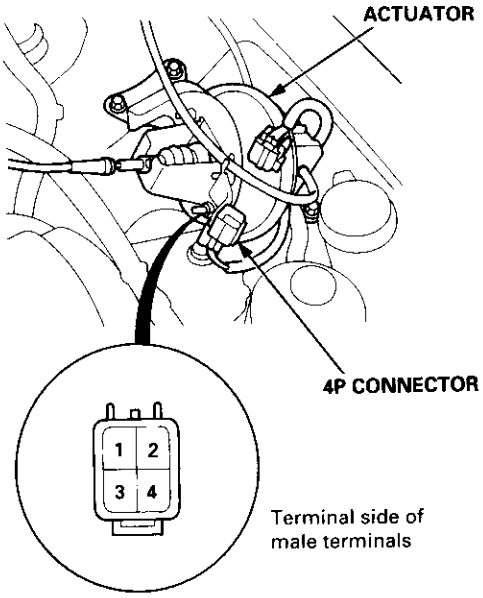

2. Check for resistance between the terminals according to the table.

Terminal / Resistance (Ω)	1	2	3	4
VENT SOLENOID 40 – 60Ω			○	○
VACUUM SOLENOID 30 – 50Ω		○		○
SAFETY SOLENOID 40 – 60Ω	○			○

NOTE: Resistance will vary slightly with temperature; specified resistance is at 70°F (20°C).

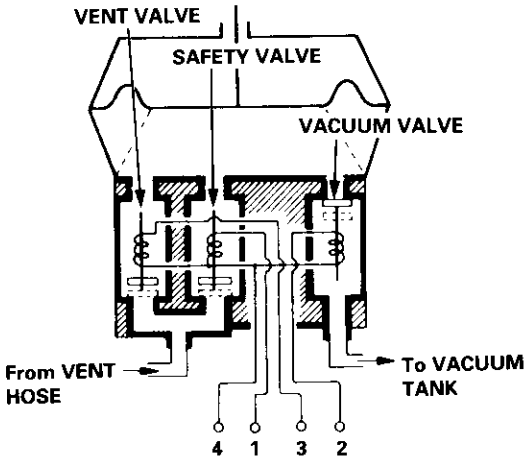

Actuator Disassembly

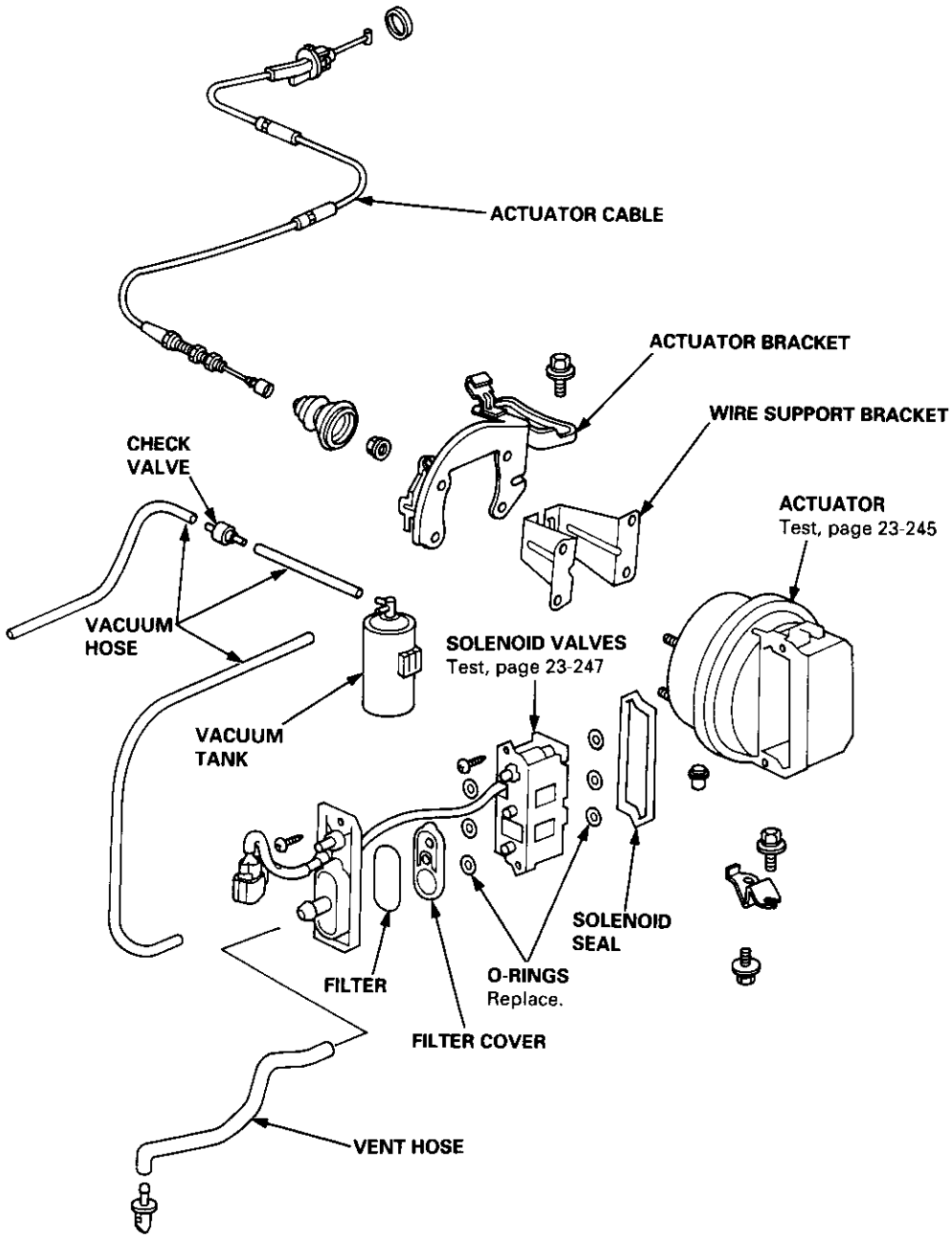

Component Location Index

NOTE (With keyless entry system):

- If the doors unlock or lock with the transmitter, but the LED on the transmitter does not come on, the LED is faulty; replace the transmitter.
- When you unlock the doors with the transmitter, the ceiling light (middle position) comes on for 30 seconds. (However, if the audio unit is not installed, the light does not come on.)
- If any door is open, you cannot lock or unlock the doors with the transmitter.
- The horn sounds only the first time you press a transmitter button. (Pressing repeatedly does not activate the horn again.)
- If you unlocked the doors with the transmitter, but do not open any of the doors within 30 seconds, the doors relock automatically.
- The doors do not lock or unlock with the transmitter if the ignition key is inserted in the ignition switch.
- If you press the PANIC button for more than two seconds, the horn sounds for about 30 seconds, and the transmitter LED comes on. (The panic mode will not be activated if the ignition key is in the ignition switch.) The panic mode is cancelled by pressing any of the transmitter buttons.
- After replacing the transmitter battery, press the lock and unlock buttons five or six times to activate the transmitter.

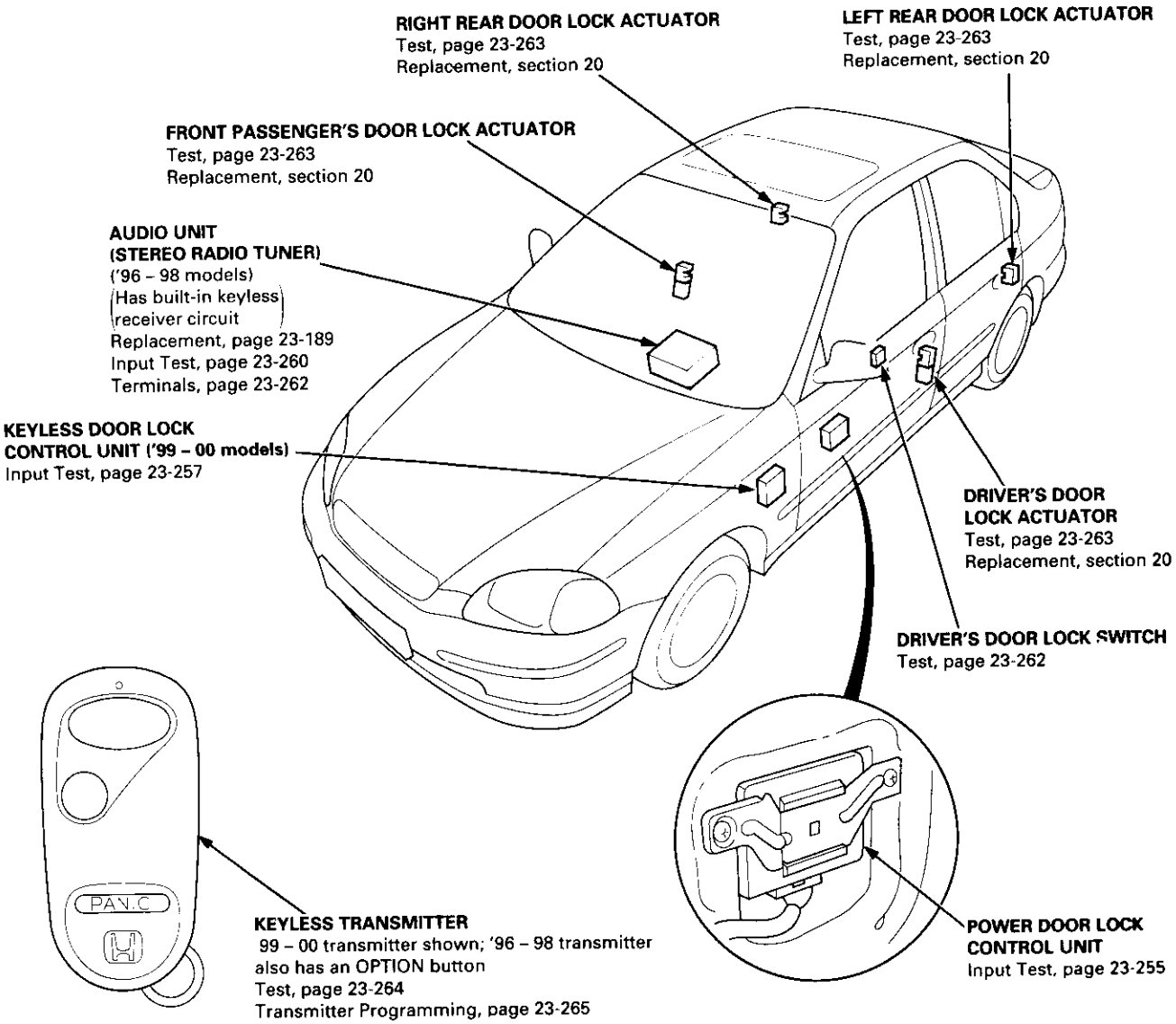

Circuit Diagram (With Keyless Entry System: '96 – 98 models)

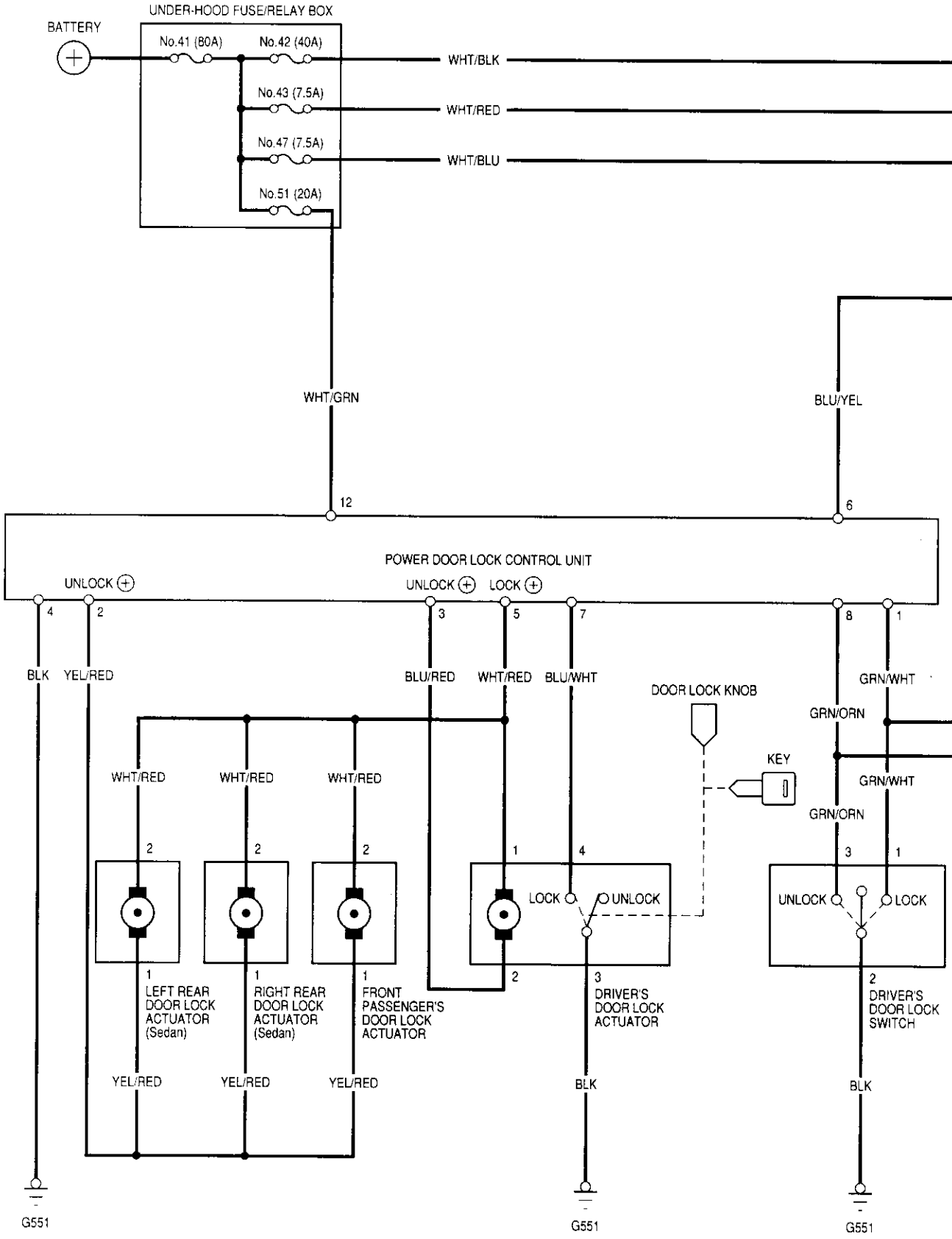

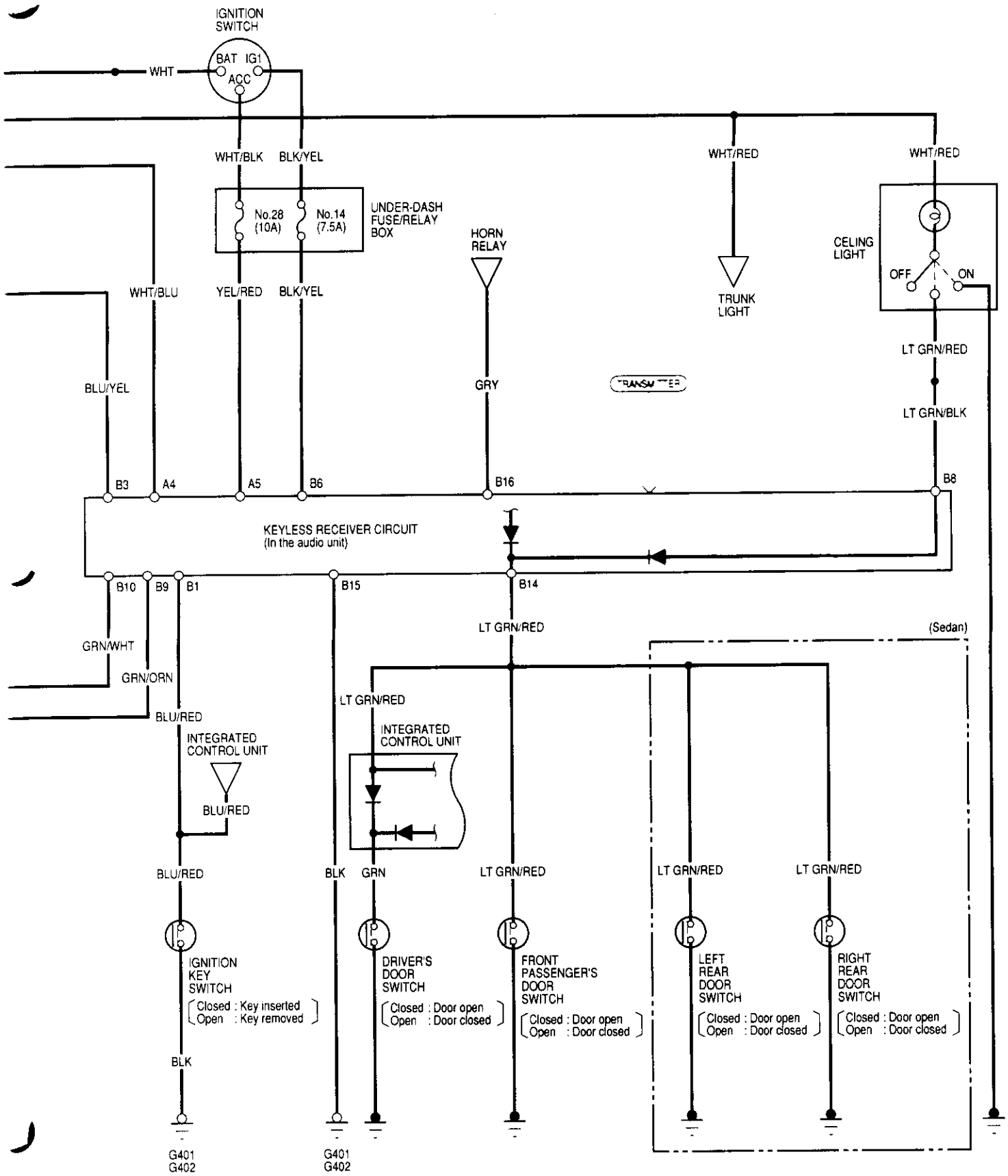
IGNITION SWITCH
BAT
IG1
ACC
WHT
WHT/BLK
BLK/YEL
WHT/RED
WHT/RED
No.28 (10A)
No.14 (7.5A)
UNDER-DASH FUSE/RELAY BOX
HORN RELAY
CELING LIGHT
OFF
ON
TRUNK LIGHT
WHT/BLU
YEL/RED
BLK/YEL
LT GRN/RED
BLU/YEL
GRY
LT GRN/BLK
B3
A4
A5
B6
B16
B8
KEYLESS RECEIVER CIRCUIT
(In the audio unit)
B10
B9
B1
B15
B14
LT GRN/RED
(Sedan)
GRN/WHT
GRN/ORN
LT GRN/RED
BLU/RED
INTEGRATED CONTROL UNIT
INTEGRATED CONTROL UNIT
BLU/RED
BLU/RED
BLK
GRN
LT GRN/RED
LT GRN/RED
LT GRN/RED
IGNITION KEY SWITCH
Closed : Key inserted
Open : Key removed
DRIVER'S DOOR SWITCH
Closed : Door open
Open : Door closed
FRONT PASSENGER'S DOOR SWITCH
Closed : Door open
Open : Door closed
LEFT REAR DOOR SWITCH
Closed : Door open
Open : Door closed
RIGHT REAR DOOR SWITCH
Closed : Door open
Open : Door closed
BLK
G401
G402
G401
G402

Circuit Diagram (With Keyless Entry System : '99-00 models)

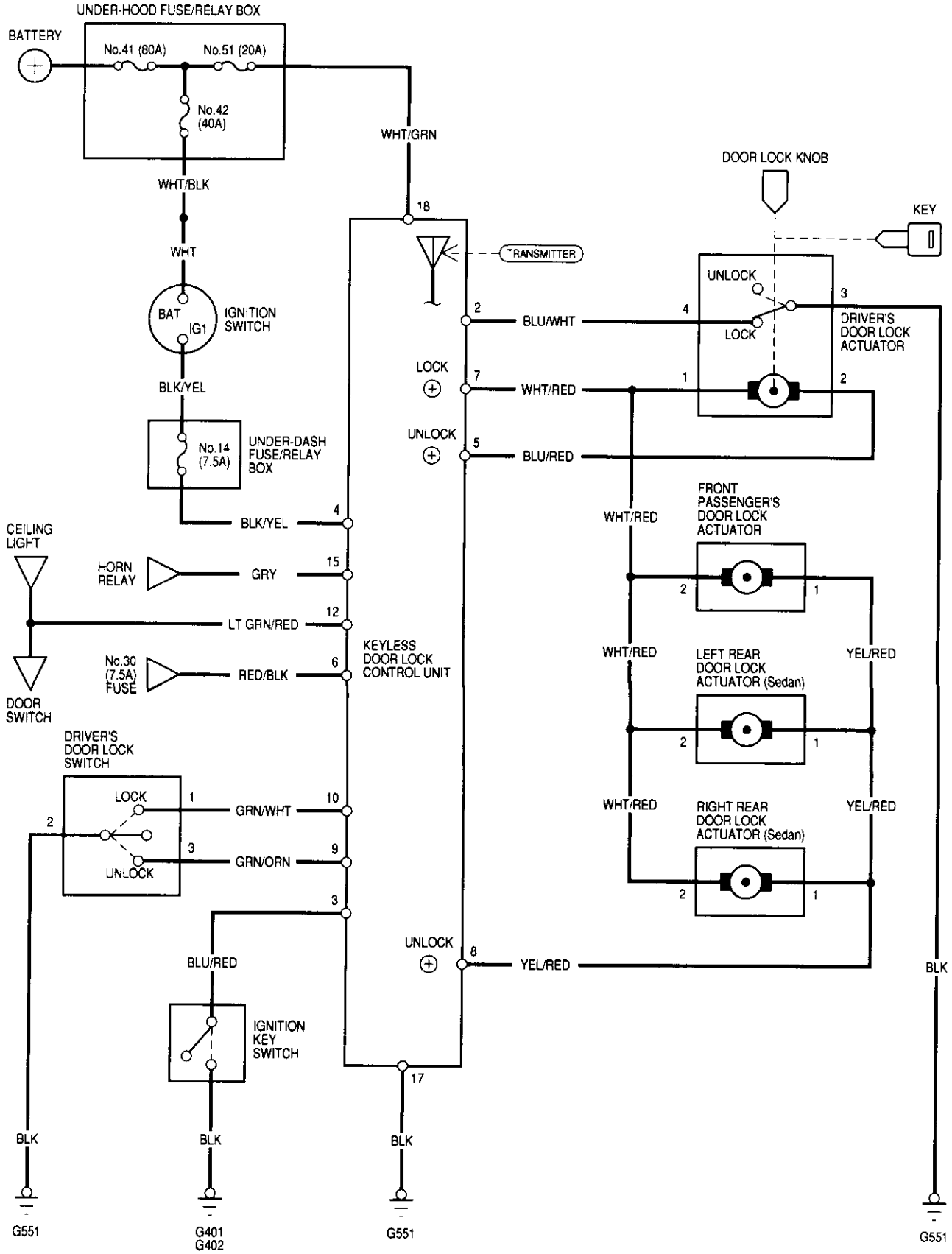

Circuit Diagram (Without Keyless Entry System)

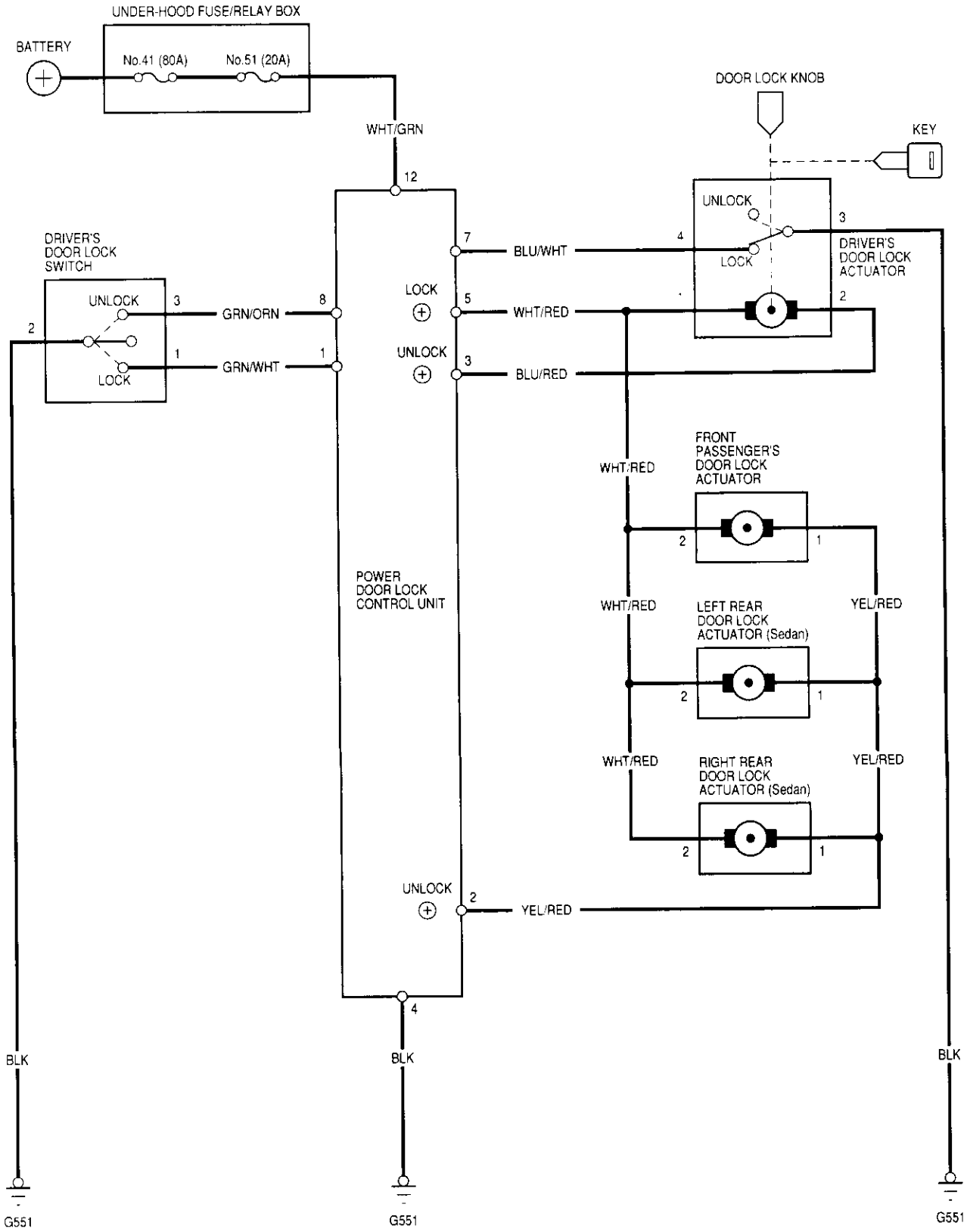

Troubleshooting

NOTE: The numbers in the table show the troubleshooting sequence.

Symptom \ Item to be inspected		Blown No. 51 (20 A) fuse (In the under-hood fuse/relay box)	Driver's door lock knob switch (In the driver's door lock actuator)	Control unit input	Passenger's door actuator	Disconnected or obstructed door lock rod/linkage	Driver's door lock switch	Transmitter inspection	Audio unit input (Has built-in keyless receiver circuit)	Poor ground	Open circuit, loose or disconnected terminals
Power door lock system does not work at all.		1		2						G551	WHT/GRN
Doors don't lock with driver's door lock knob switch.	All doors	1	2	3							BLU/WHT
	One or more doors				1	2					YEL/RED or WHT/RED
Doors don't lock or unlock with driver's door lock switch.	All doors	1		3			2				GRN/WHT, GRN/ORN, YEL/RED or WHT/RED
	One or more doors				1	2					YEL/RED or WHT/RED
*The power door lock system works properly but the keyless entry system doesn't.								1	2	G401 G402	GRN/WHT or GRN/ORN

*: With keyless entry system

NOTE:
- When the remote transmitter button is pressed the first time, only the driver's door will unlock. When the button is pressed the second time, all the doors will unlock.
- The doors will relock automatically after 30 seconds if a door is not opened, or the key is out of the ignition switch.
- The keyless entry system will not lock or unlock the doors when the key is in the ignition switch.

Control Unit Input Test ('96 – 98 models and '99 – 00 models without Keyless Entry System)

1. Remove the driver's door panel (see section 20).

2. Disconnect the 12P connector from the control unit.

3. Inspect the connector and socket terminals to be sure they are all making good contact.

   - If the terminals are bent, loose or corroded, repair them as necessary, and recheck the system
   - If the terminals look OK, make the following input tests at the connector.
     — If any test indicates a problem, find and correct the cause, then recheck the system.
     — If all the input tests prove OK, the control unit must be faulty; replace it.

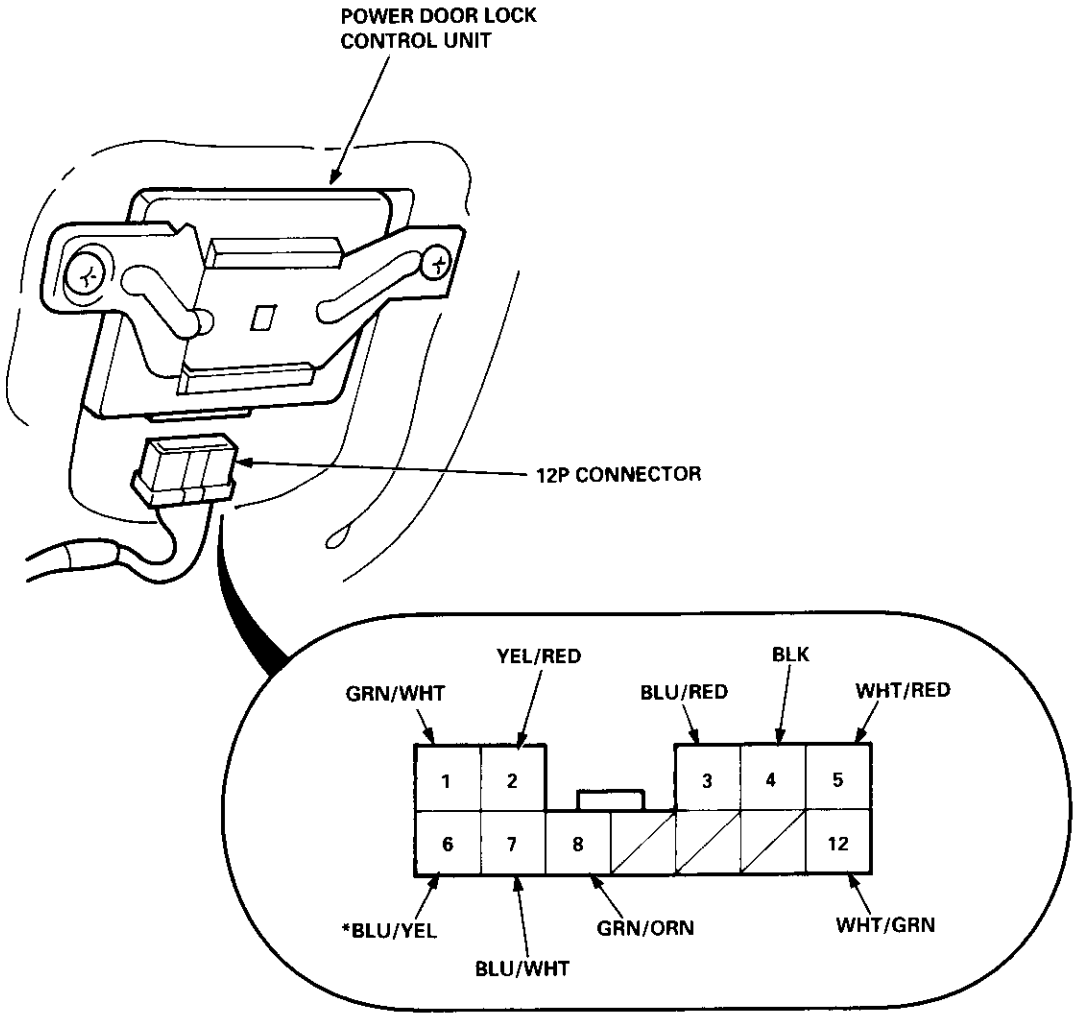

Wire side of female terminals

*: With keyless entry system

(cont'd)

Control Unit Input Test ('96 – 98 models and '99 – 00 models without Keyless Entry System) (cont'd)

Disconnect the 12P connector from the power door lock control unit.

CAUTION: To prevent damage to the actuator, apply battery voltage only momentarily.

Cavity	Wire	Test condition	Test: Desired result	Possible cause if result is not obtained
4	BLK	Under all conditions	Check for continuity to ground: There should be continuity.	• Poor ground (G551) • An open in the wire
12	WHT/GRN	Under all conditions	Check for voltage to ground: There should be battery voltage.	• Blown No. 51 (20 A) fuse in the under-hood fuse/relay box • An open in the wire
2	YEL/RED	Connect the YEL/RED terminal to the WHT/GRN terminal, and the WHT/RED terminal to the BLK terminal momentarily.	Check door lock operation: All passenger's doors should unlock.	• Blown No. 51 (20 A) fuse in the under-hood fuse/relay box • Faulty actuator • An open in the wire
3	BLU/RED	Connect the BLU/RED terminal to the WHT/GRN terminal, and the WHT/RED terminal to the BLK terminal momentarily.	Check door lock operation: Driver's door should unlock.	
5	WHT/RED	Connect the WHT/RED terminal to the WHT/GRN terminal, and the YEL/RED terminal to the BLK terminal momentarily.	Check door lock operation: All passenger doors should lock.	
*6	BLU/YEL	Under all conditions.	Check for continuity between the power door lock control unit 12P connector No. 6 terminal and audio unit 16P connector No. 3 terminal: There should be continuity.	An open in the wire

*: With keyless entry system

Reconnect the 12P connector to the power door lock control unit.

Cavity	Wire	Test condition	Test: Desired result	Possible cause if result is not obtained
1	GRN/WHT	Driver's door lock switch in LOCK	Check for voltage to ground: There should be 1 V or less.	• Faulty driver's door lock switch • Poor ground (G551) • An open in the wire
8	GRN/ORN	Driver's door lock switch in UNLOCK		
7	BLU/WHT	Driver's door lock knob in LOCK	Check for voltage to ground: There should be 1 V or less.	• Faulty driver's door lock actuator • Poor ground (G551) • An open in the wire

Control Unit Input Test ('99 – 00 models with Keyless Entry System)

1. Remove the driver's kick panel.

2. Disconnect the 18P connector from the control unit.

3. Inspect the connector and socket terminals to be sure they are all making good contact.
   - If the terminals are bent, loose or corroded, repair them as necessary, and recheck the system.
   - If the terminals look OK, make the following input tests at the connector.
     — If any test indicates a problem, find and correct the cause, then recheck the system.
     — If all the input tests prove OK, the control unit must be faulty; replace it.

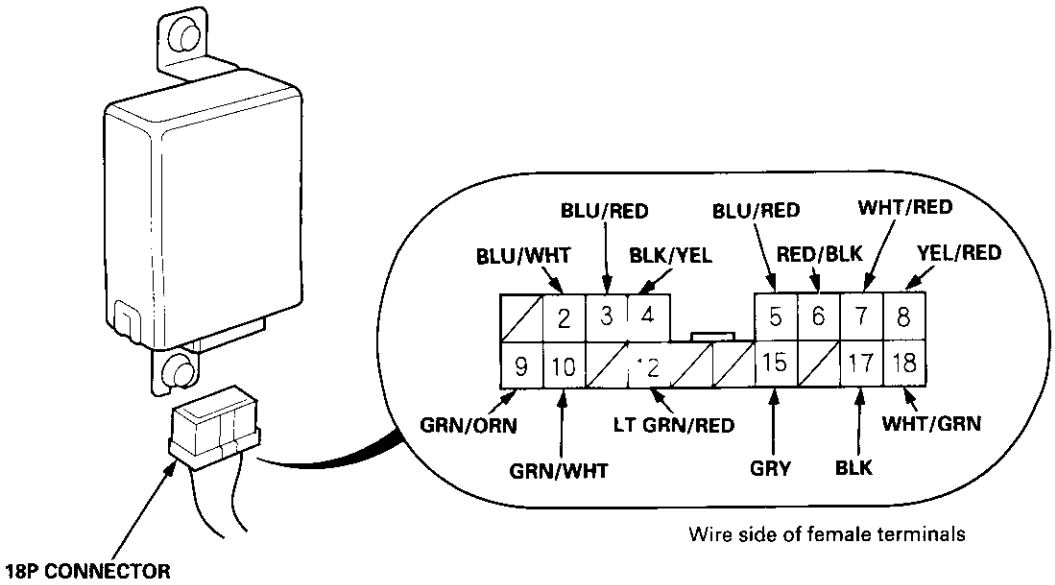

Disconnect the 18P connector from the power door lock control unit.

CAUTION: To prevent damage to the actuator, apply battery voltage only momentarily.

Cavity	Wire	Test condition	Test: Desired result	Possible cause if result is not obtained
17	BLK	Under all conditions	Check for continuity to ground: There should be continuity.	• Poor ground (G551) • An open in the wire
18	WHT/GRN	Under all conditions	Check for voltage to ground: There should be battery voltage.	• Blown No. 51 (20 A) fuse in the under-hood fuse/relay box • An open in the wire
4	BLK/YEL	Ignition switch ON (II)	Check for voltage to ground: There should be battery voltage.	• Blown No. 14 (7.5 A) fuse in the under-dash fuse/relay box • An open in the wire

(cont'd)

Control Unit Input Test ('99 – 00 models with Keyless Entry System) (cont'd)

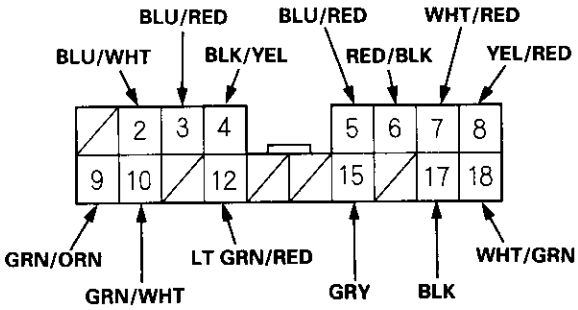

Wire side of female terminals

Disconnect the 18P connector from the power door lock control unit.

CAUTION: To prevent damage to the actuator, apply battery voltage only momentarily.

Cavity	Wire	Test condition	Test: Desired result	Possible cause if result is not obtained
8	YEL/RED	Connect the YEL/RED terminal to the WHT/GRN terminal, and the WHT/RED terminal to the BLK terminal momentarily.	Check door lock operation: All passenger's doors should unlock.	• Blown No. 51 (20 A) fuse in the under-hood fuse/relay box • Faulty actuator • An open in the wire
5	BLU/RED	Connect the BLU/RED[1] terminal to the WHT/GRN terminal, and the WHT/RED terminal to the BLK terminal momentarily.	Check door lock operation: Driver's door should unlock.	
7	WHT/RED	Connect the WHT/RED terminal to the WHT/GRN terminal, and the YEL/RED terminal to the BLK terminal momentarily.	Check door lock operation: All passenger doors should lock.	

Reconnect the 18P connector to the power door lock control unit.

Cavity	Wire	Test condition	Test: Desired result	Possible cause if result is not obtained
10	GRN/WHT	Driver's door lock switch in LOCK	Check for voltage to ground: There should be 1 V or less.	• Faulty driver's door lock switch • Poor ground (G551) • An open in the wire
9	GRN/ORN	Driver's door lock switch in UNLOCK		
2	BLU/WHT	Driver's door lock knob in LOCK	Check for voltage to ground: There should be 1 V or less.	• Faulty driver's door lock actuator • Poor ground (G551) • An open in the wire
3	BLU/RED	Ignition key inserted into the ignition key switch	Check for voltage to ground: There should be 1 V or less.	• Poor ground (G401, G402) • Faulty ignition key switch • An open in the wire • Short in the wire
		Ignition key removed from the ignition key switch	Check for voltage to ground: There should be 4 V or more.	
6	RED/BLK	Combination light switch in " [illegible] " position	Check for voltage to ground: There should be battery voltage.	• Blown No. 30 (7.5 A) fuse in the under-hood fuse/relay box • Faulty combination light switch • An open in the wire
12	LT GRN/ RED	Each door open, one at a time	Check for voltage to ground: There should be 1 V or less.	• Faulty door switch • An open in the wire
15	GRY	Under all conditions	Connect to ground: Horn should sound.	• Blown No. 52 (15 A) fuse in the under-hood fuse/relay box • Faulty horn • Faulty horn relay • An open in the wire

Audio Unit (Keyless Receiver Circuit) Input Test ('96 – 98 models)

1. Remove the audio unit, then disconnect the A and B connectors (see page 23-189).

2. Inspect the connector and socket terminals to be sure they are all making good contact.

   - If the terminals are bent, loose or corroded, repair them as necessary, and recheck the system.
   - If the terminals look OK, make the following input tests at the connector.
     — If any test indicates a problem, find and correct the cause, then recheck the system.
     — If all the input tests prove OK, the control unit must be faulty; replace it.

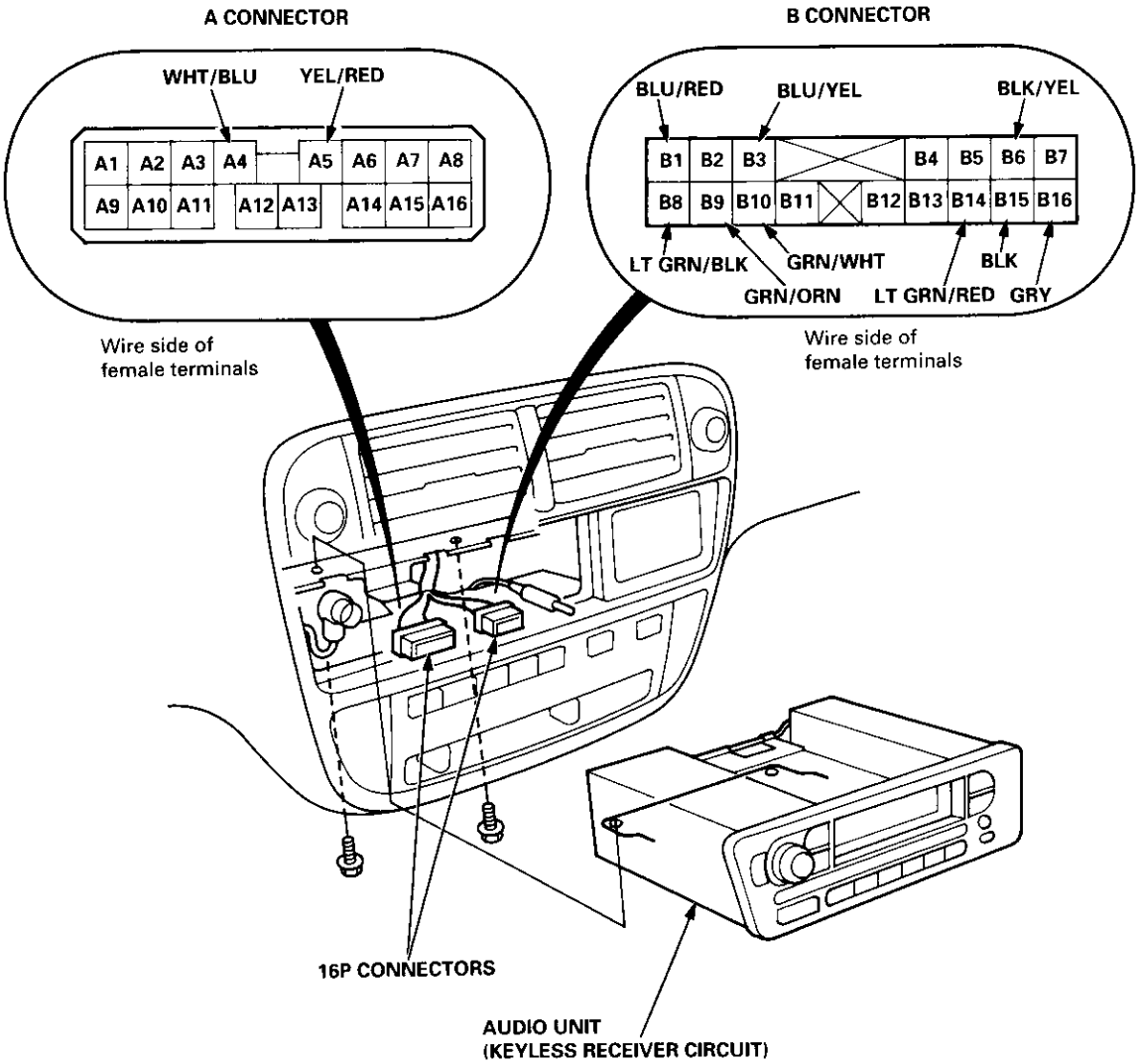

Disconnect the A and B connectors from the audio unit.

Cavity	Wire	Test condition	Test: Desired result	Possible cause if result is not obtained
A4	WHT/BLU	Under all conditions	Check for voltage to ground: There should be battery voltage.	• Blown No. 47 (7.5 A) fuse in the under-hood fuse/relay box • An open in the wire
A5	YEL/RED	Ignition switch ACC (I)	Check for voltage to ground: There should be battery voltage.	• Blown No. 28 (10 A) fuse in the under-dash fuse relay box • An open in the wire
B6	BLK/YEL	Ignition switch ON (II)	Check for voltage to ground: There should be battery voltage.	• Blown No. 14 (7.5 A) fuse in the under-dash fuse relay box • An open in the wire
B15	BLK	Under all conditions	Check for continuity to ground: There should be continuity.	• Poor ground (G401, G402) • An open in the wire
B1	BLU/RED	Ignition key inserted into the ignition key switch	Check for voltage to ground: There should be 1 V or less.	• Poor ground (G401, G402) • Faulty ignition key switch • An open in the wire • Short in the wire
		Ignition key removed from the ignition key switch	Check for voltage to ground: There should be 4 V or more.	
B3	BLU/YEL	Under all conditions	Check for continuity between the audio unit 16P connector No. 3 terminal and power door lock control unit 12P connector No. 6 terminal: There should be continuity.	• An open in the wire
B8	LT GRN/ BLK	Ceiling light switch in "middle position"	Connect to ground: The ceiling light should come on.	• Blown No. 43 (7.5 A) fuse in the under-hood fuse/relay box • Blown ceiling light bulb • Faulty ceiling light • An open in the wire
B14	LT GRN/ RED	Each door open, one at a time	Check for voltage to ground: There should be 1 V or less.	• Faulty door switch • An open in the wire
B16	GRY	Under all conditions	Connect to ground: Horn should sound.	• Blown No. 52 (15 A) fuse in the under-hood fuse/relay box • Faulty horn • Faulty horn relay • An open in the wire

Reconnect the B connector only to the audio unit.

Cavity	Wire	Test condition	Test: Desired result	Possible cause if result is not obtained
B9	GRN/ORN	Driver's door lock switch in UNLOCK	Check for voltage to ground: There should be 1 V or less.	• Poor ground (G551) • Faulty driver's door lock switch • An open in the wire • Short in the wire
		Driver's door lock switch in LOCK	Check for voltage to ground: There should be 4 V or more.	
B10	GRN/WHT	Driver's door lock switch in UNLOCK	Check for voltage to ground: There should be 4 V or more.	• Poor ground (G551) • Faulty driver's door lock switch • An open in the wire • Short in the wire
		Driver's door lock switch in LOCK	Check for voltage to ground: There should be 1 V or less.	

Audio Unit (Keyless Receiver Circuit) Terminals ('96 – 98 models)

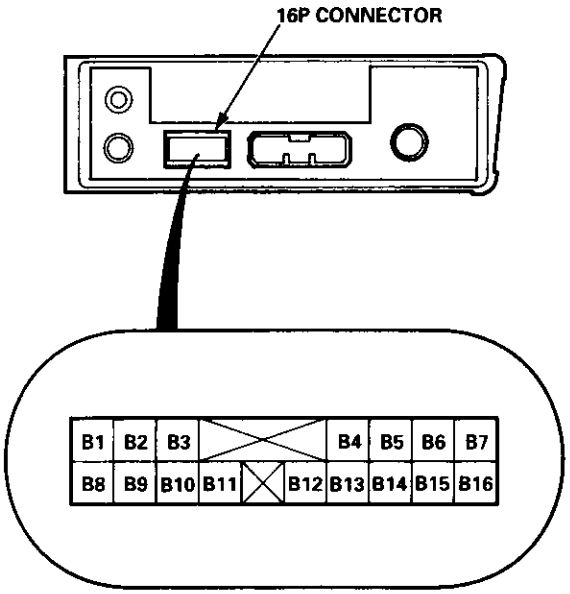

Cavity	Wire	Destination
B1	BLU/RED	Ignition key switch
*B2	LT GRN	Trunk latch switch
B3	BLU/YEL	Unlock (Driver's door)
B4	BLU	Valet switch
*B5	LT BLU	Security (IN)
B6	BLK/YEL	No. 14 (7.5 A) fuse
*B7	ORN	Security (D2)
B8	LT GRN/BLK	Ceiling light
B9	GRN/ORN	Unlock (All doors)
B10	GRN/WHT	Lock (Output)
*B11	BLU/WHT	LED ⊖
*B12	WHT/BLK	Security (D0)
*B13	YEL/BLU	Security (D1)
B14	LT GRN/RED	Door switch
B15	BLK	Ground (G401, G402)
B16	GRY	Horn

*: For security system (option)

Driver's Door Lock Switch Test

1. Remove the inner handle (see section 20).
2. Disconnect the 3P connector from the door lock switch.

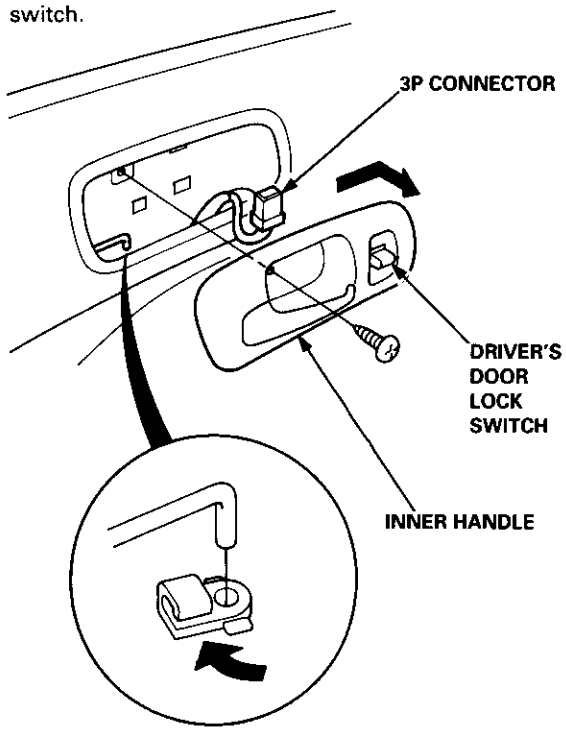

3. Check for continuity between the terminals in each switch position according to the table.

Position \ Terminal	1	2	3
LOCK	○	○	
OFF			
UNLOCK		○	○

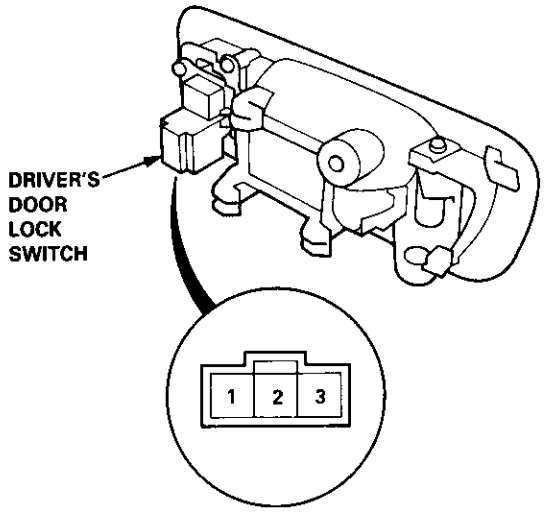

Driver's Door Lock Actuator Test

1. Remove the driver's door panel (see section 20).

2. Disconnect the 4P connector from the actuator.

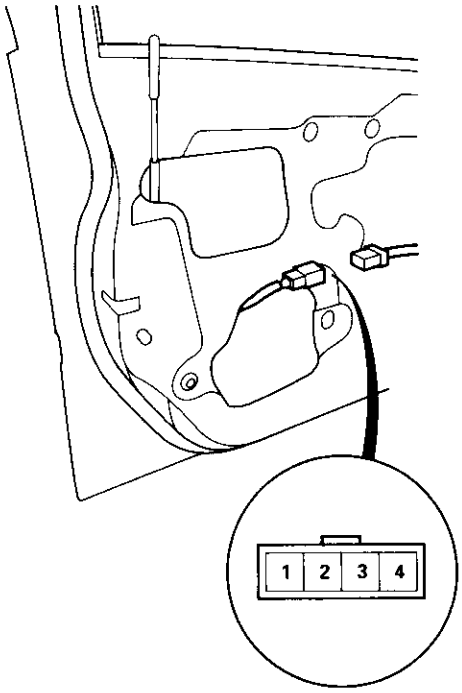

Terminal side of male terminals

3. Check for continuity between the terminals in each knob switch position according to the table.

Terminal / Position	3	4
LOCK	○	○
UNLOCK		

4. Check actuator operation by connecting power and ground according to the table. To prevent damage to the actuator, apply battery voltage only momentarily.

Terminal / Position	1	2
LOCK	⊕	⊖
UNLOCK	⊖	⊕

5. If the actuator fails to work properly, replace it.

Passenger's Door Lock Actuator Test

1. Remove the passenger's door panel (see section 20).

2. Disconnect the 2P connector from the actuator.

   NOTE: The front passenger's door lock actuator is shown; the left rear and right rear door lock actuators are similar.

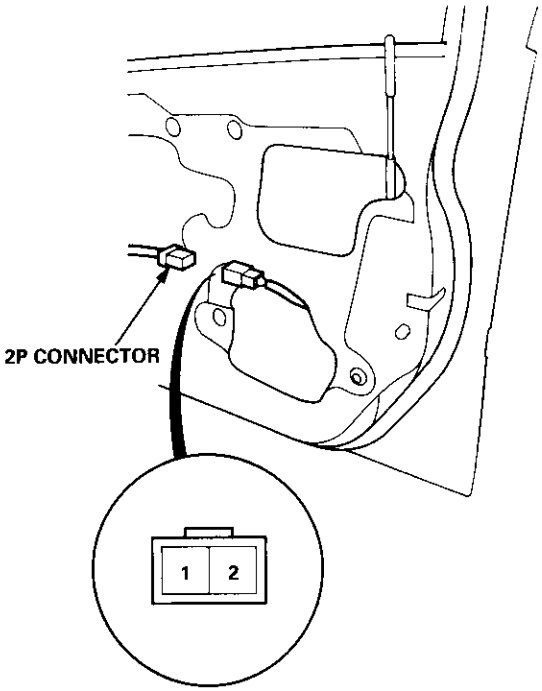

Terminal side of male terminals

3. Check actuator operation by connecting power and ground according to the table. To prevent damage to the actuator, apply battery voltage only momentarily.

Terminal / Position	1	2
LOCK	⊖	⊕
UNLOCK	⊕	⊖

4. If the actuator fails to work properly, replace it.

Transmitter Test

NOTE:
- If the doors unlock or lock with the transmitter, but the LED on the transmitter does not come on, the LED is faulty; replace the transmitter.
- If any door is open, you cannot lock or unlock the door with the transmitter.
- If you unlocked the doors with the transmitter, but do not open any of the doors within 30 seconds, the doors relock automatically.
- The doors do not lock or unlock with the transmitter if the ignition key is inserted in the ignition switch.

1. Using a keyless entry checker (07MAJ – SP00300):
   - Place the transmitter on the keyless entry checker, and press the transmitter button.
     - — If the indicator light does not come on, check for:
       - — a dead or low battery
       - — Faulty transmitter
     - — If the ray indicator light comes on, the transmitter is OK.

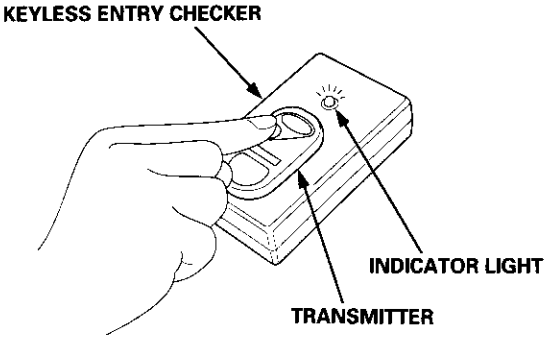

NOTE: After a transmitter battery has been replaced, aim the transmitter at the receiver, and press the transmitter button six times.
Confirm you can hear the sound of the door lock actuators when you press the sixth time.

Transmitter Programming ('96 – 98 models)

Storing Transmitter Codes

- The codes of up to four transmitters can be stored in the control unit. (If a fifth code is stored, the code which was stored first will be erased.)
- When the system enters the registration mode, all previously stored codes will be erased.
- The system leaves the registration mode and returns to the normal mode if you
  — turn the valet switch OFF, or
  — turn the ignition switch OFF, or
  — do not press the transmitter button for more than 10 seconds.

Procedure:

NOTE: It is important to maintain the time limits between steps.

1. Insert the ignition key into the ignition switch.
2. Turn the ignition switch ON (II).

Within 10 seconds, go to step 3.

3. Press and hold the valet switch for at least five seconds. (You will hear the sound of the actuators turning to UNLOCK.)

NOTE: If the tuner is turned ON, it will go off and come on again when the registration procedure is completed.

Within 10 seconds, go to step 4.

4. Press one of the transmitter buttons. (You will hear the sound of the actuators turning to UNLOCK.)

NOTE: If you want to register the codes of more than one transmitter, repeat step 4 within 10 seconds with the next transmitter.

5. Turn the ignition switch OFF; the registration procedure is completed.

NOTE: After storing its code, make sure the transmitter works properly by repeatedly pressing one of its buttons. (The system starts to work when you press any transmitter button six times.)

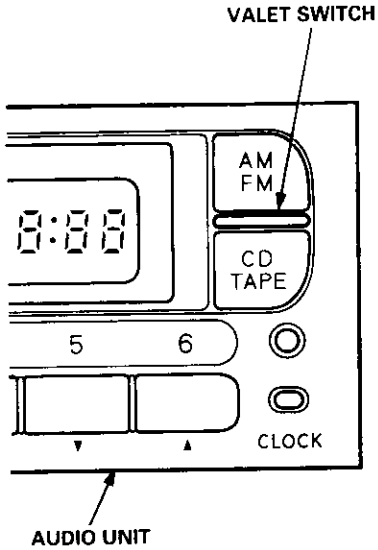

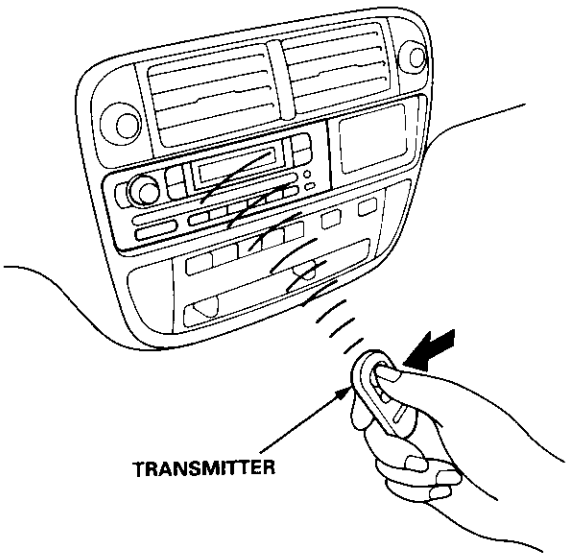

Transmitter Programming ('99 – 00 models)

Storing transmitter codes:

The codes of up to three transmitters can be read into the keyless receiver unit memory. (If a fourth code is stored, the code which was input first will be erased.)

NOTE: It is important to maintain the time limits between the steps.

1. Turn the ignition switch ON (II).
2. Within 1 to 4 sec., push the transmitter lock or unlock button with the transmitter aimed at the vehicle.
3. Within 1 to 4 sec., turn the ignition switch OFF.
4. Within 1 to 4 sec., turn the ignition switch ON (II).
5. Within 1 to 4 sec., push the transmitter lock or unlock button with the transmitter aimed at the vehicle.
6. Within 1 to 4 sec., turn the ignition switch OFF.
7. Within 4 sec., turn the ignition switch ON (II).
8. Within 1 to 4 sec., push the transmitter lock or unlock button with the transmitter aimed at the vehicle.
9. Within 1 to 4 sec., turn the ignition switch OFF.
10. Within 4 sec., turn the ignition switch ON (II).
11. Within 1 to 4 sec., push the transmitter lock or unlock button with the transmitter aimed at the vehicle.
12. Confirm you can hear the sound of the door lock actuators.
13. Within 8 sec., aim the transmitters (up to three) whose codes you want to store at the receiver, and press the transmitter lock or unlock buttons.
    Confirm that you can hear the sound of the door lock actuators after each transmitter code is stored.
14. Turn the ignition switch OFF, and pull out the key.
15. Confirm proper operation with the new code(s).

Supplemental Restraint System (SRS)

Special Tools 24-2
Component/Wiring Locations
Index 24-3
Description 24-5
Circuit Diagram 24-6
Precautions/Procedures
General Precautions 24-7
Airbag Handling and Storage 24-7
SRS Unit Precautions 24-8
Inspection After Deployment 24-8
Wiring Precautions 24-9
Backprobing Spring-loaded Lock
Connectors 24-9
Spring-loaded Lock Connector 24-10
Spring-loaded Lock Connector with
Built-in Short Contact 24-10
Disconnecting the Airbag
Connector(s) 24-11
Steering-related Precautions 24-12
Troubleshooting
Self-diagnostic Procedures 24-13
Reading the DTC 24-13
Erasing the DTC Memory 24-15
Troubleshooting Intermittent
Failures 24-15
SRS Unit Identification 24-16
Diagnostic Trouble Code (DTC)
Chart – '96 – 97 Models 24-17
Diagnostic Trouble Code (DTC)
Chart – '98 – 00 Models 24-19
SRS Indicator Light Wire
Connections 24-25
Flowcharts 24-26
Airbag
Replacement 24-67
Disposal 24-70
Cable Reel
Replacement 24-72
SRS Unit
Replacement 24-76

Special Tools

Ref. No.	Tool Number	Description	Qty	Page Reference
①*1	07HAZ – SG00500	Deployment Tool	1	24-70
②*1	07PAZ – 0010100	SCS Service Connector	1	24-14
③	07SAZ – TB4011A	SRS Inflator Simulator	1	24-42
④	07TAZ – SZ5011A	SRS Simulator Lead C	1	24-42
⑤*2	07TAZ – 001020A	Backprobe Adapter, 17 mm	2	24-30

*1: Included in SRS Tool Set 07MAZ – SM5000B
*2: Use with the stacking patch cords from T/N 07SAZ – 001000A, Backprobe Set.

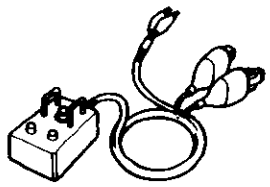

①

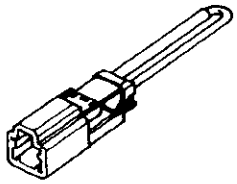

②

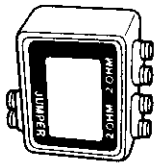

③

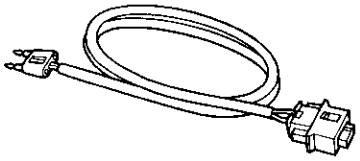

④

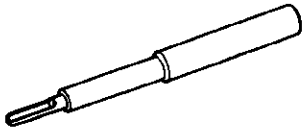

⑤

Component/Wiring Locations

Index: With Front Passenger's Airbag

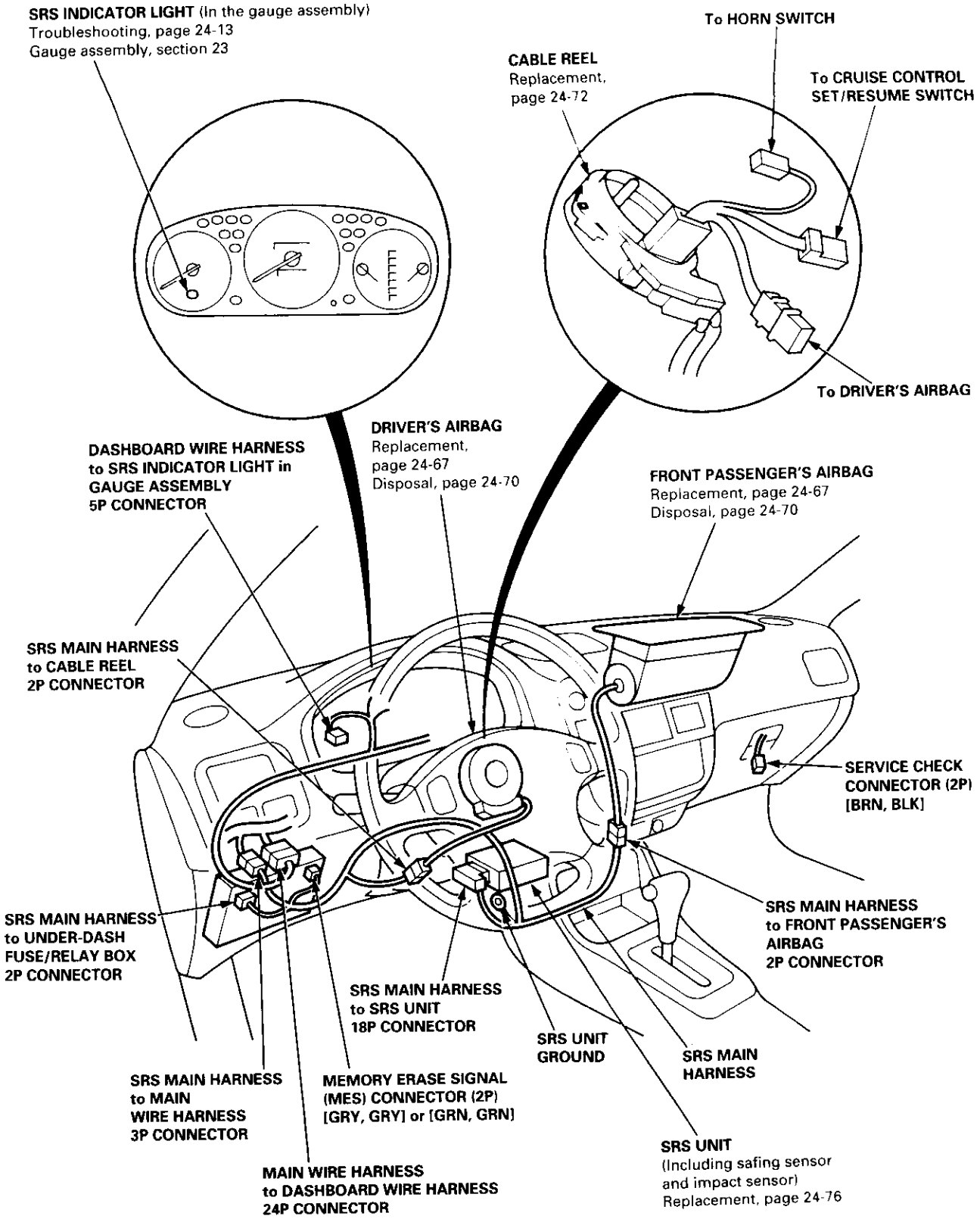

Index: Without Front Passenger's Airbag (some Canada Models)

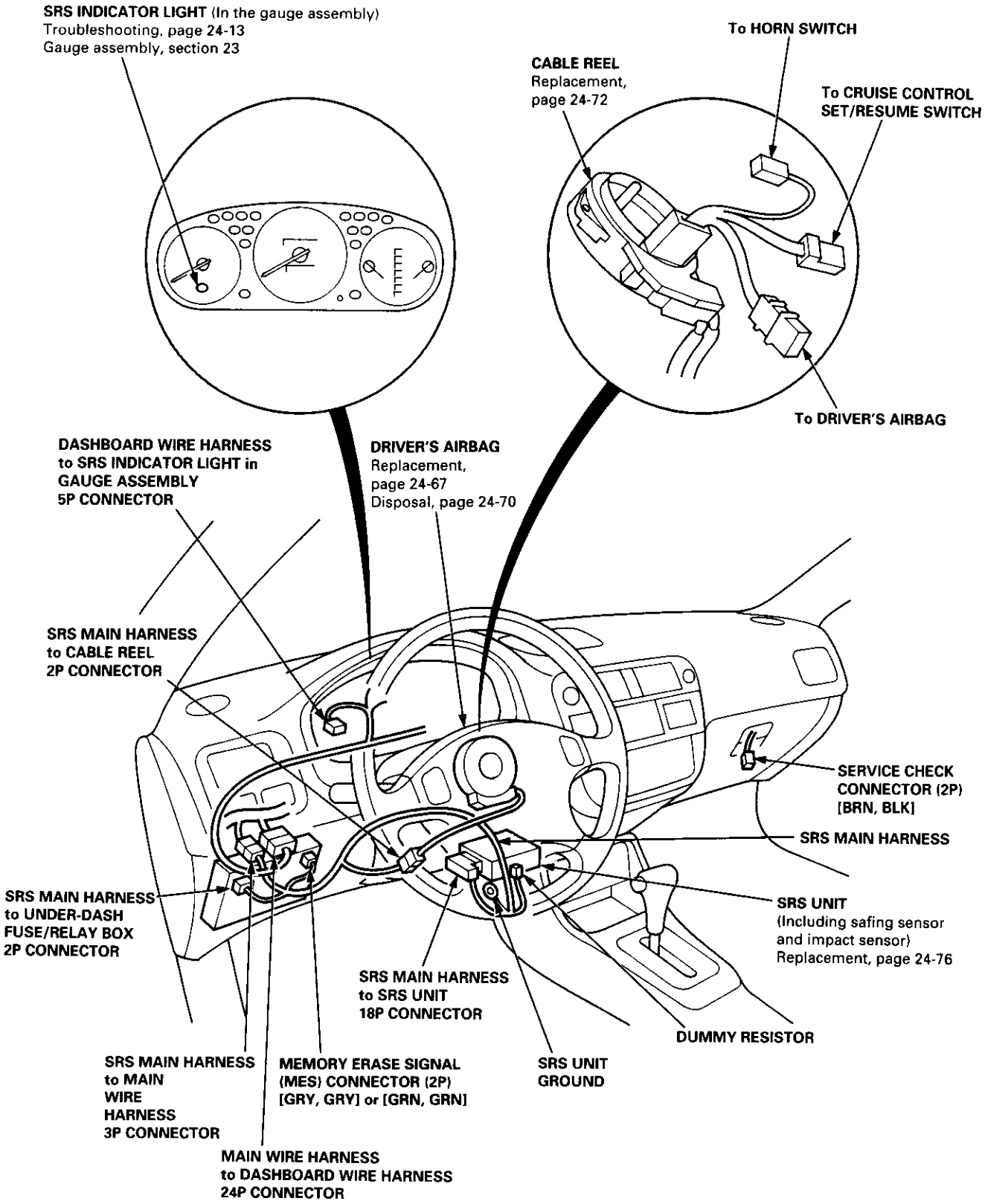

Description

The SRS is a safety device which, when used in conjunction with the seat belt, is designed to help protect the driver (and front passenger) in a frontal impact exceeding a certain set limit. The system consists of the SRS unit (including safing sensor and impact sensor), the cable reel, the driver's airbag (and front passenger's airbag).

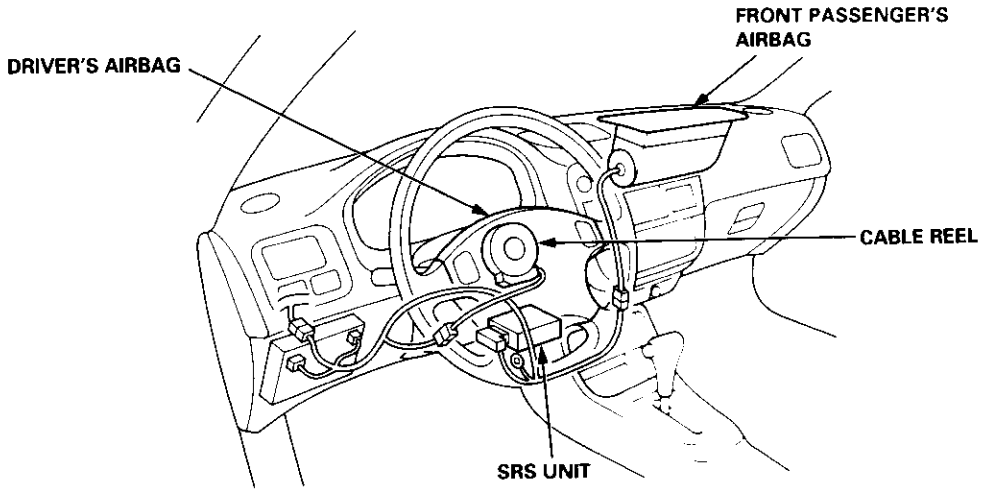

Operation

The main circuit in the SRS unit senses and judges the force of impact and, if necessary, ignites the inflator charge(s). If battery voltage is too low or power is disconnected due to the impact, the voltage regulator and the back-up power circuit respectively will keep voltage at a constant level.

For the SRS to operate:

(1) The impact sensor must activate, and send electric signals to the microprocessor.
(2) The microprocessor must compute the signals, and must send signals to the airbag inflator(s).
(3) The inflator(s) must ignite and deploy the airbag(s).

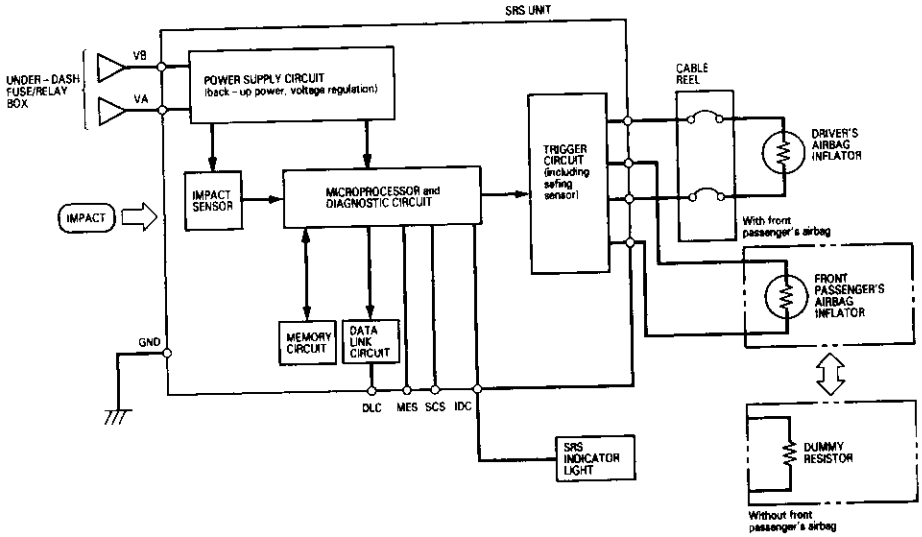

Self-diagnosis System

A self-diagnosis circuit is built into the SRS unit; when the ignition switch is turned ON (II), the SRS indicator light comes on and goes off after about six seconds if the system is operating normally.
If the light does not come on, or does not go off after six seconds, or if it comes on while driving, it indicates an abnormality in the system. The system must be inspected and repaired as soon as possible.

For better serviceability, the memory will store the cause of the malfunction, and the data link circuit passes on the information from the memory to the data link connector (DLC). This information can be read with the Honda PGM Tester connected to the DLC (16P).

Circuit Diagram

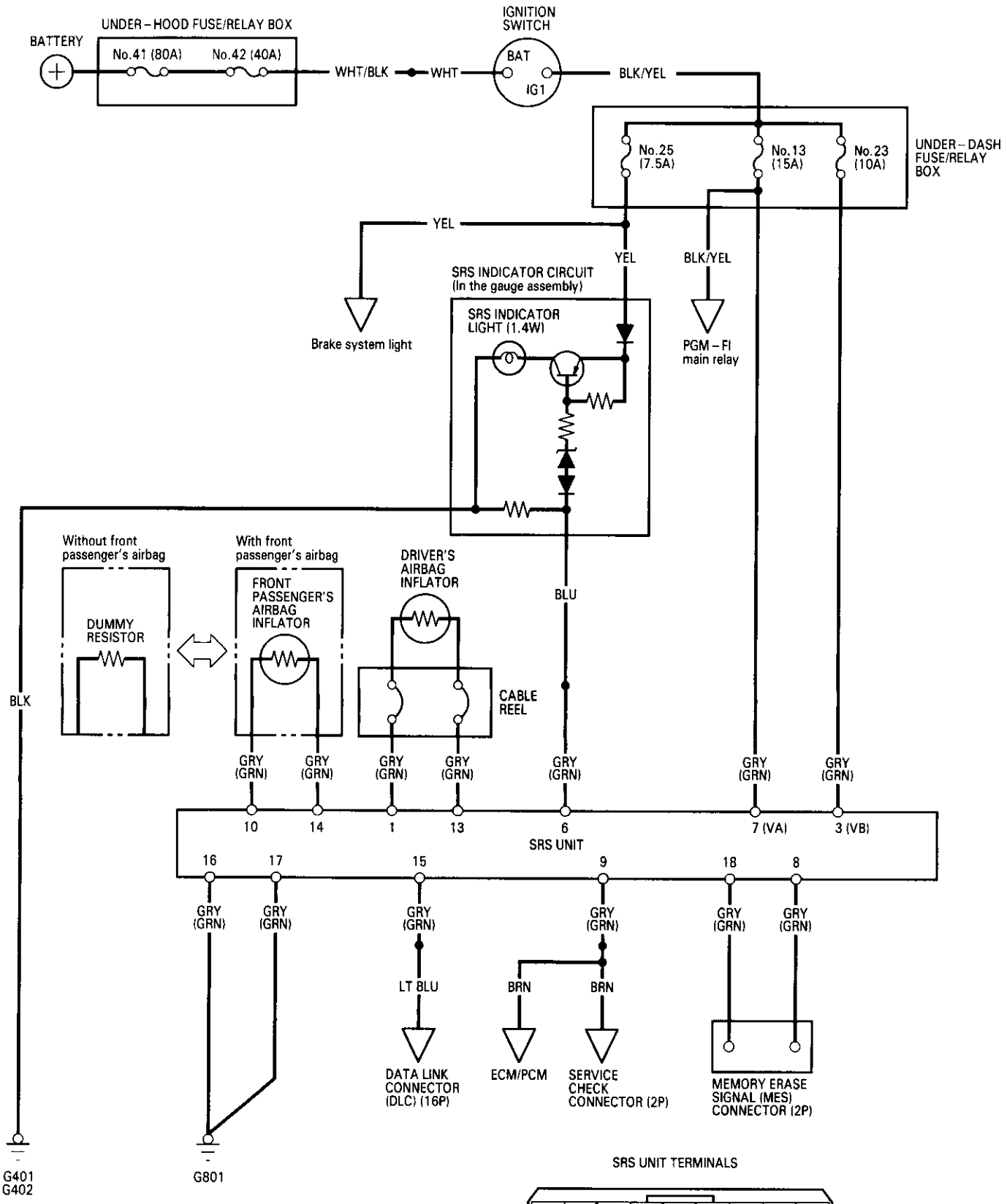

SRS UNIT TERMINALS

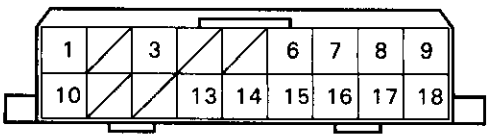

Terminal side of male terminals

Precautions/Procedures

General Precautions

- Carefully inspect any SRS part before you install it. Do not install any part that shows signs of being dropped or improperly handled, such as dents, cracks or deformation:

  — Airbags
  — Cable reel
  — SRS unit

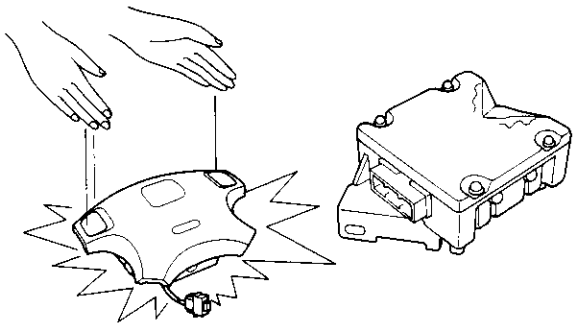

- Use only a digital multimeter to check the system. If it's not a Honda multimeter, make sure its output is 10 mA (0.01 A) or less when switched to the smallest value in the ohmmeter range. A tester with a higher output could damage the airbag circuit or cause accidental deployment and possible injury.

- Do not install used SRS parts from another vehicle. When making SRS repairs, use only new parts.

- Except when performing electrical inspections, always disconnect both the negative cable and positive cable from the battery, and wait at least three minutes before beginning work.

- Replacement of the combination light and wiper/washer switches and cruise control switch can be done without removing the steering wheel:

  — Combination light and wiper/washer switch replacement, see section 23.
  — Cruise control set/resume switch replacement, see section 23.

- Whenever the ignition switch is ON (II), or has been turned OFF for less than three minutes, be careful not to bump the SRS unit; the airbag(s) could accidentally deploy and cause damage or injury.

- Whenever the airbag(s) has(have) been activated, replace the SRS unit.

Airbag Handling and Storage

Do not try to disassemble the airbag assembly. It has no serviceable parts. Once an airbag has been operated (deployed), it cannot be repaired or reused.

For temporary storage of the airbag assembly during service, please observe the following precautions:

- Store the removed airbag assembly with the pad surface up. The driver's (and front passenger's) airbag connector(s) has (have) a built-in short contact (see page 24-11

WARNING: If the airbag is improperly stored face down, accidental deployment could propel the unit with enough force to cause serious injury.

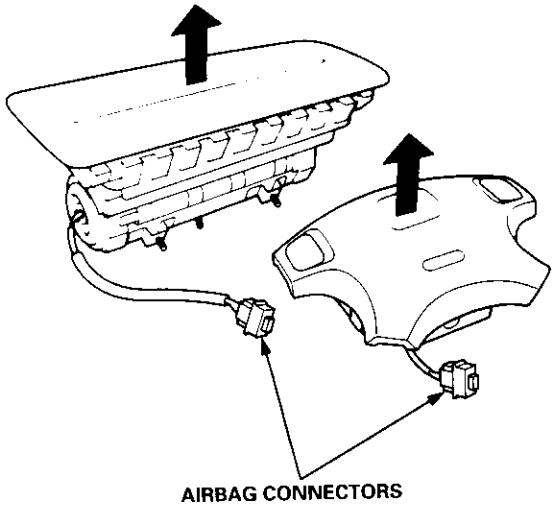

AIRBAG CONNECTORS
(With built-in short contact)

- Store the removed airbag assembly on a secure flat surface away from any high heat source (exceeding 212°F/100°C) and free of any oil, grease, detergent or water.

CAUTION: Improper handling or storage can internally damage the airbag assembly, making it inoperative. If you suspect the airbag assembly has been damaged, install a new unit, and refer to the Deployment/Disposal procedures for disposing of the damaged airbag.

SRS Unit Precautions

- Take extra care when painting or doing body work in the area below the dashboard. Avoid direct exposure of the SRS unit or wiring to heat guns, welding, or spraying equipment.
- Disconnect the airbag connector(s) before disconnecting SRS harness connectors (see page 24-11).
- After any degree of frontal body damage, or after a collision without airbag deployment, inspect the SRS unit for physical damage. If it is dented, cracked, or deformed, replace it.

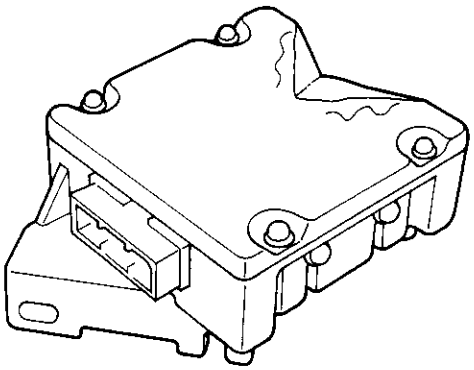

- Be sure the SRS unit is installed securely.
- Do not disassemble the SRS unit.
- Store the SRS unit in a cool (less than about 104°F/40°C) and dry (less than 80% humidity, no moisture) place. Do not spill water or oil on the SRS unit, and keep it away from dust.
- During installation or replacement, be careful not to bump (impact wrench, hammer, etc.) the area around the SRS unit. The airbag(s) could accidentally deploy and cause damage or injury.

Inspection After Deployment

After a collision in which the airbag(s) was (were) deployed, replace the SRS unit, and inspect the following:

1. Inspect all the SRS wire harnesses. Replace, don't repair, any damaged harnesses.
2. Inspect the cable reel for heat damage. If there is any damage, replace the cable reel.
3. After the vehicle is completely repaired, turn the ignition switch on. If the SRS indicator light comes on for about six seconds and then goes off, the SRS system is OK. If the indicator light does not function properly, go to SRS Troubleshooting.

Wiring Precautions

- Never attempt to modify, splice or repair SRS wiring.

  NOTE: SRS wiring can be identified by special yellow outer protective covering.

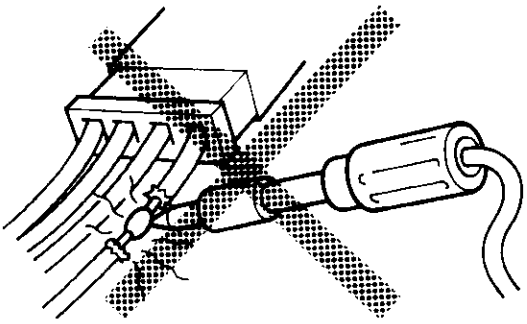

- Be sure to install the harness wires so that they are not pinched or interfering with other parts.

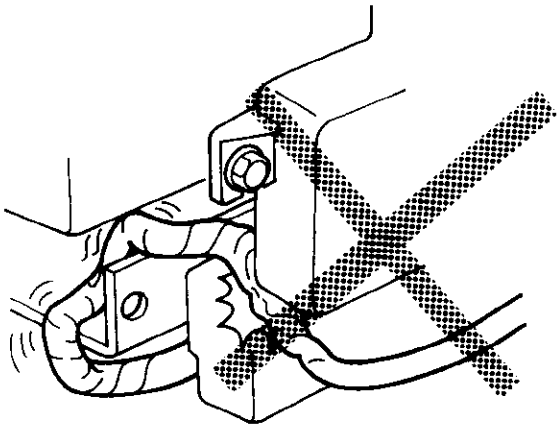

- Make sure all SRS ground locations are clean and grounds are securely fastened for optimum metal-to-metal contact. Poor grounding can cause intermittent problems that are difficult to diagnose.

Backprobing Spring-loaded Lock Connectors

- When checking voltage or resistance on this type of connector the first time, it is necessary to remove the retainer to insert tester probes from the wire side.

  NOTE: It is not necessary to reinstall the removed retainer; the terminals will stay locked in the connector housing.

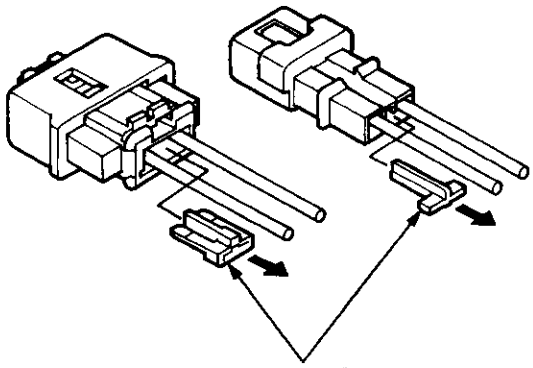

- To remove the retainer, insert a flat tip screwdriver between connector body and retainer, and carefully pry out the retainer.

  NOTE: Take care not to break the connector.

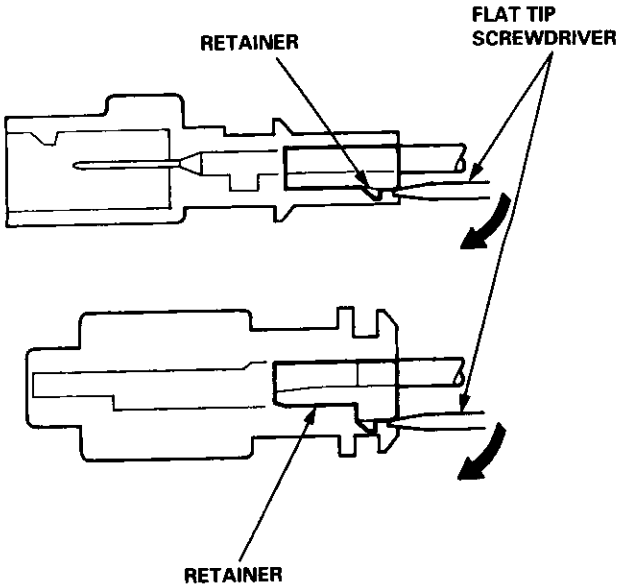

Spring-loaded Lock Connector

Some SRS system connectors have a spring-loaded lock.

Disconnecting
To release the lock, pull the spring-loaded sleeve toward the stop while holding the opposite half of the connector. Then pull the connector halves apart.

NOTE: Be sure to pull on the sleeve and not on the connector half.

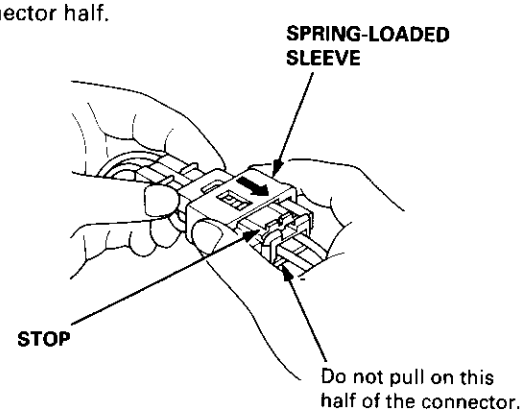

Connecting

1. Hold the pawl-side connector half, and press on the back of the sleeve-side connector half in the direction shown. As the two connector halves are pressed together, the sleeve is pushed back by the pawl.

   NOTE: Do not touch the sleeve.

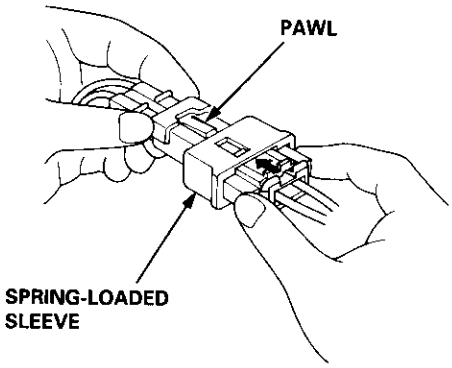

2. When the connector halves are completely connected, the pawl is released, and the spring-loaded sleeve locks the connector.

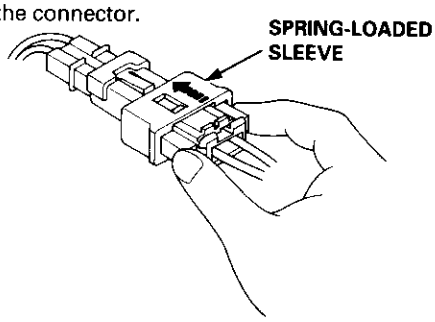

Spring-loaded Lock Connector with Built-in Short Contact

The driver's airbag (and front passenger's) airbag has (have) a spring-loaded lock connector with a built-in short contact. When this connector is disconnected, the power terminal and the ground terminal in the airbag connector are automatically shorted.

Connector halves disconnected:

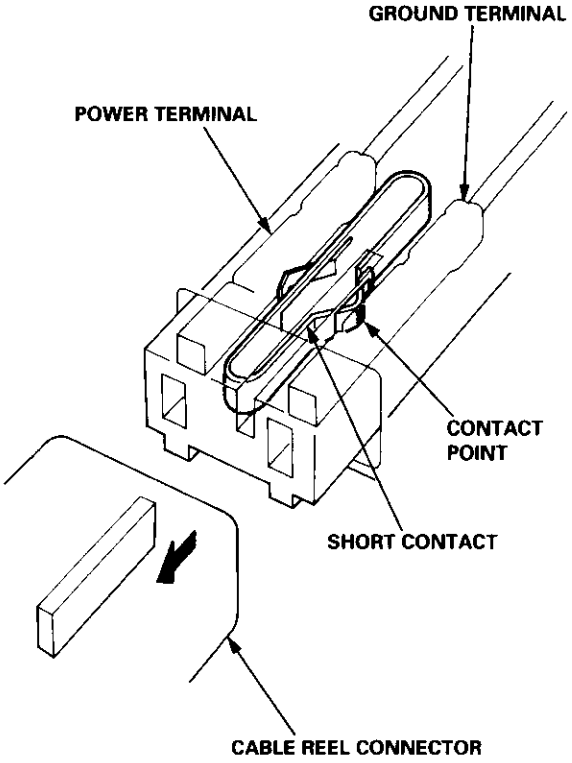

Connector halves connected:

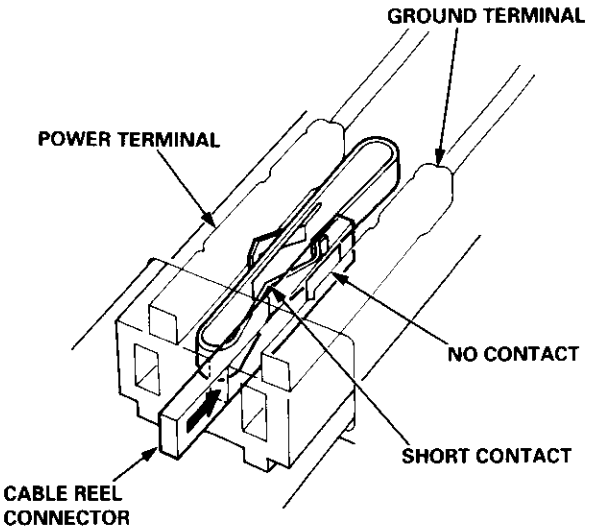

Disconnecting the Airbag Connector(s)

⚠ WARNING To prevent accidental airbag deployment, turn the ignition switch OFF, disconnect the negative battery cable, and wait three minutes before disconnecting any SRS connectors.

- Before disconnecting the SRS main harness (A) from the SRS unit, disconnect both airbags (C, D).
- Before disconnecting the cable reel 2P connector (B), disconnect the driver's airbag 2P connector (C).

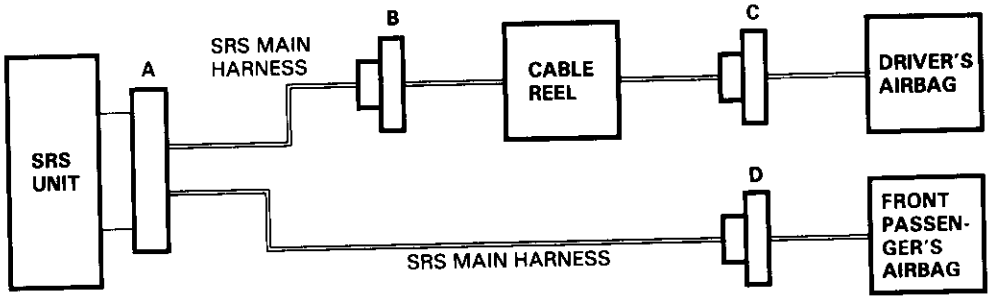

1. Disconnect the negative battery cable, and wait at least three minutes.
2. Disconnect the airbag connector(s).

Driver's Side:

- Remove the access panel from the steering wheel, then disconnect the driver's airbag 2P connector and cable reel 2P connector.

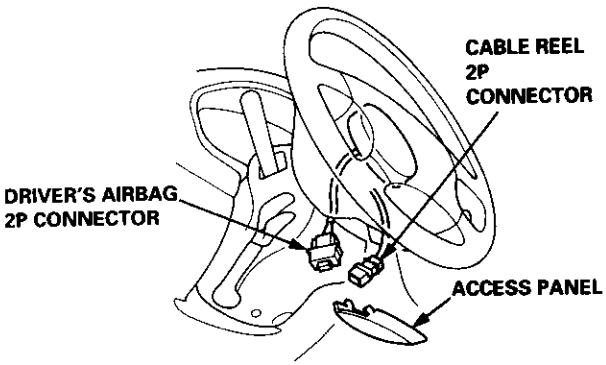

Front Passenger's Side:

- Remove the glove box, then disconnect the front passenger's airbag 2P connector and SRS main harness 2P connector.

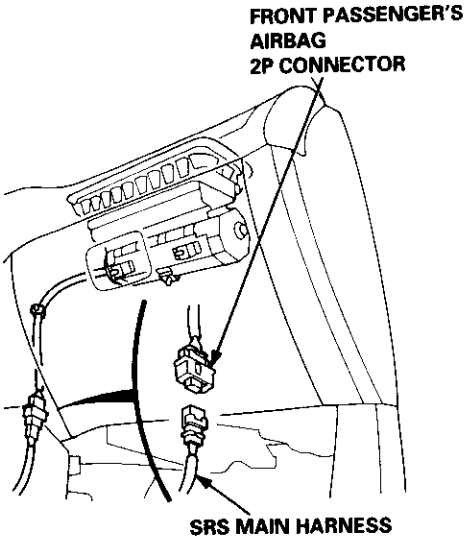

Steering-related Precautions

Steering Wheel and Cable Reel Alignment

NOTE: To avoid misalignment of the steering wheel on reassembly, make sure the wheels are turned straight ahead before removing the steering wheel.

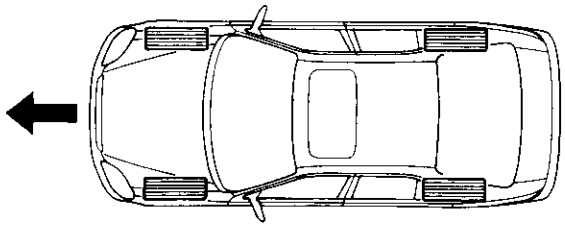

Rotate the cable reel clockwise until it stops.
Then rotate it counterclockwise (approximately two and a half turns) until the arrow mark on the cable reel label points straight up.

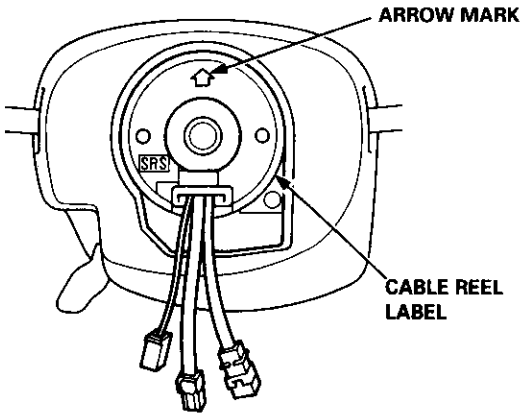

Steering Column Removal

CAUTION:
- **Before removing the steering column, disconnect the connector between the cable reel and the SRS main harness.**
- **If the steering column is going to be removed without dismounting the steering wheel, lock the steering by turning the ignition key to 0-LOCK position, or remove the key from the ignition switch so that the steering wheel will not turn.**

NOTE:
- When the airbag and cable reel are disconnected, don't reconnect the battery cable. If the battery is reconnected and the ignition switch is turned ON (II), the SRS unit will store this as an open in the driver's airbag inflator, and the SRS indicator light will come on.
- For disconnecting the spring-loaded lock type connector, refer to page 24-10.

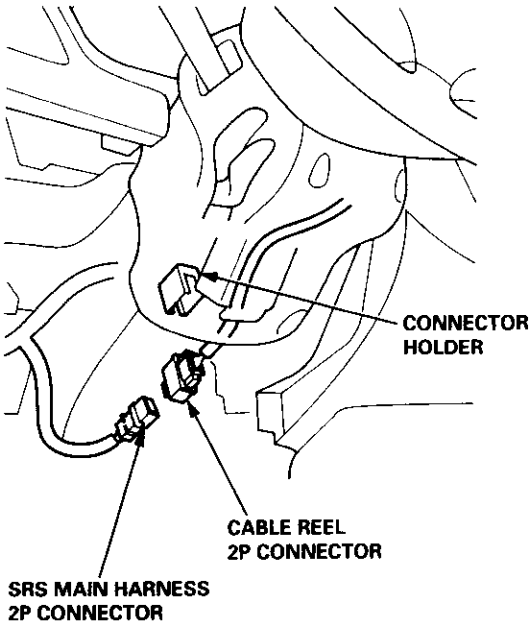

Do not replace the original steering wheel with any other design because it will make it impossible to properly install the airbag (only use genuine Honda replacement parts).

After reassembly, confirm the wheels are still turned straight ahead and that the steering wheel spoke angle is correct. If minor spoke angle adjustment is necessary, do so only by adjusting the tie-rods, not by removing and repositioning the steering wheel.

Troubleshooting

Self-diagnostic Procedures

The self-diagnostic function of the SRS system allows it to locate the causes of system problems and to store this information in memory. For easier troubleshooting, this data can be retrieved via a data link circuit.

- When you turn the ignition switch ON (II), the SRS indicator will come on. If it goes off after six seconds, the system is normal.
- If there is an abnormality, the system locates and defines the problem, stores this information in memory, and turns the SRS indicator light on. The data will remain in the memory even when the ignition switch is turned off or if the battery is disconnected.
- When you connect the SCS service connector to the service check connector (2P), and turn the ignition switch ON (II), the SRS indicator light will indicate the diagnostic trouble code (DTC) by the number of blinks.
- After reading and recording the DTC, proceed with the troubleshooting for this code.

Precautions

- Use only a digital multimeter to check the system. If it's not a Honda multimeter, make sure its output is 10 mA (0.01 A) or less when switched to the smallest value in the ohmmeter range. A tester with a higher output could damage the airbag circuit or cause accidental airbag deployment and possible injury.
- Whenever the ignition switch is ON (II), or has been turned OFF for less than three minutes, be careful not to bump the SRS unit; the airbags could accidentally deploy and cause damage or injuries.
- Before you remove the SRS main harness, disconnect the driver's airbag connector (and the front passenger's airbag connector).
- Make sure the battery is sufficiently charged (see section 23). If the battery is dead or low, measuring values won't be correct.
- Do not touch a tester probe to the terminals in the SRS unit or harness connectors, and do not connect the terminals with a jumper wire. Use only the backprobe set or the special tools.
  For backprobing spring-loaded lock type connectors, refer to page 24-9.

Reading the DTC

When the SRS indicator light is on, read the DTC using one of these methods:

A. Connect the Honda PGM Tester to the 16P Data Link Connector (DLC), and follow the tester's prompts. If the tester indicates no DTC, DTC 9-1 or DTC 9-2, double-check by jumping the service check connector and watching the SRS indicator light (see next page).

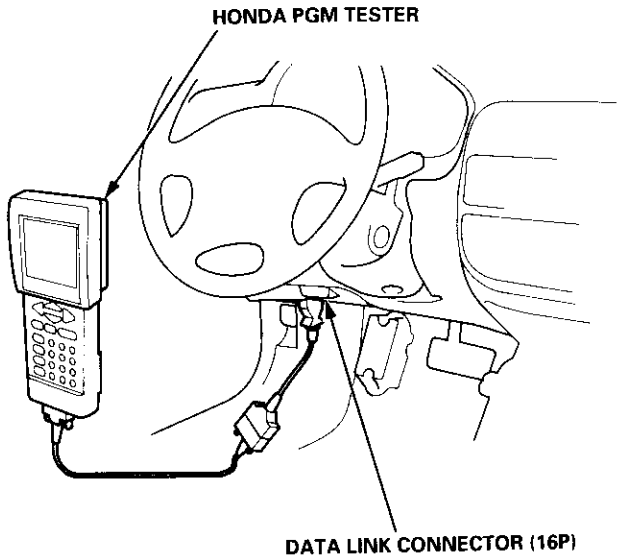

B. The SRS indicator light can also indicate the DTC by the number of blinks when the SCS service connector is connected to the service check connector (2P).

1. Turn the ignition switch OFF, and wait for ten seconds. Then connect the SCS service connector to the service check connector (2P). If you do not wait ten seconds, the SRS unit will not be completely reset and will not output DTCs.

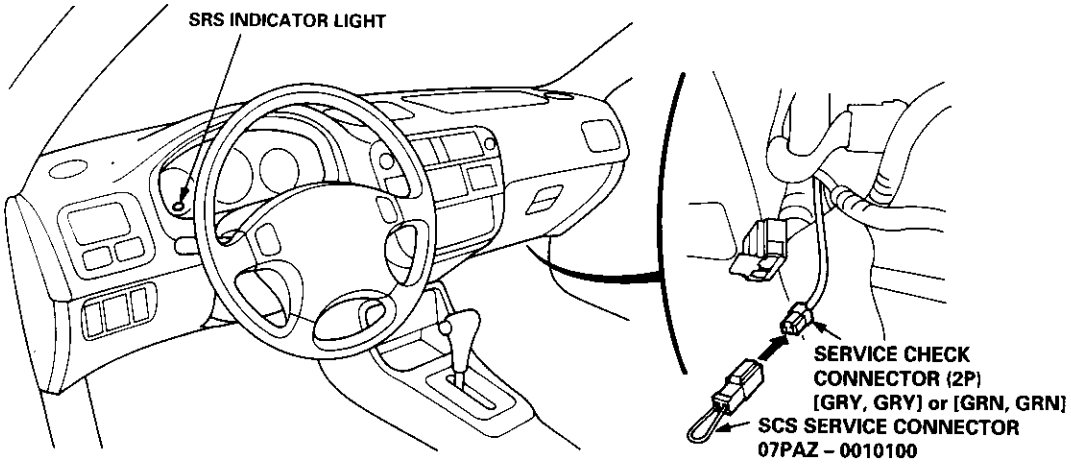

2. Turn the ignition switch ON (II). The SRS indicator light comes on for about six seconds and goes off. Then it will indicate the DTC:
   — The DTC consists of a main code and a sub-code.
   — Including the most recent problem, up to three different malfunctions can be indicated.
   — In case of a continuous failure, the DTC will be indicated repeatedly (see example 1 below).
   — In case of an intermittent failure, the SRS indicator light will indicate the DTC one time, then it will stay on (see example 2 below).
   — If both a continuous and an intermittent failure occur, both DTCs will be indicated as continuous failures.
   — In case the system is normal (no DTC), the SRS indicator light will stay on (see example 3).
3. Read the DTC.
4. Turn the ignition switch OFF, and wait for ten seconds. Then disconnect the SCS service connector from the service check connector (2P).

Examples of DTC Indications:

1. Continuous failure, SRS Indicator Light is:

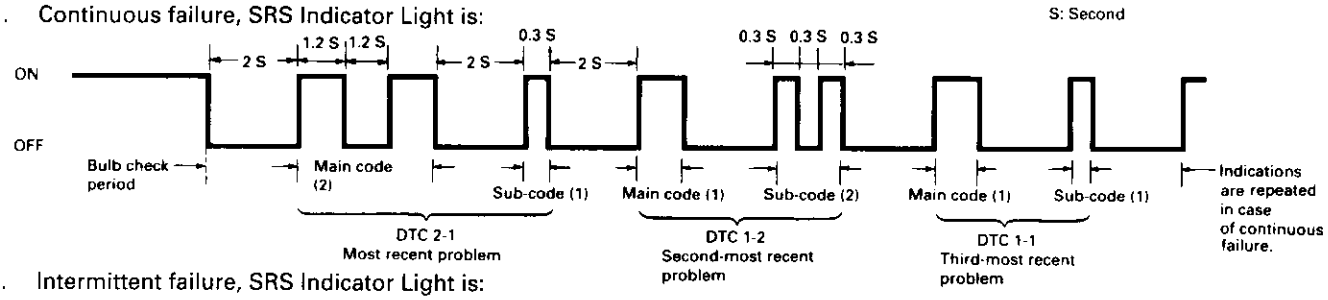

2. Intermittent failure, SRS Indicator Light is:

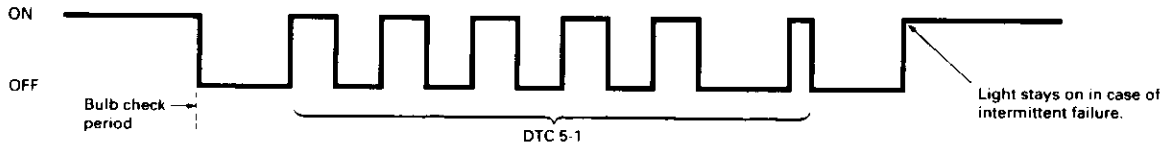

3. Normal (no failure), SRS Indicator Light is:

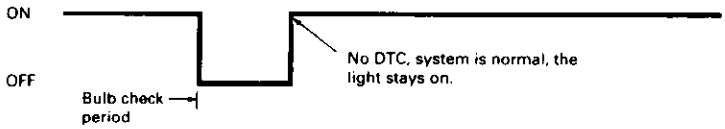

Erasing the DTC Memory

To erase the DTC(s) from the SRS unit, use a Honda PGM Tester (see the Honda PGM Tester SRS vehicle System Supplement) or the following procedure.

1. Make sure the ignition switch is OFF.
2. Connect the SCS service connector to the MES connector (2P). Do not use a jumper wire.

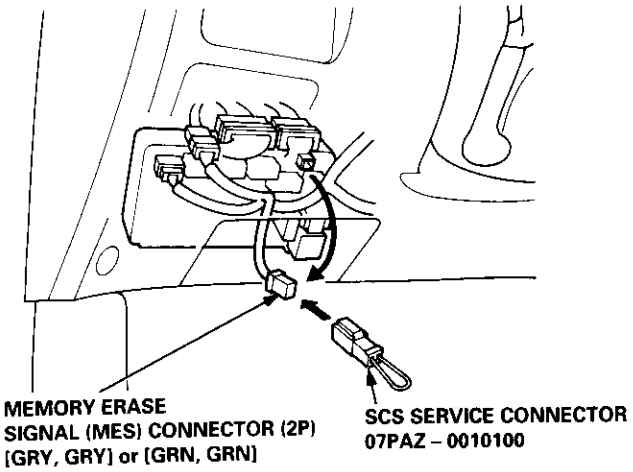

3. Turn the ignition switch ON (II).
4. The SRS indicator light comes on for about six seconds and goes off. Remove the SCS service connector from the MES connector (2P) within four seconds after the SRS indicator light went off.
5. The SRS indicator light comes on again. Reconnect the SCS service connector to the MES connector (2P) within the four seconds after the SRS indicator light comes on.
6. The SRS indicator light goes off. Remove the SCS service connector from the MES connector (2P) within four seconds.
7. The SRS indicator light indicates that the memory is erased by blinking two times.
8. Turn the ignition switch OFF, and wait for ten seconds.

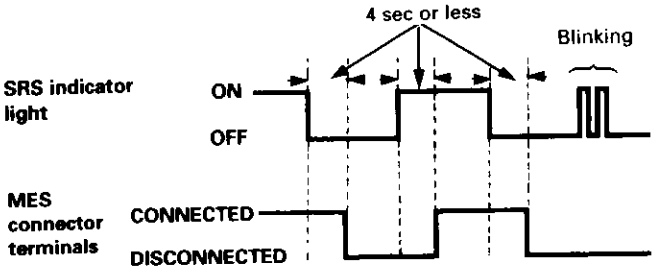

Troubleshooting Intermittent Failures

If there was a malfunction, but it doesn't recur, it will be stored in the memory as an intermittent failure, and the SRS indicator light comes on.

After checking the DTC, troubleshoot as follows:

1. Read the DTC (see "Reading the DTC").
2. Erase the DTC memory (see "Erasing the DTC Memory").
3. With the shift lever in neutral, turn the ignition switch ON (II), and let the engine idle.
4. The SRS indicator light comes on for about six seconds and goes off.

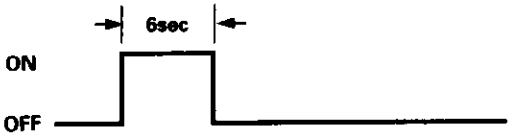

5. Shake the wire harness and the connector, take a test drive (quick acceleration, quick braking, cornering), and turn the steering wheel fully left and right, and hold it there for five to ten seconds to find the cause of the intermittent failure.
   If the problem recurs, the SRS indicator light will stay on.

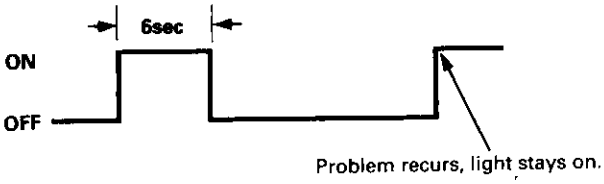

6. If you can't duplicate the intermittent failure, the system is OK at this time.

SRS Unit Identification

*: On '98 – 00 models, the troubleshooting procedures are different for each type of SRS unit. Identify the SRS unit in the vehicle using the chart below, then follow the proper flowchart in the following pages.

'98 – 00 Model SRS units

MAKER	IDENTIFICATION MARK*	Remark
NEC	M1	Driver's airbag only
	M1	Driver's & Passenger's airbags
KEIHIN	M2	Driver's & Passenger's airbags
SIEMENS	M3	Driver's & Passenger's airbags

'96 – 97 Model SRS units

MAKER	PARTS NUMBER	Remark
NEC	77960 – S04 – C81	Driver's airbag only
	77960 – S04 – N81	Driver's & Passenger's airbags
TAKATA	77960 – S04 – N82	Driver's & Passenger's airbags
SIEMENS	77960 – S02 – A81	Driver's & Passenger's airbags, '97 Model only

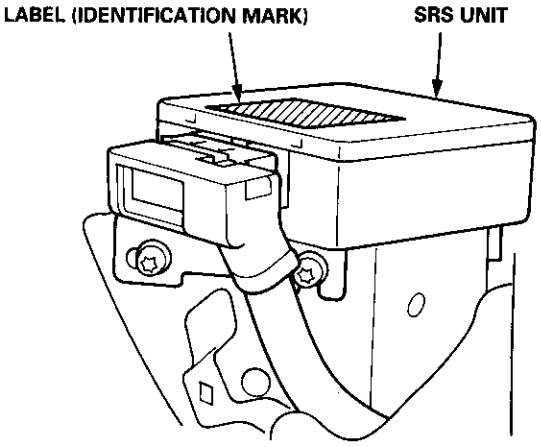

Diagnostic Trouble Code (DTC) Chart — '96 – 97 Models

SRS indicator light	DTC	Possible cause	Corrective action	See page
doesn't come on	none (doesn't come on)	Faulty SRS indicator light circuit	Troubleshooting	24-26
comes on	none *4 (doesn't go off)	Faulty SRS indicator light circuit, internal failure of SRS unit, faulty SRS power supply.	Troubleshooting	24-29
	1-1	Open in the driver's airbag inflator		24-42
	1-2	Increased resistance in the driver's airbag inflator		24-42
	1-3	Short to another wire in the driver's airbag inflator or decreased resistance		24-44
	1-4	Short to power in the driver's airbag inflator		24-46
	1-5	Short to ground in the driver's airbag inflator		24-48
	2-1	With front passenger's airbag: Open in the passenger's airbag inflator Without front passenger's airbag: Open in the dummy resistor	Troubleshooting	24-50 24-58
	2-2	With front passenger's airbag: Increased resistance in the passenger's airbag inflator Without front passenger's airbag: Increased resistance in the dummy resistor		24-50 24-58
	2-3	With front passenger's airbag: Short to another wire in the passenger's airbag inflator or decreased resistance Without front passenger's airbag: Short to another wire in the dummy resistor or decreased resistance		24-52 24-59
	2-4	With front passenger's airbag: Short to power in the passenger's airbag inflator Without front passenger's airbag: Short to power in the dummy resistor		24-54 24-60
	2-5	With front passenger's airbag: Short to ground in the passenger's airbag inflator Without front passenger's airbag: Short to ground in the dummy resistor		24-56 24-61

(cont'd)

Diagnostic Trouble Code (DTC) Chart — '96 – 97 Models (cont'd)

SRS indicator light	DTC	Possible cause	Corrective action	See page
comes on	5-1*2	Internal failure of the SRS unit	SRS unit replacement	24-76
	5-2			
	5-3			
	5-4			
	5-5			
	6-1	Internal failure of the SRS unit	SRS unit replacement	24-76
	6-2			
	6-3			
	6-4			
	7-1	Internal failure of the SRS unit	SRS unit replacement	24-76
	7-2			
	7-3			
	8-1	Internal failure of the SRS unit	SRS unit replacement	24-76
	8-2			
	8-3			
	8-4			
	8-5			
	8-6	Internal failure of the SRS unit or two failures at a time	Troubleshooting	24-62
	8-6*3	Internal failure of the SRS unit	SRS unit replacement	24-76
	9-1*1 *4	Internal failure of the SRS unit	SRS unit replacement	24-76
	9-2*2 *4	Faulty SRS power supply (VB line)	Troubleshooting	24-64
	10-1	SRS unit replacement code (SRS unit must not be used any longer)	SRS unit replacement	24-76

NOTE:
*1: In case of an intermittent failure DTC 9-1, it means there was an internal failure of the SRS unit or a faulty SRS indicator light circuit. Do the troubleshooting for intermittent failures (see page 24-15).
*2: It both DTC 9-2 and DTC 5-1 are indicated, do the troubleshooting for DTC 9-2.
*3: Apply to the '97 model coupe HX and DX.
*4: DTC cannot be read with a Honda PGM Tester; check by jumping the SCS service connector.

Diagnostic Trouble Code (DTC) Chart — '98 – 00 Models

NEC SRS Unit

SRS indicator light	DTC	Possible cause	Corrective action	See page
doesn't come on	none (doesn't come on)	Faulty SRS indicator light circuit	Troubleshooting	24-26
comes on	none*3 (doesn't go off)	Faulty SRS indicator light circuit, internal fallure of SRS unit, faulty SRS power supply (VB line)	Troubleshooting	24-34
	No DTC*3 (light comes on after self-diagnosis)	Faulty SRS power supply (VA line)	Troubleshooting	24-39
	1-1	Open in the driver's airbag inflator	Troubleshooting	24-42
	1-2	Increased resistance in the driver's airbag inflator		24-42
	1-3	Short to another wire in the driver's airbag inflator or decreased resistance		24-44
	1-4	Short to power in the driver's airbag inflator		24-46
	1-5	Short to ground in the driver's airbag inflator		24-48
	2-1	With front passenger's airbag: Open in the passenger's airbag inflator Without front passenger's airbag: Open in the dummy resistor	Troubleshooting	24-50 24-58
	2-2	With front passenger's airbag: Increased resistance in the passenger's airbag inflator Without front passenger's airbag: Increased resistance in the dummy resistor		24-50 24-58
	2-3	With front passenger's airbag: Short to another wire in the passenger's airbag inflator or decreased resistance Without front passenger's airbag: Short to another wire in the dummy resistor or decreased resistance		24-52 24-59
	2-4	With front passenger's airbag: Short to power in the passenger's airbag inflator Without front passenger's airbag: *Short to power in the dummy resistor*		24-54 24-60
	2-5	With front passenger's airbag: Short to ground in the passenger's airbag inflator Without front passenger's airbag: Short to ground in the dummy resistor		24-56 24-61

(cont'd)

Diagnostic Trouble Code (DTC) Chart — '98 – 00 Models (cont'd)

SRS indicator light	DTC	Possible cause	Corrective action	See page
comes on	5-1	Internal failure of the SRS unit	SRS unit replacement	24-76
	5-4			
	6-1	Internal failure of the SRS unit	SRS unit replacement	24-76
	6-2			
	6-3			
	6-4			
	7-1	Internal failure of the SRS unit	SRS unit replacement	24-76
	7-2			
	7-3			
	8-1	Internal failure of the SRS unit	SRS unit replacement	24-76
	8-2			
	8-6	Internal failure of the SRS unit or two failures at a time	Troubleshooting	24-62
	9-1*1 *3	Internal failure of the SRS unit	SRS unit replacement	24-76
	9-2*2 *3	Internal failure of the SRS unit	SRS unit replacement	24-76
	10-1	SRS airbags deployed (SRS unit must be replaced)	SRS unit replacement	24-76

NOTE:
*1: In case of an intermittent failure DTC 9-1, it means there was an internal failure of the SRS unit or a faulty SRS indicator light circuit. Do the troubleshooting for intermittent failures (page 24-15).
*2: In case of an intermittent failure DTC 9-2, it means there was an internal failure of the power supply (VB line). Do the troubleshooting for intermittent failures.
*3: DTC cannot be read with a Honda PGM Tester; check by jumping the SCS service connector.

KEIHIN SRS Unit

SRS indicator light	DTC	Possible cause	Corrective action	See page
doesn't come on	none (doesn't come on)	Faulty SRS indicator light circuit	Troubleshooting	24-26
comes on	none*3 (doesn't go off)	Faulty SRS indicator light circuit, internal failure of SRS unit, faulty SRS power supply (VB line)	Troubleshooting	24-34
	1-1	Open in the driver's airbag inflator	Troubleshooting	24-42
	1-2	Increased resistance in the driver's airbag inflator		24-42
	1-3	Short to another wire in the driver's airbag inflator or decreased resistance		24-44
	1-4	Short to power in the driver's airbag inflator		24-46
	1-5	Short to ground in the driver's airbag inflator		24-48
	2-1	Open in the passenger's airbag inflator	Troubleshooting	24-50
	2-2	Increased resistance in the passenger's airbag inflator		24-50
	2-3	Short to another wire in the passenger's airbag inflator or decreased resistance		24-52
	2-4	Short to power in the passenger's airbag inflator		24-54
	2-5	Short to ground in the passenger's airbag inflator		24-56

(cont'd)

Diagnostic Trouble Code (DTC) Chart — '98 – 00 Models (cont'd)

SRS indicator light	DTC	Possible cause	Corrective action	See page
comes on	5-1	Internal failure of the SRS unit	SRS unit replacement	24-76
	5-2			
	5-3			
	5-4			
	6-1	Internal failure of the SRS unit	SRS unit replacement	24-76
	6-2			
	6-3			
	6-4			
	7-1	Internal failure of the SRS unit	SRS unit replacement	24-76
	7-2			
	7-3			
	8-1	Internal failure of the SRS unit	SRS unit replacement	24-76
	8-2			
	8-6			
	9-1*1 *3	Internal failure of the SRS unit	SRS unit replacement	24-76
	9-2*2 *3	Internal failure of the SRS unit	SRS unit replacement	24-76
	10-1	SRS airbags deployed (SRS unit must be replaced)	SRS unit replacement	24-76

NOTE:

*1: In case of an intermittent failure DTC 9-1, it means there was an internal failure of the SRS unit or a faulty SRS indicator light circuit. Do the troubleshooting for intermittent failures (page 24-15).

*2: In case of an intermittent failure DTC 9-2, it means there was an internal failure of the power supply (VB line). Do the troubleshooting for intermittent failures.

*3: DTC cannot be read with a Honda PGM Tester; check by jumping the SCS service connector.

SIEMENS SRS Unit

SRS indicator light	DTC	Possible cause	Corrective action	See page
doesn't come on	none (doesn't come on)	Faulty SRS indicator light circuit	Troubleshooting	24-26
comes on	none*3 (doesn't go off)	Faulty SRS indicator light circuit, internal failure of SRS unit, faulty SRS power supply (VB line)	Troubleshooting	24-34
	1-1	Open or increased resistance in the driver's airbag inflator	Troubleshooting	24-42
	1-3	Short to another wire in the driver's airbag inflator or decreased resistance		24-44
	1-4	Short to power in the driver's airbag inflator		24-46
	1-5	Short to ground in the driver's airbag inflator		24-48
	2-1	Open or increased resistance in the passenger's airbag inflator	Troubleshooting	24-50
	2-3	Short to another wire in the passenger's airbag inflator or decreased resistance		24-52
	2-4	Short to power in the passenger's airbag inflator		24-54
	2-5	Short to ground in the passenger's airbag inflator		24-56

(cont'd)

Diagnostic Trouble Code (DTC) Chart — '98 – 00 Models (cont'd)

SRS indicator light	DTC	Possible cause	Corrective action	See page
comes on	5-1	Internal failure of the SRS unit	SRS unit replacement	24-76
	5-4			
	6-3	Internal failure of the SRS unit	SRS unit replacement	24-76
	6-4			
	7-1	Internal failure of the SRS unit	SRS unit replacement	24-76
	7-2			
	7-3			
	8-1	Internal failure of the SRS unit	SRS unit replacement	24-76
	8-2			
	8-6			
	9-1*1 *3	Internal failure of the SRS unit	SRS unit replacement	24-76
	9-2*2 *3	Internal failure of the SRS unit	SRS unit replacement	24-76
	10-1	SRS airbags deployed (SRS unit must be replaced)	SRS unit replacement	24-76

NOTE:
*1: In case of an intermittent failure DTC 9-1, it means there was an internal failure of the SRS unit or a faulty SRS indicator light circuit. Do the troubleshooting for intermittent failures (page 24-15).
*2: In case of an intermittent failure DTC 9-2, it means there was an internal failure of the power supply (VB line). Do the troubleshooting for intermittent failures.
*3: DTC cannot be read with a Honda PGM Tester; check by jumping the SCS service connector.

SRS Indicator Light Wire Connections

SRS Indicator Light Power Circuit

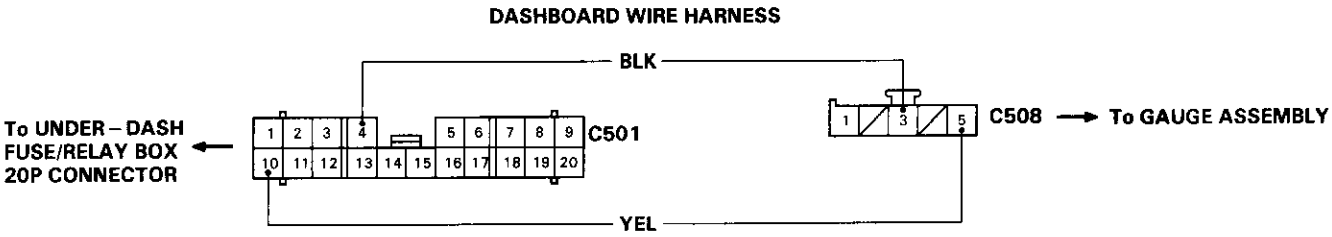

C411, C412 : Terminal side of male terminals
C501, C502, C508, C801, C802, C807 : Wire side of female terminals

SRS Indicator Light Control Circuit

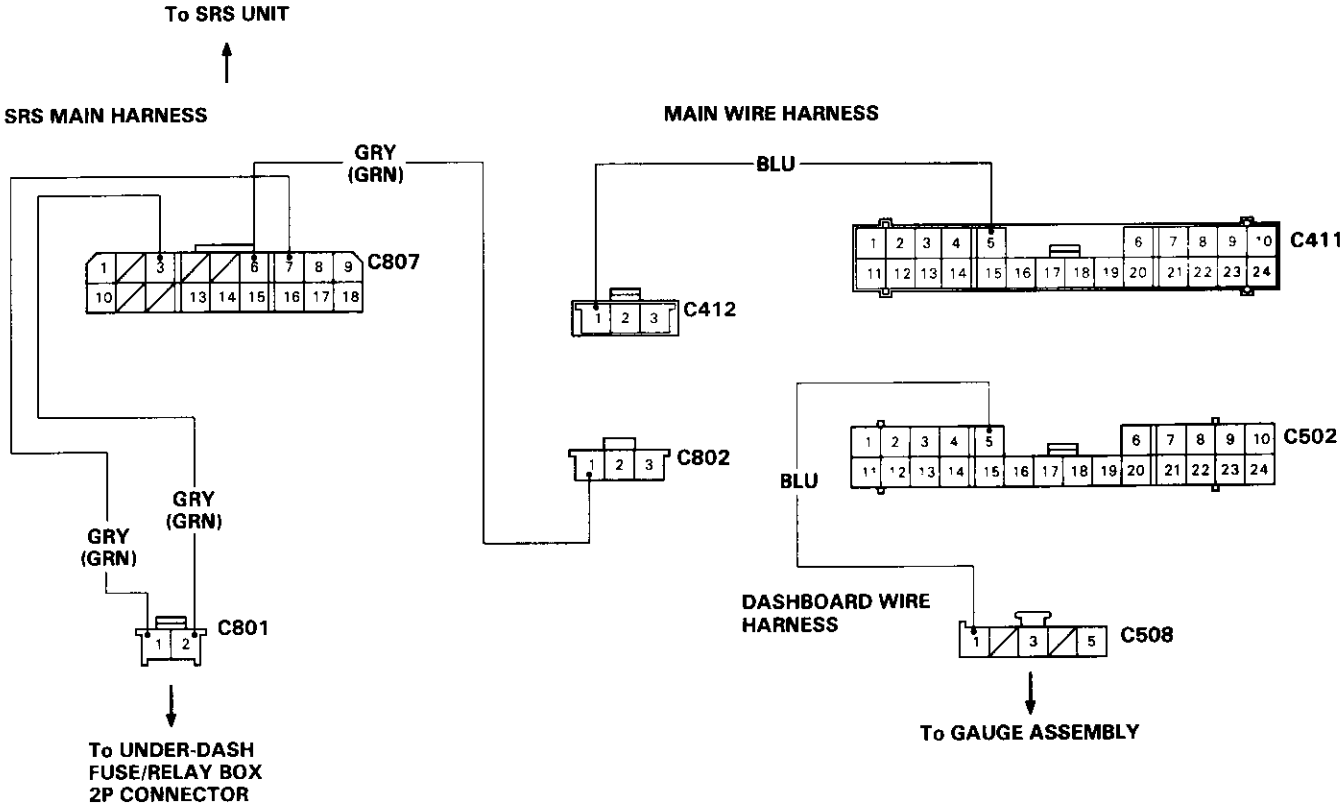

C501 : DASHBOARD WIRE HARNESS 20P CONNECTOR
C508 : DASHBOARD WIRE HARNESS 5P CONNECTOR
C801 : SRS MAIN HARNESS 2P CONNECTOR
C807 : SRS MAIN HARNESS 18P CONNECTOR
C802 : SRS MAIN HARNESS 3P CONNECTOR
C412 : MAIN WIRE HARNESS 3P CONNECTOR
C411 : MAIN WIRE HARNESS 24P CONNECTOR
C502 : DASHBOARD WIRE HARNESS 24P CONNECTOR

The SRS Indicator Light Doesn't Come On

CAUTION: Whenever the ignition switch is ON (II), or has been turned OFF for less than three minutes, be careful not to bump the SRS unit; the airbag(s) could accidentally deploy and cause damage or injuries.

Check the power supply (fuse):
Turn the ignition switch ON (II), and check whether the other indicator lights come on (brake system, etc.).

Do the other indicator lights come on?

YES — NO

Check the fuse:
Check the No. 25 (7.5 A) fuse in the under-dash fuse/relay box.

Is the fuse OK?

YES — NO

Check the bulb:
Replace the No. 25 (7.5 A) fuse, and check that the SRS indicator light comes on.

Does the SRS indicator light come on?

YES — NO

END

Check the wire harness between fuse and gauge assembly:
Check for an open in the wire harness between fuse No. 25 (7.5 A) and the gauge assembly, and repair. Check that the SRS indicator light comes on.

Does the SRS indicator light come on?

YES — NO

END

Check the SRS indicator light bulb:
1. Turn the ignition switch OFF.
2. Remove the gauge assembly.
3. Check for blown SRS indicator light bulb.

Is the SRS indicator light bulb OK?

YES — NO

Check the SRS indicator light circuit:
Replace the bulb, and reconnect the gauge assembly connectors. Then turn the ignition switch ON (II).

Does the SRS indicator light come on?

YES — NO

END

(A) To page 24-27

(B) To page 24-27

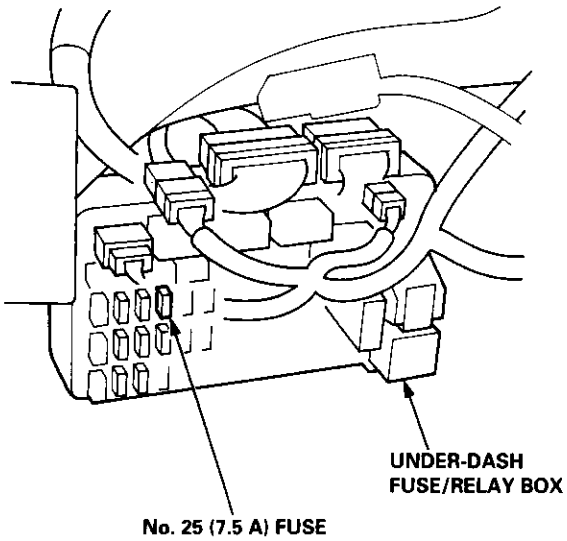

From page 24-26 (A)

From page 24-26 (B)

Check the SRS indicator light circuit:
1. Disconnect the dashboard wire harness 5P connector from the gauge assembly.
2. Connect a voltmeter between the No. 1 terminal (+) of the 5P connector and ground.
3. Turn the ignition switch ON (II), and measure voltage.

Is there 8.5 V or less for six seconds after the ignition switch has been turned ON (II)?

YES

Faulty SRS indicator light circuit in the gauge assembly; replace the SRS printed circuit board in the gauge assembly.

NO

Check the wire harness of the SRS indicator light circuit (1):
1. Turn the ignition switch OFF.
2. Disconnect the main wire harness 24P connector from the dashboard wire harness.
3. Connect a voltmeter between the No. 5 terminal (+) of the main wire harness 24P connector and ground.
4. Turn the ignition ON (II), and measure voltage.

Is there 8.5 V or less for six seconds after the ignition switch has been turned ON (II)?

YES

Short to power in the BLU wire of the dashboard wire harness; repair the harness.

NO

To page 24-28

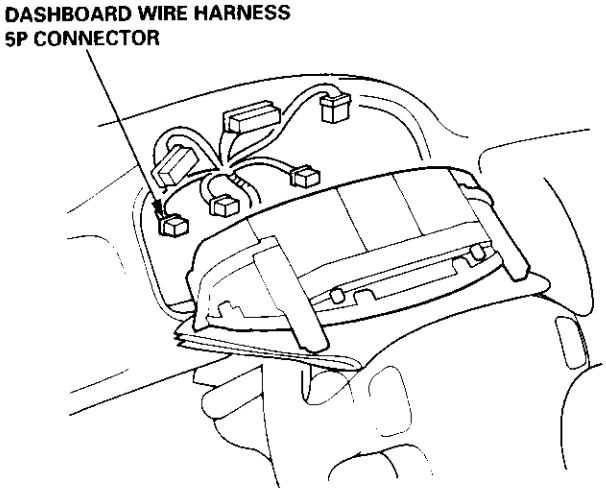

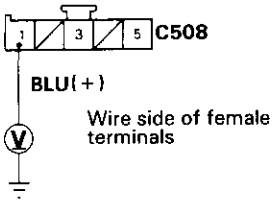

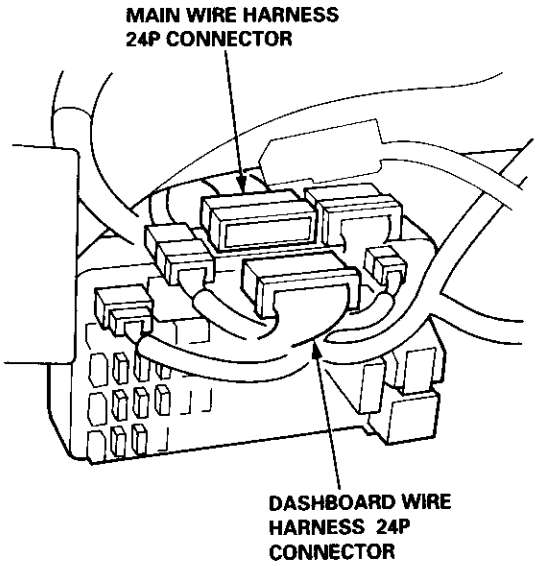

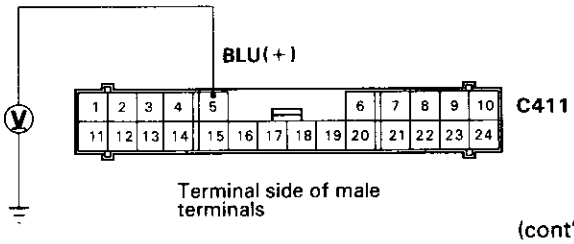

(cont'd)

The SRS Indicator Light Doesn't Come On (cont'd)

From page 24-27

Check the wire harness of the SRS indicator light circuit (2):
1. Turn the ignition switch OFF.
2. Disconnect the SRS main harness 3P connector from the main wire harness.
3. Connect a voltmeter between the No. 1 terminal (+) of the SRS main harness 3P connector and ground.
4. Turn the ignition switch ON (II), and measure voltage.

Is there 8.5 V or less for six seconds after the ignition switch has been turned ON (II)?

YES — NO

Short to power in the BLU wire of the main wire harness; repair the harness.

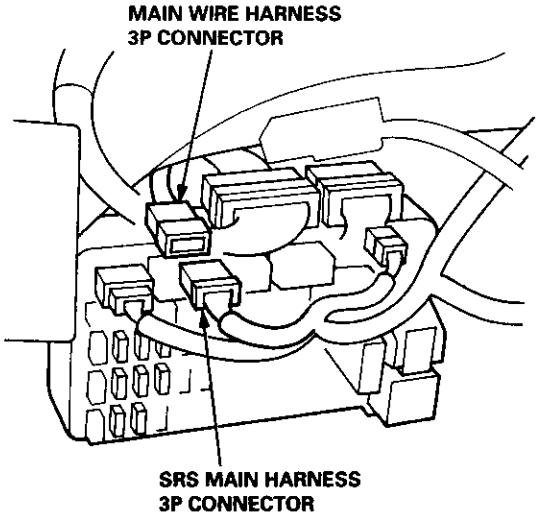

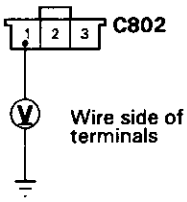

Check the wire harness of the SRS indicator circuit (3):
1. Turn the ignition switch OFF.
2. Disconnect the battery negative cable, then the positive cable, and wait three minutes.
3. Disconnect the driver's (and front passenger's) airbag connector(s) (see page 24-11).
4. Disconnect the SRS main harness 18P connector from the SRS unit.
5. Connect a voltmeter between the No. 6 terminal (+) of the SRS main harness 18P connector and ground.
6. Turn the ignition switch ON (II), and measure voltage. There should be 0.5 V or less.

Is voltage as specified?

YES — NO

Faulty SRS unit; replace the unit (see page 24-76).

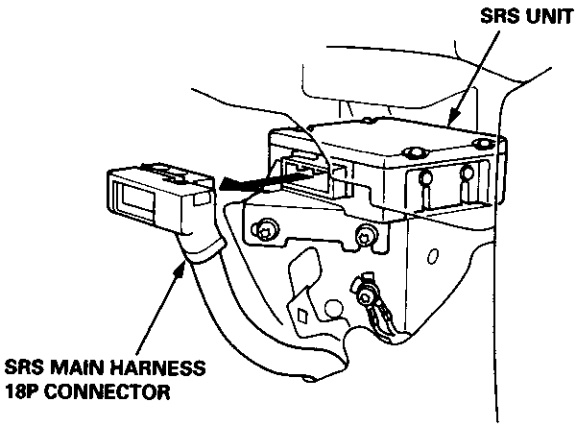

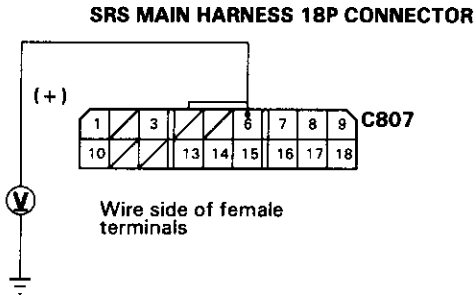

Short to power in the BLU wire of the SRS main harness; replace the harness.

The SRS Indicator Light Doesn't Go Off — '96 – 97 Models

CAUTION: Whenever the ignition switch is ON (II), or has been turned OFF for less than three minutes, be careful not to bump the SRS unit; the airbag(s) could accidentally deploy and cause damage or injuries.

Try to reproduce the SRS indicator light:
1. Erase the DTC memory (see page 24-15).
2. Turn the ignition switch OFF, and wait for ten seconds.
3. Turn the ignition switch ON (II), and check that the SRS indicator light comes on for about six seconds and goes off.

Does the SRS indicator light stay on?

YES — NO

Intermittent failure, system is OK at this time. See Troubleshooting Intermittent Failures on page 24-15.

Check the No. 13 (15 A) and No. 23 (10 A) fuses:
1. Turn the ignition switch OFF.
2. Check for blown No. 13 (15 A) and No. 23 (10 A) fuses in the under-dash fuse/relay box.

Are the fuses OK?

YES — NO

Replace the fuses, and erase the memory
1. Replace the fuses.
2. Connect the SCS service connector to the MES connector.
3. Erase the DTC memory (see page 24-15).
4. Turn the ignition switch OFF, then disconnect the SCS service connector from the MES connector.
5. Turn the ignition switch ON (II).

Does the SRS indicator light go off after six seconds?

YES — NO

END

Confirm the DTC, and continue troubleshooting.

Check for an open in the SRS main harness (VA line):
1. Turn the ignition switch OFF.
2. Disconnect the battery negative cable, then disconnect the positive cable, and wait for three minutes.
3. Disconnect the driver's (and front passenger's) airbag connector(s) (see page 24-11).
4. Disconnect the SRS main harness 18P connector from the SRS unit.
5. Reconnect the battery positive cable, then reconnect the negative cable.
6. Connect a voltmeter between the No. 7 terminal (+) of the SRS main harness 18P connector and ground.
7. Turn the ignition switch on.

Is there battery voltage?

YES — NO

(A)
To page 24-30

Open in the SRS main harness (VA line); replace the SRS main harness.

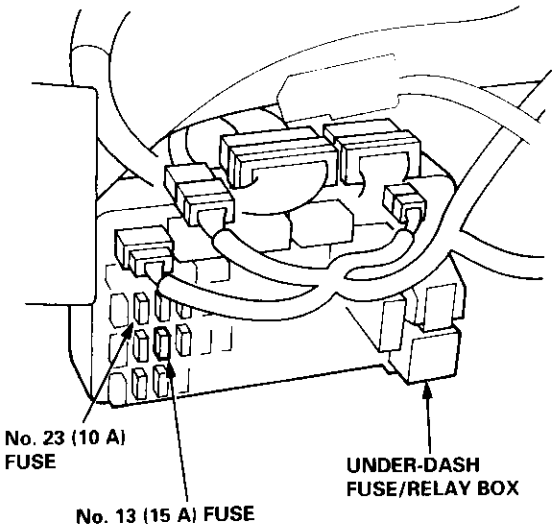

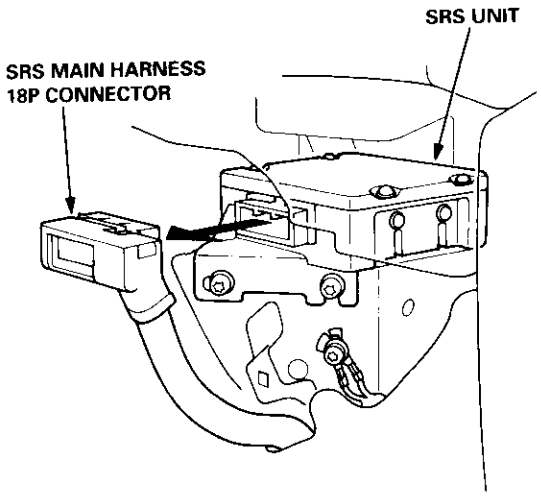

SRS MAIN HARNESS 18P CONNECTOR

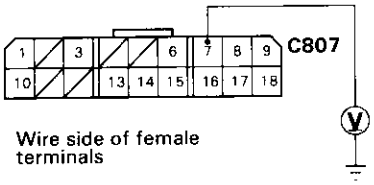

(cont'd)

The SRS Indicator Light Doesn't Go Off — '96 – 97 Models (cont'd)

From page 24-29
(A)

Check the SRS unit:
Connect the SRS main harness 18P connector terminals No. 6 and No. 7 with a jumper wire and backprobe adapters.

Does the SRS indicator light go off?

YES — NO

Faulty SRS unit or poor contact at the SRS main harness 18P connector; check the connector.
If the connector is OK, replace the SRS unit.

(B)
To page 24-31

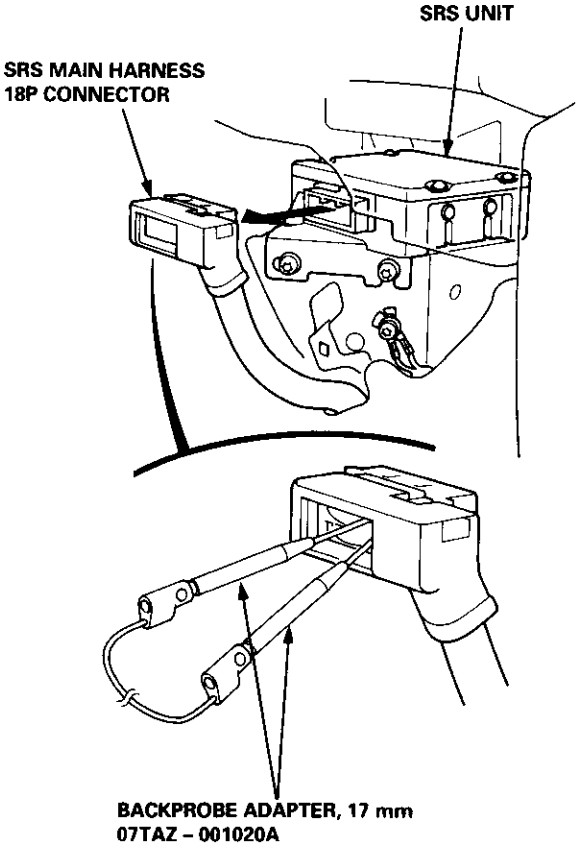

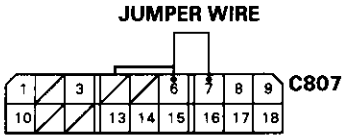

Wire side of female terminals

From page 24-30
(B)

Check the SRS indicator circuit:
1. Turn the ignition switch OFF.
2. Remove the gauge assembly.
   NOTE: Do not disconnect the dashboard wire harness 5P connector from the gauge assembly.
3. Turn the ignition switch ON (II).
4. Connect the dashboard wire harness 5P connector terminals No. 1 and No. 5 with a jumper wire.

Does the SRS indicator light go off?

YES — **NO**

Faulty SRS indicator light circuit in the gauge assembly; replace the SRS printed circuit board in the gauge assembly.

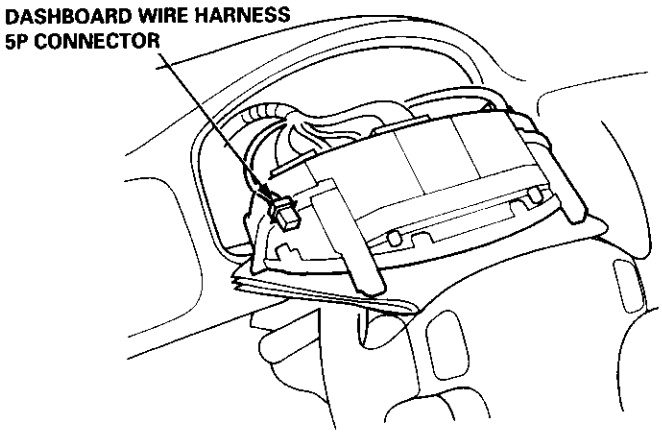

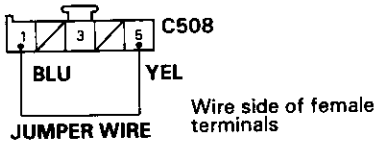

Check for a short to ground in the SRS indicator light circuit:
1. Turn the ignition switch OFF.
2. Disconnect the dashboard wire harness 5P connector from the gauge assembly.
3. Check resistance between the No. 1 terminal of the dashboard wire harness 5P connector and ground. There should be 1 MΩ or more.

Is the resistance as specified?

YES — **NO**

(C)
To page 24-32

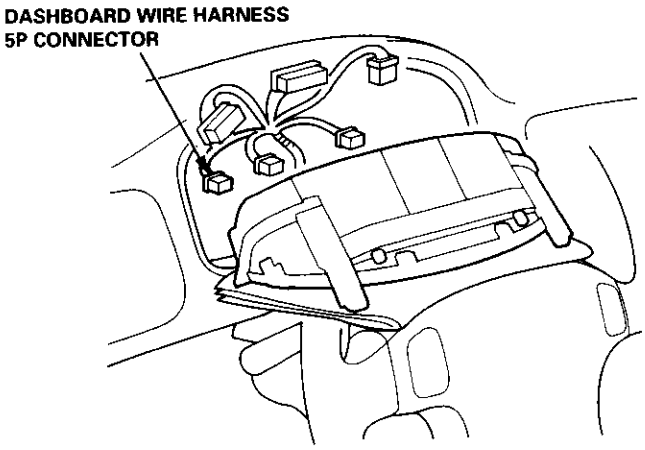

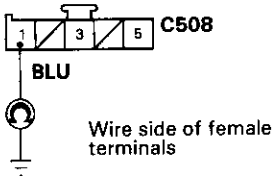

Check for an open in the SRS indicator light circuit:
1. Check resistance between the No. 6 terminal of the SRS main harness 18P connector and No. 1 terminal of the dashboard wire harness 5P connector; there should be 0 – 1.0 Ω.

Is the resistance as specified?

YES — **NO**

(D)
To page 24-33

(E)
To page 24-33

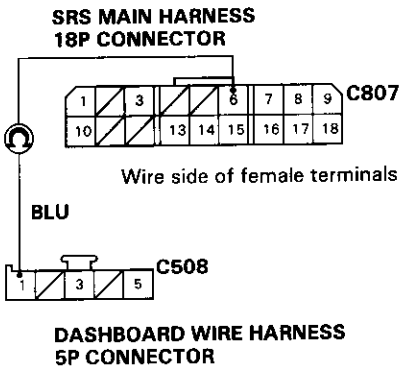

(cont'd)

The SRS Indicator Light Doesn't Go Off — '96 – 97 Models (cont'd)

From page 24-31
(C)

Check for a short to ground in the main wire harness:
1. Disconnect the dashboard wire harness 24P connector from the main wire harness.
2. Check resistance between the No. 5 terminal of the main wire harness 24P connector and ground. There should be 1 MΩ or more.

Is the resistance as specified?

YES — **Short to ground in the dashboard wire harness; repair the dashboard wire harness.**

NO

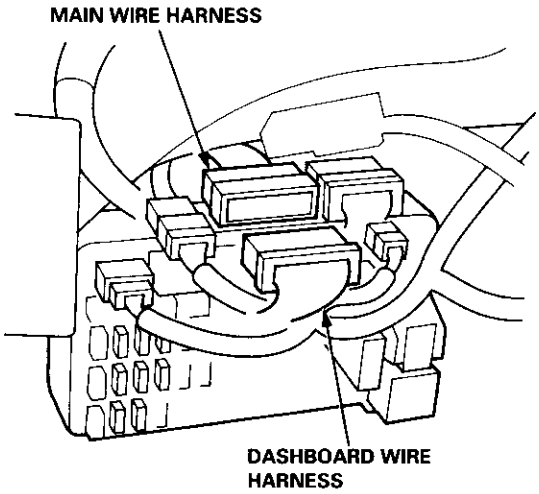

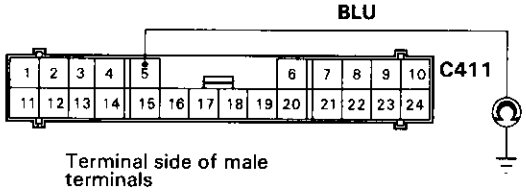

Check for a short to ground in the SRS main harness:
1. Disconnect the SRS main harness 3P connector from the main wire harness.
2. Check resistance between the No. 1 terminal of the SRS main harness 3P connector and ground. There should be 1 MΩ or more.

Is the resistance as specified?

YES — **Short to ground in the main wire harness; repair the main wire harness.**

NO

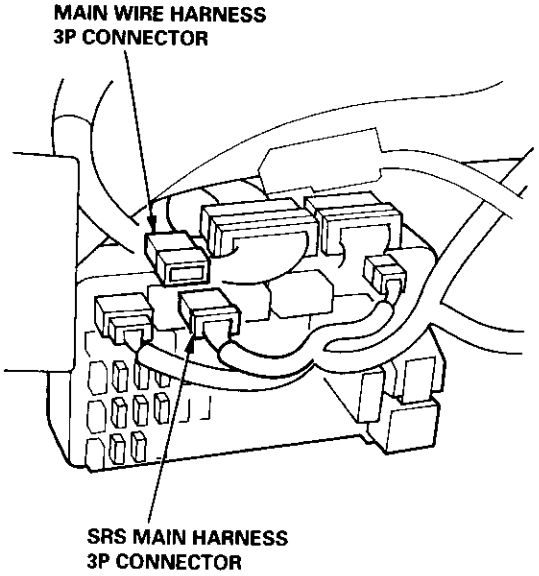

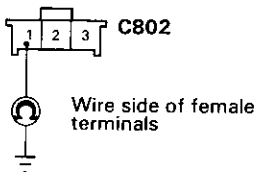

Short to ground in the SRS main harness; replace the SRS main harness.

From page 24-31
(D)

Check the SRS indicator circuit input voltage:
1. Reconnect the SRS main harness 18P connector to the SRS unit.
2. Connect a voltmeter between the No. 1 terminal (+) of the dashboard 5P connector and ground.
3. Turn the ignition switch ON (II), and measure voltage.

Is there 8.5 V or more six seconds after the ignition switch has been turned ON (II)?

YES

The problem has disappeared due to disconnecting and connecting the connectors. Be sure all terminals make good contact, and recheck the system (see Troubleshooting Intermittent Failures on page 24-15).

NO

Poor contact at the SRS main harness 18P connector; check the connector.
- **If the connector is OK, substitute a known-good SRS unit, and recheck.**
- **If the problem is still present, replace the SRS main harness.**

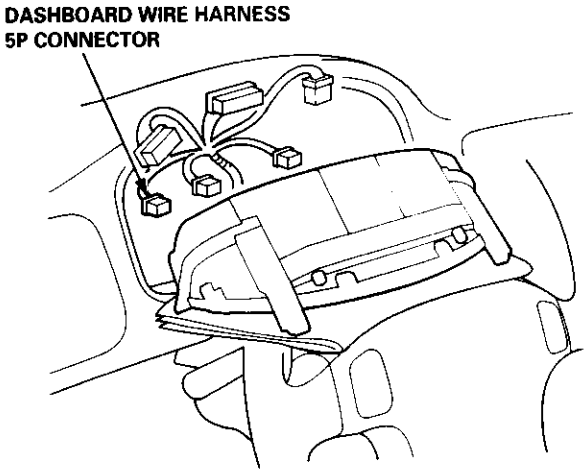

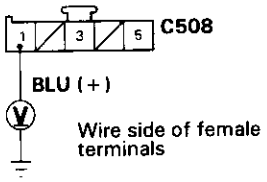

From page 24-31
(E)

Check for an open in the dashboard wire harness:
1. Disconnect the dashboard wire harness 24P connector from the main wire harness.
2. Check resistance between the No. 6 terminal of the SRS main harness 18P connector and No. 5 terminal of the main wire harness 24P connector; there should be 0 – 1.0 Ω.

Is the resistance as specified?

YES

Open in the BLU wire of the dashboard wire harness; repair the dashboard wire harness.

NO

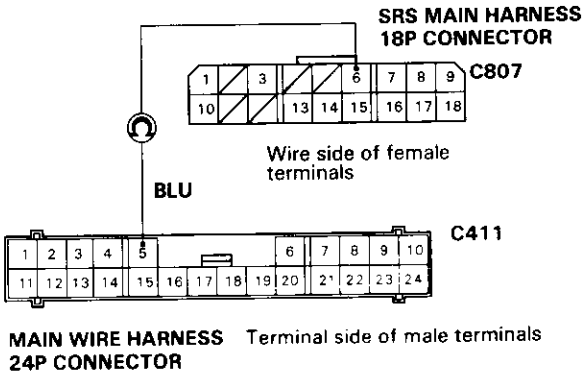

Check for an open in the main wire harness:
1. Disconnect the SRS main harness 3P connector from the main wire harness.
2. Check resistance between the No. 6 terminal of the SRS main harness 18P connector and No. 1 terminal of the SRS main harness 3P connector; there should be 0 – 1.0 Ω.

Is the resistance as specified?

YES

Open in the BLU wire of the main wire harness; repair the main wire harness.

NO

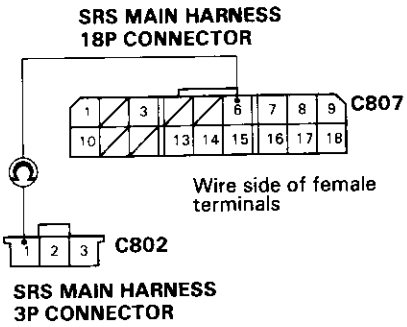

Open in the SRS main harness; replace the SRS main harness.

The SRS Indicator Light Doesn't Go Off — '98 – 00 Models

CAUTION: Whenever the ignition switch is ON (II), or has been turned OFF for less than three minutes, be careful not to bump the SRS unit; the airbags could accidentally deploy and cause damage or injuries.

Try to reproduce the SRS indicator light:
1. Erase the DTC memory (see page 24-15).
2. Turn the ignition switch ON (II), and check that the SRS indicator light comes on for about six seconds and goes off.

Does the SRS indicator light stay on?

YES — NO

Intermittent failure, system is OK at this time. See Troubleshooting Intermittent Failures on page 24-15.

Check the No. 23 (10 A) fuse:
1. Turn the ignition switch OFF.
2. Check for blown No. 23 (10 A) fuse in the under-dash fuse/relay box.

Is the fuse OK?

YES — NO

Replace the fuse, and erase the memory
1. Replace the No. 23 (10 A) fuse.
2. Erase the DTC memory (see page 24-15).
3. Turn the ignition switch ON (II).

Does the SRS indicator light go off after six seconds?

YES — NO

END

Confirm the DTC, and continue troubleshooting.

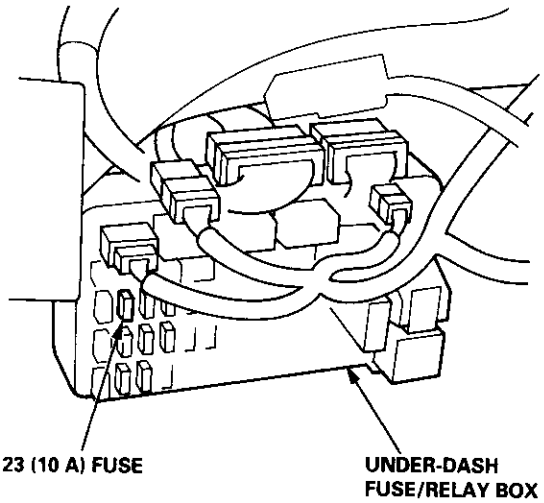

Check for an open in the SRS main harness (VB line):
1. Disconnect the battery negative cable, then disconnect the positive cable, and wait for three minutes.
2. Disconnect the driver's (and front passenger's) airbag connector(s) (see page 24-11).
3. Disconnect the SRS main harness 18P connector from the SRS unit.
4. Reconnect the battery positive cable, then reconnect the negative cable.
5. Connect a voltmeter between the No. 3 terminal (+) of the SRS main harness 18P connector and ground.
6. Turn the ignition switch ON (II).

Is there battery voltage?

YES — NO

Open in the SRS main harness (VB line); replace the harness.

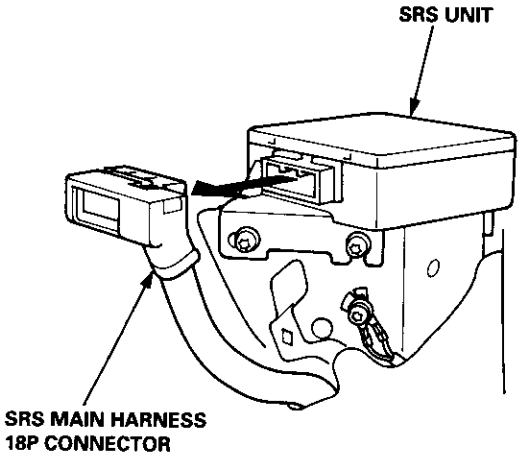

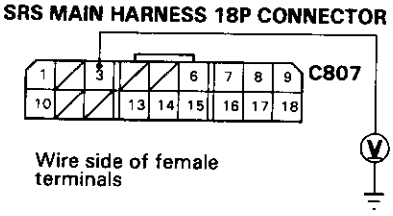

(A)
To page 24-35

From page 24-34
(A)

Check the SRS unit:
Connect the SRS main harness 18P connector terminals No. 6 and No. 3 with a jumper wire and backprobe adapters.

Does the SRS indicator light go off?

YES

Faulty SRS unit or poor contact at the SRS main harness 18P connector; check the connector.
If the connector is OK, replace the SRS unit.

NO

Did fuse No. 23 (10 A) blow?

YES

NO

(B)
To page 24-36

Check for a short to ground in the SRS indicator light circuit:
1. Turn the ignition switch OFF.
2. Disconnect the dashboard wire harness 5P connector from the gauge assembly.
3. Check resistance between the No. 1 terminal of the dashboard wire harness 5P connector and ground. There should be 1 MΩ or more.

Is the resistance as specified?

YES

Short to ground in the gauge assembly; replace the gauge assembly.

NO

(C)
To page 24-37

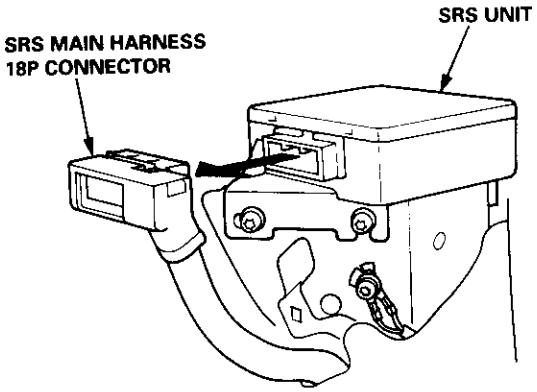

SRS MAIN HARNESS 18P CONNECTOR

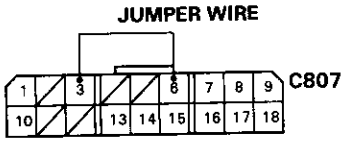

Wire side of female terminals

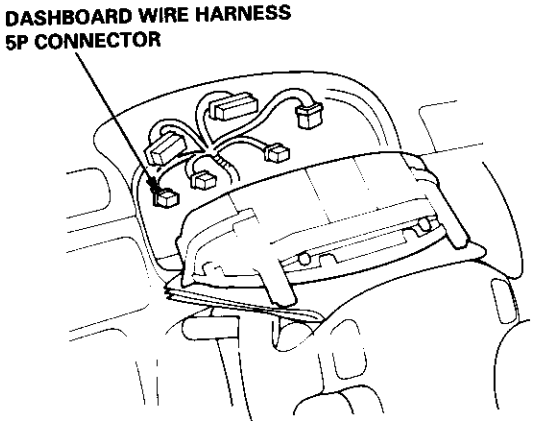

DASHBOARD WIRE HARNESS 5P CONNECTOR

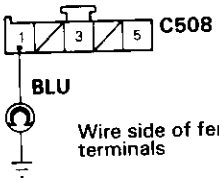

Wire side of female terminals

(cont'd)

The SRS Indicator Light Doesn't Go Off — '98 – 00 Models (cont'd)

From page 24-35
(B)

Check the SRS indicator circuit:
1. Turn the ignition switch OFF.
2. Remove the gauge assembly. Do not disconnect the dashboard wire harness 5P connector from the gauge assembly.
3. Turn the ignition switch ON (II).
4. Connect the dashboard wire harness 5P connector terminals No. 1 and No. 5 with a jumper wire.

Does the SRS indicator light go off?

YES

Faulty SRS indicator light circuit in the gauge assembly; replace the SRS printed circuit board in the gauge assembly.

NO

Check for an open in the SRS indicator light circuit:
1. Turn the ignition switch OFF.
2. Disconnect the dashboard wire harness 5P connector from the gauge assembly.
3. Check resistance between the No. 6 terminal of the SRS main harness 18P connector and No. 1 terminal of the dashboard wire harness 5P connector; there should be 0 – 1.0 Ω.

Is the resistance as specified?

YES

(D)
To page 24-38

NO

(E)
To page 24-38

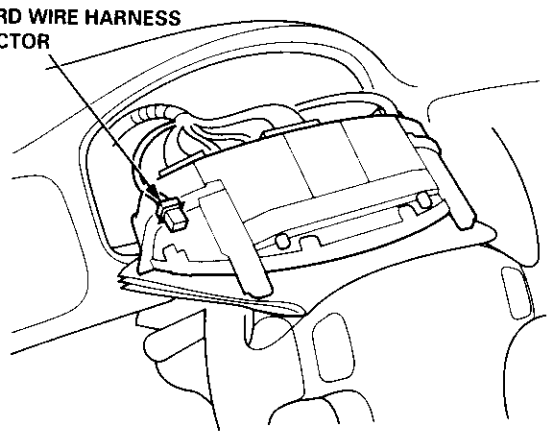

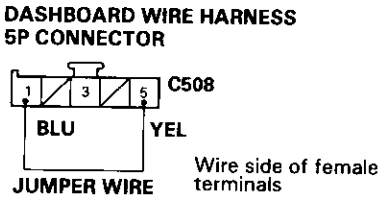

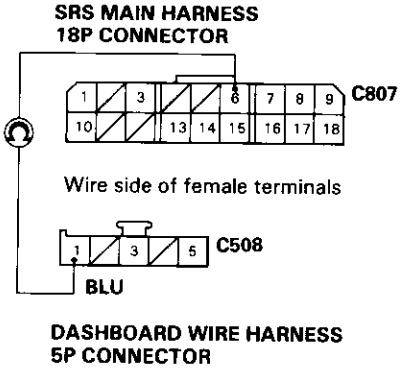

From page 24-35
(C)

Check for a short to ground in the main wire harness:
1. Disconnect the dashboard wire harness 24P connector from the main wire harness.
2. Check resistance between the No. 5 terminal of the dashboard wire harness 24P connector and ground. There should be 1 MΩ or more.

Is the resistance as specified?

YES

NO

Short to ground in the dashboard wire harness; repair the dashboard wire harness.

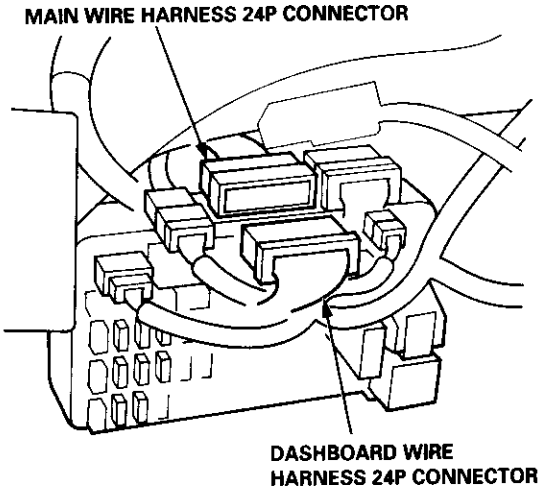

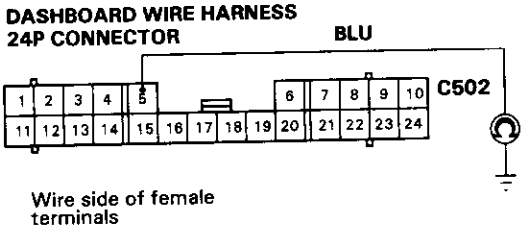

Check for a short to ground in the SRS main harness:
1. Disconnect the SRS main harness 3P connector from the main wire harness.
2. Check resistance between the No. 1 terminal of the SRS main harness 3P connector and ground. There should be 1 MΩ or more.

Is the resistance as specified?

YES

NO

Short to ground in the main wire harness; repair the main wire harness.

Short to ground in the SRS main harness; replace the SRS main harness.

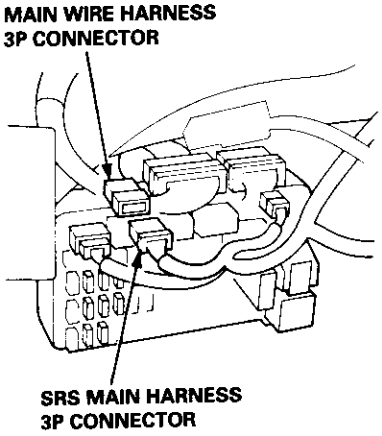

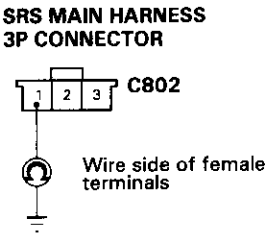

(cont'd)

The SRS Indicator Light Doesn't Go Off — '98 – 00 Models (cont'd)

From page 24-36
(D)

Check the SRS indicator circuit input voltage:
1. Reconnect the SRS main harness 18P connector to the SRS unit.
2. Connect a voltmeter between the No. 1 terminal (+) of the dashboard 5P connector and ground.
3. Turn the ignition switch ON (II), wait for six seconds, then measure voltage.

Is there 8.5 V or more?

YES

The problem has disappeared due to disconnecting and connecting the connectors. Be sure all terminals make good contact, and recheck the system (see Troubleshooting Intermittent Failures on page 24-15).

NO

Poor contact at the SRS main harness 18P connector; check the connector.
- **If the connector is OK, substitute a known-good SRS unit, and recheck.**
- **If the problem is still present, replace the SRS main harness.**

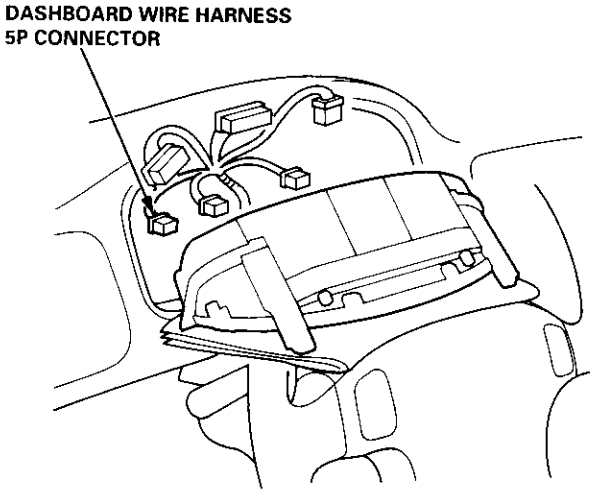

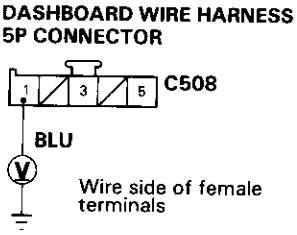

From page 24-36
(E)

Check for an open in the dashboard wire harness:
1. Disconnect the main wire harness 24P connector from the dashboard wire harness.
2. Check resistance between the No. 6 terminal of the SRS main harness 18P connector and No. 5 terminal of the main wire harness 24P connector; there should be 0 – 1.0 Ω.

Is the resistance as specified?

YES

Open in the BLU wire of the dashboard wire harness; repair the dashboard wire harness.

NO

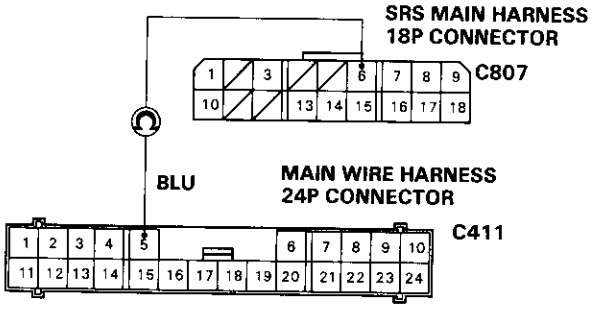

Check for an open in the main wire harness:
1. Disconnect the SRS main harness 3P connector from the main wire harness.
2. Check resistance between the No. 6 terminal of the SRS main harness 18P connector and No. 1 terminal of the SRS main harness 3P connector; there should be 0 – 1.0 Ω.

Is the resistance as specified?

YES

Open in the BLU wire of the main wire harness; repair the main wire harness.

NO

Open in the SRS main harness; replace the SRS main harness.

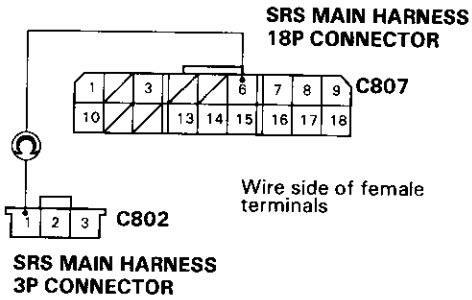

No DTC — '98 – 00 Models

CAUTION: Whenever the ignition switch is ON (II), or has been turned OFF for less than three minutes, be careful not to bump the SRS unit; the airbags could accidentally deploy and cause damage or injuries.

Check the fuse:
Check for blown No. 13 (15 A) fuse in the under-dash fuse/relay box.

Is the fuse OK?

YES — (A) To page 24-40

NO — Replace the fuse. Turn the ignition switch ON (II), and check that the fuse doesn't blow.

Is the fuse OK?

YES — **The problem has disappeared. Test-drive the vehicle and see Troubleshooting Intermittent Failures on page 24-15.**

NO — **Check for short to ground between the under-dash fuse/relay box and the SRS unit.**

1. Turn the ignition switch OFF.
2. Disconnect the battery negative cable, then disconnect the positive cable, and wait for three minutes.
3. Disconnect the driver's (and front passenger's airbag) connector(s) (see page 24-11).
4. Disconnect the SRS main harness 18P connector from the SRS unit.
5. Check resistance between the No. 7 terminal of the SRS main harness 18P connector and ground.
   There should be 1 MΩ or more.

Is the resistance as specified?

YES — **Faulty SRS unit; replace the SRS unit (see page 24-76).**

NO — (B) To page 24-40

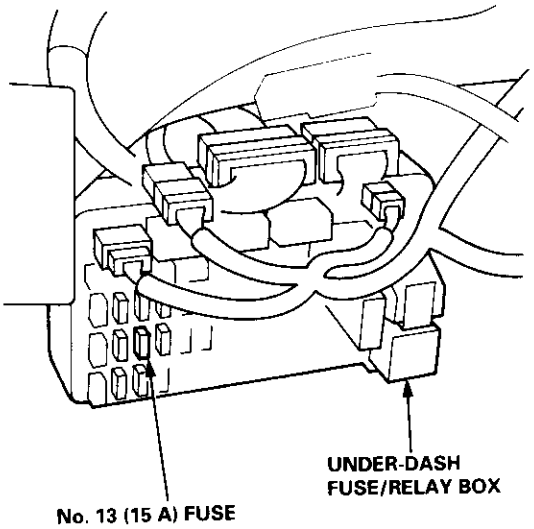

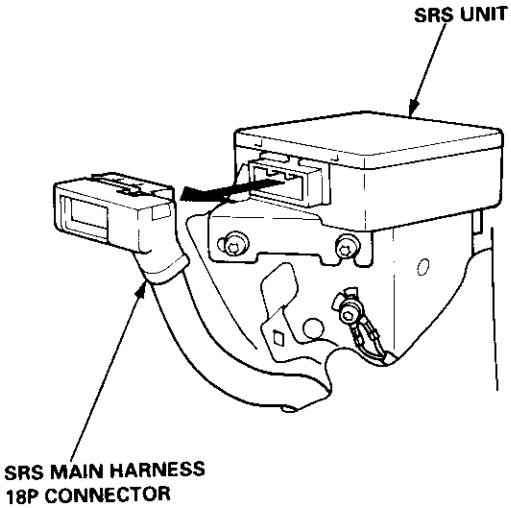

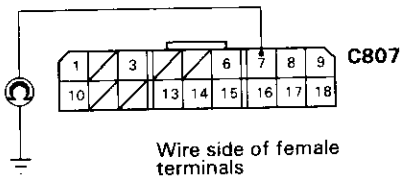

(cont'd)

No DTC — '98 – 00 Models (cont'd)

from page 24-39
(B)

Check for short to ground in the SRS main harness:
1. Disconnect the SRS main harness 2P connector from the under-dash fuse/relay box.
2. Check resistance between the No. 7 terminal of the SRS main harness 18P connector and ground. There should be 1.0 MΩ or more.

Is the resistance as specified?

YES

Short to ground in the under-dash fuse/relay box; replace the under-dash fuse/relay box.

NO

Short to ground in the SRS main harness; replace the SRS main harness.

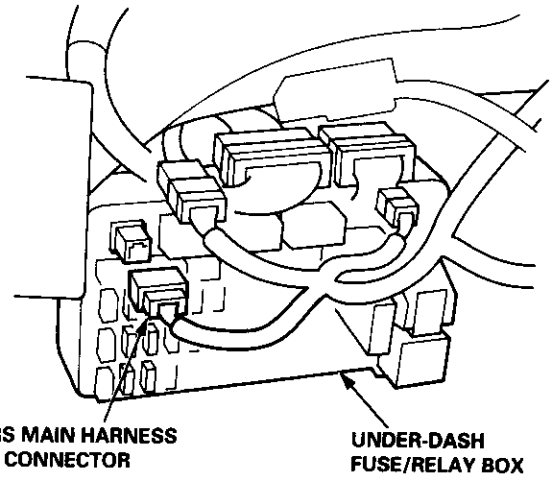

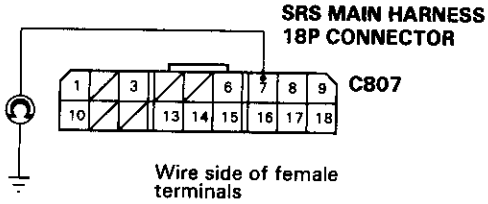

(A) From page 24-39

Check for an open in the SRS main harness:
1. Turn the ignition switch OFF.
2. Disconnect the battery negative cable, then disconnect the positive cable, and wait for three minutes.
3. Disconnect the driver's (and front passenger's) airbag connector(s) (see page 24-11).
4. Disconnect the SRS main harness 18P connector from the SRS unit.
5. Reconnect the battery positive cable, then reconnect the negative cable.
6. Connect a voltmeter between the No. 7 terminal of the SRS main harness 18P connector and ground.
7. Turn the ignition switch ON (II), and measure voltage.

Is there battery voltage?

YES

Poor contact at the SRS main harness 18P connector; check the connector.
- **If the connector is OK, substitute a known-good SRS unit, and recheck.**
- **If the problem is still present, replace the SRS main harness.**

NO

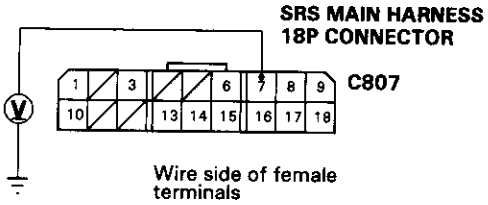

To page 24-41

From page 24-40

Check for an open in the SRS main harness:
1. Turn the ignition switch OFF.
2. Disconnect the SRS main harness 2P connector from the under-dash fuse/relay box.
3. Check resistance between the No. 1 terminal of the SRS main harness 2P connector and No. 7 terminal of the SRS main harness 18P connector.
   There should be 0 – 0.5 Ω.

Is the resistance as specified?

YES

Poor contact at the SRS main harness 2P connector; check the connector.
- **If the connector is OK, substitute a known-good under-dash fuse/relay box, and recheck.**
- **If the problem is still present, replace the SRS main harness.**

NO

Open in the SRS main harness; replace the SRS main harness.

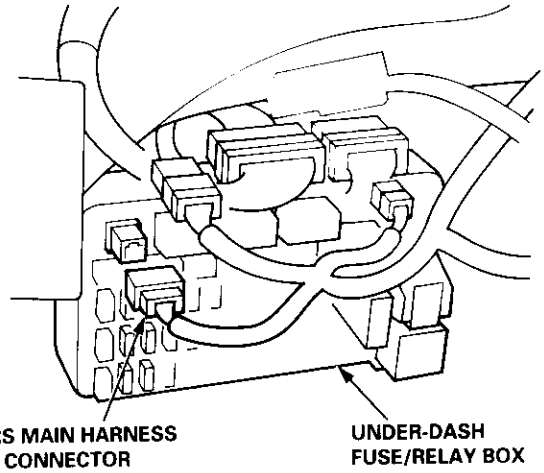

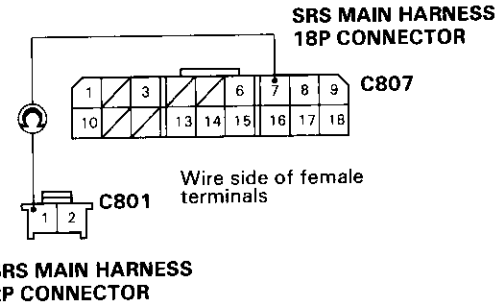

DTC 1-1 and DTC 1-2

CAUTION: Whenever the ignition switch is ON (II), or has been turned OFF for less than three minutes, be careful not to bump the SRS unit; the airbag(s) could accidentally deploy and cause damage or injuries.

Try to reproduce the SRS indicator light:
1. Erase the DTC memory (see page 24-15).
2. Turn the ignition switch ON (II), and check that the SRS indicator light comes on for about six seconds and goes off.

Does the SRS indicator light stay on?

YES — NO

Intermittent failure, system is OK at this time. See Troubleshooting Intermittent Failures on page 24-15.

Check for an open in the driver's airbag inflator:
1. Turn the ignition switch OFF.
2. Disconnect the battery negative cable, then disconnect the positive cable, and wait for three minutes.
3. Disconnect the driver's airbag 2P connector from the cable reel 2P connector.
   CAUTION: Do not disconnect the passenger's airbag connector.
4. Connect the special tool (2 Ω) to the cable reel 2P connector.
5. Reconnect the battery positive cable, then reconnect the negative cable.
6. Erase the DTC memory (see page 24-15).
7. Read the DTC (see page 24-13).

Is DTC 1-1 or DTC 1-2 indicated?

YES — NO

Open or increased resistance in the driver's airbag inflator; replace the driver's airbag (see page 24-67).

Check for an open in the cable reel:
1. Disconnect the battery negative cable, then disconnect the positive cable, and wait for three minutes.
2. Disconnect the special tool (2 Ω) from the cable reel 2P connector.
3. Remove the dashboard lower cover, and disconnect the cable reel 2P connector from the SRS main harness.
4. Connect the special tool (2 Ω) to the SRS main harness 2P connector. (cont'd)

To page 24-43

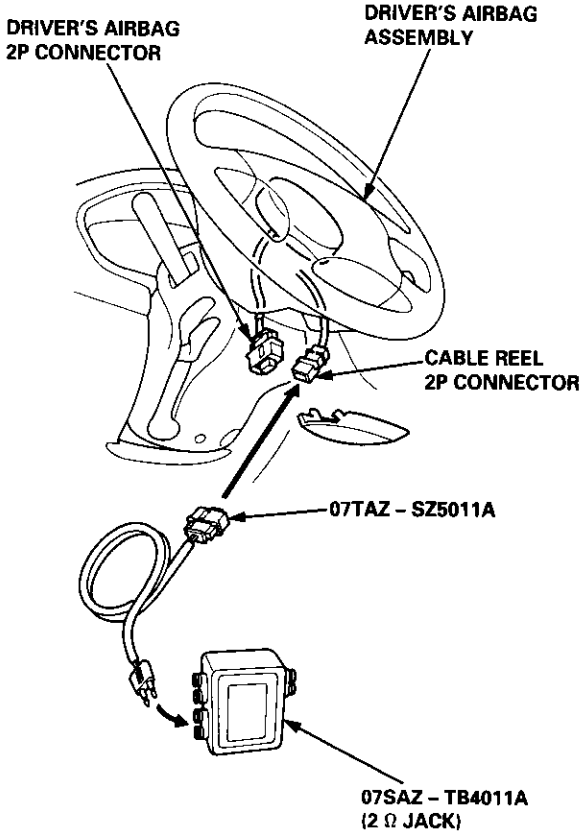

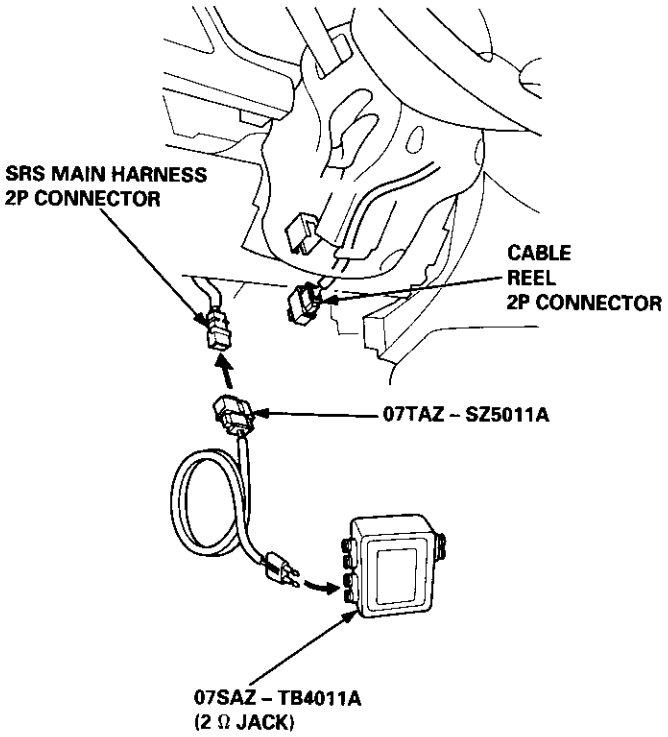

From page 24-42

Check for an open in the cable reel (cont'd):
5. Reconnect the battery positive cable, then reconnect the negative cable.
6. Erase the DTC memory (see page 24-15).
7. Read the DTC (see page 24-13).

Is DTC 1-1 or DTC 1-2 indicated?

YES

Open or increased resistance in the cable reel; replace the cable reel (see page 24-72).

NO

Check for an open in the SRS main harness:
1. Disconnect the battery negative cable, then disconnect the positive cable, and wait for three minutes.
2. Disconnect the front passenger's airbag connector from the SRS main harness (with front passenger's airbag).
3. Disconnect the SRS main harness 18P connector from the SRS unit. Do not disconnect the special tool (2 Ω) from the SRS main harness 2P connector.
4. Check resistance between terminals No. 1 and No. 13 of the SRS main harness 18P connector.
   There should be approx. 2.0 – 3.0 Ω.

Is the resistance as specified?

YES

Poor contact at the SRS main harness 18P connector; check the connector.
- **If the connector is OK, substitute a known-good SRS unit, and recheck.**
- **If the problem is still present, replace the SRS main harness.**

NO

Open or increased resistance in the SRS main harness; replace the harness.

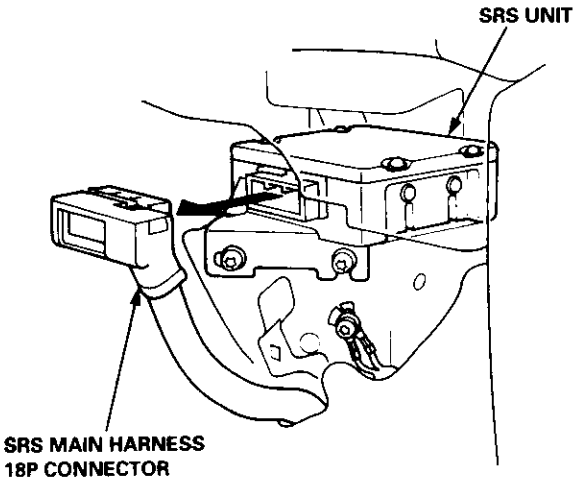

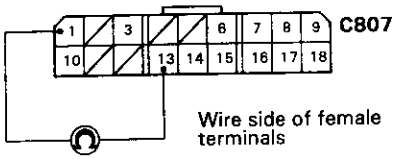

DTC 1-3

CAUTION: Whenever the ignition switch is ON (II), or has been turned OFF for less than three minutes, be careful not to bump the SRS unit; the airbag(s) could accidentally deploy and cause damage or injuries.

Try to reproduce the SRS indicator light:
1. Erase the DTC memory (see page 24-15).
2. Turn the ignition switch ON (II), and check that the SRS indicator light comes on for about six seconds and goes off.

Does the SRS indicator light stay on?

YES — NO

Intermittent failure, system is OK at this time. See Troubleshooting Intermittent Failures on page 24-15.

Check for a short to another wire in the driver's airbag inflator:
1. Turn the ignition switch OFF.
2. Disconnect the battery negative cable, then disconnect the positive cable, and wait for three minutes.
3. Disconnect the driver's airbag 2P connector from the cable reel 2P connector.
   CAUTION: Do not disconnect the passenger's airbag connector.
4. Connect the special tool (2 Ω) to the cable reel 2P connector.
5. Reconnect the battery positive cable, then reconnect the negative cable.
6. Erase the DTC memory (see page 24-15).
7. Read the DTC (see page 24-13).

Is DTC 1-3 indicated?

YES — NO

Short in the driver's airbag inflator; replace the driver's airbag (see page 24-67).

Check for a short in the cable reel:
1. Disconnect the battery negative cable, then disconnect the positive cable, and wait for three minutes.
2. Disconnect the special tool (2 Ω) from the cable reel 2P connector.
3. Remove the dashboard lower cover, and disconnect the cable reel 2P connector from the SRS main harness.
4. Connect the special tool (2 Ω) to the SRS main harness 2P connector. (cont'd)

To page 24-45

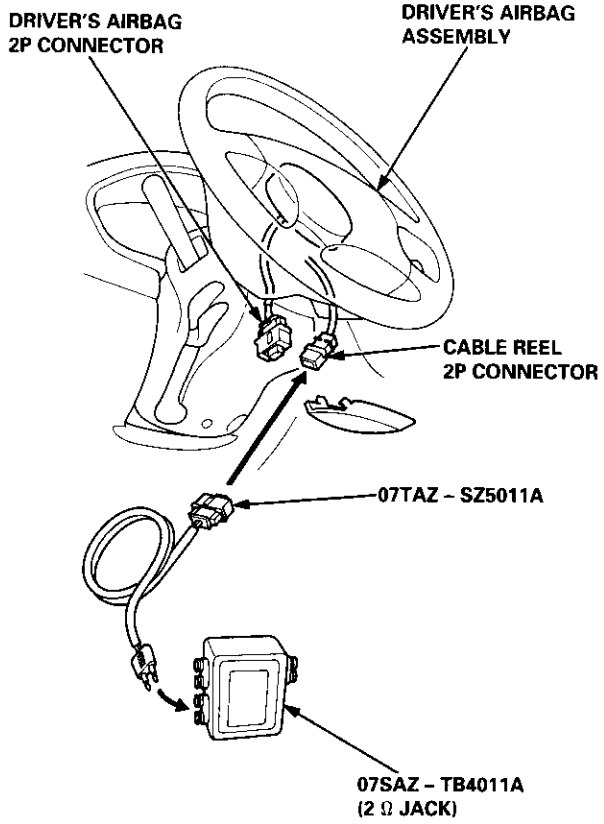

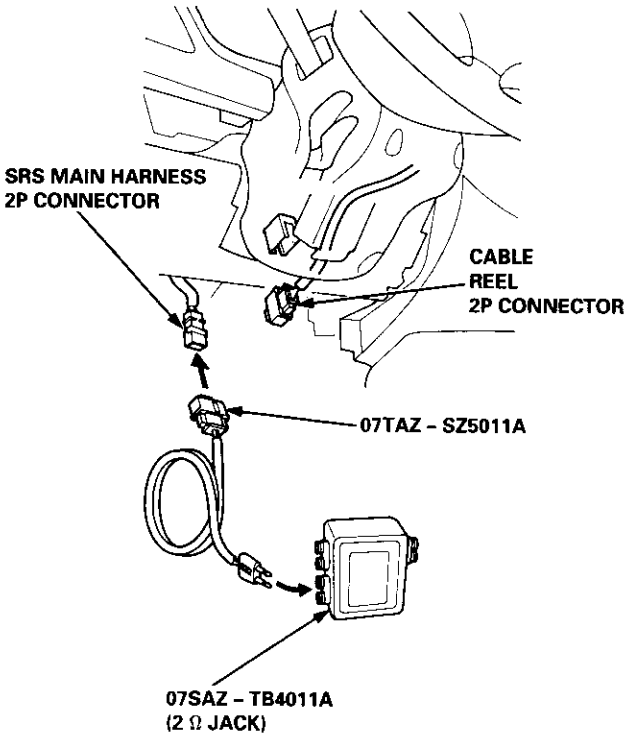

From page 24-44

Check for a short in the cable reel (cont'd):
5. Reconnect the battery positive cable, then reconnect the negative cable.
6. Erase the DTC memory (see page 24-15).
7. Read the DTC (see page 24-13).

Is DTC 1-3 indicated?

YES

Short in the cable reel; replace the cable reel (see page 24-72).

NO

Check for a short in the SRS main harness:
1. Disconnect the battery negative cable, then disconnect the positive cable, and wait for three minutes.
2. Disconnect the front passenger's airbag connector from the SRS main harness (with front passenger's airbag).
3. Disconnect the SRS main harness 18P connector from the SRS unit. Do not disconnect the special tool (2 Ω) from the SRS main harness 2P connector.
4. Check resistance between terminals No. 1 and No. 13 of the SRS main harness 18P connector.
   There should be approx. 2.0 – 3.0 Ω.

Is the resistance as specified?

YES

Faulty SRS unit; replace the SRS unit (see page 24-76).

NO

Short in the SRS main harness; replace the SRS main harness.

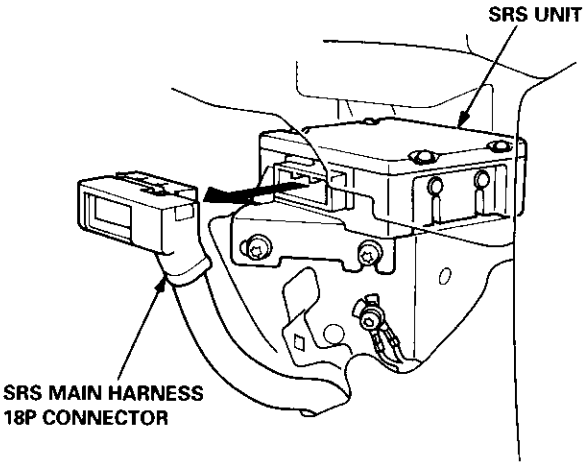

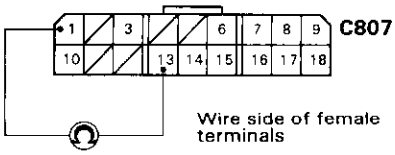

DTC 1-4

CAUTION: Whenever the ignition switch is ON (II), or has been turned OFF for less than three minutes, be careful not to bump the SRS unit; the airbag(s) could accidentally deploy and cause damage or injuries.

Try to reproduce the SRS indicator light:
1. Erase the DTC memory (see page 24-15).
2. Turn the ignition switch ON (II), and check that the SRS indicator light comes on for about six seconds and goes off.

Does the SRS indicator light stay on?

YES — NO

Intermittent failure, system is OK at this time. See Troubleshooting Intermittent Failures on page 24-15.

Check for a short to power in the driver's airbag inflator:
1. Turn the ignition switch OFF.
2. Disconnect the battery negative cable, then disconnect the positive cable, and wait for three minutes.
3. Disconnect the driver's airbag 2P connector from the cable reel 2P connector.
   CAUTION: Do not disconnect the passenger's airbag connector.
4. Connect the SRS service connector (2 Ω) to the cable reel 2P connector.
5. Reconnect the battery positive cable, then reconnect the negative cable.
6. Erase the DTC memory (see page 24-15).
7. Read the DTC (see page 24-13).

Is DTC 1-4 indicated?

YES — NO

Short to power in the driver's airbag inflator; replace the driver's airbag (see page 24-67).

Check for a short to power in the cable reel:
1. Disconnect the battery negative cable, then disconnect the positive cable, and wait for three minutes.
2. Disconnect the special tool (2 Ω) from the cable reel 2P cononector.
3. Remove the dashboard lower cover, and disconnect the cable reel 2P connector from the SRS main harness.
4. Connect the special tool (2 Ω) to the SRS main harness 2P connector. (cont'd)

To page 24-47

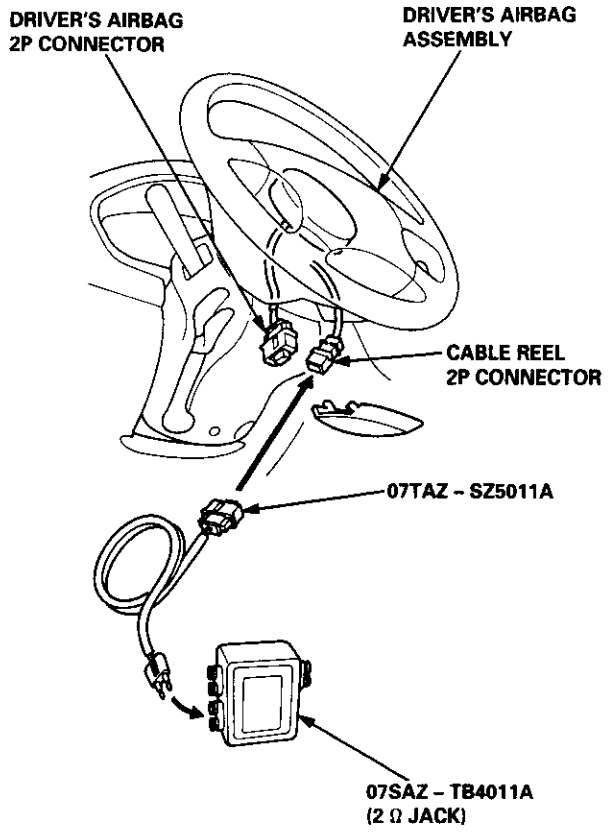

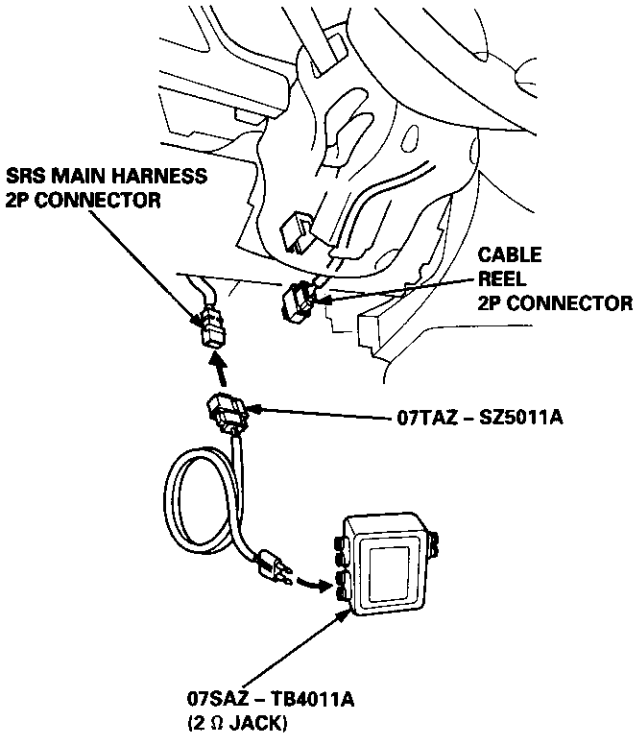

From page 24-46

Check for a short to power in the cable reel (cont'd):
5. Reconnect the battery positive cable, then reconnect the negative cable.
6. Erase the DTC memory (see page 24-15).
7. Read the DTC (see page 24-13).

Is DTC 1-4 indicated?

YES — **NO**

Short to power in the cable reel; replace the cable reel (see page 24-72).

Check for a short to power in the SRS main harness:
1. Disconnect the battery negative cable, then disconnect the positive cable, and wait for three minutes.
2. Disconnect the front passenger's airbag connector from the SRS main harness (with front passenger's airbag).
3. Remove the special tool (2 Ω) from the SRS main harness 2P connector.
4. Disconnect the SRS main harness 18P connector from the SRS unit.
5. Reconnect the battery positive cable, then reconnect the negative cable.
6. Connect a voltmeter between the No. 1 (+) terminal of the SRS main harness 18P connector and body ground.
7. Turn the ignition switch ON (II), and measure voltage. There should be 0.5 V or less.
8. Turn the ignition switch OFF.
9. Connect a voltmeter between the No. 13 (+) terminal of the SRS main harness 18P connector and body ground.
10. Turn the ignition switch ON (II), and measure voltage. There should be 0.5 V or less.

Are voltages as specified?

YES — **NO**

Faulty SRS unit; replace the SRS unit (see page 24-76).

Short to power in the SRS main harness; replace the SRS main harness.

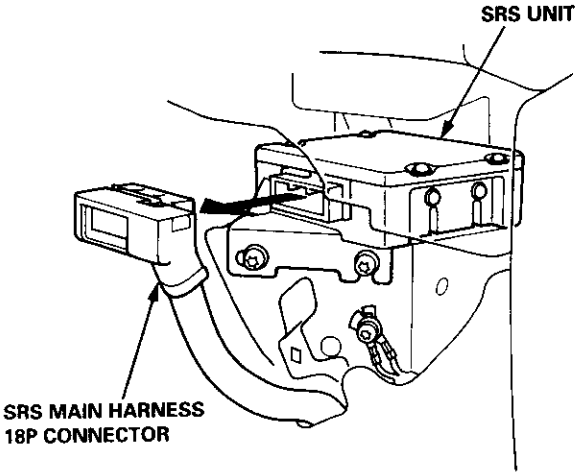

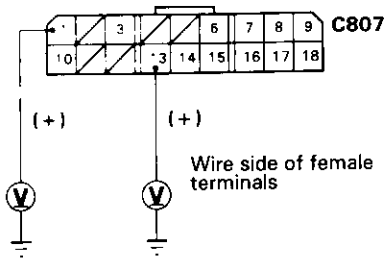

DTC 1-5

CAUTION: Whenever the ignition switch is ON (II), or has been turned OFF for less than three minutes, be careful not to bump the SRS unit; the airbag(s) could accidentally deploy and cause damage or injuries.

Try to reproduce the SRS indicator light:
1. Erase the DTC memory (See page 24-15).
2. Turn the ignition switch ON (II), and check that the SRS indicator light comes on for about six seconds and goes off.

Does the SRS indicator light stay on?

YES — NO

Intermittent failure, system is OK at this time. See Troubleshooting Intermittent Failures on page 24-15.

Check for a short to ground in the driver's airbag inflator:
1. Turn the ignition switch OFF.
2. Disconnect the battery negative cable, then disconnect the positive cable, and wait for three minutes.
3. Disconnect the driver's airbag 2P connector from the cable reel 2P connector.
   CAUTION: Do not disconnect the passenger's airbag connector.
4. Connect the special tool (2 Ω) to the cable reel 2P connector.
5. Reconnect the battery positive cable, then reconnect the negative cable.
6. Erase the DTC memory (see page 24-15).
7. Read the DTC (see page 24-13).

Is DTC 1-5 indicated?

YES — NO

Short to ground in the driver's airbag inflator; replace the driver's airbag (see page 24-67).

Check for a short to ground in the cable reel:
1. Disconnect the battery negative cable, then disconnect the positive cable, and wait for three minutes.
2. Disconnect the special tool (2 Ω) from the cable reel 2P connector.
3. Remove the dashboard lower cover, and disconnect the cable reel 2P connector from the SRS main harness.
4. Connect the Special tool (2 Ω) to the SRS main harness 2P connector (cont'd).

To page 24-49

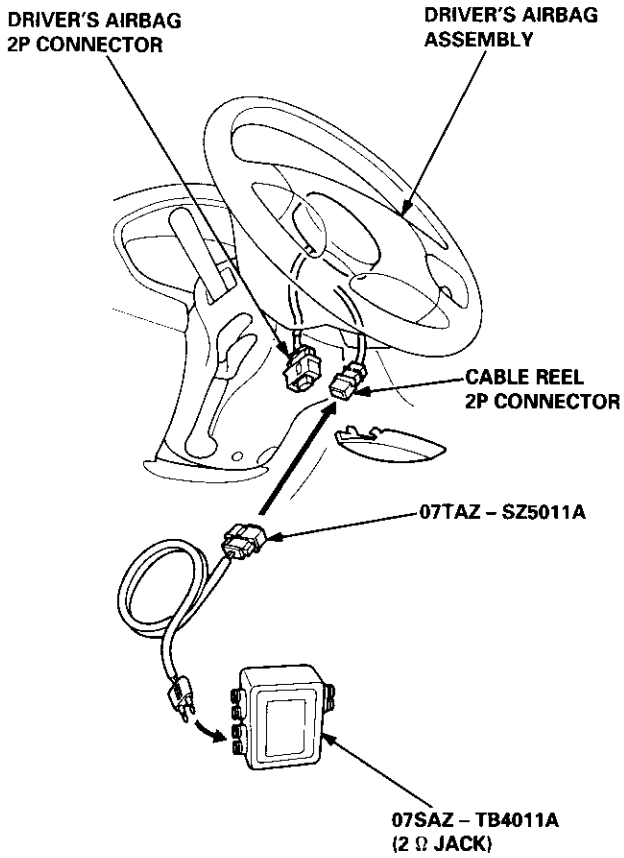

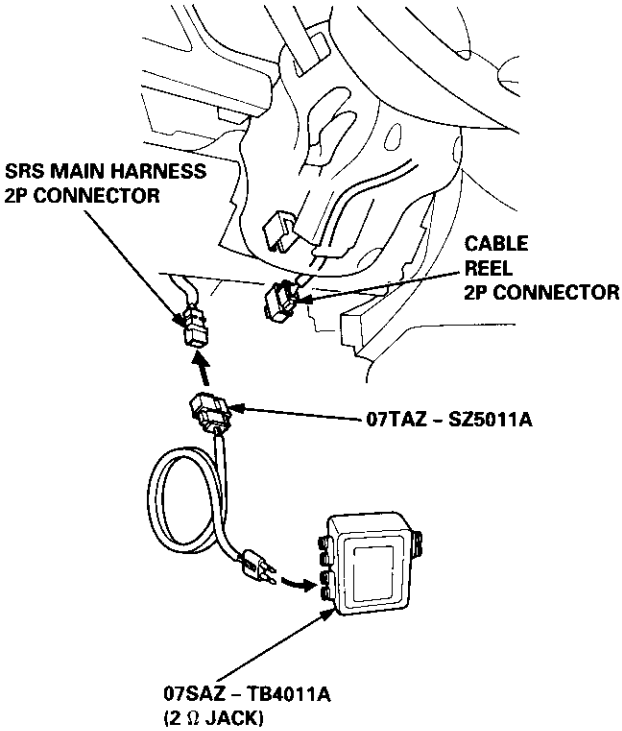

From page 24-48

Check for a short to ground in the cable reel (cont'd):
5. Reconnect the battery positive cable, then reconnect the negative cable.
6. Erase the DTC memory (see page 24-15).
7. Read the DTC (see page 24-13).

Is DTC 1-5 indicated?

YES — **NO**

Short to ground in the cable reel; replace the cable reel (see page 24-72).

Check for a short to ground in the SRS main harness:
1. Disconnect the battery negative cable, then disconnect the positive cable, and wait for three minutes.
2. Disconnect the front passenger's airbag 2P connector from the SRS main harness (with front passenger's airbag).
3. Remove the special tool (2 Ω) from the SRS main harness 2P connector.
4. Check resistance between the No. 1 terminal of the SRS main harness 18P connector and ground, and between the No. 13 terminal of the SRS main harness 18P connector and ground.
   There should be 1 MΩ or more.

Is the resistance as specified?

YES — **NO**

Faulty SRS unit; replace the SRS unit (see page 24-76).

Short to ground in the SRS main harness; replace the SRS main harness.

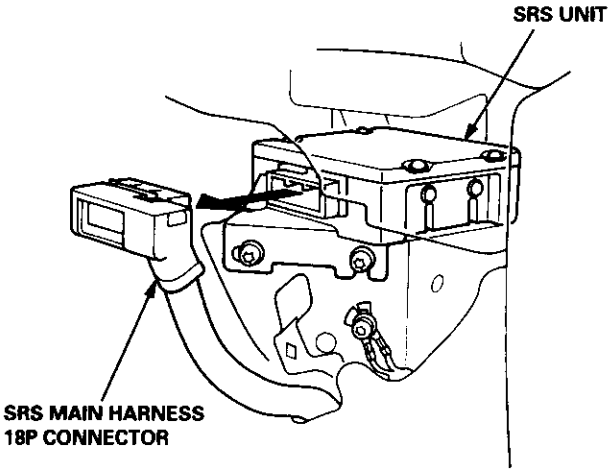

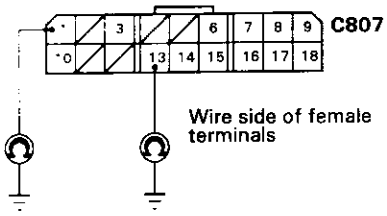

DTC 2-1 and DTC 2-2 — With Front Passenger's Airbag

CAUTION: Whenever the ignition switch is ON (II), or has been turned OFF for less than three minutes, be careful not to bump the SRS unit; the airbags could accidentally deploy and cause damage or injuries.

Try to reproduce the SRS indicator light:
1. Erase the DTC memory (see page 24-15).
2. Turn the ignition switch ON (II), and check that the SRS indicator light comes on for about six seconds and goes off.

Does the SRS indicator light stay on?

YES — NO

Intermittent failure, system is OK at this time. See Troubleshooting Intermittent Failures on page 24-15.

Check for an open in the passenger's airbag inflator:
1. Turn the ignition switch OFF.
2. Disconnect the battery negative cable, then disconnect the positive cable, and wait for three minutes.
3. Disconnect the front passenger's airbag connector from the SRS main harness (see page 24-11).
4. Connect the special tool (2 Ω) to the SRS main harness 2P connector.
   CAUTION: Do not disconnect the driver's airbag connector.
5. Reconnect the battery positive cable, then reconnect the negative cable.
6. Erase the DTC memory (see page 24-15).
7. Read the DTC (see page 24-13).

Is DTC 2-1 or DTC 2-2 indicated?

YES — NO

Open or increased resistance in the passenger's airbag inflator; replace the passenger's airbag (see page 24-67).

To page 24-51

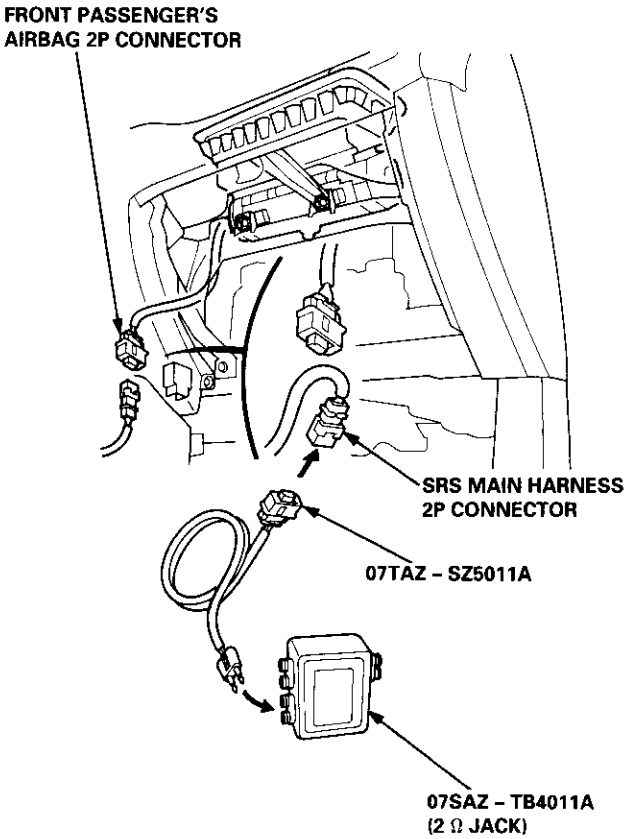

From page 24-50

Check for an open in the SRS main harness:

1. Disconnect the battery negative cable, then disconnect the positive cable, and wait for three minutes.
2. Disconnect the driver's airbag 2P connector from the cable reel 2P connector (see page 24-11).
3. Disconnect the SRS main harness 18P connector from the SRS unit. Do not disconnect the special tool (2 Ω) from the SRS main harness 2P connector.
4. Check resistance between the No. 10 terminal and No. 14 terminal of the SRS main harness 18P connector. There should be approx. 2.0 – 3.0 Ω.

Is the resistance as specified?

YES

Poor contact at the SRS main harness 18P connector; check the connector.
- **If the connector is OK, substitute a known-good SRS unit, and recheck.**
- **If the problem is still present, replace the SRS main harness.**

NO

Open or increased resistance in the SRS main harness; replace the harness.

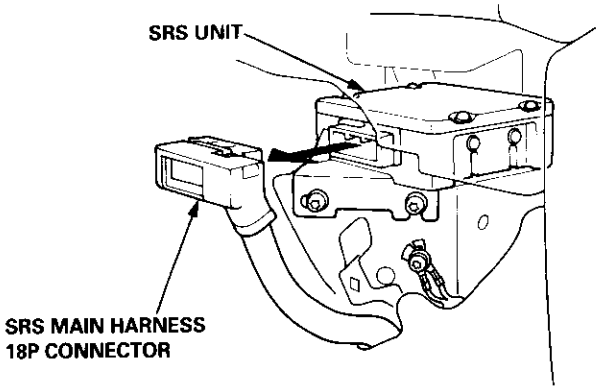

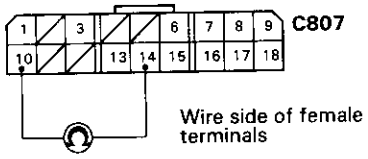

DTC 2-3 — With Front Passenger's Airbag

CAUTION: Whenever the ignition switch is ON (II), or has been turned OFF for less than three minutes, be careful not to bump the SRS unit; the airbags could accidentally deploy and cause damage or injuries.

Try to reproduce the SRS indicator light:
1. Erase the DTC memory (see page 24-15).
2. Turn the ignition switch ON (II), and check that the SRS indicator light comes on for about six seconds and goes off.

Does the SRS indicator light stay on?

YES — NO

Intermittent failure, system is OK at this time. See Troubleshooting Intermittent Failures on page 24-15.

Check for a short to another wire or decreased resistance in the passenger's airbag inflator:
1. Turn the ignition switch OFF.
2. Disconnect the battery negative cable, then disconnect the positive cable, and wait for three minutes.
3. Disconnect the front passenger's airbag 2P connector from the SRS main harness (see page 24-11).
4. Connect the special tool (2 Ω) to the SRS main harness 2P connector.
   CAUTION: Do not disconnect the driver's airbag connector.
5. Reconnect the battery positive cable, then reconnect the negative cable.
6. Erase the DTC memory (see page 24-15).
7. Read the DTC (see page 24-13).

Is DTC 2-3 indicated?

YES — NO

Short to another wire or decreased resistance in the passenger's airbag inflator; replace the passenger's airbag (see page 24-67).

To page 24-53

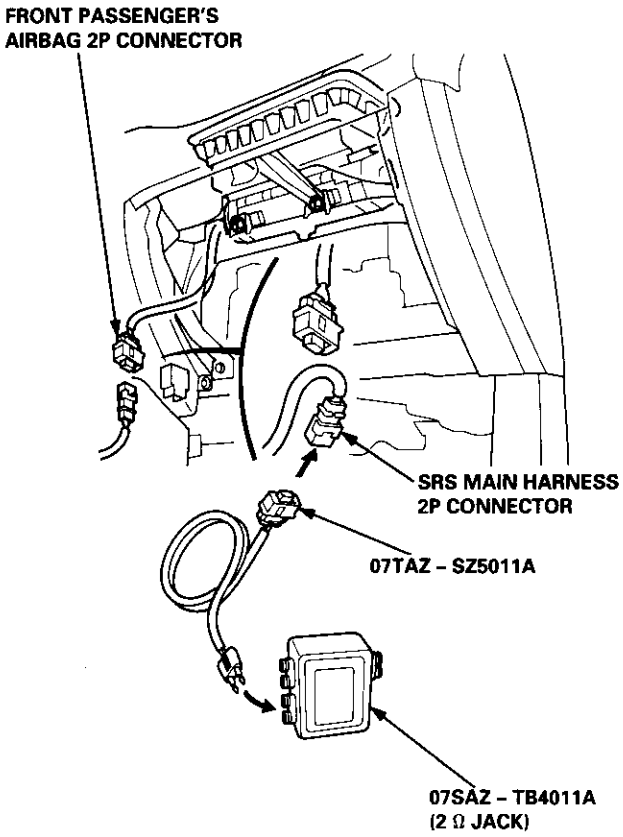

From page 24-52

Check for a short to another wire or decreased resistance in the SRS main harness:

1. Disconnect the battery negative cable, then disconnect the positive cable, and wait for three minutes.
2. Disconnect the driver's airbag 2P connector from the cable reel 2P connector.
3. Disconnect the SRS main harness 18P connector from the SRS unit. Do not disconnect the special tool (2 Ω) from the SRS main harness 2P connector.
4. Check resistance between the No. 10 terminal and No. 14 terminal of the SRS main harness 18P connector. There should be approx. 2.0 – 3.0 Ω.

Is the resistance as specified?

YES

Faulty SRS unit; replace the SRS unit (see page 24-76).

NO

Short to another wire or decreased resistance in the SRS main harness; replace the SRS main harness.

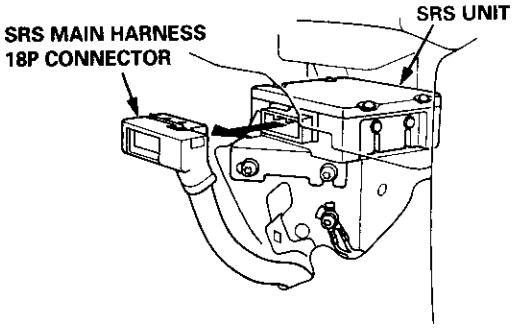

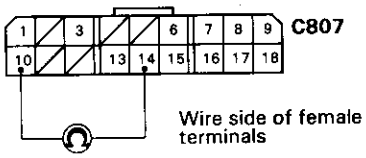

DTC 2-4 — With Front Passenger's Airbag

CAUTION: Whenever the ignition switch is ON (II), or has been turned OFF for less than three minutes, be careful not to bump the SRS unit; the airbags could accidentally deploy and cause damage or injuries.

Try to reproduce the SRS indicator light:
1. Erase the DTC memory (see page 24-15).
2. Turn the ignition switch ON (II), and check that the SRS indicator light comes on for about six seconds and goes off.

Does the SRS indicator light stay on?

YES — NO

Intermittent failure, system is OK at this time. See Troubleshooting Intermittent Failures on page 24-15.

Check for a short to power in the passenger's airbag inflator:
1. Turn the ignition switch OFF.
2. Disconnect the battery negative cable, then disconnect the positive cable, and wait for three minutes.
3. Disconnect the front passenger's airbag 2P connector from the SRS main harness (see page 24-11).
4. Connect the special tool (2 Ω) to the SRS main harness 2P connector.
   CAUTION: Do not disconnect the driver's airbag connector.
5. Reconnect the battery positive cable, then reconnect the negative cable.
6. Erase the DTC memory (see page 24-15).
7. Read the DTC (see page 24-13).

Is DTC 2-4 indicated?

YES — NO

Short to power in the passenger's airbag inflator; replace the passenger's airbag (see page 24-67).

To page 24-55

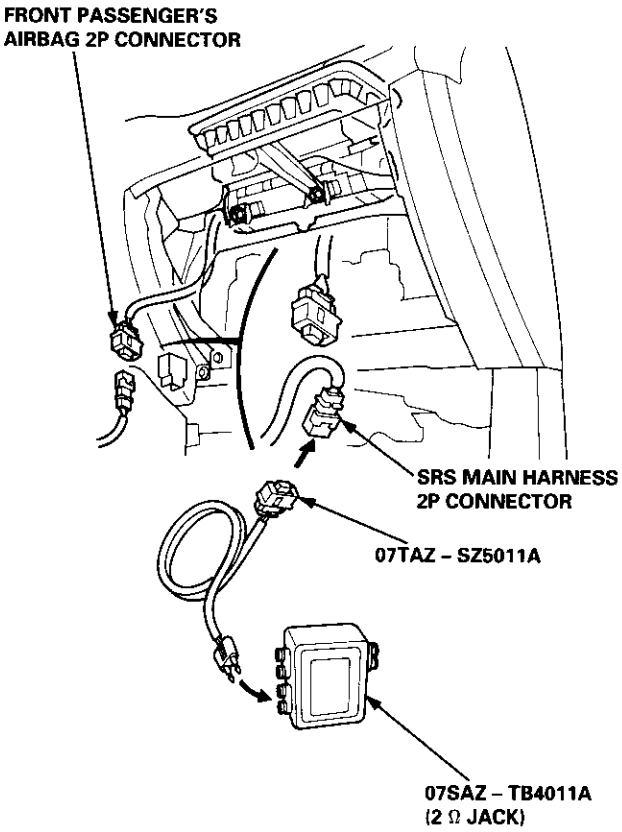

From page 24-54

Check for a short to power in the SRS main harness:

1. Disconnect the battery negative cable, then disconnect the positive cable, and wait for three minutes.
2. Disconnect the driver's airbag 2P connector from the cable reel 2P connector.
3. Disconnect the SRS main harness 18P connector from the SRS unit.
4. Remove the special tool (2 Ω) from the SRS main harness 2P connector.
5. Reconnect the battery positive cable, then reconnect the negative cable.
6. Connect a voltmeter between the No. 10 (+) terminal of SRS main harness 18P connector and ground.
7. Turn the ignition switch ON (II), and measure voltage. There should be 0.5 V or less.
8. Connect a voltmeter between the No. 14 (+) terminal of the SRS main harness 18P connector and ground, and measure voltage. There should be 0.5 V or less.

Are voltages as specified?

YES

Faulty SRS unit; replace the SRS unit (see page 24-76).

NO

Short to power in the SRS main harness; replace the SRS main harness.

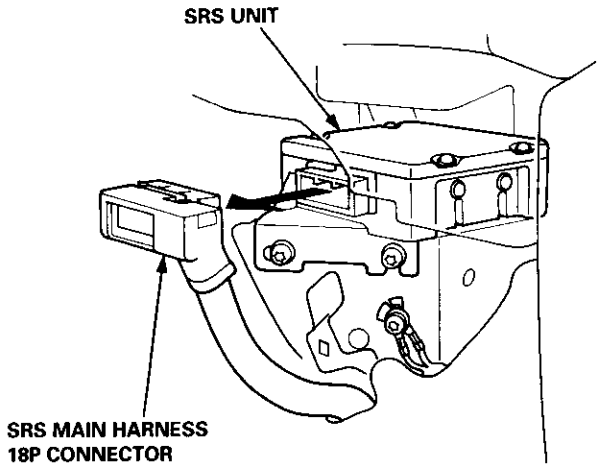

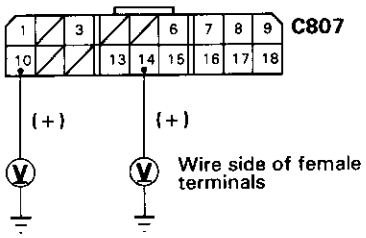

DTC 2-5 — With Front Passenger's Airbag

CAUTION: Whenever the ignition switch is ON (II), or has been turned OFF for less than three minutes, be careful not to bump the SRS unit; the airbags could accidentally deploy and cause damage or injuries.

Try to reproduce the SRS indicator light:
1. Erase the DTC memory (see page 24-15).
2. Turn the ignition switch ON (II), and check that the SRS indicator light comes on for about six seconds and goes off.

Does the SRS indicator light stay on?

YES — NO

Intermittent failure, system is OK at this time. See Troubleshooting Intermittent Failures on page 24-15.

Check for a short to ground in the passenger's airbag inflator:
1. Turn the ignition switch OFF.
2. Disconnect the battery negative cable, then disconnect the positive cable, and wait for three minutes.
3. Disconnect the front passenger's airbag 2P connector from the SRS main harness (see page 24-11).
4. Connect the special tool (2 Ω) to the SRS main harness 2P connector.
   CAUTION: Do not disconnect the driver's airbag connector.
5. Reconnect the battery positive cable, then reconnect the negative cable.
6. Erase the DTC memory (see page 24-15).
7. Read the DTC (see page 24-13).

Is DTC 2-5 indicated?

YES — NO

Short to ground in the passenger's airbag inflator; replace the passenger's airbag (see page 24-67).

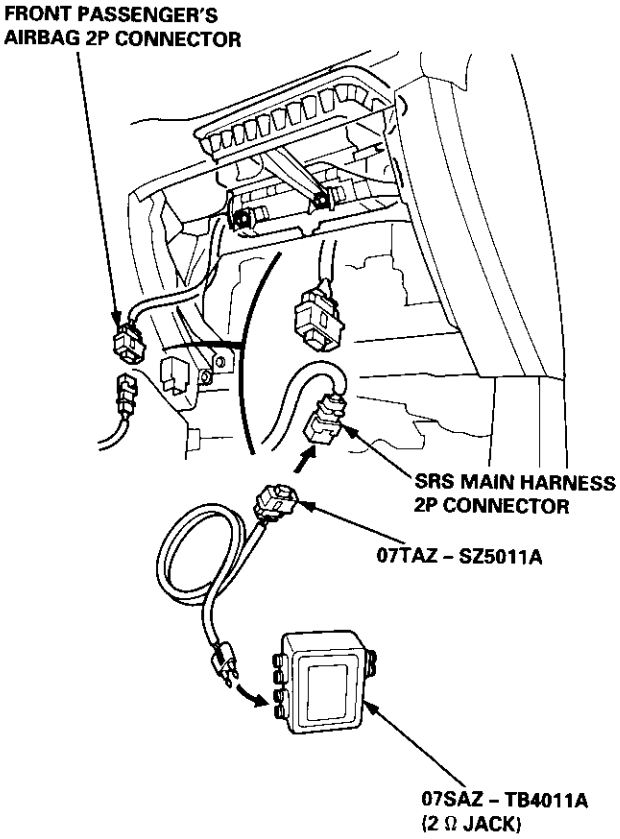

To page 24-57

From page 24-56

Check for a short to ground in the SRS main harness:

1. Disconnect the battery negative cable, then disconnect the positive cable, and wait for three minutes.
2. Disconnect the driver's airbag 2P connector from the cable reel 2P connector.
3. Disconnect the SRS main harness 18P connector from the SRS unit.
4. Remove the special tool (2 Ω) from the SRS main harness 2P connector.
5. Check resistance between the No. 10 terminal of the SRS main harness 18P connector and ground, and between the No. 14 terminal of the SRS main harness 18P connector and ground. There should be 1 MΩ or more.

Is the resistance as specified?

YES

Faulty SRS unit; replace the SRS unit (see page 24-76).

NO

Short to ground in the SRS main harness; replace the SRS main harness.

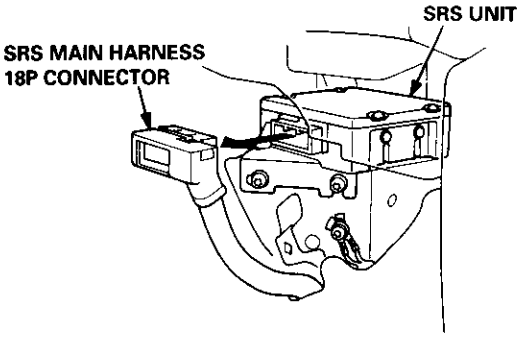

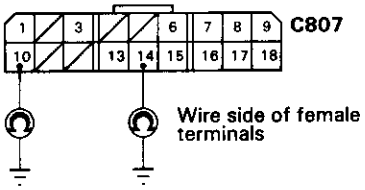

DTC 2-1 and DTC 2-2 — Without Front Passenger's Airbag

CAUTION: Whenever the ignition switch is ON (II), or has been turned OFF for less than three minutes, be careful not to bump the SRS unit; the airbag could accidentally deploy and cause damage or injuries.

Try to reproduce the SRS indicator light:
1. Erase the DTC memory (see page 24-15).
2. Turn the ignition switch ON (II), and check that the SRS indicator light comes on for about six seconds and goes off.

Does the SRS indicator light stay on?

YES — NO

Intermittent failure, system is OK at this time. See Troubleshooting Intermittent Failures on page 24-15.

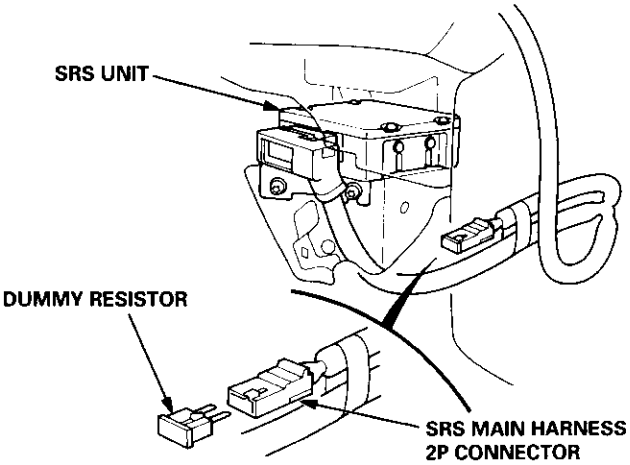

Check for an open or increased resistance in the dummy resistor:
1. Turn the ignition switch OFF.
2. Remove the dummy resistor from the SRS main harness 2P connector.
3. Check the resistance between the A and B terminals of the dummy resistor. There should be 1.5 – 2.5 Ω.

Is the resistance as specified?

YES — NO

Faulty dummy resistor; replace the dummy resistor.

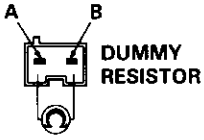

Check for an open or increased resistance in the SRS main harness:
1. Disconnect the battery negative cable, then disconnect the positive cable, and wait for three minutes.
2. Disconnect the driver's airbag 2P connector from the cable reel 2P connector (see page 24-11).
3. Disconnect the SRS main harness 18P connector from the SRS unit.
4. Connect the dummy resistor to the SRS main harness 2P connector.
5. Check resistance between the No. 10 terminal and No. 14 terminal of the SRS main harness 18P connector. There should be approx. 1.5 – 2.5 Ω.

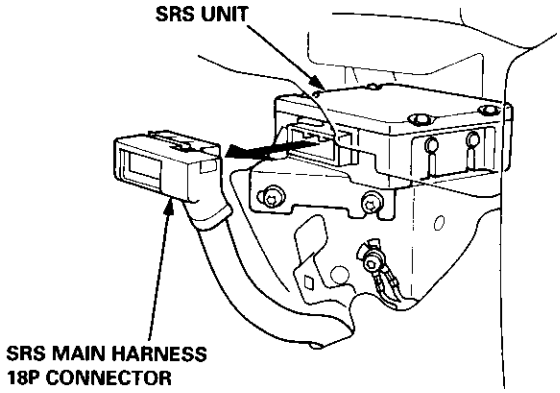

Is the resistance as specified?

YES — NO

Poor contact at the SRS main harness 18P connector; check the connector.
- **If the connector is OK, substitute a known-good SRS unit, and recheck.**
- **If the problem is still present, replace the SRS main harness.**

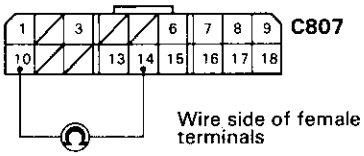

Open or increased resistance in the SRS main harness; replace the harness.

DTC 2-3 — Without Front Passenger's Airbag

CAUTION: Whenever the ignition switch is ON (II), or has been turned OFF for less than three minutes, be careful not to bump the SRS unit; the airbag could accidentally deploy and cause damage or injuries.

Try to reproduce the SRS indicator light:
1. Erase the DTC memory (see page 24-15).
2. Turn the ignition switch ON (II), and check that the SRS indicator light comes on for about six seconds and goes off.

Does the SRS indicator light stay on?

YES — **Intermittent failure, system is OK at this time. See Troubleshooting Intermittent Failures on page 24-15.**

NO

Check for a short to another wire or decreased resistance in the dummy resistor:
1. Turn the ignition switch OFF.
2. Remove the dummy resistor from the SRS main harness 2P connector.
3. Check the resistance between the A and B terminals of the dummy resistor. There should be 1.5 – 2.5 Ω.

Is the resistance as specified?

YES — **Faulty dummy resistor; replace the dummy resistor.**

NO

Check for a short to another wire or decreased resistance in the SRS main harness:
1. Disconnect the battery negative cable, then disconnect the positive cable, and wait for three minutes.
2. Disconnect the driver's airbag 2P connector from the cable reel 2P connector (see page 24-11).
3. Disconnect the SRS main harness 18P connector from the SRS unit.
   NOTE: Do not connect the dummy resistor to the SRS main harness 2P connector.
4. Check resistance between the No. 10 terminal and No. 14 terminal of the SRS main harness 18P connector. There should be 1 MΩ or more.

Is the resistance as specified?

YES — **Faulty SRS unit; replace the SRS unit (see page 24-76).**

NO

Short to another wire or decreased resistance in the SRS main harness; replace the SRS main harness.

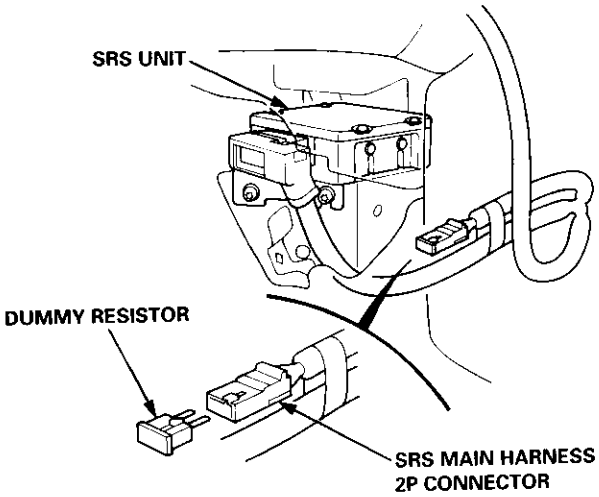

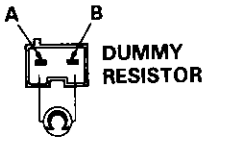

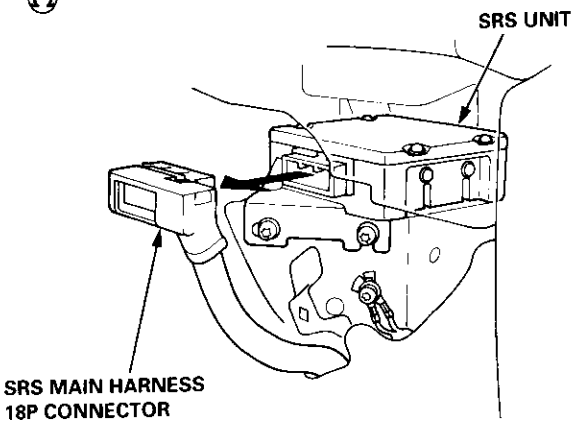

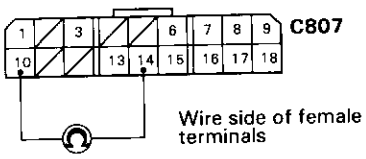

DTC 2-4 — Without Front Passenger's Airbag

CAUTION: Whenever the ignition switch is ON (II), or has been turned OFF for less than three minutes, be careful not bump the SRS unit; the airbag could accidentally deploy and cause damage or injuries.

Try to reproduce the SRS indicator light:
1. Erase the DTC memory (see page 24-15).
2. Turn the ignition switch ON (II), and check that the SRS indicator light comes on for about six seconds and goes off.

Does the SRS indicator light stay on?

YES — NO

Intermittent failure, system is OK at this time. See Troubleshooting Intermittent Failures on page 24-15.

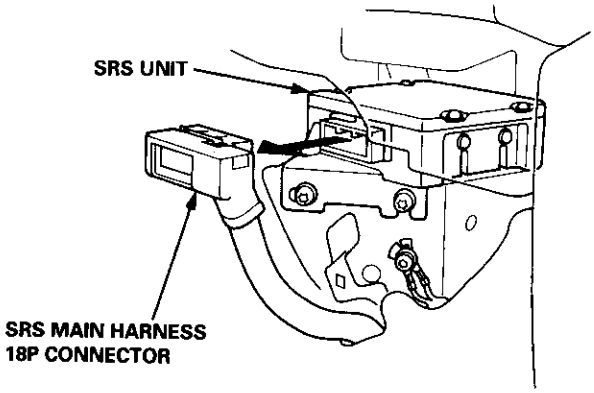

Check for a short to power in the SRS main harness:
1. Disconnect the battery negative cable, then disconnect the positive cable, and wait for three minutes.
2. Disconnect the driver's airbag 2P connector from the cable reel 2P connector (see page 24-11).
3. Disconnect the SRS main harness 18P connector from the SRS unit.
4. Reconnect the battery positive cable, then reconnect the negative cable.
5. Connect a voltmeter between the No. 10 (+) terminal of the SRS main harness 18P connector and ground.
6. Turn the ignition switch ON (II), and measure voltage. There should be 0.5 V or less.
7. Connect a voltmeter between the No. 14 (+) terminal of the SRS main harness 18P connector and ground, and measure voltage. There should be 0.5 V or less.

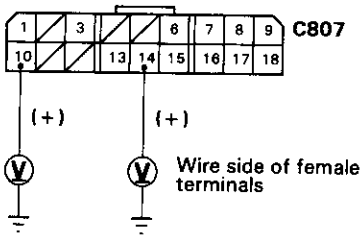

Are voltages as specified?

YES — NO

Faulty SRS unit; replace the SRS unit (see page 24-76).

Short to power in the SRS main harness or the dummy resistor; check for contact between the dummy resistor and another wire. If there is no contact, replace the SRS main harness.

DTC 2-5 — Without Front Passenger's Airbag

CAUTION: Whenever the ignition switch is ON (II), or has been turned OFF for less than three minutes, be careful not to bump the SRS unit; the airbag could accidentally deploy and cause damage or injuries.

Try to reproduce the SRS indicator light:
1. Erase the DTC memory (see page 24-15).
2. Turn the ignition switch ON (II), and check that the SRS indicator light comes on for about six seconds and goes off.

Does the SRS indicator light stay on?

YES

Intermittent failure, system is OK at this time. See Troubleshooting Intermittent Failures on page 24-15.

NO

Check for a short to ground in the SRS main harness:
1. Disconnect the battery negative cable, then disconnect the positive cable, and wait for three minutes.
2. Disconnect the driver's airbag 2P connector from the cable reel 2P connector (see page 24-11).
3. Disconnect the SRS main harness 18P connector from the SRS unit.
4. Check resistance between No. 10 terminal of the SRS main harness 18P connector and ground, and between the No. 14 terminal of the SRS main harness 18P connector and ground. There should be 1 MΩ or more.

Is the resistance as specified?

YES

Faulty SRS unit; replace the SRS unit (see page 24-76).

NO

Short to ground in the SRS main harness or the dummy resistor; check for contact between the dummy resistor and ground. If there is no contact, replace the SRS main harness.

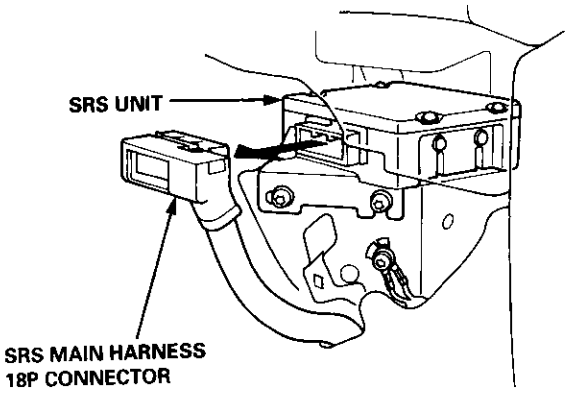

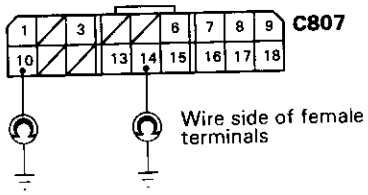

DTC 8-6

CAUTION: Whenever the ignition switch is ON (II), or has been turned OFF for less than three minutes, be careful not to bump the SRS unit; the airbags could accidentally deploy and cause damage or injuries.

Besides indicating an abnormality in the SRS unit, DTC 8-6 may also indicate that two problems equivalent to DTC 1-1 and 2-4, 1-4 and 2-1, or 1-4 and 2-4 occurred at the same time. Proceed in the order shown below.

Check the SRS main harness:
1. Disconnect the battery negative cable, then disconnect the positive cable, and wait for three minutes.
2. Disconnect the driver's airbag (and front passenger's airbag) connector(s) (see page 24-11).
3. Disconnect the SRS main harness 18P connector from the SRS unit.
4. Reconnect the battery positive cable, then reconnect the negative cable.
5. Turn the ignition switch ON (II).
6. Connect a voltmeter and measure voltage between the No. 10 terminal of the SRS main harness 18P connector and ground, and between the No. 14 terminal and ground. There should be approx. 0 – 0.5 V.

Are voltages as specified?

YES

NO

Short to power in the SRS main harness; replace the SRS main harness.

Check the SRS main harness and the cable reel:
Connect a voltmeter and measure voltage between the No. 1 terminal of the SRS main harness 18P connector and ground, and between the No. 13 terminal and ground. There should be approx. 0 – 0.5 V.

Are voltages as specified?

YES

NO

Faulty SRS unit; replace the SRS unit (see page 24-76).

To page 24-63 (A)

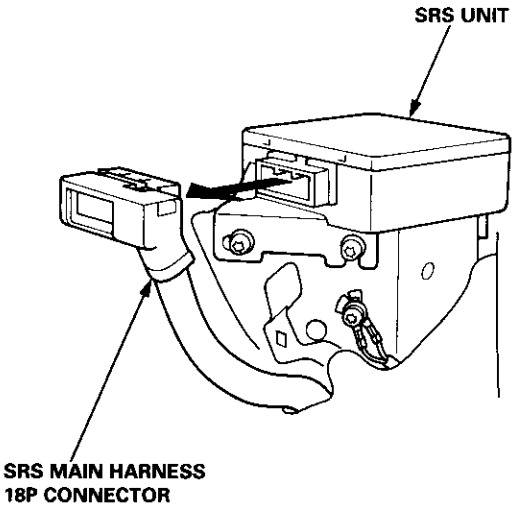

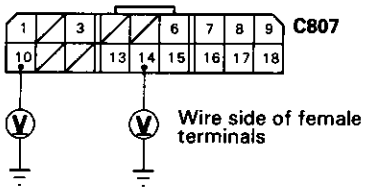

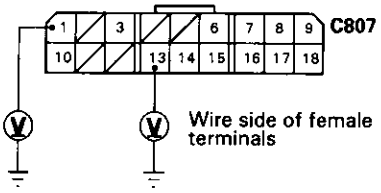

From page 24-62 (A)

Check the cable reel:
1. Turn the ignition switch OFF.
2. Disconnect the cable reel 2P connector from the SRS main harness.
3. Turn the ignition switch ON (II).
4. Connect a voltmeter and measure voltage between the No. 1 terminal of the SRS main harness 18P connector and ground, and between the No. 13 terminal and ground. There should be approx. 0 – 0.5 V.

Are voltages as specified?

YES

Short to power in the cable reel; replace the cable reel (see page 24-72).

NO

Short to power in the SRS main harness; replace the SRS main harness.

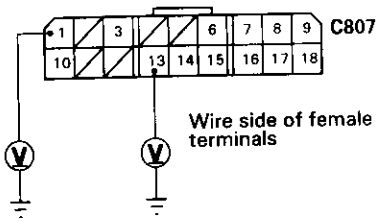

DTC 9-2

CAUTION: Whenever the ignition switch is ON (II), or has been turned OFF for less than three minutes, be careful not to bump the SRS unit; the airbag(s) could accidentally deploy and cause damage or injuries.

Check the fuse:
1. Turn the ignition switch OFF.
2. Check for blown No. 23 (10 A) fuse in the under-dash fuse/relay box.

Is the fuse OK?

YES — (A) To page 24-65

NO — Replace the fuse. Turn the ignition switch ON (II), and check that the fuse doesn't blow.

Is the fuse OK?

YES — **The problem has disappeared. Test-drive the vehicle and see Troubleshooting Intermittent Failures on page 24-15.**

NO — **Check for short to ground between the under-dash fuse/relay box and the SRS unit.**
1. Turn the ignition switch OFF.
2. Disconnect the battery negative cable, then disconnect the positive cable, and wait for three minutes.
3. Disconnect the driver's (and front passenger's) airbag connector(s) (see page 24-11).
4. Disconnect the SRS main harness 18P connector from the SRS unit.
5. Check resistance between the No. 3 terminal of the SRS main harness 18P connector and ground. There should be 1 MΩ or more.

Is the resistance as specified?

YES — **Faulty SRS unit; replace the SRS unit (see page 24-76).**

NO — (B) To page 24-65

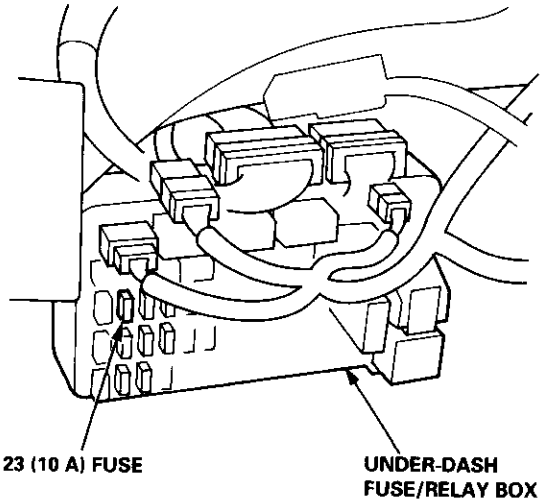

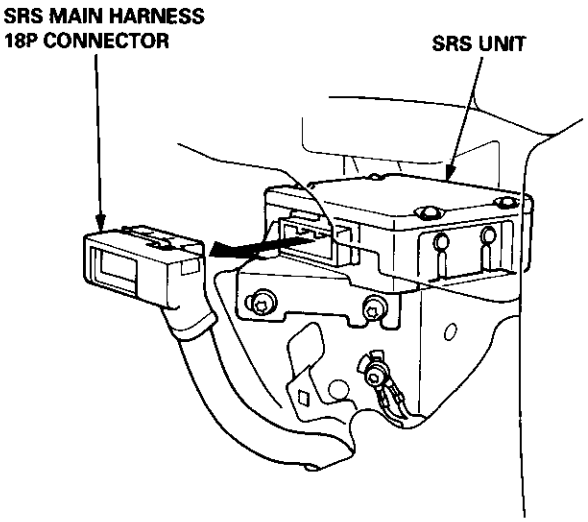

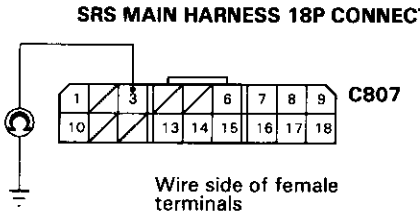

(B) from page 24-64

Check for short to ground in the SRS main harness:
1. Disconnect the SRS main harness 2P connector from the under-dash fuse/relay box.
2. Check resistance between the No. 3 terminal of the SRS main harness 18P connector and ground. There should be 1.0 MΩ or more.

Is the resistance as specified?

YES

Short to ground in the under-dash fuse/relay box; replace the under-dash fuse/relay box.

NO

Short to ground in the SRS main harness; replace the SRS main harness.

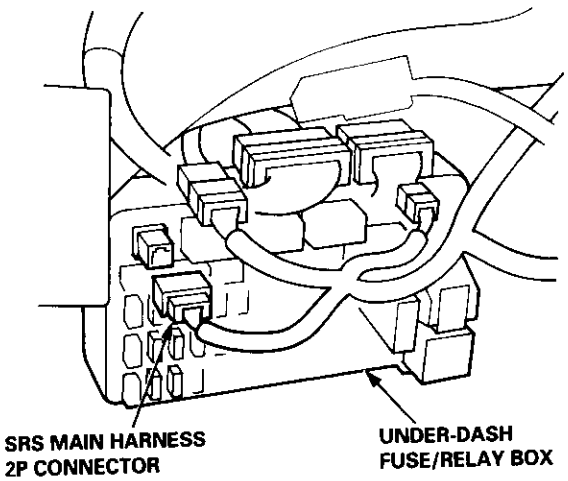

(A) From page 24-64

Check for an open in the SRS main harness:
1. Turn the ignition switch OFF.
2. Disconnect the battery negative cable, then disconnect the positive cable, and wait for three minutes.
3. Disconnect the driver's (and front passenger's) airbag connector (see page 24-11).
4. Disconnect the SRS main harness 18P connector from the SRS unit.
5. Reconnect the battery positive cable, then reconnect the negative cable.
6. Connect a voltmeter between the No. 3 terminal of the SRS main harness 18P connector and ground.
7. Turn the ignition switch ON (II), and measure voltage.

Is there battery voltage?

YES

Poor contact at the SRS main harness 18P connector; check the connector.
- **If the connector is OK, substitute a known-good SRS unit, and recheck.**
- **If the problem is still present, replace the SRS main harness**

NO

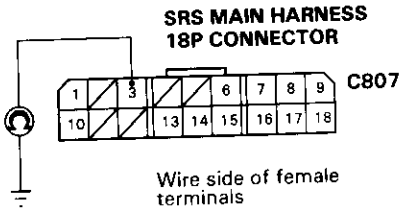

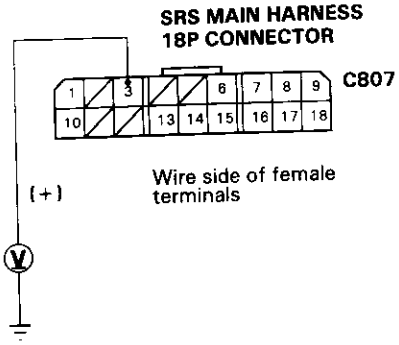

To page 24-66

(cont'd)

DTC 9-2 (cont'd)

From page 24-65

Check for an open in the SRS main harness:
1. Turn the ignition switch OFF.
2. Disconnect the SRS main harness 2P connector from the under-dash fuse/relay box.
3. Check resistance between the No. 2 terminal of the SRS main harness 2P connector and No. 3 terminal of the SRS main harness 18P connector.
   There should be 0 – 0.5 Ω.

Is the resistance as specified?

YES

Poor contact at the SRS main harness 2P connector; check the connector.
- **If the connector is OK, substitute a known-good under-dash fuse/relay box, and recheck.**
- **If the problem is still present, replace the SRS main harness.**

NO

Open in the SRS main harness; replace the SRS main harness.

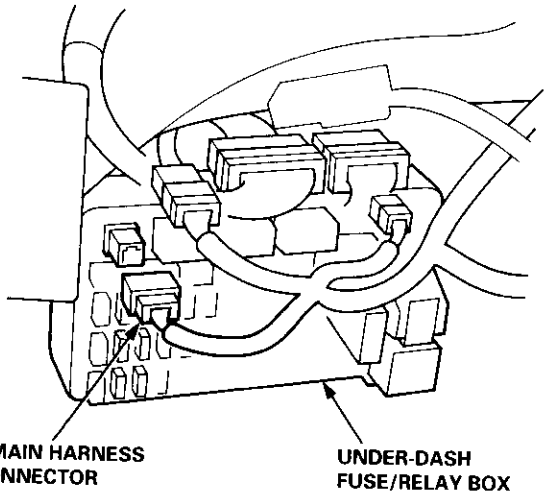

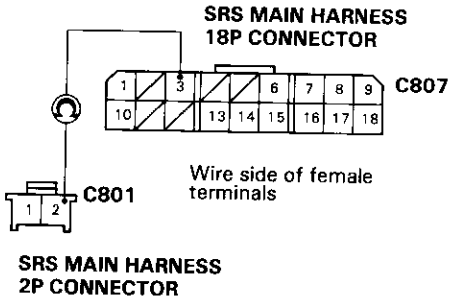

Replacement

After a collision in which the airbags were deployed, the airbag assemblies and the SRS unit must be replaced.

WARNING Store a removed airbag with the pad surface up. If the airbag is improperly stored face down, accidental deployment could propel the unit with enough force to cause serious injury.

CAUTION:
- **Always disconnect the airbag connector(s) when the harness is disconnected.**
- **Do not disassemble or tamper with the airbag.**

NOTE:
- Do not install used SRS parts from another vehicle. When repairing, use only new SRS parts.
- Carefully inspect the airbag before you install it. Do not install an airbag that shows signs of being dropped or improperly handled, such as dents, cracks or deformation.

1. Disconnect the battery negative cable, then disconnect the positive cable from the battery, and wait at least three minutes.

2. Disconnect the airbag connector(s):

Driver's Side:

- Remove the access panel from the steering wheel, then disconnect the 2P connector between the driver's airbag and cable reel.

  NOTE: When disconnected, the airbag connector is automatically shorted.

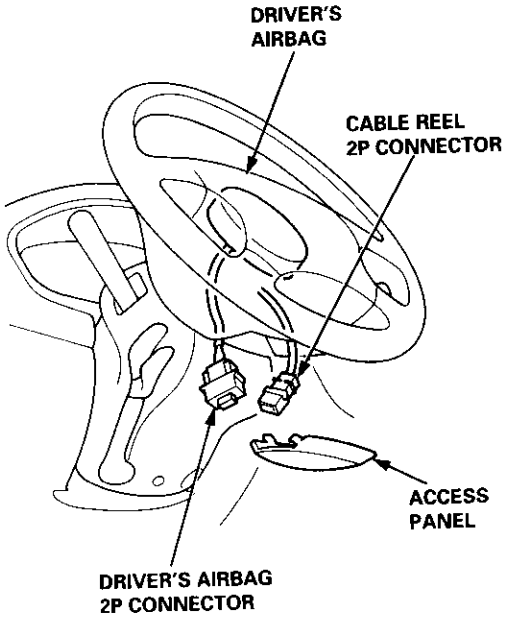

Front Passenger's Side:

- Disconnect the 2P connector between the front passenger's airbag and SRS main harness.

  NOTE: When disconnected, the airbag connector is automatically shorted.

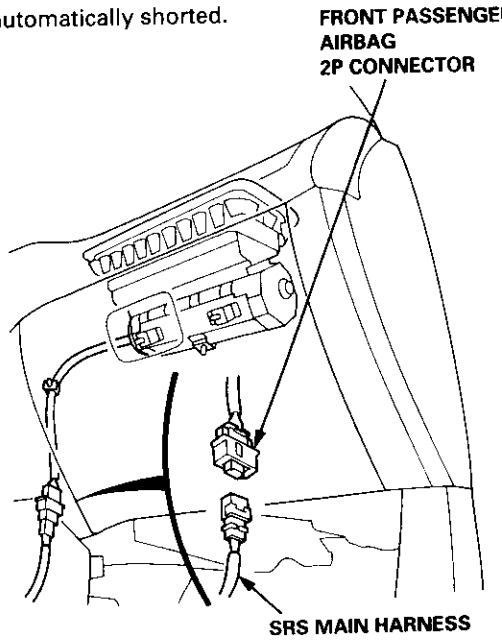

3. Remove the airbag(s):

Driver's Side:

- Remove the two Torx bolts using a Torx T30 bit, then remove the driver's airbag.

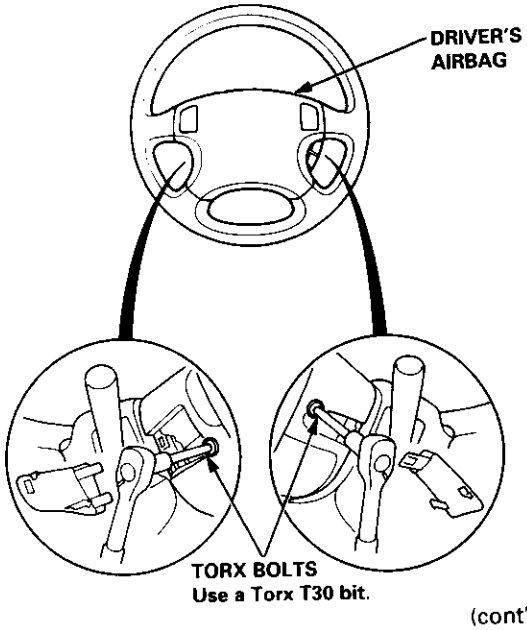

(cont'd)

Replacement (cont'd)

Front Passenger's Side:

- Remove the three mounting nuts from the bracket, then remove the harness clip.
- Lift the front passenger's airbag out of the dashboard by covering the lid and dashboard with a cloth, and prying carefully with a flat-tip screwdriver.

NOTE: The lid of the airbag has pawls on its side which attach it to the dashboard.

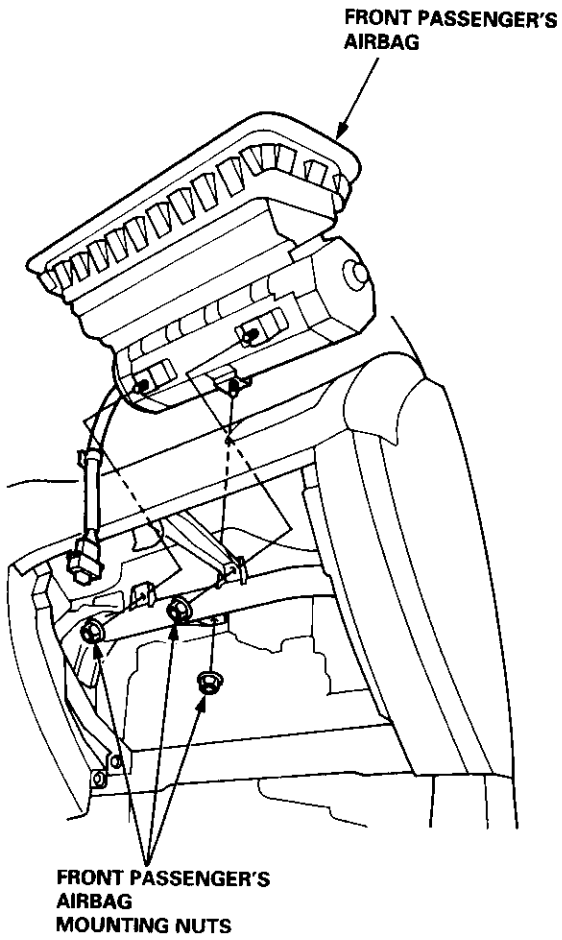

CAUTION: Be sure to install the SRS wiring so that it is not pinched or interfering with other parts.

4. Install the new airbag(s):

Driver's Side: Place the driver's airbag into the steering wheel, and secure it with new Torx bolts.

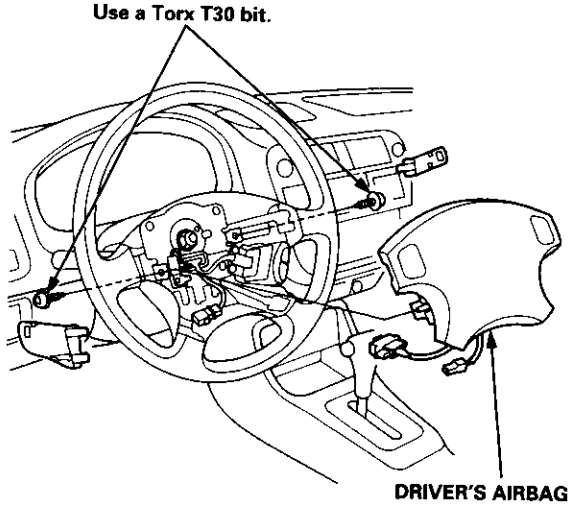

Front Passenger's Side:

- Place the front passenger's airbag into the dashboard.
- Tighten the front passenger's airbag mounting nuts.

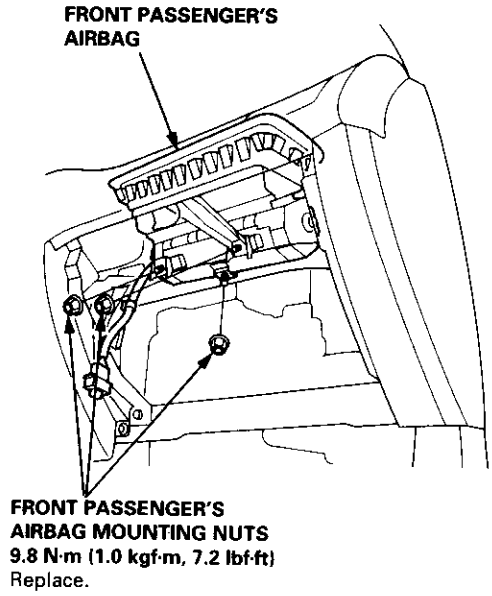

5. Reconnect the airbag connector(s).

Front Passenger's Side:

- Attach the airbag connector to the connector holder, then reinstall the glove box.

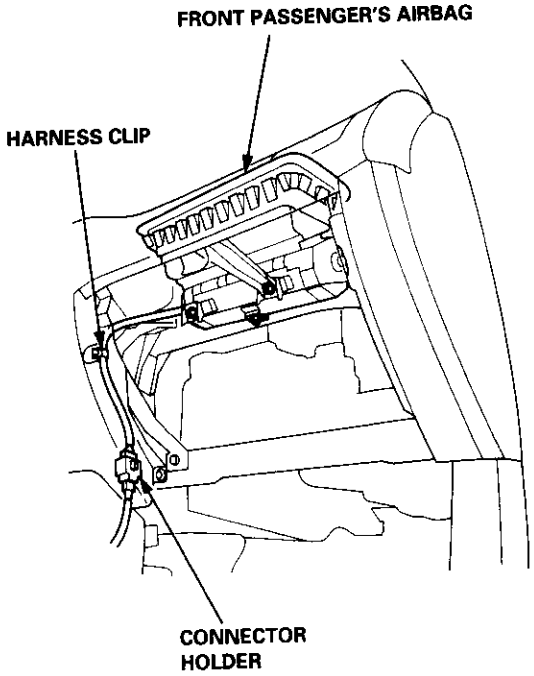

Driver's Side:

- Connect the driver's airbag 2P connector to the cable reel 2P connector, then install the access panel on the steering wheel.

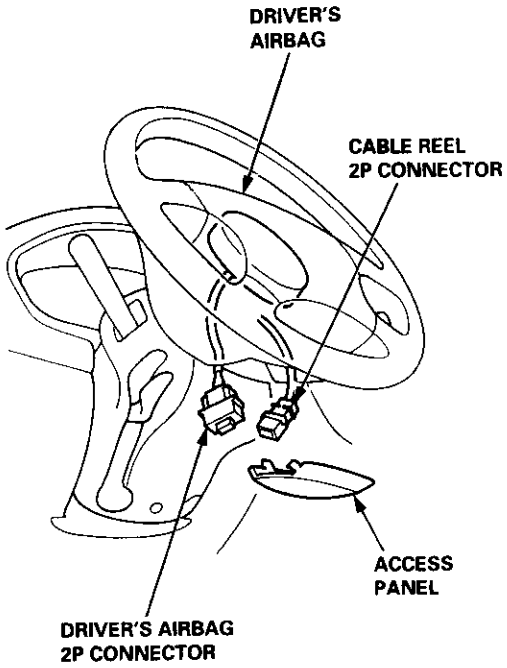

6. Connect the battery positive cable, then connect the negative cable.

7. After installing the airbag, confirm proper system operation:
   - Turn the ignition switch ON (II); the SRS indicator light should come on for about six seconds and then go off.
   - Make sure both horn buttons work.

Disposal

Before scrapping any airbags (including those in a whole vehicle to be scrapped), the airbags must be deployed. If the vehicle is still within the warranty period, before you deploy the airbags, the Honda District Service Manager must give approval and/or special instructions. Only after the airbags have been deployed (as the result of vehicle collision, for example), can they be scrapped.
If the airbags appear intact (not deployed), treat them with extreme caution.
Follow this procedure:

Deploying the Airbags: In-vehicle

NOTE: If an SRS vehicle is to be entirely scrapped, its airbags should be deployed while still in the vehicle. The airbags should not be considered as salvageable parts and should never be installed in another vehicle.

⚠ WARNING Confirm that each airbag assembly is securely mounted; otherwise, severe personal injury could result from deployment.

1. Disconnect the battery negative cable, then disconnect the positive cable.

2. Confirm that the special tool is functioning properly by following the check procedure on the tool label or on page 24-71.

Driver's Airbag:

3. Remove the access panel, then disconnect the 2P connector between the driver's airbag and the cable reel.

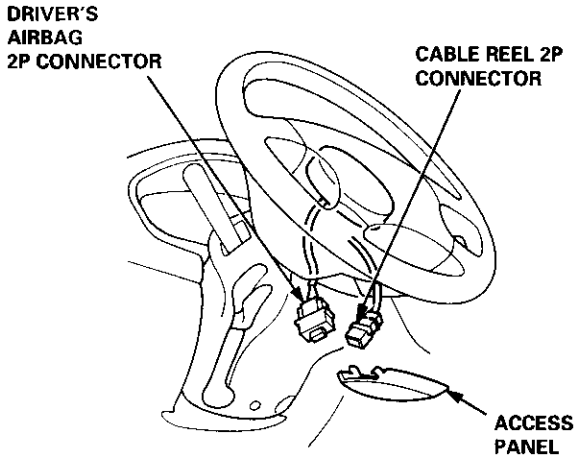

Front Passenger's Airbag:

4. Remove the glove box, then disconnect the 2P connector between the front passenger's airbag and SRS main harness.

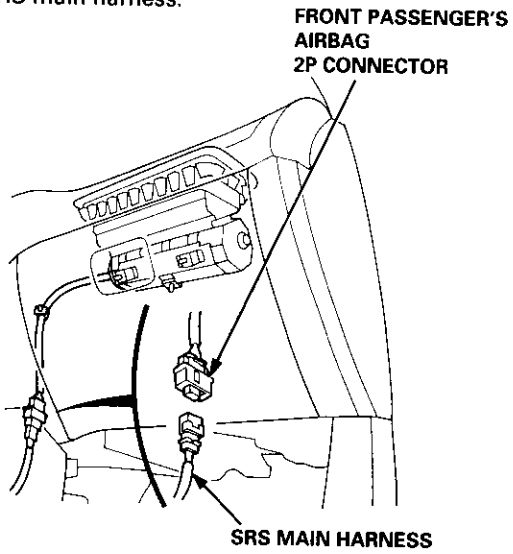

5. Cut off the airbag connector, strip the ends of the airbag wires, and connect the deployment tool alligator clips to the airbag. Place the deployment tool at least thirty feet (10 meters) away from the airbag.

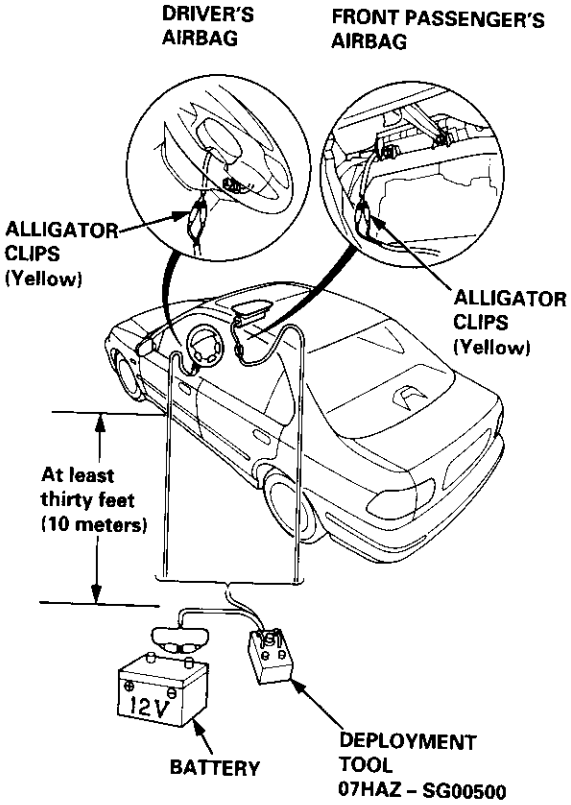

6. Connect a 12 volt battery to the tool:

   - If the green light on the tool comes on, the airbag igniter circuit is defective and cannot deploy the airbag. Go to Damaged Airbag Special Procedure.
   - If the red light on the tool comes on, the airbag is ready to be deployed.

7. Push the tool's deployment switch. The airbag should deploy (deployment is both highly audible and visible; a loud noise and rapid inflation of the bag, followed by slow deflation).

   - If the airbags deploy and the green light on the tool comes on, continue with this procedure.
   - If an airbag doesn't deploy, yet the green light comes ON, its igniter is defective. Go to Damaged Airbag Special Procedure.

   ⚠WARNING During deployment, the airbag assembly can become hot enough to burn you. Wait thirty minutes after deployment before touching the assembly.

8. Dispose of the complete airbag assembly. No part of it can be reused. Place it in a sturdy plastic bag, and seal it securely.

   CAUTION:
   - **Wear a face shield and gloves when handling a deployed airbag.**
   - **Wash your hands and rinse them well with water after handling a deployed airbag.**

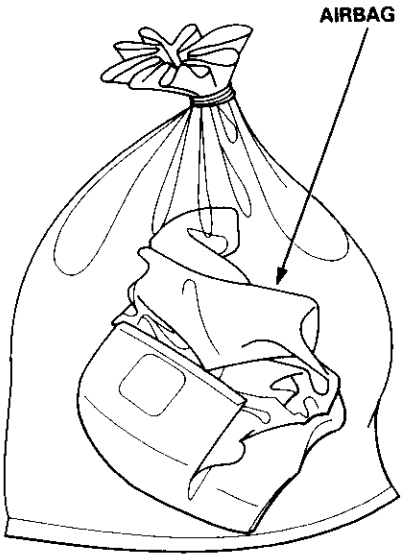

Deploying the Airbag: Out-of-vehicle

NOTE: If an intact airbag has been removed from a scrapped vehicle, or has been found defective or damaged during transit, storage or service, it should be deployed as follows:

⚠WARNING Position the airbag face up, outdoors on flat ground at least thirty feet (10 m) from any obstacles or people.

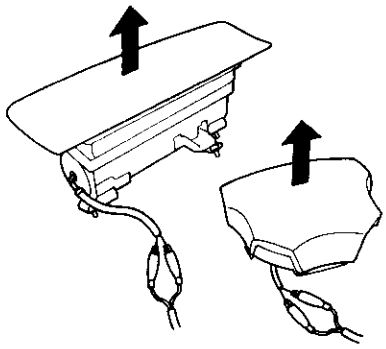

1. Confirm that the special tool is functioning properly by following the check procedure on this page or on the tool label.
2. Follow steps 5, 6, 7, and 8 of the in-vehicle deployment procedure.

Damaged Airbag Special Procedure

⚠WARNING If an airbag cannot be deployed, it should not be treated as normal scrap; it should still be considered a potentially explosive device that can cause serious injury.

1. If installed in a vehicle, follow the removal procedure on page 24-67.
2. In all cases, make a short circuit by twisting together the two airbag inflator wires.
3. Package the airbag in exactly the same packaging that the new replacement part came in.
4. Mark the outside of the box "DAMAGED AIRBAG NOT DEPLOYED" so it does not get confused with your parts stock.
5. Contact your Honda District Service Manager for how and where to return it for disposal.

Deployment Tool: Check Procedure

1. Connect the yellow clips to both switch protector handles on the tool; connect the tool to a battery.
2. Push the operation switch: green means the tool is OK; red means the tool is faulty.
3. Disconnect the battery and the yellow clips.

Replacement

⚠WARNING Store a remove airbag assembly with the pad surface up. If the airbag is improperly stored face down, accidental deployment could propel the unit with enough force to cause serious injury.

CAUTION:
- **Always disconnect the airbag connector(s) when the harness is disconnected.**
- **Do not disassemble or tamper with the airbag.**

NOTE: Carefully inspect the airbag assembly before installing it. Do not install an airbag that shows signs of being dropped or improperly handled, such as dents, cracks or deformation.

1. Disconnect the battery negative cable, then disconnect the positive cable from the battery, and wait at least three minutes.

2. Remove the access panel from the steering wheel, then disconnect the 2P connector between the driver's airbag and cable reel.

   NOTE: When disconnected, the airbag connector is automatically shorted.

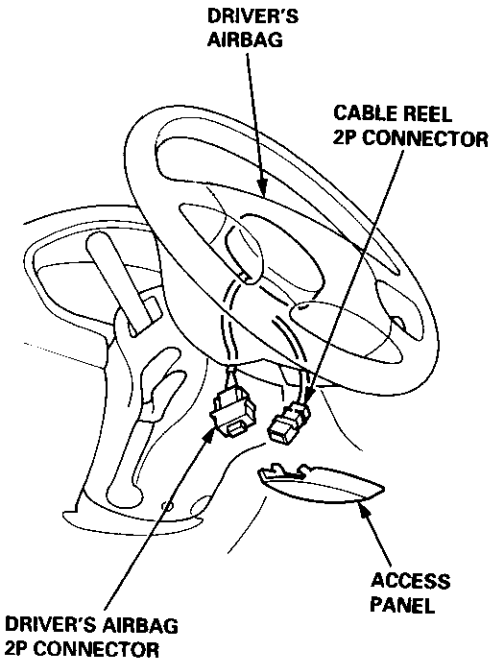

3. Make sure the wheels are aligned straight ahead.

4. Remove the driver's dashboard lower cover.

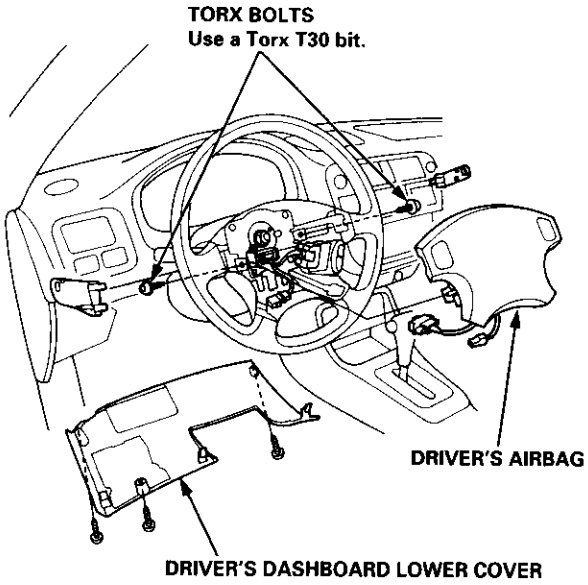

5. Remove the two Torx bolts from the steering wheel, and disconnect the horn connector. Then remove the driver's airbag.

6. Disconnect the connectors from the horn and cruise control set/resume switches, then remove the steering wheel nut.

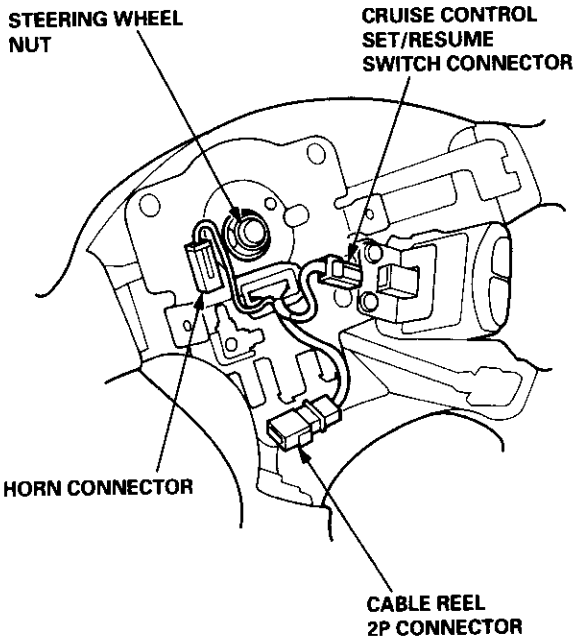

7. Remove the steering wheel using a steering wheel puller.

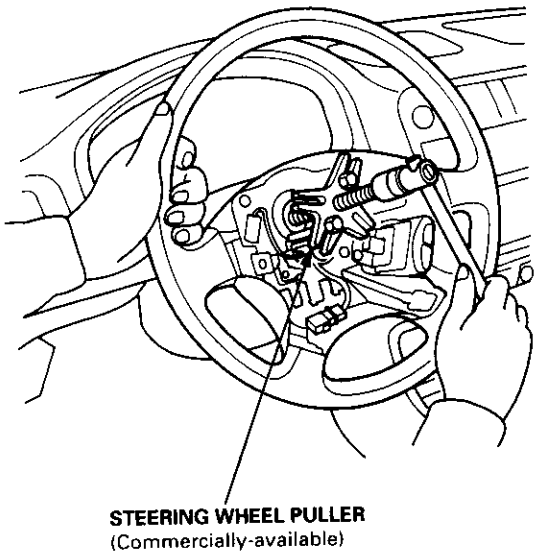

8. Remove the column covers.

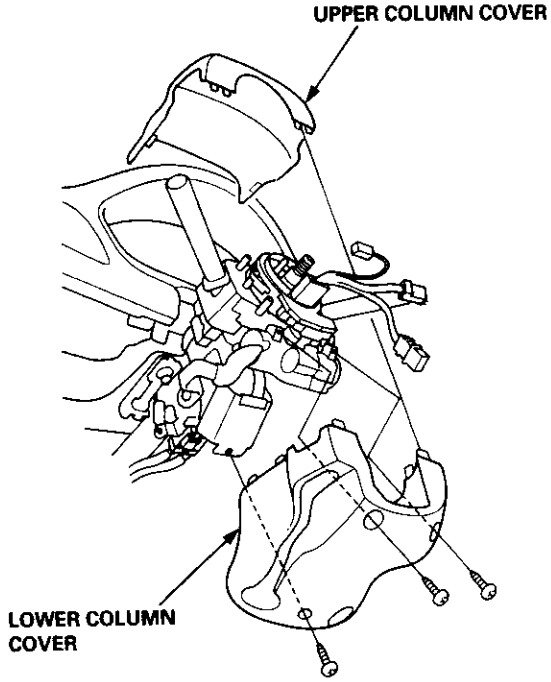

9. Disconnect the 3P connector between the main wire harness and cable reel sub-harness, and the 2P connector between the cable reel and SRS main harness.

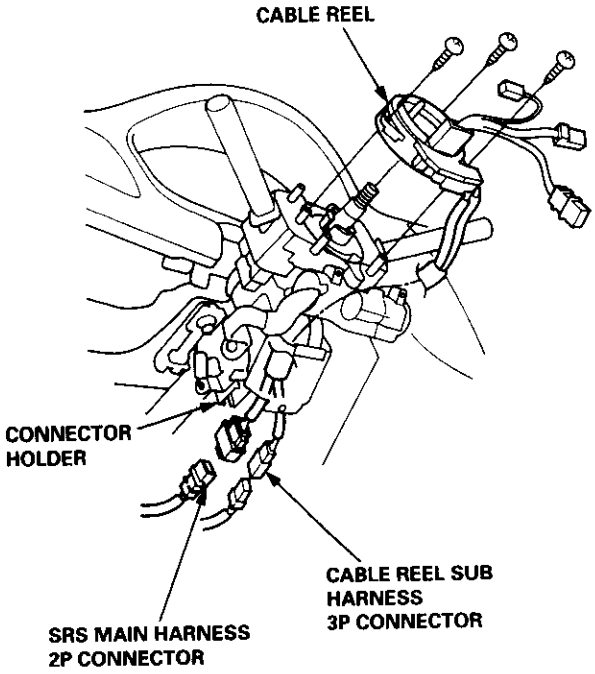

10. Remove the cable reel from the column. (cont'd)

Replacement (cont'd)

NOTE:
- Before installing the steering wheel, the front wheels should be aligned straight ahead.
- Be sure to install the harness wires so that they are not pinched or interfering with other parts.
- After reassembly, confirm that the wheels are still turned straight ahead and that the steering wheel spoke angle is correct (road test). If minor spoke angle adjustment is necessary, do so only by adjusting the tie-rods, not by removing and repositioning the steering wheel.

11. Set the cancel sleeve so that the projections are aligned vertically.

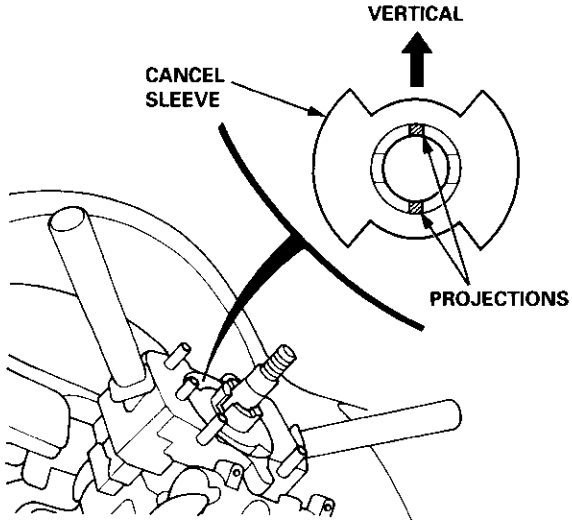

12. Carefully install the cable reel on the steering column shaft. Then connect the 3P connector to the cable reel sub-harness, and connect the 2P connector to the SRS main harness.

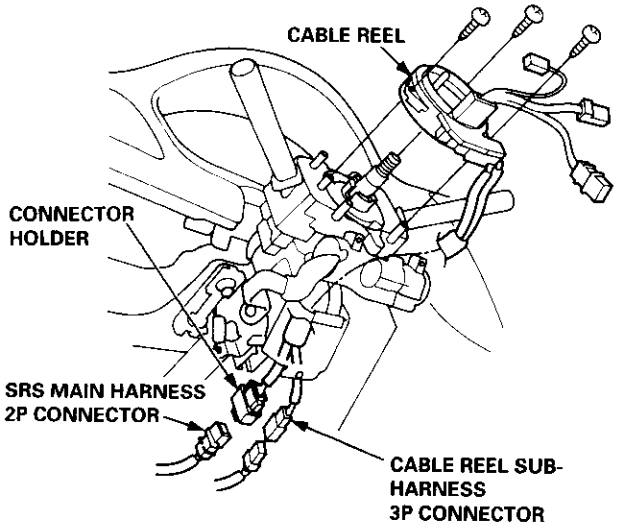

13. Install the steering column covers.

14. If necessary, center the cable reel. (New replacement cable reels come centered.) Do this by first rotating the cable reel clockwise until it stops. Then rotate it counterclockwise (approximately two and a half turns) until the arrow mark on the cable reel label points straight up.

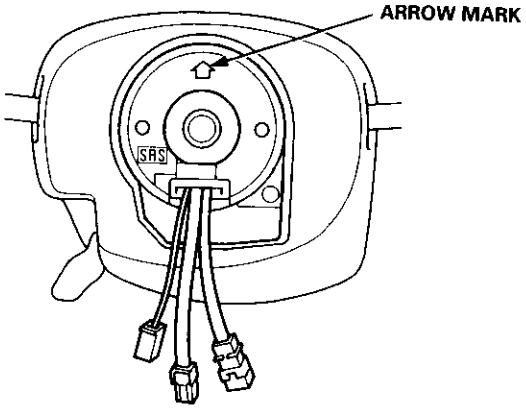

15. Install the steering wheel, then connect the horn connector and cruise control set/resume switch connector.

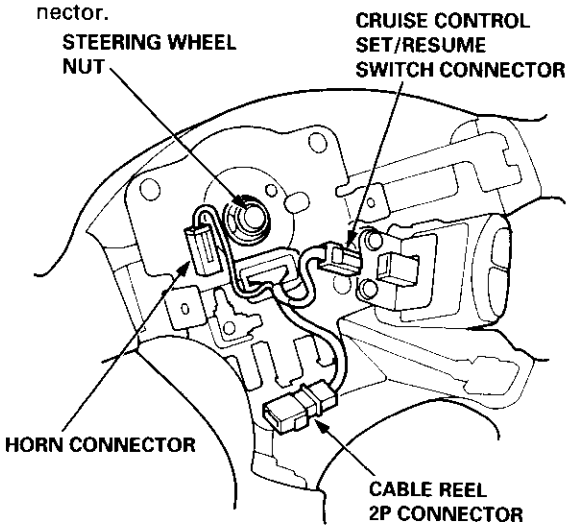

16. Install the steering wheel nut, and connect the horn connector to the steering wheel. Then install the driver's airbag.

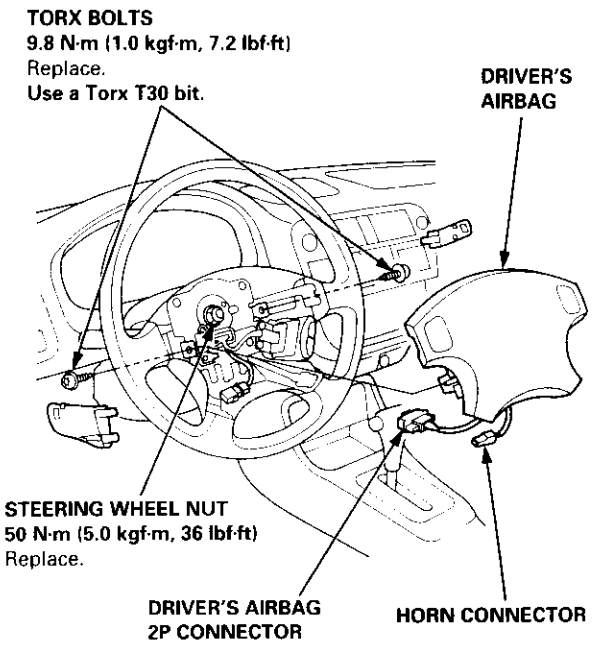

17. Attach the cable reel 2P and 3P connector to the connector holder. Then install the driver's dashboard lower cover.

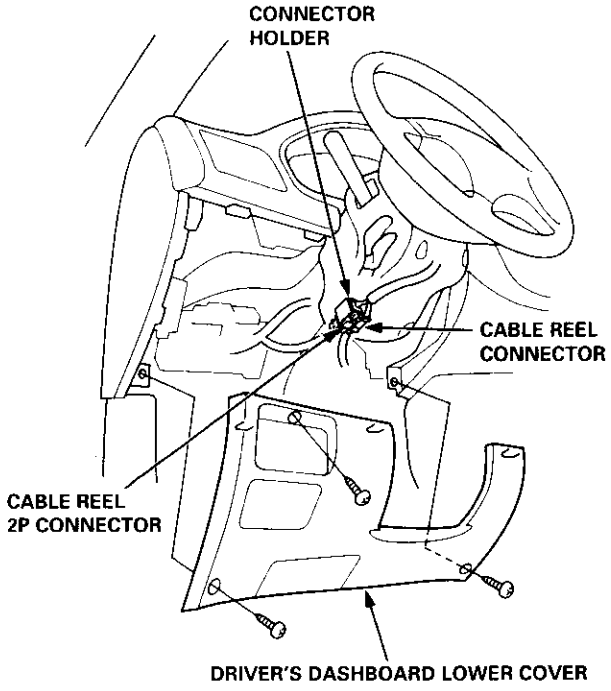

18. Reconnect the driver's airbag 2P connector to the cable reel 2P connector. and reinstall the access panel on the steering wheel.

19. Reconnect the battery positive cable, then the negative cable.

20. After installing the cable reel, confirm proper system operation:

- Turn the ignition switch ON (II); the SRS indicator light should come on for about six seconds and then go off.
- Make sure both horn buttons work.
- Make sure the headlight and wiper switches work.
- Go for a test drive, and make sure the cruise control switches work.

Replacement

CAUTION:
- **Before disconnecting any part of the SRS wire harness, disconnect the airbag connector(s).**
- **During installation or replacement, do not bump (impact wrench, hammer etc.) the area near the SRS unit.**

NOTE:
- Do not damage the SRS unit terminals or connectors.
- Do not disassemble the SRS unit; it has no serviceable parts.
- Store the SRS unit in a clean, dry area.
- Do not use any SRS unit which has been subjected to water or shows signs of being dropped or improperly handled, such as dents, cracks or deformation.

1. Disconnect the battery negative cable, then disconnect the positive cable from the battery, and wait at least three minutes.

2. Disconnect the airbag connector(s):

   NOTE: When disconnected, the airbag connector is automatically shorted.

Driver's Side:
- Remove the access panel from the steering wheel, then disconnect the 2P connector between the driver's airbag and cable reel (see page 24-11).

Front Passenger's Side:
- Disconnect the 2P connector between the front passenger's airbag and SRS main harness (see page 24-11).

3. Remove the right side cover from the SRS unit.

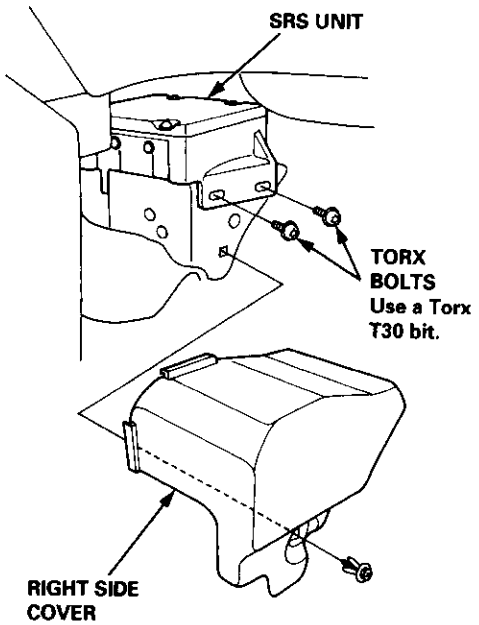

4. Remove the left side cover from the SRS unit, then disconnect the SRS main harness 18P connector from the SRS unit.

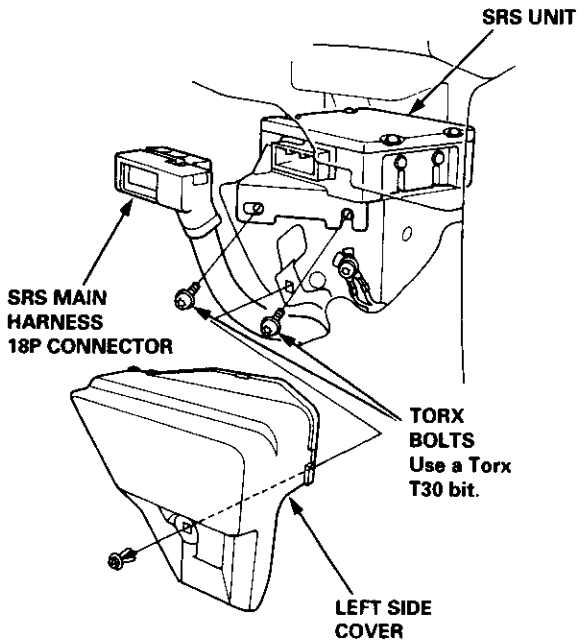

5. Remove the four Torx bolts from the SRS unit, then pull out the SRS unit from the driver's side.

6. Install the new SRS unit.

   NOTE: Do not reuse a torx bolt that has red threads. Replace the bolt with a new one.

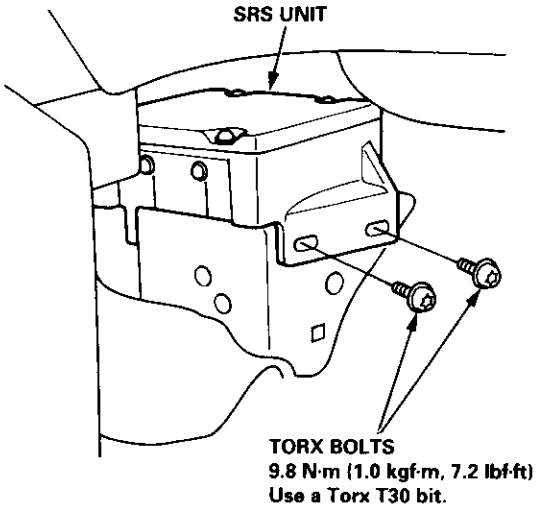

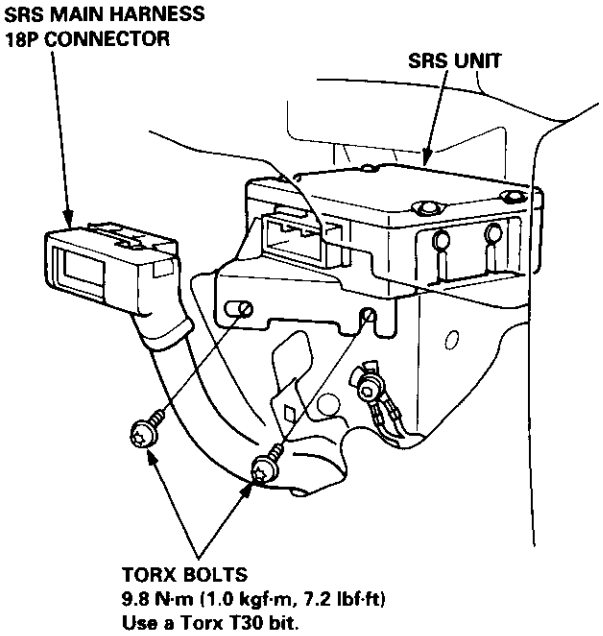

7. Connect the SRS main harness 18P connector to the SRS unit; push it into position until it clicks.

8. Install the SRS unit covers (right and left). Make sure the covers snap together in the middle.

9. Reconnect the driver's airbag 2P connector to the cable reel 2P connector, then reinstall the access panel on the steering wheel.

10. Reconnect the front passenger's airbag connector to the SRS main harness.

11. Reconnect the battery positive cable, then the negative cable.

12. After installing the SRS unit, confirm proper system operation: Turn the ignition switch ON (II); the SRS indicator light should come on for about six seconds and then go off.

CIVIC

96-00 Electrical Troubleshooting

Contents

How to Use This Manual 1
Circuit Schematics (see Circuit Index)
Fuse/Relay Information 6
Ground-to-Components Index 6-6
Component Location Photographs 201
Connector Views 202

Circuit Index

Accessory power socket 155
Air conditioner
  Air delivery
    '96-'98 models 61
    '99-'00 models 61-2
  Blower controls
    '96-'98 models 60
    '99-'00 models 60-1
  Compressor controls 62
  Fans 63
Anti-lock brake system (ABS) 44
A/T gear position indicator
  CVT 89
  All except CVT 89-1
Automatic transmission controls
  All '96-'98 models except CVT and GX 39
  All '99-'00 models except CVT 39-8
  All GX models 39-8
  '96-'98 CVT 39-4
  '99-'00 CVT 39-12
Back-up lights
    Coupe and Sedan 110
    Hatchback 110-1
Brake lights
  All Coupes and '96-'98 Sedans 110-15
  '99-'00 Sedans 110-16
  Hatchback 110-17
Brake system indicator light
    '96-'98 models 71
    '99-'00 models 71-1
Ceiling light 114-3
Charging system 22
Condenser fan 63
Console lights 114
Cruise control 34
Dash lights 114
Daytime running lights 110-13
Engine coolant temperature gauge 81-1
Fog lights 110-10
Front parking lights 110-2
Fuel gauge 81-1
Fuse/relay box
  Under-dash 6
  Under-hood 6-4
  Under-hood ABS 6-3
Gauges 81
Ground distribution 14
Ground-to-Components Index 6-6
Hazard warning lights
  All except '99-'00 Sedans 110-6
  '99-'00 Sedans 110-8
Headlights 110-12
Headlight switch 100
Heater – See Air Conditioner
Horn
  '96-'97 models 40
  '98 model 40-1
  '99-'00 models 40-2
Ignition key reminder 73
Ignition system
  All '96-'98 models except D16B5 20
  All '99-'00 models except D16Y5 with M/T 20-2
  All D16B5 engines 20-2
  '99-'00 D16Y5 with M/T 20
Indicators 80
Integrated control unit 70
Interlock system
  All except '96-'98 CVT 138
  '96-'98 CVT 138-1
License plate lights
  All Coupes and '96-'98 Sedans 110-3
  '99-'00 Sedans 110-4
  Hatchback 110-5
Low fuel indicator light 74
Moonroof
  '96-'97 models 122
  '98-'00 models 122-1
Odometer 81
Oil pressure indicator light 80-3
Power distribution
  Battery to ignition switch, fuses, and relays 10
  Fuses to relays and components 10-2
Power door locks
  All models without keyless entry 130
  '96-'98 models with keyless entry 130-2
  '99-'00 models with keyless entry 130-12
Power mirrors
  Without defogger 141
  With defogger 141-2
Power windows 120
Programmed fuel injection system (PGM-FI)
  All '96-'98 models except D16B5 23
  All '99-'00 models except D16Y5
    with M/T and D16B5 24
  All D16B5 engines 25
  '99-'00 D16Y5 with M/T 23
Radiator fan 63
Rear window defogger
    '96-'98 models 64
    '99-'00 models 64-1
Seat belt reminder 73
Security system
  '96-'98 USA HX, LX, EX 133
  '96-'98 Canada EX, Si 133
  '99-'00 USA HX, LX, EX, DX-V, Si 133-4
  '99-'00 Canada EX, Si 133-4
  All CX and DX models 133-8
Speedometer 81
Starting system
  A/T (All except D16B5) 21
  A/T (D16B5) 21-1
  Manual transmission 21-2
Stereo sound system 150
Supplemental restraint system (SRS) 47
Tachometer 81
Taillights
  All Coupes and '96-'98 Sedans 110-3
  '99-'00 Sedans 110-4
  Hatchback 110-5
Trunk light 114-3
Turn signal lights
  All except '99-'00 Sedans 110-6
  '99-'00 Sedans 110-8
Vehicle speed sensor (VSS) 33
Wiper/washer
  Front 91
  Rear 92

How To Use This Manual

The next few pages describe how this manual is organized. They also explain what kind of information the manual contains, what that information means, and how to use it to troubleshoot electrical problems.

Circuit schematics break the entire electrical system into individual systems, like the Low Fuel Indicator Light on the next page. Only electrical components that work together are shown together, so you won't be distracted by unrelated wires.

Explanations of the abbreviations and symbols used in the schematics begin on page 8. You'll need to know what they mean before you can use a schematic effectively.

How To Use This Manual

Circuit Schematics

Each schematic represents one circuit. A circuit's wires and components are arranged to show current flow, from power at the top of the page, to ground, at the bottom.

Shared Circuits

Other circuits may share power or ground terminals or wiring with the circuit shown. A wire that connects one circuit to another, for example, is cut short and has an arrowhead at the end of it pointing in the direction of current flow. Next to the arrowhead is the name of the circuit or component which shares that wiring. To quickly check shared wiring, check the operation of a component it serves. If that component works, you know the shared wiring is OK.

Connectors

All in-line and fuse box connectors are numbered (C725, C416, etc.).
Component connectors are not numbered but are identified by the name of the component. If a component has more than one connector, each connector is assigned a letter (A, B, C, etc.). Below most connector numbers and component names are PHOTO and VIEW numbers. The PHOTO number refers to a photo in the back of the book that shows the connector's location on the car. The VIEW number refers to an illustration in the back of the book that shows the connector face, wire colors, connector cavity numbers, and other details. The connector cavity numbering sequence begins at the top left corner of the connector as seen from either of the viewpoints shown on page 9. Disregard any numbers molded into the connector housing.

Wires

Wires are identified by the abbreviated names of their colors; the second color is the color of the stripe. Wires are also identified by their location in a connector. The number "2" next to the male and female wire terminals at C416, for example, means those terminals join in cavity 2 of connector C416.

Symbols

A complete description of schematic symbols begins on page 8.

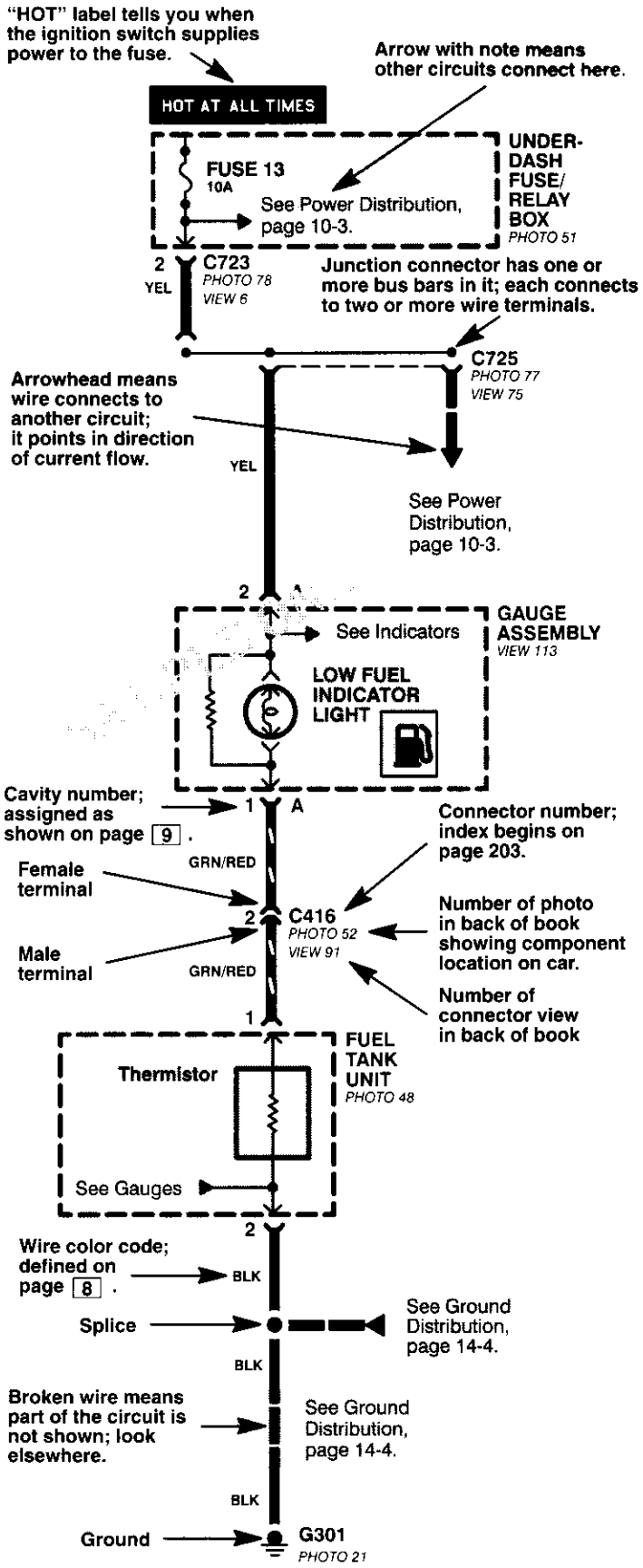

Power Distribution Schematics

Power Distribution schematics show how power is supplied from the positive battery terminal to various circuits in the car. Refer to the Power Distribution section to get a more detailed picture of how power is supplied to the circuit you're working on.

From Battery to Ignition Switch, Fuses, and Relays

Individual circuit schematics begin with a fuse. The first half of Power Distribution, however, shows the wiring "upstream" between the battery and the fuses.

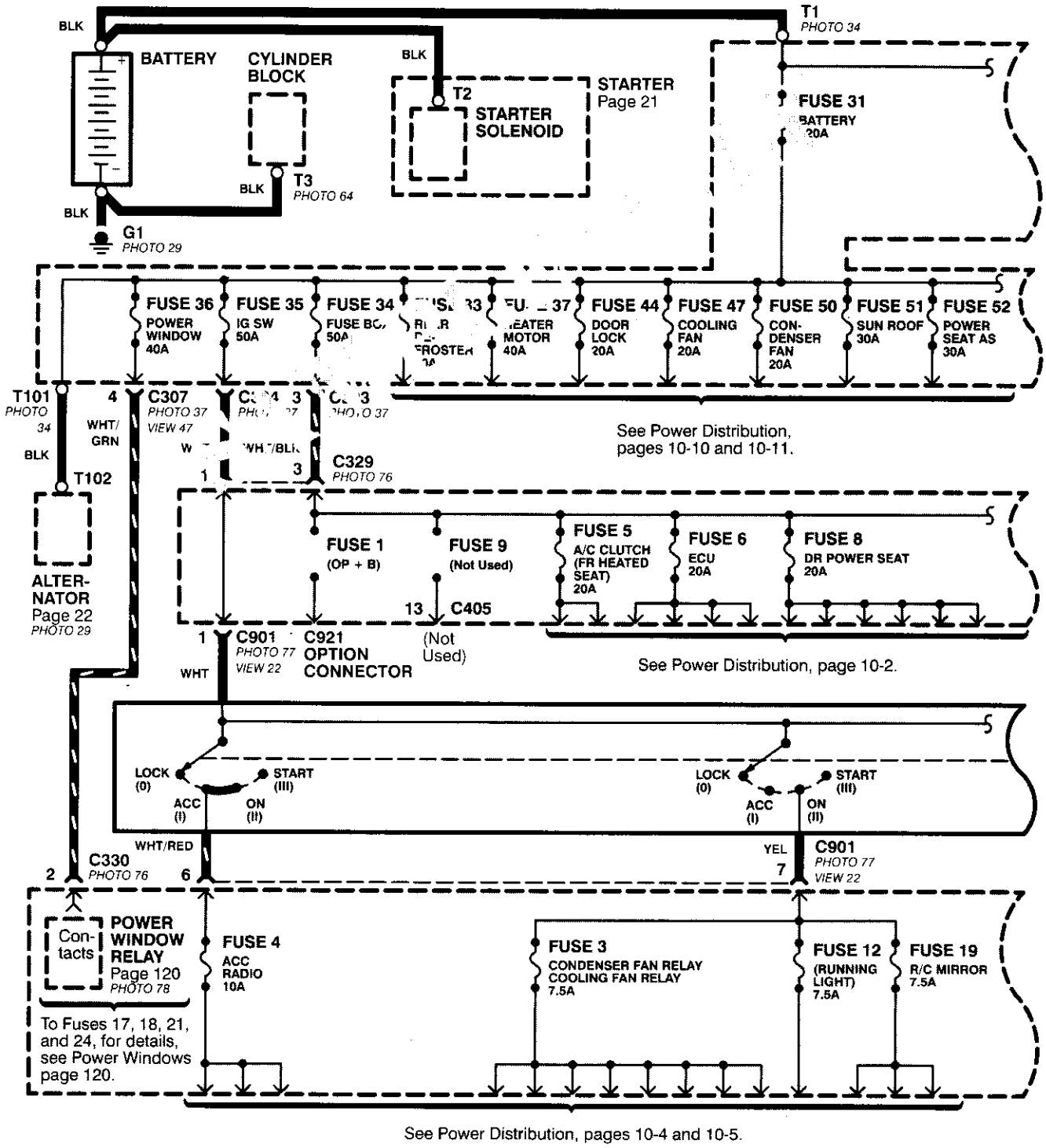

Power Distribution Schematics (cont'd)

From Fuses to Relays and Components

The second half of Power Distribution shows the wiring "From Fuses to Relays and Components." This can speed your troubleshooting by showing which circuits share fuses. If Power Distribution shows that an inoperative circuit and another circuit share a fuse, check a component in the other circuit. If it works, you know the fuse is good and power is available to the inoperative circuit.

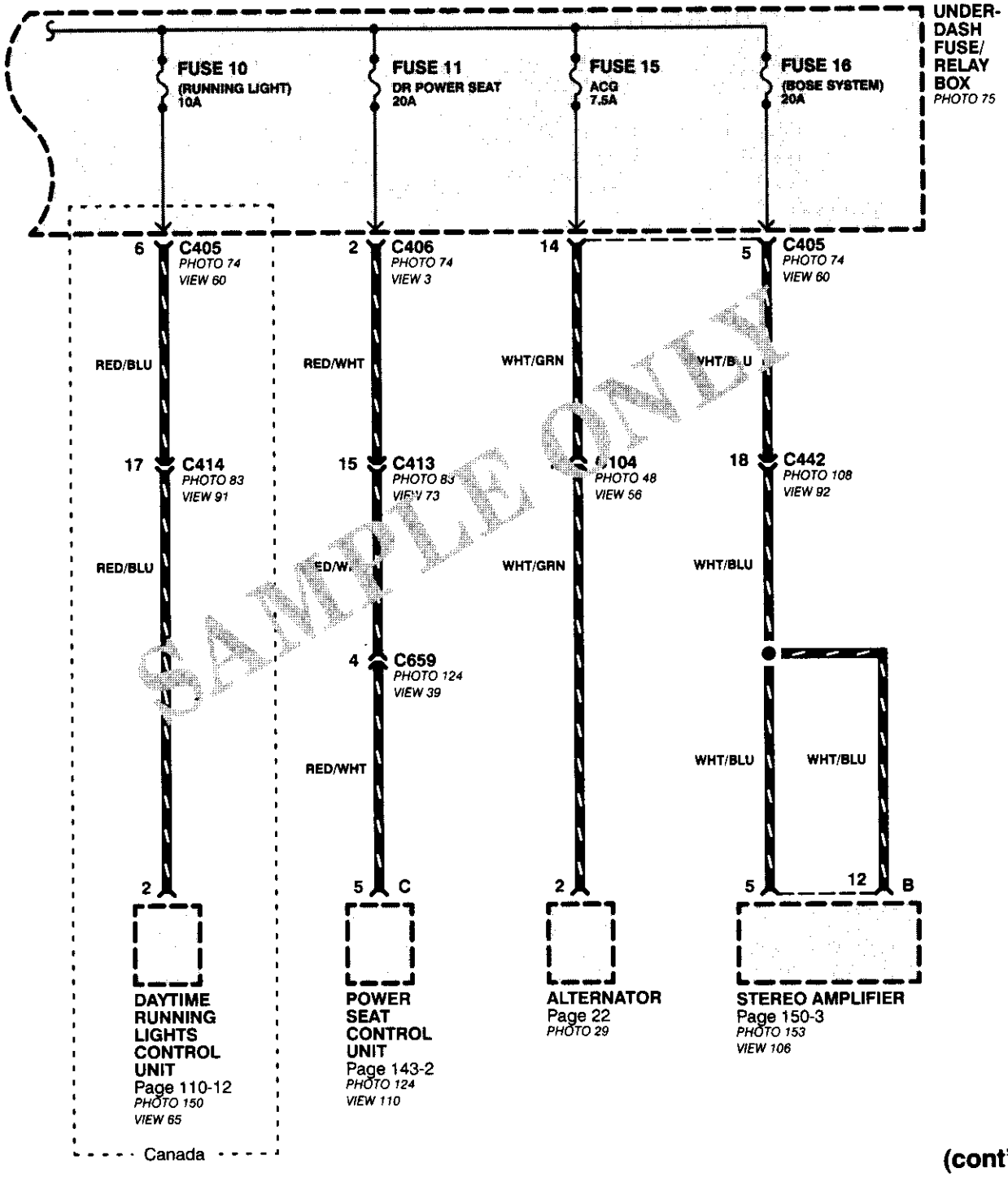

SAMPLE ONLY

(cont'd)

Ground Distribution Schematics

This sample Ground Distribution schematic shows all of the components that share two ground points.

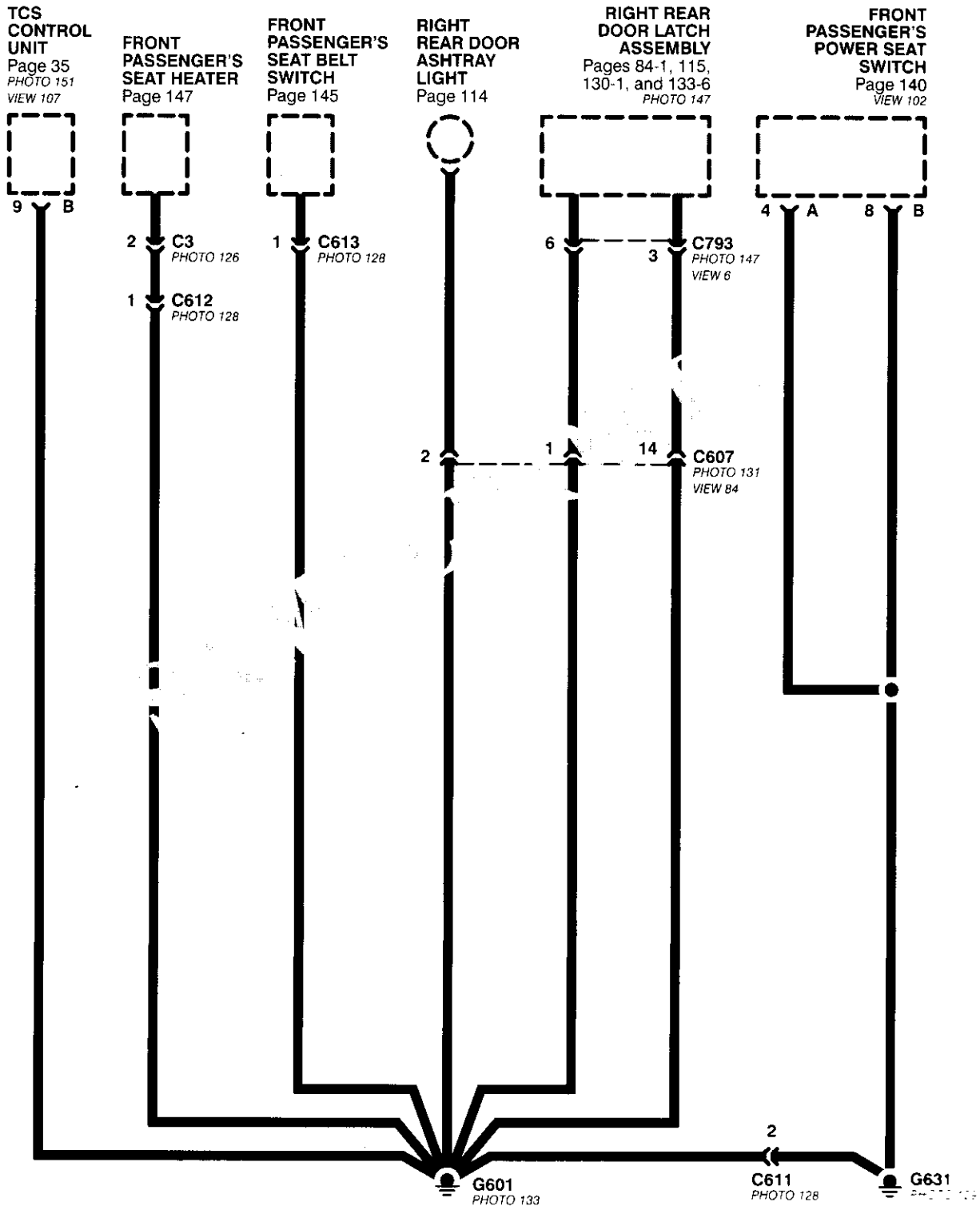

How To Use This Manual

Component Locations

To see where a component or connector is located on the car, look up its photo number in the Component Location section in the back of the book. The photo will also tell you the color of the connector, and how many cavities it has.

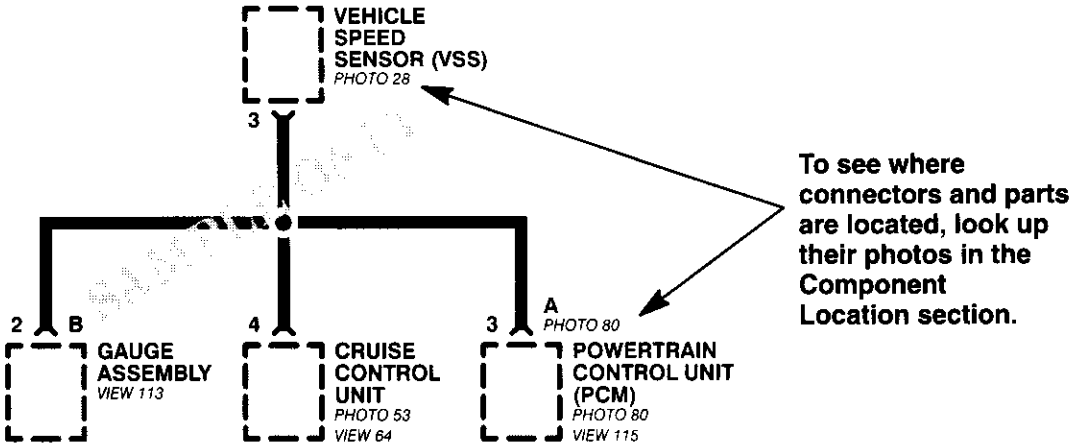

If there is no photo number below or beside a component name or a connector, ground, or terminal number, look up that name or number in the Connector-to-Harness Index that begins on page 203. The chart lists how many cavities a connector has, where it's located, and what it connects to. The related illustration shows the connector's location on the harness, and the harness routing.

Connector Identification and Wire Harness Routing

Driver's Seat Wire Harness

Connector or Terminal	Number of Cavities	Location	Connects to	Notes
C701	10	Under driver's seat	Left side wire harness (C261)	
C702	5	Under driver's seat	Left side wire harness (C262)	
C703	2	Under driver's seat	Front up-down memory sensor	
C704	2	Under driver's seat	Rear up-down memory sensor	
C705	10	Under driver's seat	Power seat control unit	
C706	7	Under driver's seat	Power seat control unit	
C707	7	Under driver's seat	Power seat control unit	
C708	2	Under driver's seat	Slide sensor	
C709	2	Under driver's seat	Slide motor	
C710	2	Under driver's seat	Rear up-down motor	
C711	2	Under driver's seat	Front up-down motor	
C712	4	Under driver's seat	Recline motor	
C714	2	Under driver's seat	Recline limit switch	
C715	10	Left side of driver's seat	Power seat switch	
C716	14	Under driver's seat	Left side wire harness (C291)	

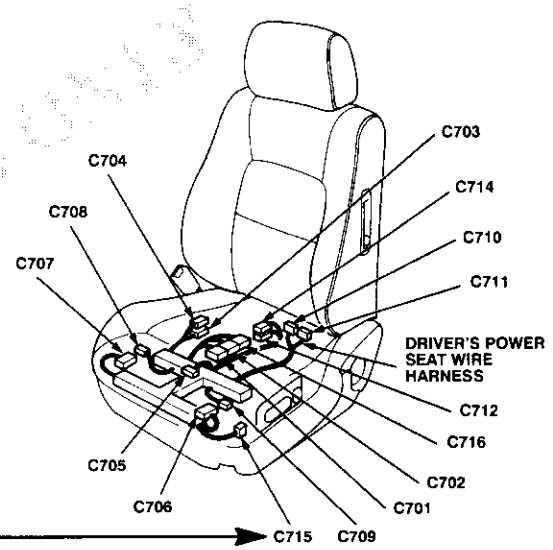

If a connector on a schematic has no photo number, look it up in the Connector Identification chart and related illustration.

203

203-1

Connector Views

To see the configuration of a connector's cavities, look up its view number in the Connector View section in the back of the book. Each view includes the color of the connector, where it is located, and what it connects to.

Use the Connector Views to help locate the proper cavity when you need to probe a connector. It can be especially helpful if the connector has more than one wire of the same color.

Connector views can also be used to help diagnose multiple symptoms in separate circuits which could be caused by a single problem in a connector shared by those circuits. Here's how:

1. Pick one of the multiple symptoms and look up the schematic for that circuit.
2. Make a list of all the in-line and fuse box connectors in that schematic (include page numbers).
3. Then, in the Connector View section, look up each connector on your list to see if circuits related to the other symptoms run through one of them. If they do, inspect that connector for the problem.

Example: The blower, rear window defogger, and the windshield wiper don't work. List all in-line and fuse box connectors in the blower controls circuit and then check the Connector View section (sample below). You find that C324 is common to the rear window defogger circuit and wiper/washer circuit, so you inspect C324 and find the problem, bent terminals.

Connector Views (cont'd)

21. C324

- Brown
- Behind left kick panel
- Connects left engine compartment wire harness to main wire harness

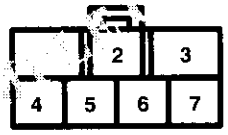

1. WHT (Blower controls)
2. YEL/BLU (Rear window defogger)
3. BLK/WHT (Starting)
4. BLU/YEL (Wiper/washer)
5. BLU (Wiper/washer)
6. BLK/YEL (Ignition)
7. WHT/BLU (ABS)

How To Use This Manual

Symbols

Wire Color Abbreviations

The following abbreviations are used to identify wire colors in the circuit schematics:

BLK	black
BLU	blue
BRN	brown
GRN	green
GRY	gray
LT BLU	light blue
LT GRN	light green
ORN	orange
PNK	pink
PUR	purple
RED	red
WHT	white
YEL	yellow

Wires

A wavy line at the end of a wire means the wire is broken by the binding of the book or by a "choice" bracket but continues on the next page.

Wire insulation can be one color, or one color with another color stripe. (The second color is the stripe.)

This circuit continues on another page. (The arrow shows direction of current flow.) To follow the RED/BLK wire in this example, you would turn to page 23-5 and look for the "Z" arrow.

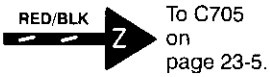

This means the branch of the wire connects to another circuit. The arrow points to the name of the circuit branch where the wire continues.

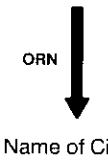

A broken line means this part of the circuit is not shown; refer to the circuit listed for the complete schematic.

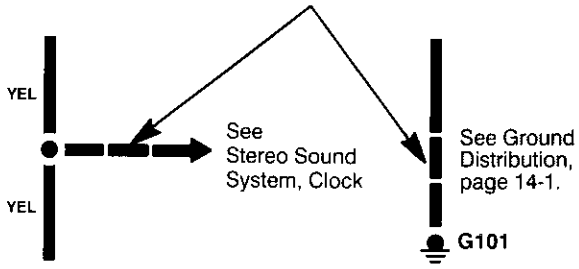

Where separate wires join, only the splice is shown; for details on the additional wiring, refer to the circuits listed.

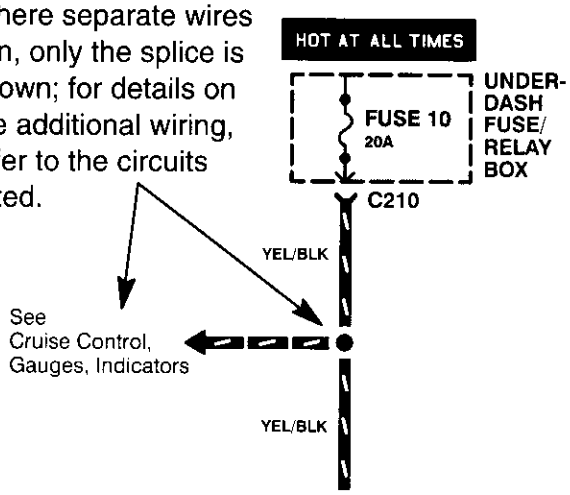

Wire choices for options or different models are labeled and shown with a "choice" bracket like this.

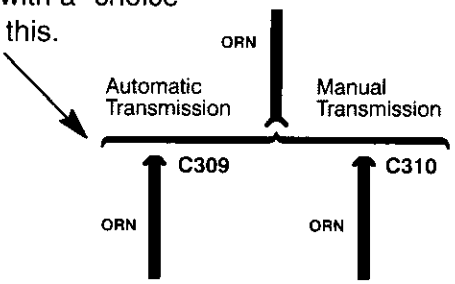

This broken line means both terminals are in connector C134.

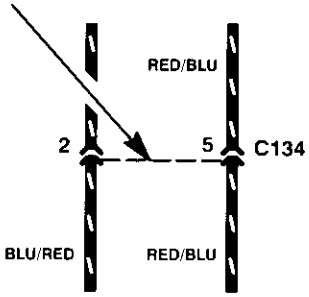

Connectors – "C"

The cavities (and wire terminals) in each connector are numbered starting from the upper left, looking at the male terminals from the terminal side (or looking at the female terminals from the wire side. Both views are in the same direction so the numbers are the same.) All actual cavities are numbered, even if they have no wire terminals in them.

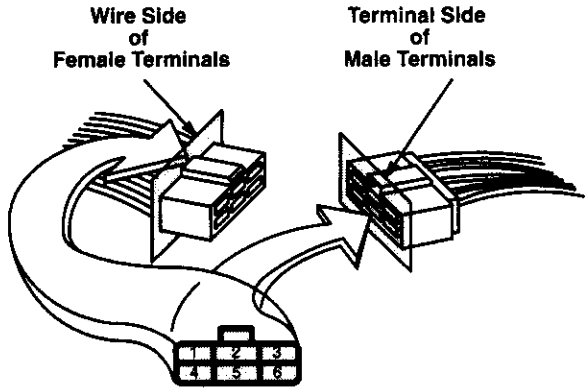

The connector cavity number is listed next to each terminal on the circuit schematic. The cavity/terminal shown below is #6.

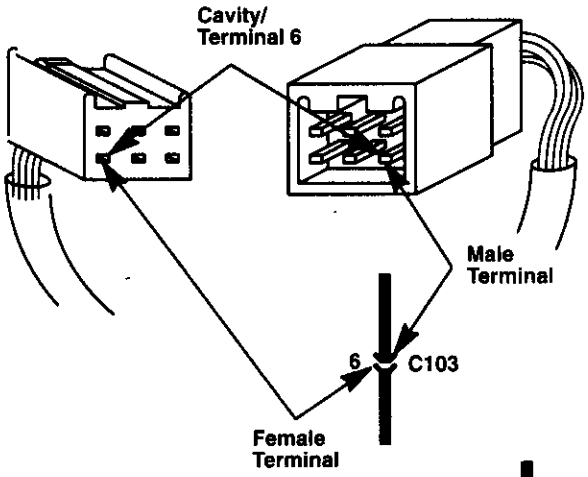

This means the connector connects directly to the component.

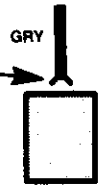

This means the connector connects to a lead (pigtail) wired directly to the component.

This symbol represents one bus inside the cap of a junction connector. A junction connector cap contains several buses, but only the one affecting that circuit will be shown. The dots represent tabs on the bus that the wire terminals connect to.

Remaining wires to the same bus are represented by a broken line.

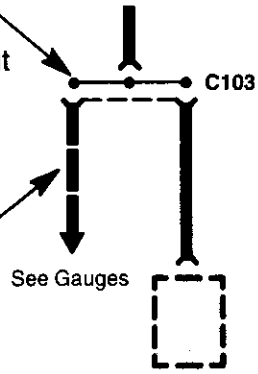

Splices

Splices are shown as a dot. Their location and the number of wires may vary depending on the harness manufacturer.

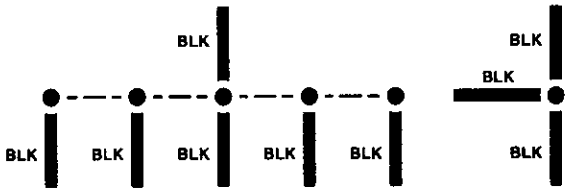

Components

A solid border line means the entire component is shown.

A broken border line indicates that only part of the component is shown.

The name of the component appears next to its upper right corner followed by notes about its function.

How To Use This Manual

Symbols

Ground – "G"

This symbol means the end of the wire is attached (grounded) to the car frame or to a metal part connected to the frame.

Each wire ground (G) is numbered for reference.

This ground symbol (dot and 3 lines) overlapping the component means the housing of the component is grounded to the car frame or to a metal part connected to the frame.

This symbol represents the bus inside a ground connector. The dots represent tabs on the bus that the wire terminals connect to. The ground symbol (large dot) is the connection between the bus and metal (grounded) part of the car.

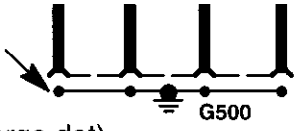

Terminals – "T"

Each "T" terminal (ring type) is numbered for reference and location. A "T" terminal is secured with a screw or bolt.

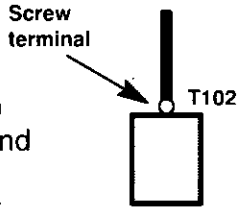

Shielding

This represents RFI (Radio Frequency Interference) shielding around a wire. The shielding is always connected to ground.

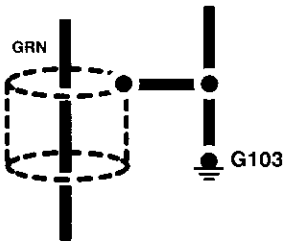

Switches

These switches move together; the broken straight line between them means they are mechanically connected.

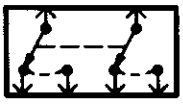

Other types of switches are controlled by a coil or a solid state circuit. Unless otherwise noted, all switches are shown in their normal (rest) position, with power off.

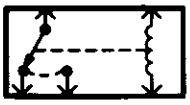

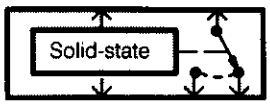

Fuses

This means power is supplied when the ignition switch is in ON (II).

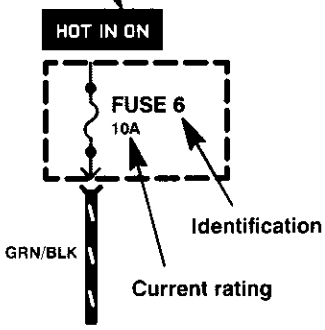

Diodes

A rectifier diode works like a one way valve. It allows current to flow only in the direction of the arrow.

A Zener diode blocks reverse current at normal voltages just like a rectifier diode. At high voltages, however, a Zener diode allows current to flow in reverse.

Five-Step Troubleshooting

1. Verify The Complaint

Turn on all the components in the problem circuit to check the accuracy of the customer complaint. Note the symptoms. Do not begin disassembly or testing until you have narrowed down the problem area.

2. Analyze The Schematic

Look up the schematic for the problem circuit. Determine how the circuit is supposed to work by tracing the current paths from the power source through the circuit components to ground. Also, trace circuits that share wiring with the problem circuit. The names of circuits that share the same fuse, ground, or switch, and so on, are referred to in each circuit schematic. Try to operate any shared circuits you didn't check in step 1. If the shared circuits work, the shared wiring is OK, and the cause must be in the wiring used only by the problem circuit. If several circuits fail at the same time, the fuse or ground is a likely cause.

Based on the symptoms and your understanding of the circuit's operation, identify one or more possible causes.

3. Isolate The Problem By Testing The Circuit

Make circuit tests to check the diagnosis you made in step 2. Keep in mind that a logical, simple procedure is the key to efficient troubleshooting. Test for the most likely cause of failure first. Try to make tests at points that are easily accessible.

4. Fix The Problem

Once the specific problem is identified, make the repair. Be sure to use proper tools and safe procedures.

5. Make Sure The Circuit Works

Turn on all components in the repaired circuit in all modes to make sure you've fixed the entire problem. If the problem was a blown fuse, be sure to test all of the circuits on that fuse. Make sure no new problems turn up and the original problem does not recur.

Test Equipment

CAUTION:

Most circuits include solid-state devices. Test the voltages in these circuits only with a 10-megaohm or higher impedance digital multimeter. Never use a test light or analog meter on circuits that contain solid-state devices. Damage to the devices may result.

Test Light and DVOM

On circuits without solid-state devices, use a test light to check for voltage. A test light is made up of a 12 volt bulb with a pair of leads attached. After grounding one lead, touch the other lead to various points along the circuit where voltage should be present. The bulb will go on if there is voltage at the point being tested. If you need to know how much voltage is present, use a digital volt/ohmmeter (DVOM).

Self-Powered Test Light and DVOM

Use a self-powered test light to check for continuity. This tool is made up of a light bulb, battery, and two leads. To test it, touch the leads together: the light should go on.

Use a self-powered test light only on an unpowered circuit. First, disconnect the battery, or remove the fuse that feeds the circuit you are working on. Select two points in the circuit between which you want to check continuity. Connect one lead of the self-powered test light to each point. If there is continuity, the test light's circuit will be completed, and the light will go on.

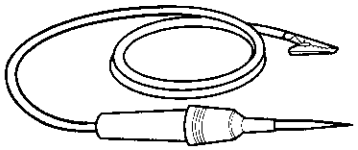

SELF-POWERED TEST LIGHT

If, in addition, you need to know exactly how much resistance there is between two points use a digital volt/ohmmeter (DVOM).

(cont'd)

Test Equipment (cont'd)

In the "OHMS" range, the DVOM will measure resistance between two points along a circuit. Low resistance means good continuity.

Diodes and solid-state devices in a circuit can make a DVOM give a false reading. To check a reading, reverse the leads, and take a second reading. If the readings differ, the component is affecting the measurement.

Jumper Wire

Use a jumper wire to bypass an open circuit. A jumper wire is made up of an in-line fuse holder connected to a set of test leads. It should have a five ampere fuse. Never connect a jumper wire across a short circuit. The direct battery short will blow the fuse.

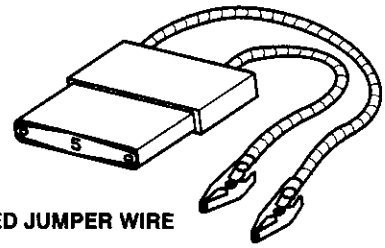

FUSED JUMPER WIRE

Short Finder (Short Circuit Locater)

Short finders are available to locate shorts to ground. The short finder creates a pulsing magnetic field in the shorted circuit which you can follow to the location of the short. Its use is explained on page 15.

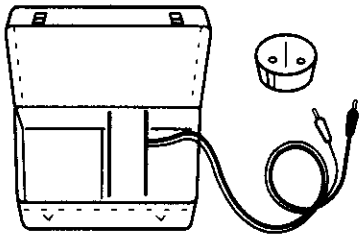

SHORT FINDER

To order any test equipment shown above, contact your local tool supplier. For a list of suppliers and tool numbers, refer to Honda Required Special Tools and Equipment Service Bulletin.

Troubleshooting Precautions

Before Troubleshooting

1. Check the main fuse and the fuse box.
2. Check the battery for damage, state of charge, and clean and tight connections.

   CAUTION:

   - **Do not quick-charge a battery unless the battery ground cable has been disconnected, or you will damage the alternator diodes.**
   - **Do not attempt to crank the engine with the ground cable disconnected or you will severely damage the wiring.**

While You're Working

1. Make sure connectors are clean, and have no loose terminals or receptacles.
2. Make sure that connectors without wire seals are packed with dielectric (silicone) grease. Part Number: 08798-9001.

Pack with dielectric (silicone) grease

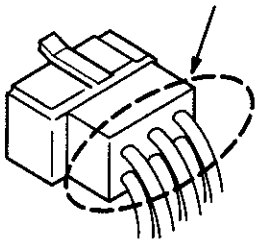

3. When connecting a connector, push it until it "clicks" into place.

   CAUTION:

   - **Do not pull on the wires when disconnecting a connector. Pull only on the connector housings.**
   - **Most circuits include solid-state devices. Test the voltages in these circuits only with a 10-megaohm or higher impedance digital multimeter. Never use a test light or analog meter on circuits that contain solid-state devices. Damage to the devices may result.**

Troubleshooting Tests

Testing for Voltage

When testing for voltage at a connector without wire seals, you do not have to separate the two halves of the connector. Instead, probe the connector from the back. Always check both sides of the connector because dirty, corroded, and bent terminals can cause problems (no electrical contact = an open).

1. Connect one lead of the test light to a known good ground, or, if you're using a digital volt ohmmeter (DVOM), place it in the appropriate DC volts range, and connect its negative lead to ground.

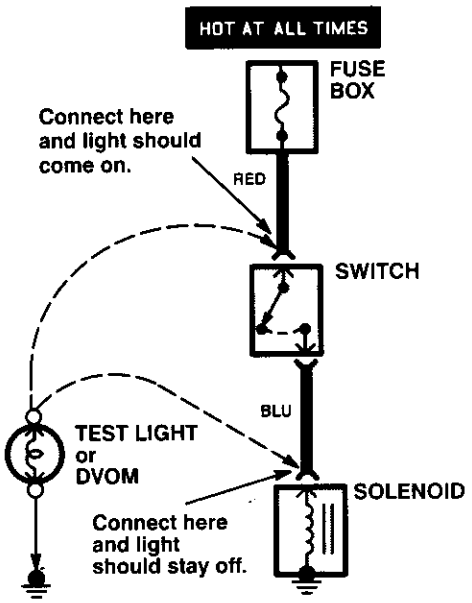

2. Connect the other lead of the test light or DVOM to the point you want to check.

3. If the test light glows, there is voltage present. If you're using a DVOM, note the voltage reading. It should be within one volt of measured battery voltage. A loss of more than one volt indicates a problem.

   NOTE: Always use a DVOM on high impedance circuits. A test light may not glow (even with battery voltage present).

Testing for Continuity

When testing for continuity at a connector without wire seals, you do not have to separate the two halves of the connector. Instead, probe the connector from the back. Always check both sides of the connector because dirty, corroded, and bent terminals can cause problems (no electrical contact = an open).

1. Disconnect the negative cable from the car battery. If you're using a DVOM, place it in the lowest "OHMS" range.

2. Connect one lead of a self-powered test light or DVOM to one end of the part of the circuit you want to test.

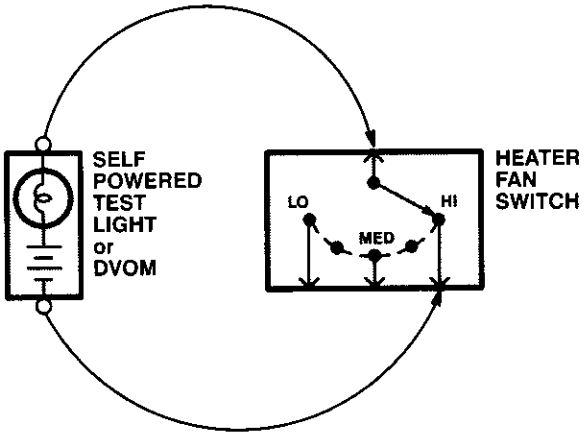

3. Connect the other lead to the other end.

4. If the self-powered test light glows, there is continuity. If you're using a DVOM, a low reading or no reading (zero), means good continuity.

Troubleshooting Tests

Testing for Voltage Drop

Wires, connectors, and switches are designed to conduct current with a minimum loss of voltage. A voltage drop of more than one volt indicates a problem.

1. Place the digital volt/ohmmeter (DVOM) in the appropriate DC volts range. Connect the positive lead to the end of the wire (or to the connector or switch) closest to the battery.

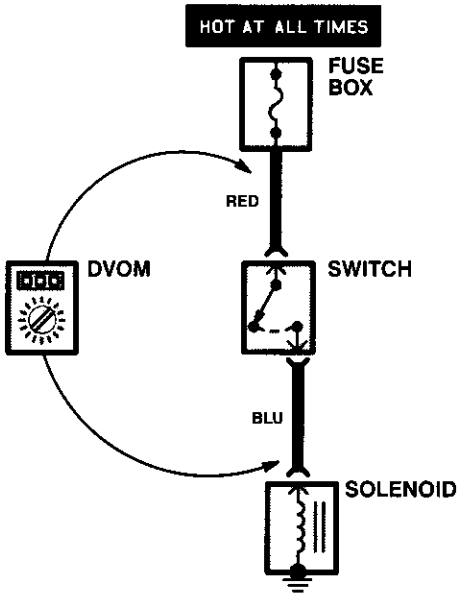

2. Connect the negative lead to the other end of the wire (or the other side of the connector or switch).

3. Turn on the components in the circuit.

4. The DVOM will show the difference in voltage between the two points. A difference, or drop, of more than one volt indicates a problem. Check the circuit for loose, dirty, or bent terminals.

Testing for a Short with a Test Light or DVOM

1. Remove the blown fuse and disconnect the load.

2. Connect a test light or digital volt/ohmmeter (DVOM), switched to the appropriate DC volts range, across the fuse terminals to make sure voltage is present. You might have to turn the ignition switch to ON: check the schematic to see.

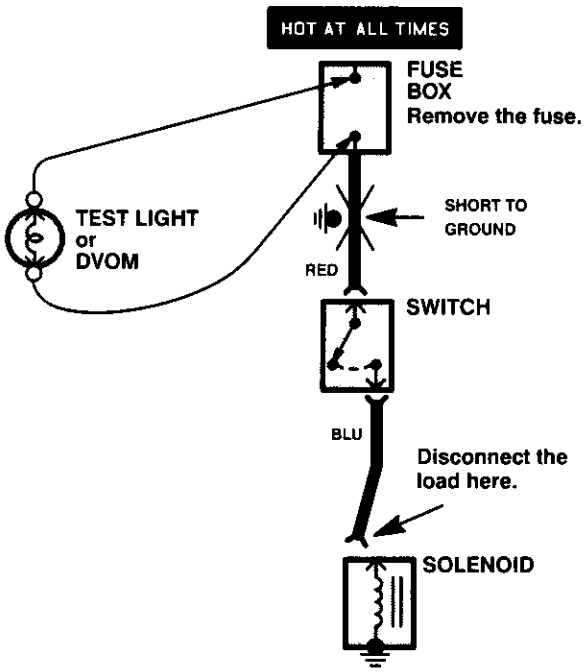

3. Beginning near the fuse box, wiggle the harness. Continue this at convenient points about six inches apart while watching the test light or DVOM.

4. Where the test light goes off, or the DVOM voltage drops to zero, there is a short to ground in the wiring near that point.

   NOTE: Always use a DVOM on high impedance circuits. A test light may not glow (even with battery voltage present).

Testing for a Short with a Self-Powered Test Light or DVOM

1. Remove the blown fuse and disconnect the battery and load.

2. Connect one lead of a self-powered test light or digital volt/ohmmeter (DVOM) (switched to the lowest "OHMS" range) to the fuse terminal on the load side.

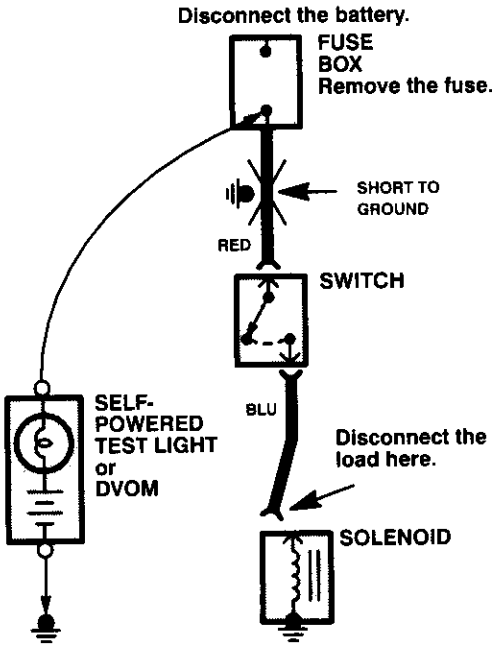

3. Connect the other lead to a known good ground.

4. Beginning near the fuse box, wiggle the harness. Continue this at convenient points about six inches apart while watching the test light or DVOM.

5. If the self-powered test light goes on or the DVOM displays a low reading or no reading (zero), there is a short to ground in the wiring near that point.

Testing for a Short with a Short Circuit Locator (Short Finder)

1. Remove the blown fuse. Leave the battery connected.

2. Connect the short finder across the battery terminals and the load (component) side of the fuse terminal.

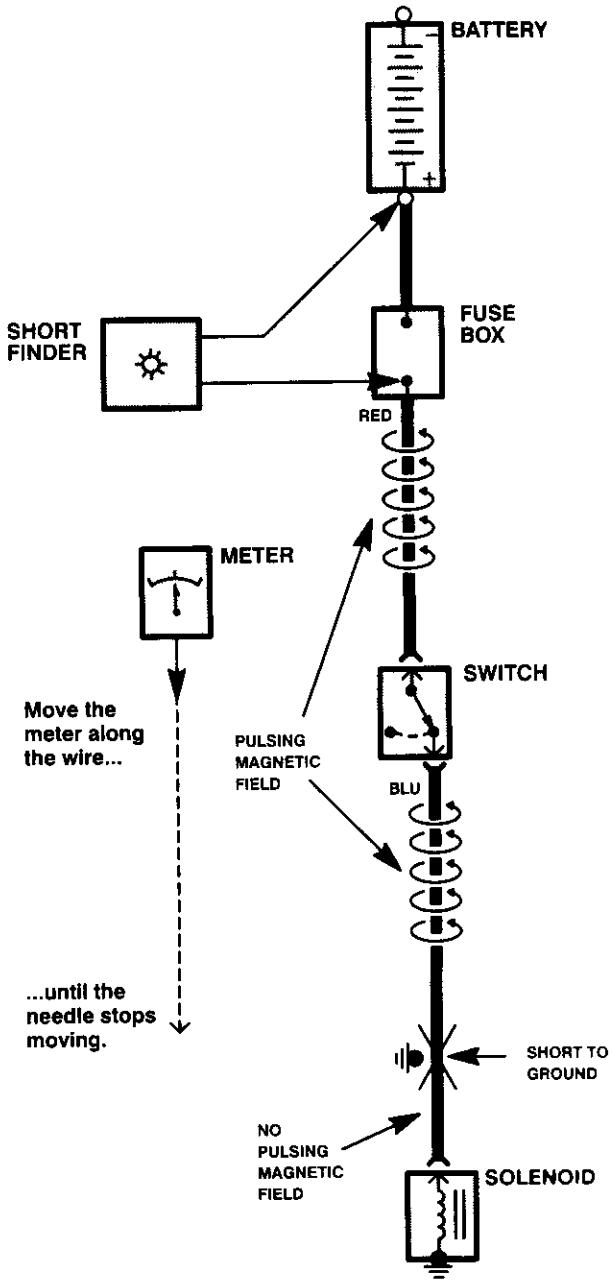

3. Close all switches in the circuit you're testing.

(cont'd)

Troubleshooting Tests (cont'd)

4. Turn on the short finder. This creates a pulsing magnetic field around the wiring between the fuse box and the short.

5. Beginning at the fuse box, slowly move the short finder along the circuit wiring. The meter will show current pulses through sheet metal and body trim. As long as the meter is between the fuse and the short, the needle will move with each current pulse. Once you move the meter past the point of the short, the needle will stop moving. Check the wiring and connectors in this area to locate the cause of the short.

Fuse/Relay Information

– Under-dash Fuse/Relay Box

Front View

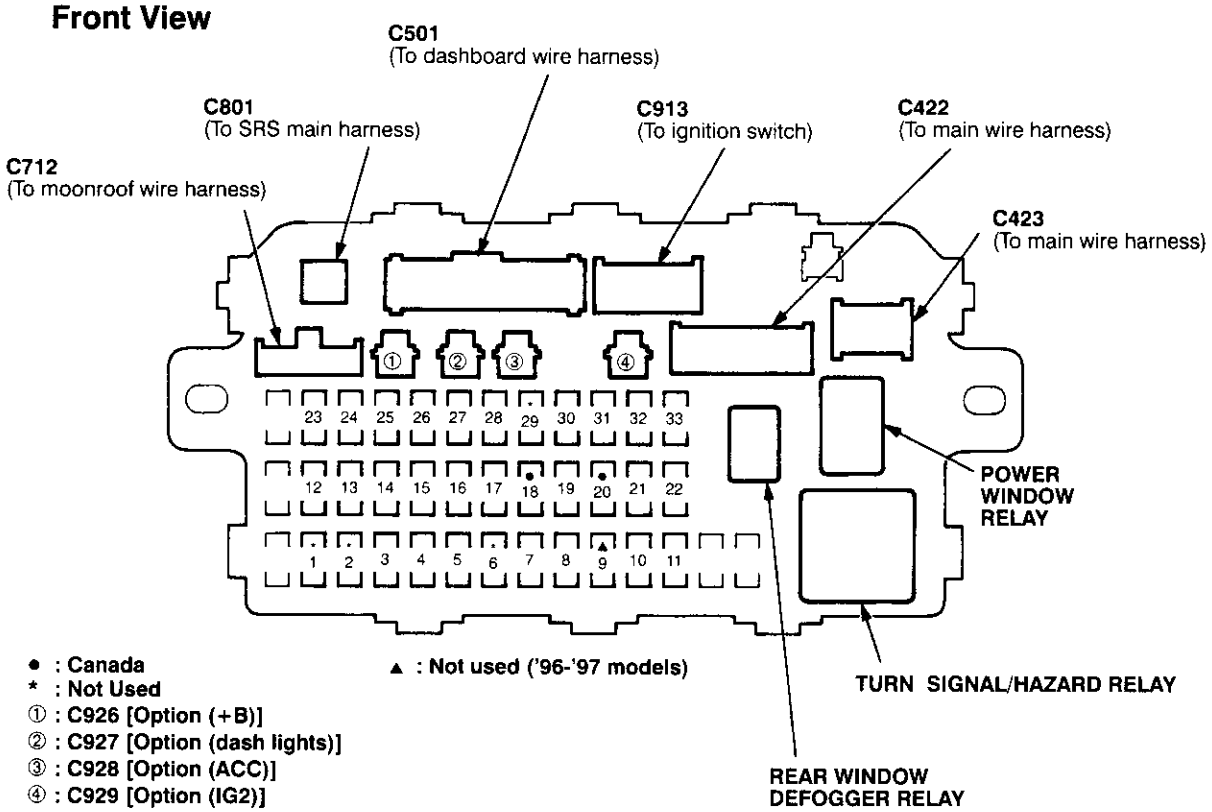

● : Canada
* : Not Used
① : C926 [Option (+B)]
② : C927 [Option (dash lights)]
③ : C928 [Option (ACC)]
④ : C929 [Option (IG2)]

▲ : Not used ('96-'97 models)

Rear View

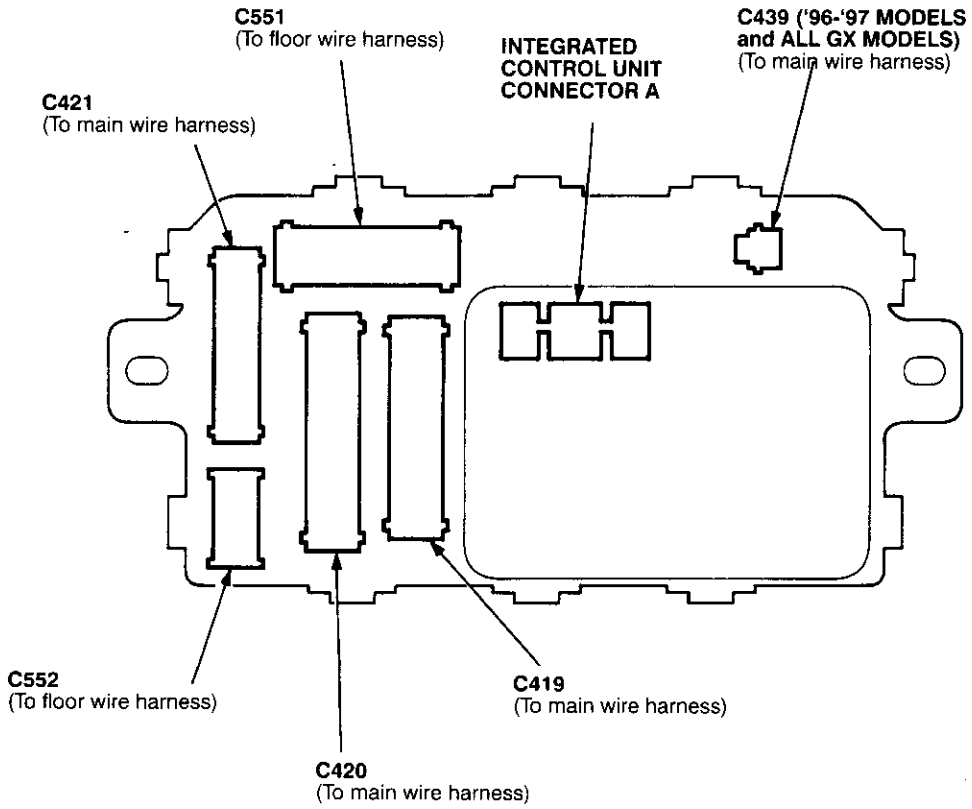

Fuse Number	Fuse Name	Amps	Page	Component or Circuit Protected
1	—	—	10-13	Not used
2	—	—	10-13	Not used
3	(RR WIPER RR WASHER)	10	10-2	Rear wiper, Security system (option) (Vehicles pre-wired for accessory security system)
4	R H/L HIGH BEAM	10	110-12	Right headlight, DRL control unit (Canada)
5	L H/L HIGH BEAM	10	110-12	Left headlight, DRL control unit (Canada)
6	—	—	10-13	Security system (option)
7	(P/W RR-L)	20	120-2	Left rear window motor
8	(P/W RR-R)	20	120-3	Right rear window motor
9	(IGN COIL)	15	10-1	Ignition coil ('98-'00 models except GX)
10	(P/W AS)	20	120-1	Front passenger's window motor
11	(P/W DR)	20	120	Driver's window motor
12	TURN LIGHTS	7.5	10-2	Hazard warning switch
13	FUEL PUMP (SRS UNIT)	15	10-2	PGM-FI main relay, SRS unit
14	(CRUISE CONTROL) (KEYLESS)	7.5	10-3	Stereo radio tuner ('96-'98 USA: LX, EX, and HX), Cruise control main switch, Keyless door lock control unit ('99-'00 models with keyless entry)
15	ALTERNATOR SP SENSOR	7.5	10-4	ELD unit, Gauge assembly, TCM ('96-'98 CVT), PGM-FI
16	RR DEF RELAY	7.5	10-8	Rear window defogger ('96-'98 models), ABS control unit, Power mirror switch ('99-'00 models except GX)
17	HEATER A/C RELAY	7.5	10-9	Power mirrors ('96-'98 models and all GX models), Air delivery, Blower controls, A/C compressor controls, Fans
18	(RUNNING LIGHT RELAY)	7.5	10-8	DRL control unit (Canada)
19	BACK-UP LIGHTS	7.5	10-3	Back-up lights
20	(RUNNING LIGHT)	7.5	10-12	DRL control unit (Canada)
21	R H/L LOW BEAM	10	110-12	Right headlight
22	L H/L LOW BEAM	10	110-12	Left headlight
23	(SRS)	10	10-3	SRS unit

(cont'd)

Fuse/Relay Information

– Under-dash Fuse/Relay Box (cont'd)

Fuse Number	Fuse Name	Amps	Page	Component or Circuit Protected
24	(P/W RELAY) (S/R RELAY)	7.5	10-6	Power window relay, Moonroof
25	METER	7.5	10-6	Integrated control unit, Interlock system, Gauge assembly
26	FR WIPER FR WASHER	20	10-7	Front wiper/washer
27	CIGARETTE LIGHTER ACC SOCKET	10	10-7	Accessory power socket
28	RADIO CLOCK	10 (*15)	10-7	Stereo radio tuner ('96-'98 models), Audio unit ('99-'00 model)
29	—	—	—	Not used
30	INSTRUMENT LIGHTS	7.5	114	Dash & console lights
31	STARTER SIGNAL	7.5	21, 21-1, or 21-2	PGM-FI main relay, PCM/ECM, Integrated control unit
32	LICENSE LIGHTS TAIL LIGHTS	7.5	100-1	Parking lights, License plate lights, Tail lights
33	(INTERLOCK UNIT)	7.5	10-12	Interlock system

* = '98 models

Under-hood ABS Fuse/Relay Box

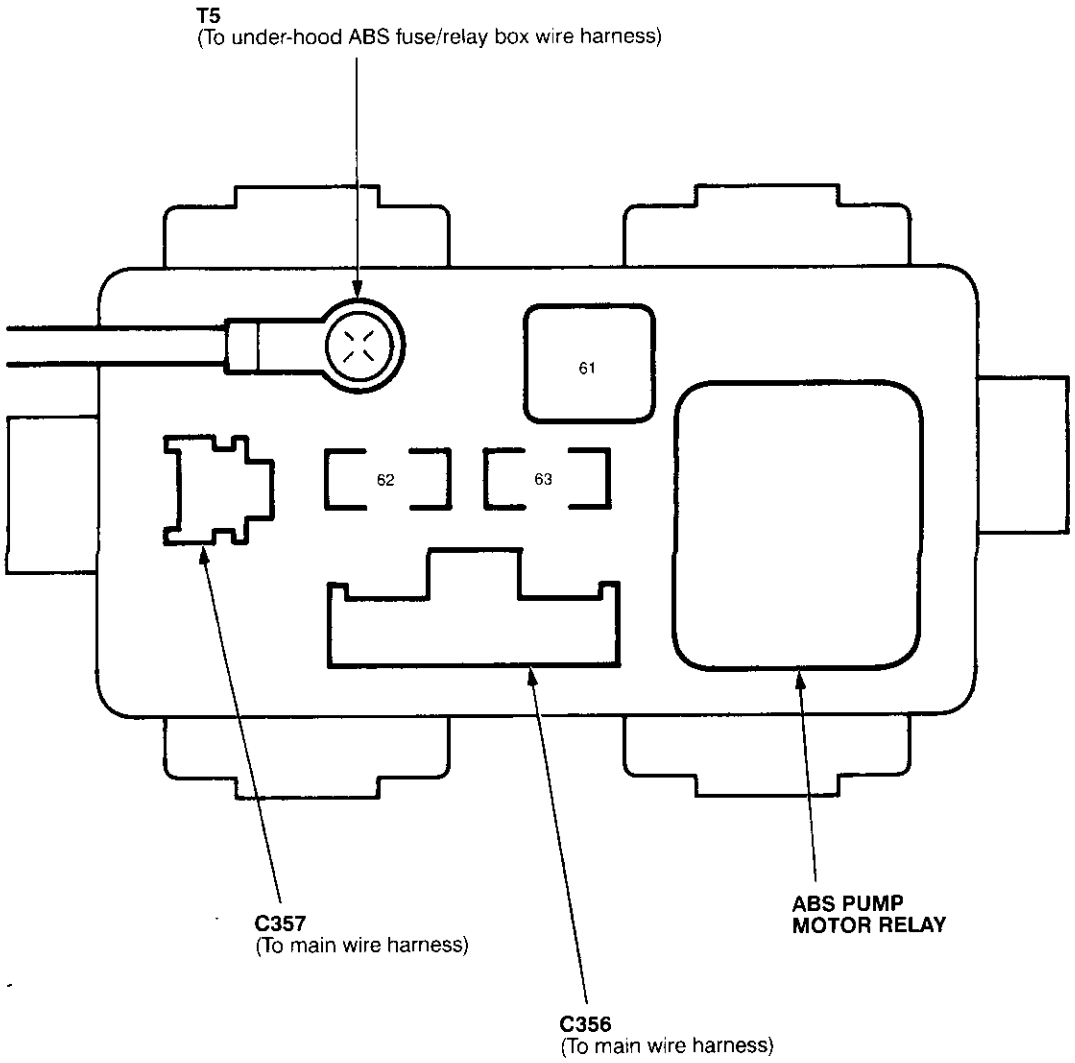

Fuse Number	Fuse Name	Amps	Page	Component or Circuit Protected
61	PUMP MOTOR	40	10-14	ABS pump motor
62	ABS +B	20	10-14	ABS control unit
63	MTR CHECK	7.5	44-1	ABS control unit

Fuse/Relay Information (cont'd)

– Under-hood Fuse/Relay Box

Front View

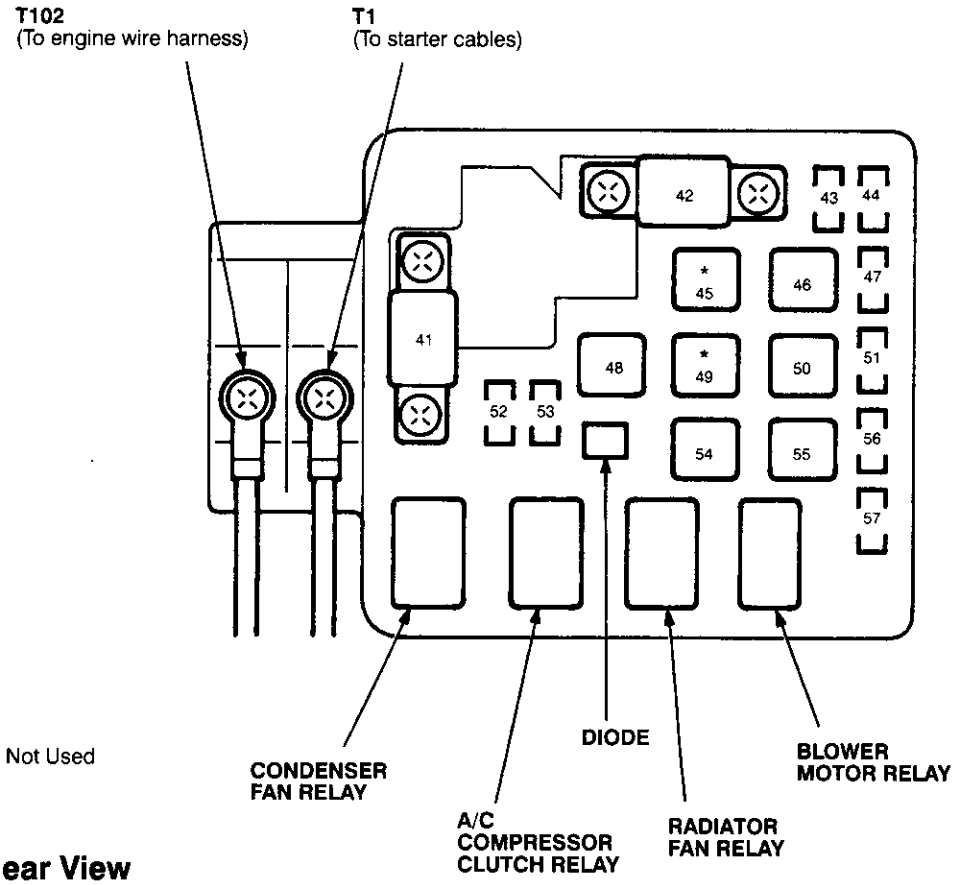

*: Not Used

Rear View

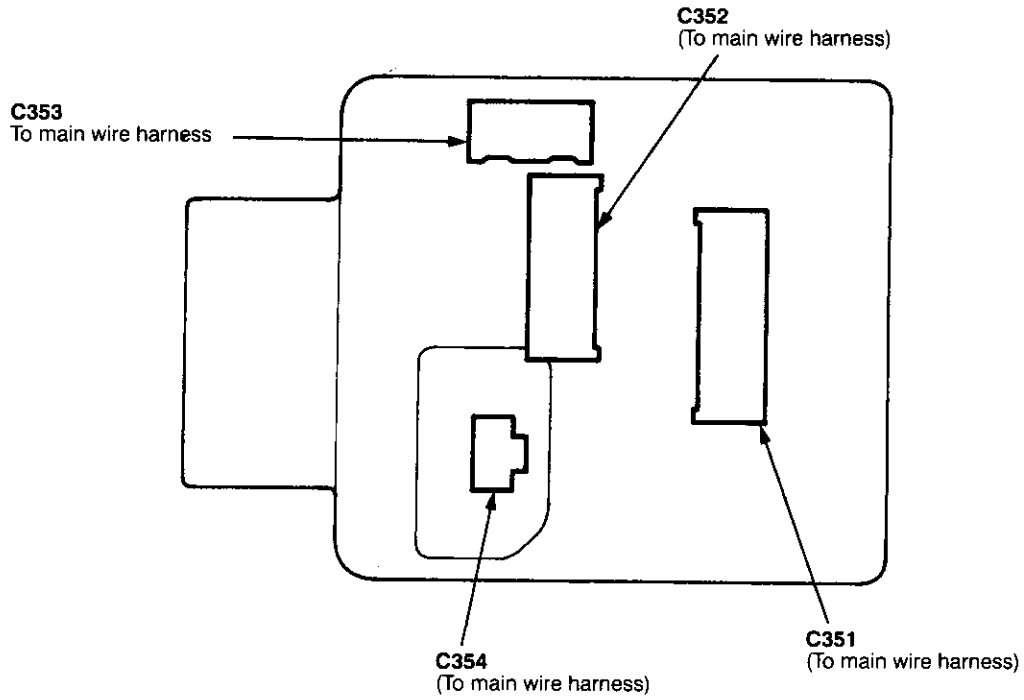

Fuse Number	Fuse Name	Amps	Page	Component or Circuit Protected
41	BATTERY	80	10	Power distribution
42	IG1	40	10	Ignition switch
43	INTERIOR LIGHT	7.5	10-10	DLC, Ceiling light, Trunk light
44	FI E/M	15 (20 GX)	10-10	PGM-FI main relay, Fuel injection relay (GX)
45	—	—	—	Not used
46	POWER WINDOW	40	10-10	Power window relay
47	BACK UP	7.5	10-11	Stereo radio tuner ('96-'98 models), Audio unit ('99-'00 models), Heater control panel, PCM/ECM, TCM ('96-'98 CVT)
48	HEADLIGHT	30	10-12	Headlights
49	—	—	—	Not used
50	REAR DEFROSTER	30	10-12	Rear window defogger relay
51	DOOR LOCK UNIT, ROOF	20	10-12	Power door lock control unit (all except '99-'00 models with keyless), Keyless door lock control unit ('99-'00 models with keyless), Moonroof
52	HORN, STOP LT	15	10-13	Horn relay, Brake switch
53	HAZARD	10	10-13	Hazard warning switch
54	OPTION	40	10-13	Security system (option)
55	HEATER MOTOR	40	10-1	Blower motor relay
56	(CONDENSER FAN)	20	10-1	Condenser fan relay, A/C compressor clutch relay
57	COOLING FAN	20	10-1	Radiator fan relay

Ground-to-Components Index

NOTE: All ground wires are BLK unless otherwise noted.

Ground	Page	Components or Circuit Grounded
G1	14-13	Battery (BLK/YEL)
G2	14-13	Steering pump bracket
G3	14-13	Transmission housing
G101 (*1)	14 and 14-1	Powertrain or engine control module (PG1 and PG2 are BLK; LG1 and LG2 are BRN/BLK), EGR control solenoid valve (CVT), EGR valve and lift sensor (D16Y5 engine with M/T), Engine coolant temperature switch, PGM-FI main relay, Power steering pressure switch (USA), Primary HO2S (D16Y5 engine with M/T), Vehicle speed sensor, VTEC pressure switch (D16Y5/D16Y8 engines), CKF sensor (BRN/BLK), Transmission control module (CVT) (PG1 is BLK; LG1 is BRN/BLK)
		Shielding between the PCM or ECM and these components (all have BRN/BLK wires): CKF sensor, TDC/CKP/CYP sensor, Primary and secondary heated oxygen sensors, Knock sensor (CVT/D16Y8 engine), Mainshaft speed sensor (A/T except CVT), Countershaft speed sensor (A/T except CVT)
		Shielding between the TCM and these components (CVT) (all have BRN/BLK wires): Drive pulley speed sensor, Driven pulley speed sensor, Secondary gear shaft speed sensor
G101 (*2)	14-2 and 14-3	Powertrain or engine control module (PG1 and PG2 are BLK; LG1 and LG2 are BRN/BLK), EGR control solenoid valve (D16Y5 engine), EGR valve (D16B5), Engine coolant temperature switch, Fuel pressure regulator shut-off solenoid valve (D16B5), PGM-FI main relay, Power steering pressure switch (USA), Vehicle speed sensor, VTEC pressure switch (All except D16Y7 engine), CKF sensor (All except B16A2) (BRN/BLK)
		Shielding between the PCM or ECM and these components (all have BRN/BLK wires): CKF sensor, TDC/CKP/CYP sensor, Primary and secondary heated oxygen sensors, Knock sensor (All except D16Y7 engine), Mainshaft speed sensor (A/T except CVT), Countershaft speed sensor (A/T except CVT), Drive pulley speed sensor (CVT), Driven pulley speed sensor (CVT), Secondary gear shaft speed sensor (CVT)
G201	14-4	Radiator fan motor, Right front parking/turn signal light, Right headlight
G202	14-4	Cruise control actuator, Left front parking/turn signal lights, Left headlight, Rear window washer motor, Windshield washer motor, Washer fluid level switch ('99-'00 Canada)
G401	14-6 and 14-7	Accessory power socket, Brake fluid level switch, Clutch interlock switch (M/T), Clutch switch (M/T with cruise/D16Y5 engine with M/T), Combination wiper switch (2 wires), Cruise control main switch, Cruise control unit, Dash lights brightness controller, Data link connector, Daytime running lights control unit (Canada), Gauge assembly, Horn ('96-'97 models), Integrated control unit, Interlock control unit (A/T), Keyless door lock control unit ('99-'00 models with keyless), Moonroof close and open relays, Moonroof switch, Park pin switch (A/T), Power window relay, Rear window defogger relay, Rear window defogger switch ('96-'98 models), Steering lock, Stereo radio tuner ('96-'98 USA: LX, EX, and HX), Turn signal/hazard relay, Windshield wiper motor.....plus everything grounded through G402

Ground	Page	Components or Circuit Grounded
G402	14-5	A/T gear position switch, ABS control unit (3 wires), Blower motor high relay ('99-'00 models), Blower motor relay, ELD unit, Heater fan switch ('96-'98 models), Heater control panel, Mode control motor ('96-'98 models), Power transistor ('99-'00 models), Service check connector ....plus everything grounded through G401
G403	14-13	ABS pump motor
G501	14-9	Stereo radio tuner ('96-'98 models), Audio unit ('99-'00 models)
G551	14-8	Driver's door lock actuator, Driver's door lock switch, Driver's window motor, Left mirror defogger, Power window master switch (2 wires), Power door lock control unit (all except '99-'00 with keyless), Power mirror switch
G552	14-9	Driver's seat belt switch, Fuel pump, Fuel tank unit, Right mirror defogger
G601 (Hatch-back)	14-12	Left and right back-up lights, Left and right brake light/tail lights, Left and right rear turn signal lights, Left and right tail lights....plus everything grounded through G761
G601 (All Coupes and ('96-'98 Sedans)	14-10	High mount brake light, Left and right back-up lights, Left and right inner brake light/ tail lights, Left and right license plate lights, Left and right outer brake light/tail lights, Left and right rear turn signal lights, Rear window defogger, Trunk latch switch
G601 ('99-'00 Sedans)	14-11	High mount brake light, Left and right back-up lights, Left and right brake light/outer taillights, Left and right inner taillight, Left and right rear turn signal light, Rear window defogger (GX), Trunk latch switch
G602 ('99-'00 Sedans)	14-11	Window antenna coil
G751	14-13	Condenser fan motor
G761 (Hatch-back)	14-12	Hatch latch switch ('98-'00 models), High mount brake light, Left and right license plate lights, Rear window wiper motor...plus everything grounded through G601
G771 (Hatch-back)	14-13	Rear window defogger
G801	14-13	SRS unit (2 wires)

*1 = All '96-'98 models except D16B5, '99-'00 D16Y5 with M/T
*2 = '98 D16B5, all '99-'00 models except D16Y5 with M/T

Power Distribution

– From Battery to Ignition Switch, Fuses, and Relays

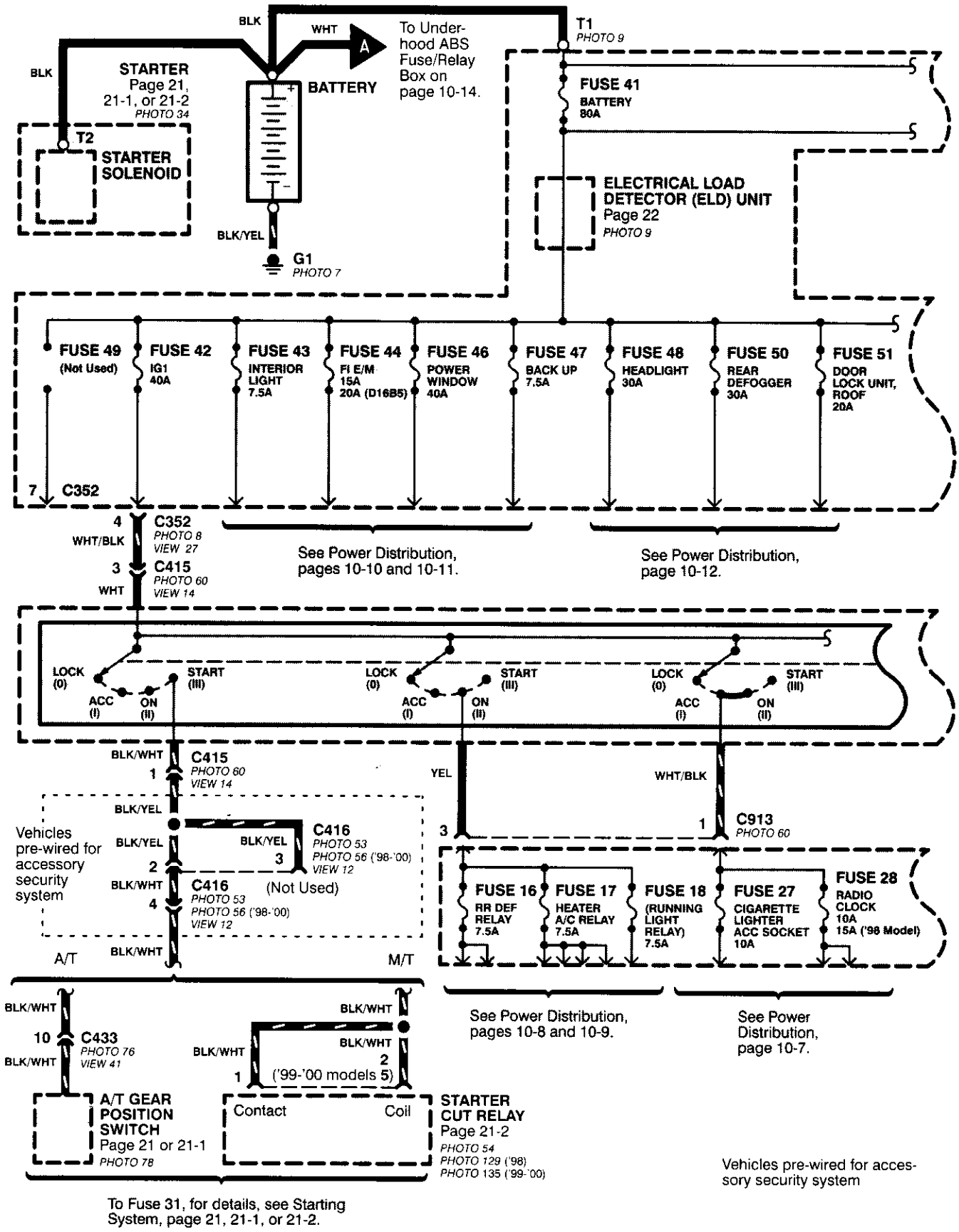

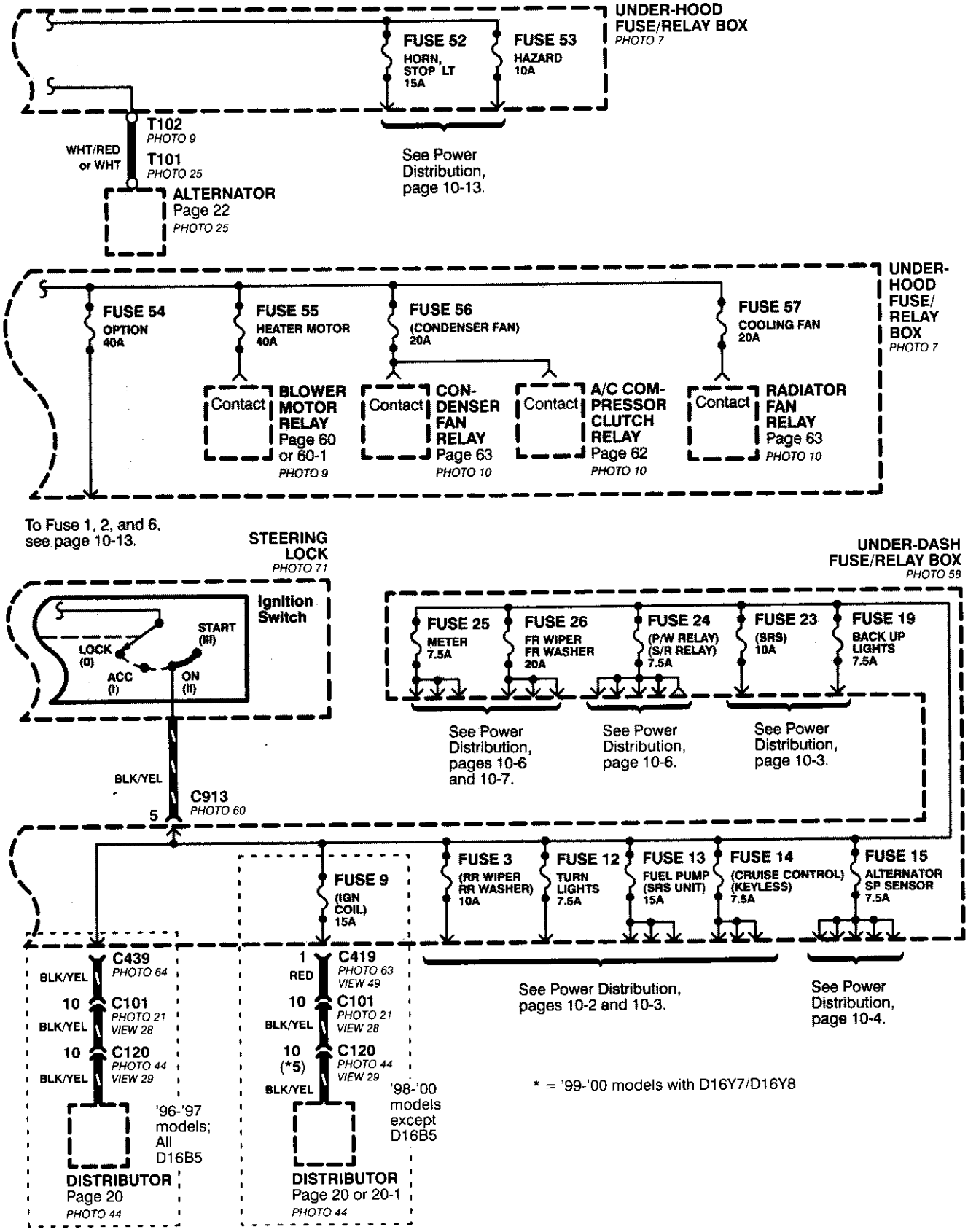
UNDER-HOOD FUSE/RELAY BOX
PHOTO 7
FUSE 52
HORN, STOP LT
15A
FUSE 53
HAZARD
10A
See Power Distribution, page 10-13.
T102
PHOTO 9
WHT/RED or WHT
T101
PHOTO 25
ALTERNATOR
Page 22
PHOTO 25
UNDER-HOOD FUSE/ RELAY BOX
PHOTO 7
FUSE 54
OPTION
40A
FUSE 55
HEATER MOTOR
40A
FUSE 56
(CONDENSER FAN)
20A
FUSE 57
COOLING FAN
20A
Contact
BLOWER MOTOR RELAY
Page 60 or 60-1
PHOTO 9
Contact
CON-DENSER FAN RELAY
Page 63
PHOTO 10
Contact
A/C COM-PRESSOR CLUTCH RELAY
Page 62
PHOTO 10
Contact
RADIATOR FAN RELAY
Page 63
PHOTO 10
To Fuse 1, 2, and 6, see page 10-13.
STEERING LOCK
PHOTO 71
Ignition Switch
LOCK (0)
ACC (I)
ON (II)
START (III)
UNDER-DASH FUSE/RELAY BOX
PHOTO 58
FUSE 25
METER
7.5A
FUSE 26
FR WIPER
FR WASHER
20A
FUSE 24
(P/W RELAY)
(S/R RELAY)
7.5A
FUSE 23
(SRS)
10A
FUSE 19
BACK UP LIGHTS
7.5A
See Power Distribution, pages 10-6 and 10-7.
See Power Distribution, page 10-6.
See Power Distribution, page 10-3.
BLK/YEL
C913
PHOTO 60
5
FUSE 9
(IGN COIL)
15A
FUSE 3
(RR WIPER
RR WASHER)
10A
FUSE 12
TURN LIGHTS
7.5A
FUSE 13
FUEL PUMP
(SRS UNIT)
15A
FUSE 14
(CRUISE CONTROL)
(KEYLESS)
7.5A
FUSE 15
ALTERNATOR
SP SENSOR
7.5A
See Power Distribution, pages 10-2 and 10-3.
See Power Distribution, page 10-4.
C439
PHOTO 64
BLK/YEL
10
C101
PHOTO 21
VIEW 28
BLK/YEL
10
C120
PHOTO 44
VIEW 29
BLK/YEL
'96-'97 models; All D16B5
DISTRIBUTOR
Page 20
PHOTO 44
1
RED
C419
PHOTO 63
VIEW 49
10
C101
PHOTO 21
VIEW 28
BLK/YEL
10
(*5)
C120
PHOTO 44
VIEW 29
BLK/YEL
'98-'00 models except D16B5
DISTRIBUTOR
Page 20 or 20-1
PHOTO 44
* = '99-'00 models with D16Y7/D16Y8

Power Distribution (cont'd)

– From Fuses to Relays and Components

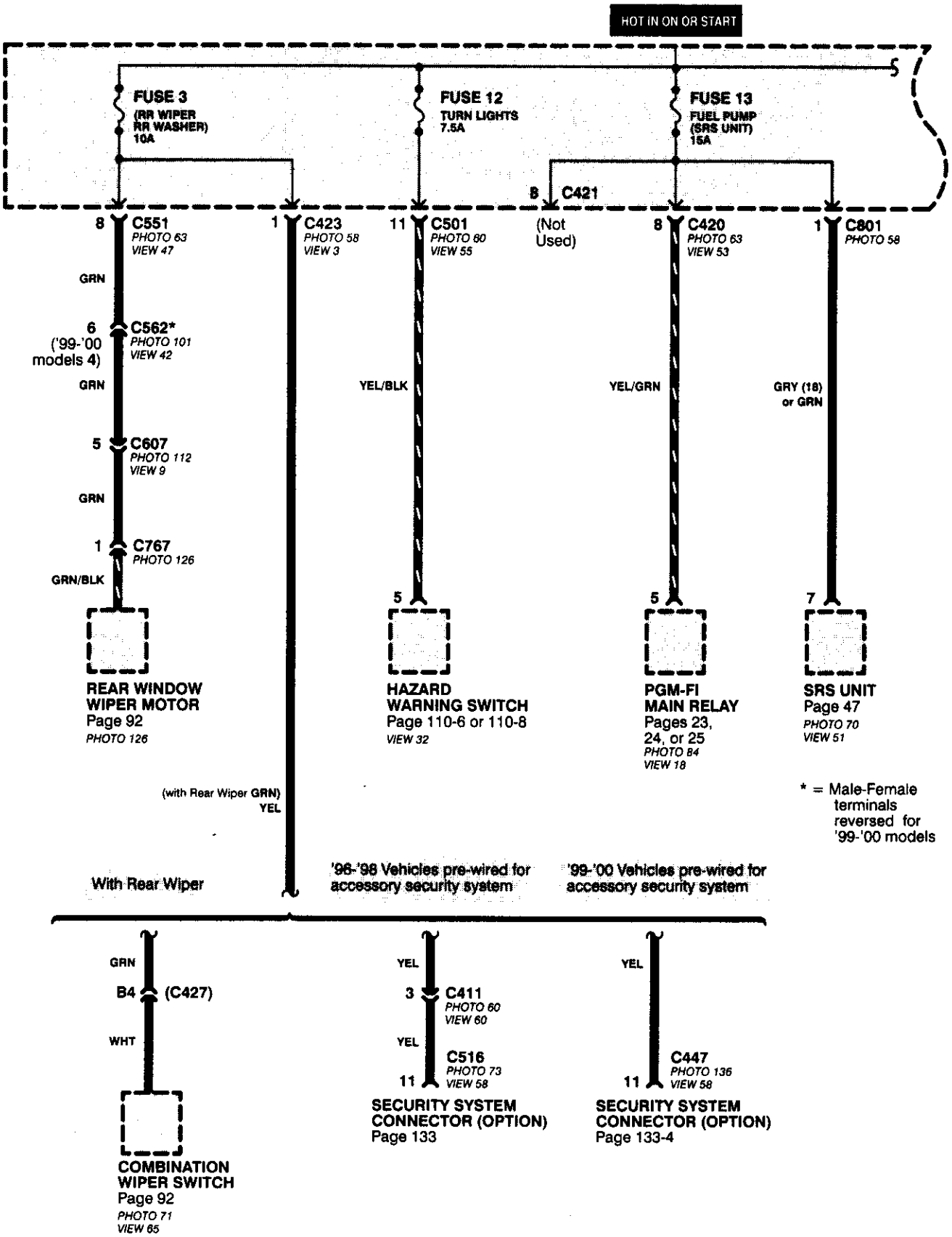

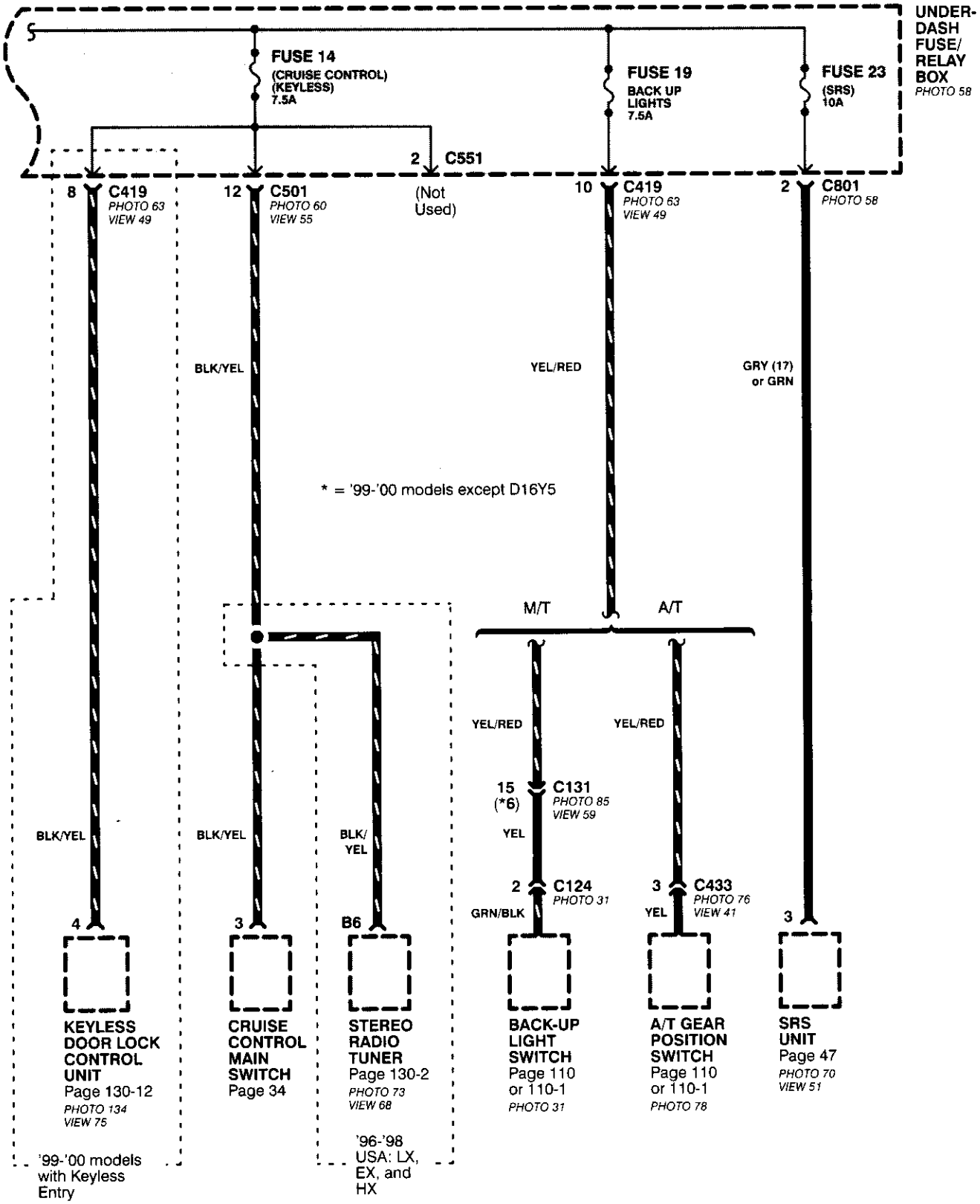
UNDER-DASH FUSE/ RELAY BOX
PHOTO 58
FUSE 14
(CRUISE CONTROL)
(KEYLESS)
7.5A
FUSE 19
BACK UP LIGHTS
7.5A
FUSE 23
(SRS)
10A
2 C551
(Not Used)
8 C419
PHOTO 63
VIEW 49
12 C501
PHOTO 60
VIEW 55
10 C419
PHOTO 63
VIEW 49
2 C801
PHOTO 58
BLK/YEL
YEL/RED
GRY (17) or GRN
* = '99-'00 models except D16Y5
M/T
A/T
YEL/RED
YEL/RED
15 (*6) C131
PHOTO 85
VIEW 59
YEL
2 C124
PHOTO 31
GRN/BLK
3 C433
PHOTO 76
VIEW 41
YEL
BLK/YEL
BLK/YEL
BLK/ YEL
4
3
B6
3
KEYLESS DOOR LOCK CONTROL UNIT
Page 130-12
PHOTO 134
VIEW 75
CRUISE CONTROL MAIN SWITCH
Page 34
STEREO RADIO TUNER
Page 130-2
PHOTO 73
VIEW 68
BACK-UP LIGHT SWITCH
Page 110 or 110-1
PHOTO 31
A/T GEAR POSITION SWITCH
Page 110 or 110-1
PHOTO 78
SRS UNIT
Page 47
PHOTO 70
VIEW 51
'99-'00 models with Keyless Entry
'96-'98 USA: LX, EX, and HX

(cont'd)

Power Distribution

– From Fuses to Relays and Components (cont'd)

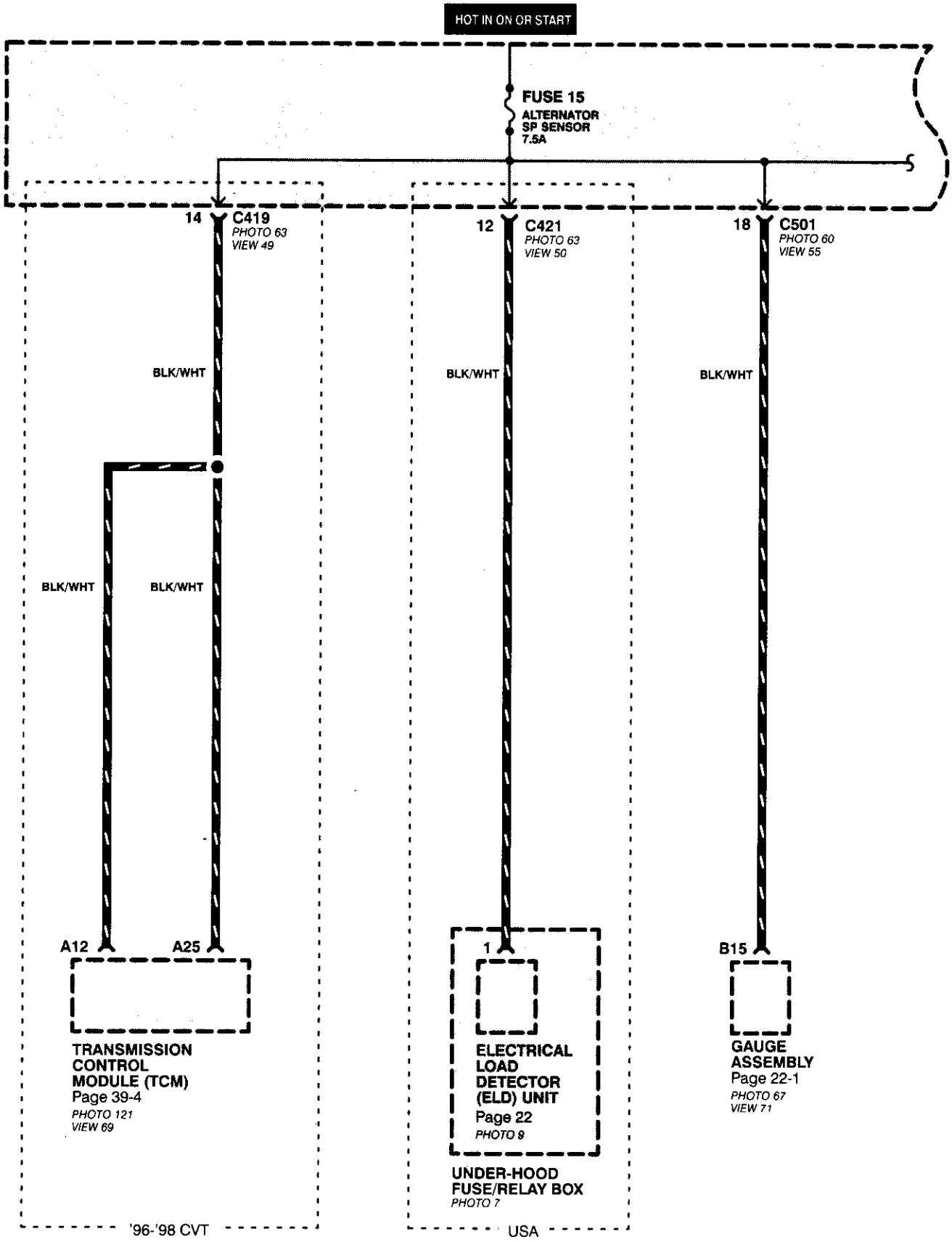

*1 = '96 D16Y8 engine: All coupes
'97 D16Y7 engine: California Coupe, California Sedan LX
'97 D16Y8 engine: All coupes, California Sedan
'98-'00 models: All except D16B5

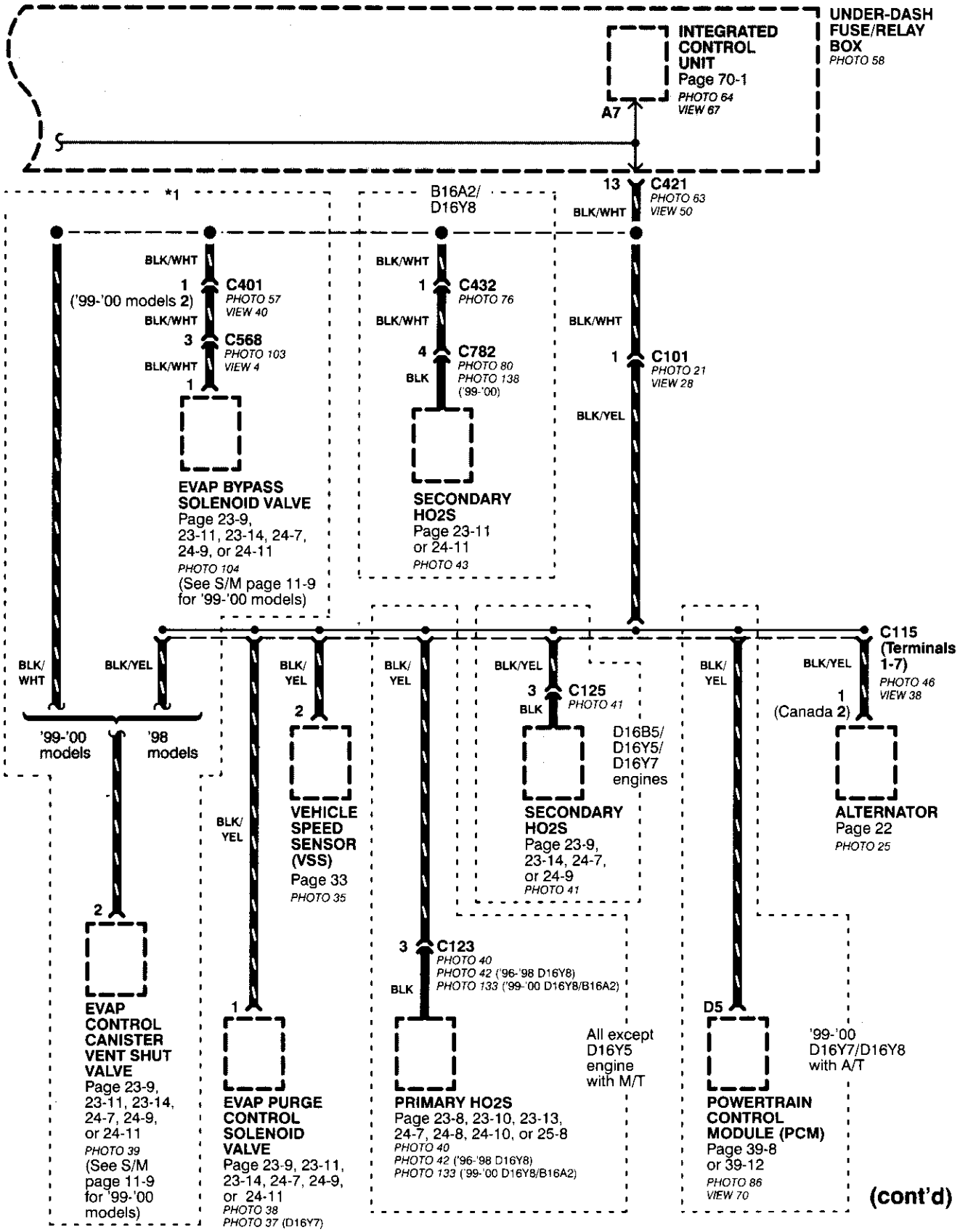

(cont'd)

Power Distribution

– From Fuses to Relays and Components (cont'd)

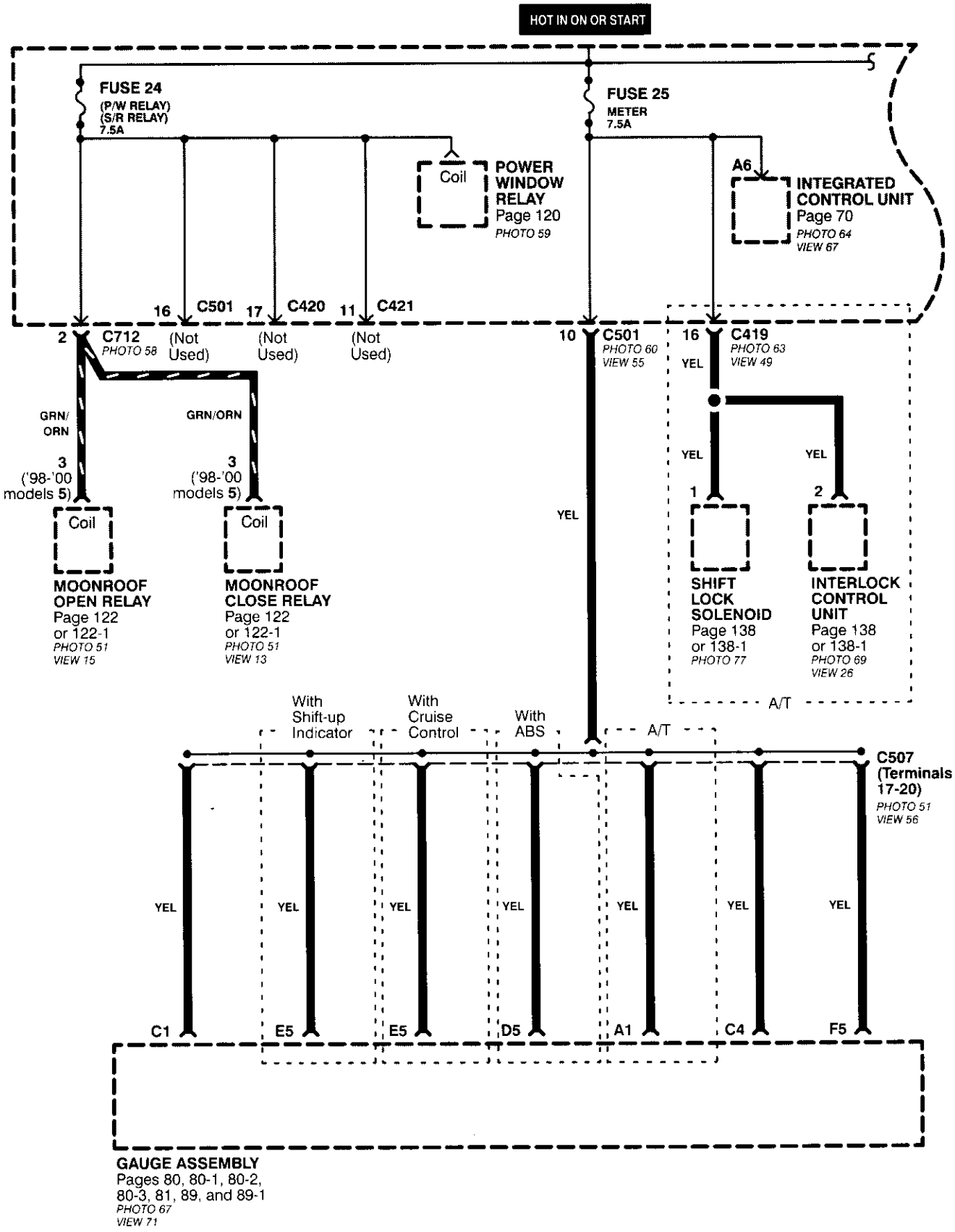

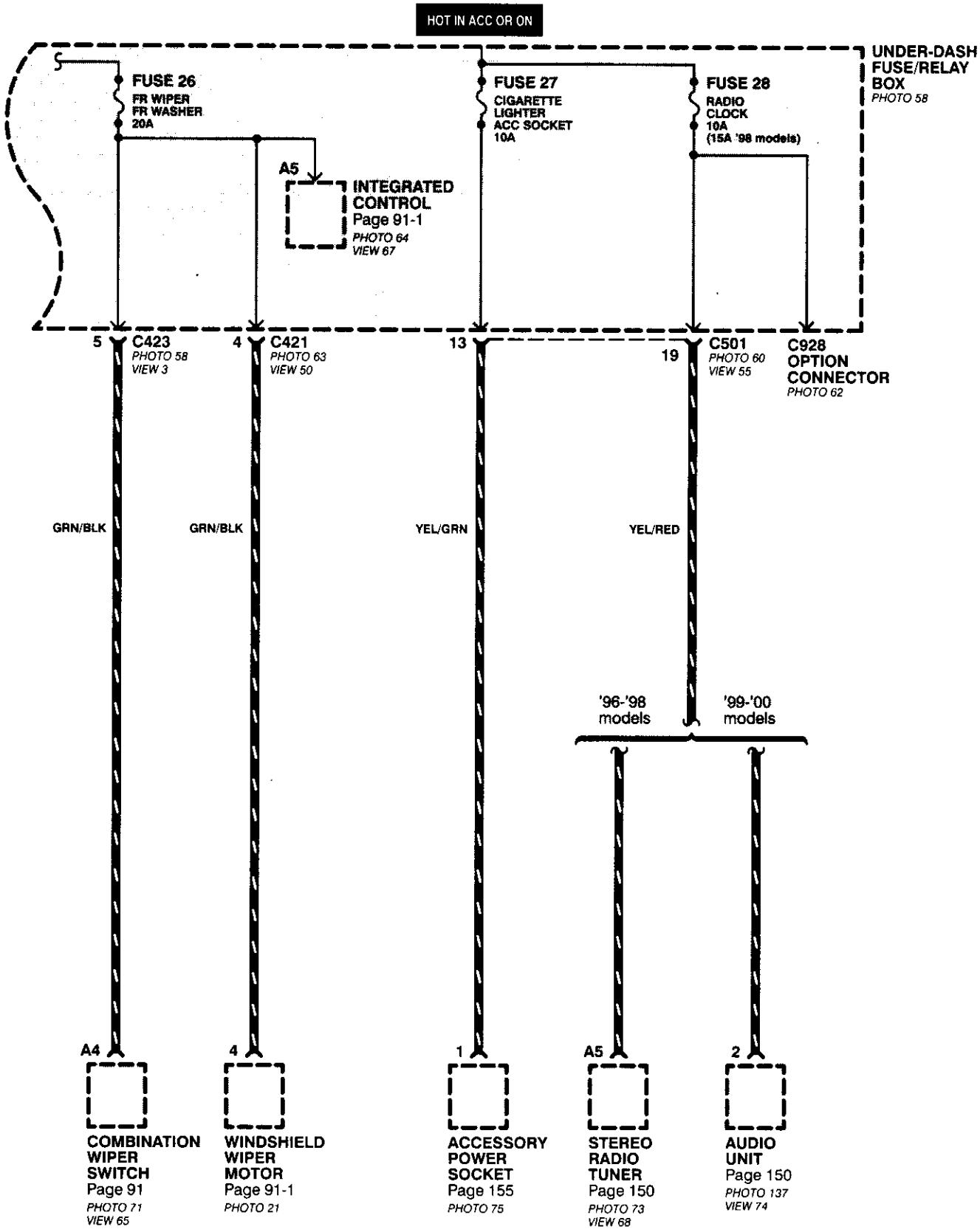
HOT IN ACC OR ON
UNDER-DASH FUSE/RELAY BOX
PHOTO 58
FUSE 26
FR WIPER
FR WASHER
20A
FUSE 27
CIGARETTE LIGHTER
ACC SOCKET
10A
FUSE 28
RADIO
CLOCK
10A
(15A '98 models)
A5
INTEGRATED CONTROL
Page 91-1
PHOTO 64
VIEW 67
5
C423
PHOTO 58
VIEW 3
4
C421
PHOTO 63
VIEW 50
13
19
C501
PHOTO 60
VIEW 55
C928 OPTION CONNECTOR
PHOTO 62
GRN/BLK
GRN/BLK
YEL/GRN
YEL/RED
'96-'98 models
'99-'00 models
A4
4
1
A5
2
COMBINATION WIPER SWITCH
Page 91
PHOTO 71
VIEW 65
WINDSHIELD WIPER MOTOR
Page 91-1
PHOTO 21
ACCESSORY POWER SOCKET
Page 155
PHOTO 75
STEREO RADIO TUNER
Page 150
PHOTO 73
VIEW 68
AUDIO UNIT
Page 150
PHOTO 137
VIEW 74

(cont'd)

Power Distribution

– From Fuses to Relays and Components (cont'd)

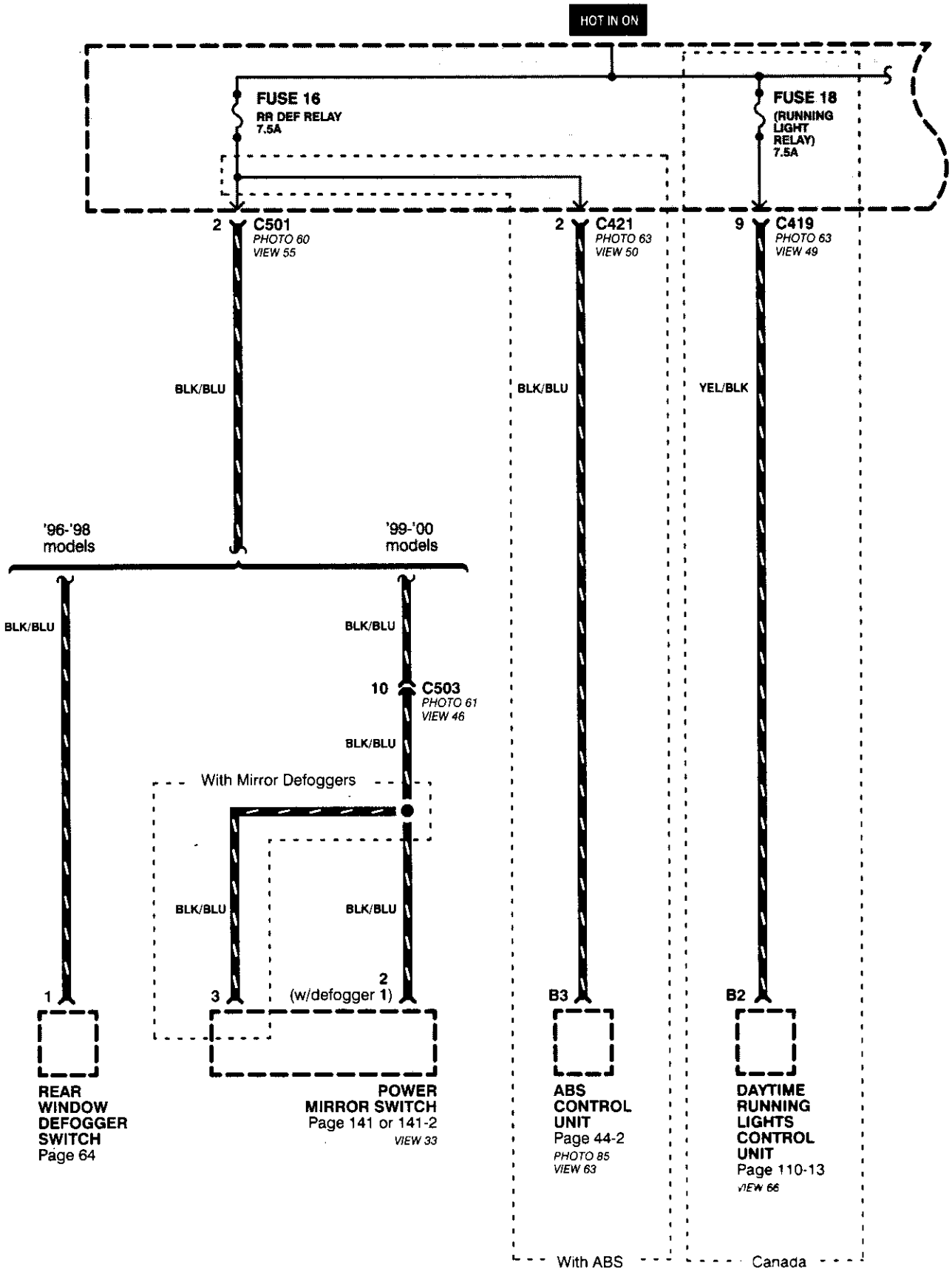

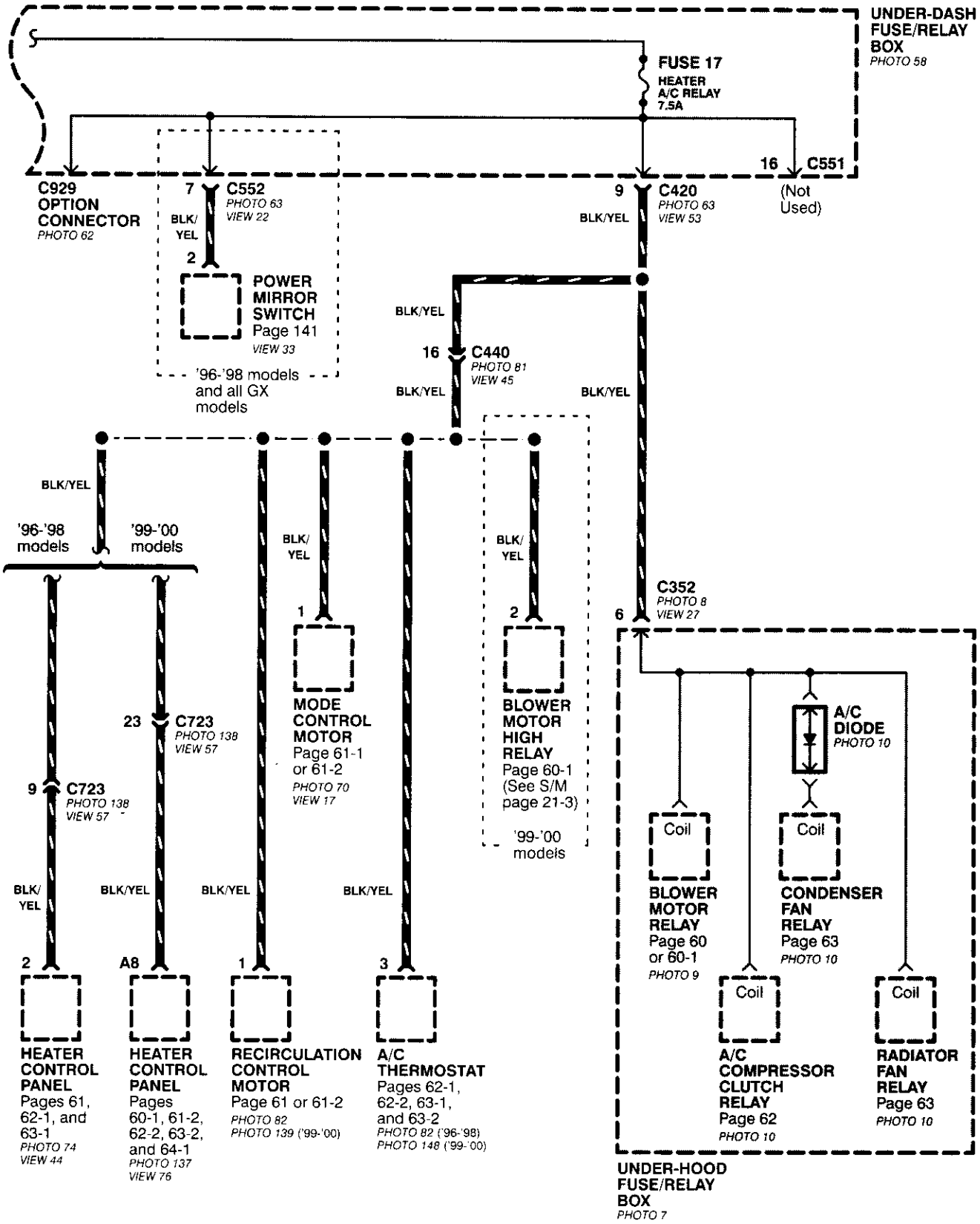
UNDER-DASH FUSE/RELAY BOX
PHOTO 58
FUSE 17
HEATER A/C RELAY 7.5A
16
C551
(Not Used)
C929 OPTION CONNECTOR
PHOTO 62
7
C552
PHOTO 63
VIEW 22
BLK/YEL
2
POWER MIRROR SWITCH
Page 141
VIEW 33
'96-'98 models and all GX models
9
C420
PHOTO 63
VIEW 53
BLK/YEL
BLK/YEL
16
C440
PHOTO 81
VIEW 45
BLK/YEL
BLK/YEL
BLK/YEL
'96-'98 models
'99-'00 models
BLK/YEL
1
MODE CONTROL MOTOR
Page 61-1 or 61-2
PHOTO 70
VIEW 17
BLK/YEL
2
BLOWER MOTOR HIGH RELAY
Page 60-1 (See S/M page 21-3)
'99-'00 models
6
C352
PHOTO 8
VIEW 27
23
C723
PHOTO 138
VIEW 57
9
C723
PHOTO 138
VIEW 57
A/C DIODE
PHOTO 10
Coil
Coil
BLOWER MOTOR RELAY
Page 60 or 60-1
PHOTO 9
CONDENSER FAN RELAY
Page 63
PHOTO 10
BLK/YEL
BLK/YEL
BLK/YEL
BLK/YEL
2
A8
1
3
Coil
Coil
HEATER CONTROL PANEL
Pages 61, 62-1, and 63-1
PHOTO 74
VIEW 44
HEATER CONTROL PANEL
Pages 60-1, 61-2, 62-2, 63-2, and 64-1
PHOTO 137
VIEW 76
RECIRCULATION CONTROL MOTOR
Page 61 or 62-2
PHOTO 82
PHOTO 139 ('99-'00)
A/C THERMOSTAT
Pages 62-1, 62-2, 63-1, and 63-2
PHOTO 82 ('96-'98)
PHOTO 148 ('99-'00)
A/C COMPRESSOR CLUTCH RELAY
Page 62
PHOTO 10
RADIATOR FAN RELAY
Page 63
PHOTO 10
UNDER-HOOD FUSE/RELAY BOX
PHOTO 7

Power Distribution

- From Fuses to Relays and Components (cont'd)

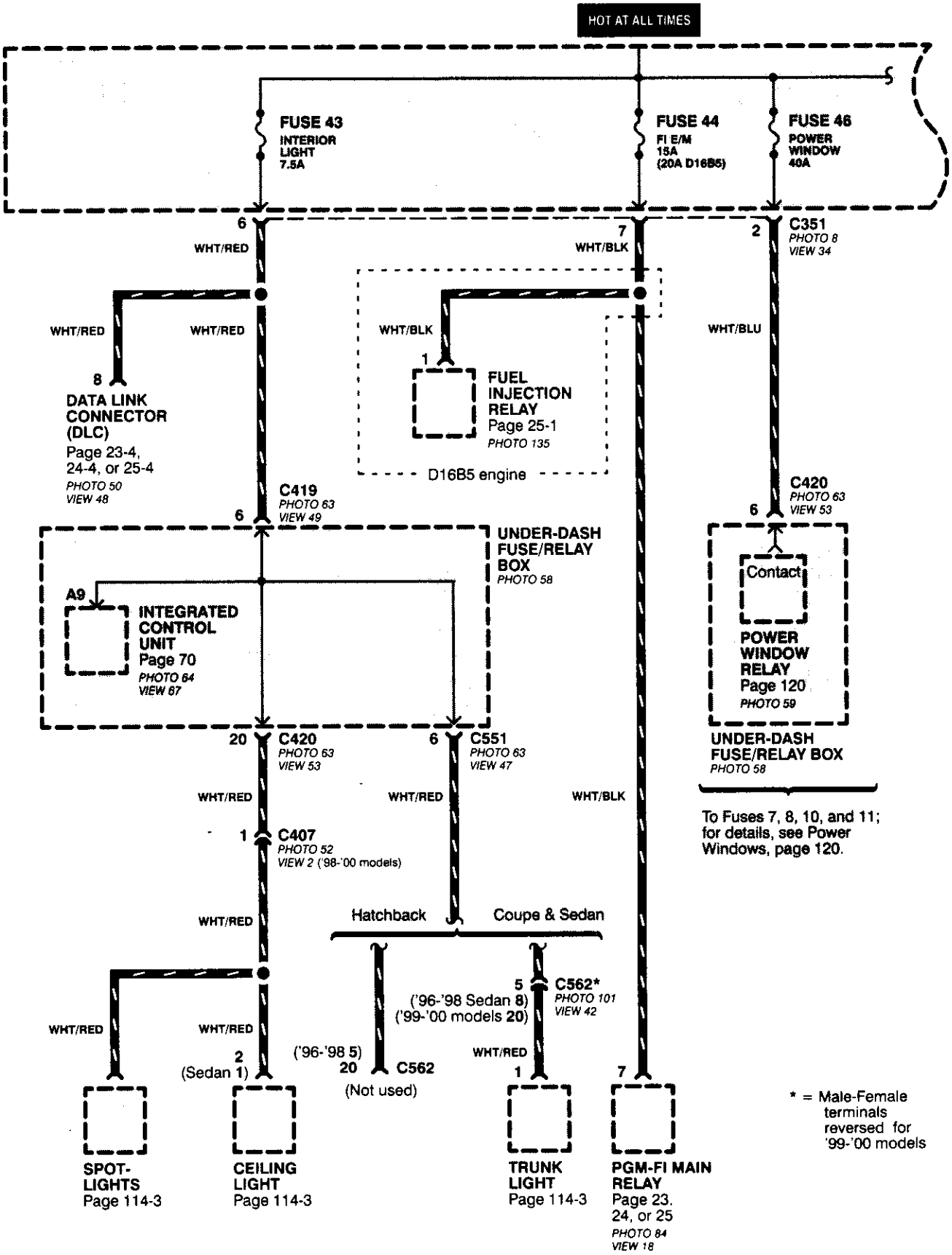

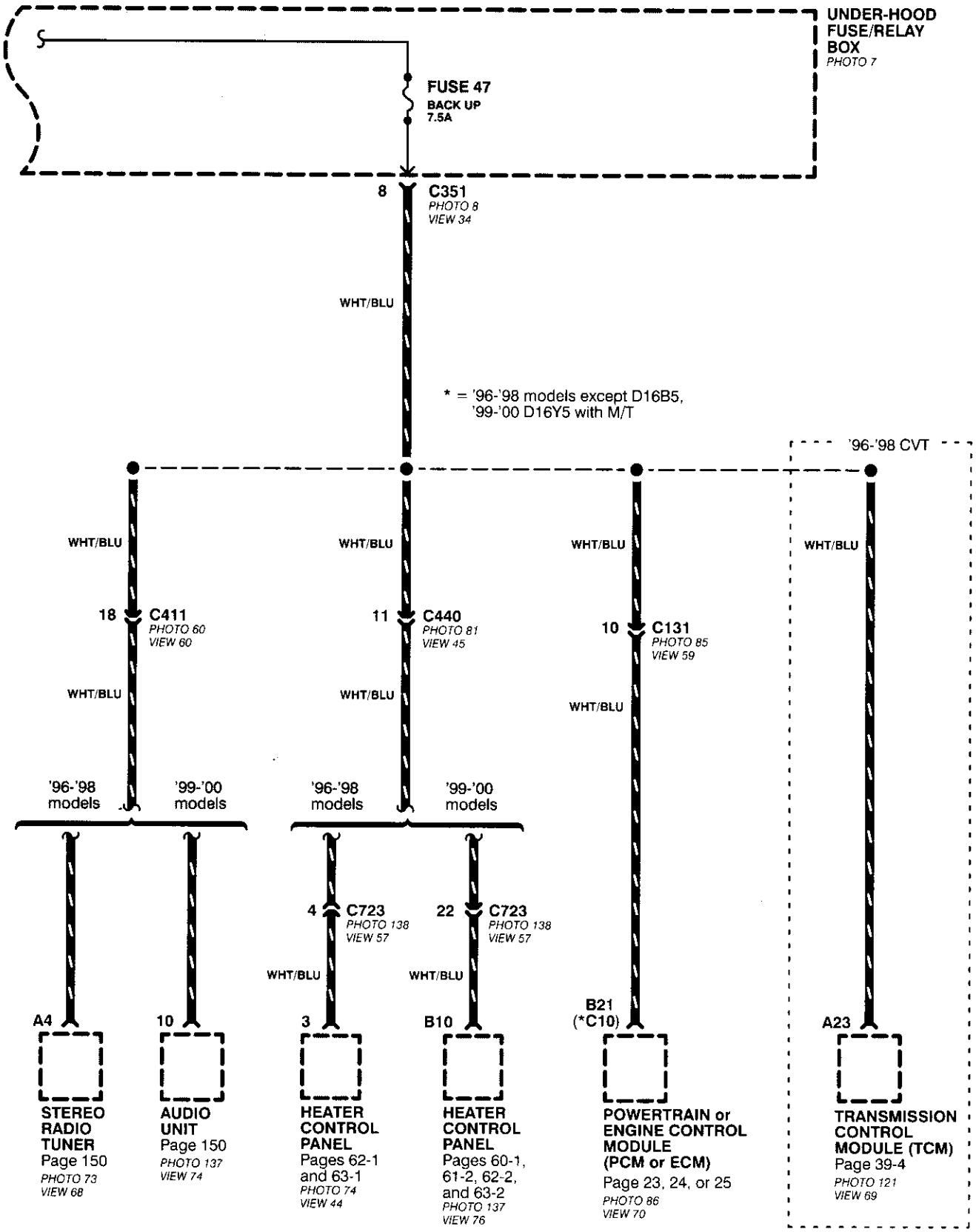
UNDER-HOOD FUSE/RELAY BOX
PHOTO 7
FUSE 47
BACK UP
7.5A
8
C351
PHOTO 8
VIEW 34
WHT/BLU
* = '96-'98 models except D16B5, '99-'00 D16Y5 with M/T
'96-'98 CVT
WHT/BLU
18
C411
PHOTO 60
VIEW 60
WHT/BLU
11
C440
PHOTO 81
VIEW 45
WHT/BLU
10
C131
PHOTO 85
VIEW 59
WHT/BLU
WHT/BLU
'96-'98 models
'99-'00 models
'96-'98 models
'99-'00 models
4
C723
PHOTO 138
VIEW 57
22
C723
PHOTO 138
VIEW 57
WHT/BLU
WHT/BLU
A4
10
3
B10
B21
(*C10)
A23
STEREO RADIO TUNER
Page 150
PHOTO 73
VIEW 68
AUDIO UNIT
Page 150
PHOTO 137
VIEW 74
HEATER CONTROL PANEL
Pages 62-1 and 63-1
PHOTO 74
VIEW 44
HEATER CONTROL PANEL
Pages 60-1, 61-2, 62-2, and 63-2
PHOTO 137
VIEW 76
POWERTRAIN or ENGINE CONTROL MODULE (PCM or ECM)
Page 23, 24, or 25
PHOTO 86
VIEW 70
TRANSMISSION CONTROL MODULE (TCM)
Page 39-4
PHOTO 121
VIEW 69

Power Distribution

– From Fuse to Relays and Components (cont'd)

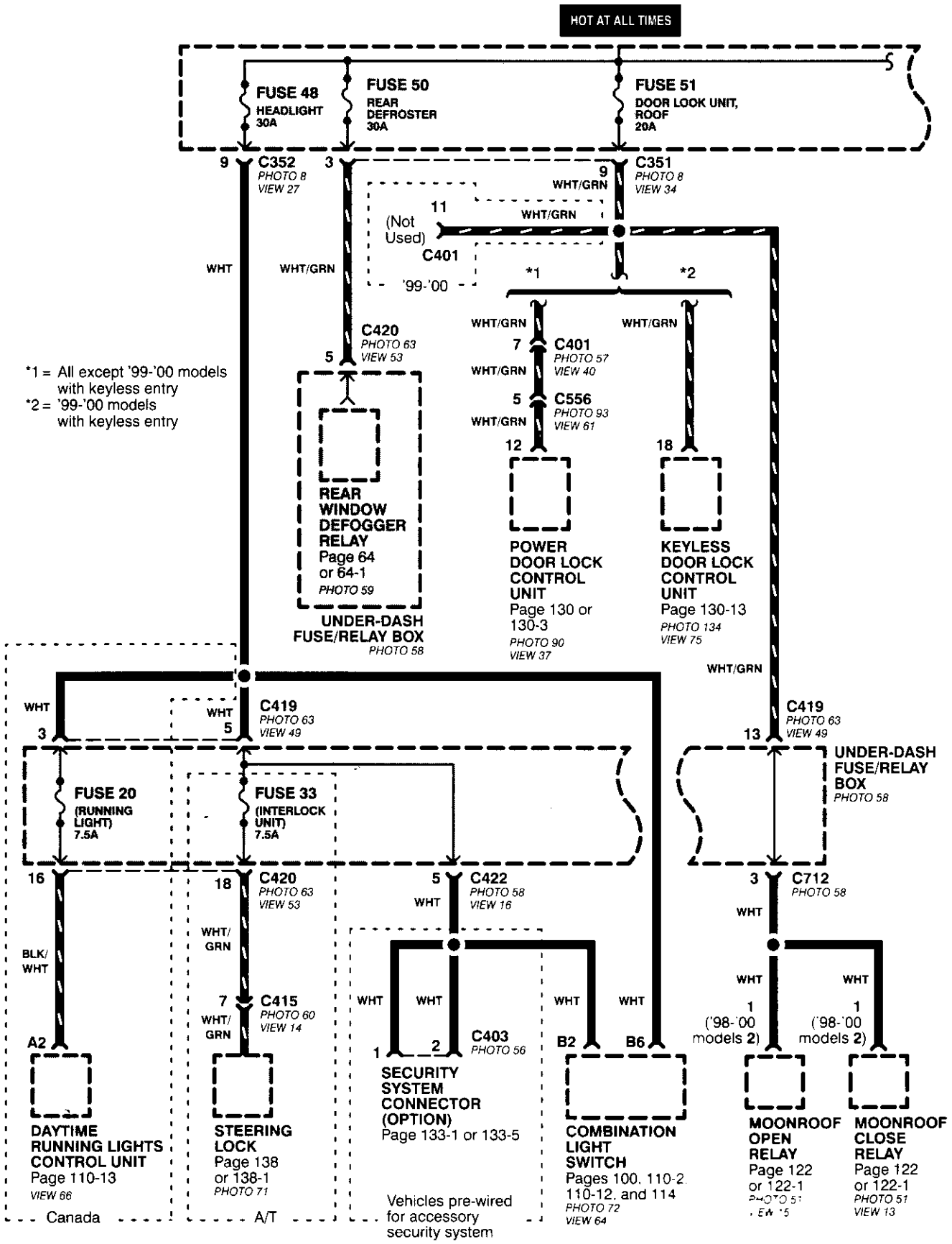

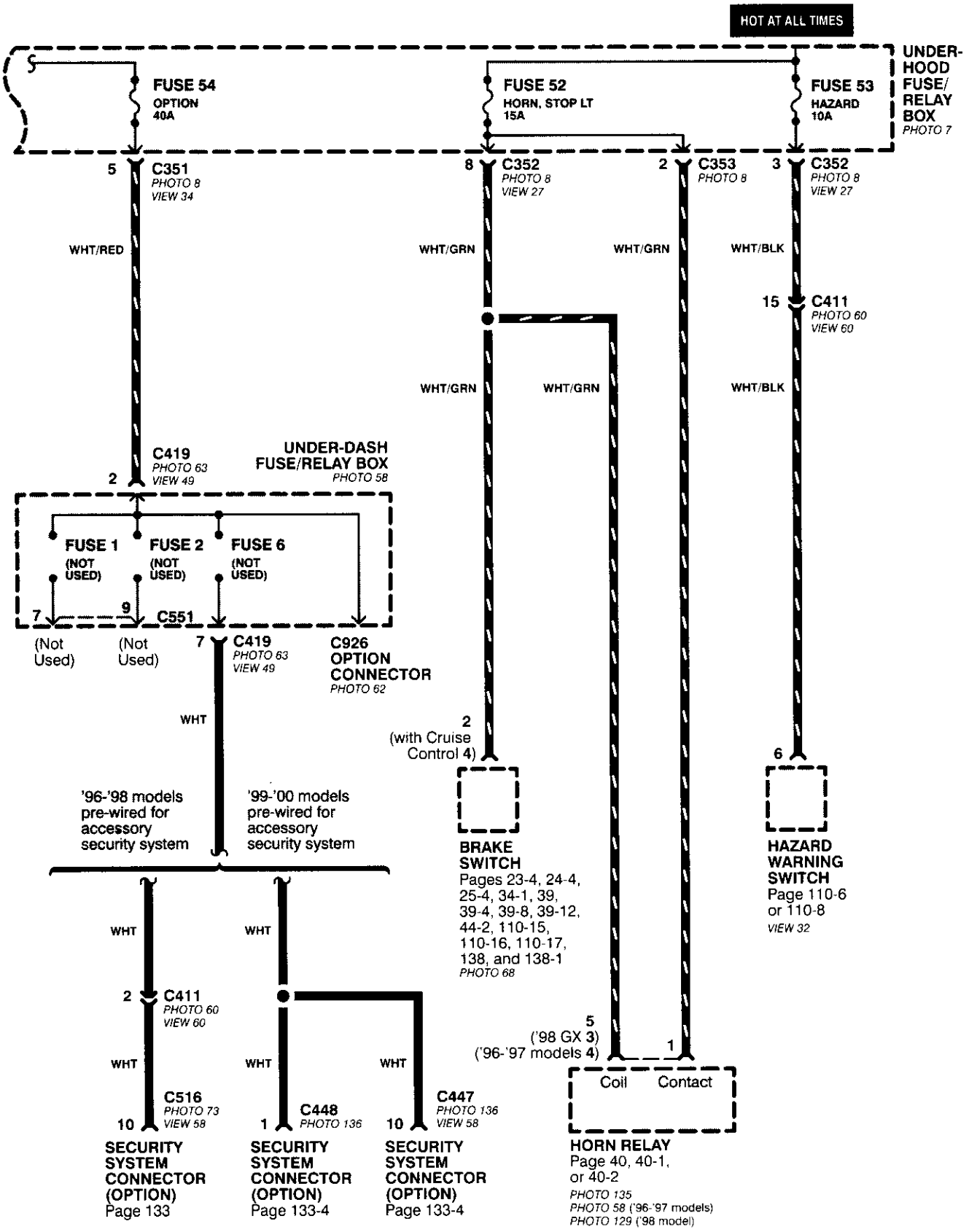
HOT AT ALL TIMES
UNDER-HOOD FUSE/ RELAY BOX
PHOTO 7
FUSE 54
OPTION
40A
FUSE 52
HORN, STOP LT
15A
FUSE 53
HAZARD
10A
5
C351
PHOTO 8
VIEW 34
8
C352
PHOTO 8
VIEW 27
2
C353
PHOTO 8
3
C352
PHOTO 8
VIEW 27
WHT/RED
WHT/GRN
WHT/GRN
WHT/BLK
15
C411
PHOTO 60
VIEW 60
WHT/GRN
WHT/GRN
WHT/BLK
C419
PHOTO 63
VIEW 49
2
UNDER-DASH FUSE/RELAY BOX
PHOTO 58
FUSE 1
(NOT USED)
FUSE 2
(NOT USED)
FUSE 6
(NOT USED)
7
9
C551
(Not Used)
(Not Used)
7
C419
PHOTO 63
VIEW 49
C926
OPTION CONNECTOR
PHOTO 62
WHT
2
(with Cruise Control 4)
6
'96-'98 models pre-wired for accessory security system
'99-'00 models pre-wired for accessory security system
BRAKE SWITCH
Pages 23-4, 24-4, 25-4, 34-1, 39, 39-4, 39-8, 39-12, 44-2, 110-15, 110-16, 110-17, 138, and 138-1
PHOTO 68
HAZARD WARNING SWITCH
Page 110-6 or 110-8
VIEW 32
WHT
WHT
2
C411
PHOTO 60
VIEW 60
5
('98 GX 3)
('96-'97 models 4)
1
WHT
WHT
WHT
C516
PHOTO 73
VIEW 58
10
C448
PHOTO 136
1
C447
PHOTO 136
VIEW 58
10
Coil
Contact
SECURITY SYSTEM CONNECTOR (OPTION)
Page 133
SECURITY SYSTEM CONNECTOR (OPTION)
Page 133-4
SECURITY SYSTEM CONNECTOR (OPTION)
Page 133-4
HORN RELAY
Page 40, 40-1, or 40-2
PHOTO 135
PHOTO 58 ('96-'97 models)
PHOTO 129 ('98 model)

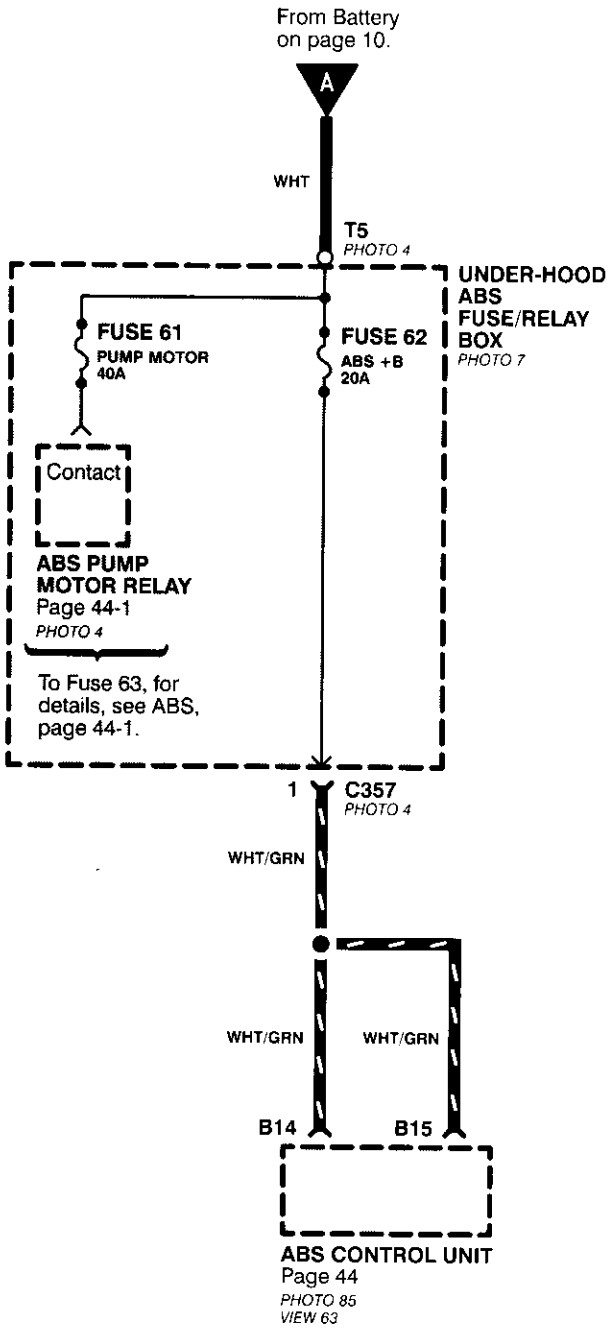
From Battery
on page 10.
A
WHT
T5
PHOTO 4
UNDER-HOOD
ABS
FUSE/RELAY
BOX
PHOTO 7
FUSE 61
PUMP MOTOR
40A
FUSE 62
ABS +B
20A
Contact
ABS PUMP
MOTOR RELAY
Page 44-1
PHOTO 4
To Fuse 63, for
details, see ABS,
page 44-1.
1
C357
PHOTO 4
WHT/GRN
WHT/GRN
WHT/GRN
B14
B15
ABS CONTROL UNIT
Page 44
PHOTO 85
VIEW 63

Ground Distribution

– G101 (All '96-'98 models except D16B5; '99-'00 D16Y5 with M/T)

NOTE: Wires shown without color codes are black.

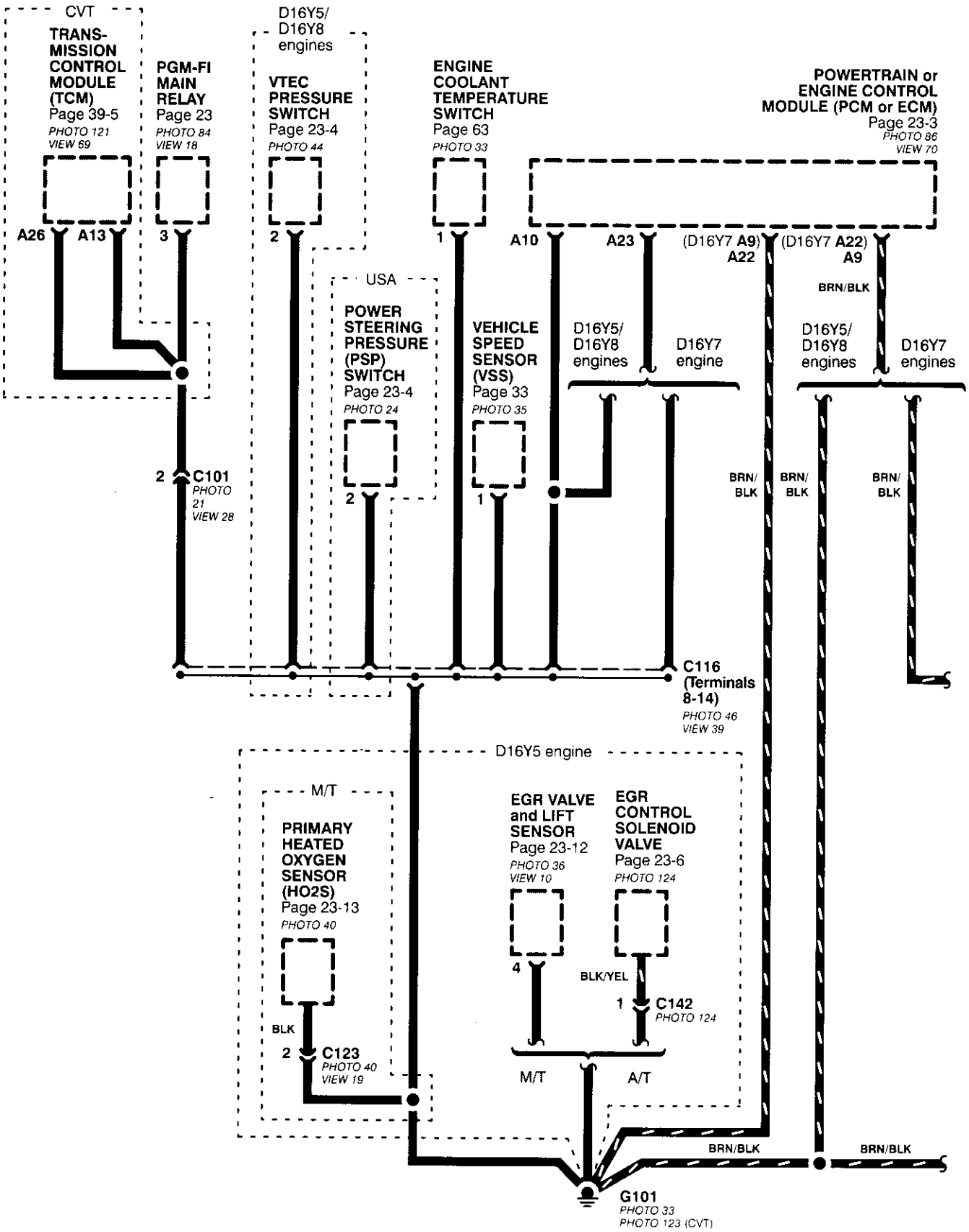

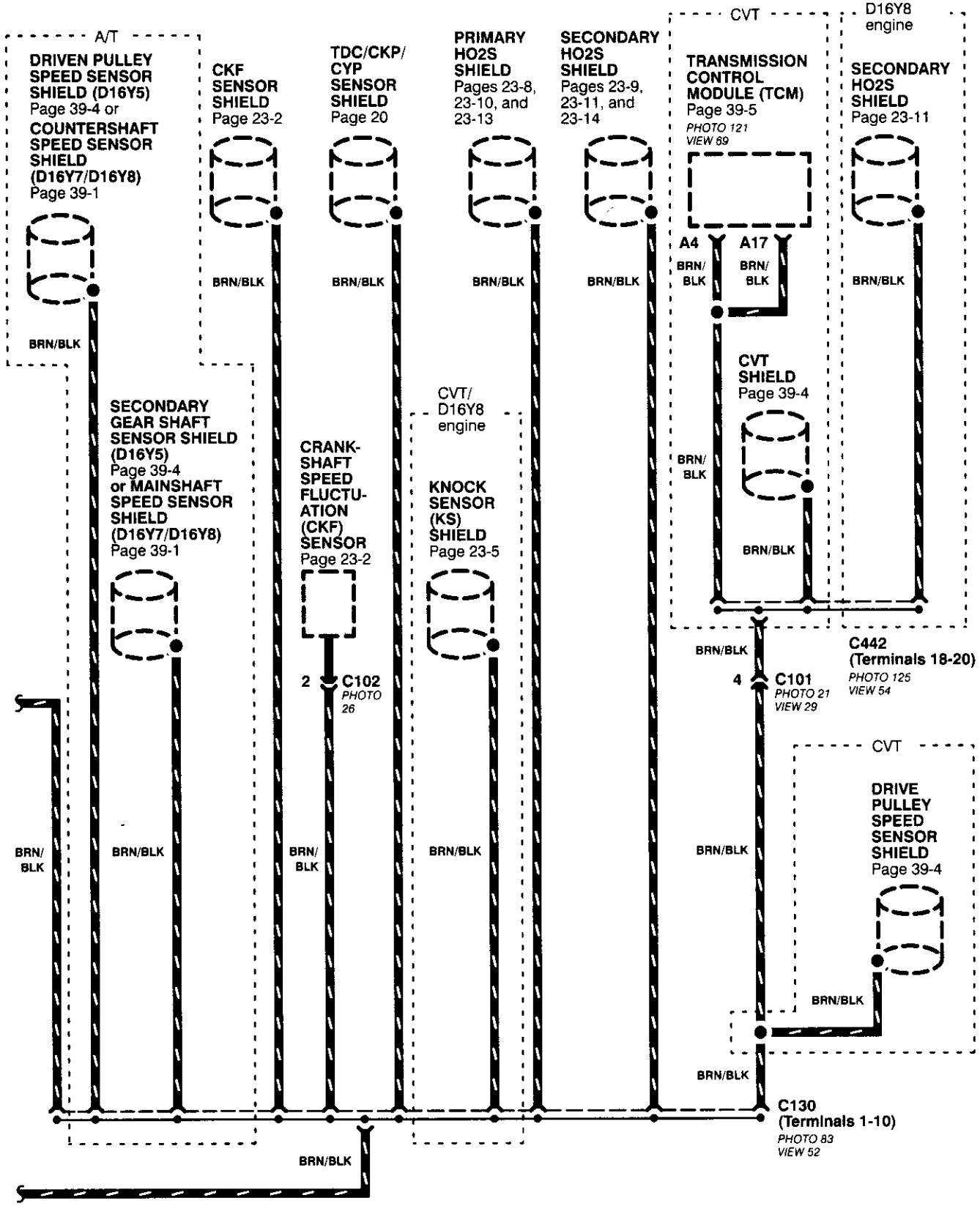
A/T
DRIVEN PULLEY SPEED SENSOR SHIELD (D16Y5)
Page 39-4 or
COUNTERSHAFT SPEED SENSOR SHIELD (D16Y7/D16Y8)
Page 39-1
CKF SENSOR SHIELD
Page 23-2
TDC/CKP/CYP SENSOR SHIELD
Page 20
PRIMARY HO2S SHIELD
Pages 23-8, 23-10, and 23-13
SECONDARY HO2S SHIELD
Pages 23-9, 23-11, and 23-14
CVT
TRANSMISSION CONTROL MODULE (TCM)
Page 39-5
PHOTO 121
VIEW 69
D16Y8 engine
SECONDARY HO2S SHIELD
Page 23-11
A4
A17
BRN/BLK
CVT SHIELD
Page 39-4
SECONDARY GEAR SHAFT SENSOR SHIELD (D16Y5)
Page 39-4
or MAINSHAFT SPEED SENSOR SHIELD (D16Y7/D16Y8)
Page 39-1
CRANK-SHAFT SPEED FLUCTU-ATION (CKF) SENSOR
Page 23-2
CVT/D16Y8 engine
KNOCK SENSOR (KS) SHIELD
Page 23-5
2
C102
PHOTO 26
4
C101
PHOTO 21
VIEW 29
C442
(Terminals 18-20)
PHOTO 125
VIEW 54
CVT
DRIVE PULLEY SPEED SENSOR SHIELD
Page 39-4
C130
(Terminals 1-10)
PHOTO 83
VIEW 52

Ground Distribution

G101 ('98 D16B5; All '99-'00 models except D16Y5 with M/T)

NOTE: Wires shown without color codes are black.

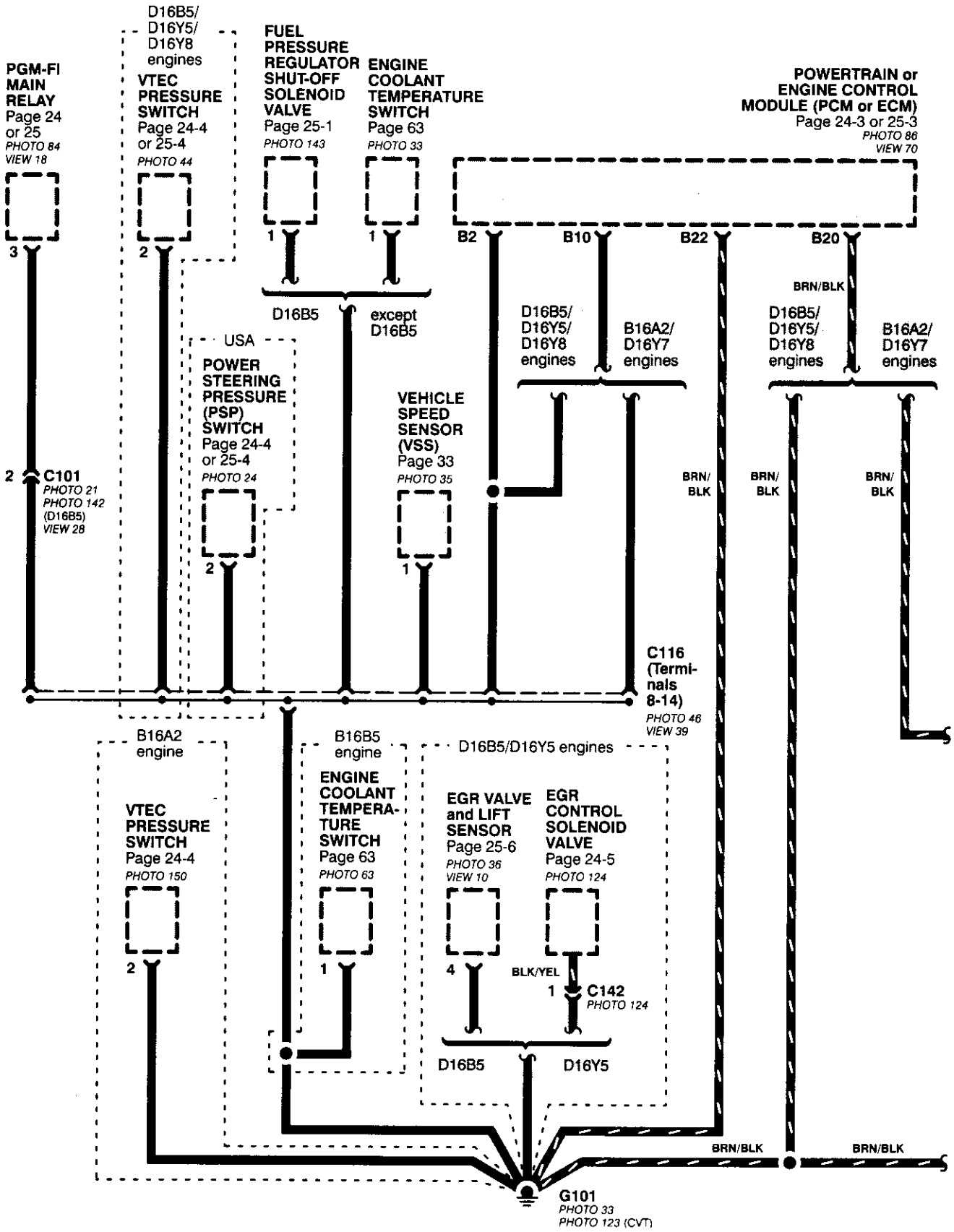

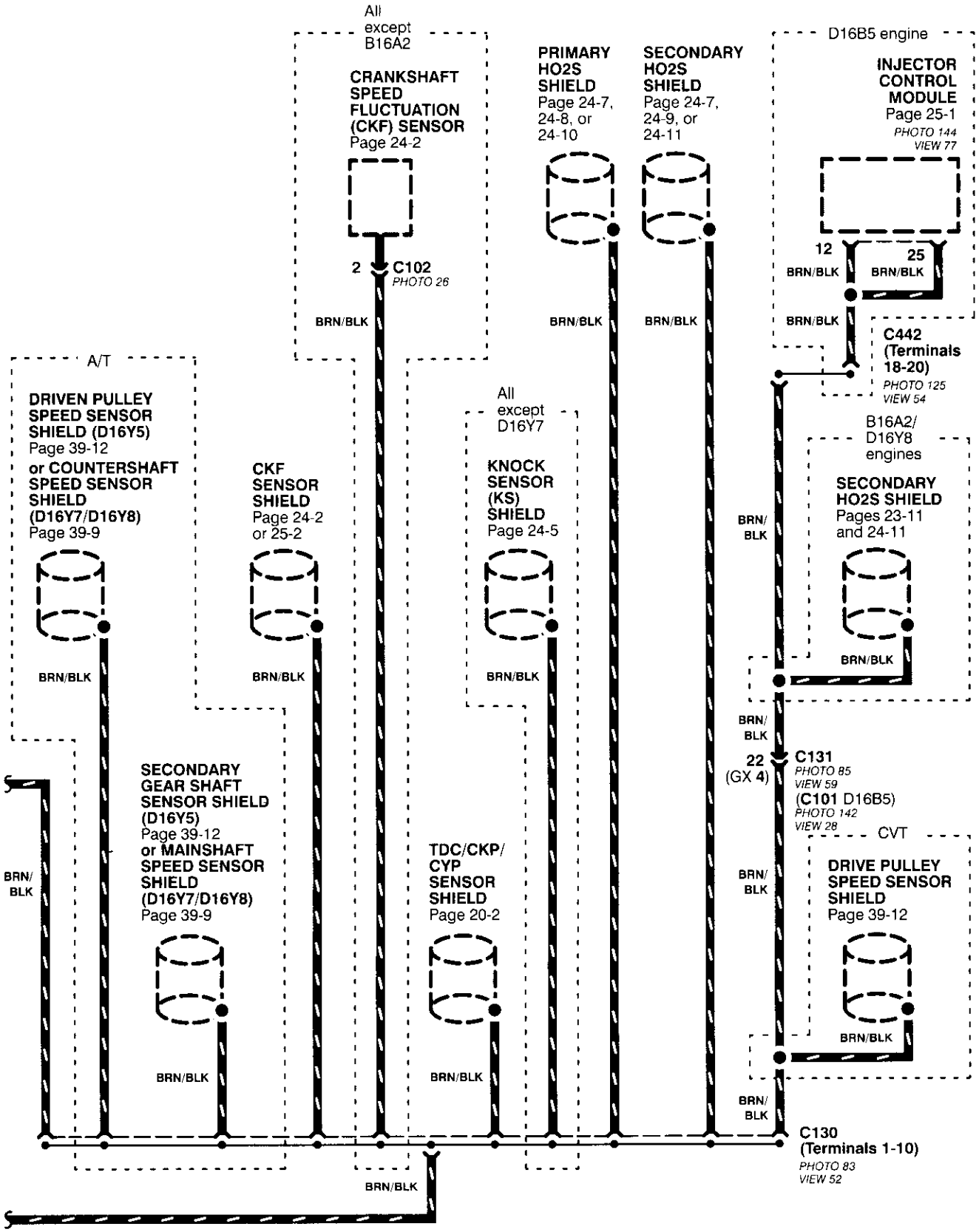
All except B16A2
CRANKSHAFT SPEED FLUCTUATION (CKF) SENSOR
Page 24-2
2
C102
PHOTO 26
BRN/BLK
PRIMARY HO2S SHIELD
Page 24-7, 24-8, or 24-10
SECONDARY HO2S SHIELD
Page 24-7, 24-9, or 24-11
D16B5 engine
INJECTOR CONTROL MODULE
Page 25-1
PHOTO 144
VIEW 77
12
25
BRN/BLK
C442 (Terminals 18-20)
PHOTO 125
VIEW 54
A/T
DRIVEN PULLEY SPEED SENSOR SHIELD (D16Y5)
Page 39-12
or COUNTERSHAFT SPEED SENSOR SHIELD (D16Y7/D16Y8)
Page 39-9
CKF SENSOR SHIELD
Page 24-2 or 25-2
All except D16Y7
KNOCK SENSOR (KS) SHIELD
Page 24-5
B16A2/ D16Y8 engines
SECONDARY HO2S SHIELD
Pages 23-11 and 24-11
BRN/ BLK
22 (GX 4)
C131
PHOTO 85
VIEW 59
(C101 D16B5)
PHOTO 142
VIEW 28
SECONDARY GEAR SHAFT SENSOR SHIELD (D16Y5)
Page 39-12
or MAINSHAFT SPEED SENSOR SHIELD (D16Y7/D16Y8)
Page 39-9
TDC/CKP/ CYP SENSOR SHIELD
Page 20-2
CVT
DRIVE PULLEY SPEED SENSOR SHIELD
Page 39-12
C130 (Terminals 1-10)
PHOTO 83
VIEW 52

Ground Distribution (cont'd)

G201 and G202

NOTE: Wires shown without color codes are black.

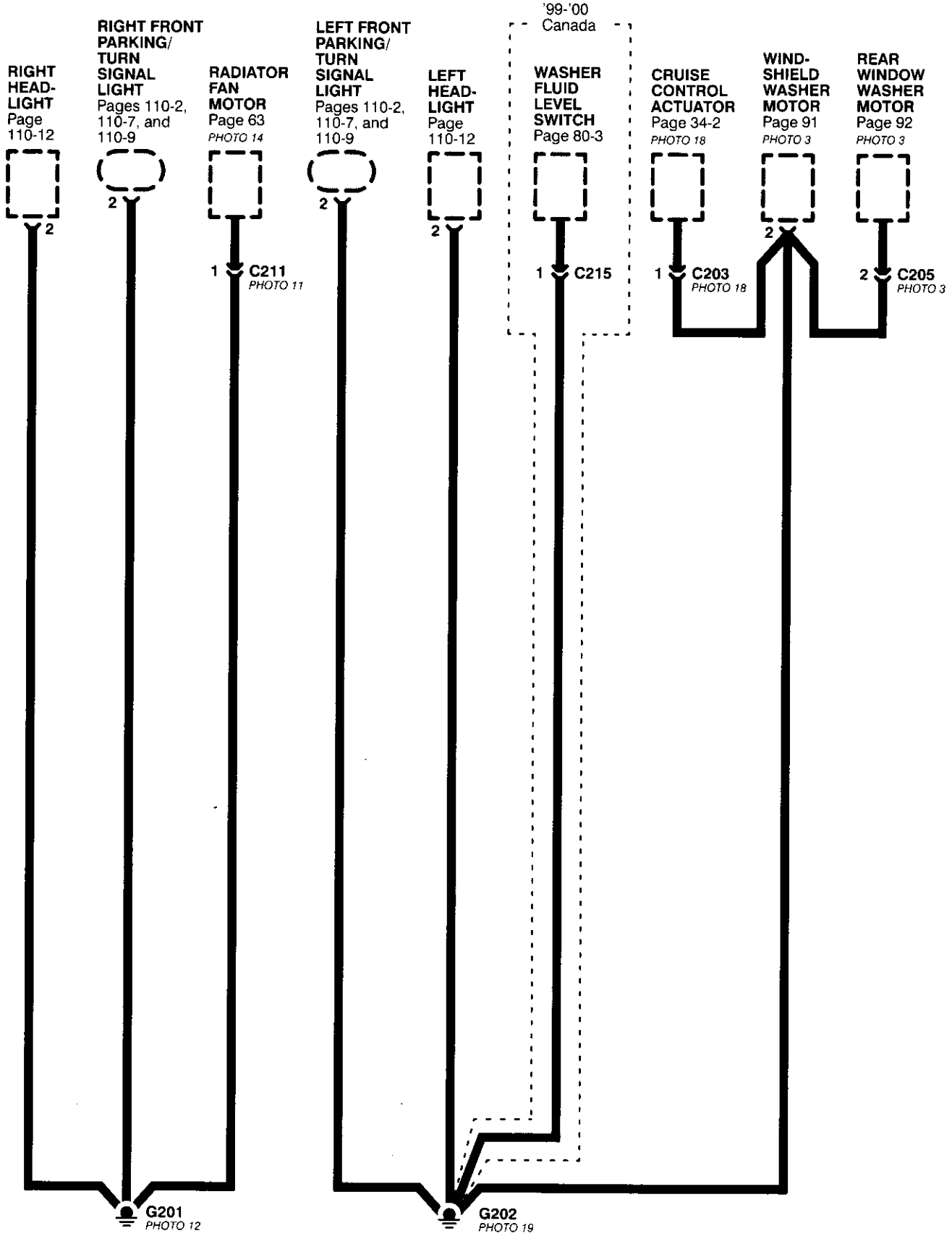

G402

NOTES:

- Wires shown without color codes are black.
- On '97-'00 models, G402 may be represented by the use of a junction connector or ring terminals.

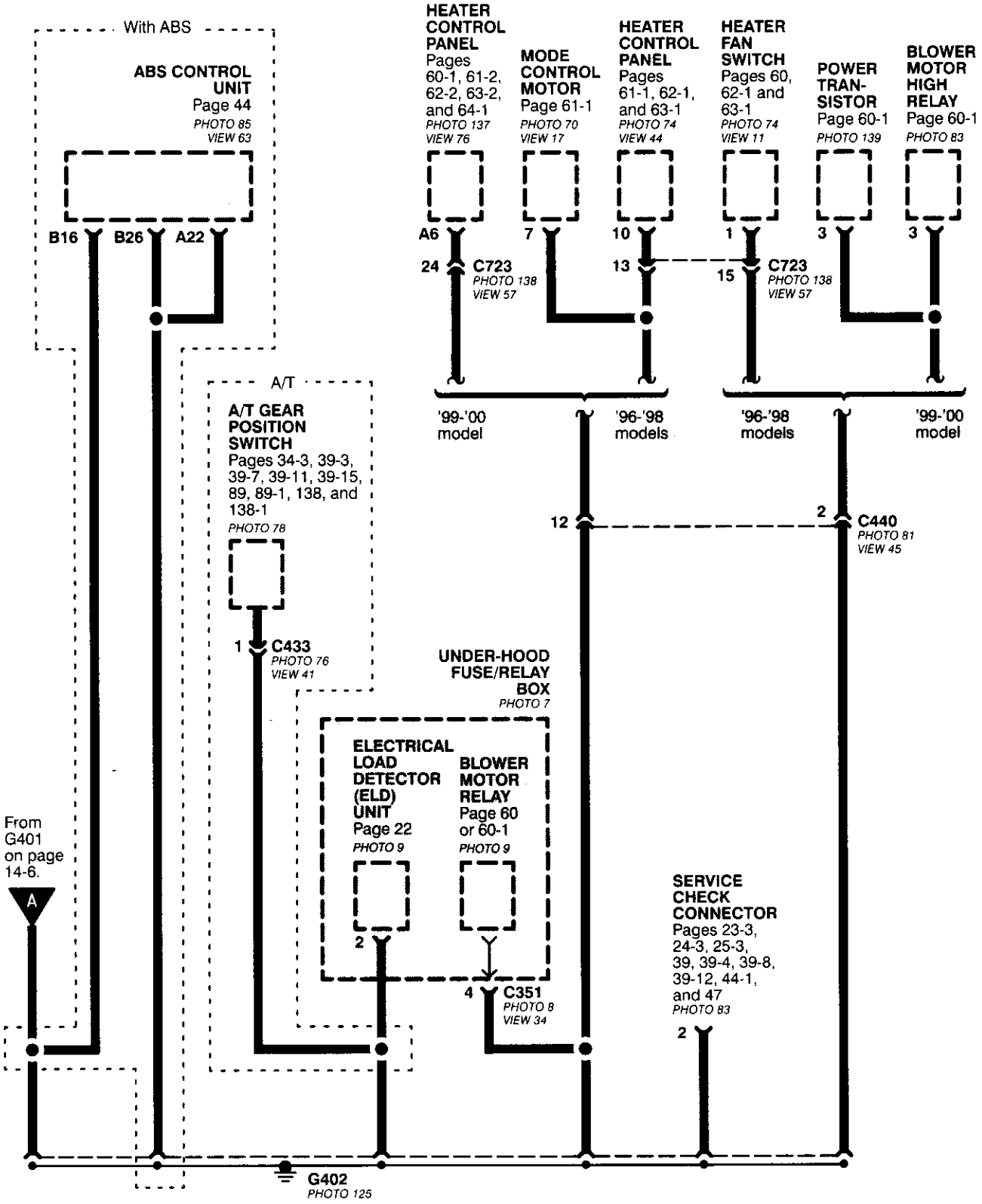

Ground Distribution (cont'd)

G401

NOTE:

- Wires shown without color codes are black.
- On Coupe and Sedan models, G401 is represented by ring terminals.

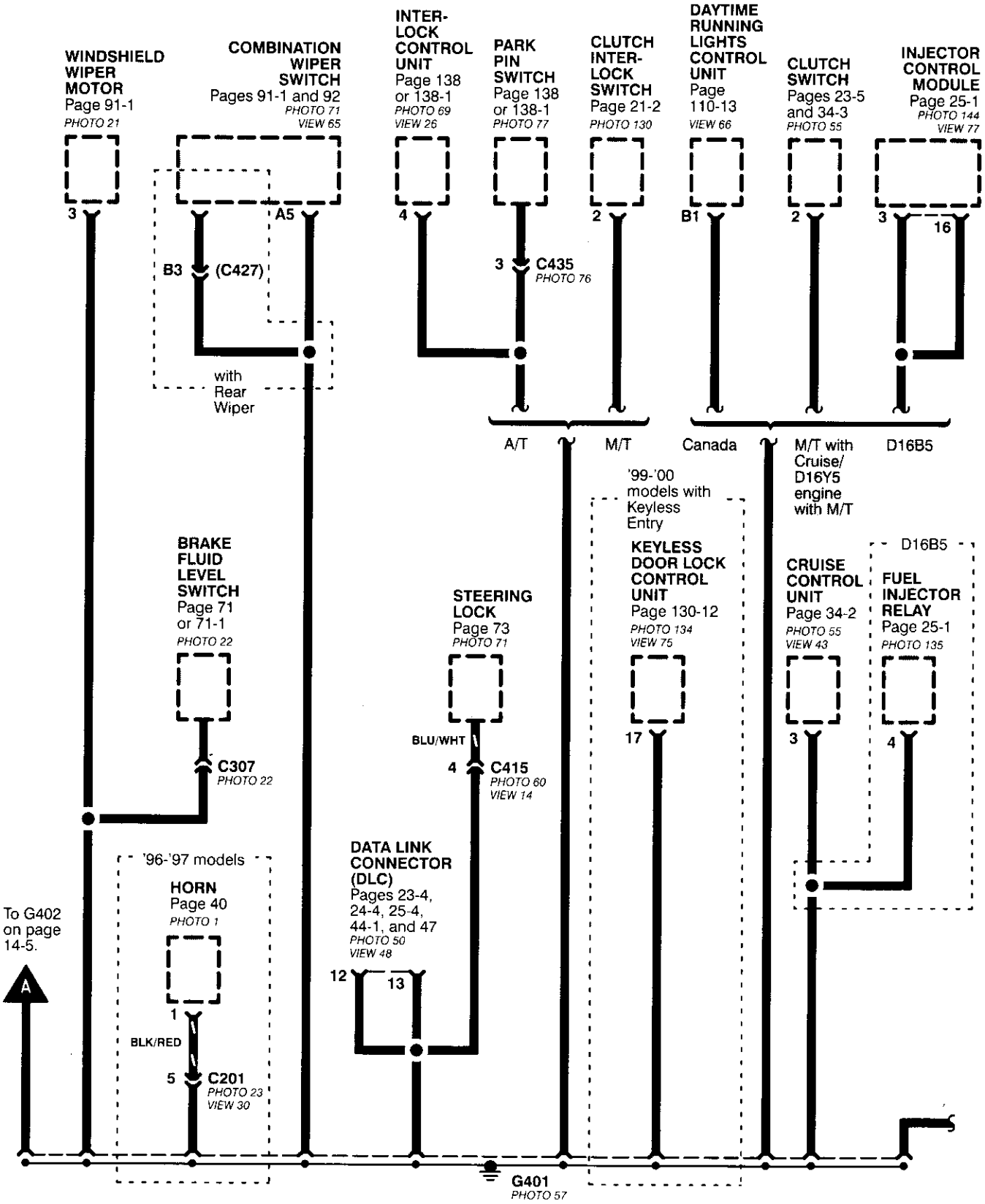

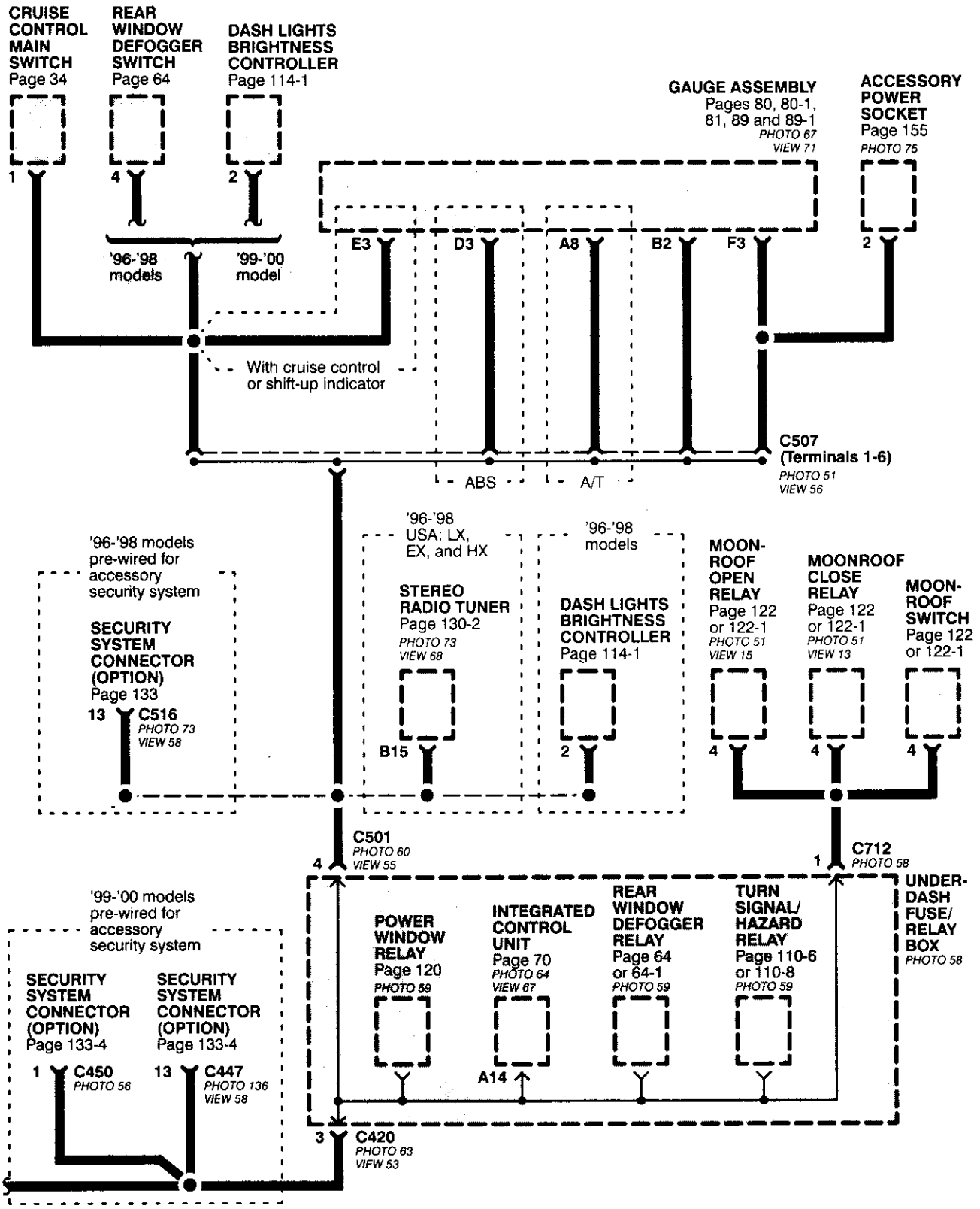
CRUISE CONTROL MAIN SWITCH
Page 34
REAR WINDOW DEFOGGER SWITCH
Page 64
DASH LIGHTS BRIGHTNESS CONTROLLER
Page 114-1
GAUGE ASSEMBLY
Pages 80, 80-1, 81, 89 and 89-1
PHOTO 67
VIEW 71
ACCESSORY POWER SOCKET
Page 155
PHOTO 75
1
4
2
'96-'98 models
'99-'00 model
E3
D3
A8
B2
F3
2
With cruise control or shift-up indicator
C507 (Terminals 1-6)
PHOTO 51
VIEW 56
ABS
A/T
'96-'98 models pre-wired for accessory security system
SECURITY SYSTEM CONNECTOR (OPTION)
Page 133
13
C516
PHOTO 73
VIEW 58
'96-'98 USA: LX, EX, and HX
STEREO RADIO TUNER
Page 130-2
PHOTO 73
VIEW 68
B15
'96-'98 models
DASH LIGHTS BRIGHTNESS CONTROLLER
Page 114-1
2
MOON-ROOF OPEN RELAY
Page 122 or 122-1
PHOTO 51
VIEW 15
MOONROOF CLOSE RELAY
Page 122 or 122-1
PHOTO 51
VIEW 13
MOON-ROOF SWITCH
Page 122 or 122-1
4
4
4
C501
PHOTO 60
VIEW 55
4
1
C712
PHOTO 58
UNDER-DASH FUSE/ RELAY BOX
PHOTO 58
'99-'00 models pre-wired for accessory security system
SECURITY SYSTEM CONNECTOR (OPTION)
Page 133-4
1
C450
PHOTO 56
SECURITY SYSTEM CONNECTOR (OPTION)
Page 133-4
13
C447
PHOTO 136
VIEW 58
POWER WINDOW RELAY
Page 120
PHOTO 59
INTEGRATED CONTROL UNIT
Page 70
PHOTO 64
VIEW 67
REAR WINDOW DEFOGGER RELAY
Page 64 or 64-1
PHOTO 59
TURN SIGNAL/ HAZARD RELAY
Page 110-6 or 110-8
PHOTO 59
A14
3
C420
PHOTO 63
VIEW 53

Ground Distribution (cont'd)

G551

NOTE: Wires shown without color codes are black.

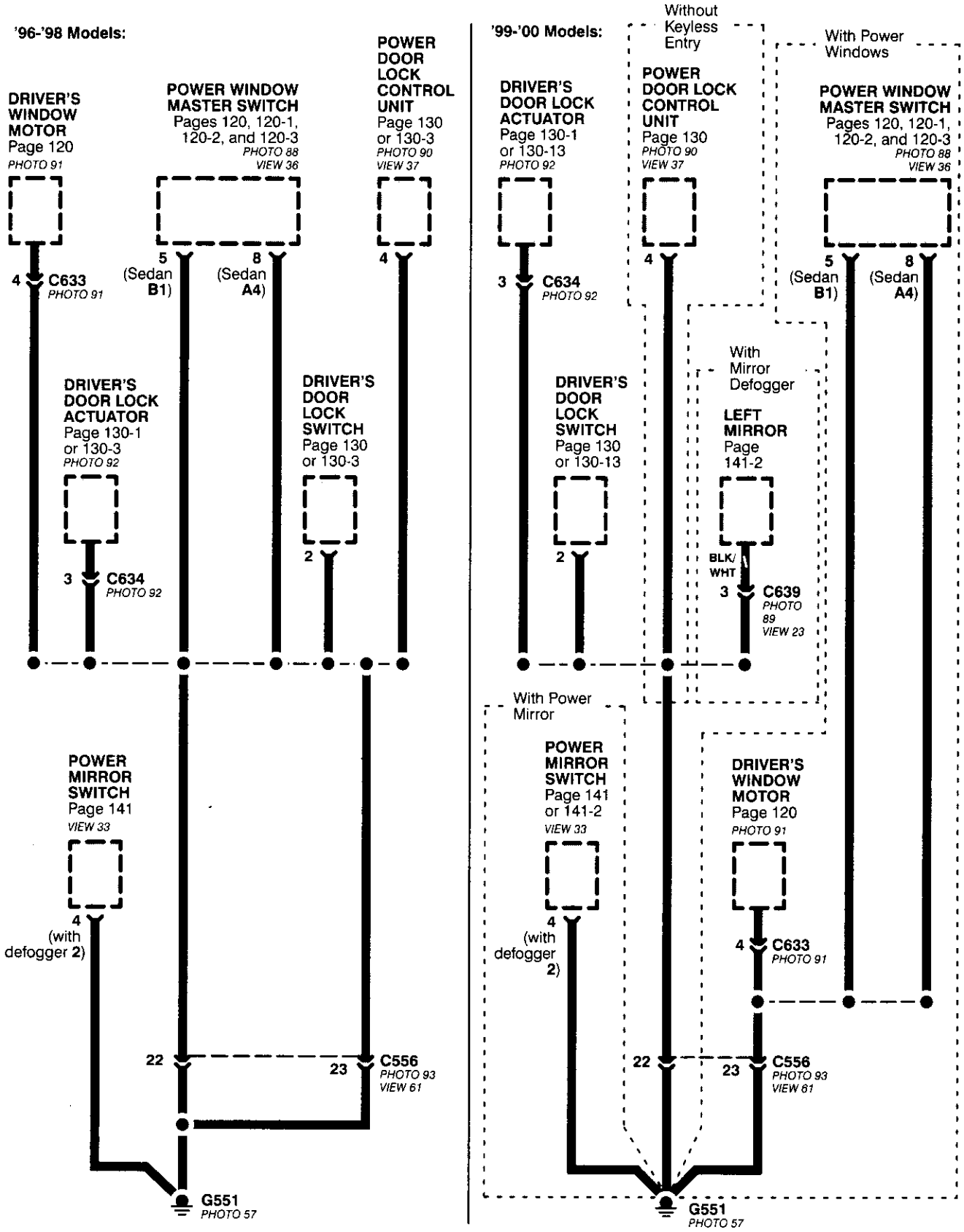

G501 and G502

NOTE: Wires shown without color codes are black.

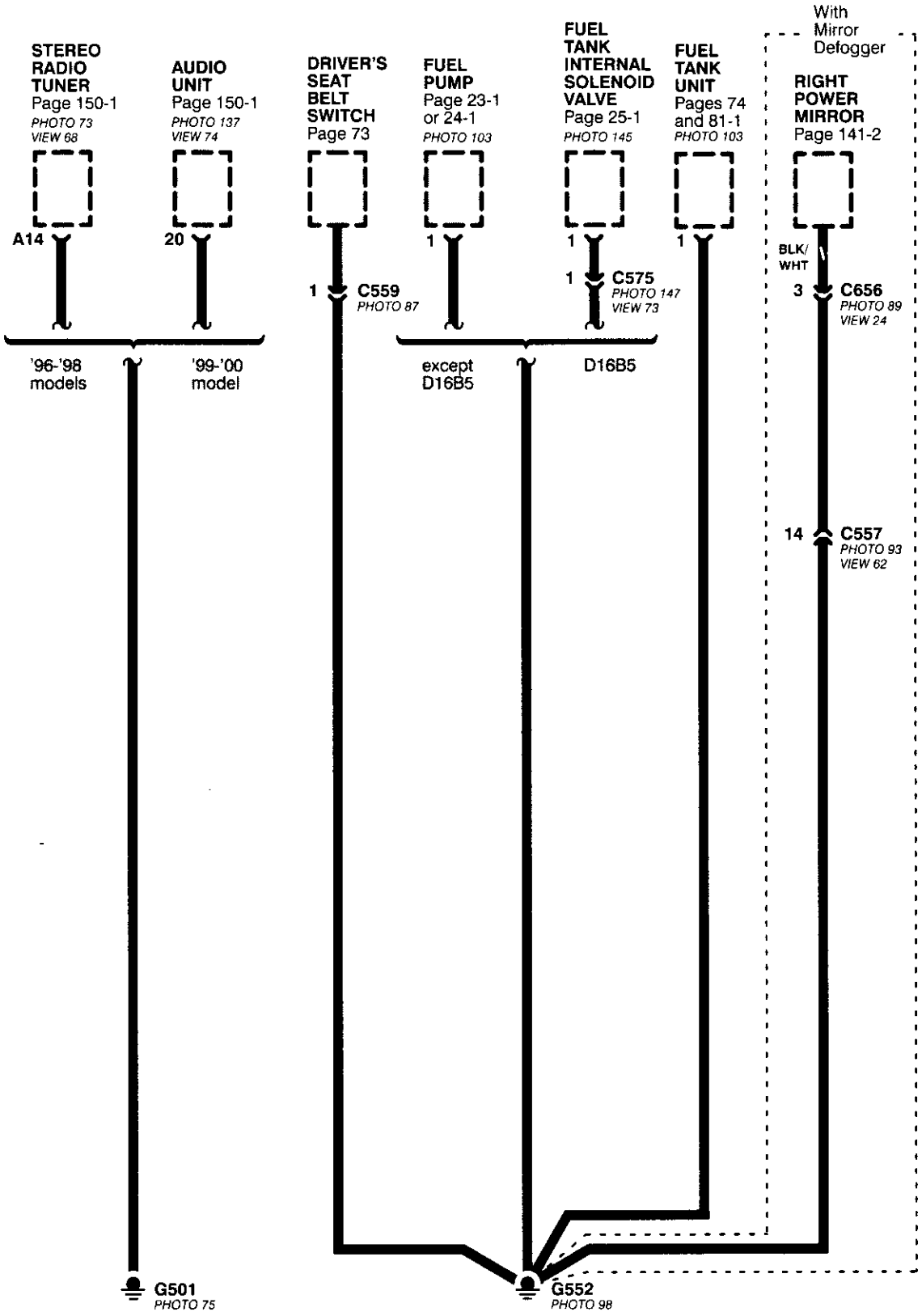

Ground Distribution (cont'd)

– G601 (All Coupes and '96-'98 Sedans)

NOTE: Wires shown without color codes are black.

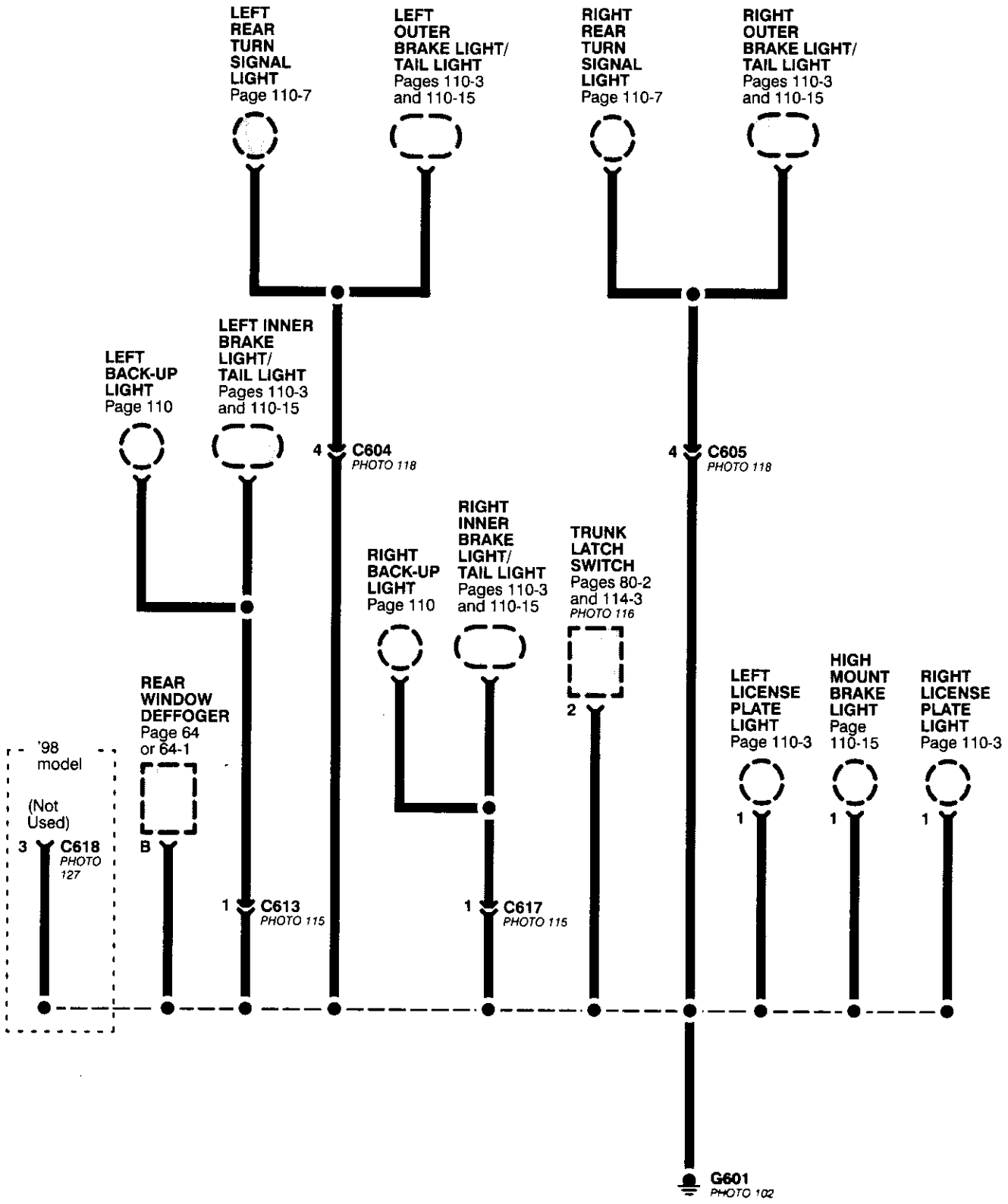

G601 ('99-'00 Sedan) and G602 ('99-'00 Sedan except GX)

NOTE: Wires shown without color codes are black.

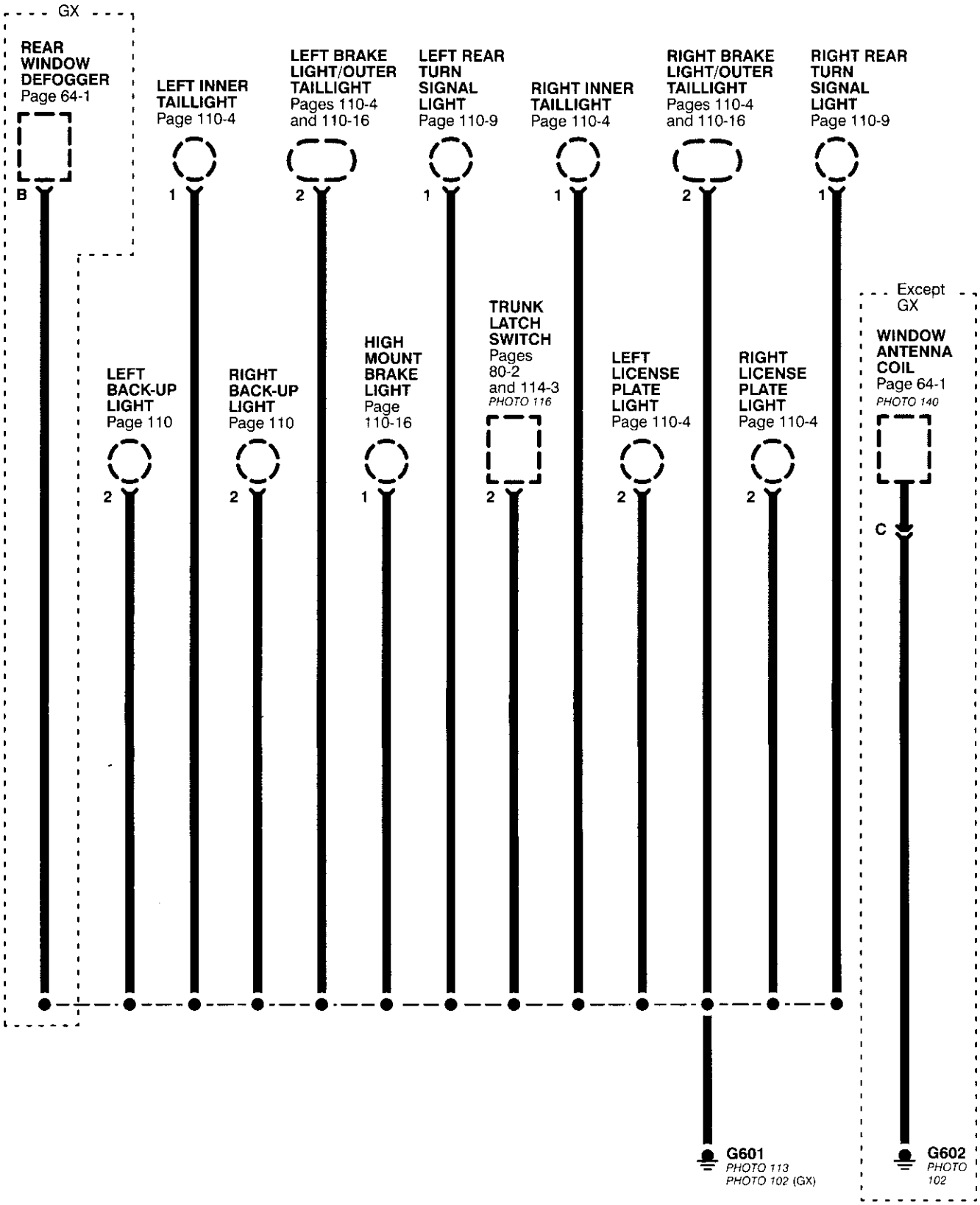

Ground Distribution (cont'd)

– G601 (Hatchback) and G761 (Hatchback)

NOTE: Wires shown without color codes are black.

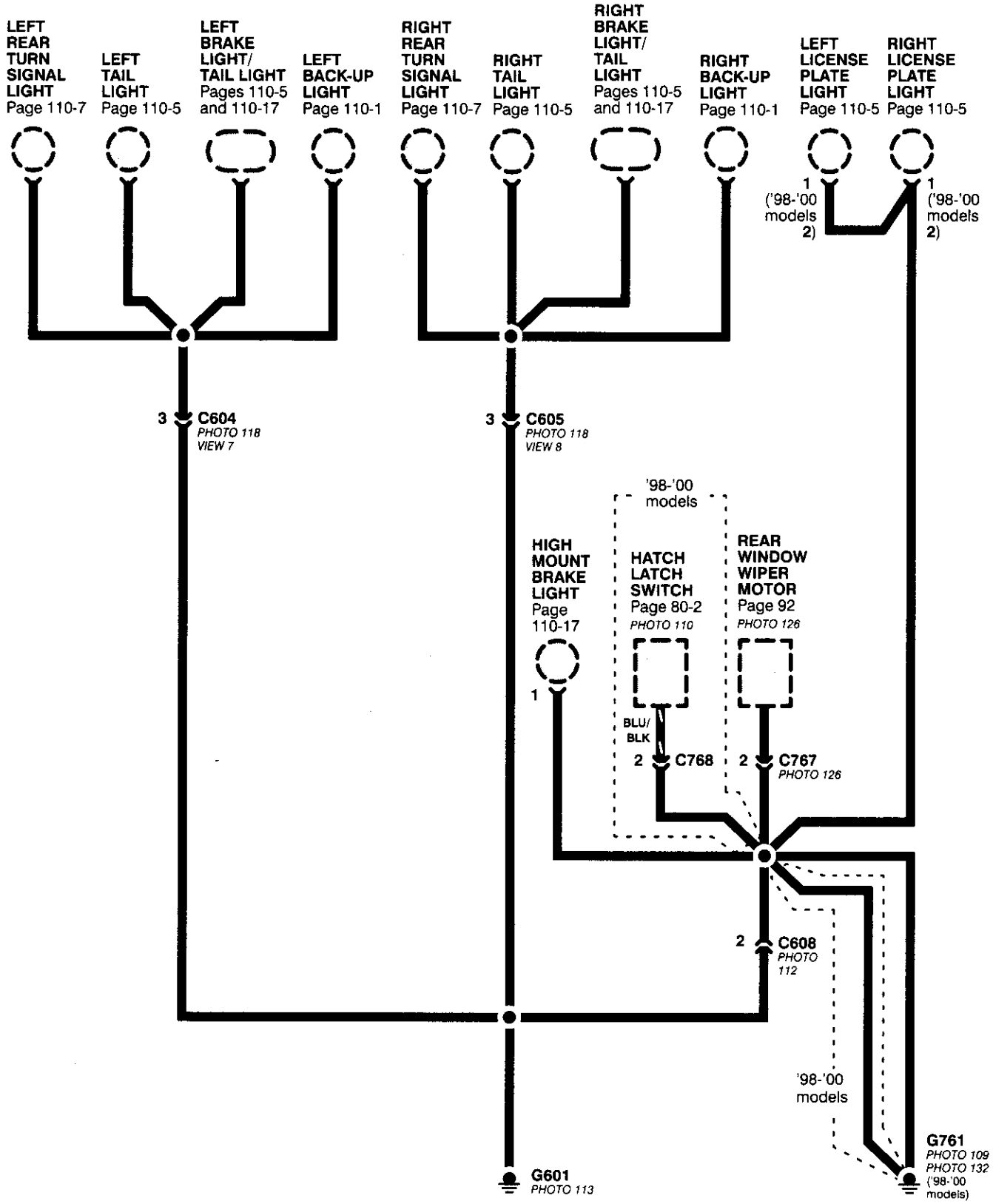

G1, G2, G3, and G403

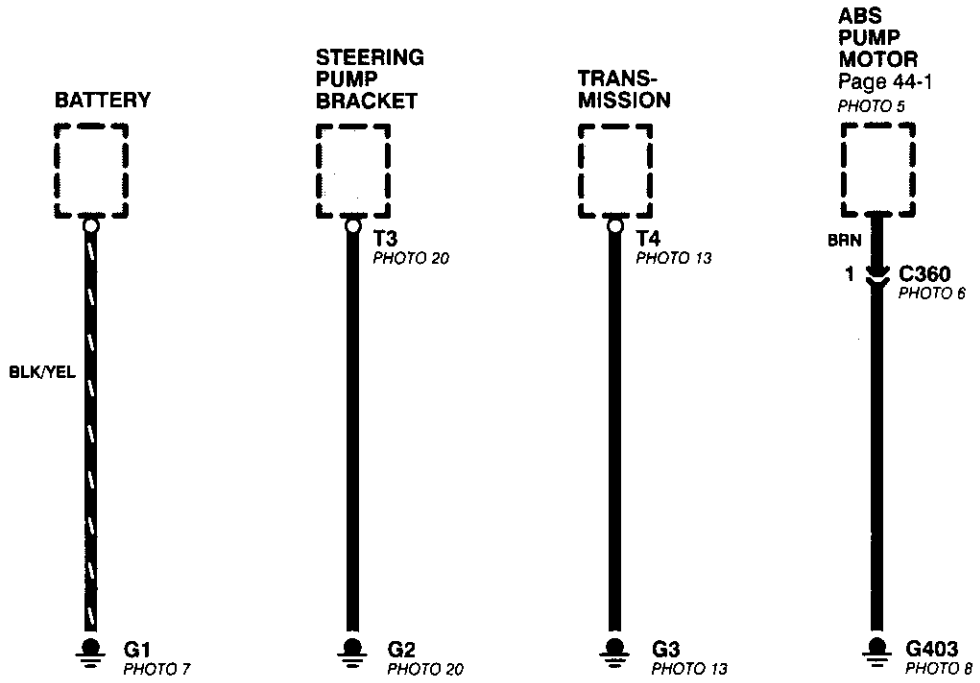

G751, G771, and G801

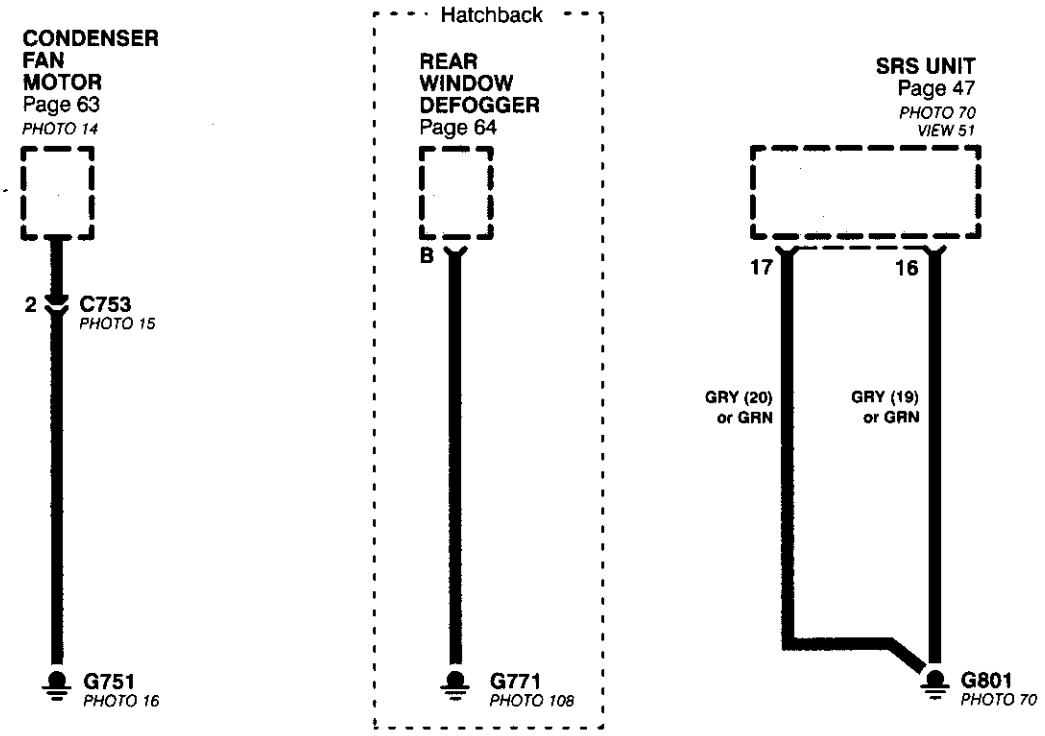

Ignition System

All '96-'98 Models except D16B5; '99-'00 D16Y5 with M/T

NOTE: For Service Check Connector details, see page 23-3.

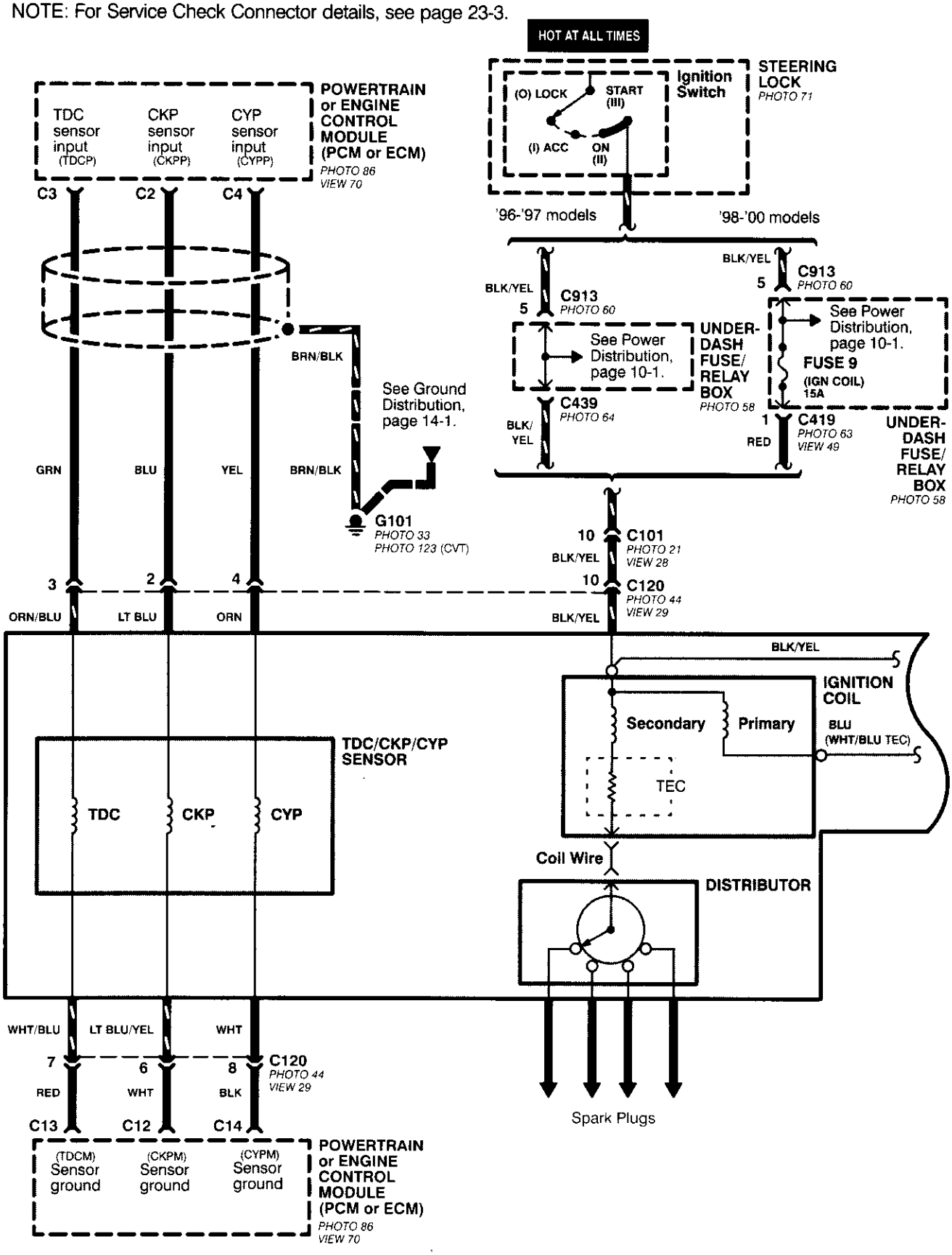

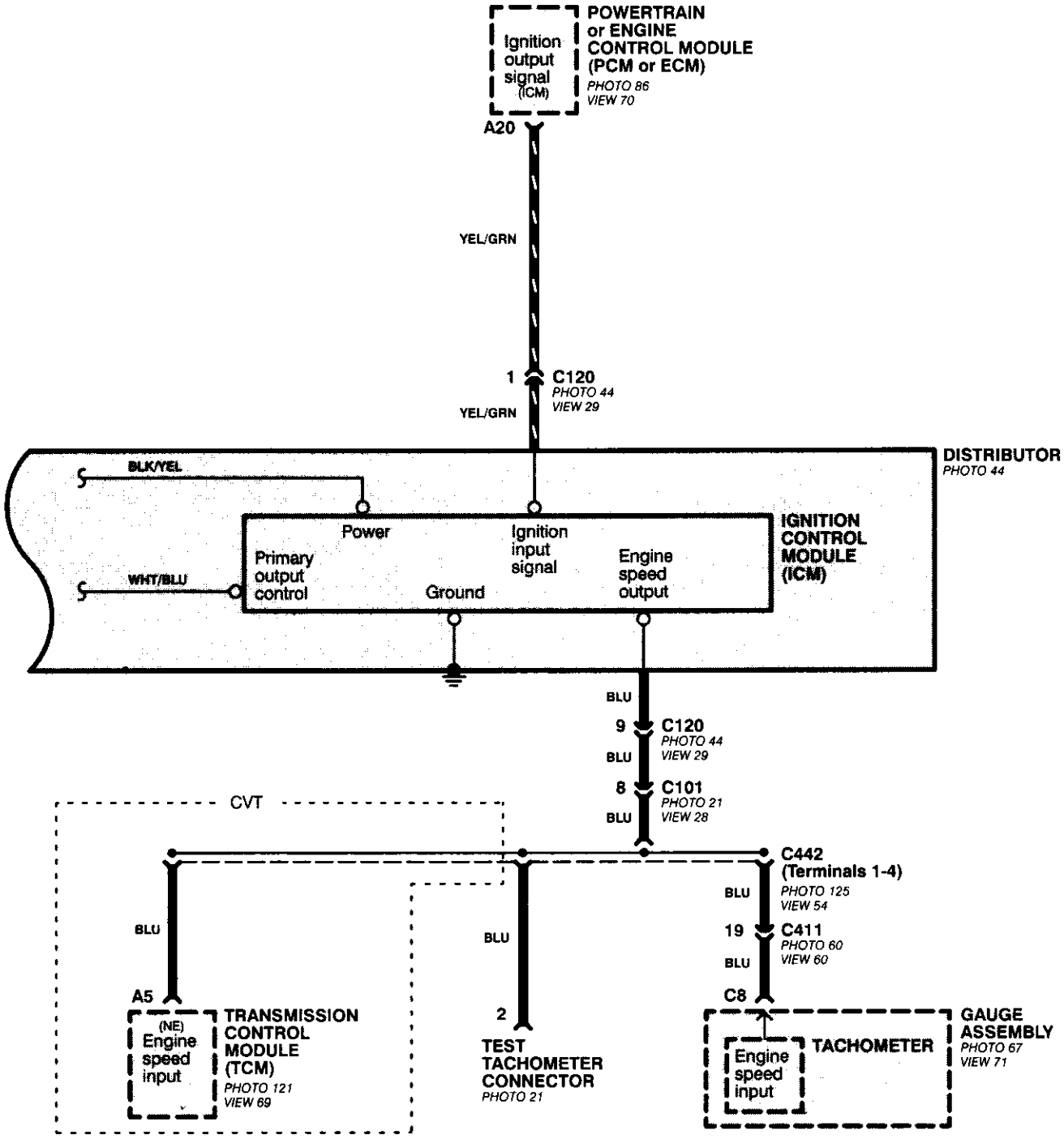
POWERTRAIN or ENGINE CONTROL MODULE (PCM or ECM)
PHOTO 86
VIEW 70
Ignition output signal (ICM)
A20
YEL/GRN
1
C120
PHOTO 44
VIEW 29
YEL/GRN
DISTRIBUTOR
PHOTO 44
BLK/YEL
WHT/BLU
Power
Primary output control
Ignition input signal
Ground
Engine speed output
IGNITION CONTROL MODULE (ICM)
BLU
9
C120
PHOTO 44
VIEW 29
BLU
8
C101
PHOTO 21
VIEW 28
BLU
CVT
C442 (Terminals 1-4)
PHOTO 125
VIEW 54
BLU
19
C411
PHOTO 60
VIEW 60
BLU
BLU
BLU
A5
(NE) Engine speed input
TRANSMISSION CONTROL MODULE (TCM)
PHOTO 121
VIEW 69
2
TEST TACHOMETER CONNECTOR
PHOTO 21
C8
Engine speed input
TACHOMETER
GAUGE ASSEMBLY
PHOTO 67
VIEW 71

Ignition System

All D16B5 engines; All '99-'00 Models except D16Y5 with M/T

NOTE: For Service Check Connector details, see page 24-4 (except D16B5) or 25-4 (D16B5).

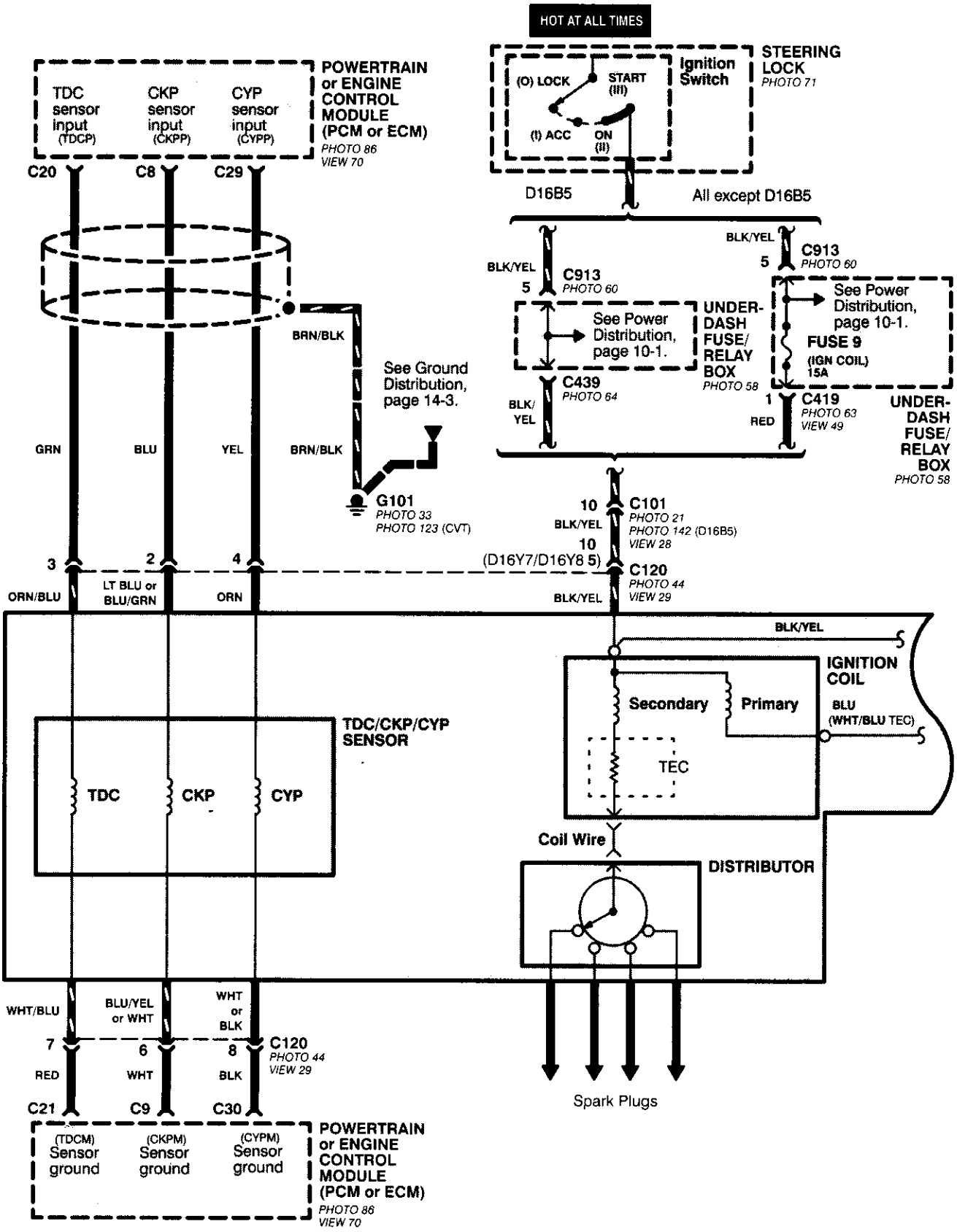

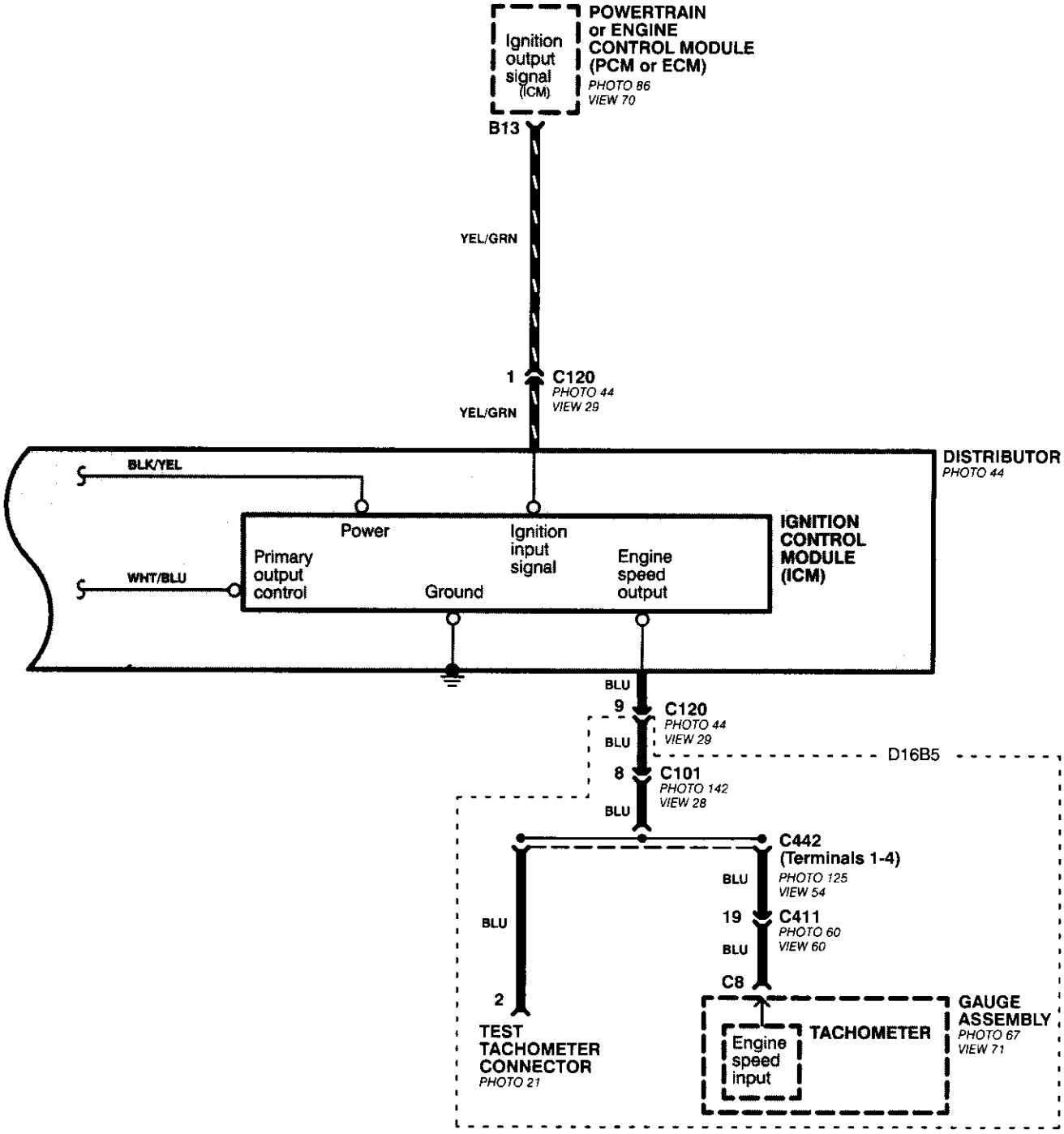
Ignition output signal (ICM)
POWERTRAIN or ENGINE CONTROL MODULE (PCM or ECM)
PHOTO 86
VIEW 70
B13
YEL/GRN
1
C120
PHOTO 44
VIEW 29
YEL/GRN
DISTRIBUTOR
PHOTO 44
BLK/YEL
Power
Ignition input signal
Engine speed output
IGNITION CONTROL MODULE (ICM)
WHT/BLU
Primary output control
Ground
BLU
9
C120
PHOTO 44
VIEW 29
BLU
D16B5
8
C101
PHOTO 142
VIEW 28
BLU
C442
(Terminals 1-4)
PHOTO 125
VIEW 54
BLU
19
C411
PHOTO 60
VIEW 60
BLU
C8
BLU
2
TEST TACHOMETER CONNECTOR
PHOTO 21
Engine speed input
TACHOMETER
GAUGE ASSEMBLY
PHOTO 67
VIEW 71

Starting System

– Automatic Transmission (All except D16B5)

NOTE: For cars equipped with optional security system, see Security System, page 133-3, 133-7, or 133-12 for starting system circuit schematic.

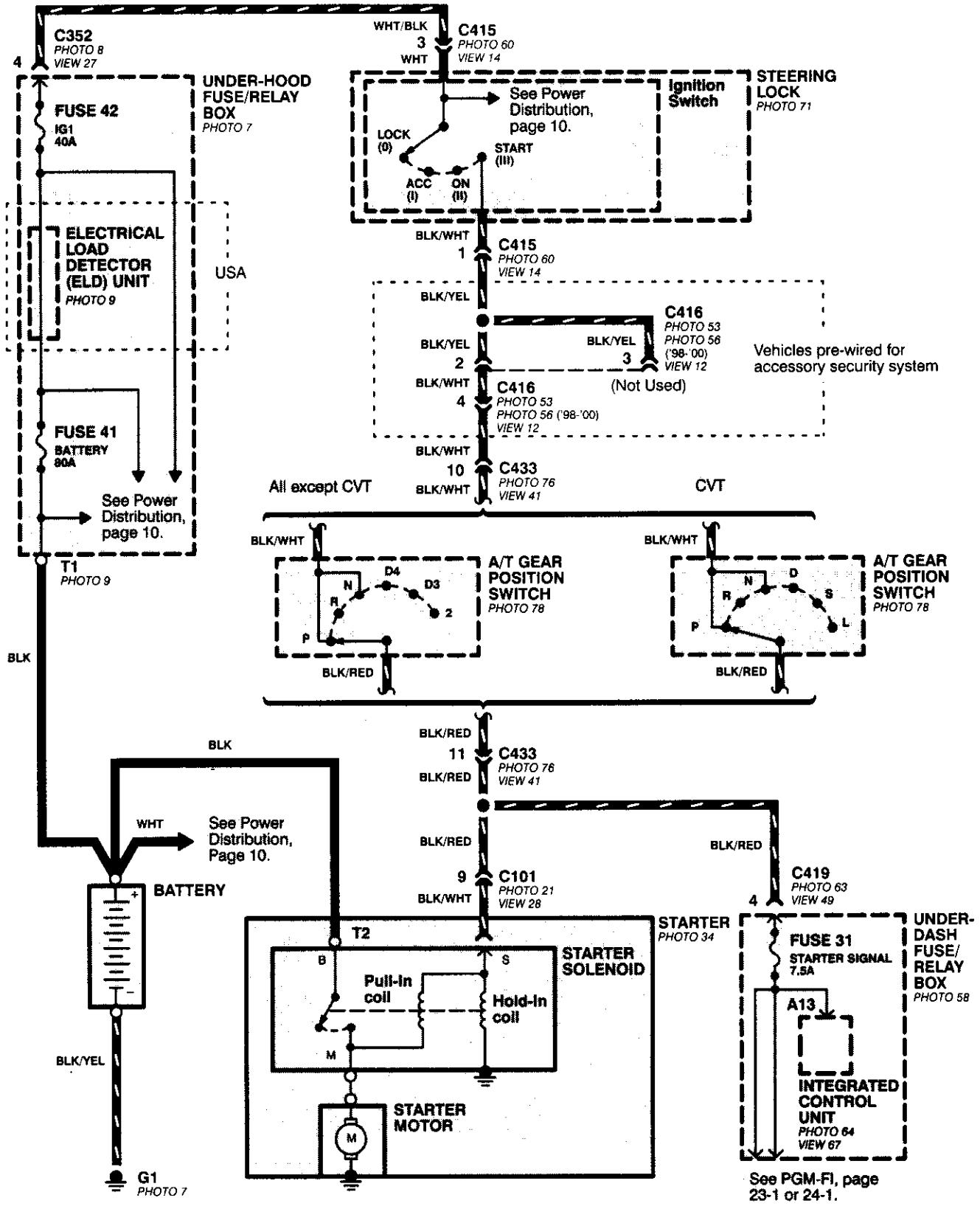

Automatic Transmission (D16B5)

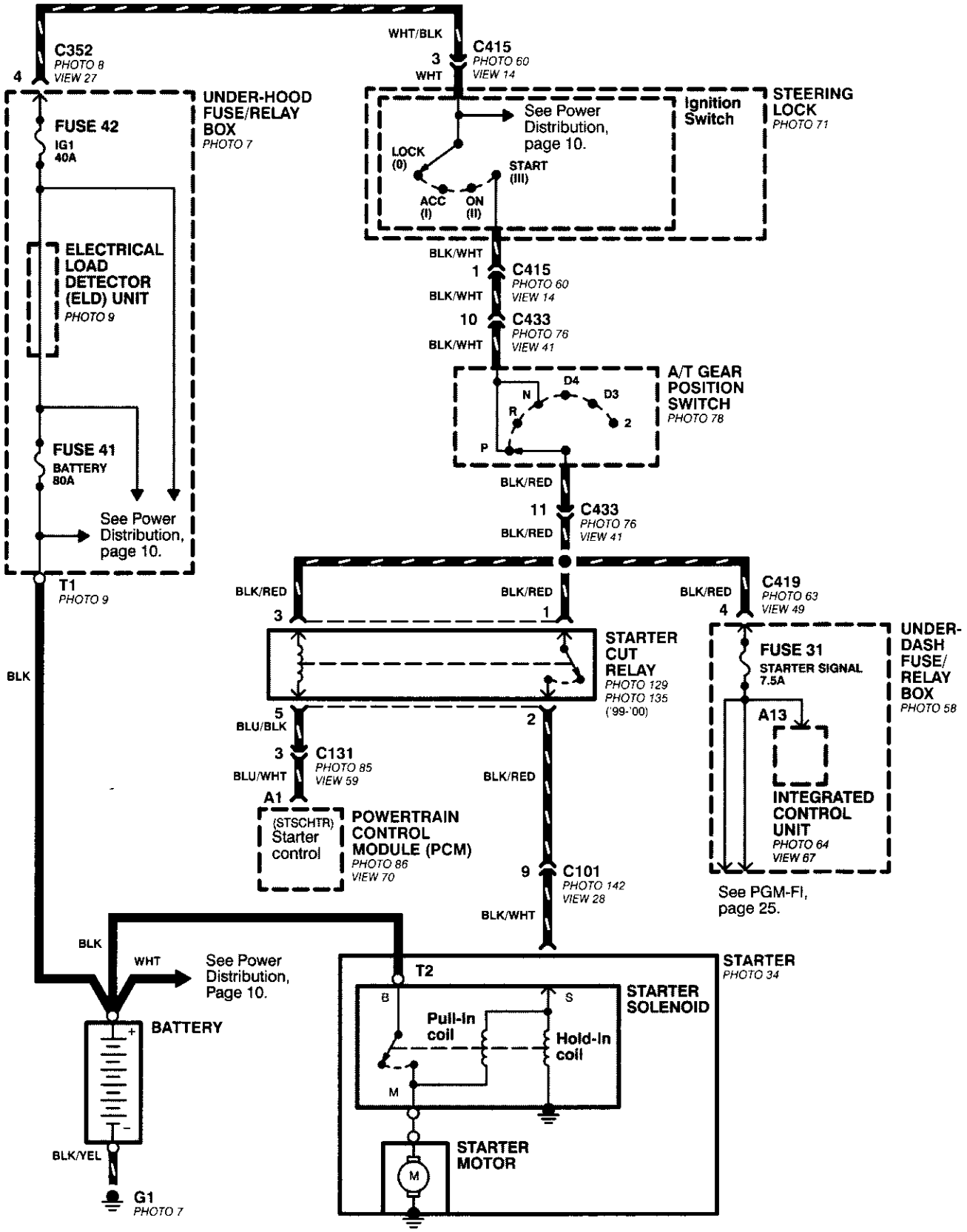

Starting System

– Manual Transmission

NOTE: For cars equipped with optional security system, see Security System, page 133-3, or 133-7, or 133-12 for starting system circuit schematic.

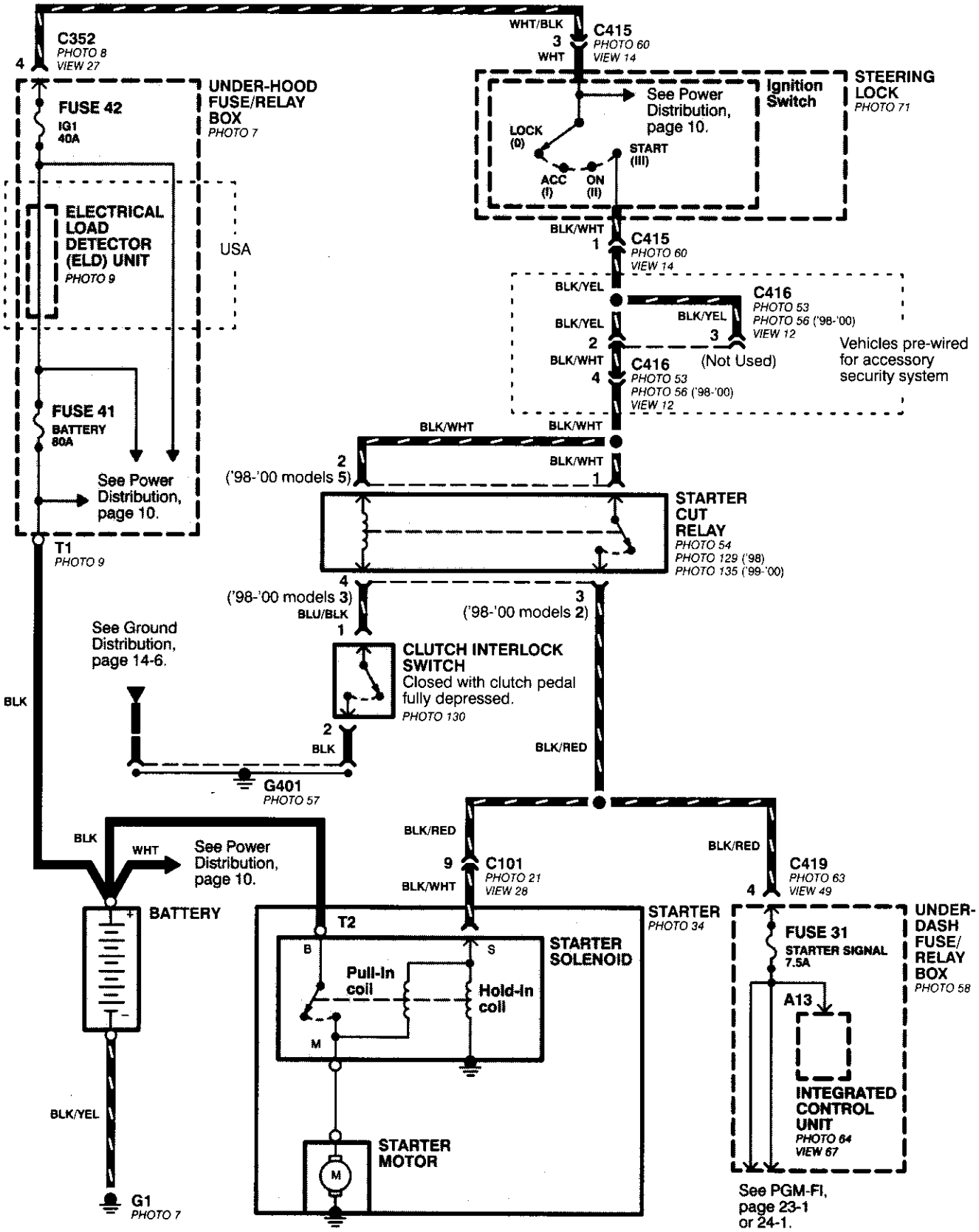

Charging System

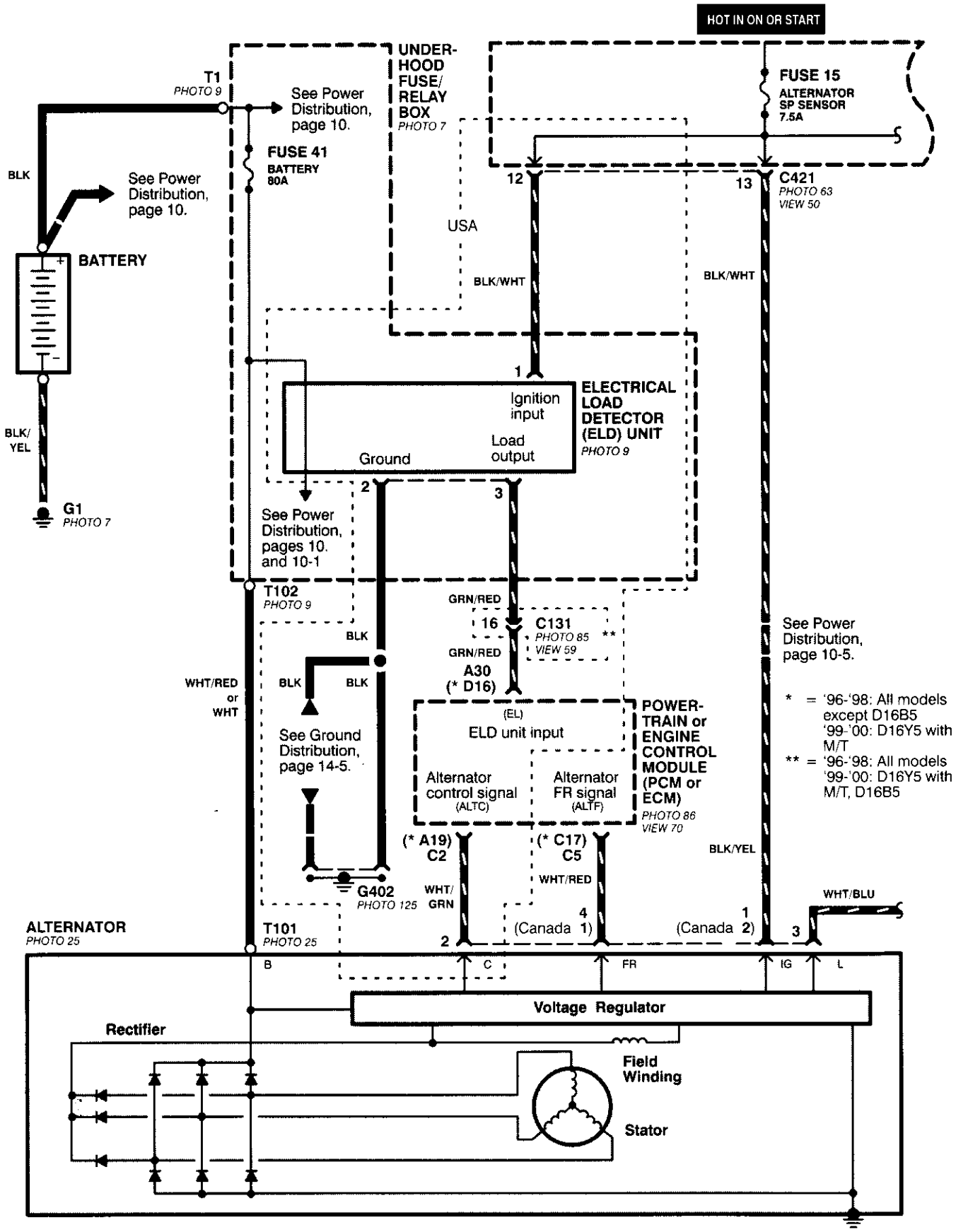

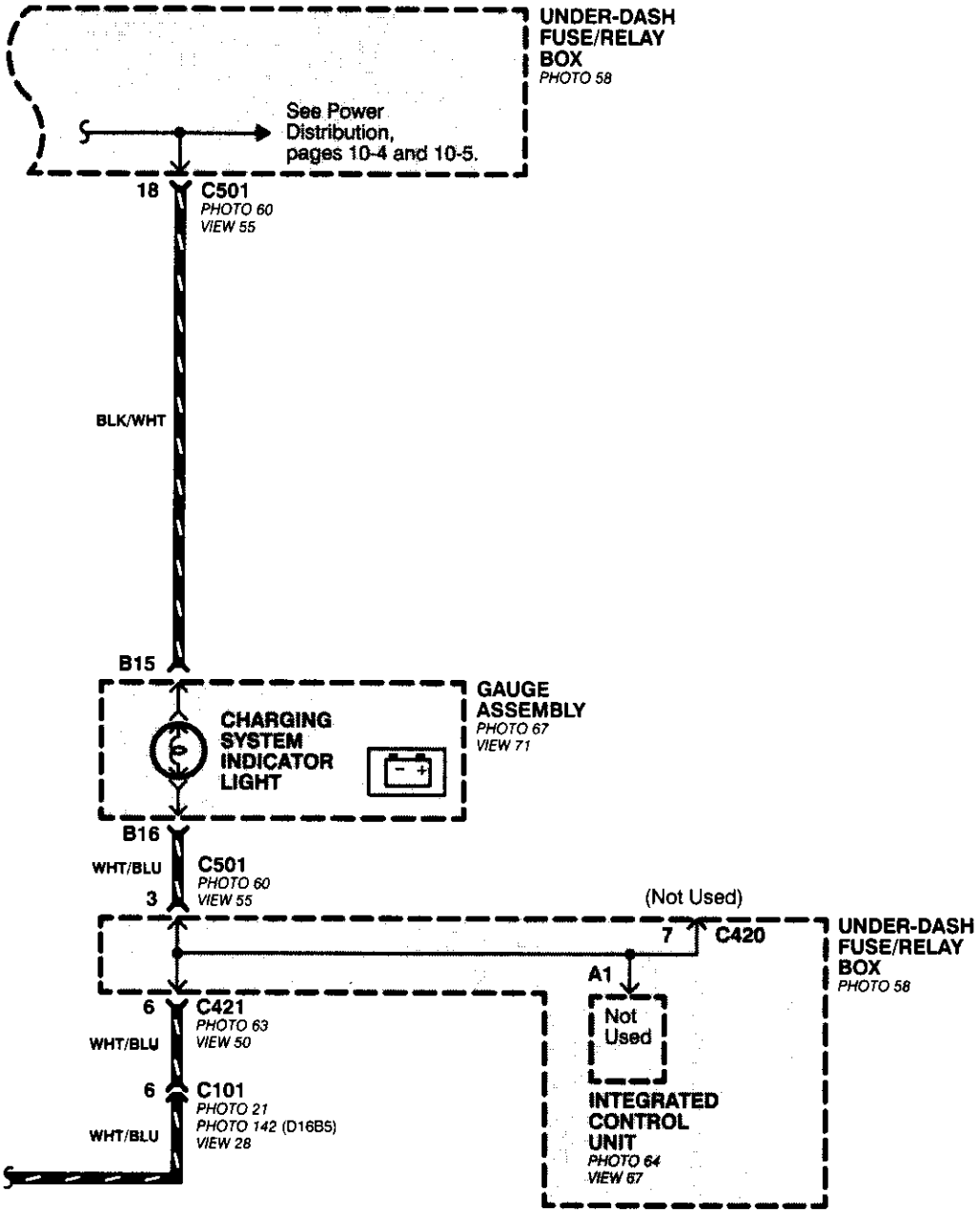
UNDER-DASH FUSE/RELAY BOX
PHOTO 58
See Power Distribution, pages 10-4 and 10-5.
18
C501
PHOTO 60
VIEW 55
BLK/WHT
B15
GAUGE ASSEMBLY
PHOTO 67
VIEW 71
CHARGING SYSTEM INDICATOR LIGHT
B16
WHT/BLU
C501
PHOTO 60
VIEW 55
3
(Not Used)
7
C420
UNDER-DASH FUSE/RELAY BOX
PHOTO 58
A1
Not Used
6
C421
PHOTO 63
VIEW 50
WHT/BLU
6
C101
PHOTO 21
PHOTO 142 (D16B5)
VIEW 28
WHT/BLU
INTEGRATED CONTROL UNIT
PHOTO 64
VIEW 67

PGM-FI (All '96-'98 Models except D16B5; '99-'00 D16Y5 with M/T)

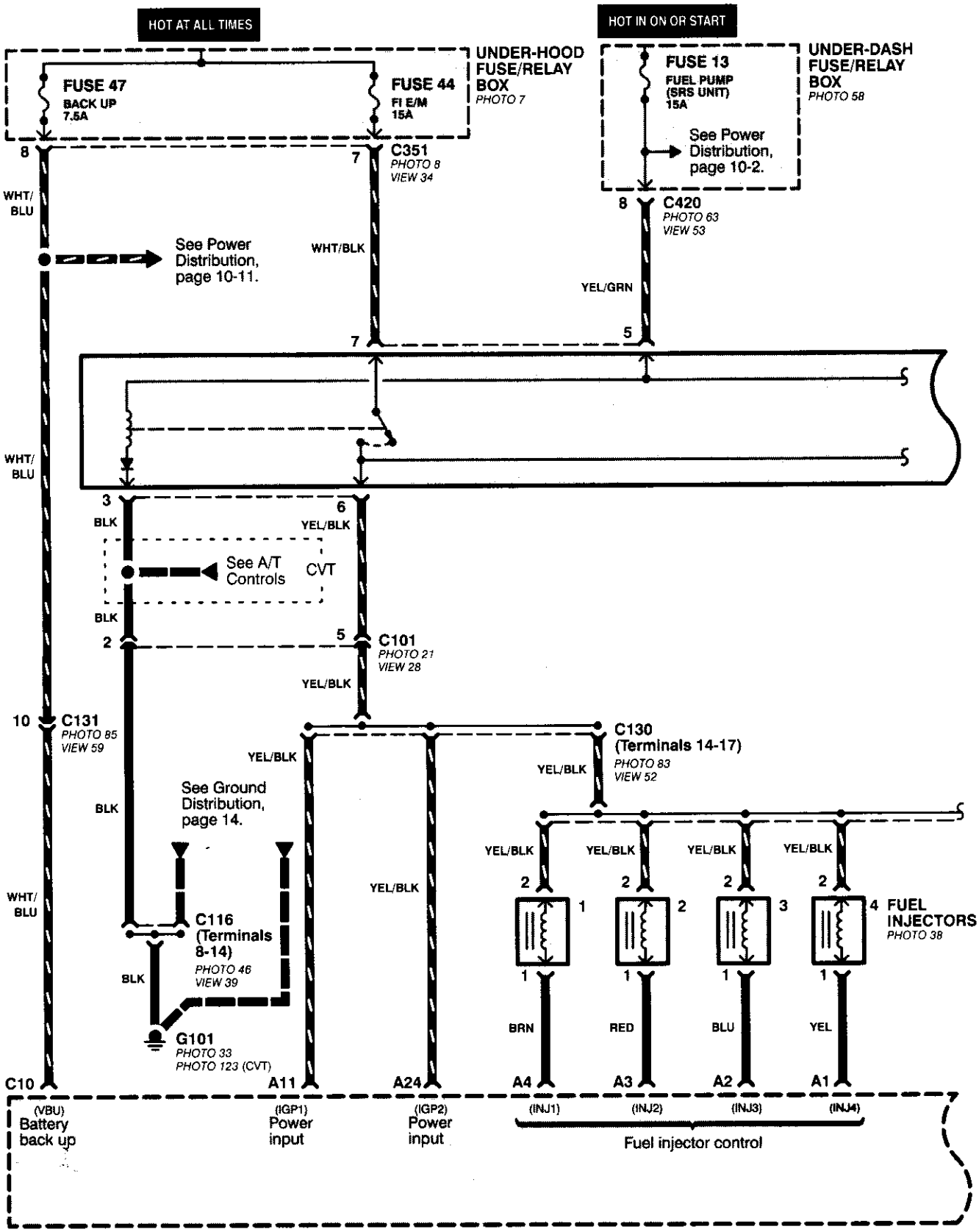

NOTE: Fuse 31 is HOT with Ignition Switch in START (III) and clutch pedal depressed or A/T Gear Selector in PARK (P) or NEUTRAL (N), see Starting System, page 21 or 21-2.

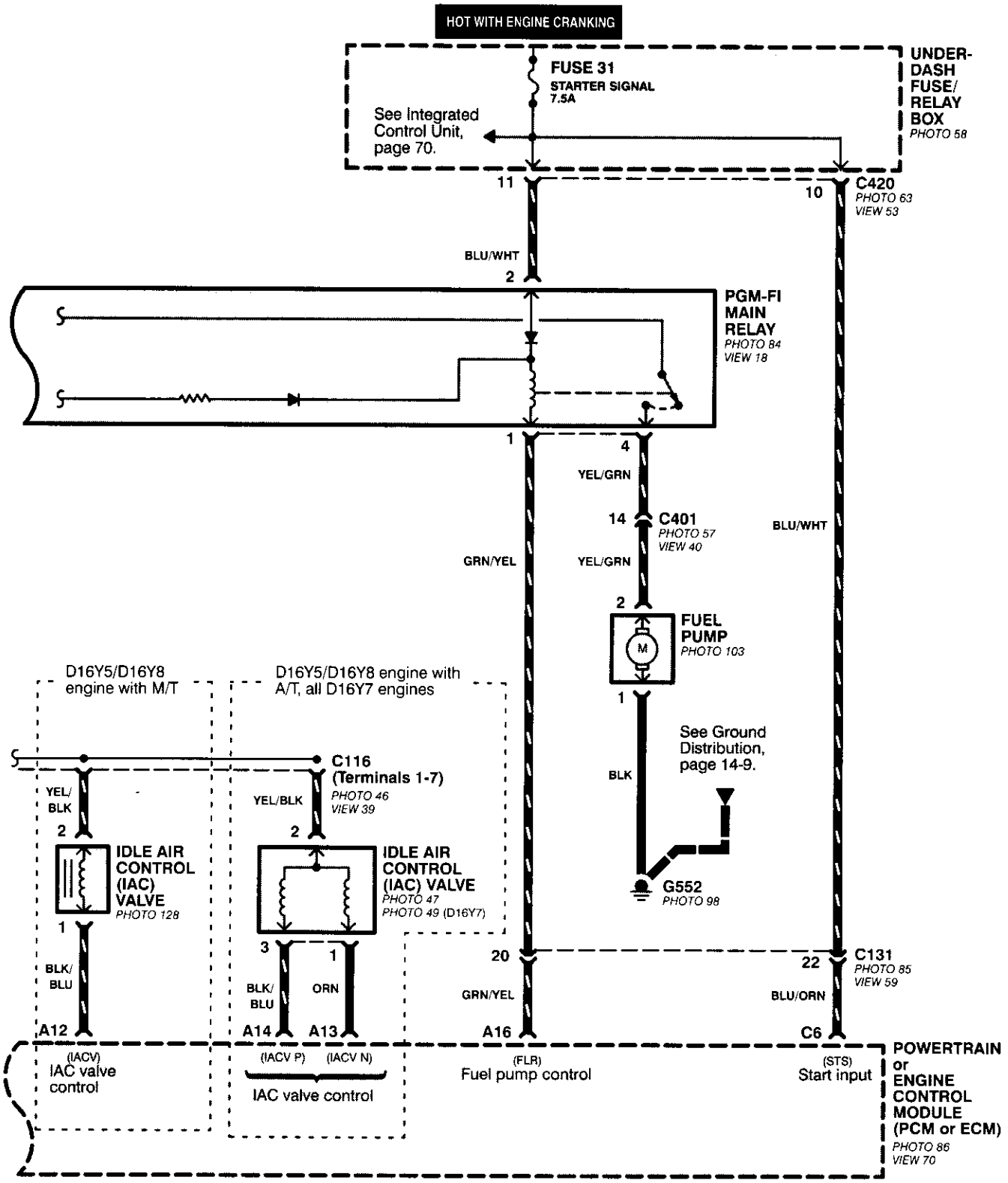

(cont'd)

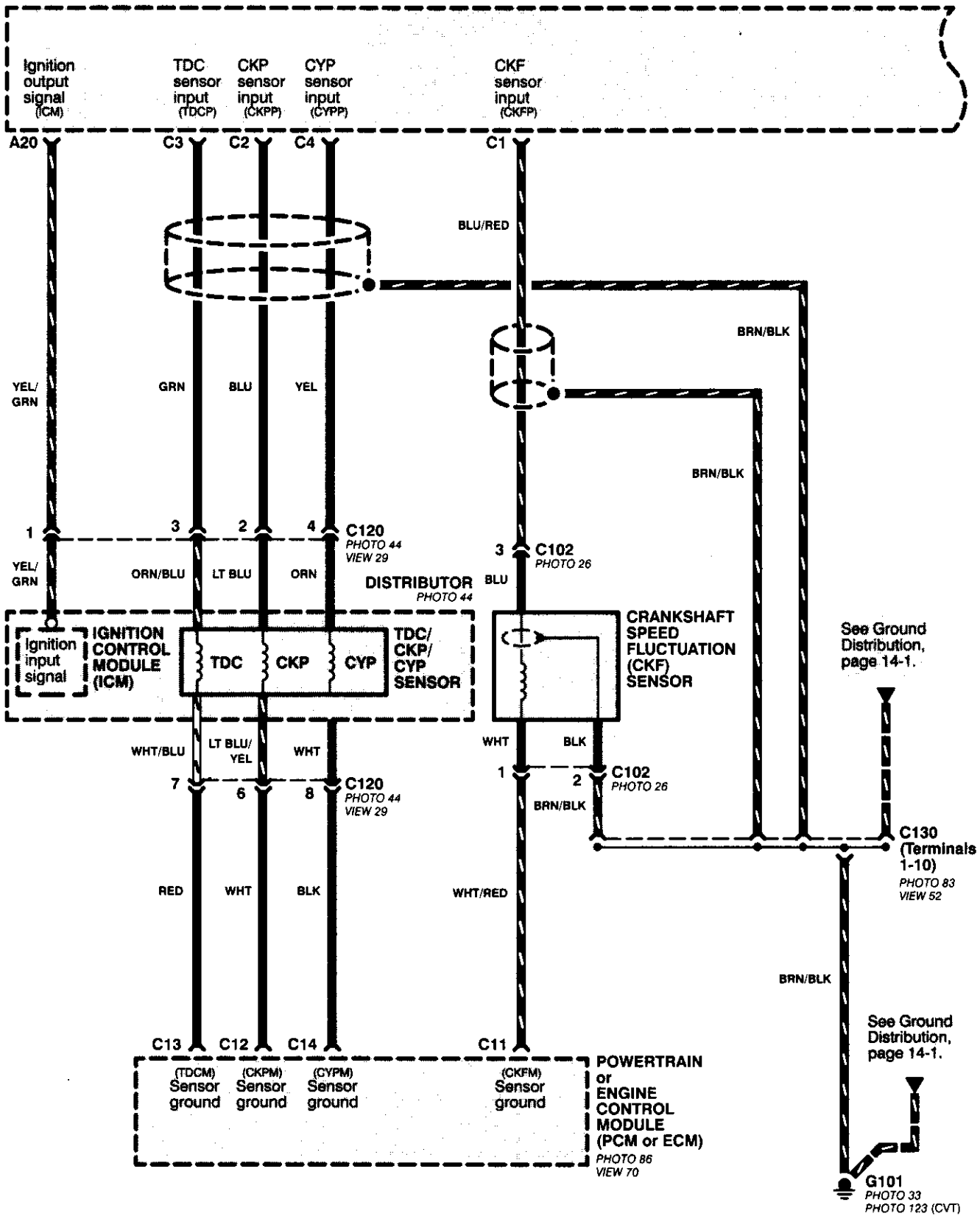
Ignition output signal (ICM)
TDC sensor input (TDCP)
CKP sensor input (CKPP)
CYP sensor input (CYPP)
CKF sensor input (CKFP)
A20
C3
C2
C4
C1
BLU/RED
BRN/BLK
YEL/GRN
GRN
BLU
YEL
BRN/BLK
1
3
2
4
C120
PHOTO 44
VIEW 29
3
C102
PHOTO 26
YEL/GRN
ORN/BLU
LT BLU
ORN
DISTRIBUTOR
PHOTO 44
BLU
Ignition input signal
IGNITION CONTROL MODULE (ICM)
TDC
CKP
CYP
TDC/CKP/CYP SENSOR
CRANKSHAFT SPEED FLUCTUATION (CKF) SENSOR
See Ground Distribution, page 14-1.
WHT/BLU
LT BLU/YEL
WHT
WHT
BLK
7
6
8
C120
PHOTO 44
VIEW 29
1
2
C102
PHOTO 26
BRN/BLK
C130 (Terminals 1-10)
PHOTO 83
VIEW 52
RED
WHT
BLK
WHT/RED
BRN/BLK
See Ground Distribution, page 14-1.
C13
C12
C14
C11
(TDCM) Sensor ground
(CKPM) Sensor ground
(CYPM) Sensor ground
(CKFM) Sensor ground
POWERTRAIN or ENGINE CONTROL MODULE (PCM or ECM)
PHOTO 86
VIEW 70
G101
PHOTO 33
PHOTO 123 (CVT)

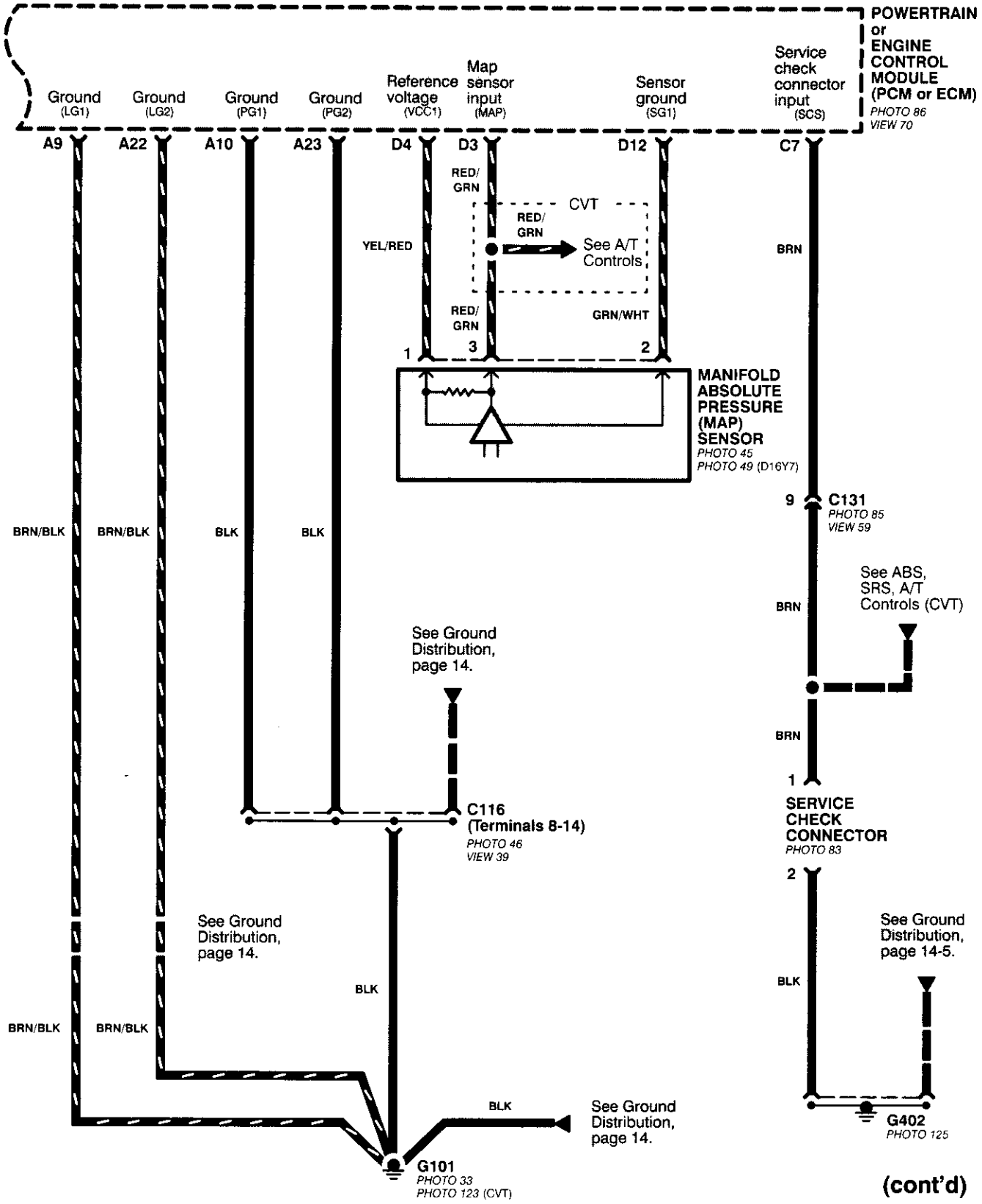
POWERTRAIN or ENGINE CONTROL MODULE (PCM or ECM)
PHOTO 86
VIEW 70
Ground (LG1)
Ground (LG2)
Ground (PG1)
Ground (PG2)
Reference voltage (VCC1)
Map sensor input (MAP)
Sensor ground (SG1)
Service check connector input (SCS)
A9
A22
A10
A23
D4
D3
D12
C7
RED/GRN
CVT
RED/GRN
See A/T Controls
YEL/RED
BRN
RED/GRN
GRN/WHT
1
3
2
MANIFOLD ABSOLUTE PRESSURE (MAP) SENSOR
PHOTO 45
PHOTO 49 (D16Y7)
9
C131
PHOTO 85
VIEW 59
BRN/BLK
BRN/BLK
BLK
BLK
See ABS, SRS, A/T Controls (CVT)
BRN
See Ground Distribution, page 14.
BRN
1
C116 (Terminals 8-14)
PHOTO 46
VIEW 39
SERVICE CHECK CONNECTOR
PHOTO 83
2
See Ground Distribution, page 14.
See Ground Distribution, page 14-5.
BLK
BLK
BRN/BLK
BRN/BLK
BLK
See Ground Distribution, page 14.
G402
PHOTO 125
G101
PHOTO 33
PHOTO 123 (CVT)

(cont'd)

PGM-FI (All '96-'98 Models except D16B5; '99-'00 D16Y5 with M/T)

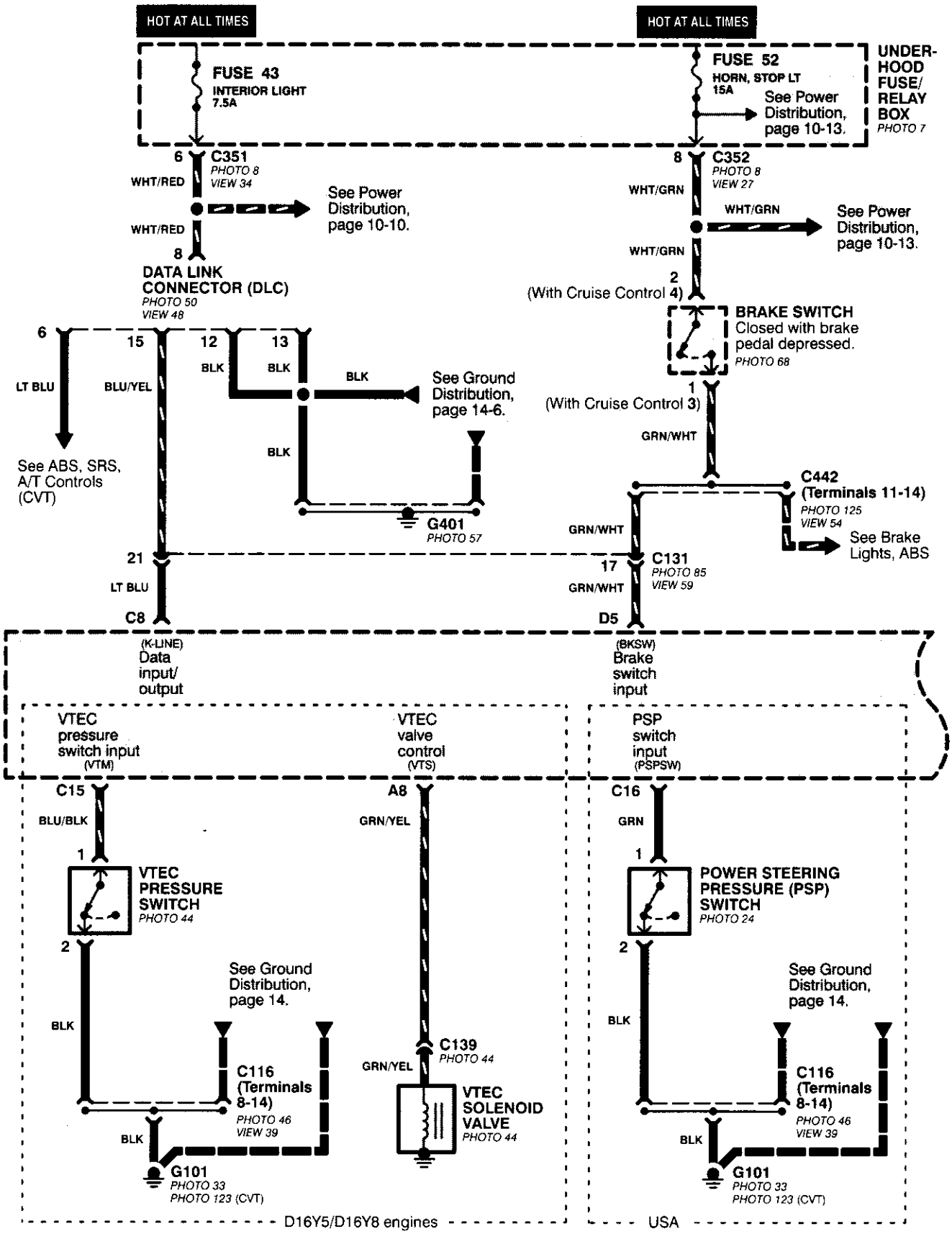

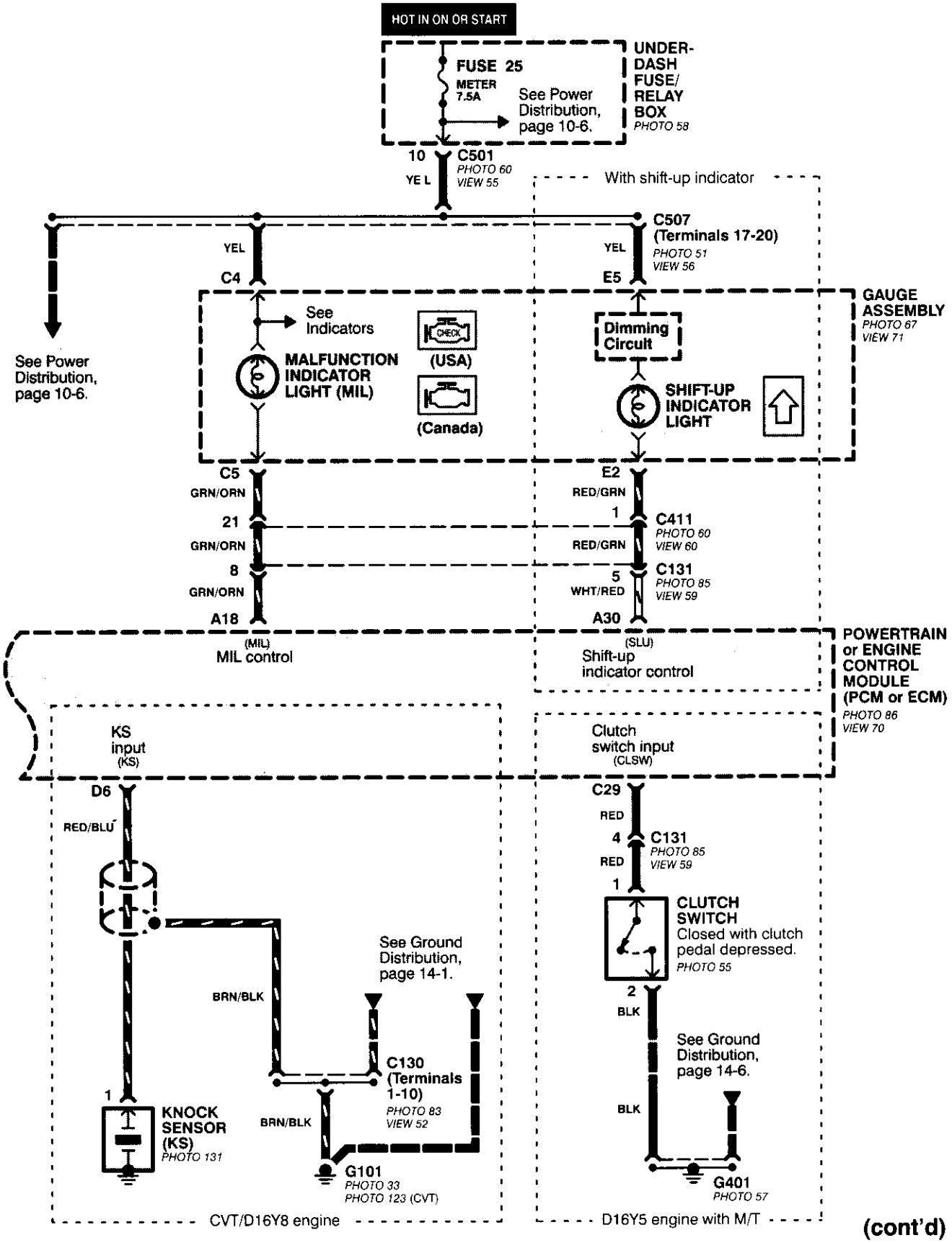
HOT IN ON OR START
FUSE 25
METER 7.5A
See Power Distribution, page 10-6.
UNDER-DASH FUSE/ RELAY BOX
PHOTO 58
10
C501
PHOTO 60
VIEW 55
YE L
With shift-up indicator
C507 (Terminals 17-20)
PHOTO 51
VIEW 56
YEL
C4
YEL
E5
See Power Distribution, page 10-6.
See Indicators
MALFUNCTION INDICATOR LIGHT (MIL)
(USA)
(Canada)
Dimming Circuit
SHIFT-UP INDICATOR LIGHT
GAUGE ASSEMBLY
PHOTO 67
VIEW 71
C5
GRN/ORN
21
GRN/ORN
8
GRN/ORN
A18
(MIL)
MIL control
E2
RED/GRN
1
C411
PHOTO 60
VIEW 60
RED/GRN
5
C131
PHOTO 85
VIEW 59
WHT/RED
A30
(SLU)
Shift-up indicator control
POWERTRAIN or ENGINE CONTROL MODULE (PCM or ECM)
PHOTO 86
VIEW 70
KS input (KS)
Clutch switch input (CLSW)
D6
RED/BLU
C29
RED
4
C131
PHOTO 85
VIEW 59
RED
1
CLUTCH SWITCH
Closed with clutch pedal depressed.
PHOTO 55
2
BLK
See Ground Distribution, page 14-1.
BRN/BLK
C130 (Terminals 1-10)
PHOTO 83
VIEW 52
1
KNOCK SENSOR (KS)
PHOTO 131
BRN/BLK
G101
PHOTO 33
PHOTO 123 (CVT)
See Ground Distribution, page 14-6.
BLK
G401
PHOTO 57
CVT/D16Y8 engine
D16Y5 engine with M/T

(cont'd)

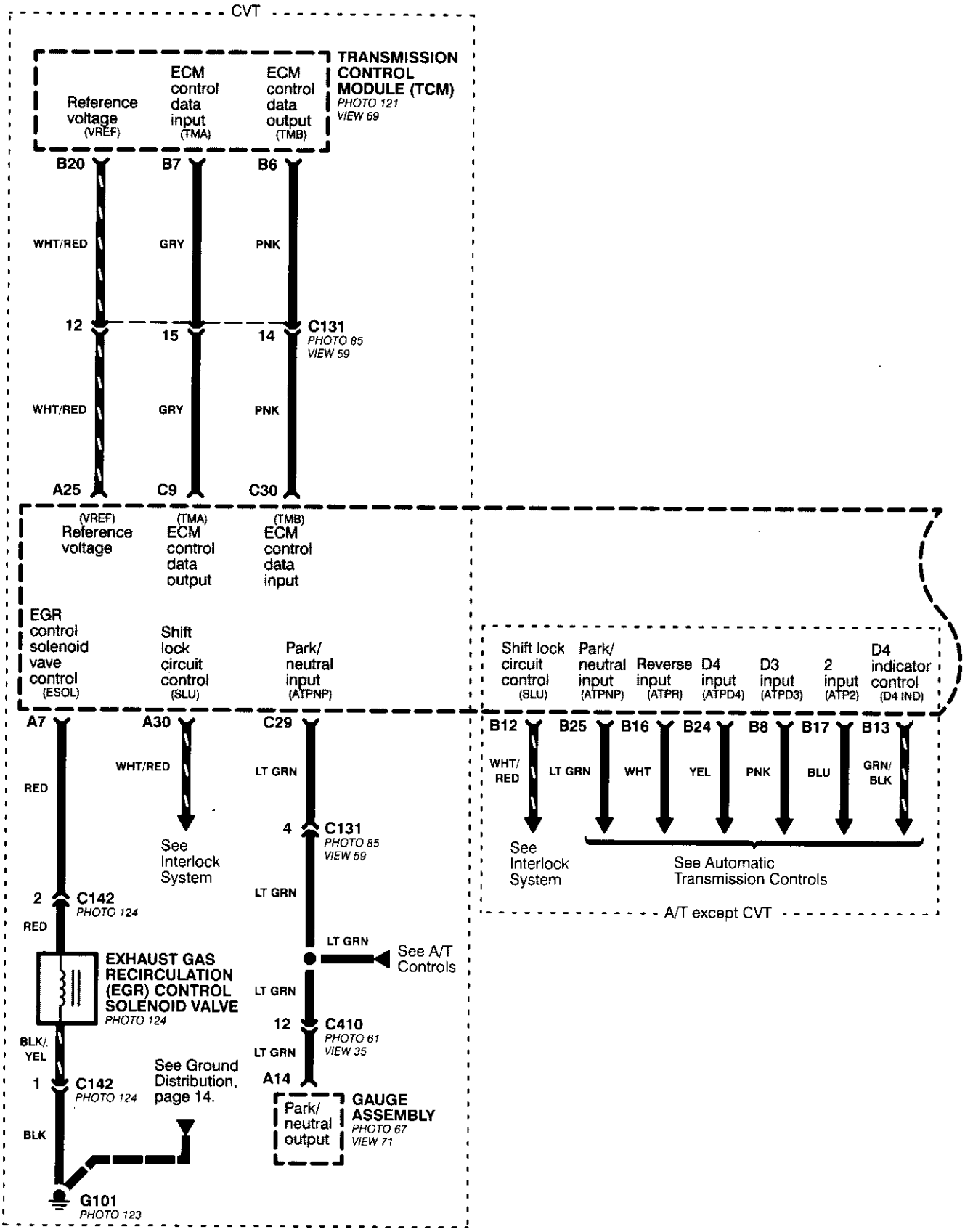
CVT
TRANSMISSION CONTROL MODULE (TCM)
PHOTO 121
VIEW 69
Reference voltage (VREF)
ECM control data input (TMA)
ECM control data output (TMB)
B20
B7
B6
WHT/RED
GRY
PNK
12
15
14
C131
PHOTO 85
VIEW 59
WHT/RED
GRY
PNK
A25
C9
C30
(VREF) Reference voltage
(TMA) ECM control data output
(TMB) ECM control data input
EGR control solenoid vave control (ESOL)
Shift lock circuit control (SLU)
Park/ neutral input (ATPNP)
A7
A30
C29
RED
WHT/RED
LT GRN
See Interlock System
4
C131
PHOTO 85
VIEW 59
2
C142
PHOTO 124
RED
LT GRN
LT GRN
See A/T Controls
EXHAUST GAS RECIRCULATION (EGR) CONTROL SOLENOID VALVE
PHOTO 124
LT GRN
12
C410
PHOTO 61
VIEW 35
BLK/YEL
LT GRN
1
C142
PHOTO 124
See Ground Distribution, page 14.
A14
Park/ neutral output
GAUGE ASSEMBLY
PHOTO 67
VIEW 71
BLK
G101
PHOTO 123
Shift lock circuit control (SLU)
Park/ neutral input (ATPNP)
Reverse input (ATPR)
D4 input (ATPD4)
D3 input (ATPD3)
2 input (ATP2)
D4 indicator control (D4 IND)
B12
B25
B16
B24
B8
B17
B13
WHT/RED
LT GRN
WHT
YEL
PNK
BLU
GRN/BLK
See Interlock System
See Automatic Transmission Controls
A/T except CVT

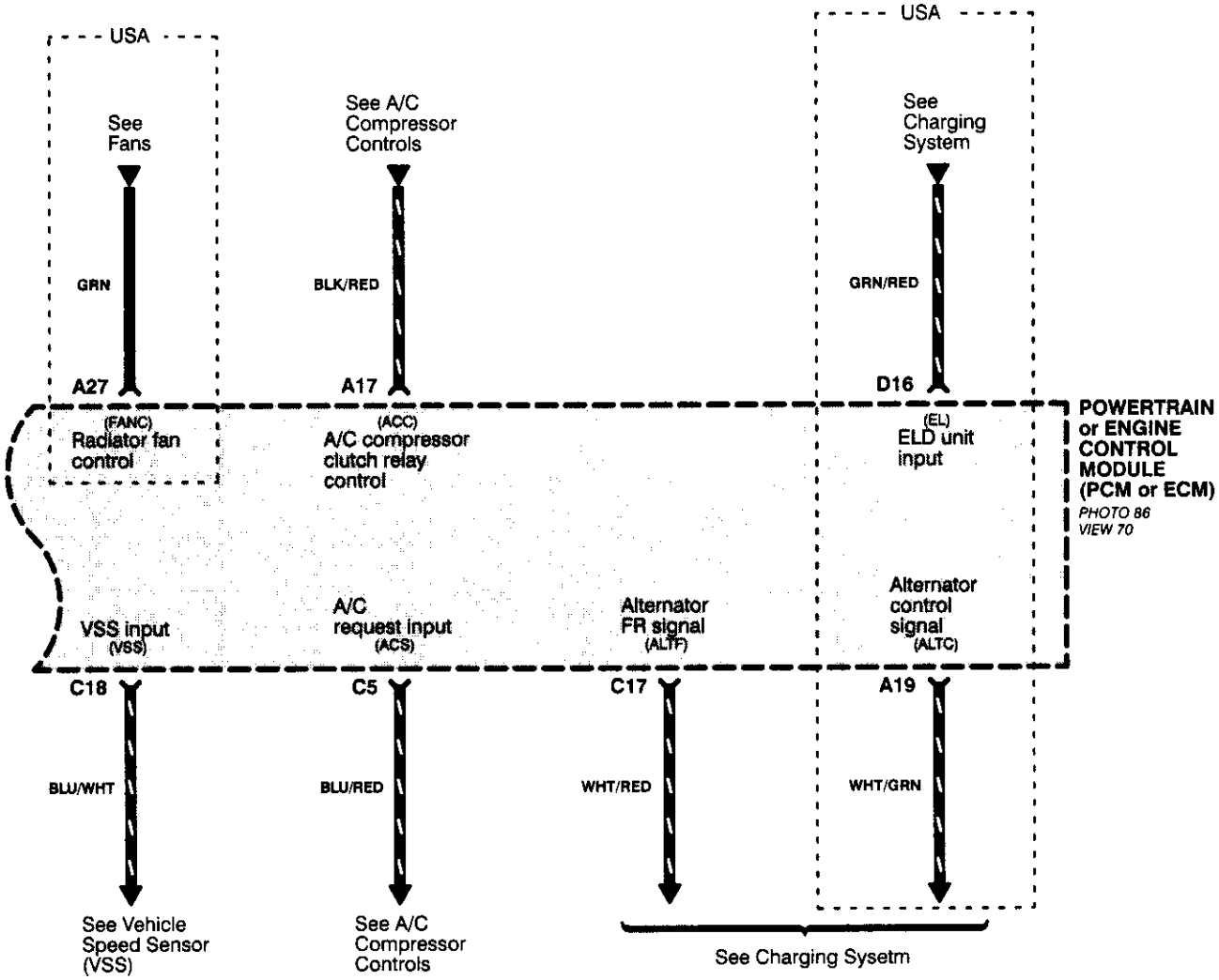
USA
See Fans
GRN
A27
(FANC)
Radiator fan control
See A/C Compressor Controls
BLK/RED
A17
(ACC)
A/C compressor clutch relay control
USA
See Charging System
GRN/RED
D16
(EL)
ELD unit input
POWERTRAIN or ENGINE CONTROL MODULE (PCM or ECM)
PHOTO 86
VIEW 70
VSS input
(VSS)
A/C request input
(ACS)
Alternator FR signal
(ALTF)
Alternator control signal
(ALTC)
C18
BLU/WHT
C5
BLU/RED
C17
WHT/RED
A19
WHT/GRN
See Vehicle Speed Sensor (VSS)
See A/C Compressor Controls
See Charging Sysetm

(cont'd)

PGM-FI (All '96-'98 Models except D16B5; '99-'00 D16Y5 with M/T)

D16Y7 Engine

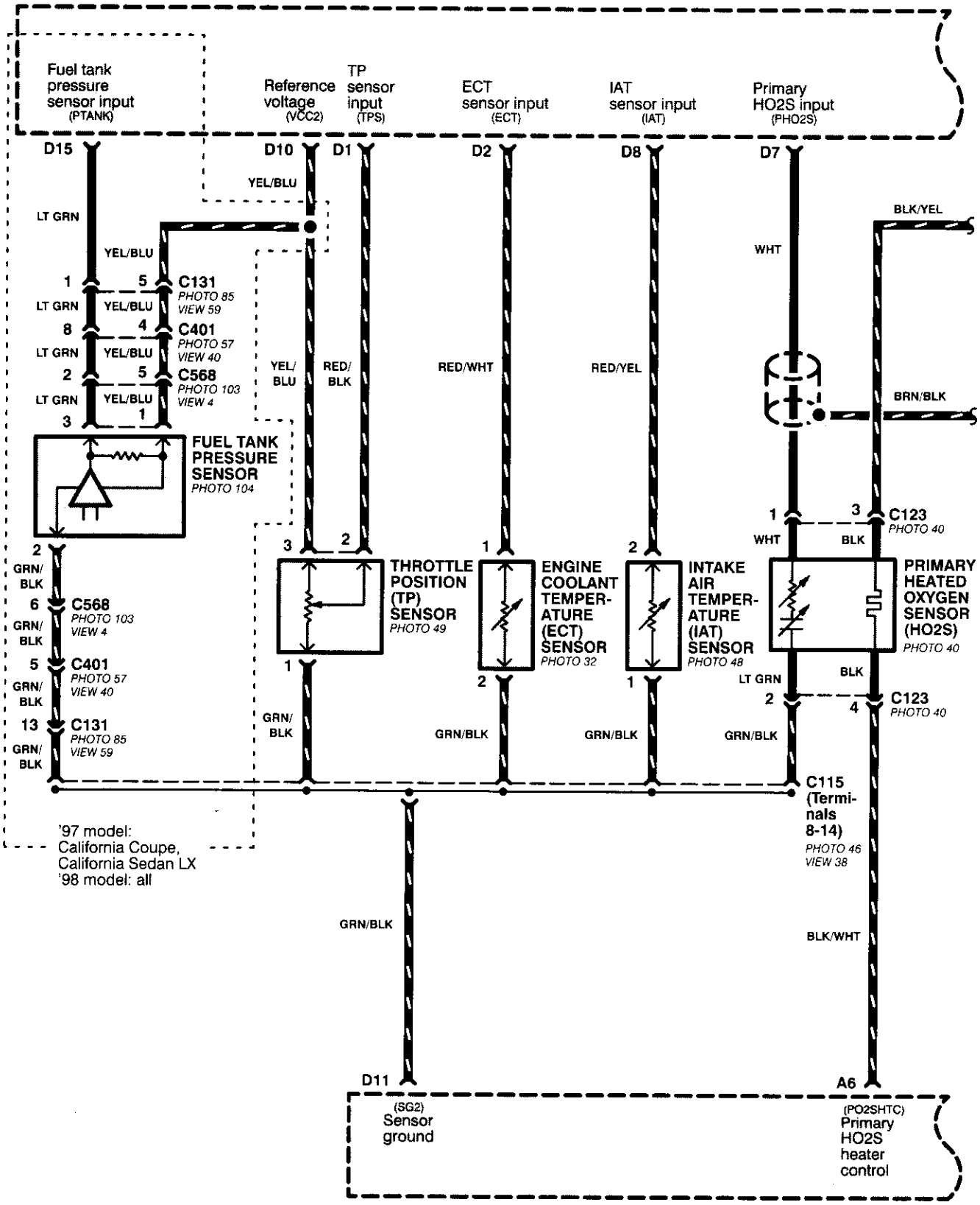

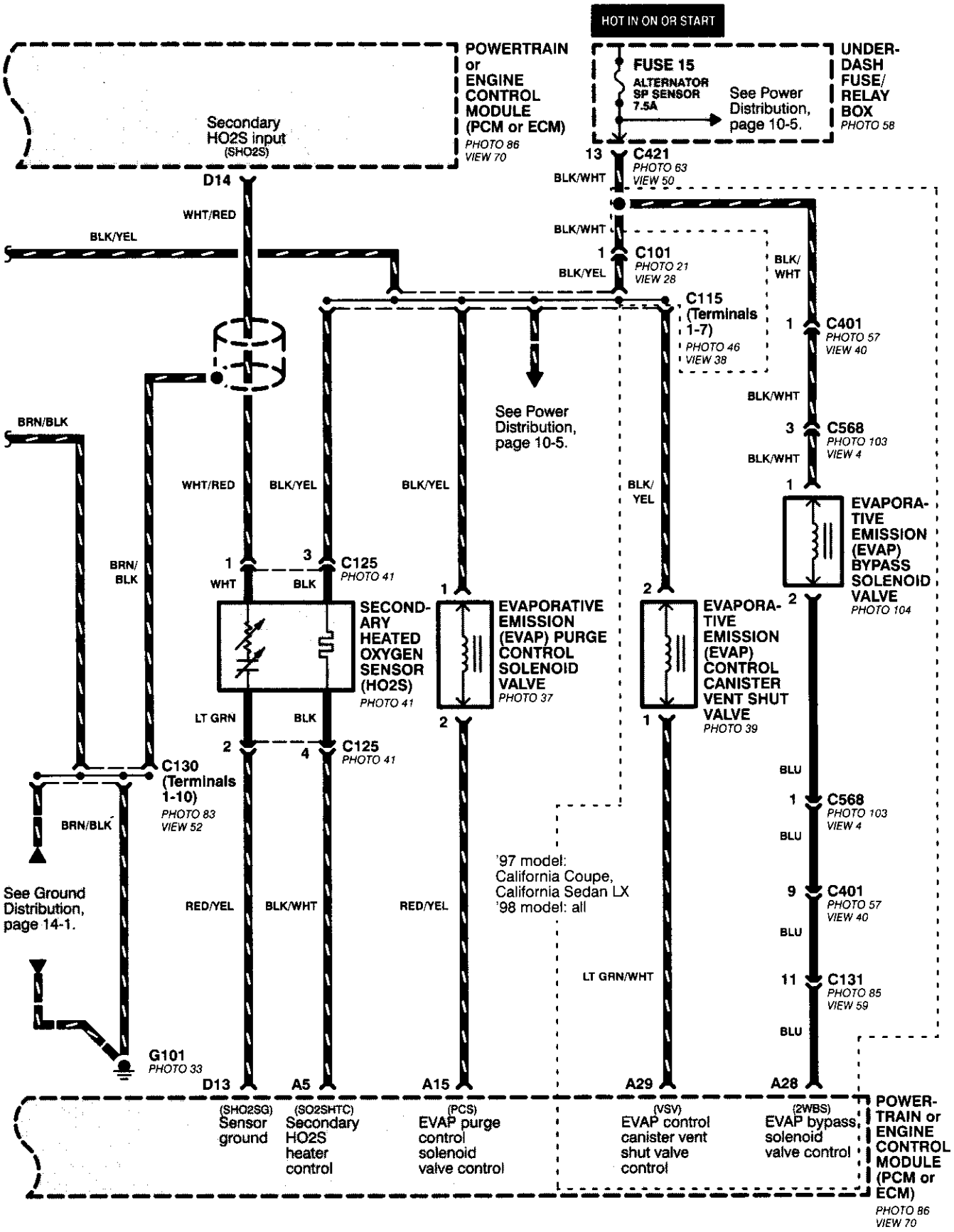
HOT IN ON OR START
POWERTRAIN or ENGINE CONTROL MODULE (PCM or ECM)
PHOTO 86
VIEW 70
Secondary HO2S input (SHO2S)
FUSE 15
ALTERNATOR SP SENSOR 7.5A
See Power Distribution, page 10-5.
UNDER-DASH FUSE/ RELAY BOX
PHOTO 58
13
C421
PHOTO 63
VIEW 50
BLK/WHT
D14
WHT/RED
BLK/YEL
BLK/WHT
1
C101
PHOTO 21
VIEW 28
BLK/YEL
BLK/ WHT
C115 (Terminals 1-7)
PHOTO 46
VIEW 38
1
C401
PHOTO 57
VIEW 40
BLK/WHT
3
C568
PHOTO 103
VIEW 4
BLK/WHT
1
EVAPORA-TIVE EMISSION (EVAP) BYPASS SOLENOID VALVE
PHOTO 104
2
See Power Distribution, page 10-5.
BRN/BLK
WHT/RED
BLK/YEL
BLK/YEL
BLK/ YEL
BRN/ BLK
1
3
C125
PHOTO 41
WHT
BLK
SECOND-ARY HEATED OXYGEN SENSOR (HO2S)
PHOTO 41
1
EVAPORATIVE EMISSION (EVAP) PURGE CONTROL SOLENOID VALVE
PHOTO 37
2
EVAPORA-TIVE EMISSION (EVAP) CONTROL CANISTER VENT SHUT VALVE
PHOTO 39
1
LT GRN
BLK
2
4
C125
PHOTO 41
C130 (Terminals 1-10)
PHOTO 83
VIEW 52
BRN/BLK
BLU
1
C568
PHOTO 103
VIEW 4
BLU
'97 model: California Coupe, California Sedan LX
'98 model: all
See Ground Distribution, page 14-1.
RED/YEL
BLK/WHT
RED/YEL
9
C401
PHOTO 57
VIEW 40
BLU
LT GRN/WHT
11
C131
PHOTO 85
VIEW 59
BLU
G101
PHOTO 33
D13
A5
A15
A29
A28
(SHO2SG) Sensor ground
(SO2SHTC) Secondary HO2S heater control
(PCS) EVAP purge control solenoid valve control
(VSV) EVAP control canister vent shut valve control
(2WBS) EVAP bypass solenoid valve control
POWER-TRAIN or ENGINE CONTROL MODULE (PCM or ECM)
PHOTO 86
VIEW 70

PGM-FI (All '96-'98 Models except D16B5; '99-'00 D16Y5 with M/T)

- D16Y8 Engine

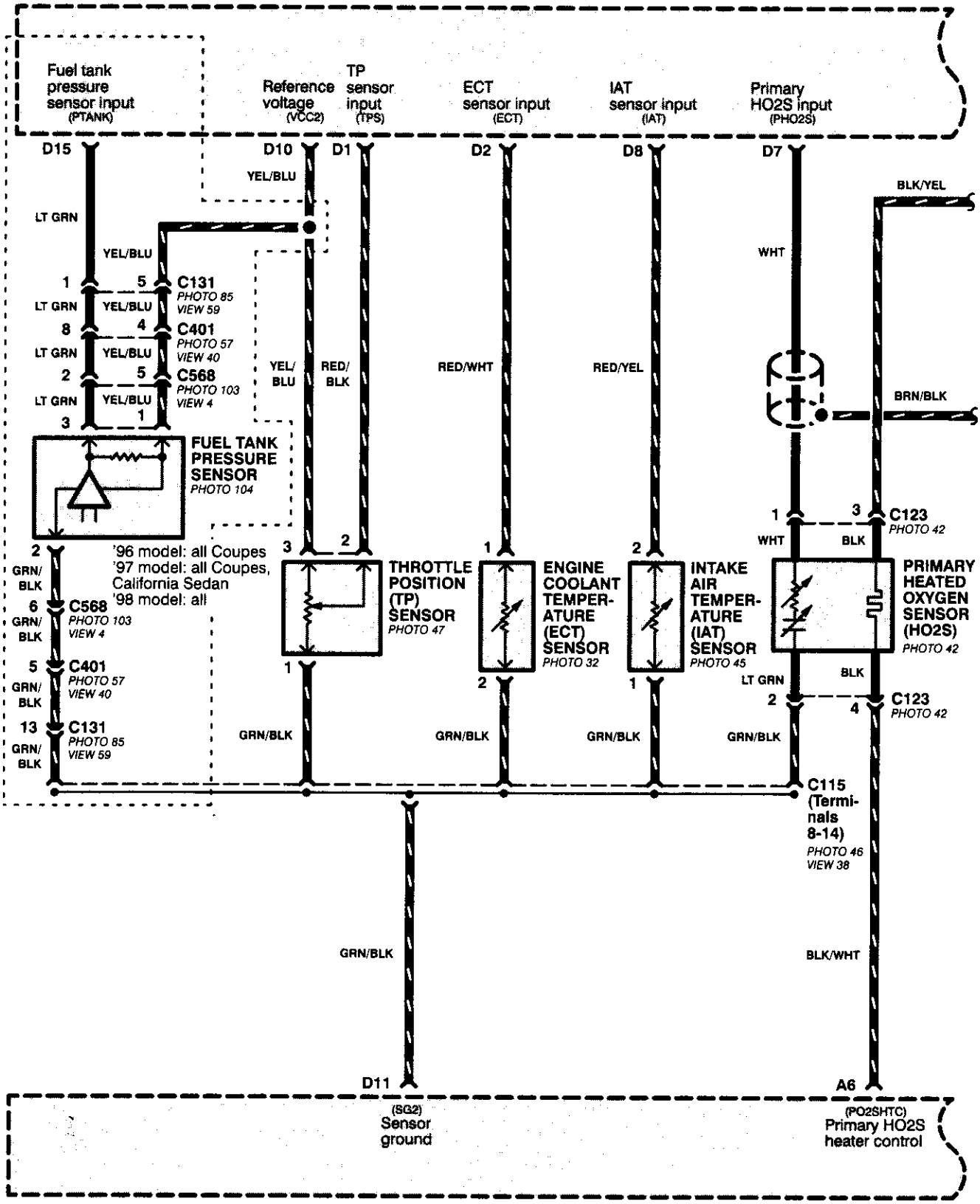

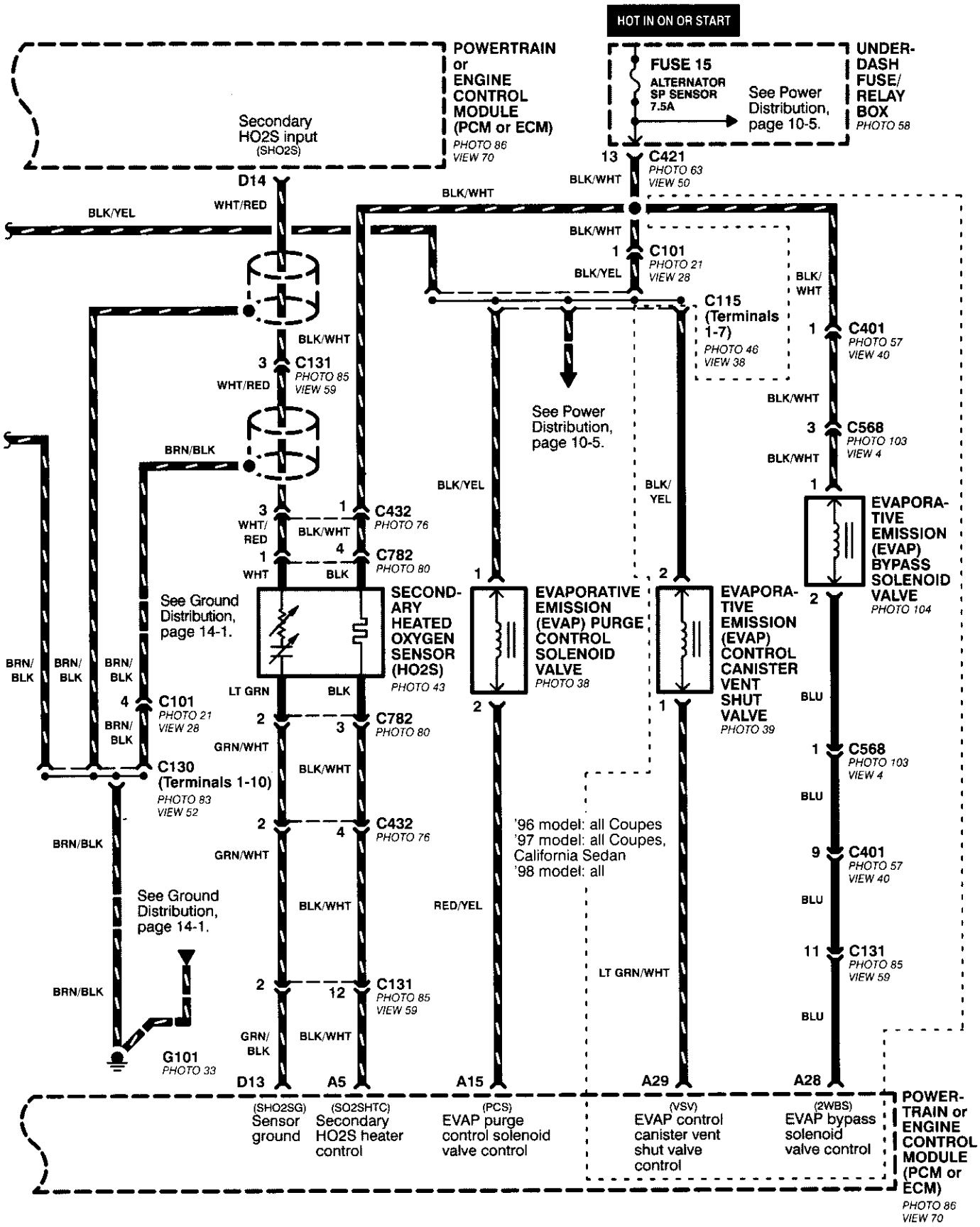
HOT IN ON OR START
POWERTRAIN or ENGINE CONTROL MODULE (PCM or ECM)
PHOTO 86
VIEW 70
Secondary HO2S input
(SHO2S)
FUSE 15
ALTERNATOR SP SENSOR 7.5A
See Power Distribution, page 10-5.
UNDER-DASH FUSE/ RELAY BOX
PHOTO 58
13
C421
PHOTO 63
VIEW 50
D14
BLK/YEL
WHT/RED
BLK/WHT
BLK/WHT
1
C101
PHOTO 21
VIEW 28
BLK/YEL
C115 (Terminals 1-7)
PHOTO 46
VIEW 38
BLK/ WHT
1
C401
PHOTO 57
VIEW 40
BLK/WHT
3
C131
PHOTO 85
VIEW 59
WHT/RED
BRN/BLK
See Power Distribution, page 10-5.
BLK/WHT
3
C568
PHOTO 103
VIEW 4
BLK/WHT
1
BLK/YEL
BLK/ YEL
EVAPORA-TIVE EMISSION (EVAP) BYPASS SOLENOID VALVE
PHOTO 104
3
WHT/ RED
1
C432
PHOTO 76
BLK/WHT
1
4
C782
PHOTO 80
WHT
BLK
See Ground Distribution, page 14-1.
SECOND-ARY HEATED OXYGEN SENSOR (HO2S)
PHOTO 43
1
EVAPORATIVE EMISSION (EVAP) PURGE CONTROL SOLENOID VALVE
PHOTO 38
2
EVAPORA-TIVE EMISSION (EVAP) CONTROL CANISTER VENT SHUT VALVE
PHOTO 39
2
BRN/ BLK
BRN/ BLK
BRN/ BLK
4
C101
PHOTO 21
VIEW 28
BRN/ BLK
LT GRN
BLK
2
3
C782
PHOTO 80
2
1
BLU
GRN/WHT
C130 (Terminals 1-10)
PHOTO 83
VIEW 52
BLK/WHT
1
C568
PHOTO 103
VIEW 4
BLU
2
4
C432
PHOTO 76
BRN/BLK
GRN/WHT
'96 model: all Coupes
'97 model: all Coupes, California Sedan
'98 model: all
9
C401
PHOTO 57
VIEW 40
BLU
See Ground Distribution, page 14-1.
BLK/WHT
RED/YEL
11
C131
PHOTO 85
VIEW 59
LT GRN/WHT
BRN/BLK
2
12
C131
PHOTO 85
VIEW 59
BLU
GRN/ BLK
BLK/WHT
G101
PHOTO 33
D13
A5
A15
A29
A28
(SHO2SG) Sensor ground
(SO2SHTC) Secondary HO2S heater control
(PCS) EVAP purge control solenoid valve control
(VSV) EVAP control canister vent shut valve control
(2WBS) EVAP bypass solenoid valve control
POWER-TRAIN or ENGINE CONTROL MODULE (PCM or ECM)
PHOTO 86
VIEW 70

PGM-FI (All '96-'98 Models except D16B5; '99 D16Y5 with M/T)

D16Y5 Engine

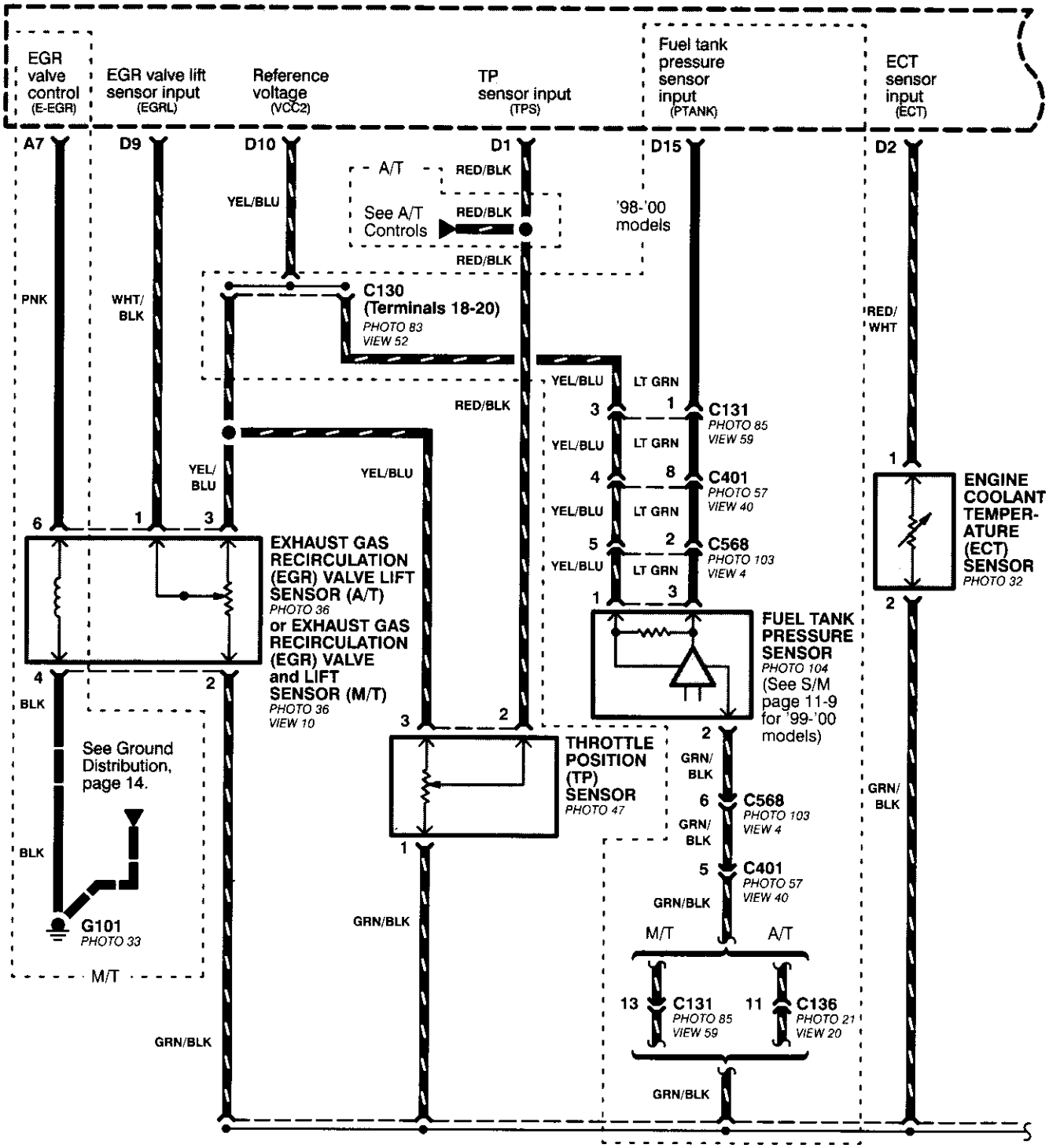

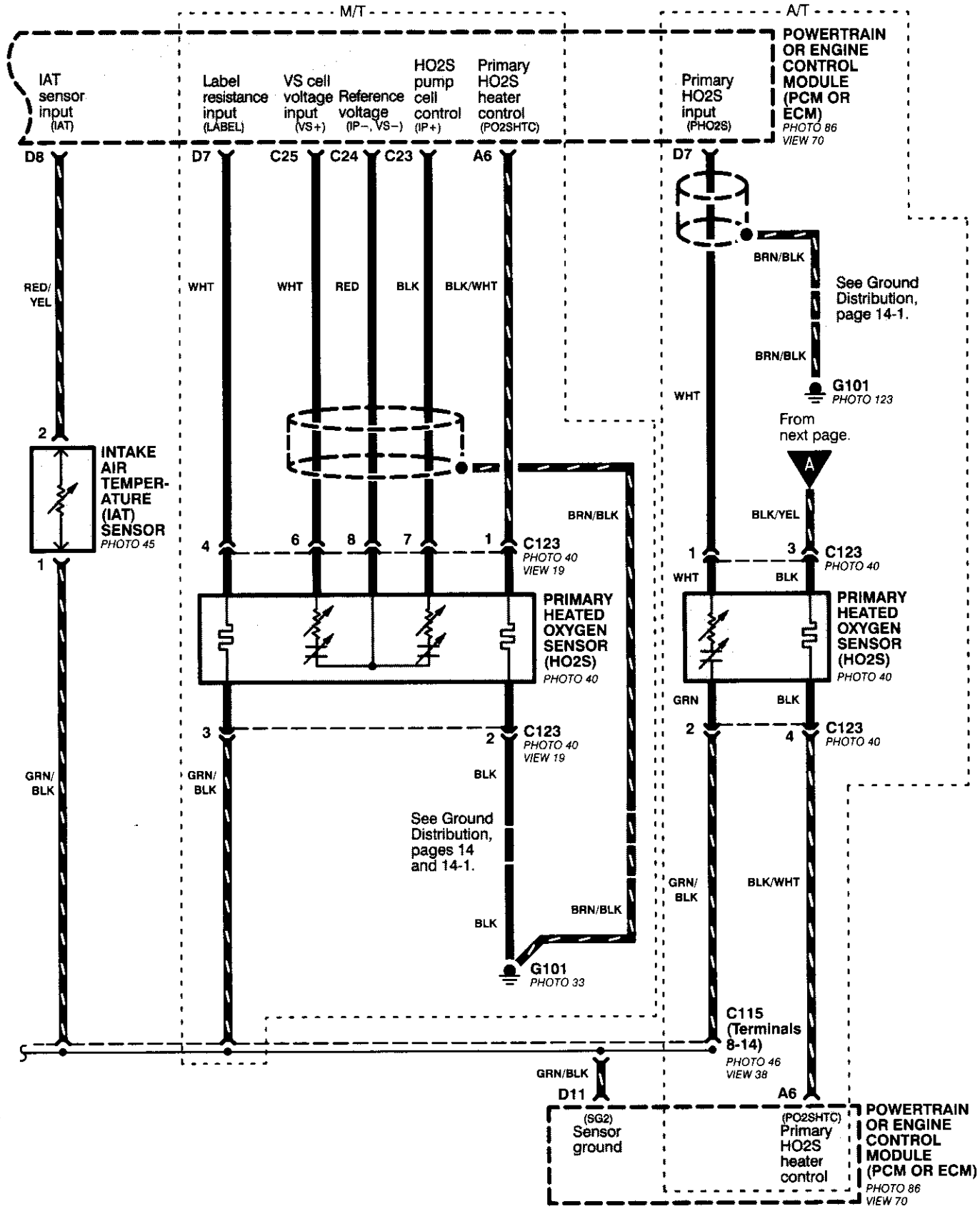
M/T
A/T
POWERTRAIN OR ENGINE CONTROL MODULE (PCM OR ECM)
PHOTO 86
VIEW 70
IAT sensor input (IAT)
Label resistance input (LABEL)
VS cell voltage input (VS+)
Reference voltage (IP−, VS−)
HO2S pump cell control (IP+)
Primary HO2S heater control (PO2SHTC)
Primary HO2S input (PHO2S)
D8
D7
C25
C24
C23
A6
D7
RED/YEL
WHT
WHT
RED
BLK
BLK/WHT
BRN/BLK
See Ground Distribution, page 14-1.
BRN/BLK
G101
PHOTO 123
WHT
From next page.
A
2
INTAKE AIR TEMPERATURE (IAT) SENSOR
PHOTO 45
1
4
6
8
7
1
C123
PHOTO 40
VIEW 19
BRN/BLK
BLK/YEL
1
3
C123
PHOTO 40
WHT
BLK
PRIMARY HEATED OXYGEN SENSOR (HO2S)
PHOTO 40
PRIMARY HEATED OXYGEN SENSOR (HO2S)
PHOTO 40
GRN
BLK
3
2
C123
PHOTO 40
VIEW 19
2
4
C123
PHOTO 40
GRN/BLK
GRN/BLK
BLK
See Ground Distribution, pages 14 and 14-1.
GRN/BLK
BLK/WHT
BRN/BLK
BLK
G101
PHOTO 33
C115 (Terminals 8-14)
PHOTO 46
VIEW 38
GRN/BLK
D11
A6
(SG2) Sensor ground
(PO2SHTC) Primary HO2S heater control
POWERTRAIN OR ENGINE CONTROL MODULE (PCM OR ECM)
PHOTO 86
VIEW 70

(cont'd)

– D16Y5 engine (cont'd)

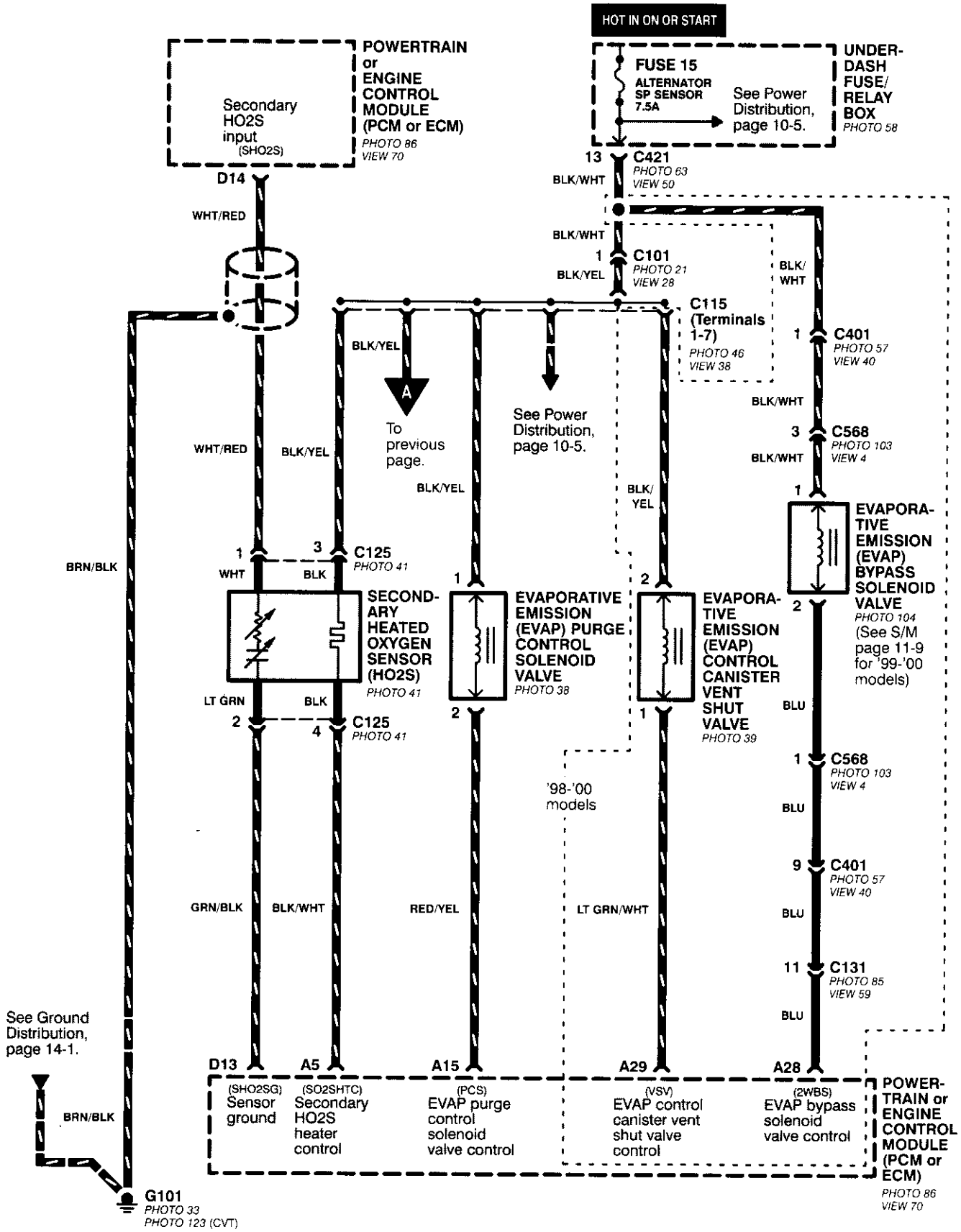

PGM-FI (All '99-'00 Models except D16Y5 with M/T and D16B5)

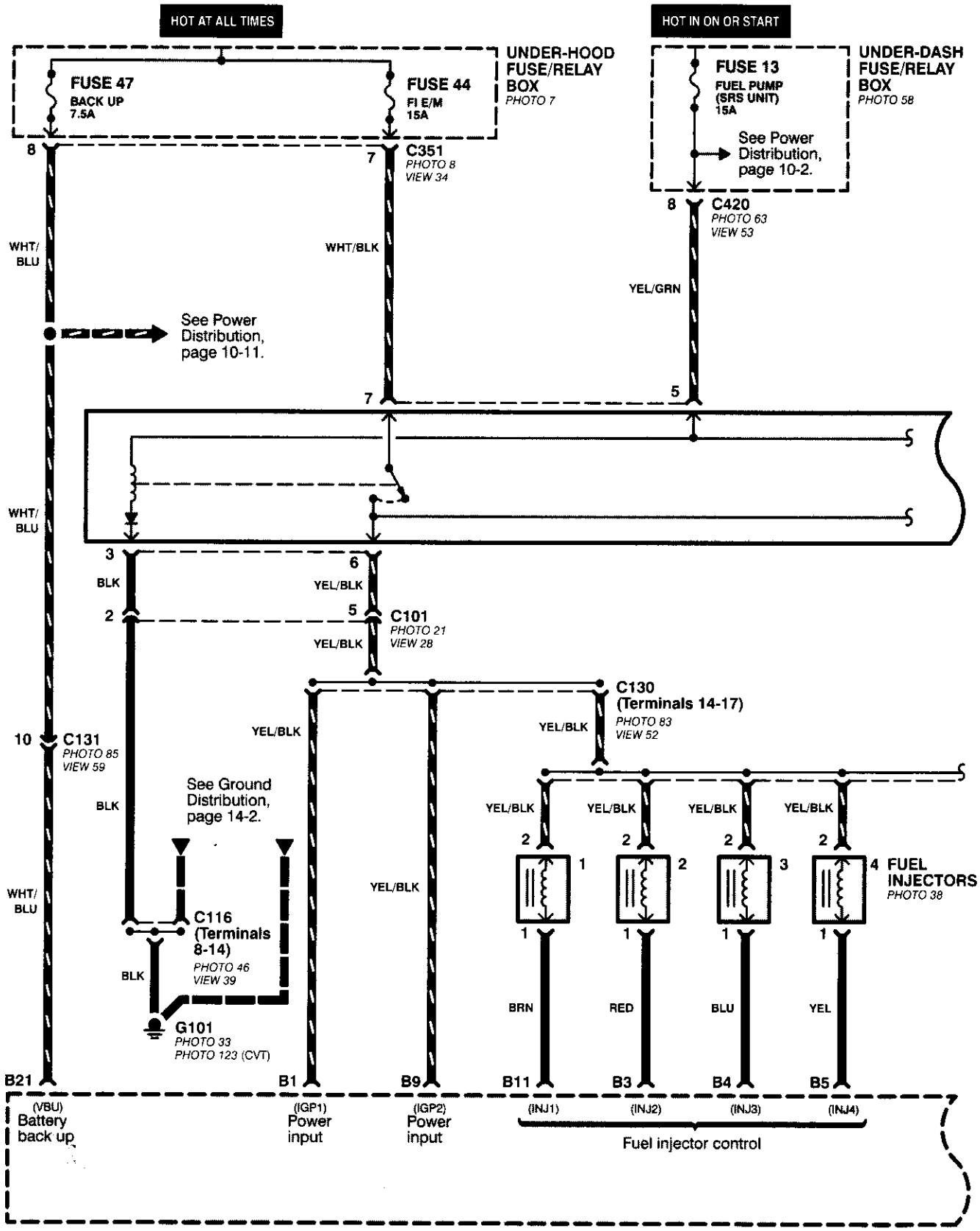

NOTE: Fuse 31 is HOT with Ignition Switch in START (III) and clutch pedal depressed or A/T Gear Selector in PARK (P) or NEUTRAL (N), see Starting System, page 21 or 21-2.

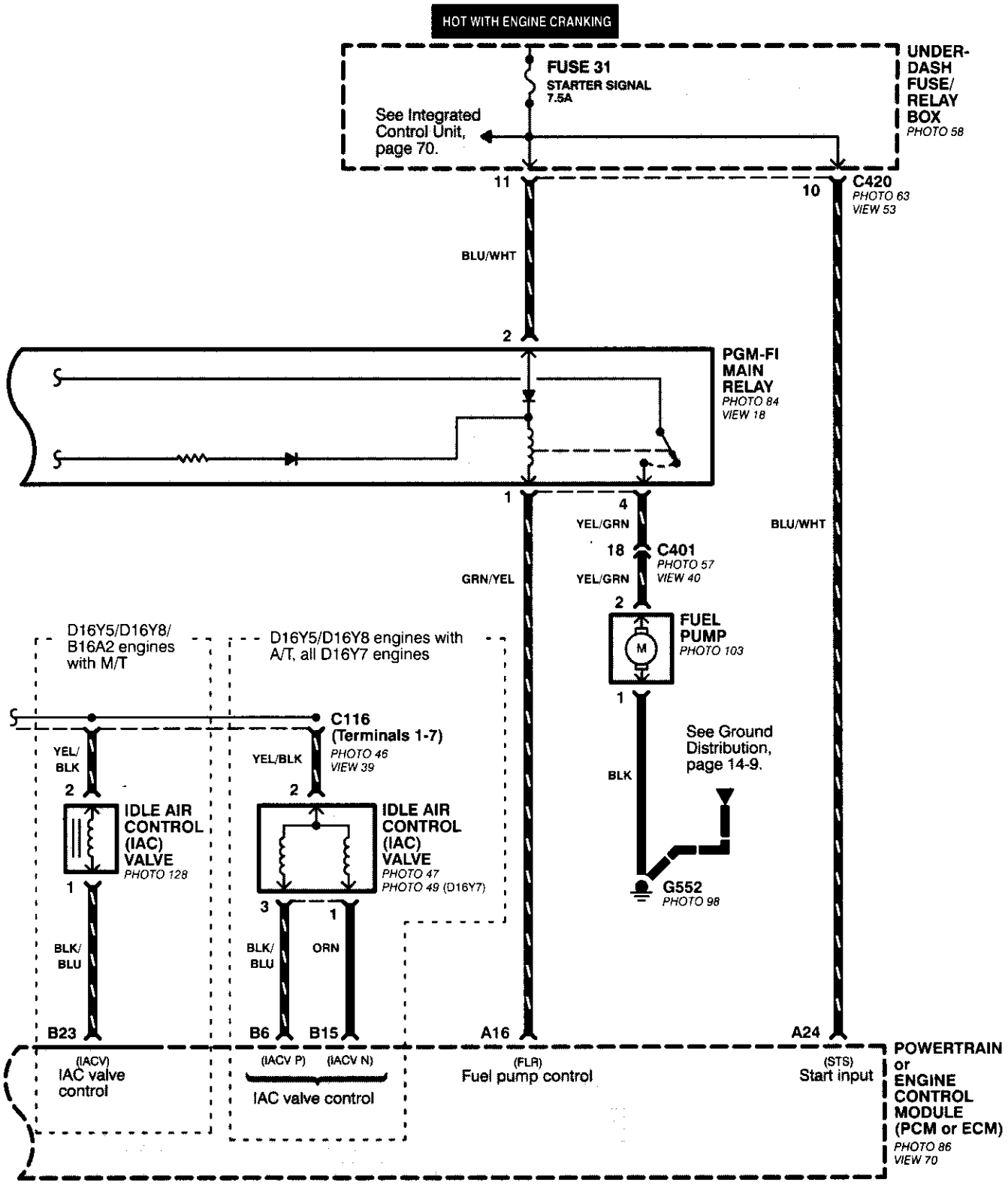

(cont'd)

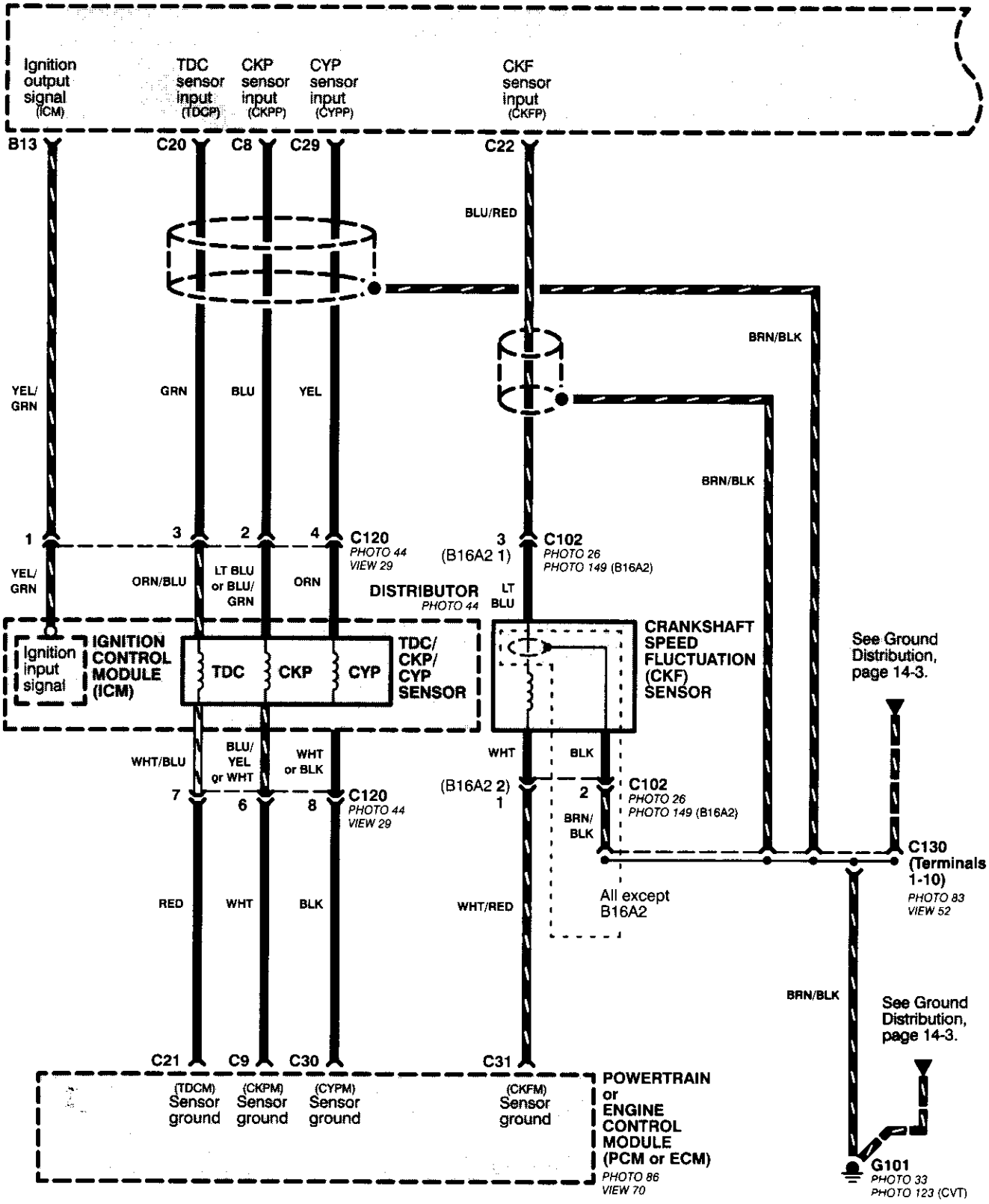
Ignition output signal (ICM)
TDC sensor input (TDCP)
CKP sensor input (CKPP)
CYP sensor input (CYPP)
CKF sensor input (CKFP)
B13
C20
C8
C29
C22
BLU/RED
BRN/BLK
YEL/GRN
GRN
BLU
YEL
BRN/BLK
1
3
2
4
C120
PHOTO 44
VIEW 29
3
(B16A2 1)
C102
PHOTO 26
PHOTO 149 (B16A2)
YEL/GRN
ORN/BLU
LT BLU or BLU/GRN
ORN
DISTRIBUTOR
PHOTO 44
LT BLU
Ignition input signal
IGNITION CONTROL MODULE (ICM)
TDC
CKP
CYP
TDC/CKP/CYP SENSOR
CRANKSHAFT SPEED FLUCTUATION (CKF) SENSOR
See Ground Distribution, page 14-3.
WHT/BLU
BLU/YEL or WHT
WHT or BLK
WHT
BLK
7
6
8
C120
PHOTO 44
VIEW 29
(B16A2 2)
1
2
C102
PHOTO 26
PHOTO 149 (B16A2)
BRN/BLK
C130 (Terminals 1-10)
PHOTO 83
VIEW 52
RED
WHT
BLK
WHT/RED
All except B16A2
BRN/BLK
See Ground Distribution, page 14-3.
C21
C9
C30
C31
(TDCM) Sensor ground
(CKPM) Sensor ground
(CYPM) Sensor ground
(CKFM) Sensor ground
POWERTRAIN or ENGINE CONTROL MODULE (PCM or ECM)
PHOTO 86
VIEW 70
G101
PHOTO 33
PHOTO 123 (CVT)

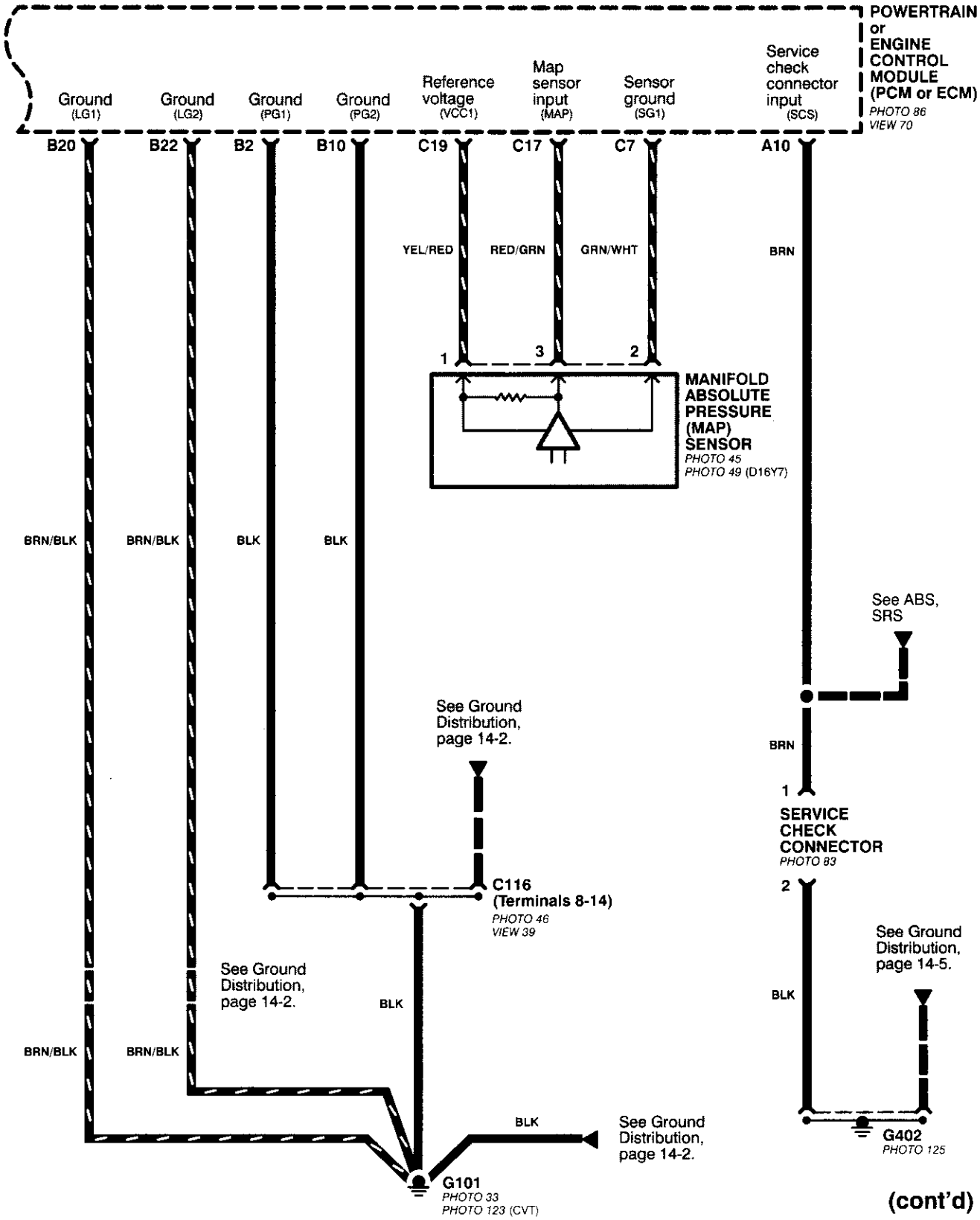
POWERTRAIN or ENGINE CONTROL MODULE (PCM or ECM)
PHOTO 86
VIEW 70
Ground (LG1)
Ground (LG2)
Ground (PG1)
Ground (PG2)
Reference voltage (VCC1)
Map sensor input (MAP)
Sensor ground (SG1)
Service check connector input (SCS)
B20
B22
B2
B10
C19
C17
C7
A10
YEL/RED
RED/GRN
GRN/WHT
BRN
1
3
2
MANIFOLD ABSOLUTE PRESSURE (MAP) SENSOR
PHOTO 45
PHOTO 49 (D16Y7)
BRN/BLK
BRN/BLK
BLK
BLK
See ABS, SRS
See Ground Distribution, page 14-2.
BRN
1
SERVICE CHECK CONNECTOR
PHOTO 83
C116 (Terminals 8-14)
PHOTO 46
VIEW 39
2
See Ground Distribution, page 14-5.
See Ground Distribution, page 14-2.
BLK
BLK
BRN/BLK
BRN/BLK
BLK
See Ground Distribution, page 14-2.
G402
PHOTO 125
G101
PHOTO 33
PHOTO 123 (CVT)

(cont'd)

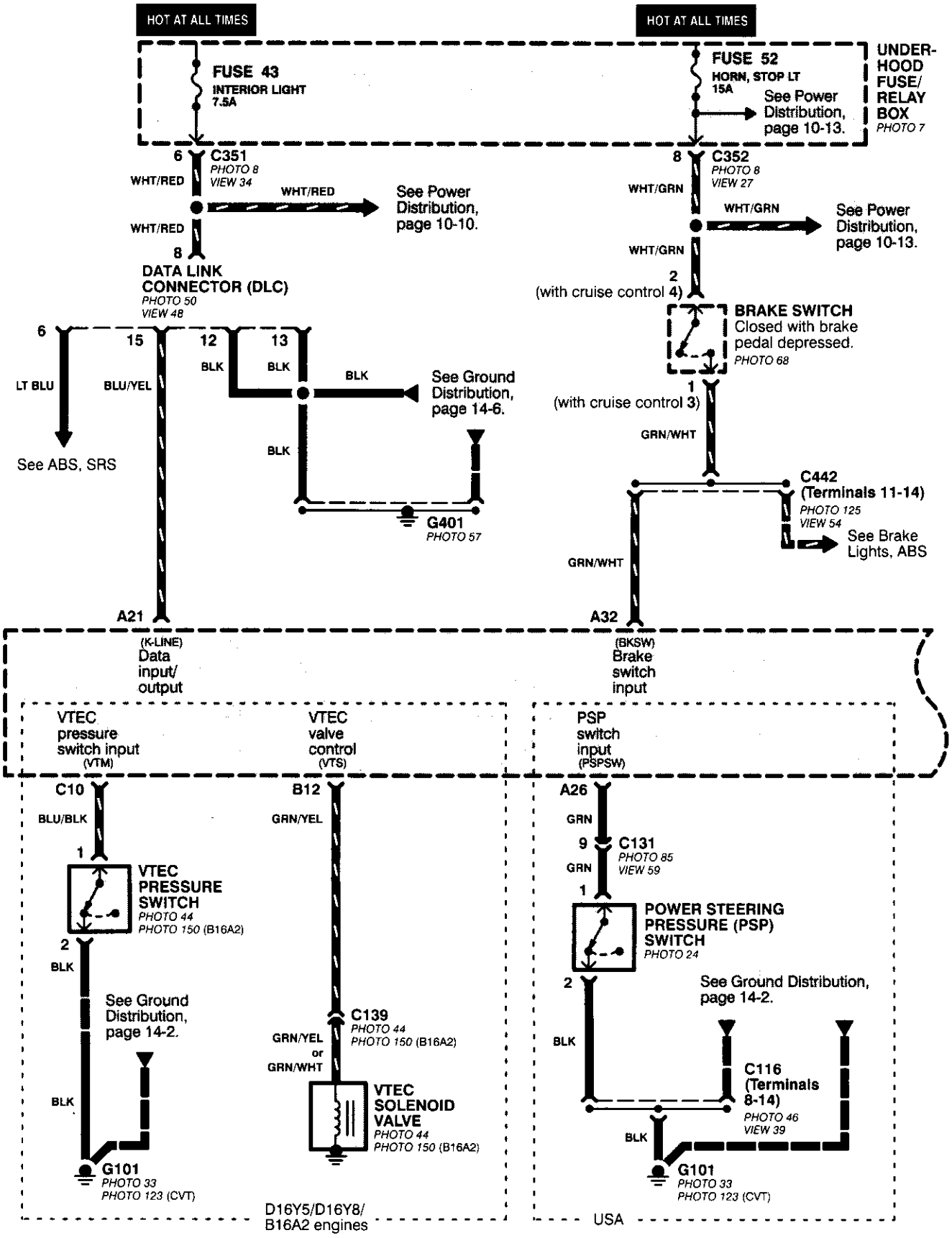
HOT AT ALL TIMES
HOT AT ALL TIMES
FUSE 43
INTERIOR LIGHT
7.5A
FUSE 52
HORN, STOP LT
15A
See Power Distribution, page 10-13.
UNDER-HOOD FUSE/ RELAY BOX
PHOTO 7
6
C351
PHOTO 8
VIEW 34
WHT/RED
WHT/RED
See Power Distribution, page 10-10.
WHT/RED
8
DATA LINK CONNECTOR (DLC)
PHOTO 50
VIEW 48
8
C352
PHOTO 8
VIEW 27
WHT/GRN
WHT/GRN
See Power Distribution, page 10-13.
WHT/GRN
2
(with cruise control 4)
BRAKE SWITCH
Closed with brake pedal depressed.
PHOTO 68
6
15
12
13
LT BLU
BLU/YEL
BLK
BLK
BLK
See Ground Distribution, page 14-6.
BLK
See ABS, SRS
G401
PHOTO 57
1
(with cruise control 3)
GRN/WHT
C442
(Terminals 11-14)
PHOTO 125
VIEW 54
See Brake Lights, ABS
GRN/WHT
A21
(K-LINE)
Data input/ output
A32
(BKSW)
Brake switch input
VTEC pressure switch input
(VTM)
VTEC valve control
(VTS)
PSP switch input
(PSPSW)
C10
BLU/BLK
1
VTEC PRESSURE SWITCH
PHOTO 44
PHOTO 150 (B16A2)
2
BLK
See Ground Distribution, page 14-2.
BLK
G101
PHOTO 33
PHOTO 123 (CVT)
B12
GRN/YEL
C139
PHOTO 44
PHOTO 150 (B16A2)
GRN/YEL or GRN/WHT
VTEC SOLENOID VALVE
PHOTO 44
PHOTO 150 (B16A2)
D16Y5/D16Y8/ B16A2 engines
A26
GRN
9
C131
PHOTO 85
VIEW 59
GRN
1
POWER STEERING PRESSURE (PSP) SWITCH
PHOTO 24
2
See Ground Distribution, page 14-2.
BLK
C116
(Terminals 8-14)
PHOTO 46
VIEW 39
BLK
G101
PHOTO 33
PHOTO 123 (CVT)
USA

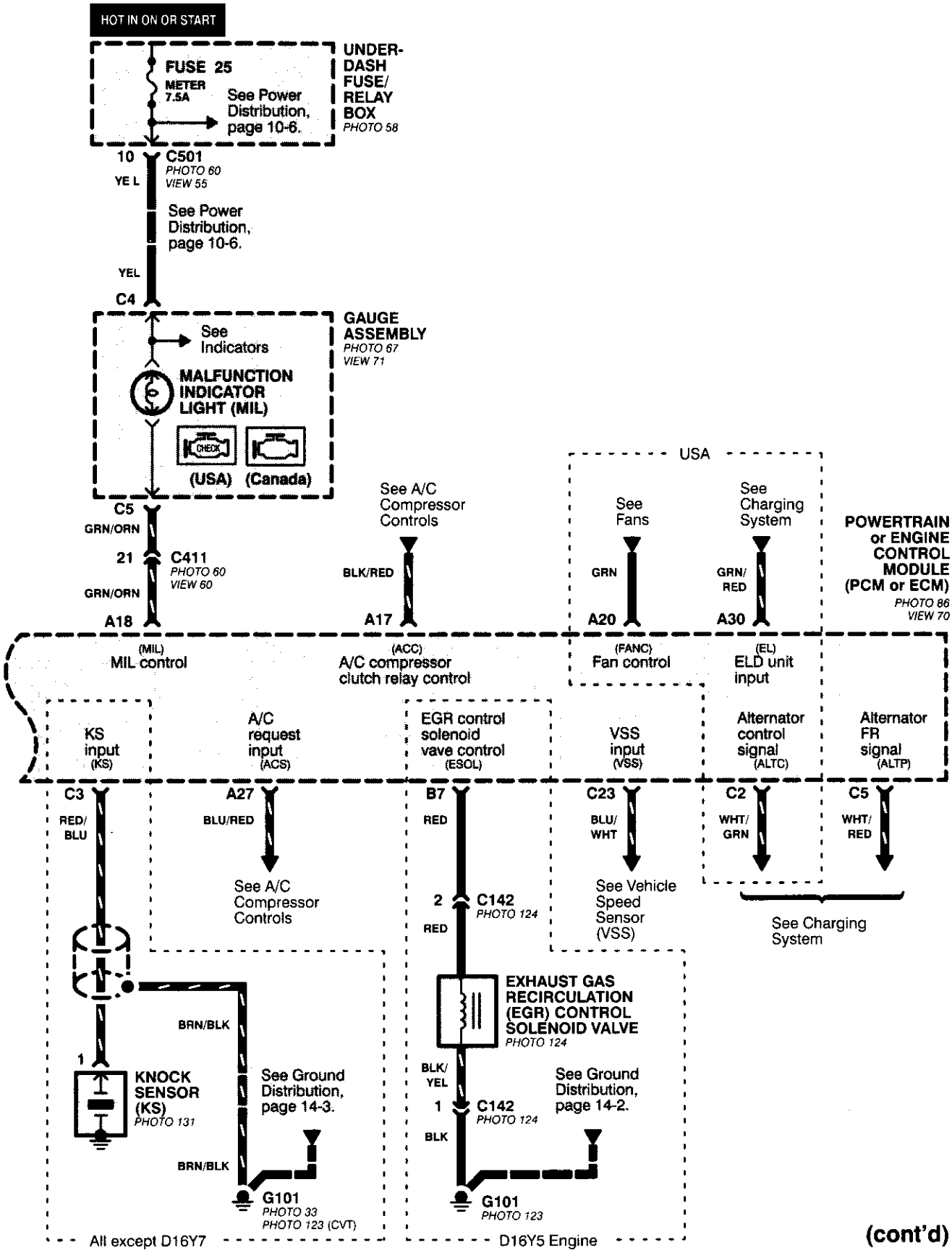
HOT IN ON OR START
FUSE 25
METER 7.5A
See Power Distribution, page 10-6.
UNDER-DASH FUSE/ RELAY BOX
PHOTO 58
10
C501
PHOTO 60
VIEW 55
YE L
See Power Distribution, page 10-6.
YEL
C4
See Indicators
MALFUNCTION INDICATOR LIGHT (MIL)
GAUGE ASSEMBLY
PHOTO 67
VIEW 71
CHECK
(USA) (Canada)
C5
GRN/ORN
21
C411
PHOTO 60
VIEW 60
GRN/ORN
A18
(MIL)
MIL control
See A/C Compressor Controls
BLK/RED
A17
(ACC)
A/C compressor clutch relay control
USA
See Fans
GRN
A20
(FANC)
Fan control
See Charging System
GRN/ RED
A30
(EL)
ELD unit input
POWERTRAIN or ENGINE CONTROL MODULE (PCM or ECM)
PHOTO 86
VIEW 70
KS input (KS)
A/C request input (ACS)
EGR control solenoid vave control (ESOL)
VSS input (VSS)
Alternator control signal (ALTC)
Alternator FR signal (ALTP)
C3
RED/ BLU
A27
BLU/RED
See A/C Compressor Controls
B7
RED
2
C142
PHOTO 124
RED
C23
BLU/ WHT
See Vehicle Speed Sensor (VSS)
C2
WHT/ GRN
C5
WHT/ RED
See Charging System
BRN/BLK
1
KNOCK SENSOR (KS)
PHOTO 131
See Ground Distribution, page 14-3.
BRN/BLK
G101
PHOTO 33
PHOTO 123 (CVT)
EXHAUST GAS RECIRCULATION (EGR) CONTROL SOLENOID VALVE
PHOTO 124
BLK/ YEL
1
C142
PHOTO 124
BLK
See Ground Distribution, page 14-2.
G101
PHOTO 123
All except D16Y7
D16Y5 Engine

(cont'd)

D16Y5 Engine

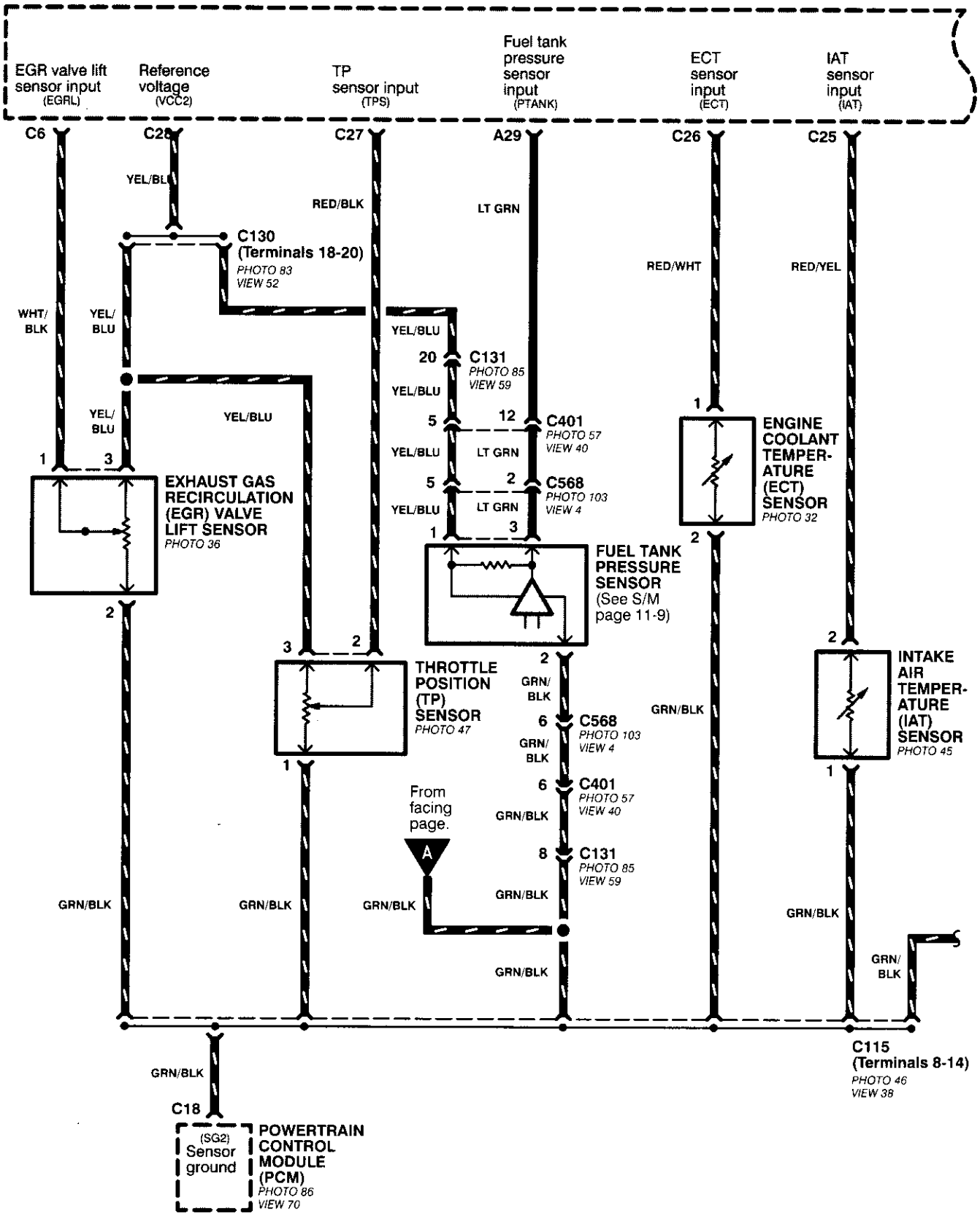

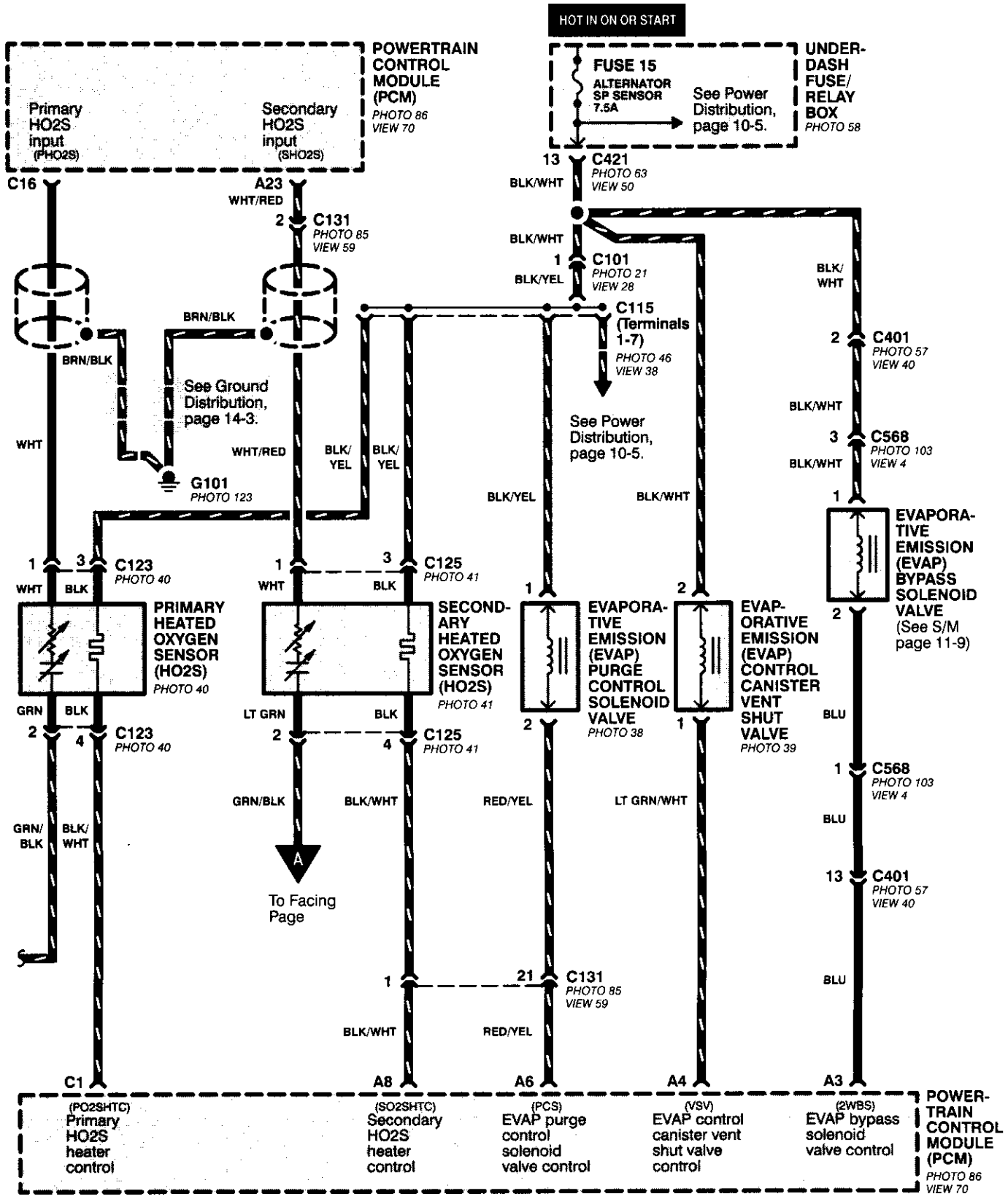
HOT IN ON OR START
POWERTRAIN CONTROL MODULE (PCM)
PHOTO 86
VIEW 70
Primary HO2S input (PHO2S)
Secondary HO2S input (SHO2S)
UNDER-DASH FUSE/ RELAY BOX
PHOTO 58
FUSE 15
ALTERNATOR SP SENSOR 7.5A
See Power Distribution, page 10-5.
C16
A23
WHT/RED
C131
PHOTO 85
VIEW 59
13
C421
PHOTO 63
VIEW 50
BLK/WHT
C101
PHOTO 21
VIEW 28
BLK/YEL
C115 (Terminals 1-7)
PHOTO 46
VIEW 38
BRN/BLK
See Ground Distribution, page 14-3.
WHT
WHT/RED
BLK/ YEL
G101
PHOTO 123
See Power Distribution, page 10-5.
C401
PHOTO 57
VIEW 40
C568
PHOTO 103
VIEW 4
EVAPORA-TIVE EMISSION (EVAP) BYPASS SOLENOID VALVE
(See S/M page 11-9)
C123
PHOTO 40
C125
PHOTO 41
PRIMARY HEATED OXYGEN SENSOR (HO2S)
PHOTO 40
SECOND-ARY HEATED OXYGEN SENSOR (HO2S)
PHOTO 41
EVAPORA-TIVE EMISSION (EVAP) PURGE CONTROL SOLENOID VALVE
PHOTO 38
EVAP-ORATIVE EMISSION (EVAP) CONTROL CANISTER VENT SHUT VALVE
PHOTO 39
GRN
BLK
LT GRN
GRN/BLK
BLK/WHT
RED/YEL
LT GRN/WHT
BLU
GRN/ BLK
BLK/ WHT
A
To Facing Page
C131
PHOTO 85
VIEW 59
C1
A8
A6
A4
A3
(PO2SHTC) Primary HO2S heater control
(SO2SHTC) Secondary HO2S heater control
(PCS) EVAP purge control solenoid valve control
(VSV) EVAP control canister vent shut valve control
(2WBS) EVAP bypass solenoid valve control
POWER-TRAIN CONTROL MODULE (PCM)
PHOTO 86
VIEW 70

- D16Y7 Engine

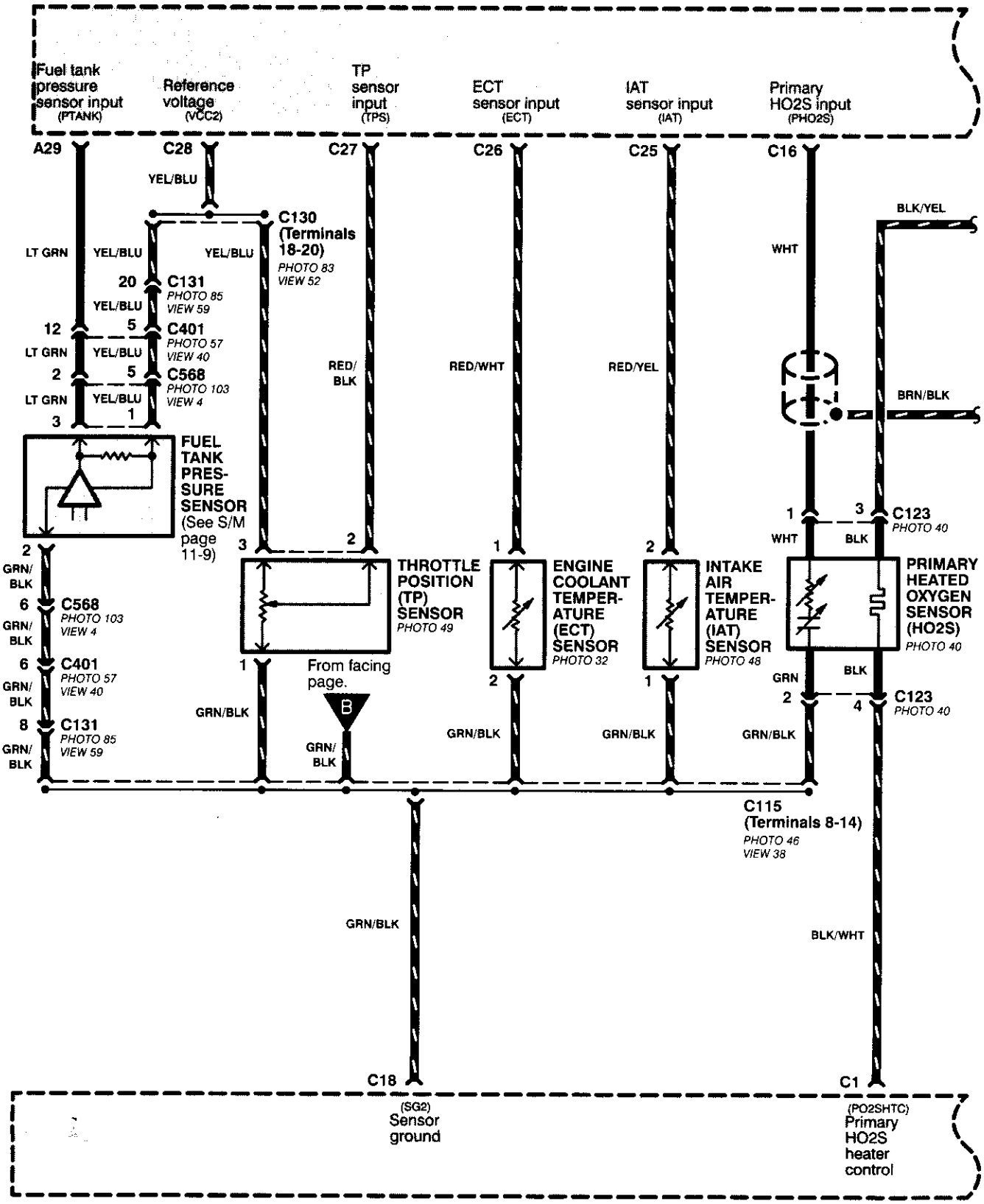

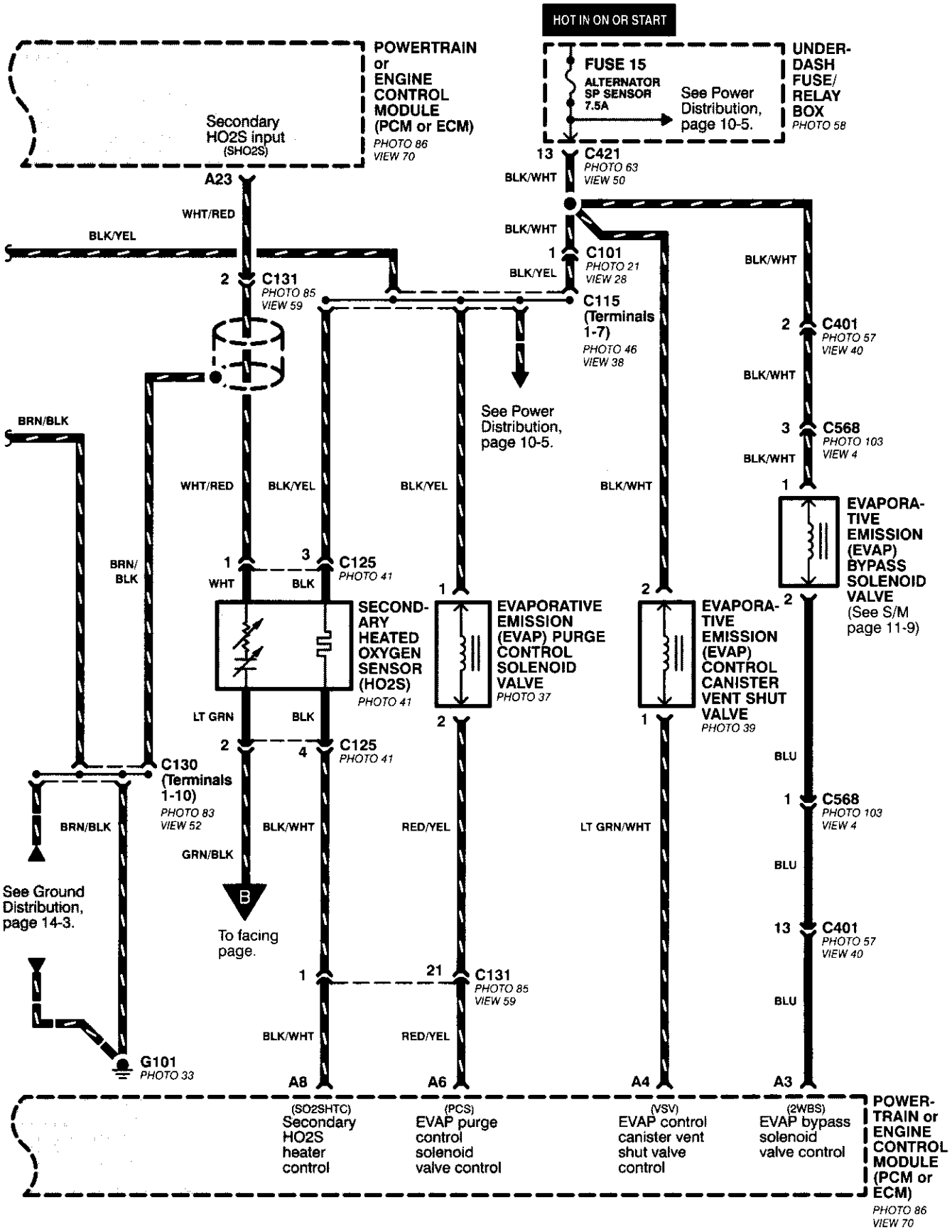
HOT IN ON OR START
POWERTRAIN or ENGINE CONTROL MODULE (PCM or ECM)
PHOTO 86
VIEW 70
Secondary HO2S input (SHO2S)
A23
WHT/RED
BLK/YEL
2
C131
PHOTO 85
VIEW 59
FUSE 15
ALTERNATOR SP SENSOR 7.5A
See Power Distribution, page 10-5.
UNDER-DASH FUSE/ RELAY BOX
PHOTO 58
13
C421
PHOTO 63
VIEW 50
BLK/WHT
1
C101
PHOTO 21
VIEW 28
C115 (Terminals 1-7)
PHOTO 46
VIEW 38
See Power Distribution, page 10-5.
2
C401
PHOTO 57
VIEW 40
3
C568
PHOTO 103
VIEW 4
1
EVAPORATIVE EMISSION (EVAP) BYPASS SOLENOID VALVE
(See S/M page 11-9)
BRN/BLK
BRN/ BLK
WHT
BLK
C125
PHOTO 41
SECONDARY HEATED OXYGEN SENSOR (HO2S)
PHOTO 41
EVAPORATIVE EMISSION (EVAP) PURGE CONTROL SOLENOID VALVE
PHOTO 37
EVAPORATIVE EMISSION (EVAP) CONTROL CANISTER VENT SHUT VALVE
PHOTO 39
LT GRN
C130 (Terminals 1-10)
PHOTO 83
VIEW 52
GRN/BLK
BLU
LT GRN/WHT
RED/YEL
See Ground Distribution, page 14-3.
B
To facing page.
C131
PHOTO 85
VIEW 59
G101
PHOTO 33
A8
A6
A4
A3
(SO2SHTC) Secondary HO2S heater control
(PCS) EVAP purge control solenoid valve control
(VSV) EVAP control canister vent shut valve control
(2WBS) EVAP bypass solenoid valve control
POWER-TRAIN or ENGINE CONTROL MODULE (PCM or ECM)
PHOTO 86
VIEW 70

D16Y8/B16A2 Engines

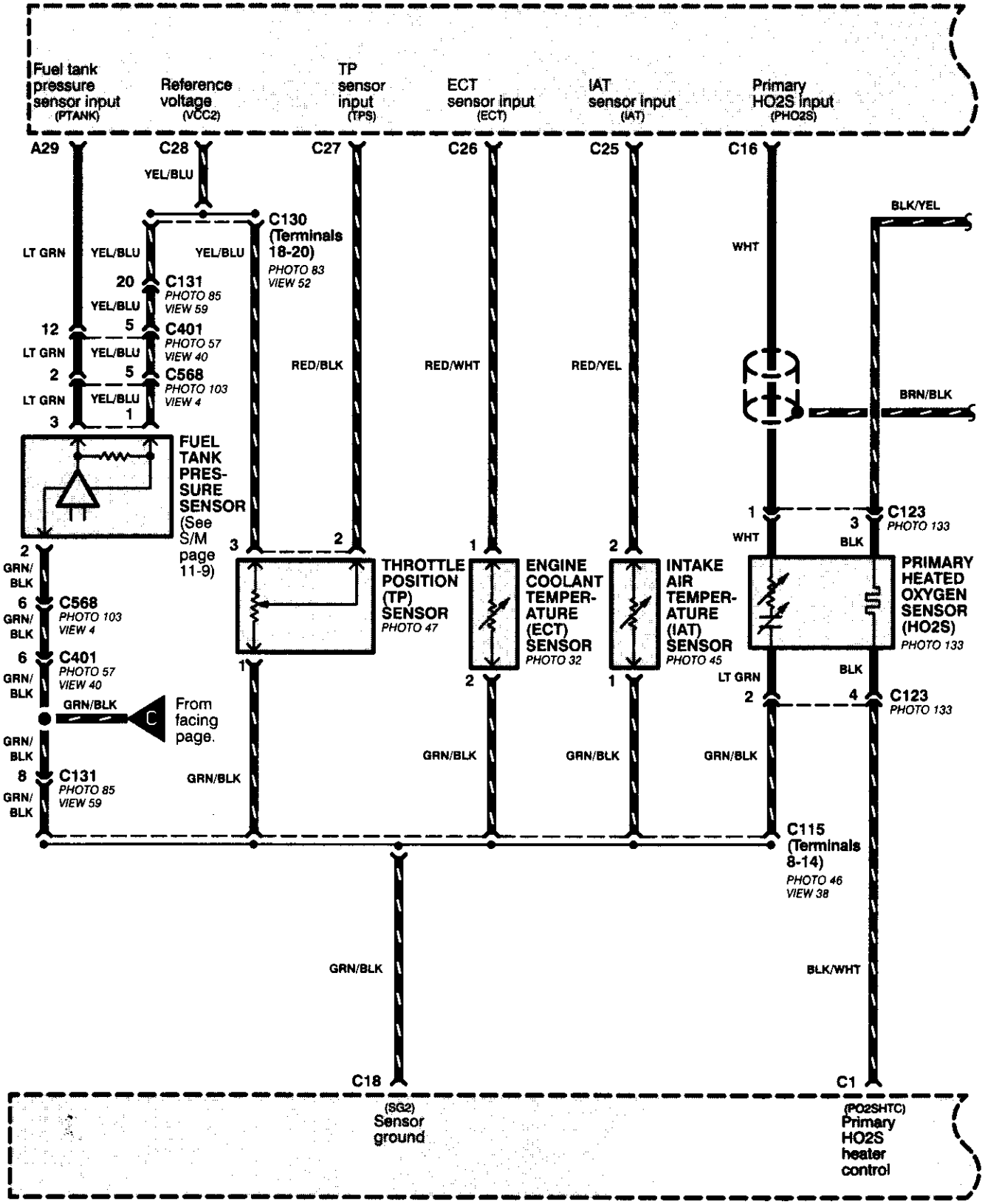

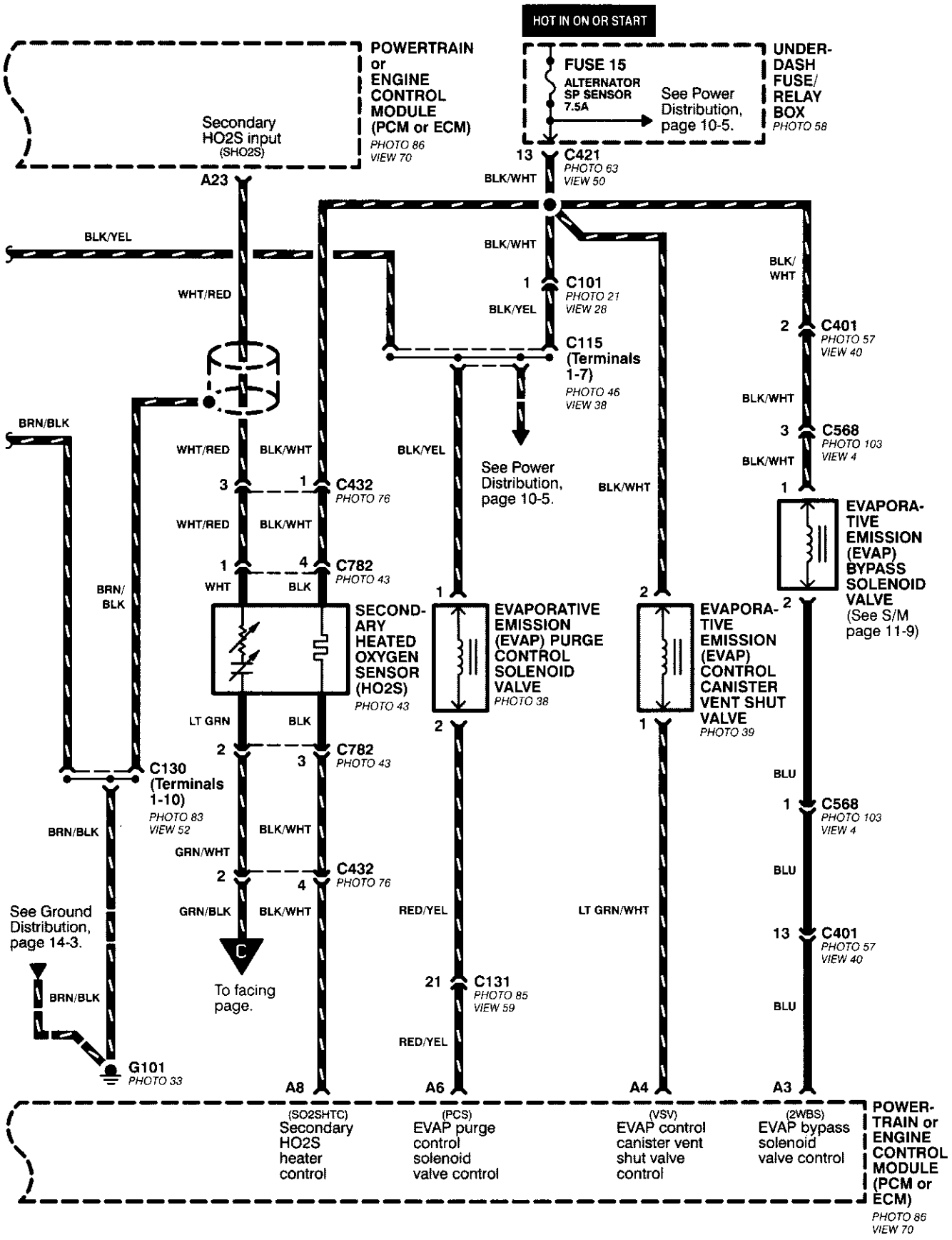
HOT IN ON OR START
POWERTRAIN or ENGINE CONTROL MODULE (PCM or ECM)
PHOTO 86
VIEW 70
Secondary HO2S input (SHO2S)
A23
FUSE 15
ALTERNATOR SP SENSOR 7.5A
See Power Distribution, page 10-5.
UNDER-DASH FUSE/ RELAY BOX
PHOTO 58
13
C421
PHOTO 63
VIEW 50
BLK/WHT
BLK/YEL
WHT/RED
1
C101
PHOTO 21
VIEW 28
C115 (Terminals 1-7)
PHOTO 46
VIEW 38
See Power Distribution, page 10-5.
BLK/ WHT
2
C401
PHOTO 57
VIEW 40
3
C568
PHOTO 103
VIEW 4
EVAPORA-TIVE EMISSION (EVAP) BYPASS SOLENOID VALVE
(See S/M page 11-9)
BRN/BLK
WHT/RED
BLK/WHT
3
C432
PHOTO 76
WHT/RED
BLK/WHT
1
C782
PHOTO 43
WHT
BLK
BRN/ BLK
SECOND-ARY HEATED OXYGEN SENSOR (HO2S)
PHOTO 43
EVAPORATIVE EMISSION (EVAP) PURGE CONTROL SOLENOID VALVE
PHOTO 38
EVAPORA-TIVE EMISSION (EVAP) CONTROL CANISTER VENT SHUT VALVE
PHOTO 39
LT GRN
BLK
2
C782
PHOTO 43
C130 (Terminals 1-10)
PHOTO 83
VIEW 52
BLU
1
C568
PHOTO 103
VIEW 4
BRN/BLK
BLK/WHT
GRN/WHT
2
C432
PHOTO 76
BLU
See Ground Distribution, page 14-3.
GRN/BLK
BLK/WHT
RED/YEL
LT GRN/WHT
13
C401
PHOTO 57
VIEW 40
To facing page.
21
C131
PHOTO 85
VIEW 59
BLU
BRN/BLK
RED/YEL
G101
PHOTO 33
A8
A6
A4
A3
(SO2SHTC) Secondary HO2S heater control
(PCS) EVAP purge control solenoid valve control
(VSV) EVAP control canister vent shut valve control
(2WBS) EVAP bypass solenoid valve control
POWER-TRAIN or ENGINE CONTROL MODULE (PCM or ECM)
PHOTO 86
VIEW 70

Programmed Fuel Injection System (PGM-FI) (D16B5)

NOTE: Fuse 31 is HOT with Ignition Switch in START (III) and A/T Gear Selector in PARK (P) or NEUTRAL (N), see Starting System, page 21-1.

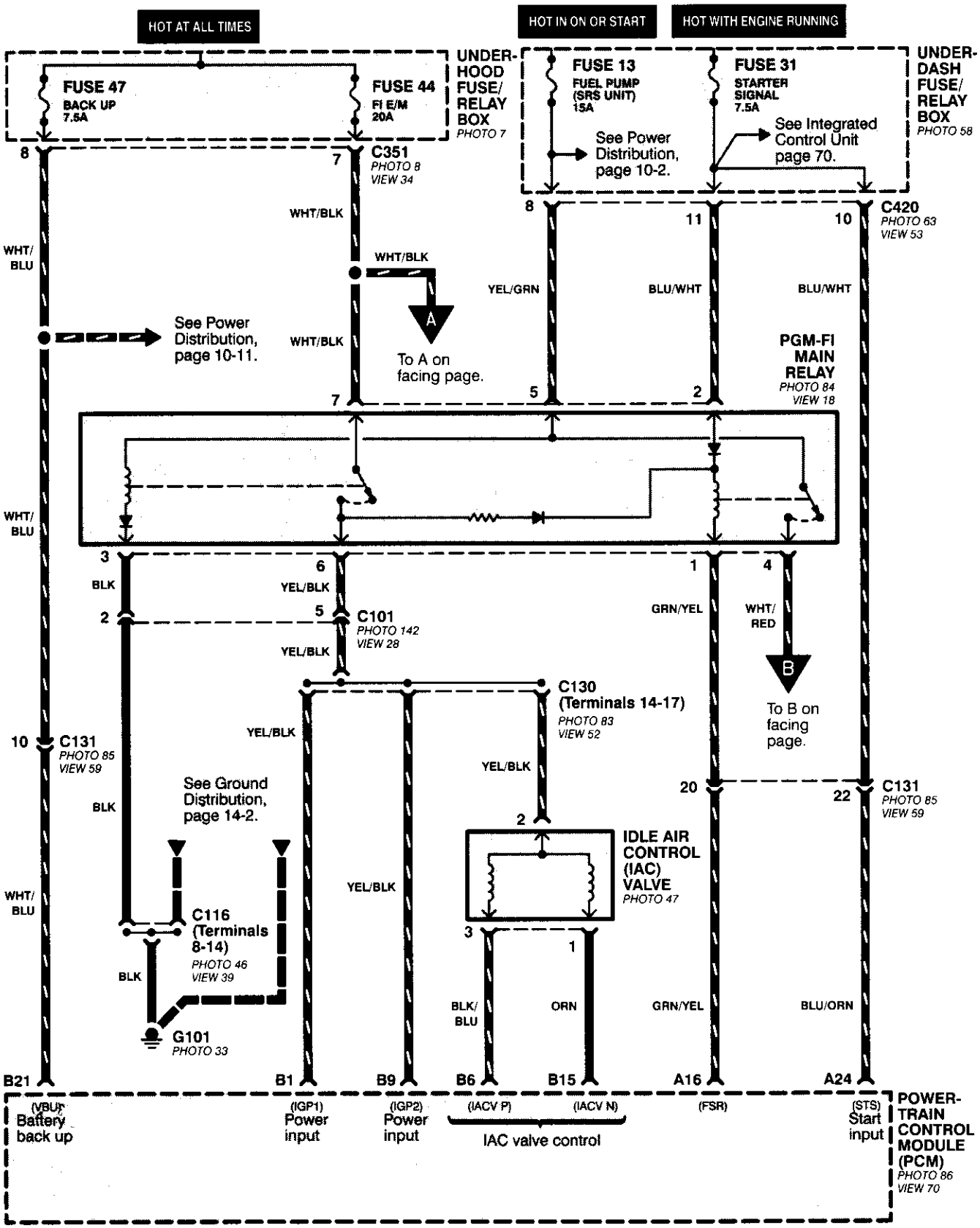

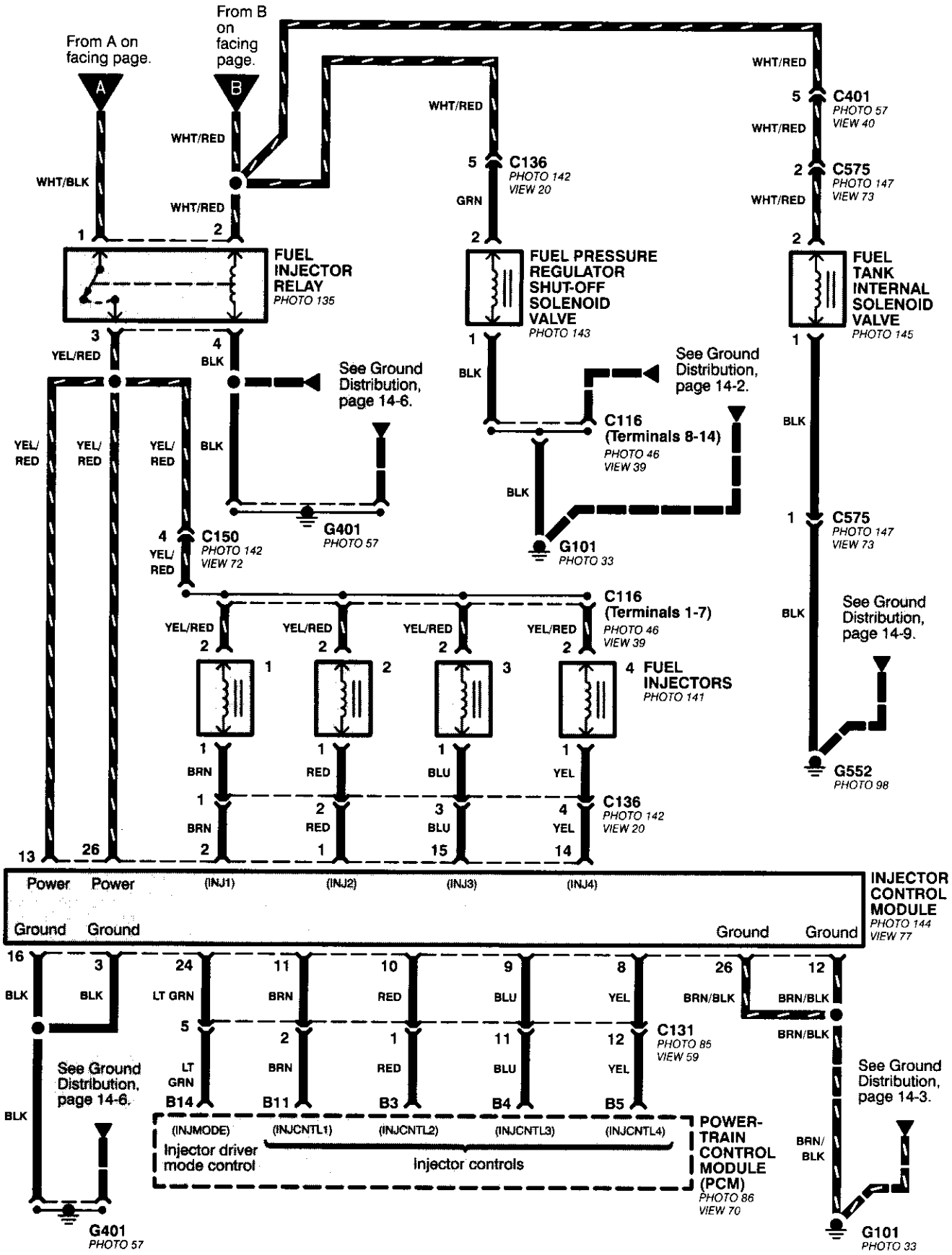
From A on facing page.
From B on facing page.
A
B
WHT/BLK
WHT/RED
WHT/RED
1
2
FUEL INJECTOR RELAY
PHOTO 135
3
YEL/RED
4
BLK
See Ground Distribution, page 14-6.
YEL/ RED
YEL/ RED
YEL/ RED
BLK
4
C150
PHOTO 142
VIEW 72
YEL/ RED
G401
PHOTO 57
WHT/RED
5
C136
PHOTO 142
VIEW 20
GRN
2
FUEL PRESSURE REGULATOR SHUT-OFF SOLENOID VALVE
PHOTO 143
1
BLK
See Ground Distribution, page 14-2.
C116
(Terminals 8-14)
PHOTO 46
VIEW 39
BLK
G101
PHOTO 33
WHT/RED
5
C401
PHOTO 57
VIEW 40
WHT/RED
2
C575
PHOTO 147
VIEW 73
WHT/RED
2
FUEL TANK INTERNAL SOLENOID VALVE
PHOTO 145
1
BLK
1
C575
PHOTO 147
VIEW 73
BLK
See Ground Distribution, page 14-9.
G552
PHOTO 98
C116
(Terminals 1-7)
PHOTO 46
VIEW 39
YEL/RED
YEL/RED
YEL/RED
YEL/RED
2
2
2
2
1
2
3
4
FUEL INJECTORS
PHOTO 141
1
BRN
1
RED
1
BLU
1
YEL
1
BRN
2
RED
3
BLU
4
YEL
C136
PHOTO 142
VIEW 20
13
26
2
1
15
14
Power
Power
(INJ1)
(INJ2)
(INJ3)
(INJ4)
Ground
Ground
Ground
Ground
INJECTOR CONTROL MODULE
PHOTO 144
VIEW 77
16
3
24
11
10
9
8
26
12
BLK
BLK
LT GRN
BRN
RED
BLU
YEL
BRN/BLK
BRN/BLK
5
2
1
11
12
C131
PHOTO 85
VIEW 59
BRN/BLK
See Ground Distribution, page 14-6.
LT GRN
BRN
RED
BLU
YEL
See Ground Distribution, page 14-3.
BLK
B14
B11
B3
B4
B5
(INJMODE)
(INJCNTL1)
(INJCNTL2)
(INJCNTL3)
(INJCNTL4)
Injector driver mode control
Injector controls
POWER-TRAIN CONTROL MODULE (PCM)
PHOTO 86
VIEW 70
BRN/ BLK
G401
PHOTO 57
G101
PHOTO 33

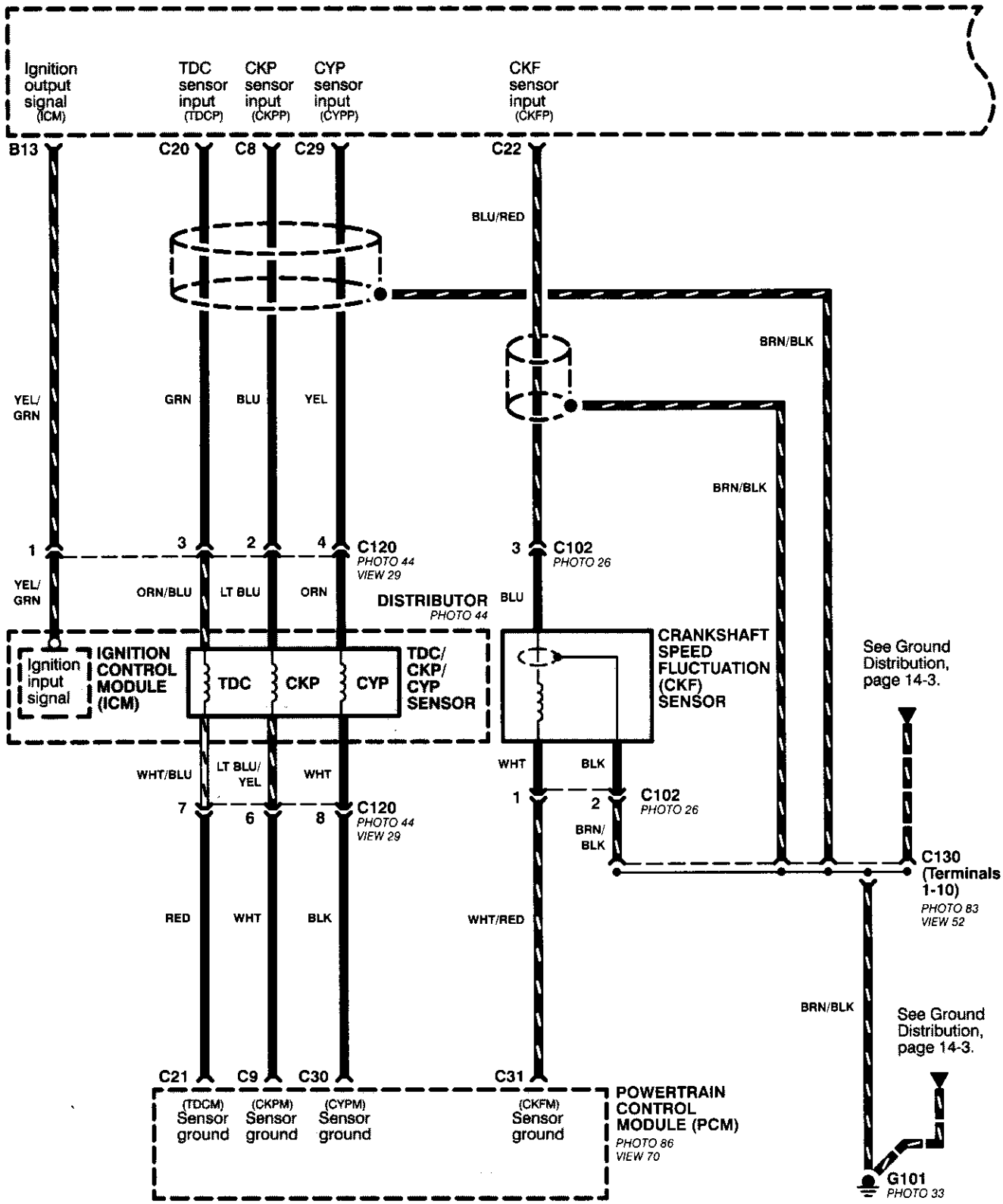
Ignition output signal (ICM)
TDC sensor input (TDCP)
CKP sensor input (CKPP)
CYP sensor input (CYPP)
CKF sensor input (CKFP)
B13
C20
C8
C29
C22
BLU/RED
BRN/BLK
YEL/GRN
GRN
BLU
YEL
BRN/BLK
1
3
2
4
C120
PHOTO 44
VIEW 29
3
C102
PHOTO 26
YEL/GRN
ORN/BLU
LT BLU
ORN
DISTRIBUTOR
PHOTO 44
BLU
Ignition input signal
IGNITION CONTROL MODULE (ICM)
TDC
CKP
CYP
TDC/CKP/CYP SENSOR
CRANKSHAFT SPEED FLUCTUATION (CKF) SENSOR
See Ground Distribution, page 14-3.
WHT/BLU
LT BLU/YEL
WHT
WHT
BLK
7
6
8
C120
PHOTO 44
VIEW 29
1
2
C102
PHOTO 26
BRN/BLK
C130 (Terminals 1-10)
PHOTO 83
VIEW 52
RED
WHT
BLK
WHT/RED
BRN/BLK
See Ground Distribution, page 14-3.
C21
C9
C30
C31
(TDCM) Sensor ground
(CKPM) Sensor ground
(CYPM) Sensor ground
(CKFM) Sensor ground
POWERTRAIN CONTROL MODULE (PCM)
PHOTO 86
VIEW 70
G101
PHOTO 33

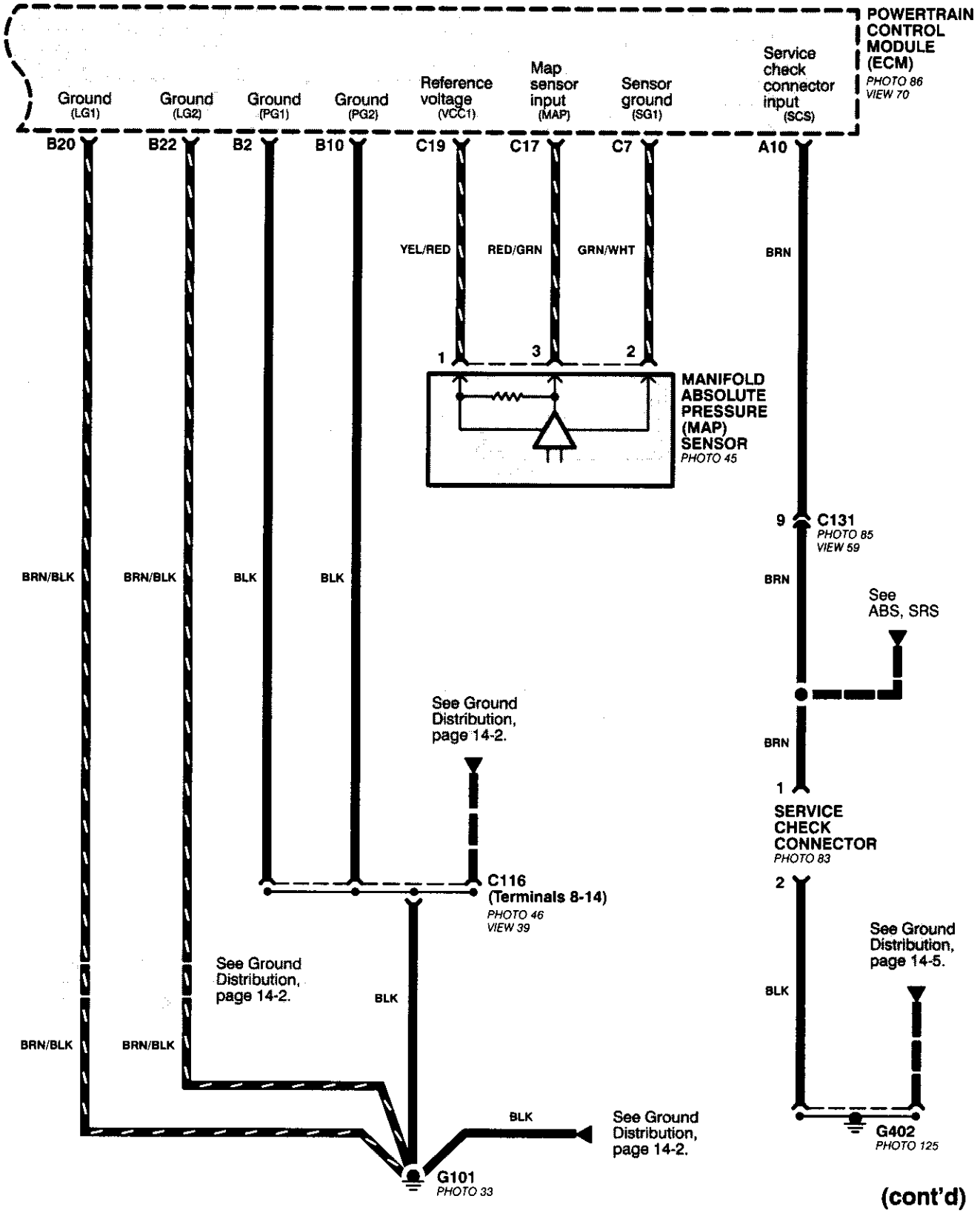
POWERTRAIN CONTROL MODULE (ECM)
PHOTO 86
VIEW 70
Ground (LG1)
Ground (LG2)
Ground (PG1)
Ground (PG2)
Reference voltage (VCC1)
Map sensor input (MAP)
Sensor ground (SG1)
Service check connector input (SCS)
B20
B22
B2
B10
C19
C17
C7
A10
YEL/RED
RED/GRN
GRN/WHT
BRN
1
3
2
MANIFOLD ABSOLUTE PRESSURE (MAP) SENSOR
PHOTO 45
9
C131
PHOTO 85
VIEW 59
BRN/BLK
BRN/BLK
BLK
BLK
BRN
See ABS, SRS
See Ground Distribution, page 14-2.
BRN
1
SERVICE CHECK CONNECTOR
PHOTO 83
C116 (Terminals 8-14)
PHOTO 46
VIEW 39
2
See Ground Distribution, page 14-5.
See Ground Distribution, page 14-2.
BLK
BLK
BRN/BLK
BRN/BLK
BLK
See Ground Distribution, page 14-2.
G402
PHOTO 125
G101
PHOTO 33

(cont'd)

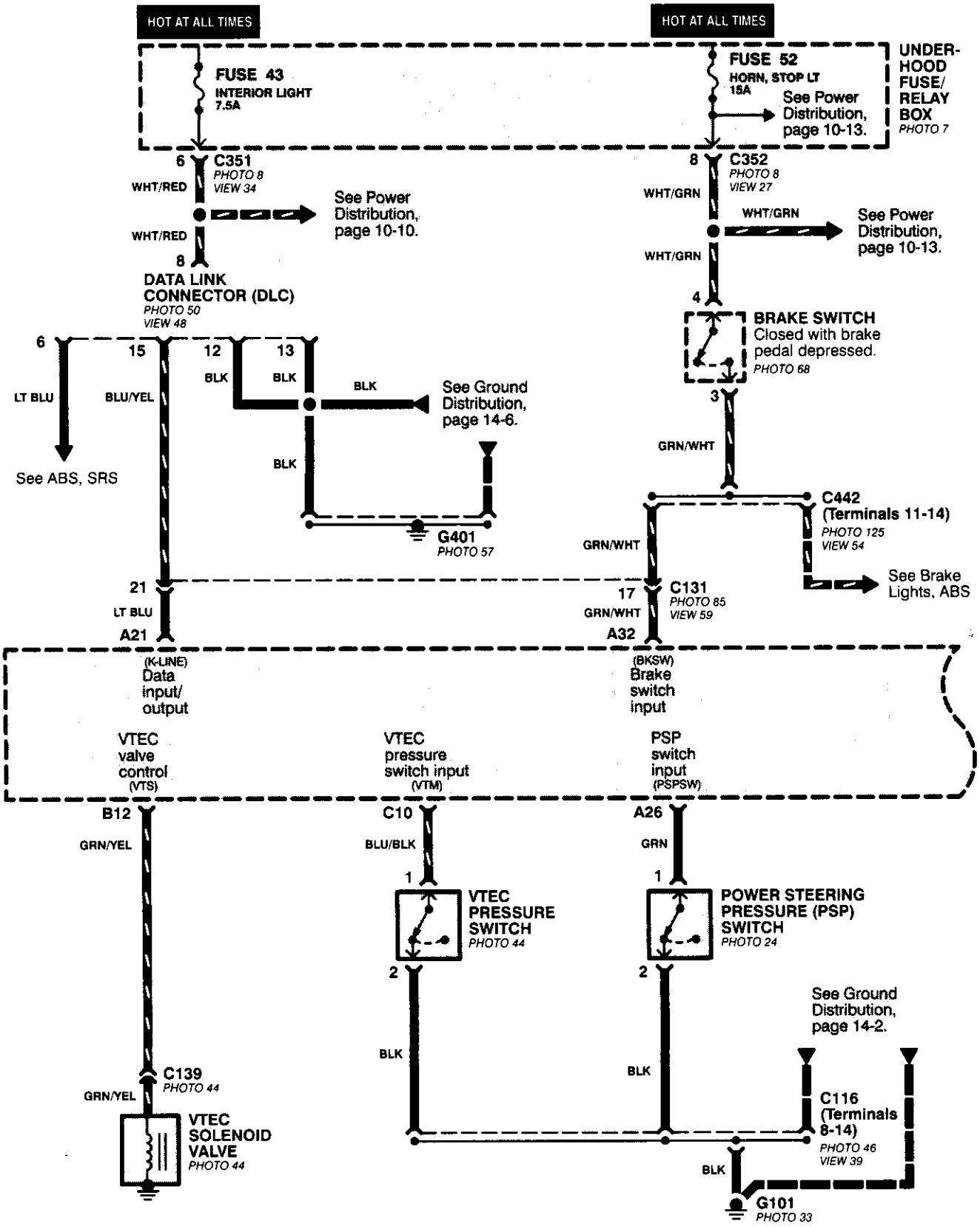
HOT AT ALL TIMES
HOT AT ALL TIMES
FUSE 43
INTERIOR LIGHT
7.5A
FUSE 52
HORN, STOP LT
15A
See Power Distribution, page 10-13.
UNDER-HOOD FUSE/ RELAY BOX
PHOTO 7
6
C351
PHOTO 8
VIEW 34
WHT/RED
See Power Distribution, page 10-10.
WHT/RED
8
DATA LINK CONNECTOR (DLC)
PHOTO 50
VIEW 48
8
C352
PHOTO 8
VIEW 27
WHT/GRN
WHT/GRN
See Power Distribution, page 10-13.
WHT/GRN
4
BRAKE SWITCH
Closed with brake pedal depressed.
PHOTO 68
3
GRN/WHT
6
15
12
13
LT BLU
BLU/YEL
BLK
BLK
BLK
See Ground Distribution, page 14-6.
BLK
See ABS, SRS
G401
PHOTO 57
C442
(Terminals 11-14)
PHOTO 125
VIEW 54
GRN/WHT
See Brake Lights, ABS
21
LT BLU
A21
17
GRN/WHT
A32
C131
PHOTO 85
VIEW 59
(K-LINE)
Data input/ output
(BKSW)
Brake switch input
VTEC valve control (VTS)
VTEC pressure switch input (VTM)
PSP switch input (PSPSW)
B12
GRN/YEL
C10
BLU/BLK
A26
GRN
1
VTEC PRESSURE SWITCH
PHOTO 44
1
POWER STEERING PRESSURE (PSP) SWITCH
PHOTO 24
2
2
See Ground Distribution, page 14-2.
BLK
BLK
C139
PHOTO 44
GRN/YEL
VTEC SOLENOID VALVE
PHOTO 44
C116
(Terminals 8-14)
PHOTO 46
VIEW 39
BLK
G101
PHOTO 33

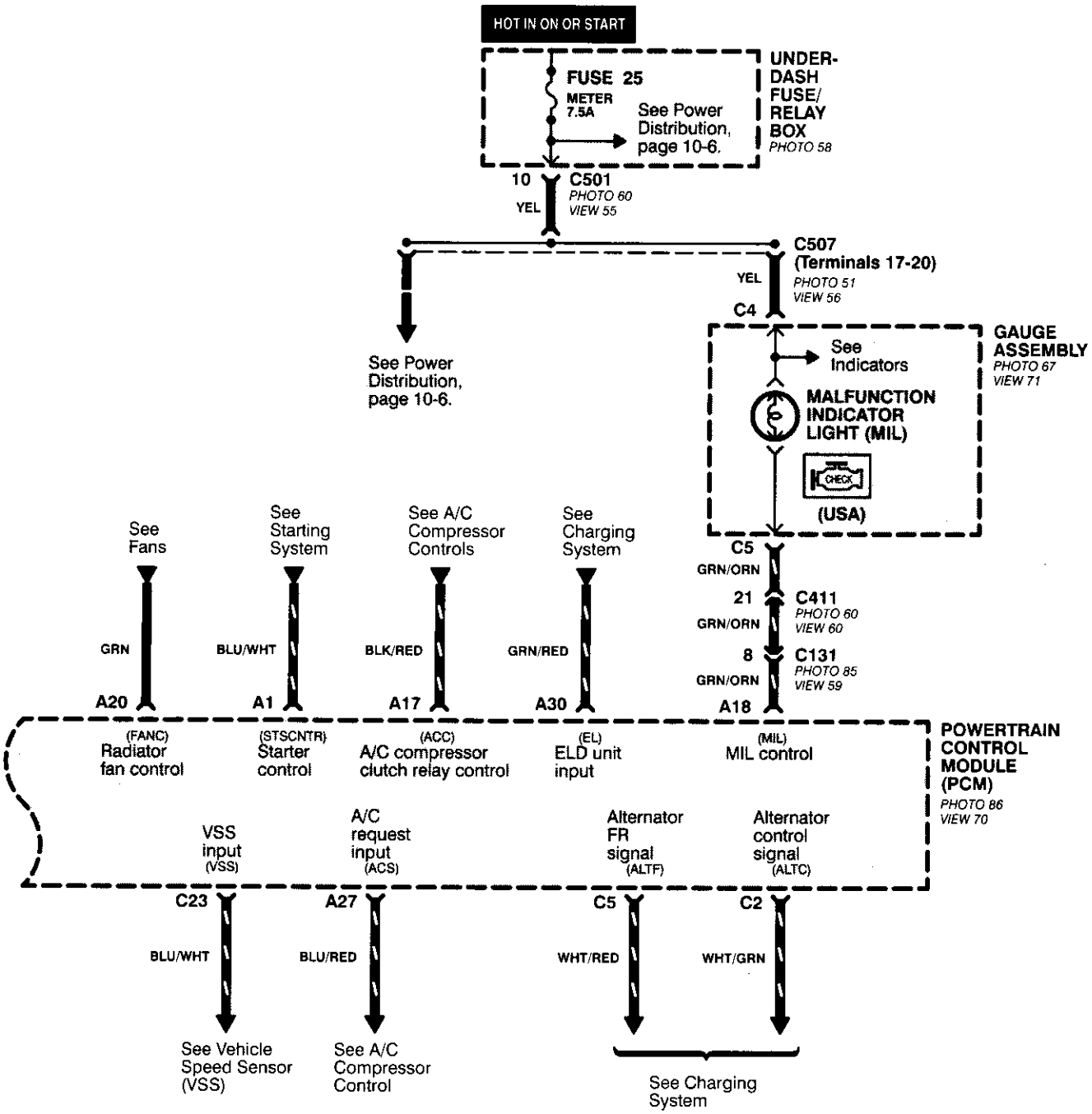
HOT IN ON OR START
FUSE 25
METER 7.5A
See Power Distribution, page 10-6.
UNDER-DASH FUSE/ RELAY BOX
PHOTO 58
10
YEL
C501
PHOTO 60
VIEW 55
C507 (Terminals 17-20)
PHOTO 51
VIEW 56
YEL
C4
See Power Distribution, page 10-6.
See Indicators
MALFUNCTION INDICATOR LIGHT (MIL)
CHECK
(USA)
GAUGE ASSEMBLY
PHOTO 67
VIEW 71
C5
GRN/ORN
21
C411
PHOTO 60
VIEW 60
GRN/ORN
8
C131
PHOTO 85
VIEW 59
GRN/ORN
A18
See Fans
See Starting System
See A/C Compressor Controls
See Charging System
GRN
BLU/WHT
BLK/RED
GRN/RED
A20
A1
A17
A30
(FANC) Radiator fan control
(STSCNTR) Starter control
(ACC) A/C compressor clutch relay control
(EL) ELD unit input
(MIL) MIL control
POWERTRAIN CONTROL MODULE (PCM)
PHOTO 86
VIEW 70
VSS input (VSS)
A/C request input (ACS)
Alternator FR signal (ALTF)
Alternator control signal (ALTC)
C23
A27
C5
C2
BLU/WHT
BLU/RED
WHT/RED
WHT/GRN
See Vehicle Speed Sensor (VSS)
See A/C Compressor Control
See Charging System

(cont'd)

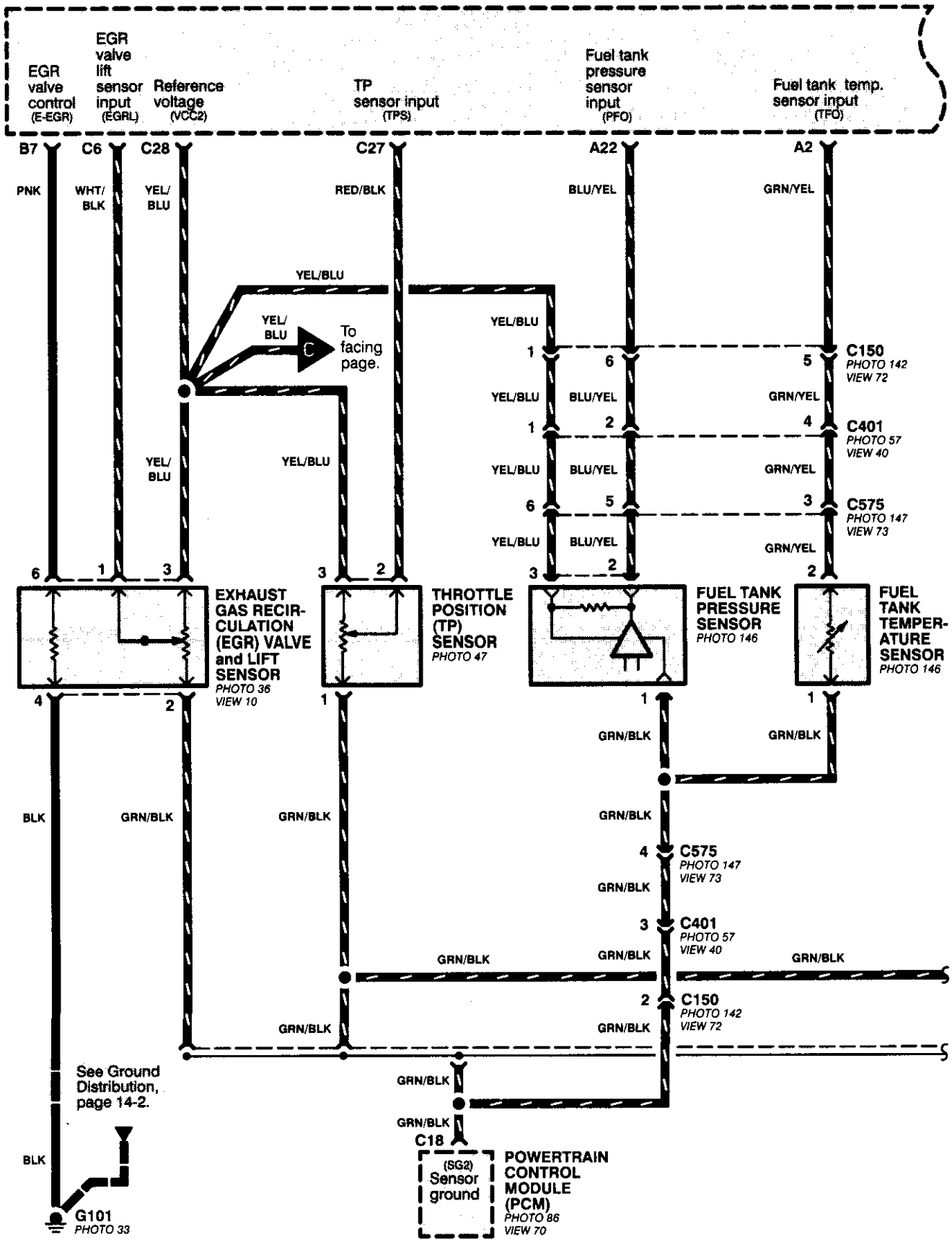
EGR valve control (E-EGR)
EGR valve lift sensor input (EGRL)
Reference voltage (VCC2)
TP sensor input (TPS)
Fuel tank pressure sensor input (PFO)
Fuel tank temp. sensor input (TFO)
B7
C6
C28
C27
A22
A2
PNK
WHT/BLK
YEL/BLU
RED/BLK
BLU/YEL
GRN/YEL
YEL/BLU
To facing page.
C150
PHOTO 142
VIEW 72
C401
PHOTO 57
VIEW 40
C575
PHOTO 147
VIEW 73
EXHAUST GAS RECIRCULATION (EGR) VALVE and LIFT SENSOR
PHOTO 36
VIEW 10
THROTTLE POSITION (TP) SENSOR
PHOTO 47
FUEL TANK PRESSURE SENSOR
PHOTO 146
FUEL TANK TEMPERATURE SENSOR
PHOTO 146
GRN/BLK
BLK
See Ground Distribution, page 14-2.
G101
PHOTO 33
C18
(SG2) Sensor ground
POWERTRAIN CONTROL MODULE (PCM)
PHOTO 86
VIEW 70

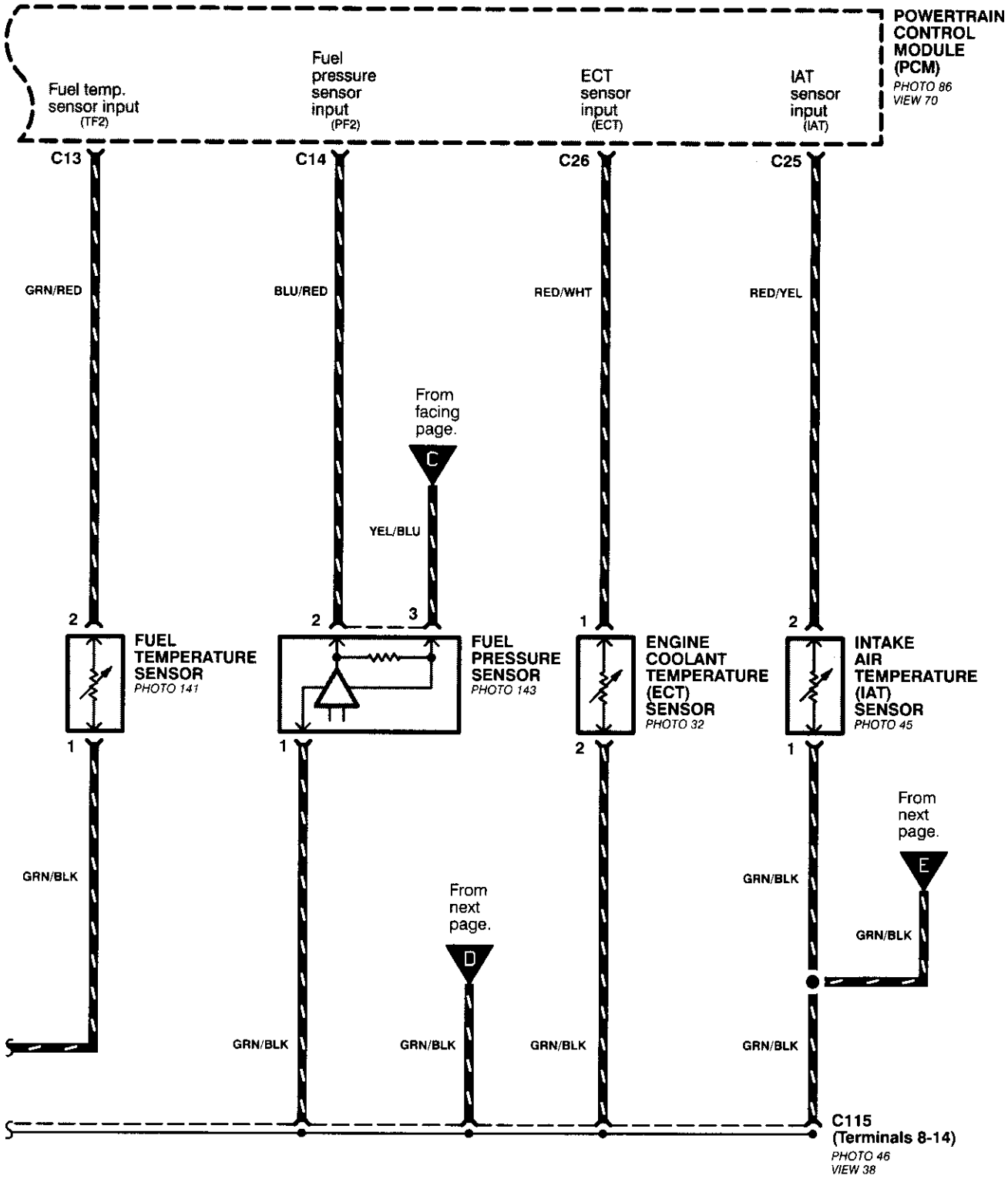
POWERTRAIN CONTROL MODULE (PCM)
PHOTO 86
VIEW 70
Fuel temp. sensor input (TF2)
Fuel pressure sensor input (PF2)
ECT sensor input (ECT)
IAT sensor input (IAT)
C13
C14
C26
C25
GRN/RED
BLU/RED
RED/WHT
RED/YEL
From facing page.
C
YEL/BLU
2
3
1
FUEL TEMPERATURE SENSOR
PHOTO 141
FUEL PRESSURE SENSOR
PHOTO 143
ENGINE COOLANT TEMPERATURE (ECT) SENSOR
PHOTO 32
INTAKE AIR TEMPERATURE (IAT) SENSOR
PHOTO 45
From next page.
E
GRN/BLK
From next page.
D
C115 (Terminals 8-14)
PHOTO 46
VIEW 38

(cont'd)

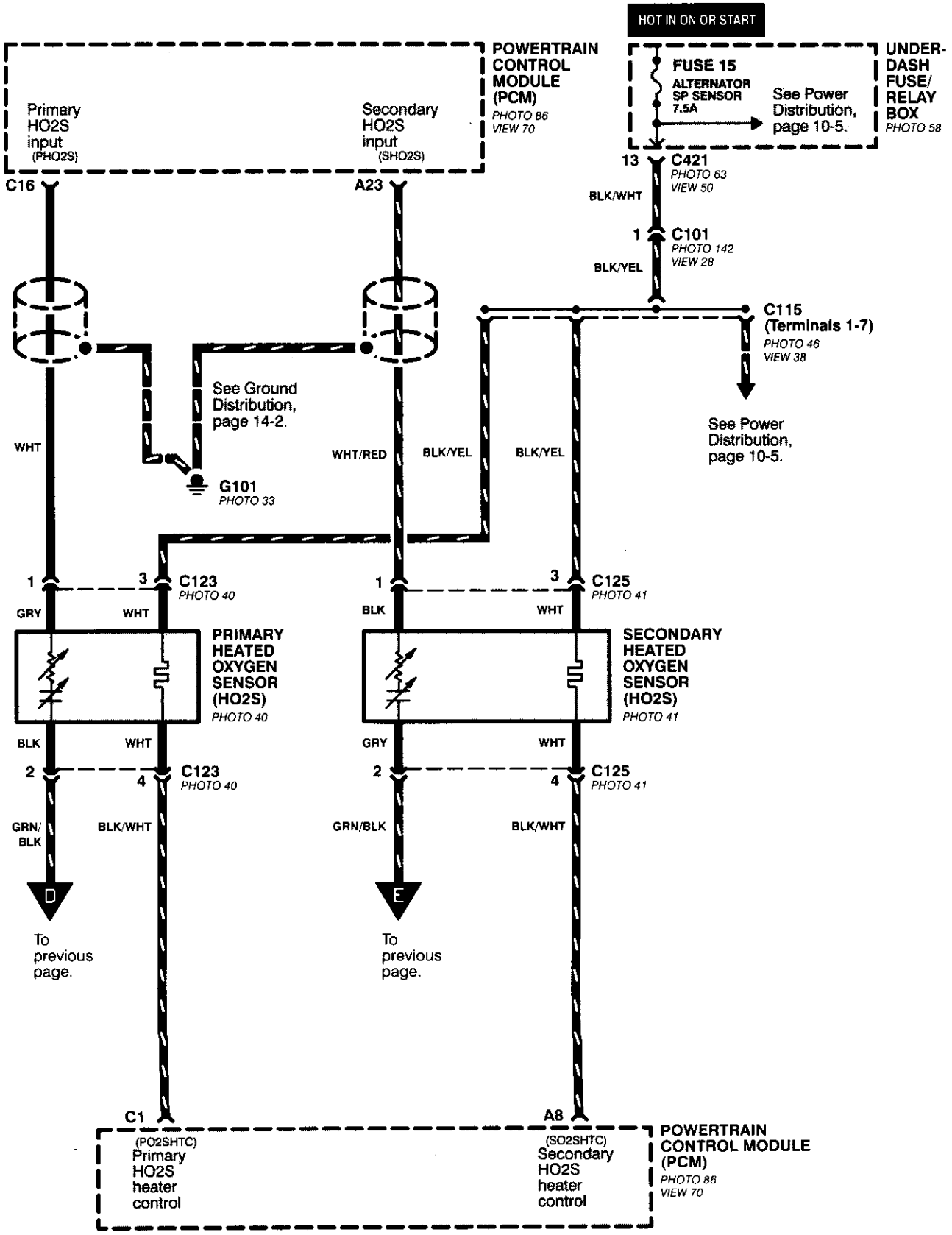
HOT IN ON OR START
POWERTRAIN CONTROL MODULE (PCM)
PHOTO 86
VIEW 70
Primary HO2S input (PHO2S)
Secondary HO2S input (SHO2S)
FUSE 15
ALTERNATOR SP SENSOR 7.5A
See Power Distribution, page 10-5.
UNDER-DASH FUSE/ RELAY BOX
PHOTO 58
13
C421
PHOTO 63
VIEW 50
BLK/WHT
1
C101
PHOTO 142
VIEW 28
BLK/YEL
C16
A23
C115 (Terminals 1-7)
PHOTO 46
VIEW 38
See Ground Distribution, page 14-2.
See Power Distribution, page 10-5.
WHT
WHT/RED
BLK/YEL
BLK/YEL
G101
PHOTO 33
1
3
C123
PHOTO 40
1
3
C125
PHOTO 41
GRY
WHT
BLK
WHT
PRIMARY HEATED OXYGEN SENSOR (HO2S)
PHOTO 40
SECONDARY HEATED OXYGEN SENSOR (HO2S)
PHOTO 41
BLK
WHT
GRY
WHT
2
4
C123
PHOTO 40
2
4
C125
PHOTO 41
GRN/ BLK
BLK/WHT
GRN/BLK
BLK/WHT
D
E
To previous page.
To previous page.
C1
A8
(PO2SHTC) Primary HO2S heater control
(SO2SHTC) Secondary HO2S heater control
POWERTRAIN CONTROL MODULE (PCM)
PHOTO 86
VIEW 70

Vehicle Speed Sensor (VSS)

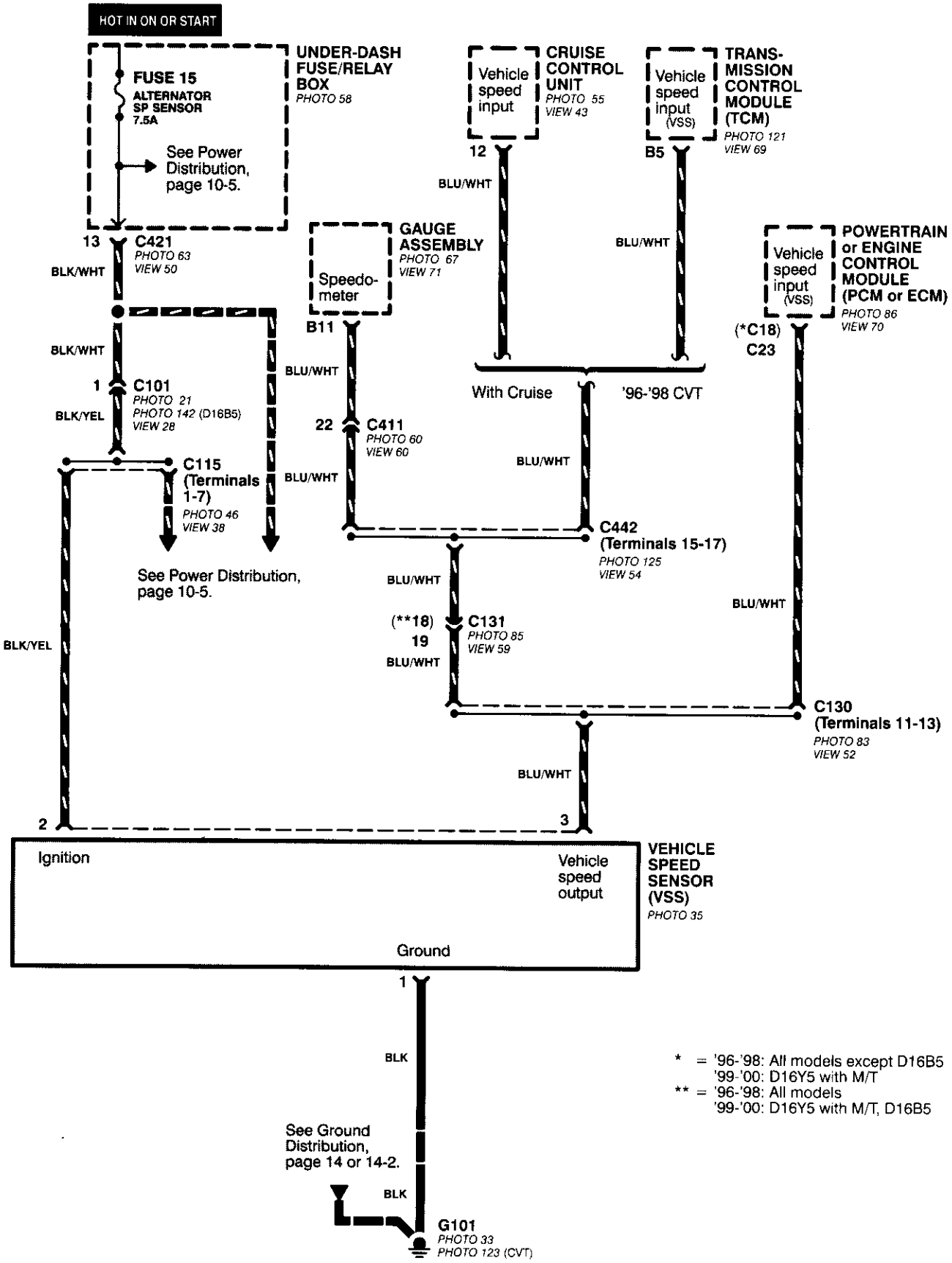

* = '96-'98: All models except D16B5
'99-'00: D16Y5 with M/T
** = '96-'98: All models
'99-'00: D16Y5 with M/T, D16B5

How the Circuit Works

With the ignition switch in ON (II) or START (III), battery voltage is supplied through fuse 15 and the BLK/WHT and BLK/YEL wire to the vehicle speed sensor (VSS). The sensor is grounded by the BLK wire to G101. The speedometer and other control units in the circuit supply about 5 volts to the BLU/WHT wire. The vehicle speed sensor (VSS) intermittently grounds the BLU/WHT wire which generates a pulsed signal in it. The number of pulses per minute increases/decreases with the speed of the car.

Refer to the Service Manual (Section 23, Electrical) for specific tests or troubleshooting procedures.

Cruise Control

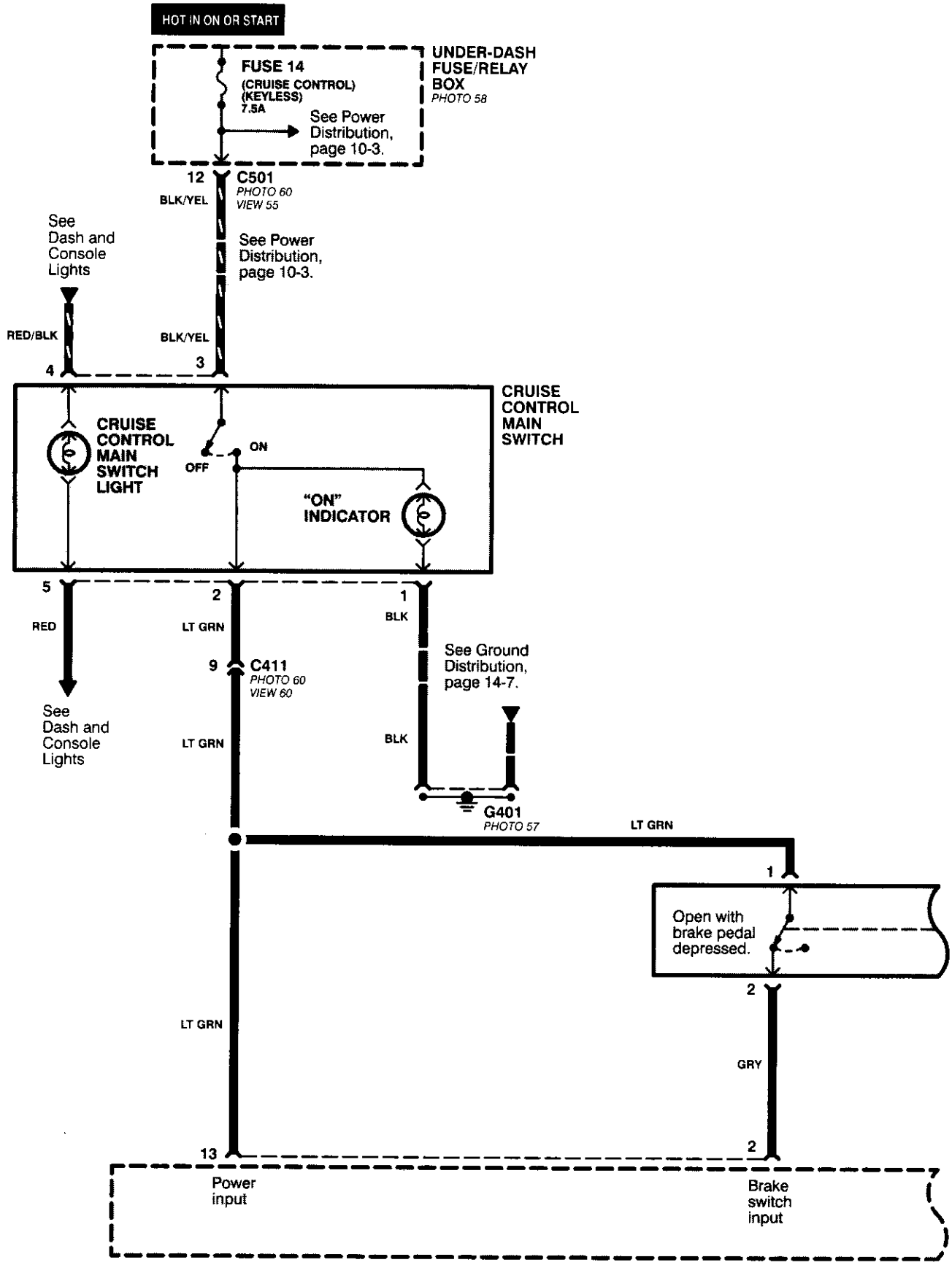

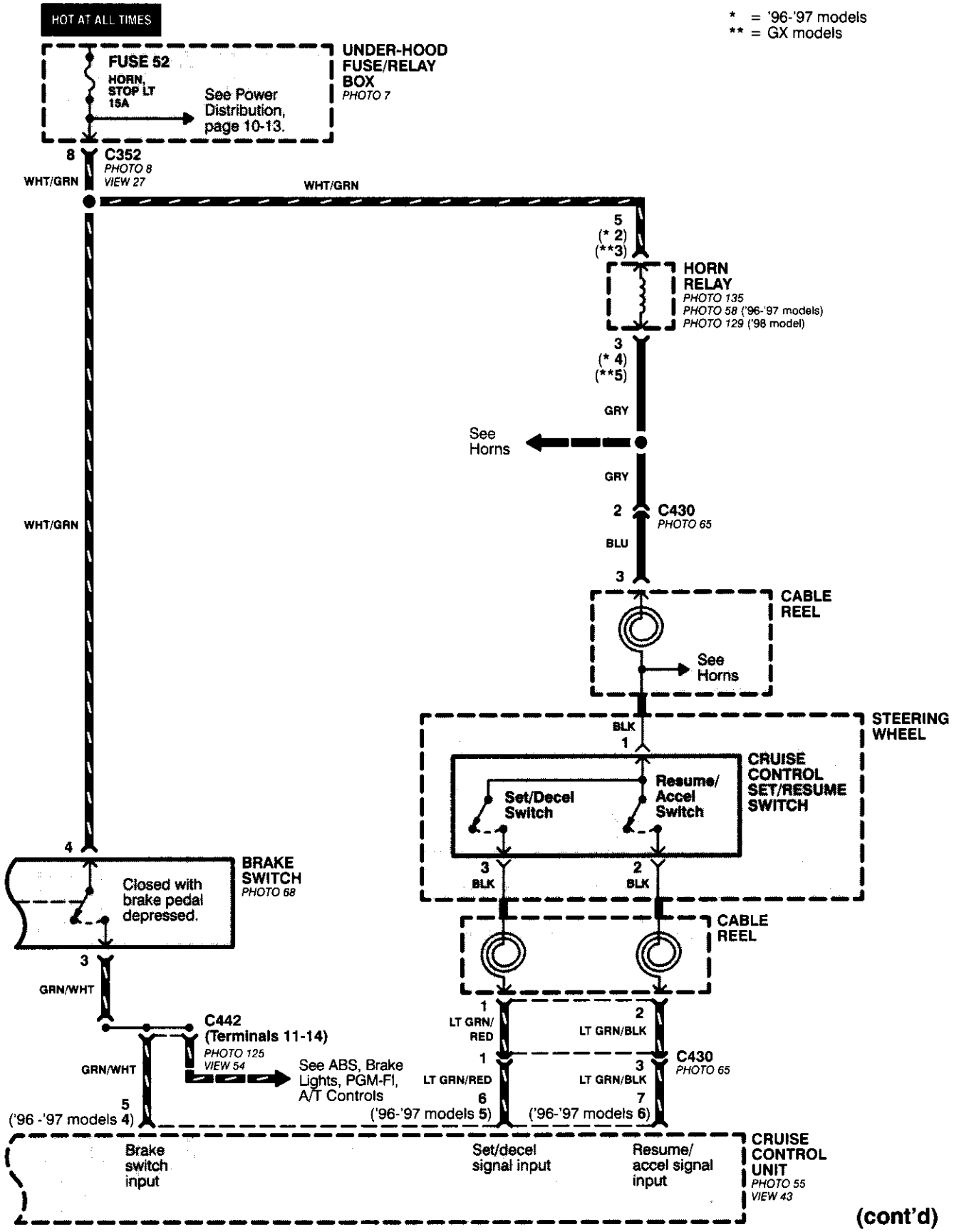
HOT AT ALL TIMES
* = '96-'97 models
** = GX models
FUSE 52
HORN, STOP LT 15A
See Power Distribution, page 10-13.
UNDER-HOOD FUSE/RELAY BOX
PHOTO 7
8
C352
PHOTO 8
VIEW 27
WHT/GRN
WHT/GRN
5 (* 2) (**3)
HORN RELAY
PHOTO 135
PHOTO 58 ('96-'97 models)
PHOTO 129 ('98 model)
3 (* 4) (**5)
GRY
See Horns
GRY
2
C430
PHOTO 65
BLU
3
CABLE REEL
See Horns
WHT/GRN
BLK
1
STEERING WHEEL
CRUISE CONTROL SET/RESUME SWITCH
Set/Decel Switch
Resume/ Accel Switch
3 BLK
2 BLK
4
BRAKE SWITCH
PHOTO 68
Closed with brake pedal depressed.
CABLE REEL
3
GRN/WHT
C442 (Terminals 11-14)
PHOTO 125
VIEW 54
See ABS, Brake Lights, PGM-FI, A/T Controls
GRN/WHT
5 ('96 -'97 models 4)
1 LT GRN/ RED
2 LT GRN/BLK
1 LT GRN/RED
6 ('96-'97 models 5)
3 LT GRN/BLK
7 ('96-'97 models 6)
C430
PHOTO 65
Brake switch input
Set/decel signal input
Resume/ accel signal input
CRUISE CONTROL UNIT
PHOTO 55
VIEW 43

(cont'd)

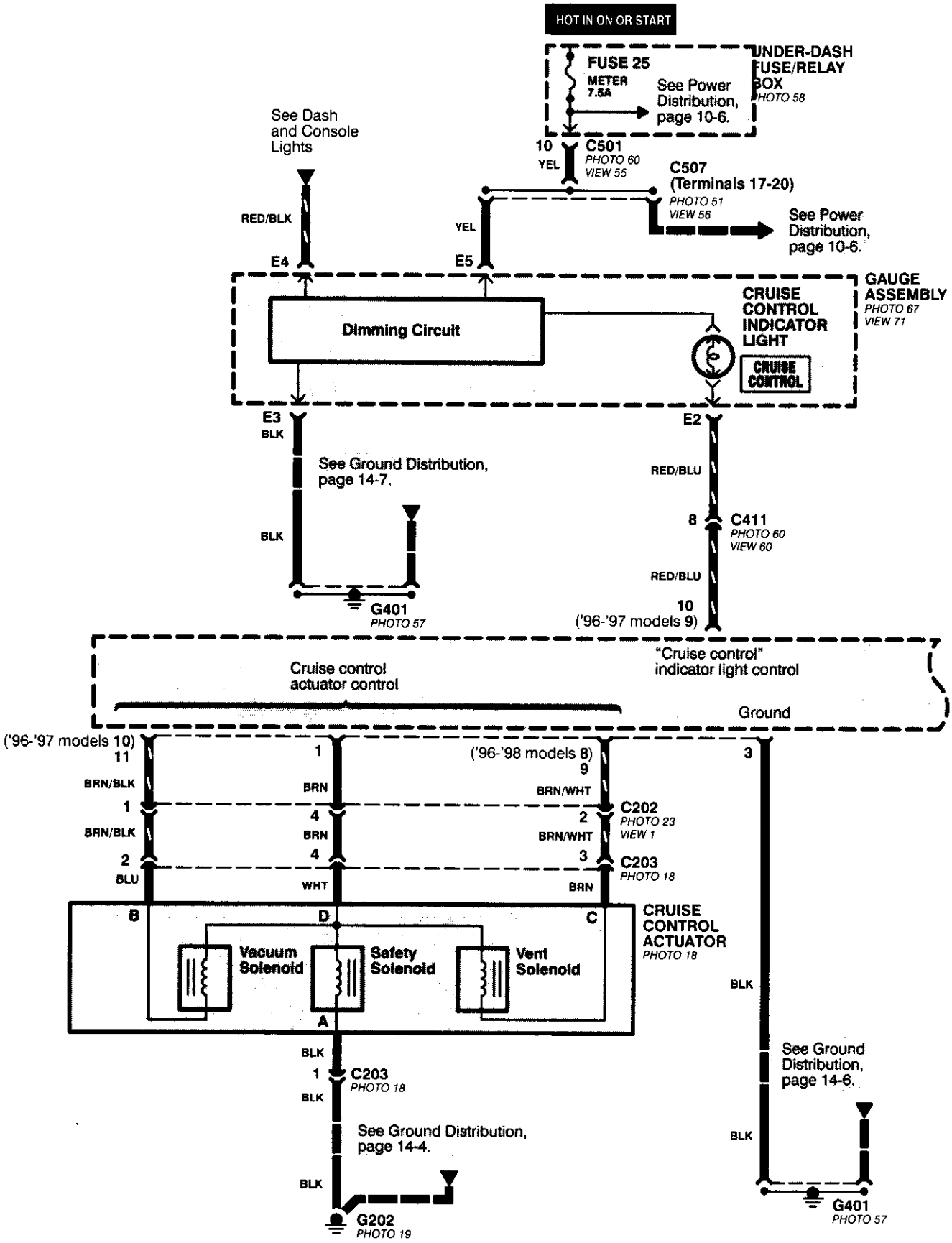
HOT IN ON OR START
FUSE 25
METER 7.5A
See Power Distribution, page 10-6.
UNDER-DASH FUSE/RELAY BOX
PHOTO 58
See Dash and Console Lights
10
YEL
C501
PHOTO 60
VIEW 55
C507
(Terminals 17-20)
PHOTO 51
VIEW 56
See Power Distribution, page 10-6.
RED/BLK
YEL
E4
E5
GAUGE ASSEMBLY
PHOTO 67
VIEW 71
Dimming Circuit
CRUISE CONTROL INDICATOR LIGHT
CRUISE CONTROL
E3
BLK
E2
See Ground Distribution, page 14-7.
RED/BLU
8
C411
PHOTO 60
VIEW 60
BLK
RED/BLU
G401
PHOTO 57
10
('96-'97 models 9)
"Cruise control" indicator light control
Cruise control actuator control
Ground
('96-'97 models 10)
11
1
('96-'98 models 8)
9
3
BRN/BLK
BRN
BRN/WHT
1
4
2
C202
PHOTO 23
VIEW 1
BRN/BLK
BRN
BRN/WHT
2
4
3
C203
PHOTO 18
BLU
WHT
BRN
B
D
C
CRUISE CONTROL ACTUATOR
PHOTO 18
Vacuum Solenoid
Safety Solenoid
Vent Solenoid
A
BLK
BLK
1
C203
PHOTO 18
BLK
See Ground Distribution, page 14-6.
BLK
See Ground Distribution, page 14-4.
BLK
G202
PHOTO 19
G401
PHOTO 57

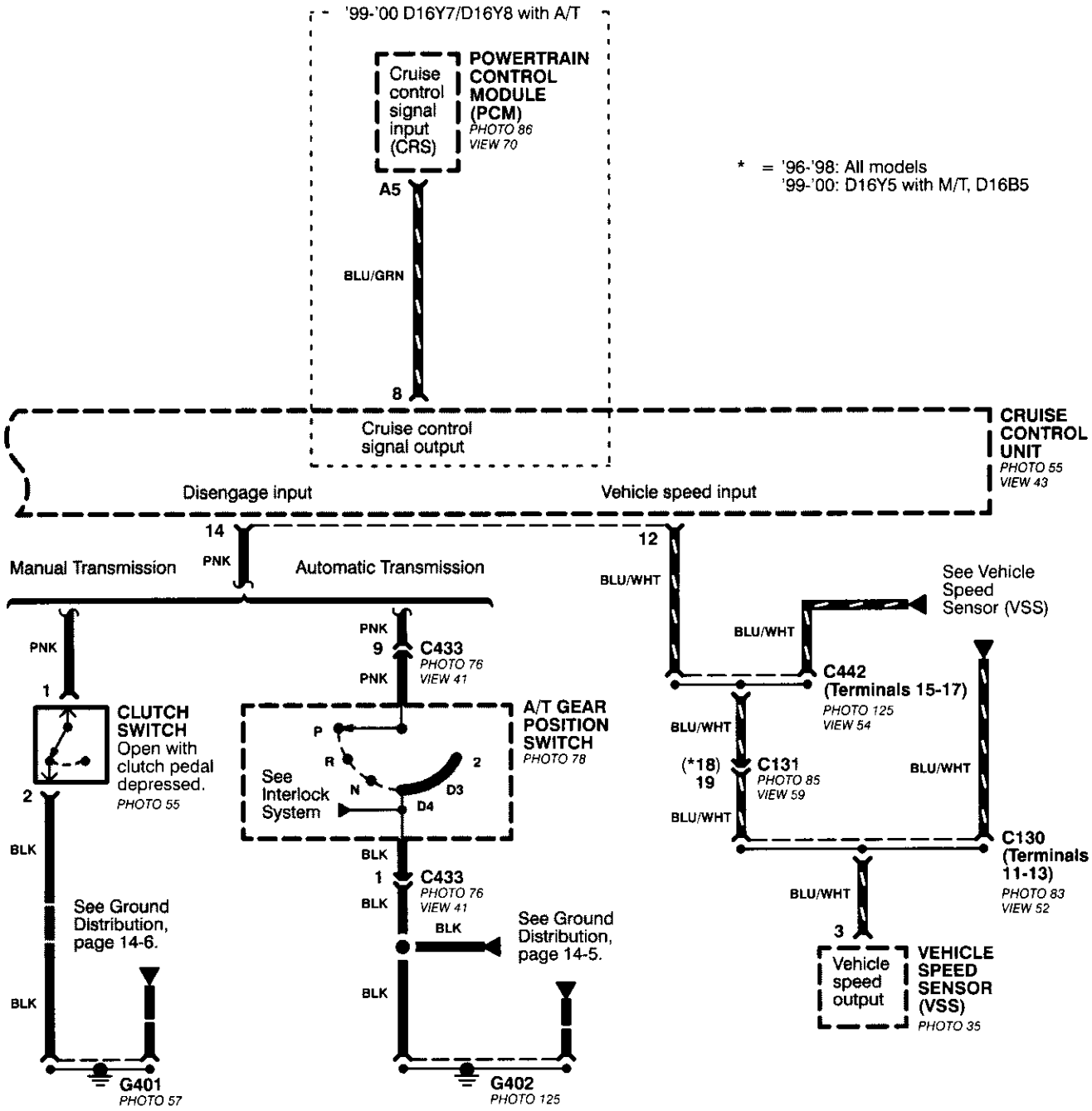
'99-'00 D16Y7/D16Y8 with A/T
Cruise control signal input (CRS)
POWERTRAIN CONTROL MODULE (PCM)
PHOTO 86
VIEW 70
* = '96-'98: All models
'99-'00: D16Y5 with M/T, D16B5
A5
BLU/GRN
8
Cruise control signal output
CRUISE CONTROL UNIT
PHOTO 55
VIEW 43
Disengage input
Vehicle speed input
14
PNK
12
BLU/WHT
Manual Transmission
Automatic Transmission
See Vehicle Speed Sensor (VSS)
PNK
1
CLUTCH SWITCH
Open with clutch pedal depressed.
PHOTO 55
2
BLK
See Ground Distribution, page 14-6.
BLK
G401
PHOTO 57
PNK
9
C433
PHOTO 76
VIEW 41
PNK
A/T GEAR POSITION SWITCH
PHOTO 78
P
R
N
D3
D4
2
See Interlock System
BLK
1
C433
PHOTO 76
VIEW 41
BLK
BLK
See Ground Distribution, page 14-5.
BLK
G402
PHOTO 125
BLU/WHT
C442
(Terminals 15-17)
PHOTO 125
VIEW 54
BLU/WHT
(*18)
19
C131
PHOTO 85
VIEW 59
BLU/WHT
BLU/WHT
C130
(Terminals 11-13)
PHOTO 83
VIEW 52
BLU/WHT
3
Vehicle speed output
VEHICLE SPEED SENSOR (VSS)
PHOTO 35

How the Circuit Works

The cruise control system uses mechanical and electrical devices to maintain the car's speed at a setting selected by the driver.

System Description

The cruise control unit receives command signals from the cruise control main switch and the cruise control Set/Resume switch. With the ignition switch in ON (II) or START (III), voltage is provided to the cruise control main switch through fuse 14. When you push the switch to ON, power is provided to the cruise control unit and the brake switch.

The cruise control unit receives information about operating conditions from the brake switch, the vehicle speed sensor (VSS), and the clutch switch (manual transmission) or the A/T gear position switch (automatic transmission). The cruise control unit then sends signals to the cruise control actuator which regulates the throttle position to maintain the selected speed. The control unit compares the actual speed of the car to the selected speed. The control unit then uses the result of that comparison to open or close the throttle.

The brake switch releases the system's control of the throttle at the instant you press on the brake pedal. The switch sends a signal to the control unit by removing power from the normally closed brake input (GRY wire), and providing power at the normally open brake input (GRN/WHT wire). The control unit responds by allowing the throttle to close. The clutch switch or the A/T gear position switch sends a "disengage" signal to the control unit that also allows the throttle to close.

The cruise control system will set and automatically maintain any speed above 25 mph (40 km/h). To set it, make sure the main switch is on and the switch indicator is on. Then, after reaching the desired speed, press the SET switch. This sends a "set" signal to the cruise control unit which, in turn, controls the cruise control actuator to maintain the set speed.

When you push the SET switch and the cruise control system is on, the "cruise control" ON indicator lights up.

You can cancel the cruise control system by turning the main switch off. This removes power to the control unit and erases the set speed from memory. If the system is disengaged temporarily by the brake switch, or clutch switch, and the car's speed is still above 25 mph, press the resume switch: the car will automatically return to the previously set speed.

For gradual acceleration without pressing the accelerator pedal, push the RESUME switch and hold it there. This will send an "acceleration" signal to the control unit. When you release the switch, the system will be reprogrammed for the new speed. To slow the car down, push the SET switch in and hold it there. This sends a "deceleration" signal to the control unit, causing the car to coast. When the desired speed is reached, release the SET switch. This reprograms the system for the new speed.

Refer to the Service Manual (Section 23, Electrical) for specific tests or troubleshooting procedures.

A/T Controls (All '96-'98 Models except CVT and GX)

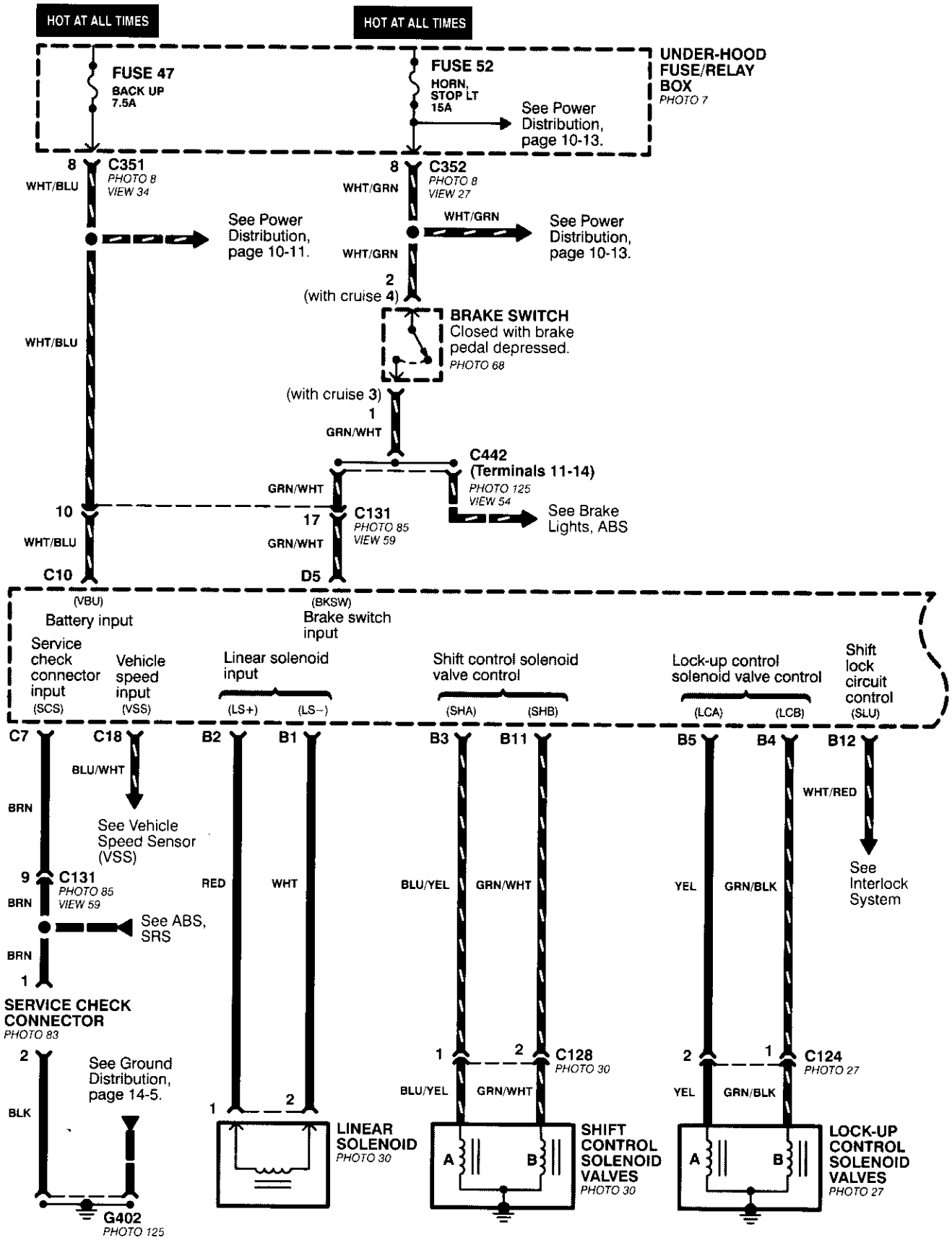

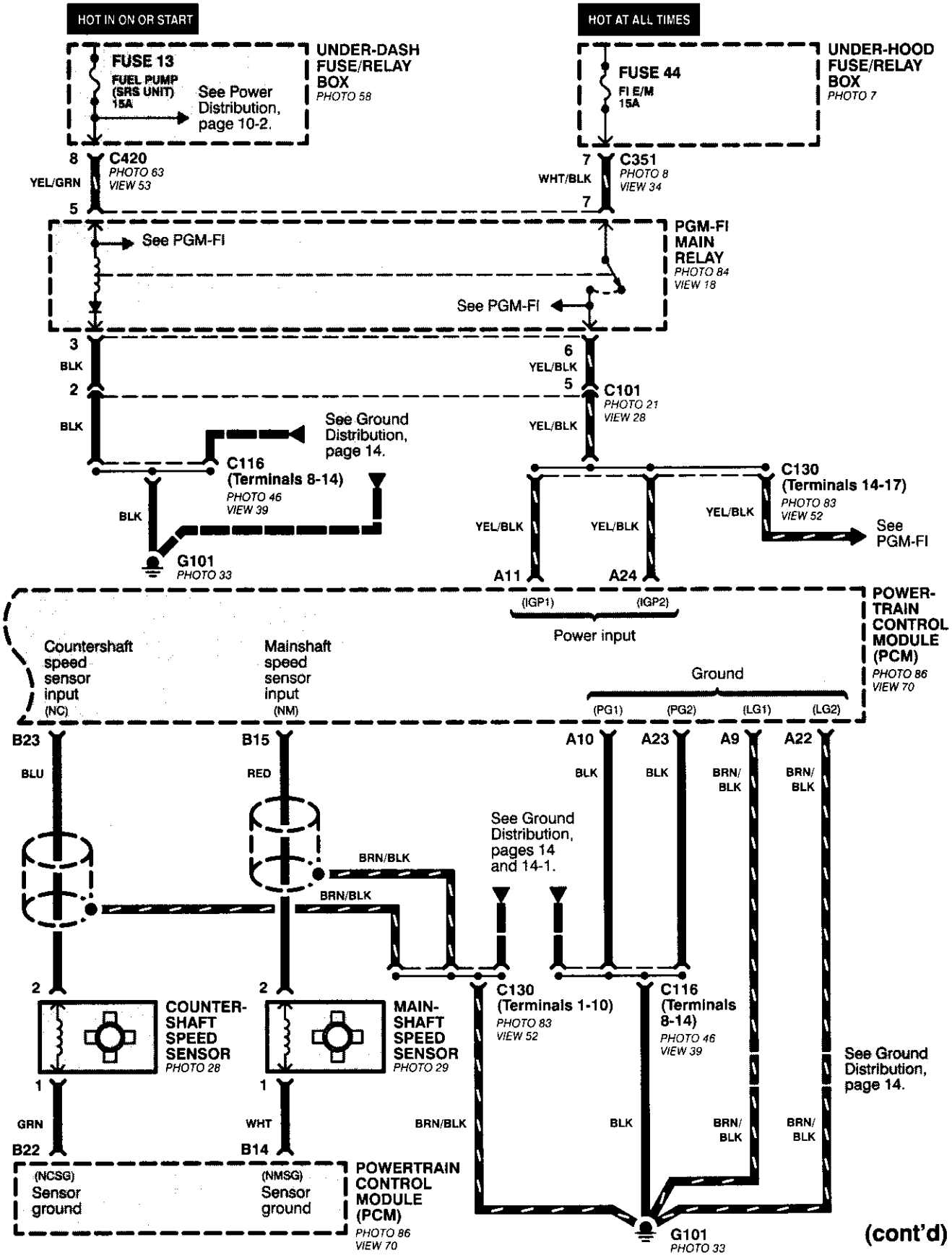
HOT IN ON OR START
HOT AT ALL TIMES
FUSE 13
FUEL PUMP (SRS UNIT) 15A
See Power Distribution, page 10-2.
UNDER-DASH FUSE/RELAY BOX
PHOTO 58
FUSE 44
FI E/M 15A
UNDER-HOOD FUSE/RELAY BOX
PHOTO 7
8
C420
PHOTO 63
VIEW 53
YEL/GRN
5
7
C351
PHOTO 8
VIEW 34
WHT/BLK
7
See PGM-FI
PGM-FI MAIN RELAY
PHOTO 84
VIEW 18
See PGM-FI
3
BLK
2
BLK
6
YEL/BLK
5
C101
PHOTO 21
VIEW 28
YEL/BLK
See Ground Distribution, page 14.
C116 (Terminals 8-14)
PHOTO 46
VIEW 39
BLK
G101
PHOTO 33
C130 (Terminals 14-17)
PHOTO 83
VIEW 52
YEL/BLK
YEL/BLK
YEL/BLK
See PGM-FI
A11
A24
(IGP1)
(IGP2)
Power input
POWER-TRAIN CONTROL MODULE (PCM)
PHOTO 86
VIEW 70
Countershaft speed sensor input (NC)
Mainshaft speed sensor input (NM)
Ground
(PG1)
(PG2)
(LG1)
(LG2)
B23
B15
A10
A23
A9
A22
BLU
RED
BLK
BLK
BRN/BLK
BRN/BLK
See Ground Distribution, pages 14 and 14-1.
BRN/BLK
BRN/BLK
2
2
COUNTER-SHAFT SPEED SENSOR
PHOTO 28
MAIN-SHAFT SPEED SENSOR
PHOTO 29
C130 (Terminals 1-10)
PHOTO 83
VIEW 52
C116 (Terminals 8-14)
PHOTO 46
VIEW 39
See Ground Distribution, page 14.
1
1
GRN
WHT
BRN/BLK
BLK
BRN/BLK
BRN/BLK
B22
B14
(NCSG) Sensor ground
(NMSG) Sensor ground
POWERTRAIN CONTROL MODULE (PCM)
PHOTO 86
VIEW 70
G101
PHOTO 33

(cont'd)

A/T Controls (All '96-'98 Models except CVT and GX) (cont'd)

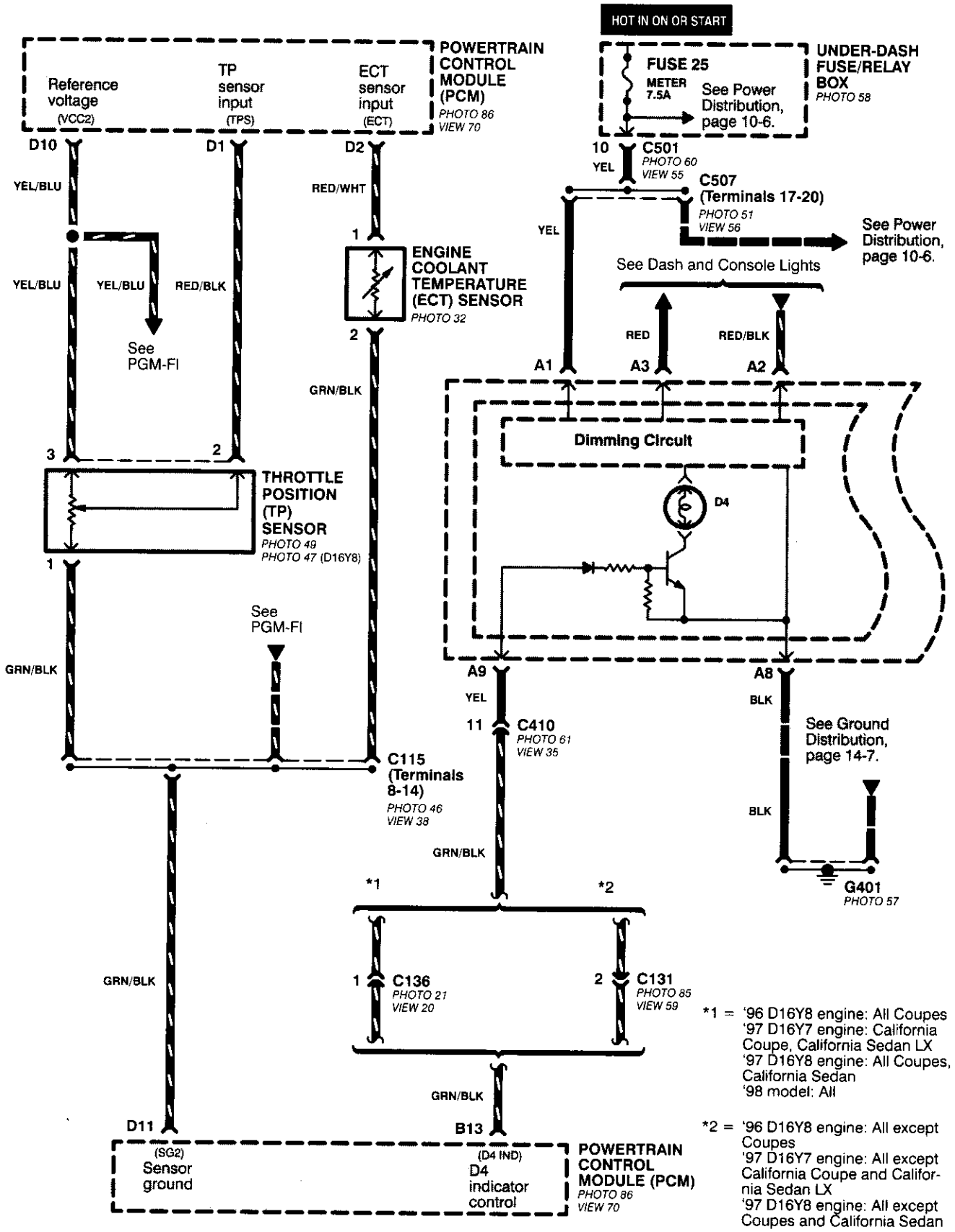

*1 = '96 D16Y8 engine: All Coupes
'97 D16Y7 engine: California Coupe, California Sedan LX
'97 D16Y8 engine: All Coupes, California Sedan
'98 model: All

*2 = '96 D16Y8 engine: All except Coupes
'97 D16Y7 engine: All except California Coupe and California Sedan LX
'97 D16Y8 engine: All except Coupes and California Sedan

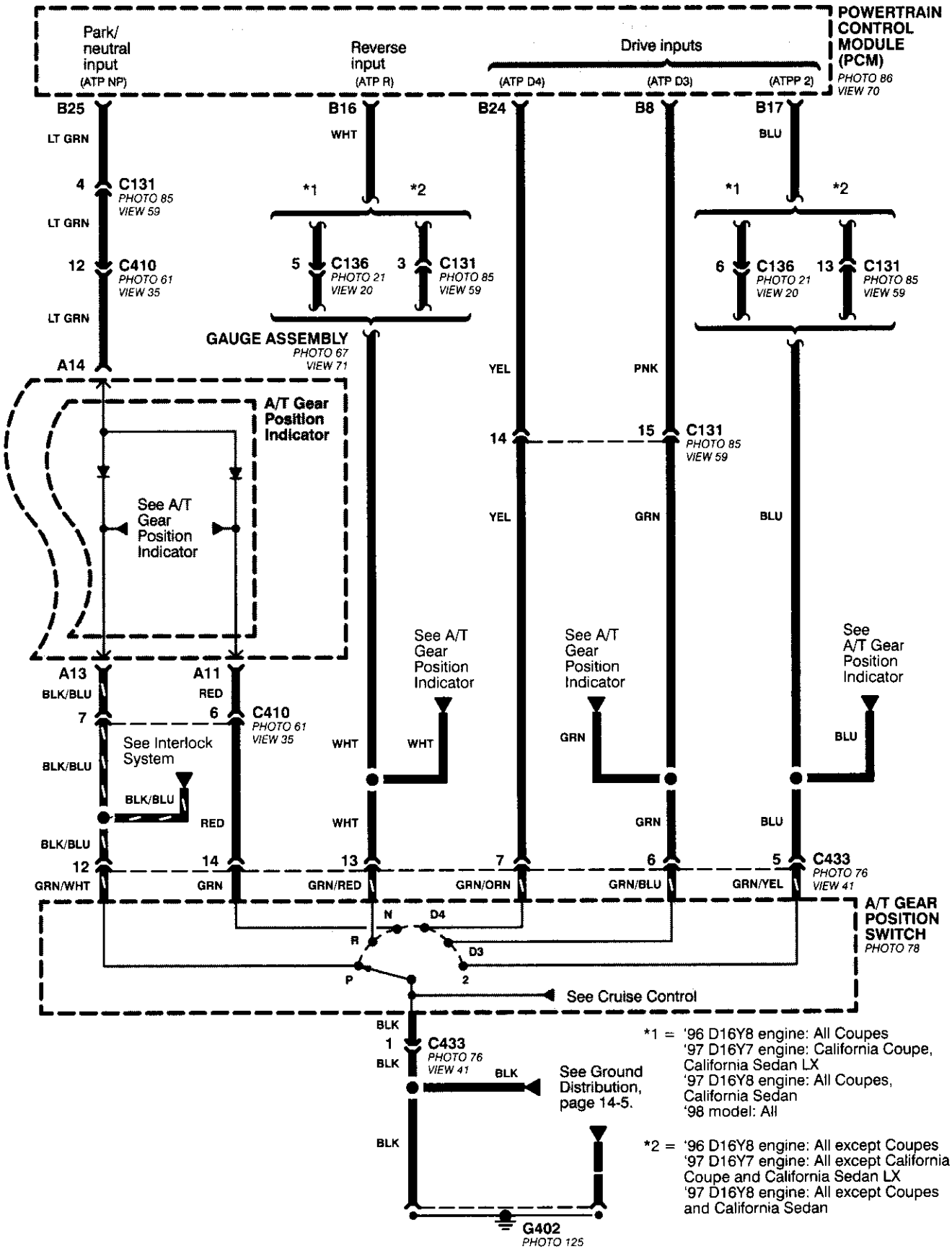
POWERTRAIN CONTROL MODULE (PCM)
PHOTO 86
VIEW 70
Park/ neutral input
(ATP NP)
Reverse input
(ATP R)
Drive inputs
(ATP D4)
(ATP D3)
(ATPP 2)
B25
B16
B24
B8
B17
LT GRN
WHT
BLU
4
C131
PHOTO 85
VIEW 59
*1
*2
LT GRN
12
C410
PHOTO 61
VIEW 35
5
C136
PHOTO 21
VIEW 20
3
C131
PHOTO 85
VIEW 59
6
C136
PHOTO 21
VIEW 20
13
C131
PHOTO 85
VIEW 59
LT GRN
GAUGE ASSEMBLY
PHOTO 67
VIEW 71
A14
YEL
PNK
A/T Gear Position Indicator
14
15
C131
PHOTO 85
VIEW 59
See A/T Gear Position Indicator
YEL
GRN
BLU
See A/T Gear Position Indicator
See A/T Gear Position Indicator
See A/T Gear Position Indicator
A13
A11
BLK/BLU
RED
7
6
C410
PHOTO 61
VIEW 35
See Interlock System
WHT
WHT
GRN
BLU
BLK/BLU
BLK/BLU
RED
WHT
GRN
BLU
BLK/BLU
12
14
13
7
6
5
C433
PHOTO 76
VIEW 41
GRN/WHT
GRN
GRN/RED
GRN/ORN
GRN/BLU
GRN/YEL
A/T GEAR POSITION SWITCH
PHOTO 78
N
D4
R
D3
P
2
See Cruise Control
BLK
1
C433
PHOTO 76
VIEW 41
BLK
BLK
See Ground Distribution, page 14-5.
BLK
G402
PHOTO 125
*1 = '96 D16Y8 engine: All Coupes
'97 D16Y7 engine: California Coupe, California Sedan LX
'97 D16Y8 engine: All Coupes, California Sedan
'98 model: All
*2 = '96 D16Y8 engine: All except Coupes
'97 D16Y7 engine: All except California Coupe and California Sedan LX
'97 D16Y8 engine: All except Coupes and California Sedan

A/T Controls ('96-'98 CVT)

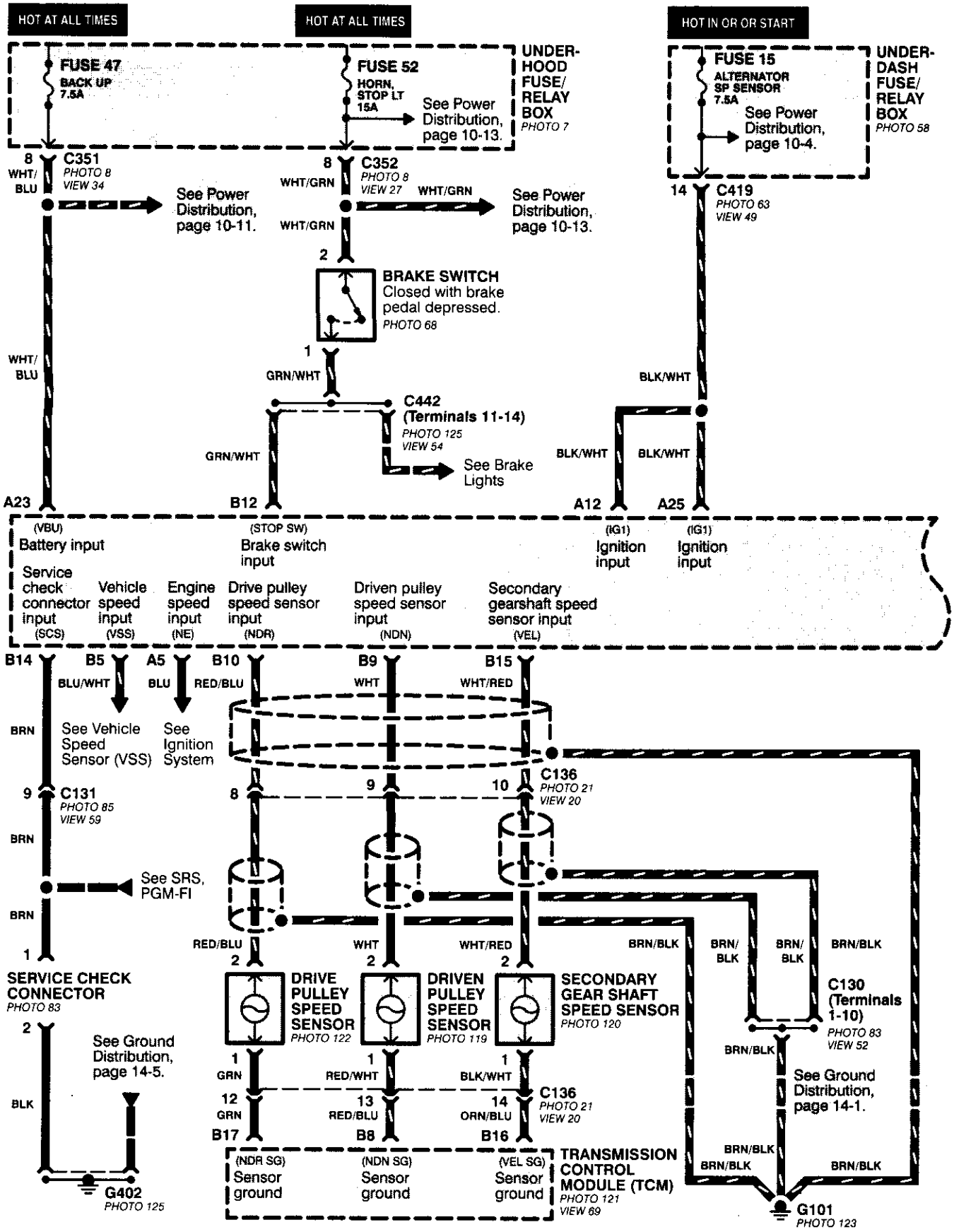

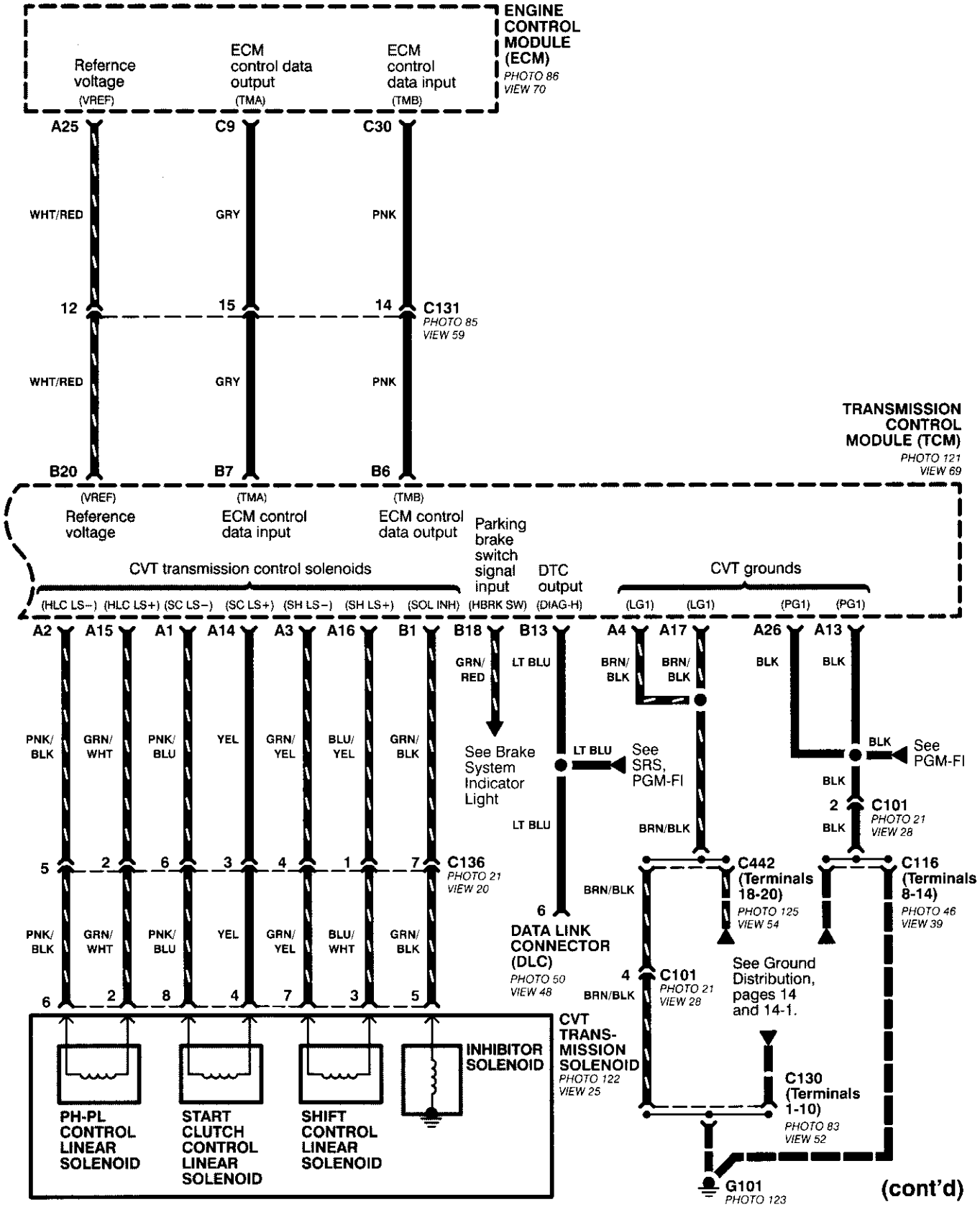
ENGINE CONTROL MODULE (ECM)
PHOTO 86
VIEW 70
Refernce voltage (VREF)
ECM control data output (TMA)
ECM control data input (TMB)
A25
C9
C30
WHT/RED
GRY
PNK
12
15
14
C131
PHOTO 85
VIEW 59
WHT/RED
GRY
PNK
B20
B7
B6
TRANSMISSION CONTROL MODULE (TCM)
PHOTO 121
VIEW 69
(VREF) Reference voltage
(TMA) ECM control data input
(TMB) ECM control data output
Parking brake switch signal input
DTC output
CVT transmission control solenoids
CVT grounds
(HLC LS−) (HLC LS+) (SC LS−) (SC LS+) (SH LS−) (SH LS+) (SOL INH) (HBRK SW) (DIAG-H)
(LG1) (LG1) (PG1) (PG1)
A2 A15 A1 A14 A3 A16 B1 B18 B13 A4 A17 A26 A13
GRN/RED
LT BLU
BRN/BLK
BRN/BLK
BLK
BLK
PNK/BLK
GRN/WHT
PNK/BLU
YEL
GRN/YEL
BLU/YEL
GRN/BLK
See Brake System Indicator Light
LT BLU
See SRS, PGM-FI
BLK
See PGM-FI
BLK
2
C101
PHOTO 21
VIEW 28
BLK
LT BLU
BRN/BLK
5
2
6
3
4
1
7
C136
PHOTO 21
VIEW 20
C442 (Terminals 18-20)
PHOTO 125
VIEW 54
C116 (Terminals 8-14)
PHOTO 46
VIEW 39
BRN/BLK
6
DATA LINK CONNECTOR (DLC)
PHOTO 50
VIEW 48
PNK/BLK
GRN/WHT
PNK/BLU
YEL
GRN/YEL
BLU/WHT
GRN/BLK
4
C101
PHOTO 21
VIEW 28
BRN/BLK
See Ground Distribution, pages 14 and 14-1.
6
2
8
4
7
3
5
CVT TRANS-MISSION SOLENOID
PHOTO 122
VIEW 25
INHIBITOR SOLENOID
C130 (Terminals 1-10)
PHOTO 83
VIEW 52
PH-PL CONTROL LINEAR SOLENOID
START CLUTCH CONTROL LINEAR SOLENOID
SHIFT CONTROL LINEAR SOLENOID
G101
PHOTO 123

(cont'd)

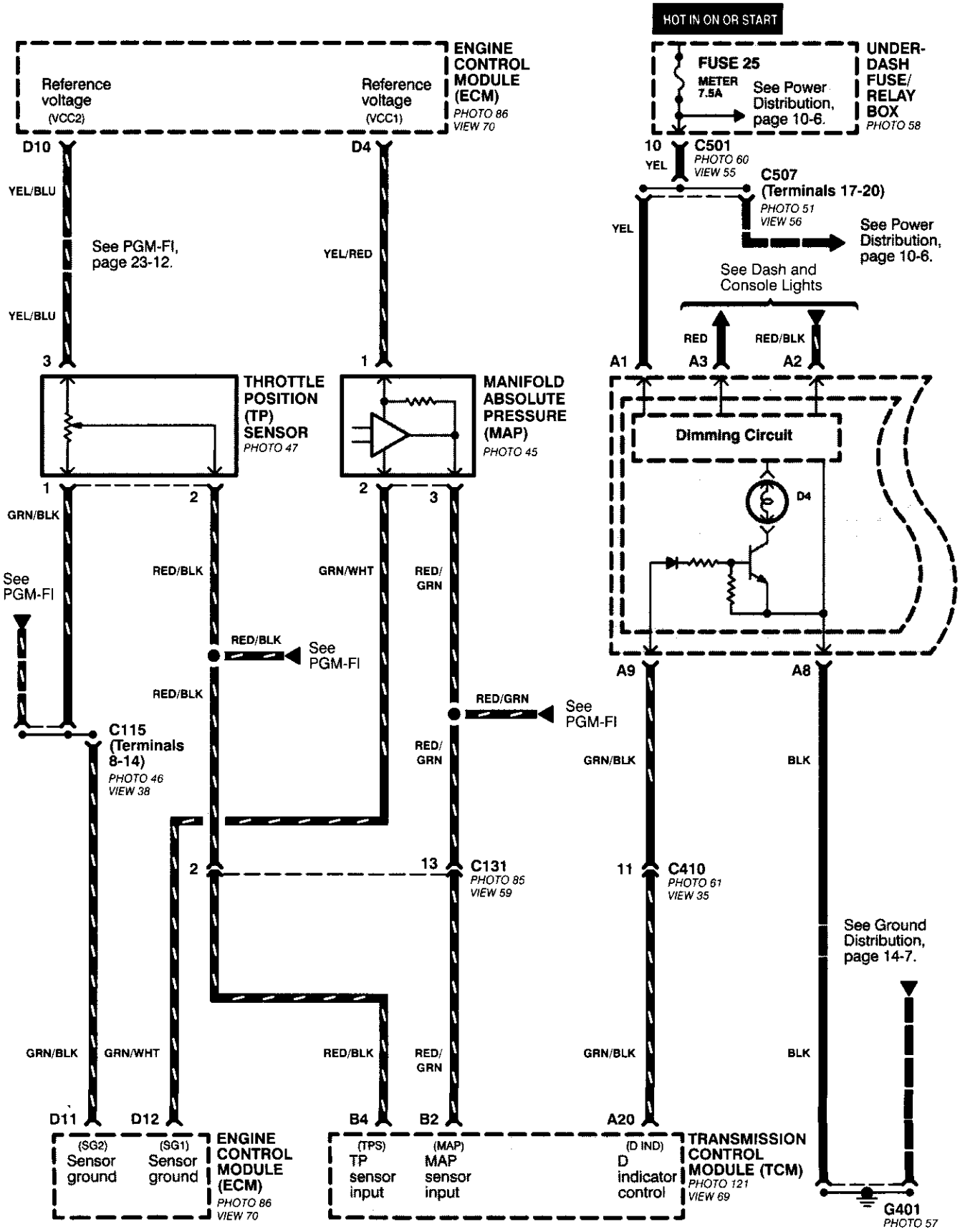
HOT IN ON OR START
ENGINE CONTROL MODULE (ECM)
PHOTO 86
VIEW 70
Reference voltage (VCC2)
Reference voltage (VCC1)
D10
D4
YEL/BLU
YEL/BLU
See PGM-FI, page 23-12.
YEL/RED
3
1
THROTTLE POSITION (TP) SENSOR
PHOTO 47
MANIFOLD ABSOLUTE PRESSURE (MAP)
PHOTO 45
1
2
2
3
GRN/BLK
RED/BLK
GRN/WHT
RED/GRN
See PGM-FI
RED/BLK
See PGM-FI
RED/BLK
RED/GRN
See PGM-FI
C115 (Terminals 8-14)
PHOTO 46
VIEW 38
RED/GRN
2
13
C131
PHOTO 85
VIEW 59
GRN/WHT
RED/BLK
RED/GRN
D11
D12
B4
B2
(SG2) Sensor ground
(SG1) Sensor ground
ENGINE CONTROL MODULE (ECM)
PHOTO 86
VIEW 70
(TPS) TP sensor input
(MAP) MAP sensor input
(D IND) D indicator control
TRANSMISSION CONTROL MODULE (TCM)
PHOTO 121
VIEW 69
FUSE 25
METER 7.5A
See Power Distribution, page 10-6.
UNDER-DASH FUSE/ RELAY BOX
PHOTO 58
10
YEL
C501
PHOTO 60
VIEW 55
C507 (Terminals 17-20)
PHOTO 51
VIEW 56
See Power Distribution, page 10-6.
YEL
See Dash and Console Lights
RED
RED/BLK
A1
A3
A2
Dimming Circuit
D4
A9
A8
GRN/BLK
BLK
11
C410
PHOTO 61
VIEW 35
See Ground Distribution, page 14-7.
GRN/BLK
BLK
G401
PHOTO 57

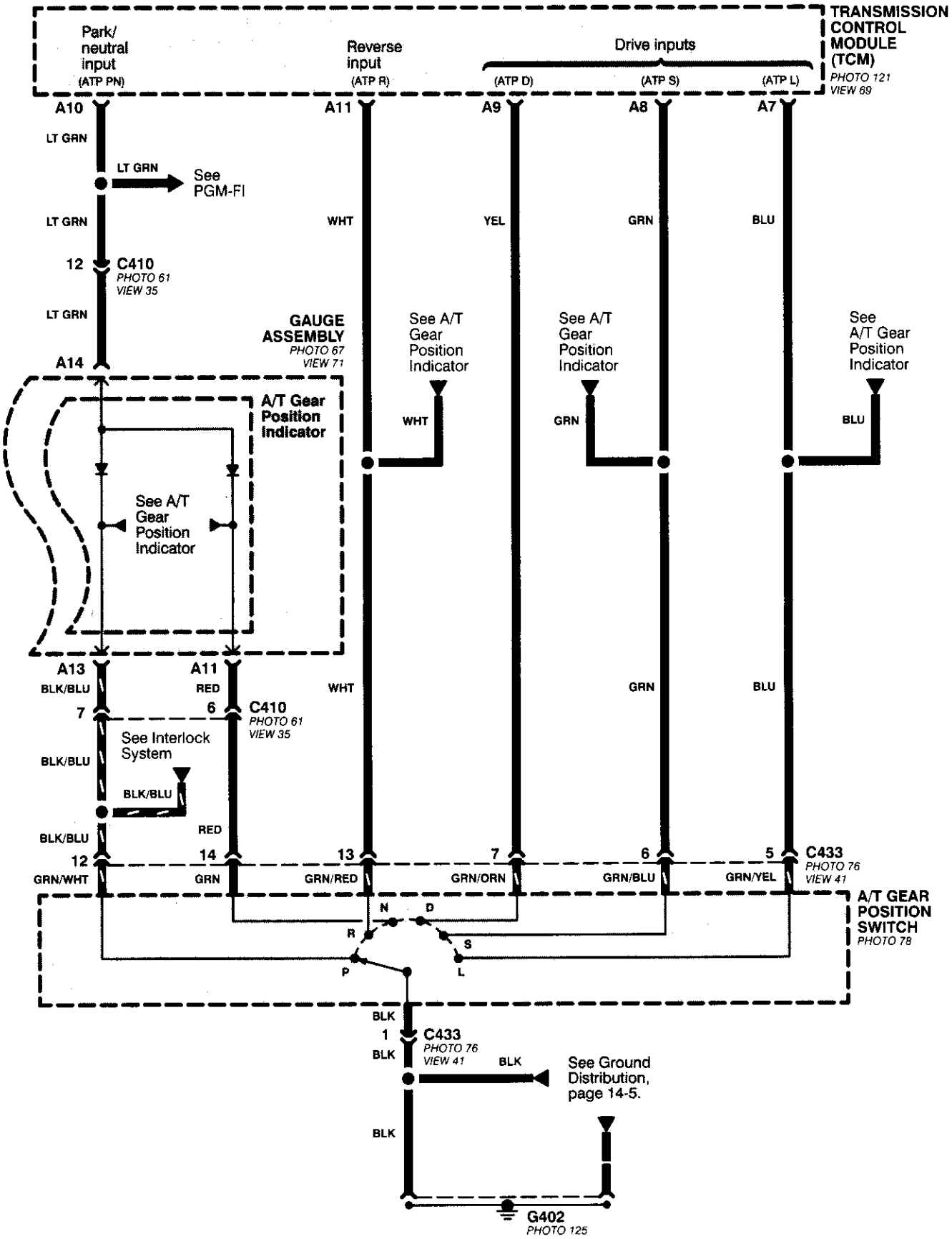
TRANSMISSION CONTROL MODULE (TCM)
PHOTO 121
VIEW 69
Park/ neutral input
(ATP PN)
Reverse input
(ATP R)
Drive inputs
(ATP D)
(ATP S)
(ATP L)
A10
A11
A9
A8
A7
LT GRN
See PGM-FI
WHT
YEL
GRN
BLU
12
C410
PHOTO 61
VIEW 35
GAUGE ASSEMBLY
PHOTO 67
VIEW 71
See A/T Gear Position Indicator
A14
A/T Gear Position Indicator
A13
BLK/BLU
RED
7
6
See Interlock System
BLK/BLU
RED
14
13
7
6
5
C433
PHOTO 76
VIEW 41
GRN/WHT
GRN
GRN/RED
GRN/ORN
GRN/BLU
GRN/YEL
A/T GEAR POSITION SWITCH
PHOTO 78
N
D
R
S
P
L
BLK
1
See Ground Distribution, page 14-5.
G402
PHOTO 125

A/T Controls (All GX and All '99-'00 Models except CVT)

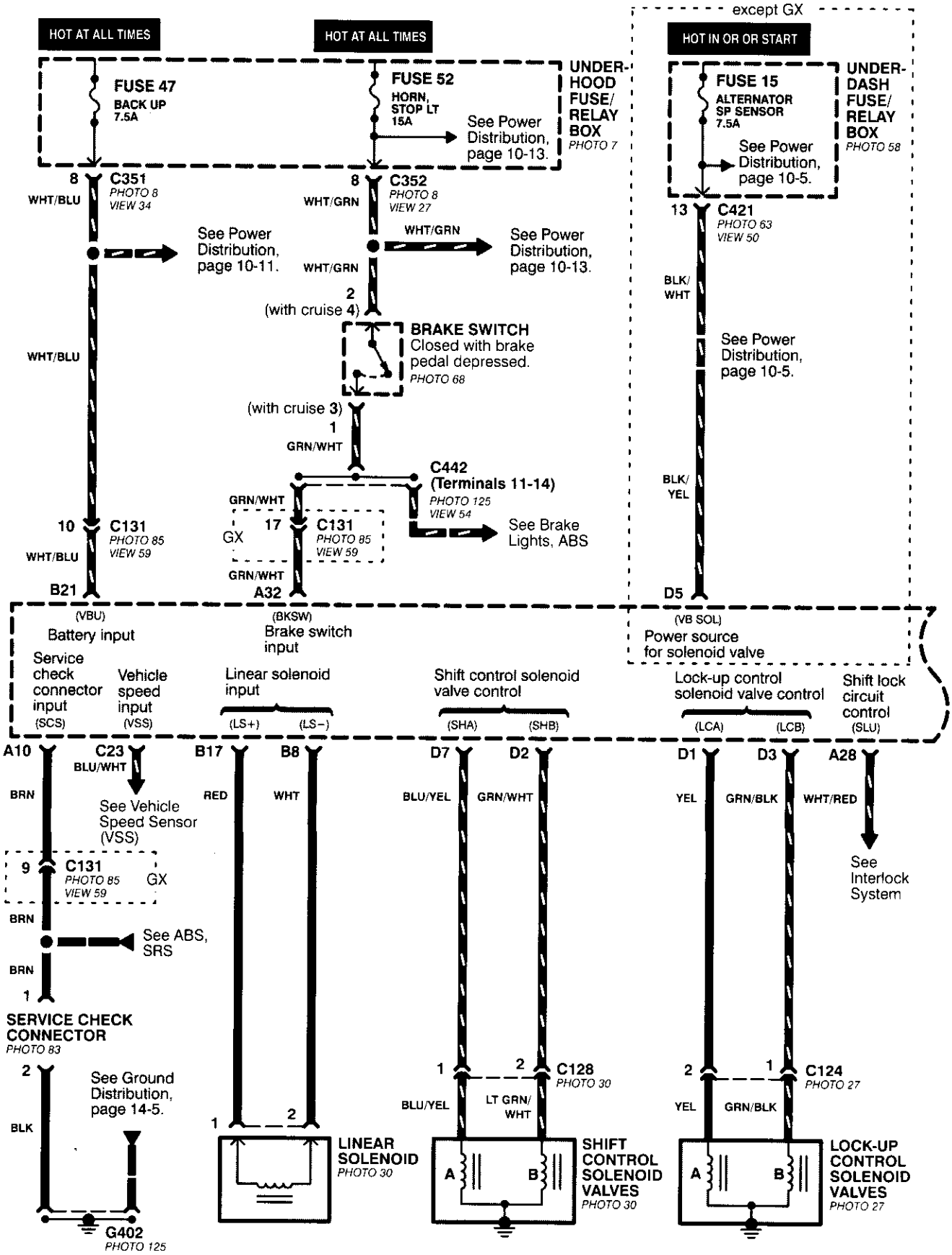

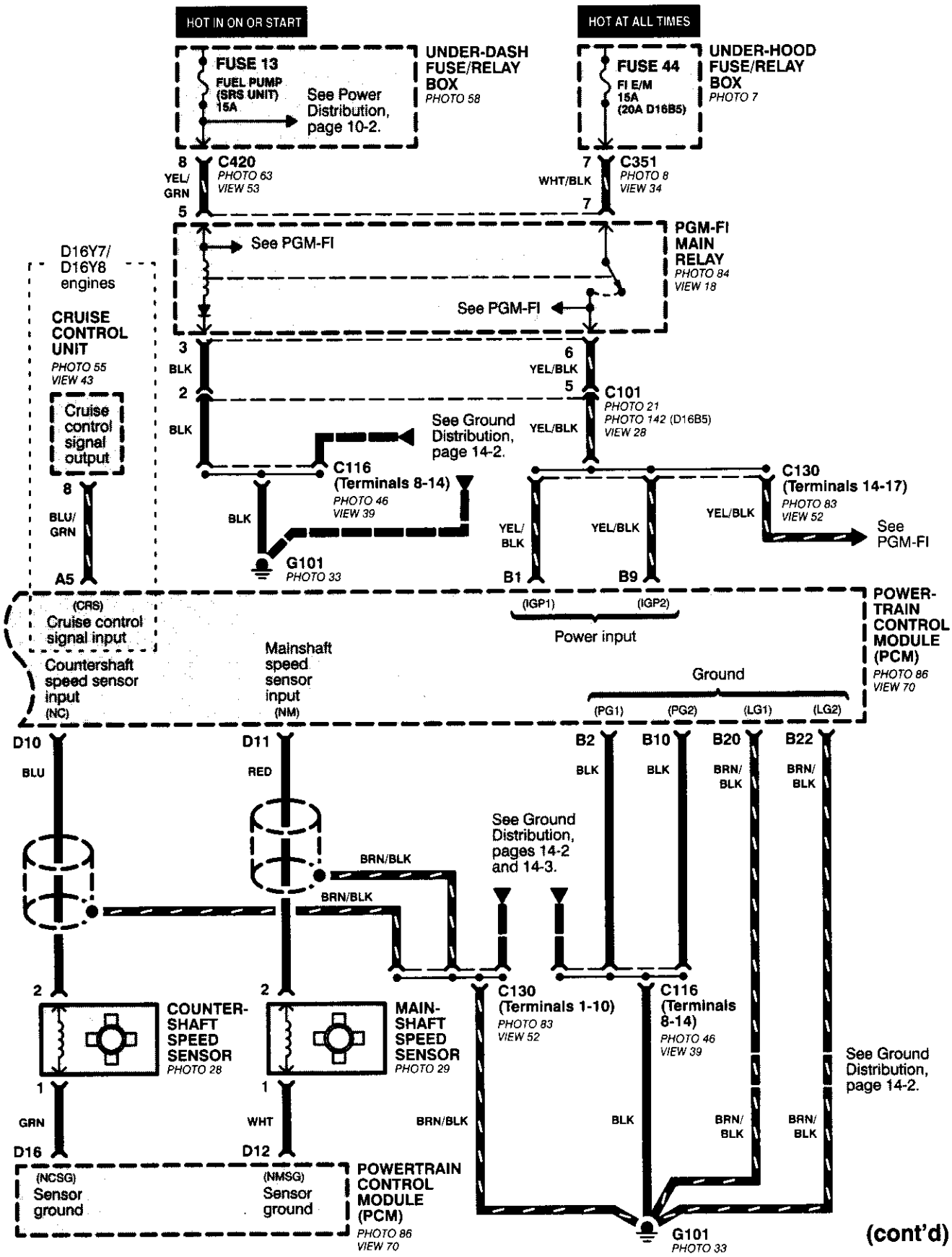
HOT IN ON OR START
HOT AT ALL TIMES
FUSE 13
FUEL PUMP (SRS UNIT) 15A
See Power Distribution, page 10-2.
UNDER-DASH FUSE/RELAY BOX
PHOTO 58
FUSE 44
FI E/M 15A (20A D16B5)
UNDER-HOOD FUSE/RELAY BOX
PHOTO 7
8
YEL/GRN
C420
PHOTO 63
VIEW 53
5
7
WHT/BLK
C351
PHOTO 8
VIEW 34
7
See PGM-FI
PGM-FI MAIN RELAY
PHOTO 84
VIEW 18
See PGM-FI
D16Y7/ D16Y8 engines
CRUISE CONTROL UNIT
PHOTO 55
VIEW 43
Cruise control signal output
3
BLK
2
BLK
6
YEL/BLK
5
C101
PHOTO 21
PHOTO 142 (D16B5)
VIEW 28
YEL/BLK
See Ground Distribution, page 14-2.
C116 (Terminals 8-14)
PHOTO 46
VIEW 39
BLK
G101
PHOTO 33
C130 (Terminals 14-17)
PHOTO 83
VIEW 52
YEL/BLK
See PGM-FI
8
BLU/GRN
A5
YEL/BLK
YEL/BLK
B1
B9
(IGP1)
(IGP2)
Power input
POWER-TRAIN CONTROL MODULE (PCM)
PHOTO 86
VIEW 70
(CRS)
Cruise control signal input
Countershaft speed sensor input
(NC)
Mainshaft speed sensor input
(NM)
Ground
(PG1)
(PG2)
(LG1)
(LG2)
D10
BLU
D11
RED
B2
BLK
B10
BLK
B20
BRN/BLK
B22
BRN/BLK
BRN/BLK
BRN/BLK
See Ground Distribution, pages 14-2 and 14-3.
2
2
COUNTER-SHAFT SPEED SENSOR
PHOTO 28
MAIN-SHAFT SPEED SENSOR
PHOTO 29
C130 (Terminals 1-10)
PHOTO 83
VIEW 52
C116 (Terminals 8-14)
PHOTO 46
VIEW 39
See Ground Distribution, page 14-2.
1
1
GRN
WHT
BRN/BLK
BLK
BRN/BLK
BRN/BLK
D16
D12
(NCSG)
Sensor ground
(NMSG)
Sensor ground
POWERTRAIN CONTROL MODULE (PCM)
PHOTO 86
VIEW 70
G101
PHOTO 33

(cont'd)

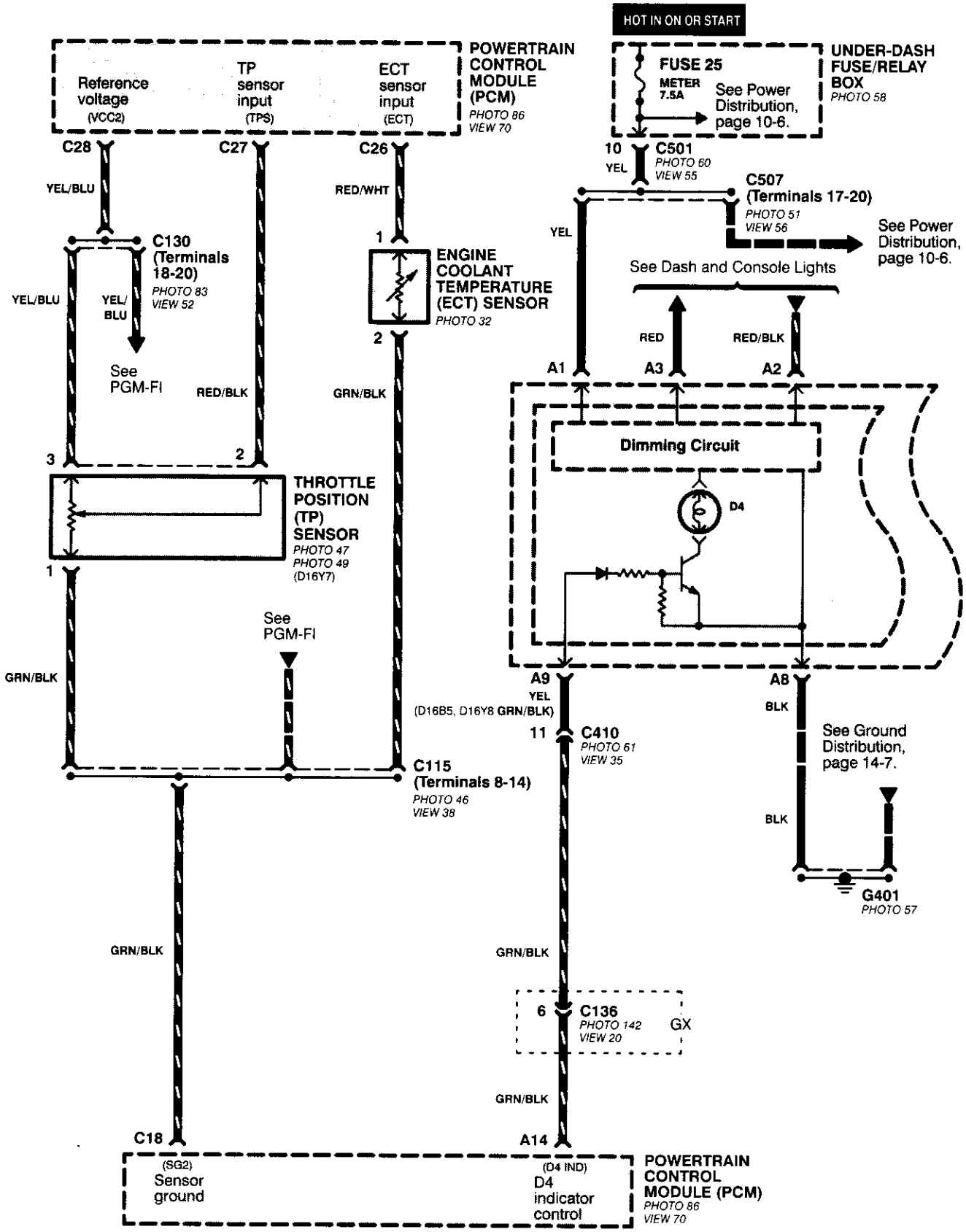
HOT IN ON OR START
POWERTRAIN CONTROL MODULE (PCM)
PHOTO 86
VIEW 70
Reference voltage (VCC2)
TP sensor input (TPS)
ECT sensor input (ECT)
UNDER-DASH FUSE/RELAY BOX
PHOTO 58
FUSE 25
METER 7.5A
See Power Distribution, page 10-6.
C28
C27
C26
10
C501
PHOTO 60
VIEW 55
YEL
YEL/BLU
RED/WHT
C507 (Terminals 17-20)
PHOTO 51
VIEW 56
See Power Distribution, page 10-6.
C130 (Terminals 18-20)
PHOTO 83
VIEW 52
ENGINE COOLANT TEMPERATURE (ECT) SENSOR
PHOTO 32
See Dash and Console Lights
YEL/BLU
YEL/BLU
See PGM-FI
RED/BLK
GRN/BLK
RED
RED/BLK
A1
A3
A2
Dimming Circuit
D4
THROTTLE POSITION (TP) SENSOR
PHOTO 47
PHOTO 49
(D16Y7)
See PGM-FI
GRN/BLK
A9
A8
YEL
(D16B5, D16Y8 GRN/BLK)
BLK
11
C410
PHOTO 61
VIEW 35
See Ground Distribution, page 14-7.
C115 (Terminals 8-14)
PHOTO 46
VIEW 38
BLK
G401
PHOTO 57
GRN/BLK
GRN/BLK
6
C136
PHOTO 142
VIEW 20
GX
GRN/BLK
C18
A14
(SG2)
Sensor ground
(D4 IND)
D4 indicator control
POWERTRAIN CONTROL MODULE (PCM)
PHOTO 86
VIEW 70

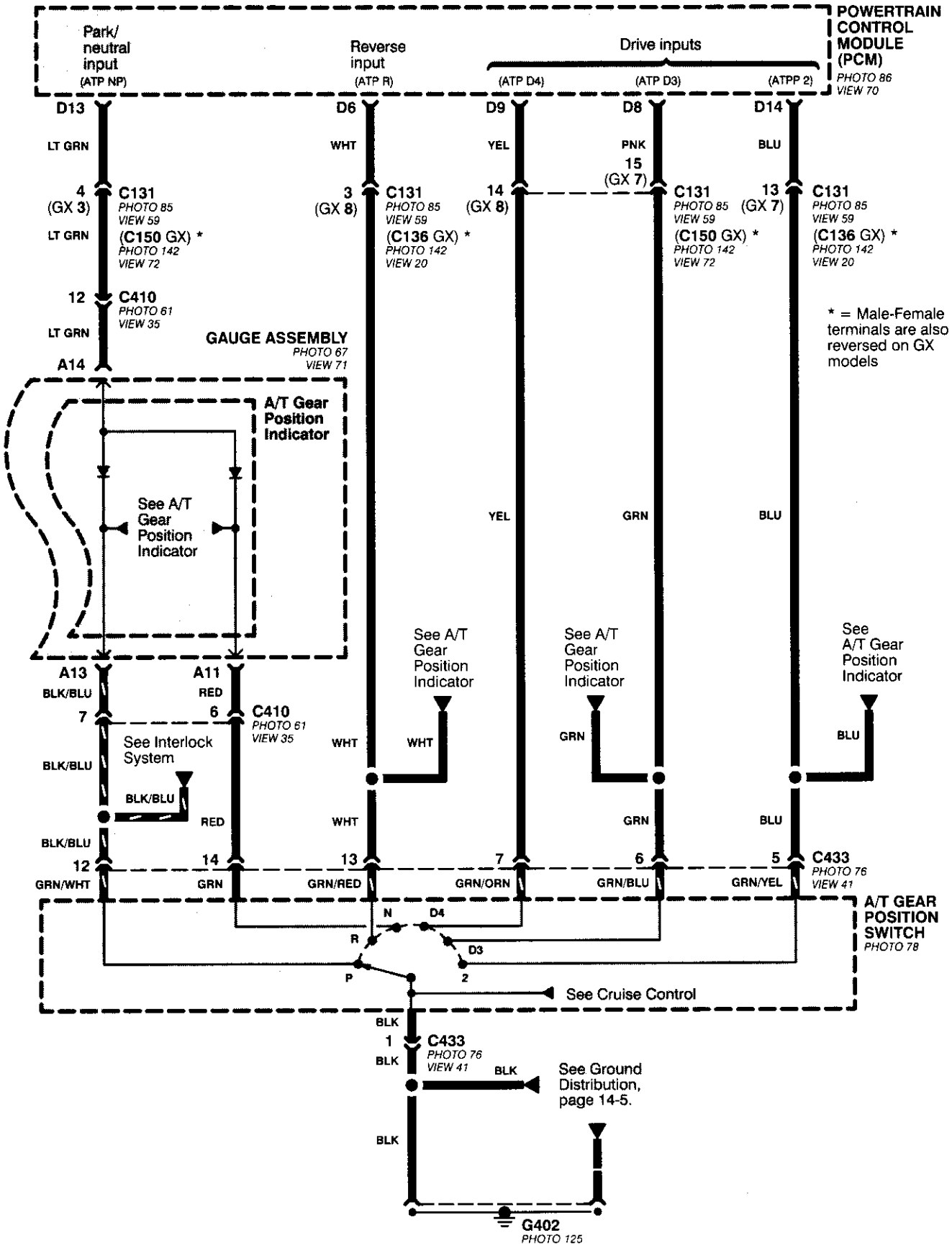
POWERTRAIN CONTROL MODULE (PCM)
PHOTO 86
VIEW 70
Park/ neutral input
(ATP NP)
Reverse input
(ATP R)
Drive inputs
(ATP D4)
(ATP D3)
(ATPP 2)
D13
D6
D9
D8
D14
LT GRN
WHT
YEL
PNK
BLU
4
(GX 3)
C131
PHOTO 85
VIEW 59
(C150 GX) *
PHOTO 142
VIEW 72
3
(GX 8)
C131
PHOTO 85
VIEW 59
(C136 GX) *
PHOTO 142
VIEW 20
14
(GX 8)
15
(GX 7)
C131
PHOTO 85
VIEW 59
(C150 GX) *
PHOTO 142
VIEW 72
13
(GX 7)
C131
PHOTO 85
VIEW 59
(C136 GX) *
PHOTO 142
VIEW 20
12
C410
PHOTO 61
VIEW 35
GAUGE ASSEMBLY
PHOTO 67
VIEW 71
A14
* = Male-Female terminals are also reversed on GX models
A/T Gear Position Indicator
See A/T Gear Position Indicator
YEL
GRN
BLU
See A/T Gear Position Indicator
See A/T Gear Position Indicator
See A/T Gear Position Indicator
A13
A11
BLK/BLU
RED
7
6
C410
PHOTO 61
VIEW 35
See Interlock System
WHT
WHT
GRN
BLU
BLK/BLU
BLK/BLU
RED
WHT
GRN
BLU
BLK/BLU
12
14
13
7
6
5
C433
PHOTO 76
VIEW 41
GRN/WHT
GRN
GRN/RED
GRN/ORN
GRN/BLU
GRN/YEL
A/T GEAR POSITION SWITCH
PHOTO 78
N
D4
R
D3
P
2
See Cruise Control
BLK
1
C433
PHOTO 76
VIEW 41
BLK
BLK
See Ground Distribution, page 14-5.
BLK
G402
PHOTO 125

A/T Controls ('99-'00 CVT)

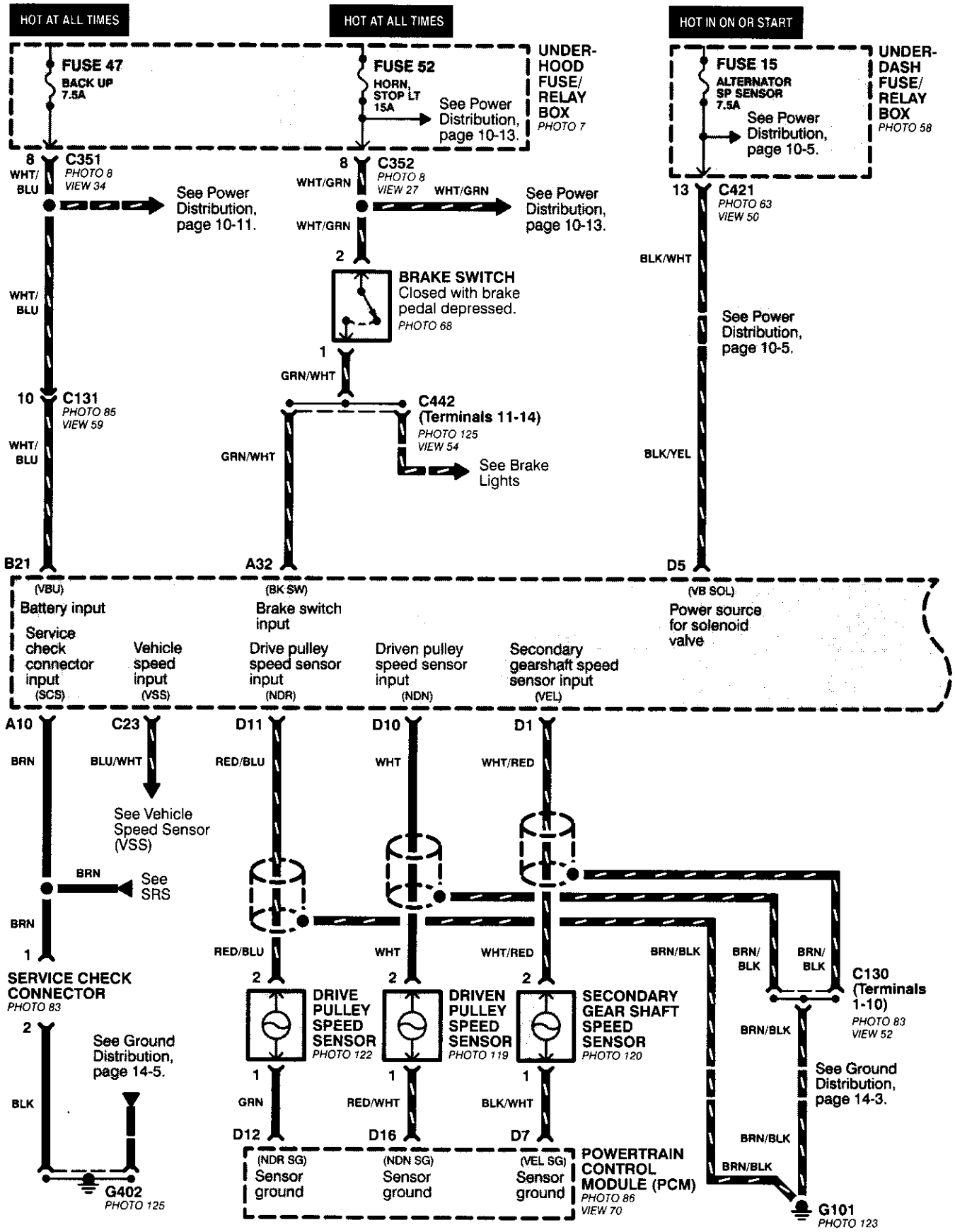

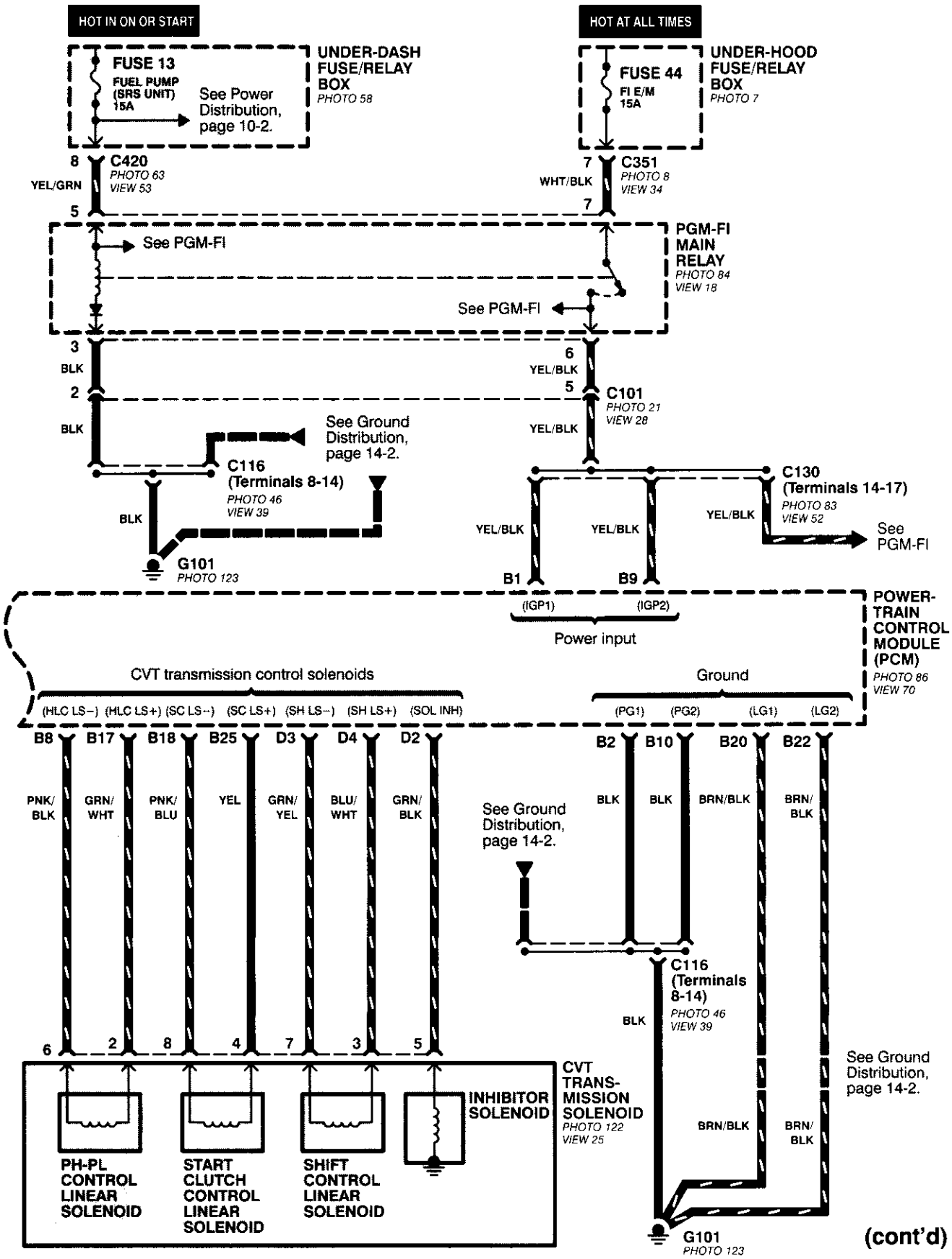
HOT IN ON OR START
HOT AT ALL TIMES
FUSE 13
FUEL PUMP (SRS UNIT) 15A
See Power Distribution, page 10-2.
UNDER-DASH FUSE/RELAY BOX
PHOTO 58
FUSE 44
FI E/M 15A
UNDER-HOOD FUSE/RELAY BOX
PHOTO 7
8
C420
PHOTO 63
VIEW 53
YEL/GRN
5
7
C351
PHOTO 8
VIEW 34
WHT/BLK
7
See PGM-FI
PGM-FI MAIN RELAY
PHOTO 84
VIEW 18
See PGM-FI
3
BLK
2
BLK
6
YEL/BLK
5
C101
PHOTO 21
VIEW 28
YEL/BLK
See Ground Distribution, page 14-2.
C116 (Terminals 8-14)
PHOTO 46
VIEW 39
BLK
G101
PHOTO 123
C130 (Terminals 14-17)
PHOTO 83
VIEW 52
YEL/BLK
See PGM-FI
YEL/BLK
YEL/BLK
B1
B9
(IGP1)
(IGP2)
Power input
POWER-TRAIN CONTROL MODULE (PCM)
PHOTO 86
VIEW 70
CVT transmission control solenoids
(HLC LS−) (HLC LS+) (SC LS−) (SC LS+) (SH LS−) (SH LS+) (SOL INH)
Ground
(PG1) (PG2) (LG1) (LG2)
B8 B17 B18 B25 D3 D4 D2
B2 B10 B20 B22
PNK/BLK
GRN/WHT
PNK/BLU
YEL
GRN/YEL
BLU/WHT
GRN/BLK
BLK
BLK
BRN/BLK
BRN/BLK
See Ground Distribution, page 14-2.
C116 (Terminals 8-14)
PHOTO 46
VIEW 39
BLK
6 2 8 4 7 3 5
CVT TRANS-MISSION SOLENOID
PHOTO 122
VIEW 25
INHIBITOR SOLENOID
PH-PL CONTROL LINEAR SOLENOID
START CLUTCH CONTROL LINEAR SOLENOID
SHIFT CONTROL LINEAR SOLENOID
BRN/BLK
BRN/BLK
See Ground Distribution, page 14-2.
G101
PHOTO 123

(cont'd)

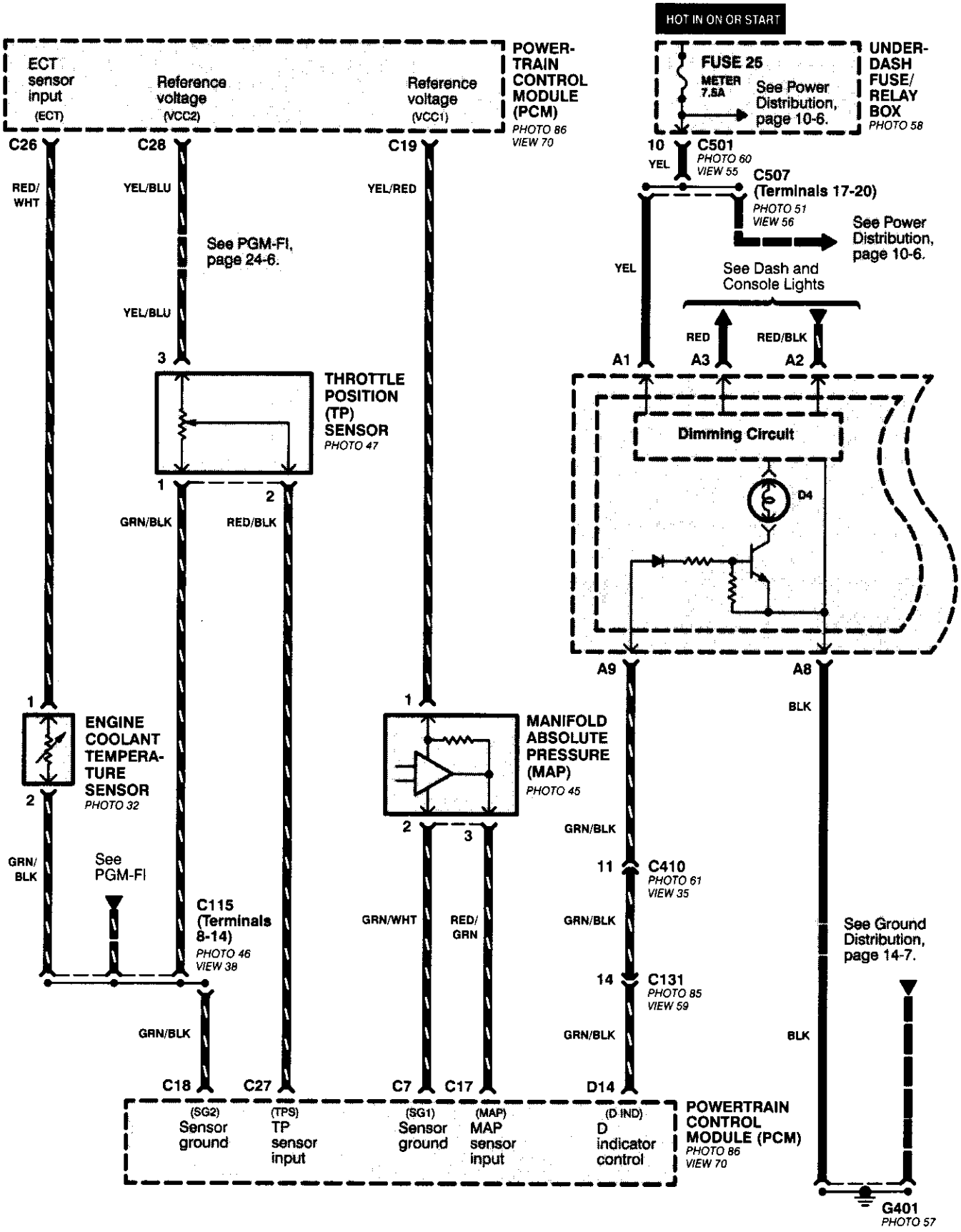
HOT IN ON OR START
ECT sensor input (ECT)
Reference voltage (VCC2)
Reference voltage (VCC1)
POWER-TRAIN CONTROL MODULE (PCM)
PHOTO 86
VIEW 70
FUSE 25
METER 7.5A
See Power Distribution, page 10-6.
UNDER-DASH FUSE/ RELAY BOX
PHOTO 58
C26
C28
C19
10
C501
PHOTO 60
VIEW 55
YEL
C507 (Terminals 17-20)
PHOTO 51
VIEW 56
See Power Distribution, page 10-6.
RED/ WHT
YEL/BLU
YEL/RED
See PGM-FI, page 24-6.
YEL/BLU
YEL
See Dash and Console Lights
RED
RED/BLK
3
A1
A3
A2
THROTTLE POSITION (TP) SENSOR
PHOTO 47
Dimming Circuit
D4
1
2
GRN/BLK
RED/BLK
A9
A8
BLK
1
ENGINE COOLANT TEMPERA-TURE SENSOR
PHOTO 32
2
1
MANIFOLD ABSOLUTE PRESSURE (MAP)
PHOTO 45
2
3
GRN/BLK
GRN/ BLK
See PGM-FI
11
C410
PHOTO 61
VIEW 35
C115 (Terminals 8-14)
PHOTO 46
VIEW 38
GRN/WHT
RED/ GRN
GRN/BLK
See Ground Distribution, page 14-7.
14
C131
PHOTO 85
VIEW 59
GRN/BLK
GRN/BLK
BLK
C18
C27
C7
C17
D14
(SG2) Sensor ground
(TPS) TP sensor input
(SG1) Sensor ground
(MAP) MAP sensor input
(D IND) D indicator control
POWERTRAIN CONTROL MODULE (PCM)
PHOTO 86
VIEW 70
G401
PHOTO 57

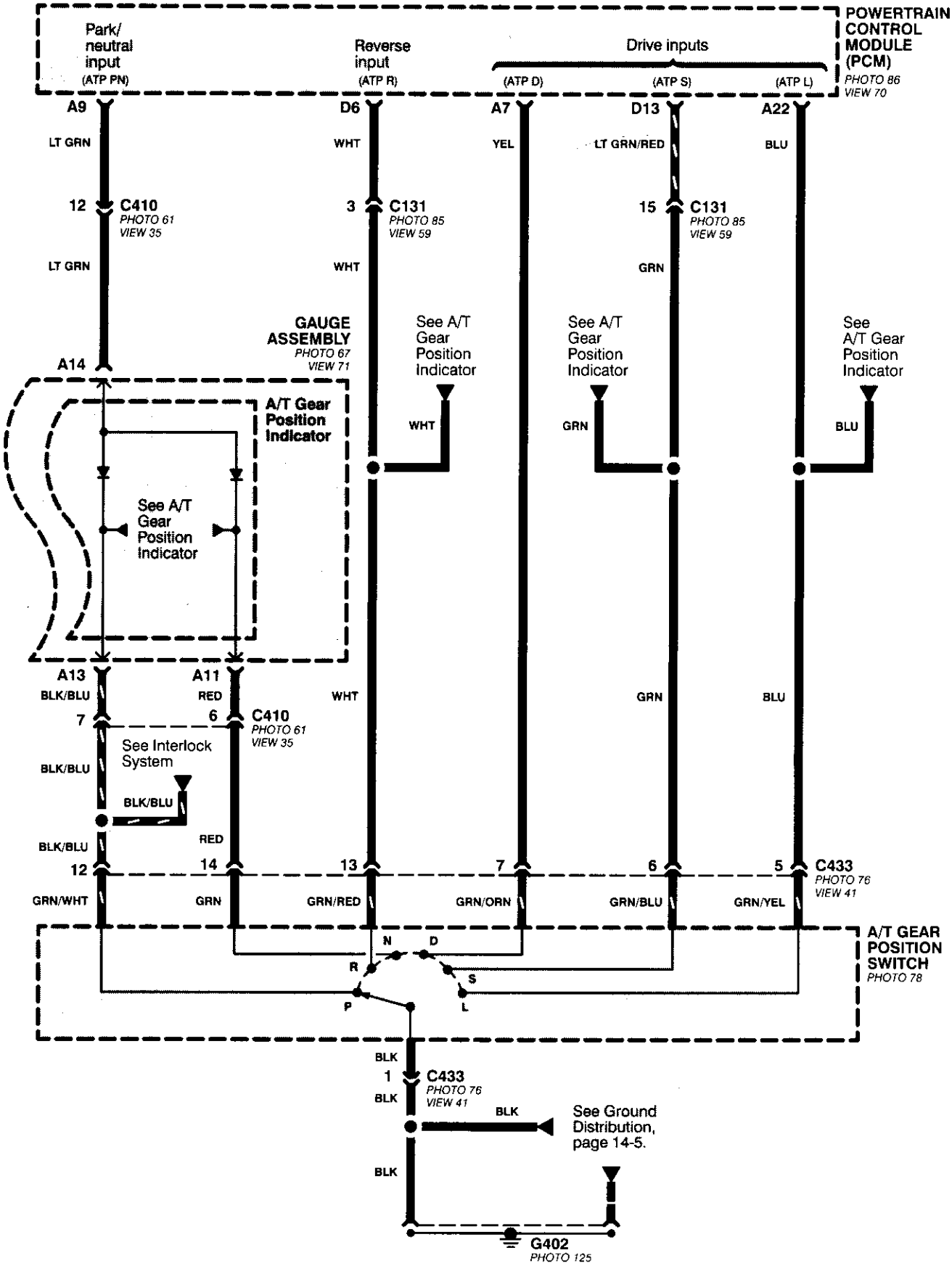
POWERTRAIN CONTROL MODULE (PCM)
PHOTO 86
VIEW 70
Park/ neutral input
(ATP PN)
Reverse input
(ATP R)
Drive inputs
(ATP D)
(ATP S)
(ATP L)
A9
D6
A7
D13
A22
LT GRN
WHT
YEL
LT GRN/RED
BLU
12
C410
PHOTO 61
VIEW 35
3
C131
PHOTO 85
VIEW 59
15
C131
PHOTO 85
VIEW 59
LT GRN
WHT
GRN
GAUGE ASSEMBLY
PHOTO 67
VIEW 71
See A/T Gear Position Indicator
See A/T Gear Position Indicator
See A/T Gear Position Indicator
A14
A/T Gear Position Indicator
WHT
GRN
BLU
See A/T Gear Position Indicator
A13
A11
BLK/BLU
RED
WHT
GRN
BLU
7
6
C410
PHOTO 61
VIEW 35
See Interlock System
BLK/BLU
BLK/BLU
BLK/BLU
RED
12
14
13
7
6
5
C433
PHOTO 76
VIEW 41
GRN/WHT
GRN
GRN/RED
GRN/ORN
GRN/BLU
GRN/YEL
A/T GEAR POSITION SWITCH
PHOTO 78
N
D
R
S
P
L
BLK
1
C433
PHOTO 76
VIEW 41
BLK
BLK
See Ground Distribution, page 14-5.
BLK
G402
PHOTO 125

Horn

'96-'97 Models

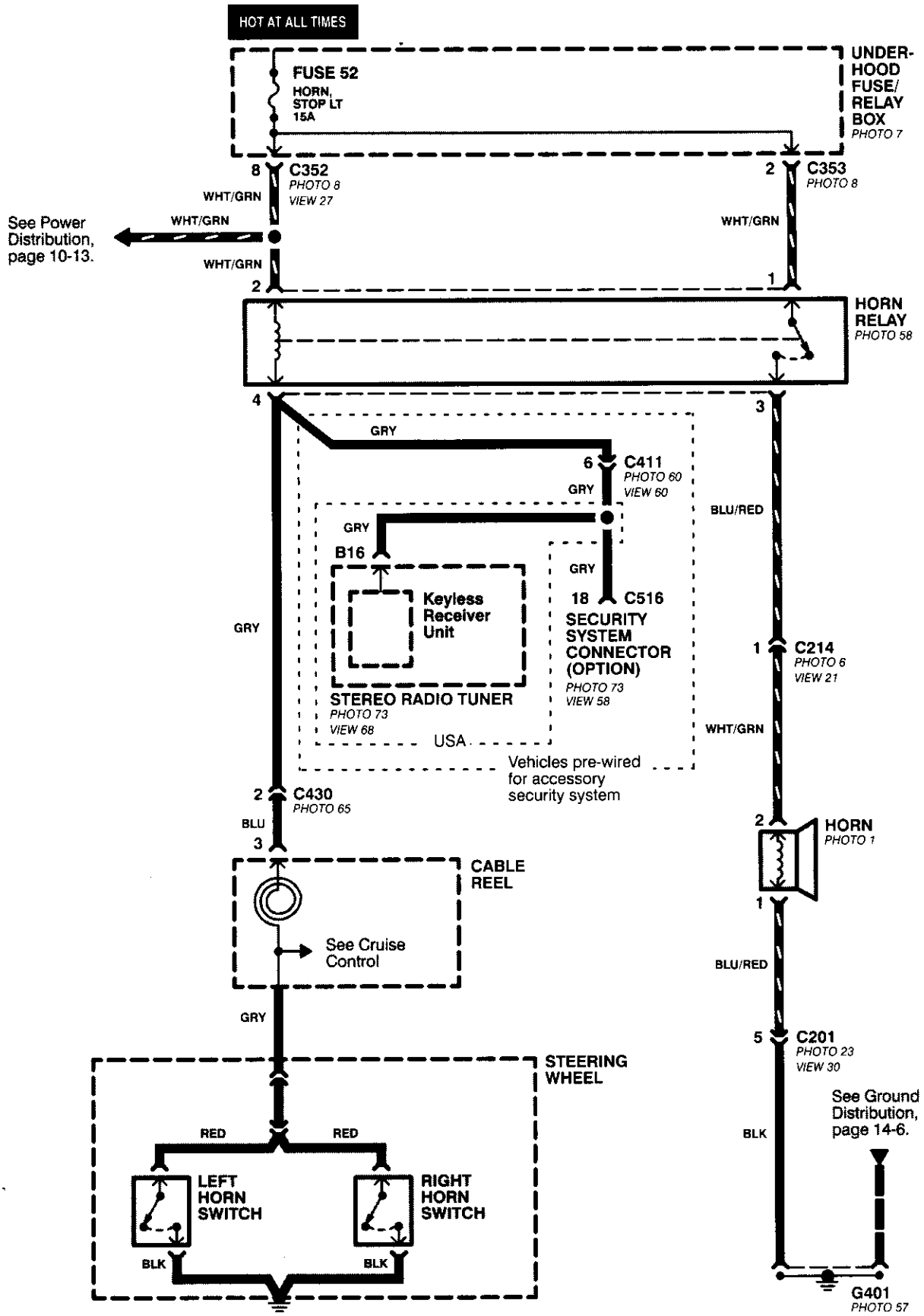

'98 Model

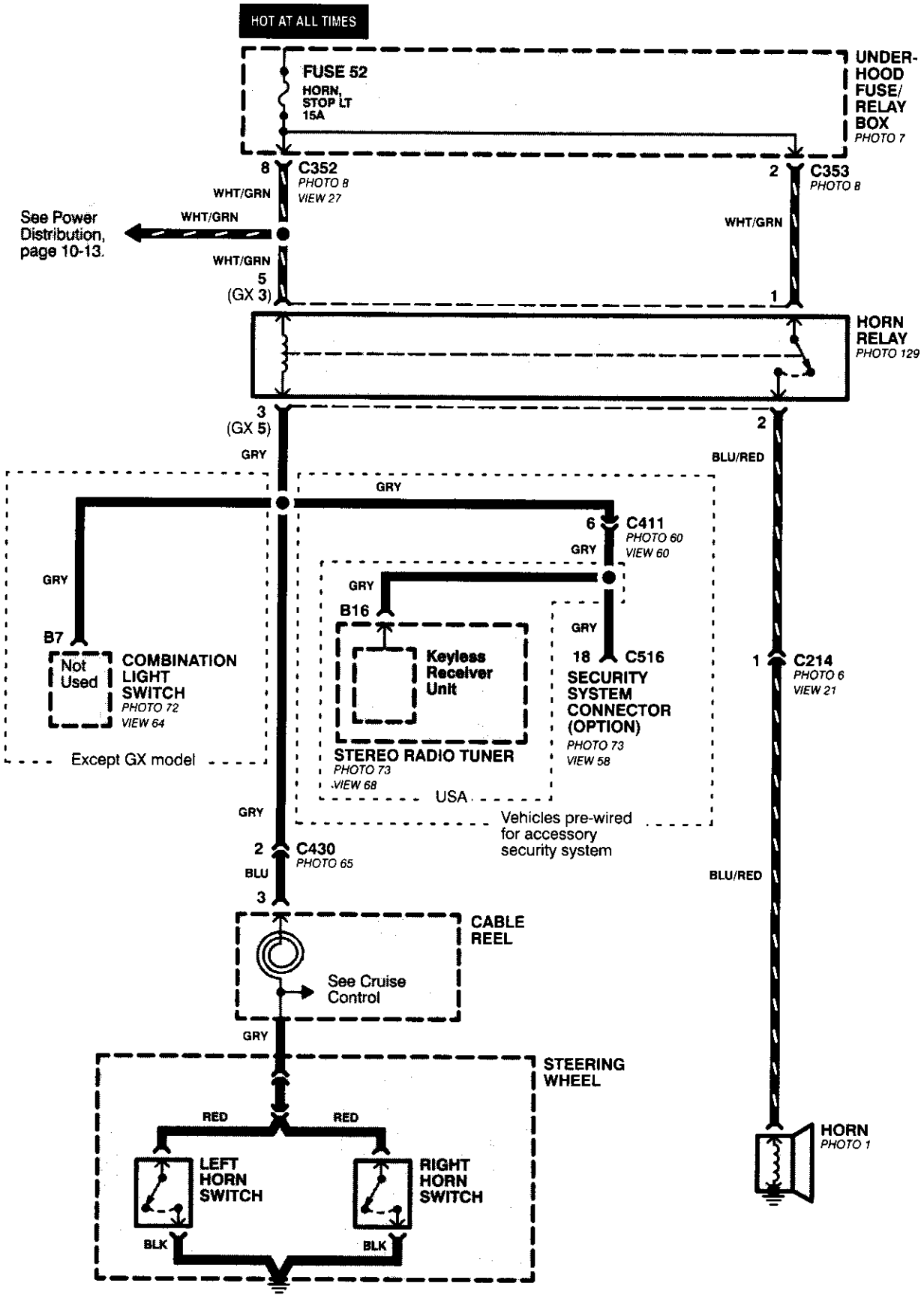
HOT AT ALL TIMES
FUSE 52
HORN, STOP LT 15A
UNDER-HOOD FUSE/ RELAY BOX
PHOTO 7
8
C352
PHOTO 8
VIEW 27
2
C353
PHOTO 8
WHT/GRN
See Power Distribution, page 10-13.
WHT/GRN
WHT/GRN
WHT/GRN
5
(GX 3)
1
HORN RELAY
PHOTO 129
3
(GX 5)
2
GRY
BLU/RED
GRY
6
C411
PHOTO 60
VIEW 60
GRY
GRY
GRY
B16
B7
Not Used
COMBINATION LIGHT SWITCH
PHOTO 72
VIEW 64
Except GX model
Keyless Receiver Unit
STEREO RADIO TUNER
PHOTO 73
VIEW 68
USA
GRY
18
C516
SECURITY SYSTEM CONNECTOR (OPTION)
PHOTO 73
VIEW 58
1
C214
PHOTO 6
VIEW 21
Vehicles pre-wired for accessory security system
GRY
2
C430
PHOTO 65
BLU
BLU/RED
3
CABLE REEL
See Cruise Control
GRY
STEERING WHEEL
RED
RED
LEFT HORN SWITCH
RIGHT HORN SWITCH
BLK
BLK
HORN
PHOTO 1

Horn

'99-'00 Models

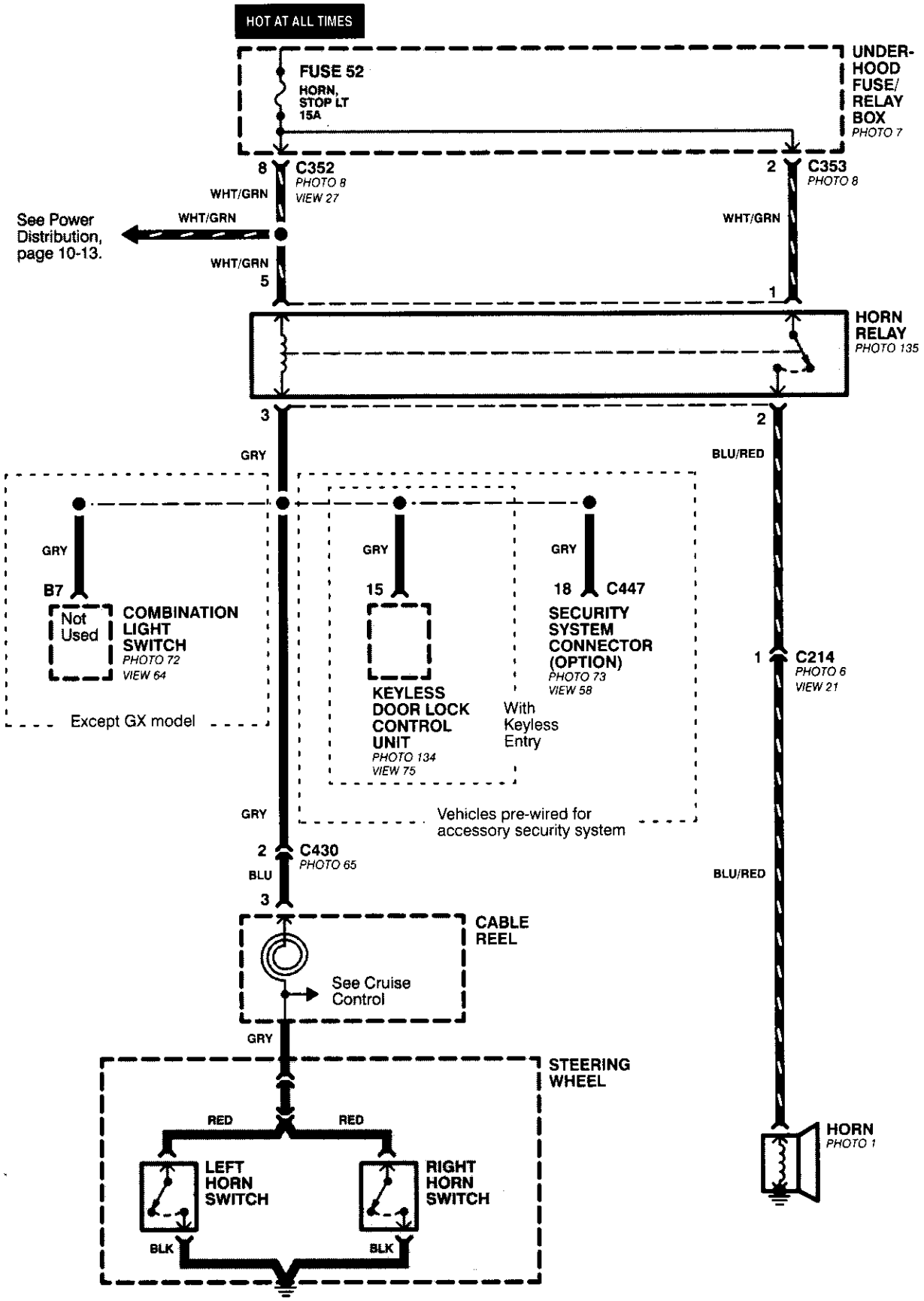

Anti-Lock Brake System (ABS)

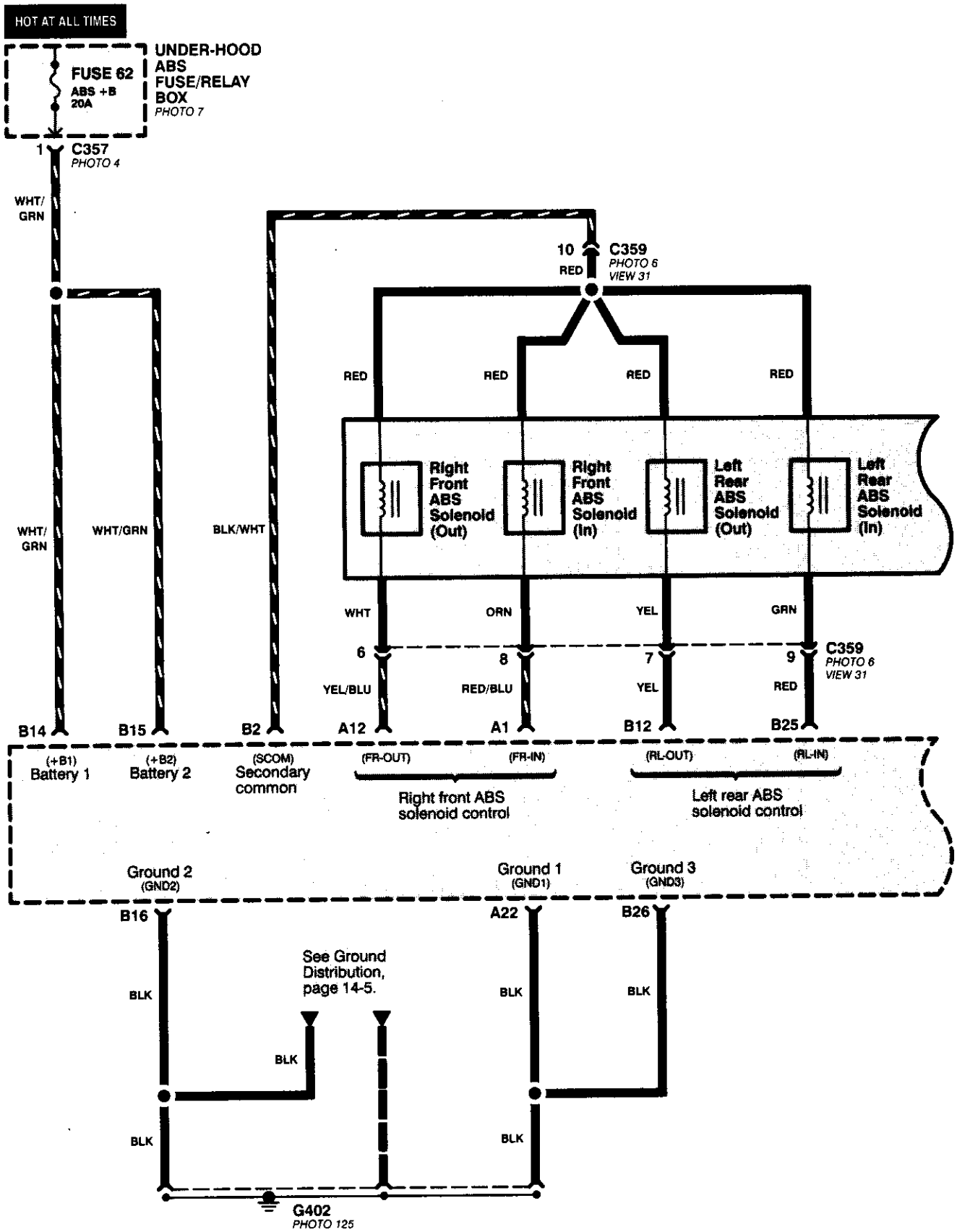

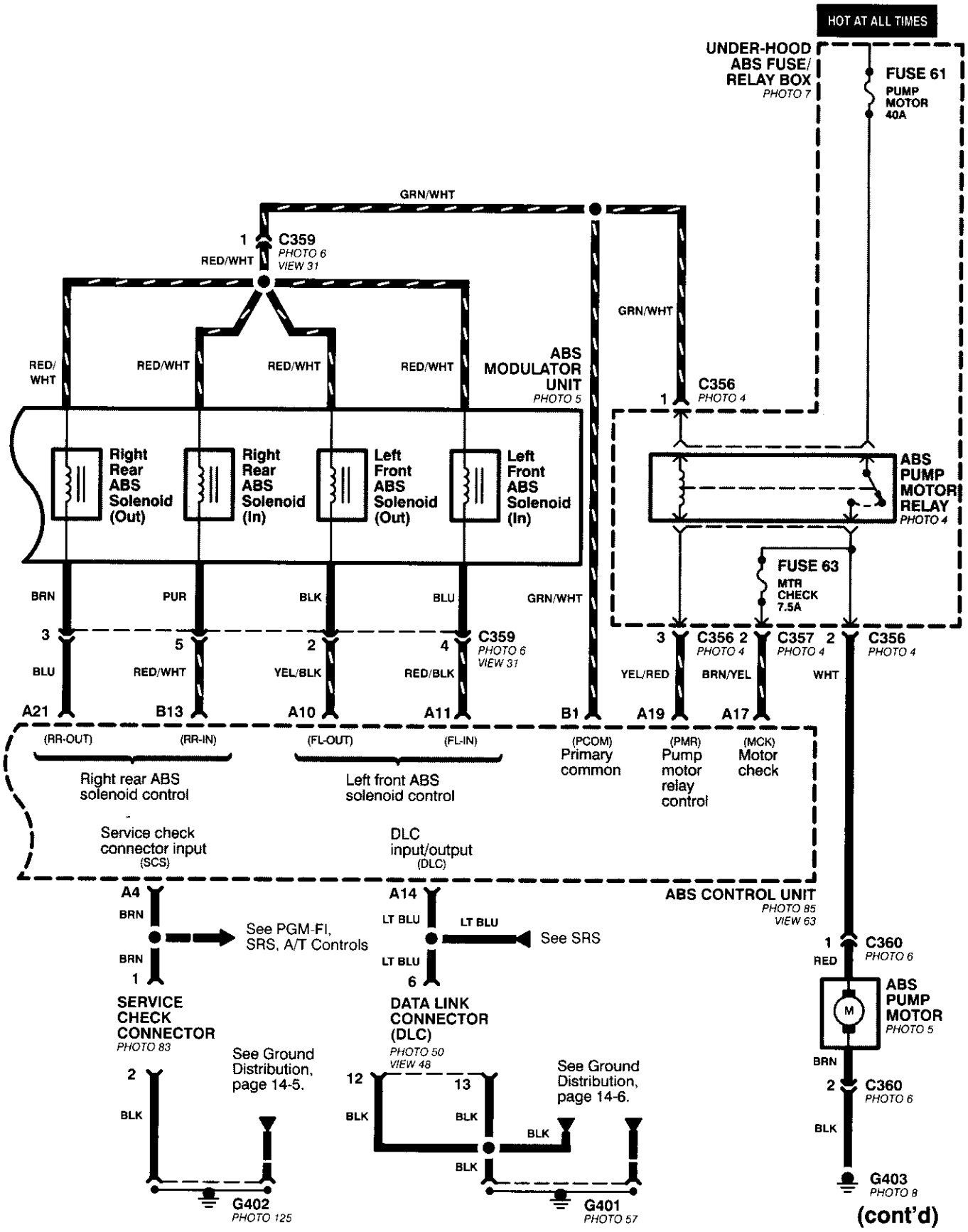
HOT AT ALL TIMES
UNDER-HOOD ABS FUSE/ RELAY BOX
PHOTO 7
FUSE 61
PUMP MOTOR 40A
GRN/WHT
1
C359
PHOTO 6
VIEW 31
RED/WHT
GRN/WHT
RED/ WHT
RED/WHT
RED/WHT
RED/WHT
ABS MODULATOR UNIT
PHOTO 5
1
C356
PHOTO 4
Right Rear ABS Solenoid (Out)
Right Rear ABS Solenoid (In)
Left Front ABS Solenoid (Out)
Left Front ABS Solenoid (In)
ABS PUMP MOTOR RELAY
PHOTO 4
FUSE 63
MTR CHECK 7.5A
BRN
PUR
BLK
BLU
GRN/WHT
3
5
2
4
C359
PHOTO 6
VIEW 31
3
C356 2
PHOTO 4
C357 2
PHOTO 4
C356
PHOTO 4
BLU
RED/WHT
YEL/BLK
RED/BLK
YEL/RED
BRN/YEL
WHT
A21
B13
A10
A11
B1
A19
A17
(RR-OUT)
(RR-IN)
(FL-OUT)
(FL-IN)
(PCOM) Primary common
(PMR) Pump motor relay control
(MCK) Motor check
Right rear ABS solenoid control
Left front ABS solenoid control
Service check connector input (SCS)
DLC input/output (DLC)
ABS CONTROL UNIT
PHOTO 85
VIEW 63
A4
BRN
BRN
1
See PGM-FI, SRS, A/T Controls
A14
LT BLU
LT BLU
LT BLU
6
See SRS
1
C360
PHOTO 6
RED
ABS PUMP MOTOR
PHOTO 5
M
SERVICE CHECK CONNECTOR
PHOTO 83
DATA LINK CONNECTOR (DLC)
PHOTO 50
VIEW 48
BRN
2
C360
PHOTO 6
2
BLK
See Ground Distribution, page 14-5.
12
13
BLK
BLK
BLK
BLK
See Ground Distribution, page 14-6.
BLK
G402
PHOTO 125
G401
PHOTO 57
G403
PHOTO 8

(cont'd)

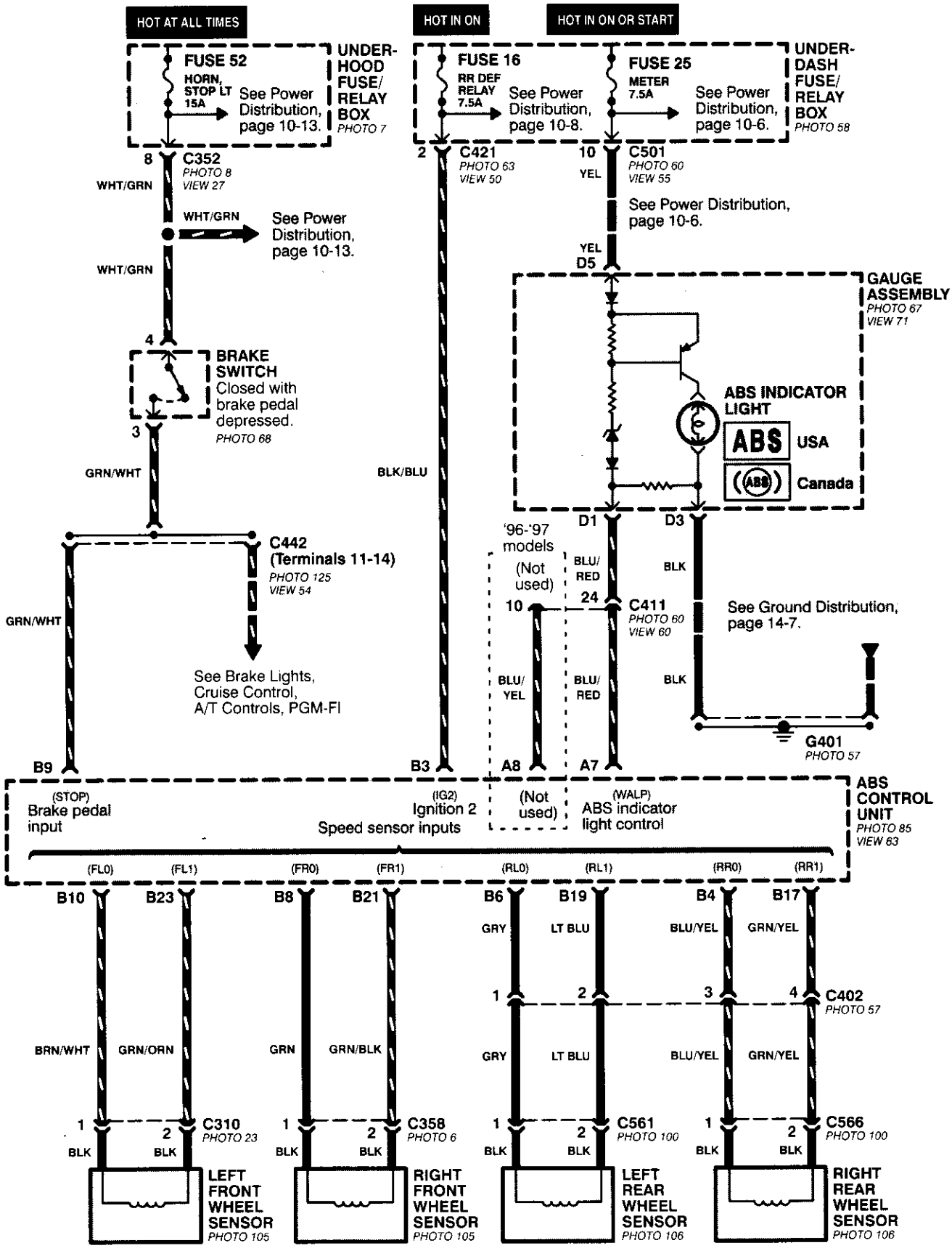
HOT AT ALL TIMES
HOT IN ON
HOT IN ON OR START
FUSE 52
HORN, STOP LT 15A
See Power Distribution, page 10-13.
UNDER-HOOD FUSE/ RELAY BOX
PHOTO 7
FUSE 16
RR DEF RELAY 7.5A
See Power Distribution, page 10-8.
FUSE 25
METER 7.5A
See Power Distribution, page 10-6.
UNDER-DASH FUSE/ RELAY BOX
PHOTO 58
8
C352
PHOTO 8
VIEW 27
WHT/GRN
2
C421
PHOTO 63
VIEW 50
10
C501
PHOTO 60
VIEW 55
YEL
See Power Distribution, page 10-6.
WHT/GRN
See Power Distribution, page 10-13.
WHT/GRN
YEL
D5
GAUGE ASSEMBLY
PHOTO 67
VIEW 71
4
BRAKE SWITCH
Closed with brake pedal depressed.
PHOTO 68
3
ABS INDICATOR LIGHT
ABS
USA
Canada
GRN/WHT
BLK/BLU
D1
D3
'96-'97 models
(Not used)
BLU/ RED
BLK
C442
(Terminals 11-14)
PHOTO 125
VIEW 54
10
24
C411
PHOTO 60
VIEW 60
See Ground Distribution, page 14-7.
GRN/WHT
See Brake Lights, Cruise Control, A/T Controls, PGM-FI
BLU/ YEL
BLU/ RED
BLK
G401
PHOTO 57
B9
B3
A8
A7
ABS CONTROL UNIT
PHOTO 85
VIEW 63
(STOP) Brake pedal input
(IG2) Ignition 2
Speed sensor inputs
(Not used)
(WALP) ABS indicator light control
(FL0)
(FL1)
(FR0)
(FR1)
(RL0)
(RL1)
(RR0)
(RR1)
B10
B23
B8
B21
B6
B19
B4
B17
GRY
LT BLU
BLU/YEL
GRN/YEL
1
2
3
4
C402
PHOTO 57
BRN/WHT
GRN/ORN
GRN
GRN/BLK
GRY
LT BLU
BLU/YEL
GRN/YEL
1
2
C310
PHOTO 23
1
2
C358
PHOTO 6
1
2
C561
PHOTO 100
1
2
C566
PHOTO 100
BLK
BLK
BLK
BLK
BLK
BLK
BLK
BLK
LEFT FRONT WHEEL SENSOR
PHOTO 105
RIGHT FRONT WHEEL SENSOR
PHOTO 105
LEFT REAR WHEEL SENSOR
PHOTO 106
RIGHT REAR WHEEL SENSOR
PHOTO 106

How the Circuit Works

The anti-lock brake system (ABS) prevents locking of the wheels as a result of heavy braking and/or poor traction. A vehicle with locked wheels cannot be steered. The anti-lock brake system controls the application of the brakes, allowing the driver to maintain control of the steering.

Under anti-lock conditions, the anti-lock brake system (ABS) modulates the pressure of the brake fluid to each brake caliper. This system is a four channel system: the pressure at each caliper is controlled independently of the pressure at any other caliper. Whenever a wheel is likely to lock during braking, the anti-lock brake system modulates the brake pressure at that wheel. When the brake pressure is reduced to the point where there is no longer any possibility of wheel locking, the system returns to the conventional braking system mode of operation.

Battery voltage is applied at all times through fuse 63 to the ABS control unit. When the ignition switch is in ON (II), battery voltage is supplied to the control unit through fuse 16. The control unit is case grounded. Inputs are received from the brake switch and the individual wheel sensors located at each wheel. The ABS control unit uses these inputs to control the modulator solenoid unit. The solenoids adjust the hydraulic pressure applied to each caliper.

The ABS control unit has a self-diagnosis function. When the control unit detects a fault, it turns on the "ABS" indicator and disables the anti-lock brake system. If the fault is not in the conventional braking system, the brakes will continue to operate normally but without the anti-lock feature.

Refer to the Service Manual (Section 19, Anti-Lock Brake System) for specific tests or troubleshooting procedures.

Supplemental Restraint System (SRS)

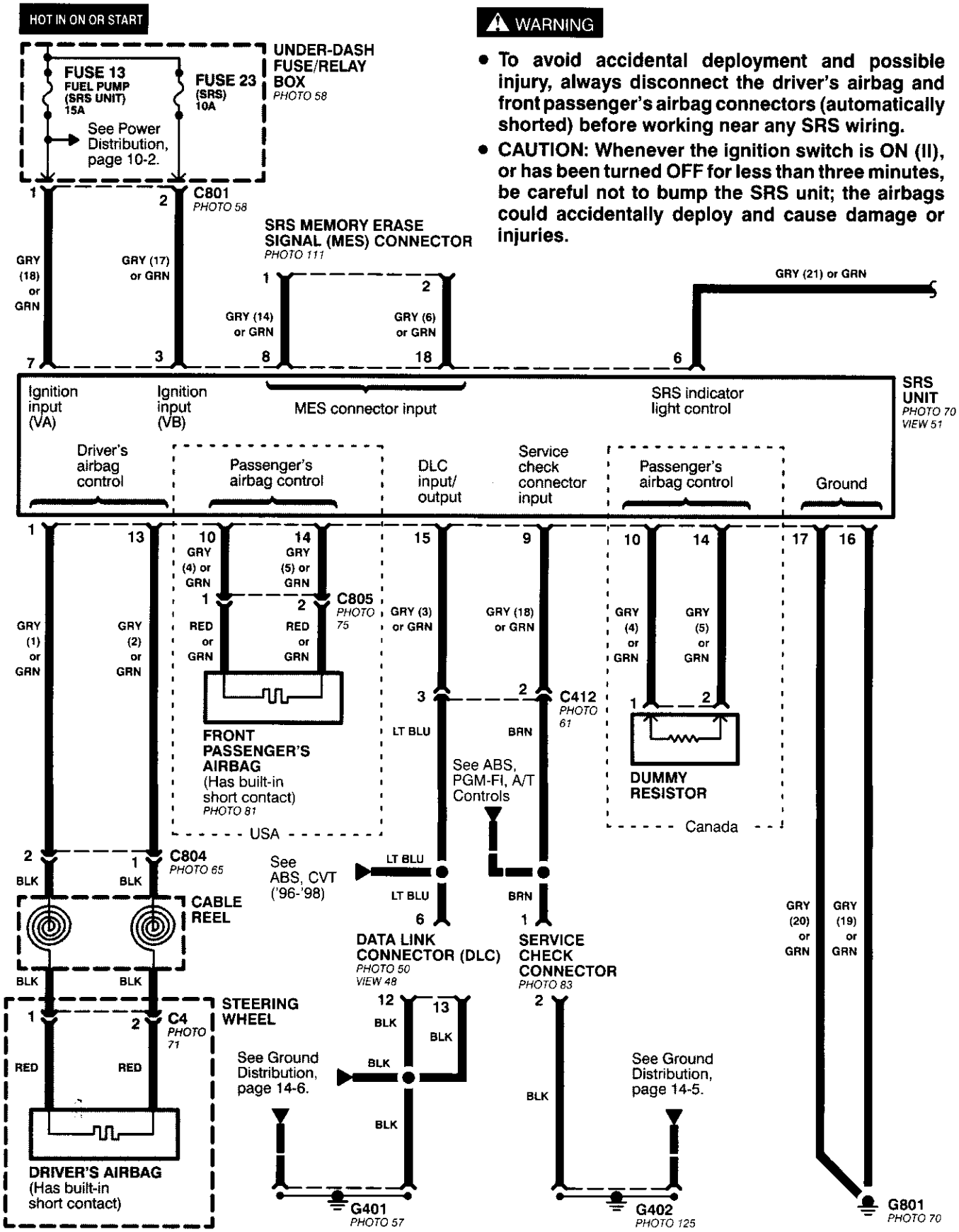

⚠ WARNING

- **To avoid accidental deployment and possible injury, always disconnect the driver's airbag and front passenger's airbag connectors (automatically shorted) before working near any SRS wiring.**
- **CAUTION: Whenever the ignition switch is ON (II), or has been turned OFF for less than three minutes, be careful not to bump the SRS unit; the airbags could accidentally deploy and cause damage or injuries.**

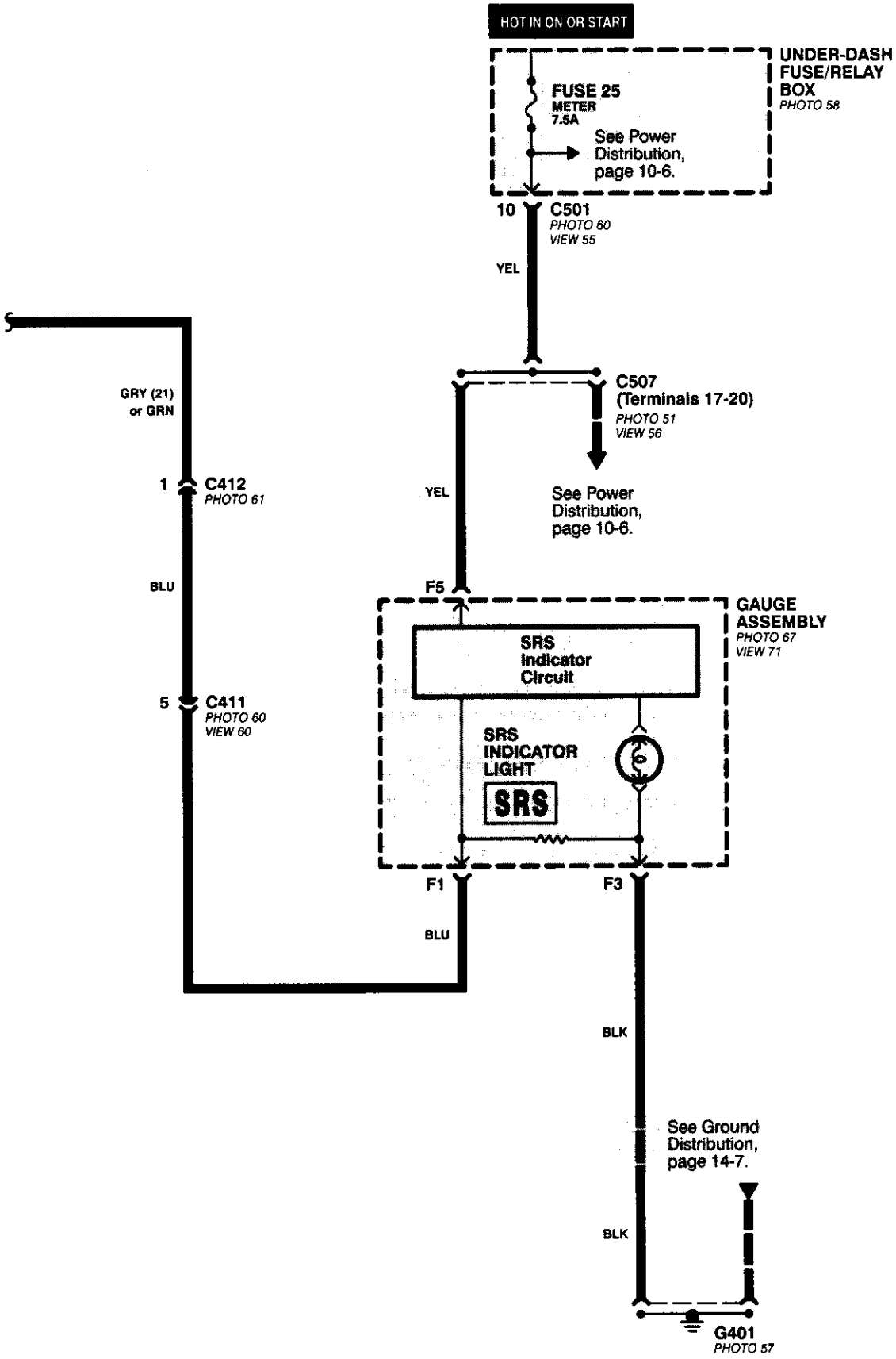
HOT IN ON OR START
UNDER-DASH FUSE/RELAY BOX
PHOTO 58
FUSE 25
METER
7.5A
See Power Distribution, page 10-6.
10
C501
PHOTO 60
VIEW 55
YEL
C507
(Terminals 17-20)
PHOTO 51
VIEW 56
See Power Distribution, page 10-6.
GRY (21) or GRN
1
C412
PHOTO 61
YEL
BLU
F5
GAUGE ASSEMBLY
PHOTO 67
VIEW 71
SRS Indicator Circuit
5
C411
PHOTO 60
VIEW 60
SRS INDICATOR LIGHT
SRS
F1
F3
BLU
BLK
See Ground Distribution, page 14-7.
BLK
G401
PHOTO 57

Blower Controls

– '96-'98 Models

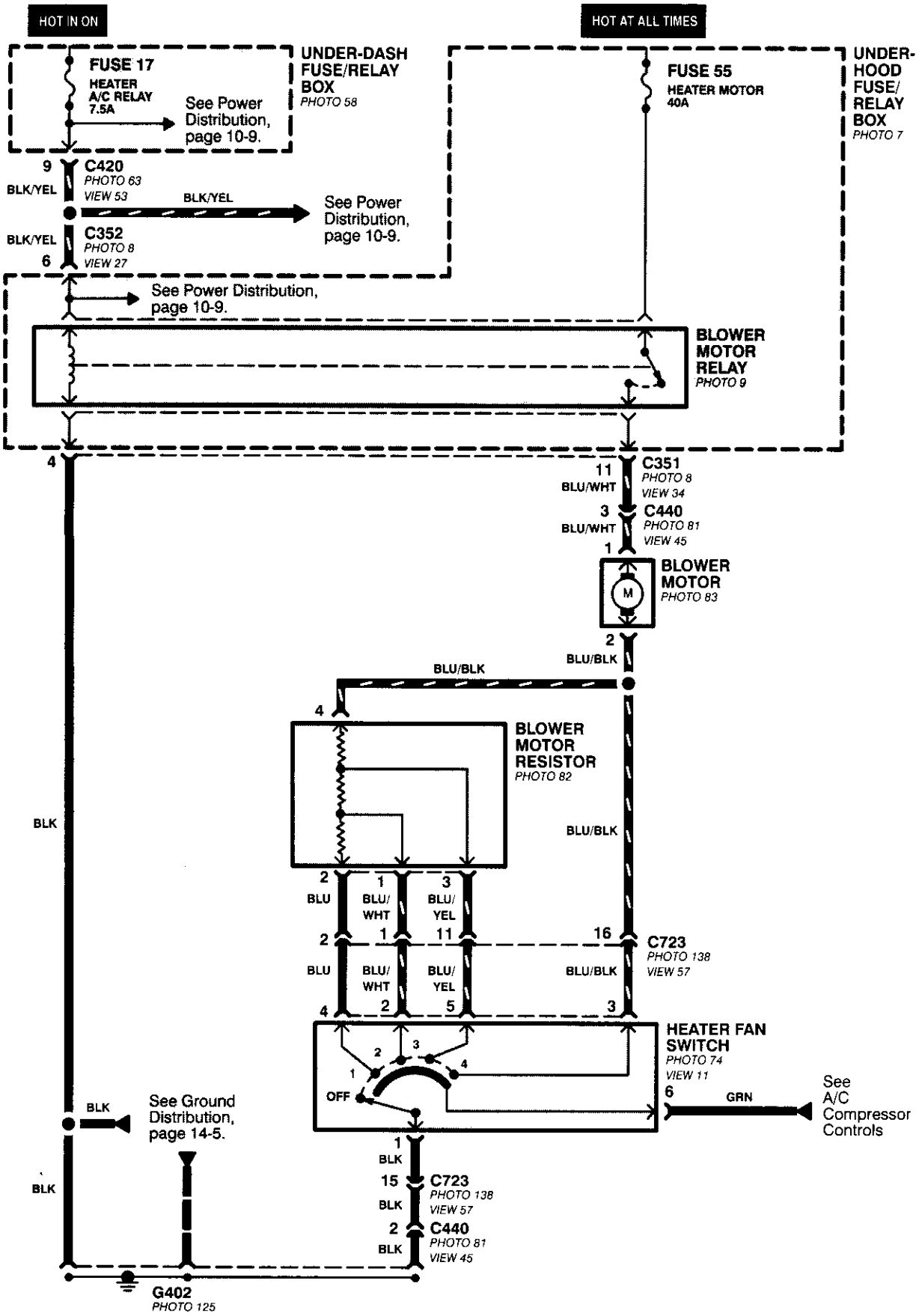

– '99-'00 Models

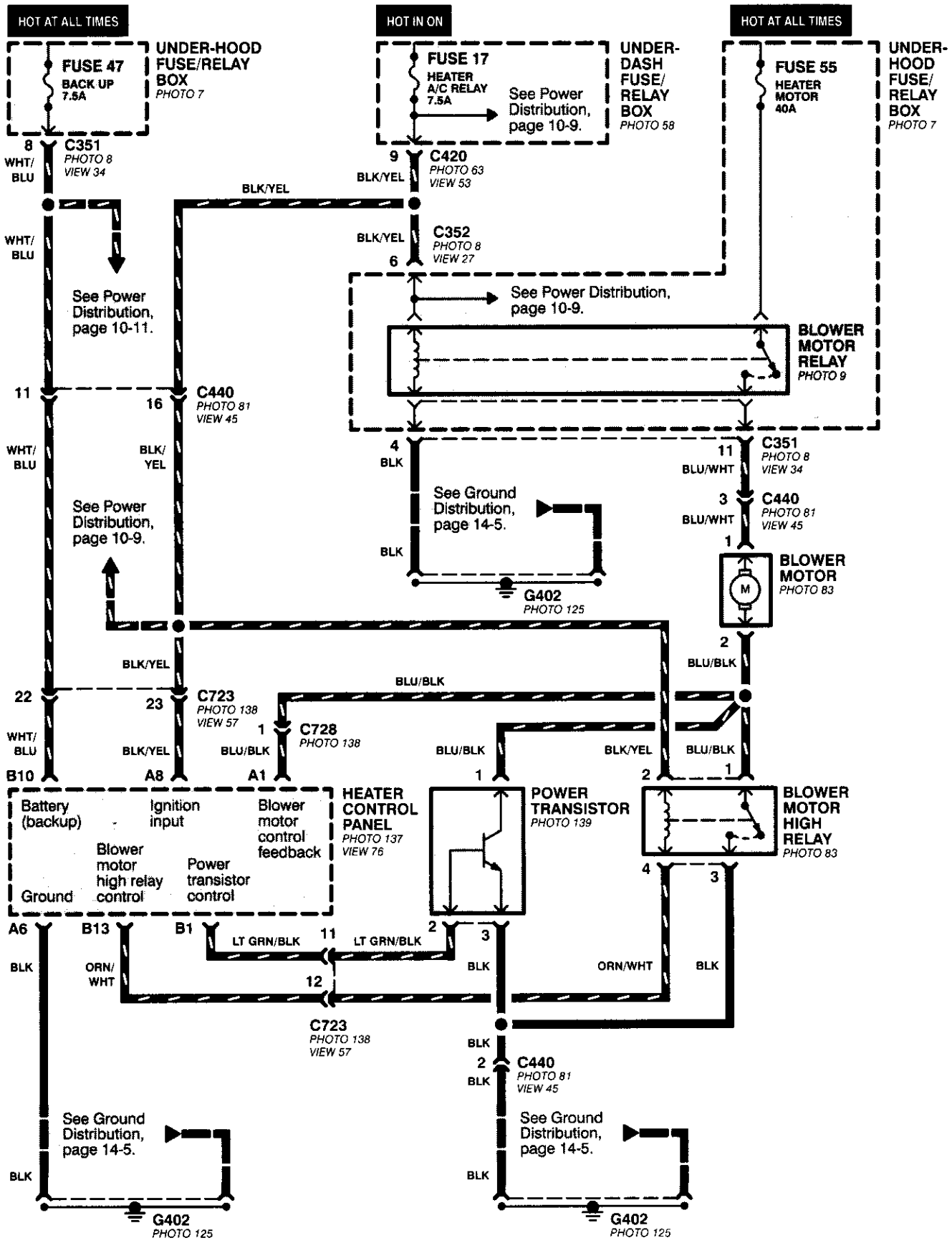
HOT AT ALL TIMES
HOT IN ON
HOT AT ALL TIMES
UNDER-HOOD FUSE/RELAY BOX PHOTO 7
FUSE 47 BACK UP 7.5A
FUSE 17 HEATER A/C RELAY 7.5A
See Power Distribution, page 10-9.
UNDER-DASH FUSE/ RELAY BOX PHOTO 58
FUSE 55 HEATER MOTOR 40A
UNDER-HOOD FUSE/ RELAY BOX PHOTO 7
8 C351 PHOTO 8 VIEW 34
WHT/BLU
9 C420 PHOTO 63 VIEW 53
BLK/YEL
BLK/YEL
WHT/BLU
BLK/YEL
C352 PHOTO 8 VIEW 27
6
See Power Distribution, page 10-11.
See Power Distribution, page 10-9.
BLOWER MOTOR RELAY PHOTO 9
11
16 C440 PHOTO 81 VIEW 45
WHT/BLU
BLK/YEL
4 BLK
11 BLU/WHT C351 PHOTO 8 VIEW 34
3 BLU/WHT C440 PHOTO 81 VIEW 45
1
See Ground Distribution, page 14-5.
See Power Distribution, page 10-9.
BLK
G402 PHOTO 125
BLOWER MOTOR PHOTO 83
2 BLU/BLK
BLK/YEL
BLU/BLK
22
23 C723 PHOTO 138 VIEW 57
1 C728 PHOTO 138
WHT/BLU
BLK/YEL
BLU/BLK
BLU/BLK
BLK/YEL
BLU/BLK
B10
A8
A1
1
2
1
Battery (backup)
Ignition input
Blower motor control feedback
Blower motor high relay control
Power transistor control
Ground
HEATER CONTROL PANEL PHOTO 137 VIEW 76
POWER TRANSISTOR PHOTO 139
BLOWER MOTOR HIGH RELAY PHOTO 83
4
3
A6
B13
B1
LT GRN/BLK
11
LT GRN/BLK
2
3
BLK
ORN/WHT
12
BLK
ORN/WHT
BLK
C723 PHOTO 138 VIEW 57
BLK
2 C440 PHOTO 81 VIEW 45
BLK
See Ground Distribution, page 14-5.
See Ground Distribution, page 14-5.
BLK
BLK
G402 PHOTO 125
G402 PHOTO 125

Air Delivery

– '96-'98 Models

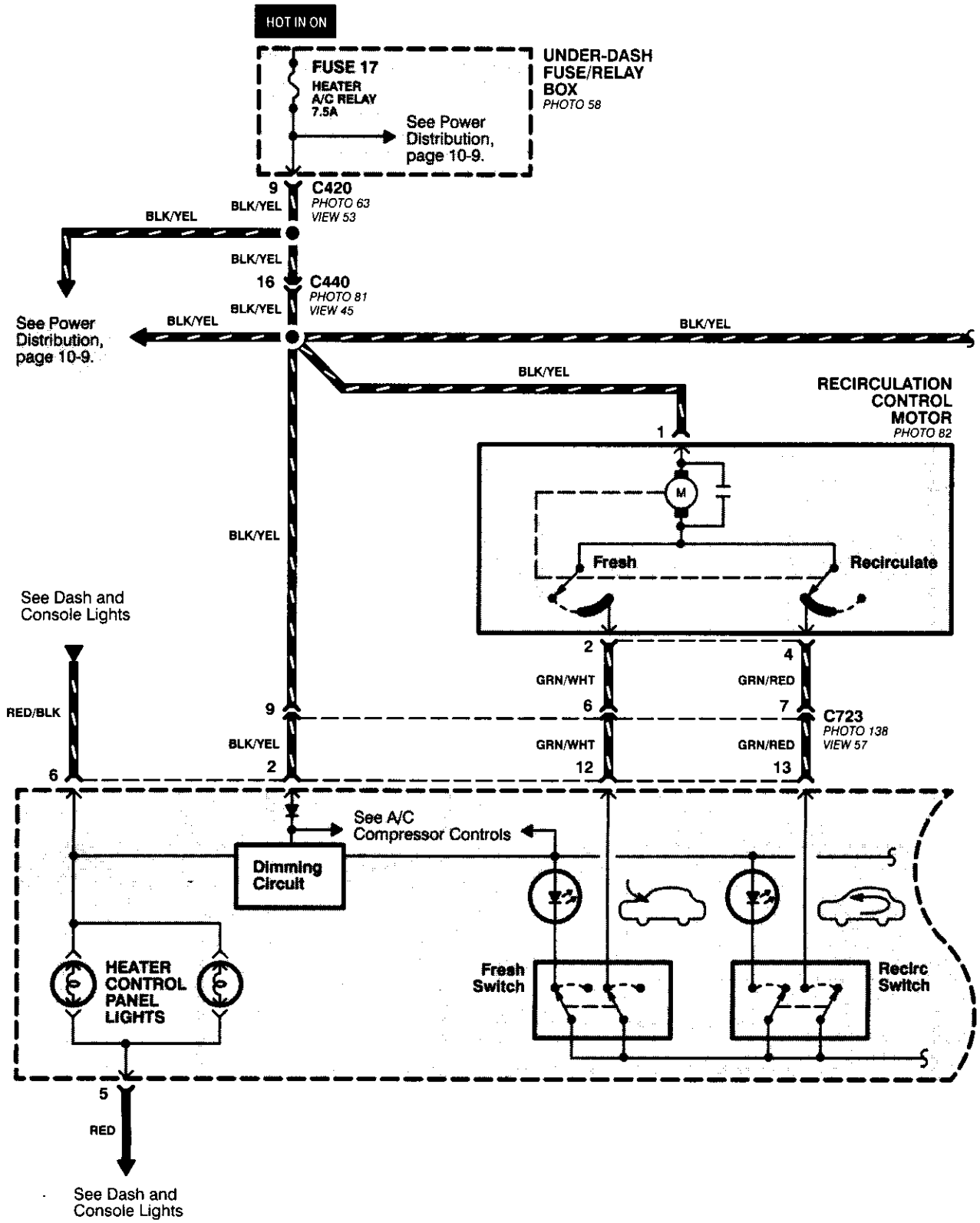

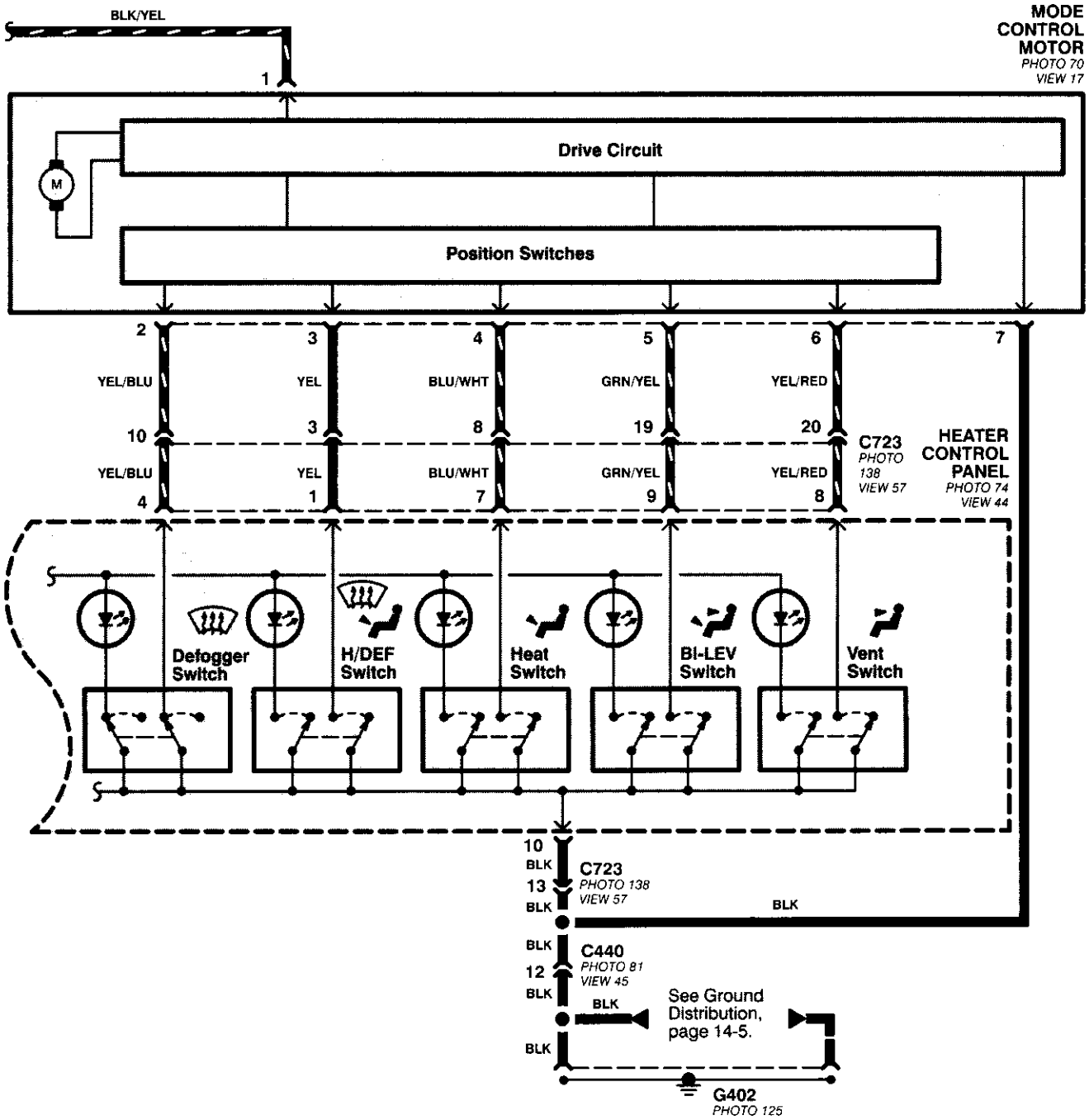
BLK/YEL
1
MODE CONTROL MOTOR
PHOTO 70
VIEW 17
Drive Circuit
M
Position Switches
2
3
4
5
6
7
YEL/BLU
YEL
BLU/WHT
GRN/YEL
YEL/RED
10
3
8
19
20
C723
PHOTO 138
VIEW 57
HEATER CONTROL PANEL
PHOTO 74
VIEW 44
YEL/BLU
YEL
BLU/WHT
GRN/YEL
YEL/RED
4
1
7
9
8
Defogger Switch
H/DEF Switch
Heat Switch
Bi-LEV Switch
Vent Switch
10
BLK
13
BLK
C723
PHOTO 138
VIEW 57
BLK
BLK
C440
PHOTO 81
VIEW 45
12
BLK
BLK
See Ground Distribution, page 14-5.
BLK
G402
PHOTO 125

Air Delivery

– '99-'00 Models

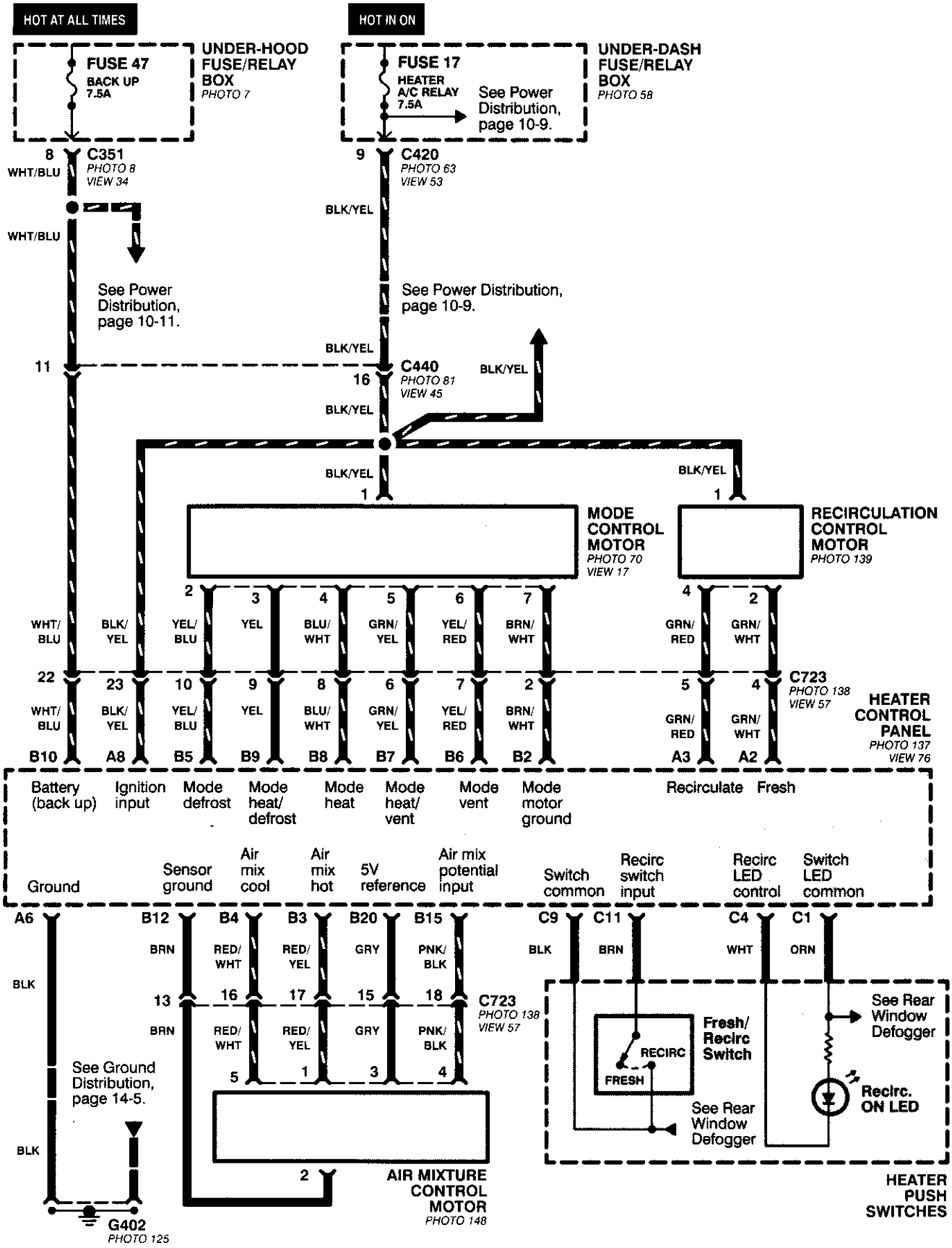

How the Circuit Works

'96-'98 Models

The air delivery system directs the flow of air used by the heater and air conditioner systems.

Mode Selection

Mode selection is controlled by the mode switches in the heater control panel and the mode control motor. When you select a specific mode, voltage is applied through the dimming circuit to the LED, which comes on, indicating the mode selected. Ground is provided to the mode control motor though that mode switch. The motor then runs until the air control door reaches the proper position.

Fresh/Recirculation Selection

When you press the fresh or recirculation button, a ground signal is sent from the heater control panel to the recirculation control motor. The motor then runs until the recirculation door reaches the proper position. Battery voltage is also applied through the dimming circuit to the corresponding LED, and the LED comes on.

Refer to the Service Manual (Section 21, Heater) for specific tests or troubleshooting procedures.

'99-'00 Models

The heater control panel receives battery voltage at all times through fuse 47. With the ignition switch in ON (II), voltage is supplied to the heater control panel through fuse 17. The control panel is grounded at G402.

The heater control panel controls the air delivery motors, and supplies a 5 VDC reference voltage to the air mixture control motor.

The air mixture and mode control motors each receive inputs from the heater control panel. The air mix motor regulates the mixture of cold and hot air by varying the position of the heater-evaporator door.

The mode control motor controls the direction and volume of outlet air. The air flow can be directed to the dashboard vents or the corner vents.

Both the air mixture control motor and mode control motor are grounded by the heater control panel.

The recirculation control motor receives battery voltage through fuse 17 when the ignition switch is in ON (II). It regulates the position of the fresh/recirc door, and is controlled by two position inputs from the heater control panel ("Recirc" and "Fresh").

Refer to the Service Manual (Section 21, Heater) for specific tests or troubleshooting procedures.

A/C Compressor Controls

– All Models

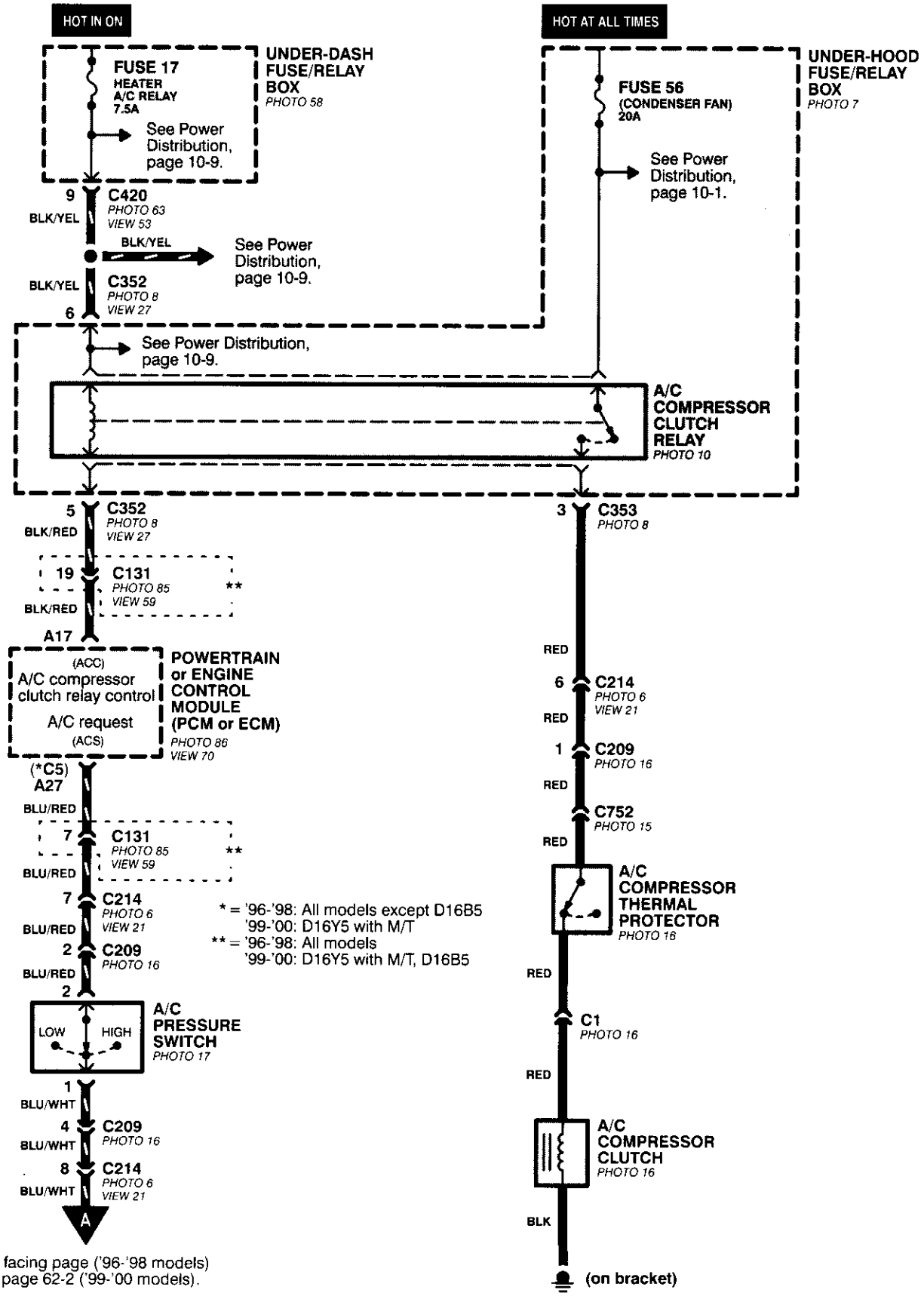

To facing page ('96-'98 models) or page 62-2 ('99-'00 models).

'96-'98 Models

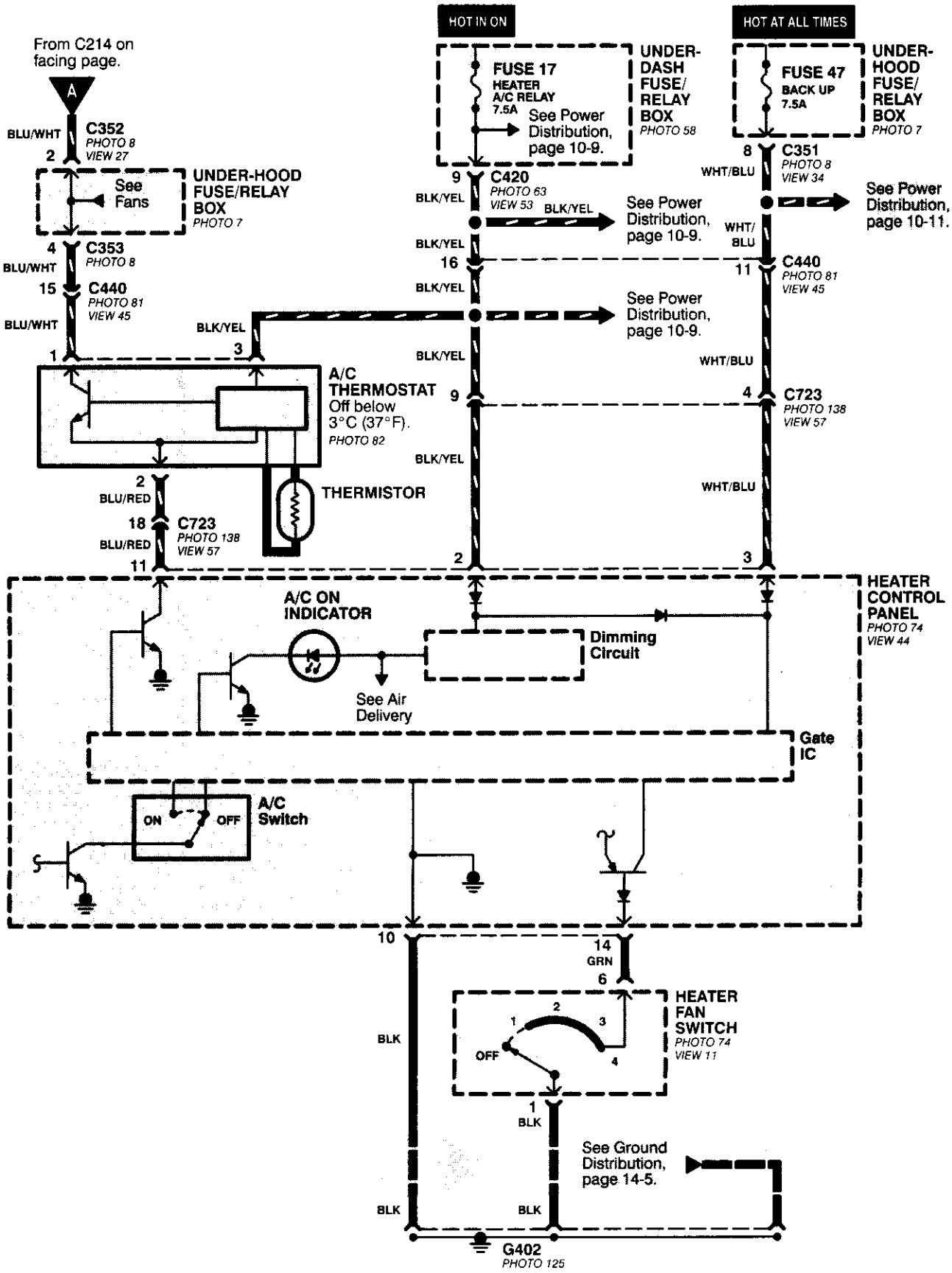
HOT IN ON
HOT AT ALL TIMES
From C214 on facing page.
A
BLU/WHT
C352
PHOTO 8
VIEW 27
2
UNDER-HOOD FUSE/RELAY BOX
PHOTO 7
See Fans
4
C353
PHOTO 8
BLU/WHT
15
C440
PHOTO 81
VIEW 45
BLU/WHT
1
BLK/YEL
3
A/C THERMOSTAT
Off below 3°C (37°F).
PHOTO 82
THERMISTOR
2
BLU/RED
18
C723
PHOTO 138
VIEW 57
BLU/RED
11
FUSE 17
HEATER A/C RELAY
7.5A
See Power Distribution, page 10-9.
UNDER-DASH FUSE/RELAY BOX
PHOTO 58
9
C420
PHOTO 63
VIEW 53
BLK/YEL
BLK/YEL
See Power Distribution, page 10-9.
BLK/YEL
16
BLK/YEL
See Power Distribution, page 10-9.
BLK/YEL
9
BLK/YEL
2
FUSE 47
BACK UP
7.5A
UNDER-HOOD FUSE/RELAY BOX
PHOTO 7
8
C351
PHOTO 8
VIEW 34
WHT/BLU
See Power Distribution, page 10-11.
WHT/BLU
11
C440
PHOTO 81
VIEW 45
WHT/BLU
4
C723
PHOTO 138
VIEW 57
WHT/BLU
3
HEATER CONTROL PANEL
PHOTO 74
VIEW 44
A/C ON INDICATOR
Dimming Circuit
See Air Delivery
Gate IC
A/C Switch
ON
OFF
10
14
GRN
6
HEATER FAN SWITCH
PHOTO 74
VIEW 11
OFF
1
2
3
4
BLK
1
BLK
See Ground Distribution, page 14-5.
BLK
BLK
G402
PHOTO 125

A/C Compressor Controls (cont'd)

– '99-'00 Models

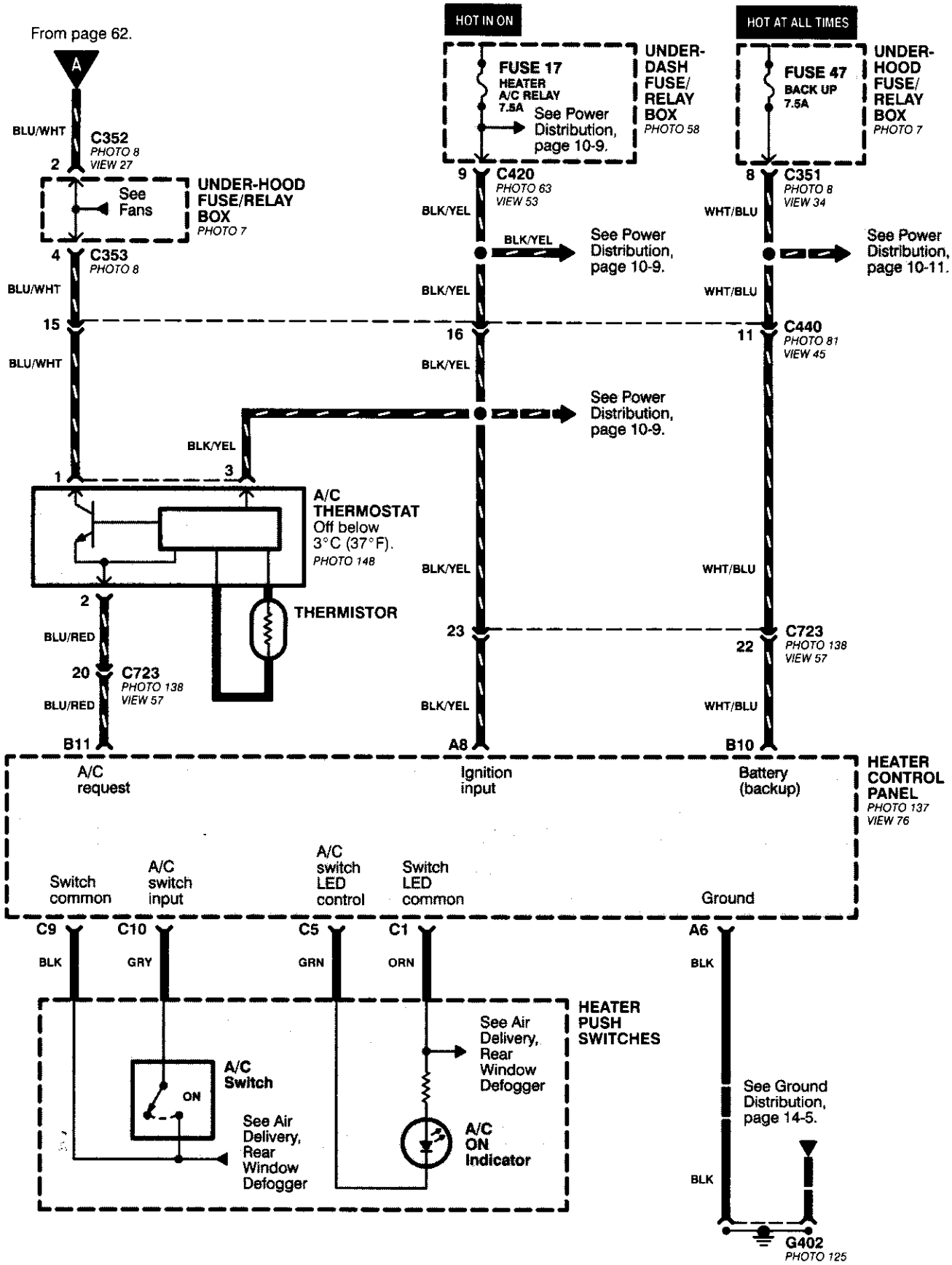

How the Circuit Works

Battery voltage is supplied through fuse 56 to the A/C compressor clutch relay contacts at all times.

With the ignition switch in ON (II), voltage is applied to the coil of the A/C compressor clutch relay through fuse 17. When you push the A/C switch ON, and the heater fan switch is in position 1, 2, 3, or 4, a "ground" input is provided to the engine control module (ECM) or powertrain control module (PCM) through the A/C thermostat and the A/C pressure switch.

The A/C compressor clutch relay is grounded by the engine control module (ECM) or powertrain control module (PCM). When energized, the A/C compressor clutch relay allows battery voltage to turn on the A/C compressor clutch.

The A/C ON indicator light comes on when the A/C system is requested.

A/C Thermostat

The A/C thermostat is located on the evaporator housing. The A/C thermostat turns off the A/C compressor clutch if the temperature at the evaporator goes below 3°C (37°F). This prevents condensation from freezing on the evaporator fins and blocking the air delivery into the passenger compartment. The blower motor will keep running when the sensor turns off the compressor.

A/C Pressure Switch

The A/C pressure switch is located in the condenser outlet line where refrigerant is in a high temperature/high pressure liquid state. The switch will sense abnormally high or low pressure, and open the circuit. This removes ground, and the compressor will stop running.

Thermal Protector

The thermal protector, located on the A/C compressor, opens and turns the compressor off if it senses high temperature. Once the compressor cools, the switch will close and the compressor will begin running again.

Refer to the Service Manual (Section 22, Air Conditioning) for specific tests or troubleshooting procedures.

Fans

– All Models

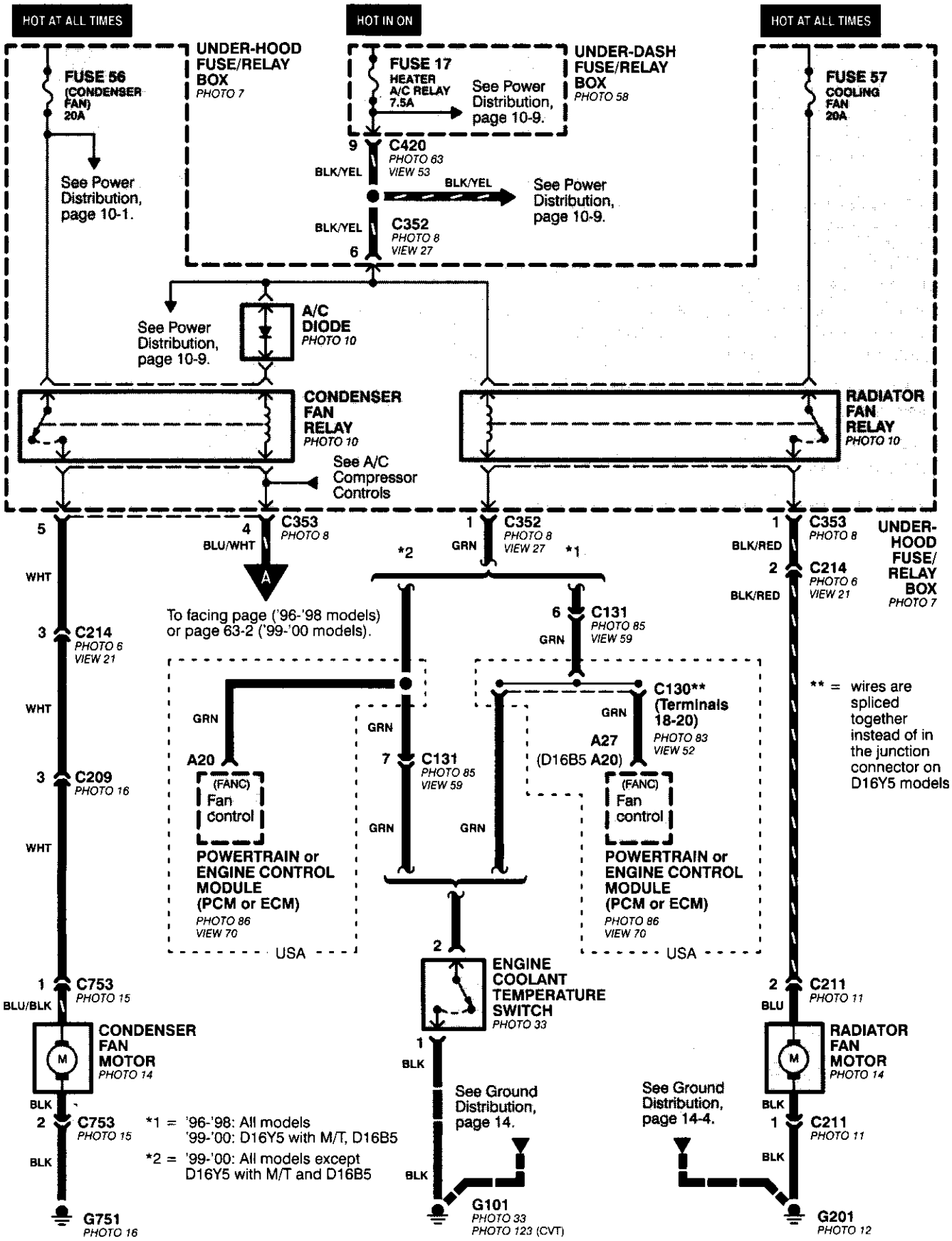

'96-'98 Models

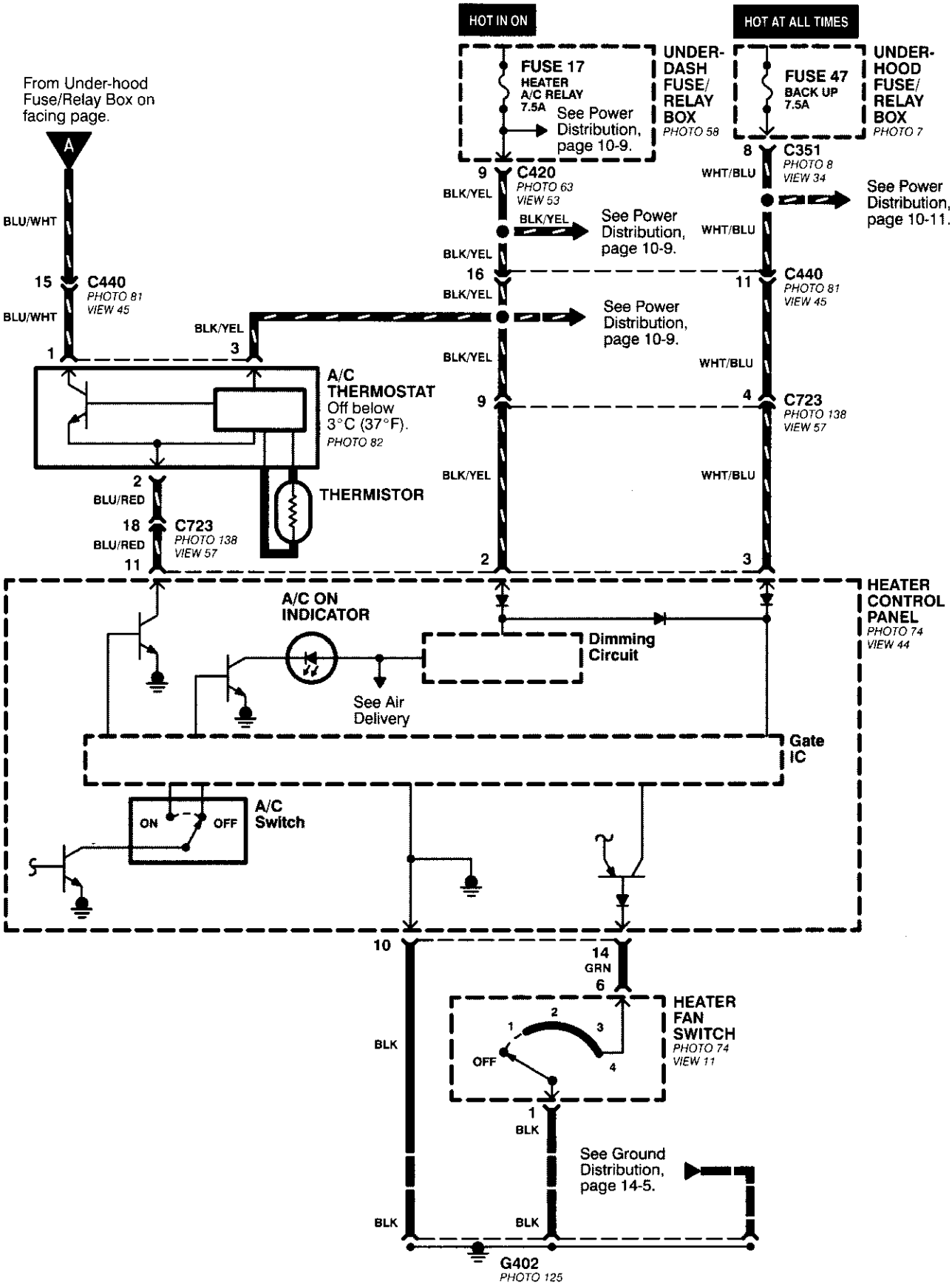
HOT IN ON
HOT AT ALL TIMES
FUSE 17
HEATER
A/C RELAY
7.5A
See Power Distribution, page 10-9.
UNDER-DASH FUSE/ RELAY BOX
PHOTO 58
FUSE 47
BACK UP
7.5A
UNDER-HOOD FUSE/ RELAY BOX
PHOTO 7
From Under-hood Fuse/Relay Box on facing page.
A
BLU/WHT
15
C440
PHOTO 81
VIEW 45
BLU/WHT
1
BLK/YEL
3
9
C420
PHOTO 63
VIEW 53
BLK/YEL
BLK/YEL
See Power Distribution, page 10-9.
BLK/YEL
16
BLK/YEL
See Power Distribution, page 10-9.
BLK/YEL
9
BLK/YEL
8
C351
PHOTO 8
VIEW 34
WHT/BLU
See Power Distribution, page 10-11.
WHT/BLU
11
C440
PHOTO 81
VIEW 45
WHT/BLU
4
C723
PHOTO 138
VIEW 57
WHT/BLU
A/C THERMOSTAT
Off below 3°C (37°F).
PHOTO 82
THERMISTOR
2
BLU/RED
18
C723
PHOTO 138
VIEW 57
BLU/RED
11
2
3
HEATER CONTROL PANEL
PHOTO 74
VIEW 44
A/C ON INDICATOR
Dimming Circuit
See Air Delivery
Gate IC
ON
OFF
A/C Switch
10
14
GRN
6
HEATER FAN SWITCH
PHOTO 74
VIEW 11
1
2
3
4
OFF
BLK
1
BLK
See Ground Distribution, page 14-5.
BLK
BLK
G402
PHOTO 125

'99-'00 Models

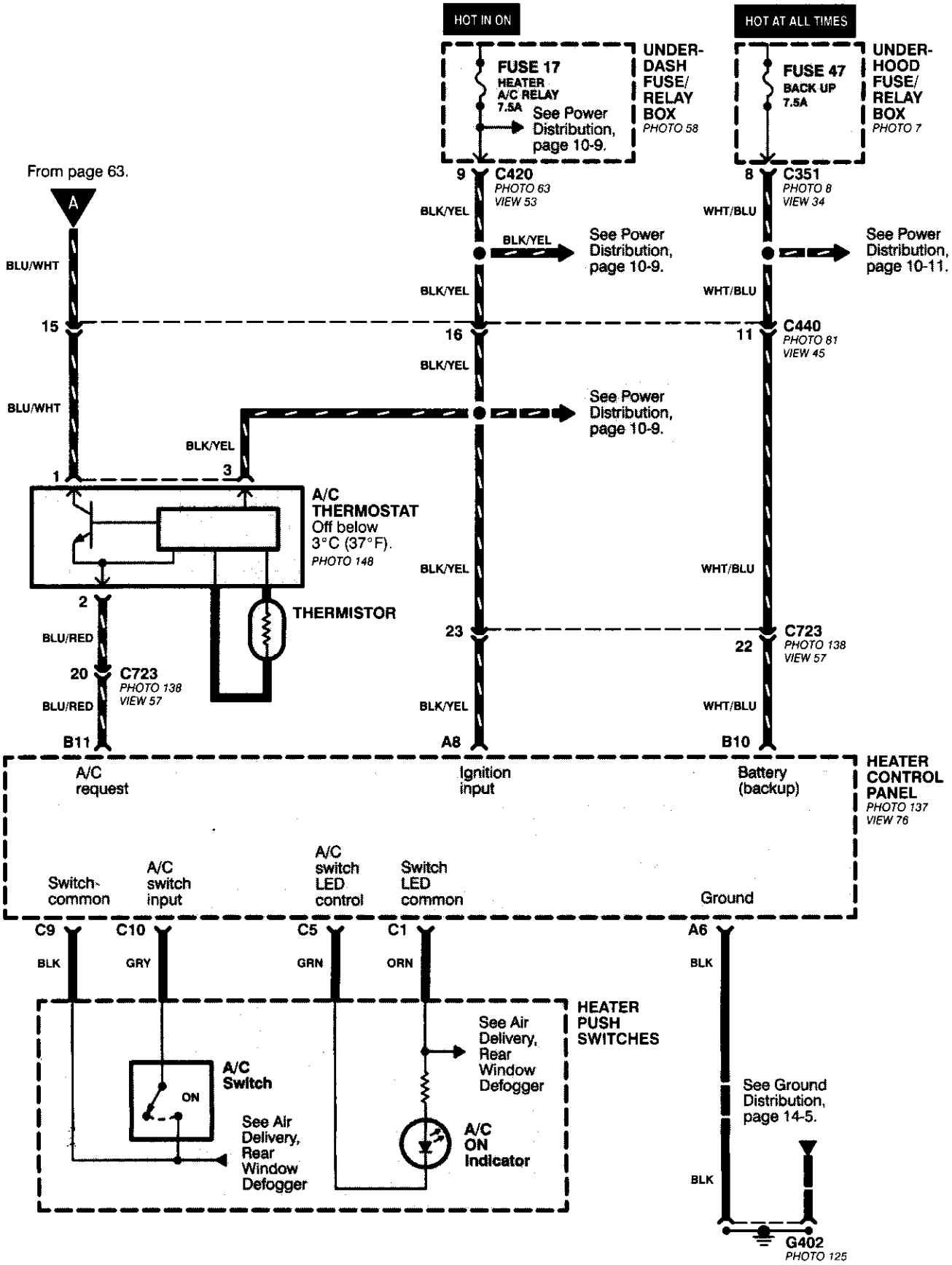
HOT IN ON
HOT AT ALL TIMES
FUSE 17
HEATER
A/C RELAY
7.5A
See Power Distribution, page 10-9.
UNDER-DASH FUSE/ RELAY BOX
PHOTO 58
FUSE 47
BACK UP
7.5A
UNDER-HOOD FUSE/ RELAY BOX
PHOTO 7
From page 63.
A
9
C420
PHOTO 63
VIEW 53
8
C351
PHOTO 8
VIEW 34
BLK/YEL
WHT/BLU
BLU/WHT
See Power Distribution, page 10-11.
15
16
11
C440
PHOTO 81
VIEW 45
1
3
A/C THERMOSTAT
Off below 3°C (37°F).
PHOTO 148
THERMISTOR
2
BLU/RED
20
C723
PHOTO 138
VIEW 57
23
22
B11
A8
B10
A/C request
Ignition input
Battery (backup)
HEATER CONTROL PANEL
PHOTO 137
VIEW 76
Switch-common
A/C switch input
A/C switch LED control
Switch LED common
Ground
C9
C10
C5
C1
A6
BLK
GRY
GRN
ORN
HEATER PUSH SWITCHES
See Air Delivery, Rear Window Defogger
A/C Switch
ON
A/C ON Indicator
See Ground Distribution, page 14-5.
G402
PHOTO 125

How the Circuit Works

Radiator Fan

Voltage is provided at all times to the radiator fan relay (contacts) through fuse 57. With the ignition switch in ON (II), voltage is provided to the coil of the relay through fuse 17.

The radiator fan relay can be grounded through either the engine coolant temperature switch or the engine control module (ECM) or powertrain control module (PCM).

The engine coolant temperature switch grounds the radiator fan relay (coil) when the engine coolant temperature exceeds 199°F (83°C). The switch opens when coolant temperature decreases 3°– 8°C.

Condenser Fan

Voltage is provided at all times to the condenser fan relay (contacts) through fuse 56. With the ignition switch in ON (II), voltage is provided to the coil of the relay through fuse 17. When you push the A/C switch and put the heater fan switch in 1, 2, 3, or 4 position, the A/C thermostat comes on, the condenser fan relay energizes, and the condenser fan motor runs.

A/C Thermostat

The A/C thermostat is located on the evaporator housing. The A/C thermostat turns off the A/C compressor clutch if the temperature at the evaporator goes below 3°C (37°F). This prevents condensation from freezing on the evaporator fins and blocking the air delivery into the passenger compartment. If the temperature goes below 3°C (37°F) turning off the A/C thermostat, ground will be removed from the condenser fan relay. This will deenergize the relay and remove voltage from the condenser fan motor causing the fan to stop running.

Refer to the Service Manual (Section 23, Electrical) for specific tests or troubleshooting procedures.

Rear Window Defogger

– '96-'98 Models

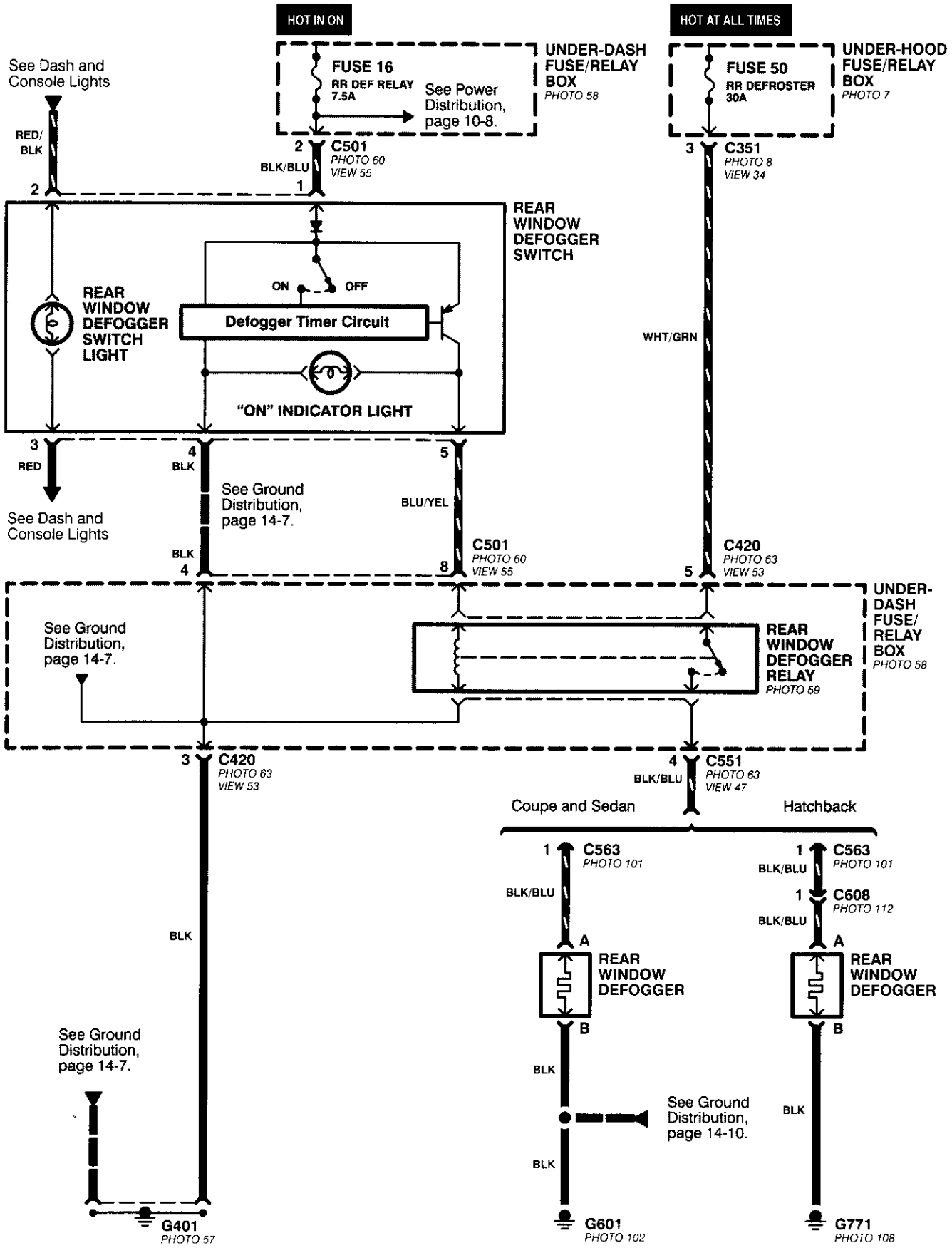

– '99-'00 Models

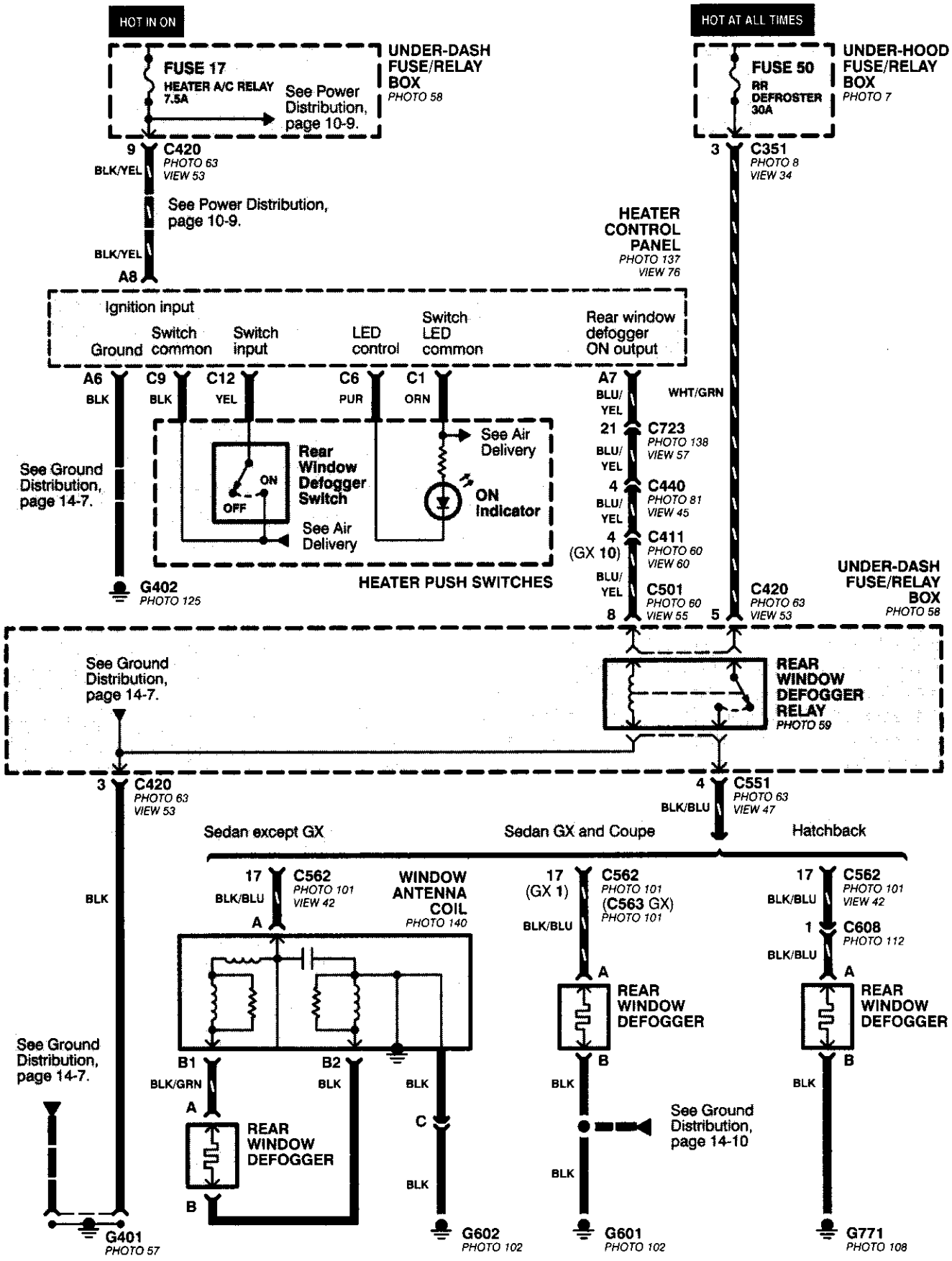
HOT IN ON
HOT AT ALL TIMES
UNDER-DASH FUSE/RELAY BOX PHOTO 58
FUSE 17
HEATER A/C RELAY 7.5A
See Power Distribution, page 10-9.
UNDER-HOOD FUSE/RELAY BOX PHOTO 7
FUSE 50
RR DEFROSTER 30A
9 C420 PHOTO 63 VIEW 53
BLK/YEL
3 C351 PHOTO 8 VIEW 34
See Power Distribution, page 10-9.
HEATER CONTROL PANEL PHOTO 137 VIEW 76
BLK/YEL
A8
Ignition input
Ground
Switch common
Switch input
LED control
Switch LED common
Rear window defogger ON output
A6 BLK
C9 BLK
C12 YEL
C6 PUR
C1 ORN
A7 BLU/YEL
WHT/GRN
21 C723 PHOTO 138 VIEW 57
BLU/YEL
4 C440 PHOTO 81 VIEW 45
BLU/YEL
4 (GX 10) C411 PHOTO 60 VIEW 60
BLU/YEL
C501 PHOTO 60 VIEW 55
8
5 C420 PHOTO 63 VIEW 53
UNDER-DASH FUSE/RELAY BOX PHOTO 58
See Ground Distribution, page 14-7.
Rear Window Defogger Switch
ON
OFF
See Air Delivery
See Air Delivery
ON Indicator
HEATER PUSH SWITCHES
G402 PHOTO 125
See Ground Distribution, page 14-7.
REAR WINDOW DEFOGGER RELAY PHOTO 59
3 C420 PHOTO 63 VIEW 53
4 C551 PHOTO 63 VIEW 47
BLK/BLU
Sedan except GX
Sedan GX and Coupe
Hatchback
BLK
17 C562 PHOTO 101 VIEW 42
BLK/BLU
A
WINDOW ANTENNA COIL PHOTO 140
17 (GX 1) C562 PHOTO 101 (C563 GX) PHOTO 101
BLK/BLU
17 C562 PHOTO 101 VIEW 42
BLK/BLU
1 C608 PHOTO 112
BLK/BLU
A
REAR WINDOW DEFOGGER
A
REAR WINDOW DEFOGGER
See Ground Distribution, page 14-7.
B1
BLK/GRN
B2
BLK
BLK
A
REAR WINDOW DEFOGGER
B
C
BLK
B
BLK
See Ground Distribution, page 14-10
BLK
B
BLK
G401 PHOTO 57
G602 PHOTO 102
G601 PHOTO 102
G771 PHOTO 108

Rear Window Defogger

– How the Circuit Works

'96-'98 Models

Voltage is applied at all times through fuse 50 to the rear window defogger relay (contacts). With the ignition switch in ON (II), voltage is applied through fuse 16 to the rear window defogger switch.

When you turn the switch ON, voltage is applied to the defogger timer circuit. The timer circuit supplies voltage to the rear window defogger relay (coil). The relay energizes and supplies voltage to the rear window defogger. The defogger grid then heats the rear window to remove any condensation from the glass.

The defogger timer circuit will automatically turn off the rear window defogger after about 25 minutes.

Refer to the Service Manual (Section 23, Electrical) for specific tests or troubleshooting procedures.

'99-'00 Models

Voltage is applied at all times through fuse 50 to the rear window defogger relay (contacts). With the ignition switch in ON (II), voltage is applied through fuse 16 to the heater control panel.

When you turn the rear window defogger switch ON, a signal is sent to the defogger timer circuit built-into the heater control panel. The timer circuit supplies voltage to the rear window defogger relay (coil). The relay energizes and supplies voltage to the rear window defogger. The defogger grid then heats the rear window to remove any condensation from the glass.

The defogger timer circuit will automatically turn off the rear window defogger after about 25 minutes.

Refer to the Service Manual (Section 23, Electrical) for specific tests or troubleshooting procedures.

Integrated Control Unit

NOTE: Fuse 31 is hot with Ignition Switch in START (III) and clutch pedal depressed or A/T Gear Selector in PARK (P) or NEUTRAL (N), see Starting System, page 21, 21-1, or 21-2.

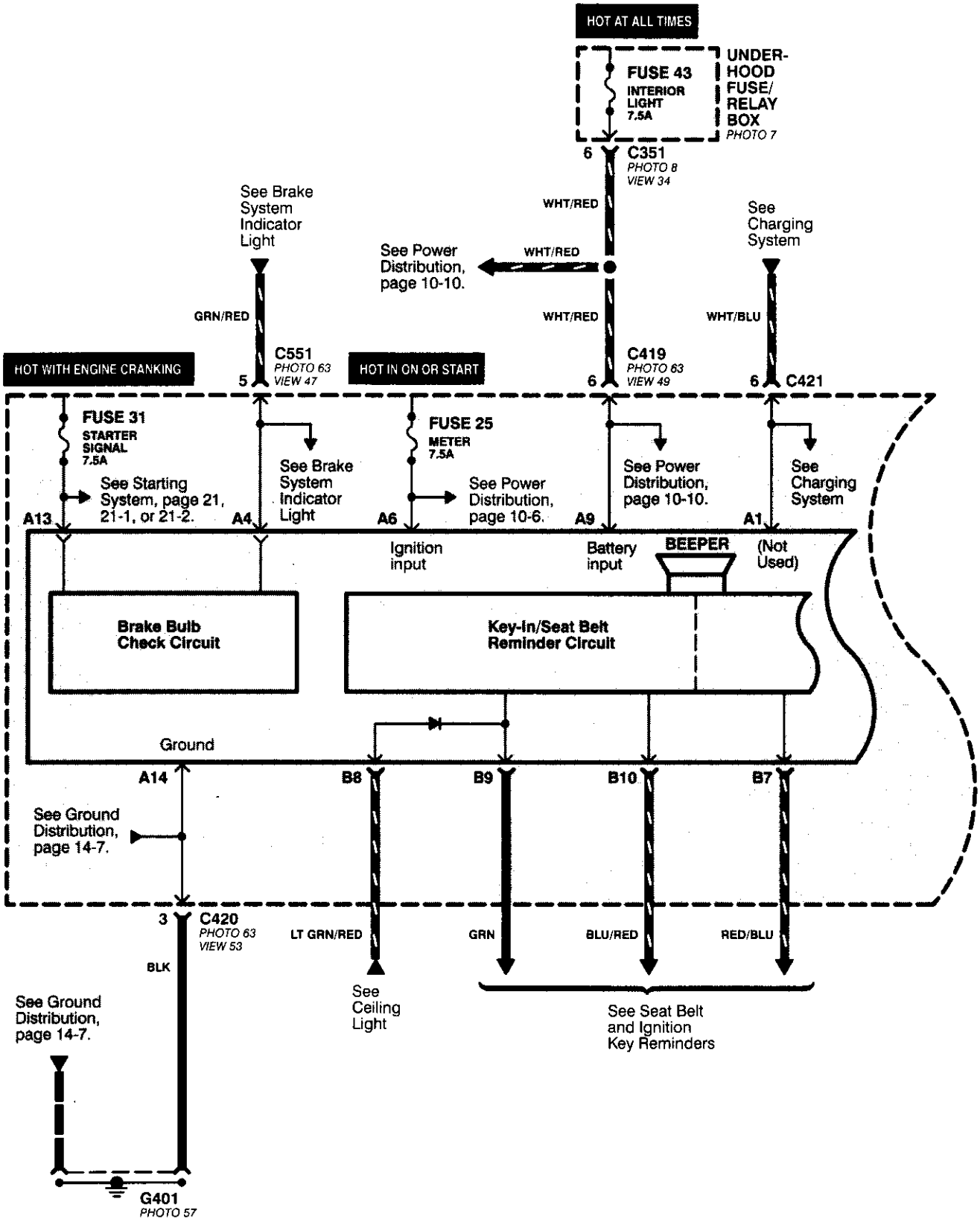

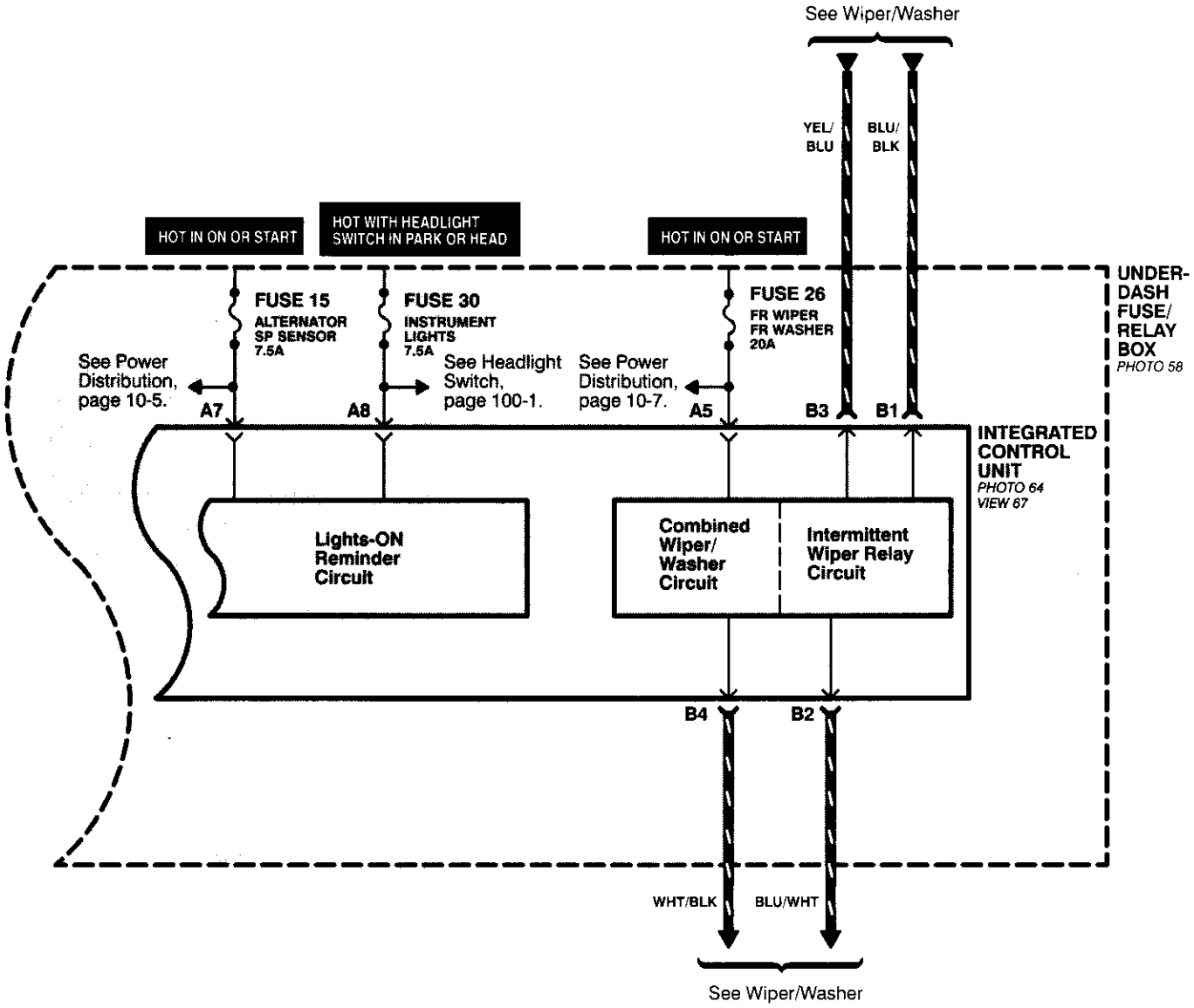
See Wiper/Washer
YEL/BLU
BLU/BLK
HOT IN ON OR START
HOT WITH HEADLIGHT SWITCH IN PARK OR HEAD
HOT IN ON OR START
UNDER-DASH FUSE/RELAY BOX
PHOTO 58
FUSE 15
ALTERNATOR SP SENSOR 7.5A
FUSE 30
INSTRUMENT LIGHTS 7.5A
FUSE 26
FR WIPER FR WASHER 20A
See Power Distribution, page 10-5.
See Headlight Switch, page 100-1.
See Power Distribution, page 10-7.
A7
A8
A5
B3
B1
INTEGRATED CONTROL UNIT
PHOTO 64
VIEW 67
Lights-ON Reminder Circuit
Combined Wiper/Washer Circuit
Intermittent Wiper Relay Circuit
B4
B2
WHT/BLK
BLU/WHT
See Wiper/Washer

Brake System Indicator Light

– '96-'98 Models

NOTE: Fuse 31 is hot with Ignition Switch in START (III) and clutch pedal depressed or A/T gear selector in PARK (P) or NEUTRAL (N), see Starting System, page 21, 21-1, or 21-2.

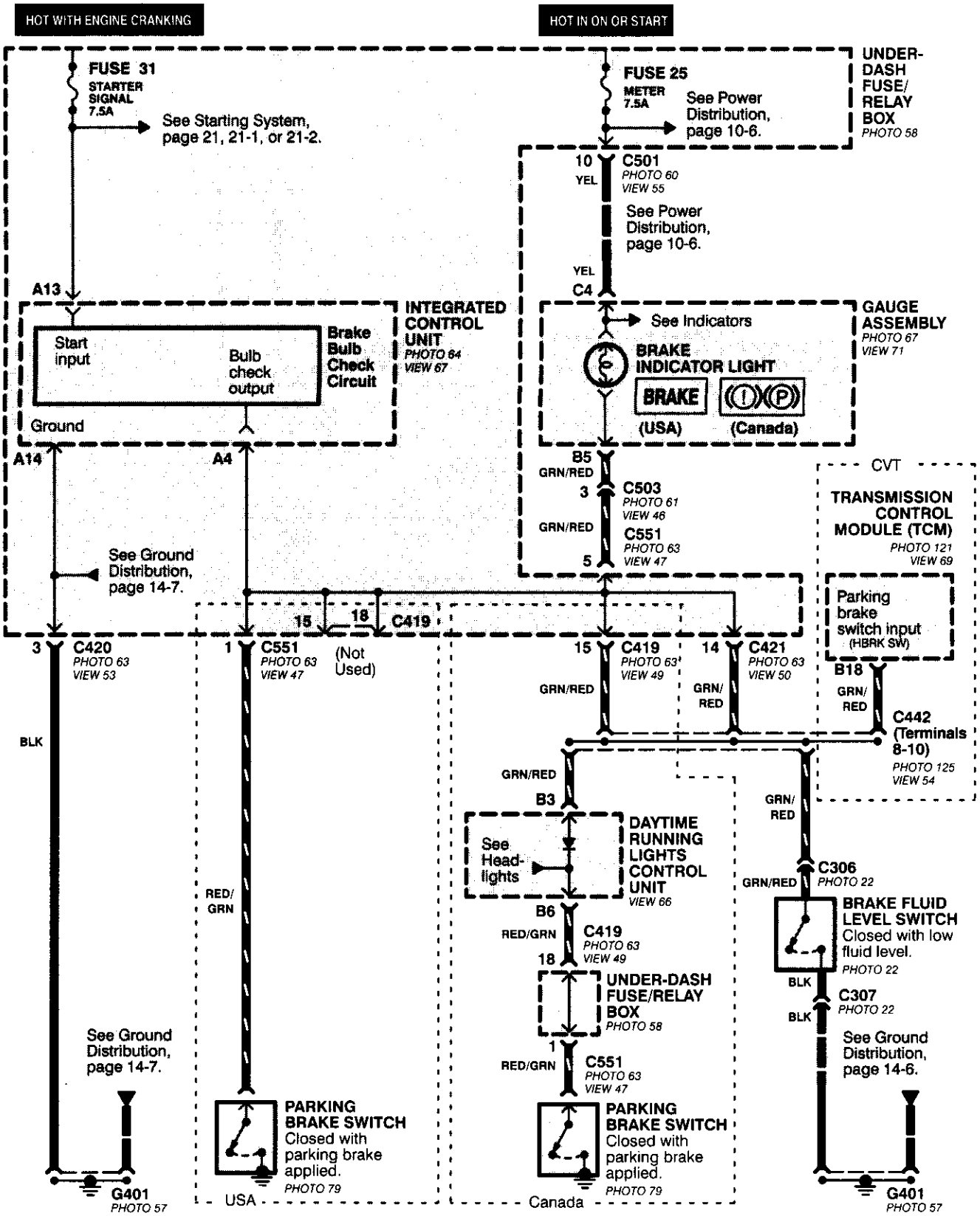

'99-'00 Models

NOTE: Fuse 31 is hot with Ignition Switch in START (III) and clutch pedal depressed or A/T gear selector in PARK (P) or NEUTRAL (N), see Starting System, page 21, 21-1, or 21-2.

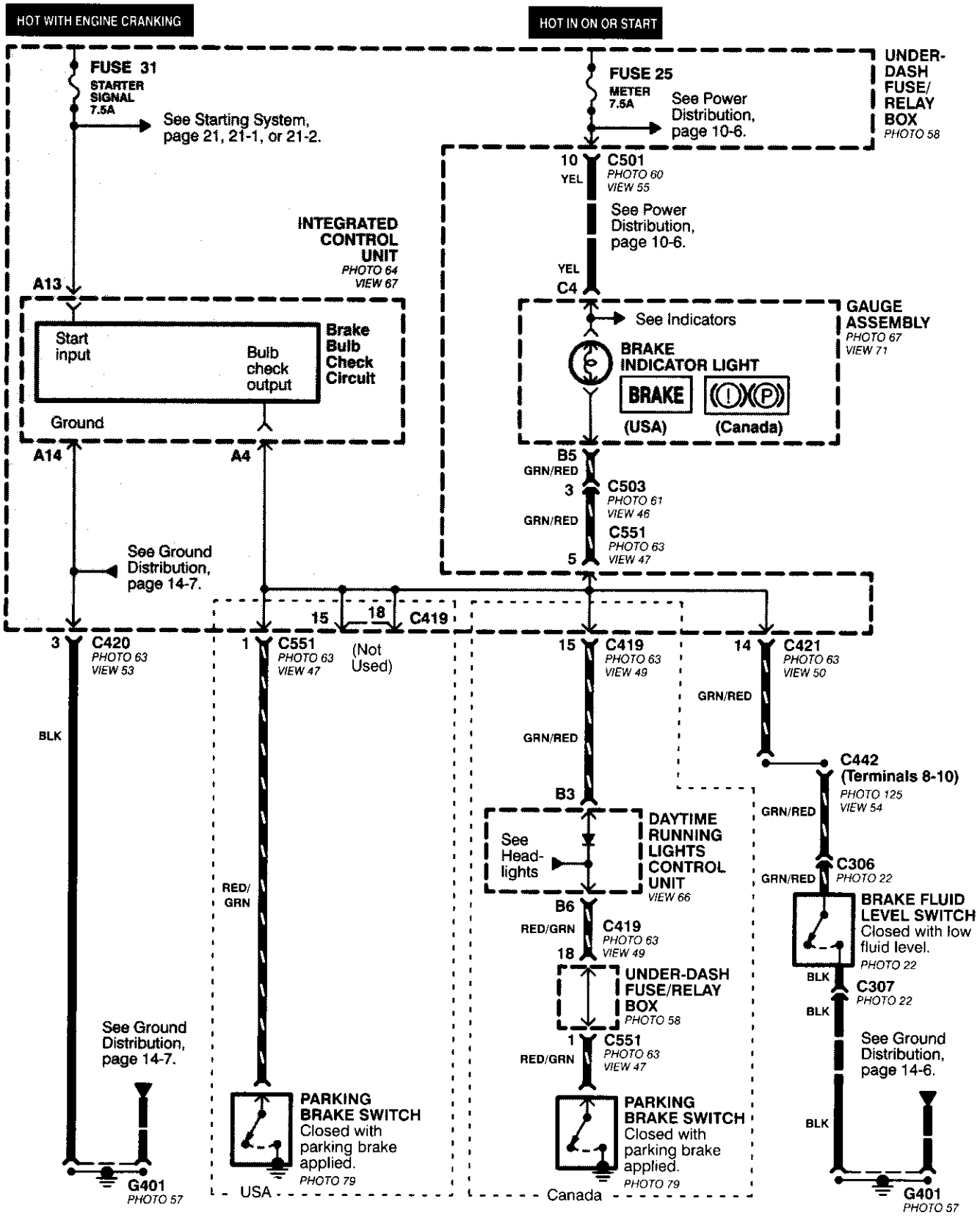

Brake System Indicator Light (cont'd)

How the Circuit Works

The brake system indicator light comes on to alert the driver that the parking brake is applied, or that the brake fluid level is low. It also comes on as a bulb test when the engine is cranked.

Parking Brake

With the ignition switch in ON (II) or START (III), voltage is applied through fuse 25 to the brake system light. When you apply the parking brake, the switch closes and provides a ground for the light. The light then comes on to remind you that the parking brake is applied.

Brake Fluid Level

With the ignition switch in ON (II) or START (III), voltage is applied through fuse 25 to the brake system light. If the brake fluid level is low, the brake fluid level switch closes, providing ground to the circuit. The brake system light then comes on, alerting the driver to a low brake fluid level in the brake master cylinder. (Check brake pad wear before you add fluid).

Bulb Check

With the ignition switch in START (III) and clutch pedal depressed or A/T gear selector in PARK (P) or NEUTRAL (N), voltage is applied through fuse 31 to the brake bulb check circuit. The brake bulb check circuit closes, allowing current to flow through the brake system light and bulb check circuit to ground. The brake system light then comes on to test the bulb.

Refer to the Service Manual (Section 23, Electrical) for specific tests or troubleshooting procedures.

Seat Belt and Ignition Key Reminders

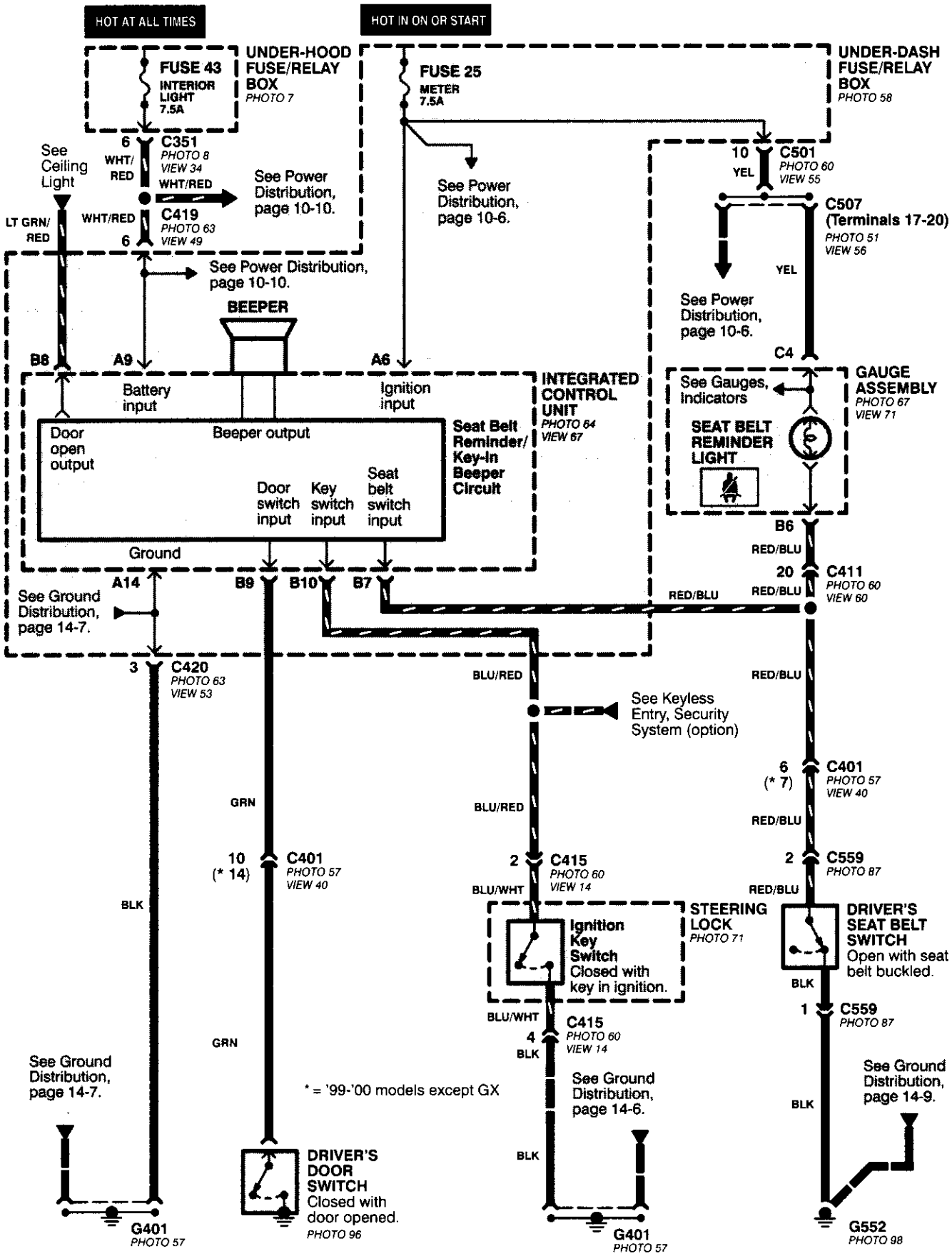

How the Circuit Works

Seat Belt Warning

With the ignition switch in ON (II) or START (III), battery voltage is applied to the seat belt reminder light. When the seat belt is not buckled, the seat belt reminder/key-on beeper circuit in the integrated control unit senses ground through the closed seat belt switch. The seat belt reminder light comes on and stays on, and the beeper beeps for 6 seconds. The reminder light and beeper will stop when the seat belt is buckled or the timer circuit deactivates them.

Ignition Key Warning

Battery voltage is supplied at all times to the seat belt reminder/key-on beeper circuit in the integrated control unit. When you turn on the ignition key switch the integrated control unit senses ground. If you open the driver's door, the door switch closes, causing the beeper to sound until the door is closed.

Refer to the Service Manual (Section 23, Electrical) for specific tests or troubleshooting procedures.

Low Fuel Indicator Light

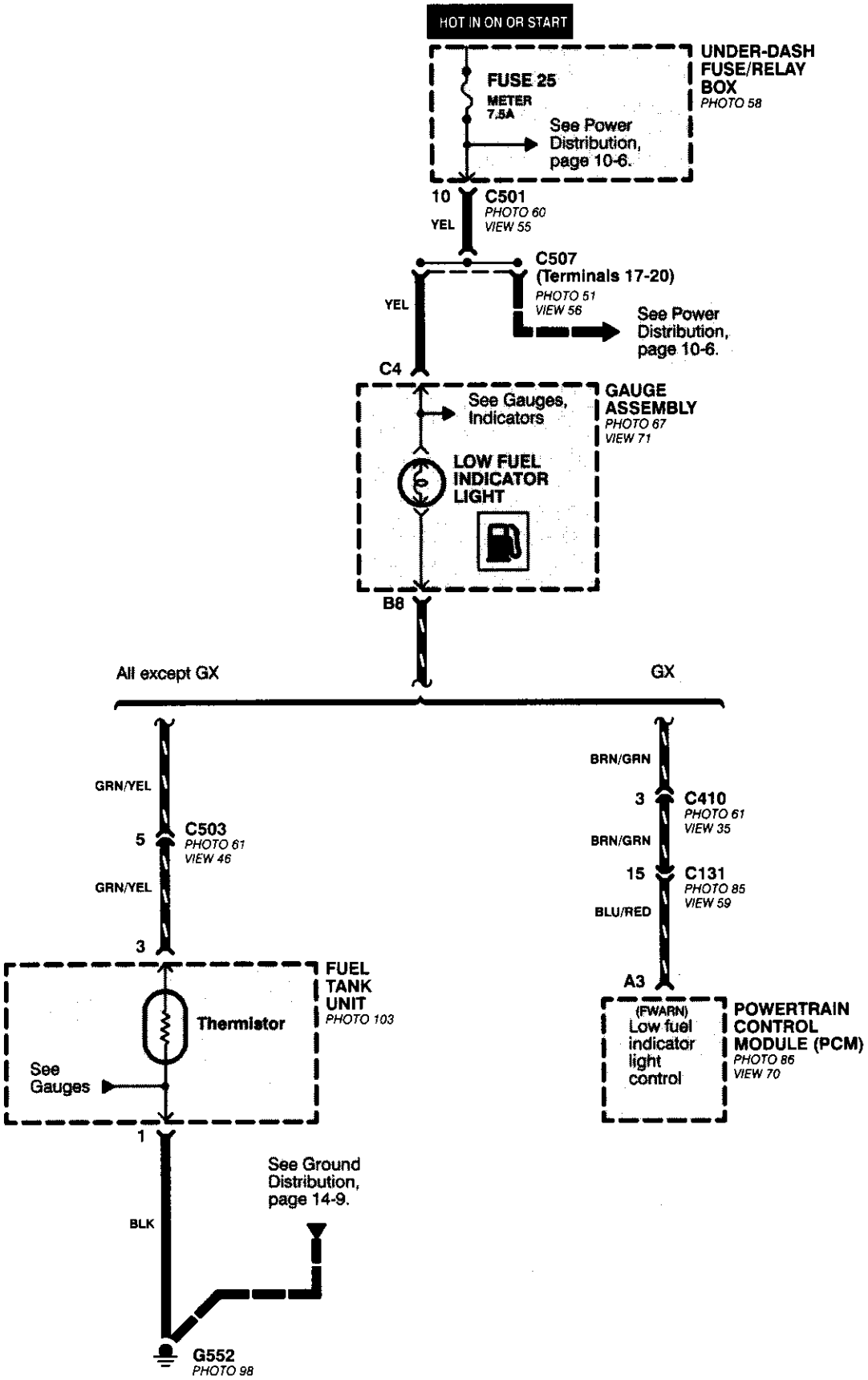

How the Circuit Works

All Except GX

WARNING

Do not smoke while working on the fuel system. Keep open flame away from the work area. Drain fuel only into an approved container.

A thermistor is mounted in the fuel tank unit. When the thermistor is cool, its resistance is very high. When the thermistor's temperature increases, its resistance decreases. Fuel in the fuel tank transfers heat away from the thermistor fast enough to keep it cool so the thermistor's resistance stays high and the low fuel indicator light does not come on. When the fuel level drops below the thermistor, the thermistor's temperature increases. Without the fuel to cool it, the thermistor's resistance decreases, allowing current to flow through the low fuel indicator light and the thermistor to ground, and the low fuel indicator light comes on.

Refer to the Service Manual (Section 23, Electrical) for specific tests or troubleshooting procedures.

GX

The PCM turns on the low fuel indicator light when the fuel level is low. The PCM will also blink the indicator light when a problem is detected by the fuel tank pressure sensor or the fuel tank temperature sensor.

Refer to the Service Manual GX Supplement (Section 11, Fuel and Emissions) for specific tests or troubleshooting procedures.

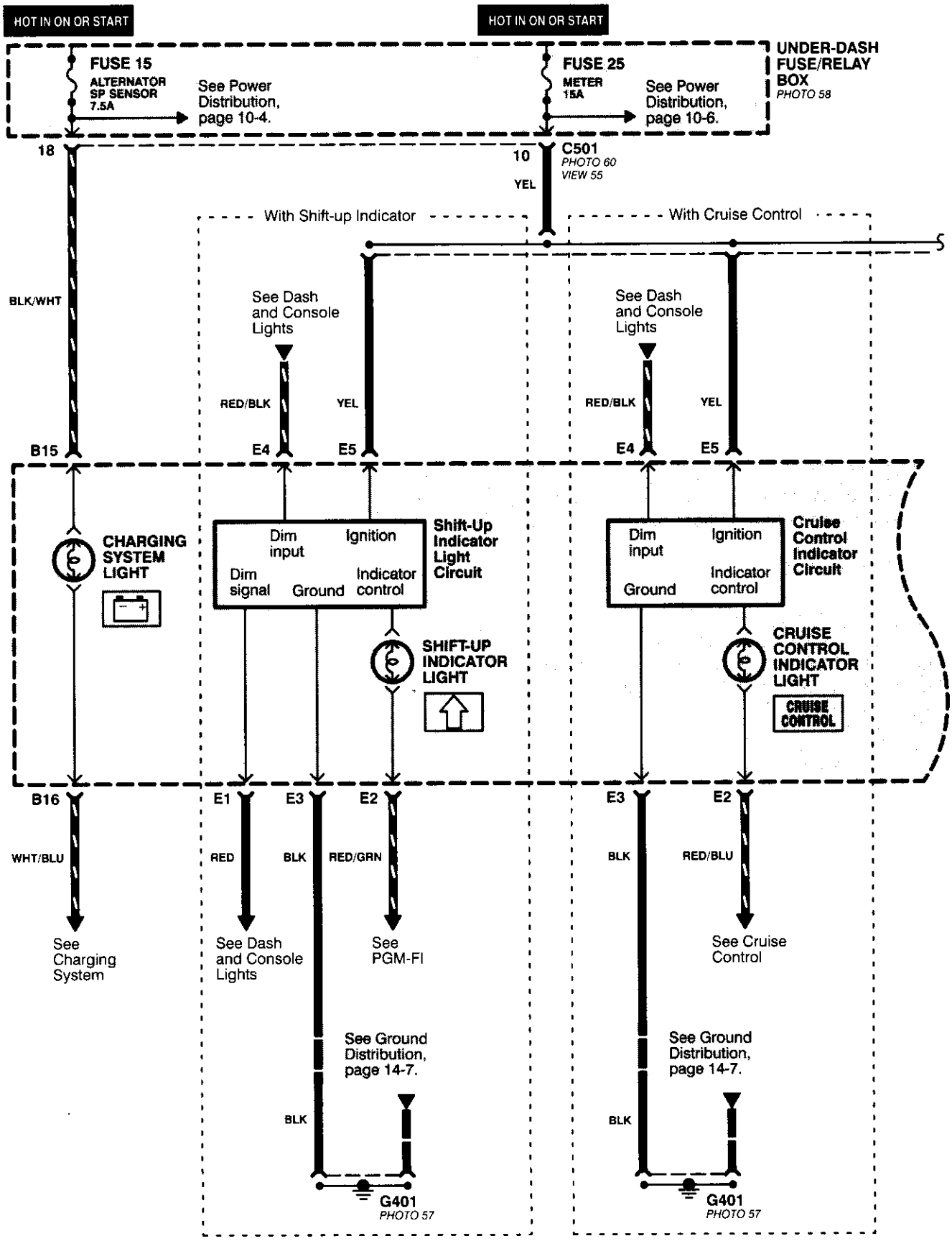
HOT IN ON OR START
HOT IN ON OR START
FUSE 15
ALTERNATOR SP SENSOR 7.5A
See Power Distribution, page 10-4.
FUSE 25
METER 15A
See Power Distribution, page 10-6.
UNDER-DASH FUSE/RELAY BOX
PHOTO 58
18
10
C501
PHOTO 60
VIEW 55
YEL
With Shift-up Indicator
With Cruise Control
BLK/WHT
See Dash and Console Lights
See Dash and Console Lights
RED/BLK
YEL
RED/BLK
YEL
B15
E4
E5
E4
E5
CHARGING SYSTEM LIGHT
Dim input
Ignition
Dim signal
Ground
Indicator control
Shift-Up Indicator Light Circuit
Dim input
Ignition
Ground
Indicator control
Cruise Control Indicator Circuit
SHIFT-UP INDICATOR LIGHT
CRUISE CONTROL INDICATOR LIGHT
CRUISE CONTROL
B16
E1
E3
E2
E3
E2
WHT/BLU
RED
BLK
RED/GRN
BLK
RED/BLU
See Charging System
See Dash and Console Lights
See PGM-FI
See Cruise Control
See Ground Distribution, page 14-7.
See Ground Distribution, page 14-7.
BLK
BLK
G401
PHOTO 57
G401
PHOTO 57

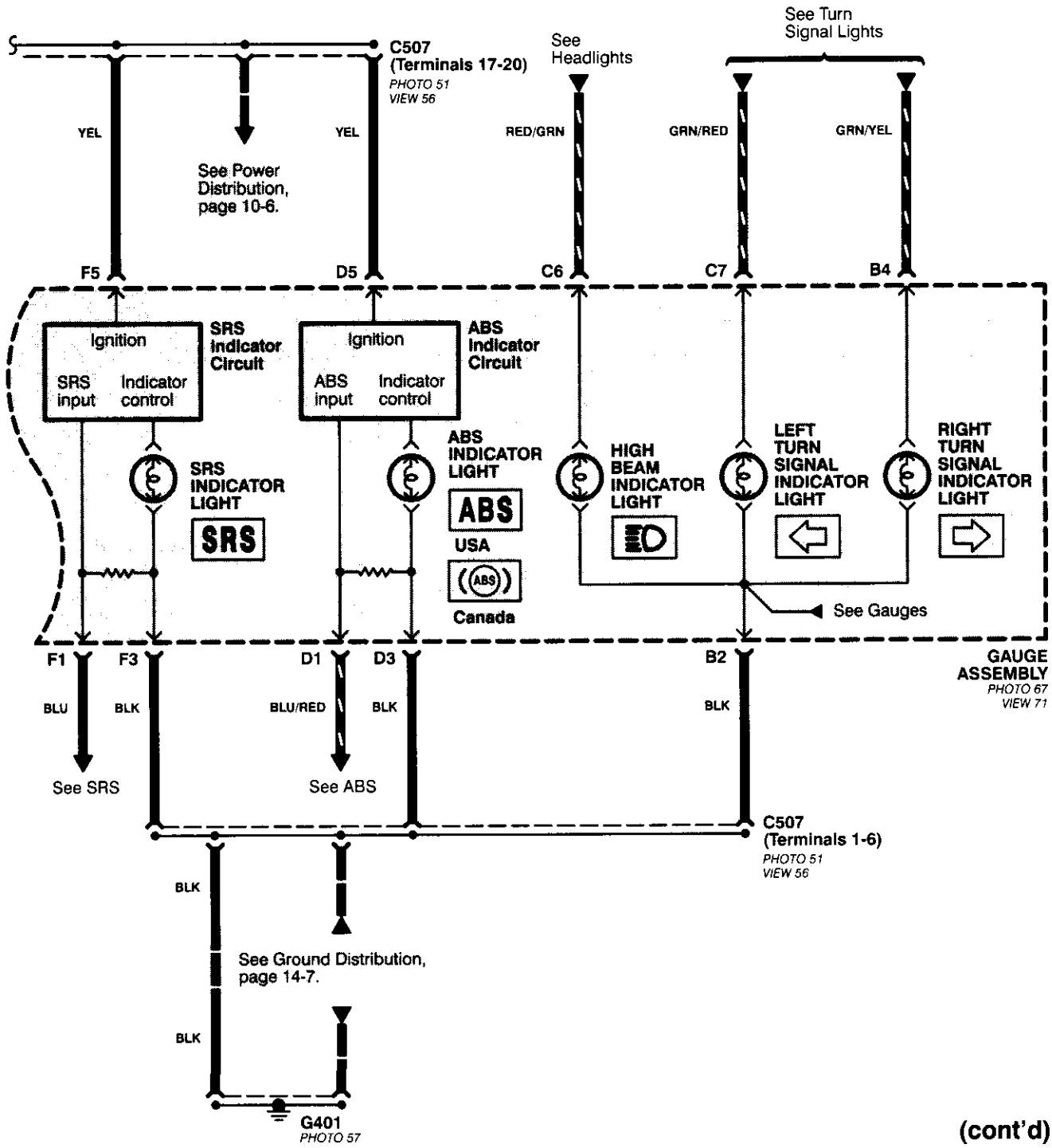
C507
(Terminals 17-20)
PHOTO 51
VIEW 56
See Headlights
See Turn Signal Lights
YEL
YEL
RED/GRN
GRN/RED
GRN/YEL
See Power Distribution, page 10-6.
F5
D5
C6
C7
B4
Ignition
SRS input
Indicator control
SRS Indicator Circuit
Ignition
ABS input
Indicator control
ABS Indicator Circuit
SRS INDICATOR LIGHT
SRS
ABS INDICATOR LIGHT
ABS
USA
Canada
HIGH BEAM INDICATOR LIGHT
LEFT TURN SIGNAL INDICATOR LIGHT
RIGHT TURN SIGNAL INDICATOR LIGHT
See Gauges
F1
F3
D1
D3
B2
GAUGE ASSEMBLY
PHOTO 67
VIEW 71
BLU
BLK
BLU/RED
BLK
BLK
See SRS
See ABS
C507
(Terminals 1-6)
PHOTO 51
VIEW 56
BLK
See Ground Distribution, page 14-7.
BLK
G401
PHOTO 57

(cont'd)

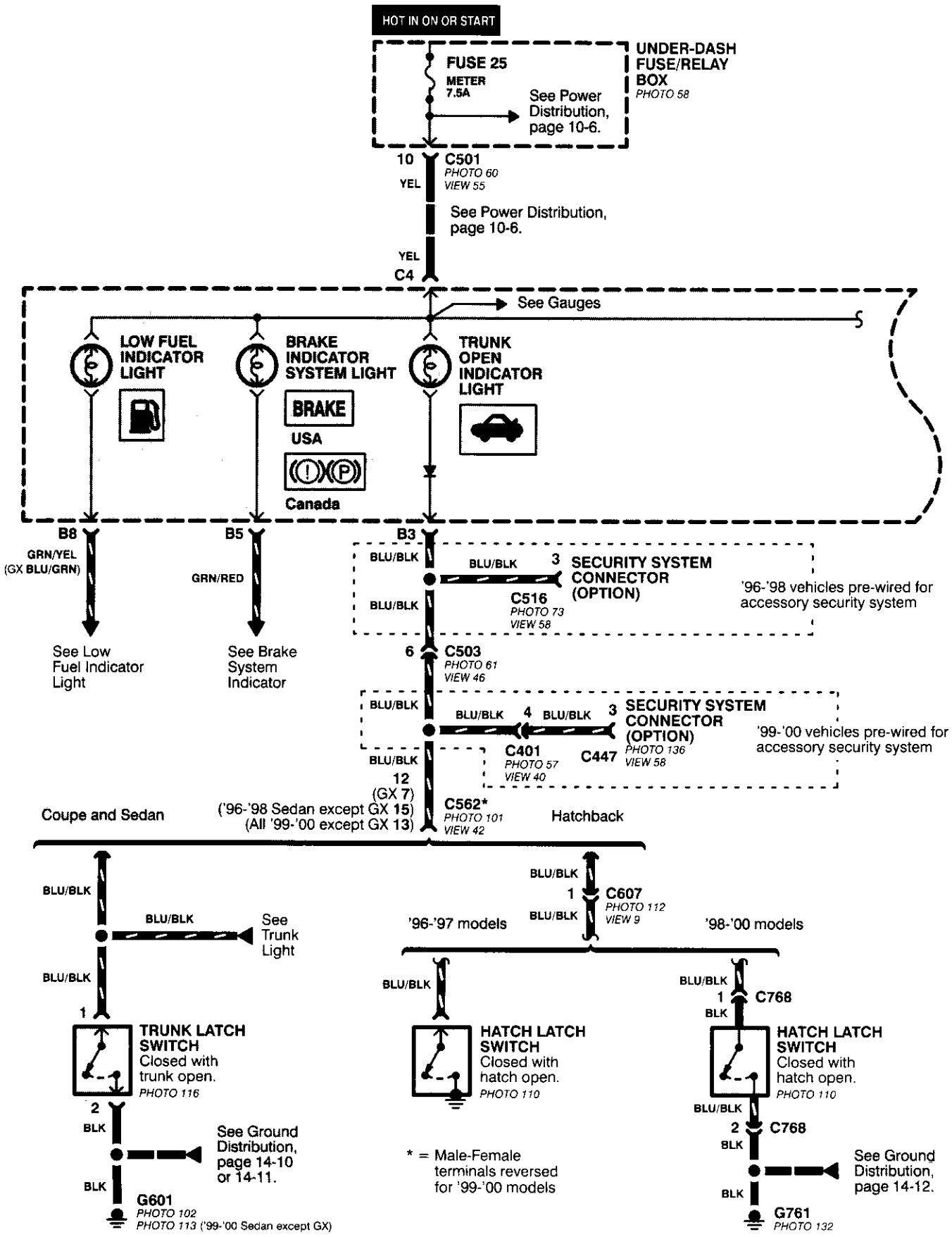
HOT IN ON OR START
FUSE 25
METER
7.5A
See Power Distribution, page 10-6.
UNDER-DASH FUSE/RELAY BOX
PHOTO 58
10
C501
PHOTO 60
VIEW 55
YEL
See Power Distribution, page 10-6.
YEL
C4
See Gauges
LOW FUEL INDICATOR LIGHT
BRAKE INDICATOR SYSTEM LIGHT
BRAKE
USA
Canada
TRUNK OPEN INDICATOR LIGHT
B8
GRN/YEL
(GX BLU/GRN)
B5
GRN/RED
B3
See Low Fuel Indicator Light
See Brake System Indicator
BLU/BLK
BLU/BLK
3
SECURITY SYSTEM CONNECTOR (OPTION)
C516
PHOTO 73
VIEW 58
'96-'98 vehicles pre-wired for accessory security system
6
C503
PHOTO 61
VIEW 46
BLU/BLK
BLU/BLK
4
BLU/BLK
3
SECURITY SYSTEM CONNECTOR (OPTION)
C401
PHOTO 57
VIEW 40
C447
PHOTO 136
VIEW 58
'99-'00 vehicles pre-wired for accessory security system
BLU/BLK
12
(GX 7)
('96-'98 Sedan except GX 15)
(All '99-'00 except GX 13)
C562*
PHOTO 101
VIEW 42
Coupe and Sedan
Hatchback
BLU/BLK
BLU/BLK
See Trunk Light
BLU/BLK
1
TRUNK LATCH SWITCH
Closed with trunk open.
PHOTO 116
2
BLK
See Ground Distribution, page 14-10 or 14-11.
BLK
G601
PHOTO 102
PHOTO 113 ('99-'00 Sedan except GX)
BLU/BLK
1
C607
PHOTO 112
VIEW 9
BLU/BLK
'96-'97 models
'98-'00 models
BLU/BLK
HATCH LATCH SWITCH
Closed with hatch open.
PHOTO 110
* = Male-Female terminals reversed for '99-'00 models
BLU/BLK
1
C768
BLK
HATCH LATCH SWITCH
Closed with hatch open.
PHOTO 110
BLU/BLK
2
C768
BLK
See Ground Distribution, page 14-12.
BLK
G761
PHOTO 132

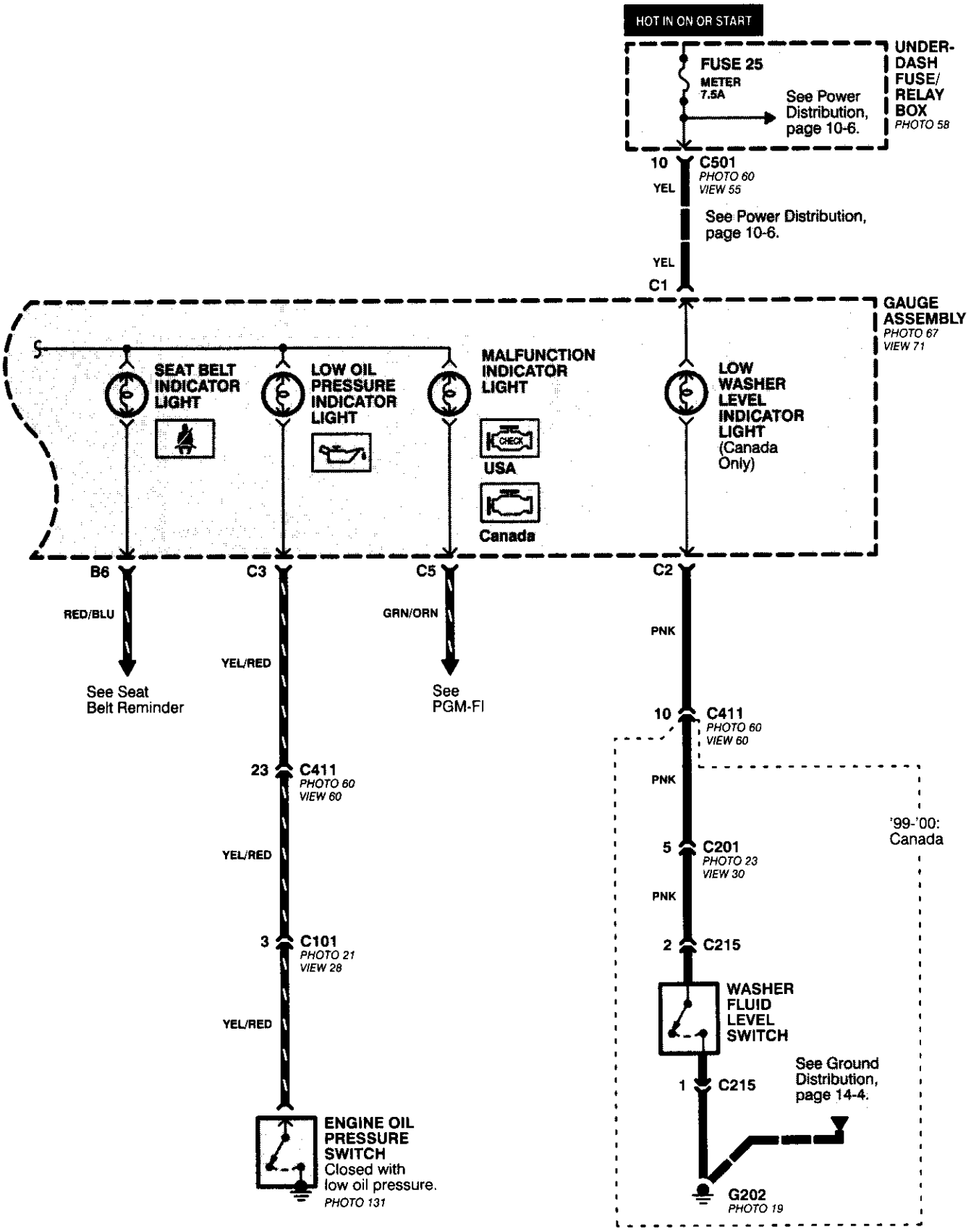
HOT IN ON OR START
FUSE 25
METER
7.5A
See Power Distribution, page 10-6.
UNDER-DASH FUSE/ RELAY BOX
PHOTO 58
10
C501
PHOTO 60
VIEW 55
YEL
See Power Distribution, page 10-6.
YEL
C1
GAUGE ASSEMBLY
PHOTO 67
VIEW 71
SEAT BELT INDICATOR LIGHT
LOW OIL PRESSURE INDICATOR LIGHT
MALFUNCTION INDICATOR LIGHT
CHECK
USA
Canada
LOW WASHER LEVEL INDICATOR LIGHT (Canada Only)
B6
C3
C5
C2
RED/BLU
GRN/ORN
PNK
YEL/RED
See Seat Belt Reminder
See PGM-FI
10
C411
PHOTO 60
VIEW 60
23
C411
PHOTO 60
VIEW 60
PNK
'99-'00: Canada
5
C201
PHOTO 23
VIEW 30
YEL/RED
PNK
3
C101
PHOTO 21
VIEW 28
2
C215
WASHER FLUID LEVEL SWITCH
YEL/RED
1
C215
See Ground Distribution, page 14-4.
ENGINE OIL PRESSURE SWITCH
Closed with low oil pressure.
PHOTO 131
G202
PHOTO 19

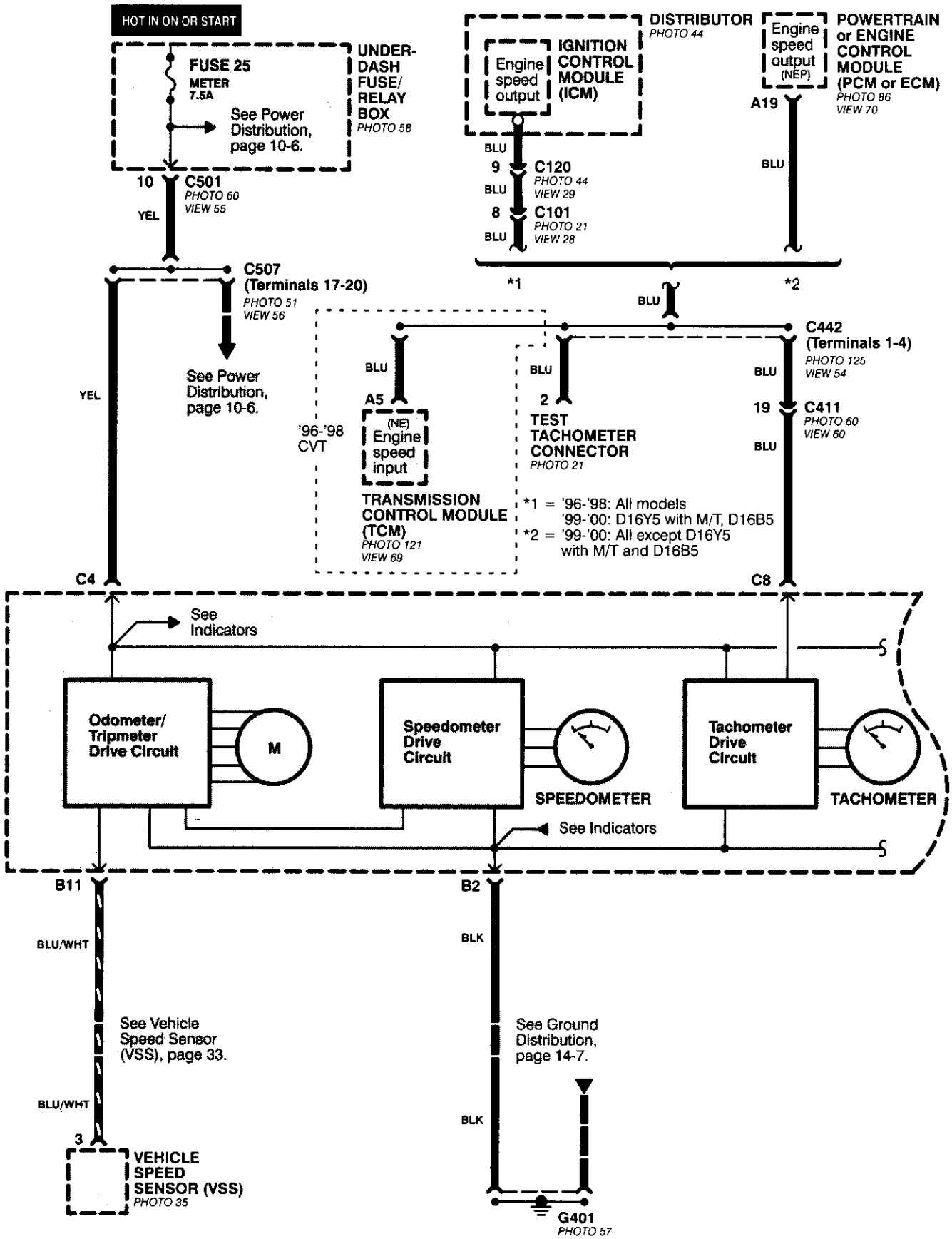
HOT IN ON OR START
FUSE 25
METER
7.5A
See Power Distribution, page 10-6.
UNDER-DASH FUSE/ RELAY BOX
PHOTO 58
10
C501
PHOTO 60
VIEW 55
YEL
C507
(Terminals 17-20)
PHOTO 51
VIEW 56
See Power Distribution, page 10-6.
YEL
C4
Engine speed output
IGNITION CONTROL MODULE (ICM)
DISTRIBUTOR
PHOTO 44
Engine speed output (NEP)
POWERTRAIN or ENGINE CONTROL MODULE (PCM or ECM)
PHOTO 86
VIEW 70
A19
BLU
9
C120
PHOTO 44
VIEW 29
8
C101
PHOTO 21
VIEW 28
*1
*2
C442
(Terminals 1-4)
PHOTO 125
VIEW 54
A5
(NE) Engine speed input
'96-'98 CVT
TRANSMISSION CONTROL MODULE (TCM)
PHOTO 121
VIEW 69
2
TEST TACHOMETER CONNECTOR
PHOTO 21
19
C411
PHOTO 60
VIEW 60
C8
*1 = '96-'98: All models
'99-'00: D16Y5 with M/T, D16B5
*2 = '99-'00: All except D16Y5 with M/T and D16B5
See Indicators
Odometer/ Tripmeter Drive Circuit
M
Speedometer Drive Circuit
SPEEDOMETER
Tachometer Drive Circuit
TACHOMETER
See Indicators
B11
BLU/WHT
See Vehicle Speed Sensor (VSS), page 33.
BLU/WHT
3
VEHICLE SPEED SENSOR (VSS)
PHOTO 35
B2
BLK
See Ground Distribution, page 14-7.
BLK
G401
PHOTO 57

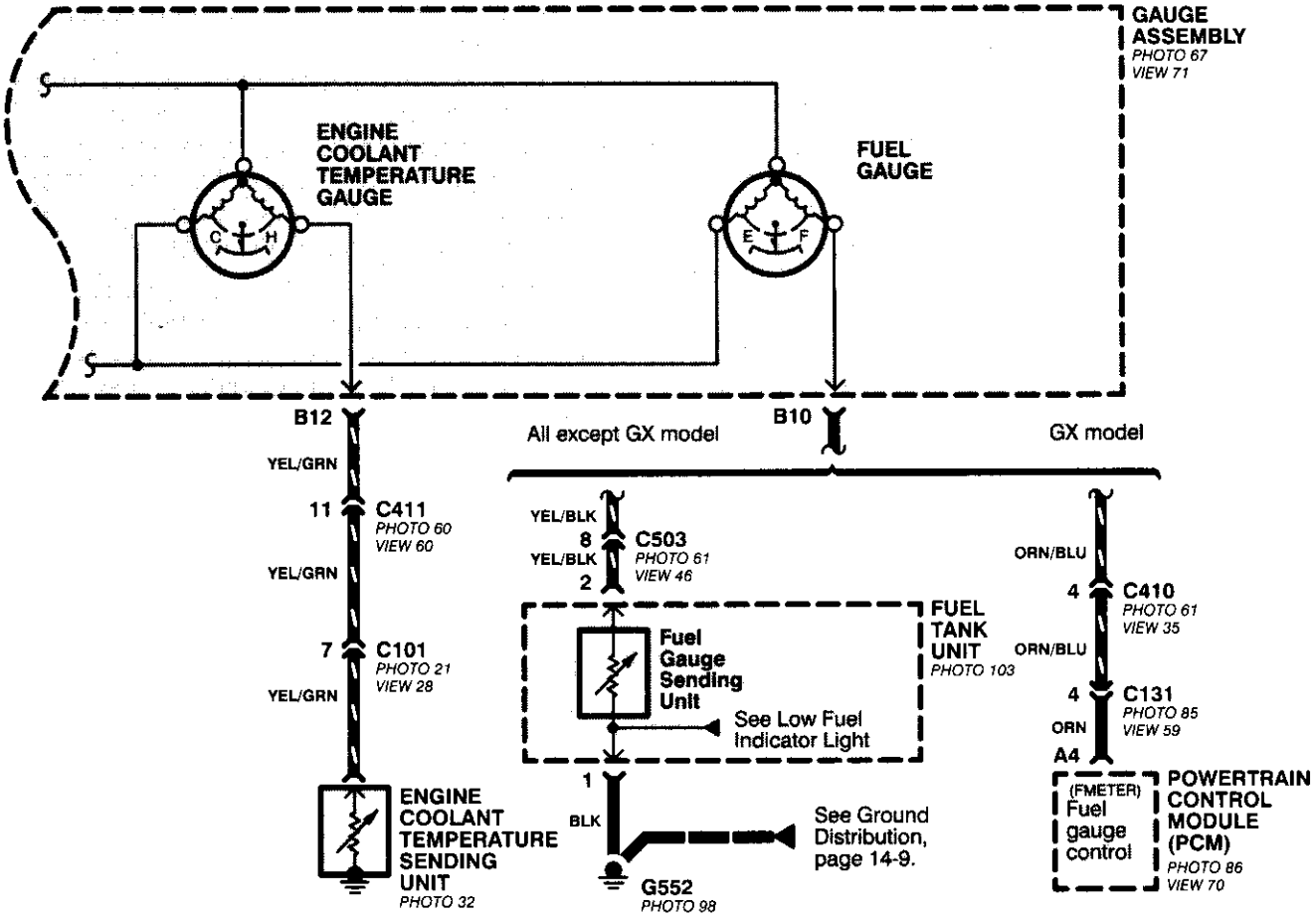
GAUGE ASSEMBLY
PHOTO 67
VIEW 71
ENGINE COOLANT TEMPERATURE GAUGE
FUEL GAUGE
C
H
E
F
B12
B10
All except GX model
GX model
YEL/GRN
11
C411
PHOTO 60
VIEW 60
YEL/GRN
7
C101
PHOTO 21
VIEW 28
YEL/GRN
YEL/BLK
8
C503
PHOTO 61
VIEW 46
YEL/BLK
2
FUEL TANK UNIT
PHOTO 103
Fuel Gauge Sending Unit
See Low Fuel Indicator Light
1
BLK
G552
PHOTO 98
See Ground Distribution, page 14-9.
ENGINE COOLANT TEMPERATURE SENDING UNIT
PHOTO 32
ORN/BLU
4
C410
PHOTO 61
VIEW 35
ORN/BLU
4
C131
PHOTO 85
VIEW 59
ORN
A4
(FMETER) Fuel gauge control
POWERTRAIN CONTROL MODULE (PCM)
PHOTO 86
VIEW 70

– How the Circuit Works

When the ignition switch is in ON (II) or START (III), battery voltage is supplied through fuse 25 to the gauges in the gauge assembly.

Speedometer and Odometer

The odometer and speedometer drive circuits receive pulses from the vehicle speed sensor (VSS). The pulse rate increases as the car accelerates. The frequency and duration of these input pulses are measured and displayed by the speedometer, odometer and tripmeter.

Tachometer

The tachometer drive circuit receives pulses from the ignition control module (ICM) in the distributor assembly or the ECM/PCM. The solid-state tachometer then displays these pulses as engine speed. For each 200 pulses per minute from the ignition control module (ICM) or the ECM/PCM, the tachometer displays 100 RPM.

Engine Coolant Temperature Gauge

The engine coolant temperature gauge has two intersecting coils wound around a permanent magnet rotor. Voltage applied to the coils, through fuse 25, generates a magnetic field. The magnetic field, controlled by the coolant temperature sending unit, causes the rotor to rotate and the gauge needle to move. As the resistance in the sending unit varies, current through the gauge coils changes. The gauge needle moves toward the coil with the strongest magnetic field.

The engine coolant temperature sending unit's resistance varies from about 137 ohms at low engine temperature to between 30–46 ohms at high temperature (radiator fan running).

Refer to the Service Manual (Section 23, Electrical) for specific tests or troubleshooting procedures.

Fuel Gauge (All except GX)

The fuel gauge has two intersecting coils wound around a permanent magnet rotor. Voltage applied to the coils, through fuse 25, generates a magnetic field. The magnetic field, controlled by the fuel gauge sending unit, causes the rotor to rotate and the gauge needle to move. As the resistance in the sending unit varies, current through the gauge coils changes. The gauge needle moves toward the coil with the strongest magnetic field.

The fuel gauge sending unit's resistance varies from about 2-5 ohms at full, to about 110 ohms at empty. When you turn the ignition switch off, the gauge remains at the last reading until you turn the ignition switch to ON (II) or START (III) again.

Refer to the Service Manual (Section 23, Electrical) for specific tests or troubleshooting procedures.

Fuel Gauge (GX)

The fuel gauge has two intersecting coils wound around a permanent magnet rotor. Voltage applied to the coils, through fuse 25, generates a magnetic field. The magnetic field, controlled by the PCM, causes the rotor to rotate and the gauge needle to move. The PCM calculates the gas quantity in the fuel tank by using the fuel pressure value detected by the fuel tank pressure sensor and the fuel temperature value detected by the fuel tank temperature sensor, and outputs the signal to the gauge assembly. The gauge needle moves toward the coil with the strongest magnetic field.

When you turn the ignition switch off, the gauge remains at the last reading until you turn the ignition switch to ON (II) or START (III) again. When the PCM detects a malfunction with the fuel pressure or temperature, or detects a gas leak, the PCM reduces the fuel meter to 0.

Refer to the Service Manual GX Supplement (Section 11, Fuel and Emissions) for specific tests or troubleshooting procedures.

A/T Gear Position Indicator

– CVT

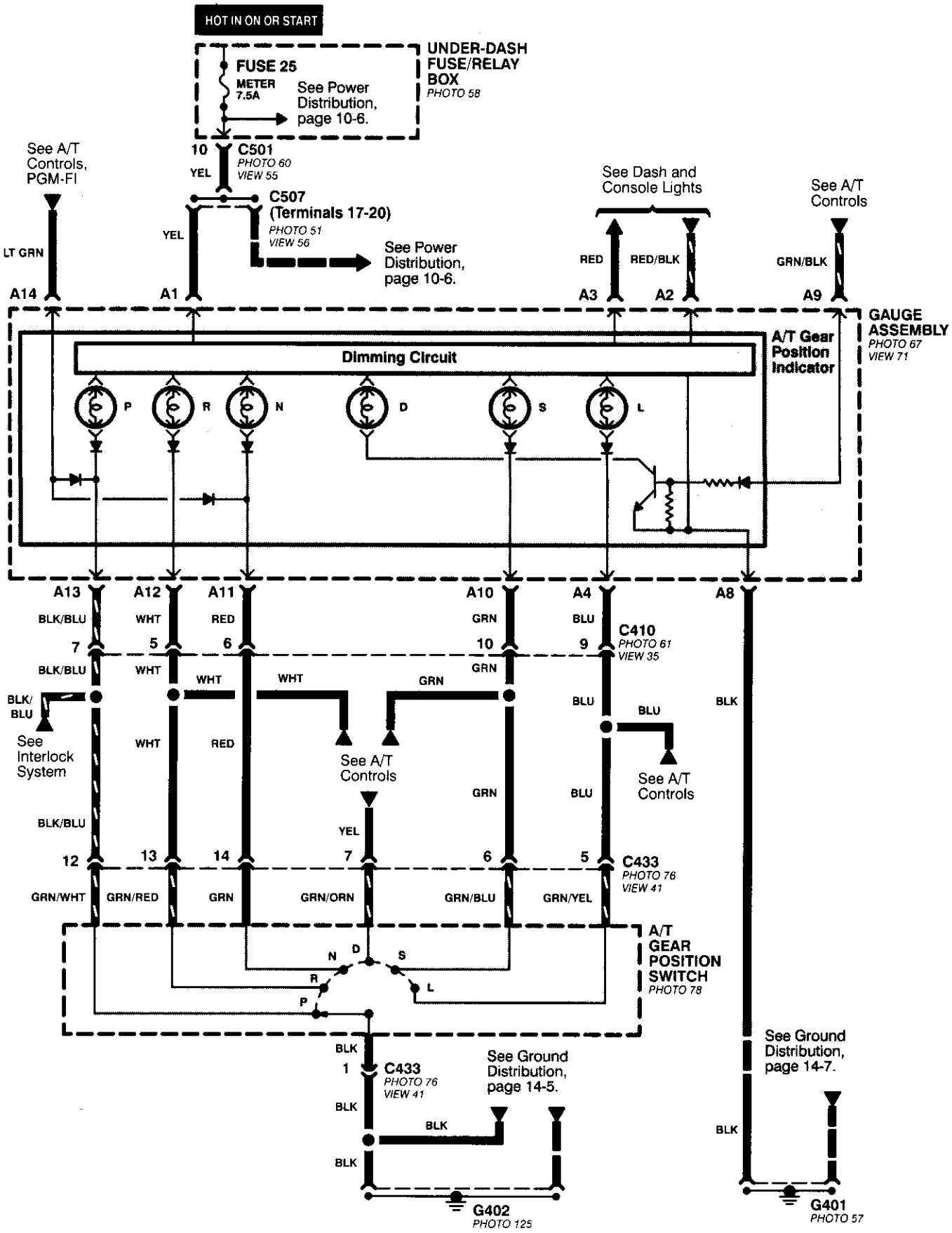

- All except CVT

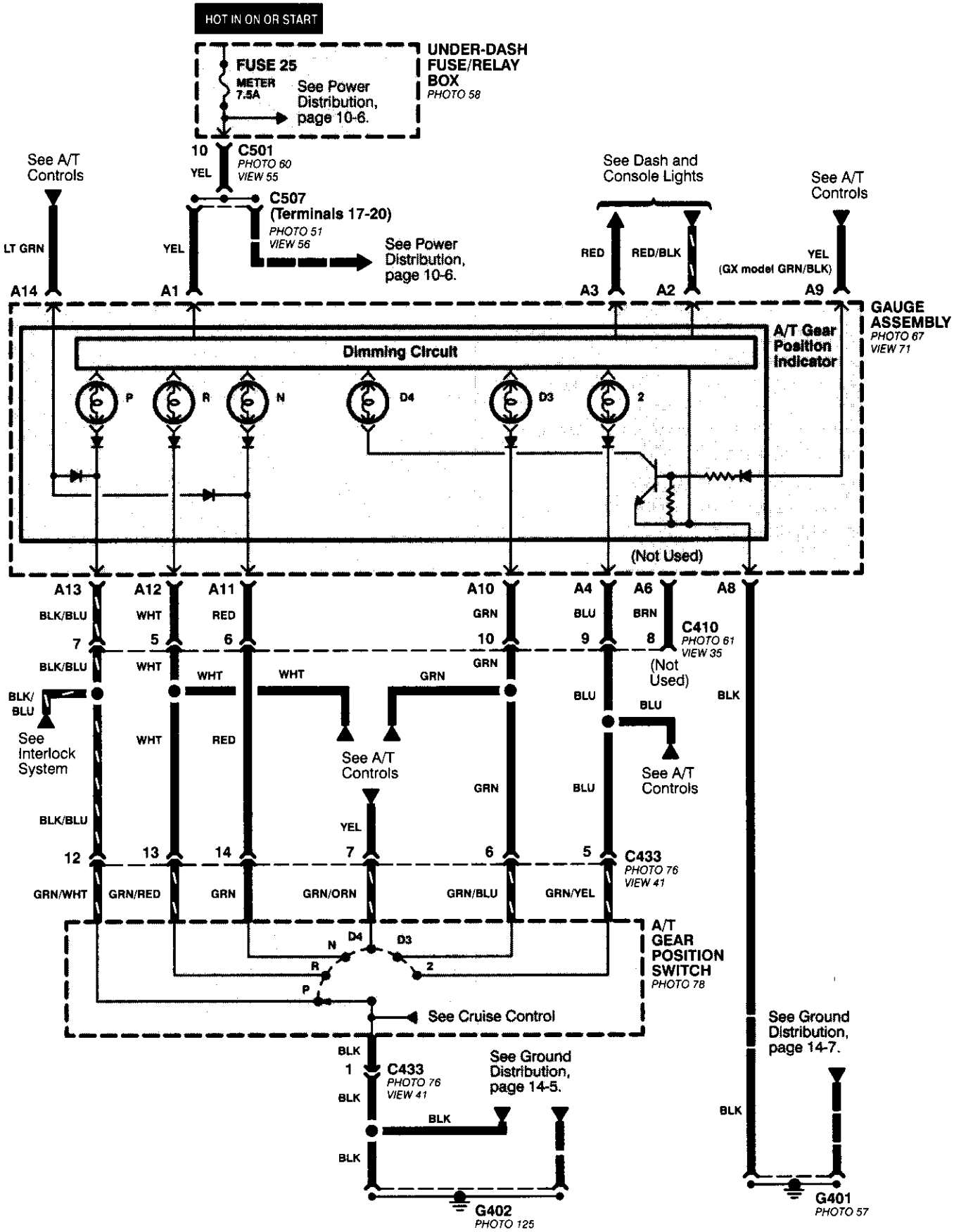

A/T Gear Position Indicator (cont'd)

How the Circuit Works

With the ignition switch in ON (II) or START (III), voltage is applied to the A/T gear position indicator. The A/T gear position switch provides a ground for each position. As an input is grounded, its indicator light comes on. If you select R, for example, ground will be provided to the input of the A/T gear position indicator, and the R indicator will come on.

With the headlight switch in PARK or HEAD, voltage is applied to the RED/BLK wire terminal. This changes the indicator panel illumination from fixed to controlled by the dash lights dimmer input through the RED wire.

When the powertrain (all except '96-'98 CVT) or transmission ('96-'98 CVT) control module (PCM or TCM) detects an abnormality in the automatic transmission control system, or when you request diagnostic trouble codes through the service check connector, the PCM or TCM will make the D4 (D for CVT) indicator light blink.

Refer to the Service Manual (Section 14, Automatic Transmission) for specific tests or troubleshooting procedures.

Front Wiper/Washer

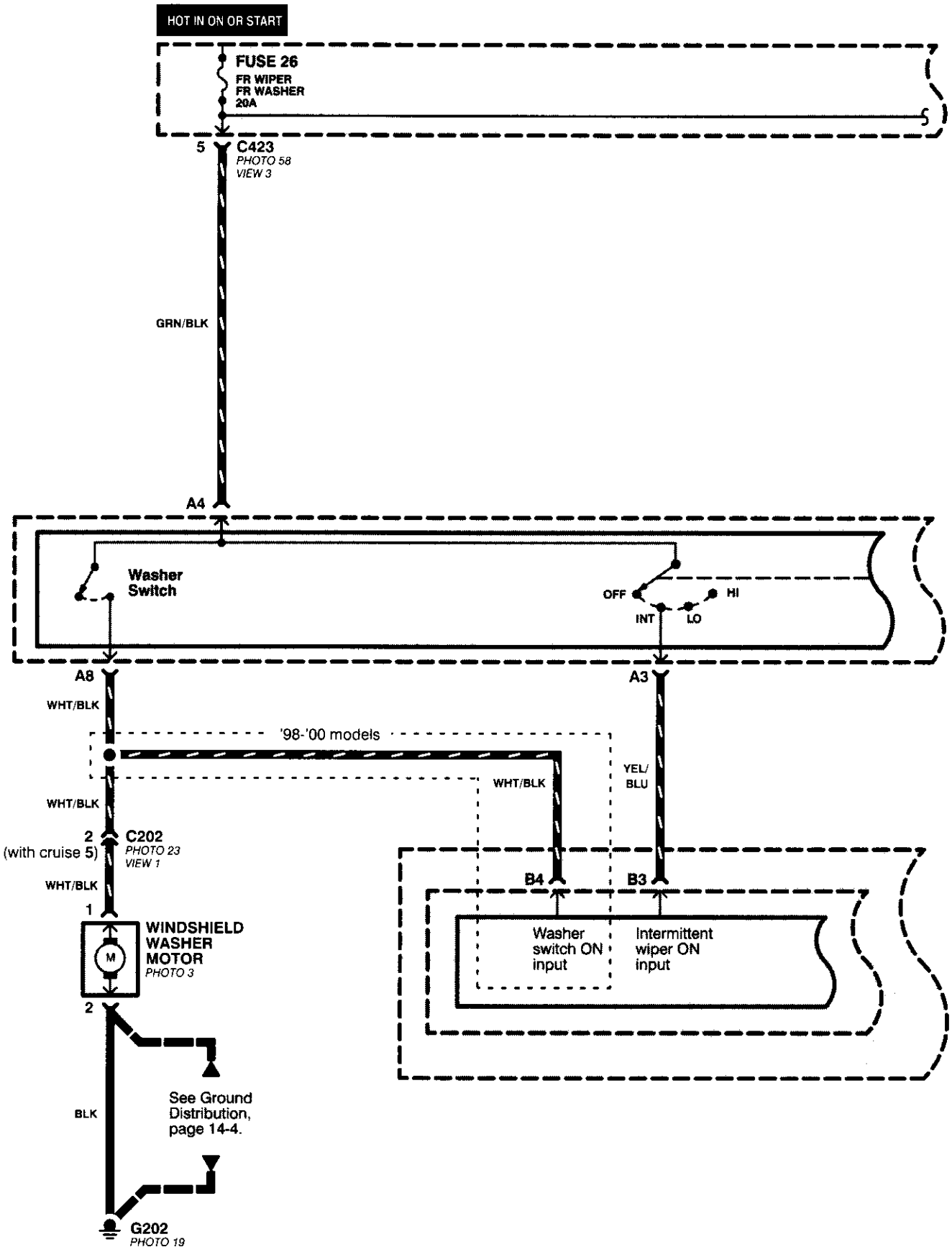

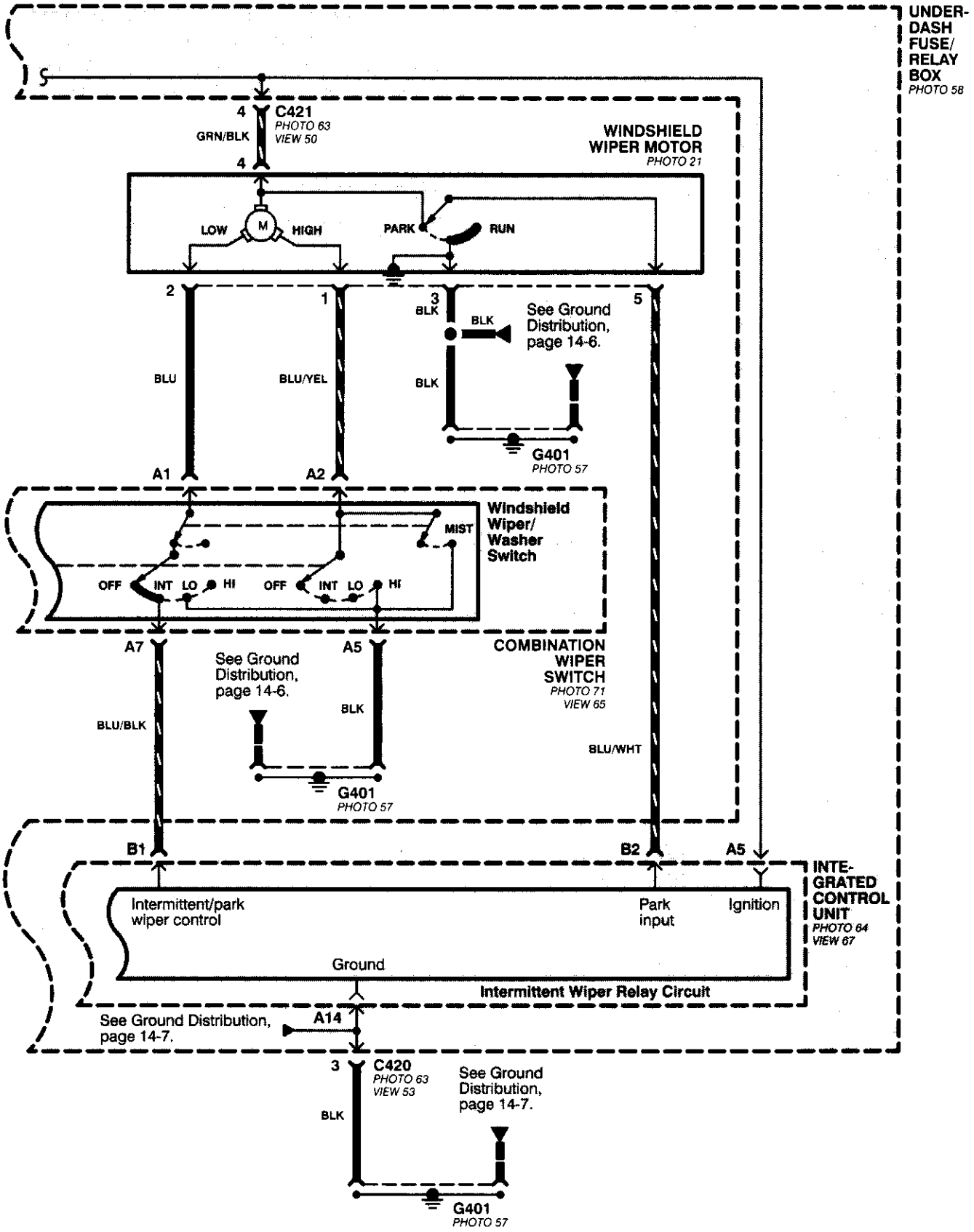
UNDER-DASH FUSE/ RELAY BOX
PHOTO 58
4
C421
PHOTO 63
VIEW 50
GRN/BLK
4
WINDSHIELD WIPER MOTOR
PHOTO 21
LOW
M
HIGH
PARK
RUN
2
1
3
BLK
5
BLK
See Ground Distribution, page 14-6.
BLU
BLU/YEL
BLK
G401
PHOTO 57
A1
A2
Windshield Wiper/ Washer Switch
MIST
OFF
INT
LO
HI
OFF
INT
LO
HI
A7
A5
See Ground Distribution, page 14-6.
COMBINATION WIPER SWITCH
PHOTO 71
VIEW 65
BLK
BLU/BLK
BLU/WHT
G401
PHOTO 57
B1
B2
A5
INTE-GRATED CONTROL UNIT
PHOTO 64
VIEW 67
Intermittent/park wiper control
Park input
Ignition
Ground
Intermittent Wiper Relay Circuit
See Ground Distribution, page 14-7.
A14
3
C420
PHOTO 63
VIEW 53
See Ground Distribution, page 14-7.
BLK
G401
PHOTO 57

– How the Circuit Works

When the ignition switch is in ON (II) or START (III), battery voltage is applied to the combination wiper switch, and the windshield wiper motor.

Low Speed

When you turn the wiper switch to LO, the wiper motor's low speed winding is grounded through the BLU wire and the LO speed contacts of the wiper switch at G401, and the wipers run at low speed.

Park/Off

When you turn the wiper switch OFF, the integrated control unit (PARK input) grounds the wiper motor through the BLU/WHT wire. The cam switch on the motor signals the integrated control unit that the wipers are in the PARK position; the control unit then removes ground from the motor, and the wipers stop in the PARK position.

High Speed

When the wiper switch is in HI, the high speed windings of the windshield wiper motor are grounded through the BLU/YEL wire and the HI contacts of the wiper switch at G401, and the wipers run at high speed.

Intermittent

When the wiper switch is in INT, battery voltage is applied through the YEL/BLU wire to the integrated control unit (Intermittent wiper ON input). The integrated control unit (Intermittent/Park Wiper Control) grounds the low speed windings of the wiper motor and the wipers make a single sweep every few seconds (See Low Speed above). When the wiper returns to the PARK position, the park switch applies battery voltage through the BLU/WHT wire to the integrated control unit (PARK input), and the wipers stop in the PARK position.

Mist

When you pull the wiper switch down to MIST position, the high speed windings of the wiper motor are grounded through the BLU/YEL wire and the closed contacts of the mist switch at G401, and the wipers make one pass across the windshield at high speed. The Park/Off function then takes over and the wipers stop in the PARK position.

Washer

When you pull the wiper switch toward you to turn on the washer switch, battery voltage is applied to the washer motor. The motor pumps fluid onto the windshield until you release the lever; on '98-'99 models, the integrated control unit (windshield washer ON input) senses power at the WHT/BLK wire terminal and runs the wipers whenever the washer motor runs.

Refer to the Service Manual (Section 23, Electrical) for specific tests or troubleshooting procedures.

Rear Wiper/Washer

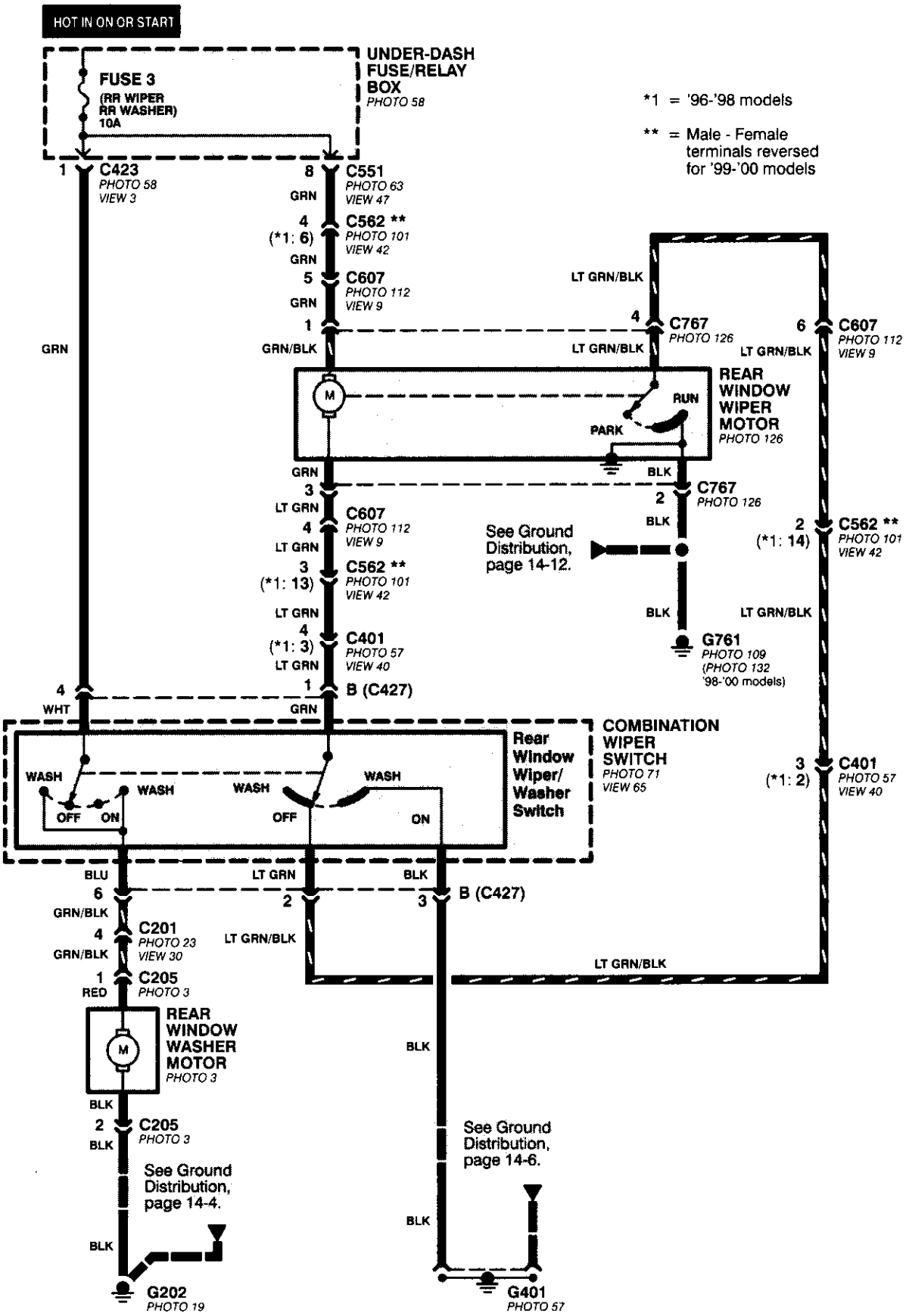

Headlight Switch

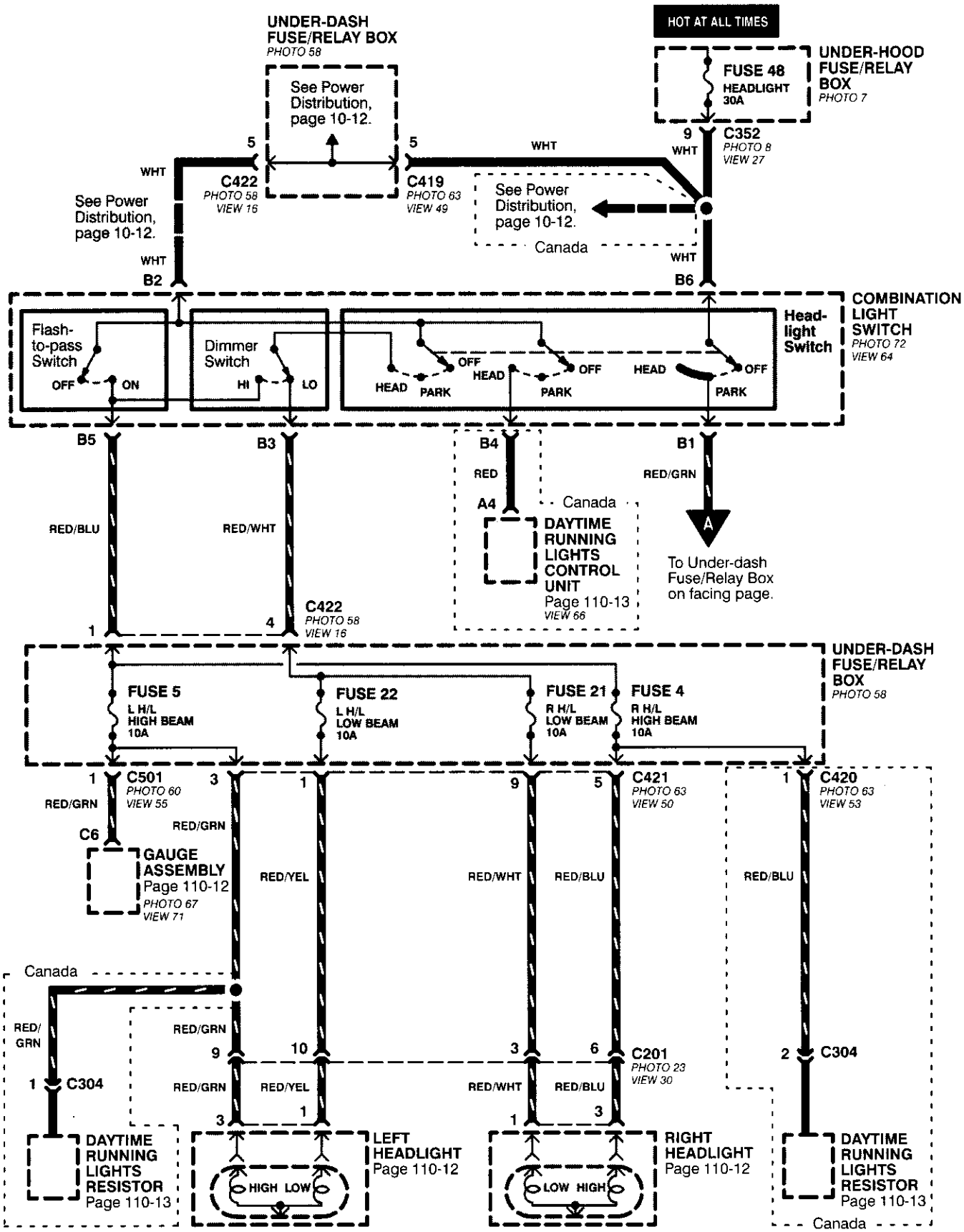

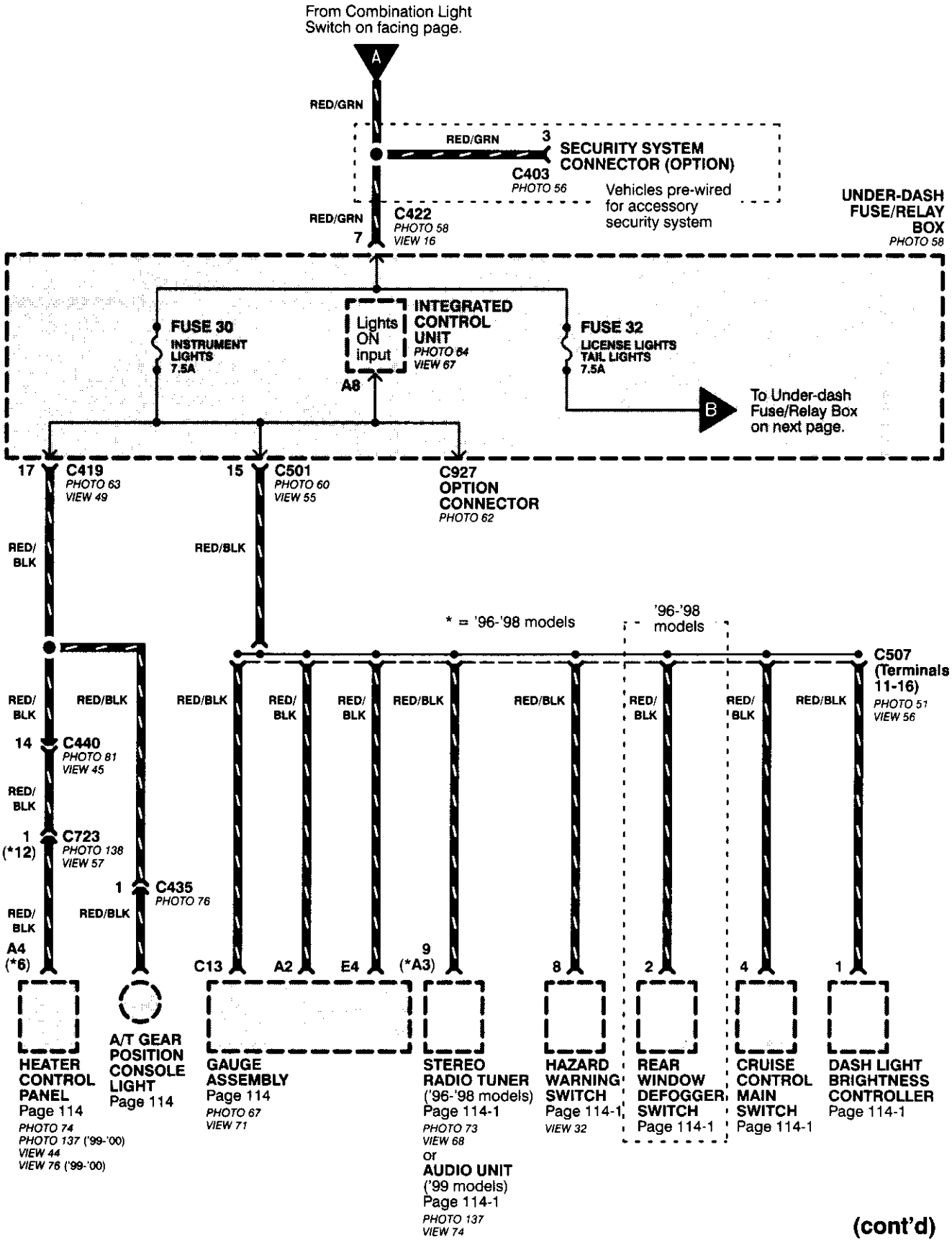
From Combination Light Switch on facing page.
A
RED/GRN
RED/GRN
3
SECURITY SYSTEM CONNECTOR (OPTION)
C403
PHOTO 56
Vehicles pre-wired for accessory security system
RED/GRN
C422
PHOTO 58
VIEW 16
7
UNDER-DASH FUSE/RELAY BOX
PHOTO 58
FUSE 30
INSTRUMENT LIGHTS
7.5A
Lights ON input
INTEGRATED CONTROL UNIT
PHOTO 64
VIEW 67
A8
FUSE 32
LICENSE LIGHTS
TAIL LIGHTS
7.5A
B
To Under-dash Fuse/Relay Box on next page.
17
C419
PHOTO 63
VIEW 49
15
C501
PHOTO 60
VIEW 55
C927
OPTION CONNECTOR
PHOTO 62
RED/BLK
RED/BLK
* = '96-'98 models
'96-'98 models
C507 (Terminals 11-16)
PHOTO 51
VIEW 56
RED/BLK
RED/BLK
RED/BLK
RED/BLK
RED/BLK
RED/BLK
RED/BLK
RED/BLK
RED/BLK
RED/BLK
14
C440
PHOTO 81
VIEW 45
RED/BLK
1 (*12)
C723
PHOTO 138
VIEW 57
1
C435
PHOTO 76
RED/BLK
RED/BLK
A4 (*6)
C13
A2
E4
9 (*A3)
8
2
4
1
HEATER CONTROL PANEL
Page 114
PHOTO 74
PHOTO 137 ('99-'00)
VIEW 44
VIEW 76 ('99-'00)
A/T GEAR POSITION CONSOLE LIGHT
Page 114
GAUGE ASSEMBLY
Page 114
PHOTO 67
VIEW 71
STEREO RADIO TUNER
('96-'98 models)
Page 114-1
PHOTO 73
VIEW 68
or
AUDIO UNIT
('99 models)
Page 114-1
PHOTO 137
VIEW 74
HAZARD WARNING SWITCH
Page 114-1
VIEW 32
REAR WINDOW DEFOGGER SWITCH
Page 114-1
CRUISE CONTROL MAIN SWITCH
Page 114-1
DASH LIGHT BRIGHTNESS CONTROLLER
Page 114-1

(cont'd)

Headlight Switch (cont'd)

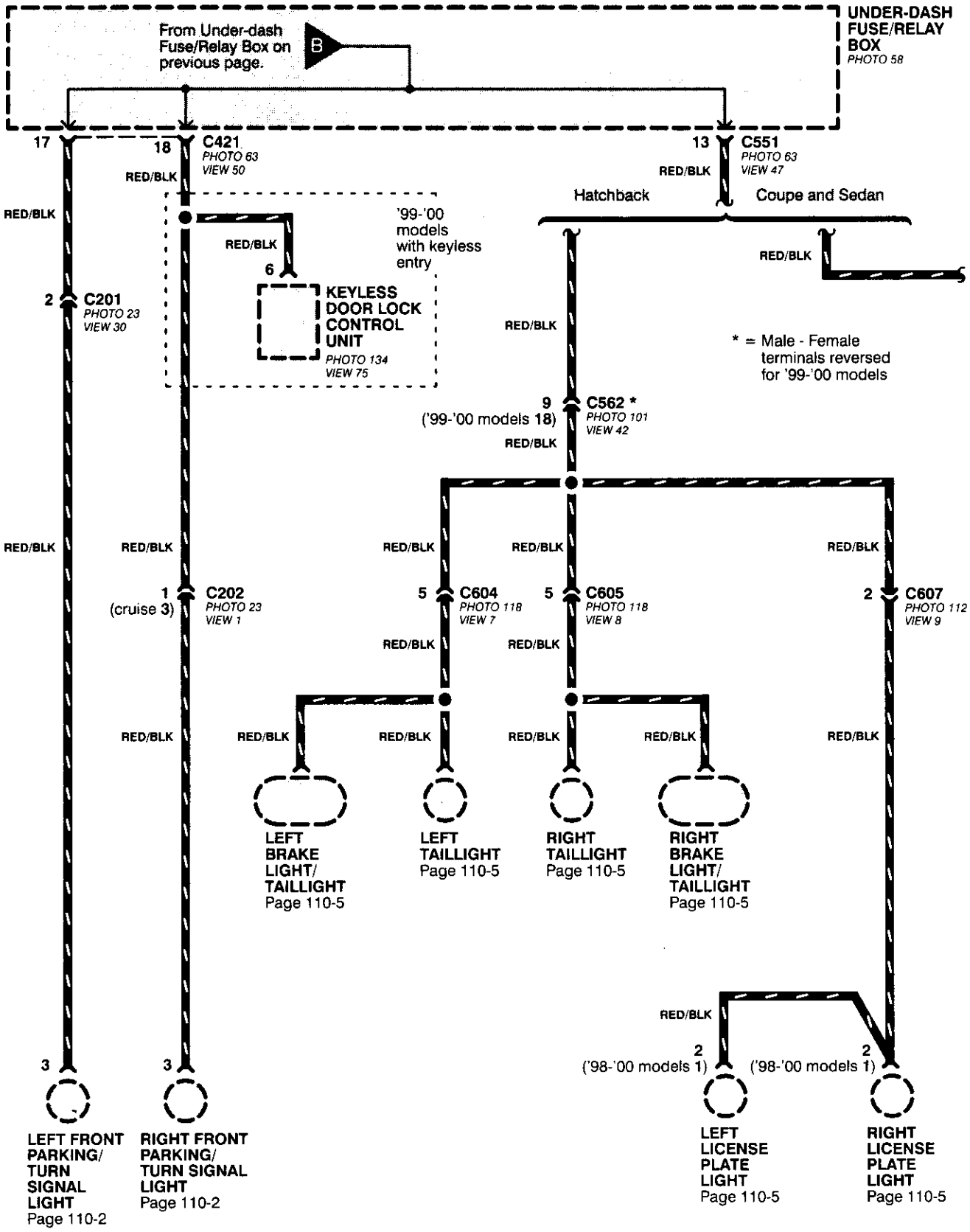

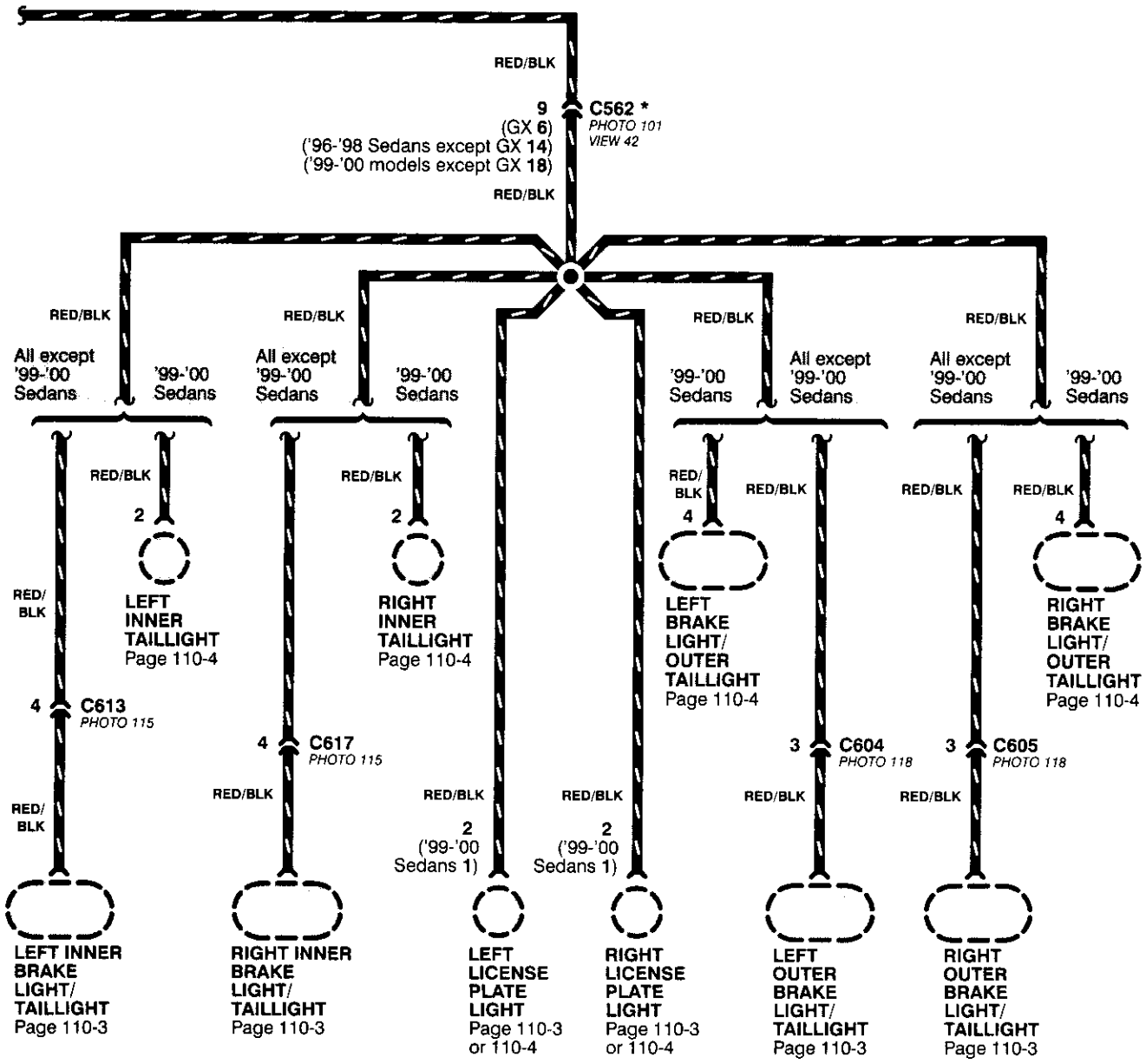
* = Male - Female terminals reversed for '99-'00 models
RED/BLK
9 C562 *
PHOTO 101
VIEW 42
(GX 6)
('96-'98 Sedans except GX 14)
('99-'00 models except GX 18)
RED/BLK
All except '99-'00 Sedans
'99-'00 Sedans
2
LEFT INNER TAILLIGHT
Page 110-4
RED/BLK
4 C613
PHOTO 115
LEFT INNER BRAKE LIGHT/ TAILLIGHT
Page 110-3
4 C617
PHOTO 115
RIGHT INNER TAILLIGHT
Page 110-4
RIGHT INNER BRAKE LIGHT/ TAILLIGHT
Page 110-3
2 ('99-'00 Sedans 1)
LEFT LICENSE PLATE LIGHT
Page 110-3 or 110-4
RIGHT LICENSE PLATE LIGHT
Page 110-3 or 110-4
4
LEFT BRAKE LIGHT/ OUTER TAILLIGHT
Page 110-4
3 C604
PHOTO 118
LEFT OUTER BRAKE LIGHT/ TAILLIGHT
Page 110-3
3 C605
PHOTO 118
RIGHT BRAKE LIGHT/ OUTER TAILLIGHT
Page 110-4
RIGHT OUTER BRAKE LIGHT/ TAILLIGHT
Page 110-3

Back-Up Lights

– Coupe and Sedan

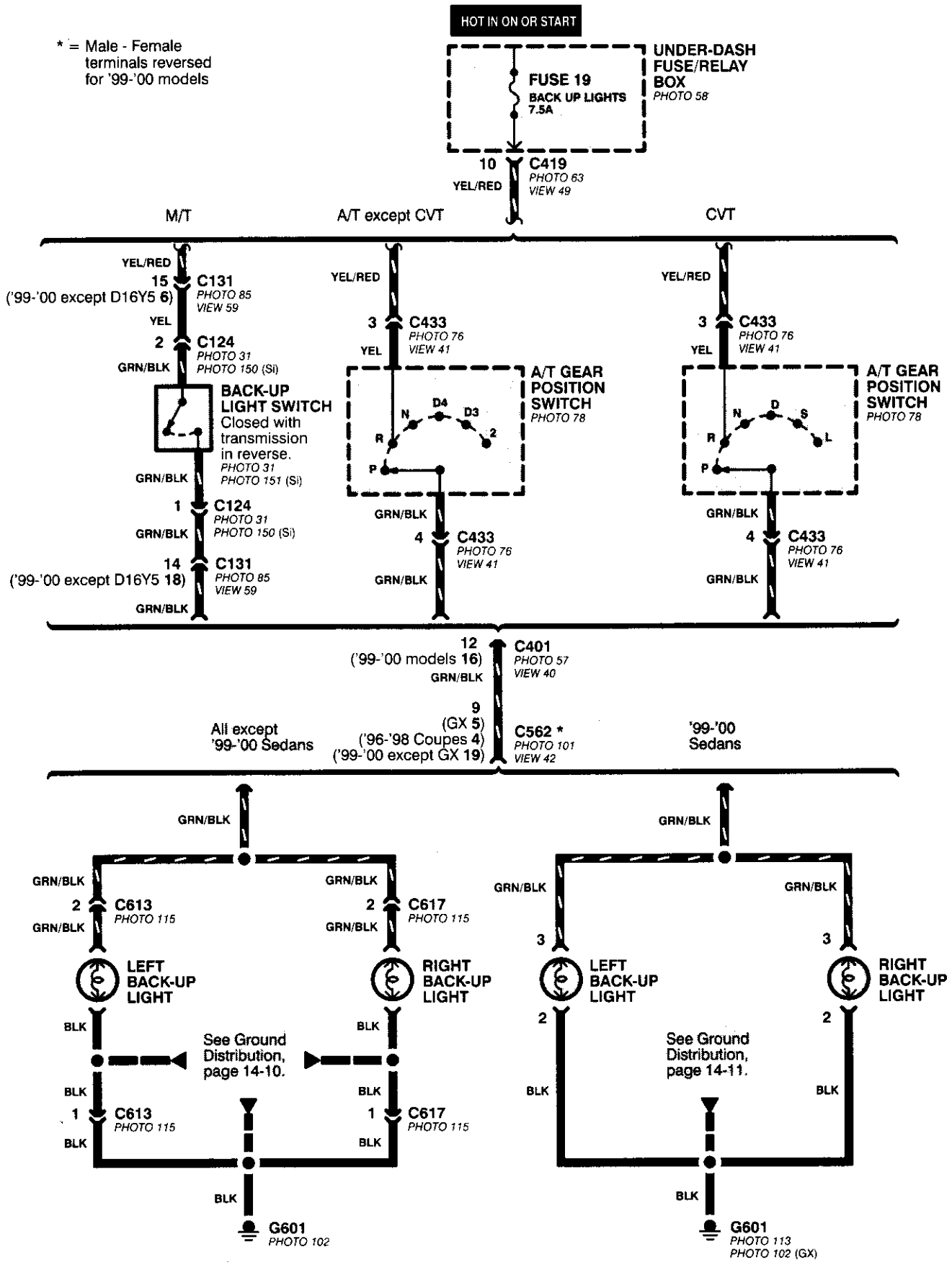

– Hatchback

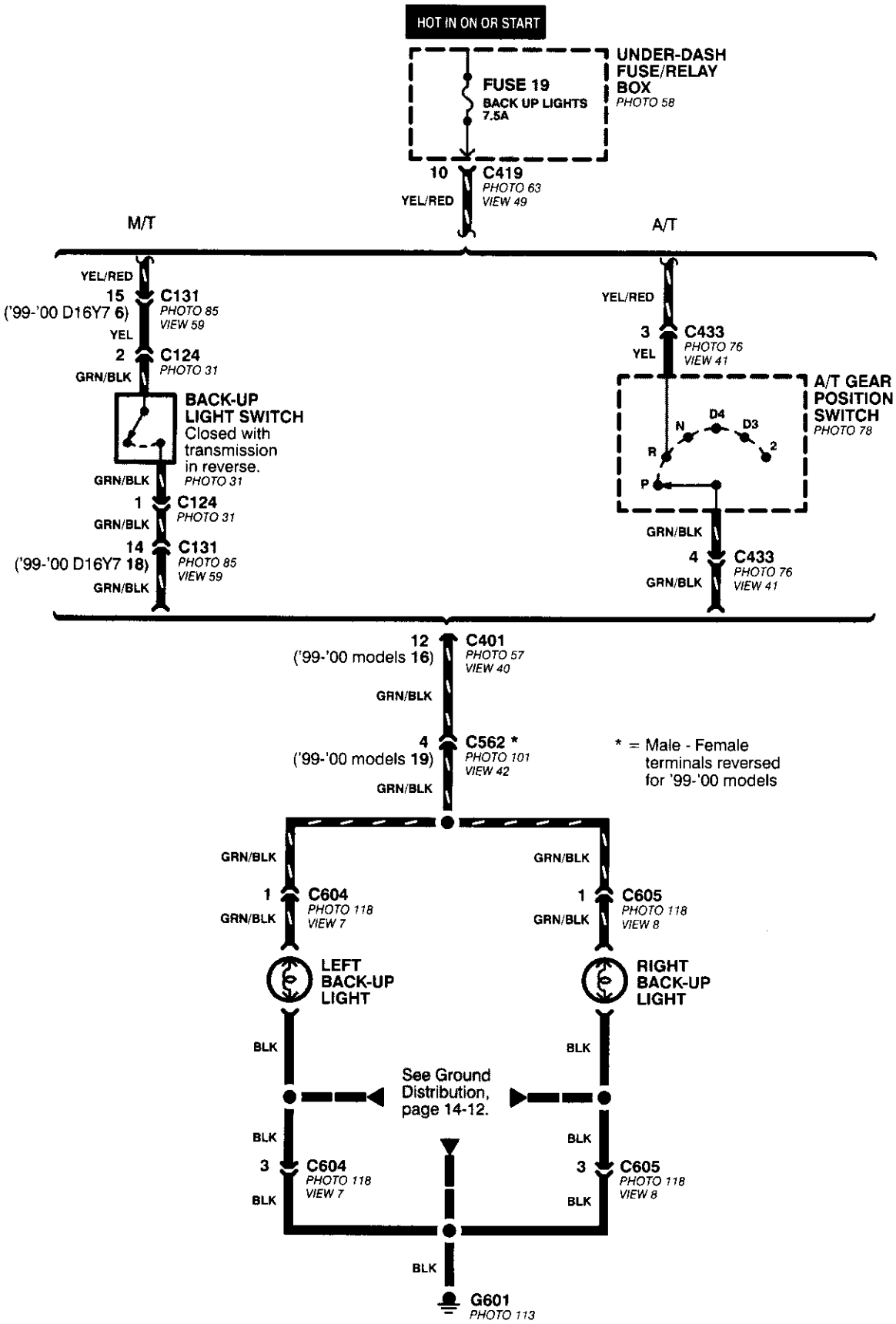
HOT IN ON OR START
UNDER-DASH FUSE/RELAY BOX
PHOTO 58
FUSE 19
BACK UP LIGHTS
7.5A
10
YEL/RED
C419
PHOTO 63
VIEW 49
M/T
A/T
YEL/RED
15
('99-'00 D16Y7 6)
C131
PHOTO 85
VIEW 59
YEL
2
C124
PHOTO 31
GRN/BLK
BACK-UP LIGHT SWITCH
Closed with transmission in reverse.
PHOTO 31
GRN/BLK
1
C124
PHOTO 31
GRN/BLK
14
('99-'00 D16Y7 18)
C131
PHOTO 85
VIEW 59
GRN/BLK
YEL/RED
3
C433
PHOTO 76
VIEW 41
YEL
A/T GEAR POSITION SWITCH
PHOTO 78
N
D4
D3
R
2
P
GRN/BLK
4
C433
PHOTO 76
VIEW 41
GRN/BLK
12
('99-'00 models 16)
C401
PHOTO 57
VIEW 40
GRN/BLK
4
('99-'00 models 19)
C562 *
PHOTO 101
VIEW 42
GRN/BLK
* = Male - Female terminals reversed for '99-'00 models
GRN/BLK
1
C604
PHOTO 118
VIEW 7
GRN/BLK
GRN/BLK
1
C605
PHOTO 118
VIEW 8
GRN/BLK
LEFT BACK-UP LIGHT
RIGHT BACK-UP LIGHT
BLK
BLK
See Ground Distribution, page 14-12.
BLK
3
C604
PHOTO 118
VIEW 7
BLK
BLK
3
C605
PHOTO 118
VIEW 8
BLK
BLK
G601
PHOTO 113

License Lights, Parking Lights, and Taillights

– Coupe, Sedan, and Hatchback

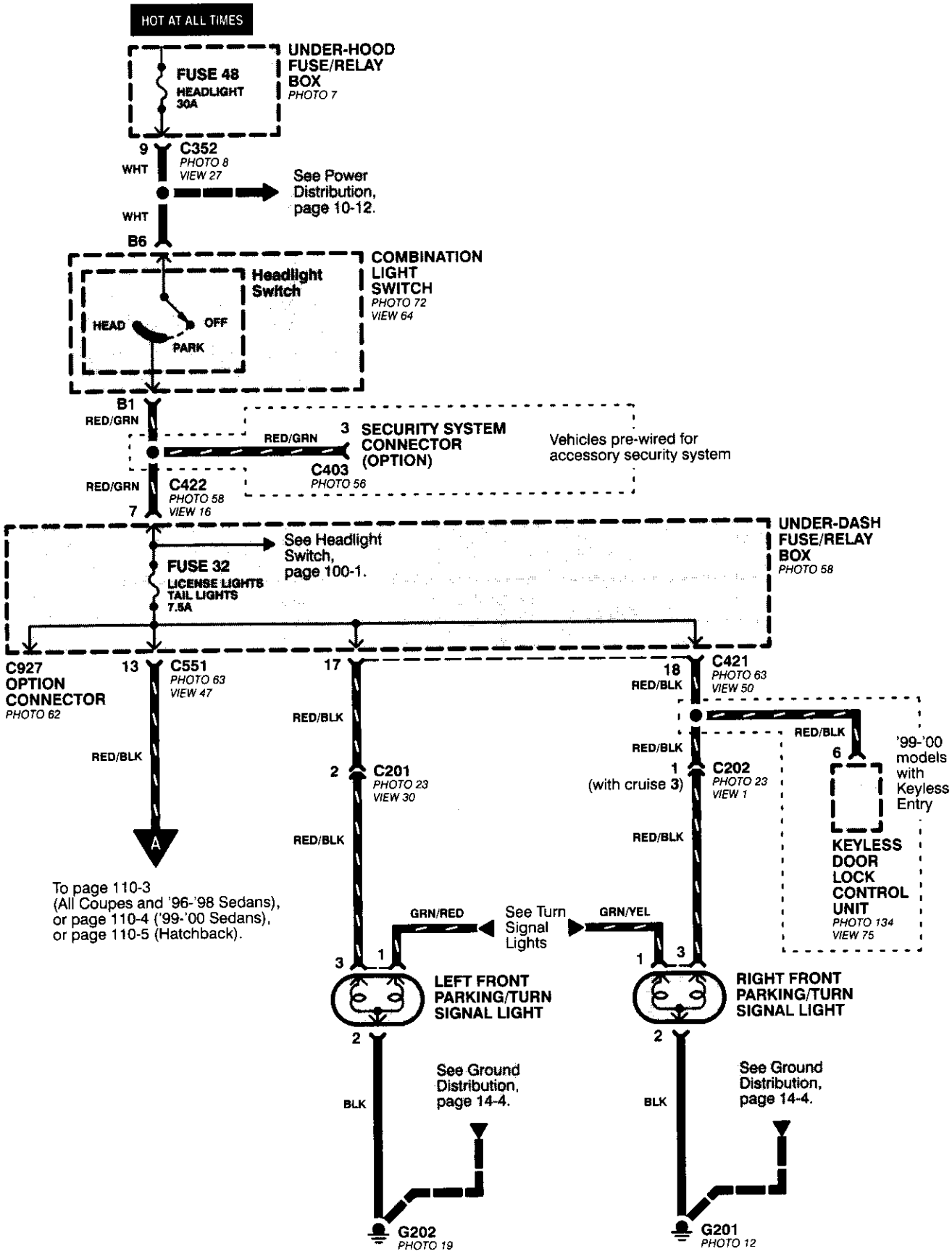

All Coupes and '96-'98 Sedans

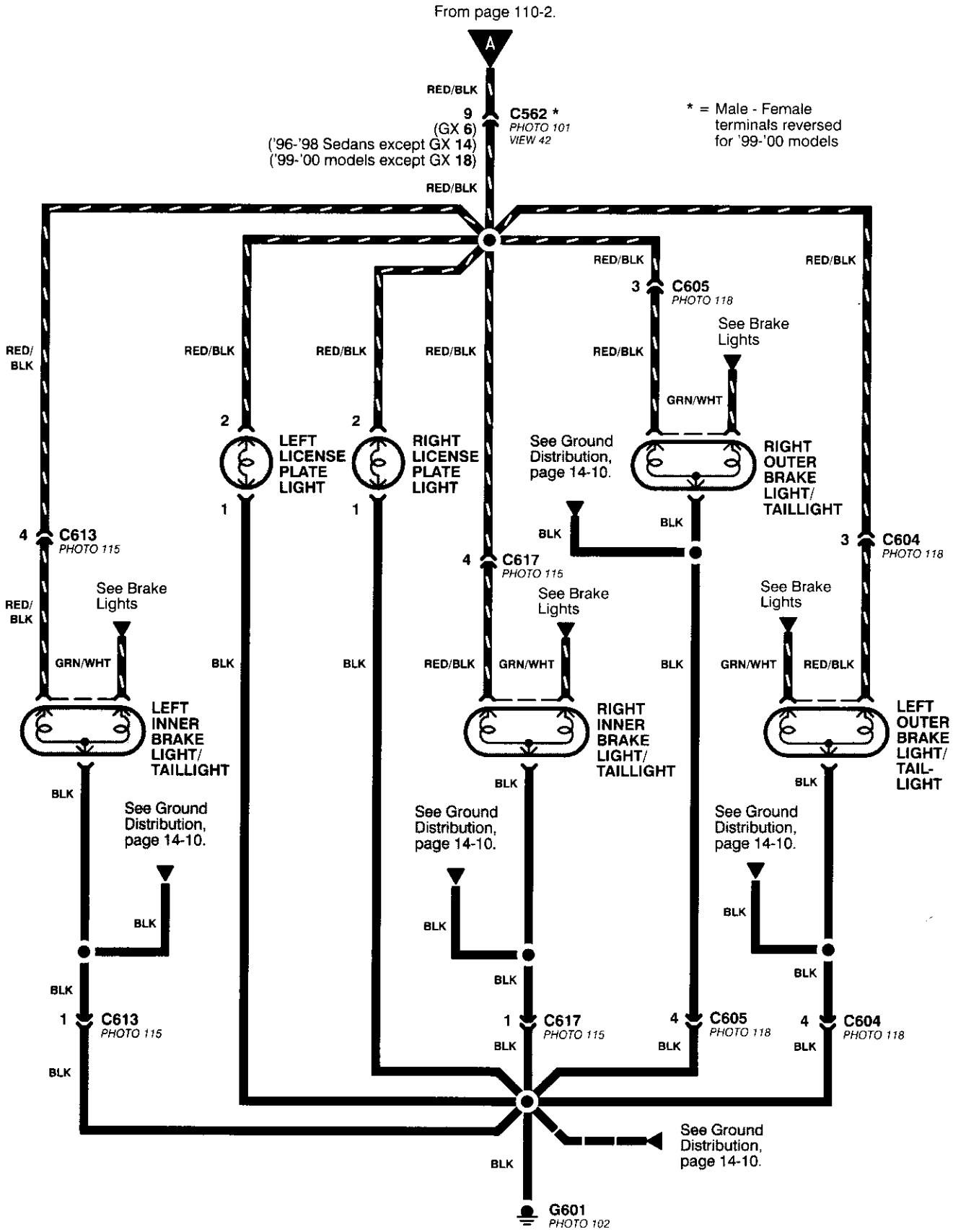

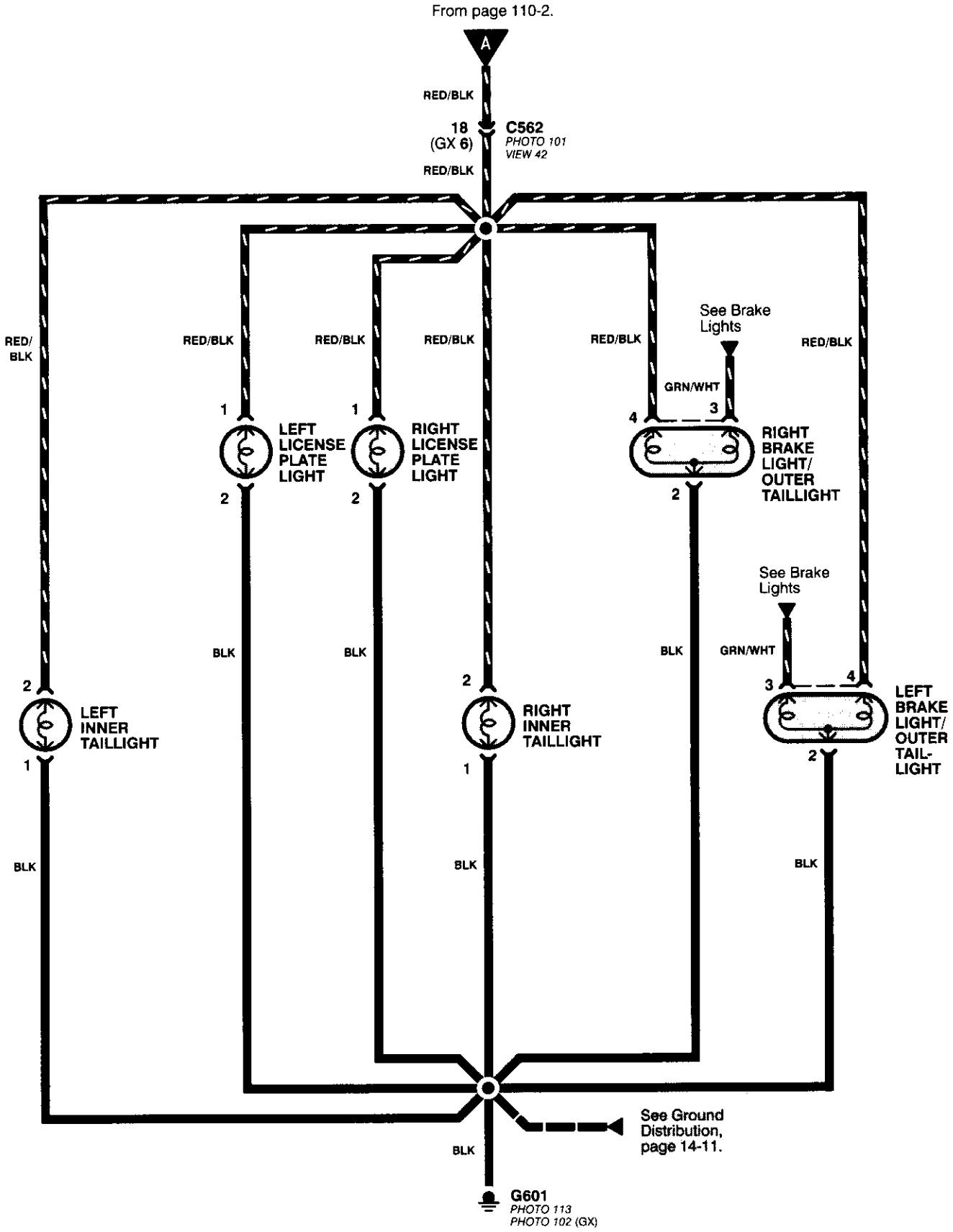
From page 110-2.
A
RED/BLK
18
(GX 6)
C562
PHOTO 101
VIEW 42
RED/BLK
RED/
BLK
RED/BLK
RED/BLK
RED/BLK
RED/BLK
RED/BLK
See Brake
Lights
GRN/WHT
1
2
LEFT
LICENSE
PLATE
LIGHT
1
2
RIGHT
LICENSE
PLATE
LIGHT
4
3
2
RIGHT
BRAKE
LIGHT/
OUTER
TAILLIGHT
See Brake
Lights
GRN/WHT
BLK
BLK
BLK
2
1
LEFT
INNER
TAILLIGHT
2
1
RIGHT
INNER
TAILLIGHT
3
4
2
LEFT
BRAKE
LIGHT/
OUTER
TAIL-
LIGHT
BLK
BLK
BLK
See Ground
Distribution,
page 14-11.
BLK
G601
PHOTO 113
PHOTO 102 (GX)

Hatchback

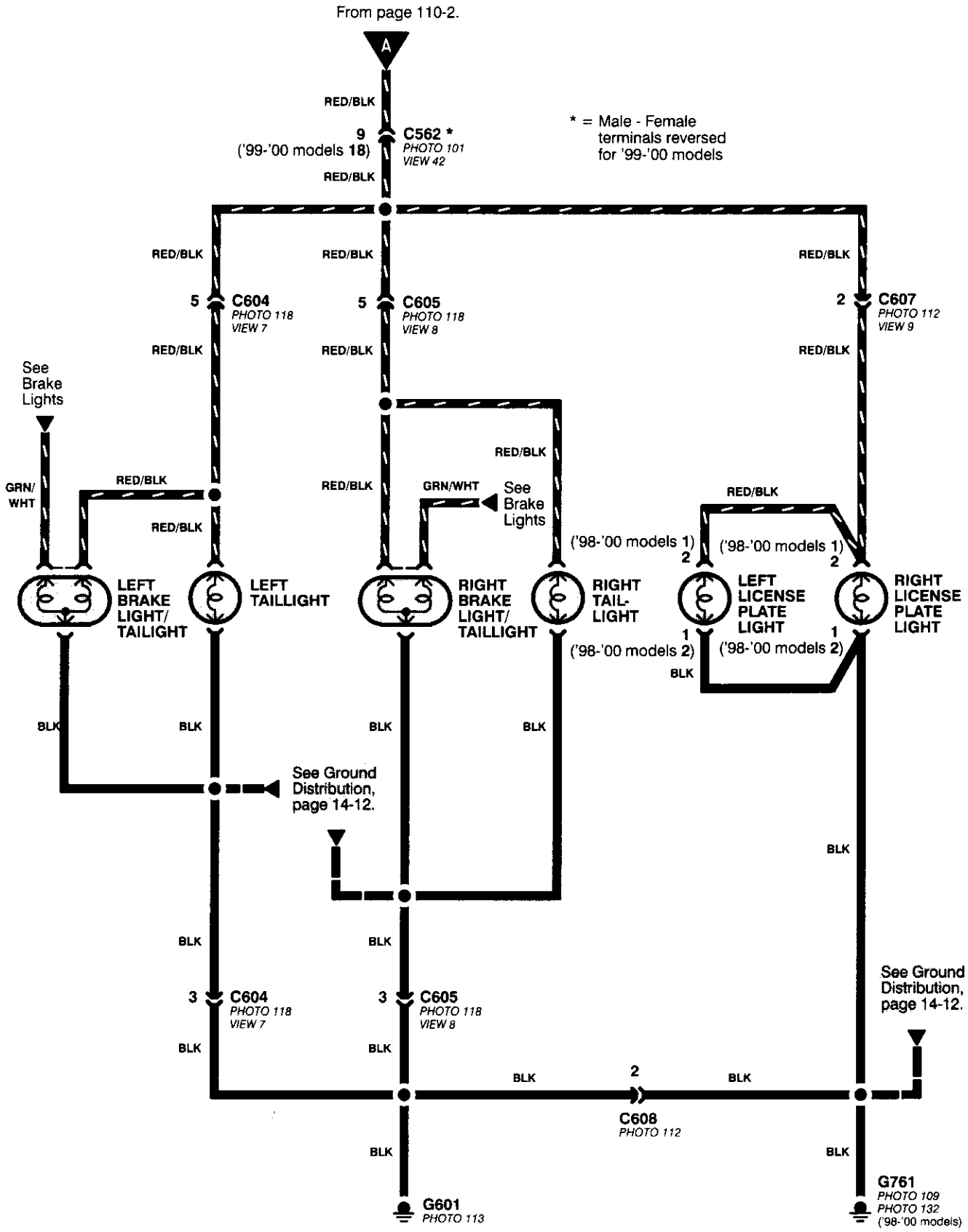
From page 110-2.
A
RED/BLK
9
('99-'00 models 18)
C562 *
PHOTO 101
VIEW 42
* = Male - Female terminals reversed for '99-'00 models
5
C604
PHOTO 118
VIEW 7
5
C605
PHOTO 118
VIEW 8
2
C607
PHOTO 112
VIEW 9
See Brake Lights
GRN/WHT
GRN/WHT
See Brake Lights
('98-'00 models 1)
('98-'00 models 1)
2
2
LEFT BRAKE LIGHT/ TAILIGHT
LEFT TAILLIGHT
RIGHT BRAKE LIGHT/ TAILLIGHT
RIGHT TAIL-LIGHT
LEFT LICENSE PLATE LIGHT
RIGHT LICENSE PLATE LIGHT
1
1
('98-'00 models 2)
('98-'00 models 2)
BLK
See Ground Distribution, page 14-12.
3
C604
PHOTO 118
VIEW 7
3
C605
PHOTO 118
VIEW 8
2
C608
PHOTO 112
See Ground Distribution, page 14-12.
G601
PHOTO 113
G761
PHOTO 109
PHOTO 132
('98-'00 models)

Turn Signal and Hazard Warning Lights

– All except '99-'00 Sedans

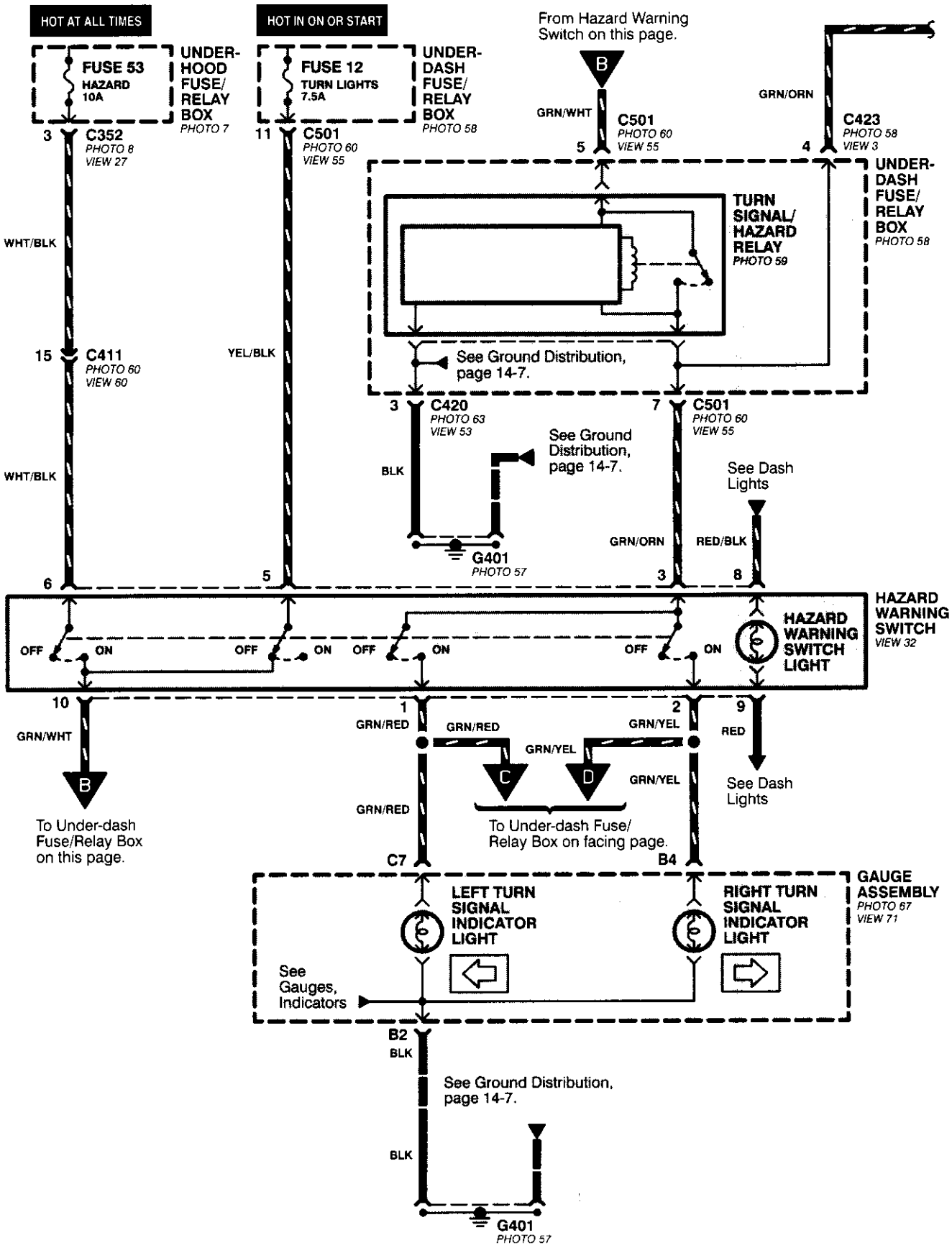

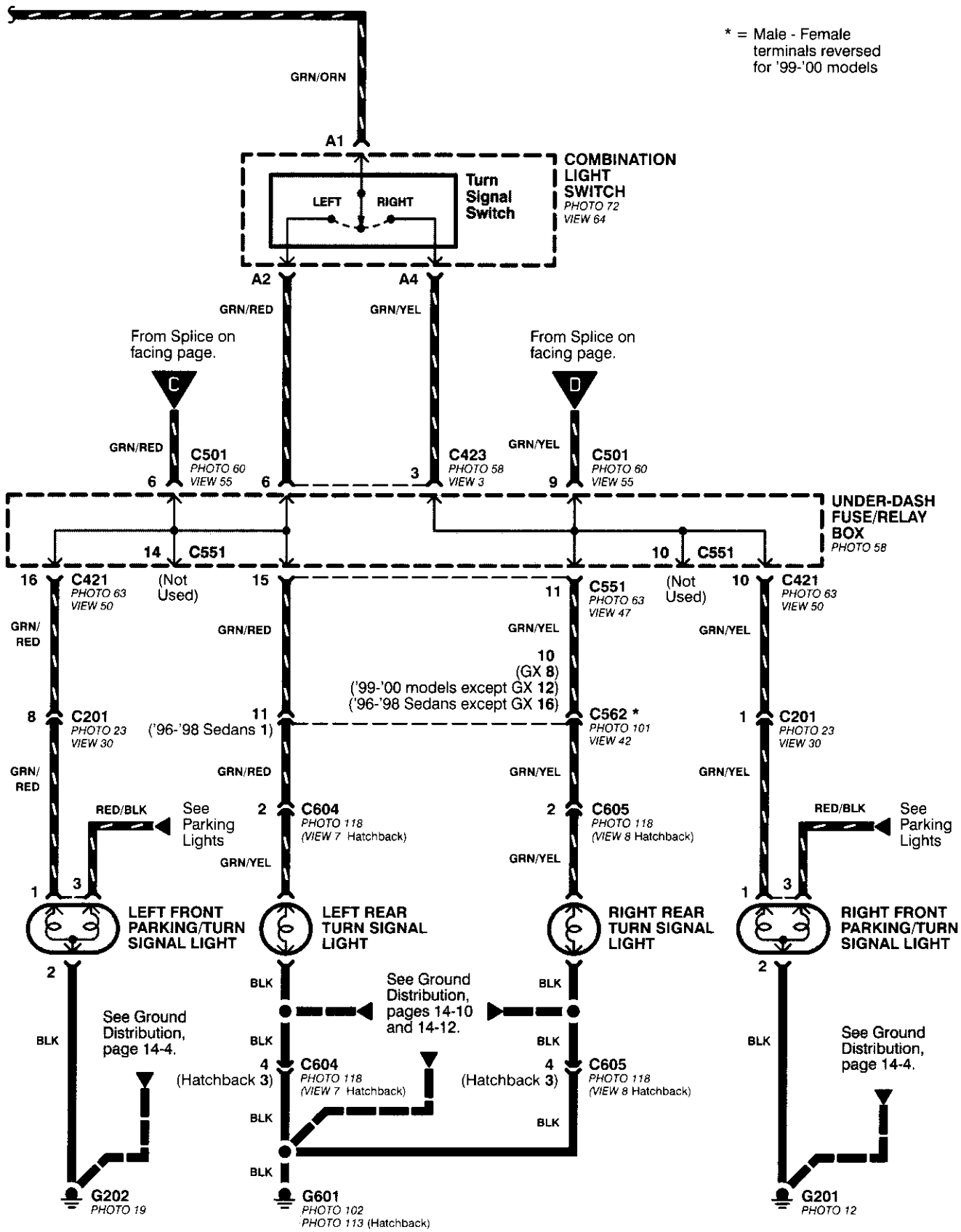
* = Male - Female terminals reversed for '99-'00 models
GRN/ORN
A1
COMBINATION LIGHT SWITCH
PHOTO 72
VIEW 64
Turn Signal Switch
LEFT
RIGHT
A2
A4
GRN/RED
GRN/YEL
From Splice on facing page.
From Splice on facing page.
C
D
GRN/RED
C501
PHOTO 60
VIEW 55
6
6
3
C423
PHOTO 58
VIEW 3
GRN/YEL
9
C501
PHOTO 60
VIEW 55
UNDER-DASH FUSE/RELAY BOX
PHOTO 58
14
C551
10
C551
16
C421
PHOTO 63
VIEW 50
(Not Used)
15
11
C551
PHOTO 63
VIEW 47
(Not Used)
10
C421
PHOTO 63
VIEW 50
GRN/RED
GRN/YEL
GRN/YEL
GRN/RED
10
(GX 8)
('99-'00 models except GX 12)
('96-'98 Sedans except GX 16)
8
C201
PHOTO 23
VIEW 30
11
('96-'98 Sedans 1)
C562 *
PHOTO 101
VIEW 42
1
C201
PHOTO 23
VIEW 30
GRN/RED
GRN/YEL
GRN/YEL
RED/BLK
See Parking Lights
2
C604
PHOTO 118
(VIEW 7 Hatchback)
2
C605
PHOTO 118
(VIEW 8 Hatchback)
RED/BLK
See Parking Lights
GRN/YEL
GRN/YEL
1
3
LEFT FRONT PARKING/TURN SIGNAL LIGHT
LEFT REAR TURN SIGNAL LIGHT
RIGHT REAR TURN SIGNAL LIGHT
1
3
RIGHT FRONT PARKING/TURN SIGNAL LIGHT
2
BLK
See Ground Distribution, page 14-4.
BLK
See Ground Distribution, pages 14-10 and 14-12.
BLK
BLK
BLK
4
(Hatchback 3)
C604
PHOTO 118
(VIEW 7 Hatchback)
4
(Hatchback 3)
C605
PHOTO 118
(VIEW 8 Hatchback)
BLK
BLK
BLK
See Ground Distribution, page 14-4.
G202
PHOTO 19
G601
PHOTO 102
PHOTO 113 (Hatchback)
G201
PHOTO 12

Turn Signal and Hazard Warning Lights

– '99-'00 Sedans

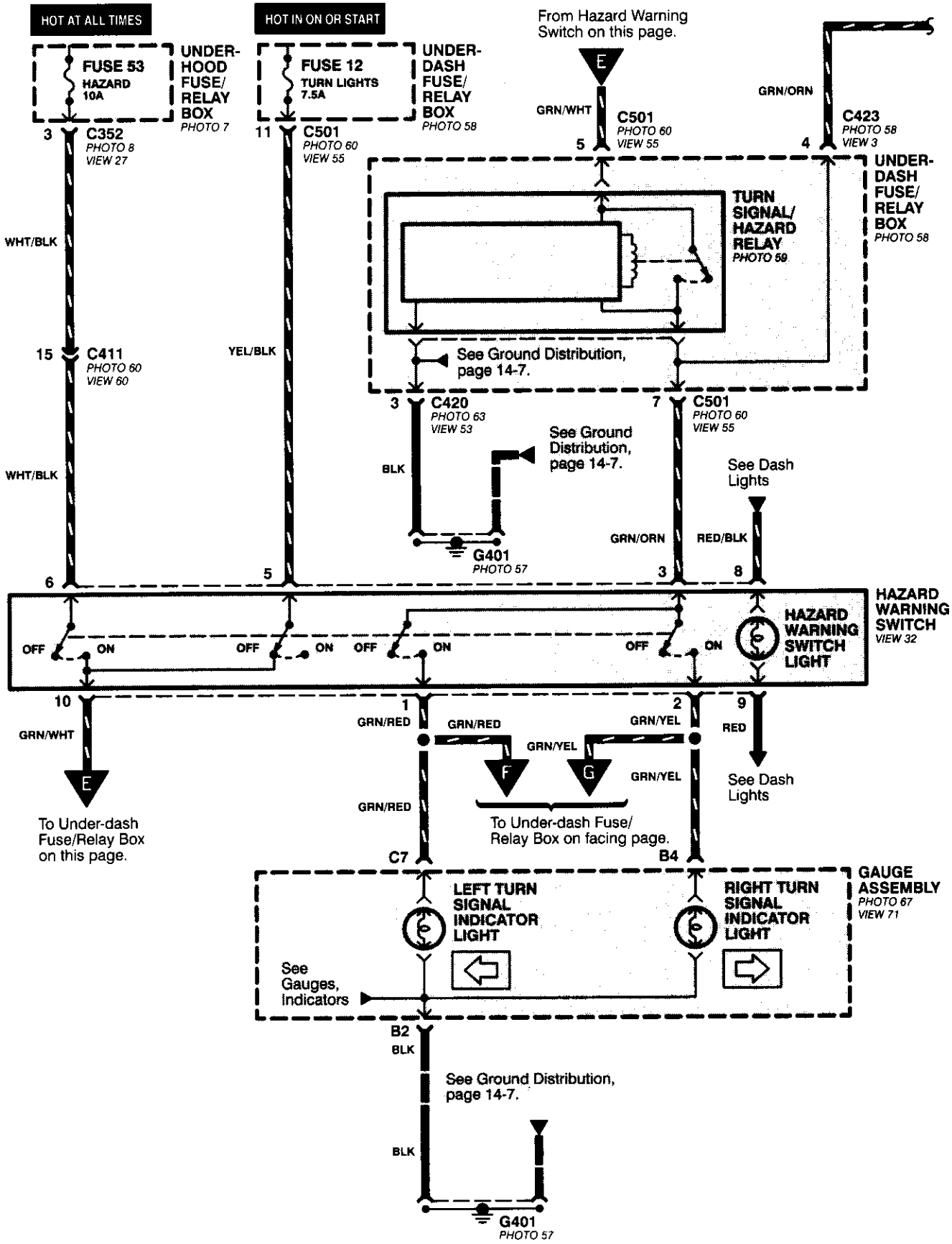

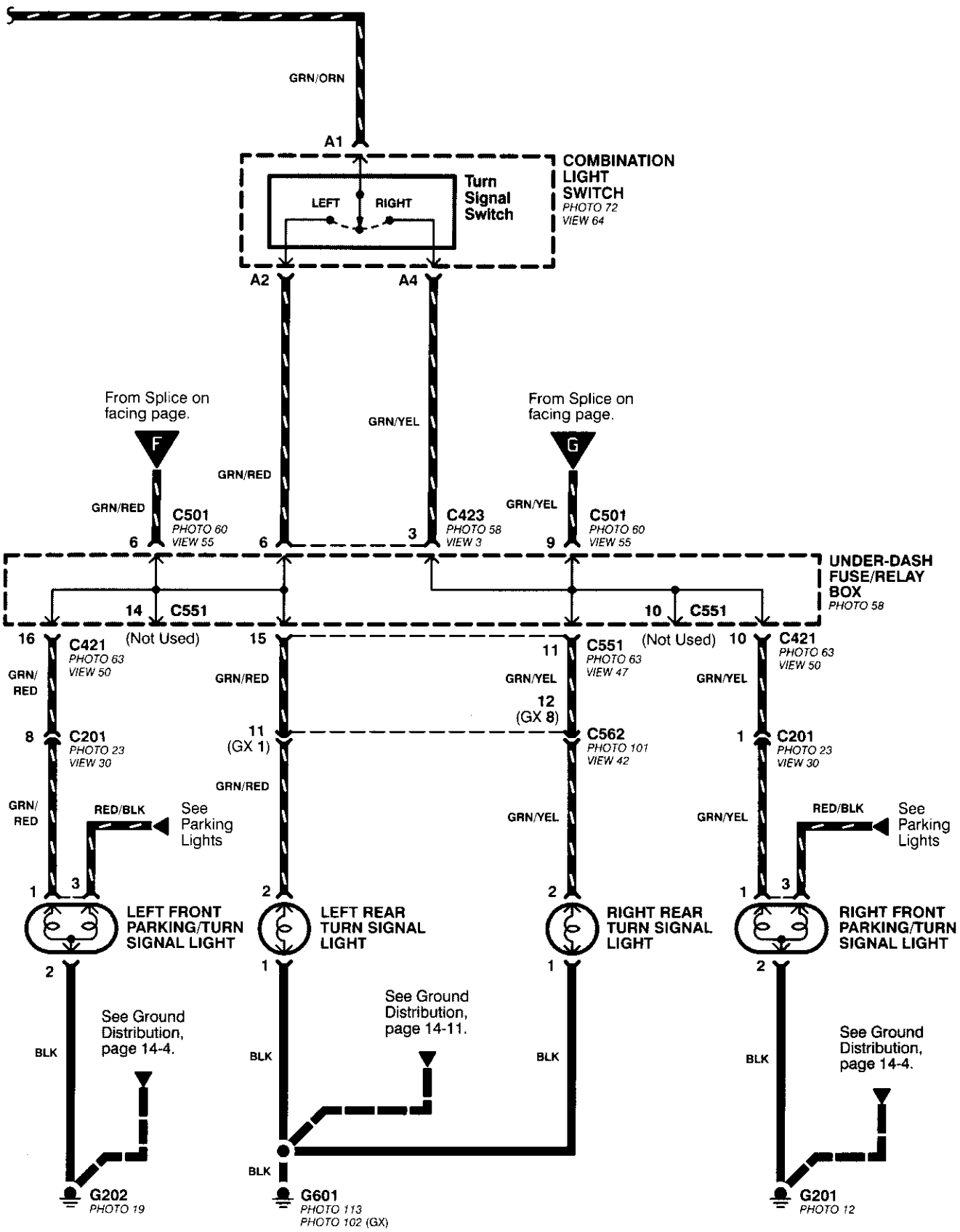
GRN/ORN
A1
COMBINATION LIGHT SWITCH
PHOTO 72
VIEW 64
Turn Signal Switch
LEFT
RIGHT
A2
A4
From Splice on facing page.
F
From Splice on facing page.
G
GRN/RED
GRN/YEL
GRN/RED
C501
PHOTO 60
VIEW 55
6
6
3
C423
PHOTO 58
VIEW 3
GRN/YEL
C501
PHOTO 60
VIEW 55
9
UNDER-DASH FUSE/RELAY BOX
PHOTO 58
14
C551
10
C551
16
C421
PHOTO 63
VIEW 50
(Not Used)
15
11
C551
PHOTO 63
VIEW 47
(Not Used)
10
C421
PHOTO 63
VIEW 50
GRN/RED
GRN/YEL
GRN/YEL
12
(GX 8)
8
C201
PHOTO 23
VIEW 30
11
(GX 1)
C562
PHOTO 101
VIEW 42
1
C201
PHOTO 23
VIEW 30
GRN/RED
GRN/RED
RED/BLK
See Parking Lights
GRN/YEL
GRN/YEL
RED/BLK
See Parking Lights
1
3
2
2
1
3
LEFT FRONT PARKING/TURN SIGNAL LIGHT
LEFT REAR TURN SIGNAL LIGHT
RIGHT REAR TURN SIGNAL LIGHT
RIGHT FRONT PARKING/TURN SIGNAL LIGHT
2
1
1
2
See Ground Distribution, page 14-4.
See Ground Distribution, page 14-11.
See Ground Distribution, page 14-4.
BLK
BLK
BLK
BLK
G202
PHOTO 19
G601
PHOTO 113
PHOTO 102 (GX)
G201
PHOTO 12

Fog Lights

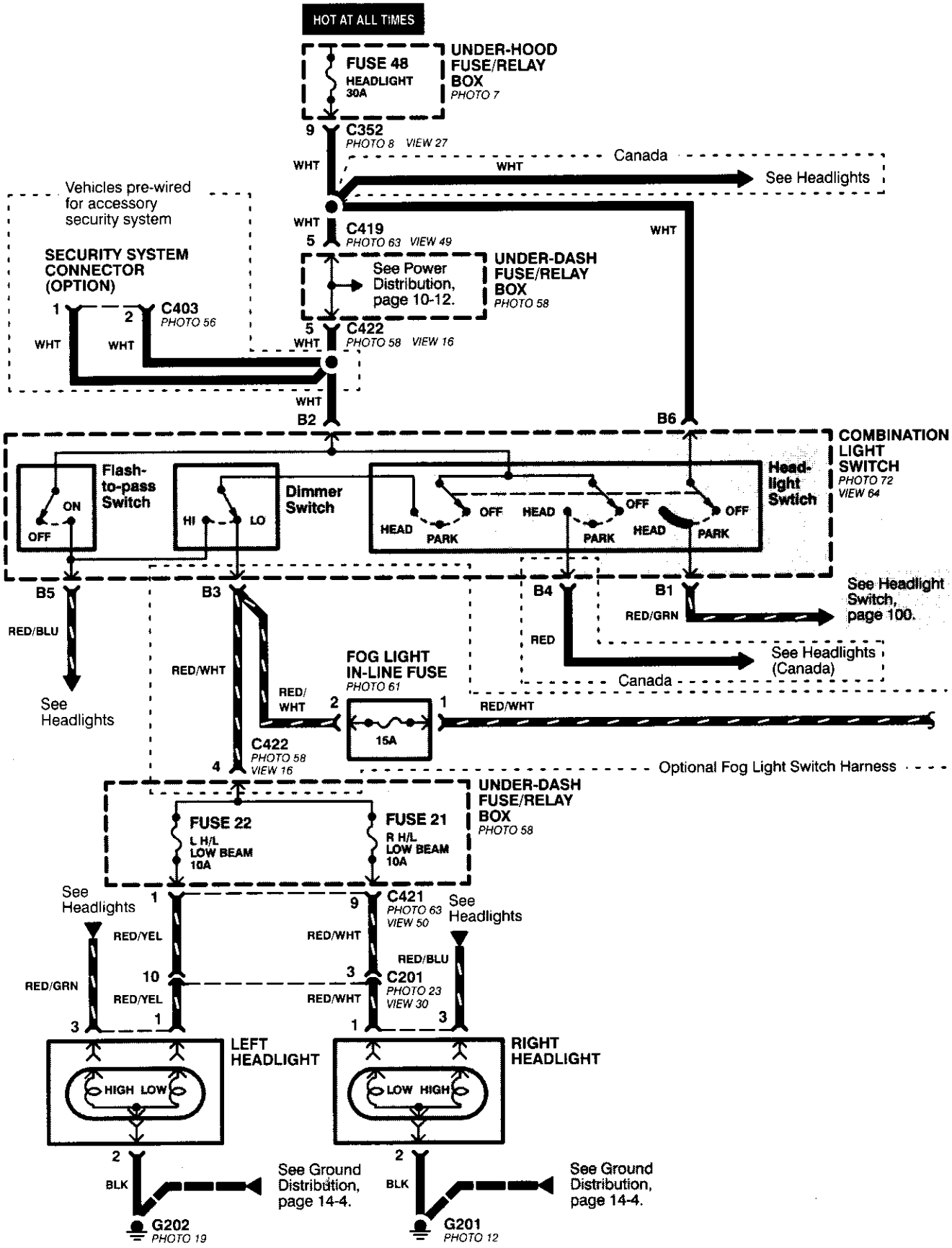
HOT AT ALL TIMES
FUSE 48
HEADLIGHT
30A
UNDER-HOOD FUSE/RELAY BOX
PHOTO 7
9
C352
PHOTO 8 VIEW 27
WHT
Canada
WHT
See Headlights
Vehicles pre-wired for accessory security system
WHT
C419
5
PHOTO 63 VIEW 49
WHT
SECURITY SYSTEM CONNECTOR (OPTION)
See Power Distribution, page 10-12.
UNDER-DASH FUSE/RELAY BOX
PHOTO 58
1
2
C403
PHOTO 56
5
C422
PHOTO 58 VIEW 16
WHT
WHT
WHT
WHT
B2
B6
COMBINATION LIGHT SWITCH
PHOTO 72
VIEW 64
Flash-to-pass Switch
ON
OFF
Dimmer Switch
HI
LO
Head-light Swtich
HEAD
PARK
OFF
HEAD
PARK
OFF
HEAD
PARK
OFF
B5
B3
B4
B1
See Headlight Switch, page 100.
RED/GRN
RED/BLU
RED
See Headlights (Canada)
Canada
See Headlights
RED/WHT
FOG LIGHT IN-LINE FUSE
PHOTO 61
RED/WHT
2
1
RED/WHT
15A
C422
PHOTO 58
VIEW 16
4
Optional Fog Light Switch Harness
UNDER-DASH FUSE/RELAY BOX
PHOTO 58
FUSE 22
L H/L
LOW BEAM
10A
FUSE 21
R H/L
LOW BEAM
10A
See Headlights
1
9
C421
PHOTO 63
VIEW 50
See Headlights
RED/YEL
RED/WHT
RED/BLU
RED/GRN
10
3
C201
PHOTO 23
VIEW 30
RED/YEL
RED/WHT
3
1
1
3
LEFT HEADLIGHT
RIGHT HEADLIGHT
HIGH LOW
LOW HIGH
2
2
BLK
BLK
See Ground Distribution, page 14-4.
See Ground Distribution, page 14-4.
G202
PHOTO 19
G201
PHOTO 12

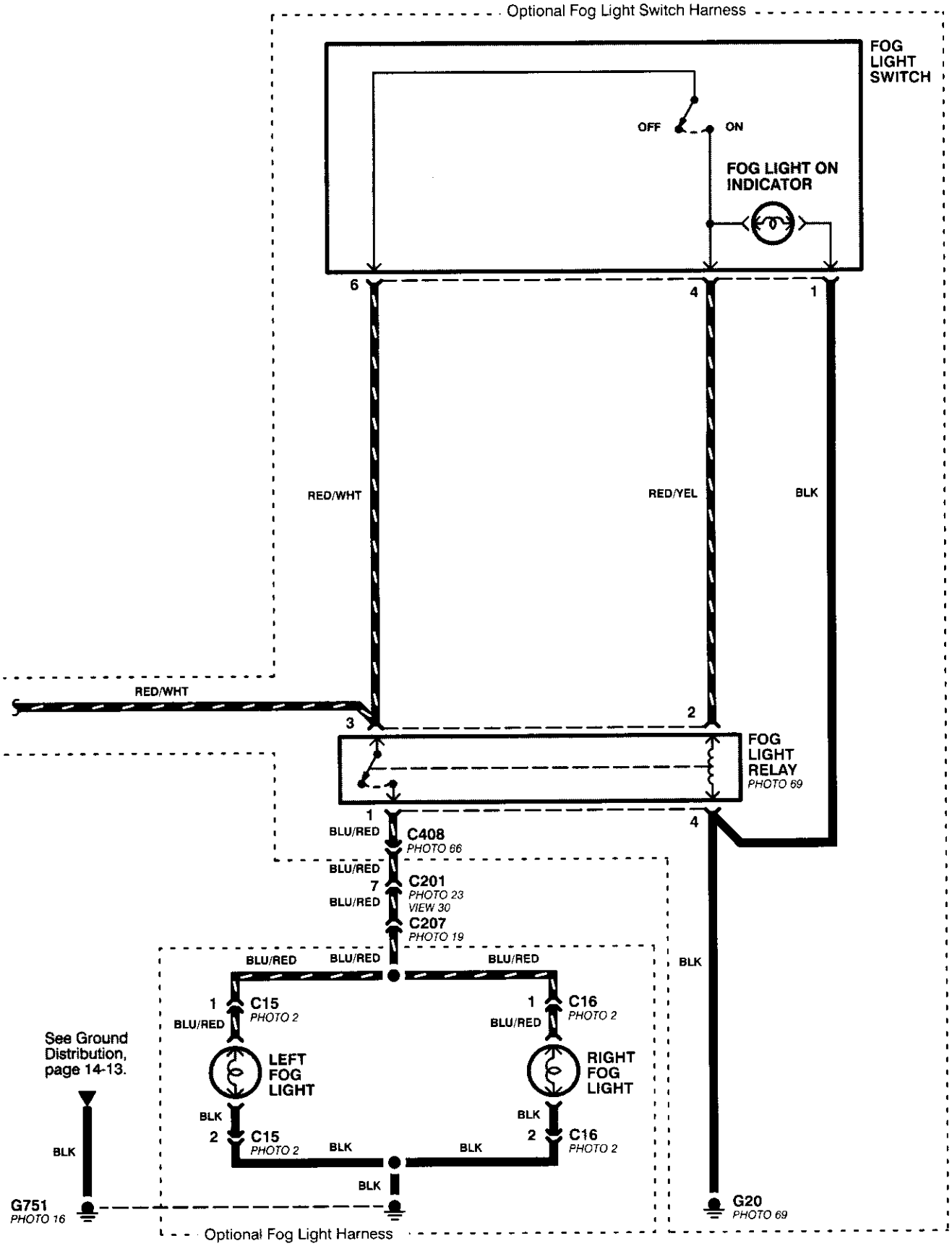
Optional Fog Light Switch Harness
FOG LIGHT SWITCH
OFF
ON
FOG LIGHT ON INDICATOR
6
4
1
RED/WHT
RED/YEL
BLK
RED/WHT
3
2
FOG LIGHT RELAY
PHOTO 69
1
BLU/RED
C408
PHOTO 66
4
BLU/RED
7
C201
PHOTO 23
VIEW 30
BLU/RED
C207
PHOTO 19
BLU/RED
BLU/RED
BLU/RED
BLK
1
C15
PHOTO 2
BLU/RED
1
C16
PHOTO 2
BLU/RED
See Ground Distribution, page 14-13.
LEFT FOG LIGHT
RIGHT FOG LIGHT
BLK
BLK
2
C15
PHOTO 2
BLK
BLK
2
C16
PHOTO 2
BLK
BLK
G751
PHOTO 16
G20
PHOTO 69
Optional Fog Light Harness

Headlights

– Coupe and Sedan

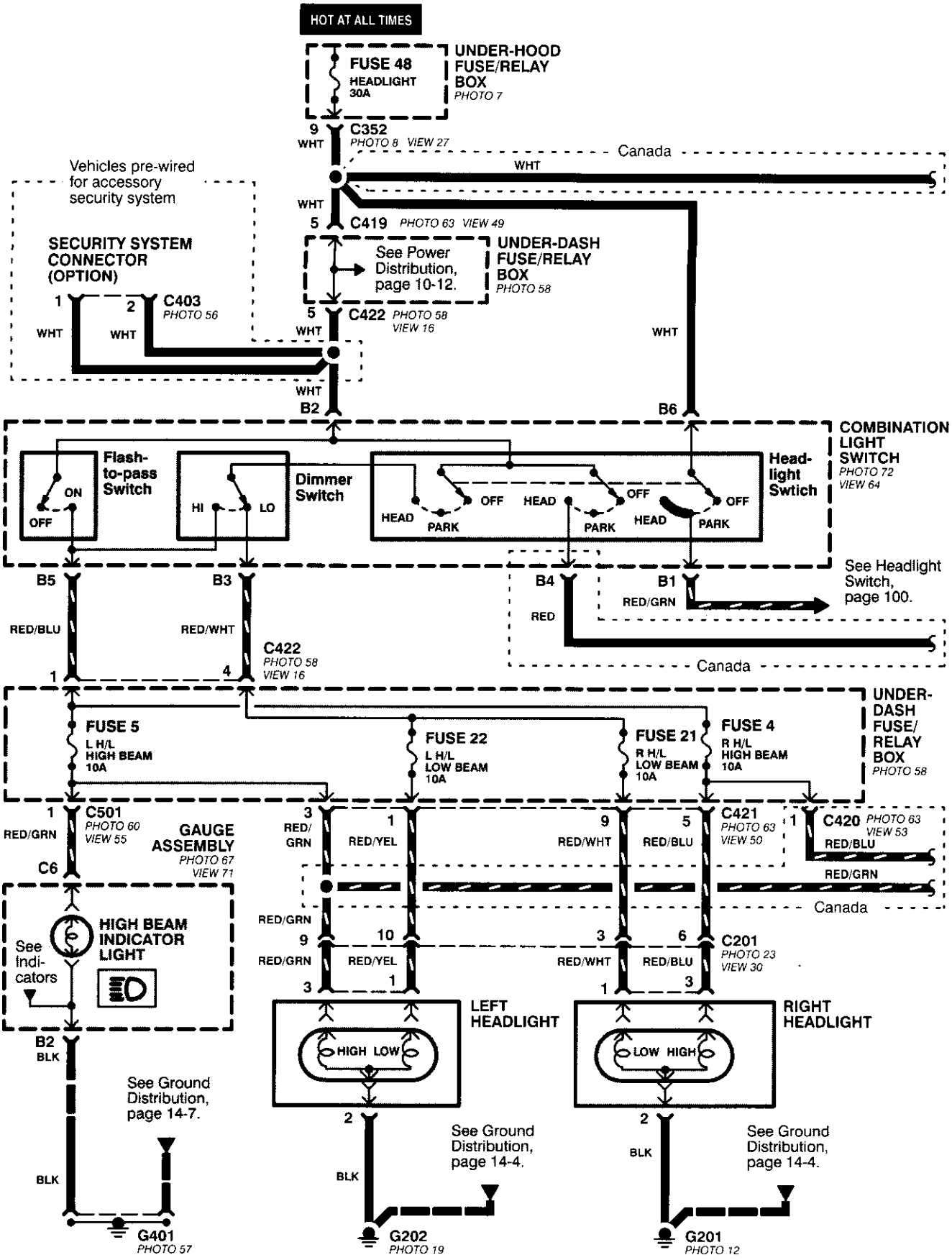

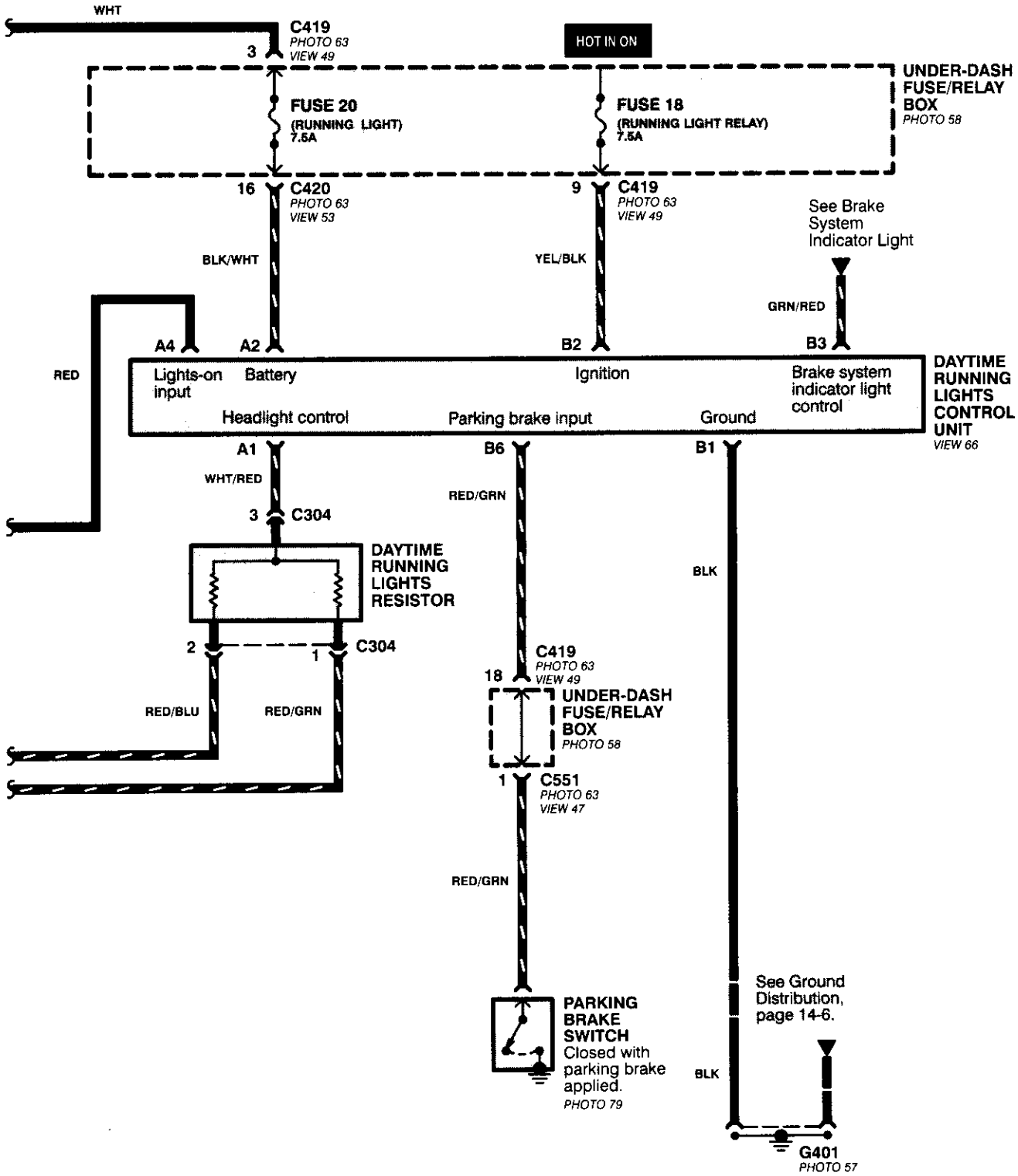
WHT
C419
PHOTO 63
VIEW 49
3
HOT IN ON
UNDER-DASH FUSE/RELAY BOX
PHOTO 58
FUSE 20
(RUNNING LIGHT)
7.5A
FUSE 18
(RUNNING LIGHT RELAY)
7.5A
16
C420
PHOTO 63
VIEW 53
9
C419
PHOTO 63
VIEW 49
See Brake System Indicator Light
BLK/WHT
YEL/BLK
GRN/RED
A4
A2
B2
B3
RED
Lights-on input
Battery
Ignition
Brake system indicator light control
Headlight control
Parking brake input
Ground
DAYTIME RUNNING LIGHTS CONTROL UNIT
VIEW 66
A1
B6
B1
WHT/RED
RED/GRN
BLK
3
C304
DAYTIME RUNNING LIGHTS RESISTOR
2
1
C304
18
C419
PHOTO 63
VIEW 49
UNDER-DASH FUSE/RELAY BOX
PHOTO 58
RED/BLU
RED/GRN
1
C551
PHOTO 63
VIEW 47
RED/GRN
PARKING BRAKE SWITCH
Closed with parking brake applied.
PHOTO 79
See Ground Distribution, page 14-6.
BLK
G401
PHOTO 57

How the Circuit Works

Low Beams

With the headlight switch in HEAD and the dimmer switch in LO, current flows through the headlight switch, fuse 21, fuse 22, and the low beam filaments to ground, and the low beams come on.

High Beams

With the headlight switch in HEAD and the dimmer switch in HI, current flows through the headlight switch, dimmer switch, fuses 4, 5, and the high beam filaments to ground, and the high beams come on.

Current also flows through the high beam indicator light to ground. The high beam indicator comes on to remind the driver that the high beams are on.

Flash-to-Pass

The flash feature works with the headlight switch in OFF, PARK, or HEAD (low beams). When you move the flash-to-pass switch to ON, current flows through the switch, fuses 4 and 5, and the high beam filaments to ground, and the high beams flash. The high beam indicator also flashes during the flash operation. The flash function has no effect if the high beams are already on.

Daytime Running Lights (Canada)

When you turn the ignition to ON (II) with the parking brake released, the daytime running lights control unit supplies battery voltage at the WHT/RED wire. This voltage is applied to the high beam headlights through the daytime running lights resistor. Each high beam headlight receives less than battery voltage causing them to come on at reduced brightness.

If the parking brake is set, a ground signal is applied to the daytime running lights control unit at the RED/GRN wire. If the parking brake is set when you first turn the ignition switch to ON (II), the high beam headlights will remain off until you release the parking brake. Once the high beam headlights are on, setting the parking brake will not turn them off. When low or high beam operation is requested, battery voltage from the headlight switch is applied to the daytime running light control unit via the RED wire. The daytime running lights control unit then turns off the headlights.

Refer to the Service Manual (Section 23, Electrical) for specific tests or troubleshooting procedures.

Brake Lights

– All Coupes and '96-'98 Sedans

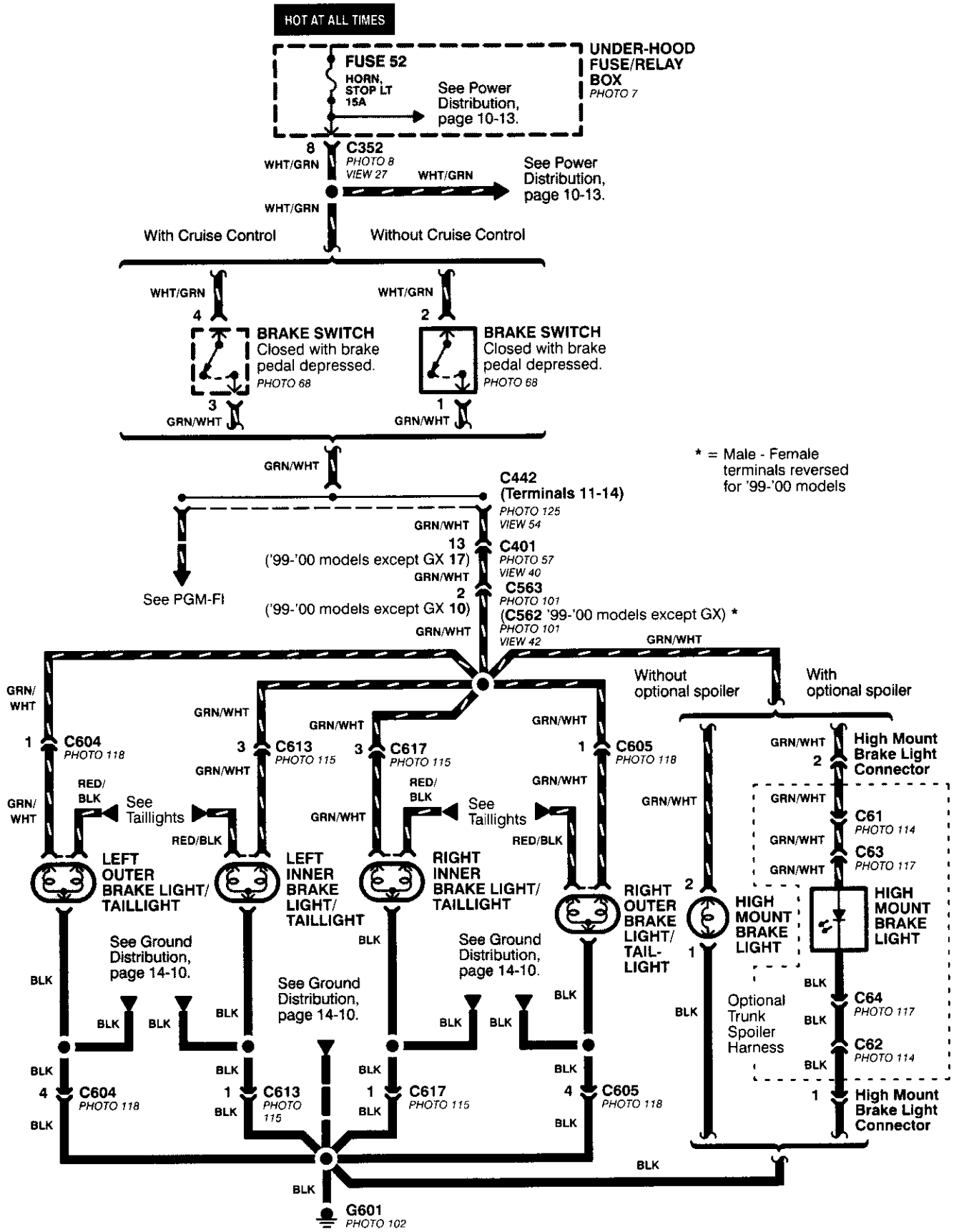

Brake Lights

– '99-'00 Sedans

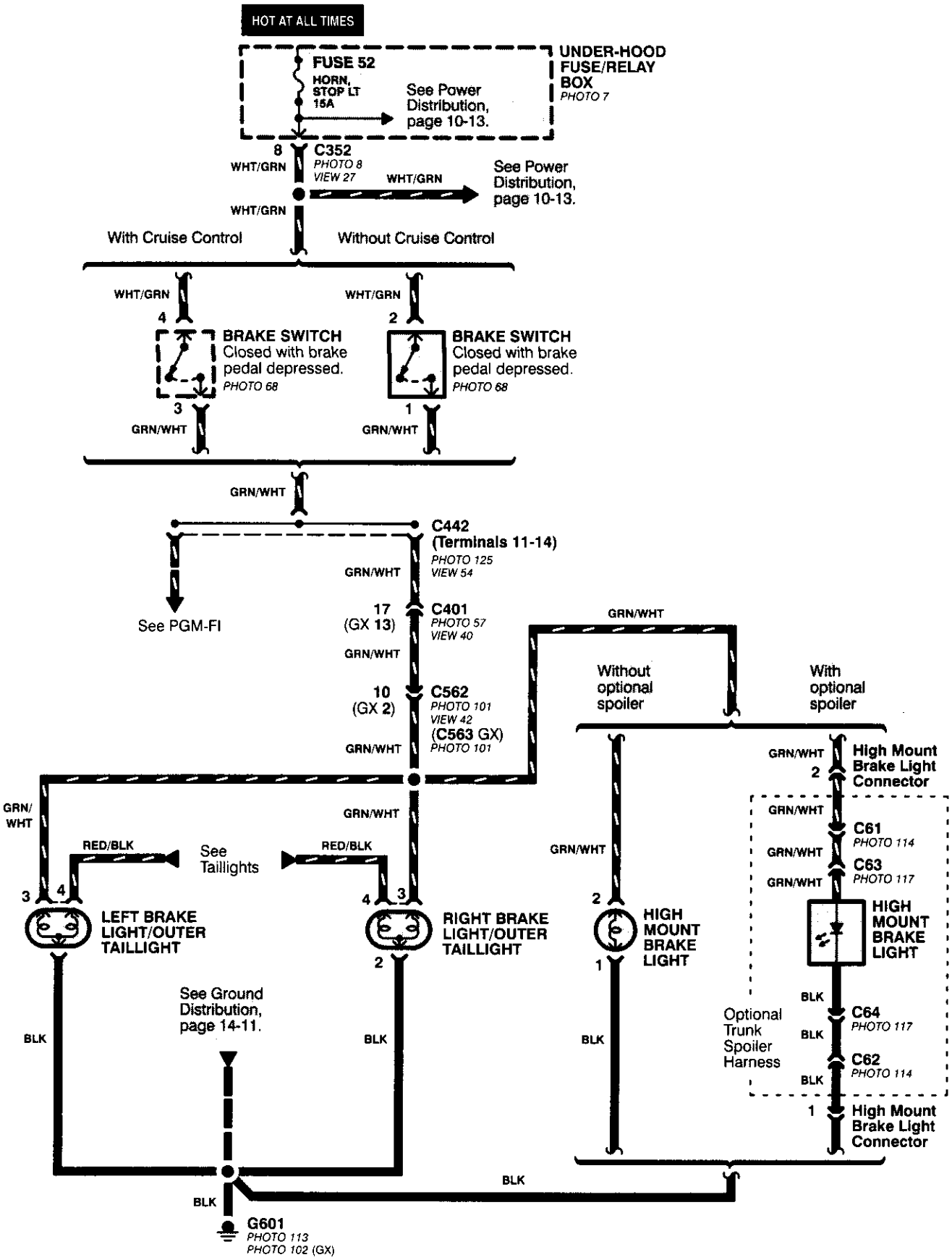

Hatchback

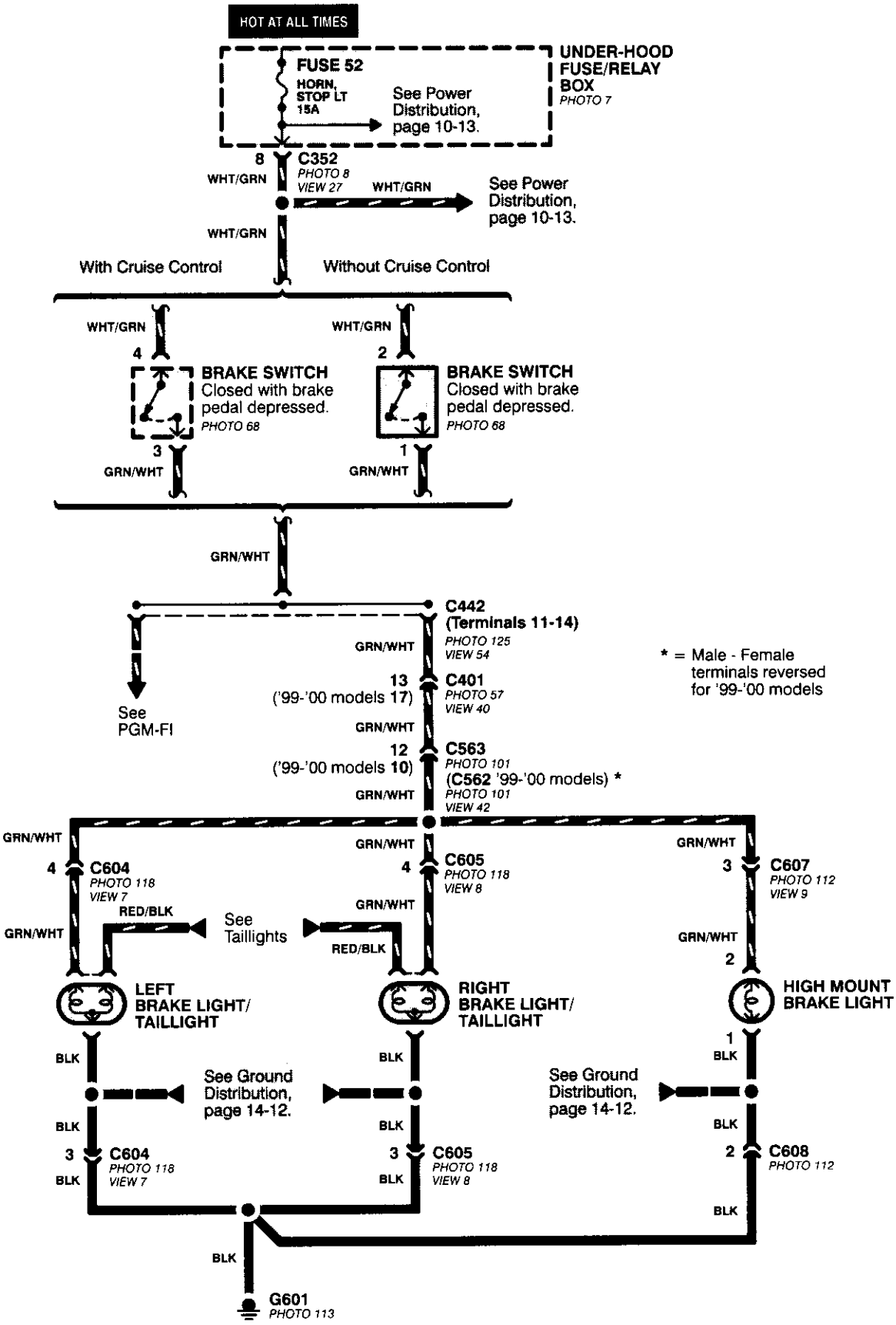
HOT AT ALL TIMES
FUSE 52
HORN, STOP LT 15A
See Power Distribution, page 10-13.
UNDER-HOOD FUSE/RELAY BOX
PHOTO 7
8
C352
PHOTO 8
VIEW 27
WHT/GRN
See Power Distribution, page 10-13.
With Cruise Control
Without Cruise Control
BRAKE SWITCH
Closed with brake pedal depressed.
PHOTO 68
GRN/WHT
C442
(Terminals 11-14)
PHOTO 125
VIEW 54
See PGM-FI
13
C401
('99-'00 models 17)
PHOTO 57
VIEW 40
12
C563
('99-'00 models 10)
PHOTO 101
(C562 '99-'00 models) *
PHOTO 101
VIEW 42
* = Male - Female terminals reversed for '99-'00 models
C604
PHOTO 118
VIEW 7
C605
PHOTO 118
VIEW 8
C607
PHOTO 112
VIEW 9
RED/BLK
See Taillights
LEFT BRAKE LIGHT/ TAILLIGHT
RIGHT BRAKE LIGHT/ TAILLIGHT
HIGH MOUNT BRAKE LIGHT
BLK
See Ground Distribution, page 14-12.
C608
PHOTO 112
G601
PHOTO 113

Dash and Console Lights

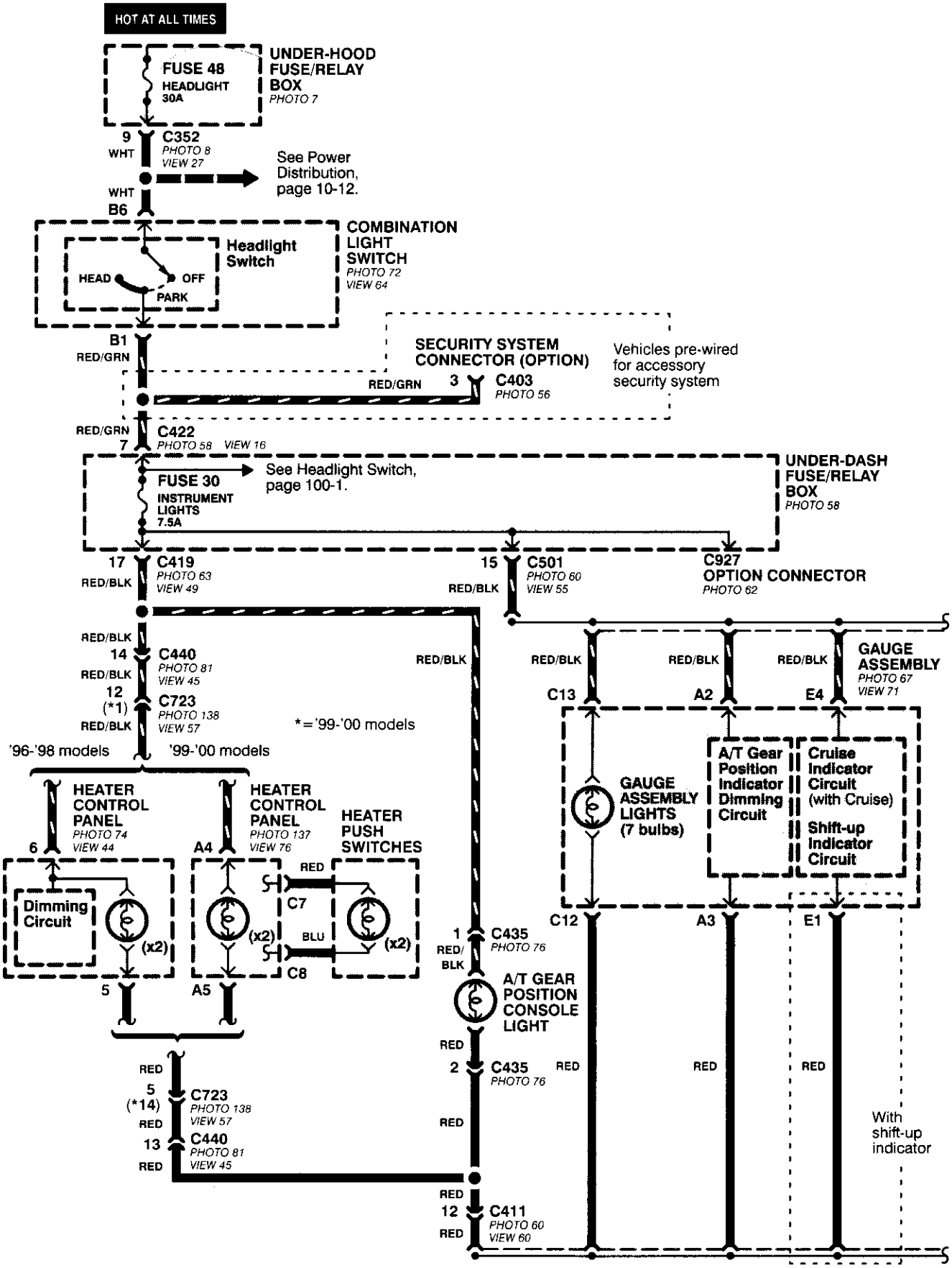

*='96-'98 models

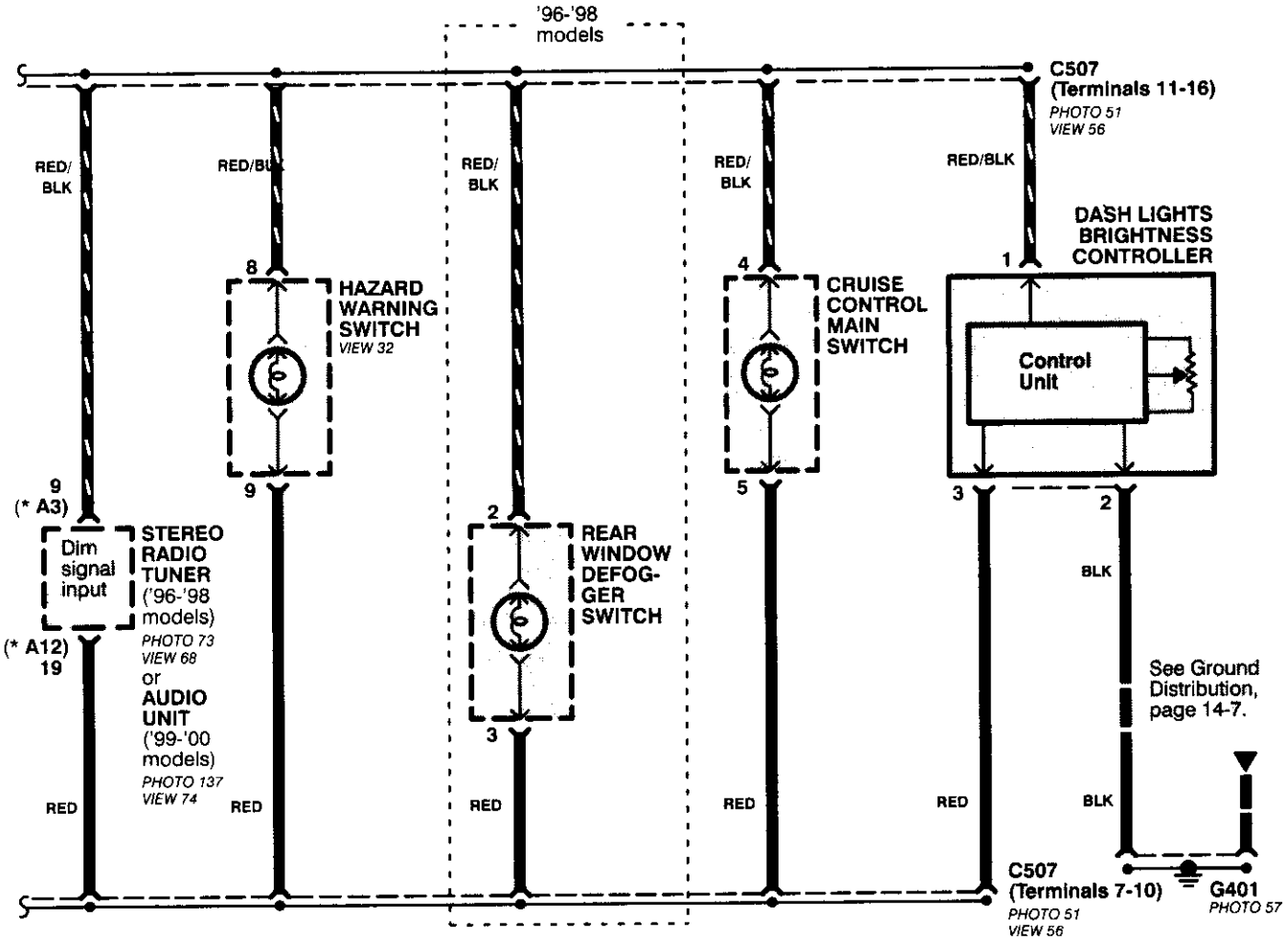
'96-'98 models
C507 (Terminals 11-16)
PHOTO 51
VIEW 56
RED/BLK
RED/BLK
RED/BLK
RED/BLK
RED/BLK
DASH LIGHTS BRIGHTNESS CONTROLLER
8
HAZARD WARNING SWITCH
VIEW 32
4
CRUISE CONTROL MAIN SWITCH
1
Control Unit
9
(* A3)
9
5
3
2
Dim signal input
STEREO RADIO TUNER ('96-'98 models)
PHOTO 73
VIEW 68
or
AUDIO UNIT ('99-'00 models)
PHOTO 137
VIEW 74
2
REAR WINDOW DEFOG-GER SWITCH
3
BLK
See Ground Distribution, page 14-7.
(* A12)
19
RED
RED
RED
RED
RED
BLK
C507 (Terminals 7-10)
PHOTO 51
VIEW 56
G401
PHOTO 57

Ceiling Light, Trunk Light, and Spotlights

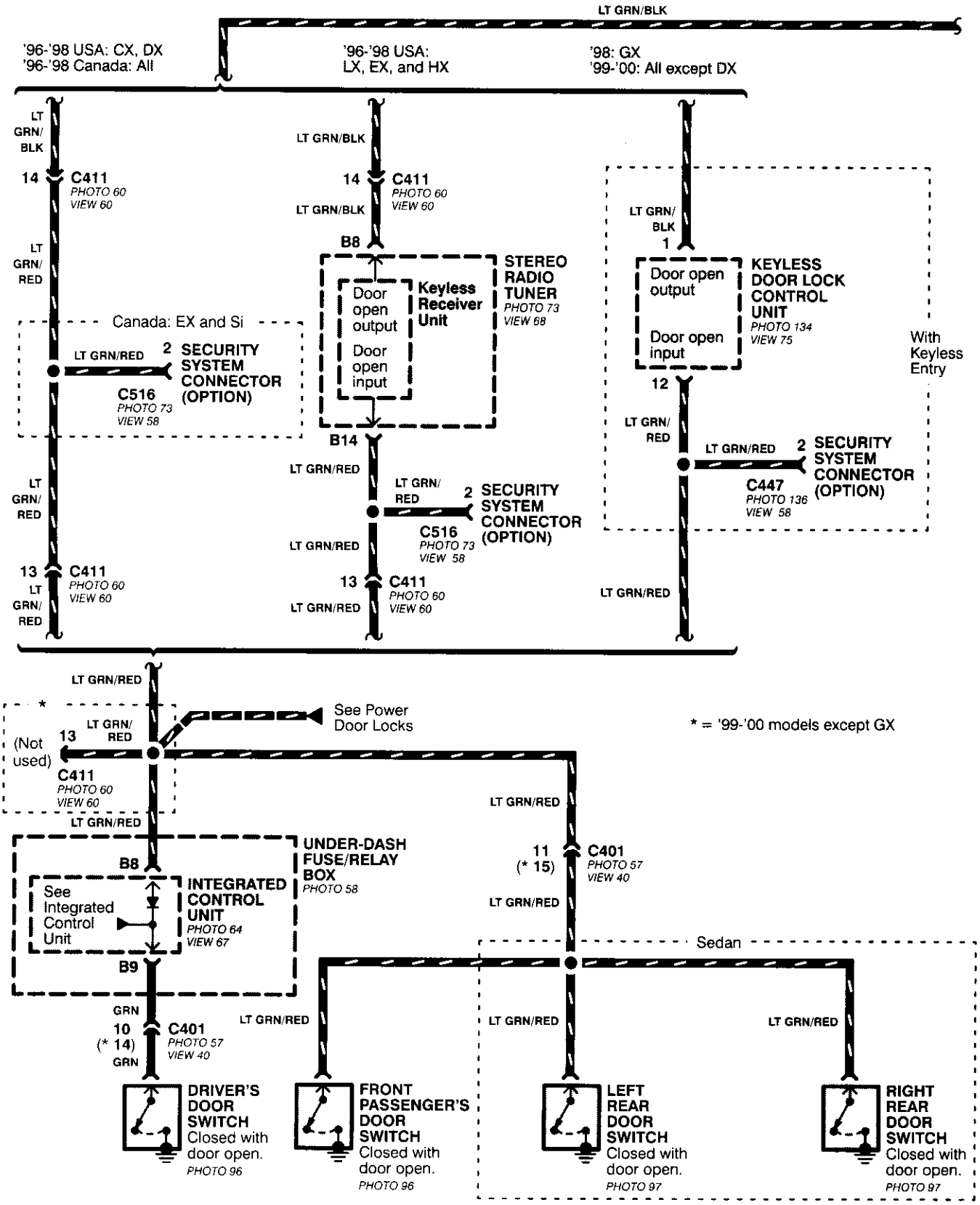

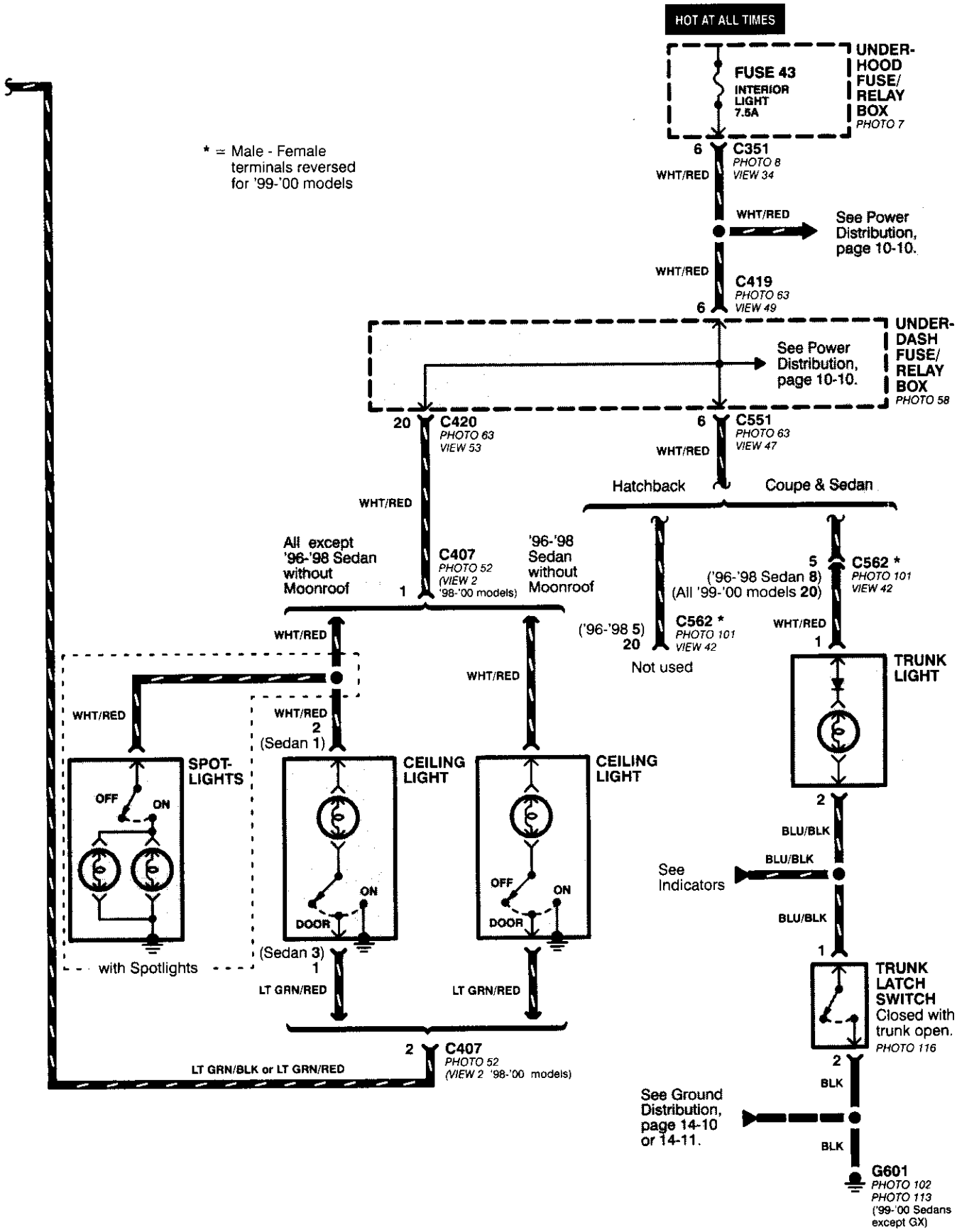
HOT AT ALL TIMES
FUSE 43
INTERIOR LIGHT 7.5A
UNDER-HOOD FUSE/ RELAY BOX
PHOTO 7
* = Male - Female terminals reversed for '99-'00 models
6
C351
PHOTO 8
VIEW 34
WHT/RED
See Power Distribution, page 10-10.
C419
PHOTO 63
VIEW 49
UNDER-DASH FUSE/ RELAY BOX
PHOTO 58
20
C420
PHOTO 63
VIEW 53
C551
PHOTO 63
VIEW 47
Hatchback
Coupe & Sedan
All except '96-'98 Sedan without Moonroof
C407
PHOTO 52
(VIEW 2 '98-'00 models)
'96-'98 Sedan without Moonroof
('96-'98 5)
20
C562 *
PHOTO 101
VIEW 42
Not used
5
C562 *
PHOTO 101
VIEW 42
('96-'98 Sedan 8)
(All '99-'00 models 20)
TRUNK LIGHT
SPOT-LIGHTS
OFF
ON
with Spotlights
(Sedan 1)
CEILING LIGHT
DOOR
(Sedan 3)
LT GRN/RED
LT GRN/BLK or LT GRN/RED
BLU/BLK
See Indicators
TRUNK LATCH SWITCH
Closed with trunk open.
PHOTO 116
BLK
See Ground Distribution, page 14-10 or 14-11.
G601
PHOTO 102
PHOTO 113
('99-'00 Sedans except GX)

Power Windows

– Driver's Door and Front Passenger Door

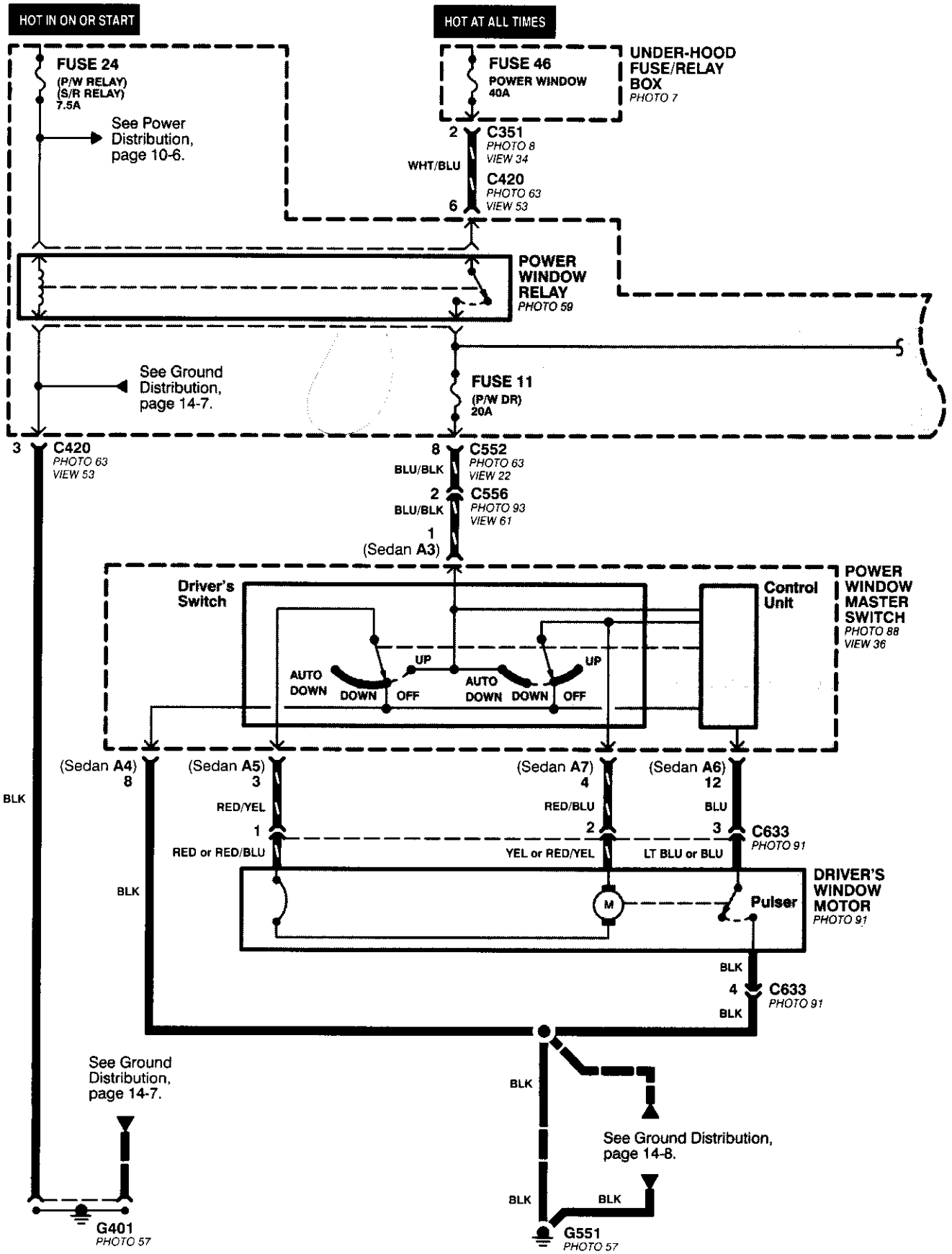

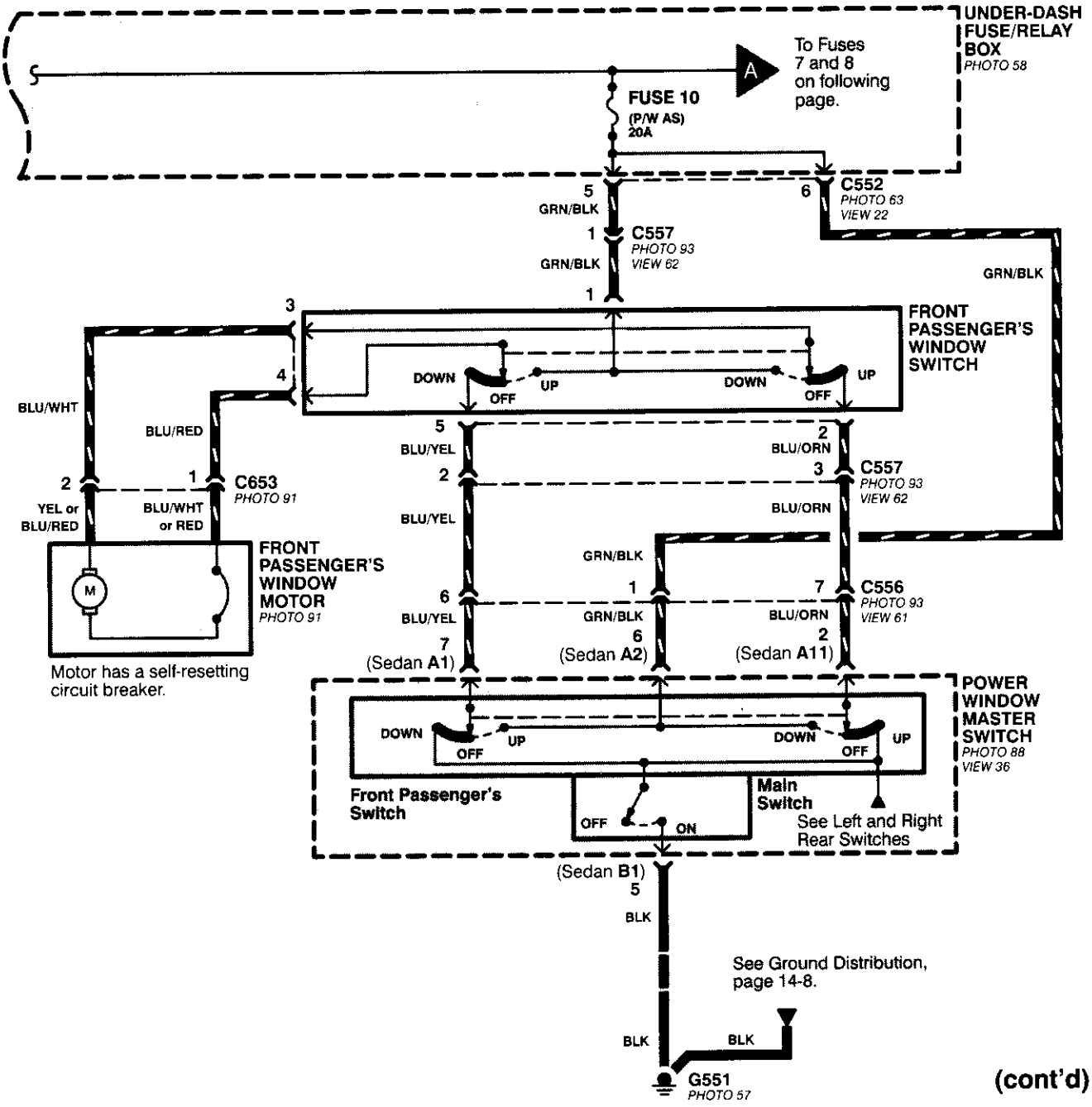
UNDER-DASH FUSE/RELAY BOX
PHOTO 58
To Fuses 7 and 8 on following page.
A
FUSE 10
(P/W AS)
20A
5
GRN/BLK
6
C552
PHOTO 63
VIEW 22
1
C557
PHOTO 93
VIEW 62
GRN/BLK
GRN/BLK
1
3
4
FRONT PASSENGER'S WINDOW SWITCH
DOWN
UP
OFF
DOWN
UP
OFF
BLU/WHT
BLU/RED
5
BLU/YEL
2
BLU/ORN
2
1
C653
PHOTO 91
2
3
C557
PHOTO 93
VIEW 62
YEL or BLU/RED
BLU/WHT or RED
BLU/YEL
BLU/ORN
FRONT PASSENGER'S WINDOW MOTOR
PHOTO 91
M
GRN/BLK
6
1
7
C556
PHOTO 93
VIEW 61
BLU/YEL
GRN/BLK
BLU/ORN
7
(Sedan A1)
6
(Sedan A2)
2
(Sedan A11)
Motor has a self-resetting circuit breaker.
POWER WINDOW MASTER SWITCH
PHOTO 88
VIEW 36
DOWN
UP
OFF
DOWN
UP
OFF
Front Passenger's Switch
Main Switch
OFF
ON
See Left and Right Rear Switches
(Sedan B1)
5
BLK
See Ground Distribution, page 14-8.
BLK
BLK
G551
PHOTO 57

(cont'd)

Power Windows (cont'd)

– Rear Doors

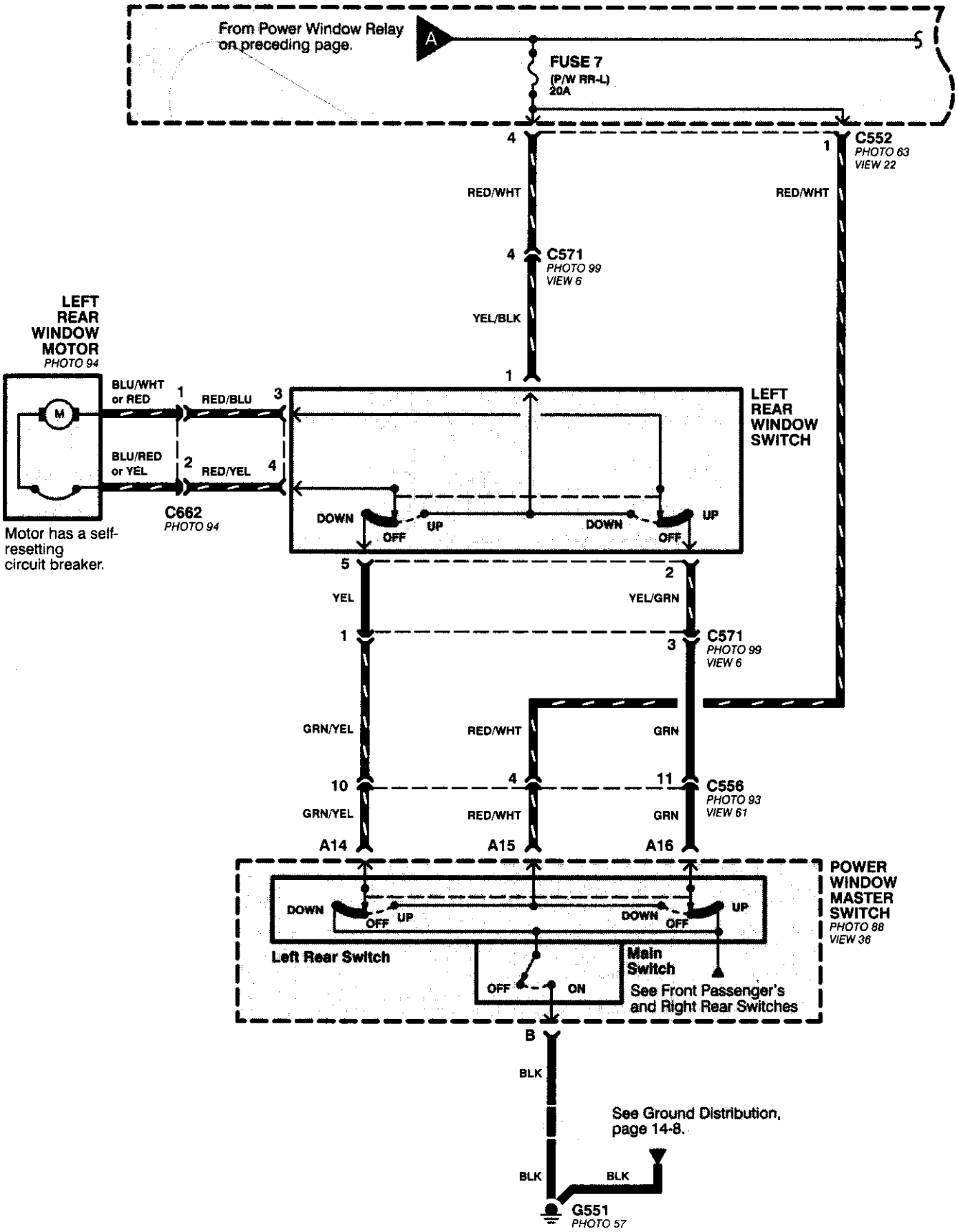

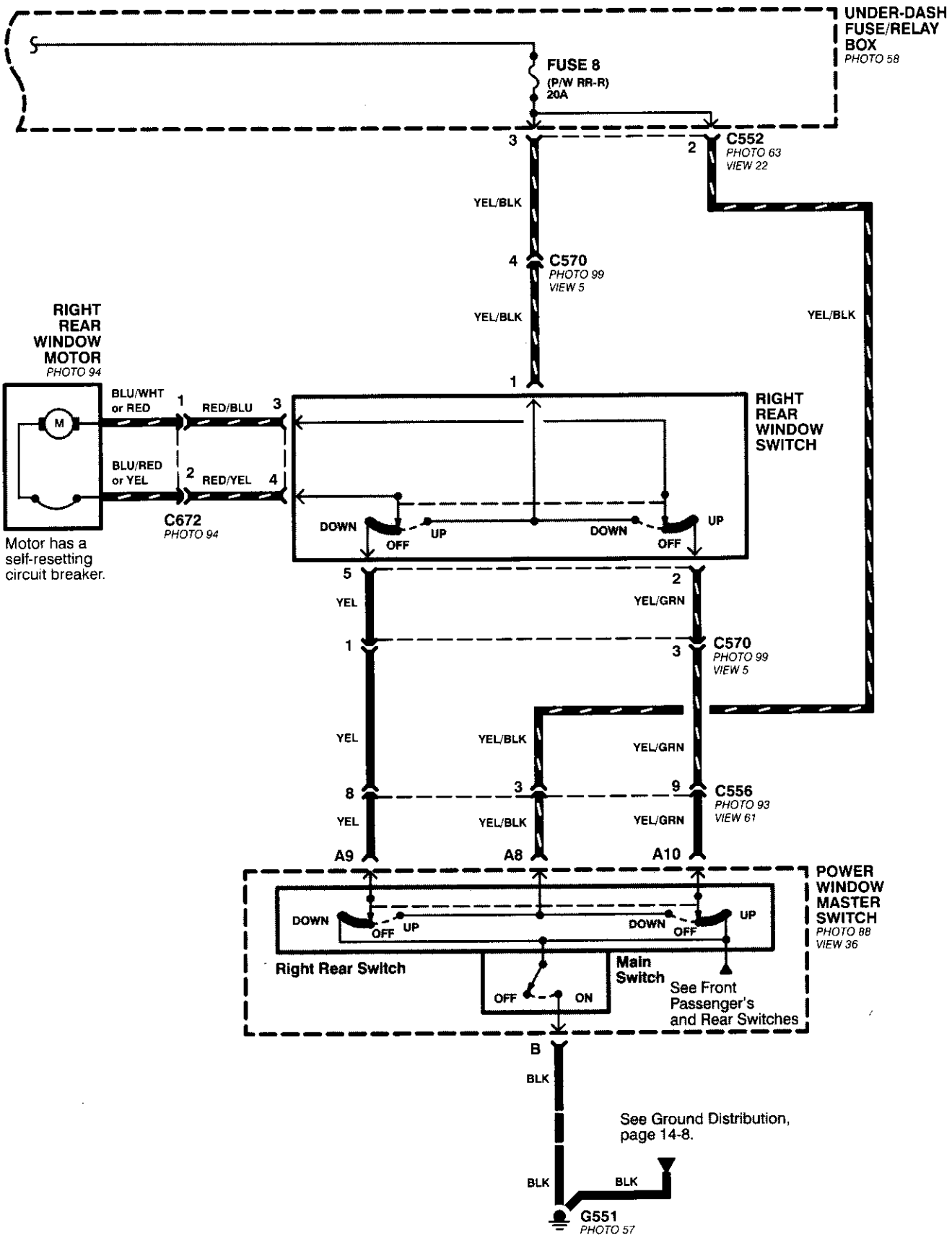
UNDER-DASH FUSE/RELAY BOX
PHOTO 58
FUSE 8
(P/W RR-R)
20A
3
2
C552
PHOTO 63
VIEW 22
YEL/BLK
4
C570
PHOTO 99
VIEW 5
YEL/BLK
YEL/BLK
RIGHT REAR WINDOW MOTOR
PHOTO 94
M
BLU/WHT or RED
1
RED/BLU
3
BLU/RED or YEL
2
RED/YEL
4
C672
PHOTO 94
Motor has a self-resetting circuit breaker.
1
RIGHT REAR WINDOW SWITCH
DOWN
UP
OFF
DOWN
UP
OFF
5
2
YEL
YEL/GRN
1
3
C570
PHOTO 99
VIEW 5
YEL
YEL/BLK
YEL/GRN
8
3
9
C556
PHOTO 93
VIEW 61
YEL
YEL/BLK
YEL/GRN
A9
A8
A10
POWER WINDOW MASTER SWITCH
PHOTO 88
VIEW 36
DOWN
UP
OFF
DOWN
UP
OFF
Right Rear Switch
Main Switch
OFF
ON
See Front Passenger's and Rear Switches
B
BLK
See Ground Distribution, page 14-8.
BLK
BLK
G551
PHOTO 57

How the Circuit Works

CAUTION: You could injure your arms, hands, or fingers if you unintentionally switch the driver's window to "automatic down" while working in that door with the power on. Disconnect the window switch connector or the battery when working in the driver's door.

System Description

The operation of the power windows is controlled by the main switch in the power window master switch. When the main switch is in OFF, only the driver's door window can be opened or closed. With the main switch ON, all windows can be opened or closed either by switches in the master panel, or switches in the doors. The driver's window switch also has an automatic down mode which is turned on by pushing the switch down to its second position.

The power windows are driven by reversible motors. Each motor is protected by a built-in circuit breaker. If the window switch is held on too long (with the window obstructed, or after the window is fully up or down), the circuit breaker opens the circuit. The circuit breaker resets automatically as it cools.

Driver's Window

With the ignition switch in ON, voltage is provided to the coil of the power window relay through fuse 24. The contacts of the power window relay close, and voltage is applied to the driver's switch. When you push the power window master switch to UP, voltage is applied to the driver's window motor. (The motor's ground path is back through the master power window switch.) The driver's window motor then drives the window up. When you push the switch to DOWN, voltage is applied in the opposite direction and the motor drives the window down.

Automatic Down (Driver's Window)

With the ignition switch in ON or START, voltage is applied to the coil of the power window relay. The contacts of the power window relay close and voltage is applied to the power window master switch. When you push the driver's switch to the AUTO DOWN position, voltage is applied through the driver's switch to the driver's window motor. The control unit receives pulses at the pulser input while the motor is running. When the window is fully down, the motor stops, and pulses are no longer generated by the pulser. This is sensed by the control unit at the pulser input, and voltage is no longer applied to the driver's window motor.

Passenger Windows

With the ignition switch in ON, voltage is applied to the coil of the power window relay through fuse 24. The contacts of the power window relay then close, applying voltage to the individual window switches and the power window master switch. With the master panel main switch ON, the passenger windows can be operated from the individual window switches or from the master panel switches.

When you push the front passenger's window switch to UP, voltage is applied to the front passenger's window motor. (The motor is grounded through the contacts in the front passenger's window switch and the power window master switch.) The window moves up as long as you hold the switch in the UP position. If you push the switch to DOWN, voltage is applied in the opposite direction to the front passenger's window motor, and the window moves down as long as you hold the switch in the DOWN position. The window switches in the other doors operate similarly.

When you push the front passenger's switch in the master panel to UP, voltage is applied through the front passenger's window switch contacts to the front passenger's window motor. (The motor is grounded through the contacts in the front passenger's window switch and the power window master switch.) The window moves up as long as you hold the switch in the UP position. If you push the switch to DOWN, voltage is applied in the opposite direction to the front passenger's window motor, and the window moves down as long as you hold the switch in the DOWN position. The other passenger window switches in the master panel operate similarly.

Refer to the Service Manual (Section 23, Electrical) for specific tests or troubleshooting procedures.

Moonroof

'96-'97 Models

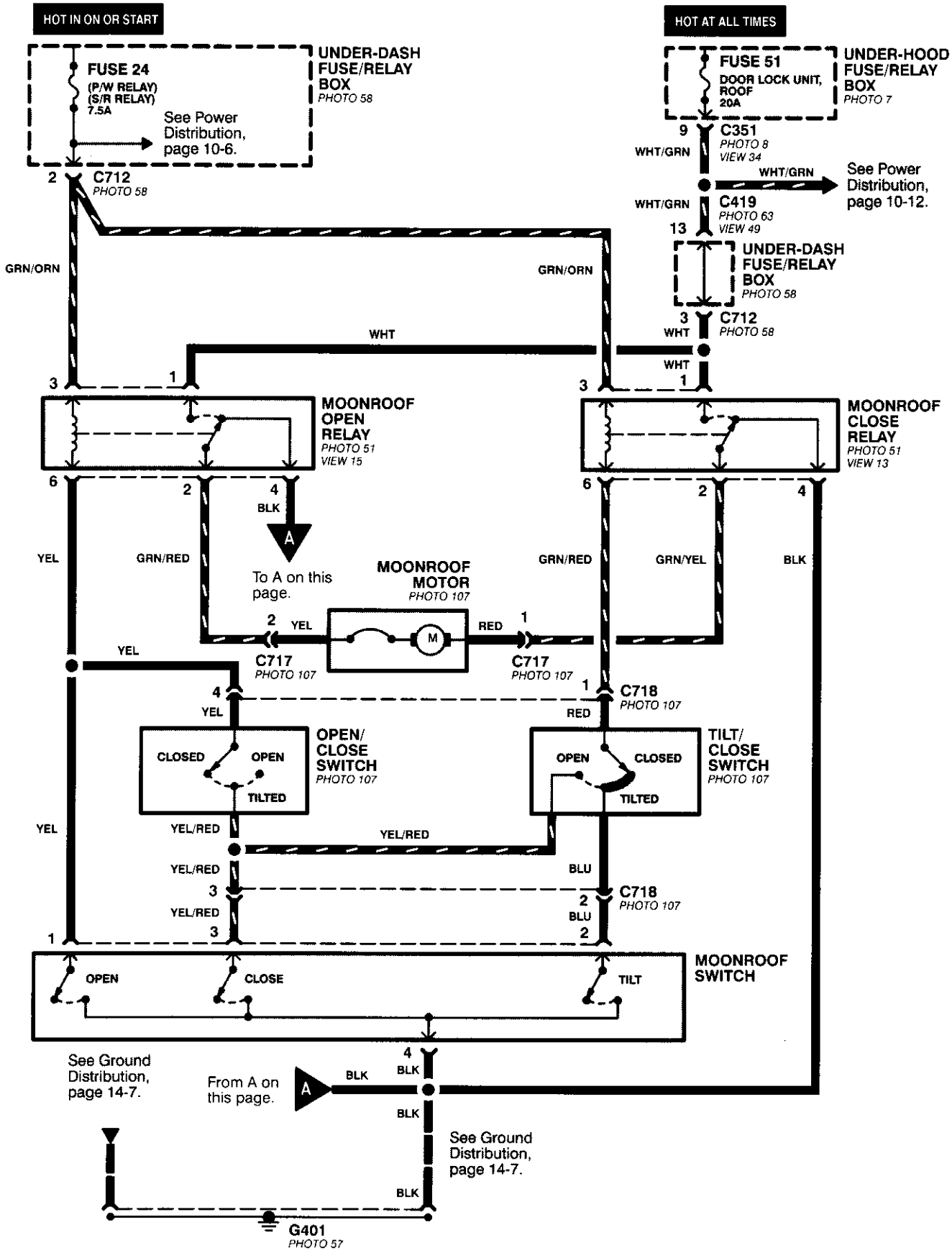

'98-'00 Models

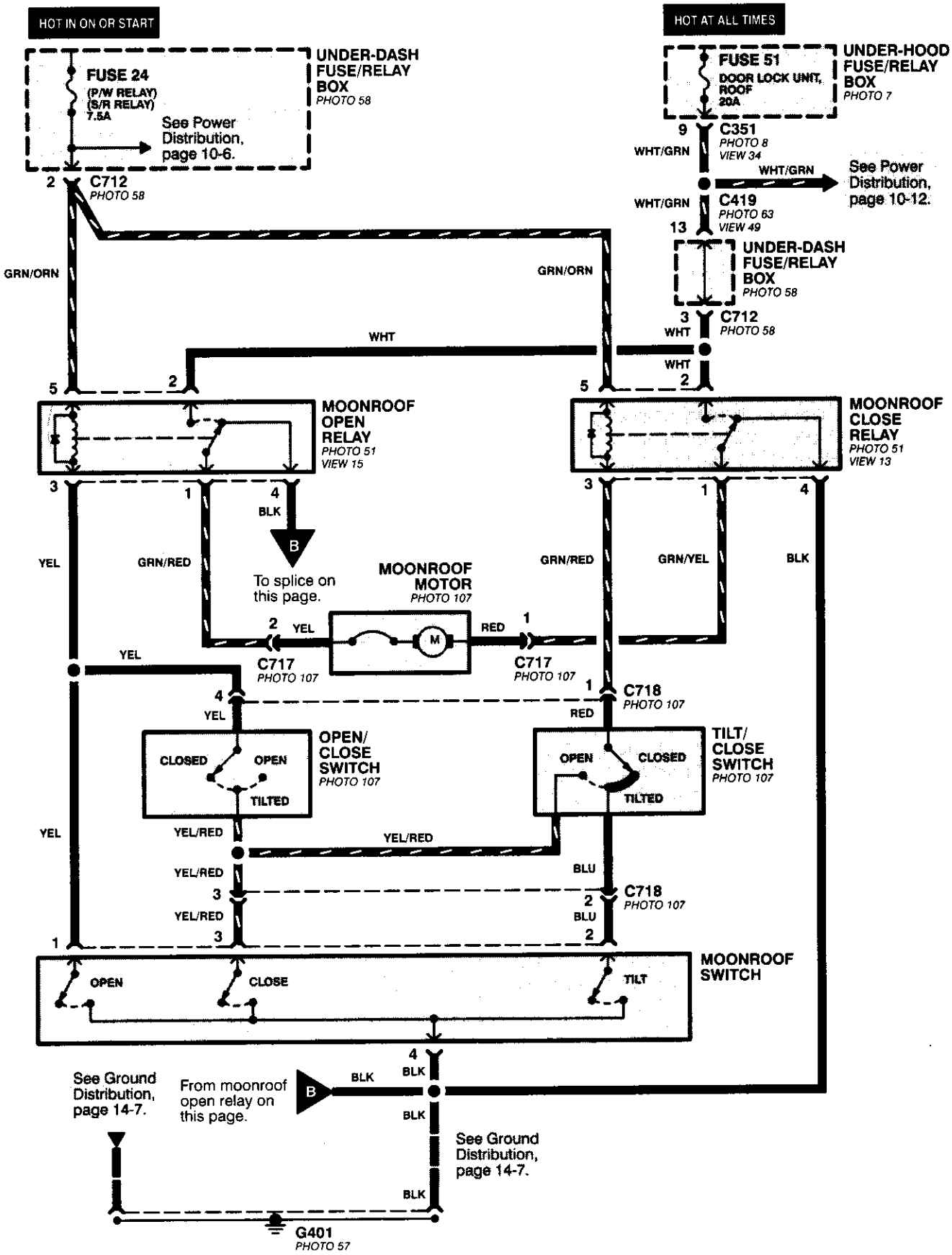
HOT IN ON OR START
HOT AT ALL TIMES
FUSE 24
(P/W RELAY)
(S/R RELAY)
7.5A
See Power Distribution, page 10-6.
UNDER-DASH FUSE/RELAY BOX
PHOTO 58
FUSE 51
DOOR LOCK UNIT, ROOF
20A
UNDER-HOOD FUSE/RELAY BOX
PHOTO 7
C351
PHOTO 8
VIEW 34
WHT/GRN
See Power Distribution, page 10-12.
C419
PHOTO 63
VIEW 49
UNDER-DASH FUSE/RELAY BOX
PHOTO 58
C712
PHOTO 58
GRN/ORN
WHT
MOONROOF OPEN RELAY
PHOTO 51
VIEW 15
MOONROOF CLOSE RELAY
PHOTO 51
VIEW 13
BLK
To splice on this page.
MOONROOF MOTOR
PHOTO 107
YEL
GRN/RED
GRN/YEL
RED
C717
PHOTO 107
C718
PHOTO 107
OPEN/ CLOSE SWITCH
PHOTO 107
CLOSED
OPEN
TILTED
TILT/ CLOSE SWITCH
PHOTO 107
YEL/RED
BLU
MOONROOF SWITCH
OPEN
CLOSE
TILT
See Ground Distribution, page 14-7.
From moonroof open relay on this page.
G401
PHOTO 57

How the Circuit Works

Moonroof Open

When you push the moonroof switch to the OPEN position, the moonroof open switch applies ground to the moonroof "open" relay through the YEL wire. The moonroof "open" relay applies battery voltage to the moonroof motor through the GRN/RED wire. The moonroof "close" relay supplies ground to the moonroof motor through its normally closed relay contacts. When the moonroof moves out of the fully closed position, the tilt/close switch moves to the OPEN position; the open/close switch moves to the OPEN position.

Moonroof Tilt

When you push the moonroof switch to the TILT position, the moonroof tilt switch applies ground to the moonroof "close" relay through the BLU wire, tilt/close switch and RED wire. The moonroof "close" relay applies battery voltage to the GRN/YEL wire to the moonroof motor. The moonroof "open" relay supplies ground to the moonroof motor through its normally closed relay contacts. When the moonroof is in the tilt position, the tilt/close switch moves to the TILTED position; the open/close switch moves to the TILTED position.

Moonroof Close from the Open Position

When you push the moonroof switch to the CLOSE position, the moonroof "close" switch applies ground to the moonroof "close" relay through the YEL/RED wire, tilt/close switch and GRN/RED wire. The moonroof "close" relay applies battery voltage to the GRN/YEL wire to the moonroof motor. The moonroof "open" relay supplies ground to the moonroof motor through its normally closed relay contacts. When the moonroof is fully closed, the tilt/close switch moves to the closed position; the open/close switch moves to the CLOSED position.

Moonroof Close from the Tilt Position

When you push the moonroof switch to the CLOSE position, the moonroof "open" switch applies ground to the moonroof "close" relay through the YEL/RED wire, open/close switch and moonroof "open" relay. The moonroof "open" relay applies battery voltage to the moonroof motor through the GRN/RED wire. The moonroof "close" relay supplies ground to the moonroof motor through its normally closed relay contacts. When the moonroof is fully closed, the tilt/close switch moves to the closed position and the open/close switch moves to the CLOSED position.

Refer to the Service Manual (Section 23, Electrical) for specific tests or troubleshooting procedures.

Power Door Locks

– All Models Without Keyless Entry

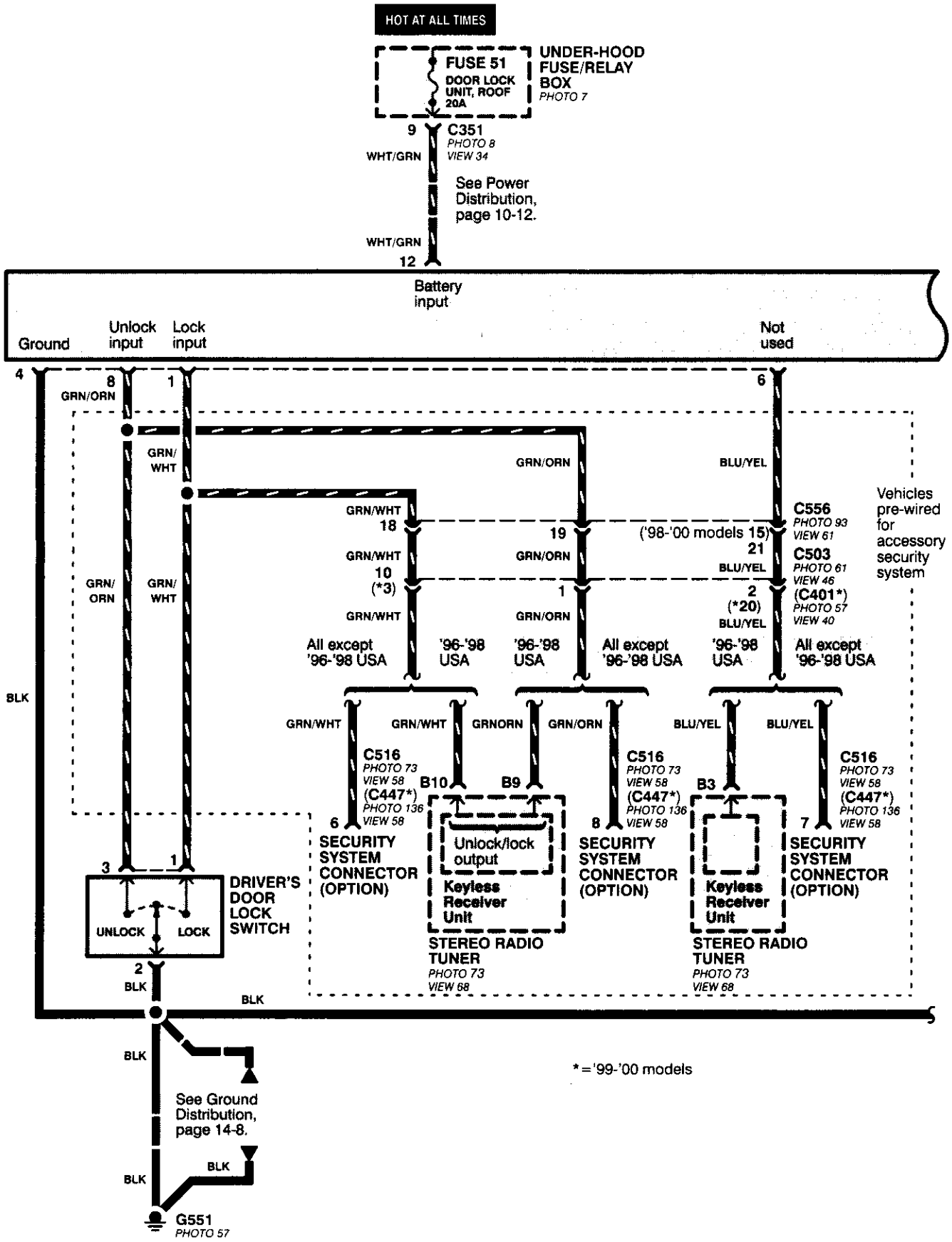

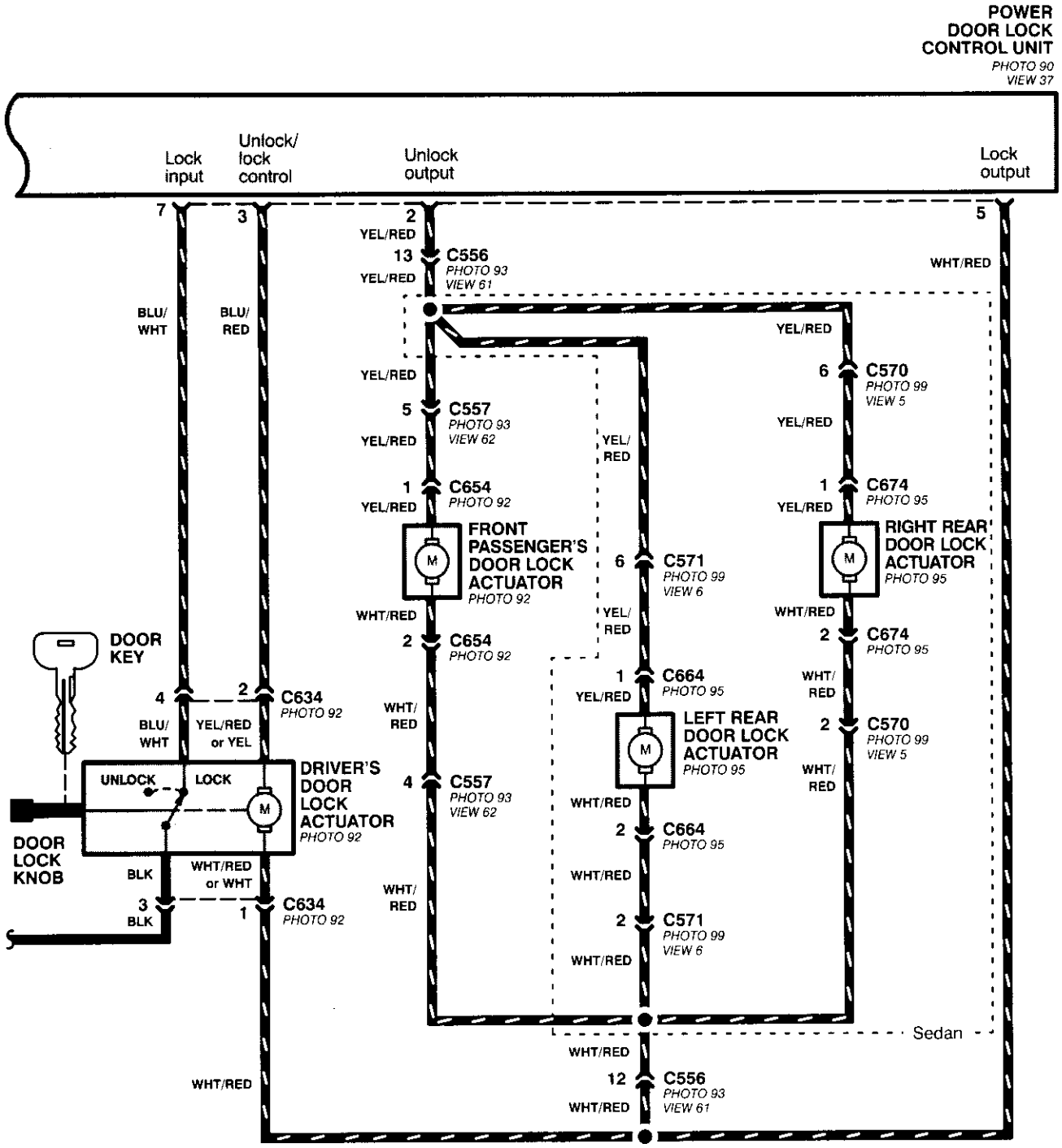
POWER DOOR LOCK CONTROL UNIT
PHOTO 90
VIEW 37
Lock input
Unlock/ lock control
Unlock output
Lock output
7
3
2
5
YEL/RED
13
C556
PHOTO 93
VIEW 61
YEL/RED
WHT/RED
BLU/ WHT
BLU/ RED
YEL/RED
6
C570
PHOTO 99
VIEW 5
YEL/RED
5
C557
PHOTO 93
VIEW 62
YEL/RED
YEL/ RED
YEL/RED
1
C654
PHOTO 92
YEL/RED
1
C674
PHOTO 95
YEL/RED
FRONT PASSENGER'S DOOR LOCK ACTUATOR
PHOTO 92
6
C571
PHOTO 99
VIEW 6
RIGHT REAR DOOR LOCK ACTUATOR
PHOTO 95
WHT/RED
YEL/ RED
WHT/RED
2
C654
PHOTO 92
2
C674
PHOTO 95
DOOR KEY
4
2
C634
PHOTO 92
WHT/ RED
1
C664
PHOTO 95
YEL/RED
WHT/ RED
BLU/ WHT
YEL/RED or YEL
LEFT REAR DOOR LOCK ACTUATOR
PHOTO 95
2
C570
PHOTO 99
VIEW 5
UNLOCK
LOCK
DRIVER'S DOOR LOCK ACTUATOR
PHOTO 92
4
C557
PHOTO 93
VIEW 62
WHT/ RED
WHT/ RED
DOOR LOCK KNOB
WHT/RED
2
C664
PHOTO 95
BLK
WHT/RED or WHT
WHT/RED
3
BLK
1
C634
PHOTO 92
WHT/ RED
2
C571
PHOTO 99
VIEW 6
WHT/RED
Sedan
WHT/RED
WHT/RED
12
C556
PHOTO 93
VIEW 61
WHT/RED

Power Door Locks

– '96-'98 Models With Keyless Entry

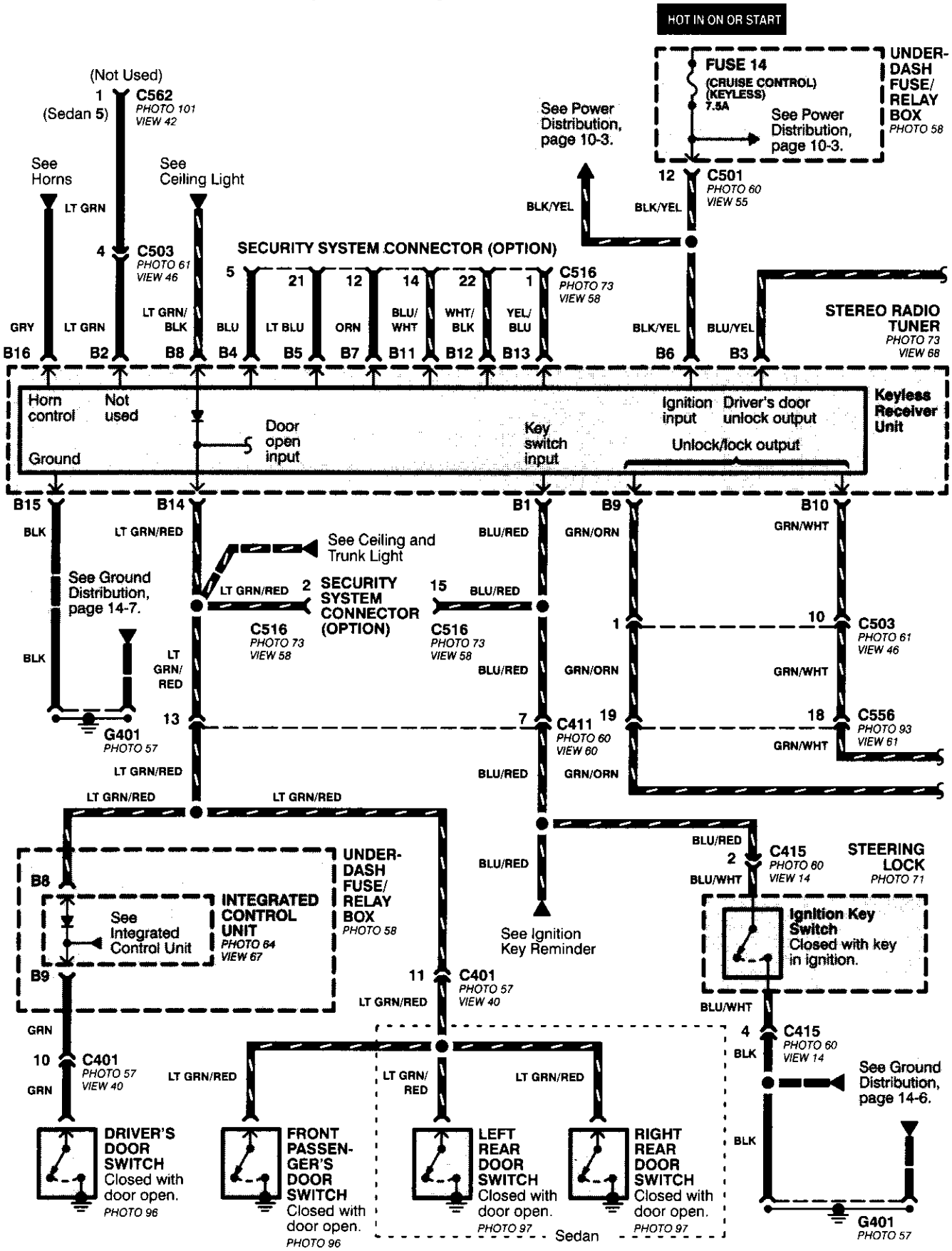

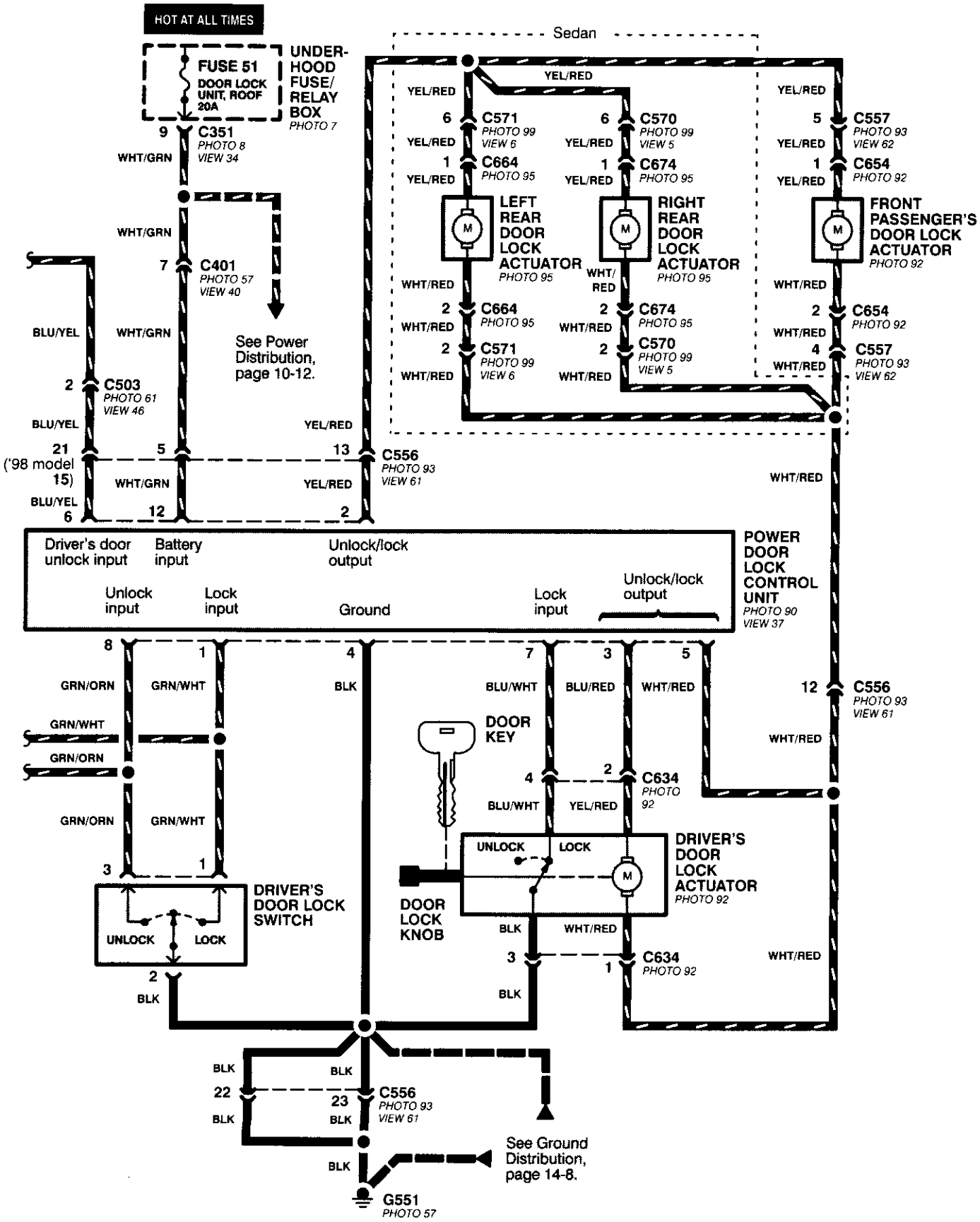
HOT AT ALL TIMES
FUSE 51
DOOR LOCK UNIT, ROOF 20A
UNDER-HOOD FUSE/ RELAY BOX
PHOTO 7
9
C351
PHOTO 8
VIEW 34
WHT/GRN
WHT/GRN
7
C401
PHOTO 57
VIEW 40
See Power Distribution, page 10-12.
BLU/YEL
WHT/GRN
2
C503
PHOTO 61
VIEW 46
BLU/YEL
21
('98 model 15)
5
13
C556
PHOTO 93
VIEW 61
YEL/RED
WHT/GRN
YEL/RED
BLU/YEL
6
12
2
Sedan
YEL/RED
6
C571
PHOTO 99
VIEW 6
YEL/RED
1
C664
PHOTO 95
YEL/RED
LEFT REAR DOOR LOCK ACTUATOR
PHOTO 95
WHT/RED
2
C664
PHOTO 95
WHT/RED
2
C571
PHOTO 99
VIEW 6
WHT/RED
6
C570
PHOTO 99
VIEW 5
YEL/RED
1
C674
PHOTO 95
YEL/RED
RIGHT REAR DOOR LOCK ACTUATOR
PHOTO 95
WHT/RED
2
C674
PHOTO 95
WHT/RED
2
C570
PHOTO 99
VIEW 5
WHT/RED
YEL/RED
5
C557
PHOTO 93
VIEW 62
YEL/RED
1
C654
PHOTO 92
YEL/RED
FRONT PASSENGER'S DOOR LOCK ACTUATOR
PHOTO 92
WHT/RED
2
C654
PHOTO 92
WHT/RED
4
C557
PHOTO 93
VIEW 62
WHT/RED
WHT/RED
Driver's door unlock input
Battery input
Unlock/lock output
Unlock input
Lock input
Ground
Lock input
Unlock/lock output
POWER DOOR LOCK CONTROL UNIT
PHOTO 90
VIEW 37
8
1
4
7
3
5
GRN/ORN
GRN/WHT
BLK
BLU/WHT
BLU/RED
WHT/RED
12
C556
PHOTO 93
VIEW 61
GRN/WHT
GRN/ORN
WHT/RED
DOOR KEY
4
2
C634
PHOTO 92
BLU/WHT
YEL/RED
GRN/ORN
GRN/WHT
UNLOCK
LOCK
DRIVER'S DOOR LOCK ACTUATOR
PHOTO 92
3
1
DRIVER'S DOOR LOCK SWITCH
UNLOCK
LOCK
DOOR LOCK KNOB
BLK
WHT/RED
3
1
C634
PHOTO 92
WHT/RED
2
BLK
BLK
BLK
BLK
22
23
C556
PHOTO 93
VIEW 61
BLK
BLK
BLK
See Ground Distribution, page 14-8.
G551
PHOTO 57

How the Circuit Works

Keyless Entry System

The keyless door locks combine the power door locks with a remote key-fob transmitter. The keyless receiver unit is part of the radio. The keyless receiver unit receives direct inputs from the ignition key switch, the passenger door switches, and an indirect input from the driver's door switch through the integrated control unit.

Power Door Locks (With or Without Keyless)

The power door lock system is made up of the power door lock control unit, driver's door lock switch, and individual door lock actuators. The power door locks are controlled by the driver's door lock switch and the driver's door lock actuator switch.

Transmitter (With Keyless Entry)

The transmitter sends coded radio wave signals to the keyless receiver unit when one of its buttons is pressed. Each transmitter has a unique code that must be "taught" to the keyless receiver unit before it can operate the door locks or any other function. Up to 4 transmitters can be programmed to operate the keyless door locks.

Door Locking (With or Without Keyless Entry)

When you push the driver's door lock switch to the lock position, ground is applied to the GRN/WHT wire to the power door lock control unit. The control unit then applies battery voltage to the WHT/RED wire and ground to the YEL/RED wire. The passenger door lock actuators then activate to lock the corresponding door locks.
When you lock the driver's door with the key or door lock knob, it is mechanically locked, and the driver's door lock actuator switch applies ground to the power door lock control unit. The control unit then applies battery voltage to the WHT/RED wire and ground to the YEL/RED wire, activating the passenger door lock actuators which lock the doors.

Door Locking with Transmitter

When you press the LOCK button on the remote transmitter, the power door lock control unit applies battery voltage to the WHT/RED wire and ground to the YEL/RED wire. The passenger door lock actuators then activate and lock the doors. A ground signal is also applied to the BLU/RED wire to lock the driver's door. If any door is open, you cannot lock it using the remote transmitter.

Door Unlocking (With or Without Keyless Entry)

When you push the driver's power door lock switch to the unlock position, ground is applied to the GRN/ORN wire to the power door lock control unit. The control unit then applies battery voltage to the YEL/RED and BLU/RED wires and ground to the WHT/RED wire. The door lock actuators then activate to unlock the doors.
When you unlock the driver's door with the key or the door lock knob, it is mechanically unlocked; the other doors do not unlock.

Door Unlocking (With Transmitter)

When you press the UNLOCK button on the remote transmitter once, the power door lock control unit applies battery voltage to the WHT/RED wire and ground to the BLU/RED wire to unlock the driver's door. When you press the UNLOCK button twice, the control unit then applies ground to the YEL/RED wires to activate the passenger door locks. If you do not open a door within 30 seconds after unlocking the doors with the transmitter, the doors automatically relock.

Transmitter Programming

1. Turn the ignition switch ON (II).
2. Press and hold the Valet-Disarm button on the radio (between the AM/FM button and the CD/TAPE button) to enter the programming mode. (Continue to hold the button during the procedure, or programming will be cancelled.) Check that the power door locks cycle to confirm that you're in the programming mode.
3. Press the "LOCK" or "UNLOCK" button on the transmitter. Check that the power door locks cycle to confirm that the code was accepted.
4. Press the "LOCK" or "UNLOCK" button on each of the remaining transmitters. (You can program up to four transmitters per vehicle.)
5. After all the transmitters have been programmed, release the Valet-Disarm button to exit the programming mode.

Beep On/Off Feature

1. Press and hold the LOCK and OPTION buttons on the transmitter.
2. Watch the transmitter's LED:
   One flash: Beep activated.
   Two flashes: Beep deactivated.

Keyless Receiver Unit Troubleshooting

If a faulty keyless receiver unit has one of the symptoms below, turn to the page listed and follow the appropriate troubleshooting procedure. If the symptom seems related to an input problem, or is not covered by the troubleshooting procedures, do the Input Tests on page 130-6. Refer to the circuit schematic on pages 130-2 and 130-3 as needed.

Symptom Index

Keyless Entry Does Not Work In Any Mode ..... Page 130-8

Ceiling Light Does Not Come On When The Doors Are Unlocked With The Transmitter ..... Page 130-9

Doors Do Not Unlock Or Lock With The Transmitter ..... Page 130-10

Horn Does Not Sound With The Transmitter "Beep" Feature On ..... Page 130-11

Horn Does Not Sound In The Panic Mode ..... Page 130-11

Horn Does Not Stop Sounding ..... Page 130-11

Input Tests ..... Page 130-6

Keyless Receiver Unit Input Test

The following tests are performed with A (Main) and B (Keyless) disconnected from the audio unit.

A

Terminal No.	Wire Color	Test Condition	Test: Desired Result	Possible Cause if result is not obtained
4	WHT/BLU	Under all conditions	Check for voltage to ground: There should be battery voltage.	• Blown No. 47 (7.5A) fuse in the under-hood fuse/relay box • An open in the wire
5	YEL/RED	Ignition switch ACC (I)	Check for voltage to ground: There should be battery voltage.	• Blown No. 28 (10A) fuse in the under-dash fuse/relay box • An open in the wire

B

Terminal No.	Wire Color	Test Condition	Test: Desired Result	Possible Cause if result is not obtained
1	BLU/RED	Ignition key inserted into the ignition key switch	Check for voltage to ground: There should be 1 V or less.	• Poor ground (G401, G402) • Faulty ignition key switch • An open in the wire • Short in the wire
		Ignition key removed from the ignition key switch	Check for voltage to ground: There should be 4 V or more.	
3	BLU/YEL	Under all conditions	Check for continuity between the audio unit 16P connector No. 3 terminal and power door lock control unit 12P connector No. 6 terminal: There should be continuity.	• An open in the wire
6	BLK/YEL	Ignition switch ON (II)	Check for voltage to ground: There should be battery voltage.	• Blown No. 14 (7.5A) fuse in the under-dash fuse/relay box • An open in the wire
8	LT GRN/ BLK	Ceiling light switch in "middle position"	Connect to ground: The ceiling light should come on.	• Blown No. 43 (7.5A) fuse in the under-hood fuse/relay box • Blown ceiling light bulb • Faulty ceiling light • An open in the wire
14	LT GRN/ RED	Each door opened, one at a time	Check for continuity to ground: There should be continuity.	• Faulty door switch • An open in the wire
15	BLK	Under all conditions	Check for continuity to ground: There should be continuity.	• Poor ground (G401, G402) • An open in the wire
16	GRY	Under all conditions	Connect to ground: Horn should sound.	• Blown No. 52 (15A) fuse in the under-hood fuse/relay box • Faulty horn • Faulty horn relay • An open in the wire

The following tests are performed with A (Main) reconnected to the audio unit.

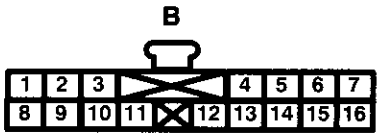

Terminal No.	Wire Color	Test Condition	Test: Desired Result	Possible Cause if result is not obtained
9	GRN/ORN	Driver's door lock switch in UNLOCK	Check for voltage to ground: There should be 1 V or less.	• Poor ground (G551) • Faulty driver's door lock switch • An open in the wire • Short in the wire
		Driver door lock switch in LOCK	Check for voltage to ground: There should be 4 V or more.	
10	GRN/WHT	Driver's door lock switch in UNLOCK	Check for voltage to ground: There should be 4 V or more.	• Poor ground (G551) • Faulty driver's door lock switch • An open in the wire • Short in the wire
		Driver's door lock switch in LOCK	Check for voltage to ground: There should be 1 V or less.	

Keyless Entry Does Not Work In Any Mode

NOTE: Before beginning, verify that all the transmitters are programmed to the vehicle.

1. Does the radio work properly?
   Yes – Go to step 9.
   No – Go to the next step.

NOTE: For steps 2 - 8, refer to the schematic diagram for the Stereo Sound System on page 150.

2. Are fuses 28 (in the under-dash fuse box) and fuse 47 (in the under-hood fuse box) OK?
   Yes – Go to step 4.
   No – Replace the blown fuse, then go to the next step.
3. Does the fuse blow again?
   Yes – Locate and repair the short.
   No – Retest the system.
4. Is the vehicle equipped with the optional security system?
   Yes – Go to the next step.
   No – Go to step 6.
5. Does the keyless entry work correctly when the security control unit connector is disconnected?
   Yes – Faulty security system, go to security system for further troubleshooting.
   No – Go to the next step.
6. Is there battery voltage at terminal 4 of the radio main harness connector (A)?

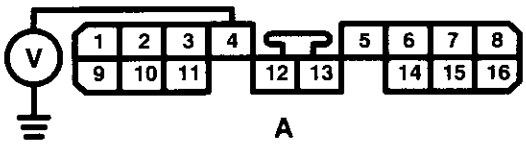

   Yes – Go to the next step.
   No – Locate the open in the wiring between fuse 47 and the radio.
7. Is there battery voltage at terminal 5 of the radio main harness connector (A), when the ignition switch is in the ACC (I) or ON (II) position?

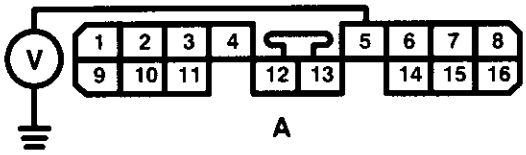

   Yes – Go to the next step.
   No – Locate the open in the wiring between fuse 28 and the radio.
8. Is there continuity from terminal 14 of the radio main harness connector (A) to ground?

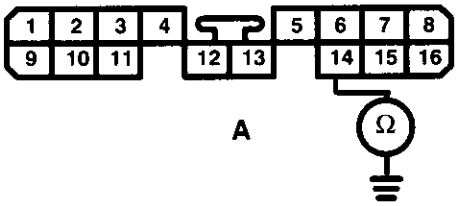

   Yes – Replace the radio.
   No – Repair the open in the wiring between the radio and the ground (G501).
9. Does the transmitter LED come on when any of the buttons are pressed?
   Yes – Go to step 12.
   No – Go to the next step.
10. Is the transmitter battery installed with the positive side facing up?

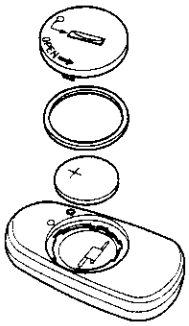

   Yes – Ensure that the battery contact tabs are repositioned, then replace the battery. Remove the key from the ignition, then close the doors and trunk. Press the LOCK button on the transmitter six times, then go to the next step.
   No – Ensure that the battery contact tabs are repositioned, then reinstall the battery correctly. Then reprogram the transmitter and retest it. Use the procedure on page 130-4 for transmitter programming.
11. Does the transmitter LED come on when any of the buttons are pressed?
   Yes – Go to the next step.
   No – Replace the transmitter and program it by using the procedure on page 130-4.
12. Does the system work properly in all modes?
   Yes – Finished. The system is OK.
   No – Go to the next step.

13. Recheck with a known good transmitter reprogrammed to the vehicle. Does the system work properly in all modes?
    Yes – Replace the transmitter and program it by using the procedure on page 130-4.
    No – Replace the radio.

Ceiling Light Does Not Come On When The Doors Are Unlocked With The Transmitter

NOTE: The vehicle must have a factory radio installed.

1. Is the ceiling light switch in the center position?
   Yes – Go to the next step.
   No – Reposition the ceiling light switch and retest.
2. Does the ceiling light come on with the ceiling light switch in the ON position?
   Yes – Go to the next step.
   No – Repair the ceiling light circuit.
3. Does the transmitter LED come on when any of the buttons are pressed?
   Yes – Go to the next step.
   No – Check the transmitter battery, then retest. If the ceiling light still does not work, go to the next step.
4. Recheck with a known good transmitter reprogrammed to the vehicle. Does the system work properly in all modes?
   Yes – Replace the transmitter and program it by using the procedure on page 130-4.
   No – Go to the next step.
5. With the keyless entry harness connector (B) disconnected from the radio, run a jumper wire from terminal 8 to ground.

   Does the ceiling light come on?

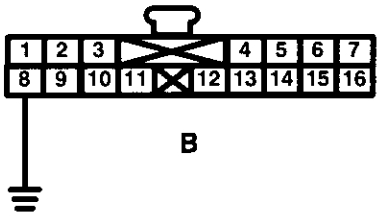

   Yes – Replace the radio.
   No – Repair the open in the keyless entry harness connector (B) terminal 8 (LT GRN/BLK) wire.

Doors Do Not Unlock Or Lock With The Transmitter

1. Do the door's unlock and lock when using the driver's door lock switch?
   Yes – Go to the next step.
   No – Repair the power door lock system.
2. Does the transmitter LED come on when any of the buttons are pressed?
   Yes – Go to the next step.
   No – Check the transmitter battery, then retest. If the doors still do not unlock or lock with the transmitter, go to the next step.
3. Recheck with a known good transmitter reprogrammed to the vehicle. Does the system work properly in all modes.
   Yes – Replace and program the transmitter, then retest. Use the procedure on page 130-4 for transmitter programming.
   No – Go to the next step.
4. Run a jumper wire from terminal 9 of the keyless entry harness connector (B) to ground.

   Do the doors unlock?

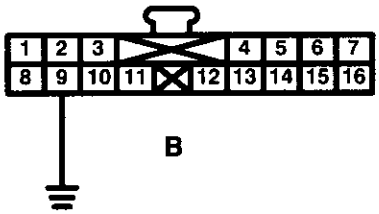

   Yes – Go to the next step.
   No – Repair the open in the terminal 9 (GRN/ORN) wire.

5. Run a jumper wire from terminal 10 of the keyless entry harness connector (B) to ground.

   Do the doors lock?

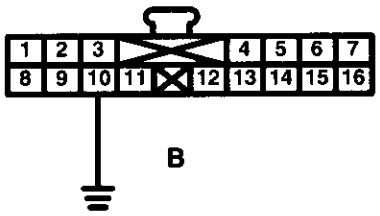

   Yes – Go to the next step.
   No – Repair the open in the terminal 10 (GRN/WHT) wire.
6. Does the voltage at terminal 1 of the keyless entry harness connector (B) change from battery voltage when the key is not in the ignition, to less than 1 volt when the key is in the ignition?

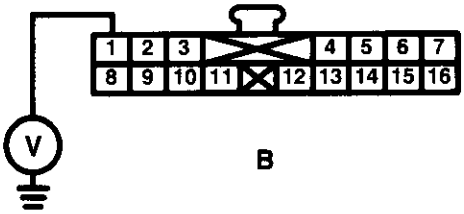

   Yes – Go to the next step.
   No – Replace the ignition switch or repair the damaged terminal 1 (BLU/RED) wire.
7. Does the voltage at terminal 14 of the keyless entry harness connector (B) change from battery voltage when all the doors are closed, to less than 1 volt when any door is opened?

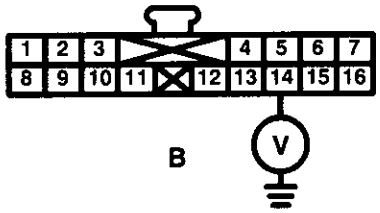

   Yes – Replace the radio.
   No – Repair the open in the terminal 14 (LT GRN/RED) wire.

Horn Does Not Sound In The Panic Mode Or With The Transmitter "Beep" Feature On

NOTE: The transmitter has a Beep On/Off feature. Refer to page 130-4 for how to turn the beep on or off.

1. Does the horn sound when the HORN button is pressed?
   Yes – Go to the next step.
   No – Repair the horn circuit.
2. Does the transmitter LED come on when any of the buttons are pressed?
   Yes – Go to the next step.
   No – Check the transmitter battery, then retest. If the beep feature still does not work, go to the next step.
3. Recheck with a known good transmitter reprogrammed to the vehicle. Does the system work properly in all modes?
   Yes – Replace and program the transmitter, then retest. Use the procedure on page 130-4 for transmitter programming.
   No – Go to the next step.
4. With the keyless entry harness connector (B) disconnected from the radio, run a jumper wire from terminal 16 to ground.

   Does the horn sound?

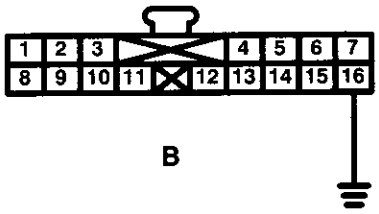

   Yes – Replace the radio.
   No – Repair the open in the terminal 16 (GRY) wire.

Horn Does Not Stop Sounding

1. Is the vehicle equipped with the optional security system?
   Yes – Go to the next step.
   No – Go to step 3.
2. Does the horn stop sounding when the security control unit connector is disconnected?
   Yes – Replace the security control unit.
   No – Go to the next step.
3. Does the horn stop sounding when the keyless entry harness connector (B) is disconnected?
   Yes – Replace the radio.
   No – Repair the horn circuit.

Power Door Locks

– '99-'00 Models with Keyless Entry

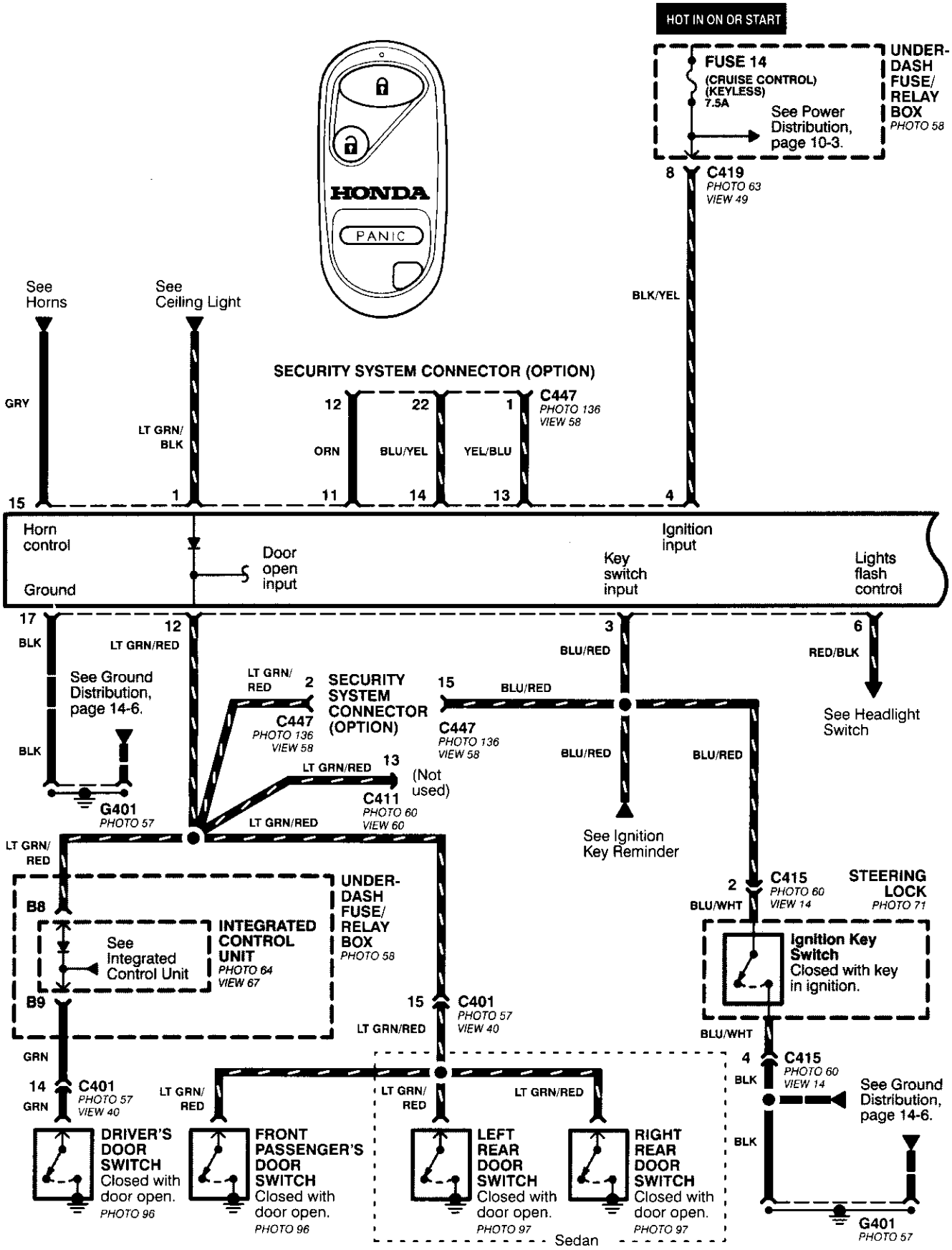

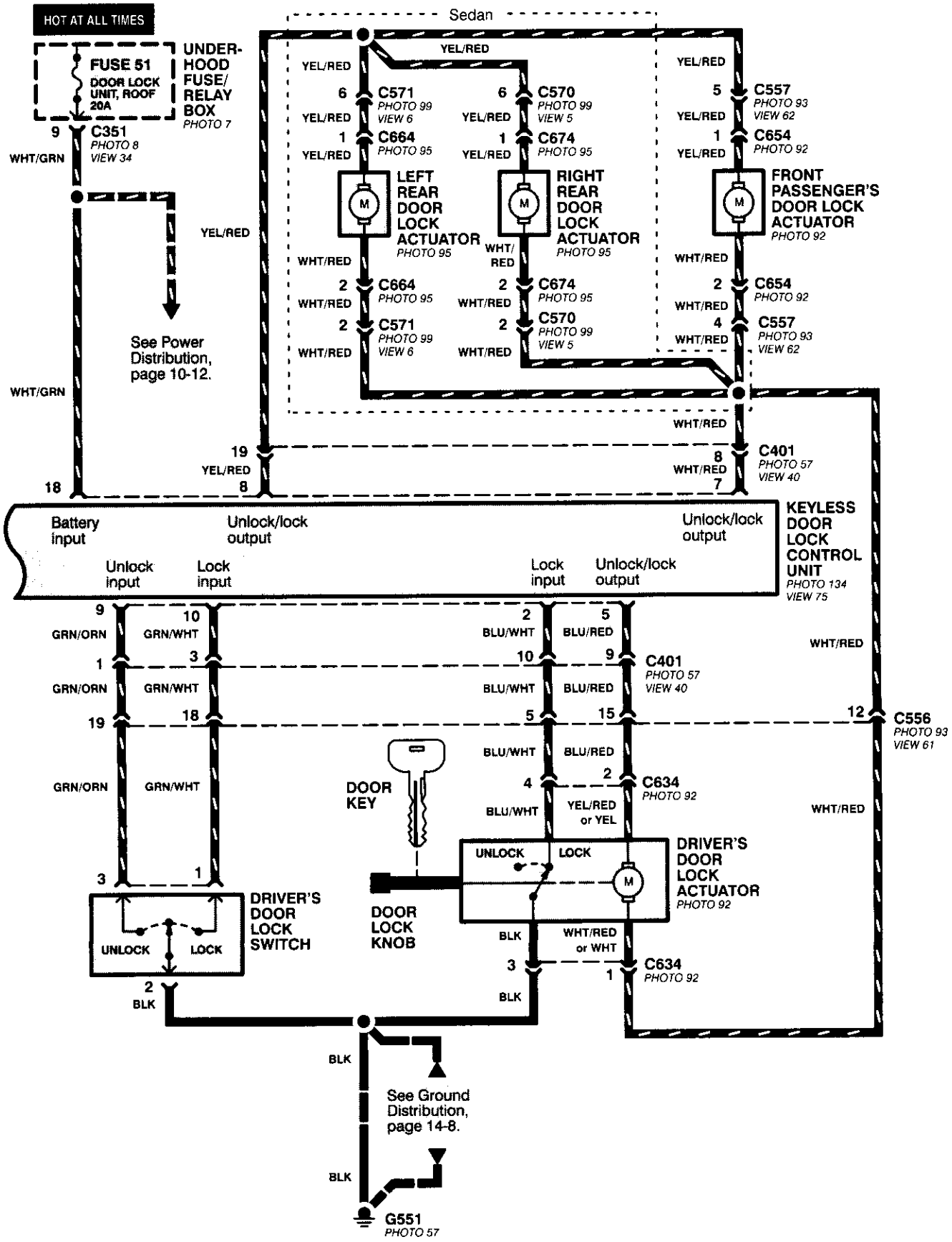
HOT AT ALL TIMES
FUSE 51
DOOR LOCK UNIT, ROOF 20A
UNDER-HOOD FUSE/ RELAY BOX
PHOTO 7
9
C351
PHOTO 8
VIEW 34
WHT/GRN
See Power Distribution, page 10-12.
Sedan
YEL/RED
6
C571
PHOTO 99
VIEW 6
C570
PHOTO 99
VIEW 5
5
C557
PHOTO 93
VIEW 62
1
C664
PHOTO 95
C674
PHOTO 95
C654
PHOTO 92
LEFT REAR DOOR LOCK ACTUATOR
PHOTO 95
RIGHT REAR DOOR LOCK ACTUATOR
PHOTO 95
FRONT PASSENGER'S DOOR LOCK ACTUATOR
PHOTO 92
WHT/RED
WHT/ RED
2
C664
PHOTO 95
C674
PHOTO 95
C654
PHOTO 92
C571
PHOTO 99
VIEW 6
C570
PHOTO 99
VIEW 5
4
C557
PHOTO 93
VIEW 62
19
8
C401
PHOTO 57
VIEW 40
7
18
Battery input
Unlock/lock output
Unlock/lock output
KEYLESS DOOR LOCK CONTROL UNIT
PHOTO 134
VIEW 75
Unlock input
Lock input
Lock input
Unlock/lock output
10
GRN/ORN
GRN/WHT
BLU/WHT
BLU/RED
3
C401
PHOTO 57
VIEW 40
15
12
C556
PHOTO 93
VIEW 61
DOOR KEY
C634
PHOTO 92
YEL/RED or YEL
UNLOCK
LOCK
DRIVER'S DOOR LOCK ACTUATOR
PHOTO 92
DRIVER'S DOOR LOCK SWITCH
DOOR LOCK KNOB
BLK
WHT/RED or WHT
See Ground Distribution, page 14-8.
G551
PHOTO 57

How the Circuit Works

Keyless Entry System

The keyless door locks combine the power door locks with a remote key-fob transmitter. The keyless door lock control unit receives direct inputs from the ignition key switch, the passenger door switches, and an indirect input from the driver's door switch through the integrated control unit.

Power Door Locks

The power door lock system is made up of the keyless door lock control unit, driver's door lock switch, and individual door lock actuators. The power door locks are controlled by the driver's door lock switch and the driver's door lock actuator switch.

Transmitter

The transmitter sends coded radio wave signals to the keyless door lock control unit when one of its buttons is pressed. Each transmitter has a unique code that must be "taught" to the control unit before it can operate the door locks or any other function. Up to 4 transmitters can be programmed to operate the keyless door locks.

Door Locking

When you push the driver's door lock switch to the lock position, ground is applied to the GRN/WHT wire to the keyless door lock control unit. The control unit then applies battery voltage to the WHT/RED wire and ground to the YEL/RED wire. The passenger door lock actuators then activate to lock the corresponding door locks.
When you lock the driver's door with the key or door lock knob, it is mechanically locked, and the driver's door lock actuator switch applies ground to the power door lock control unit. The control unit then applies battery voltage to the WHT/RED wire and ground to the YEL/RED wire, activating the passenger door lock actuators which lock the doors.

Door Locking with Transmitter

When you press the LOCK button on the remote transmitter, the keyless door lock control unit applies battery voltage to the WHT/RED wire and ground to the YEL/RED wire. The passenger door lock actuators then activate and lock the doors. A ground signal is also applied to the BLU/RED wire to lock the driver's door. If any door is open, you cannot lock it using the remote transmitter.

Door Unlocking

When you push the driver's power door lock switch to the unlock position, ground is applied to the GRN/ORN wire to the keyless door lock control unit. The control unit then applies battery voltage to the YEL/RED and BLU/RED wires and ground to the WHT/RED wire. The door lock actuators then activate to unlock the doors.
When you unlock the driver's door with the key or the door lock knob, it is mechanically unlocked; the other doors do not unlock.

Door Unlocking with Transmitter

When you press the UNLOCK button on the remote transmitter once, the keyless door lock control unit applies battery voltage to the WHT/RED wire and ground to the BLU/RED wire to unlock the driver's door. When you press the UNLOCK button twice, the control unit then applies ground to the YEL/RED wires to activate the passenger door locks. If you do not open a door within 30 seconds after unlocking the doors with the transmitter, the doors automatically relock.

Transmitter Programming

- Entering the programming mode cancels all learned transmitter codes, so none of the previously programmed transmitters will work. You must reprogram all the transmitters once you're in the programming mode.
- To keep the system from exiting the programming mode, complete each step within 5 seconds of the previous step, and program the transmitters within 10 seconds of each other.

1. Turn the ignition switch ON (II).
2. Press the "LOCK" or "UNLOCK" button on one of the transmitters. (A non-programmed transmitter can be used for this step.)
3. Turn the ignition switch OFF (0).
4. Repeat steps 1, 2, and 3 two more times with the transmitter used in step 2.
5. Turn the ignition switch ON (II).
6. Press the "LOCK" or "UNLOCK" button on the same transmitter. Check that the power door locks cycle to confirm that you're in the programming mode.
7. Press the "LOCK" or "UNLOCK" button on each transmitter. (You can program up to four transmitters per vehicle.) Check that the power door locks cycle after you push each transmitter button, confirming that the system has accepted the transmitter's code.

Beep On/Off Feature

1. Press and hold the LOCK and OPTION buttons on the transmitter.
2. Watch the transmitter's LED:
   One flash: Beep activated.
   Two flashes: Beep deactivated.

Keyless Receiver Unit Troubleshooting

If a faulty keyless door lock control unit has one of the symptoms below, turn to the page listed and follow the appropriate troubleshooting procedure. If the symptom seems related to an input problem, or is not covered by the troubleshooting procedures, do the Input Tests on page 130-16. Refer to the circuit schematic on pages 130-12 and 130-13 as needed.

Symptom Index

Keyless Entry Does Not Work In Any Mode ..... Page 130-17

Ceiling Light Does Not Come On When The Doors Are Unlocked With The Transmitter ..... Page 130-18

Doors Do Not Unlock Or Lock With The Transmitter ..... Page 130-18

Horn Does Not Sound With The Transmitter "Beep" Feature On ..... Page 130-19

Horn Does Not Sound In The Panic Mode ..... Page 130-19

Horn Does Not Stop Sounding ..... Page 130-19

Input Tests ..... Page 130-16

Keyless Door Lock Control Unit Input Test

The following tests are performed with the keyless door lock control unit connector disconnected.

Terminal No.	Wire Color	Test Condition	Test: Desired Result	Possible Cause if result is not obtained
1	LT GRN/ BLK	Ceiling light switch in "middle position"	Connect to ground: The ceiling light should come on.	• Blown No. 43 (7.5A) fuse in the under-hood fuse/relay box • Blown ceiling light bulb • Faulty ceiling light • An open in the wire
3	BLU/RED	Ignition key inserted into the ignition key switch	Check for voltage to ground: There should be 1 V or less.	• Poor ground (G401, G402) • Faulty ignition key switch • An open in the wire • Short in the wire
		Ignition key removed from the ignition key switch	Check for voltage to ground: There should be 4 V or more.	
4	BLK/YEL	Ignition switch ON (II)	Check for voltage to ground: There should be battery voltage.	• Blown No. 14 (7.5A) fuse in the under-dash fuse/relay box • An open in the wire
6	RED/BLK	Headlight switch in PARK or HEAD	Check for voltage to ground: There should be battery voltage.	• Blown No. 32 (7.5A) fuse in the under-dash fuse/relay box • A faulty headlight switch • An open in the wire
12	LT GRN/ RED	Each door opened, one at a time	Check for continuity to ground: There should be continuity.	• Faulty door switch • An open in the wire
15	GRY	Under all conditions	Connect to ground: Horn should sound.	• Blown No. 52 (15A) fuse in the under-hood fuse/relay box • Faulty horn • Faulty horn relay • An open in the wire
17	BLK	Under all conditions	Check for continuity to ground: There should be continuity.	• Poor ground (G401, G402) • An open in the wire

Keyless Entry Does Not Work In Any Mode

NOTE: Before beginning, verify that all the transmitters are programmed to the vehicle.

1. Is the vehicle equipped with the optional security system?
   Yes – Go to the next step.
   No – Go to step 3.
2. Does the keyless entry work correctly when the security control unit connector is disconnected?
   Yes – Faulty security system, go to security system for further troubleshooting.
   No – Go to the next step.
3. Does the transmitter LED come on when any of the buttons are pressed?
   Yes – Go to step 6.
   No – Go to the next step.
4. Is the transmitter battery installed with the positive side facing up?

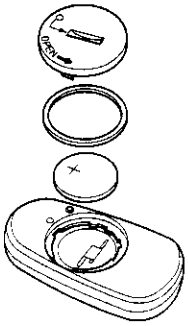

   Yes – Ensure that the battery contact tabs are repositioned, then replace the battery. Remove the key from the ignition, then close the doors and trunk. Press the LOCK button on the transmitter six times, then go to the next step.
   No – Ensure that the battery contact tabs are repositioned, then reinstall the battery correctly. Then reprogram the transmitter and retest it. Use the procedure on page 130-14 for transmitter programming.
5. Does the transmitter LED come on when any of the buttons are pressed?
   Yes – Go to the next step.
   No – Replace the transmitter and program it by using the procedure on page 130-14.
6. Does the system work properly in all modes?
   Yes – Finished. The system is OK.
   No – Go to the next step.
7. Recheck with a known good transmitter reprogrammed to the vehicle. Does the system work properly in all modes?
   Yes – Replace the transmitter and program it by using the procedure on page 130-14.
   No – Replace the keyless door lock control unit.

Ceiling Light Does Not Come On When The Doors Are Unlocked With The Transmitter

1. Is the ceiling light switch in the center position?
   Yes – Go to the next step.
   No – Reposition the ceiling light switch and retest.
2. Does the ceiling light come on with the ceiling light switch in the ON position?
   Yes – Go to the next step.
   No – Repair the ceiling light circuit.
3. Does the transmitter LED come on when any of the buttons are pressed?
   Yes – Go to the next step.
   No – Check the transmitter battery, then retest. If the ceiling light still does not work, go to the next step.
4. Recheck with a known good transmitter reprogrammed to the vehicle. Does the system work properly in all modes?
   Yes – Replace the transmitter and program it by using the procedure on page 130-14.
   No – Go to the next step.
5. With the keyless door lock control unit connector disconnected, run a jumper wire from terminal 1 to ground.

   Does the ceiling light come on?

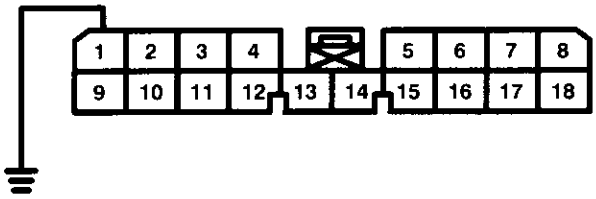

   Yes – Replace the keyless door lock control unit.
   No – Repair the open in the terminal 1 (LT GRN/BLK) wire.

Doors Do Not Unlock Or Lock With The Transmitter

1. Do the door's unlock and lock when using the driver's door lock switch?
   Yes – Go to the next step.
   No – Repair the power door lock system.
2. Does the transmitter LED come on when any of the buttons are pressed?
   Yes – Go to the next step.
   No – Check the transmitter battery, then retest. If the doors still do not unlock or lock with the transmitter, go to the next step.
3. Recheck with a known good transmitter reprogrammed to the vehicle. Does the system work properly in all modes.
   Yes – Replace and program the transmitter, then retest. Use the procedure on page 130-14 for transmitter programming.
   No – Go to the next step.
4. Does the voltage at terminal 3 of the keyless door lock control unit connector change from battery voltage when the key is not in the ignition, to less than 1 volt when the key is in the ignition?

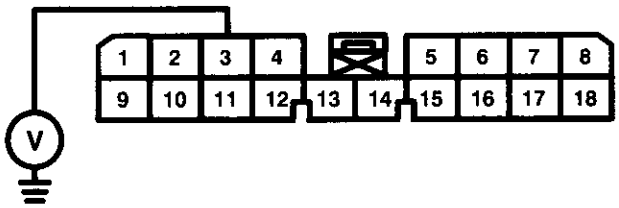

   Yes – Go to the next step.
   No – Replace the ignition switch or repair the damaged terminal 3 (BLU/RED) wire.
5. Does the voltage at terminal 12 of the keyless door lock control unit connector change from battery voltage when all the doors are closed, to less than 1 volt when any door is opened?

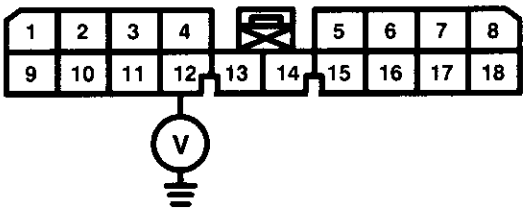

   Yes – Replace the keyless door lock control unit.
   No – Repair the open in the terminal 12 (LT GRN/RED) wire.

Horn Does Not Sound In The Panic Mode Or With The Transmitter "Beep" Feature On

NOTE: The transmitter has a Beep On/Off feature. Refer to page 130-14 for how to turn the beep on or off.

1. Does the horn sound when the HORN button is pressed?
   Yes – Go to the next step.
   No – Repair the horn circuit.
2. Does the transmitter LED come on when any of the buttons are pressed?
   Yes – Go to the next step.
   No – Check the transmitter battery, then retest. If the beep feature still does not work, go to the next step.
3. Recheck with a known good transmitter reprogrammed to the vehicle. Does the system work properly in all modes?
   Yes – Replace and program the transmitter, then retest. Use the procedure on page 130-14 for transmitter programming.
   No – Go to the next step.
4. With the keyless door lock control unit connector disconnected, run a jumper wire from terminal 15 to ground.

   Does the horn sound?

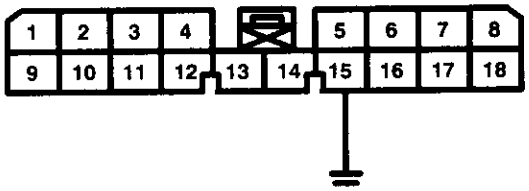

   Yes – Replace the keyless door lock control unit.
   No – Repair the open in the terminal 15 (GRY) wire.

Horn Does Not Stop Sounding

1. Is the vehicle equipped with the optional security system?
   Yes – Go to the next step.
   No – Go to step 3.
2. Does the horn stop sounding when the security control unit connector is disconnected?
   Yes – Replace the security control unit.
   No – Go to the next step.
3. Does the horn stop sounding when the keyless door lock control unit connector is disconnected?
   Yes – Replace the keyless door lock control unit.
   No – Repair the horn circuit.

Security System

– '96-'98 USA: HX, LX, EX; '96-'98 Canada: EX, Si

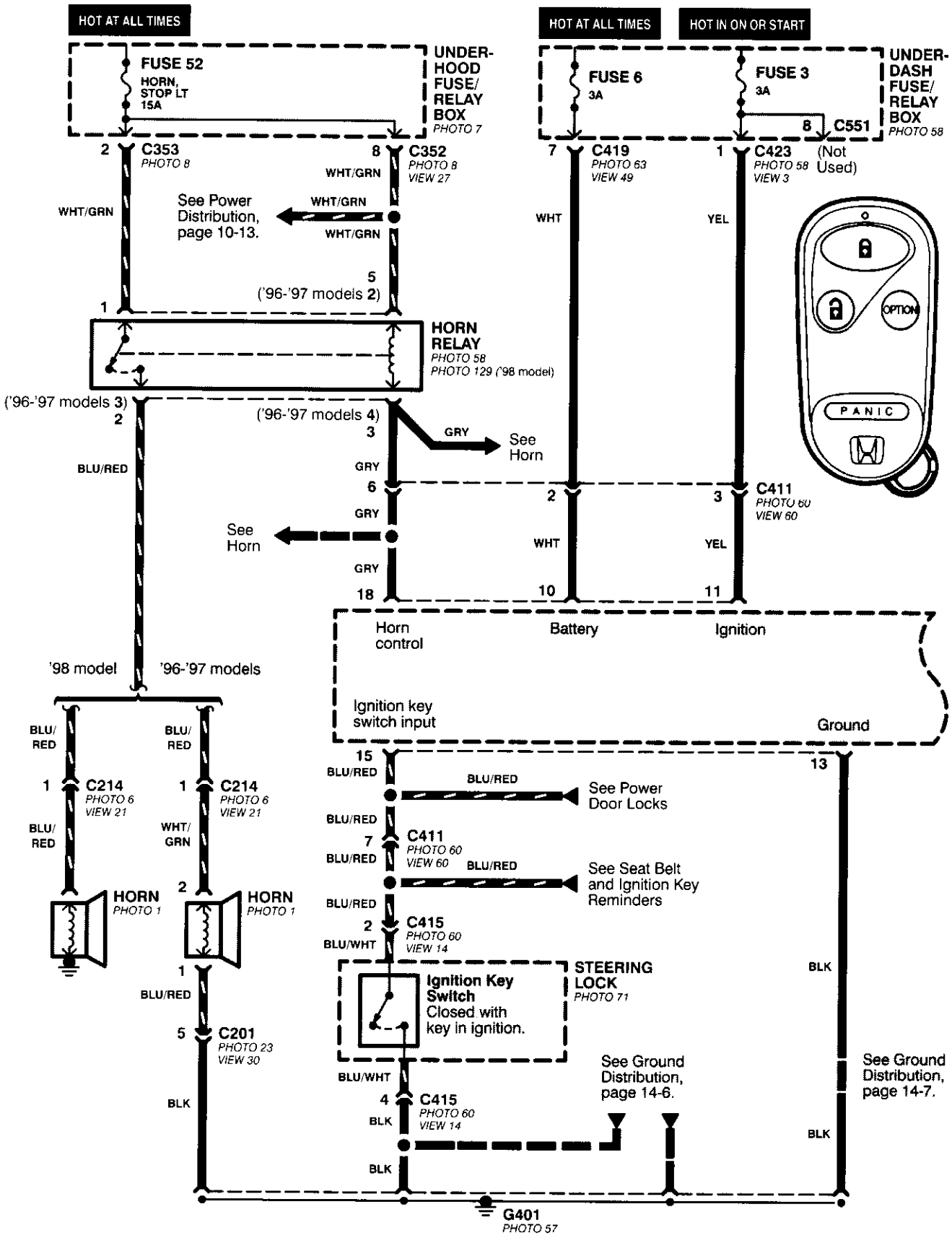

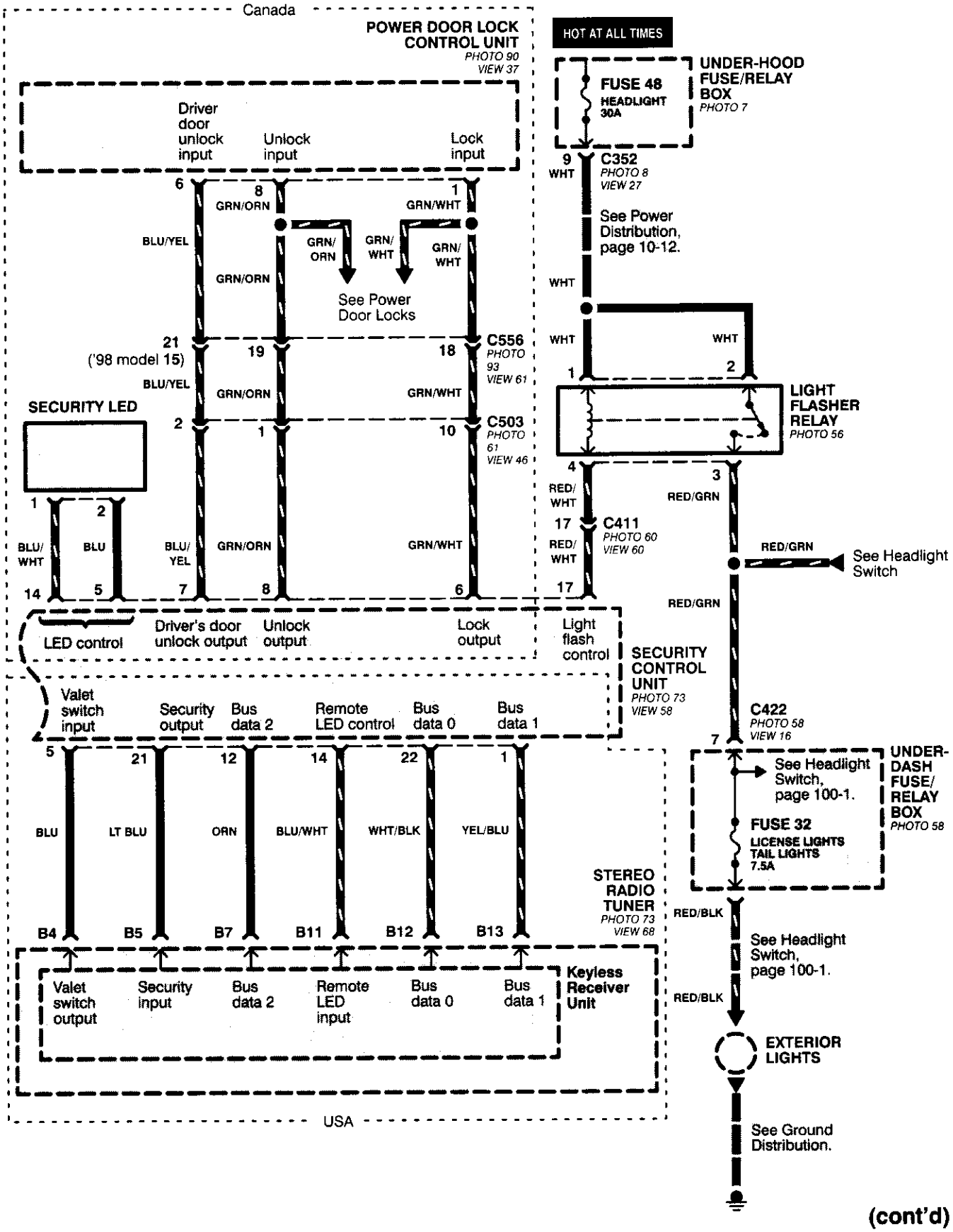
Canada
POWER DOOR LOCK CONTROL UNIT
PHOTO 90
VIEW 37
Driver door unlock input
Unlock input
Lock input
6
8
1
GRN/ORN
GRN/WHT
BLU/YEL
GRN/ORN
GRN/ ORN
GRN/ WHT
GRN/ WHT
See Power Door Locks
21
('98 model 15)
19
18
C556
PHOTO 93
VIEW 61
BLU/YEL
GRN/ORN
GRN/WHT
SECURITY LED
2
1
10
C503
PHOTO 61
VIEW 46
1
2
BLU/ WHT
BLU
BLU/ YEL
GRN/ORN
GRN/WHT
14
5
7
8
6
LED control
Driver's door unlock output
Unlock output
Lock output
Light flash control
SECURITY CONTROL UNIT
PHOTO 73
VIEW 58
Valet switch input
Security output
Bus data 2
Remote LED control
Bus data 0
Bus data 1
5
21
12
14
22
1
BLU
LT BLU
ORN
BLU/WHT
WHT/BLK
YEL/BLU
STEREO RADIO TUNER
PHOTO 73
VIEW 68
B4
B5
B7
B11
B12
B13
Valet switch output
Security input
Bus data 2
Remote LED input
Bus data 0
Bus data 1
Keyless Receiver Unit
USA
HOT AT ALL TIMES
FUSE 48
HEADLIGHT 30A
UNDER-HOOD FUSE/RELAY BOX
PHOTO 7
9
WHT
C352
PHOTO 8
VIEW 27
See Power Distribution, page 10-12.
WHT
WHT
WHT
1
2
LIGHT FLASHER RELAY
PHOTO 56
4
3
RED/ WHT
RED/GRN
17
C411
PHOTO 60
VIEW 60
RED/ WHT
RED/GRN
See Headlight Switch
17
RED/GRN
C422
PHOTO 58
VIEW 16
7
See Headlight Switch, page 100-1.
UNDER-DASH FUSE/ RELAY BOX
PHOTO 58
FUSE 32
LICENSE LIGHTS TAIL LIGHTS 7.5A
RED/BLK
See Headlight Switch, page 100-1.
RED/BLK
EXTERIOR LIGHTS
See Ground Distribution.

(cont'd)

Security System

– '96-'98 USA: HX, LX, EX; '96-'98 Canada: EX, Si (cont'd)

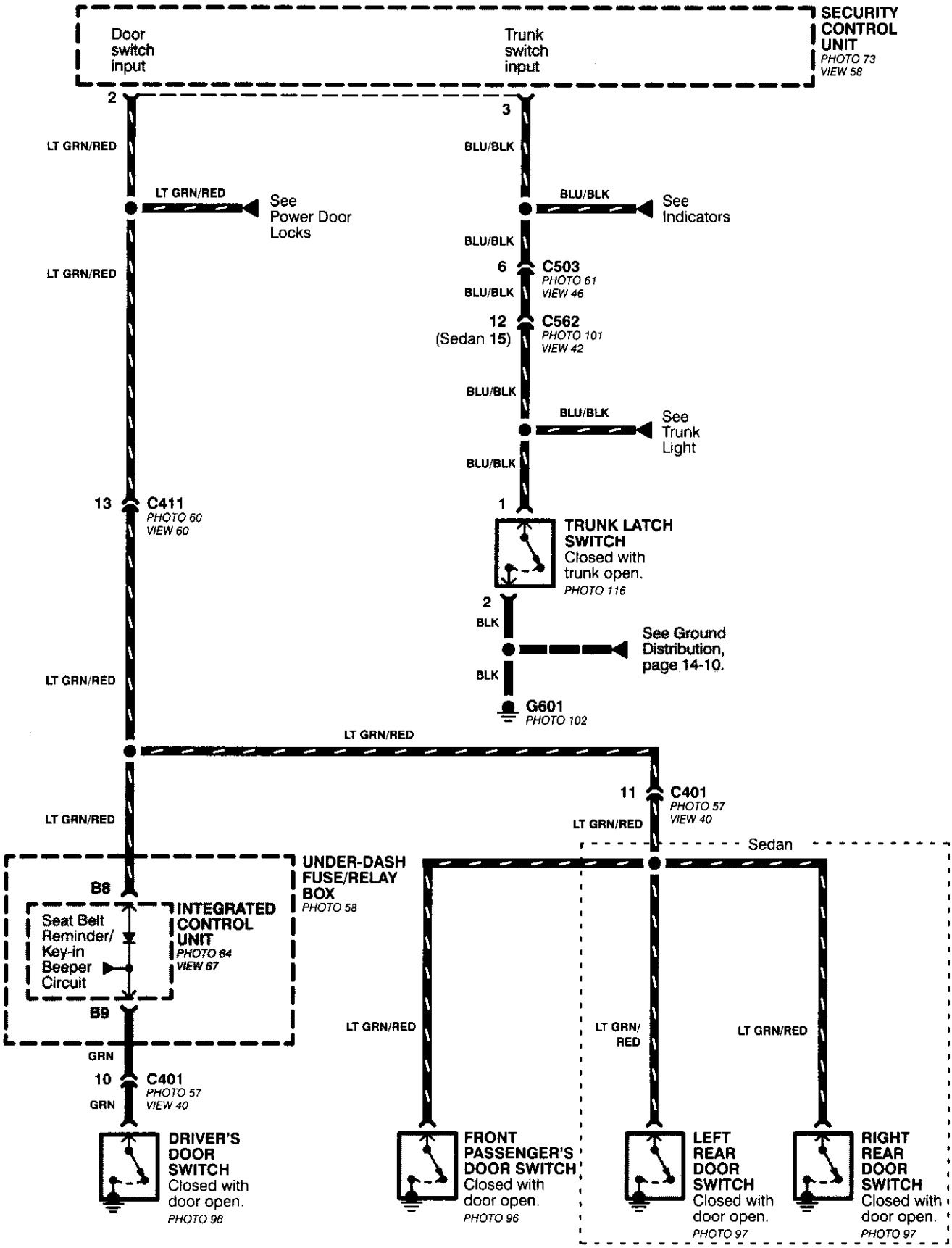

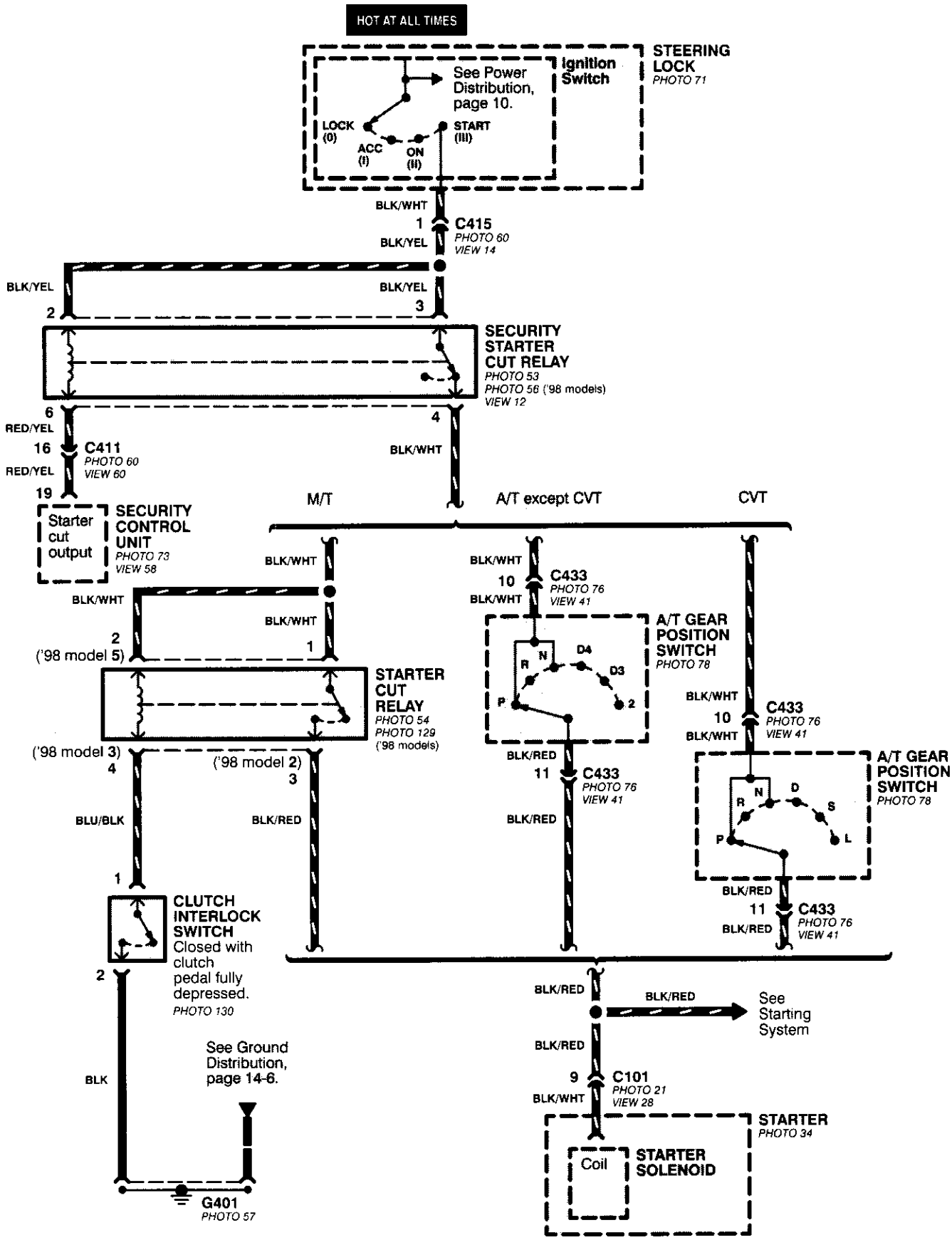
HOT AT ALL TIMES
STEERING LOCK
PHOTO 71
Ignition Switch
See Power Distribution, page 10.
LOCK (0)
ACC (I)
ON (II)
START (III)
BLK/WHT
1
C415
PHOTO 60
VIEW 14
BLK/YEL
BLK/YEL
2
BLK/YEL
3
SECURITY STARTER CUT RELAY
PHOTO 53
PHOTO 56 ('98 models)
VIEW 12
6
RED/YEL
16
C411
PHOTO 60
VIEW 60
RED/YEL
19
4
BLK/WHT
Starter cut output
SECURITY CONTROL UNIT
PHOTO 73
VIEW 58
M/T
A/T except CVT
CVT
BLK/WHT
BLK/WHT
2
('98 model 5)
BLK/WHT
1
STARTER CUT RELAY
PHOTO 54
PHOTO 129
('98 models)
('98 model 3)
4
('98 model 2)
3
BLU/BLK
BLK/RED
1
CLUTCH INTERLOCK SWITCH
Closed with clutch pedal fully depressed.
PHOTO 130
2
BLK
See Ground Distribution, page 14-6.
G401
PHOTO 57
BLK/WHT
10
C433
PHOTO 76
VIEW 41
BLK/WHT
A/T GEAR POSITION SWITCH
PHOTO 78
N
D4
R
D3
P
2
BLK/RED
11
C433
PHOTO 76
VIEW 41
BLK/RED
BLK/WHT
10
C433
PHOTO 76
VIEW 41
BLK/WHT
A/T GEAR POSITION SWITCH
PHOTO 78
N
D
R
S
P
L
BLK/RED
11
C433
PHOTO 76
VIEW 41
BLK/RED
BLK/RED
BLK/RED
See Starting System
BLK/RED
9
C101
PHOTO 21
VIEW 28
BLK/WHT
STARTER
PHOTO 34
Coil
STARTER SOLENOID

Security System

– '99-'00 USA: HX, LX, EX, DX-V, Si; '99-'00 Canada: EX, Si

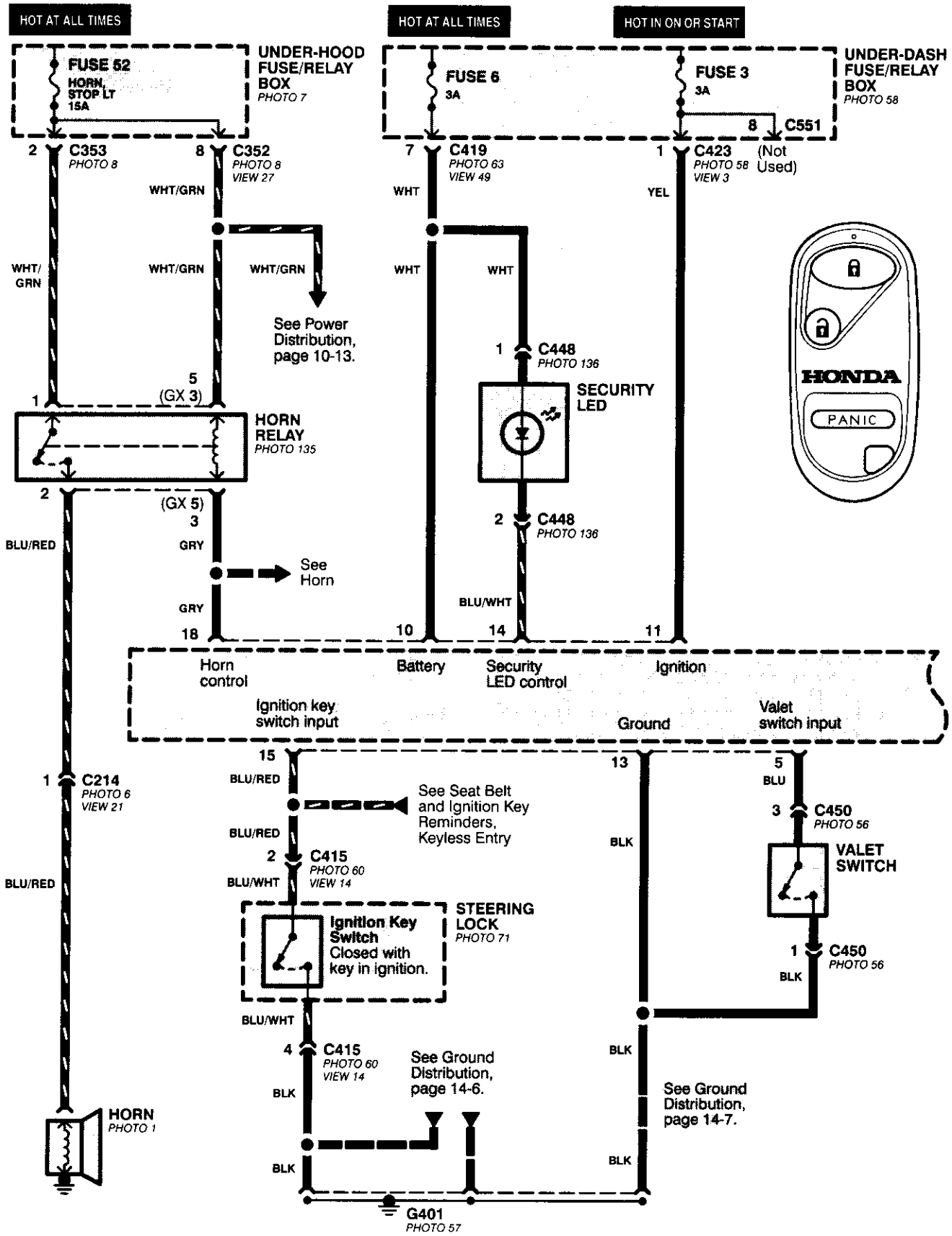

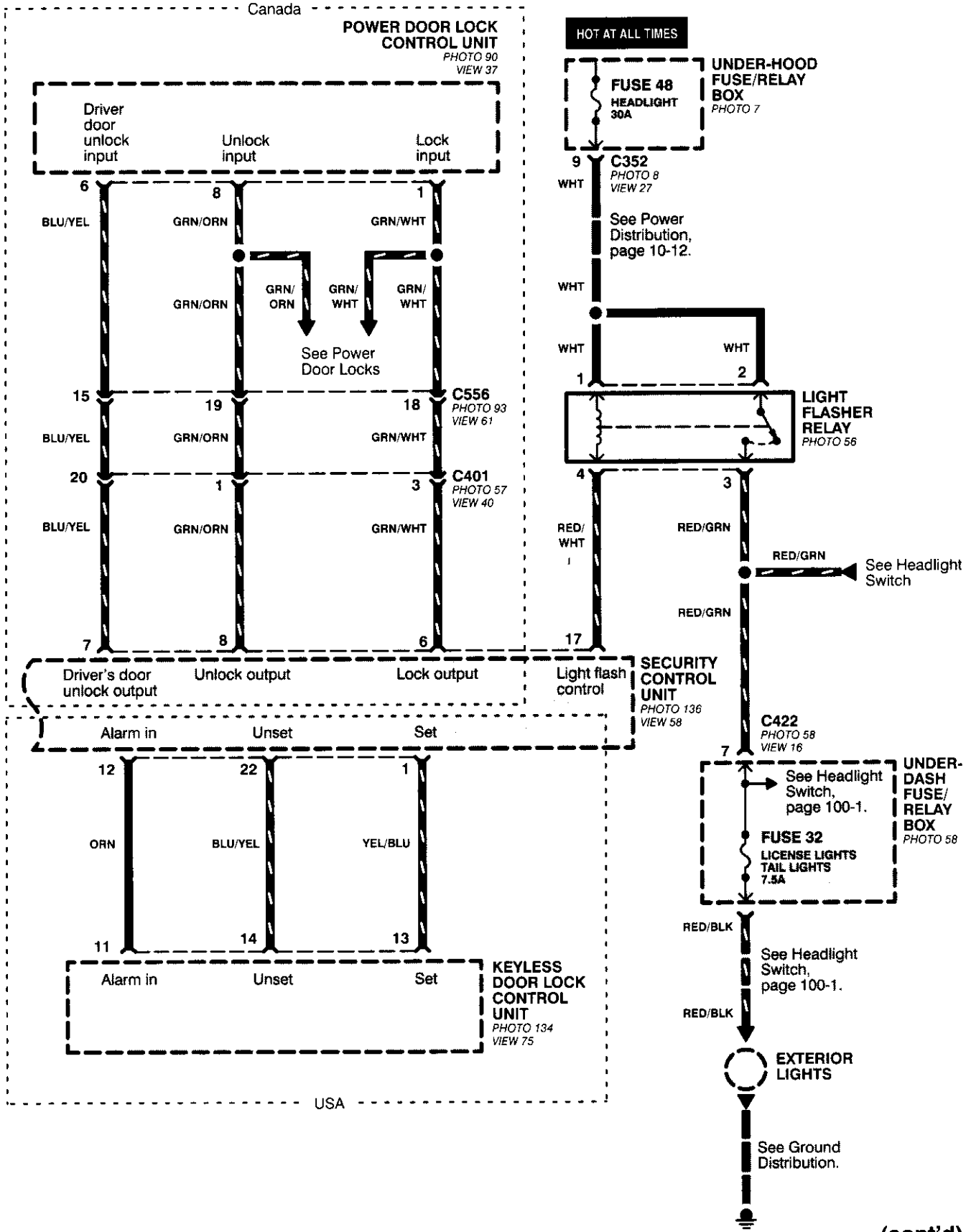
Canada
POWER DOOR LOCK CONTROL UNIT
PHOTO 90
VIEW 37
Driver door unlock input
Unlock input
Lock input
6
8
1
BLU/YEL
GRN/ORN
GRN/WHT
GRN/ORN
GRN/ ORN
GRN/ WHT
GRN/ WHT
See Power Door Locks
15
19
18
C556
PHOTO 93
VIEW 61
BLU/YEL
GRN/ORN
GRN/WHT
20
1
3
C401
PHOTO 57
VIEW 40
BLU/YEL
GRN/ORN
GRN/WHT
7
8
6
Driver's door unlock output
Unlock output
Lock output
Light flash control
SECURITY CONTROL UNIT
PHOTO 136
VIEW 58
Alarm in
Unset
Set
12
22
1
ORN
BLU/YEL
YEL/BLU
11
14
13
Alarm in
Unset
Set
KEYLESS DOOR LOCK CONTROL UNIT
PHOTO 134
VIEW 75
USA
HOT AT ALL TIMES
FUSE 48
HEADLIGHT 30A
UNDER-HOOD FUSE/RELAY BOX
PHOTO 7
9
C352
PHOTO 8
VIEW 27
WHT
See Power Distribution, page 10-12.
WHT
WHT
WHT
1
2
LIGHT FLASHER RELAY
PHOTO 56
4
3
RED/ WHT
RED/GRN
RED/GRN
See Headlight Switch
RED/GRN
17
C422
PHOTO 58
VIEW 16
7
See Headlight Switch, page 100-1.
FUSE 32
LICENSE LIGHTS TAIL LIGHTS 7.5A
UNDER-DASH FUSE/ RELAY BOX
PHOTO 58
RED/BLK
See Headlight Switch, page 100-1.
RED/BLK
EXTERIOR LIGHTS
See Ground Distribution.

(cont'd)

Security System

– '99-'00 USA: HX, LX, EX, DX-V, Si; '99-'00 Canada: EX, Si (cont'd)

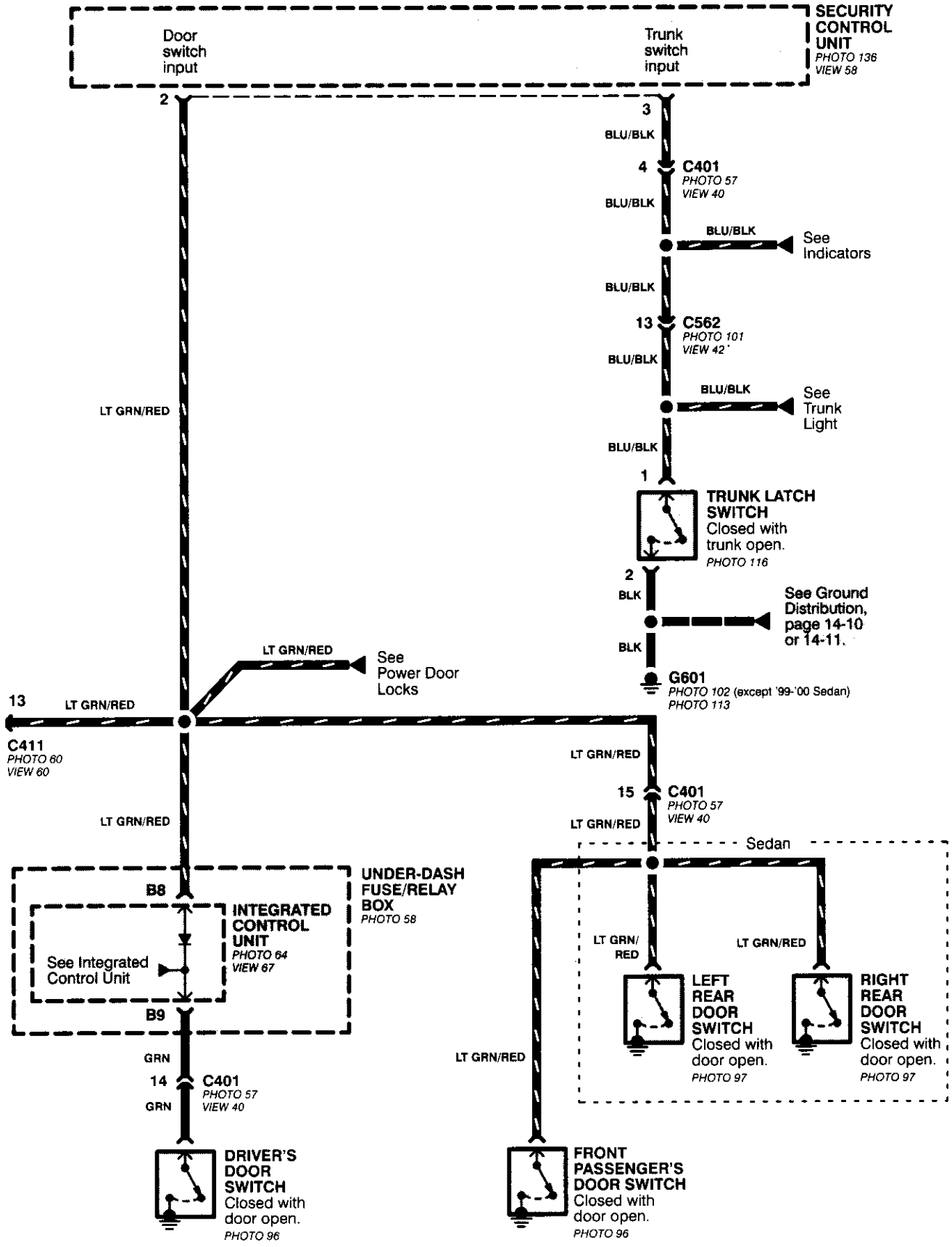

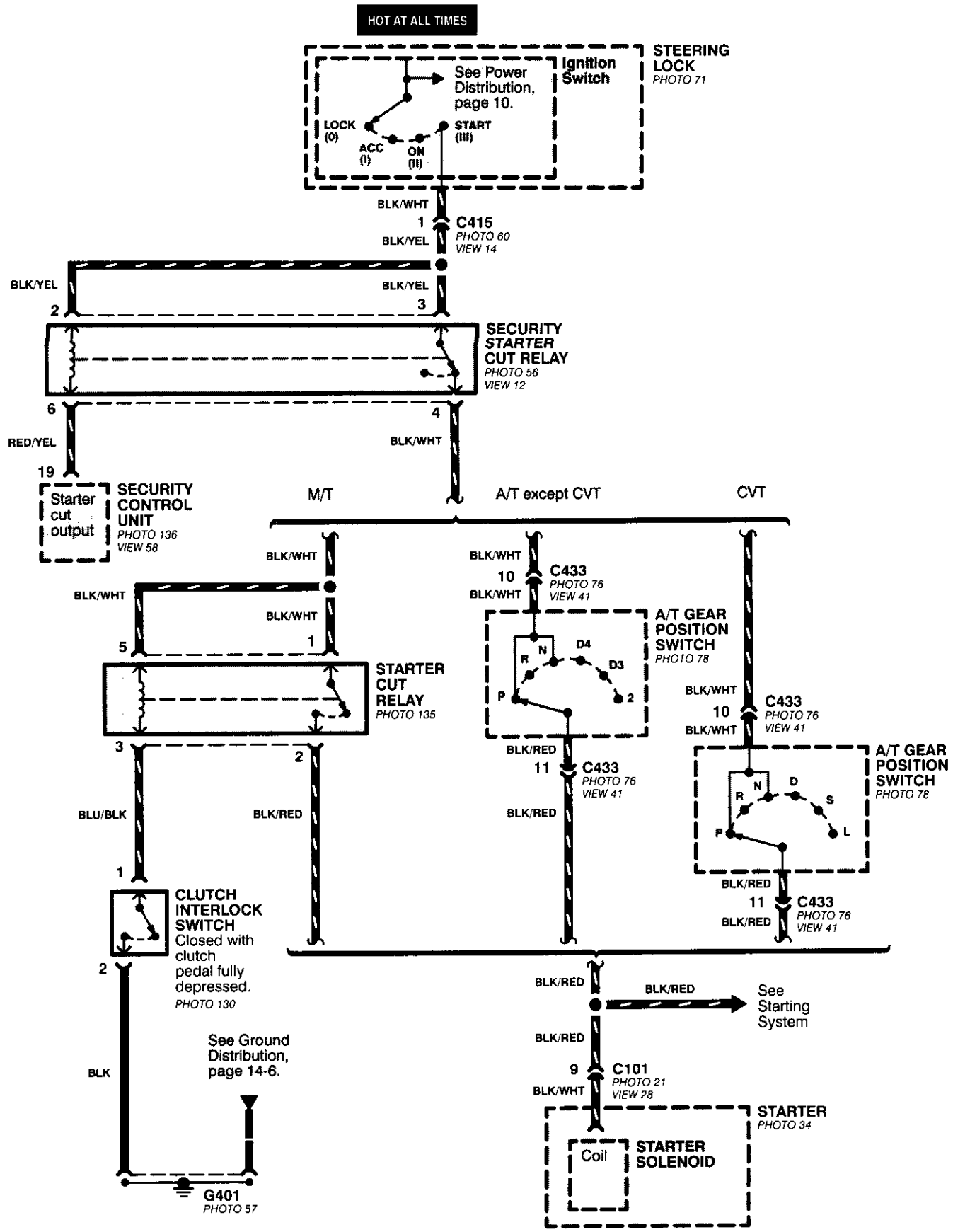
HOT AT ALL TIMES
STEERING LOCK
PHOTO 71
Ignition Switch
See Power Distribution, page 10.
LOCK (0)
ACC (I)
ON (II)
START (III)
BLK/WHT
1
C415
PHOTO 60
VIEW 14
BLK/YEL
BLK/YEL
BLK/YEL
2
3
SECURITY STARTER CUT RELAY
PHOTO 56
VIEW 12
6
4
RED/YEL
BLK/WHT
19
Starter cut output
SECURITY CONTROL UNIT
PHOTO 136
VIEW 58
M/T
A/T except CVT
CVT
BLK/WHT
BLK/WHT
BLK/WHT
5
1
STARTER CUT RELAY
PHOTO 135
3
2
BLU/BLK
BLK/RED
1
CLUTCH INTERLOCK SWITCH
Closed with clutch pedal fully depressed.
PHOTO 130
2
BLK
See Ground Distribution, page 14-6.
G401
PHOTO 57
BLK/WHT
10
C433
PHOTO 76
VIEW 41
BLK/WHT
A/T GEAR POSITION SWITCH
PHOTO 78
R
N
D4
D3
P
2
BLK/RED
11
C433
PHOTO 76
VIEW 41
BLK/RED
BLK/WHT
10
C433
PHOTO 76
VIEW 41
BLK/WHT
A/T GEAR POSITION SWITCH
PHOTO 78
R
N
D
S
P
L
BLK/RED
11
C433
PHOTO 76
VIEW 41
BLK/RED
BLK/RED
BLK/RED
See Starting System
BLK/RED
9
C101
PHOTO 21
VIEW 28
BLK/WHT
STARTER
PHOTO 34
Coil
STARTER SOLENOID

Security System (cont'd)

– '96-'97 CX and DX Models (cont'd on page 133-10)

NOTE: Wires that look like this are part of the optional Security System harness installed between factory harness connectors.

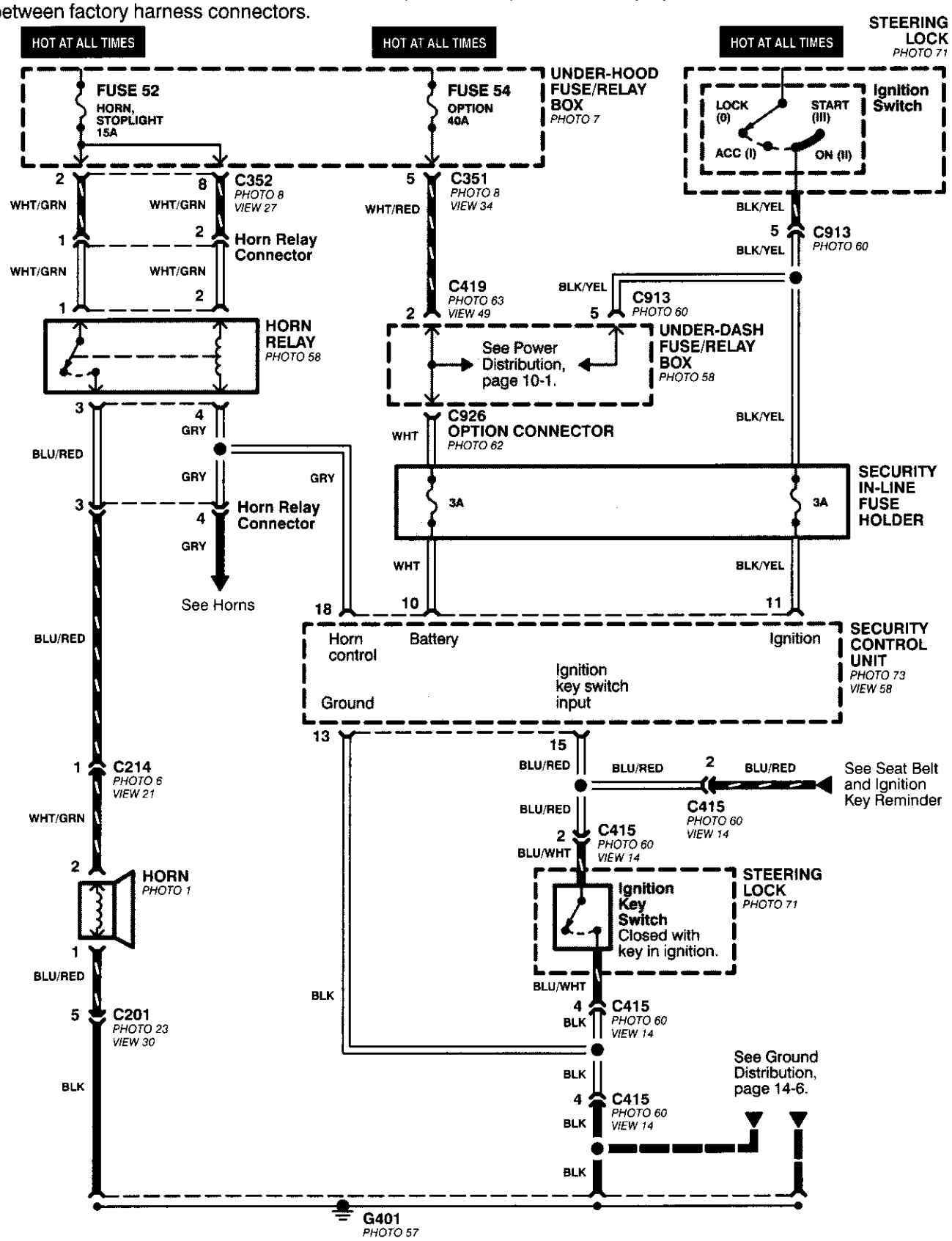

'98-'00 CX and DX Models (cont'd on page 133-10)

NOTE: Wires that look like this are part of the optional Security System harness installed between factory harness connectors.

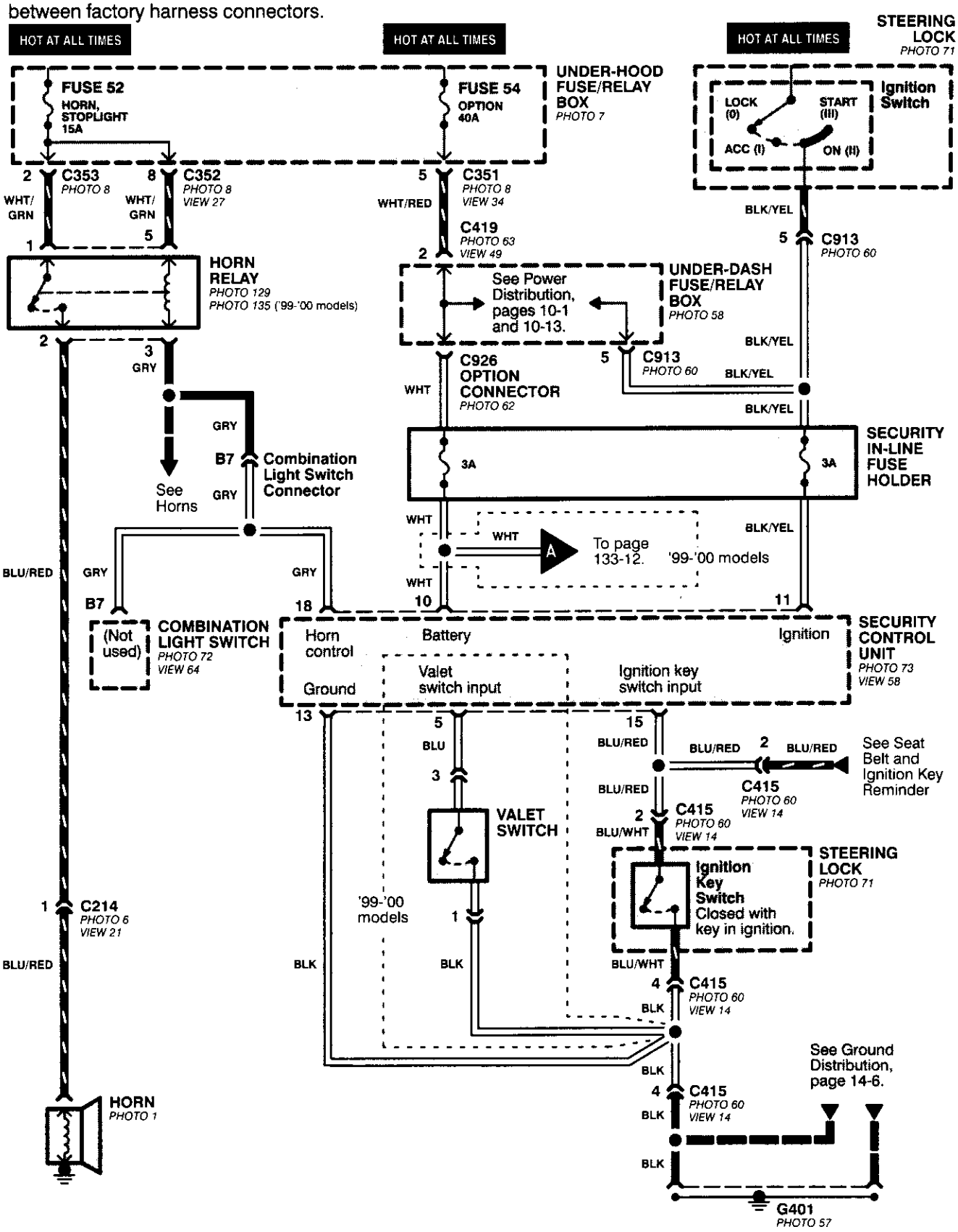

Security System

– All CX and DX Models (cont'd)

NOTE: Wires that look like this are part of the optional Security System harness installed between factory harness connectors.

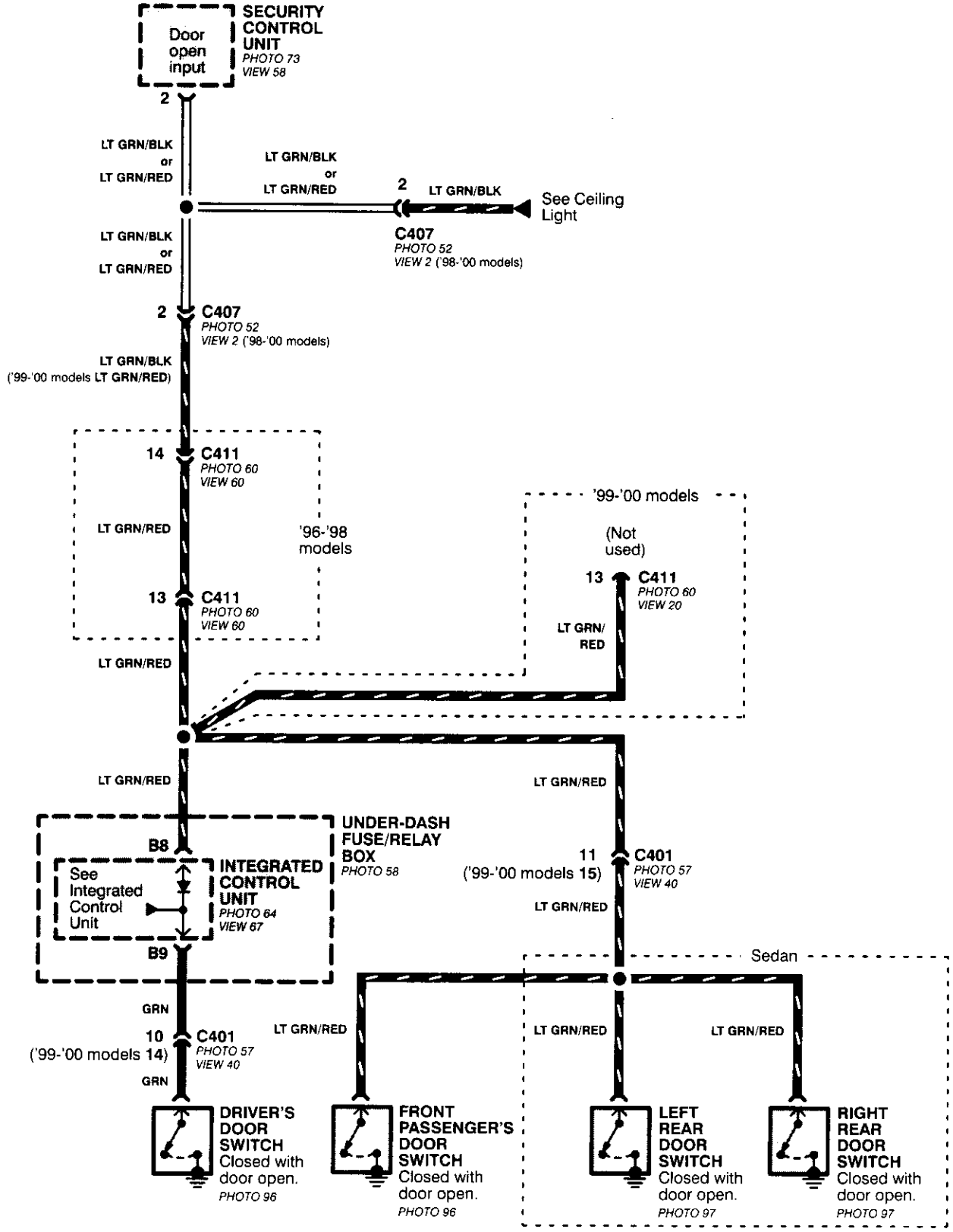

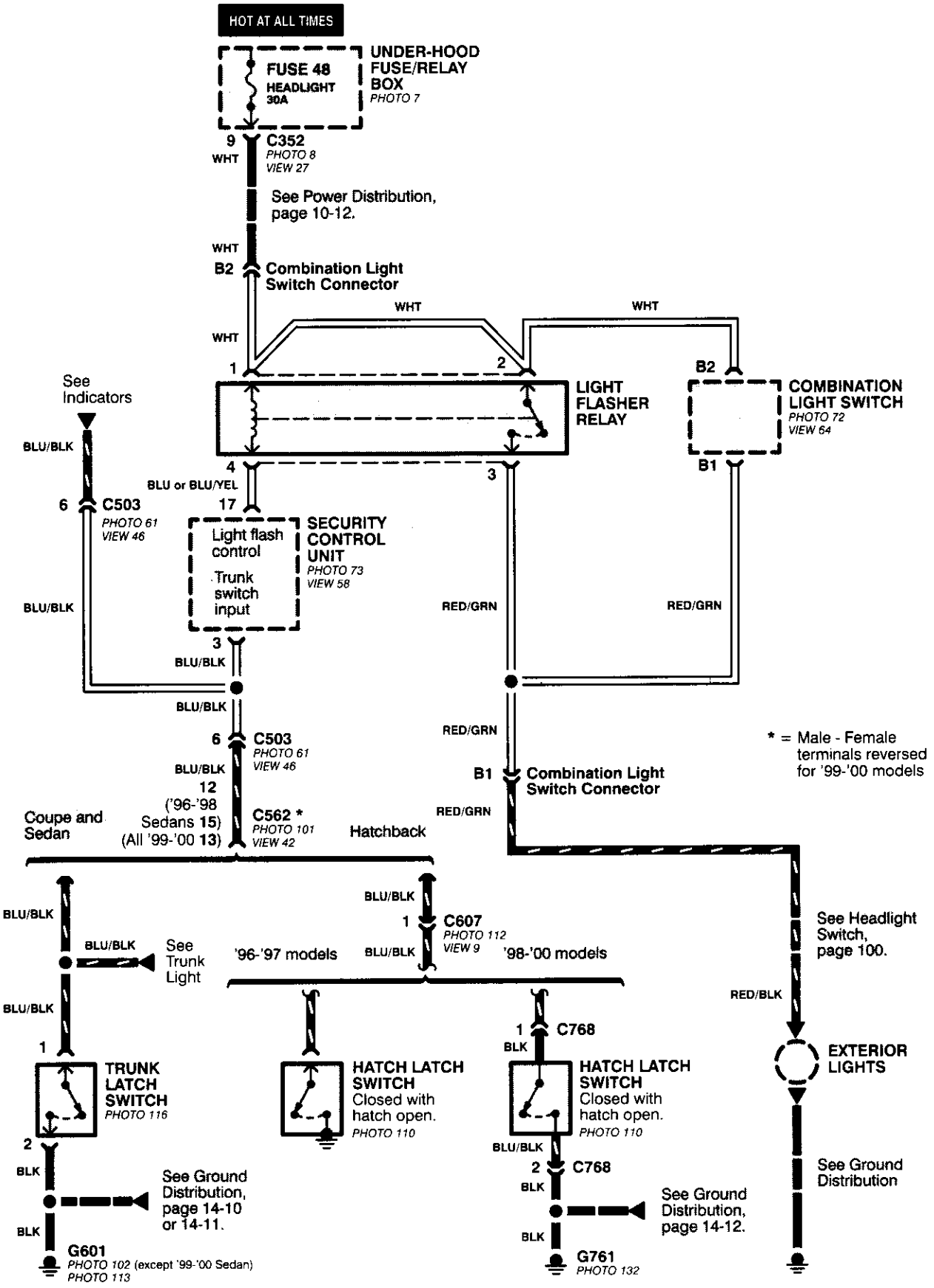
HOT AT ALL TIMES
FUSE 48
HEADLIGHT
30A
UNDER-HOOD FUSE/RELAY BOX
PHOTO 7
9
WHT
C352
PHOTO 8
VIEW 27
See Power Distribution, page 10-12.
WHT
B2
Combination Light Switch Connector
WHT
WHT
WHT
1
2
B2
See Indicators
LIGHT FLASHER RELAY
COMBINATION LIGHT SWITCH
PHOTO 72
VIEW 64
BLU/BLK
4
3
B1
BLU or BLU/YEL
6
C503
PHOTO 61
VIEW 46
17
Light flash control
Trunk switch input
SECURITY CONTROL UNIT
PHOTO 73
VIEW 58
BLU/BLK
RED/GRN
RED/GRN
3
BLU/BLK
BLU/BLK
RED/GRN
6
C503
PHOTO 61
VIEW 46
* = Male - Female terminals reversed for '99-'00 models
BLU/BLK
B1
Combination Light Switch Connector
12
('96-'98 Sedans 15)
(All '99-'00 13)
C562 *
PHOTO 101
VIEW 42
RED/GRN
Coupe and Sedan
Hatchback
BLU/BLK
BLU/BLK
1
C607
PHOTO 112
VIEW 9
See Headlight Switch, page 100.
BLU/BLK
See Trunk Light
'96-'97 models
BLU/BLK
'98-'00 models
BLU/BLK
RED/BLK
1
C768
BLK
1
TRUNK LATCH SWITCH
PHOTO 116
HATCH LATCH SWITCH
Closed with hatch open.
PHOTO 110
HATCH LATCH SWITCH
Closed with hatch open.
PHOTO 110
EXTERIOR LIGHTS
2
BLU/BLK
BLK
2
C768
See Ground Distribution, page 14-10 or 14-11.
BLK
See Ground Distribution, page 14-12.
See Ground Distribution
BLK
BLK
G601
PHOTO 102 (except '99-'00 Sedan)
PHOTO 113
G761
PHOTO 132

Security System

- All CX and DX Models (cont'd)

NOTE: Wires that look like this are part of the optional Security System harness installed between factory harness connectors.

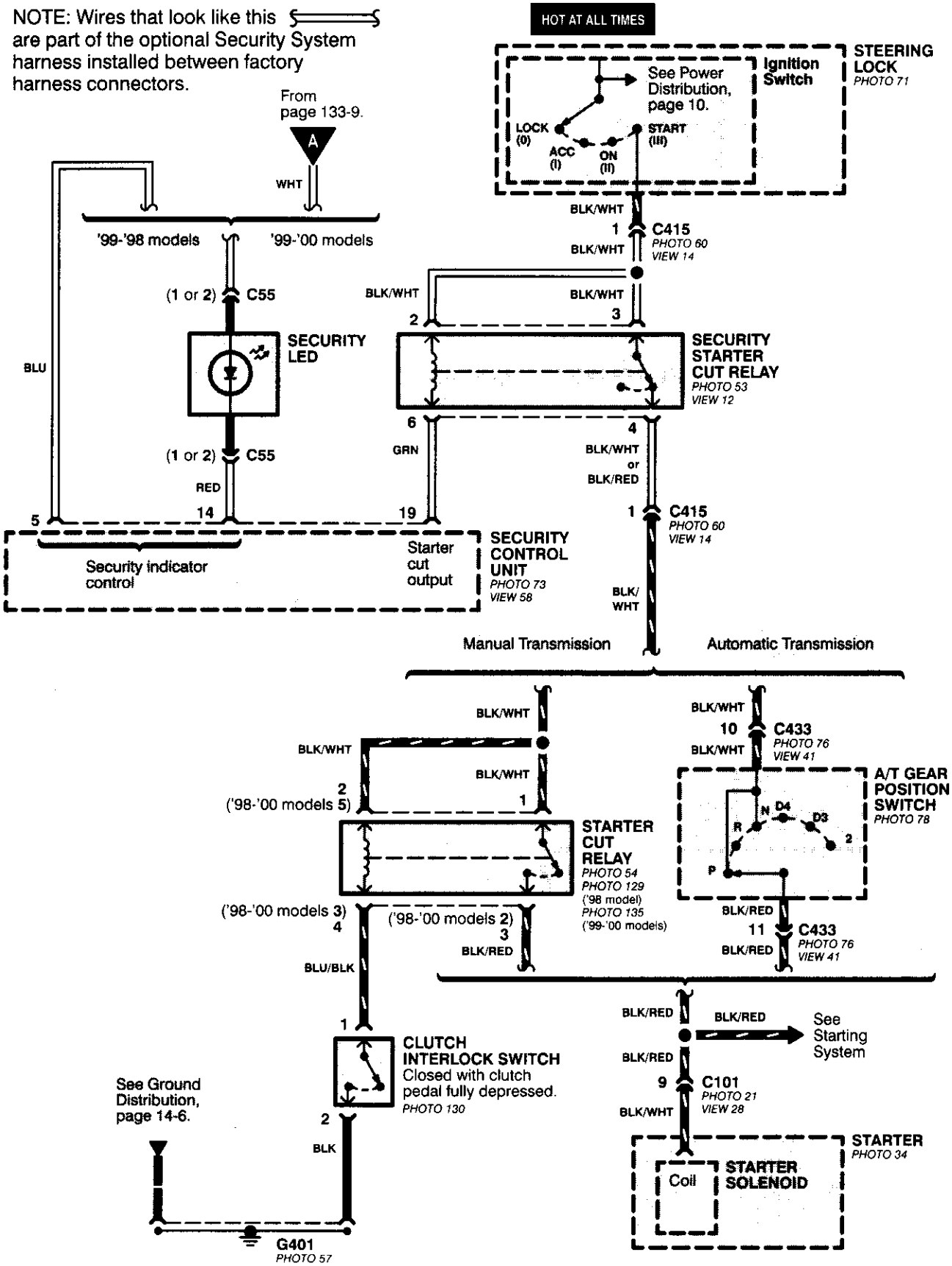

How the Circuit Works

Arming the Security System

The security system can be armed:

- By pressing the remote control LOCK button (if equipped)
- 20 seconds after closing all doors (CX/DX only)

Arming with the Transmitter

The security system can be armed by removing the ignition key from the ignition switch, closing all doors and the trunk, and pressing the LOCK button on the transmitter. When you arm the system in this way, the remote control LED comes on, the status LED flashes once per second, the parking lights flash once, the doors lock, and the horn sounds once if the beep sound mode is on.

Passive Arming (CX and DX only)

When you turn the ignition to OFF, remove the ignition key from the ignition switch, and close all the doors and the trunk; the system will automatically arm itself 20 seconds after the trunk or last door is closed. When you arm the system this way, the status LED flashes 4 times per second during the exit delay time, and once per second after the system is armed; the parking lights will flash once to confirm that the system is armed.

Triggering the Alarm

After you've armed the system, it will trigger the alarm if any door or the trunk/hatch is opened. If the battery is disconnected when the system is armed or in the alarm mode, reconnecting it will immediately trigger the alarm. When the alarm is triggered, the following will occur for 30 seconds:

- the horn sounds
- the parking lights flash once per second
- the status LED flashes twice per second
- the starter is disabled

After 30 seconds, the alarm will stop and the system will rearm. Pressing the transmitter UNLOCK button will disarm the system.

Disarming the System without the Remote Transmitter (HX, LX, and EX)

You can disarm the system by turning the ignition switch to ON (II) and pressing the disarm/valet switch on the right side of the stereo tuner face. The disarm switch will also disarm the system after the system has been triggered.

Disarming the System with the Remote Transmitter (HX, LX, EX, DX-V, and Si)

Pressing the transmitter UNLOCK button will disarm the system. The parking lights flash twice if the alarm has not been triggered. The parking lights flash three times if the alarm has been triggered. The driver's door will unlock. If you press the unlock button twice, it will unlock all doors. If a door is not opened within 30 seconds, the system will lock all doors and rearm.

Disarming the System (CX and DX only)

If the system arms itself, there is a 20 second delay after you open a door before the alarm will trigger. To disarm the system in this mode, simply turn the ignition switch to the ON position.

Identifying Tripped Sensors

The system identifies which sensor trips the alarm by flashing the status LED. To display the trip sensor flash code, press the disarm/valet switch 3 times within 5 seconds after the system has been disarmed. The status sensor will blink according to the following codes:

Sensors	Number of Flashes
Door	1 blink, pause, repeat
Trunk/Hatch	2 blinks, pause, repeat
System Switches	3 blinks, pause, repeat

For further operating instructions, see the security system owner's manual.

(cont'd)

Security Control Unit Troubleshooting

If a faulty security system has one of the symptoms below, turn to the page listed and follow the appropriate troubleshooting procedure. If the symptom seems related to an input problem, or is not covered by the troubleshooting procedures, do the Input Tests on page 133-15. Refer to the circuit schematic on pages 133 through 133-12 as needed.

Symptom Index

Security System Does Not Work In Any Mode (HX, LX, EX) ..... Page 133-17

Security System Does Not Work In Any Mode (CX, DX) ..... Page 133-18

Security System Does Not Arm (CX, DX) ..... Page 133-18

Security System Does Not Arm (HX, LX, EX, DX-V, Si) ..... Page 133-19

Security System Does Not Disarm With The Transmitter (HX, LX, EX, DX-V, Si) ..... Page 133-20

Security System Does Not Disarm (CX, DX) ..... Page 133-20

Security System Does Not Disarm With The Valet Switch ('96-'98 HX, LX, EX) ..... Page 133-21

Security System Does Not Disarm With The Valet Switch ('99 models) ... Page 133-22

Security System Does Not Work In The Valet Mode ('96-'98 HX, LX, EX) ..... Page 133-21

Security System Does Not Work In The Valet Mode ('99 models) ..... Page 133-22

Security System Alarm Does Not Trigger When The System Is Armed And The Trunk Or A Door Is Opened ..... Page 133-23

Security System Does Not "Beep" 3 Times When The System Is Armed With The Trunk Or A Door Open (HX, LX, EX, DX-V, Si) ..... Page 133-23

Parking Lights Do Not Flash (CX, DX) ..... Page 133-24

Parking Lights Do Not Flash (HX, LX, EX, DX-V, Si) ..... Page 133-25

Security System Status LED Stays On (HX, LX, EX, DX-V, Si) ..... Page 133-26

Security System Status LED Does Not Come On (HX, LX, EX, DX-V, Si) . Page 133-26

Starter Cut Does Not Work Properly ('96-'98 HX, LX, EX, DX-V, Si) ..... Page 133-27

Starter Cut Does Not Work Properly (CX, DX) ..... Page 133-28

Horn Does Not Sound When Alarm Is Triggered ..... Page 133-29

Input Tests ..... Page 133-15

Security Control Unit Input Test

The following tests are performed with the electrical connector disconnected from the security control unit.

Terminal No.	Wire Color	Test Condition	Test: Desired Result	Possible Cause if result is not obtained
2	LT GRN/ RED	Each door opened, one at a time	Check for continuity to ground: There should be continuity.	• Faulty door switch • An open in the wire
3	BLU/BLK	Trunk/Hatch open	Check for continuity to ground: There should be continuity.	• Faulty trunk/hatch latch switch • An open in the wire
10	WHT	Under all conditions	Check for voltage to ground: There should be battery voltage.	• Blown No. 6 (3A) fuse in the under-hood fuse/relay box (HX, LX, EX, DX-V, Si) • Blown No. 54 (40A) fuse in the under-hood fuse/relay box (CX, DX) • Blown (3A) fuse in security in-line fuse holder (CX, DX) • An open in the wire
11	YEL (BLK/YEL CX, DX)	Ignition switch ON (II)	Check for voltage to ground: There should be battery voltage.	• Blown No 3 (10A) fuse in the under-dash fuse/relay box (HX, LX, EX, DX-V, Si) • Blown (3A) fuse in the security in-line fuse holder (CX, DX) • An open in the wire
13	BLK	Under all conditions	Check for continuity to ground: There should be continuity.	• Poor ground (G401, G402) • An open in the wire
15	BLU/RED	Ignition key inserted into the ignition key switch	Check for voltage to ground: There should be 1 V or less.	• Poor ground (G401, G402) • Faulty ignition key switch • An open in the wire • Short in the wire
		Ignition key removed from the ignition key switch	Check for voltage to ground: There should be 4 V or more.	
18	GRY	Under all conditions	Connect to ground: Horn should sound.	• Blown No. 52 (15A) fuse in the under-hood fuse/relay box • Faulty horn • Faulty horn relay • An open in the wire

The following tests are performed with the electrical connector connected to the security control unit.

Terminal No.	Wire Color	Test Condition	Test: Desired Result	Possible Cause if result is not obtained
1	YEL/BLU	Under all conditions	Check for voltage to ground: There should be approximately 5 volts.	• Blown No. 6 (3A) fuse in the under-dash fuse/relay box • Faulty security control unit
5	BLU	Valet switch pressed	Check for voltage to ground: Should change from approximately 5 volts to less than 1 volt when valet switch is pressed.	• Faulty radio ('96-'98 models) or valet switch ('99 models) • An open in the wire
12	ORN	Under all conditions	Check for voltage to ground: There should be approximately 5 volts.	• Blown No 6 (3A) fuse in the under-dash fuse/relay box • Faulty security control unit
14	BLU/WHT (RED CX, DX)	Under all conditions	Check for voltage to ground: There should be approximately 4 volts.	• An open in the wire • Faulty radio ('96-'98 models) or security LED ('99 models)
17	RED/ WHT	Security system in PANIC mode	Check for voltage to ground: Should change from battery voltage to less then 1 volt when in the PANIC mode.	• Blown No. 48 (30A) fuse in the under-hood fuse/relay box • Faulty light flasher relay • Faulty security control unit • An open in the wire
19	RED/YEL (GRN CX, DX)	Security system alarm triggered	Check for voltage to ground: Should change from battery voltage to less then 1 volt when security system alarm is triggered.	• Faulty security starter cut relay • Faulty security control unit • An open in the wire
22	BLU/YEL ('96-'98 models WHT/BLK)	Under all conditions	Check for voltage to ground: There should be approximately 5 volts.	• Blown No. 6 (3A) fuse in the under-dash fuse/relay box • Faulty security control unit

Security System Does Not Work In Any Mode (HX, LX, EX, DX-V, Si)

1. Is fuse 6 (in the under-dash box) OK?
   Yes – Go to the next step.
   No – Replace the blown fuse, then go to the next step.
2. Does the fuse blow again?
   Yes – Go to the next step.
   No – Retest the system.
3. Disconnect the security control unit connector.
4. Is there continuity from terminals 1, 10, 12, or 22 to ground?

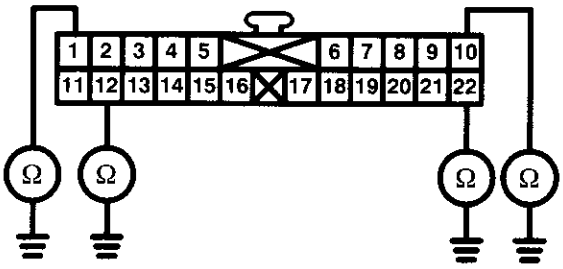

   Yes – Locate the short in the wiring between the security control unit and the radio ('96-'98 models) or keyless door lock control unit ('99 model).
   No – Go to the next step.
5. Is there battery voltage at terminal 10 of the security control unit connector?

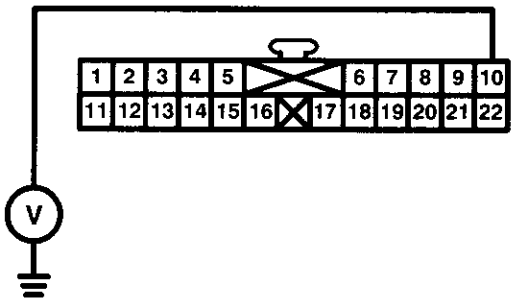

   Yes – Go to the next step.
   No – Locate the open in the wiring between fuse 6 and the security control unit.
6. Is there continuity from terminal 13 of the security control unit connector to ground?

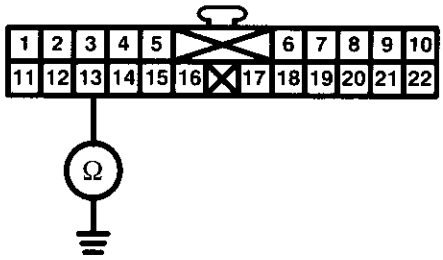

   Yes – '96-'98 models: Go to the next step.
   '99 models: Replace the security control unit.
   No – Locate the open in the wiring between the security control unit and ground (G401).
7. With the security control unit connector reconnected, is there battery voltage at terminal 21 of the security control unit connector?

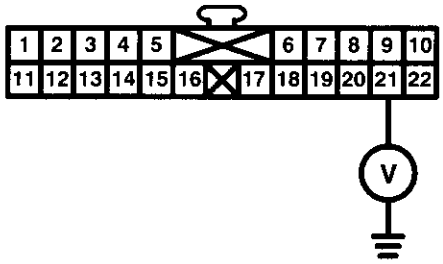

   Yes – Go to the next step.
   No – Replace the security control unit.
8. Is there battery voltage at terminal 5 of the keyless entry harness connector (B)?

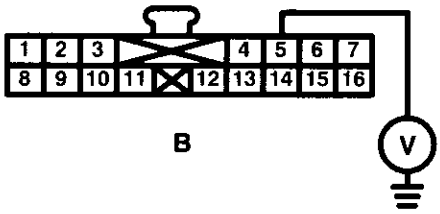

   Yes – Replace the radio.
   No – Repair the damaged LT BLU wire between the security control unit and the radio.

Security System Does Not Work In Any Mode (CX, DX)

1. Is fuse 54 (in the under-hood fuse box) OK?
   Yes – Go to the next step.
   No – Replace the blown fuse, then go to the next step.
2. Is the fuse in the security in-line fuse holder OK?
   Yes – Go to the next step.
   No – Replace the blown fuse, then go to next step.
3. Does either fuse blow again?
   Yes – Locate and repair the short.
   No – Retest the system.
4. Is there battery voltage at terminal 10 of the security control unit connector?

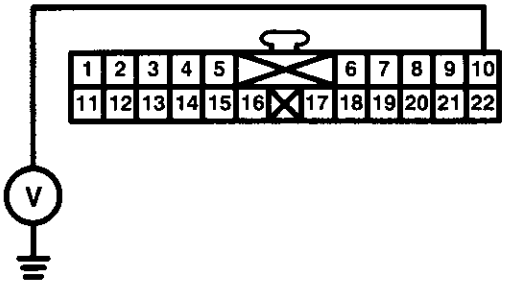

   Yes – Go to the next step.
   No – Locate the open in the wiring between fuse 54 and the security control unit.
5. Is there continuity from terminal 13 of the security control unit connector to ground?

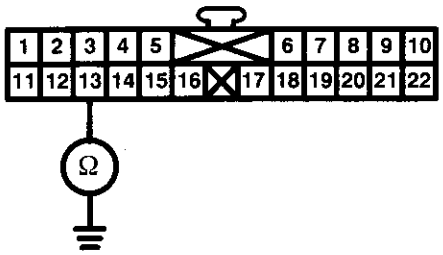

   Yes – Replace the security control unit.
   No – Locate the open in the wiring between the security control unit and G401.

Security System Does Not Arm (CX, DX)

1. Place the ceiling light in the center position. Does the ceiling light come on, even with all the doors closed?
   Yes – Faulty door switch or short in wiring to door switches.
   No – Go to the next step.
2. With the ignition switch in the ON (II) position, does the trunk open indicator in the gauge assembly come on, even with the trunk closed?
   Yes – Faulty trunk latch switch or short in the BLU/BLK wire.
   No – Go to the next step.
3. Does voltage at terminal 2 of the security control unit connector change from battery voltage with all doors closed, to less than 1 volt when any door is opened?

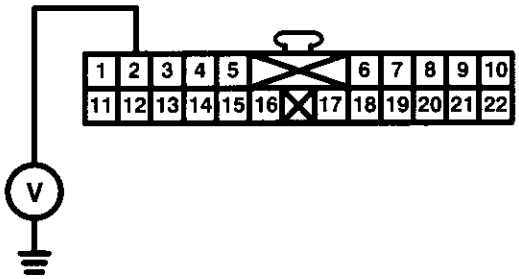

   Yes – Go to the next step.
   No – Repair the open in the terminal 2 (LT GRN/BLK or LT GRN/RED) wire.
4. Does voltage at terminal 3 of the security control unit connector change from battery voltage with the trunk closed, to less than 1 volt when the trunk is opened?

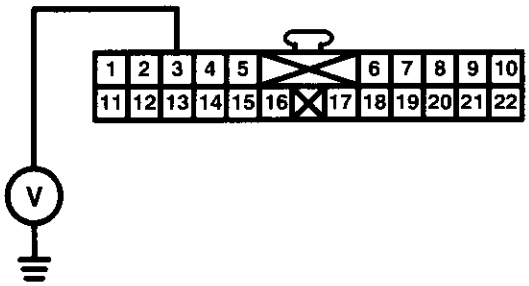

   Yes – Replace the security control unit.
   No – Repair the open in the terminal 3 (BLU/BLK) wire.

Security System Does Not Arm (HX, LX, EX, DX-V, Si)

1. *With all the doors closed, do the doors lock when you press the transmitter LOCK button?*
   Yes – Go to the next step.
   No – Go to Doors Do Not Lock With The Transmitter, on page 130-11 ('96-'98 models) or 130-18 ('99 models).
2. Check the trunk open indicator in the gauge assembly. With the ignition switch in the ON (II) position, does the trunk open indicator come on even with the trunk closed?
   Yes – Faulty trunk latch switch or short in BLU/BLK wire.
   No – Go to the next step.
3. Does the voltage at terminal 2 of the security control unit connector change from approximately 5 volts with all doors closed, to less than 1 volt when any door is opened?

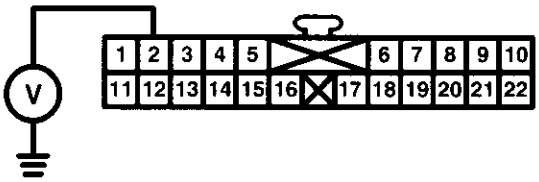

   Yes – Go to the next step.
   No – Repair the damaged terminal 2 (LT GRN/RED) wire.
4. Does the voltage at terminal 3 of the security control unit connector change from battery voltage with the trunk closed, to less than 1 volt when the trunk is opened?

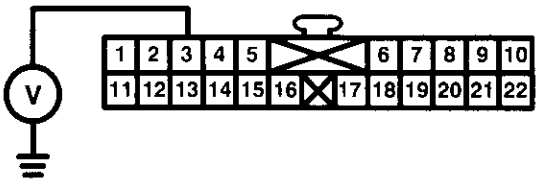

   Yes – Go to the next step.
   No – Repair the damaged terminal 3 (BLU/BLK) wire.
5. Does the voltage at terminal 15 of the security control unit connector change from battery voltage the key is not in the ignition, to less than 1 volt when the key is in the ignition?

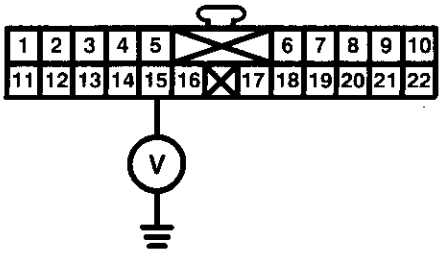

   Yes – Go to the next step.
   No – Repair the damaged terminal 15 (BLU/RED) wire.
6. Is there approximately 5 volts at terminal 22 of the security control unit connector?

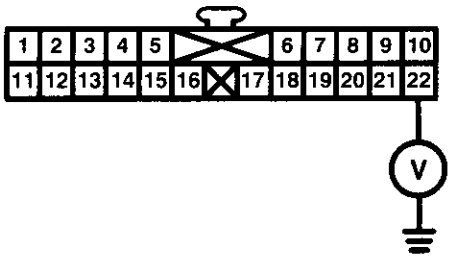

   Yes – Go to the next step.
   No – Replace the security control unit.
7. Is there approximately 5 volts at terminal 12 ('96-'98 models) or 14 ('99 models) of the keyless receiver unit ('96-'98 models) or the keyless door lock control unit ('99 models)?

'96-'98 models:

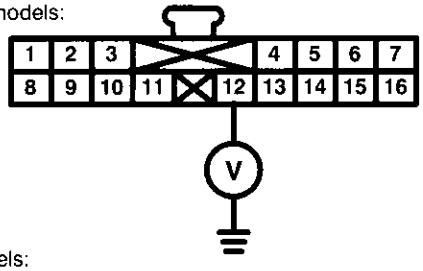

'99 models:

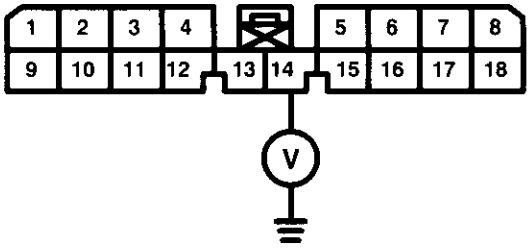

   Yes – Replace the radio ('96-'98 models) or the keyless door lock control unit ('99 models).
   No – Repair the damaged WHT/BLK ('96-'98 models) or BLU/YEL ('99 models) wire between the security control unit and the radio ('96-'98 models) or the keyless door lock control unit ('99 models).

Security System Does Not Disarm With The Transmitter (HX, LX, EX, DX-V, Si)

1. With all the doors closed and locked, do the doors unlock when the transmitter UNLOCK button is pressed?
   Yes – Go to the next step.
   No – Go to "Doors Do Not Unlock With The Transmitter" on page 130-11 ('96-'98 models) or 130-18 ('99 models).
2. Is there approximately 5 volts at terminal 1 of the security control unit connector?

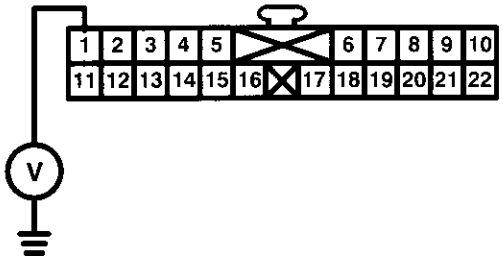

   Yes – Go to the next step.
   No – Security control unit.
3. Is there battery voltage at terminal 13 of the keyless receiver unit ('96-'98 models) or the keyless door lock control unit ('99 models)?

'96-'98 models:

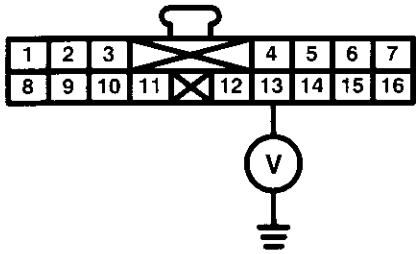

'99 models:

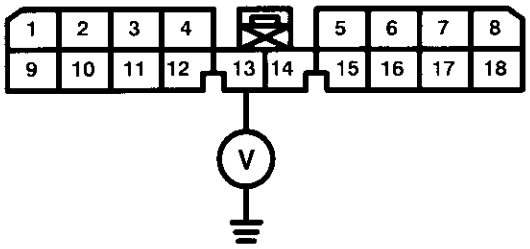

   Yes – Replace the radio ('96-'98 models) or the keyless door lock control unit ('99 models).
   No – Repair the damaged YEL/BLU wire between the security control unit and the radio.

Security System Does Not Disarm (CX, DX)

1. Is the fuse in the security in-line fuse holder OK?
   Yes – Go to the next step.
   No – Replace the blown fuse, then go to the next step.
2. Does the fuse blow again?
   Yes – Locate and repair the short.
   No – Retest the system.
3. Is there battery voltage at terminal 11 of the security control unit connector, when the ignition switch is in the ON (II) position?

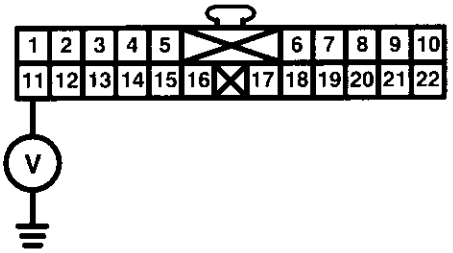

   Yes – Replace the security control unit.
   No – Locate the open in the wiring between the ignition switch and the security control unit.

Security System Does Not Disarm With The Valet Switch
Security System Does Not Work In The Valet Mode ('96-'98 HX, LX, EX)

1. Is fuse 3 (in the under-dash fuse box) OK?
   Yes – Go to the next step.
   No – Replace the blown fuse, then go to the next step.
2. Does the fuse blow again?
   Yes – Locate and repair the short.
   No – Retest the system.
3. Is there battery voltage at terminal 11 of the security control unit connector, when the ignition switch is in the ON (II) position?

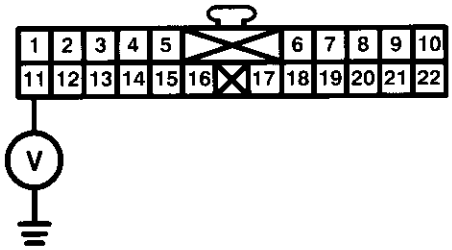

   Yes – Go to the next step.
   No – Locate the open in the wiring between fuse 3 and the security control unit.
4. Is there approximately 5 volts at terminal 4 of the keyless entry harness connector (B)?

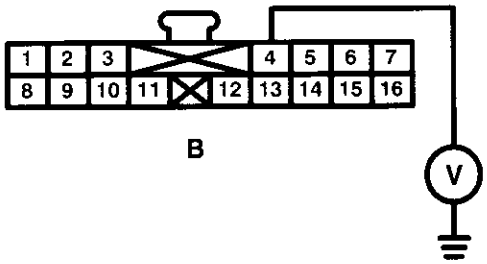

   Yes – Go to the next step.
   No – Replace the radio.
5. Is there approximately 5 volts at terminal 5 of the security control unit connector?

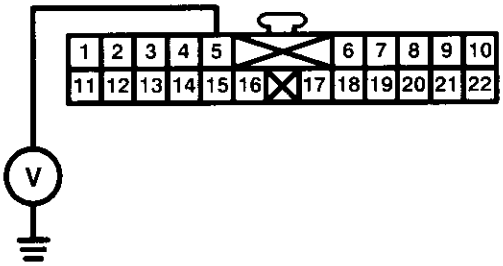

   Yes – Go to the next step.
   No – Locate the open in the BLU wire between the security control unit and the radio.
6. Is the voltage at terminal 5 of the security control unit connector changed from approximately 5 volts to 0 volts when the valet switch is pressed?

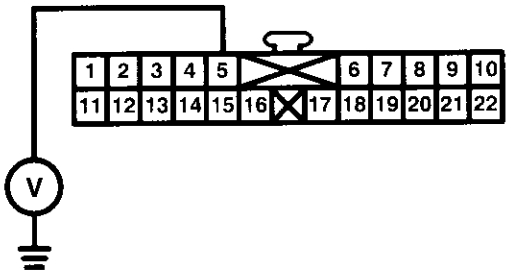

   Yes – Replace the security control unit.
   No – Replace the radio.

Security System Does Not Disarm With The Valet Switch
Security System Does Not Work In The Valet Mode ('99-'00 models)

1. Is fuse 3 (in the under-dash fuse box) (HX, LX, EX, DX-V, Si) or the fuse in the security in-line fuse holder (CX, DX) OK?
   Yes – Go to the next step.
   No – Replace the blown fuse, then go to the next step.
2. Does the fuse blow again?
   Yes – Locate and repair the short.
   No – Retest the system.
3. Is there battery voltage at terminal 11 of the security control unit connector, when the ignition switch is in the ON (II) position?

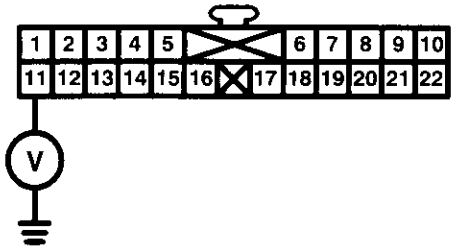

   Yes – Go to the next step.
   No – Locate the open in the wiring between fuse 3 (HX, LX, EX, DX-V, Si) or the fuse in the security in-line fuse holder (CX, DX) and the security control unit.

4. Is there approximately 5 volts at terminal 5 of the security control unit connector?

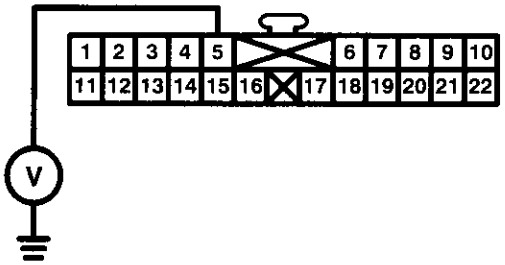

   Yes – Go to the next step.
   No – Replace the security control unit.
5. Is the voltage at terminal 5 of the security control unit connector changed from approximately 5 volts to 0 volts when the valet switch is pressed?

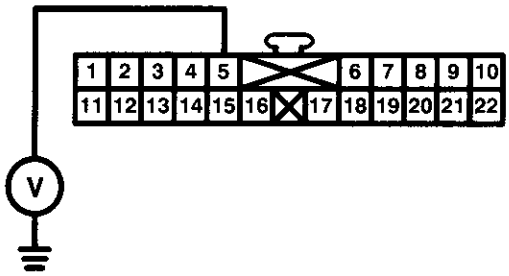

   Yes – Replace the security control unit.
   No – Check that the valet switch is working properly, then check for an open in the wiring between the valet switch and the security control unit.

Security System Alarm Does Not Trigger When The System Is Armed And The Trunk Or A Door Is Opened

Security System Does Not "Beep" 3 Times When The System is Armed With The Trunk Or A Door Open (HX, LX, EX, DX-V, Si)

1. Place the ceiling light in the center position, then open and close the doors one at a time. Do all the doors operate the ceiling light properly?
   Yes – Go to the next step.
   No – Repair the ceiling light circuit.
2. With the ignition switch in the ON (II) position, does the trunk open indicator in the gauge assembly come on with the trunk open?
   Yes – Go to the next step.
   No – Faulty trunk latch switch or an open in the BLU/BLK wire.
3. Does the voltage at terminal 2 of the security control unit connector change from battery voltage with all doors closed, to less than 1 volt when any door is opened?

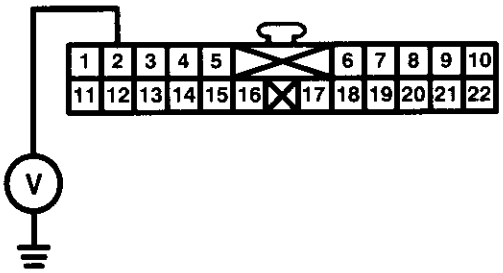

Yes – Go to the next step.
No – Repair the open in the terminal 2 (LT GRN/RED) wire.

4. Does the voltage at terminal 3 of the security control unit connector change from battery voltage with the trunk closed, to less than 1 volt when the trunk is opened?

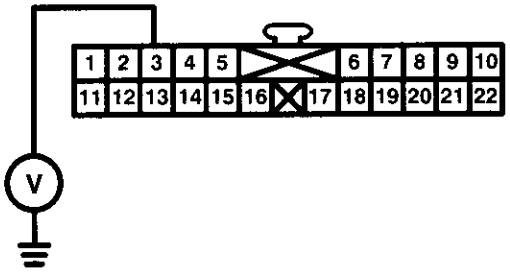

Yes – Replace the security control unit.
No – Repair the open in the terminal 3 (BLU/BLK) wire.

Parking Lights Do Not Flash (CX, DX)

1. Do the parking lights, headlights, and taillights come on with the headlight switch in the HEAD position?
   Yes – Go to the next step.
   No – Repair the parking lights, headlights, or taillights circuit.
2. Is there battery voltage at terminals 1 and 2 of the light flasher relay connector?

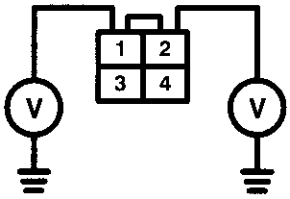

   Yes – Go to the next step.
   No – Repair the open in the WHT wire between fuse 48 and the light flasher relay.
3. Is there battery voltage at terminal 4 of the light flasher relay connector?

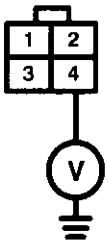

   Yes – Go to the next step.
   No – Replace the light flasher relay.
4. With the light flasher relay connector disconnected, run a jumper wire from terminal 1 to terminal 3.

   Do the parking lights and taillights come on?

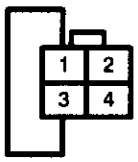

   Yes – Go to the next step.
   No – Repair the open in the RED/GRN wire.
5. Does the voltage at terminal 4 of the light flasher relay connector change from battery voltage to 0 volts repeatedly when the system is in the alarm triggered mode?

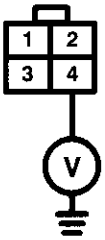

   Yes – Replace the light flasher relay.
   No – Go to the next step.
6. With the security control unit connector disconnected, run a jumper wire from terminal 17 to ground.

   Do the parking lights come on?

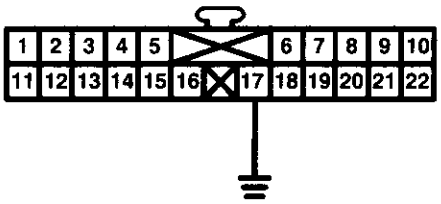

   Yes – Replace the security control unit.
   No – Repair the open in the terminal 17 (RED/WHT) wire.

Parking Lights Do Not Flash In Any Mode (HX, LX, EX, DX-V, Si)

1. Do the parking lights, headlights, and taillights come on with the headlight switch in the HEAD position?
   Yes – Go to the next step.
   No – Repair the parking light, headlight, or taillight circuit.
2. Does the horn sound when the transmitter PANIC button is pressed?
   Yes – Go to the next step.
   No – Go to the "Horn Does Not Sound In the Panic Mode" test on page 130-11 ('96-'98 models) or 130-18 ('99 models).
3. Is there battery voltage at terminals 1 and 2 of the light flasher relay connector?

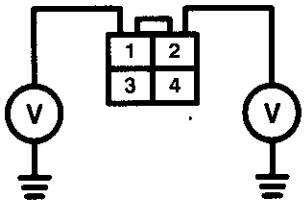

   Yes – Go to the next step.
   No – Repair the open in the WHT wire between fuse 48 and the light flasher relay.
4. Is there battery voltage at terminal 4 of the light flasher relay connector?
   Yes – Go to the next step.
   No – Replace the light flasher relay.

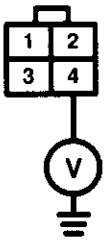

5. With the light flasher relay connector disconnected, run a jumper wire from terminal 1 to terminal 3.

   Do the parking lights and taillights come on?

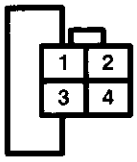

   Yes – Go to the next step.
   No – Repair the open in the RED/GRN wire.
6. Does the voltage at terminal 4 of the light flasher relay connector (C403) change from battery voltage to 0 volts repeatedly when the security system is in the PANIC mode?

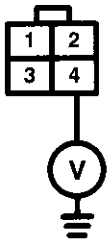

   Yes – Replace the light flasher relay.
   No – Go to the next step.
7. With the security control unit connector disconnected, run a jumper wire from terminal 17 to ground.

   Do the parking lights and taillights come on?

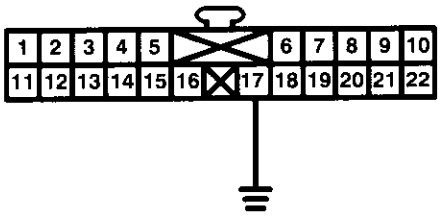

   Yes – Replace the security control unit.
   No – Repair the open in the terminal 17 (RED/WHT) wire.

Security System Status LED Stays On (HX, LX, EX, DX-V, Si)

1. Does the security system status LED go out when the security control unit connector is disconnected?
   Yes – Replace the security control unit.
   No – '96-'98 models: Go to the next step.
   '99 models: Locate and repair the short in the BLU/WHT wire between the security LED and the security control unit connector.
2. Does the security system status LED go out when the keyless entry connector (B) is disconnected?
   Yes – Locate and repair the short in the BLU/WHT wire between the keyless entry harness connector (B) and the security control unit connector.
   No – Replace the radio.

Security System Status LED Does Not Come On ('96-'98 HX, LX, EX)

1. Is there voltage at terminal 11 of the keyless entry harness connector (B)?

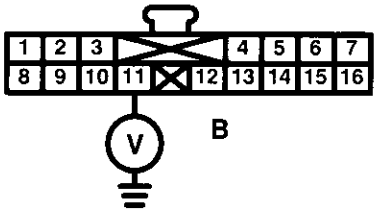

   Yes – Go to the next step.
   No – Replace the radio.
2. Is there voltage at terminal 14 of the security control unit connector?

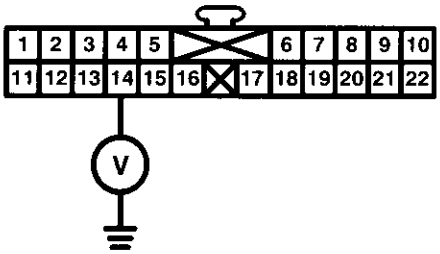

   Yes – Go to the next step.
   No – Locate and repair the open in the BLU/WHT wire.
3. With the keyless entry harness connector (B) connected, run a jumper from terminal 14 of the security control unit connector to ground.

   Does the security status LED come on?

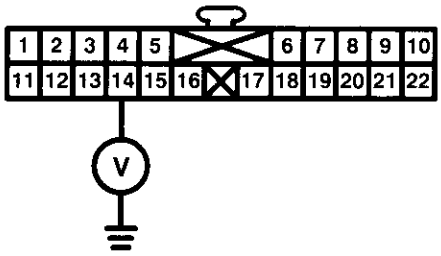

   Yes – Replace the security control unit.
   No – Replace the radio.

Starter Cut Does Not Work Properly (HX, LX, EX, DX-V, Si)

1. With the security system connector disconnected, run a jumper wire from terminal 19 to ground.

   Does the starter motor operate when the ignition switch is turned to START (III)?

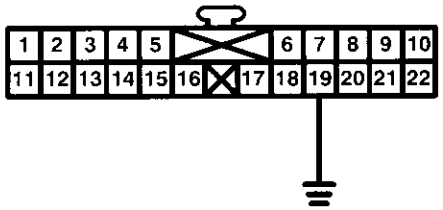

   Yes – Replace the security control unit.
   No – Go to the next step.

2. Is there battery voltage at terminals 2 and 3 of the security starter cut relay connector, when the ignition switch is in the START (III) position?

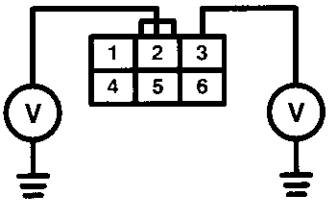

   Yes – Go to the next step.
   No – Repair the open in the BLK/YEL wire between the ignition switch and the security starter cut relay.

3. Is there battery voltage at terminal 6 of the security starter cut relay?

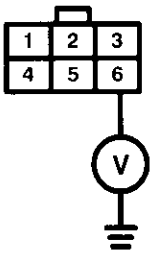

   Yes – Go to the next step.
   No – Replace the security starter cut relay.

4. With the security starter cut relay connector disconnected, run a jumper wire from terminal 2 to terminal 4.

   Does the starter motor operate when the ignition switch is turned to START (III)?

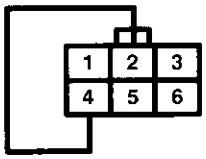

   Yes – Go to the next step.
   No – Repair the starting system.

5. With the security starter cut relay connector reconnected, does the voltage at terminal 6 change from battery voltage to 0 volts when the system is in the Alarm Triggered Mode?

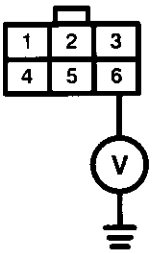

   Yes – Replace the security starter cut relay.
   No – Repair the open in terminal 19 (RED/YEL) wire.

Starter Cut Does Not Work Properly (CX, DX)

1. With the security system connector disconnected, run a jumper wire from terminal 19 to ground.

   Does the starter motor operate when the ignition switch is turned to START (III)?

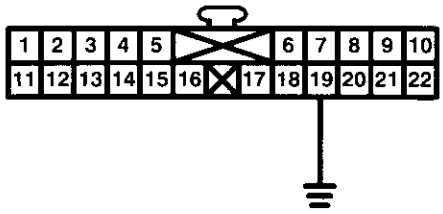

   Yes – Replace the security control unit.
   No – Go to the next step.

2. Is there battery voltage at terminals 2 and 3 of the security starter cut relay connector, when the ignition switch is in the START (III) position?

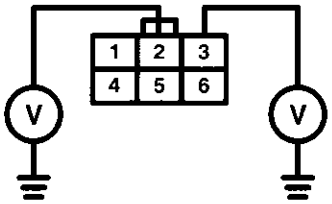

   Yes – Go to the next step.
   No – Repair the open in the BLK/WHT wire between the ignition switch and the security starter cut relay.

3. Is there battery voltage at terminal 6 of the security starter cut relay?

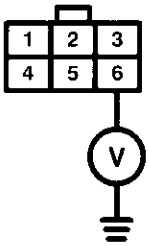

   Yes – Go to the next step.
   No – Replace the security starter cut relay.

4. With the security starter cut relay connector disconnected, run a jumper wire from terminal 2 to terminal 4.

   Does the starter motor operate when the ignition switch is turned to START (III)?

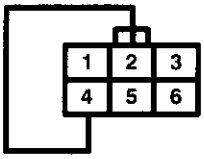

   Yes – Go to the next step.
   No – Repair the starting system.

5. Does the voltage at terminal 6 of the security starter cut relay change from battery voltage to 0 volts when the system is in the Alarm Triggered Mode?

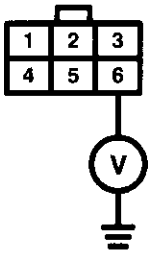

   Yes – Replace the security starter cut relay.
   No – Repair the open in the terminal 19 (GRN) wire.

Horn Does Not Sound When Alarm Is Triggered

1. Does the horn sound when the horn button is pressed?
   Yes – Go to the next step.
   No – Repair the horn circuit.
2. With the security control connector disconnected, run a jumper wire from terminal 18 to ground.

   Does the horn sound?

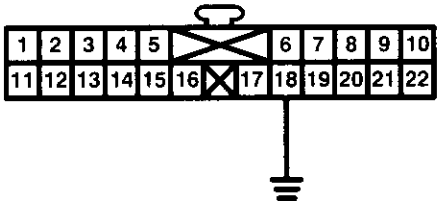

Yes – Replace the security control unit.
No – Repair the open in the terminal 18 (GRY) wire.

Interlock System

– All except '96-'98 CVT

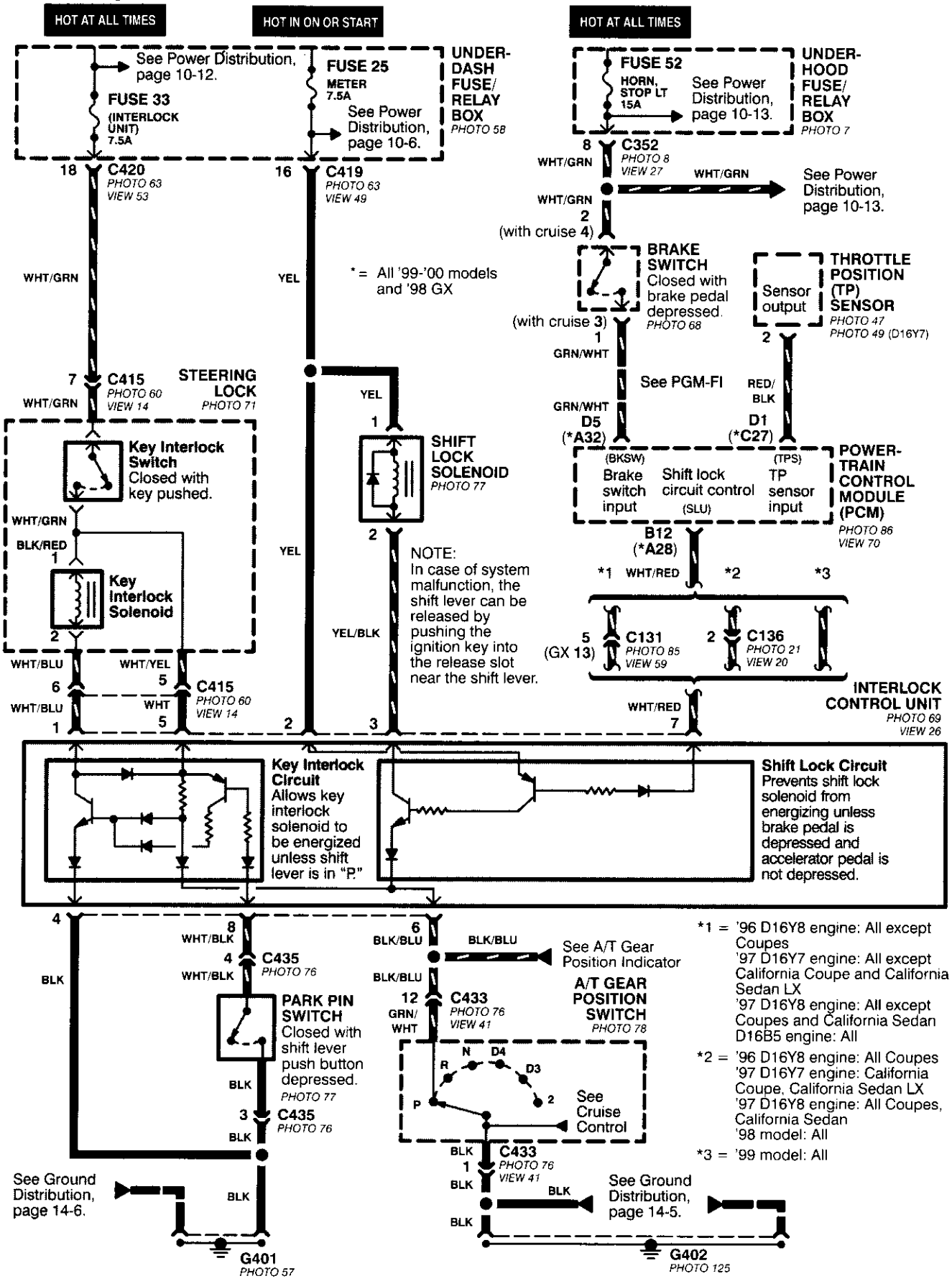

'96-'98 CVT

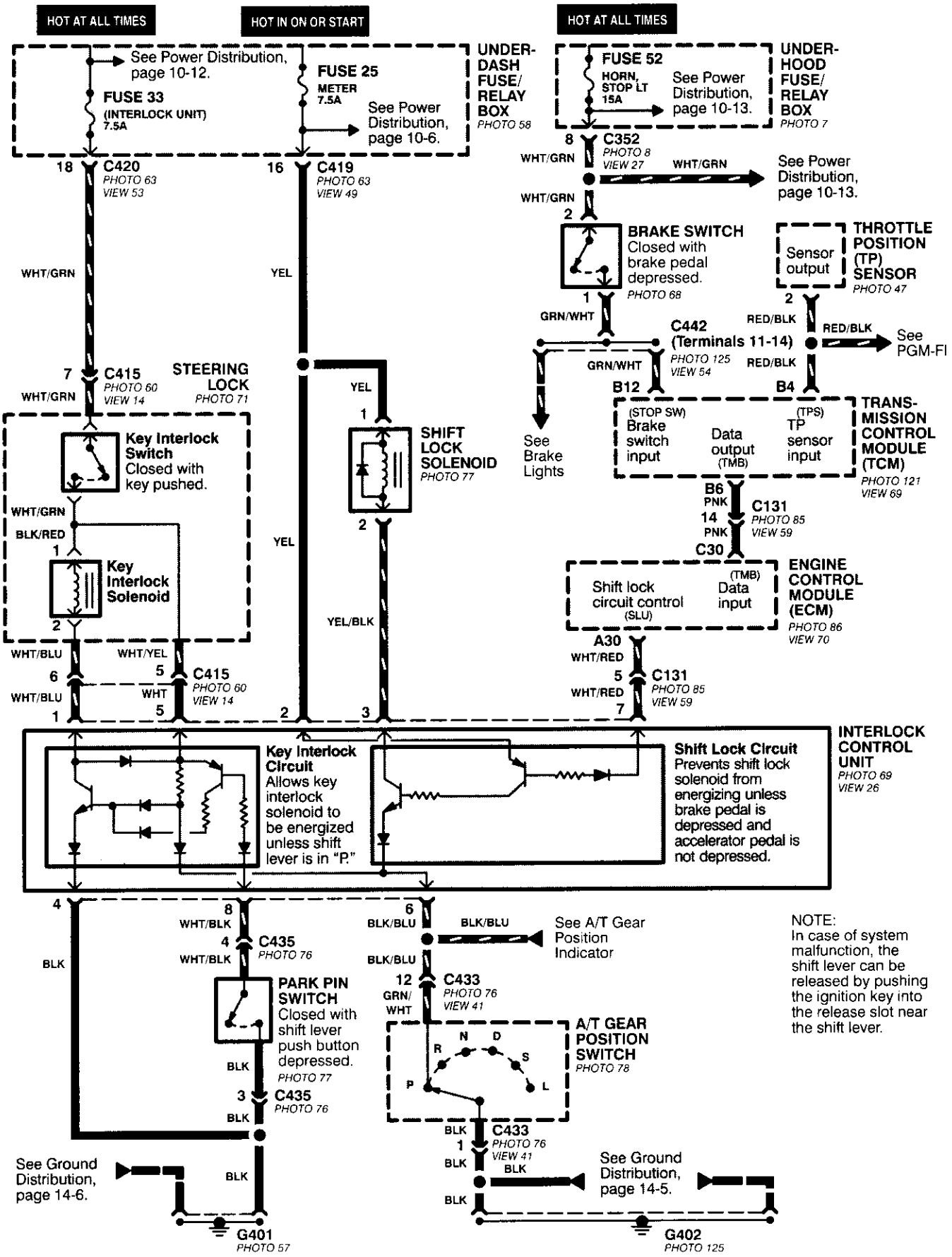
HOT AT ALL TIMES
HOT IN ON OR START
HOT AT ALL TIMES
See Power Distribution, page 10-12.
FUSE 33
(INTERLOCK UNIT)
7.5A
FUSE 25
METER
7.5A
See Power Distribution, page 10-6.
UNDER-DASH FUSE/ RELAY BOX
PHOTO 58
FUSE 52
HORN, STOP LT
15A
See Power Distribution, page 10-13.
UNDER-HOOD FUSE/ RELAY BOX
PHOTO 7
18
C420
PHOTO 63
VIEW 53
16
C419
PHOTO 63
VIEW 49
8
C352
PHOTO 8
VIEW 27
WHT/GRN
See Power Distribution, page 10-13.
WHT/GRN
2
BRAKE SWITCH
Closed with brake pedal depressed.
PHOTO 68
Sensor output
THROTTLE POSITION (TP) SENSOR
PHOTO 47
WHT/GRN
YEL
1
GRN/WHT
C442
(Terminals 11-14)
PHOTO 125
VIEW 54
RED/BLK
See PGM-FI
7
C415
PHOTO 60
VIEW 14
STEERING LOCK
PHOTO 71
B12
B4
Key Interlock Switch
Closed with key pushed.
SHIFT LOCK SOLENOID
PHOTO 77
See Brake Lights
(STOP SW) Brake switch input
Data output (TMB)
(TPS) TP sensor input
TRANS-MISSION CONTROL MODULE (TCM)
PHOTO 121
VIEW 69
BLK/RED
Key Interlock Solenoid
YEL/BLK
B6
PNK
14
C131
PHOTO 85
VIEW 59
C30
Shift lock circuit control (SLU)
(TMB) Data input
ENGINE CONTROL MODULE (ECM)
PHOTO 86
VIEW 70
A30
WHT/RED
WHT/BLU
WHT/YEL
WHT
WHT/BLU
Key Interlock Circuit
Allows key interlock solenoid to be energized unless shift lever is in "P."
Shift Lock Circuit
Prevents shift lock solenoid from energizing unless brake pedal is depressed and accelerator pedal is not depressed.
INTERLOCK CONTROL UNIT
PHOTO 69
VIEW 26
WHT/BLK
C435
PHOTO 76
BLK/BLU
See A/T Gear Position Indicator
BLK
PARK PIN SWITCH
Closed with shift lever push button depressed.
PHOTO 77
GRN/WHT
C433
PHOTO 76
VIEW 41
A/T GEAR POSITION SWITCH
PHOTO 78
N
D
R
S
P
L
NOTE:
In case of system malfunction, the shift lever can be released by pushing the ignition key into the release slot near the shift lever.
See Ground Distribution, page 14-6.
See Ground Distribution, page 14-5.
G401
PHOTO 57
G402
PHOTO 125

Power Mirrors

– Without Defogger

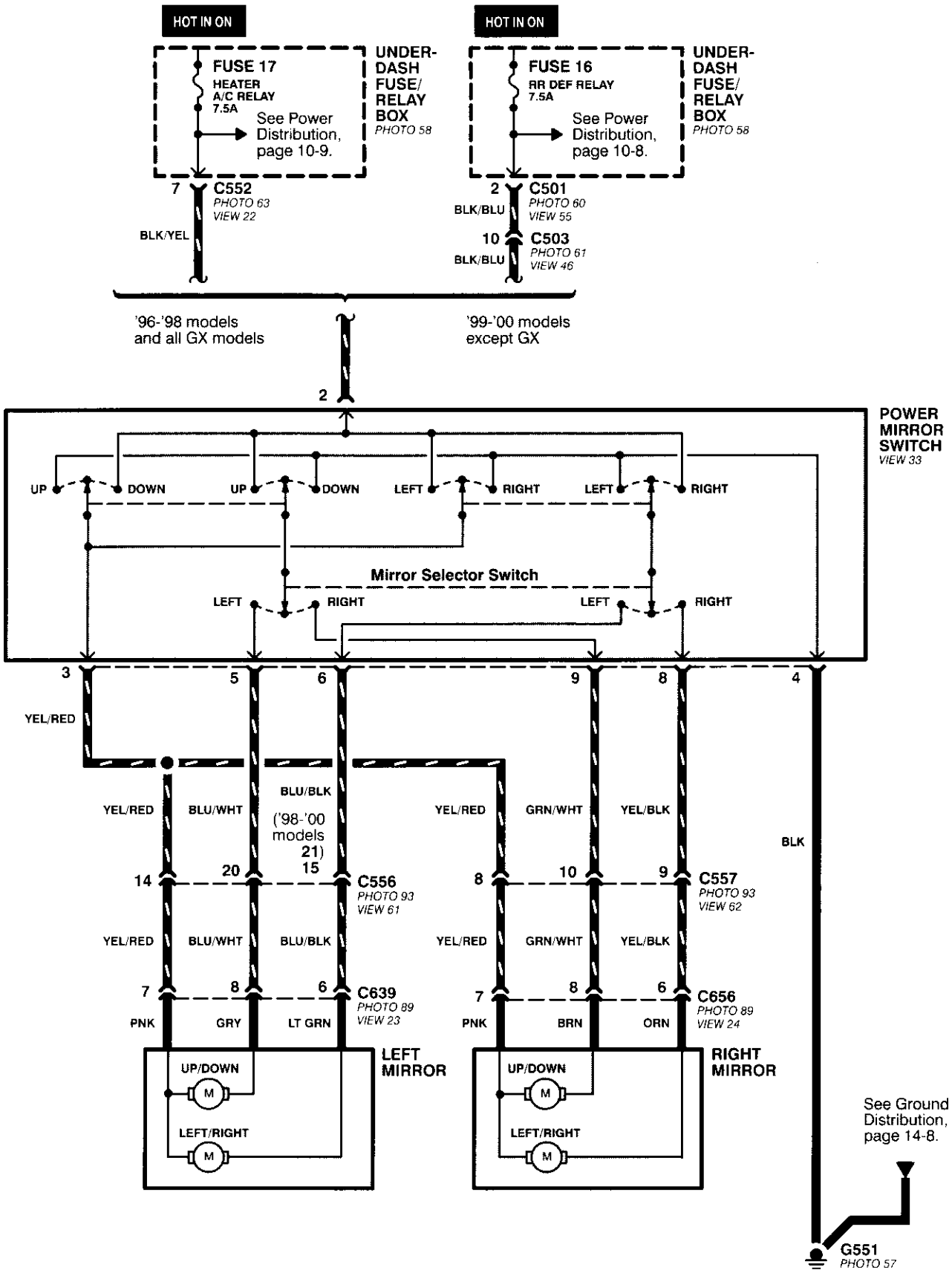

How the Circuit Works

The two outside mirrors are controlled by the power mirror switch. Each mirror has two reversible motors: one motor moves the mirror up and down and the other motor moves the mirror left and right.

The power mirror switch contains four switches to control mirror adjustment, and two switches to select the left or right mirror. With the ignition in ON (II), battery voltage is supplied to the power mirror switch. The mirror selector switch directs voltage from two of the direction switches to either the left or the right mirror.

Mirror Up

When you press the "up" edge of the mirror adjustment button, ground is supplied from one of the up/down switch contacts to both mirrors; battery voltage is supplied from the opposite up/down switch contact through the mirror select switch. If the mirror select switch is in the left or right position, battery voltage is supplied to the corresponding mirror up/down motor which then tilts the selected mirror up.

Mirror Down

When you press the "down" edge of the mirror adjustment button, battery voltage is supplied from one of the up/down switch contacts to both mirrors; a ground is supplied from the opposite up/down switch contact through the mirror select switch. If the mirror select switch is in the left or right position, battery voltage is supplied to the corresponding mirror up/down motor which then tilts the selected mirror down.

Mirror Left

When you press the "left" edge of the mirror adjustment button, battery voltage is supplied from one of the left/right switch contacts to both mirrors; a ground is supplied from the opposite left/right switch contact through the mirror select switch. If the mirror select switch is in the left or right position, battery voltage is supplied to the corresponding mirror left/right motor which then tilts the selected mirror to the left.

Mirror Right

When you press the "right" edge of the mirror adjustment button, ground is supplied from one of the left/right switch contacts to both mirrors; battery voltage is supplied from the opposite left/right switch contact through the mirror select switch. If the mirror select switch is in the left or right position, battery voltage is supplied to the corresponding mirror left/right motor which then tilts the selected mirror to the right.

Refer to the Service Manual (Section 23, Electrical) for specific tests of troubleshooting procedures

Power Mirrors

– With Defogger

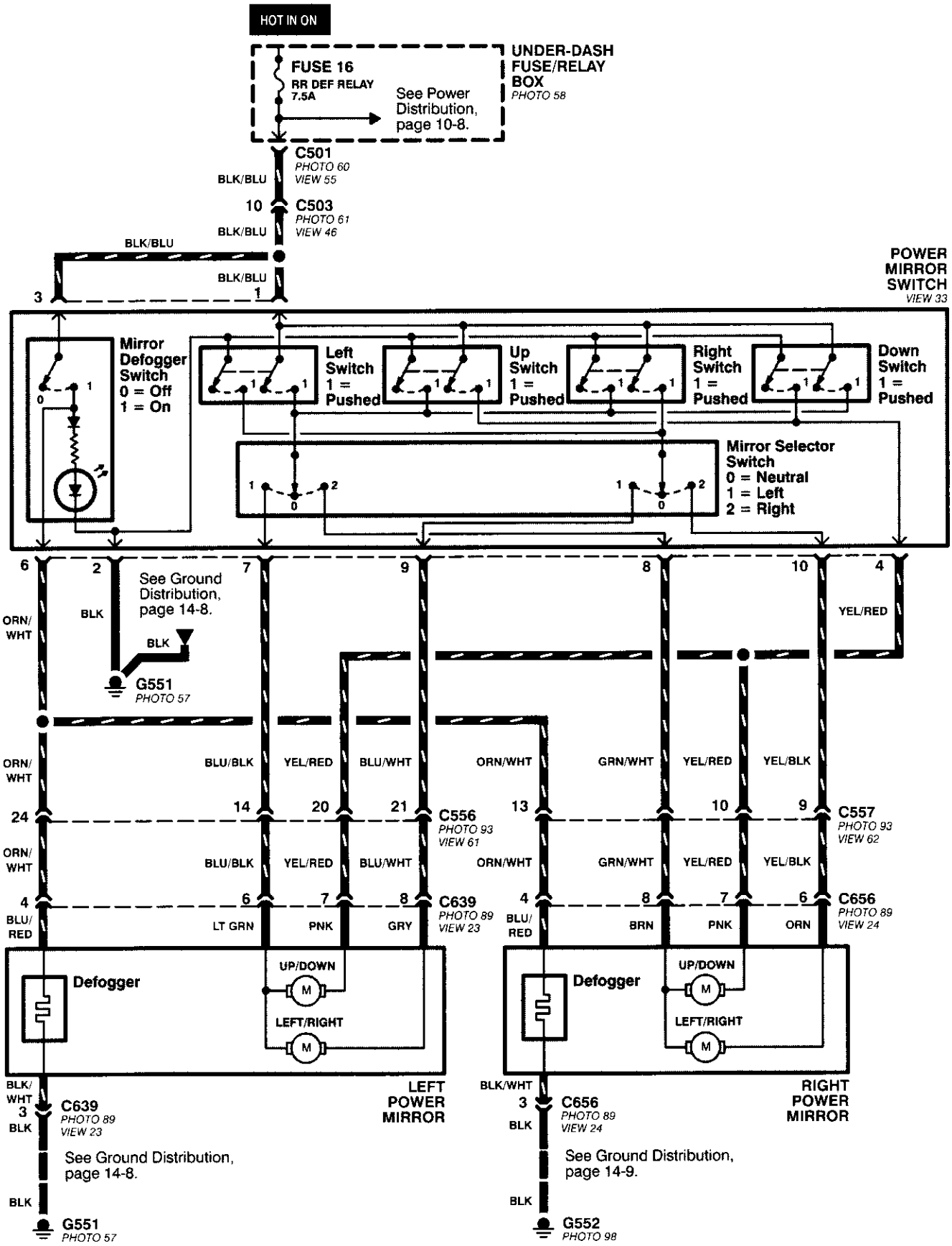

How the Circuit Works

The two outside mirrors are controlled by the power mirror switch. Each mirror has two reversible motors: one motor moves the mirror up and down and the other motor moves the mirror left and right.

The power mirror switch contains four switches to control mirror adjustment, and a switch to select the left or right mirror. With the ignition ON (II), battery voltage is supplied to the power mirror switch. The mirror selector switch directs voltage from the direction switches to either the left or right mirror.

Mirror Up

When you press the "up" edge of the mirror adjustment button, voltage is supplied from one of the UP switch contacts to both mirrors. With the mirror select switch in the LEFT or RIGHT position, ground is provided for the corresponding up/down motor through the opposite UP switch contact. Battery voltage is supplied to the mirror up/down motor which then tilts the selected mirror up.

Mirror Down

When you press the "down" edge of the mirror adjustment button, ground is provided through one of the DOWN switch contacts to both mirrors. With the mirror select switch in the LEFT or RIGHT position, voltage is supplied to the corresponding up/down motor through the opposite DOWN switch contact. Battery voltage is supplied to the mirror up/down motor which then tilts the selected mirror down.

Mirror Left

When the mirror select switch is in the LEFT or RIGHT position, and you press the "left" edge of the mirror adjustment button, voltage is supplied to both corresponding mirror motors through one of the LEFT switch contacts. Ground is provided for the corresponding left/right motor through the opposite LEFT switch contact. Battery voltage is supplied to the mirror left /right motor which then tilts the selected mirror left.

Mirror Right

When the mirror select switch is in the LEFT or RIGHT position, and you press the "right" edge of the mirror adjustment button, ground is provided to both corresponding mirror motors through one of the RIGHT switch contacts. Voltage is supplied to the corresponding left/right motor through the opposite RIGHT switch contact. Battery voltage is supplied to the mirror left /right motor which then tilts the selected mirror right.

Mirror Defoggers

With the ignition switch in ON (II), battery voltage is supplied to the mirror defogger switch. When you press the mirror defogger switch ON, voltage is supplied to both mirror defoggers, causing them to heat up and remove any fog from the mirrors. The opposite side of each defogger grid is connected to ground.

Refer to the Service Manual (Section 23, Body Electrical) for specific tests and troubleshooting procedures.

Stereo Sound System

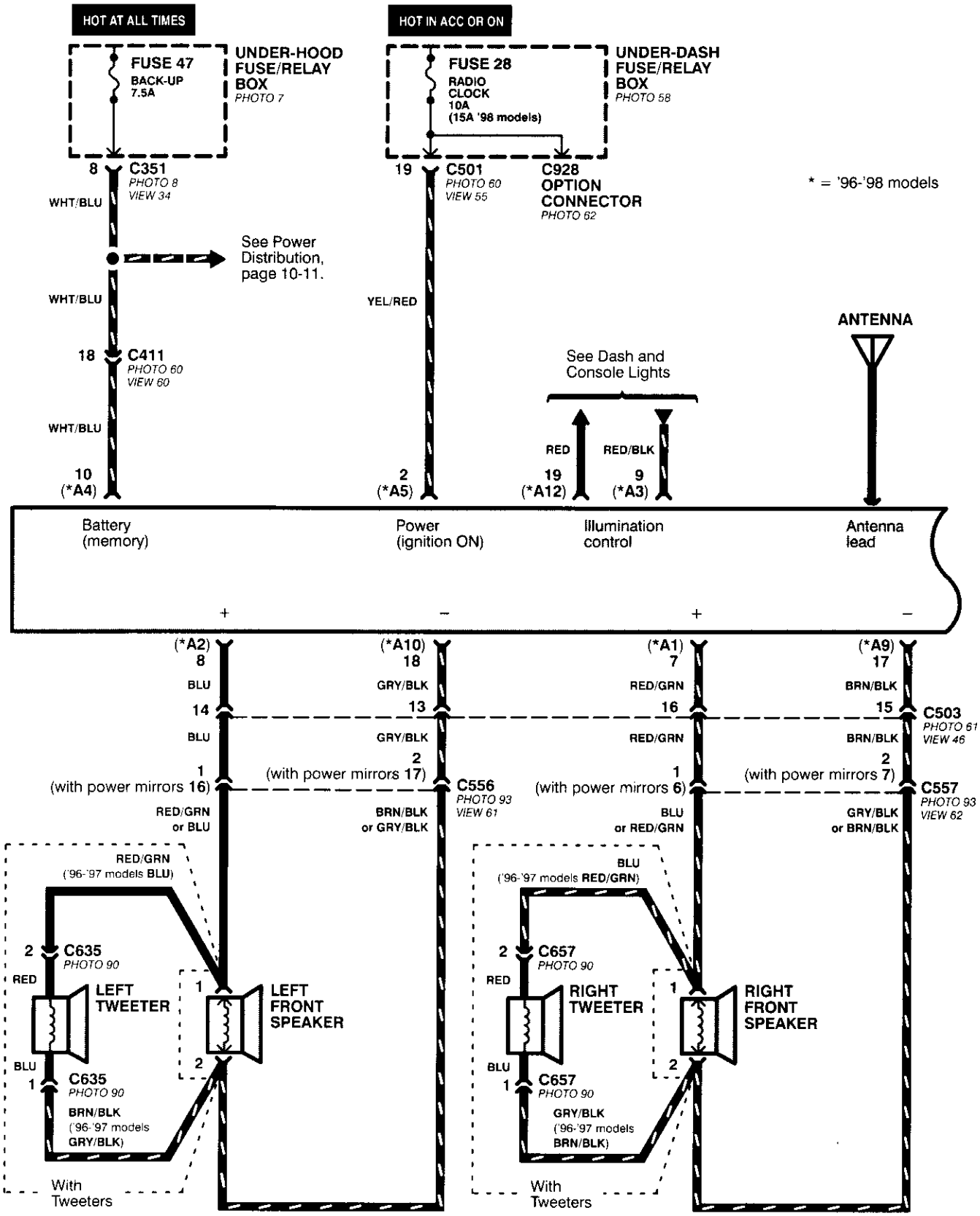

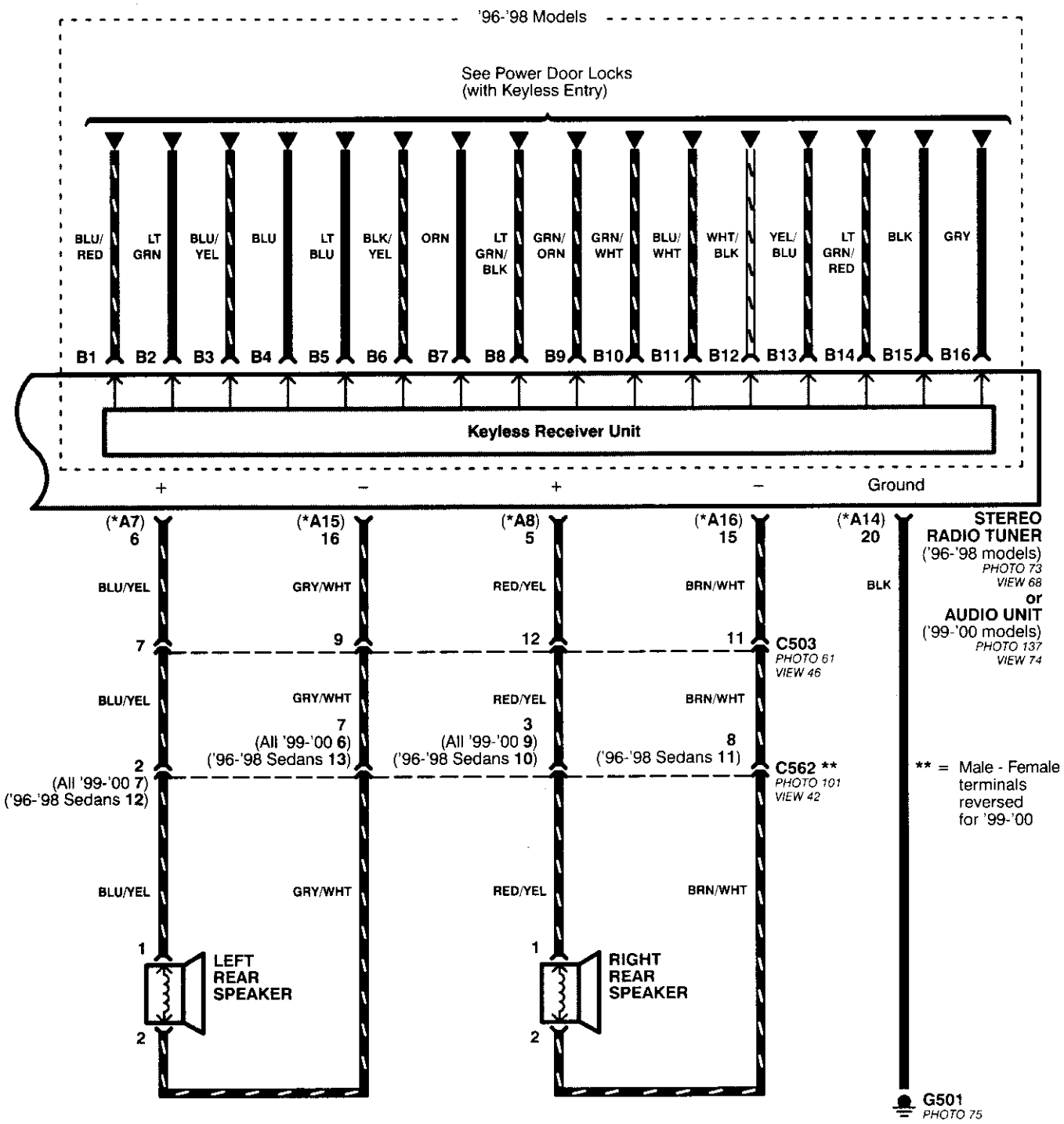
* = '96-'98 models
'96-'98 Models
See Power Door Locks
(with Keyless Entry)
BLU/RED
LT GRN
BLU/YEL
BLU
LT BLU
BLK/YEL
ORN
LT GRN/BLK
GRN/ORN
GRN/WHT
BLU/WHT
WHT/BLK
YEL/BLU
LT GRN/RED
BLK
GRY
B1
B2
B3
B4
B5
B6
B7
B8
B9
B10
B11
B12
B13
B14
B15
B16
Keyless Receiver Unit
+
–
+
–
Ground
(*A7) 6
(*A15) 16
(*A8) 5
(*A16) 15
(*A14) 20
STEREO RADIO TUNER
('96-'98 models)
PHOTO 73
VIEW 68
or
AUDIO UNIT
('99-'00 models)
PHOTO 137
VIEW 74
BLU/YEL
GRY/WHT
RED/YEL
BRN/WHT
BLK
7
9
12
11
C503
PHOTO 61
VIEW 46
BLU/YEL
GRY/WHT
RED/YEL
BRN/WHT
7
(All '99-'00 6)
('96-'98 Sedans 13)
3
(All '99-'00 9)
('96-'98 Sedans 10)
8
('96-'98 Sedans 11)
2
(All '99-'00 7)
('96-'98 Sedans 12)
C562 **
PHOTO 101
VIEW 42
** = Male - Female terminals reversed for '99-'00
BLU/YEL
GRY/WHT
RED/YEL
BRN/WHT
1
2
LEFT REAR SPEAKER
1
2
RIGHT REAR SPEAKER
G501
PHOTO 75

Accessory Power Socket

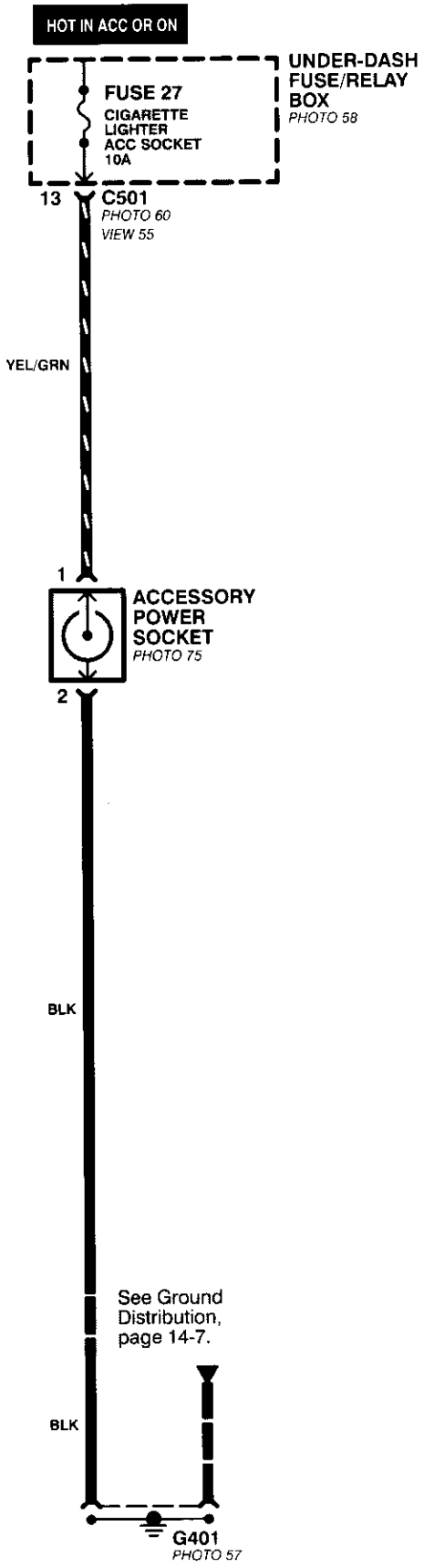

Component Location

1. Behind Front Grille

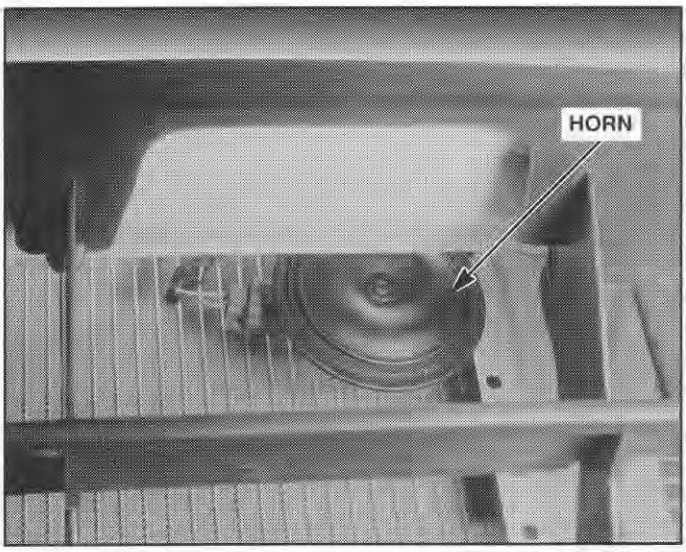

2. Behind Left Side of Front Bumper

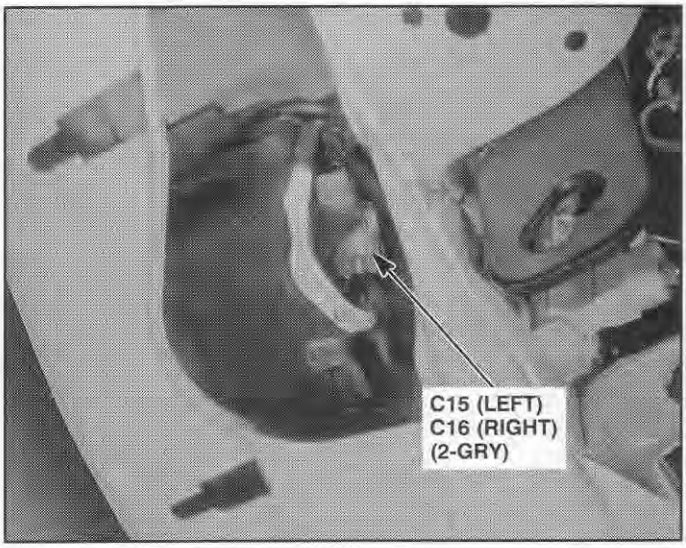

3. Behind Left Side of Front Bumper

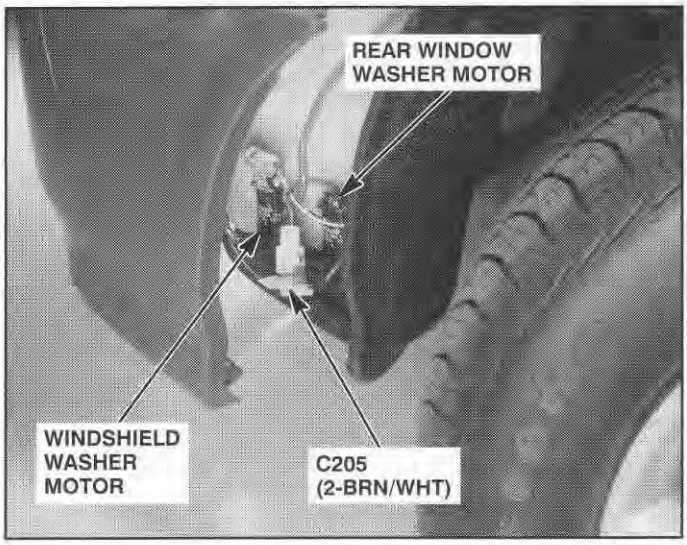

4. Right Rear Corner of Engine Compartment

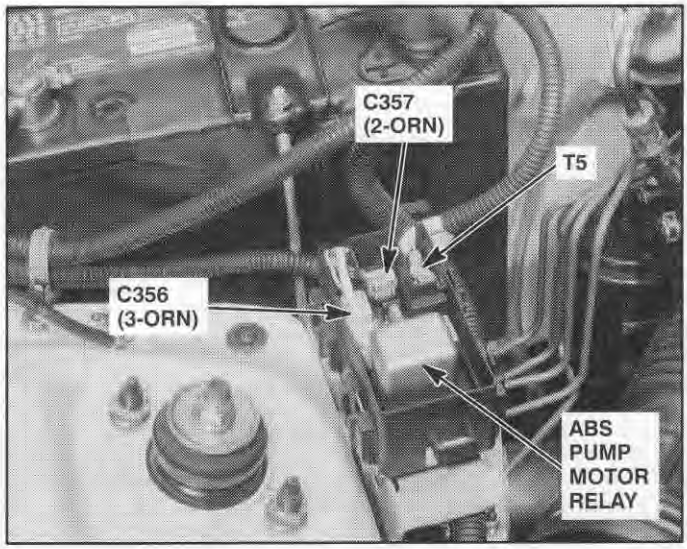

5. Right Side of Engine Compartment

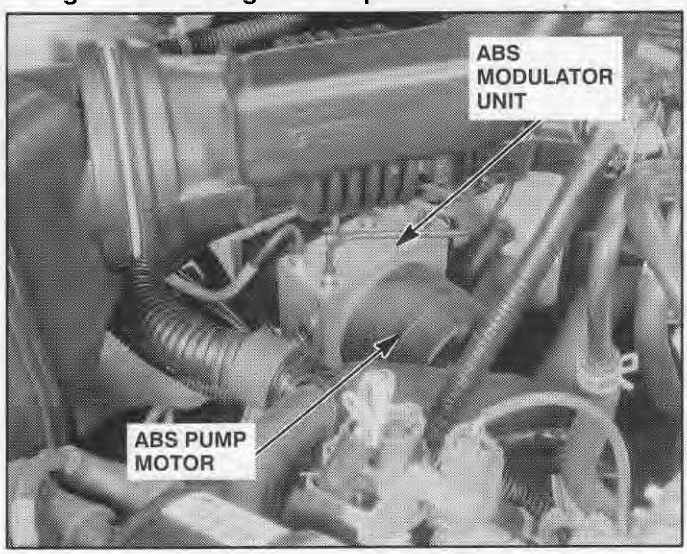

6. Right Side of Engine Compartment

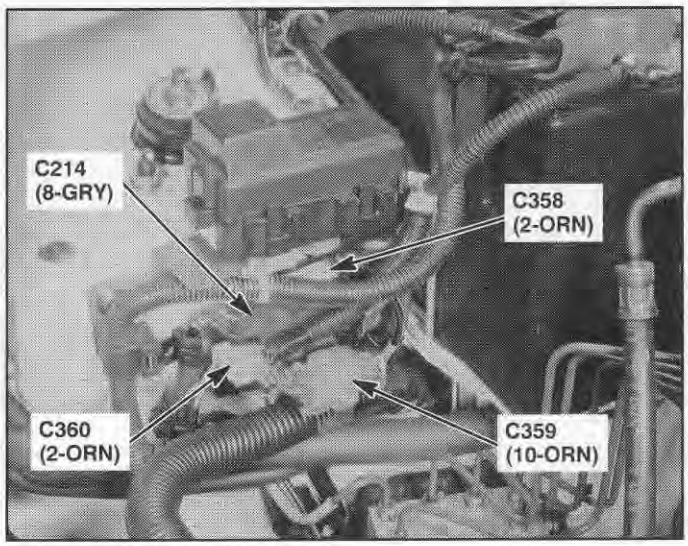

7. Right Rear Corner of Engine Compartment

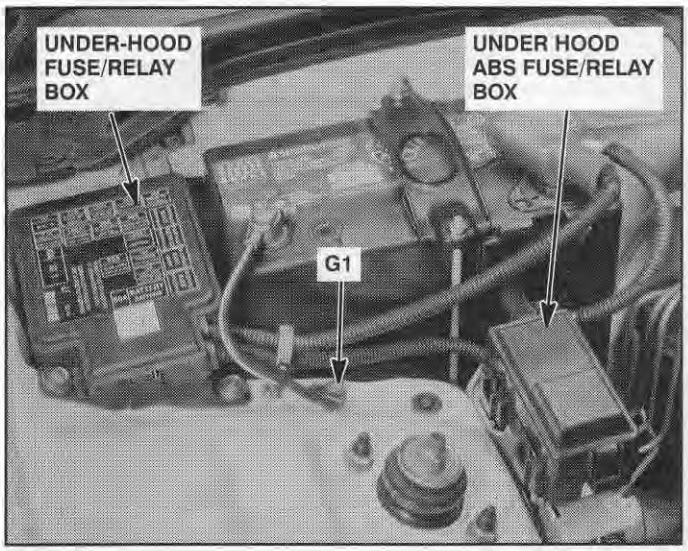

8. Right Rear Corner of Engine Compartment

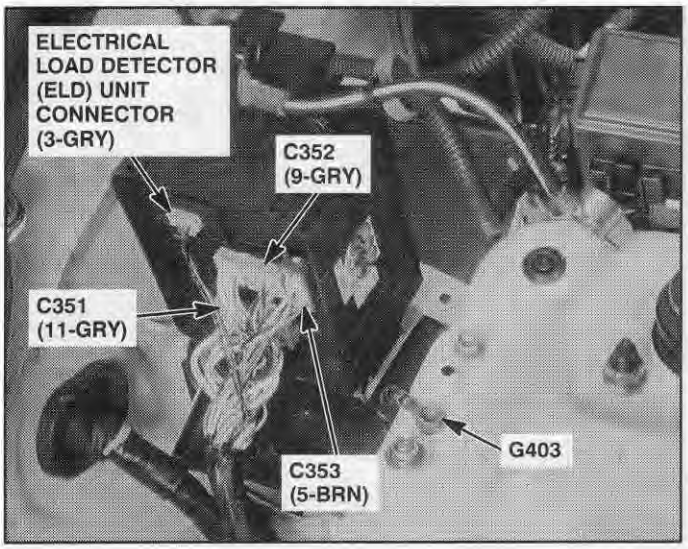

9. Right Rear Corner of Engine Compartment

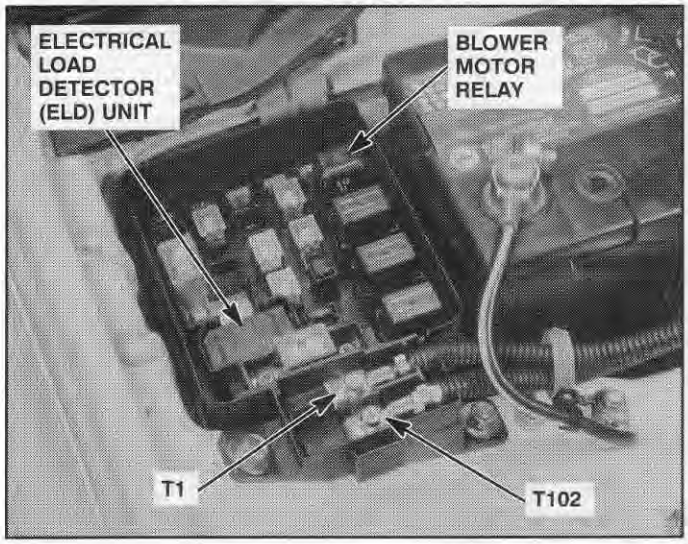

10. Right Rear Corner of Engine Compartment

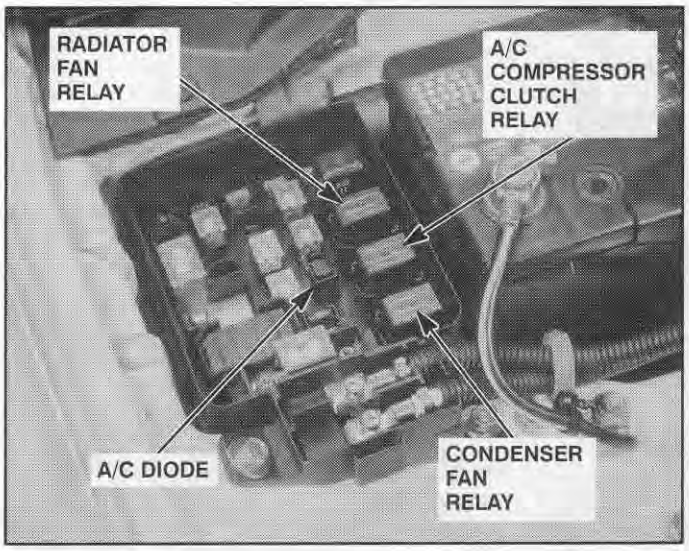

11. Right Front Corner of Engine Compartment

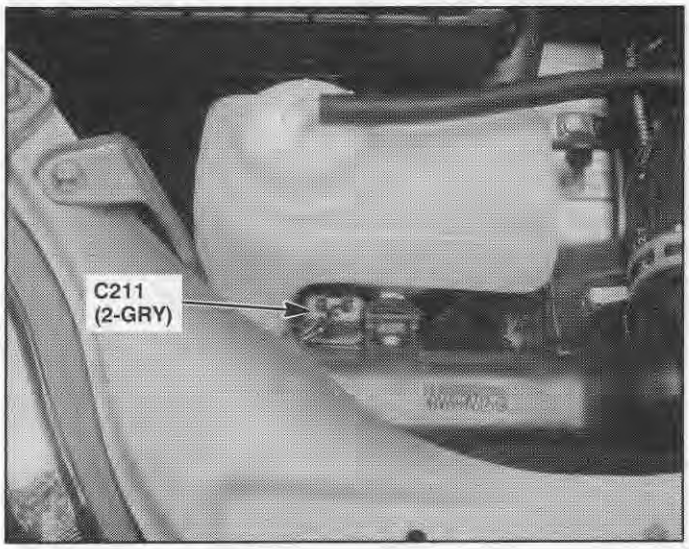

12. Right Front Corner of Engine Compartment

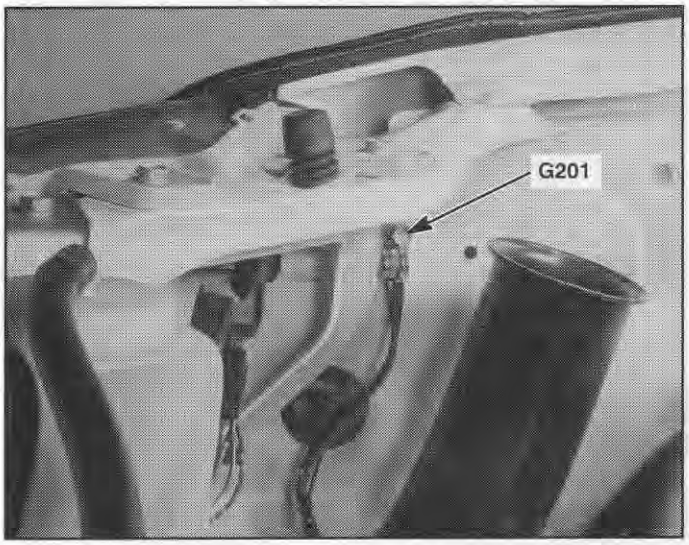

Component Location

13. Lower Right Front of Engine Compartment

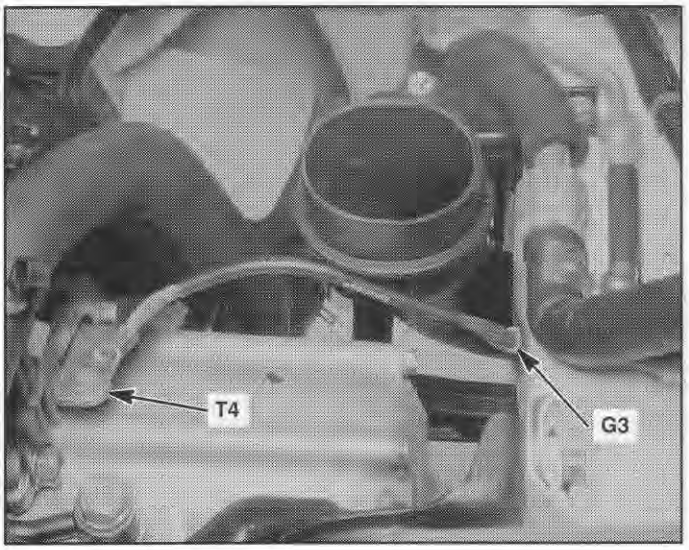

14. Front of Engine Compartment

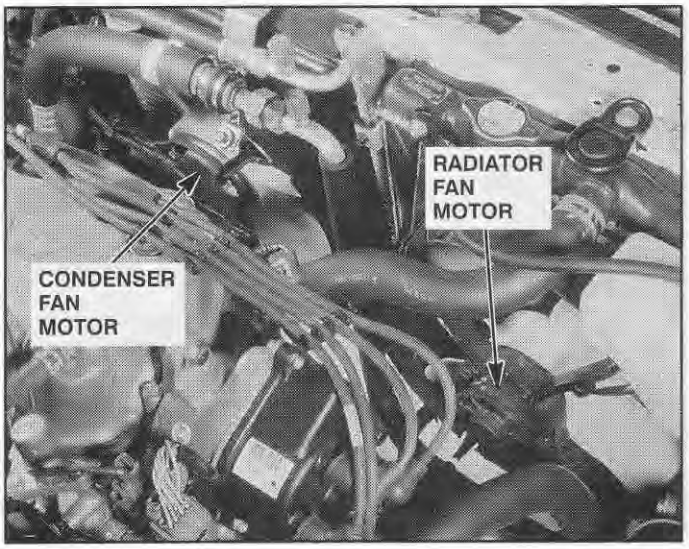

15. Lower Left Front of Engine Compartment

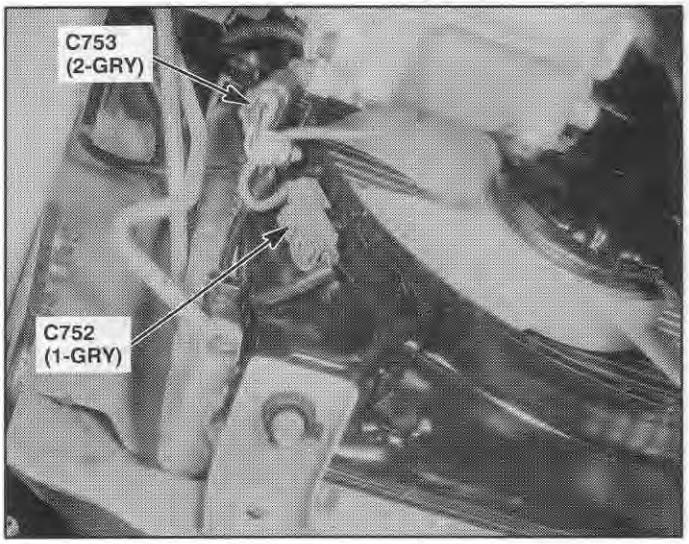

16. Left Front Corner of Engine Compartment

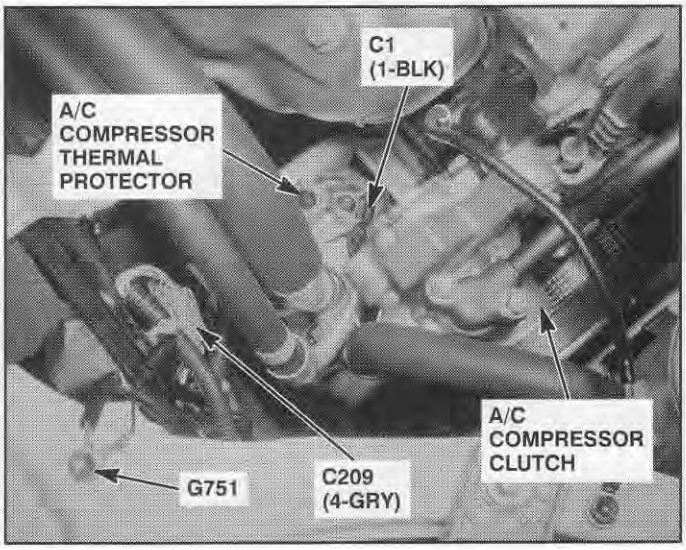

17. Left Front Corner of Engine Compartment

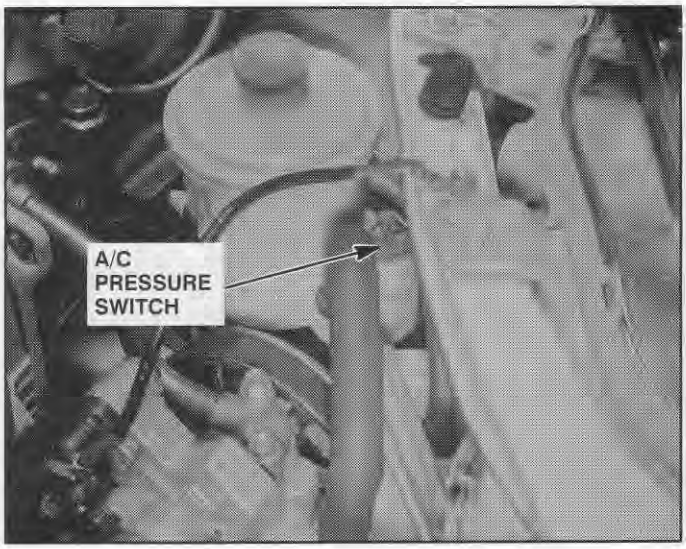

18. Left Front Corner of Engine Compartment

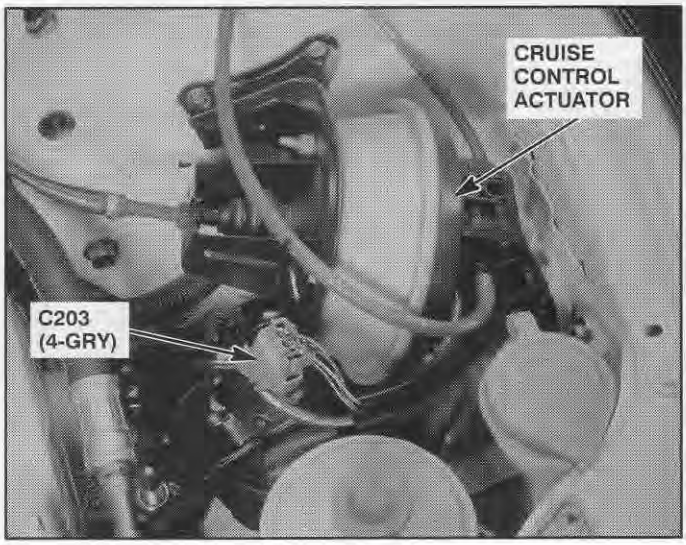

19. Left Front Corner of Engine Compartment

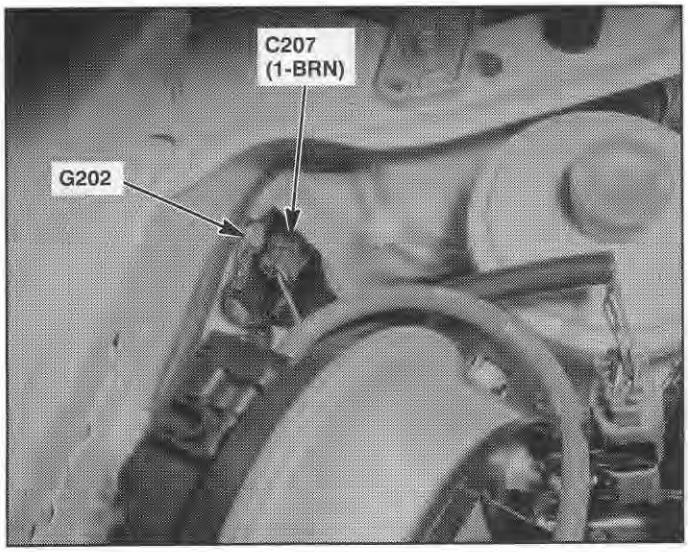

20. Left Front of Engine Compartment

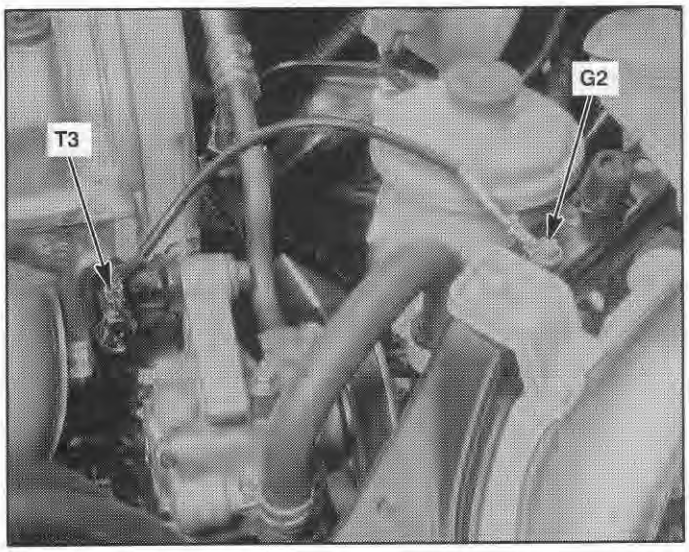

21. Left Rear Corner of Engine Compartment

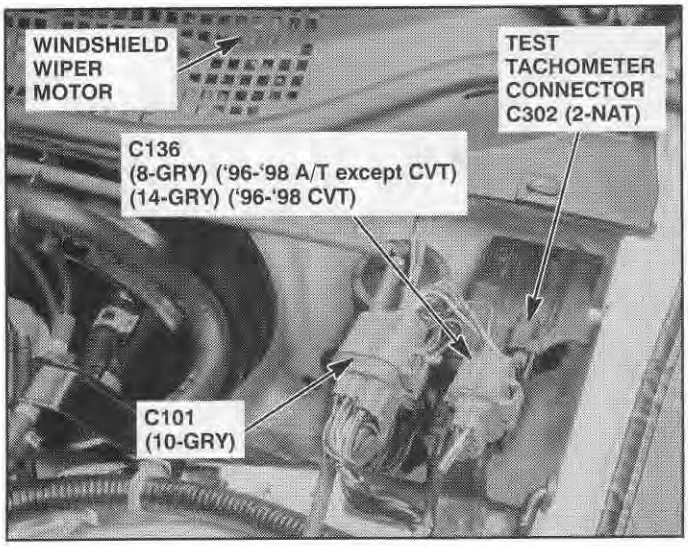

22. Left Rear Corner of Engine Compartment

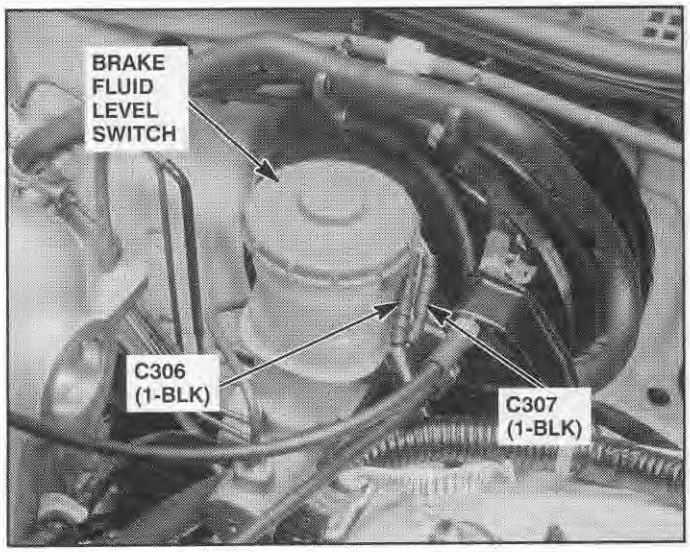

23. Left Rear Corner of Engine Compartment

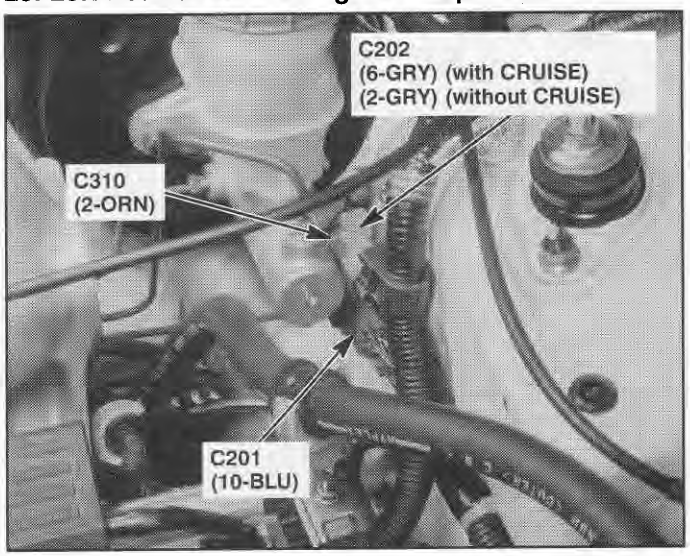

24. Lower Left Rear of Engine Compartment

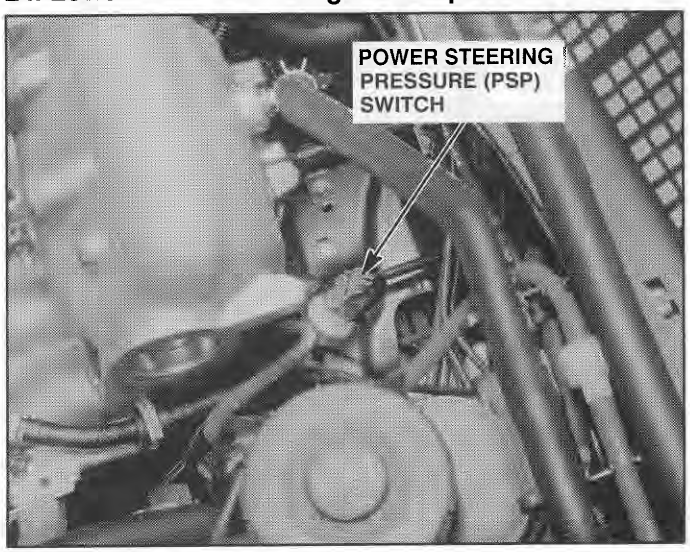

Component Location

25. Lower Left Rear of Engine

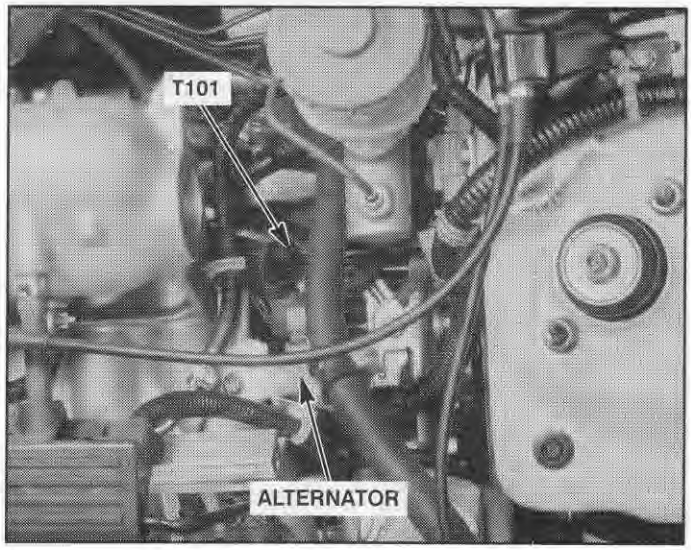

26. Left Side of Engine (All Except B16A2)

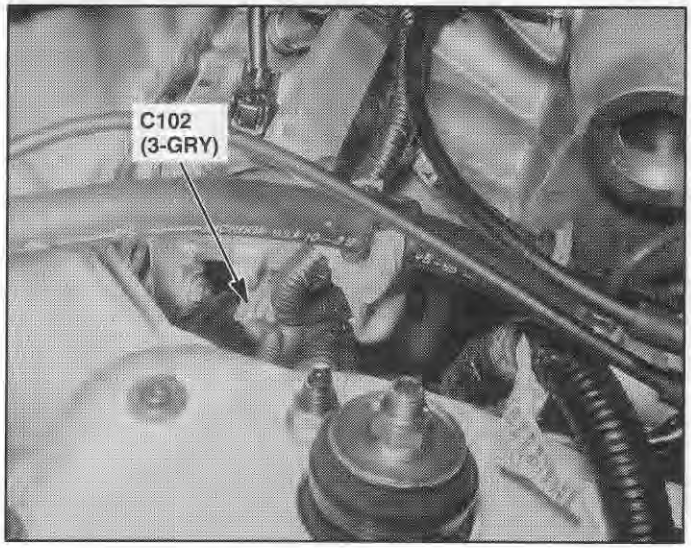

27. Right Front of Engine

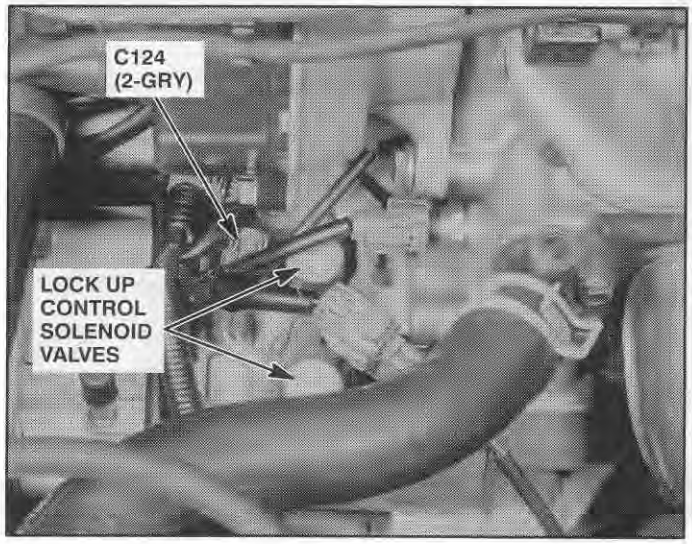

28. Lower Right Side of Engine Compartment

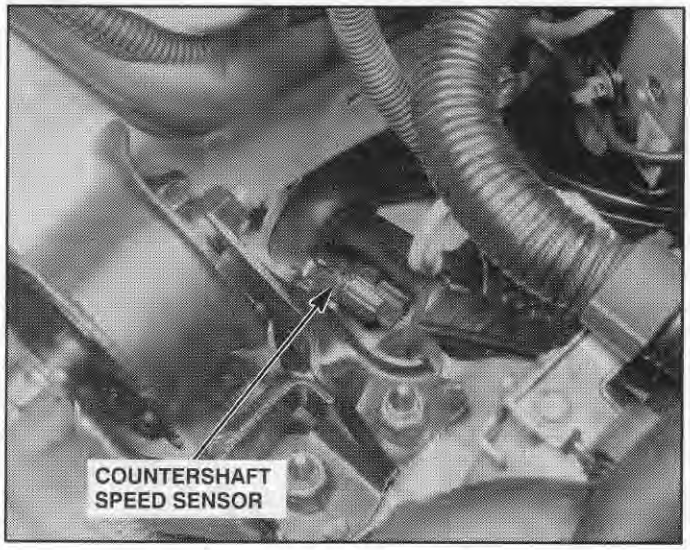

29. Lower Right Front of Engine

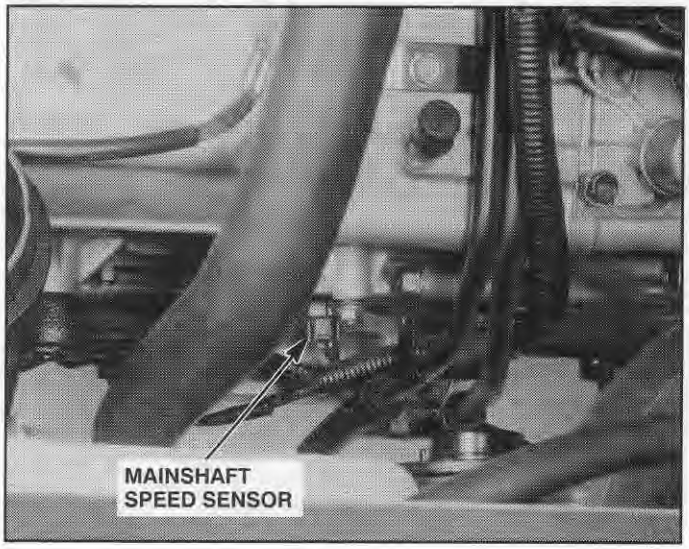

30. Lower Front of Transmission

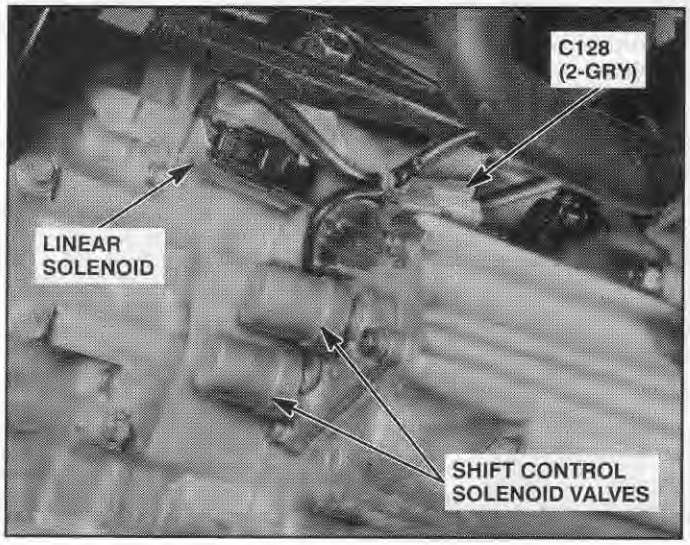

31. Right Side of Engine Compartment (M/T)

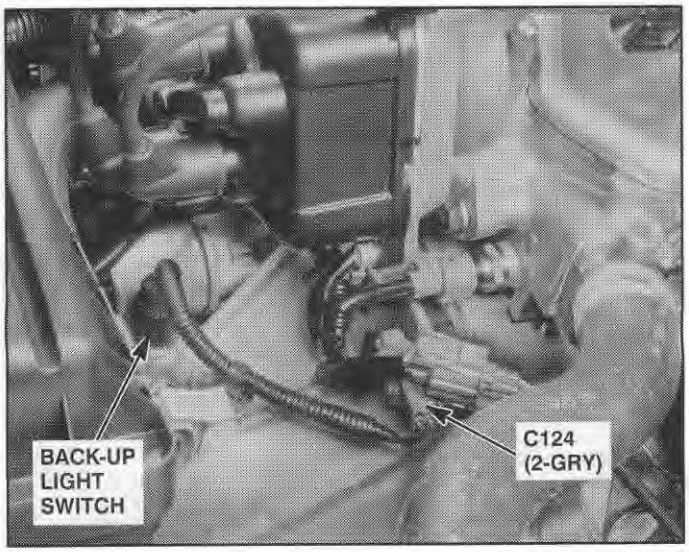

32. Right Front of Engine Compartment

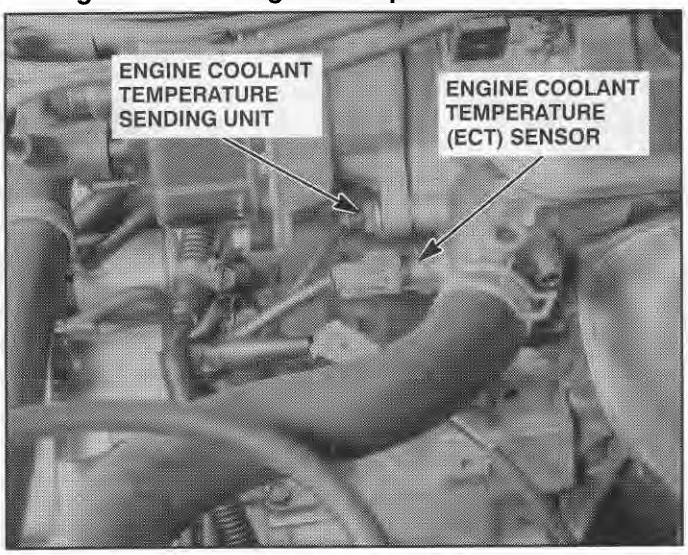

33. Right Side of Engine

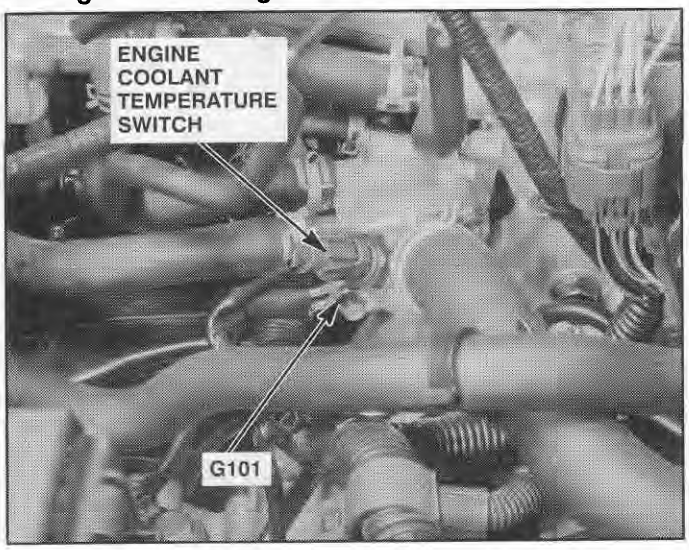

34. Lower Right Side of Engine

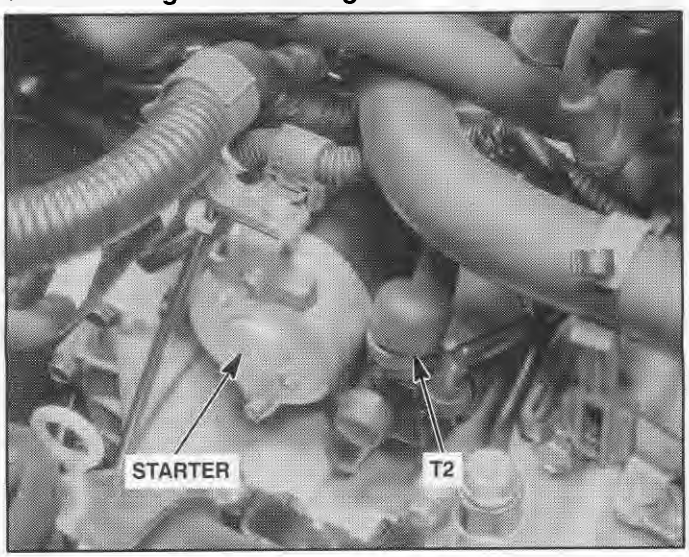

35. Lower Right Rear of Engine

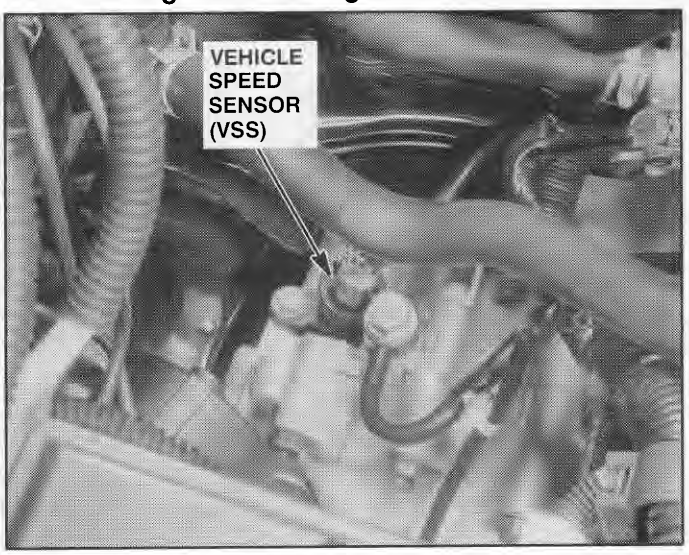

36. Right Side of D16Y5 Engine (D16B5 Similar)

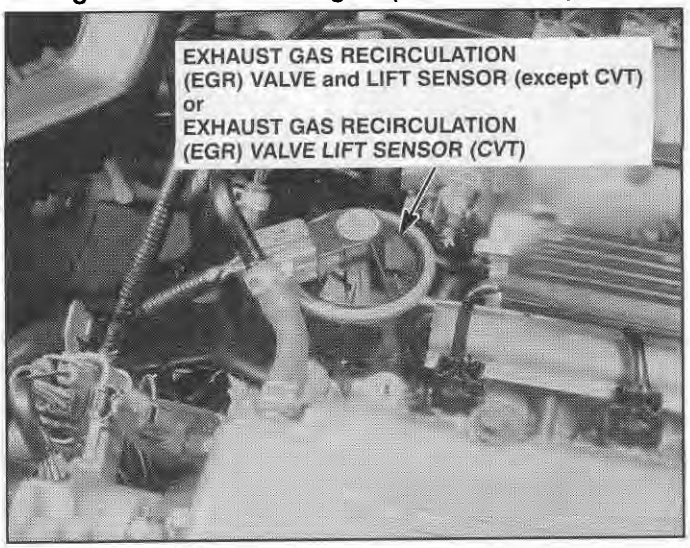

Component Location

37. Top Right Side of D16Y7 Engine

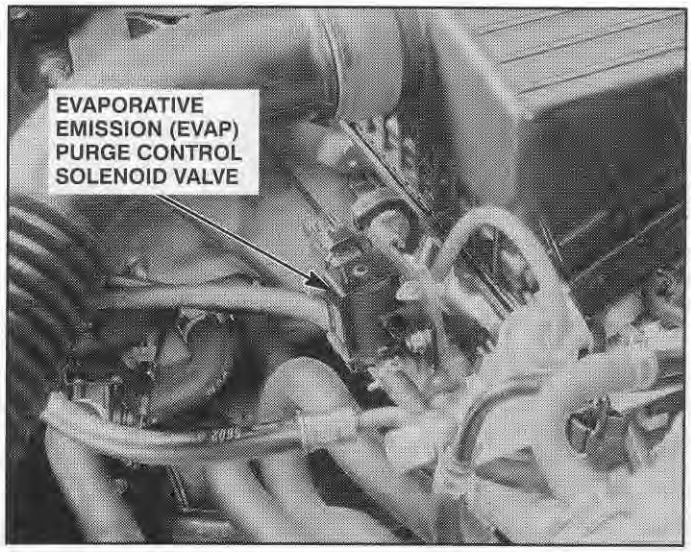

38. Top Center of Engine (except D16B5)

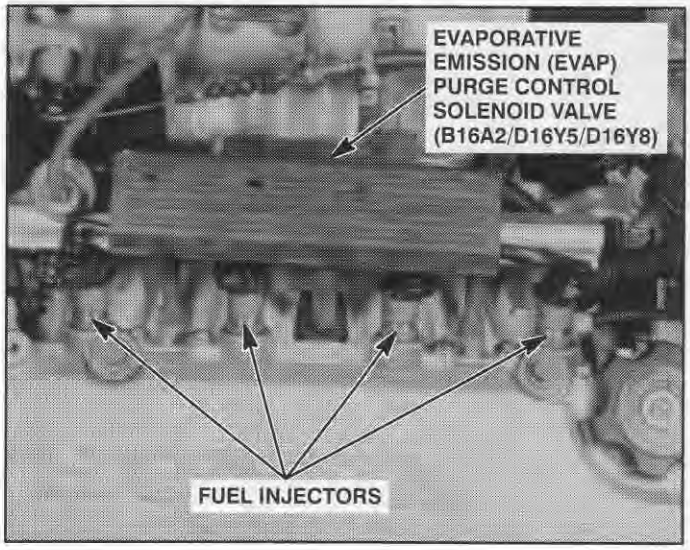

39. Right Rear of Engine Compartment

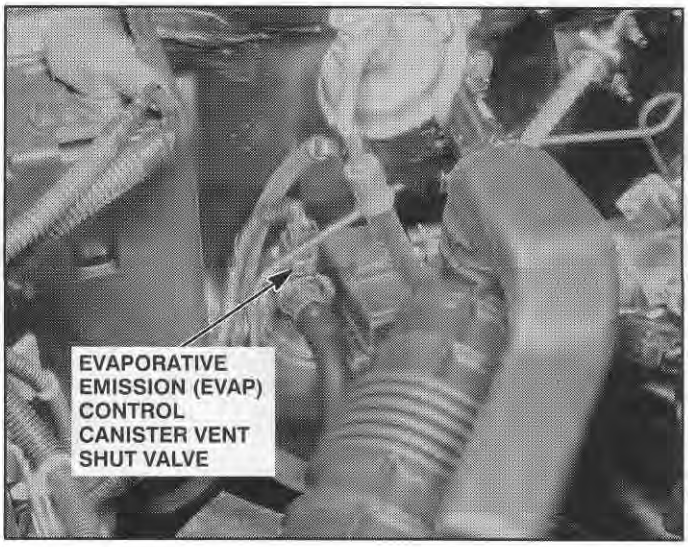

40. Front of D16Y5 Engine (D16B5/D16Y7 Similar)

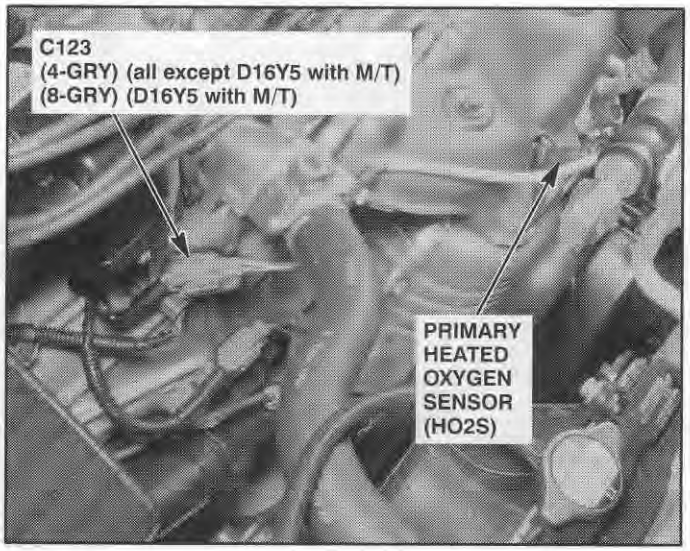

41. Front of D16Y5 Engine (D16B5/D16Y7 Similar)

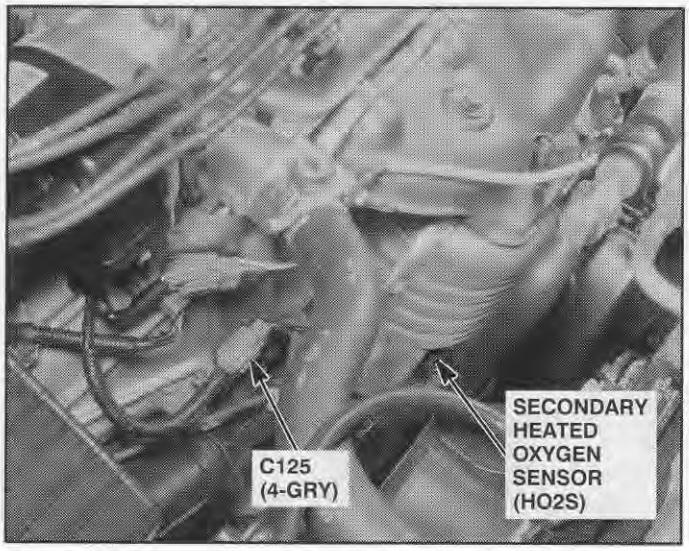

42. Front of D16Y8 Engine ('96-'98)

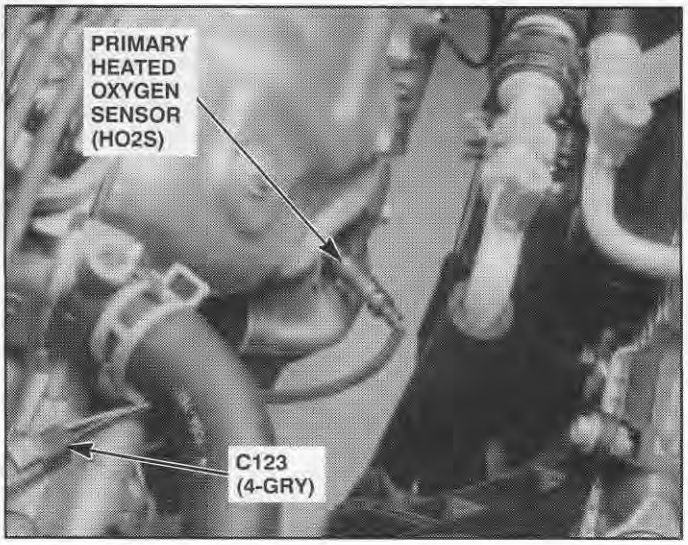

43. Underside of Vehicle ('96-'98 D16Y8)

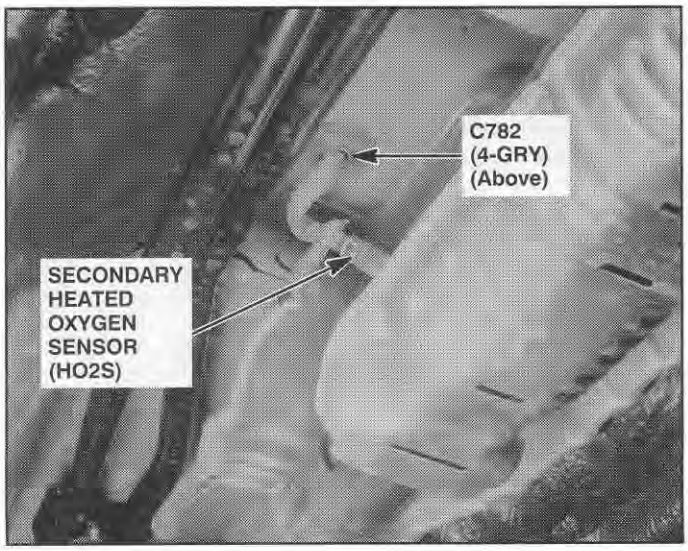

44. Right Side of D16Y8 Engine (Others Similar)

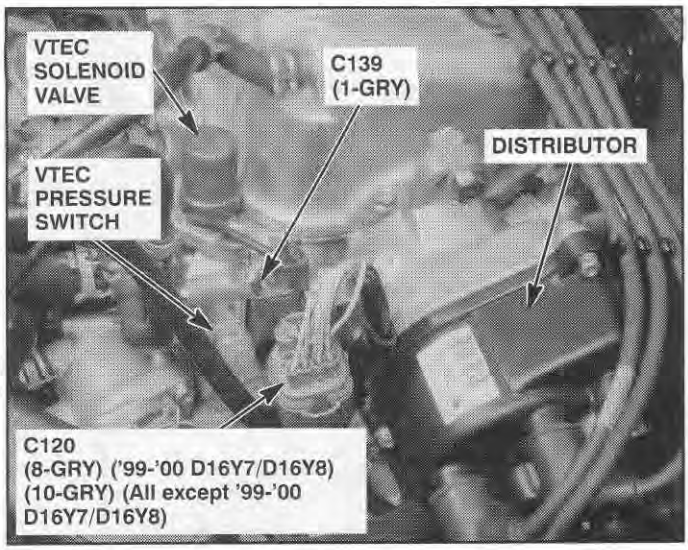

45. Rear of D16Y8 Engine (All except D16Y7)

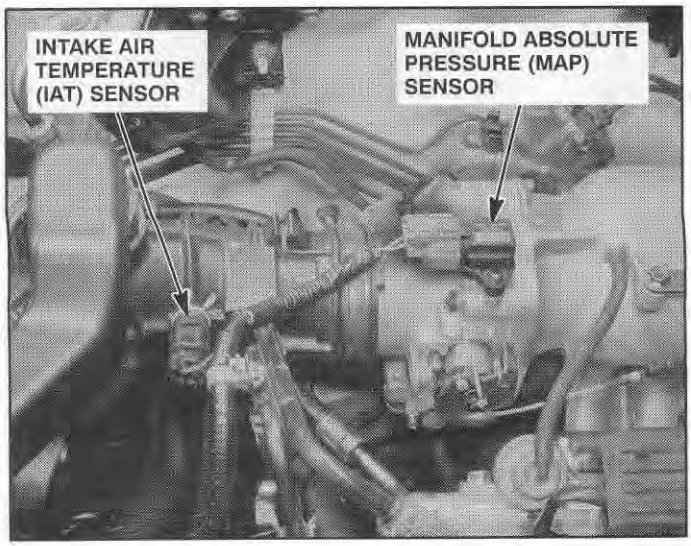

46. Lower Rear of D16Y8 Engine (Others Similar)

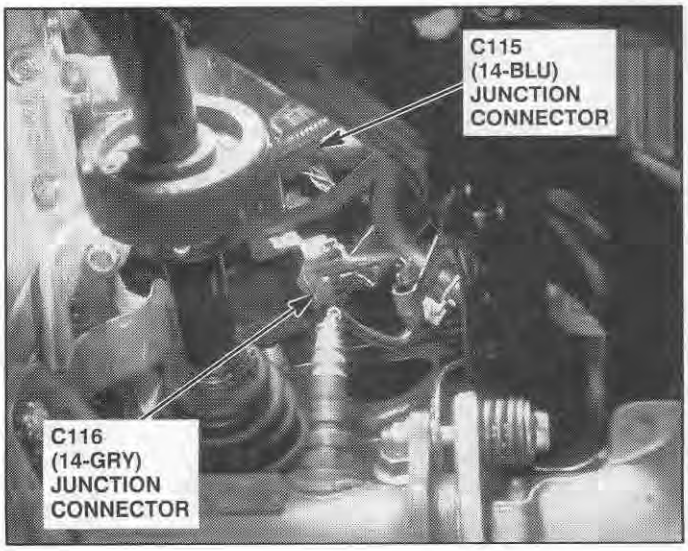

47. Rear of D16Y8 Engine (D16Y5 and D16B5 Similar)

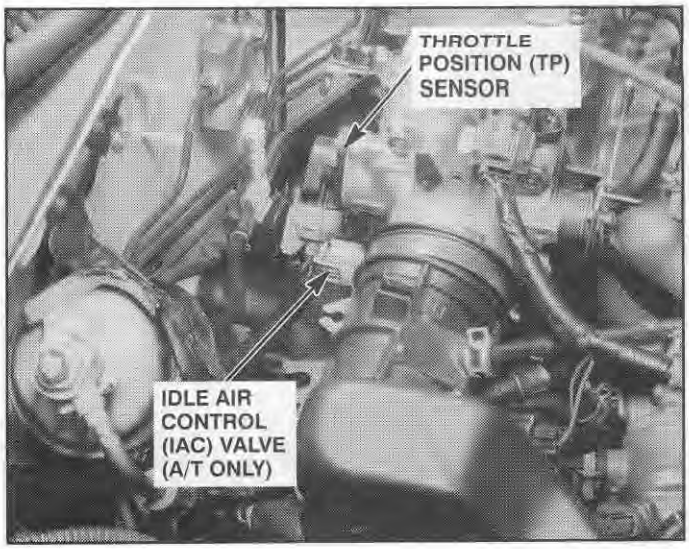

48. Top Left Side of D16Y7 Engine

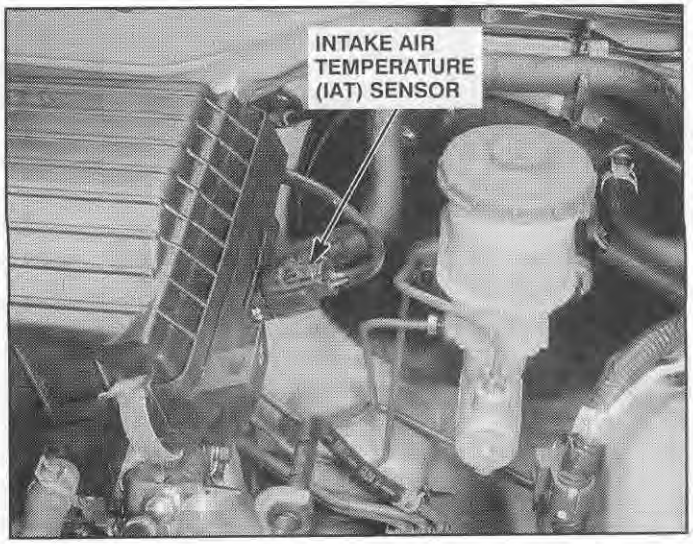

Component Location

49. Top of D16Y7 Engine

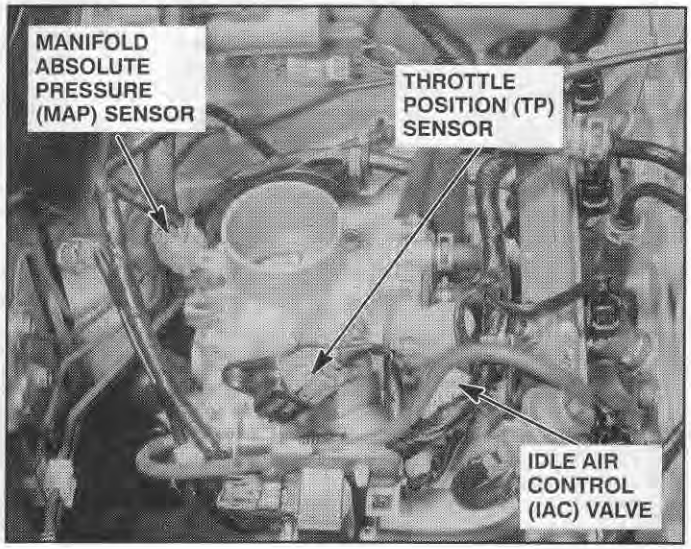

50. Left Side of Dash Panel

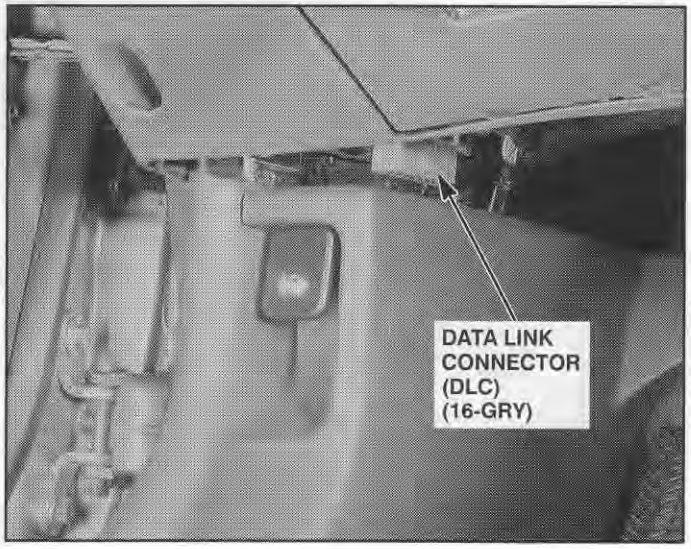

51. Behind Left Side of Dash Panel

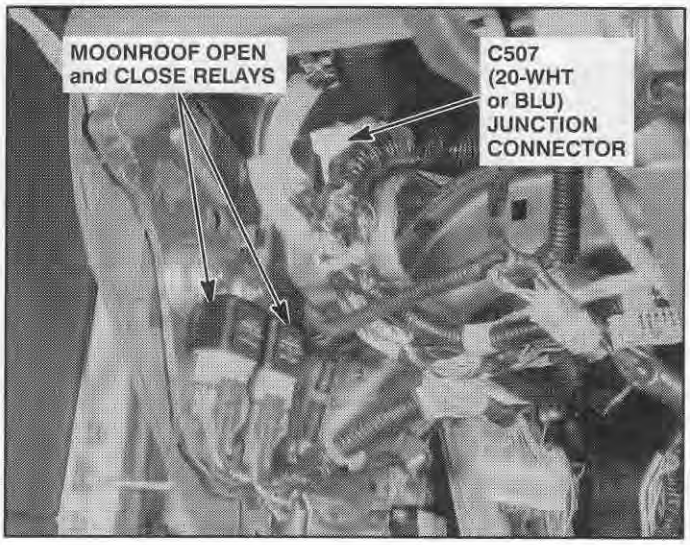

52. Behind Left Side of Dash Panel

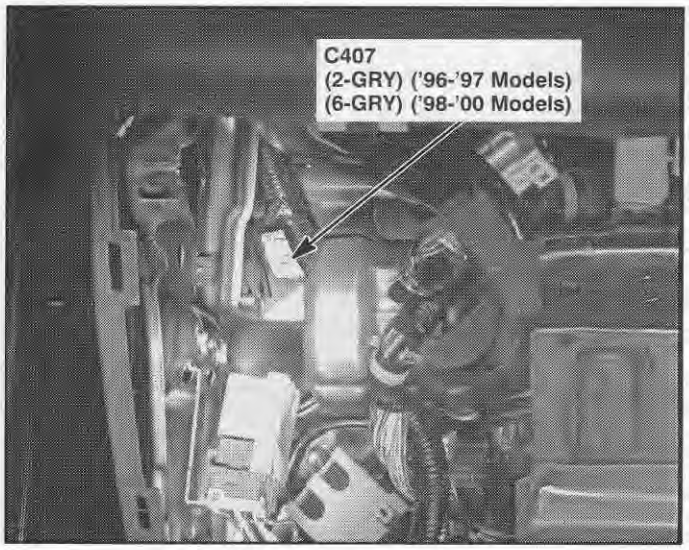

53. Behind Left Side of Dash Panel ('96-'97)

54. Behind Left Side of Dash Panel ('96-'97 Models)

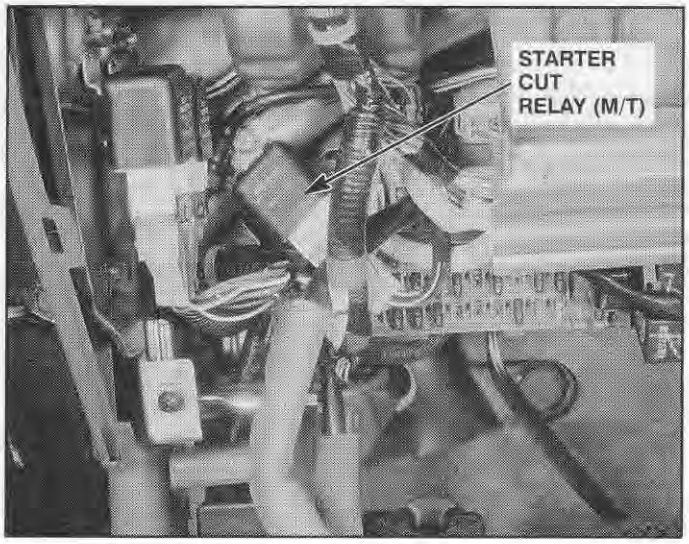

55. Behind Left Side of Dash Panel

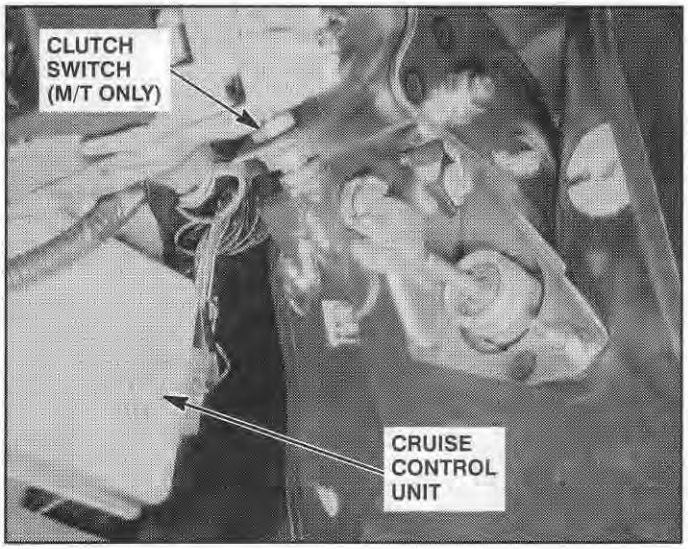

56. Upper Left Kick Panel

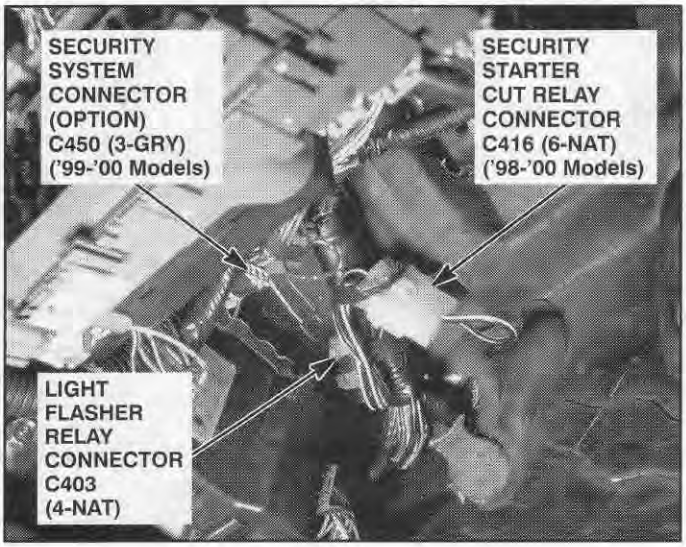

57. Left Kick Panel Area

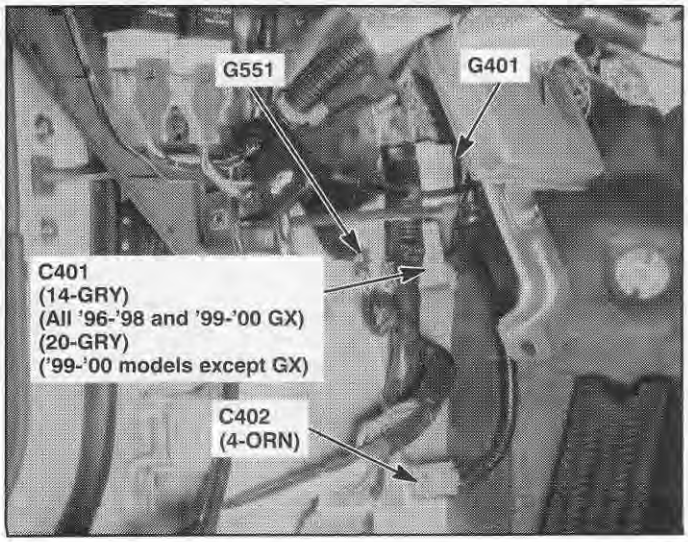

58. Behind Left Side of Dash Panel

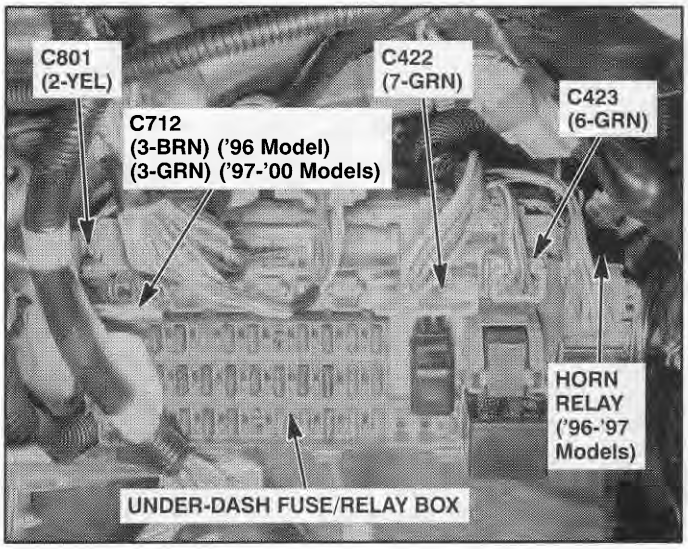

59. Behind Left Side of Dash Panel

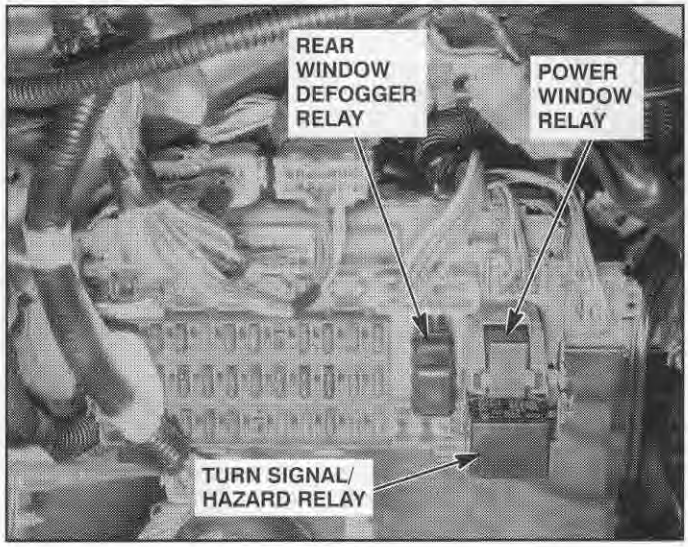

60. Behind Left Side of Dash Panel

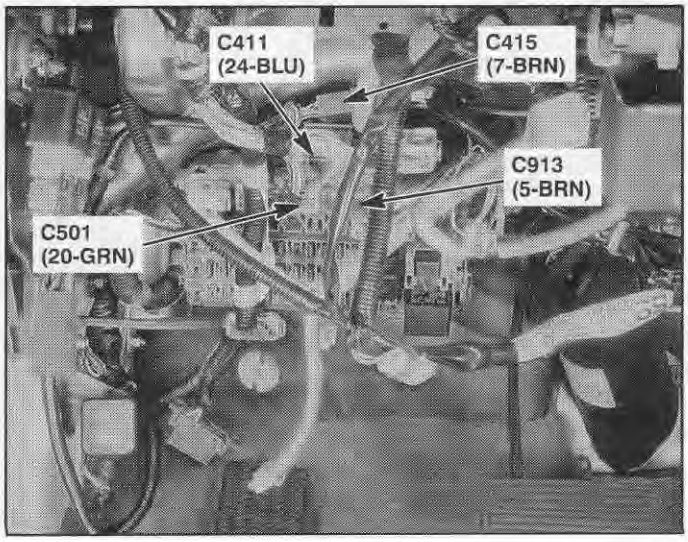

Component Location

61. Behind Left Side of Dash Panel

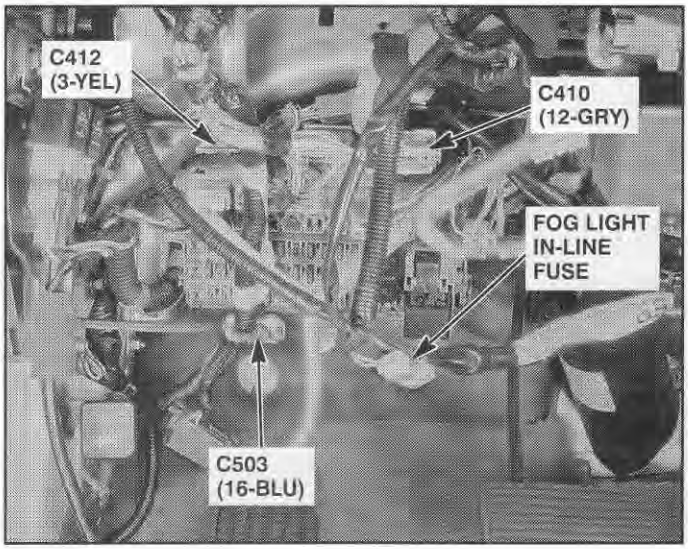

62. Behind Left Side of Dash Panel

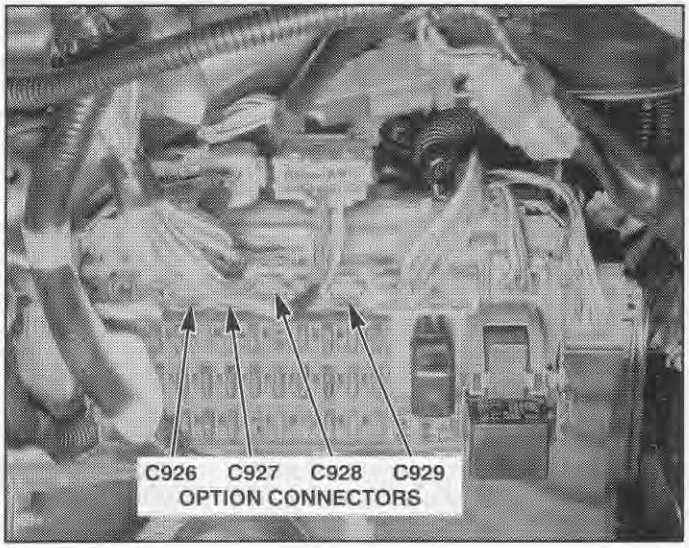

63. Rear of Under-dash Fuse/Relay Box

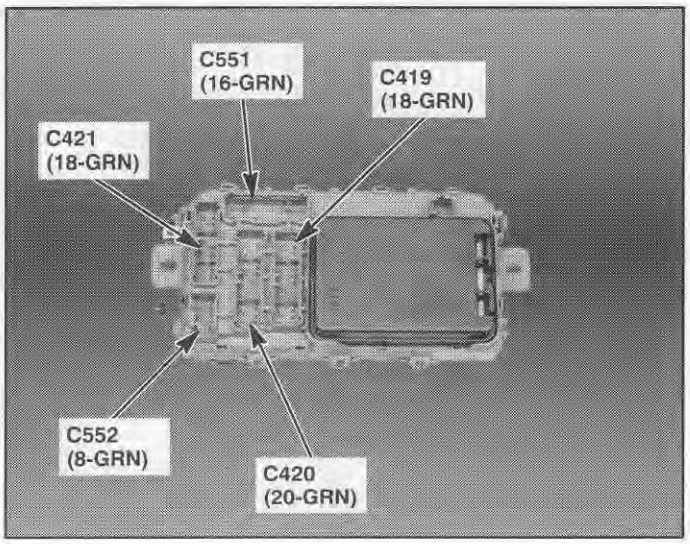

64. Rear of Under-dash Fuse/Relay Box

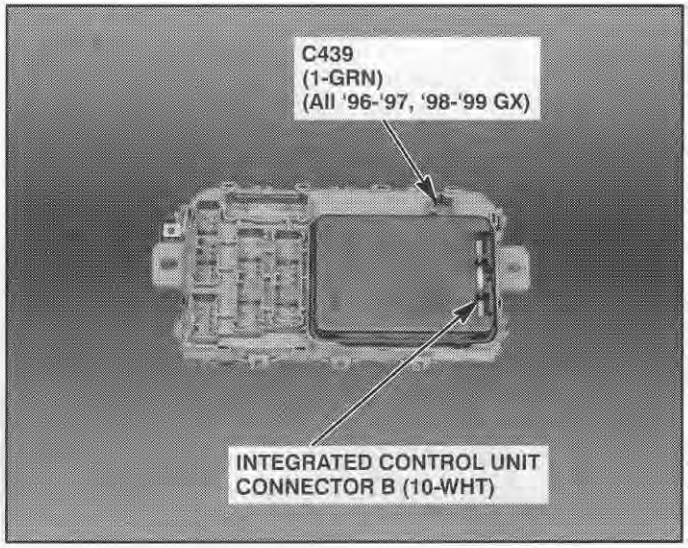

65. Underside of Steering Column

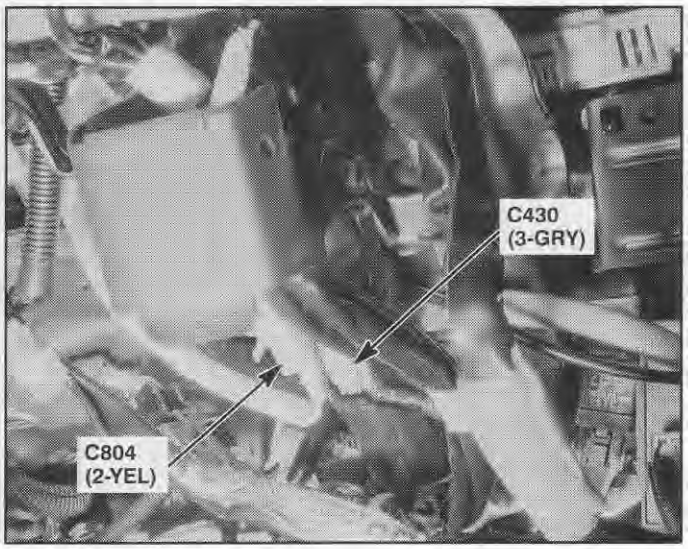

66. Behind Left Side of Dash Panel

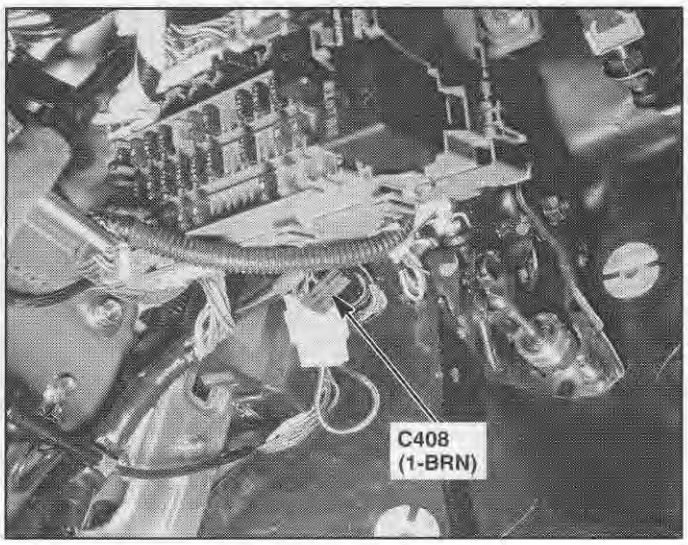

67. Rear of Gauge Assembly

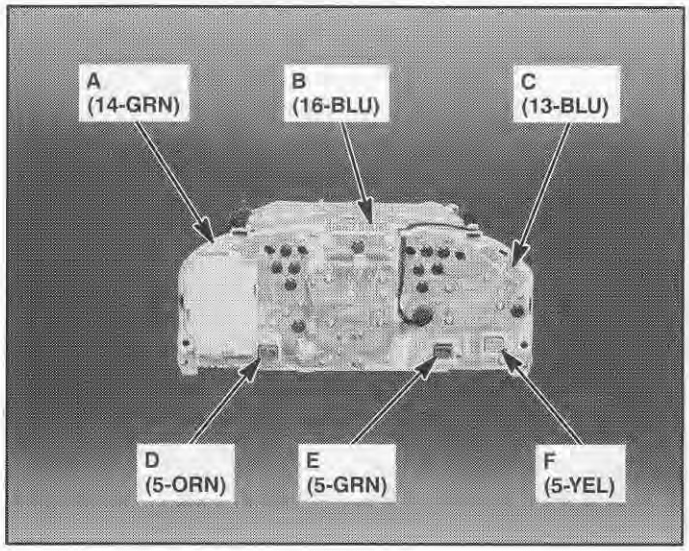

68. Behind Left Side of Dash Panel

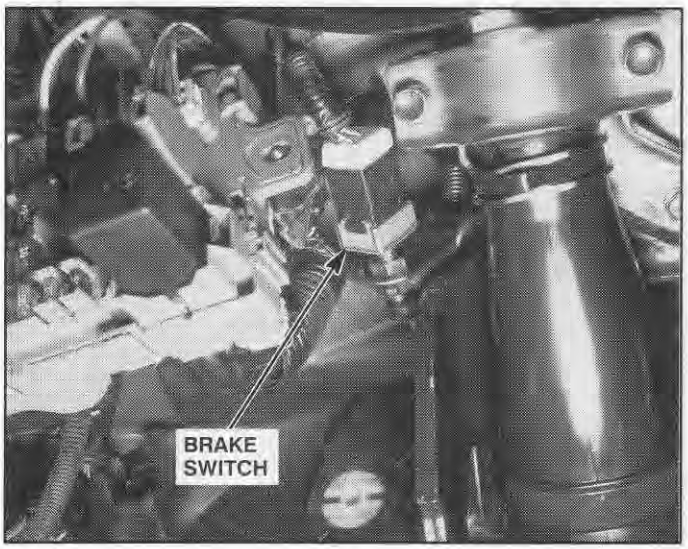

69. Behind Left Side of Dash Panel

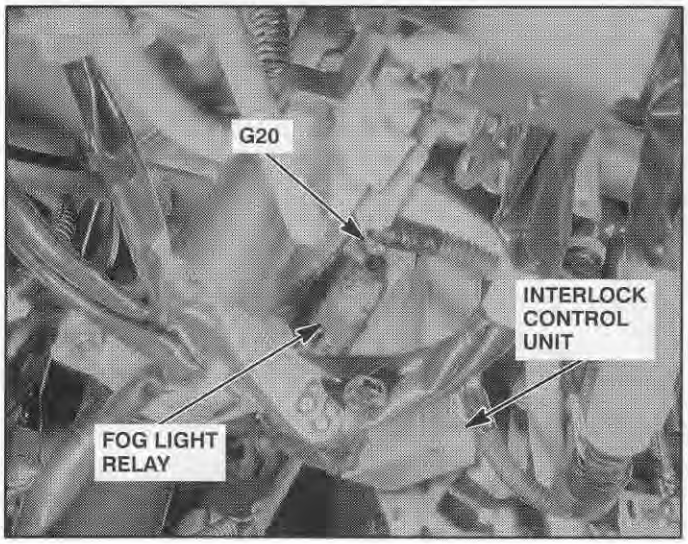

70. Behind Left Side of Front Console

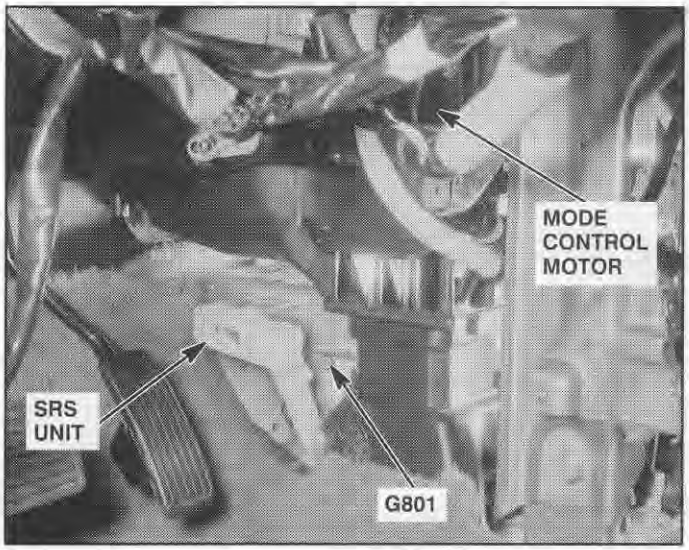

71. Right Side of Steering Column

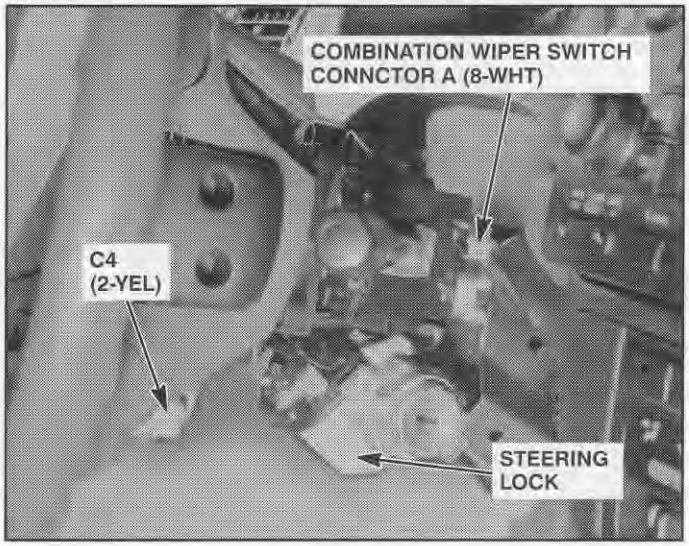

72. Left Side of Steering Column

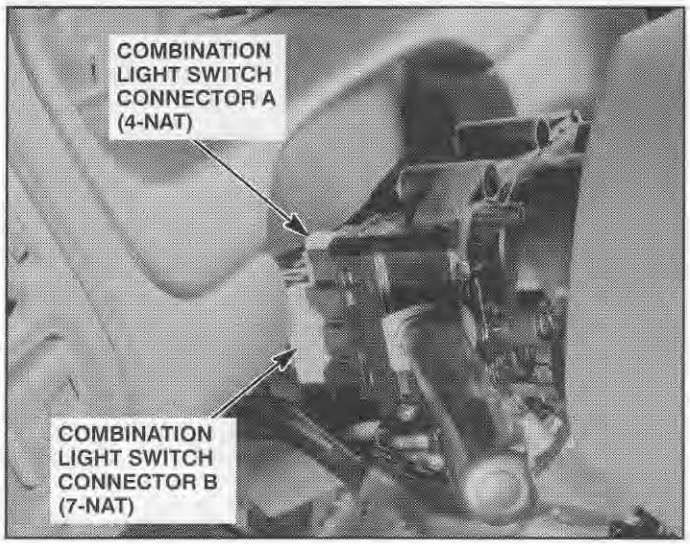

Component Location

73. Rear of Radio ('96-'98)

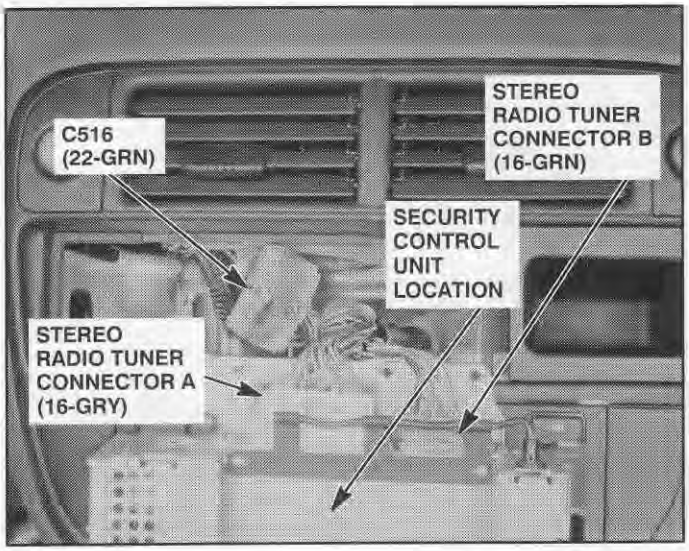

74. Underside of Heater Control Panel ('96-'98)

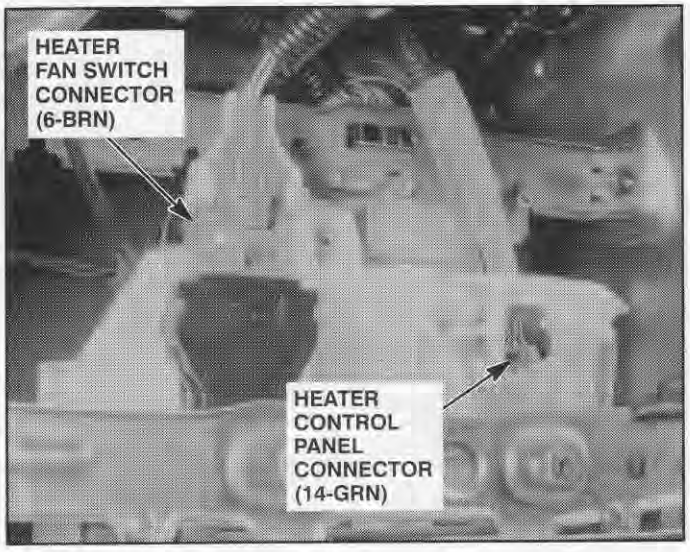

75. Behind Front Console

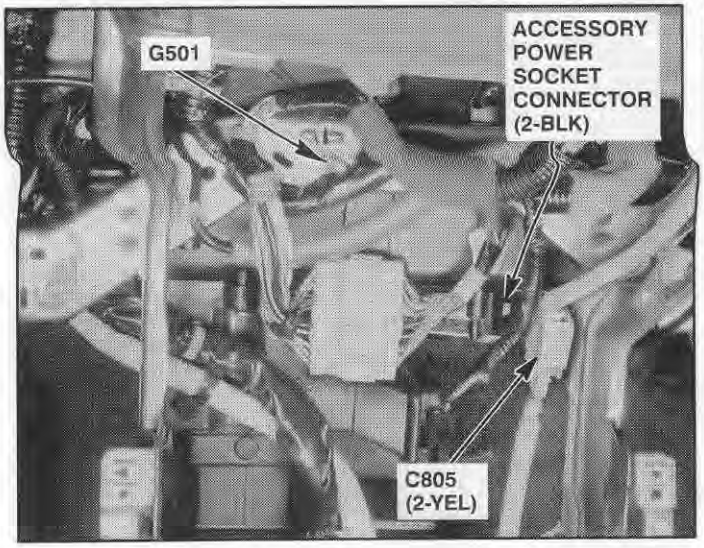

76. Below Front Console

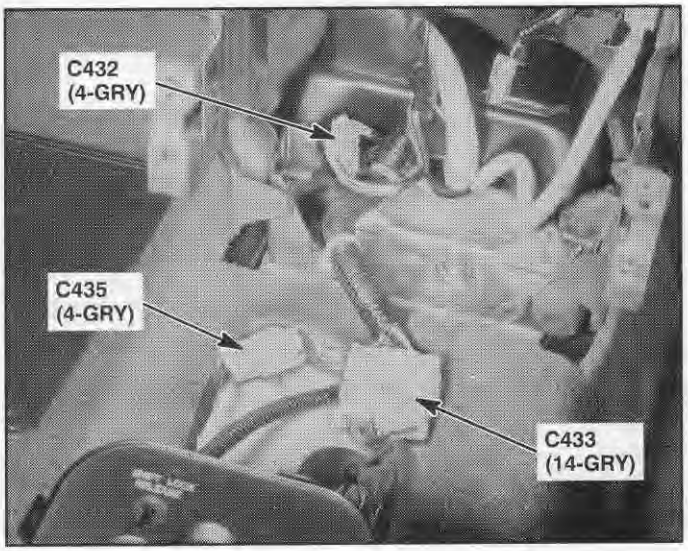

77. Left Side of Center Console

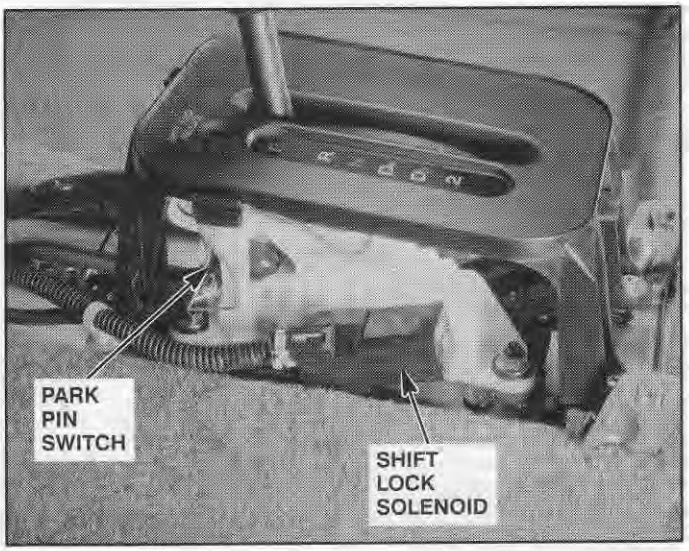

78. Right Side of Center Console

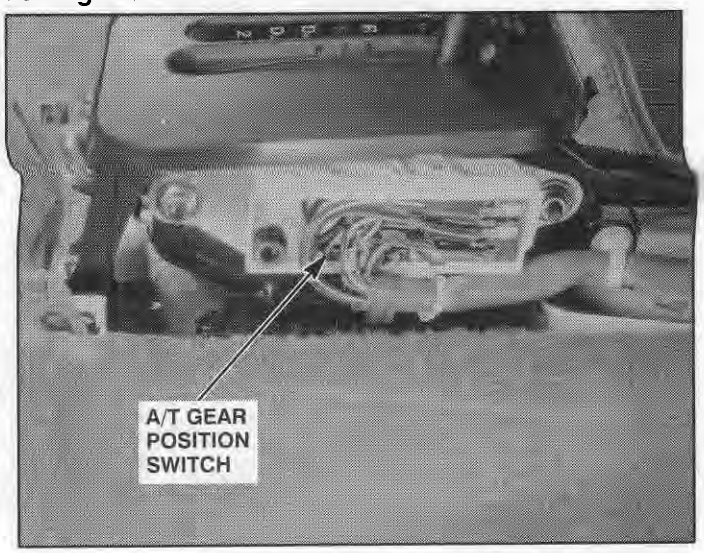

79. Below Center Console

80. Below Front Console ('96-'98)

81. Behind Right Side of Dash Panel

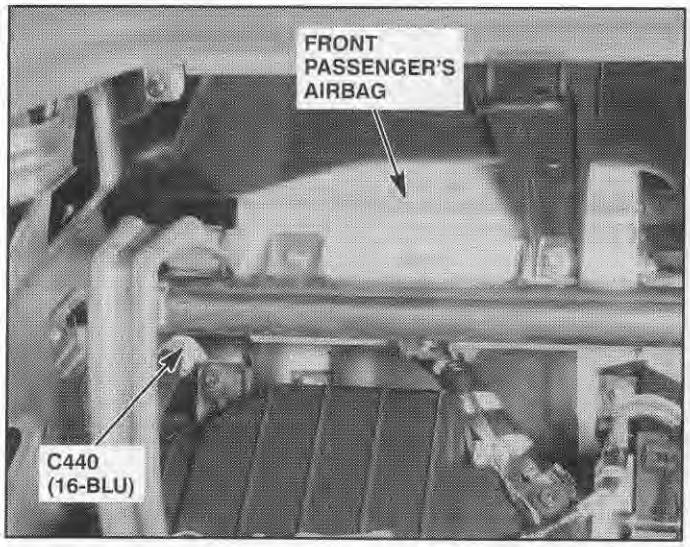

82. Behind Glove Box ('96-'98)

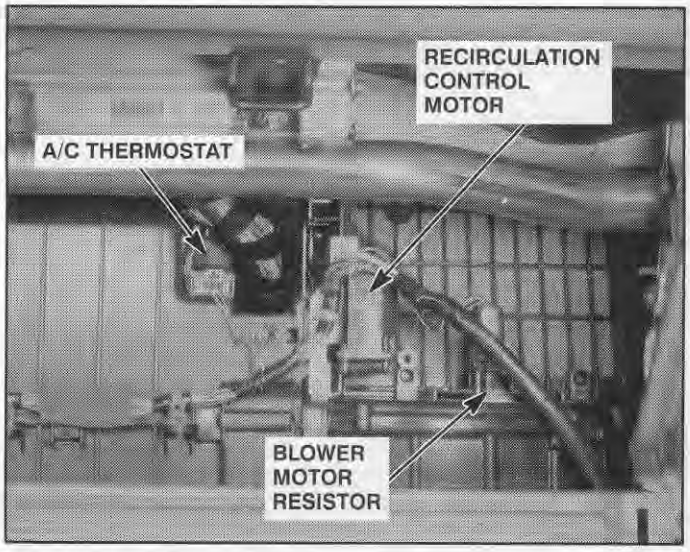

83. Below Right Side of Dash Panel

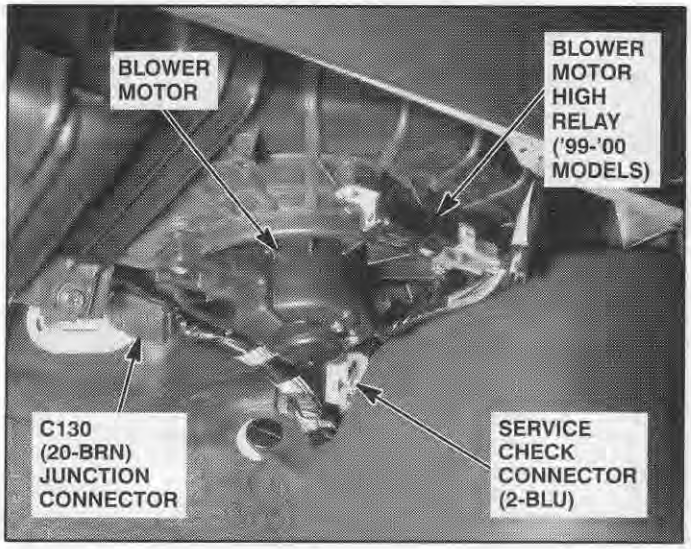

84. Behind Glove Box

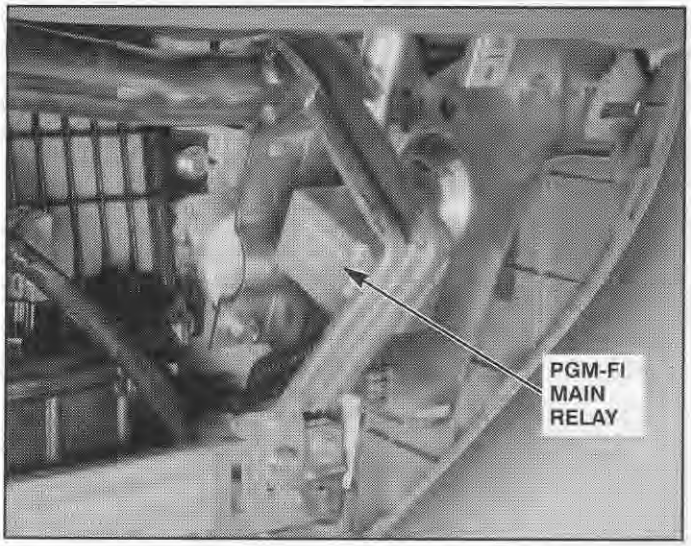

Component Location

85. Behind Right Kick Panel

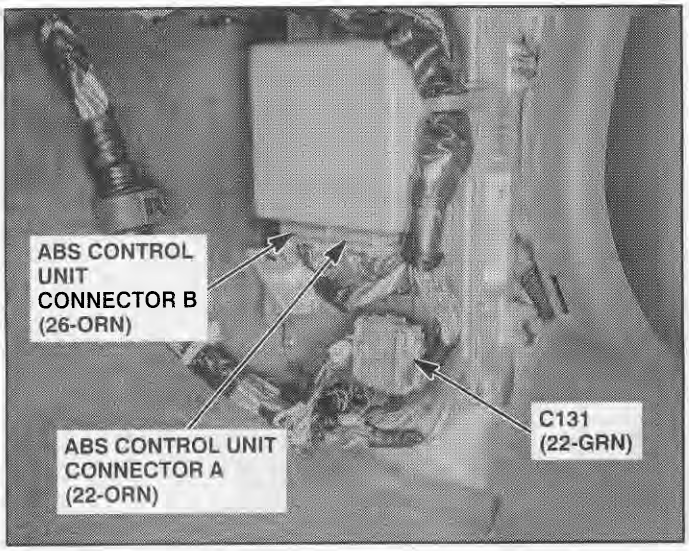

86. Behind Right Kick Panel

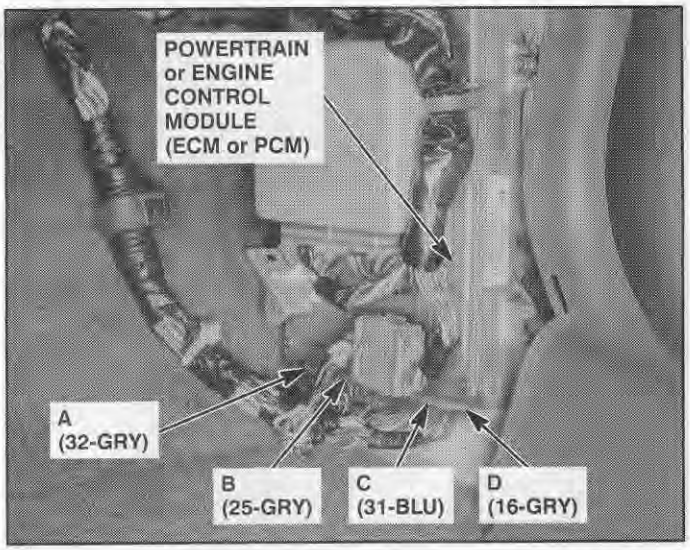

87. Underside of Driver's Seat

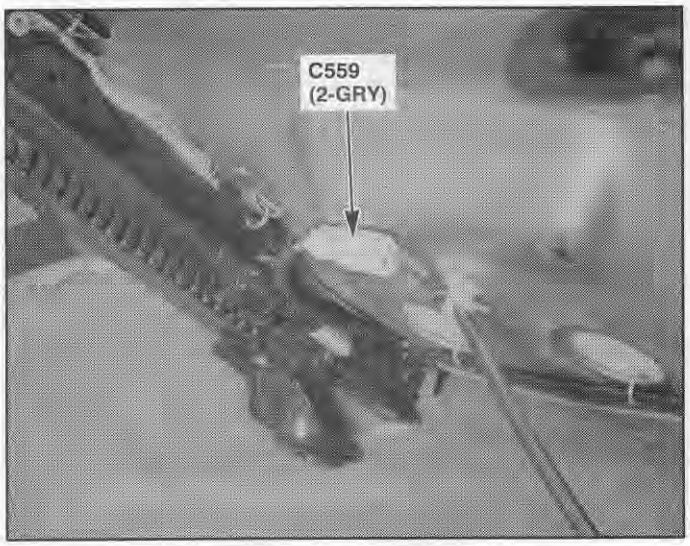

88. Driver's Door

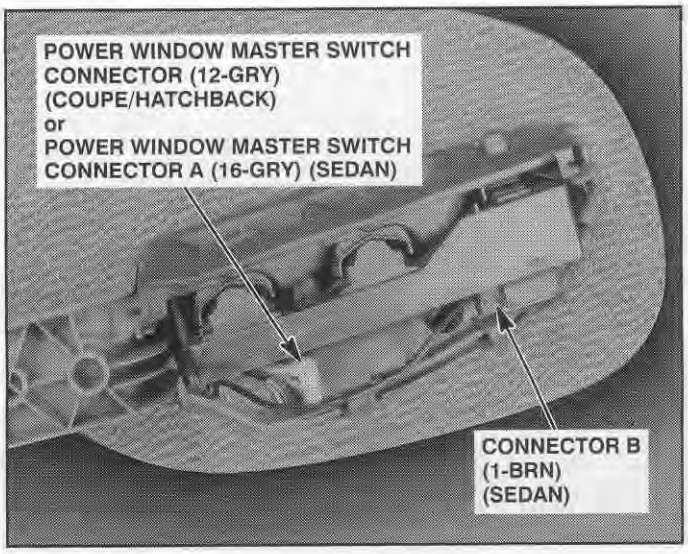

89. Top Front of Driver's Door (Frt. Pass. Similar)

90. Front of Driver's Door (Frt. Pass. Similar)

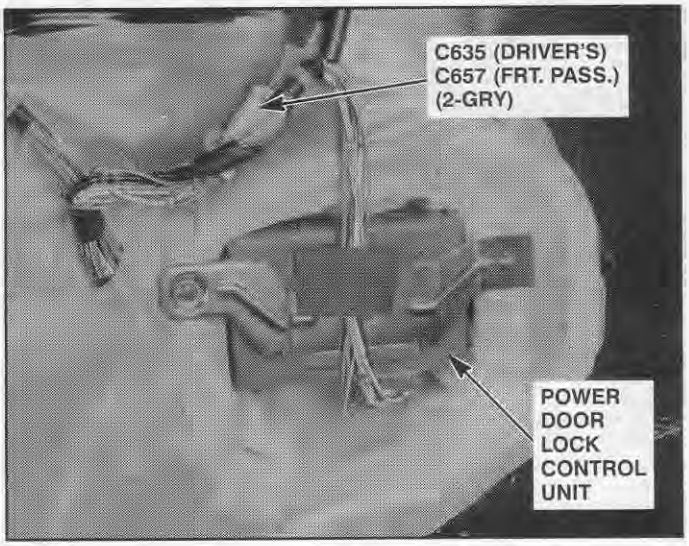

91. Front of Driver's Door (Frt. Pass. Similar)

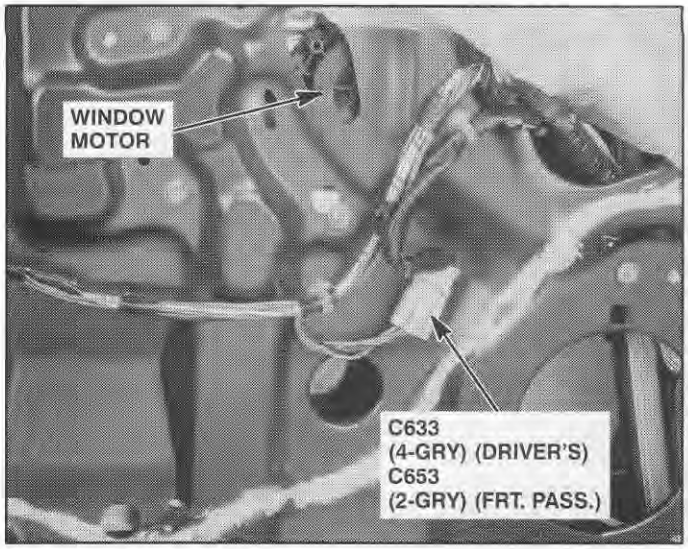

92. Rear of Driver's Door (Frt. Pass. Similar)

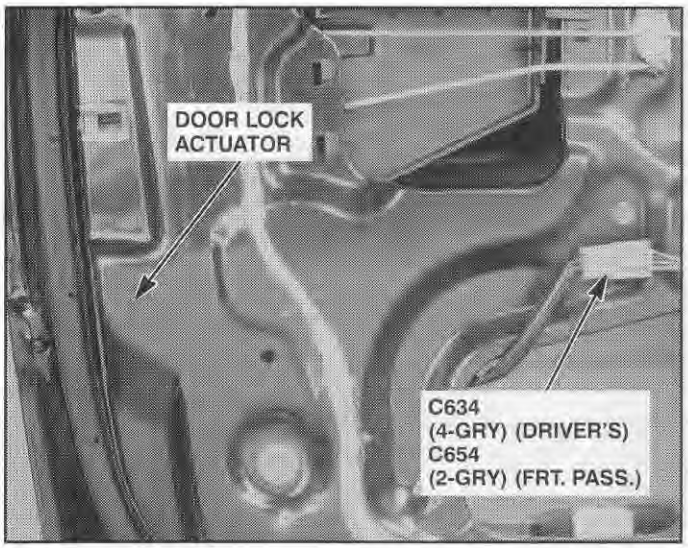

93. Driver's Door (Frt. Pass. Similar)

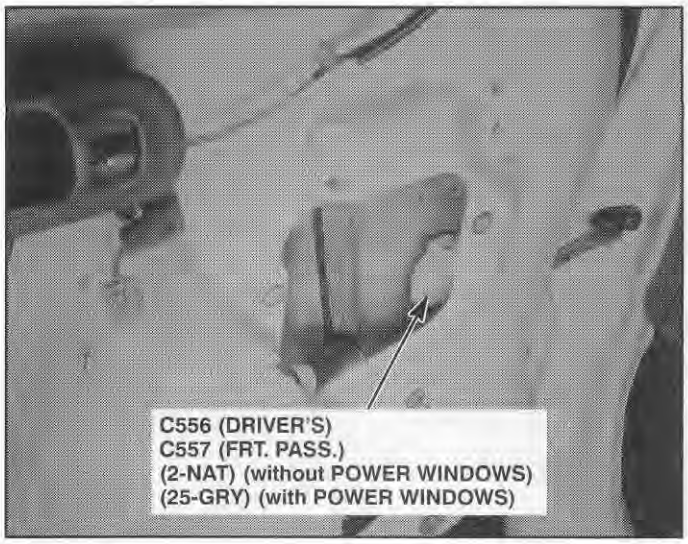

94. Front of Left Rear Door (Right Similar)

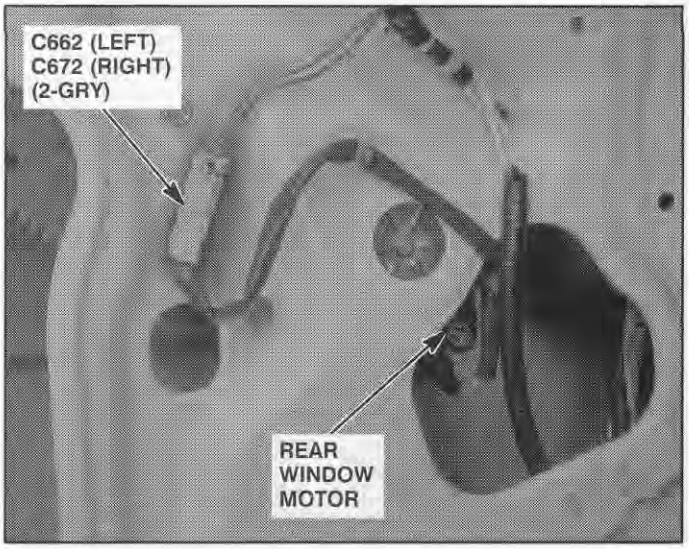

95. Rear of Left Rear Door (Right Similar)

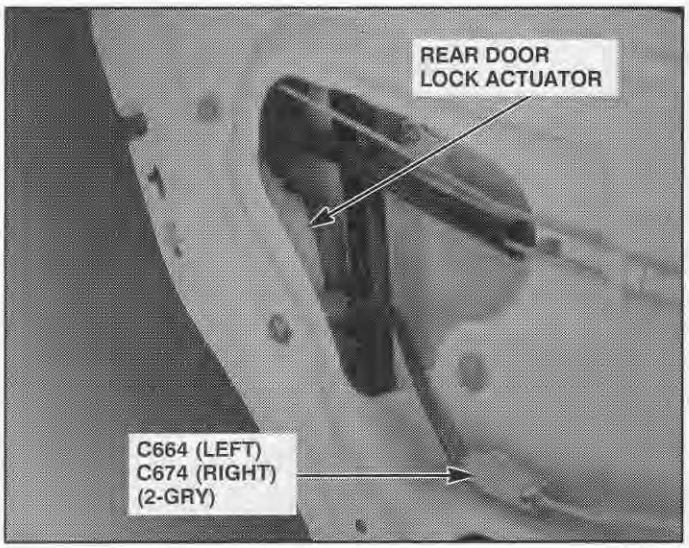

96. At Driver's Door Striker Area (Frt. Pass. Similar)

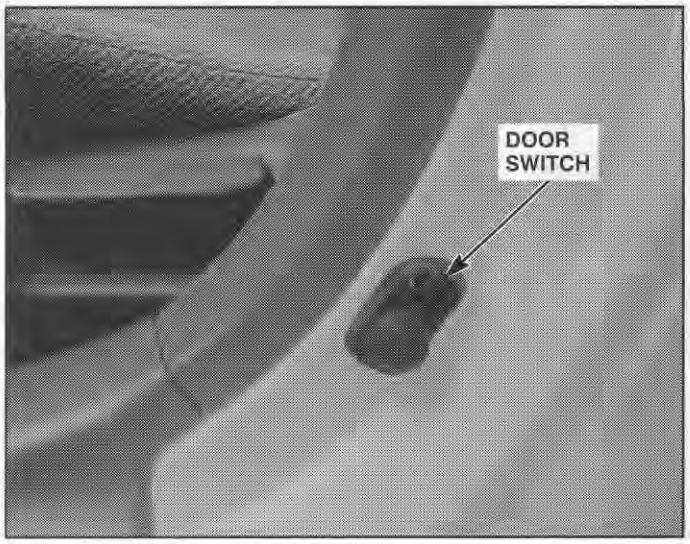

Component Location

97. Left Rear Door Striker Area (Right Similar)

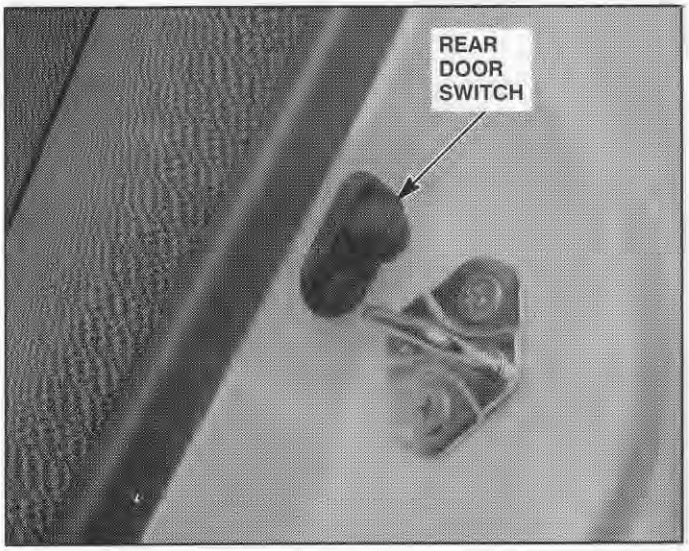

98. Driver's Door Sill

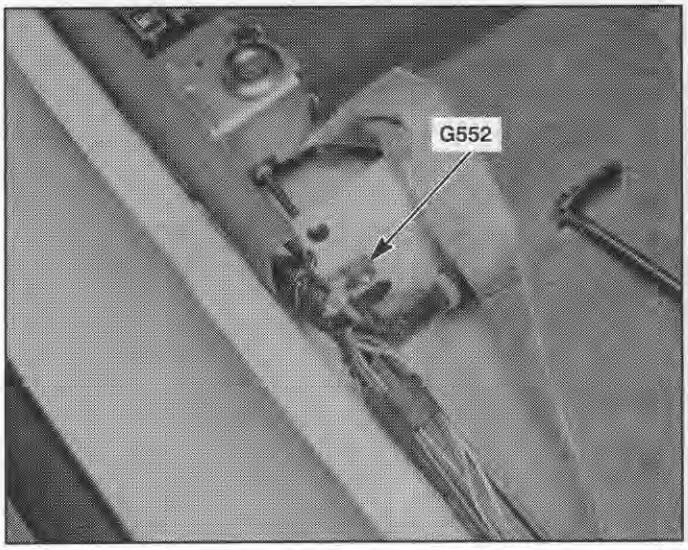

99. Left Center Pillar (Right Similar)

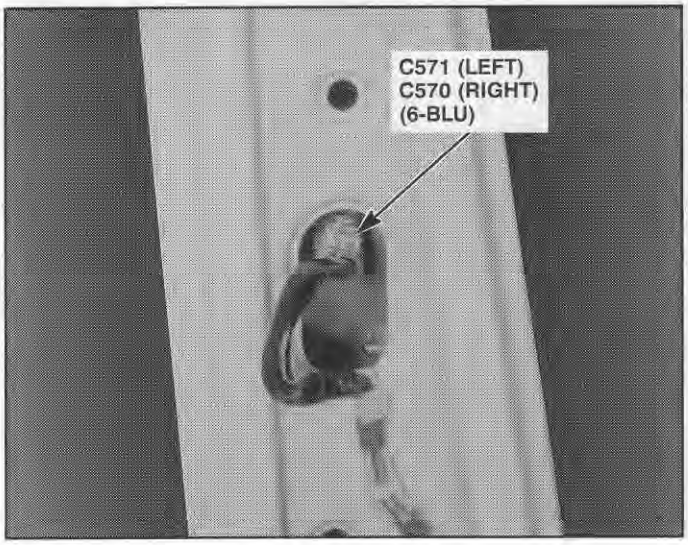

100. Below Left Side of Rear Seat (Right Similar)

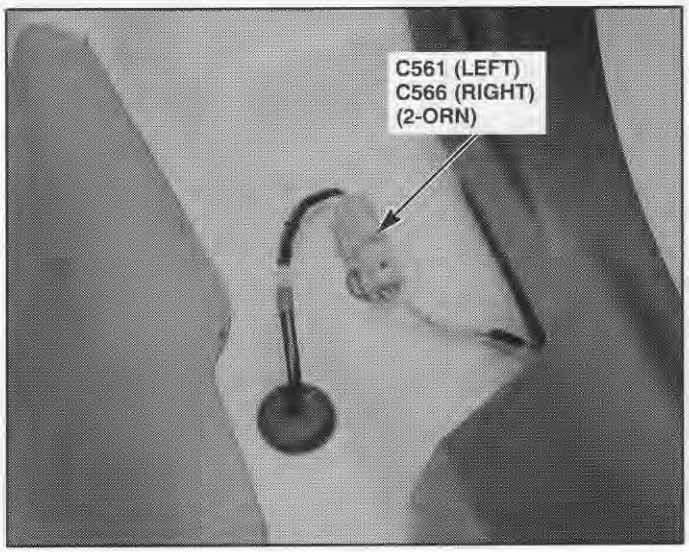

101. Left of Rear Seat (Sedan Shown, Others Similar)

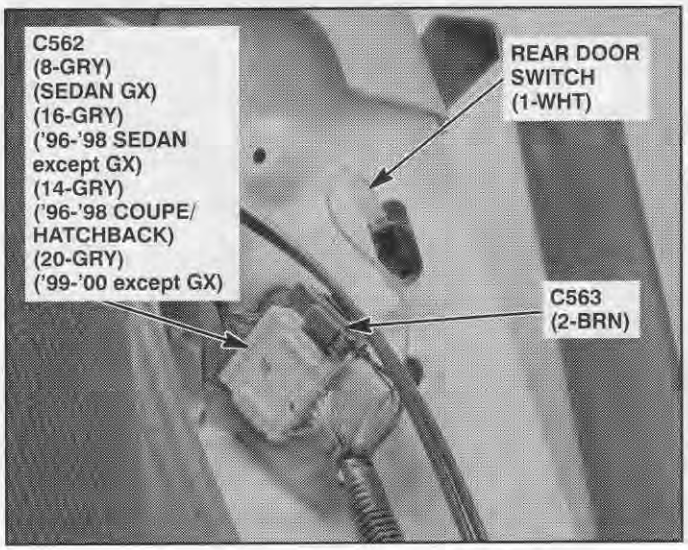

102. Center of Rear Shelf (Coupe/Sedan)

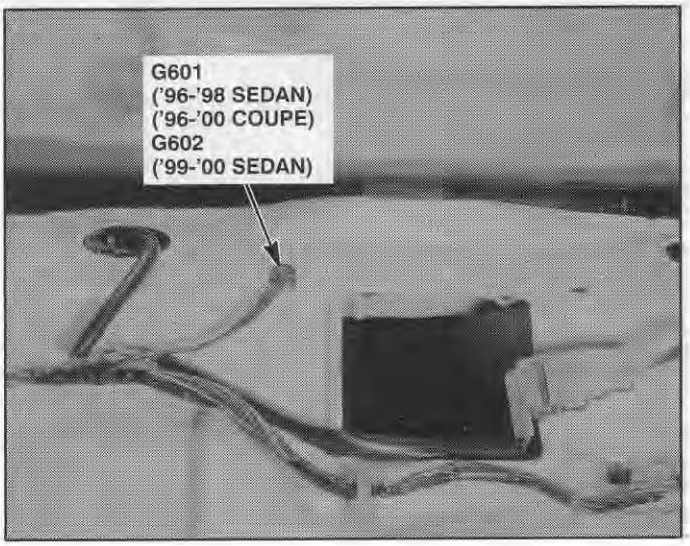

103. Below Center of Rear Seat

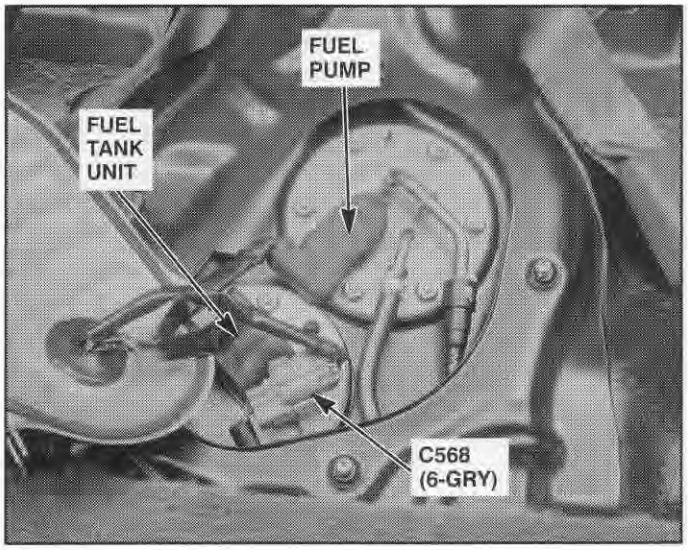

104. Left Front Corner of Fuel Tank ('96-'98)

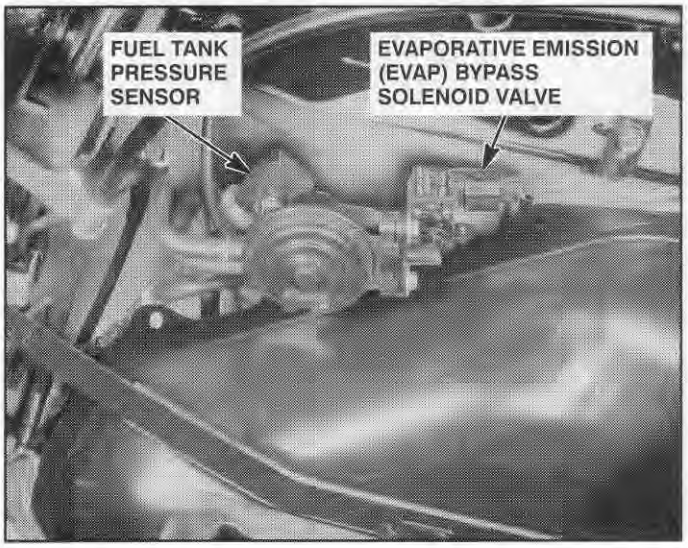

105. Inside of Left Front Wheel (Right Similar)

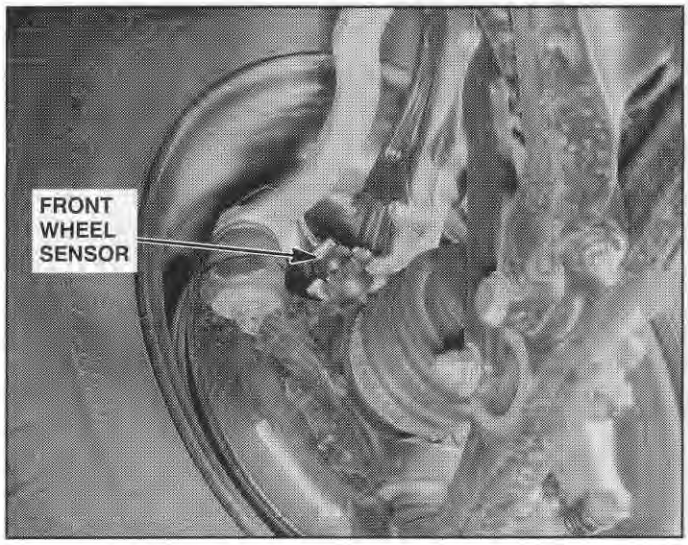

106. Inside of Left Rear Wheel (Right Similar)

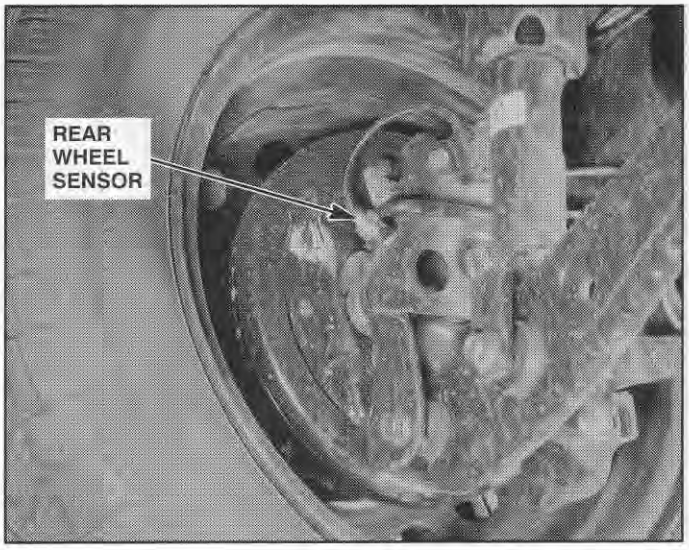

107. Underside of Roof

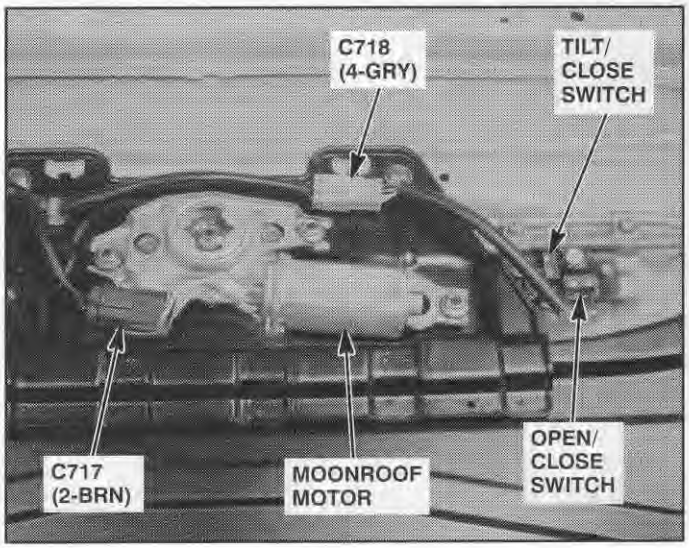

108. Left Underside of Hatch Lid

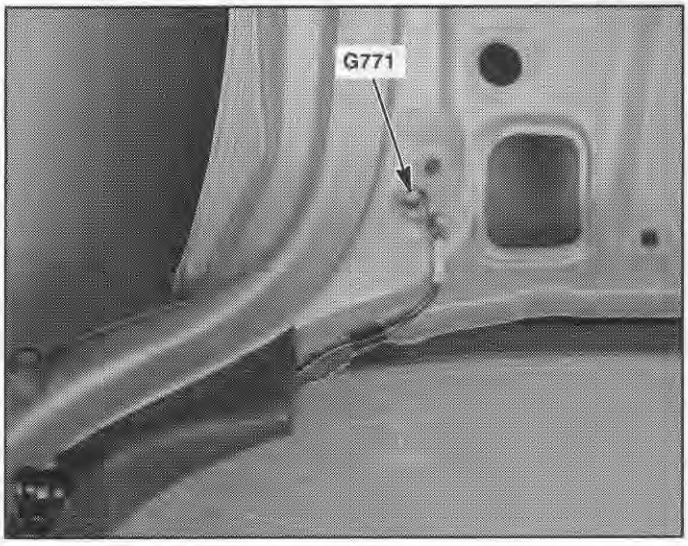

Component Location

109. Underside of Hatch Lid ('96-'97 Models)

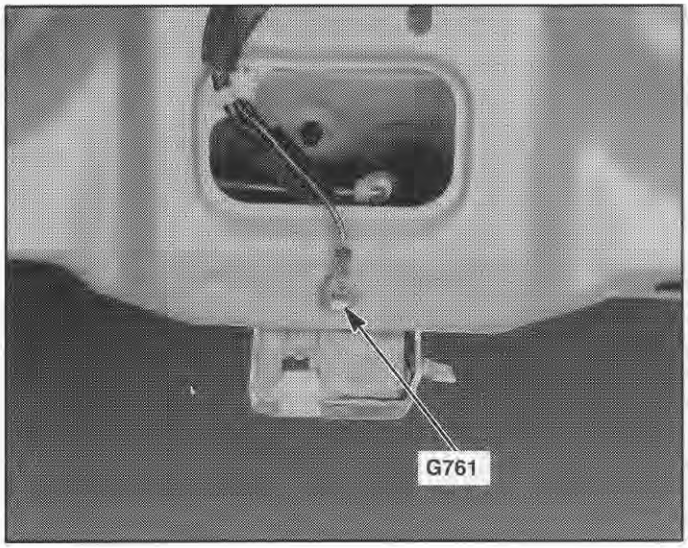

110. Underside of Hatch Lid

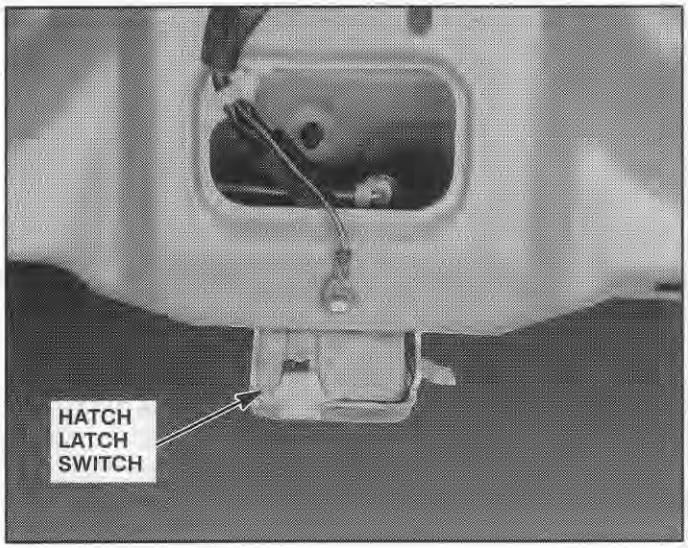

111. Behind Left Side of Dash Panel

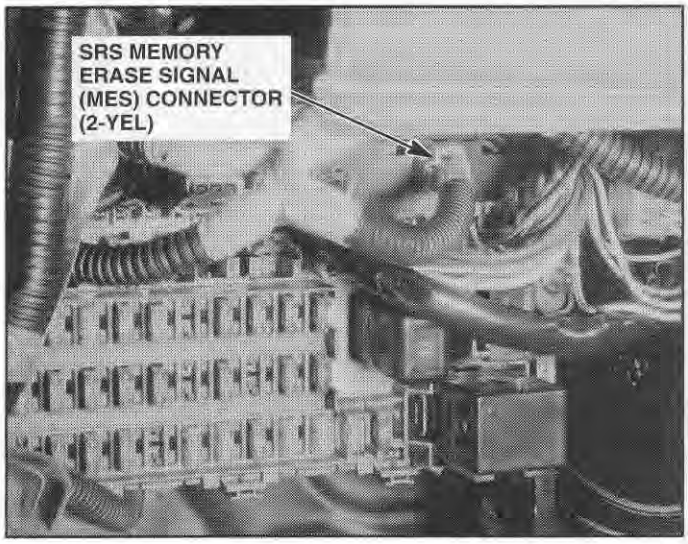

112. Right Side of Cargo Area (Hatchback)

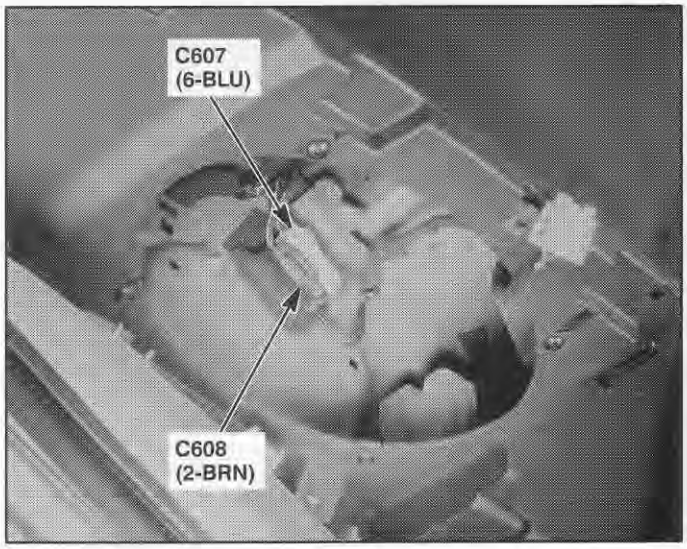

113. Center of End Panel

114. Left Side of Trunk Lid (with Optional Trunk Spoiler)

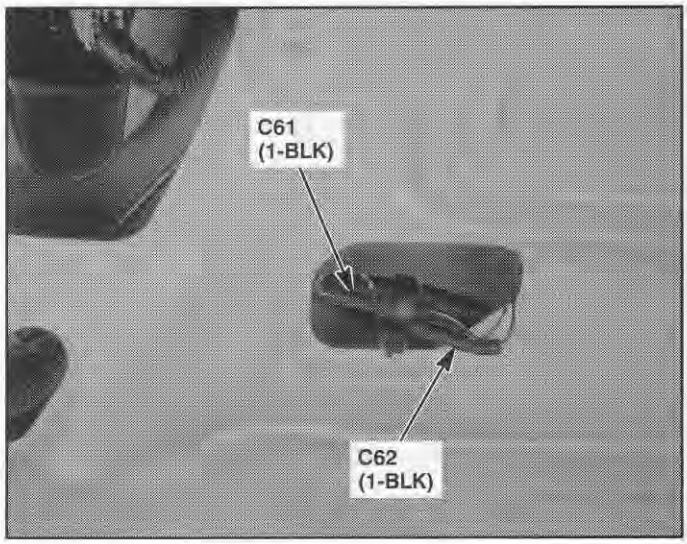

115. Left Side of Trunk Lid (except '99-'00 Sedan)

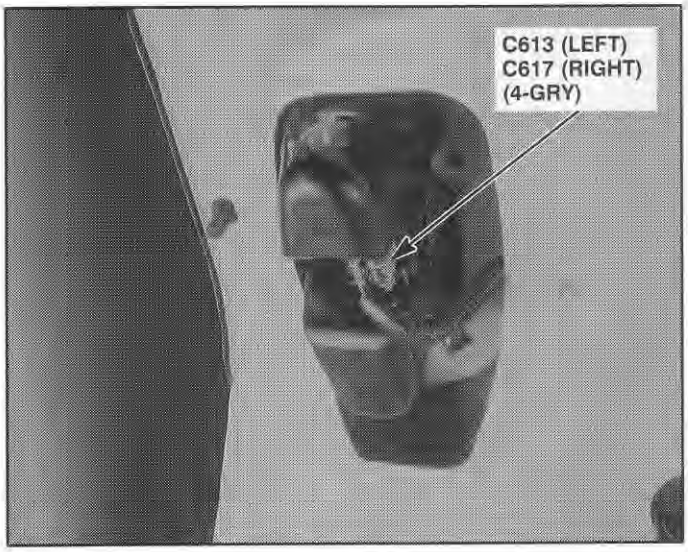

116. Center of Trunk Lid

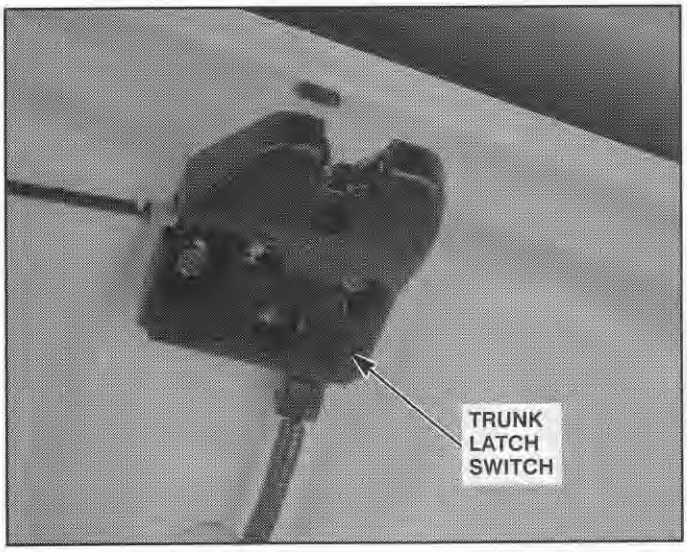

117. Rear Spoiler on Trunk Lid

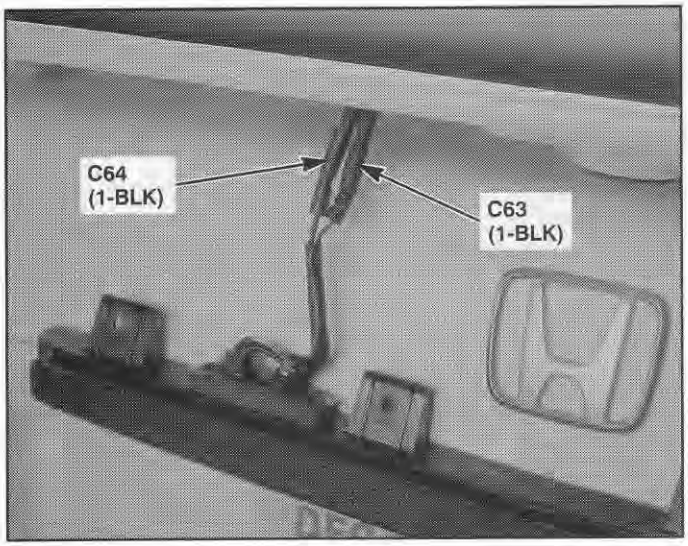

118. Left Rear of Trunk/Cargo Area (except '99-'00 Sed.)

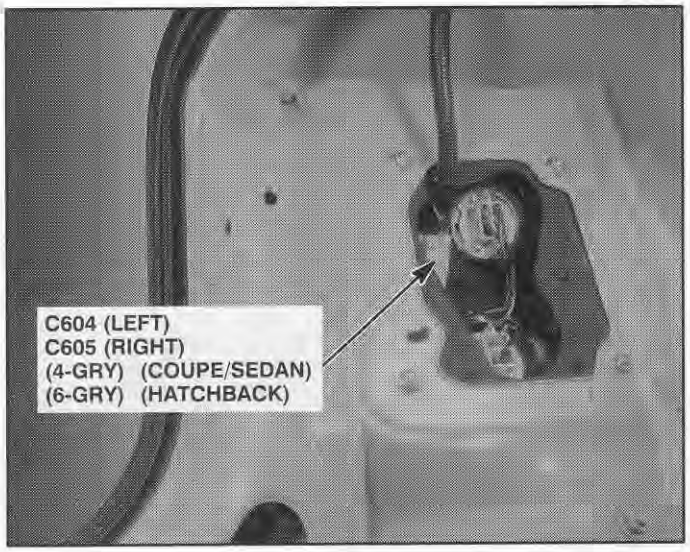

119. Top of Transmission (CVT)

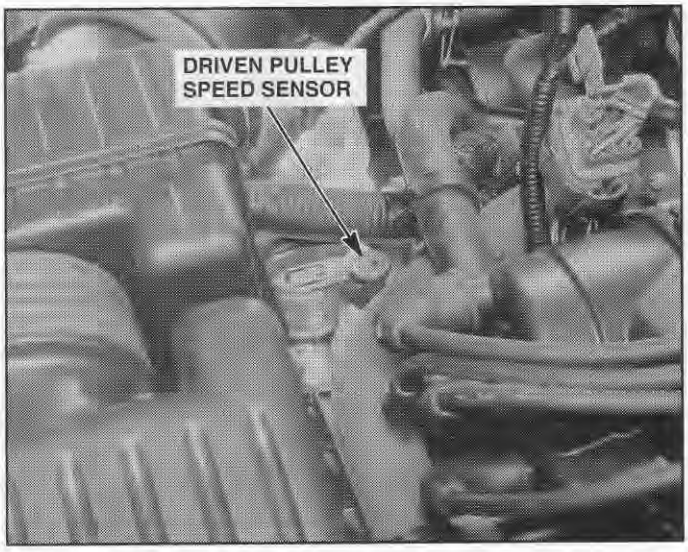

120. Right Side Rear of Engine Compartment (CVT)

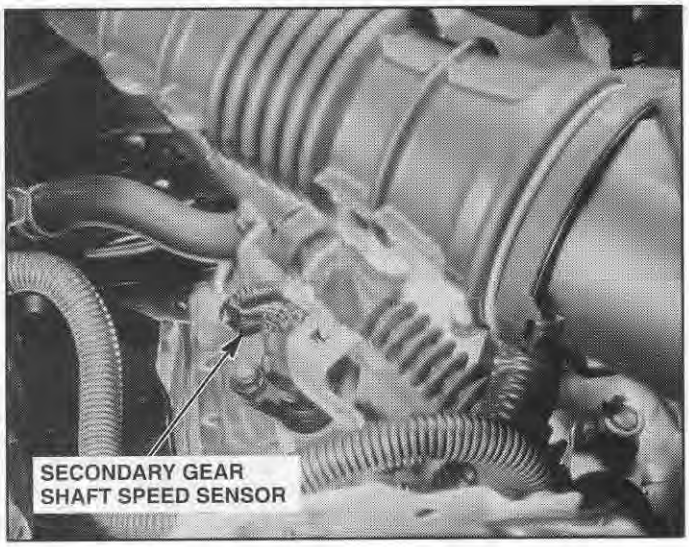

Component Location

121. Behind Left Kick Panel ('96-'98 CVT)

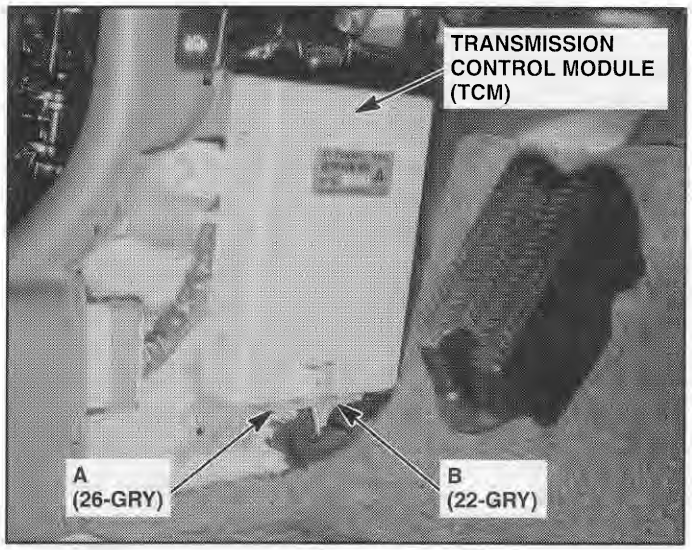

122. Right Side Lower Engine Compartment (CVT)

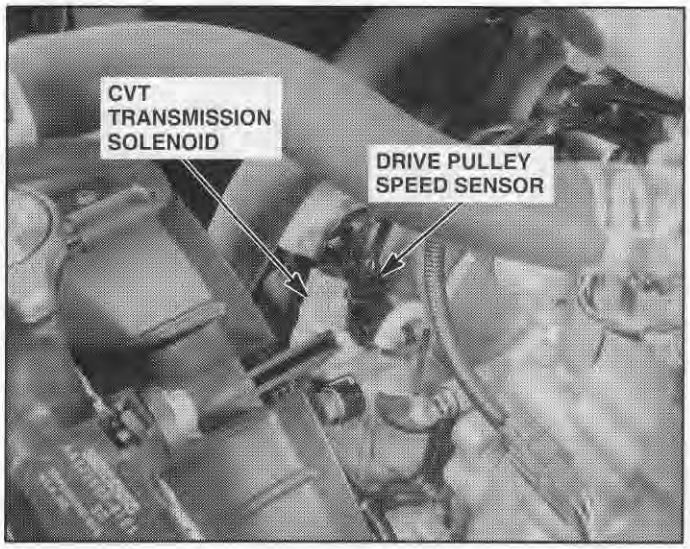

123. Right Front of Engine (CVT)

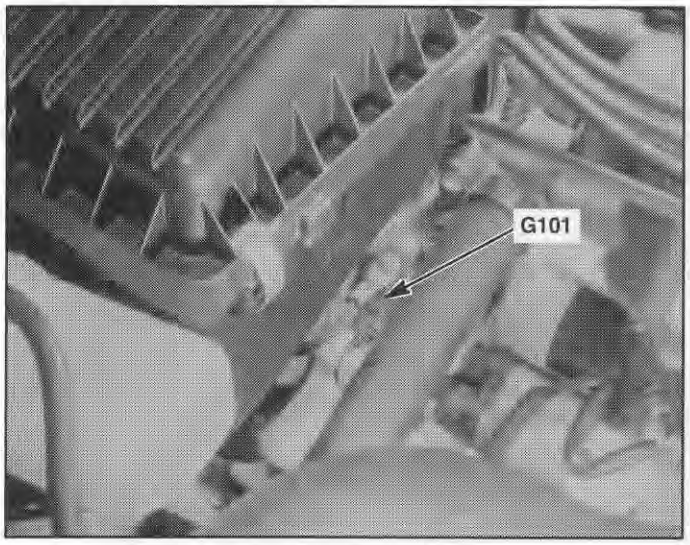

124. Rear of Engine Compartment (CVT)

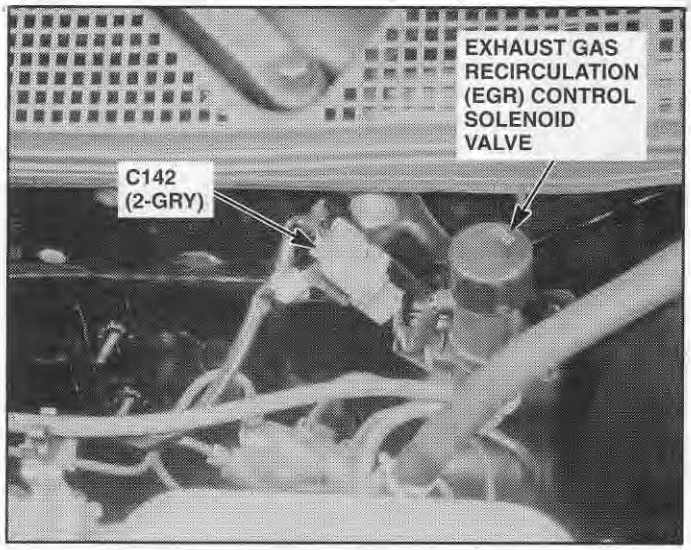

125. Behind Right Side of Dash Panel

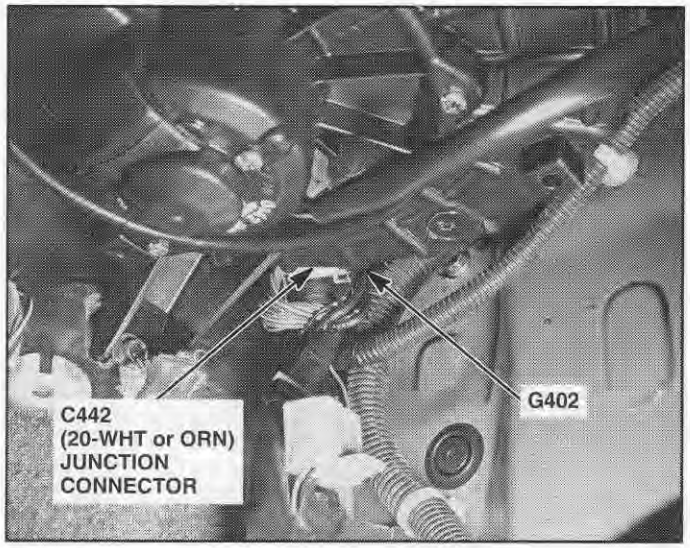

126. Underside of Hatch Lid

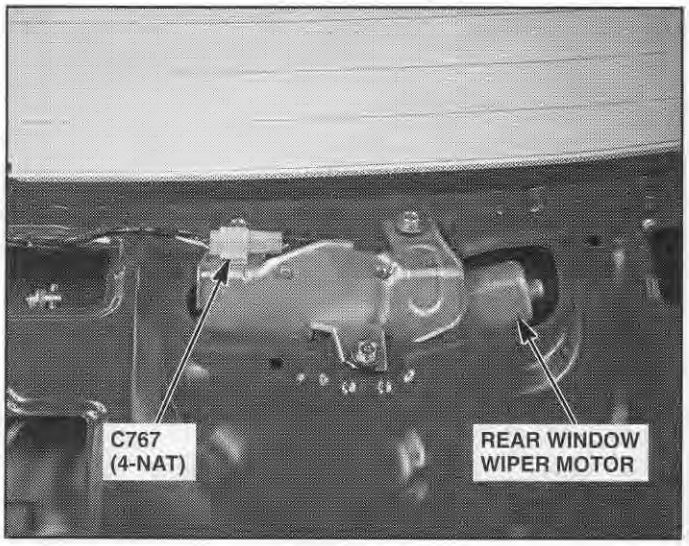

127. Left Rear of Trunk ('98)

128. Rear of D16Y8 Engine with M/T (B16A2/D16Y5 Similar)

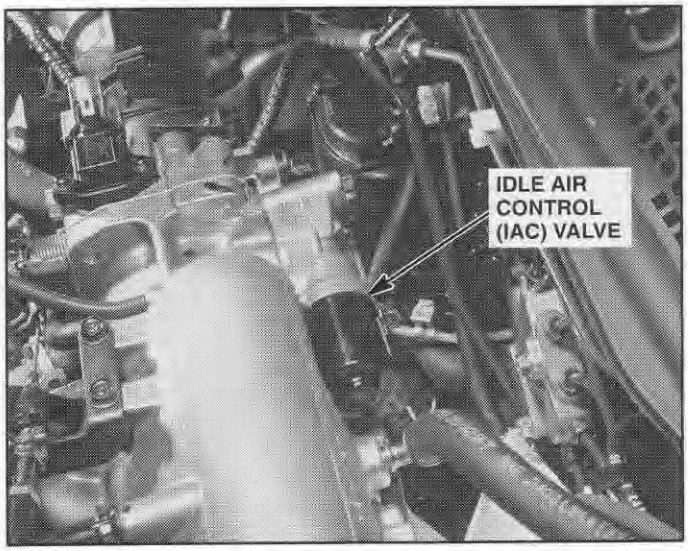

129. Behind Left Side of Dash ('98)

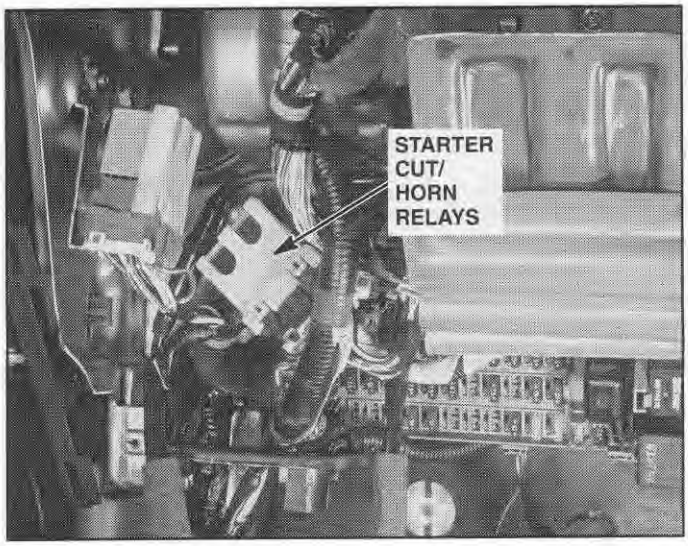

130. Behind Left Side of Dash

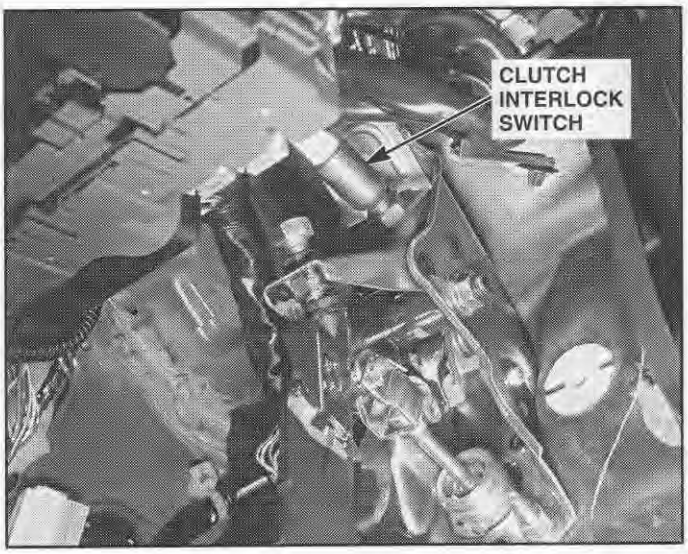

131. Underside of Vehicle, Rear of Engine

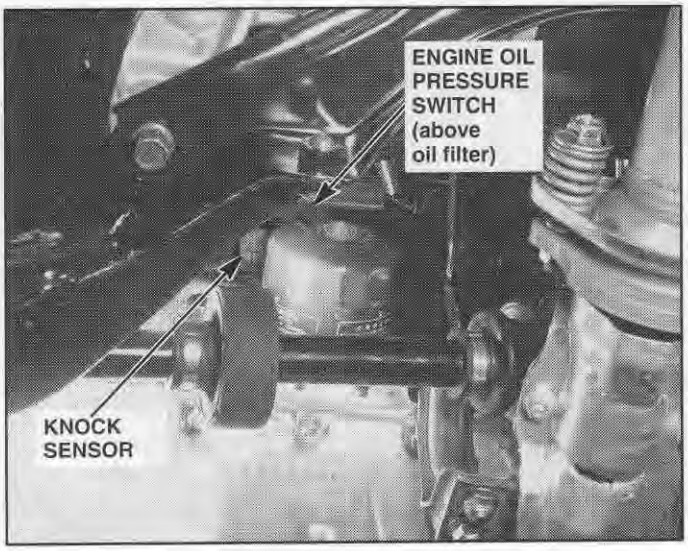

132. Underside of Hatch Lid ('98-'00)

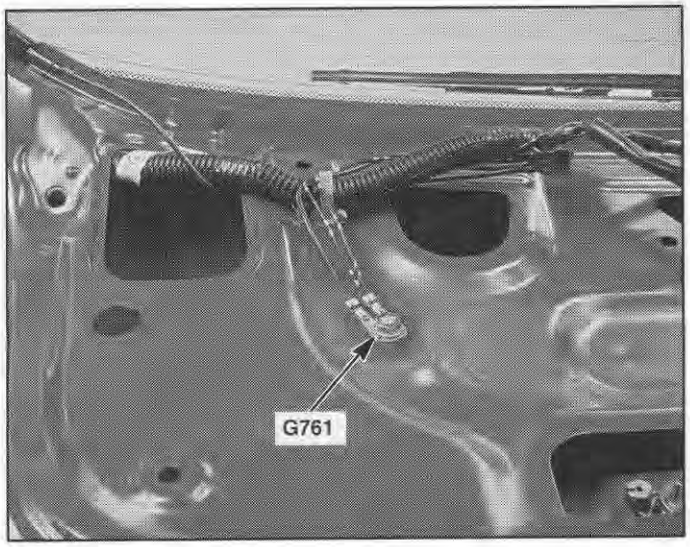

Component Location

133. Below Rear of D16Y8 Eng. (B16A2 Similar) ('99-'00)

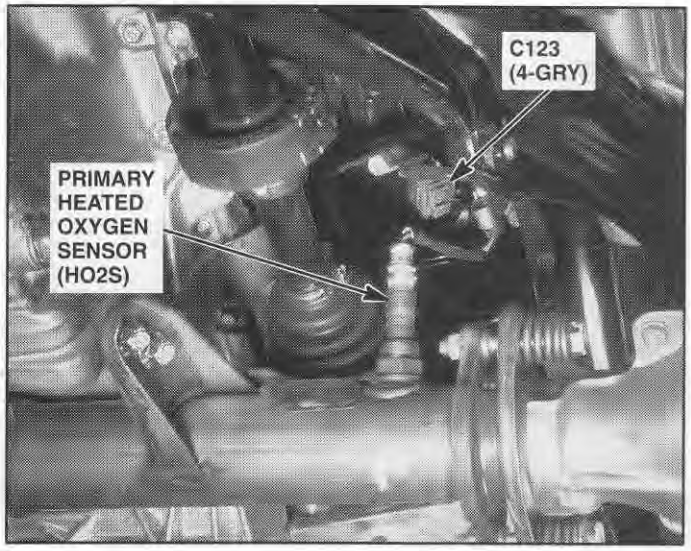

134. Behind Kick Panel ('99-'00)

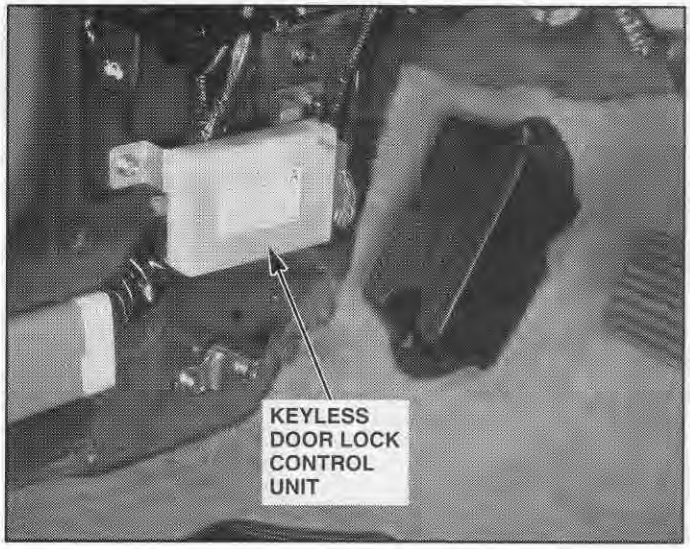

135. Behind Left Side of Dash Panel ('99-'00)

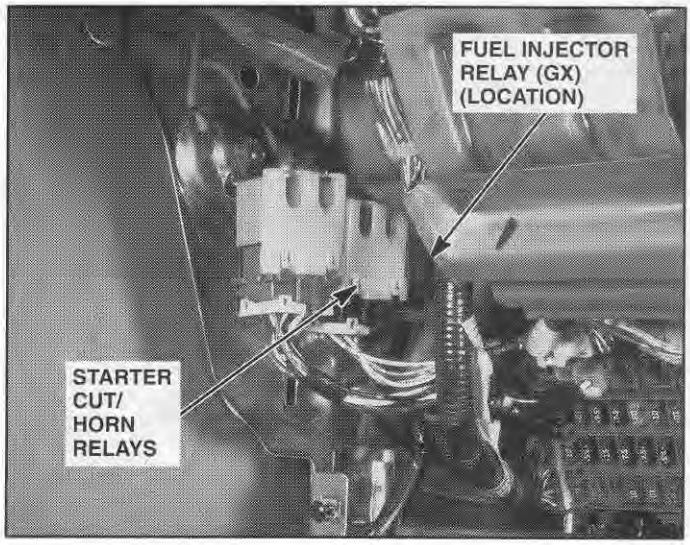

136. Behind Left Side of Front Console ('99-'00)

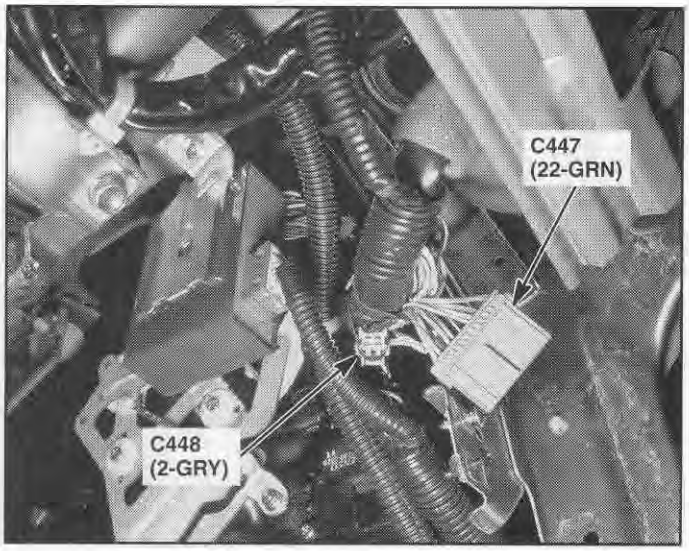

137. Behind Center Panel ('99-'00)

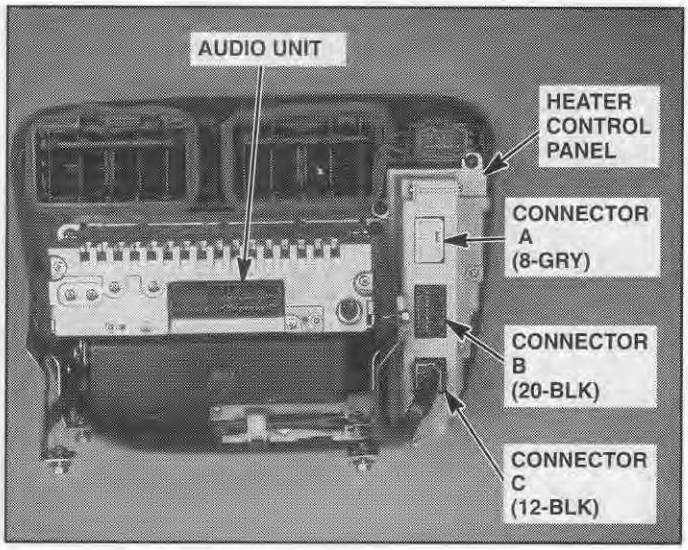

138. Behind Front Console

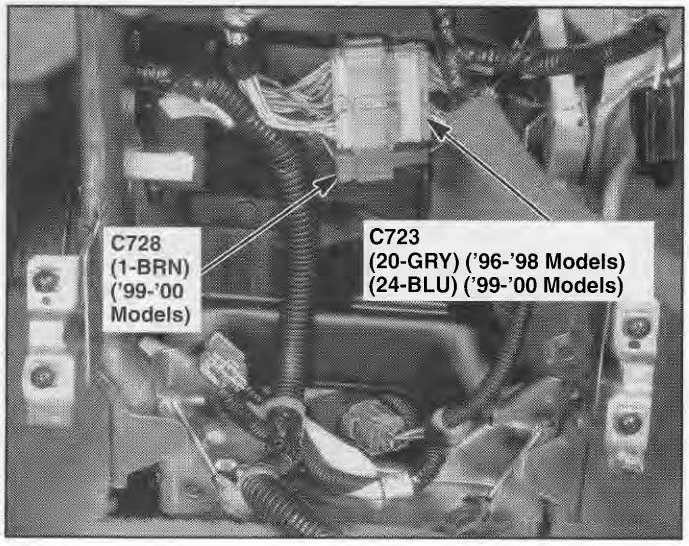

139. Behind Glove Box ('99-'00)

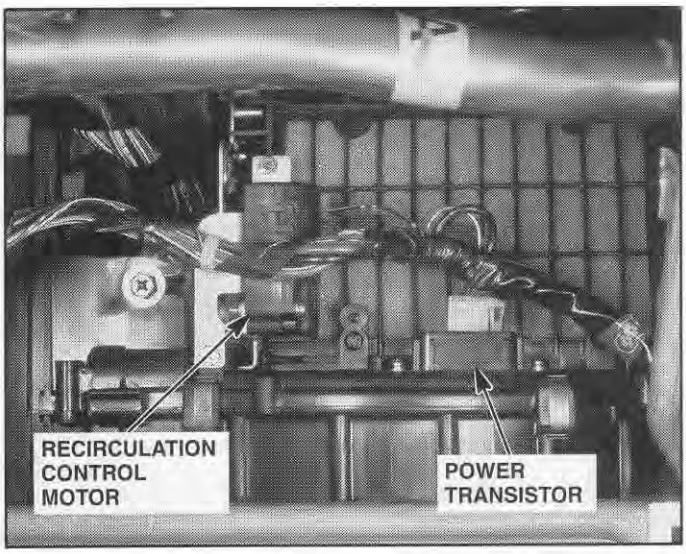

140. Underside of Rear Shelf ('99-'00 Sedans)

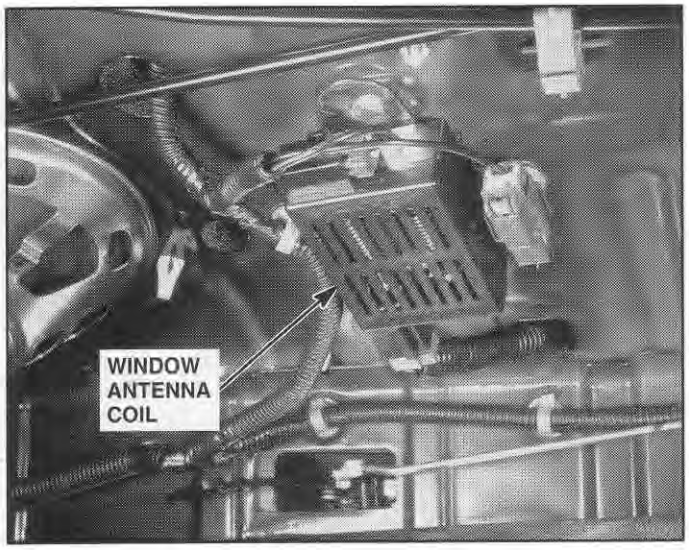

141. Top Center of Engine (GX)

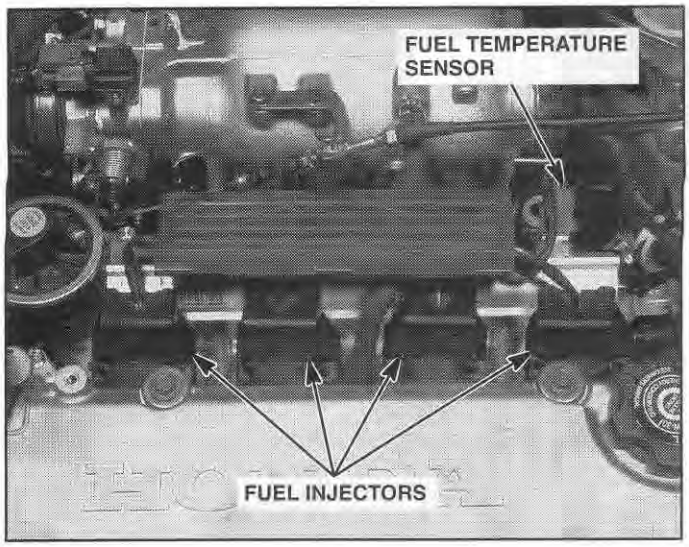

142. Left Rear Corner Engine Compartment (GX)

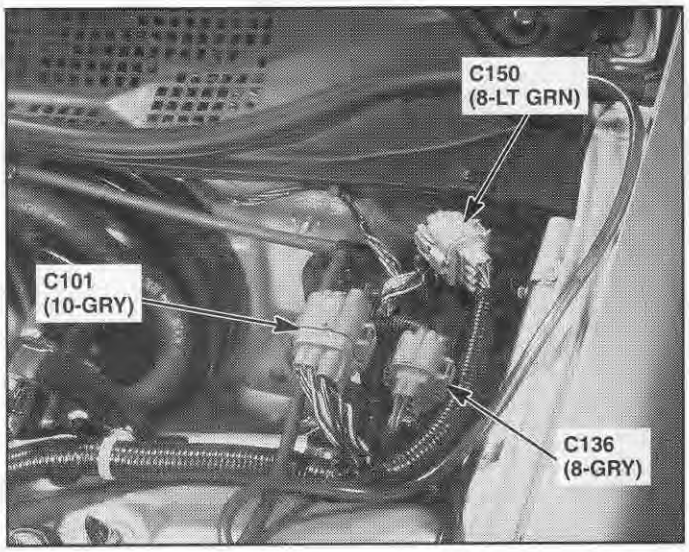

143. Right Rear of Engine Compartment (GX)

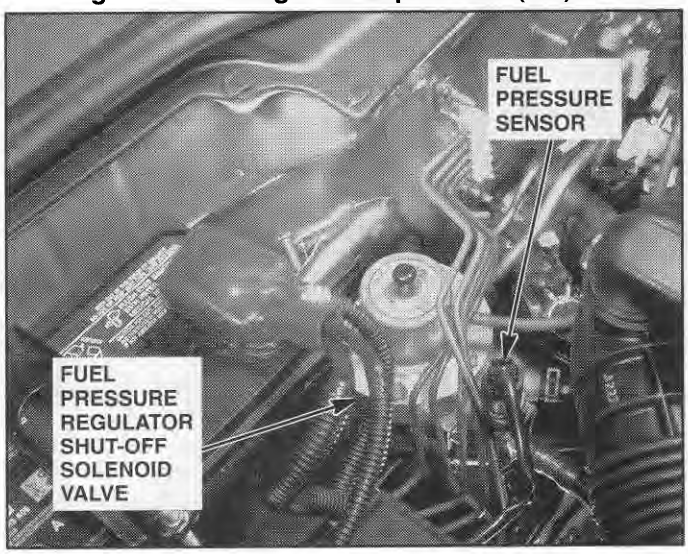

144. Behind Left Kick Panel (GX)

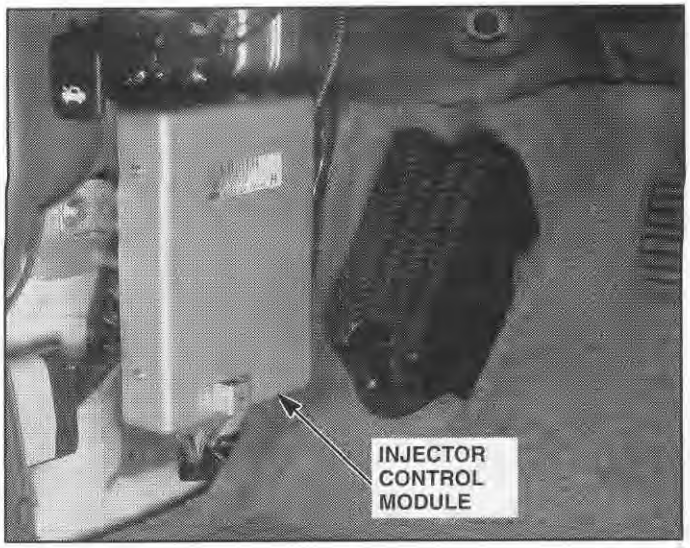

Component Location

145. Left Side of Trunk (GX)

146. Behind Back Seat (GX)

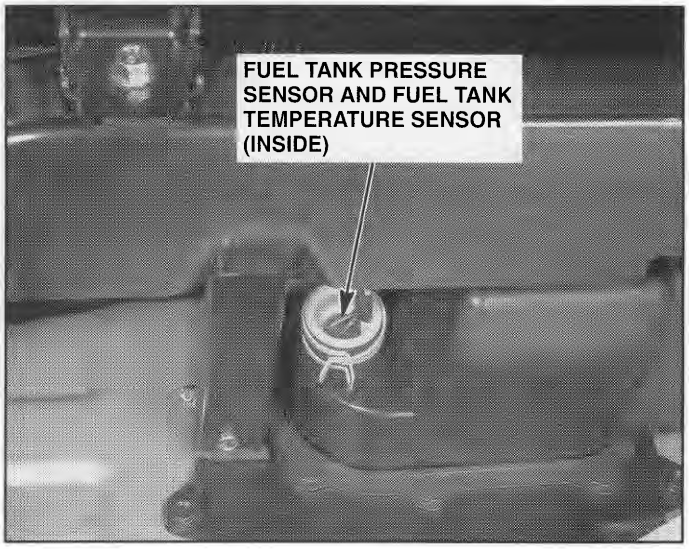

147. Behind Left Side of Back Seat (GX)

148. Below Right Side of Center Console

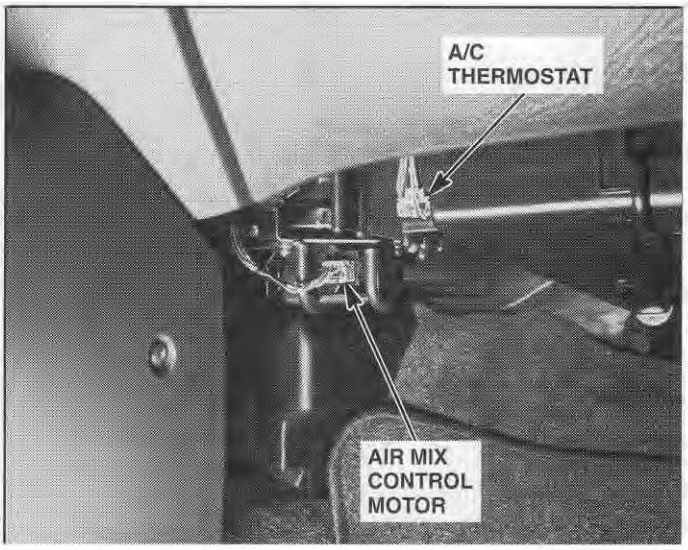

149. Underside of Vehicle, Left Rear of Engine (Si)

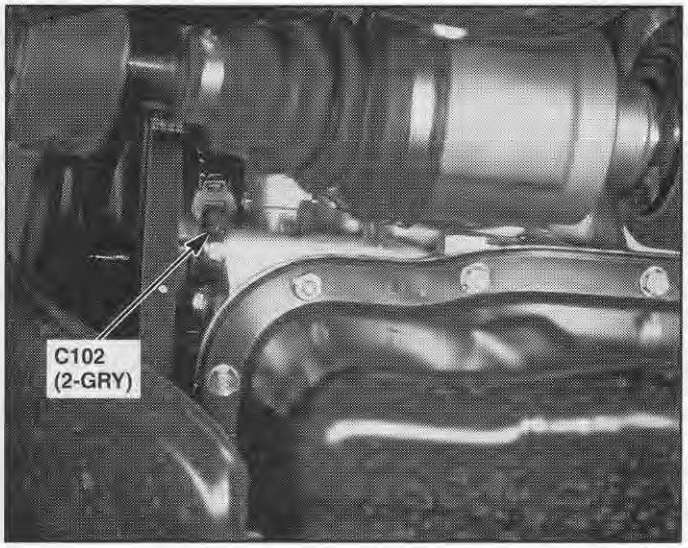

150. Right Front of Engine (Si)

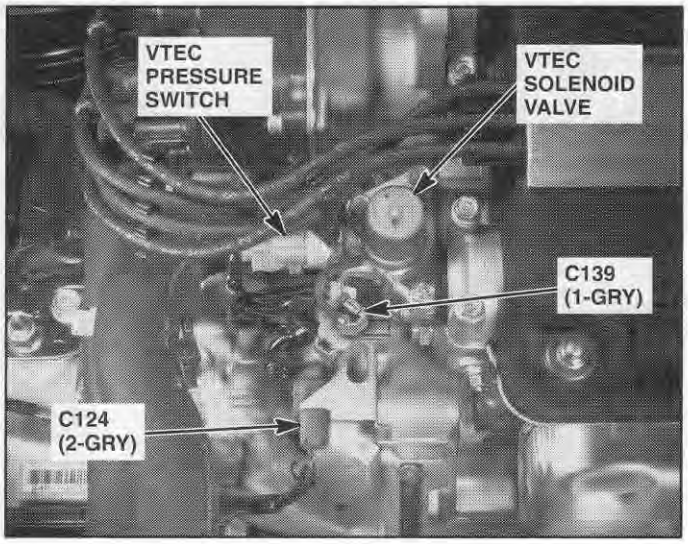

151. Lower Front of Transmission (Si)

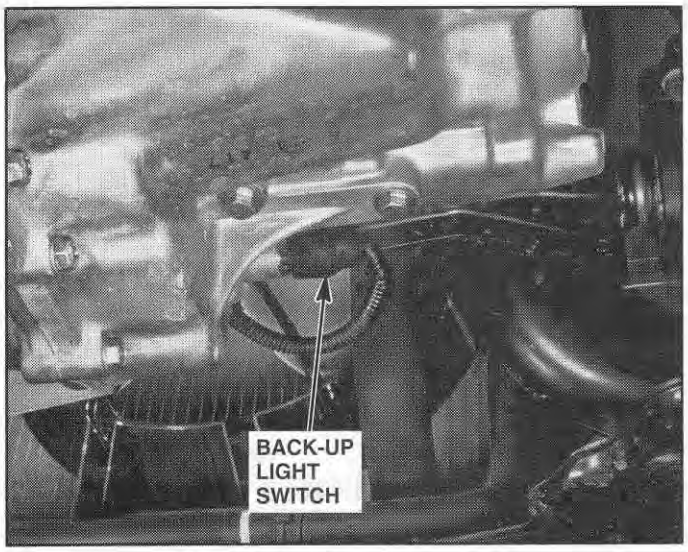

152. Left Center of End Panel ('99-'00 Sedan)

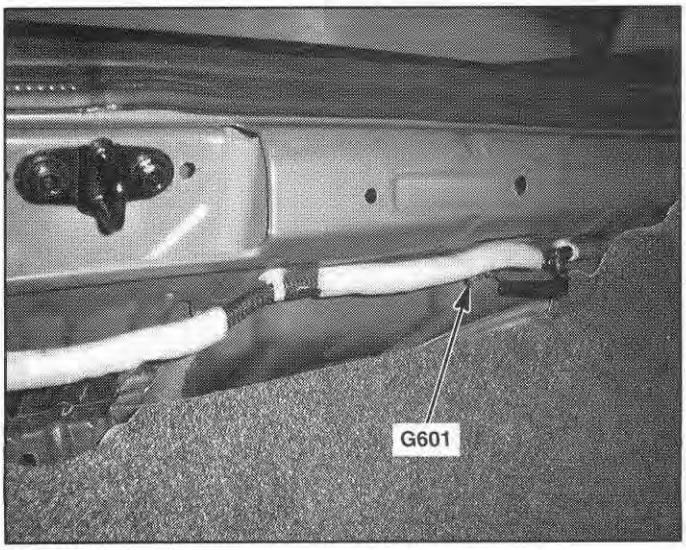

Connector Views

Cavity Numbering System

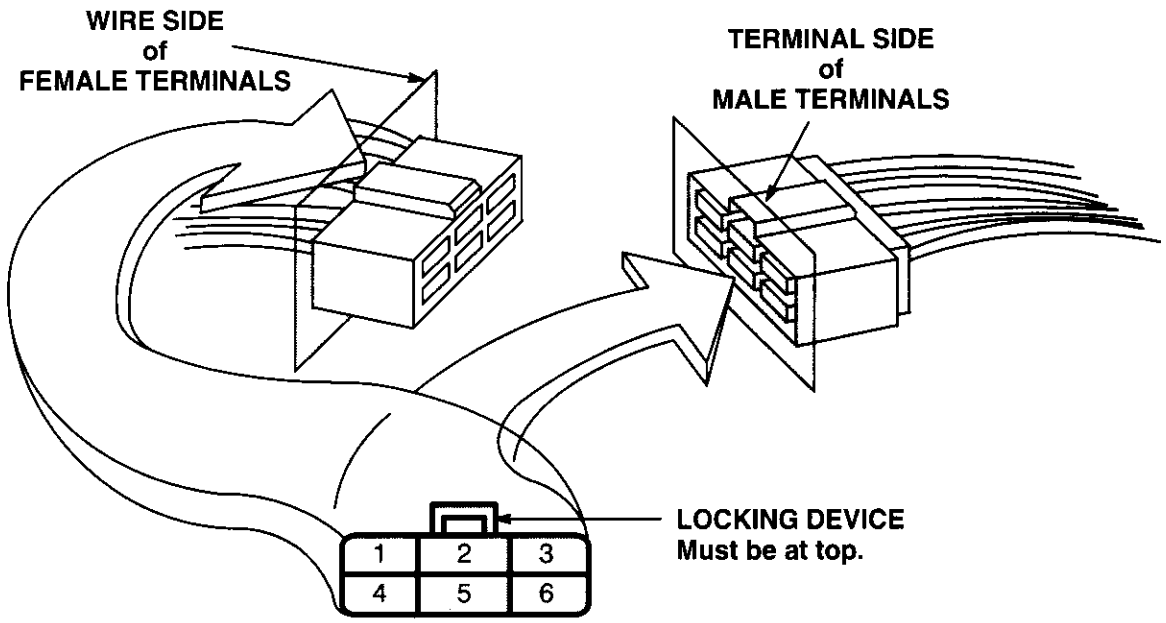

In-Line Connector View Index (Views begin on page 202-2)

Connector	View
C101	28
C115	38
C116	39
C120	29
C123 (D16Y5 M/T)	19
C130	52
C131	59
C136	20
C150	72
C201	30
C202 (Cruise Control)	1
C214	21
C351	34
C352	27
C359	31
C401	40
C407	2
C410 (A/T)	35
C411	60
C415	14
C416	12
C419	49
C420	53
C421	50
C422	16
C423	3
C427	65
C433	41
C440	45
C442	54
C447	58
C501	55
C503	46
C507	56
C516	58
C551	47
C552	22
C556	61
C557	62
C562	42
C568	4
C570	5
C571	6
C575	73
C604 (Hatchback)	7
C605 (Hatchback)	8
C607 (Hatchback)	9
C639	23
C656	24
C723	57

Component Connector View Index (Views begin on page 202-2)

Connector	View
ABS Control Unit	63
Audio Unit ('99-'00 models)	74
Combination Light Switch	64
Combination Wiper Switch	65
Cruise Control Unit	43
CVT Transmission Solenoid	25
Data Link Connector (DLC)	48
Daytime Running Lights Control Unit	66
Engine Control Module (ECM)	70
Exhaust Gas Recirculation (EGR) Valve and Lift Sensor (D16Y5 M/T, D16B5)	10
Gauge Assembly	71
Hazard Warning Switch	32
Heater Control Panel ('96-'98 models)	44
Heater Control Panel ('99-'00 models)	76
Heater Fan Switch ('96-'98 models)	11
Injector Control Module (GX)	77
Integrated Control Unit	67
Interlock Control Unit	26
Keyless Door Lock Control Unit	75
Mode Control Motor	17
Moonroof Close Relay	13
Moonroof Open Relay	15
PGM-FI Main Relay	18
Power Door Lock Control Unit	37
Power Mirror Switch	33
Power Window Master Switch	36
Powertrain Control Module (PCM)	70
Security Control Unit	58
Security Starter Cut Relay	12
SRS Unit	51
Stereo Radio Tuner ('96-'98 models)	68
Transmission Control Module (TCM)	69

1. C202 (with Cruise Control)

- Gray
- Left side of engine compartment
- Connects main wire harness to engine compartment wire harness

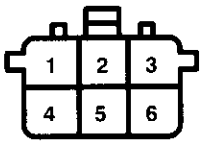

1 BRN/BLK (Cruise control)
2 BRN/WHT (Cruise control)
3 RED/BLK (Headlight switch)
4 BRN (Cruise control)
5 WHT/BLK (Front wiper/washer)
6 —

2. C407 ('98-'00 Models)

- Gray
- Behind left side of dash, above kick panel
- Connects main wire harness to roof or moonroof wire harness

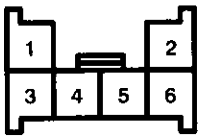

1 WHT/RED (Ceiling light)
2 Male – LT GRN/RED
Female – LT GRN/BLK or LT GRN/RED (Ceiling light)
3 —
4 —
5 —
6 —

3. C423

- Green
- On front of under-dash fuse/relay box
- On main wire harness

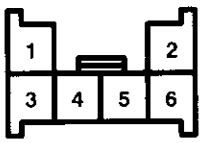

1 *1: YEL (Fuse 3)
*2: GRN (Rear wiper/washer)
2 —
3 GRN/YEL (Turn signals)
4 GRN/ORN (Turn signals)
5 GRN/BLK (Front wiper/washer)
6 GRN/RED (Turn signals)

*1= USA: LX, EX, HX, DX-V, Si
Canada: EX, Si
*2= Hatchback

4. C568

- Gray
- Below fuel tank unit connector
- Connects floor wire harness to fuel tank pressure sub-harness

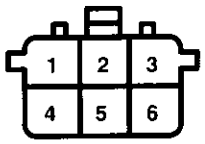

1 BLU (PGM-FI)
2 LT GRN (PGM-FI)
3 BLK/WHT (PGM-FI)
4 —
5 YEL/BLU (PGM-FI)
6 GRN/BLK (PGM-FI)

5. C570

- Blue
- In right door pillar
- Connects floor wire harness to right rear door wire harness

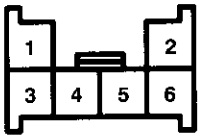

1 YEL (Power windows)
2 WHT/RED (Power door locks)
3 YEL/GRN (Power windows)
4 YEL/BLK (Power windows)
5 —
6 YEL/RED (Power door locks)

6. C571

- Blue
- In left door pillar
- Connects floor wire harness to left rear door wire harness

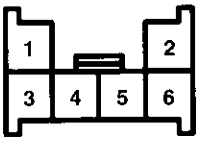

1 Male – YEL
Female – GRN/YEL (Power windows)
2 WHT/RED (Power door locks)
3 Male – YEL/GRN
Female – GRN (Power windows)
4 Male – YEL/BLK
Female – RED/WHT (Power windows)
5 —
6 YEL/RED (Power door locks)

7. C604 (Hatchback)

- Gray
- Left rear of cargo area
- Connects rear wire harness to left outer taillight assembly

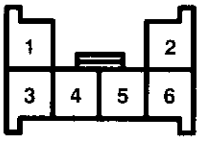

1 GRN/BLK (Back-up lights)
2 Male – GRN/YEL
Female – GRN/RED
(Turn signal and hazard warning lights)
3 BLK (G601)
4 GRN/WHT (Brake lights)
5 RED/BLK (Headlight switch)
6 —

8. C605 (Hatchback)

- Gray
- Right rear of cargo area
- Connects rear wire harness to right outer taillight assembly

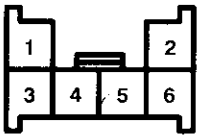

1 GRN/BLK (Back-up lights)
2 GRN/YEL (Turn signal and hazard warning lights)
3 BLK (G601)
4 GRN/WHT (Brake lights)
5 RED/BLK (Headlight switch)
6 —

9. C607 (Hatchback)

- Blue
- Right side of cargo area
- On rear wire harness

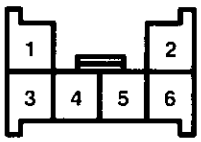

1 BLU/BLK (Indicators)
2 RED/BLK (License lights)
3 GRN/WHT (Brake lights)
4 LT GRN (Rear wiper/washer)
5 GRN (Rear wiper/washer)
6 LT GRN/BLK (Rear wiper washer)

10. Exhaust Gas Recirculation (EGR) Valve and Lift Sensor (D16Y5 M/T, D16B5)

- Gray
- Top right side of engine
- On engine wire harness

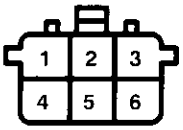

1 WHT/BLK (EGR input)
2 GRN/BLK (Sensor ground)
3 YEL/BLU (Reference voltage)
4 BLK (Ground)
5 —
6 PNK (EGR control)

11. Heater Fan Switch ('96-'98 Models)

- Brown
- Center of dash
- On heater-sub B wire harness

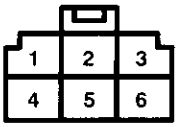

1 BLK (Ground)
2 BLU/WHT (Medium LO speed input)
3 BLU/BLK (HI speed input)
4 BLU (LO speed input)
5 BLU/YEL (Medium HI speed input)
6 GRN (Blower switch ON input)

12. Security Starter Cut Relay/C416

- Natural
- Upper left kick panel
- On main wire harness

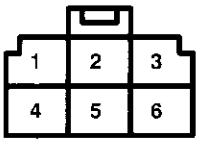

1 —
2 All except CX and DX:
Male: BLK/WHT
Female: BLK/YEL
CX and DX: BLK/WHT
(Battery input)
3 All except CX and DX:
BLK/YEL
CX and DX: BLK/WHT
(Battery input)
4 Male – BLK/WHT
Female – BLK/WHT or BLK/RED
(Starter output)
5
6 All except CX and DX:
RED/YEL
CX and DX: GRN
(Security starter cut relay control input)

13. Moonroof Close Relay

- Brown ('96-'97 models) or Gray ('98-'00 models)
- Upper left kick panel
- On moonroof wire harness

'96-'97 Models:

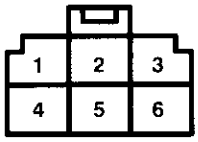

1 WHT (Battery input)
2 GRN/YEL (Motor control)
3 GRN/ORN (Ignition input)
4 BLK (Ground)
5 —
6 GRN/RED (Coil control)

'98-'00 Models:

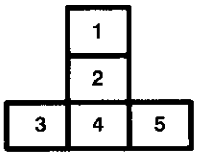

1 GRN/YEL (Motor control)
2 WHT (Battery input)
3 GRN/RED (Coil control)
4 BLK (G401)
5 GRN/ORN (Ignition input)

14. C415

- Brown
- Above under-dash fuse/relay box
- Connects main wire harness to steering lock pigtail

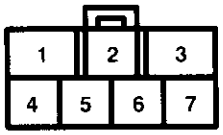

1 *1: Male – BLK/YEL
Female – BLK/WHT
*2: BLK/WHT
(Start output)
2 Male – BLU/RED
Female – BLU/WHT
(Ignition key switch output)
3 Male – WHT/BLK
Female – WHT
(Battery input)
4 Male – BLK
Female – BLU/WHT
(Ground)
5 A/T: Male – WHT
Female – WHT/YEL
(Key interlock switch output)
6 A/T: WHT/BLU
(Key interlock solenoid control)
7 A/T: WHT/GRN
(Battery input)

*1= Vehicles pre-wired for accessory security system
*2= Vehicles not pre-wired for accessory security system

15. Moonroof Open Relay

- Brown ('96-'97 models) or Gray ('98-'00 models)
- Upper left kick panel
- On moonroof wire harness

'96-'97 Models:

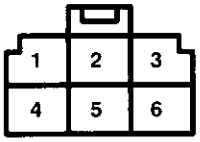

1 WHT (Battery input)
2 GRN/RED (Motor control)
3 GRN/ORN (Ignition input)
4 BLK (Ground)
5 —
6 YEL (Coil control)

'98-'00 Models:

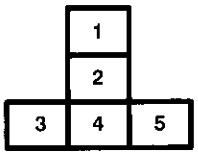

1 GRN/RED (Motor control)
2 WHT (Battery input)
3 YEL (Coil control)
4 BLK (G401)
5 GRN/ORN (Ignition input)

16. C422

- Green
- On front of under-dash fuse/relay box
- On main wire harness

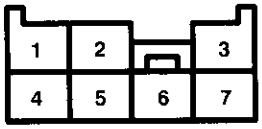

1 RED/BLU (Headlights)
2 —
3 —
4 RED/WHT (Headlights)
5 WHT (Fuse 48)
6 —
7 RED/GRN (Headlight switch)

17. Mode Control Motor

- Green
- Behind dash, right of steering column
- On heater sub-harness-A

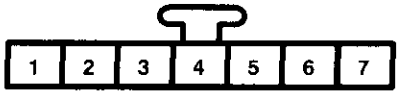

1 BLK/YEL (Ignition input)
2 YEL/BLU (Defrost input)
3 YEL (H/DEF input)
4 BLU/WHT (Heat input)
5 GRN/YEL (BI-LEV input)
6 YEL/RED (Vent input)
7 '96-'98: BLK (G402)
'99-'00: BRN/WHT
(Motor ground input)

18. PGM-FI Main Relay

- Brown
- Behind right side of dash
- On main wire harness

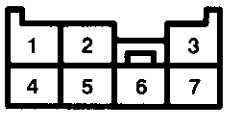

1 GRN/YEL
(Fuel pump control)
2 BLU/WHT (Fuse 31)
3 BLK (G101)
4 *1: YEL/GRN
(Fuel pump output)
*2: WHT/RED
(Fuel supply control)
5 YEL/GRN (Fuse 13)
6 YEL/BLK (Power output)
7 WHT/BLK (Fuse 44)

*1= All except D16B5
*2= D16B5

19. C123 (D16Y5 M/T)

- Gray
- Right front of engine
- Connects engine wire harness to primary HO2S pigtail

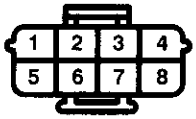

1 BLK/WHT
(Heater control)
2 BLK (Heater ground)
3 GRN/BLK
(Sensor ground)
4 WHT (Heater control)
5 —
6 WHT (Sensor input)
7 BLK (Sensor input)
8 RED (Sensor ground)

20. C136

- Gray
- Left rear of engine compartment
- Connects engine wire harness to main wire harness

'96-'98 D16Y5:

1 Male – BLU/WHT
Female – BLU/YEL
(A/T controls)
2 GRN/WHT (A/T controls)
3 YEL (A/T controls)
4 GRN/YEL (A/T controls)
5 PNK/BLK (A/T controls)
6 PNK/BLU (A/T controls)
7 GRN/BLK (A/T controls)
8 RED/BLU (A/T controls)
9 WHT (A/T controls)
10 WHT/RED (A/T controls)
11 '98 models: GRN/BLK
(PGM-FI)
12 GRN (A/T controls)
13 Male – RED/WHT
Female – RED/BLU
(A/T controls)
14 Male – BLK/WHT
Female – ORN/BLU
(A/T controls)

'96-'98 D16Y7/D16Y8:

1 GRN/BLK (A/T controls)
2 WHT/RED
(Interlock system)
3 —
4 —
5 WHT (A/T controls)
6 BLU (A/T controls)
7 —
8 —

All D16B5:

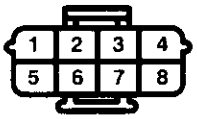

1 BRN (PGM-FI)
2 RED (PGM-FI)
3 BLU (PGM-FI)
4 YEL (PGM-FI)
5 Male – GRN
Female – WHT/RED
(PGM-FI)
6 GRN/BLK (A/T controls)
7 BLU (A/T controls)
8 WHT (A/T controls)

21. C214

- Gray
- Right side of engine compartment
- Connects engine wire harness to main wire harness

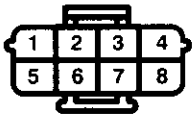

1 '96-'97 models:
Male – WHT/GRN
Female – BLU/RED
(Horn)
'98-'00 models:
BLU/RED (Horn)
2 BLK/RED (Fans)
3 WHT (Fans)
4 —
5 —
6 RED (A/C compressor controls)
7 BLU/RED (A/C compressor controls)
8 BLU/WHT (A/C compressor controls)

22. C552

- Green
- On rear of under-dash fuse/relay box
- On floor wire harness

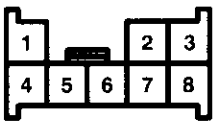

1 *1: RED/WHT (Power windows)
2 *1: YEL/BLK (Power windows)
3 *1: YEL/BLK (Power windows)
4 *1: RED/WHT (Power windows)
5 GRN/BLK (Power windows)
6 GRN/BLK (Power windows)
7 *2: BLK/YEL (Power mirrors)
8 BLU/BLK (Power windows)

*1= Sedan only
*2='96-'98: All
'99-'00: GX

23. C639

- Black/White
- Top front of driver's door
- Connects driver's door wire harness to driver's power mirror pigtail

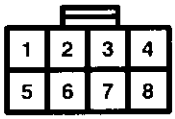

Without Defogger:

1 —
2 —
3 —
4 —
5 —
6 Male – LT GRN
Female – BLU/BLK
(Left/right control)
7 Male – PNK
Female – YEL/RED
(Common)
8 Male – GRY
Female – BLU/WHT
(Up/down control)

With Defogger:

1 —
2 —
3 Male – BLK/WHT
Female – BLK
(Ground)
4 Male – BLU/RED
Female – ORN/WHT
(Defogger)
5 —
6 Male – LT GRN
Female –BLU/BLK
(Common)
7 Male – PNK
Female – YEL/RED
(Up/down control)
8 Male – GRY
Female – BLU/WHT
(Left/right control)

24. C656

- Black/White
- Top front of front passenger's door
- Connects front passenger's door wire harness to passenger's power mirror pigtail

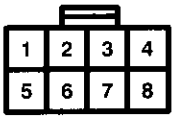

Without Defogger:

1 —
2 —
3 Male – —
Female – BLK
(Not Used)
4 Male – —
Female – ORN/WHT
(Not Used)
5 —
6 Male – ORN
Female – YEL/BLK
(Left/right control)
7 Male – PNK
Female – YEL/RED
(Common)
8 Male – BRN
Female - GRN/WHT
(Up/down control)

With Defogger:

1 —
2 —
3 Male – BLK/WHT
Female – BLK
(Ground)
4 Male – BLU/RED
Female – ORN/WHT
(Defogger)
5 —
6 Male – ORN
Female – YEL/BLK
(Left/right control)
7 Male – PNK
Female – YEL/RED
(Up/down control)
8 Male – BRN
Female - GRN
(Common)

25. CVT Transmission Solenoid

- Gray
- Lower front of transmission
- On engine wire harness

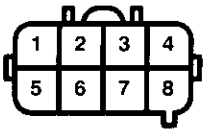

1 ---
2 GRN/WHT (H LC LS +)
3 BLU/WHT (SH LS +)
4 YEL (SC LS +)
5 GRN/BLK (SOL IN H)
6 PNK/BLK (HLC LS −)
7 GRN/YEL (SH LS −)
8 PNK/BLU (SC LS −)

26. Interlock Control Unit

- Gray
- Behind left side of dash, right of steering column
- On main wire harness

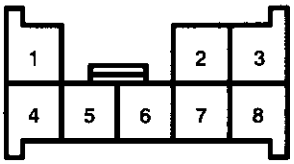

1 WHT/BLU (Key interlock solenoid control)
2 YEL (Ignition input)
3 YEL/BLK (Shift lock solenoid control)
4 BLK (G401)
5 WHT (Key interlock switch input)
6 BLK/BLU (Park input)
7 WHT/RED (Shift lock circuit control)
8 WHT/BLK (Park pin switch input)

27. C352

- Gray
- On bottom of under-hood fuse/relay box
- On main wire harness

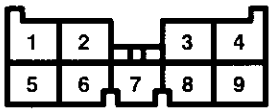

1 GRN (Fans)
2 BLU/WHT (A/C compressor controls)
3 WHT/BLK (Hazard warning lights)
4 WHT/BLK (Fuse 42)
5 BLK/RED (A/C compressor clutch relay control)
6 BLK/YEL (Fuse 17)
7 ---
8 WHT/GRN (Fuse 52)
9 WHT (Fuse 48)

28. C101

- Gray
- Left rear of engine compartment
- Connects engine wire harness to main wire harness

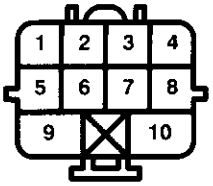

1 Male – BLK/YEL
Female – BLK/WHT
(Fuse 15)
2 BLK (G101)
3 YEL/RED (Oil pressure indicator light)
4 *1/*4: BRN/BLK (G101)
5 YEL/BLK (PGM-FI)
6 WHT/BLU (Charging system)
7 YEL/GRN (Gauges)
8 *1: BLU (Ignition system)
9 Male – BLK/WHT
Female – BLK/RED
(Starting system)
10 *2: BLK/YEL (Ignition system)
*3: Male – BLK/YEL
Female – RED
(Ignition system)

*1= '96-'98 models: All
'99: D16Y5 with M/T
*2= '96-'97 models: All
'98-'99 models: GX
*3= '96-'98 models: All except GX
*4= '98-'00 Models: GX

29. C120

- Gray
- Top center of engine
- Connects engine wire harness to distributor assembly pigtail

All except '99-'00 D16Y7/D16Y8:

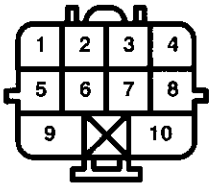

1 YEL/GRN
(Ignition input signal)
2 Male – LT BLU
Female – BLU
(CKP sensor output)
3 Male – ORN/BLU
Female – GRN
(TDC sensor output)
4 Male – ORN
Female – YEL
(CYP sensor output)
5 —
6 Male – BLU/YEL
Female – WHT
(CKP sensor ground)
7 Male – WHT/BLU
Female – RED
(TDC sensor ground)
8 Male – WHT
Female – BLK
(CYP sensor ground)
9 Male – BLU
Female – —
*: BLU
(Engine speed output)
10 BLK/YEL (Ignition input)

* = '96-'98: All
'99-'00: D16B5

'99-'00 D16Y7/D16Y8:

1 YEL/GRN
(Ignition input signal)
2 Male – LT BLU
Female – BLU
(CKP sensor output)
3 Male – ORN/BLU
Female – GRN
(TDC sensor output)
4 Male – ORN
Female – YEL
(CYP sensor output)
5 BLK/YEL (Ignition input)
6 WHT
(CKP sensor ground)
7 Male – WHT/BLU
Female – RED
(TDC sensor ground)
8 BLK
(CYP sensor ground)

30. C201

- Blue
- Left side of engine compartment
- Connects main wire harness to engine compartment wire harness

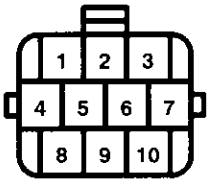

1 GRN/YEL
(Turn signal and hazard warning lights)
2 RED/BLK
(Headlight switch)
3 RED/WHT
(Headlight switch)
4 D16Y5:
Male – GRN/BLK
Female – —
Hatchback: GRN/BLK
(Rear wiper/washer)
5 '96-'97 models:
Male – BLU/RED
Female – BLK (Horns)
'99-'00: Canada –
PNK (Indicators)
6 RED/BLU
(Headlight switch)
7 BLU/RED (Fog lights)
8 GRN/RED
(Turn signal and hazard warning lights)
9 RED/GRN
(Headlight switch)
10 RED/YEL
(Headlight switch)

31. C359

- Orange
- Right side of engine compartment
- Connects main wire harness to ABS modulator unit

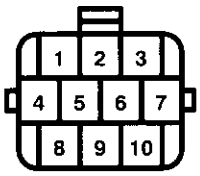

1 Male – RED/WHT
Female – GRN/WHT
(Power)
2 Male – BLK
Female – YEL/BLK
(FL-OUT)
3 Male – BRN
Female – BLU
(RR-OUT)
4 Male – BLU
Female – RED/BLK
(FL-IN)
5 Male – PUR
Female – RED/WHT
(RR-IN)
6 Male – WHT
Female – YEL/BLU
(FR-OUT)
7 YEL (RL-OUT)
8 Male – ORN
Female – RED/BLU
(FR-IN)
9 Male – GRN
Female – RED (RL-IN)
10 Male – RED
Female – BLK/WHT
(SCOM)

32. Hazard Warning Switch

- Gray
- Center of dash
- On dashboard wire harness

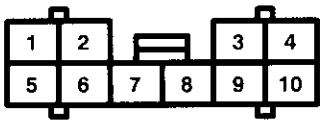

1 GRN/RED (Left turn signal indicator light output)
2 GRN/YEL (Right turn signal indicator light output)
3 GRN/ORN (Turn signal/hazard relay control)
4 —
5 YEL/BLK (Ignition input)
6 WHT/BLK (Battery input)
7 —
8 RED/BLK (Dash and console lights)
9 RED (Dash and console lights)
10 GRN/WHT (Turn signal/hazard relay power)

33. Power Mirror Switch

- Green or White or Gray
- Left of steering column
- On floor wire harness

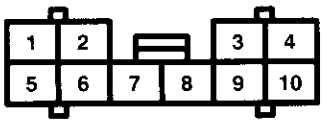

Without Defogger:

1 —
2 *1: BLK/YEL
*2: BLK/BLU
(Ignition input)
3 YEL/RED (Common)
4 BLK (G551)
5 BLU/WHT (Left up/down control)
6 BLU/BLK (Left left/right control)
7 —
8 YEL/BLK (Right left/right control)
9 GRN/WHT (Right up/down control)
10 —

With Defogger:

1 BLK/BLU (Ignition input)
2 BLK (G551)
3 BLK/BLU (Ignition input)
4 YEL/RED (Common)
5 —
6 ORN/WHT (Defogger control)
7 BLU/BLK (Left left/right control)
8 GRN/WHT (Right up/down control)
9 BLU/WHT (Left up/down control)
10 YEL/BLK (Right left/right control)

*1: '96-'98 models, '98-'00 GX
*2: '99-'00 models except GX

34. C351

- Gray
- On bottom of under-hood fuse/relay box
- On main wire harness

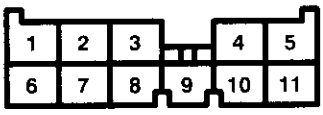

1 —
2 WHT/BLU (Power windows)
3 WHT/GRN (Rear window defogger)
4 BLK (G402)
5 WHT/RED (Fuse 54)
6 WHT/RED (Fuse 43)
7 WHT/BLK (PGM-FI)
8 WHT/BLU (Fuse 47)
9 WHT/GRN (Fuse 51)
10 —
11 BLU/WHT (Blower controls)

35. C410 (A/T)

- Gray
- Mounted to top of under-dash fuse/relay box
- Connects main wire harness and dashboard wire harness

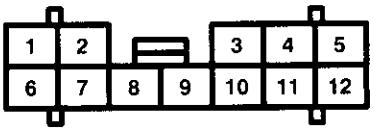

1 —
2 —
3 GX: BLU/GRN (Low fuel indicator)
4 GX: ORN/BLU (Fuel gauge)
5 WHT (A/T gear position indicator)
6 RED (A/T controls)
7 BLK/BLU (A/T controls)
8 All except CVT: BRN (A/T gear position indicator)
9 BLU (A/T gear position indicator)
10 GRN (A/T gear position indicator)
11 D16Y7/D16Y8: Male – GRN/BLK Female – YEL (A/T controls) D16B5/D16Y5: GRN/BLK (A/T controls)
12 LT GRN (A/T controls)

36. Power Window Master Switch Coupe/Hatchback:

- Gray
- Driver's door armrest
- On driver's door wire harness

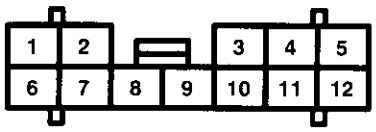

1 BLU/BLK (Ignition input)
2 BLU/ORN (RF motor control)
3 RED/YEL (LF motor control)
4 RED/BLU (LF motor control)
5 BLK (G551)
6 GRN/BLK (Ignition input)
7 BLU/YEL (RF motor control)
8 BLK (G551)
9 —
10 —
11 —
12 BLU (Auto control)

Sedan:

- In driver's door armrest

Connector A

- Gray
- On driver's door wire harness

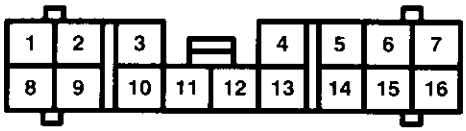

1 BLU/YEL (RF motor control)
2 GRN/BLK (Ignition input)
3 BLU/BLK (Ignition input)
4 BLK (G551)
5 RED/YEL (LF motor control)
6 BLU (Auto control)
7 RED/BLU (LF motor control)
8 YEL/BLK (Ignition input)
9 YEL (RR motor control)
10 YEL/GRN (RR motor control)
11 BLU/ORN (RF motor control)
12 —
13 —
14 GRN/YEL (LR motor control)
15 RED/WHT (Ignition input)
16 GRN (LR motor control)

Connector B

- Brown
- On driver's door wire harness

1 BLK (G551)

37. Power Door Lock Control Unit (All except '99-'00 models with keyless)

- Gray
- In driver's door
- On drivers door wire harness

1 GRN/WHT (Lock input)
2 YEL/RED (Unlock/lock output)
3 BLU/RED (Unlock/lock control)
4 BLK (Ground)
5 WHT/RED (Lock output)
6 BLU/YEL (Driver's door unlock input)
7 BLU/WHT (Lock input)
8 GRN/ORN (Unlock input)
9 —
10 —
11 —
12 WHT/GRN (Battery input)

38. C115

- Blue
- Rear of engine, below intake manifold
- Engine wire harness junction connector

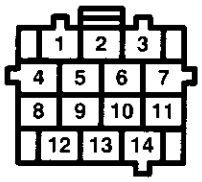

1 BLK/YEL (Fuse 15)
2 BLK/YEL (Fuse 15)
3 BLK/YEL (Fuse 15)
4 BLK/YEL (Fuse 15)
5 BLK/YEL (Fuse 15)
6 BLK/YEL (Fuse 15)
7 BLK/YEL (Fuse 15)

8 GRN/BLK (PGM-FI)
9 GRN/BLK (PGM-FI)
10 GRN/BLK (PGM-FI)
11 GRN/BLK (PGM-FI)
12 GRN/BLK (PGM-FI)
13 GRN/BLK (PGM-FI)
14 GRN/BLK (PGM-FI)

Terminals grouped together are connected by the same bus bar.

39. C116

- Gray
- Rear of engine, below intake manifold
- Engine wire harness junction connector

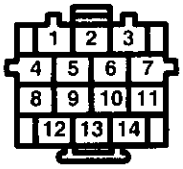

1 —
2 *1: YEL/BLK
*2: YEL/RED
(PGM-FI)
3 *1: YEL/BLK
*2: YEL/RED
(PGM-FI)
4 *1: YEL/BLK
*2: YEL/RED
(PGM-FI)
5 *1: YEL/BLK
*2: YEL/RED
(PGM-FI)
6 *1: YEL/BLK
*2: YEL/RED
(PGM-FI)
7 *1: YEL/BLK
*2: YEL/RED
(PGM-FI)

8 BLK (G101)
9 BLK (G101)
10 BLK (G101)
11 BLK (G101)
12 BLK (G101)
13 USA: BLK (G101)
14 BLK (G101)

*1: All except GX
*2: GX

Terminals grouped together are connected by the same bus bar.

41. C433

- Gray
- Below center console
- Connects main wire harness to A/T gear position switch pigtail

1 BLK (Cruise control)
2 Male – LT GRN
Female – —
(Not used)
3 Male – YEL
Female – YEL/RED
(Back-up lights)
4 GRN/BLK
(Back-up lights)
5 Male – GRN/YEL
Female – BLU
(A/T controls)
6 Male – GRN/BLU
Female – GRN
(A/T controls)
7 Male – GRN/ORN
Female – YEL
(A/T controls)
8 —
9 PNK (Cruise control)
10 BLK/WHT
(Starting system)
11 BLK/RED
(Starting system)
12 Male – GRN/WHT
Female – BLK/BLU
(A/T controls)
13 Male – GRN/RED
Female – WHT
(A/T controls)
14 Male – GRN
Female – RED
(A/T controls)

40. C401

- Gray
- Behind left kick panel
- Connects main wire harness to floor wire harness

All '96-'98 Models and '99-'00 GX Models:

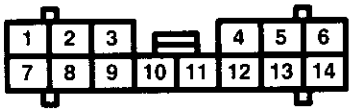

1 *1: BLK/WHT (PGM-FI)
*2: YEL/BLU (PGM-FI)
2 Hatchback:
LT GRN/BLK
(Rear wiper/washer)
*2: BLU/YEL (PGM-FI)
3 Hatchback: LT GRN
(Rear wiper)
*2: GRN/BLK (PGM-FI)
4 *1: YEL/BLU (PGM-FI)
*2: GRN/YEL (PGM-FI)
5 *1: GRN/BLK (PGM-FI)
*2: WHT/RED (PGM-FI)
6 RED/BLU
(Seat belt reminder)
7 WHT/GRN (Fuse 51)
8 1*: LT GRN (PGM-FI)
9 1*: BLU (PGM-FI)
10 GRN (Ignition key reminder)
11 LT GRN/RED
(Ceiling light)
12 GRN/BLK
(Back-up lights)
13 GRN/WHT (Brake lights)
14 Except GX: YEL/GRN
(PGM-FI)

*1= D16Y5: All '98 models
D16Y7: '97 California Coupe and Sedan LX, all '98 models
D16Y8: All '96-'97 Coupes, '97 California Sedans, all '98 models

*2= GX models

'99-'00 Models except GX:

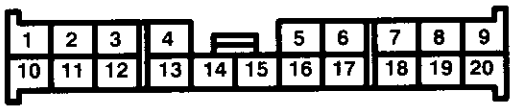

1 GRN/ORN
(Power door locks)
2 BLK/WHT (PGM-FI)
3 Coupe/Sedan:
GRN/WHT
(Power door locks)
Hatchback:
LT GRN/BLK (Rear wiper)
4 Coupe/Sedan: BLU/BLK
(Security system)
Hatchback:
LT GRN (Rear Wiper)
5 YEL/BLU (PGM-FI)
6 GRN/BLK (PGM-FI)
7 RED/BLU
(Seat belt reminder)
8 *3: WHT/RED
(Power door locks)
9 *3: BLU/RED
(Power door locks)
10 *3: BLU/WHT
(Power door locks)
11 Male – —
Female – WHT/GRN
(Fuse 51)
12 LT GRN (PGM-FI)
13 BLU (PGM-FI)
14 GRN
(Ignition key reminder)
15 LT GRN/RED
(Ceiling light)
16 GRN/BLK
(Back-up lights)
17 GRN/WHT
(Brake lights)
18 YEL/GRN (PGM-FI)
19 *3: YEL/RED
(Power door locks)
20 Canada: BLU/YEL
(Power door locks)

*3= USA: HX, LX, EX, DX-V, Si

42. C562

- Gray
- Behind left side of rear seat back
- Connects floor wire harness and rear wire harness

'96-'98 Coupe/Hatchback:

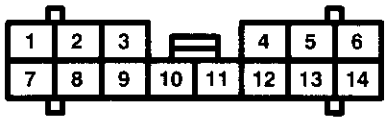

1 LT GRN (Power door locks)
2 BLU/YEL (Stereo sound system)
3 RED/YEL (Stereo sound system)
4 GRN/BLK (Back-up lights)
5 *WHT/RED (Fuse 43)
6 Hatchback: GRN (Rear wiper/washer)
7 GRY/WHT (Stereo sound system)
8 BRN/WHT (Stereo sound system)
9 RED/BLK (Headlight switch)
10 GRN/YEL (Turn signal lights)
11 GRN/RED (Turn signal lights)
12 BLU/BLK (Indicators)
13 Hatchback: LT GRN (Rear wiper/washer)
14 Hatchback: LT GRN/BLK (Rear wiper/washer)

*= Male terminal not used on Hatchback models

'96-'98 Sedan except GX:

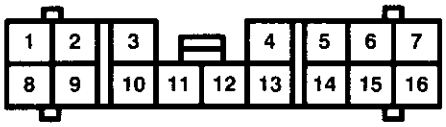

1 GRN/RED (Turn signal lights)
2 —
3 Male – YEL/BLK
Female – (Not used)
4 Male – WHT/BLU
Female – (Not used)
5 LT GRN (Power door locks)
6 —
7 —
8 WHT/RED (Trunk light)
9 GRN/BLK (Back-up lights)
10 RED/YEL (Stereo sound system)
11 BRN/WHT (Stereo sound system)
12 BLU/YEL (Stereo sound system)
13 GRY/WHT (Stereo sound system)
14 RED/BLK (Headlight switch)
15 BLU/BLK (Indicators)
16 GRN/YEL (Turn signal lights)

'99-'00 Models except GX:

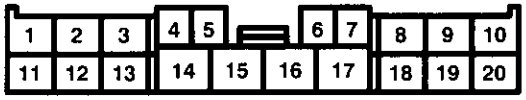

1 —
2 *1: LT GRN/BLK (Rear wiper/washer)
3 *1: LT GRN (Rear wiper/washer)
4 *1: GRN (Rear wiper/washer)
5 —
6 GRY/WHT (Stereo sound system)
7 BLU/YEL (Stereo sound system)
8 BRN/WHT (Stereo sound system)
9 RED/YEL (Stereo sound system)
10 GRN/WHT (Brake lights)
11 GRN/RED (Turn signal lights)
12 GRN/YEL (Turn signal lights)
13 BLU/BLK (Indicators)
14 —
15 —
16 —
17 BLK/BLU (Rear window defogger)
18 RED/BLK (Headlight switch)
19 GRN/BLK (Back-up lights)
20 *2: WHT/RED (Fuse 43)

* 1= Hatchback
* 2= Female terminal not used on Hatchback models

All GX Models:

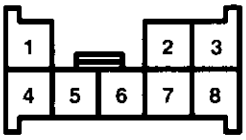

1 GRN/RED (Turn signal lights)
2 —
3 —
4 —
5 GRN/BLK (Back-up lights)
6 RED/BLK (Headlight switch)
7 BLU/BLK (Indicators)
8 GRN/YEL (Turn signal lights)

43. Cruise Control Unit

- Gray ('96-'97 models) or Blue ('98-'00 models)
- Behind left side of dash
- On main wire harness

'96-'97 Models:

1 BRN (Cruise control actuator control)
2 GRY (Brake switch input)
3 BLK (Ground)
4 GRN/WHT (Brake switch input)
5 LT GRN/RED (Set/decel signal input)
6 LT GRN/BLK (Resume/accel input)
7 —
8 BRN/WHT (Vent solenoid control)
9 RED/BLU ("Cruise Control" indicator light control)
10 BRN/BLK (Vacuum solenoid control)
11 —
12 BLU/WHT (Vehicle speed input)
13 LT GRN (Power input)
14 PNK (Disengage input)

'98-'00 Models:

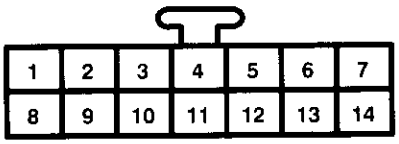

1 BRN (Actuator control)
2 GRY (Brake switch input)
3 BLK (G401)
4 —
5 GRN/WHT (Brake switch input)
6 LT GRN/RED (Set/decel signal input)
7 LT GRN/BLK (Resume/accel signal input)
8 *1: BLU/GRN (Cruise signal)
9 BRN/WHT (Actuator control)
10 RED/BLU (Indicator light control)
11 BRN/BLK (Actuator control)
12 BLU/WHT (Vehicle speed input)
13 LT GRN (Power input)
14 PNK (Disengage input)

*1 = '99-'00 with A/T

44. Heater Control Panel ('96-'98)

- Green
- Center of dash
- On heater-sub-B wire harness

1 YEL (H/DEF control)
2 BLK/YEL (Ignition input)
3 WHT/BLU (Battery input)
4 YEL/BLU (Defrost control)
5 RED (Illumination −)
6 RED/BLK (Illumination +)
7 BLU/WHT (Heat control)
8 YEL/RED (Vent control)
9 GRN/YEL (BI-LEV control)
10 BLK (Ground)
11 BLU/RED (A/C thermostat input)
12 GRN/WHT (Fresh control)
13 GRN/RED (Recirc. control)
14 GRN (A/C ON input)

45. C440

- Blue
- Below right side of dash
- Connects main wire harness to heater-sub-A wire harness

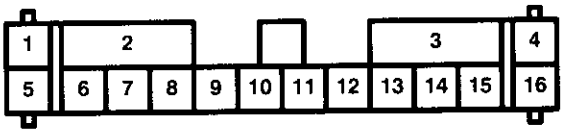

1 —
2 BLK (G402)
3 BLU/WHT (Blower controls)
4 '99-'00: BLU/YEL (Rear window defogger)
5 —
6 —
7 —
8 —
9 —
10 —
11 WHT/BLU (Fuse 47)
12 BLK (G402)
13 RED (Dash and console lights)
14 RED/BLK (Dash and console lights)
15 BLU/WHT (A/C compressor controls)
16 BLK/YEL (Air delivery)

46. C503

- Blue
- Mounted to side of under-dash fuse/relay box
- Connects floor wire harness to dashboard wire harness

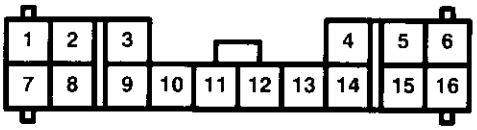

1 *1: GRN/ORN (Power door locks)
2 *1: BLU/YEL (Power door locks)
3 GRN/RED (Brake system indicator light)
4 *1: LT GRN (Power door locks)
5 *3: GRN/YEL (Low fuel indicator light)
6 BLU/BLK (Indicators)
7 *3: BLU/YEL (Stereo sound system)
8 *3: YEL/BLK (Gauges)
9 *3: GRY/WHT (Stereo sound system)
10 *1: GRN/WHT (Power door locks) *2: BLK/BLU (Power mirrors)
11 *3: BRN/WHT (Stereo sound system)
12 *3: RED/YEL (Stereo sound system)
13 GRY/BLK (Stereo sound system)
14 BLU (Stereo sound system)
15 BRN/BLK (Stereo sound system)
16 RED/GRN (Stereo sound system)

*1= '96-'98 models
*2= '99-'00 models
*3= All except GX models

47. C551

- Green
- On rear of under-dash fuse/relay box
- On floor wire harness

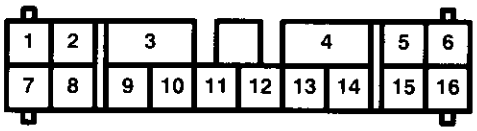

1 RED/GRN (Brake system indicator light)
2 —
3 —
4 BLK/BLU (Rear window defogger)
5 GRN/RED (Brake system indicator light)
6 *1: WHT/RED (Trunk light)
7 —
8 Hatchback: GRN (Rear wiper/washer)
9 —
10 —
11 GRN/YEL (Turn signal and hazard warning lights)
12 —
13 RED/BLK (Headlight switch)
14 —
15 GRN/RED (Turn signal and hazard warning lights)
16 —

*1= All except GX models

48. Data Link Connector (DLC)

- Gray
- Below left side of dash, above kick panel
- On main wire harness

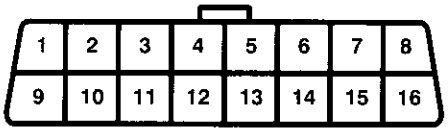

1 —
2 —
3 —
4 —
5 —
6 LT BLU (SRS)
7 —
8 WHT/RED (Battery input)
9 —
10 —
11 —
12 BLK (G401)
13 BLK (G401)
14 —
15 BLU/YEL (DLC input/output)
16 —

49. C419

- Green
- On rear of under-dash fuse/relay box
- On main wire harness

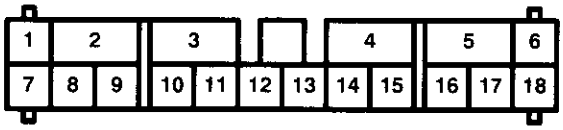

1 '98-'00 models: RED (Ignition system)
2 WHT/RED (Fuse 54)
3 Canada: WHT (Fuse 48)
4 BLK/RED (Starting system)
5 WHT (Fuse 48)
6 WHT/RED (Fuse 43)
7 1*: WHT (Security system)
8 *2: BLK/YEL (Power door locks)
9 Canada: YEL/BLK (Headlights)
10 YEL/RED (Back-up lights)
11
12 —
13 WHT/GRN (Fuse 51)
14 '96-'98 CVT: BLK/WHT (A/T controls)
15 Canada: GRN/RED (Headlights)
16 A/T: YEL (Interlock system)
17 RED/BLK (Headlight switch)
18 Canada: RED/GRN (Headlights)

*1 = USA: LX, EX, HX, DX-V, Si
Canada: EX, Si
*2 = '99-'00 USA: LX, EX, HX, DX-V, Si

50. C421

- Green
- On rear of under-dash fuse/relay box
- On main wire harness

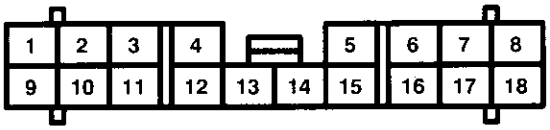

1 RED/YEL (Headlight switch)
2 BLK/BLU (ABS)
3 RED/GRN (Headlight switch)
4 GRN/BLK (Front wiper/washer)
5 RED/BLU (Headlight switch)
6 WHT/BLU (Charging system)
7 —
8 —
9 RED/WHT (Headlight switch)
10 GRN/YEL (Turn signal and hazard lights)
11
12 USA: BLK/WHT (Charging system)
13 BLK/WHT (Fuse 15)
14 GRN/RED (Brake indicator system light)
15 —
16 GRN/RED (Turn signal and hazard lights)
17 RED/BLK (Headlight switch)
18 RED/BLK (Headlight switch)

51. SRS Unit

- Yellow
- Below center of dash
- On SRS main wire harness

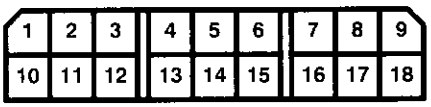

1 GRY (1) or GRN (Driver's inflator)
2 —
3 GRY (17) or GRN (Ignition input)
4
5 —
6 GRY (21) or GRN (SRS indicator control)
7 GRY (18) or GRN (Ignition input)
8 GRY (14) or GRN (MES)
9 GRY (13) or GRN (Service check connector input)
10 GRY (4) or GRN (Frt. pass. inflator)
11 —
12 —
13 GRY (2) or GRN (Driver's inflator)
14 GRY (5) or GRN (Frt. pass. inflator)
15 GRY (3) or GRN (DLC input/output)
16 GRY (19) or GRN (G801)
17 GRY (20) or GRN (G801)
18 GRY (6) or GRN (MES)

52. C130

- Brown
- Below right side of dash panel
- Engine wire harness junction connector

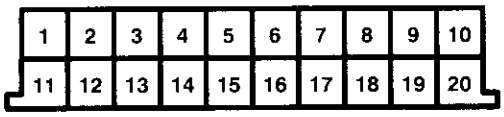

1 BRN/BLK (G101)
2 BRN/BLK (G101)
3 BRN/BLK (G101)
4 BRN/BLK (G101)
5 BRN/BLK (G101)
6 BRN/BLK (G101)
7 BRN/BLK (G101)
8 BRN/BLK (G101)
9 BRN/BLK (G101)
10 BRN/BLK (G101)

Terminals grouped together are connected by the same bus bar.

*1= '96-'98 models: All except D16Y5
'99-'00 models: D16B5
*2= '96-'98 models: D16Y5/D16B5
'99-'00: All except D16B5

11 BLU/WHT (VSS)
12 BLU/WHT (VSS)
13 BLU/WHT (VSS)

14 YEL/BLK (PGM-FI)
15 YEL/BLK (PGM-FI)
16 YEL/BLK (PGM-FI)
17 YEL/BLK (PGM-FI)

18 *1: GRN (Fans)
*2: YEL/BLU (PGM-FI)
19 *1: GRN (Fans)
*2: YEL/BLU (PGM-FI)
20 *1: GRN (Fans)
*2: YEL/BLU (PGM-FI)

53. C420

- Green
- On rear of under-dash fuse/relay box
- On main wire harness

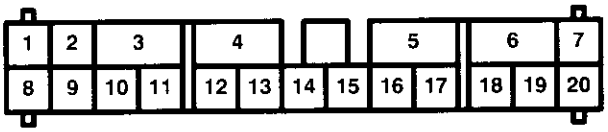

1 Canada: RED/BLU (Headlights)
2 —
3 BLK (G401)
4 —
5 WHT/GRN (Rear window defogger)
6 WHT/BLU (Power windows)
7 —
8 YEL/GRN (PGM-FI)
9 BLK/YEL (Fuse 17)
10 BLU/WHT (PGM-FI)
11 BLU/WHT (PGM-FI)
12 —
13 —
14 —
15 —
16 Canada: BLK/WHT (Headlights)
17 —
18 A/T: WHT/GRN (Interlock system)
19 —
20 WHT/RED (Ceiling light)

54. C442

- White or Orange
- Behind right kick panel
- Main wire harness junction connector

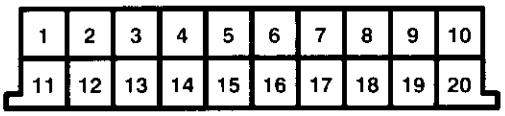

1 BLU (Ignition system or Gauges)
2 BLU (Ignition system or Gauges)
3 BLU (Ignition system or Gauges)
4 BLU (Ignition system or Gauges)

5
6
7 —

8 GRN/RED (Brake system indicator light)
9 GRN/RED (Brake system indicator light)
10 GRN/RED (Brake system indicator light)

11 GRN/WHT (PGM-FI)
12 GRN/WHT (A/T controls)
13 GRN/WHT (ABS)
14 GRN/WHT (Cruise control)

15 BLU/WHT (VSS)
16 BLU/WHT (VSS)
17 BLU/WHT (VSS)

18 BRN/BLK (G101)
19 BRN/BLK (G101)
20 BRN/BLK (G101)

Terminals grouped together are connected by the same bus bar.

55. C501

- Green
- On front of under-dash fuse/relay box
- On dashboard wire harness

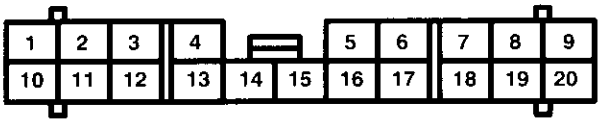

1 RED/GRN (Headlight switch)
2 *1: BLK/BLU (Fuse 16)
3 WHT/BLU (Charging system)
4 BLK (G401)
5 GRN/WHT (Turn signal lights)
6 GRN/RED (Turn signal lights)
7 GRN/ORN (Turn signal lights)
8 BLU/YEL (Rear window defogger)
9 GRN/YEL (Turn signal lights)
10 YEL (Fuse 25)
11 YEL/BLK (Turn signal lights)
12 BLK/YEL (Fuse 14)
13 YEL/GRN (Accessory power socket)
14
15 RED/BLK (Headlight switch)
16 —
17 —
18 BLK/WHT (Charging system)
19 YEL/RED (Stereo sound system)
20 —

*1 = All except GX

56. C507

- White or Blue
- Behind left side of dash
- Dashboard wire harness junction connector

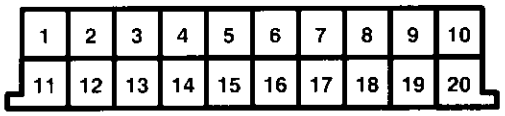

1 BLK (G401)
2 BLK (G401)
3 BLK (G401)
4 BLK (G401)
5 BLK (G401)
6 BLK (G401)

7 RED (Dash and console lights)
8 RED (Dash and console lights)
9 RED (Dash and console lights)
10 RED (Dash and console lights)

11 RED/BLK (Dash and console lights)
12 RED/BLK (Dash and console lights)
13 RED/BLK (Dash and console lights)
14 RED/BLK (Dash and console lights)
15 RED/BLK (Dash and console lights)
16 RED/BLK (Dash and console lights)

17 YEL (Fuse 25)
18 YEL (Fuse 25)
19 YEL (Fuse 25)
20 YEL (Fuse 25)

Terminals grouped together are connected by the same bus bar.

57. C723

- Connects heater-sub-A wire harness to heater-sub-B wire harness

'96-'98 Models:

- Gray
- Below right side of dash

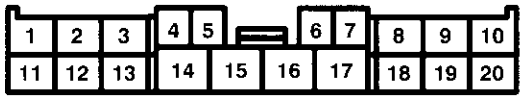

1 BLU/WHT (Blower controls)
2 BLU (Blower controls)
3 YEL (Air delivery)
4 WHT/BLU (A/C compressor controls)
5 RED (Dash lights)
6 GRN/WHT (Air delivery)
7 GRN/RED (Air delivery)
8 BLU/WHT (Air delivery)
9 BLK/YEL (Air delivery)
10 YEL/BLU (Air delivery)
11 BLU/YEL (Blower controls)
12 RED/BLK (Dash lights)
13 BLK (G402)
14 —
15 BLK (Blower controls)
16 BLU/BLK (Blower controls)
17 —
18 BLU/RED (A/C compressor controls)
19 GRN/YEL (Air delivery)
20 YEL/RED (Air delivery)

'99-'00 Models:

- Blue
- Behind center of dash

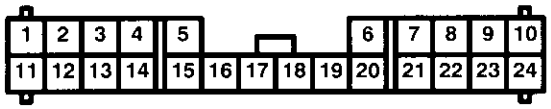

1 RED/BLK (Dash lights)
2 BRN/WHT (Air delivery)
3 —
4 GRN/WHT (Air delivery)
5 GRN/RED (Air delivery)
6 GRN/YEL (Air delivery)
7 YEL/RED (Air delivery)
8 BLU/WHT (Air delivery)
9 YEL (Air delivery)
10 YEL/BLU (Air delivery)
11 LT GRN/BLK (Blower controls)
12 ORN/WHT (Blower controls)
13 BRN (Air delivery)
14 RED (Dash lights)
15 GRY (Air delivery)
16 RED/WHT (Air delivery)
17 RED/YEL (Air delivery)
18 PNK/BLK (Air delivery)
19 —
20 BLU/RED (A/C compressor controls)
21 BLU/YEL (Rear window defogger)
22 WHT/BLU (Fuse 47)
23 BLK/YEL (Fuse 17)
24 BLK (G402)

58. Security Control Unit/C447/C516

- Green
- Above radio ('96-'98) or right of steering column ('99-'00)

USA: HX, LX, EX, DX-V, Si; Canada: EX, Si:

1 USA: YEL/BLU (Set)
2 LT GRN/RED (Door switch input)
3 BLU/BLK (Trunk switch input)
4
5 BLU (Valet switch input)
6 Canada: GRN/WHT (Lock output)
7 Canada: BLU/YEL (Driver's door lock output)
8 Canada: GRN/ORN (Unlock output)
9
10 WHT (Battery)
11 YEL (Ignition)
12 USA: ORN (Alarm in)
13 BLK (G401)
14 BLU/WHT (Security LED control)
15 BLU/RED (Ignition key switch input)
16 —
17 RED/WHT (Light flash control)
18 GRY (Horn control)
19 RED/YEL (Starter cut output)
20 Canada: LT GRN (Not used)
21 '96-'98 USA: LT BLU (Security output)
22 '96-'98 USA: WHT/BLK (Bus data 0)
'99-'00 USA: BLU/YEL (Unset)

CX and DX:

1 —
2 LT GRN/BLK (Door open input)
3 BLU/BLK (Trunk/hatch open input)
4
5 '96-'98: BLU (Security indicator control)
'99-'00: BLU (Valet switch input)
6
7 —
8
9
10 WHT (Battery input)
11 BLK/YEL (Ignition input)
12 —
13 BLK (Ground)
14 RED (Security indicator control)
15 BLU/RED (Key-in ignition input)
16
17 BLU or BLU/YEL (Light flash control)
18 GRY (Horn control)
19 GRN (Starter cut control)
20
21 —
22

59. C131

- Green
- Behind right kick panel
- Connects main wire harness to engine wire harness

'96-'98 D16Y5, '99-'00 D16Y5 with M/T:

1 '98-'00 models: LT GRN (PGM-FI)
2 '99-'00:
Male - LT GRN/WHT
Female - (Not used)
A/T: RED/BLK (A/T controls)
3 '98-'00 models: YEL/BLU (PGM-FI)
4 A/T: LT GRN (PGM-FI)
M/T: RED (PGM-FI)
5 '97 models with M/T:
Male – RED/GRN
Female – WHT/RED (PGM-FI)
A/T: WHT/RED (Interlock)
6 GRN (Fans)
7 BLU/RED (A/T compressor controls)
8 GRN/ORN (PGM-FI)
9 BRN (PGM-FI)
10 WHT/BLU (PGM-FI)
11 '98-'00 models: BLU (PGM-FI)
12 A/T: WHT/RED (PGM-FI)
13 A/T: RED/GRN (A/T controls)
M/T: GRN/BLK (PGM-FI)
14 A/T: PNK (PGM-FI)
M/T: GRN/BLK (Back-up lights)
15 A/T: GRY (PGM-FI)
M/T: Male – YEL/RED
Female – YEL (Back-up lights)
16 USA: GRN/RED (Charging)
17 GRN/WHT (PGM-FI)
18 BLU/WHT (Vehicle speed sensor)
19 BLK/RED (A/T compressor controls)
20 GRN/YEL (PGM-FI)
21 Male – BLU/YEL
Female – LT BLU (PGM-FI)
22 Male – BLU/WHT
Female – BLU/ORN (PGM-FI)

'96-'98 D16Y7:

1 *1: LT GRN (PGM-FI)
2 *2: GRN/BLK (A/T controls)
3 *2: WHT (A/T controls)
'98 models:
Male – WHT/RED
Female– (Not used)
4 A/T: LT GRN (A/T controls)
5 *1: YEL/BLU (PGM-FI)
*2: WHT/RED (Interlock)
6 GRN (Fans)
7 BLU/RED (A/C compressor controls)
8 GRN/ORN (PGM-FI)
9 BRN (PGM-FI)
10 WHT/BLU (PGM-FI)
11 *1: BLU (PGM-FI)
12 —
13 *1: GRN/BLK (PGM-FI)
*2: BLU (A/T controls)
14 A/T: YEL (A/T controls)
M/T: GRN/BLK (Back-up lights)
15 A/T: Male – GRN
Female – PNK (A/T controls)
M/T: Male – YEL/RED
Female – YEL (Back-up lights)
16 USA: GRN/RED (Charging)
17 GRN/WHT (PGM-FI)
18 BLU/WHT (Vehicle speed sensor)
19 BLK/RED (A/C compressor controls)
20 GRN/YEL (PGM-FI)
21 Male – BLU/YEL
Female – LT BLU (PGM-FI)
22 Male – BLU/WHT
Female – BLU/ORN (PGM-FI)

'96-'98 D16Y8:

1 *3: LT GRN (PGM-FI)
2 Male – GRN/WHT
Female – GRN/BLK (PGM-FI)
3 WHT/RED (PGM-FI)
4 A/T: LT GRN (A/T controls)
5 *3: YEL/BLU (PGM-FI)
6 GRN (Fans)
7 BLU/RED (A/T compressor controls)
8 GRN/ORN (PGM-FI)
9 BRN (PGM-FI)
10 WHT/BLU (PGM-FI)
11 *3: BLU (PGM-FI)
12 BLK/WHT (PGM-FI)
13 *3: GRN/BLK (PGM-FI)
14 A/T: YEL (A/T controls)
M/T: GRN/BLK (Back-up lights)
15 A/T: Male – GRN
Female – PNK (A/T controls)
M/T: Male – YEL/RED
Female – YEL (Back-up lights)
16 USA: GRN/RED (Charging)
17 GRN/WHT (PGM-FI)
18 BLU/WHT (Vehicle speed sensor)
19 BLK/RED (A/T compressor controls)
20 GRN/YEL (PGM-FI)
21 Male – BLU/YEL
Female – LT BLU (PGM-FI)
22 Male – BLU/WHT
Female – BLU/ORN (PGM-FI)

*1 = '97 models: California coupes, California sedan LX
'98 models: all models
*2 = '96 models: all A/T
'97 models: all A/T except Coupe DX
*3 = '96 models: all coupes
'97 models: all coupes, California Sedans
'98 models: all models

D16B5:

1 RED (PGM-FI)
2 BRN (PGM-FI)
3 Male – BLU/BLK
Female – BLU/WHT
(Starting system)
4 Male – ORN/BLU
Female – ORN
(Fuel gauge)
5 LT GRN (PGM-FI)
6 GRN (Fans)
7 BLU/RED (A/C compressor controls)
8 GRN/ORN (PGM-FI)
9 BRN (PGM-FI)
10 WHT/BLU (PGM-FI)
11 BLU (PGM-FI)
12 YEL (PGM-FI)
13 WHT/RED
(Interlock system)
14 —
15 Male – BLU/GRN
Female – BLU/RED
(Low fuel indicator)
16 GRN/RED
(Charging system)
17 GRN/WHT (PGM-FI)
18 BLU/WHT
(Vehicle speed sensor)
19 BLK/RED (A/C compressor controls)
20 GRN/YEL (PGM-FI)
21 Male – BLU/YEL
Female – LT BLU
(PGM-FI)
22 Male – BLU/WHT
Female – BLU/ORN
(PGM-FI)

'99-'00 Models except D16Y5 with M/T and D16B5:

1 D16Y5/D16Y7:
BLK/WHT (PGM-FI)
2 D16Y5/D16Y7:
WHT/RED (PGM-FI)
3 A/T: WHT (A/T controls)
4 *1: LT GRN
(A/T controls)
5 —
6 M/T: Male - YEL/RED
Female - YEL
(Back-up lights)
7 GRN (Fans)
8 GRN/BLK (PGM-FI)
9 USA: GRN (PGM-FI)
10 WHT/BLU (PGM-FI)
11 —
12 —
13 *1: BLU (A/T controls)
14 *1: YEL
*2: GRN/BLK
(A/T controls)
15 *1: Male – GRN
Female – PNK
(A/T controls)
*2: Male – GRN
Female – LT GRN/RED
(A/T controls)
16 —
17 —
18 M/T: GRN/BLK
(Back-up lights)
19 BLU/WHT
(Vehicle speed sensor)
20 YEL/BLU (PGM-FI)
21 RED/YEL (PGM-FI)
22 BRN/BLK (G101)

*1 = A/T except CVT
*2 = CVT

60. C411

- Blue
- Mounted to top of under-dash fuse/relay box
- Connects main wire harness to dashboard harness

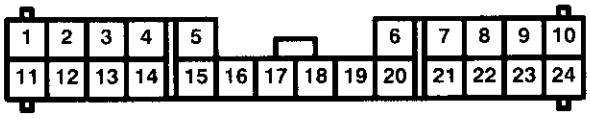

'96-'98 Models except GX:

1 *1: RED/GRN (PGM-FI)
2 *2: WHT (Security system)
3 *2: YEL (Security system)
4 —
5 BLU (SRS)
6 *2: GRY (Cruise control)
7 *2: BLU/RED (Security system)
8 RED/BLU (Cruise control)
9 LT GRN (Cruise control)
10 '96-'97 models: BLU/YEL (ABS)
11 YEL/GRN (Gauges)
12 RED (Dash and console lights)
13 LT GRN/RED (Ceiling light)
14 USA LX, EX, and HX: LT GRN/BLK (Ceiling light) Except USA LX, EX and HX: Male – LT GRN/RED Female – LT GRN/BLK (Ceiling light)
15 WHT/BLK (Hazard warning lights)
16 *2: RED/YEL (Security system)
17 *2: RED/WHT (Security system)
18 WHT/BLU (Stereo sound system)
19 BLU (Ignition system)
20 RED/BLU (Seat belt reminder)
21 GRN/ORN (PGM-FI)
22 BLU/WHT (VSS)
23 YEL/RED (Oil pressure indicator system)
24 BLU/RED (ABS)

*1 = With shift-up indicator

*2: USA: LX: EX, HX
Canada: EX, Si

'98 GX and All '99-'00 Models:

1 —
2 —
3 —
4 All except GX: BLU/YEL (Rear window defogger)
5 BLU (SRS)
6 —
7 —
8 RED/BLU (Cruise control)
9 LT GRN (Cruise control)
10 *1: PNK (Indicators) GX: BLU/YEL (Rear window defogger)
11 YEL/GRN (Gauges)
12 RED (Dash and console lights)
13 *2: Male - LT GRN/RED Female - Not used (Ceiling light)
14 —
15 WHT/BLK (Hazard warning lights)
16 —
17 —
18 WHT/BLU (Stereo sound system)
19 BLU (Ignition system and gauges)
20 RED/BLU (Seat belt reminder)
21 GRN/ORN (PGM-FI)
22 BLU/WHT (VSS)
23 YEL/RED (Oil pressure indicator)
24 BLU/RED (ABS)

*1 = All except CVT and GX
*2= All except GX

61. C556 (with Power Door Locks)

- Gray
- In driver's door jamb
- Connects floor wire harness to driver's door wire harness

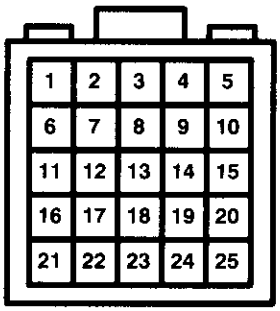

1 *9: GRN/BLK (Power windows)
2 *9: BLU/BLK (Power windows)
3 *7: YEL/BLK (Power windows)
4 *7: RED/WHT (Power windows)
5 *3: WHT/GRN *4: BLU/WHT (Power door locks)
6 *9: BLU/YEL (Power windows)
7 *9: BLU/ORN (Power windows)
8 *7: YEL (Power windows)
9 *7: YEL/GRN (Power windows)
10 *7: GRN/YEL (Power windows)
11 *7: GRN (Power windows)
12 WHT/RED (Power door locks)
13 *3: YEL/RED (Power door locks)
14 *1: YEL/RED *2: BLU/BLK (Power mirrors)
15 '96-'97models: BLU/BLK (Power mirrors) *3: BLU/YEL (Power door locks *4: BLU/RED (Power door locks)
16 '96-'97 models: BLU '98-'00 models: Male – RED/GRN Female – BLU (Stereo sound system)
17 '96-'97 models: GRY/BLK '98-'00 models: Male – BRN/BLK Female – GRY/BLK (Stereo sound system)
18 *8: GRN/WHT (Power door locks)
19 *8: GRN/ORN (Power door locks)
20 *1: BLU/WHT *2: YEL/RED (Power mirrors)
21 '96-'97 models: BLU/YEL (Power door locks) *5: BLU/BLK (Power mirrors) *6: BLU/WHT (Power mirrors)
22 BLK (G551)
23 BLK (G551)
24 *2: ORN/WHT (Power mirrors)
25 —

*1= Power mirrors without defoggers
*2= Power mirrors with defoggers
*3= '98 model: All '99-'00 models: Without keyless
*4= '99-'00 models: With keyless
*5= '98 model: All '99-'00 models: Power mirrors without defoggers
*6= '99-'00 models: Power mirrors with defoggers
*7= Sedan
*8= '96-'98 USA: LX, HX, EX '99-'00 USA: All
*9= All except '00 Canada DX-V: With Power Door Locks Only

62. C557 (with Power Door Locks)

- Gray
- In front passenger's door jamb
- Connects floor wire harness to passenger's door wire harness

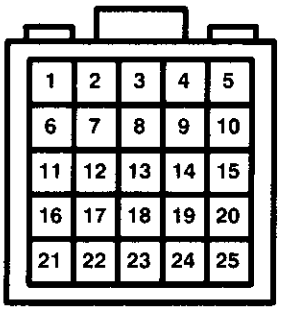

1 GRN/BLK (Power windows)
2 BLU/YEL (Power windows)
3 BLU/ORN (Power windows)
4 WHT/RED (Power door locks)
5 YEL/RED (Power door locks)
6 '96-'97 models: RED/GRN '98-'00 models: Male – BLU Female – RED/GRN (Stereo sound system)
7 '96-'97 models: BRN/BLK '98-'00 models: Male – GRY/BLK Female – BRN/BLK (Stereo sound system)
8 *1: YEL/RED *2: GRN/WHT (Power mirrors)
9 YEL/BLK (Power mirrors)
10 *1: GRN/WHT *2: YEL/RED (Power mirrors)
11 —
12 —
13 *2: ORN/WHT (Power mirrors)
14 *2: BLK (Power mirrors)
15 —
16 —
17 —
18 —
19 —
20 —
21 —
22 —
23 —
24 —
25 —

*1= Without mirror defoggers
*2= With mirror defoggers

63. ABS Control Unit

– Above right kick panel

Connector A

– Orange
– On main wire harness

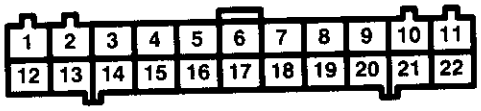

1 RED/BLU (FR-IN)
2 —
3 —
4 BRN (SCS)
5 —
6 —
7 BLU/RED (WALP)
8 '96-'97 models: BLU/YEL (Not used)
9 —
10 YEL/BLK (FL-OUT)
11 RED/BLK (FL-IN)
12 YEL/BLU (FR-OUT)
13 —
14 LT BLU (DLC)
15 —
16 —
17 BRN/YEL (MCK)
18 —
19 YEL/RED (PMR)
20 —
21 BLU (RR-OUT)
22 BLK (GND1)

Connector B

– Orange
– On main wire harness

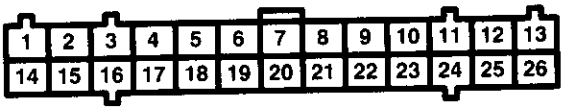

1 GRN/WHT (PCOM)
2 BLK/WHT (SCOM)
3 BLK/BLU (IG2)
4 BLU/YEL (RR0)
5 —
6 GRY (RL0)
7 —
8 GRN (FR0)
9 GRN/WHT (STOP)
10 BRN/WHT (FL0)
11 —
12 YEL (RL-OUT)
13 RED/WHT (RR-IN)
14 WHT/GRN (+B1)
15 WHT/GRN (+B2)
16 BLK (GND2)
17 GRN/YEL (RR1)
18 —
19 LT BLU (RL1)
20 —
21 GRN/BLK (FR1)
22 —
23 GRN/ORN (FL1)
24 —
25 RED (RL-IN)
26 BLK (GND3)

64. Combination Light Switch

– Left side of steering column

Connector A

– Natural
– On main wire harness

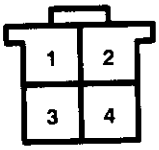

1 GRN/ORN (Turn signal switch power input)
2 GRN/RED (Left turn *signal power output)*
3 —
4 GRN/YEL (Right turn signal power output)

Connector B

– Natural
– On main wire harness

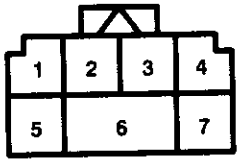

1 RED/GRN (Headlight switch output)
2 WHT (Fuse 48)
3 RED/WHT (Dimmer switch LO output)
4 Canada: RED (DRL output)
5 RED/BLU (Dimmer switch HI output)
6 WHT (Fuse 48)
7 '98-'00 models: GRY (Horns)

65. Combination Wiper Switch

– Right side of steering column

Connector A

– Natural
– On main wire harness

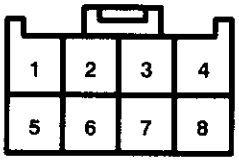

1 BLU (Windshield wiper motor LOW control)
2 BLU/YEL (Windshield wiper motor HIGH control)
3 YEL/BLU (Intermittent wiper ON input)
4 GRN/BLK (Fuse 26)
5 BLK (G401)
6 —
7 BLU/BLK (Intermittent/ park wiper control)
8 WHT/BLK (Windshield washer motor)

Connector B (C427) (with Rear Wiper)

– White
– On main wire harness

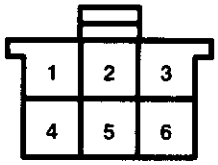

1 Male – GRN
Female – LT GRN
(Rear window wiper motor control)
2 Male – LT GRN
Female – LT GRN/BLK
(Rear window wiper motor control)
3 BLK (G401)
4 Male – WHT
Female – GRN (Fuse 3)
5 —
6 Male – BLU
Female – GRN/BLK
(Rear window washer motor control)

66. Daytime Running Lights Control Unit

– Behind left side of dash

Connector A

– Natural
– On main wire harness

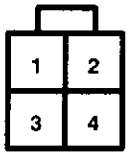

1 WHT/RED (Headlight control)
2 BLK/WHT (Battery)
3 —
4 RED (Lights-on input)

Connector B

– Gray
– On main wire harness

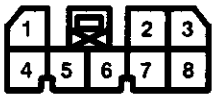

1 BLK (Ground)
2 YEL/BLK (Ignition)
3 GRN/RED (Brake system indicator light control)
4 —
5 —
6 RED/GRN (Parking brake input)
7 —
8 —

67. Integrated Control Unit

– On under-dash fuse/relay box

Connector A

– Connects control unit to under-dash fuse/relay box

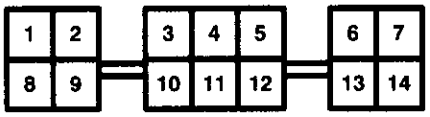

1 Not used
2 —
3 —
4 Brake bulb check output
5 Ignition input
6 Ignition input
7 Ignition input
8 Lights ON input
9 Battery input
10 —
11 —
12 —
13 Start input
14 Ground

Connector B

– Natural
– On main wire harness

1 BLU/BLK (Front wiper/washer)
2 BLU/WHT (Front wiper/washer)
3 YEL/BLU (Front wiper/washer)
4 '98-'00 models: WHT/BLK (Front wiper/washer)
5 —
6 —
7 RED/BLU (Driver's seat belt switch input)
8 LT GRN/RED (Door open input)
9 GRN (Driver's door switch input)
10 BLU/RED (Key in ignition input)

68. Stereo Radio Tuner ('96-'98)

– Center of dash

Connector A

– Gray
– On dashboard wire harness

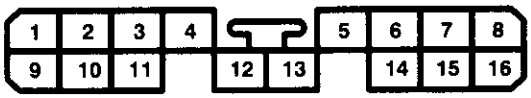

1 RED/GRN (RF speaker +)
2 BLU (LF speaker +)
3 RED/BLK (Illumination control)
4 WHT/BLU (Battery input)
5 YEL/RED (Ignition input)
6 —
7 BLU/YEL (LR speaker +)
8 RED/YEL (RR speaker +)
9 BRN/BLK (RF speaker –)
10 GRY/BLK (LF speaker –)
11 —
12 RED (Illumination control)
13 —
14 BLK (Ground)
15 GRY/WHT (LR speaker –)
16 BRN/WHT (RR speaker –)

Connector B (USA HX, LX, and EX; Canada EX and Si)

– Green
– On dashboard wire harness

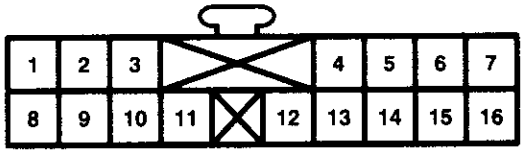

1 BLU/RED (Key switch input)
2 LT GRN (Not used)
3 BLU/YEL (Driver's door unlock output)
4 BLU (Security system)
5 LT BLU (Security system)
6 BLK/YEL (Ignition input)
7 ORN (Security system)
8 LT GRN/BLK (Door open output)
9 GRN/ORN (Unlock/lock output)
10 GRN/WHT (Unlock/lock output)
11 BLU/WHT (Security system)
12 WHT/BLK (Security system)
13 YEL/BLU (Security system)
14 LT GRN/RED (Door open input)
15 BLK (Ground)
16 GRY (Horn control)

69. Transmission Control Module (TCM) ('96-'98 CVT)

– Behind left kick panel

Connector A

– Gray
– On main wire harness

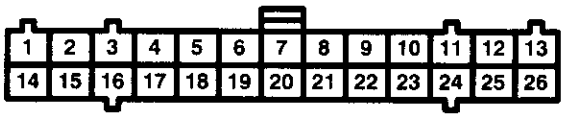

1 PNK/BLU (SC LS –)
2 PNK/BLK (H LS –)
3 GRN/YEL (SH LS –)
4 BRN/BLK (LG1)
5 BLU (NE)
6 —
7 BLU (ATP-L)
8 GRN (ATP-S)
9 YEL (ATP D)
10 LT GRN (ATP PN)
11 WHT (ATP R)
12 BLK/WHT (IG1)
13 BLK (PG1)
14 YEL (SC LS +)
15 GRN/WHT (H LC LS +)
16 BLU/YEL (SH LS +)
17 BRN/BLK (LG1)
18 —
19 —
20 GRN/BLK (D IND)
21 —
22 —
23 WHT/BLU (VBU)
24 —
25 BLK/WHT (IG1)
26 BLK (PG1)

Connector B

– Gray
– On main wire harness

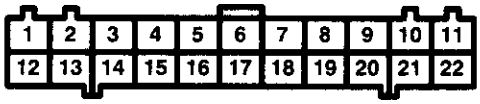

1 GRN/BLK (SOL INH)
2 RED/GRN (MAP)
3 —
4 RED/BLK (TPS)
5 BLU/WHT (VSS)
6 PNK (TMB)
7 GRY (TMA)
8 RED/BLU (NDN SG)
9 WHT (NDN)
10 RED/BLU (NDR)
11 —
12 GRN/WHT (STOP SW)
13 LT BLU (DIAG-H)
14 BRN (SCS)
15 WHT/RED (VEL)
16 ORN/BLU (VEL SG)
17 GRN (NDR SG)
18 GRN/RED (H BRK SW)
19 —
20 WHT/RED (VREF)
21 —
22 —

70. PCM or ECM (All '96-'98 Models except D16B5; '99-'00 D16Y5 M/T)

Note: For all other models, see page 202-28.

– Below right front footrest

Connector A

– Gray
– On engine wire harness

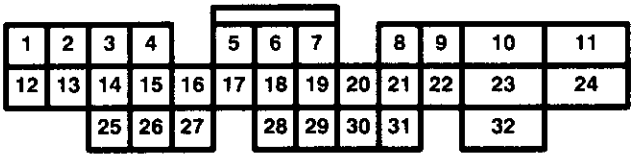

1 YEL (INJ4)
2 BLU (INJ3)
3 RED (INJ2)
4 BRN (INJ1)
5 BLK/WHT (SO2SHTC)
6 BLK/WHT (PO2SHTC)
7 D16Y5 with M/T: PNK (E-EGR) CVT: RED (ESOL)
8 D16Y5/D16Y8: GRN/YEL (VTS)
9 BRN/BLK (LG1)
10 BLK (PG1)
11 YEL/BLK (IGP1)
12 D16Y5/D16Y8 with M/T: BLK/BLU (IACV)
13 *1: ORN (IACV N)
14 *1: BLK/BLU (IACV P)
15 RED/YEL (PCS)
16 GRN/YEL (FLR)
17 BLK/RED (ACC)
18 GRN/ORN (MIL)
19 USA: WHT/GRN (ALTC)
20 YEL/GRN (ICM)
21 —
22 BRN/BLK (LG2)
23 BLK (PG2)
24 YEL/BLK (IGP2)
25 CVT: WHT/RED (VREF)
26 —
27 USA: GRN (FANC)
28 *2: BLU (2WBS)
29 *2: LT GRN/WHT (VSV)
30 With shift-up indicator: WHT/RED (Shift-up indicator control) CVT: WHT/RED (SLU)
31 —
32 —

*1 = D16Y5/D16Y8: A/T
D16Y7: All

Connector B (A/T only – except CVT)

– Gray
– On engine wire harness

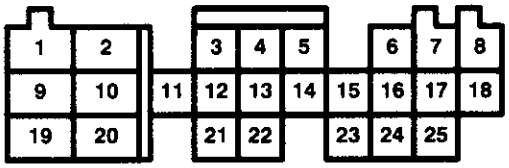

1 WHT (LS –)
2 RED (LS +)
3 BLU/YEL (SHA)
4 GRN/BLK (LC B)
5 YEL (LC A)
6 —
7 —
8 PNK (ATP D3)
9 —
10 —
11 GRN/WHT (SHB)
12 WHT/RED (SLU)
13 GRN/BLK (D4 IND)
14 WHT (NM SG)
15 RED (NM)
16 WHT (ATP R)
17 BLU (ATP 2)
18 —
19 —
20 —
21 —
22 GRN (NC SG)
23 BLU (NC)
24 YEL (ATP D4)
25 LT GRN (ATP NP)

Connector C

– Blue
– On engine wire harness

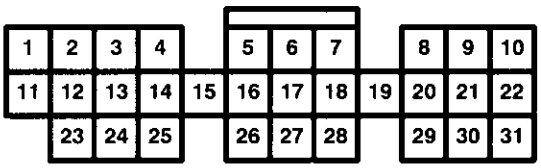

1 BLU/RED (CKF P)
2 BLU (CKP P)
3 GRN (TDC P)
4 YEL (CYP P)
5 BLU/RED (ACS)
6 BLU/ORN (STS)
7 BRN (SCS)
8 LT BLU (K-LINE)
9 CVT: GRY (TMA)
10 WHT/BLU (VBU)
11 WHT/RED (CKF M)
12 WHT (CKP M)
13 RED (TDC M)
14 BLK (CYP M)
15 D16Y5/D16Y8: BLU/BLK (VTM)
16 USA: GRN (PSPSW)
17 WHT/RED (ALTF)
18 BLU/WHT (VSS)
19 —
20 —
21 —
22 —
23 D16Y5 with M/T: BLK (IP +)
24 D16Y5 with M/T: RED (IP –, VS –)
25 D16Y5 with M/T: WHT (VS +)
26 —
27 —
28 —
29 CVT: LT GRN (ATP NP) D16Y5 with M/T: RED (CLSW)
30 CVT: PNK (TMB)
31 —

Connector D

– Gray
– On engine wire harness

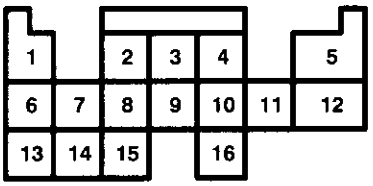

1 RED/BLK (TPS)
2 RED/WHT (ECT)
3 RED/GRN (MAP)
4 YEL/RED (VCC1)
5 GRN/WHT (BKSW)
6 CVT/D16Y8: RED/BLU (KS)
7 WHT (All except D16Y5 M/T – PHO2S) (D16Y5 M/T – LABEL)
8 RED/YEL (IAT)
9 D16Y5: WHT/BLK (EGRL)
10 YEL/BLU (VCC2)
11 GRN/BLK (SG2)
12 GRN/WHT (SG1)
13 D16Y5/D16Y8: GRN/BLK D16Y7: RED/YEL (SHO2SG)
14 WHT/RED (SHO2S)
15 *2: LT GRN (PTANK)
16 USA: GRN/RED (EL)

*2 = '96 D16Y8 engine: All Coupes
'97 D16Y7 engine: California Coupe and California Sedan LX
'97 D16Y8 engine: All Coupes and California Sedan
'98-'99: All

70. PCM or ECM (D16B5, All '99-'00 Models except D16Y5 M/T)

Note: For all other models, see page 202-26.

– Below right front footrest

Connector A

– Gray
– On main wire harness ('99-'00 except D16B5)
– On engine wire harness (D16B5)

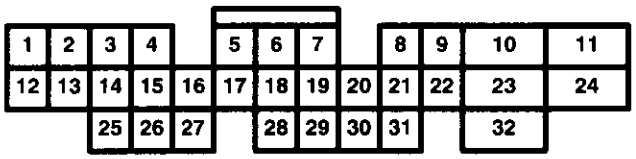

1 *1: BLU/WHT (STS CHTL)
2 *1: GRN/YEL (TFO)
3 *1: BLU/RED (FWARN) *4: BLU (2WBS)
4 *1: ORN (F METER) *4: LT GRN/WHT (VSV)
5 *2: BLU/GRN (CRS)
6 *4: RED/YEL (PCS)
7 CVT: YEL (ATP D)
8 BLK/WHT (SO2S HTC)
9 CVT: LT GRN (ATP DN)
10 BRN (SCS)
11 —
12 —
13 —
14 *3: GRN/BLK (D4IND)
15 —
16 GRN/YEL (FLR)
17 BLK/RED (ACC)
18 GRN/ORN (MIL)
19 *4: BLU (NEP)
20 GRN (FANC)
21 *1: LT BLU (K-LINE) *4: BLU/YEL (K-LINE)
22 *1: BLU/YEL (PFO) CVT: BLU (ATP L)
23 WHT/RED (SHO2S)
24 *1: BLU/ORN (STS) *4: BLU/WHT (STS)
25 —
26 GRN (PSPSW)
27 BLU/RED (ACS)
28 A/T: WHT/RED
29 *4: LT GRN (PTANK)
30 GRN/RED (EL)
31 —
32 GRN/WHT (BKSW)

*1 = D16B5
*2 = D16Y7/D16Y8 with A/T
*3 = A/T except CVT
*4 = Except D16B5

Connector B

– Gray
– On engine wire harness

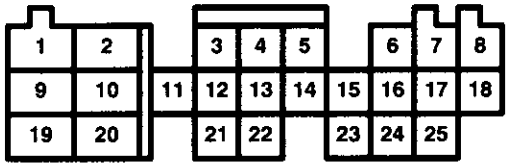

1 YEL/BLK (IGP1)
2 BLK (PG1)
3 RED (INJ2)
4 BLU (INJ3)
5 YEL (INJ4)
6 *4: BLK/BLU (IACVP)
7 D16B5: PNK (E-EGR) CVT: RED (ESOL)
8 *1: WHT (LS–) CVT: PNK/BLK (HLC LSM)
9 YEL/BLK (IGP2)
10 BLK (PG2)
11 BRN (INJ1)
12 *2: GRN/YEL (VTS)
13 YEL/GRN (ICM)
14 D16B5: LT GRN (INJ MOD)
15 *4: ORN (IACV N)
16 —
17 *1: RED (LS+) CVT: GRN/WHT (HLC LSP)
18 CVT: PNK/BLK (SC LSM)
19 —
20 BRN/BLK (LG1)
21 WHT/BLU (VBU)
22 BRN/BLK (LG2)
23 *3: BLK/BLU (IACV)
24 —
25 CVT: YEL (SCLSP)

*1 = A/T except CVT
*2 = Except D16Y7
*3 = M/T except D16Y7
*4 = A/T, All D16Y7

Connector C

- Blue
- On engine wire harness

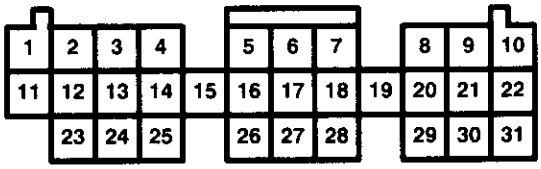

1 BLK/WHT (PO2SHTC)
2 WHT/GRN (ALTC)
3 *1: RED/BLU (KS)
4 —
5 WHT/RED (ALTP)
6 *2 WHT/BLK (EGR2)
7 GRN/WHT (SG1)
8 BLU (CKPP)
9 WHT (CKPM)
10 *3: BLU/BLK (VTM)
11 —
12 —
13 D16B5: GRN/RED (TF2)
14 D16B5: BLU/RED (PF2)
15 —
16 WHT (PHO2S)
17 RED/GRN (MAP)
18 GRN/BLK (SG2)
19 YEL/RED (VCC1)
20 GRN (TDCP)
21 RED (TDCM)
22 BLU/RED (CKFP)
23 BLU/WHT (VSS)
24 —
25 RED/YEL (IAT)
26 RED/WHT (ECT)
27 RED/BLK (TPS)
28 YEL/BLU (VCC2)
29 YEL (CYPP)
30 BLK (CYPM)
31 WHT/RED (CKFM)

*1 = CVT, D16Y8, B16A2
*2 = CVT, D16B5
*3 = Except D16Y7

Connector D

- Gray
- On engine wire harness

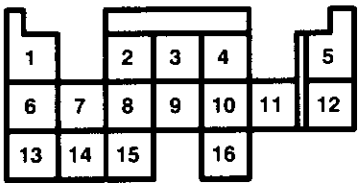

D16B5, '99-'00 except CVT:

1 YEL (LCA)
2 GRN/WHT (SHB)
3 GRN/BLK (LCB)
4 —
5 *1: BLK/YEL (VBSOL)
6 WHT (ATPR)
7 BLU/YEL (SHA)
8 PNK (ATPD3)
9 YEL (ATP D4)
10 BLU (NC)
11 RED (NM)
12 WHT (NMSG)
13 LT GRN (ATPNP)
14 BLU (ATP P2)
15 —
16 GRN (NCS G)

*1= Except D16B5

'99-'00 CVT:

1 WHT/RED (VEL)
2 GRN/BLK (INH SOL)
3 GRN/YEL (SHLS M)
4 BLU/WHT (SHLS P)
5 BLK/YEL (VBSOL)
6 WHT (ATPR)
7 BLK/WHT (VEL SG)
8 —
9 —
10 WHT (NDN)
11 RED/BLU (NDR)
12 GRN (NDR SG)
13 LT GRN/RED (ATP S)
14 GRN/BLK (DIND)
15 —
16 RED/WHT (NDNSG)

71. Gauge Assembly

– Left side of dash

Connector A (A/T only)

– Green
– On dashboard wire harness

1 YEL (Ignition input)
2 RED/BLK (Headlight switch ON input)
3 RED (Dash light brightness controller input)
4 BLU (L or 2 indicator control)
5 —
6 D16Y7/D16Y8: BRN (Not used)
7 —
8 BLK (G401)
9 D16Y7/D16Y8: YEL D16B5/D16Y5: GRN/BLK (D4 or D indicator control)
10 GRN (D3 or S indicator control)
11 RED (N indicator control)
12 WHT (R indicator control)
13 BLK/BLU (P indicator control)
14 LT GRN (Park/neutral output)

Connector B

– Blue
– On dashboard wire harness

1 —
2 BLK (G401)
3 BLU/BLK (Trunk open indicator light control)
4 GRN/YEL (Hazard warning switch input)
5 GRN/RED (Brake system indicator light control)
6 RED/BLU (Seat belt indicator light control)
7 '96-'97 model: BLU/YEL (not used)
8 Except GX: GRN/YEL GX: BLU/GRN (Low fuel indicator light control)
9 —
10 Except GX: YEL/BLK GX: ORN/BLU (Fuel gauge control input)
11 BLU/WHT (Vehicle speed sensor (VSS) input)
12 YEL/GRN (Engine coolant temperature sending unit input)
13 —
14 —
15 BLK/WHT (Ignition input)
16 WHT/BLU (Charging system indicator light control)

Connector C

– Blue
– On dashboard wire harness

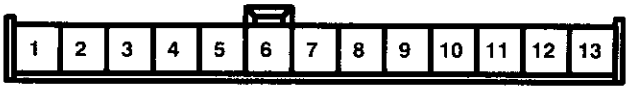

1 *: YEL (Ignition input)
2 *: PNK (Washer fluid level input)
3 YEL/RED (Low oil pressure indicator light control)
4 YEL (Ignition input)
5 GRN/ORN (Malfunction indicator light control)
6 RED/GRN (Lights on HI input)
7 GRN/RED (Hazard warning switch input)
8 BLU (Engine speed input)
9 —
10 —
11 —
12 RED (Dash light brightness controller input)
13 RED/BLK (Headlight switch ON input)

* = '99-'00: All except CVT

Connector D

– Orange
– On dashboard wire harness

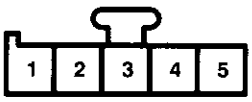

1 BLU/RED (ABS indicator light control)
2 —
3 BLK (G401)
4 —
5 YEL (Ignition input)

Connector E

– Green
– On dashboard wire harness

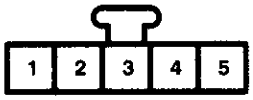

With Cruise:

1 —
2 RED/BLU (Cruise control indicator control)
3 BLK (G401)
4 RED/BLK (Headlight switch ON input)
5 YEL (Ignition input)

With Shift-up Indicator:

1 RED (Dash lights brightness controller input)
2 RED/BLU (Shift-up indicator control)
3 BLK (G401)
4 RED/BLK (Headlight switch ON input)
5 YEL (Ignition input)

Connector F

– Yellow
– On dashboard wire harness

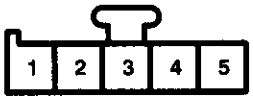

1 BLU (SRS indicator light control)
2 —
3 BLK (G401)
4 —
5 YEL (Ignition input)

72. C150 (GX Model)

- Light green
- Left rear of engine compartment
- Connects engine wire harness to main wire harness

1 YEL/BLU (PGM-FI)
2 GRN/BLK (PGM-FI)
3 LT GRN (A/T controls)
4 YEL/RED (PGM-FI)
5 GRN/YEL (PGM-FI)
6 BLU/YEL (PGM-FI)
7 Male – PNK
Female – GRN
(A/T controls)
8 YEL (A/T controls)

73. C575 (GX Model)

- Gray
- Behind left side of rear seat back
- Connects floor wire harness to sub fuel cord

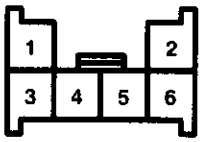

1 BLK (PGM-FI)
2 WHT/RED (PGM-FI)
3 GRN/YEL (PGM-FI)
4 GRN/BLK (PGM-FI)
5 BLU/YEL (PGM-FI)
6 YEL/BLU (PGM-FI)

74. Audio Unit ('99-'00 Models)

- Light Blue
- Center of dash
- On dashbaord wire harness

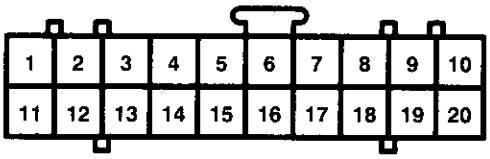

1 —
2 YEL/RED (Ignition input)
3 —
4 —
5 RED/YEL
(RR speaker +)
6 BLU/YEL
(LR speaker +)
7 RED/GRN
(RF speaker +)
8 BLU (LF speaker +)
9 RED/BLK
(Illumination control)
10 WHT/BLU
(Battery input)
11 —
12 —
13 —
14 —
15 BRN/WHT
(RR speaker –)
16 GRY/WHT
(LR speaker –)
17 BRN/BLK
(RF speaker –)
18 GRY/BLK
(LF speaker –)
19 RED
(Illumination control)
20 BLK (G501)

75. Keyless Door Lock Control Unit (USA Only)

- Gray
- At left kick panel
- On main wire harness

1 LT GRN/BLK
(Door open output)
2 BLU/WHT
(Lock input)
3 BLU/RED
(Key switch input)
4 BLK/YEL
(Ignition input)
5 BLU/RED
(Unlock/lock control)
6 RED/BLK
(Light flash control)
7 WHT/RED
(Unlock/lock output)
8 YEL/RED
(Unlock/lock output)
9 GRN/ORN
(Unlock input)
10 GRN/WHT
(Lock input)
11 ORN (Security system)
12 LT GRN/RED
(Door open input)
13 YEL/BLU
(Security system)
14 BLU/YEL
(Security system)
15 GRY (Horn control)
16 —
17 BLK (G401)
18 WHT/GRN
(Battery input)

76. Heater Control Panel ('99-'00 Models)

– Center of dash

Connector A

– Gray
– On heater sub-harness A

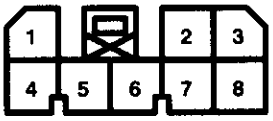

1 BLU/BLK (Blower controls)
2 GRN/WHT (Air delivery)
3 GRN/RED (Air delivery)
4 RED/BLK (Dash lights)
5 RED (Dash lights)
6 BLK (G402)
7 BLU/YEL (Rear window defogger)
8 BLK/YEL (Fuse 17)

Connector B

– Black
– On heater sub-harness A

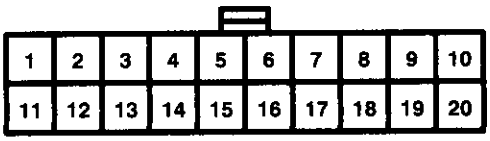

1 LT GRN/BLK (Blower controls)
2 BRN/WHT (Air delivery)
3 RED/YEL (Air delivery)
4 RED/WHT (Air delivery)
5 YEL/BLU (Air delivery)
6 YEL/RED (Air delivery)
7 GRN/YEL (Air delivery)
8 BLU/WHT (Air delivery)
9 YEL (Air delivery)
10 WHT/BLU (Fuse 47)
11 BLU/RED (A/C compressor controls)
12 BRN (Air delivery)
13 ORN/WHT (Blower controls)
14 —
15 PNK/BLK (Air delivery)
16 —
17 —
18 —
19 —
20 GRY (Air delivery)

Connector C

– Black
– To heater push switches

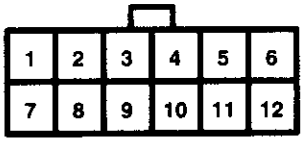

1 ORN (Air delivery)
2 —
3 —
4 WHT (Air delivery)
5 GRN (A/C compressor control)
6 PUR (Rear window defogger)
7 RED (Dash lights)
8 BLU (Dash lights)
9 BLK (Air delivery)
10 GRY (A/C compressor controls)
11 BRN (Air delivery)
12 YEL (Rear window defogger)

77. Injector Control Module (GX Model)

– Gray
– Behind left kick panel
– On main wire harness

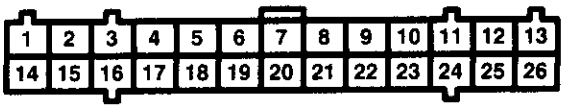

1 RED (INJ2)
2 BRN (INJ1)
3 BLK (G401)
4 —
5 —
6 —
7 —
8 YEL (INJCNTL4)
9 BLU (INJCNTL3)
10 RED (INJCNTL2)
11 BRN (INJCNTL1)
12 BRN/BLK (G101)
13 YEL/RED (Switched ignition input)
14 YEL (INJ4)
15 BLU (INJ3)
16 BLK (G401)
17 —
18 —
19 —
20 —
21 —
22 —
23 —
24 LT GRN (INJMODE)
25 BRN/BLK (G101)
26 YEL/RED (Switched ignition input)

Connector Identification and Wire Harness Routing

Connector or Terminal	Number of Cavities/ Color	Location	Connects to	Notes

Starter Cables

T1 T2		Right side of engine compartment Right side of engine	Under-hood fuse/relay box Starter motor	
⊕		Battery	Battery positive terminal	

Battery Ground Cable

G1		Right front shock tower	Body ground, via battery ground cable	
⊖		Battery	Battery negative terminal	

Engine Ground Cable A

T3		Left end of engine	Power steering pump bracket	
G2		Top left side of bulkhead	Body ground, via engine ground cable A	

Engine Ground Cable B

T4		Right side of engine compartment	Transmission	
G3		Right side of front frame	Body ground, via engine ground cable B	

Under-hood ABS Fuse/Relay Box Wire Harness

T5		Right side of engine compartment	Under-hood ABS fuse/relay box	
⊕		Battery	Battery positive terminal	

A/C Wire Harness

C209 C752 C753 C754	4-GRY 1-GRY 2-GRY 2-GRY	Left front of engine compartment Left front of engine compartment Left front of engine compartment Left front of engine compartment	Engine compartment wire harness A/C compressor clutch Condenser fan motor A/C pressure switch	
G751		Left front of engine compartment	Body ground, via A/C wire harness	

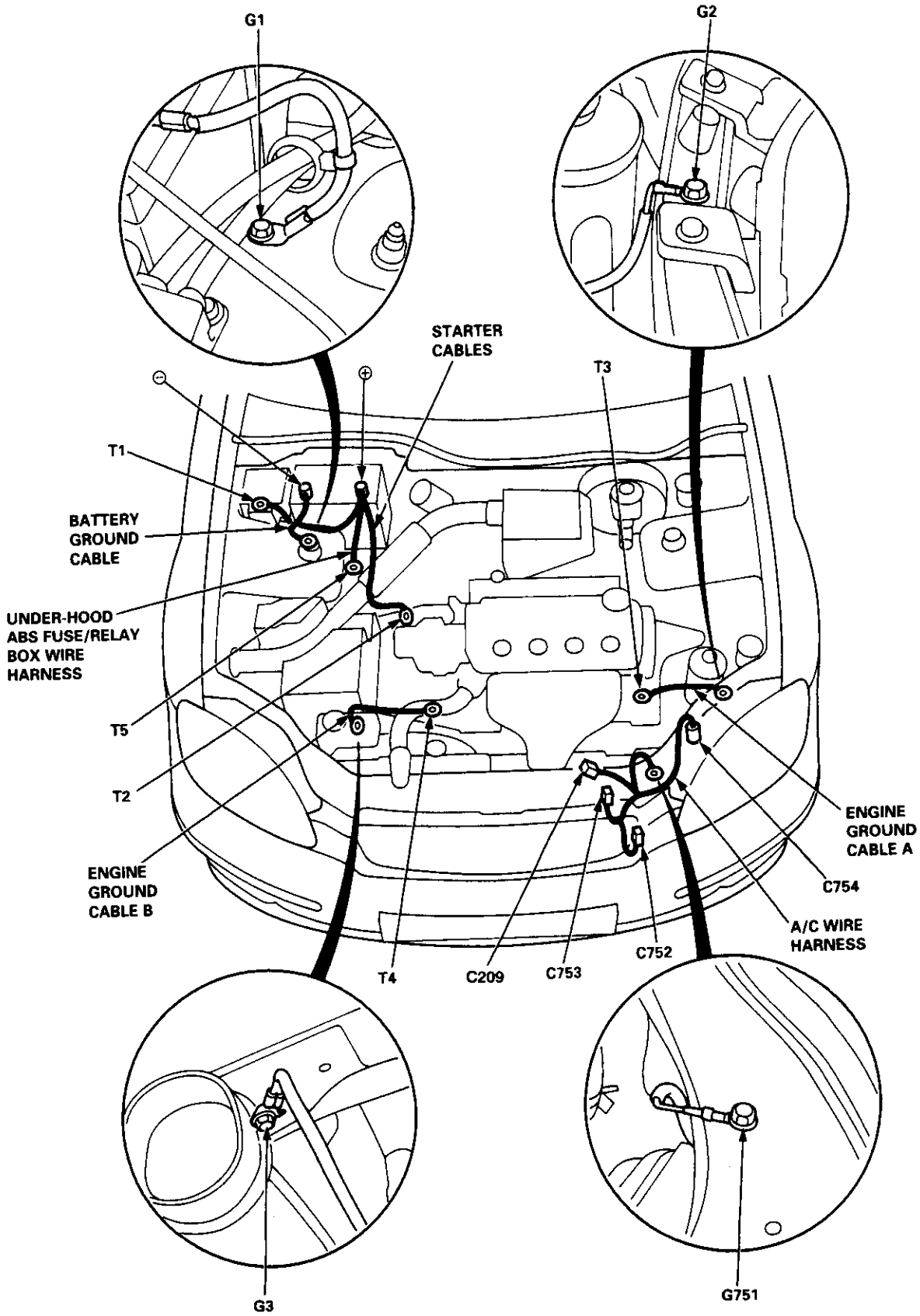
G1
G2
STARTER CABLES
T3
T1
BATTERY GROUND CABLE
UNDER-HOOD ABS FUSE/RELAY BOX WIRE HARNESS
T5
T2
ENGINE GROUND CABLE B
ENGINE GROUND CABLE A
C754
A/C WIRE HARNESS
C752
T4
C209
C753
G3
G751

Connector Identification and Wire Harness Routing

Connector or Terminal	Number of Cavities/ Color	Location	Connects to	Notes
Engine Wire Harness (D16Y5, D16Y8 engines): '96-98 models and '99-'00 D16Y5 w/M/T				
C101	10-GRY	Left side of engine compartment	Main wire harness	
C102	3-GRY	Left side of engine	CKF sensor	
C103	1-CLR	Middle of engine	Engine oil pressure switch	
C104	4-GRN	Left side of engine	Alternator	USA
C104	3-N/A	Left side of engine	Alternator	Canada
C105	2-BLK	Middle of engine	No. 1 fuel injector	
C106	2-BLK	Middle of engine	No. 2 fuel injector	
C107	2-BLK	Middle of engine	No. 3 fuel injector	
C108	2-BLK	Middle of engine	No. 4 fuel injector	
C109	3-GRY	Middle of engine	IAC valve	A/T
C110	3-GRY	Middle of engine	TP sensor	
C111	3-GRY	Middle of engine	MAP sensor	
C112	2-BLK	Middle of engine	IAT sensor	
C113	2-GRY	Middle of engine	Power steering pressure switch	USA
C114	2-BLK	Middle of engine	EVAP purge control solenoid valve	
C115	14-BLU	Middle of engine	Junction connector	
C116	14-GRY	Middle of engine	Junction connector	
C117	3-GRY	Right side of engine compartment	Vehicle speed sensor (VSS)	
C118	2-BLK	Right side of engine compartment	Countershaft speed sensor	*2 (A/T)
C119	2-GRY	Middle of engine	Engine coolant temperature switch	
C120	10-GRY	Middle of engine	Distributor	
C121	1-BLK	Middle of engine	Engine coolant temp. sending unit	
C122	2-GRY	Middle of engine	ECT sensor	
C123	4-GRY	Middle of engine	Primary HO2S (sensor 1)	*3
C123	8-GRY	Middle of engine	Primary HO2S (sensor 1)	*1 (M/T)
C124	2-GRY	Middle of engine	Back-up light switch	M/T
C124	2-GRY	Middle of engine	Lock-up control solenoid valves	*2 (A/T)
C125	4-GRY	Middle of engine	Secondary HO2S (sensor 2)	*1
C126	2-BLK	Middle of engine	Mainshaft speed sensor	*2 (A/T)
C127	2-BLK	Middle of engine	Linear solenoid	*2 (A/T)
C128	2-GRY	Middle of engine	Shift control solenoid valves	*2 (A/T)
C129	1-BLK	Right side of engine	Starter solenoid	
C130	20-BRN	Under right side of dash	Junction connector	
C131	22-GRN	Behind right kick panel	Main wire harness	
C132	32-GRY	Below right front footrest	ECM/PCM connector A	
C133	25-GRY	Below right front footrest	PCM connector B	*2 (A/T)
C134	31-BLU	Below right front footrest	ECM/PCM connector C	
C135	16-GRY	Below right front footrest	ECM/PCM connector D	
C136	14-GRY	Left side of engine compartment	Main wire harness	*1 (A/T)
C136	8-GRY	Left side of engine compartment	Main wire harness	*2 (A/T)
C137	2-GRY	Middle of engine	Knock sensor (KS)	
C138	2-GRY	Middle of engine	IAC valve	M/T
C139	1-GRY	Middle of engine	VTEC solenoid valve	
C140	2-GRY	Middle of engine	VTEC pressure switch	
C141	2-BLK	Right side of engine compartment	EVAP control canister vent shut valve	*4
C142	2-GRY	Middle of engine	EGR control solenoid valve	*1 (A/T)
C143	2-BLK	Right side of engine compartment	Secondary gear shaft speed sensor	*1 (A/T)
C144	3-GRY	Middle of engine	EGR valve	*1 (A/T)
C144	6-GRY	Middle of engine	EGR valve	*1 (M/T)
C145	2-BLK	Right side of engine compartment	Drive pulley speed sensor	*1 (CVT)
C146	8-GRY	Right side of engine compartment	CVT transmission solenoid	*1 (CVT)
C147	2-BLK	Right side of engine compartment	Driven pulley speed sensor	*1 (CVT)

Connector or Terminal	Number of Cavities/ Color	Location	Connects to	Notes

Engine Wire Harness (D16Y5, D16Y8 engines): '96-98 models and '99-'00 D16Y5 w/M/T (cont'd)

T101 T102		Left side of engine Right side of engine compartment	Alternator Under-hood fuse/relay box	
G101		Right of engine	Engine ground, via engine wire harness	

*1: D16Y5 engine
*2: D16Y8 engine
*3: D16Y5 (A/T), D16Y8 engines
*4: '96 model: all coupes, '97 model: all coupes, California Sedan, '98-'00 model: all

'96-'98 models and '99-'00 D16Y5 w/M/T:

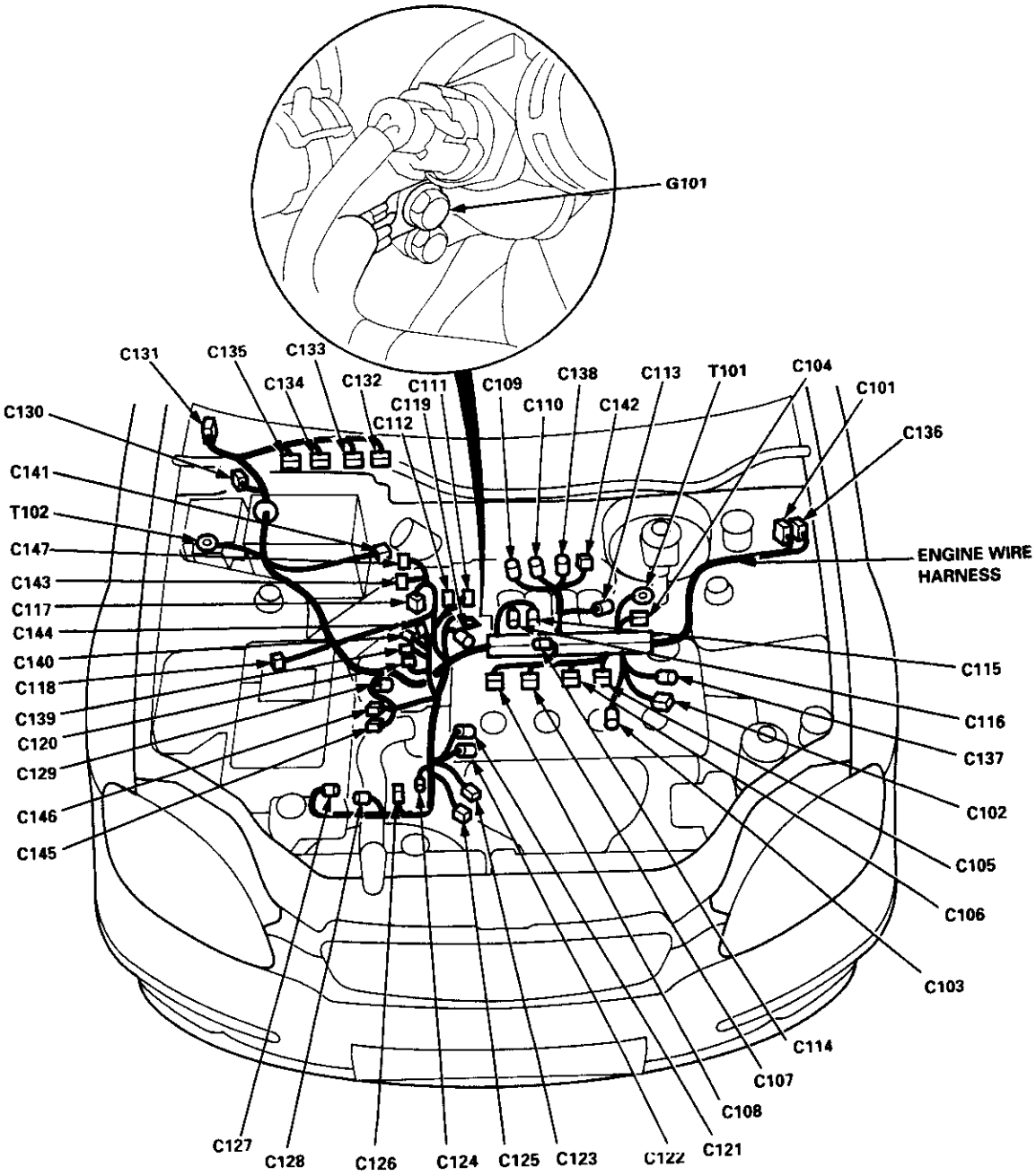

Connector Identification and Wire Harness Routing

Connector or Terminal	Number of Cavities/ Color	Location	Connects to	Notes

Engine Wire Harness (D16Y5, D16Y8 engines): '99-'00 models except D16Y5 w/M/T

C101	10-GRY	Left side of engine compartment	Main wire harness	
C102	3-GRY	Left side of engine	CKF sensor	
C103	1-CLR	Middle of engine	Engine oil pressure switch	
C104	4-GRN	Left side of engine	Alternator	USA
C104	3-N/A	Left side of engine	Alternator	Canada
C105	2-BLK	Middle of engine	No. 1 fuel injector	
C106	2-BLK	Middle of engine	No. 2 fuel injector	
C107	2-BLK	Middle of engine	No. 3 fuel injector	
C108	2-BLK	Middle of engine	No. 4 fuel injector	
C109	3-GRY	Middle of engine	IAC valve	A/T
C110	3-GRY	Middle of engine	TP sensor	
C111	3-GRY	Middle of engine	MAP sensor	
C112	2-BLK	Middle of engine	IAT sensor	
C113	2-GRY	Middle of engine	Power steering pressure switch	USA
C114	2-BLK	Middle of engine	EVAP purge control solenoid valve	
C115	14-BLU	Middle of engine	Junction connector	
C116	14-GRY	Middle of engine	Junction connector	
C117	3-GRY	Right side of engine compartment	Vehicle speed sensor (VSS)	
C118	2-BLK	Right side of engine compartment	Countershaft speed sensor	*2 (A/T)
C119	2-GRY	Middle of engine	Engine coolant temperature switch	
C120	10-GRY	Middle of engine	Distributor	*1
C120	8-GRY	Middle of engine	Distributor	*2
C121	1-BLK	Middle of engine	Engine coolant temp. sending unit	
C122	2-GRY	Middle of engine	ECT sensor	
C123	4-GRY	Middle of engine	Primary HO2S (sensor 1)	*1 (CVT)
C123	4-GRY	Middle of engine	Primary HO2S (sensor 1)	*2
C124	2-GRY	Middle of engine	Back-up light switch	M/T
C124	2-GRY	Middle of engine	Lock-up control solenoid valves	*2 (A/T)
C125	4-GRY	Middle of engine	Secondary HO2S (sensor 2)	*1
C126	2-BLK	Middle of engine	Mainshaft speed sensor	*2 (A/T)
C127	2-BLK	Middle of engine	Linear solenoid	*2 (A/T)
C128	2-GRY	Middle of engine	Shift control solenoid valves	*2 (A/T)
C129	1-BLK	Right side of engine	Starter solenoid	
C130	20-BRN	Under right side of dash	Junction Connector	
C131	22-GRN	Behind right kick panel	Main wire harness	
C133	25-GRY	Below right front footrest	ECM/PCM connector B	
C134	31-BLU	Below right front footrest	ECM/PCM connector C	
C135	16-GRY	Below right front footrest	PCM connector D	A/T
C137	2-GRY	Middle of engine	Knock sensor (KS)	
C138	2-GRY	Middle of engine	IAC valve	M/T
C139	1-GRY	Middle of engine	VTEC solenoid valve	
C140	2-GRY	Middle of engine	VTEC pressure switch	
C142	2-GRY	Middle of engine	EGR control solenoid valve	*1 (CVT)
C143	2-BLK	Right side of engine compartment	Secondary gear shaft speed sensor	*1 (CVT)
C144	3-GRY	Middle of engine	EGR valve	*1 (CVT)
C145	2-BLK	Right side of engine compartment	Drive pulley speed sensor	*1 (CVT)
C146	8-GRY	Right side of engine compartment	CVT transmission solenoid	*1 (CVT)
C147	2-BLK	Right side of engine compartment	Driven pulley speed sensor	*1 (CVT)

Connector or Terminal	Number of Cavities/ Color	Location	Connects to	Notes

Engine Wire Harness (D16Y5, D16Y8 engines): '99-'00 models except D16Y5 w/M/T (cont'd)

T101 T102		Left side of engine Right side of engine compartment	Alternator Under-hood fuse/relay box	
G101		Right side of engine	Engine ground, via engine wire harness	

*1: D16Y5 engine
*2: D16Y8 engine

'99-'00 models except D16Y5 w/M/T:

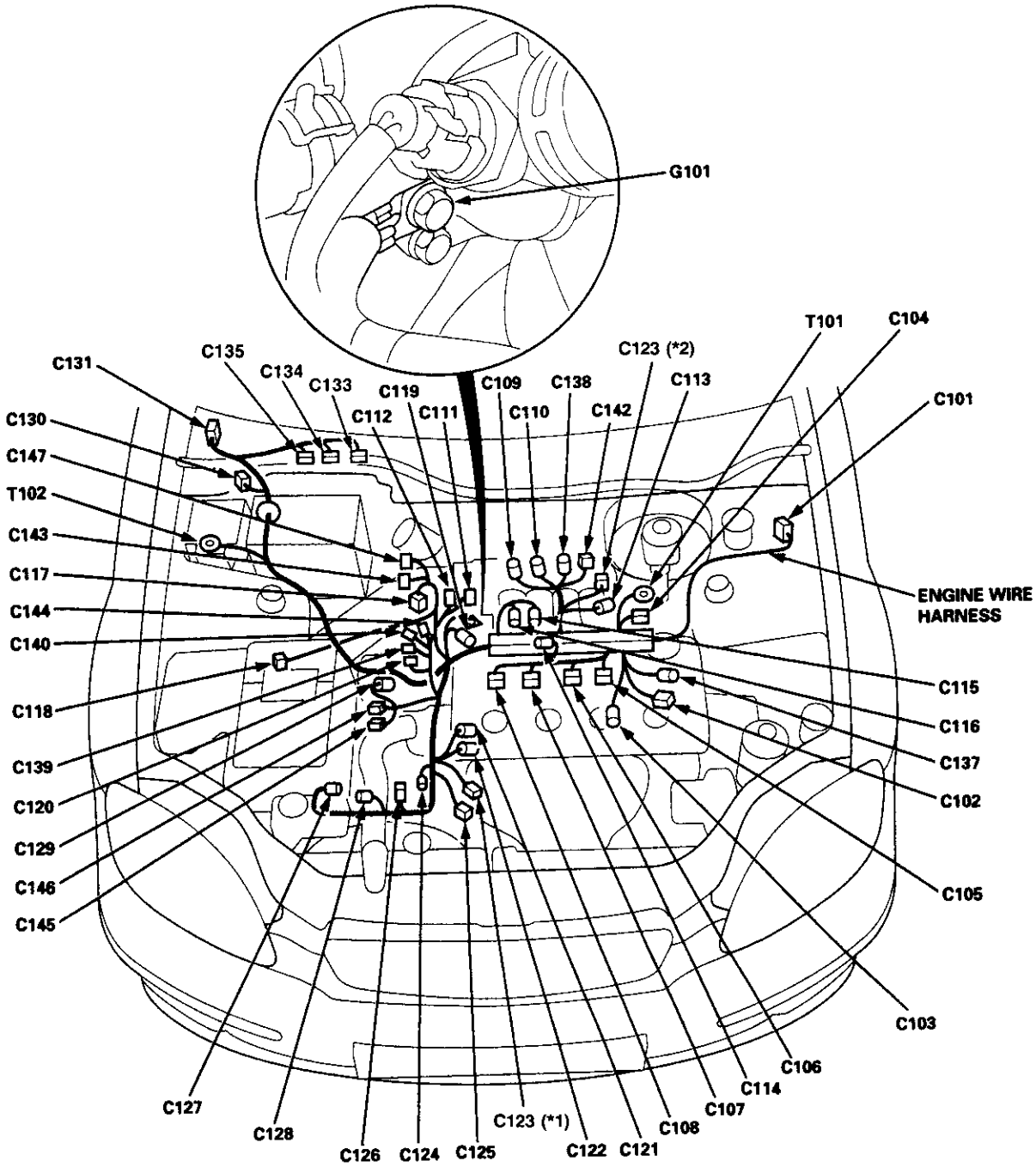

Connector Identification and Wire Harness Routing

Connector or Terminal	Number of Cavities/ Color	Location	Connects to	Notes

Engine Wire Harness (D16Y7): '96 model

C101	10-GRY	Left side of engine compartment	Main wire harness	
C102	3-GRY	Left side of engine	CKF sensor	
C103	1-CLR	Middle of engine	Engine oil pressure switch	
C104	4-GRN	Left side of engine	Alternator	USA
C104	3-N/A	Left side of engine	Alternator	Canada
C105	2-BLK	Middle of engine	No. 1 fuel injector	
C106	2-BLK	Middle of engine	No. 2 fuel injector	
C107	2-BLK	Middle of engine	No. 3 fuel injector	
C108	2-BLK	Middle of engine	No. 4 fuel injector	
C109	3-GRY	Middle of engine	IAC valve	A/T
C110	3-GRY	Middle of engine	TP sensor	
C111	3-GRY	Middle of engine	MAP sensor	
C112	2-BLK	Middle of engine	IAT sensor	
C113	2-GRY	Middle of engine	Power steering pressure switch	USA
C114	2-BLK	Middle of engine	EVAP purge control solenoid valve	
C115	14-BLU	Middle of engine	Junction connector	
C116	14-GRY	Middle of engine	Junction connector	
C117	3-GRY	Right side of engine compartment	Vehicle speed sensor (VSS)	
C118	2-BLK	Right side of engine compartment	Countershaft speed sensor	A/T
C119	2-GRY	Middle of engine	Engine coolant temperature switch	
C120	10-GRY	Middle of engine	Distributor	
C121	1-BLK	Middle of engine	Engine coolant temperature sending unit	
C122	2-GRY	Middle of engine	ECT sensor	
C123	4-GRY	Middle of engine	Primary HO2S (sensor 1)	
C124	2-GRY	Middle of engine	Back-up light switch	M/T
C124	2-GRY	Middle of engine	Lock-up control solenoid valves	A/T
C125	4-GRY	Middle of engine	Secondary HO2S (sensor 2)	
C126	2-BLK	Middle of engine	Mainshaft speed sensor	A/T
C127	2-BLK	Middle of engine	Linear solenoid	A/T
C128	2-GRY	Middle of engine	Shift control solenoid valves	A/T
C129	1-BLK	Right side of engine	Starter solenoid	
C130	20-BRN	Under right side of dash	Junction Connector	
C131	22-GRN	Behind right kick panel	Main wire harness	
C132	32-GRY	Below right front footrest	ECM/PCM connector A	
C133	25-GRY	Below right front footrest	PCM connector B	A/T
C134	31-BLU	Below right front footrest	ECM/PCM connector C	
C135	16-GRY	Below right front footrest	ECM/PCM connector D	
T101		Left side of engine compartment	Alternator	
T102		Right side of engine compartment	Under-hood fuse/relay box	
G101		Right side of engine	Engine ground, via engine wire harness	

'96 model:

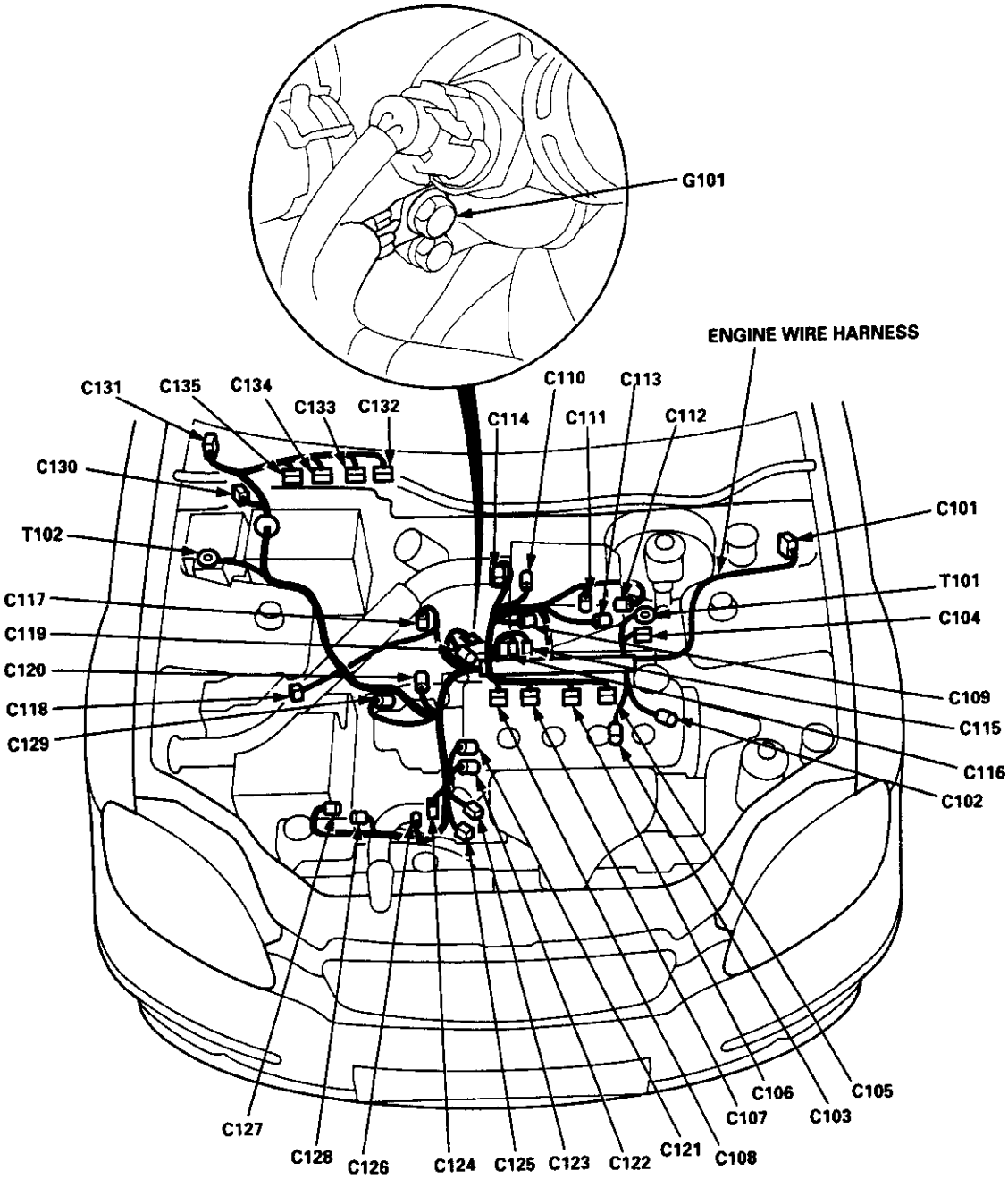
G101
ENGINE WIRE HARNESS
C131
C135
C134
C133
C132
C110
C113
C114
C111
C112
C130
T102
C101
T101
C117
C104
C119
C120
C109
C118
C115
C129
C116
C102
C106
C105
C107
C103
C127
C128
C126
C124
C125
C123
C122
C121
C108

Connector Identification and Wire Harness Routing

Connector or Terminal	Number of Cavities/ Color	Location	Connects to	Notes

Engine Wire Harness (D16Y7 engine): '97-'98 models

C101	10-GRY	Left side of engine compartment	Main wire harness	
C102	3-GRY	Left side of engine	CKF sensor	
C103	1-CLR	Middle of engine	Engine oil pressure switch	
C104	4-GRN	Left side of engine	Alternator	USA
C104	3-N/A	Left side of engine	Alternator	Canada
C105	2-BLK	Middle of engine	No. 1 fuel injector	
C106	2-BLK	Middle of engine	No. 2 fuel injector	
C107	2-BLK	Middle of engine	No. 3 fuel injector	
C108	2-BLK	Middle of engine	No. 4 fuel injector	
C109	3-GRY	Middle of engine	IAC valve	
C110	3-GRY	Middle of engine	TP sensor	
C111	3-GRY	Middle of engine	MAP sensor	
C112	2-BLK	Middle of engine	IAT sensor	
C113	2-GRY	Middle of engine	Power steering pressure switch	USA
C114	2-BLK	Middle of engine	EVAP purge control solenoid valve	
C115	14-BLU	Middle of engine	Junction connector	
C116	14-GRY	Middle of engine	Junction connector	
C117	3-GRY	Right side of engine compartment	Vehicle speed sensor (VSS)	
C118	2-BLK	Right side of engine compartment	Countershaft speed sensor	A/T
C119	2-GRY	Middle of engine	Engine coolant temperature switch	
C120	10-GRY	Middle of engine	Distributor	
C121	1-BLK	Middle of engine	Engine coolant temperature sending unit	
C122	2-GRY	Middle of engine	ECT sensor	
C123	4-GRY	Middle of engine	Primary HO2S (sensor 1)	
C124	2-GRY	Middle of engine	Back-up light switch	M/T
C124	2-GRY	Middle of engine	Lock-up control solenoid valves	A/T
C125	4-GRY	Middle of engine	Secondary HO2S (sensor 2)	
C126	2-BLK	Middle of engine	Mainshaft speed sensor	A/T
C127	2-BLK	Middle of engine	Linear solenoid	A/T
C128	2-GRY	Middle of engine	Shift control solenoid valves	A/T
C129	1-BLK	Right side of engine	Starter solenoid	
C130	20-BRN	Under right side of dash	Junction connector	
C131	22-GRN	Behind right kick panel	Main wire harness	
C132	32-GRY	Below right front footrest	ECM/PCM connector A	
C133	25-GRY	Below right front footrest	PCM connector B	A/T
C134	31-BLU	Below right front footrest	ECM/PCM connector C	
C135	16-GRY	Below right front footrest	ECM/PCM connector D	
C136	8-GRY	Left side of engine compartment	Main wire harness	A/T
C141	2-BLK	Right side of engine compartment	EVAP control canister vent shut valve	
T101		Left side of engine	Alternator	
T102		Right side of engine compartment	Under-hood fuse/relay box	
G101		Right side of engine	Engine ground, via engine wire harness	

'97-'98 models:

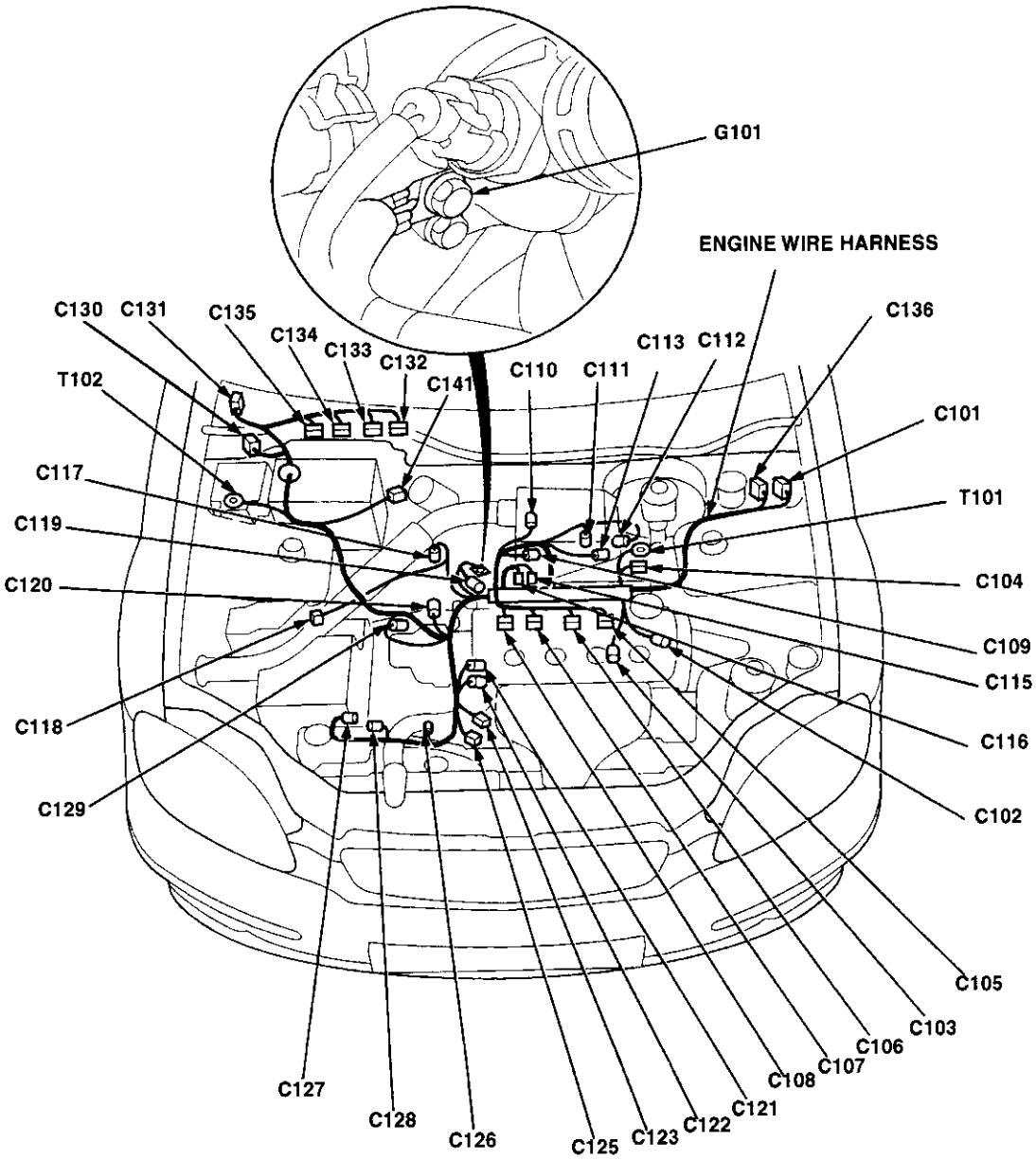
G101
ENGINE WIRE HARNESS
C130
C131
C135
C134
C133
C132
C141
C110
C111
C113
C112
C136
T102
C101
C117
T101
C119
C104
C120
C109
C115
C118
C116
C129
C102
C105
C103
C106
C107
C108
C121
C122
C123
C125
C126
C128
C127

Connector Identification and Wire Harness Routing

Connector or Terminal	Number of Cavities/ Color	Location	Connects to	Notes

Engine Wire Harness (D16Y7 engine): '99-'00 models

C101	10-GRY	Left side of engine compartment	Main wire harness	
C102	3-GRY	Left side of engine	CKF sensor	
C103	1-CLR	Middle of engine	Engine oil pressure switch	
C104	4-GRN	Left side of engine	Alternator	USA
C104	3-N/A	Left side of engine	Alternator	Canada
C105	2-BLK	Middle of engine	No. 1 fuel injector	
C106	2-BLK	Middle of engine	No. 2 fuel injector	
C107	2-BLK	Middle of engine	No. 3 fuel injector	
C108	2-BLK	Middle of engine	No. 4 fuel injector	
C109	3-GRY	Middle of engine	IAC valve	
C110	3-GRY	Middle of engine	TP sensor	
C111	3-GRY	Middle of engine	MAP sensor	
C112	2-BLK	Middle of engine	IAT sensor	
C113	2-GRY	Middle of engine	Power steering pressure switch	USA
C114	2-BLK	Middle of engine	EVAP purge control solenoid valve	
C115	14-BLU	Middle of engine	Junction connector	
C116	14-GRY	Middle of engine	Junction connector	
C117	3-GRY	Right side of engine compartment	Vehicle speed sensor (VSS)	
C118	2-BLK	Right side of engine compartment	Countershaft speed sensor	A/T
C119	2-GRY	Middle of engine	Engine coolant temperature switch	
C120	8-GRY	Middle of engine	Distributor	
C121	1-BLK	Middle of engine	Engine coolant temperature sending unit	
C122	2-GRY	Middle of engine	ECT sensor	
C123	4-GRY	Middle of engine	Primary HO2S (sensor 1)	
C124	2-GRY	Middle of engine	Back-up light switch	M/T
C124	2-GRY	Middle of engine	Lock-up control solenoid valves	A/T
C125	4-GRY	Middle of engine	Secondary HO2S (sensor 2)	
C126	2-BLK	Middle of engine	Mainshaft speed sensor	A/T
C127	2-BLK	Middle of engine	Linear solenoid	A/T
C128	2-GRY	Middle of engine	Shift control solenoid valves	A/T
C129	1-BLK	Right side of engine	Starter solenoid	
C130	20-BRN	Under right side of dash	Junction connector	
C131	22-GRN	Behind right kick panel	Main wire harness	
C133	25-GRY	Below right front footrest	ECM/PCM connector B	
C134	31-BLU	Below right front footrest	ECM/PCM connector C	
C135	16-GRY	Below right front footrest	PCM connector D	A/T
T101		Left side of engine	Alternator	
T102		Right side of engine compartment	Under-hood fuse/relay box	
G101		Right side of engine	Engine ground, via engine wire harness	

'99-'00 models:

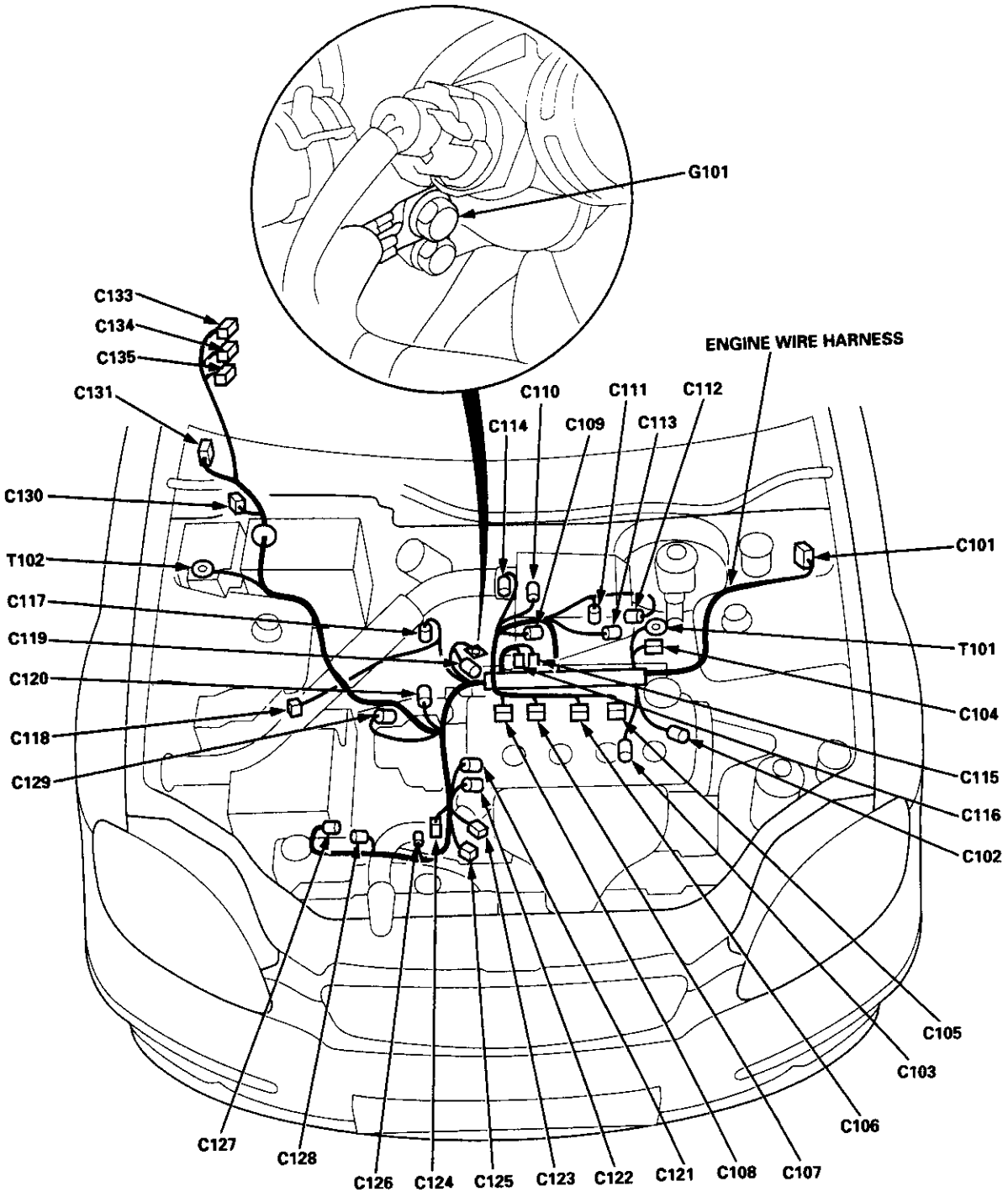
G101
C133
C134
C135
C131
C130
T102
C117
C119
C120
C118
C129
ENGINE WIRE HARNESS
C110
C111
C112
C114
C109
C113
C101
T101
C104
C115
C116
C102
C105
C103
C106
C127
C128
C126
C124
C125
C123
C122
C121
C108
C107

Connector Identification and Wire Harness Routing

Connector or Terminal	Number of Cavities/ Color	Location	Connects to	Notes

Engine Wire Harness (B16A2 engine): '99-'00 models

C101	10-GRY	Left side of engine compartment	Main wire harness	
C102	2-GRY	Left side of engine	CKF sensor	
C103	1-CLR	Middle of engine	Engine oil pressure switch	
C104	4-GRN	Left side of engine	Alternator	USA
C104	3-N/A	Left side of engine	Alternator	Canada
C105	2-BLK	Middle of engine	No. 1 fuel injector	
C106	2-BLK	Middle of engine	No. 2 fuel injector	
C107	2-BLK	Middle of engine	No. 3 fuel injector	
C108	2-BLK	Middle of engine	No. 4 fuel injector	
C110	3-GRY	Middle of engine	TP sensor	
C111	3-GRY	Middle of engine	MAP sensor	
C112	2-BLK	Middle of engine	IAT sensor	
C113	2-GRY	Middle of engine	Power steering pressure switch	USA
C114	2-BLK	Middle of engine	EVAP purge control solenoid valve	
C115	14-BLU	Middle of engine	Junction connector	
C116	14-GRY	Middle of engine	Junction connector	
C117	3-GRY	Right side of engine compartment	Vehicle speed sensor (VSS)	
C119	2-GRY	Middle of engine	Engine coolant temperature switch	
C120	10-GRY	Middle of engine	Distributor	
C121	1-BLK	Middle of engine	Engine coolant temperature sending unit	
C122	2-GRY	Middle of engine	ECT sensor	
C123	4-GRY	Middle of engine	Primary HO2S (sensor 1)	
C124	2-GRY	Middle of engine	Back-up light switch	
C129	1-BLK	Right side of engine	Starter solenoid	
C130	20-BRN	Under right side of dash	Junction connector	
C131	22-GRN	Behind right kick panel	Main wire harness	
C133	25-GRY	Below right front footrest	ECM connector B	
C134	31-BLU	Below right front footrest	ECM connector C	
C137	2-GRY	Middle of engine	Knock Sensor (KS)	
C138	2-GRY	Middle of engine	IAC valve	
C139	1-GRY	Middle of engine	VTEC solenoid valve	
C140	2-GRY	Middle of engine	VTEC pressure switch	
T101		Left side of engine	Alternator	
T102		Right side of engine compartment	Under-hood fuse/relay box	
G101		Right side of engine	Engine ground, via engine wire harness	

'99-'00 models:

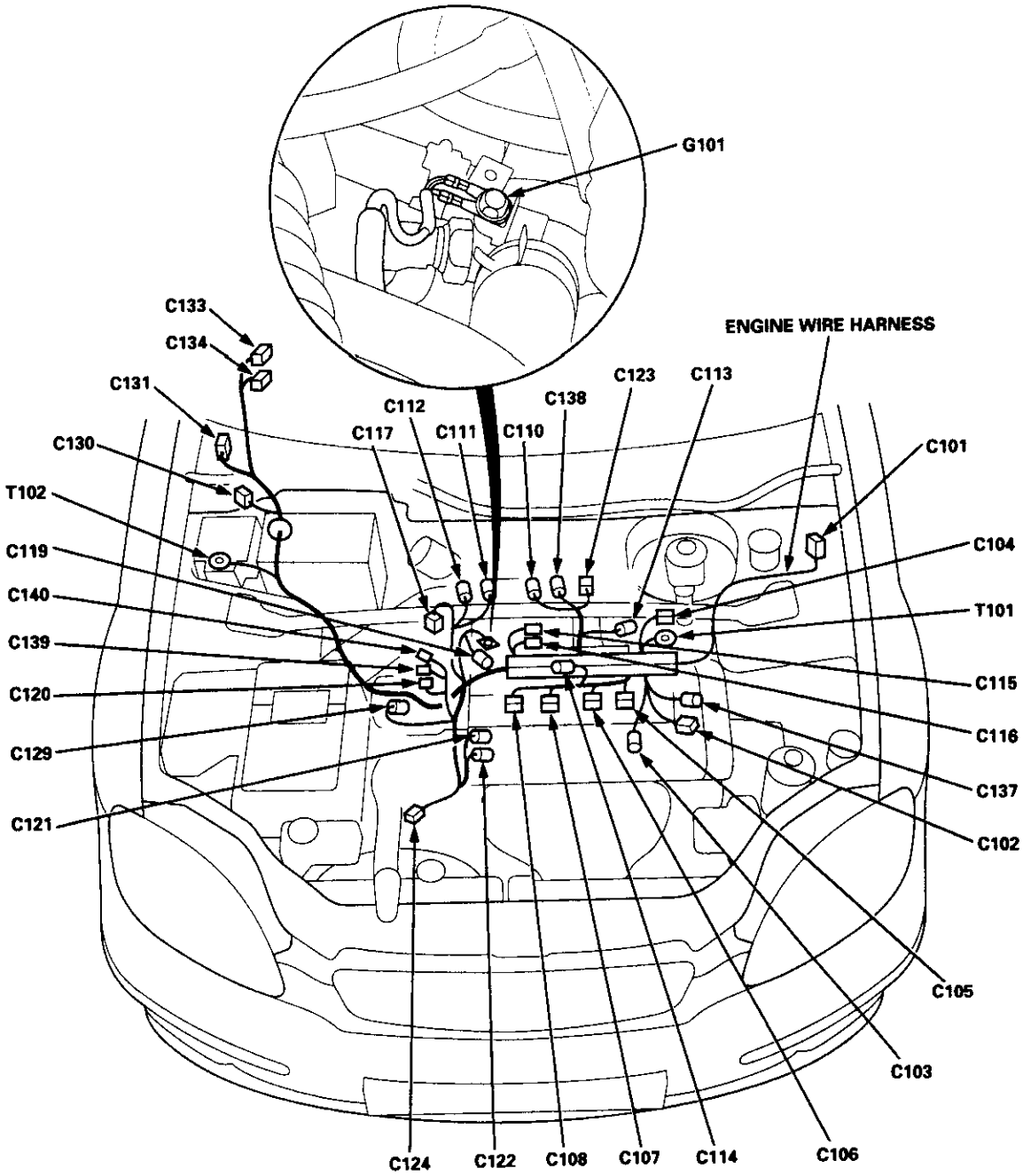
G101
C133
C134
C131
C130
T102
C119
C140
C139
C120
C129
C121
C112
C117
C111
C110
C138
C123
C113
ENGINE WIRE HARNESS
C101
C104
T101
C115
C116
C137
C102
C105
C103
C124
C122
C108
C107
C114
C106

Connector Identification and Wire Harness Routing

Connector or Terminal	Number of Cavities	Location	Connects to	Notes
Engine Wire Harness (D16B5)				
C101	10-GRY	Left side of engine compartment	Main wire harness	
C102	3-GRY	Left side of engine	CKF sensor	
C103	1-CLR	Middle of engine	Engine oil pressure switch	
C104	4-GRN	Left side of engine	Alternator	
C105	2-BLK	Middle of engine	No. 1 fuel injector	
C106	2-BLK	Middle of engine	No. 2 fuel injector	
C107	2-BLK	Middle of engine	No. 3 fuel injector	
C108	2-BLK	Middle of engine	No. 4 fuel injector	
C109	3-GRY	Middle of engine	IAC valve	
C110	3-GRY	Middle of engine	TP sensor	
C111	3-GRY	Middle of engine	MAP sensor	
C112	2-BLK	Middle of engine	IAT sensor	
C113	2-GRY	Middle of engine	Power steering pressure switch	
C115	14-BLU	Middle of engine	Junction connector	
C116	14-GRY	Middle of engine	Junction connector	
C117	3-GRY	Right side of engine compartment	Vehicle speed sensor (VSS)	
C118	2-BLK	Right side of engine compartment	Countershaft speed sensor	
C119	2-GRY	Middle of engine	Engine coolant temperature switch	
C120	10-GRY	Middle of engine	Distributor	
C121	1-BLK	Middle of engine	Engine coolant temperature sending unit	
C122	2-GRY	Middle of engine	ECT sensor	
C123	4-GRY	Middle of engine	Primary HO2S (sensor 1)	
C124	2-GRY	Middle of engine	Lock-up control solenoid valves	
C125	4-GRY	Middle of engine	Secondary HO2S (sensor 2)	
C126	2-BLK	Middle of engine	Mainshaft speed sensor	
C127	2-BLK	Middle of engine	Linear solenoid	
C128	2-GRY	Middle of engine	Shift control solenoid valves	
C129	1-BLK	Right side of engine	Starter solenoid	
C130	20-BRN	Under right side of dash	Junction connector	
C131	22-GRN	Behind right kick panel	Main wire harness	
C132	32-GRY	Below right front footrest	PCM connector A	
C133	25-GRY	Below right front footrest	PCM connector B	
C134	31-BLU	Below right front footrest	PCM connector C	
C135	16-GRY	Below right front footrest	PCM connector D	
C136	8-GRY	Left side of engine compartment	Main wire harness	
C139	1-GRY	Middle of engine	VTEC solenoid valve	
C140	2-GRY	Middle of engine	VTEC pressure switch	
C144	6-GRY	Middle of engine	EGR valve	
C150	8-LT GRN	Left side of engine compartment	Main wire harness	
C151	2-GRY	Middle of engine	Fuel temperature sensor	
C152	2-BLK	Right side of engine compartment	Fuel pressure regulator shut-off solenoid valve	
C153	3-N/A	Right side of engine compartment	Fuel pressure sensor	
T101		Left side of engine	Alternator	
T102		Right side of engine compartment	Under-hood fuse/relay box	
G101		Right side of engine	Engine ground, via engine wire harness	

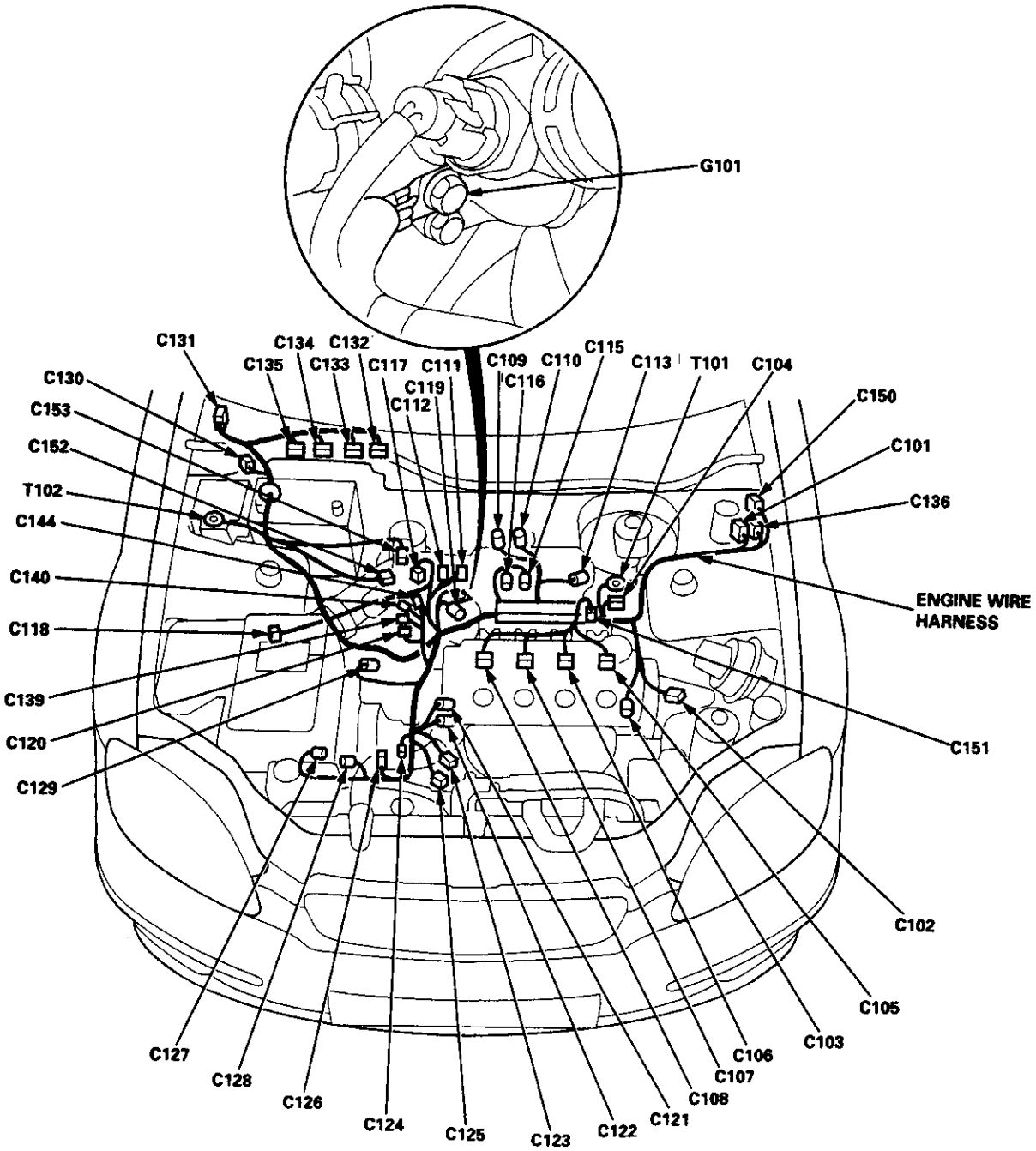
G101
C131
C134
C132
C135
C133
C117
C111
C119
C112
C109
C110
C116
C115
C113
T101
C104
C130
C153
C152
T102
C144
C140
C118
C139
C120
C129
C150
C101
C136
ENGINE WIRE HARNESS
C151
C102
C105
C103
C106
C107
C108
C121
C122
C123
C125
C124
C126
C128
C127

Connector Identification and Wire Harness Routing

Connector or Terminal	Number of Cavities/ Color	Location	Connects to	Notes

Engine Compartment Wire Harness

C201	10-BLU	Left side of engine compartment	Main wire harness	
C202	6-GRY	Left side of engine compartment	Main wire harness	*1
C202	2-GRY	Left side of engine compartment	Main wire harness	*2
C203	4-GRY	Left side of engine compartment	Cruise control actuator	*1
C204	2-GRN	Behind front bumper	Windshield washer motor	
C205	2-BRN/WHT	Behind front bumper	Rear window washer motor	
C206	3-GRY	Left side of engine compartment	Left front turn signal/parking light	
C207	1-BRN	Behind front bumper	Front fog light	Optional
C208	3	Left side of engine compartment	Left headlight	
C209	4-GRY	Left front of engine compartment	A/C wire harness	
C210	2-GRY	Behind front bumper	Horn	'96-'97 models
C210	1-BLU or BLK	Behind front bumper	Horn	'98-'00 models
C211	2-GRY	Right front of engine compartment	Radiator fan motor	
C212	3-BLK	Right side of engine compartment	Right headlight	
C213	3-GRY	Right side of engine compartment	Right front turn signal/parking light	
C214	8-GRY	Right side of engine compartment	Main wire harness	
C215	2-GRY	Behind front bumper	Washer level switch	Canada '99-'00 models
G201		Right side of engine compartment	Body ground, via engine compartment wire harness	
G202		Left side of engine compartment	Body ground, via engine compartment wire harness	

*1: With cruise control
*2: Without cruise control

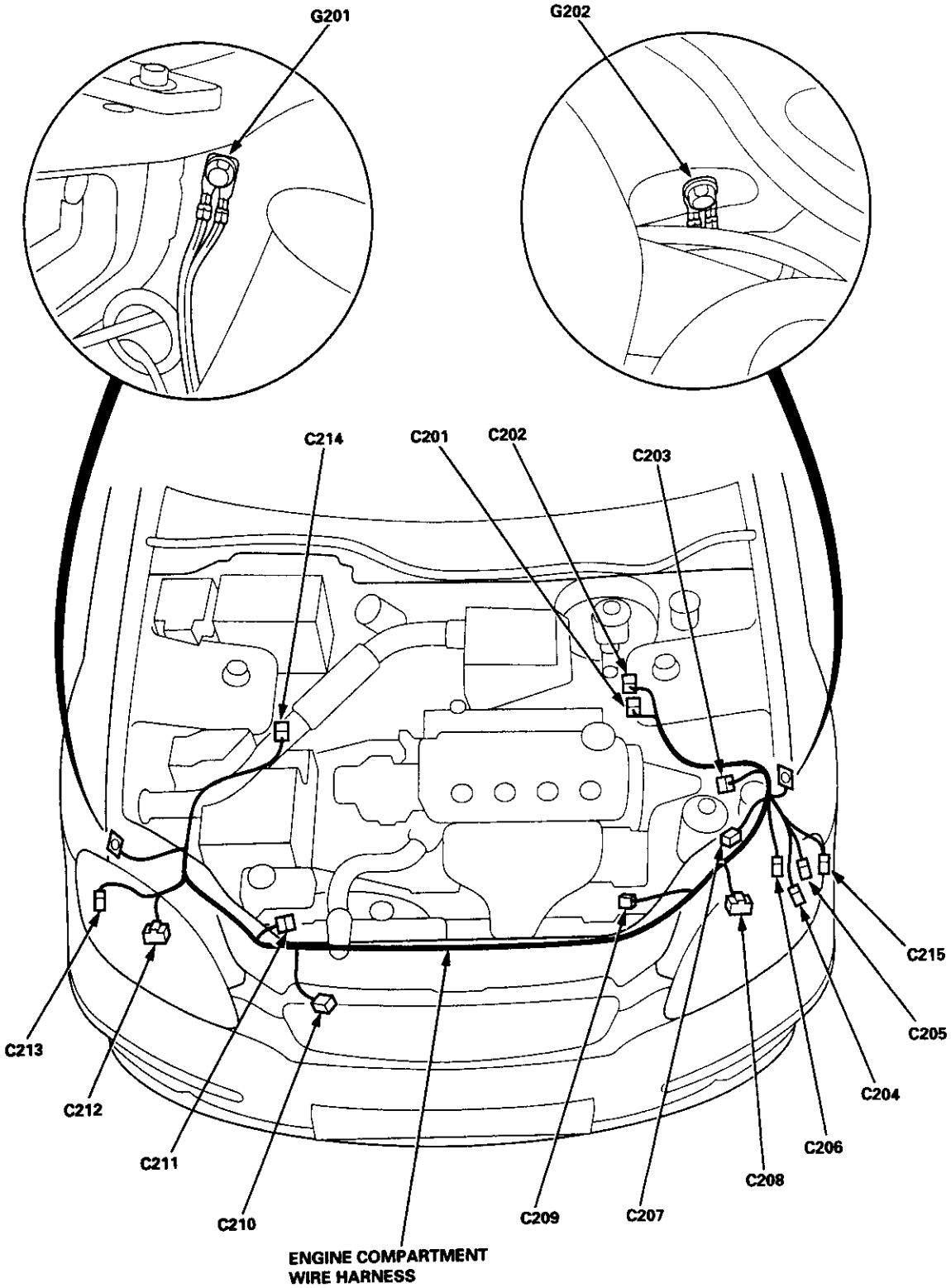
G201
G202
C214
C201
C202
C203
C215
C205
C204
C206
C208
C207
C209
C210
C211
C212
C213
ENGINE COMPARTMENT
WIRE HARNESS

Connector Identification and Wire Harness Routing

Connector or Terminal	Number of Cavities/ Color	Location	Connects to	Notes

Main Wire Harness (Left side of engine compartment branch)

C101	10-GRY	Left side of engine compartment	Engine wire harness	
C136	14-GRY	Left side of engine compartment	Engine wire harness	*1
C136	8-GRY	Left side of engine compartment	Engine wire harness	*2, *5
C150	8-LT GRN	Left side of engine compartment	Engine compartment wire harness	*5
C201	10-BLU	Left side of engine compartment	Engine compartment wire harness	
C202	6-GRY	Left side of engine compartment	Engine compartment wire harness	*3
C202	2-GRY	Left side of engine compartment	Engine compartment wire harness	*4
C301	5-GRY	Left side of engine compartment	Windshield wiper motor	
C302	2-NAT	Left side of engine compartment	Test tachometer connector	
C304	3-N/A	Left side of engine compartment	Daytime running lights resistor	Canada
C306	1-BLK	Left side of engine compartment	Brake fluid level switch (+)	
C307	1-BLK	Left side of engine compartment	Brake fluid level switch (–)	
C310	2-ORN	Left side of engine compartment	Left front ABS wheel sensor	ABS

*1: '96-'98 A/T with D16Y5 engine
*2: '96-'98 A/T with D16Y7/D16Y8 engines
*3: With cruise control
*4: Without cruise control
*5: GX model

Main Wire Harness (Right side of engine compartment branch)

C214	8-GRY	Right side of engine compartment	Engine compartment wire harness	
C351	11-GRY	Right side of engine compartment	Under-hood fuse/relay box	
C352	9-GRY	Right side of engine compartment	Under-hood fuse/relay box	
C353	5-BRN	Right side of engine compartment	Under-hood fuse/relay box	
C354	3-GRY	Right side of engine compartment	ELD unit	USA
C356	3-ORN	Right side of engine compartment	Under-hood ABS fuse/relay box	ABS
C357	2-ORN	Right side of engine compartment	Under-hood ABS fuse/relay box	ABS
C358	2-ORN	Right side of engine compartment	Right front ABS wheel sensor	ABS
C359	10-ORN	Right side of engine compartment	ABS modulator unit	ABS
C360	2-ORN	Right side of engine compartment	ABS pump motor	ABS
C361	2-BRN	Right side of engine compartment	EVAP control canister vent shut valve	*1
G403		Right side of engine compartment	Body ground, via main wire harness	ABS

*1: '99-'00 models except GX model

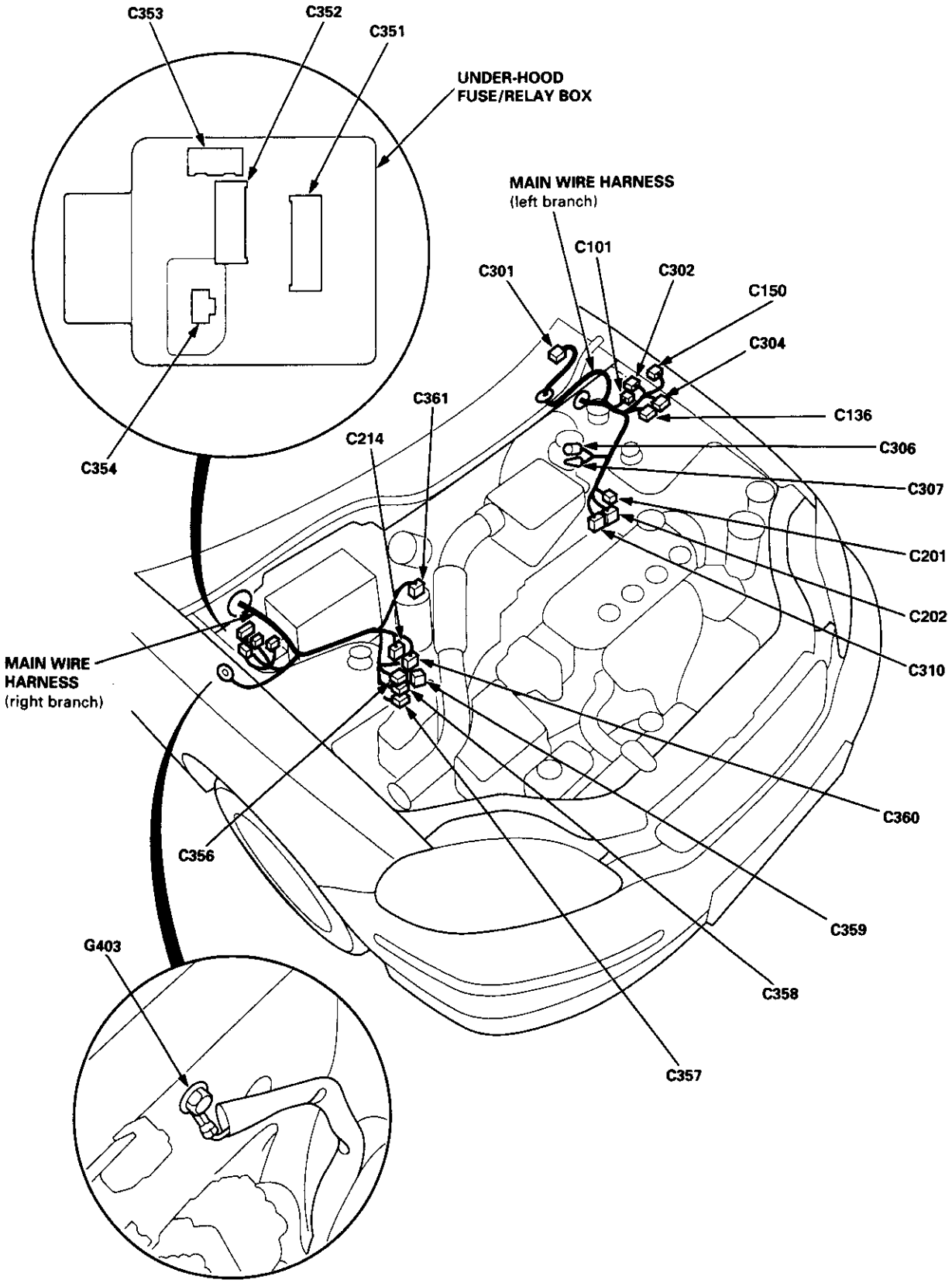
C353
C352
C351
UNDER-HOOD
FUSE/RELAY BOX
MAIN WIRE HARNESS
(left branch)
C101
C301
C302
C150
C304
C361
C136
C214
C306
C354
C307
C201
C202
C310
MAIN WIRE
HARNESS
(right branch)
C360
C356
C359
G403
C358
C357

Connector Identification and Wire Harness Routing

Connector or Terminal	Number of Cavities/ Color	Location	Connects to	Notes
Main Wire Harness (Left side of dash and floor branch): '96-'97 models				
C401	14-GRY	Behind left kick panel	Floor wire harness	
C402	4-ORN	Behind left kick panel	Floor wire harness	ABS
C403	4-NAT	Under left side of dash	Light flasher relay connector (Security)	Optional
C404	14-GRY	Under left side of dash	Cruise control unit	
C405	4-NAT	Under left side of dash	DRL control unit connector A	Canada
C406	8-GRY	Under left side of dash	DRL control unit connector B	Canada
C407	2-GRY	Under left side of dash	Roof wire harness	*2
C407	2-GRY	Under left side of dash	Moonroof wire harness	*4
C408	1-BRN	Under left side of dash	Front fog light connector	Optional
C409	10-WHT	Behind under-dash fuse/relay box	Integrated control unit	
C410	12-GRY	Above under-dash fuse/relay box	Dashboard wire harness	A/T
C411	24-BLU	Above under-dash fuse/relay box	Dashboard wire harness	
C412	3-YEL	Above under-dash fuse/relay box	SRS main harness	
C413	16-GRY	Under left side of dash	Data link connector	
C414	4-BLU	Under left side of dash	Starter cut relay	M/T
C415	7-BRN	Above under-dash fuse/relay box	Ignition switch	
C416	6-NAT	Under left side of dash	Security starter cut relay connector	Optional
C417	2-N/A	Under left side of dash	Clutch switch	*5
C418	2-YEL	Under left side of dash	Clutch interlock switch	M/T
C419	18-GRN	Behind under-dash fuse/relay box	Under-dash fuse/relay box	
C420	20-GRN	Behind under-dash fuse/relay box	Under-dash fuse/relay box	
C421	18-GRN	Behind under-dash fuse/relay box	Under-dash fuse/relay box	
C422	7-GRN	Front of under-dash fuse/relay box	Under-dash fuse/relay box	
C423	6-GRN	Front of under-dash fuse/relay box	Under-dash fuse/relay box	
C424	4-NAT	Under left side of dash	Horn relay	
C425	4-WHT	Under left side of dash	Brake switch	
C426	8-WHT	Behind steering column cover	Combination wiper switch connector A	
C427	6-WHT	Behind steering column cover	Combination wiper switch connector B	
C428	4-NAT	Behind steering column cover	Combination light switch connector A	
C429	7-NAT	Behind steering column cover	Combination light switch connector B	
C430	3-GRY	Under left side of dash	Cable reel	
C431	8-GRY	Under left side of dash	Interlock control unit	A/T
C432	4-GRY	Below front console	Secondary heated oxygen sensor sub-harness	*6
C433	14-GRY	Below front console	A/T gear position switch	A/T
C434	2-GRY	Below front console	Shift lock solenoid	A/T
C435	4-GRY	Below front console	Park pin switch and A/T gear position console light	A/T
C437	26-GRY	Behind left kick panel	TCM connector A	CVT
C438	22-GRY	Behind left kick panel	TCM connector B	CVT
C439	1-GRN	Behind under-dash fuse/relay box	Under-dash fuse/relay box	
G401		Left kick panel	Body ground, via main wire harness	

*2: Without moonroof
*4: With moonroof
*5: M/T (with cruise control or for D16Y5 engine)
*6: With secondary heated oxygen sensor (HO2S)

'96-'97 models:

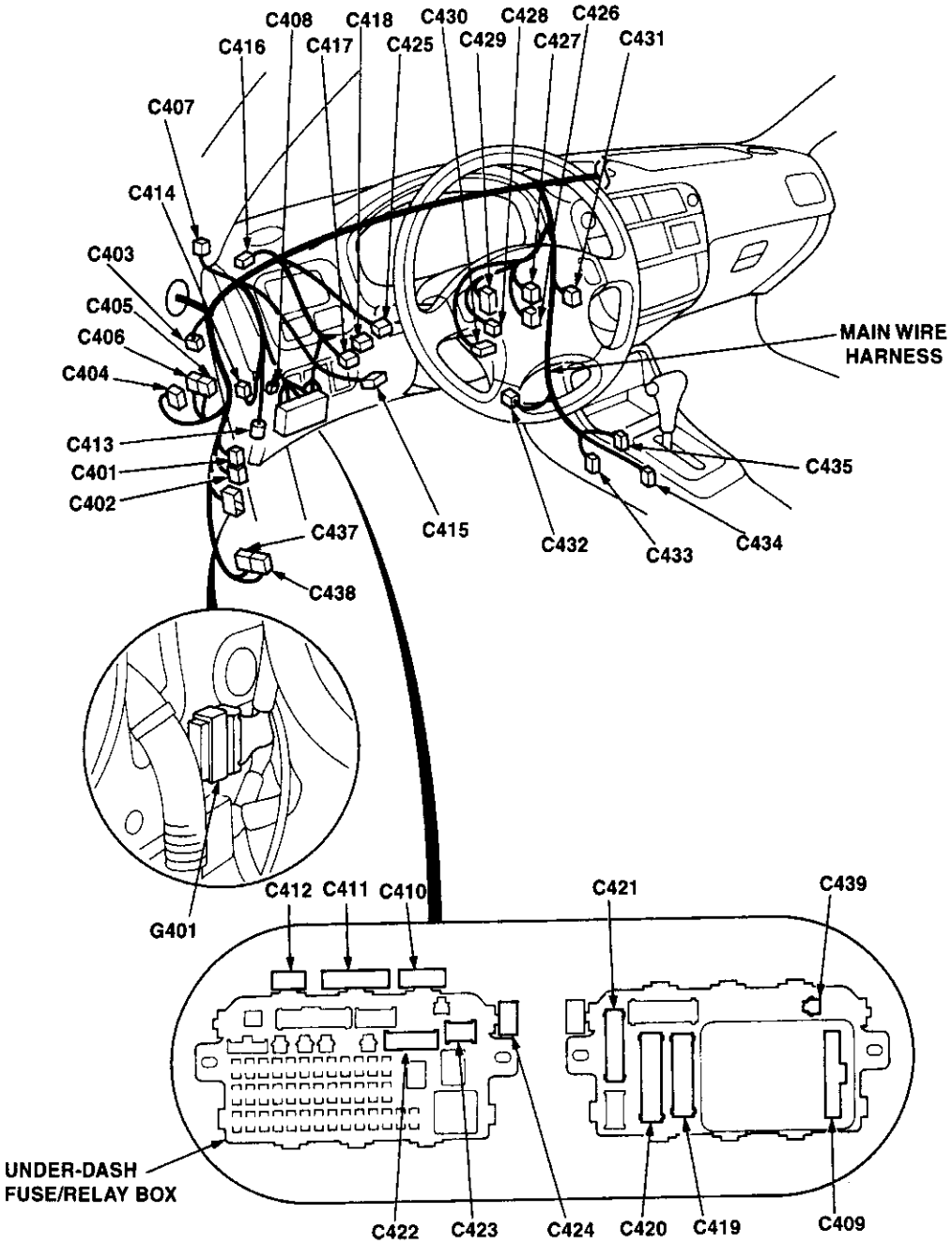
C408
C418
C430
C428
C426
C416
C417
C425
C429
C427
C431
C407
C414
C403
C405
C406
C404
MAIN WIRE HARNESS
C413
C401
C402
C435
C437
C415
C432
C433
C434
C438
G401
C412
C411
C410
C421
C439
UNDER-DASH FUSE/RELAY BOX
C422
C423
C424
C420
C419
C409

Connector Identification and Wire Harness Routing

Connector or Terminal	Number of Cavities/ Color	Location	Connects to	Notes

Main Wire Harness (Left side of dash and floor branch): '98 model and all GX models

C401	14-GRY	Behind left kick panel	Floor wire harness	
C402	4-ORN	Behind left kick panel	Floor wire harness	ABS
C403	4-NAT	Under left side of dash	Light flasher relay connector (Security)	Optional
C404	14-BLU	Under left side of dash	Cruise control unit	
C405	4-NAT	Under left side of dash	DRL control unit connector A	Canada
C406	8-GRY	Under left side of dash	DRL control unit connector B	Canada
C407	2-GRY	Under left side of dash	Roof wire harness	*2
C407	2-GRY	Under left side of dash	Moonroof wire harness	*4
C407	6-GRY	Under left side of dash	Roof wire harness	*7
C408	1-BRN	Under left side of dash	Front fog light connector	Optional
C409	10-WHT	Behind under-dash fuse/relay box	Integrated control unit	
C410	12-GRY	Above under-dash fuse/relay box	Dashboard wire harness	A/T
C411	24-BLU	Above under-dash fuse/relay box	Dashboard wire harness	
C412	3-YEL	Above under-dash fuse/relay box	SRS main harness	
C413	16-GRY	Under left side of dash	Data link connector	
C414	5-BLK	Under-dash relay box	Starter cut relay	M/T
C415	7-BRN	Above under-dash fuse/relay box	Ignition switch	
C416	6-NAT	Under left side of dash	Security starter cut relay connector	Optional
C417	2-N/A	Under left side of dash	Clutch switch	*5
C418	2-YEL	Under left side of dash	Clutch interlock switch	M/T
C419	18-GRN	Behind under-dash fuse/relay box	Under-dash fuse/relay box	
C420	20-GRN	Behind under-dash fuse/relay box	Under-dash fuse/relay box	
C421	18-GRN	Behind under-dash fuse/relay box	Under-dash fuse/relay box	
C422	7-GRN	Front of under-dash fuse/relay box	Under-dash fuse/relay box	
C423	6-GRN	Front of under-dash fuse/relay box	Under-dash fuse/relay box	
C424	5-BLK	Under-dash relay box	Horn relay	
C425	4-WHT	Under left side of dash	Brake switch	
C426	8-WHT	Behind steering column cover	Combination wiper switch connector A	
C427	6-WHT	Behind steering column cover	Combination wiper switch connector B	
C428	4-NAT	Behind steering column cover	Combination light switch connector A	
C429	7-NAT	Behind steering column cover	Combination light switch connector B	
C430	3-GRY	Under left side of dash	Cable reel	
C431	8-GRY	Under left side of dash	Interlock control unit	A/T
C432	4-GRY	Below front console	Secondary heated oxygen sensor sub-harness	*6
C433	14-GRY	Below front console	A/T gear position switch	A/T
C434	2-GRY	Below front console	Shift lock solenoid	A/T
C435	4-GRY	Below front console	Park pin switch and A/T gear position console light	A/T
C437	26-GRY	Behind left kick panel	TCM connector A	CVT
C438	22-GRY	Behind left kick panel	TCM connector B	CVT
C439	1-GRN	Behind under-dash fuse/relay box	Under-dash fuse/relay box	*7
C447	4-N/A	Under left side of dash	Fuel injector relay	*7
C448	26-GRY	Behind left kick panel	Injector control module	*7
G401		Left kick panel	Body ground, via main wire harness	

*2: Without moonroof (except GX)
*4: With moonroof
*5: M/T (with cruise control or for D16Y5 engine)
*6: With secondary heated oxygen sensor (HO2S)
*7: GX model

'98 models and all GX models:

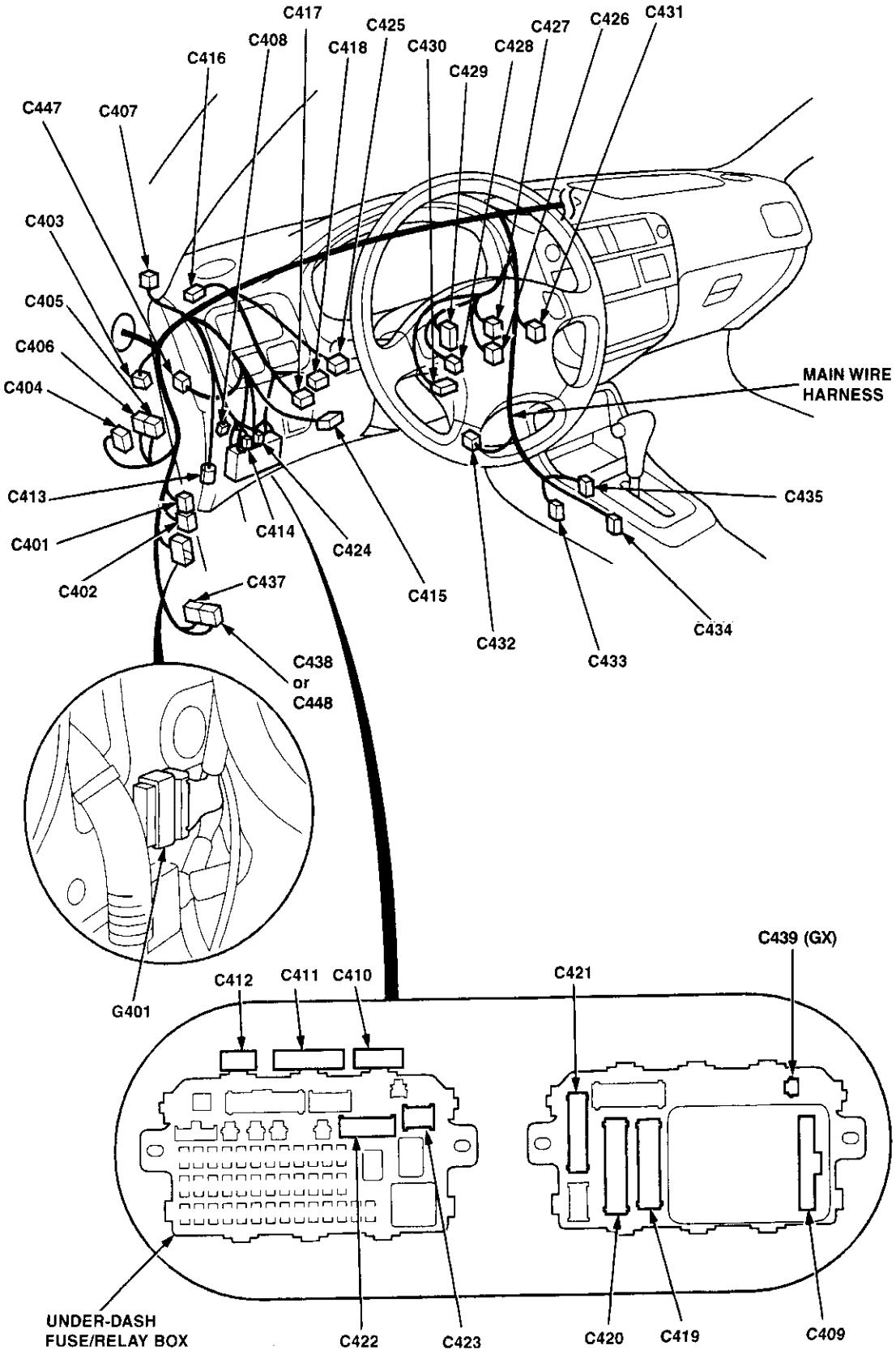

Connector Identification and Wire Harness Routing

Connector or Terminal	Number of Cavities/ Color	Location	Connects to	Notes

Main Wire Harness (Left side of dash and floor branch): '99-'00 models except GX model

C401	20-GRY	Behind left kick panel	Floor wire harness	
C402	4-ORN	Behind left kick panel	Floor wire harness	ABS
C403	4-NAT	Under left side of dash	Light flasher relay connector (Security)	Optional
C404	14-BLU	Under left side of dash	Cruise control unit	
C405	4-NAT	Under left side of dash	DRL control unit connector A	Canada
C406	8-GRY	Under left side of dash	DRL control unit connector B	Canada
C407	6-GRY	Under left side of dash	Roof wire harness	*2
C407	6-GRY	Under left side of dash	Moonroof wire harness	*4
C408	1-BRN	Under left side of dash	Front fog light connector	Optional
C409	10-WHT	Behind under-dash fuse/relay box	Integrated control unit	
C410	12-GRY	Above under-dash fuse/relay box	Dashboard wire harness	A/T
C411	24-BLU	Above under-dash fuse/relay box	Dashboard wire harness	
C412	3-YEL	Above under-dash fuse/relay box	SRS main harness	
C413	16-GRY	Under left side of dash	Data link connector	
C414	5-BLK	Under-dash relay box	Starter cut relay	M/T
C415	7-BRN	Above under-dash fuse/relay box	Ignition switch	
C416	6-NAT	Under left side of dash	Security starter cut relay connector	Optional
C417	2-N/A	Under left side of dash	Clutch switch	*5
C418	2-YEL	Under left side of dash	Clutch interlock switch	M/T
C419	18-GRN	Behind under-dash fuse/relay box	Under-dash fuse/relay box	
C420	20-GRN	Behind under-dash fuse/relay box	Under-dash fuse/relay box	
C421	18-GRN	Behind under-dash fuse/relay box	Under-dash fuse/relay box	
C422	7-GRN	Front of under-dash fuse/relay box	Under-dash fuse/relay box	
C423	6-GRN	Front of under-dash fuse/relay box	Under-dash fuse/relay box	
C424	5-BLK	Under-dash relay box	Horn relay	
C425	4-WHT	Under left side of dash	Brake switch	
C426	8-WHT	Behind steering column cover	Combination wiper switch connector A	
C427	6-WHT	Behind steering column cover	Combination wiper switch connector B	
C428	4-NAT	Behind steering column cover	Combination light switch connector A	
C429	7-NAT	Behind steering column cover	Combination light switch connector B	
C430	3-GRY	Under left side of dash	Cable reel	
C431	8-GRY	Under left side of dash	Interlock control unit	A/T
C432	4-GRY	Below front console	Secondary heated oxygen sensor sub-harness	*6
C433	14-GRY	Below front console	A/T gear position switch	A/T
C434	2-GRY	Below front console	Shift lock solenoid	A/T
C435	4-GRY	Below front console	Park pin switch and A/T gear position console light	A/T
C447	22-GRN	Under left side of dash	Security control unit connector	Optional
C448	2-GRY	Under left side of dash	Security LED connector	Optional
C450	3-GRY	Under left side of dash	Valet switch connector (Security)	Optional
C451	18-GRY	Behind left kick panel	Keyless door lock control unit	w/Keyless
G401		Left kick panel	Body ground, via main wire harness	

*2: Without moonroof
*4: With moonroof
*5: M/T (with cruise control or for D16Y5 engine)
*6: With secondary heated oxygen sensor (HO2S)

'99-'00 models except GX model:

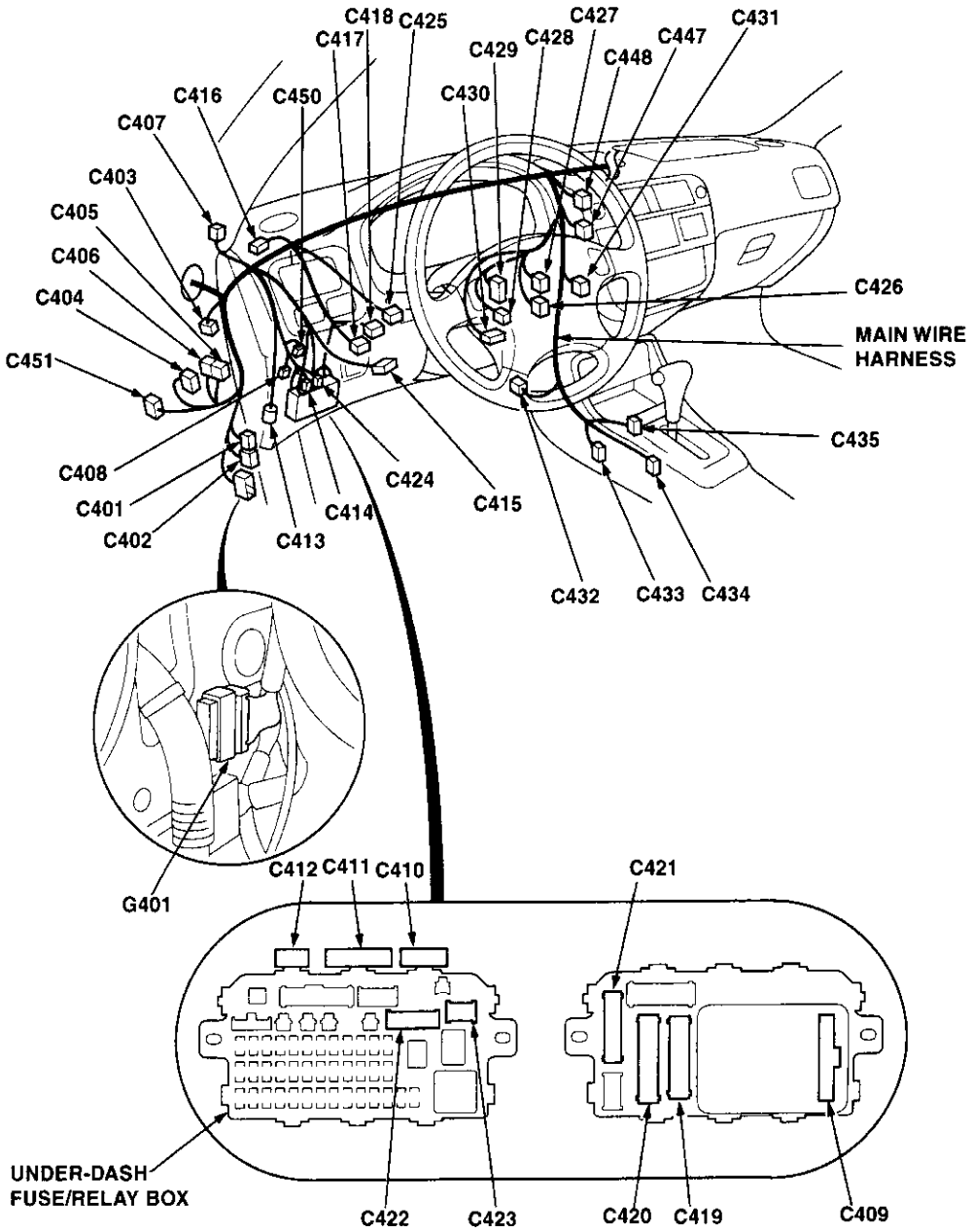

Connector Identification and Wire Harness Routing

Connector or Terminal	Number of Cavities/ Color	Location	Connects to	Notes
Main Wire Harness (Right side of dash branch)				
C131	22-GRN	Behind right kick panel	Engine wire harness	
C440	16-BLU	Under middle of dash	Heater sub-harness A	
C441	2-BLU	Under right side of dash	Service check connector	
C442	20-WHT or GRN	Under right side of dash	Junction connector	
C443	7-BRN	Under right side of dash	PGM-FI main relay	
C444	22-ORN	Behind right kick panel	ABS control unit connector A	
C445	26-ORN	Behind right kick panel	ABS control unit connector B	
C452	32-GRY	Below right front footrest	ECM/PCM connector A	*1
G402		Right kick panel	Body ground, via main wire harness	

*1: '99-'00 models except D16Y5 with M/T and D16B5

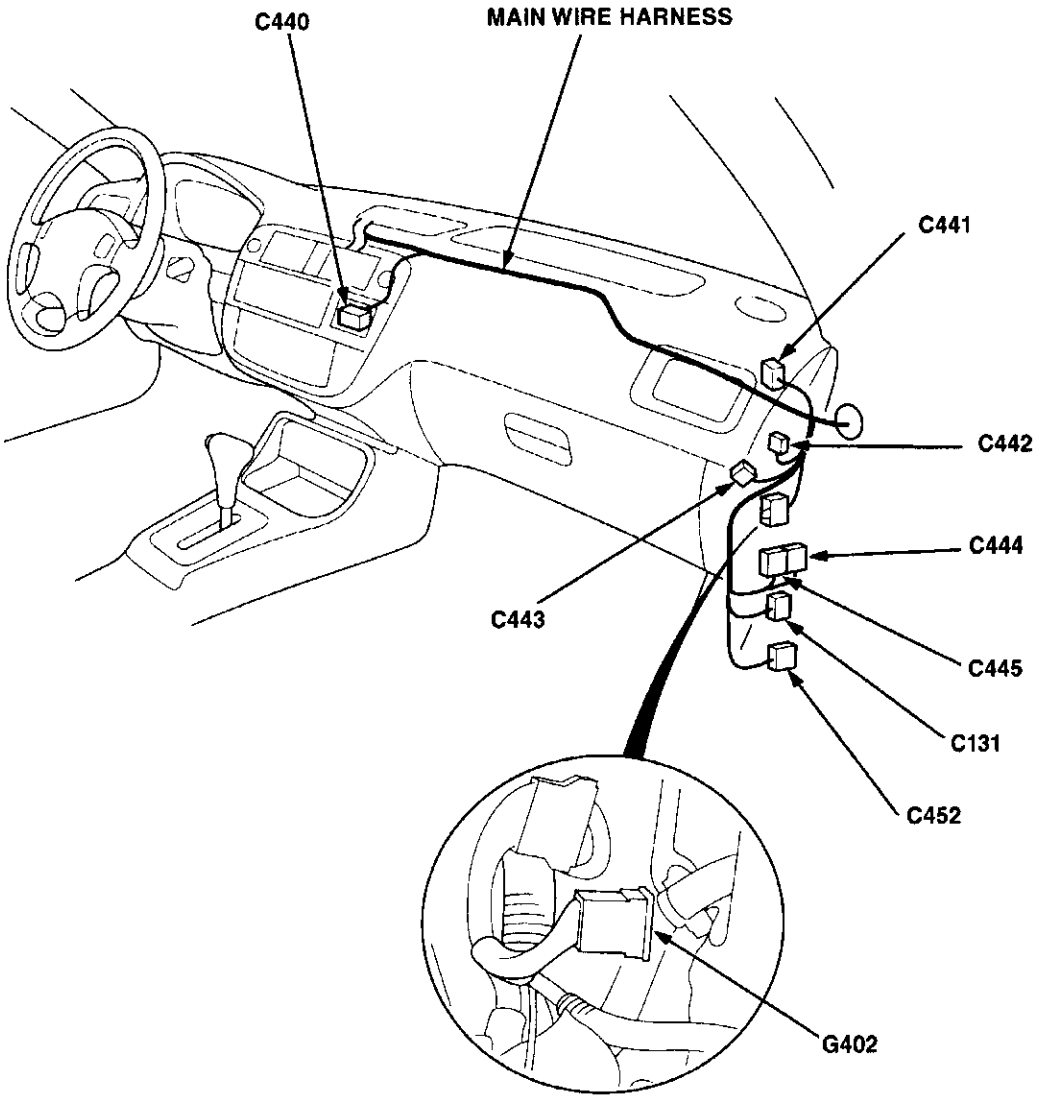

Connector or Terminal	Number of Cavities/ Color	Location	Connects to	Notes

Dashboard Wire Harness

C410	12-GRY	Above under-dash fuse/relay box	Main wire harness	A/T
C411	24-BLU	Above under-dash fuse/relay box	Main wire harness	
C501	20-GRN	Front of under-dash fuse/relay box	Under-dash fuse/relay box	
C503	16-BLU	Below under-dash fuse/relay box	Floor wire harness	
C505	5-GRY	Left of steering wheel	Cruise main switch	
C506	3-GRY	Left of steering wheel	Dash lights brightness controller	
C507	20-WHT or BLU	Below gauges	Junction connector	
C508	5-YEL	Left side of dash	Gauge assembly connector F	SRS
C509	5-GRN	Left side of dash	Gauge assembly connector E	*1
C510	14-GRN	Left side of dash	Gauge assembly connector A	A/T
C511	16-BLU	Left side of dash	Gauge assembly connector B	
C512	13-BLU	Left side of dash	Gauge assembly connector C	
C513	10-GRY	Center of dash	Hazard warning switch	
C514	5-N/A	Center of dash	Rear window defogger switch	*2
C515	16-GRN	Behind middle of dash	Audio unit connector B (Keyless receiver circuit)	*2
C515	20-N/A	Behind middle of dash	Audio unit	*3
C516	22-GRN	Behind middle of dash	Security control unit	Optional *2
C517	16-GRY	Behind middle of dash	Audio unit connector A	*2
C518	5-N/A	Behind middle of dash	Security LED connector	Optional (*2 Canada)
C519	2-BLK	Behind middle of dash	Accessory power outlet	
C520	5-ORN	Left side of dash	Gauge assembly connector D	ABS
G501		Under middle of dash	Body ground, via dashboard wire harness	

*1: With shift-up indicator or cruise control system ('96-'97 models)
With cruise control system ('98-'00 models)

*2: '96-'98 models
*3: '99-'00 models

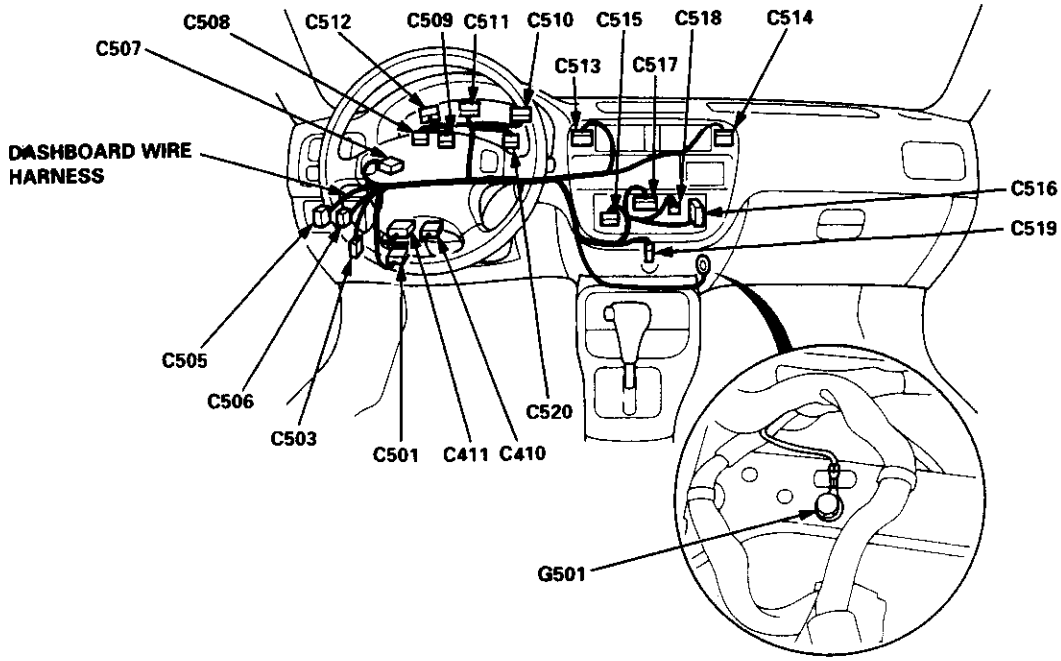

Connector Identification and Wire Harness Routing

Connector or Terminal	Number of Cavities/ Color	Location	Connects to	Notes
Floor Wire Harness (Coupe/Hatchback)				
C401	14-GRY	Behind left kick panel	Main wire harness	*4
C401	20-GRY	Behind left kick panel	Main wire harness	*5
C402	4-ORN	Behind left kick panel	Main wire harness	ABS
C503	16-BLU	Below under-dash fuse/relay box	Dashboard wire harness	
C551	16-GRN	Behind under-dash fuse/relay box	Under-dash fuse/relay box	
C552	8-GRN	Behind under-dash fuse/relay box	Under-dash fuse/relay box	
C556	25-GRY	Driver's door	Driver's door wire harness	*1
C556	2-NAT	Driver's door	Driver's door wire harness	*2
C557	25-GRY	Passenger's door	Passenger's door wire harness	*1
C557	2-NAT	Passenger's door	Passenger's door wire harness	*2
C558	1-WHT	Below center console	Parking brake switch	
C559	2-GRY	Left side of floor	Driver's seat belt switch	
C560	1-WHT	Left B-pillar	Driver's door switch	
C561	2-ORN	Below left side of rear seat	Left rear ABS wheel sensor	ABS
C562	14-GRY	Left quarter panel	Rear wire harness	*4
C562	20-GRY	Left quarter panel	Rear wire harness	*5
C563	2-BRN	Left quarter panel	Rear wire harness	*4
C564	3-BRN	Top of fuel tank	Fuel tank unit	
C565	2-BRN	Top of fuel tank	Fuel pump	
C566	2-ORN	Below right side of rear seat	Right rear ABS wheel sensor	ABS
C567	1-WHT	Right B-pillar	Passenger's door switch	
C568	6-GRY	Top of fuel tank	Fuel tank pressure sensor sub-harness	*3
C569	10-GRY	Left side of dash	Power mirror switch	
G551		Left kick panel	Body ground, via floor wire harness	
G552		Left side of floor	Body ground, via floor wire harness	

*1: With power windows
*2: Without power windows
*3: With fuel tank pressure sensor
*4: '96-'98 models
*5: '99-'00 models

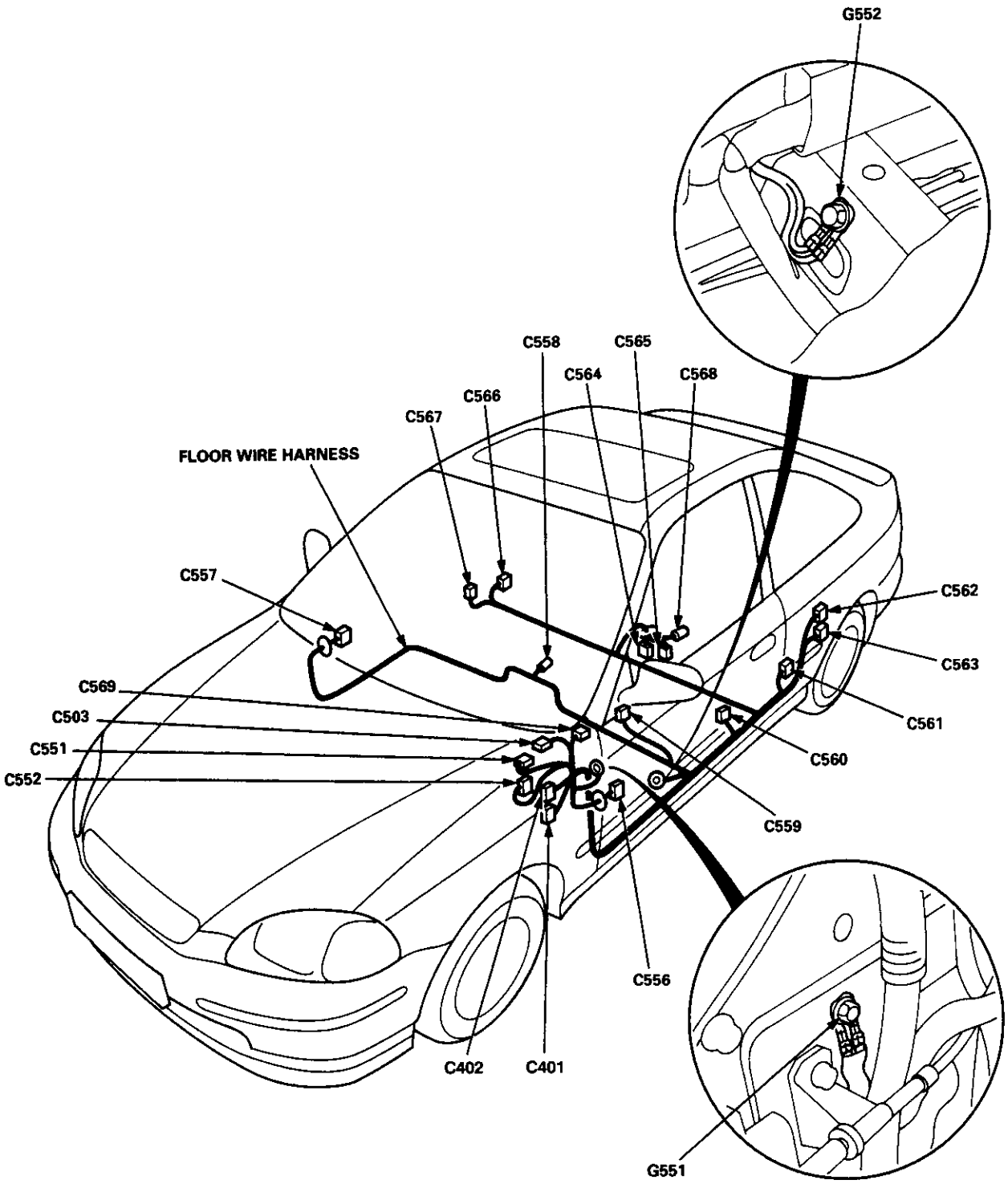
G552
C558
C565
C564
C568
C566
C567
FLOOR WIRE HARNESS
C557
C562
C563
C569
C503
C551
C552
C561
C560
C559
C556
C402
C401
G551

Connector Identification and Wire Harness Routing

Connector or Terminal	Number of Cavities/ Color	Location	Connects to	Notes

Floor Wire Harness (Sedan)

C401	14-GRY	Behind left kick panel	Main wire harness	*3, GX
C401	20-GRY	Behind left kick panel	Main wire harness	*4
C402	4-ORN	Behind left kick panel	Main wire harness	ABS
C503	16-GRN	Below under-dash fuse/relay box	Dashboard wire harness	
C551	16-GRN	Behind under-dash fuse/relay box	Under-dash fuse/relay box	
C552	8-GRN	Behind under-dash fuse/relay box	Under-dash fuse/relay box	
C556	25-GRY	Driver's door	Driver's door wire harness	*1
C556	2-NAT	Driver's door	Driver's door wire harness	*2
C557	25-GRY	Passenger's door	Front passenger's door wire harness	*1
C557	2-NAT	Passenger's door	Front passenger's door wire harness	*2
C558	1-WHT	Below center console	Parking brake switch	
C559	2-GRY	Left side of floor	Driver's seat belt switch	
C560	1-WHT	Right B-pillar	Front passenger's door switch	
C561	2-ORN	Below left side of rear seat	Left rear ABS wheel sensor	ABS
C562	8-GRY	Left C-pillar	Rear wire harness	GX
C562	16-GRY	Left C-pillar	Rear wire harness	*3
C562	20-GRY	Left C-pillar	Rear wire harness	*4
C563	2-BRN	Left C-pillar	Rear wire harness	*3, GX
C564	3-BRN	Top of fuel tank	Fuel tank unit	except GX
C565	2-BRN	Top of fuel tank	Fuel pump	except GX
C566	2-ORN	Below right side of rear seat	Right rear ABS wheel sensor	ABS
C567	1-WHT	Left B-pillar	Driver's door switch	
C568	6-GRY	Top of fuel tank	Fuel tank pressure sensor sub-harness	except GX
C569	10-GRY	Left side of dash	Power mirror switch	
C570	6-BLU	Right B-pillar	Right rear door wire harness	
C571	6-BLU	Left B-pillar	Left rear door wire harness	
C572	1-WHT	Left quarter panel	Left rear door switch	
C573	1-WHT	Right quarter panel	Right rear door switch	
C575	6-GRN	Behind left side of rear seat	Fuel sub-harness	GX
G551		Left kick panel	Body ground, via floor wire harness	
G552		Left side of floor	Body ground, via floor wire harness	

*1: With power windows
*2: Without power windows
*3: '96-'98 models except GX
*4: '99-'00 models except GX

Sedan:

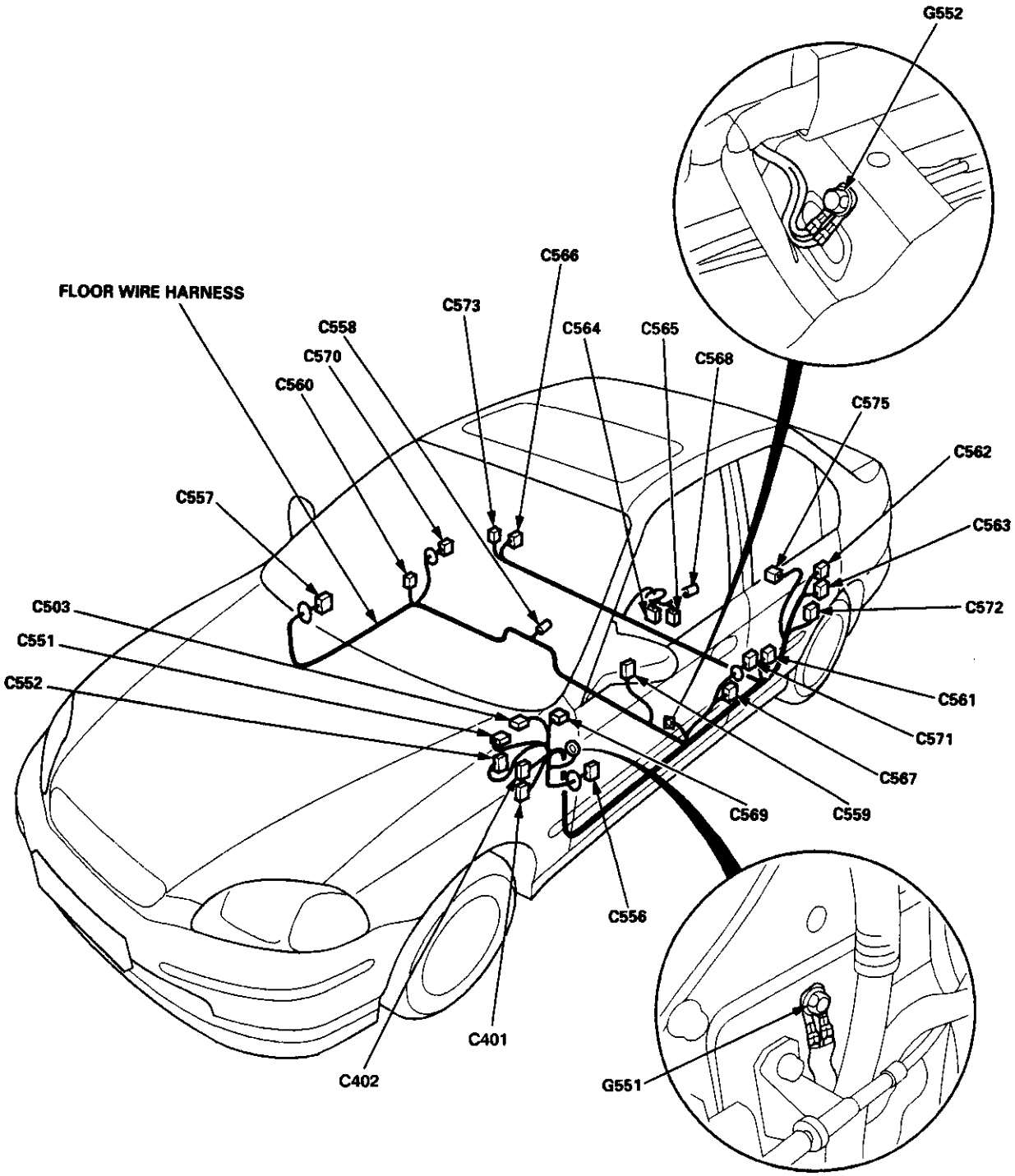
G552
C566
FLOOR WIRE HARNESS
C573
C558
C564
C565
C570
C568
C560
C575
C562
C557
C563
C503
C572
C551
C552
C561
C571
C567
C569
C559
C556
C401
C402
G551

Connector Identification and Wire Harness Routing

Connector or Terminal	Number of Cavities/ Color	Location	Connects to	Notes

Rear Wire Harness (Hatchback)

C562	14-GRY	Left quarter panel	Floor wire harness	*1
C562	20-GRY	Left quarter panel	Floor wire harness	*2
C563	2-BRN	Left quarter panel	Floor wire harness	*1
C603	2-GRY	Left quarter panel	Left rear speaker	Optional
C604	6-GRY	Left side of cargo area	Left outer taillight	
C605	6-GRY	Right side of cargo area	Right outer taillight	
C606	2-GRY	Right quarter panel	Right rear speaker	Optional
C607	6-BLU	Right quarter panel	Hatch wire harness	
C608	2-BRN	Right quarter panel	Hatch wire harness	
G601		Middle of cargo area	Body ground, via rear wire harness	

*1: '96-'98 models
*1: '99-'00 models

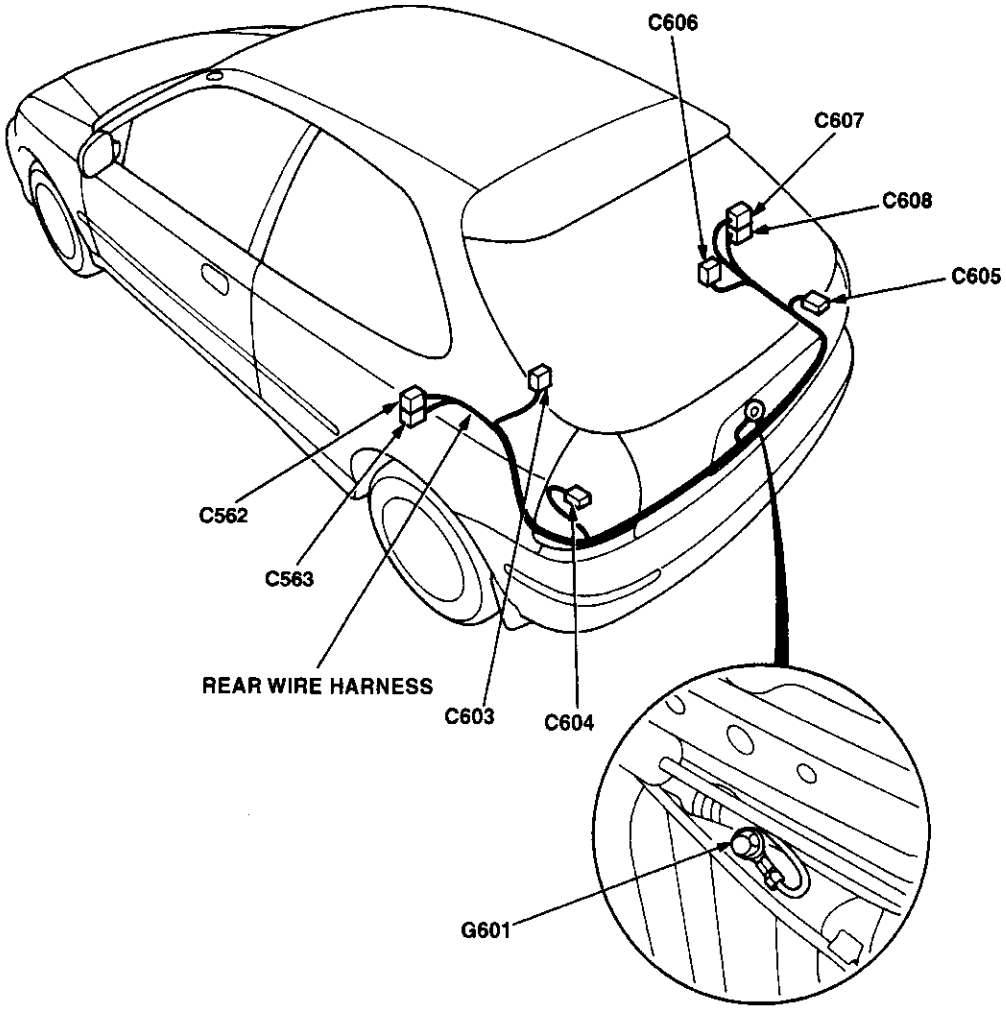

Connector or Terminal	Number of Cavities/ Color	Location	Connects to	Notes

Rear Wire Harness (Coupe: '96-'00 models/Sedan: '96-'98 models)

C562	8-GRY	Left quarter panel	Floor wire harness	GX
C562	14-GRY	Left quarter panel	Floor wire harness	*1
C562	20-GRY	Left quarter panel	Floor wire harness	*2
C563	2-BRN	Left quarter panel	Floor wire harness	'96-'98
C603	2-GRY	Left quarter panel	Left rear speaker	Optional
C604	4-GRY	Left side of trunk	Left outer taillight	
C605	4-GRY	Right side of trunk	Right outer taillight	
C606	2-GRY	Right quarter panel	Right rear speaker	Optional
C609	1-BLK	Left side of rear window	Rear window defogger (+)	
C610	2-BRN	Middle of rear shelf	High mount brake light	
C611	2-GRY	Middle of rear shelf	Trunk light	
C612	1-BLK	Right side of rear window	Rear window defogger (–)	
C613	4-GRY	Left side of trunk lid	Left inner taillight	
C614	2-BRN	Middle of trunk lid	Left license plate light	
C615	2-BLK	Middle of trunk lid	Trunk latch switch	
C616	2-BRN	Middle of trunk lid	Right license plate light	
C617	4-GRY	Right side of trunk lid	Right inner taillight	
G601		Middle of trunk	Body ground, via rear wire harness	

*1: Coupe: '96-'98 models, Sedan: '96-'98 models except GX
*2: Coupe: '99-'00 models

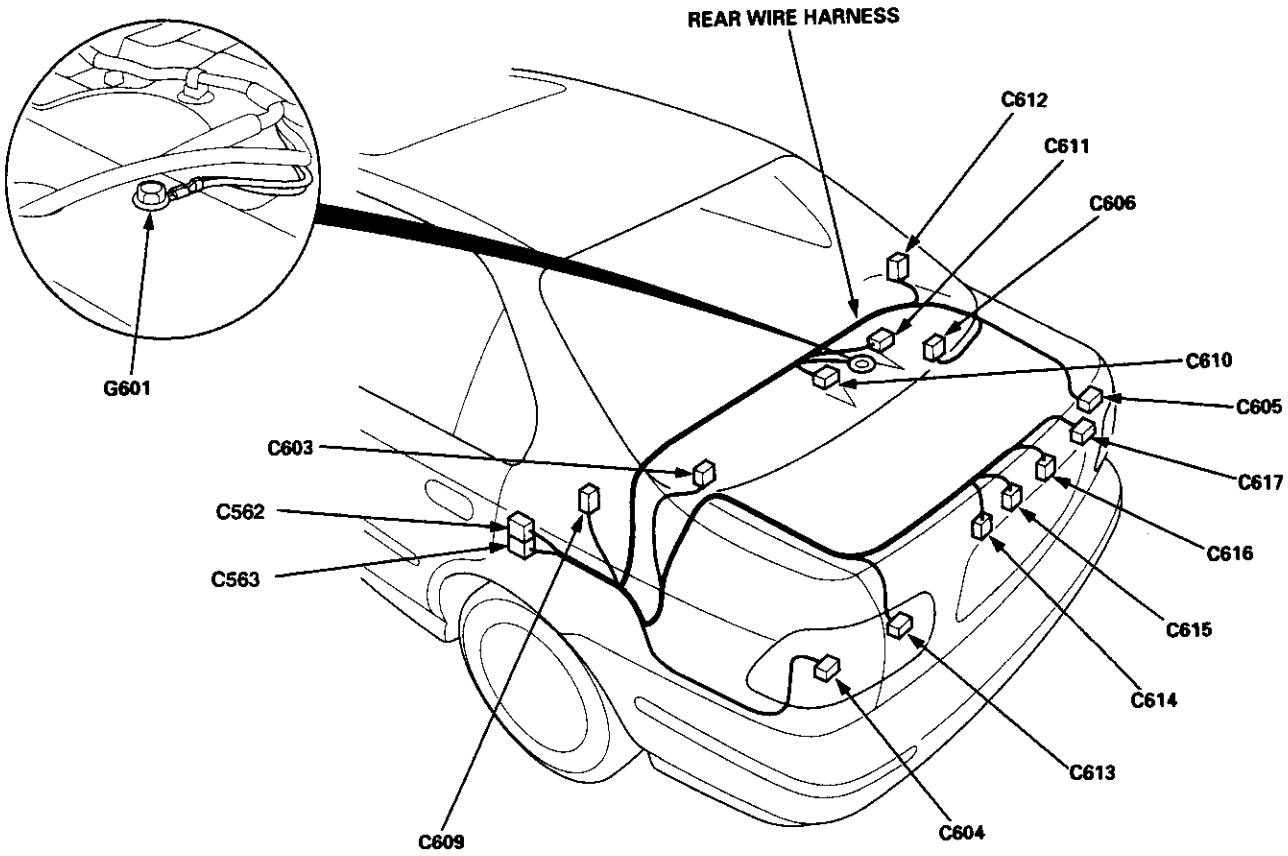

Connector Identification and Wire Harness Routing

Connector or Terminal	Number of Cavities/ Color	Location	Connects to	Notes

Rear Wire Harness (Sedan): '99-'00 models

C562	20-GRY	Left quarter panel	Floor wire harness	except GX
C562	8-GRY	Left quarter panel	Floor wire harness	GX
C563	2-BRN	Left quarter panel	Floor wire harness	GX
C603	2-GRY	Left quarter panel	Left rear speaker	Optional
C604	4-GRY	Left side of trunk	Left brake light/outer taillight	
C605	4-GRY	Right side of trunk	Right brake light/outer taillight	
C606	2-GRY	Right quarter panel	Right rear speaker	Optional
C609	1-BLK	Left side of rear window	Rear window defogger (+)	GX
C610	2-BRN	Middle of rear shelf	High mount brake light	
C611	2-GRY	Middle of rear shelf	Trunk light	
C612	1-BLK	Right side of rear window	Rear window defogger (–)	GX
C613	3-GRY	Left side of trunk lid	Left back-up light	
C614	2-GRY	Middle of trunk lid	Left license plate light	
C615	2-BLK	Middle of trunk lid	Trunk latch switch	
C616	2-GRY	Middle of trunk lid	Right license plate light	
C617	3-GRY	Right side of trunk lid	Right back-up light	
C618	2-GRY	Left side of trunk	Left rear turn signal light	
C619	2-GRY	Right side of trunk	Right rear turn signal light	
C620	2-GRY	Left side of trunk lid	Left inner taillight	
C621	2-GRY	Right side of trunk lid	Right inner taillight	
C622	1-BRN	Middle of rear shelf	Window antenna coil connector C	except GX
C623	1-BRN	Middle of rear shelf	Window antenna coil connector A	except GX
G601		Middle of trunk	Body ground, via rear wire harness	
G602		Middle of rear shelf	Body ground, via rear wire harness	except GX

Rear Window Defogger Wire (except GX)

C831	2-BRN	Middle of rear shelf	Window antenna coil connector B	
C832	1-BLK	Left side of rear window	Rear window defogger (+)	
C883	1-BLK	Right side of rear window	Rear window defogger (–)	

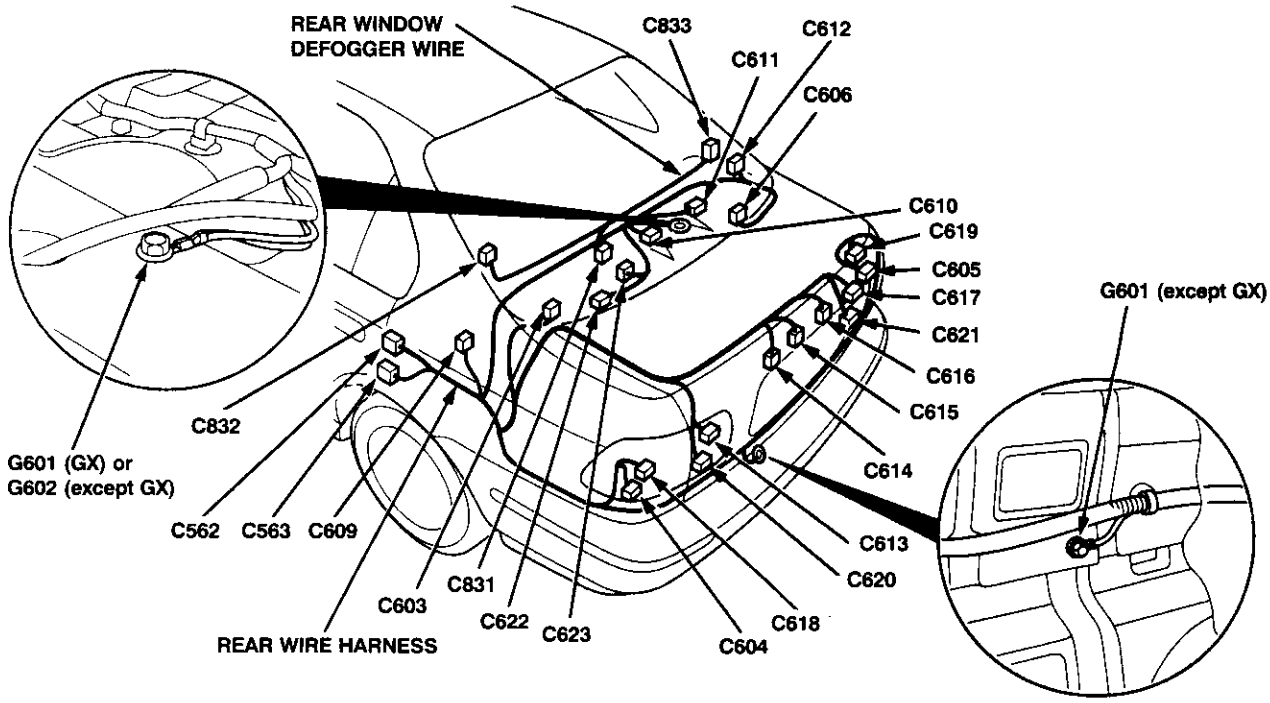

Connector or Terminal	Number of Cavities/ Color	Location	Connects to	Notes

Driver's Door Wire Harness (Coupe/Hatchback)

C556	25-GRY	Driver's door	Floor wire harness	*1
C556	2-NAT	Driver's door	Floor wire harness	*2
C632	2-GRY	Driver's door	Left front door speaker	
C633	4-GRY	Driver's door	Driver's power window motor	Coupe
C634	4-GRY	Driver's door	Driver's door lock actuator	Coupe
C635	2-GRY	Driver's door	Tweeter	Coupe
C636	12-GRY	Driver's door	Power window master switch	Coupe
C638	3-GRY	Driver's door	Driver's door lock switch	Coupe
C639	8-BLK/WHT	Inside of left power mirror	Left power mirror	Coupe
C640	12-GRY	Driver's door	Power door lock control unit	Coupe (*3)

*1: With power windows
*2: Without power windows
*3: All '96-'98 models with power door locks, '99-'00 models with power door locks but without keyless entry

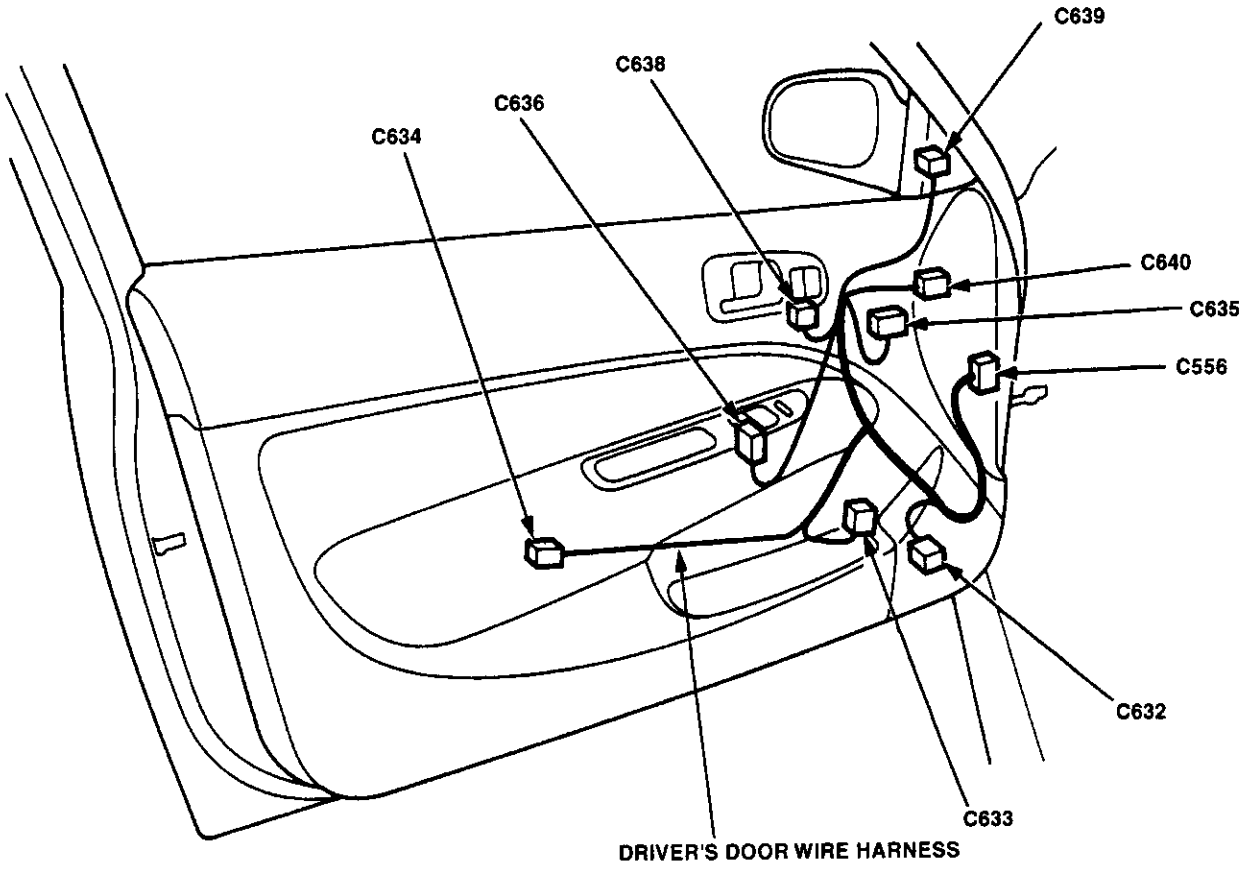

Connector Identification and Wire Harness Routing

Connector or Terminal	Number of Cavities/ Color	Location	Connects to	Notes

Passenger's Door Wire Harness (Coupe/Hatchback)

C557	25-GRY	Passenger's door	Floor wire harness	*1
C557	2-NAT	Passenger's door	Floor wire harness	*2
C652	2-GRY	Passenger's door	Right front door speaker	
C653	2-GRY	Passenger's door	Front passenger's power window motor	Coupe
C654	2-GRY	Passenger's door	Front passenger's door lock actuator	Coupe
C655	5-NAT	Passenger's door	Front passenger's power window switch	Coupe
C656	8-BLK/WHT	Inside of right power mirror	Right power mirror	Coupe
C657	2-GRY	Passenger's door	Tweeter	Coupe

*1: With power windows
*2: Without power windows

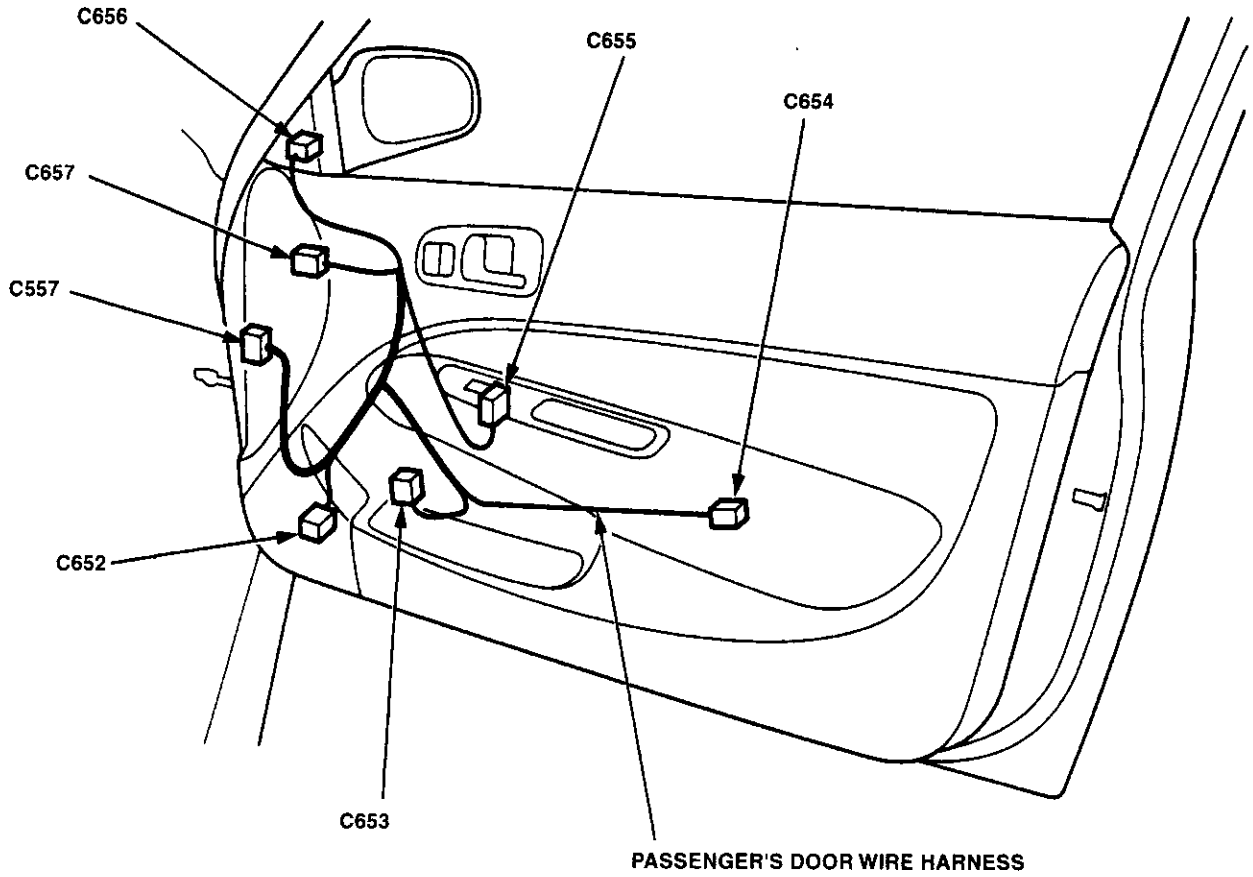

Connector or Terminal	Number of Cavities/ Color	Location	Connects to	Notes

Driver's Door Wire Harness (Sedan)

C556	25-GRY	Driver's door	Floor wire harness	*1
C556	2-NAT	Driver's door	Floor wire harness	*2
C632	2-GRY	Driver's door	Left front door speaker	
C633	4-GRY	Driver's door	Driver's power window motor	*1
C634	4-GRY	Driver's door	Driver's door lock actuator	*1
C636	16-GRY	Driver's door	Power window master switch connector A	*1
C637	1-BRN	Driver's door	Power window master switch connector B	*1
C638	3-GRY	Driver's door	Driver's door lock switch	*1
C639	8-BLK/WHT	Inside of left power mirror	Left power mirror	*1
C640	12-GRY	Driver's door	Power door lock control unit	*3

*1: With power windows
*2: Without power windows
*3: All '96-'98 models with power door locks, '99-'00 models with power door locks but without keyless entry

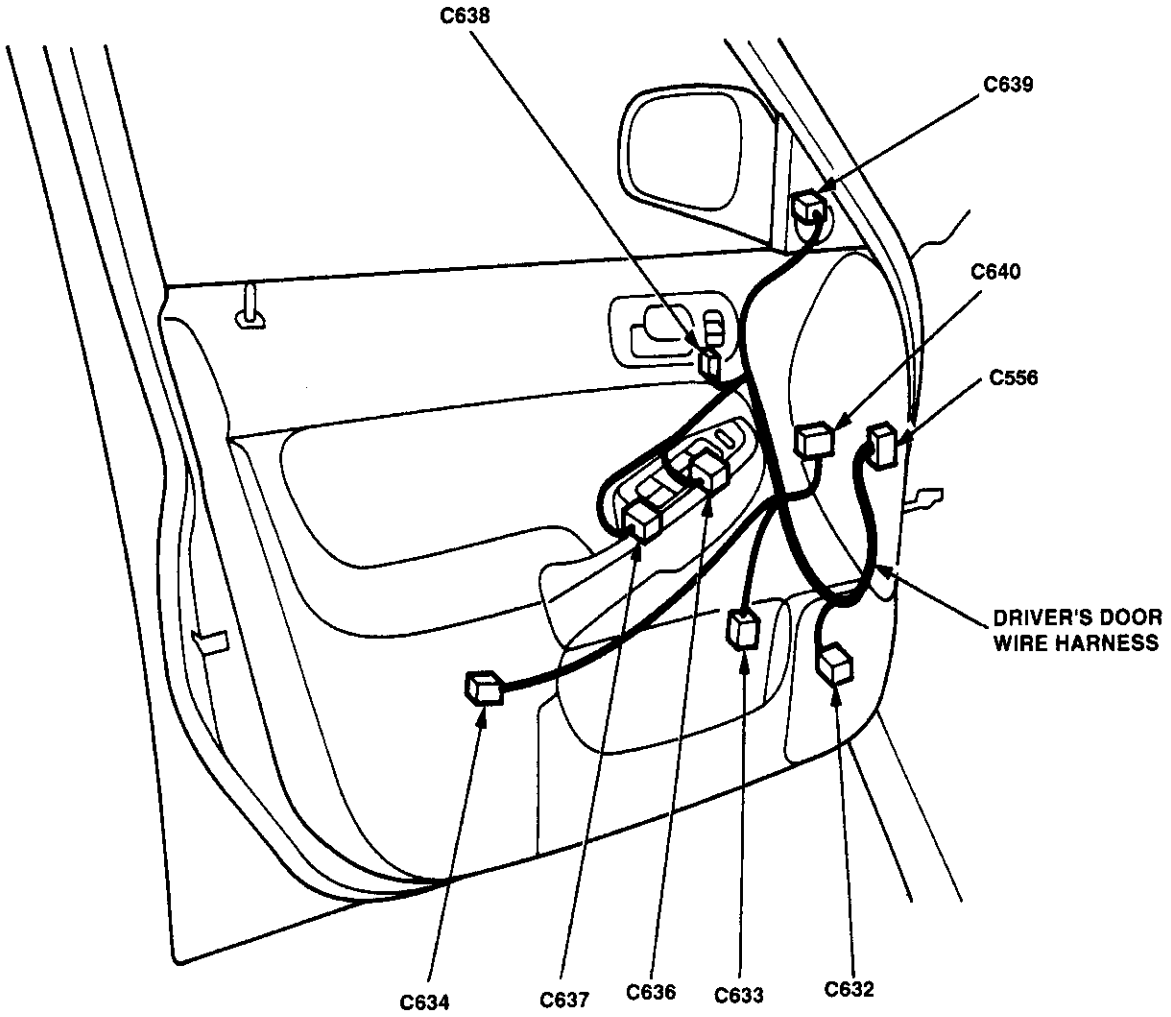

Connector Identification and Wire Harness Routing

Connector or Terminal	Number of Cavities/ Color	Location	Connects to	Notes

Front Passenger's Door Wire Harness (Sedan)

C557	25-GRY	Passenger's door	Floor wire harness	*1
C557	2-NAT	Passenger's door	Floor wire harness	*2
C652	2-GRY	Passenger's door	Right front door speaker	
C653	2-GRY	Passenger's door	Front passenger's power window motor	*1
C654	2-GRY	Passenger's door	Front passenger's door lock actuator	*1
C655	5-NAT	Passenger's door	Front passenger's power window switch	*1
C656	8-BLK/WHT	Inside of right power mirror	Right power mirror	*1

*1: With power windows
*2: Without power windows

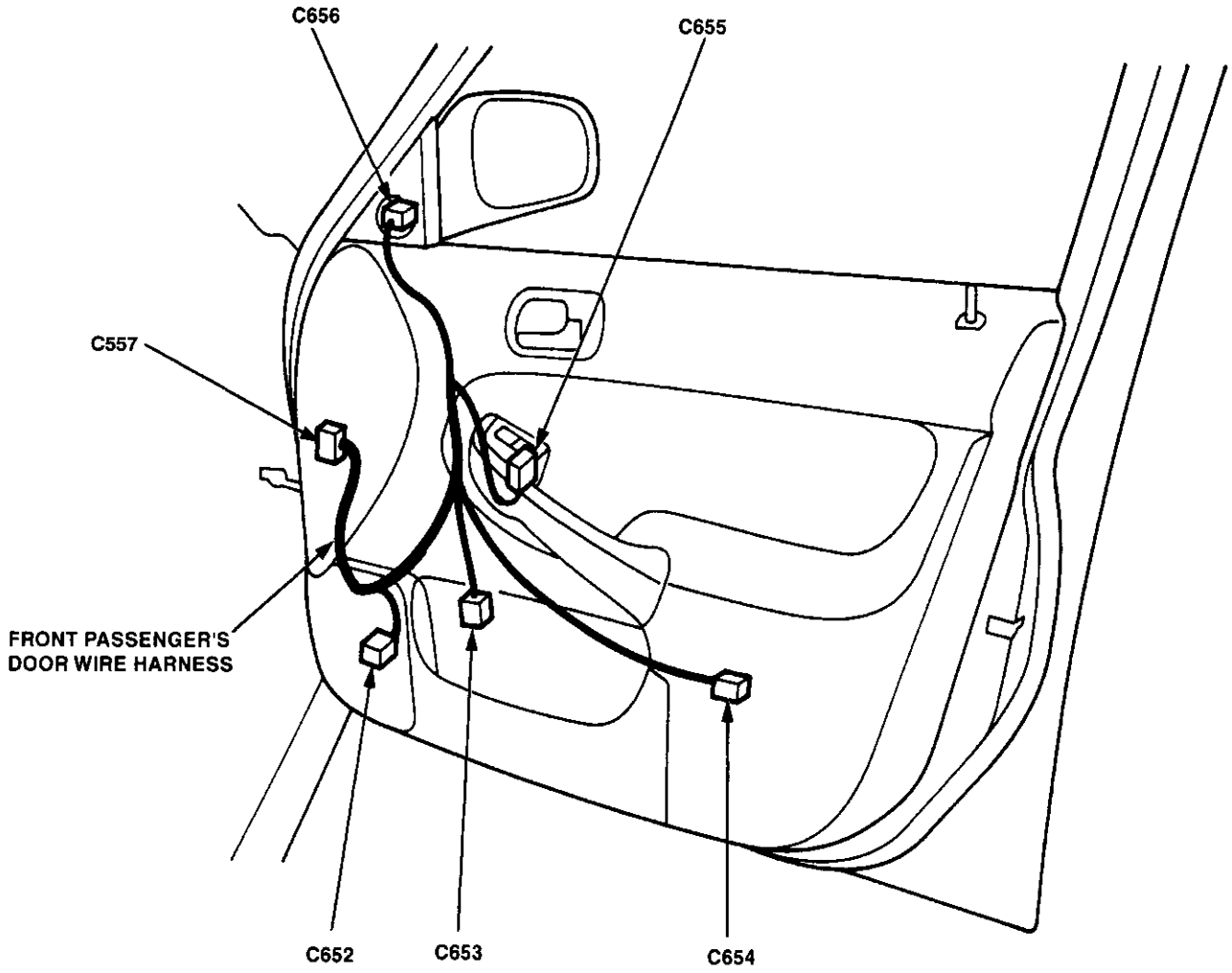

Connector or Terminal	Number of Cavities/ Color	Location	Connects to	Notes

Left Rear Door Wire Harness (Sedan)

C571	6-BLU	Left B-pillar	Floor wire harness	
C662	2-GRY	Left rear door	Left rear power window motor	
C663	5-NAT	Left rear door	Left rear power window switch	
C664	2-GRY	Left rear door	Left rear door lock actuator	

Right Rear Door Wire Harness (Sedan)

C570	6-BLU	Right B-pillar	Floor wire harness	
C672	2-GRY	Right rear door	Right rear power window motor	
C673	5-NAT	Right rear door	Right rear power window switch	
C674	2-GRY	Right rear door	Right rear door lock actuator	

Left Rear Door:

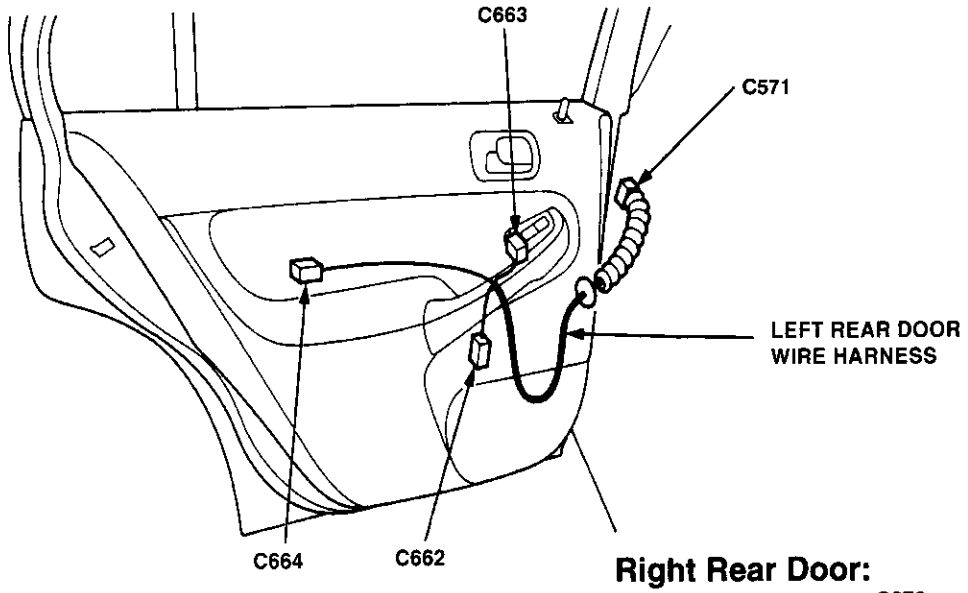

Right Rear Door:

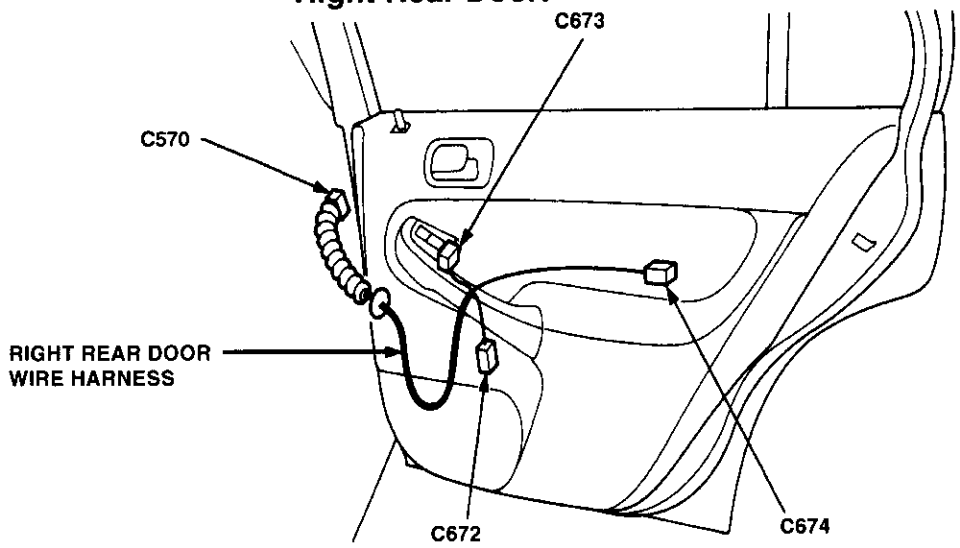

Connector Identification and Wire Harness Routing

Connector or Terminal	Number of Cavities/ Color	Location	Connects to	Notes

Roof Wire Harness (Coupe/Hatchback)

C407	2-GRY	Under left side of dash	Main wire harness	*1
C407	6-GRY	Under left side of dash	Main wire harness	*2
C702	2-WHT	Middle of roof	Ceiling light	
C719	1-WHT	Front of roof	Spotlight	*2

*1: '96-'98 models
*2: '99-'00 models

Roof Wire Harness (Sedan)

C407	2-GRY	Under left side of dash	Main wire harness	*1
C407	6-GRY	Under left side of dash	Main wire harness	*2, GX
C702	1-WHT	Middle of roof	Ceiling light (Power)	
C703	1-WHT	Middle of roof	Ceiling light (Ground)	
C719	1-WHT	Front of roof	Spotlight	*2

*1: '96-'98 models
*2: '99-'00 models

Moonroof Wire Harness (Coupe/Sedan)

C407	2-GRY	Under left side of dash	Main wire harness	*1, *2
C407	6-GRY	Under left side of dash	Main wire harness	*3
C712	3-BRN or GRN	Front of under-dash fuse/relay box	Under-dash fuse/relay box	
C713	6-BRN	Left side of dashboard bracket	Moonroof open relay	*1
C713	5-GRY	Left side of dashboard bracket	Moonroof open relay	*2, *3
C714	6-BRN	Left side of dashboard bracket	Moonroof close relay	*1
C714	5-GRY	Left side of dashboard bracket	Moonroof close relay	*2, *3
C715	4-GRY	Left of steering wheel	Moonroof switch	
C716	3-WHT	Middle of roof	Ceiling light	
C717	2-BRN	Rear of roof	Moonroof motor	
C718	4-GRY	Rear of roof	Open/close and tilt/close switches	
C719	1-WHT	Front of roof	Spotlight	*2, *3

*1: '96-'97 models
*2: '98 models
*3: '99-'00 models

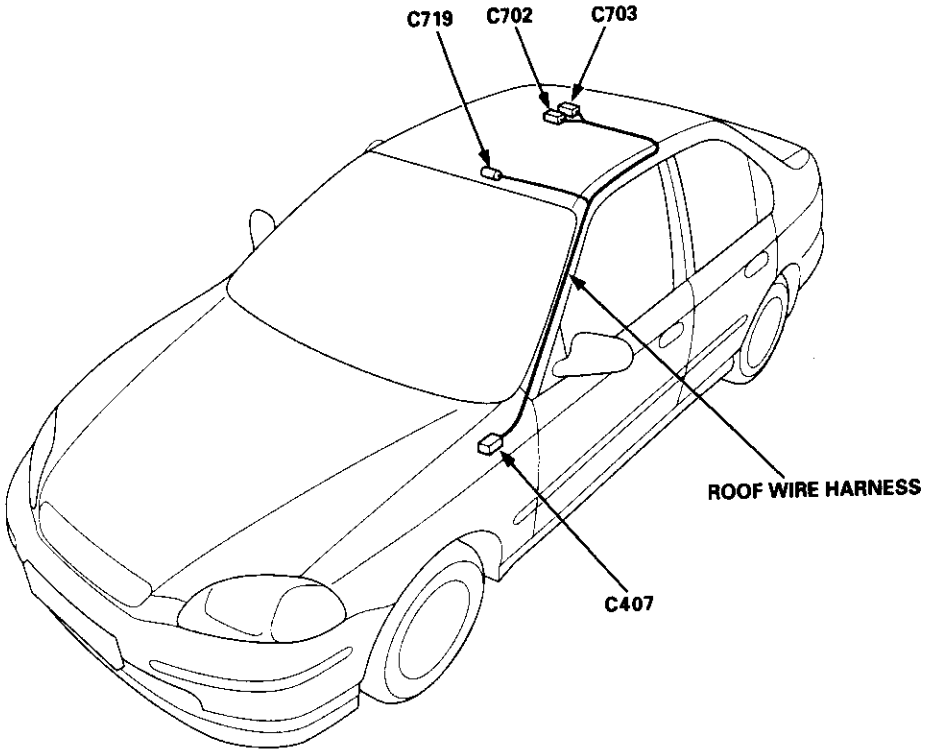
C719
C702
C703
ROOF WIRE HARNESS
C407

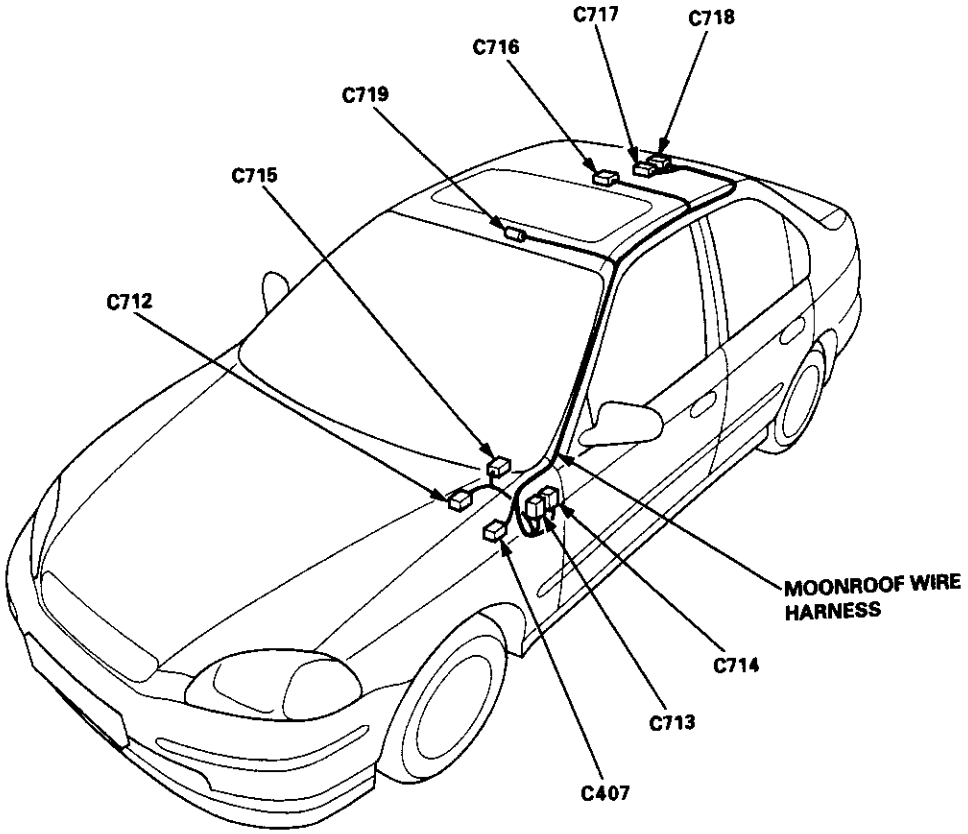
C717
C718
C716
C719
C715
C712
MOONROOF WIRE HARNESS
C714
C713
C407

Connector Identification and Wire Harness Routing

Connector or Terminal	Number of Cavities/ Color	Location	Connects to	Notes

Hatch Wire Harness (Hatchback)

C607	6-BLU	Right quarter panel	Rear wire harness	
C608	2-BRN	Right quarter panel	Rear wire harness	
C763	2-N/A	Rear of roof	High mount brake light	
C764	1-BLK	Right side of hatch lid	Rear window defogger (+)	
C765	2-GRY	Middle of hatch lid	Right license light	
C766	2-GRY	Middle of hatch lid	Left license light	
C767	4-NAT	Middle of hatch lid	Rear window wiper motor	
C768	2-GRY	Middle of hatch lid	Hatch latch switch	
G761		Middle of hatch lid	Body ground, via tailgate wire harness	

Rear Window Defogger Ground Wire (Hatchback)

C771	1-BLK	Left side of hatch lid	Rear window defogger (–)	
G771		Left side of hatch lid	Body ground, via rear window defogger wire	

'96-'97 models:

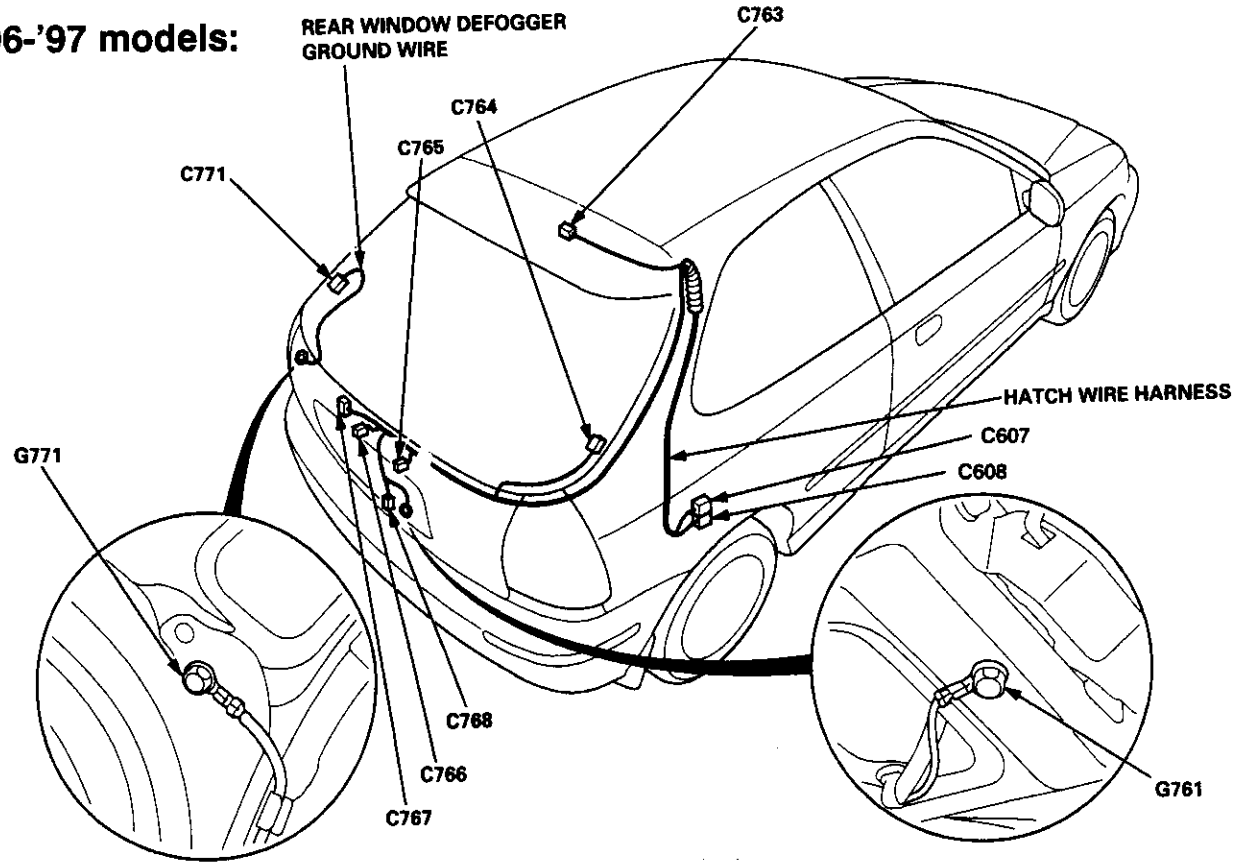

'98-'00 models:

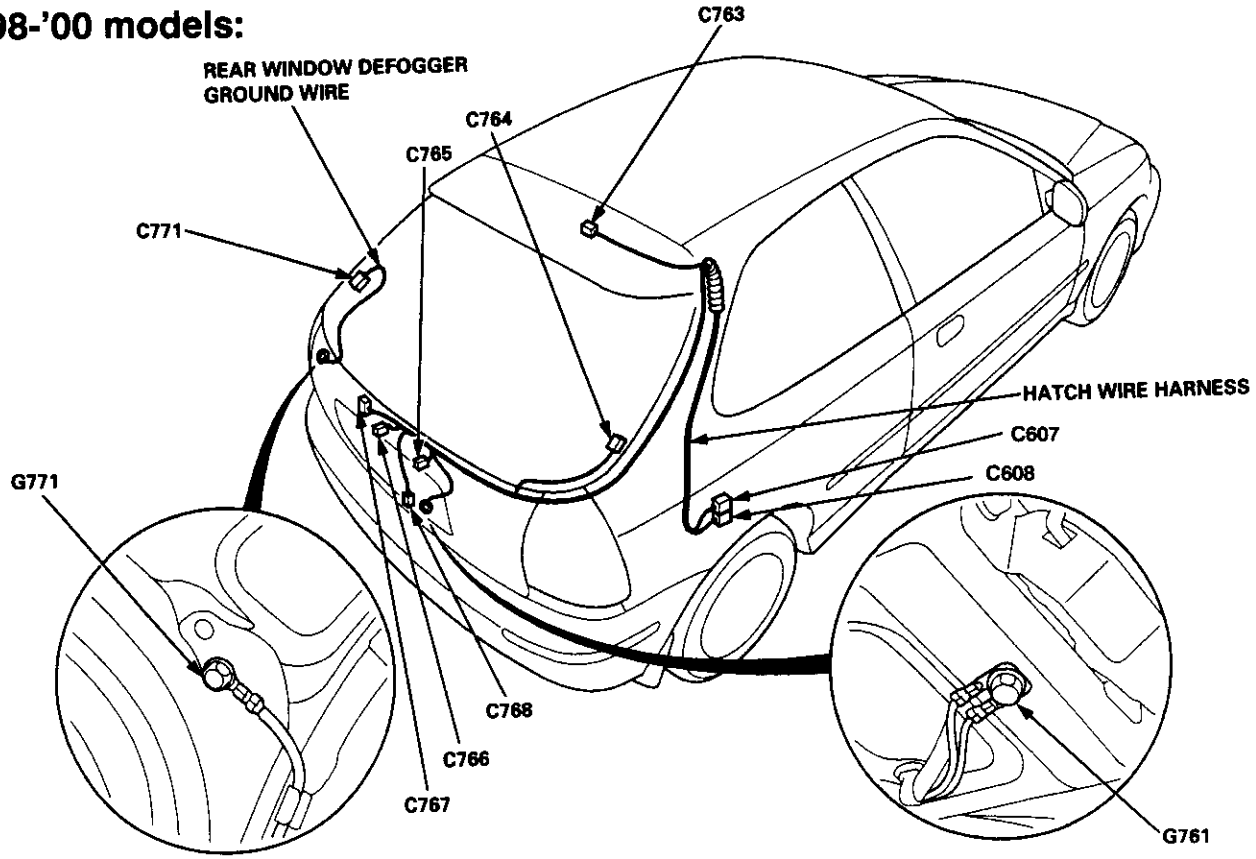

Connector Identification and Wire Harness Routing

Connector or Terminal	Number of Cavities/ Color	Location	Connects to	Notes

Heater Sub-harness A: '96-'98 models

C440	16-BLU	Under middle of dash	Main wire harness	
C722	7-GRN	Behind middle of dash	Mode control motor	
C723	20-GRY	Behind front console	Heater sub-harness B	
C724	3-GRY	Behind glove box	A/C thermostat	
C725	2-NAT	Below right side of dash	Blower motor	
C726	4-BRN	Behind glove box	Blower motor resistor	
C727	4-GRN	Behind glove box	Recirculation control motor	

Heater Sub-harness B: '96-'98 models

C723	20-GRY	Behind front console	Heater sub-harness A	
C742	6-BRN	Behind middle of dash	Heater fan switch	
C743	14-GRN	Behind middle of dash	Heater control panel	

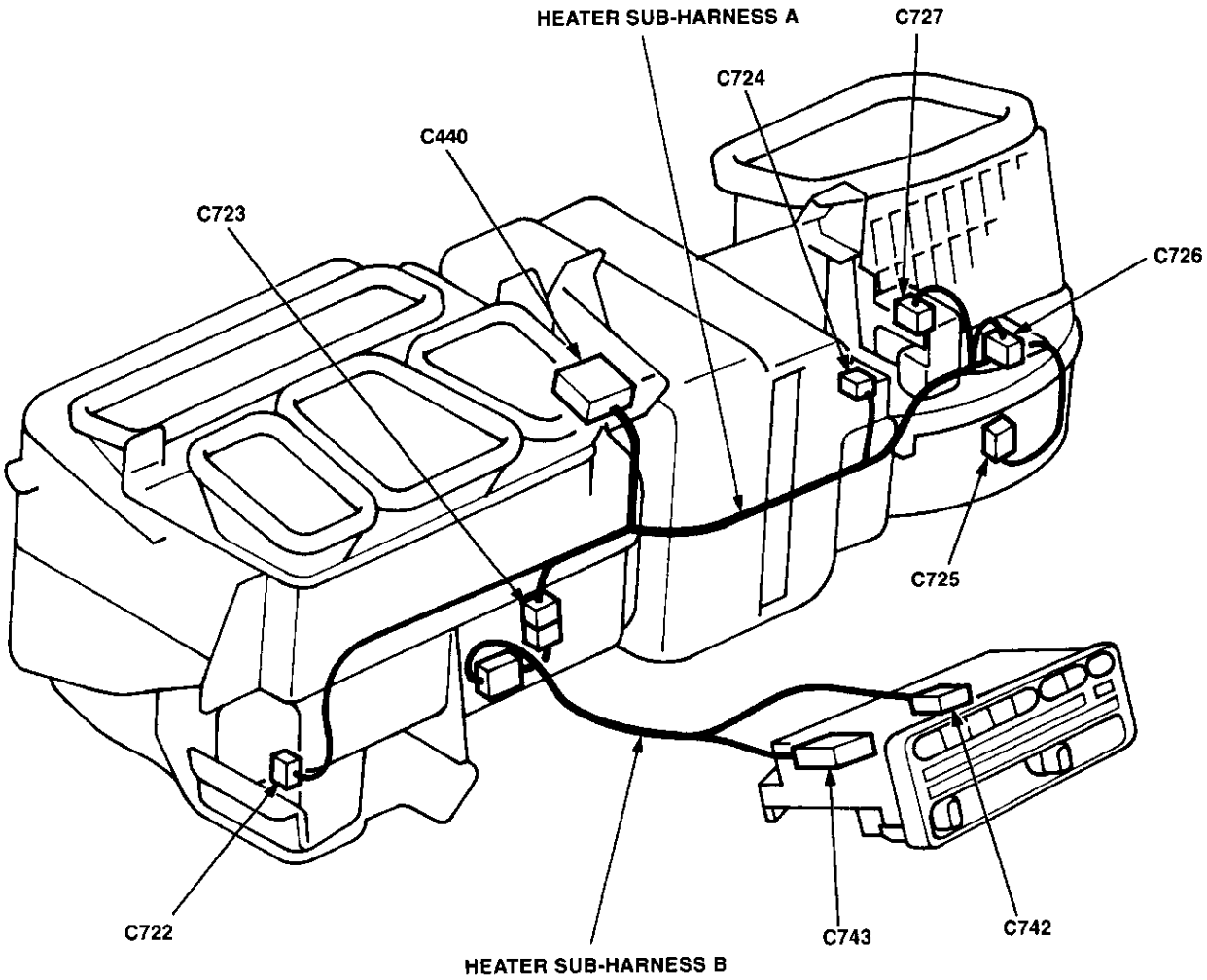

Connector or Terminal	Number of Cavities/ Color	Location	Connects to	Notes

Heater Sub-harness A: '99-'00 models

C440	16-BLU	Under middle of dash	Main wire harness	
C722	7-GRN	Behind middle of dash	Mode control motor	
C723	24-BLU	Behind front console	Heater sub-harness B	
C724	3-GRY	Behind glove box	A/C thermostat	
C725	2-NAT	Below right side of dash	Blower motor	
C726	3-NAT	Behind glove box	Power transistor	
C727	4-GRN	Behind glove box	Recirculation control motor	
C728	1-BRN	Behind front console	Heater sub-harness B	
C729	5-GRN	Behind glove box	Air mix control motor	
C730	4-BRN	Behind glove box	Blower motor high relay	

Heater Sub-harness B: '99-'00 models

C723	24-BLU	Behind front console	Heater sub-harness A	
C728	1-BRN	Behind front console	Heater sub-harness A	
C742	8-GRY	Behind middle of dash	Heater control panel connector A	
C743	20-BLK	Behind middle of dash	Heater control panel connector B	

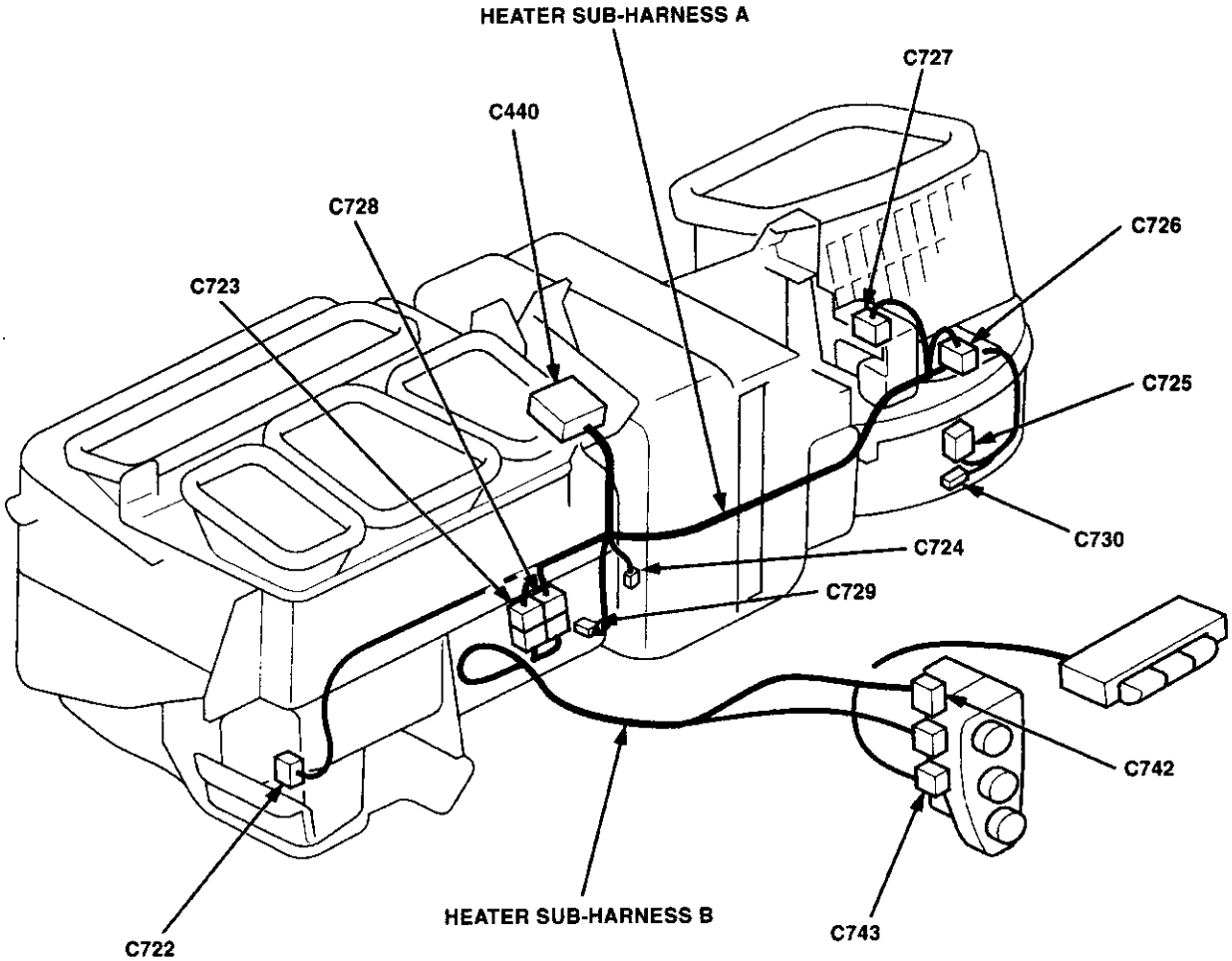

Connector Identification and Wire Harness Routing

Connector or Terminal	Number of Cavities/ Color	Location	Connects to	Notes

Rear Heated Oxygen Sensor Sub-harness

C432 C782	4-GRY 4-GRY	Below front console Below front console	Main wire harness Secondary heated oxygen sensor (Secondary HO2S)	

Fuel Tank Pressure Sensor Sensor Sub-harness

C568 C792 C793	6-GRY 3-BRN 2-BRN	Top of fuel tank Left side of fuel tank Left side of fuel tank	Floor wire harness Fuel tank pressure sensor EVAP two way valve	

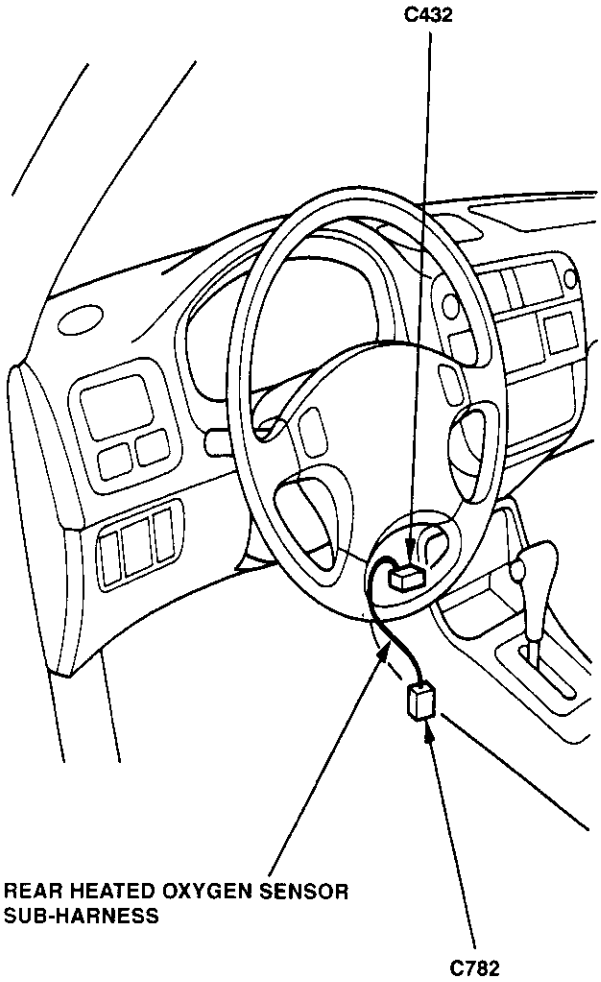

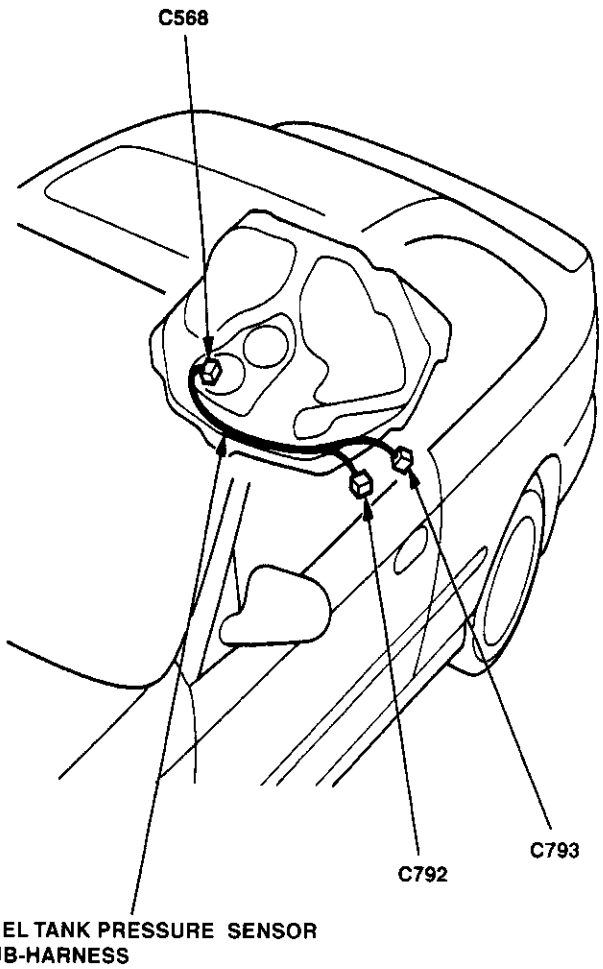

Connector or Terminal	Number of Cavities/ Color	Location	Connects to	Notes

SRS Main Harness

C412	3-YEL	Above under-dash fuse/relay box	Main wire harness	
C801	2-YEL	Under left side of dash	Under-dash fuse/relay box	
C803	2-YEL	Right side of under-dash fuse/ relay box	Memory erase signal (MES) connector	
C804	2-YEL	Under left side of dash	Cable reel	
C805	2-YEL	Under center of dash	Passenger's airbag assembly	USA
C806	2-YEL	Middle of floor	Dummy resistor connector	Canada
C807	18-YEL	Middle of floor	SRS unit	
G801		Middle of floor	Body ground, via SRS main harness	

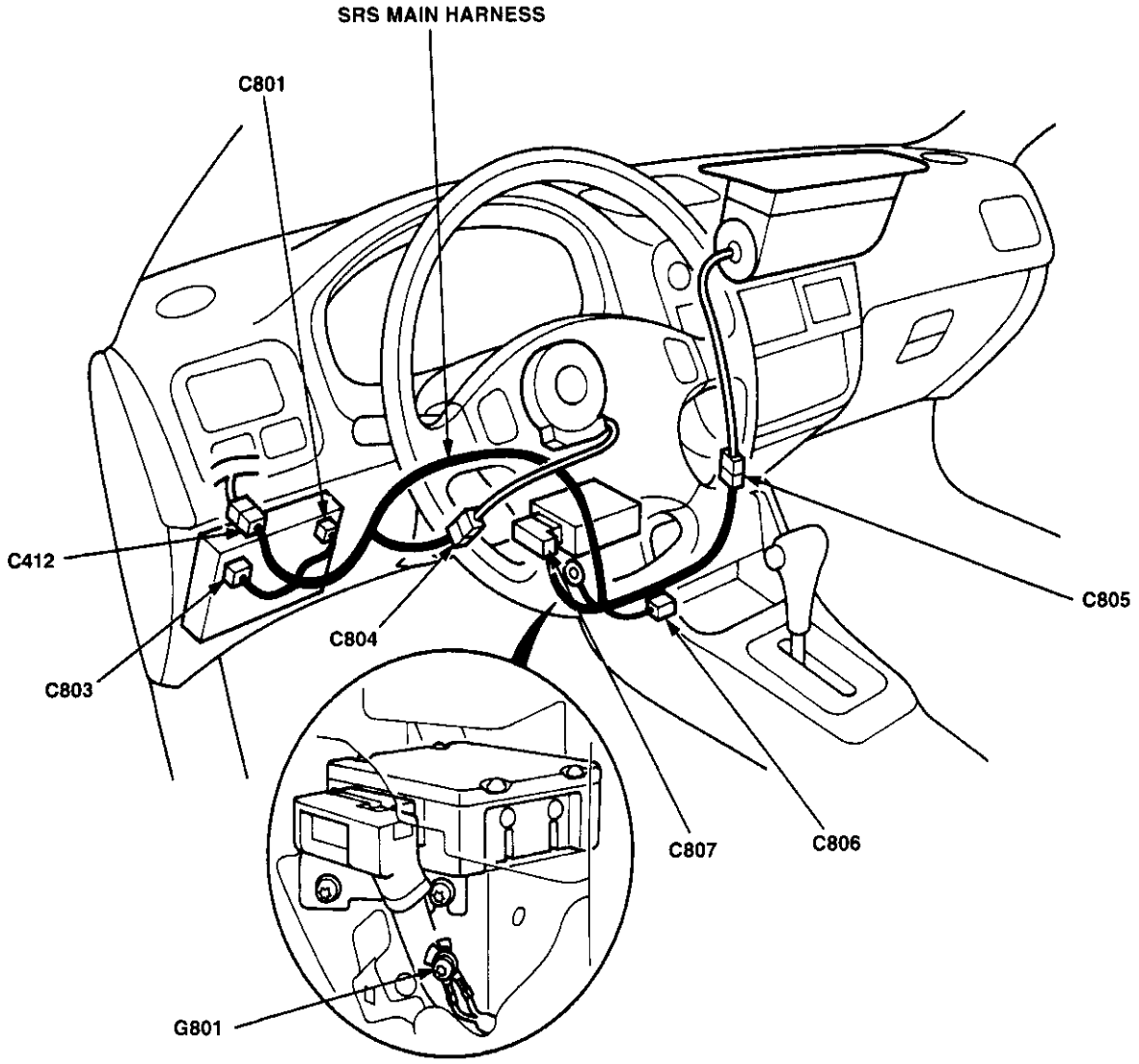

Connector Identification and Wire Harness Routing

Connector or Terminal	Number of Cavities	Location	Connects to	Notes

Fuel Sub-Harness (GX)
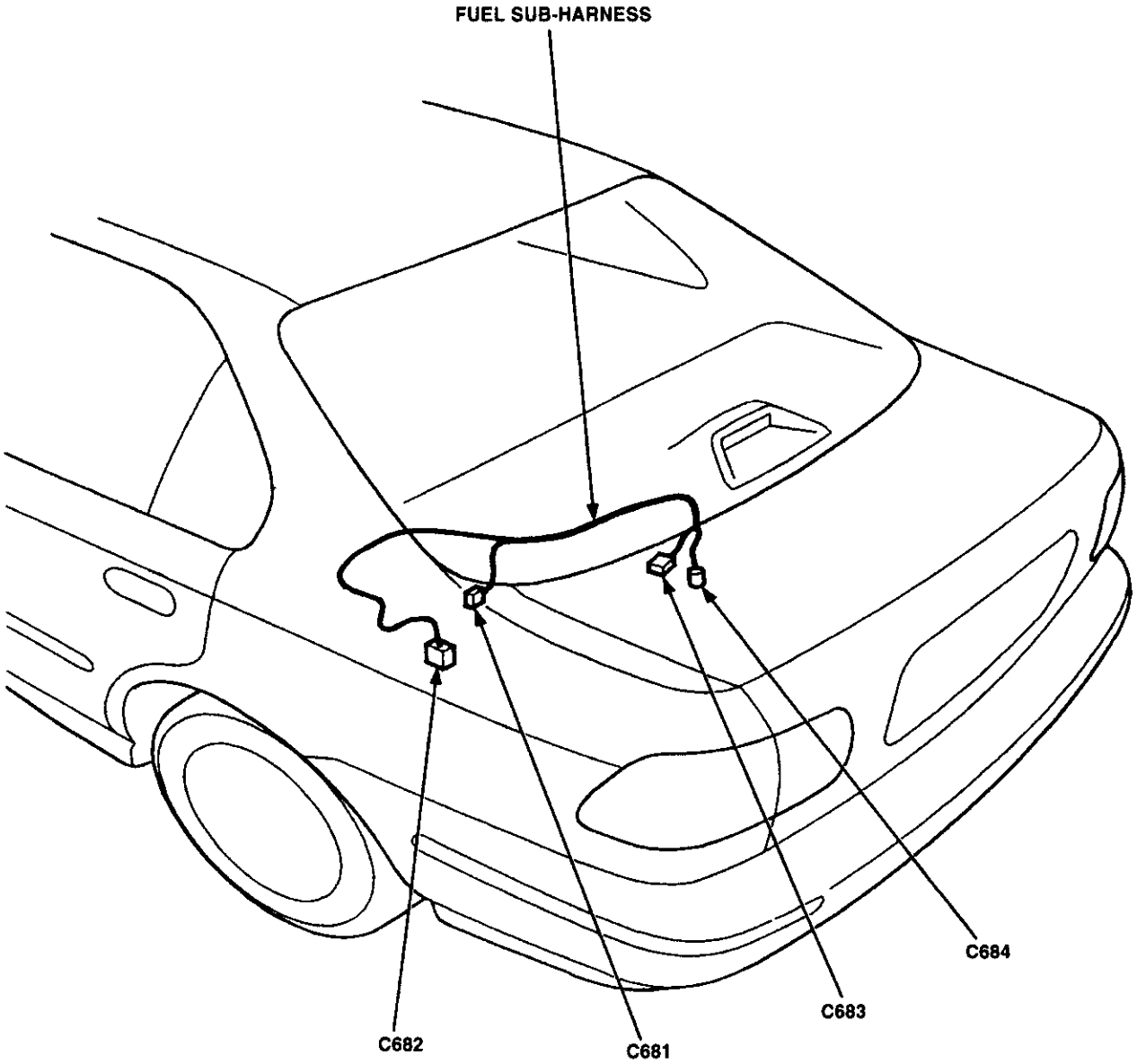
C575	6-GRN	Behind left side of rear seat	Floor wire harness	
C682	2-GRY	Left side of trunk	Fuel tank internal solenoid valve	
C683	3-N/A	Middle of trunk	Fuel tank pressure sensor	
C684	2-GRY	Middle of trunk	Fuel tank temperature sensor