Strata S_e & VI_e

with CENTREX Application

GENERAL DESCRIPTION

TSD 87-10-05 10M ISSUE 5.1 PRINTED IN U.S.A.

STRATA Se/VIe

GENERAL DESCRIPTION

TABLE OF CONTENTS

PARAGRAPH	SUBJECT	PAGE
	TABLE of CONTENTS	i
01	GENERAL	1
	Summary Description	1
	Maintanence	2
02	PHYSICAL DESCRIPTIONS	2
	Key Service Units	2
	Peripheral Equipment	3
	Electronic Telephones	3
03	ELECTRICAL CHARACTERISTICS	6
	General	6
04	FEATURES and SERVICES	6
	TABLE A—Summary of Electrical Characteristics	7
	TABLE B—Standard Features	8
	TABLE C—Optional Features	9
05	SYSTEM OPERATION	9
	General	9
06	SYSTEM CONFIGURATION	10
	Key Service Unit	10
	Option Modules	13
	Station Equipment	14
	Installation	14
	Maintenance	15
07	FEATURES and OPERATION	15
	General	15
	Standard Features	15
	System	15
	Station	17
	Optional Features	20

ILLUSTRATION LIST

FIGURE NO.	TITLE	PAGE
1	PERIPHERAL EQUIPMENT	1
2	STRATA Se and VIe CABINETS	2
3	STRATA Se CABINET (Interior)	3
4	STRATA VIe CABINET (Interior)	3
5	EXTERNAL MODULES	3
6	DOOR PHONE	4
7	MRGU	4
8	HESB	4
9	SINGLE-LINE ELECTRONIC TELEPHONE	4
10	10-button ELECTRONIC TELEPHONE	5
11	10-button BUSY LAMP FIELD ELECTRONIC TELEPHONE	5
12	20-button ELECTRONIC TELEPHONE	5
13	20-button LIQUID CRYSTAL DISPLAY ELECTRONIC TELEPHONE	5
14	HMDB	6
15	SYSTEM DIAGRAM	10
16	FUNCTIONAL BLOCK DIAGRAM	11
17	STRATA Se KEY SERVICE UNIT (with PCBs)	12
18	STRATA VIe KEY SERVICE UNIT (with PCBs)	12
19	1A2 INTERFACE FUNCTIONAL BLOCK DIAGRAM	13
20	ELECTRONIC TELEPHONE DIAGRAM	22

01 GENERAL

Summary Description

STRATA S_e and VI_e are advanced electronic key telephone systems designed to function in a variety of situations. Both systems are electrically compatible with the public telephone network and can also be applied in a "behind PBX" environment.

Figure 1 shows all the basic electronic key system features, including CENTREX (CTX) capabilities, and the impressive package of optional features provided by these two systems. These features offer, among others, enhanced connectivity with stand-alone voice mail products, off-hook call announce (OCA), SMDR, remote administration/maintenance, and 32-character alphanumeric Liquid Crystal Display read-outs. Wherever a CO line interface is indicated in the following text, it can be a CO/CTX and/or PBX line.

Very similar in design, both systems are based on stored-program control, custom LSI circuitry, solid-state, space-division switching and reduced station cabling, and are housed in single cabinets.

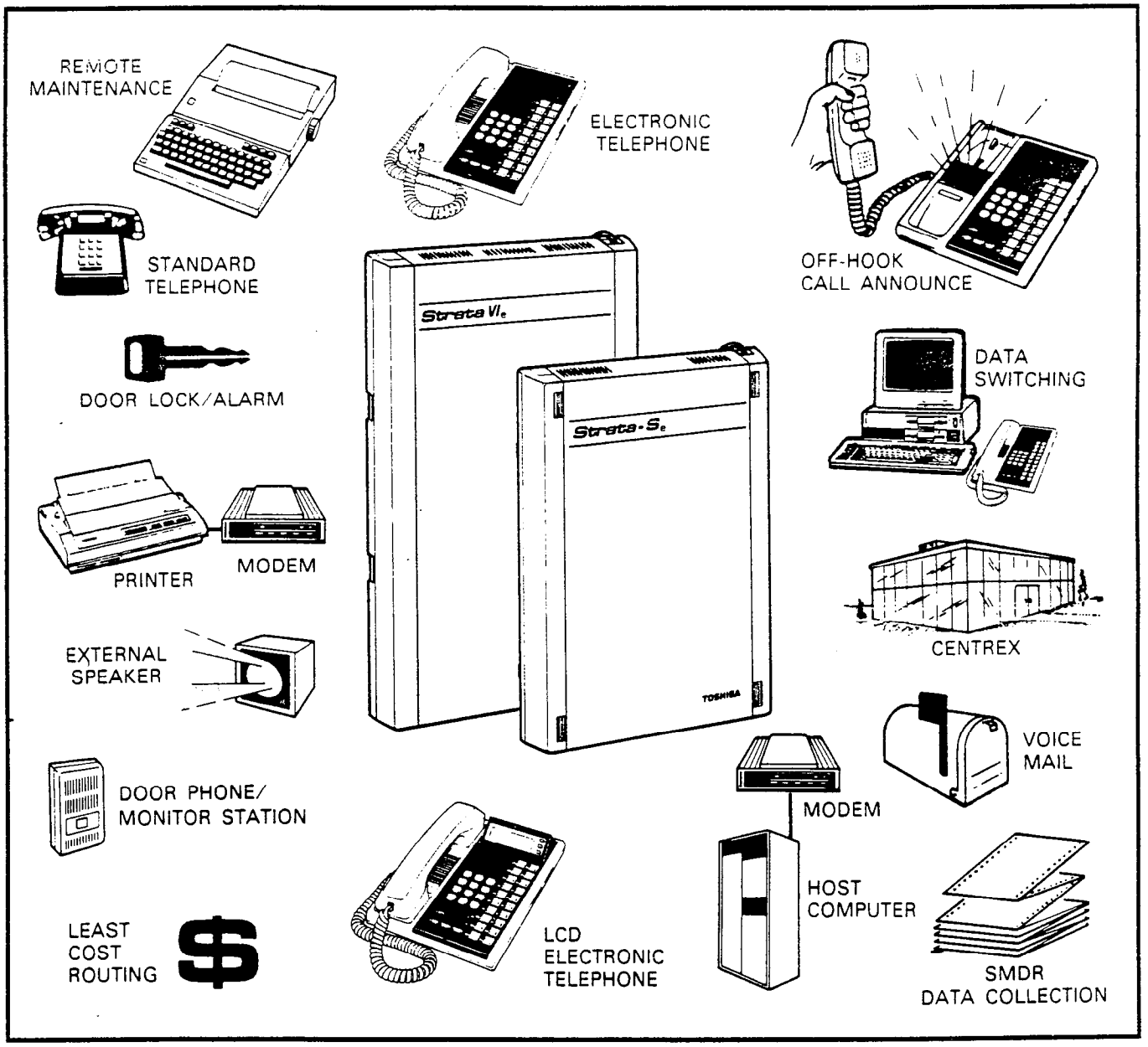

FIGURE 1—PERIPHERAL EQUIPMENT

System differences are restricted to the capacities of the key service units. STRATA S_e has a maximum capacity of three incoming lines and eight stations, while STRATA VI_e will accommodate up to six incoming lines with a maximum of 16 stations. Both systems have two intercom paths as a standard feature, with two additional paths available on the VI_e as an optional feature.

Utilizing specially designed electronic telephones (each of which is connected to the system via industry-standard 2- or 3-pair cabling and equipped with a push-button dial pad), solid-state electronics within the key service unit translate signals from the station dial pad into either DTMF or rotary-dial signals, as required by the Central Office. If the system is to be equipped with off-hook call announce and/or modem phones (see Station Equipment), 3-pair cabling and modular cords must be used.

Maintenance

Maintenance procedures are based on quickly locating and replacing defective plug-in units, keeping service disruption to a minimum. In addition, remote administration/maintenance is also an available option for both systems.

02 PHYSICAL DESCRIPTIONS

Key Service Units

Designed for wall mounting, each key service unit is housed in a single metal and plastic cabinet (Figure 2) with the following dimensions:

STRATA S_e
Height: 16.5" (420 mm)
Width: 12.0" (306 mm)
Depth: 2.67" (67 mm)
Weight: 9.25 lbs. (4.2 kg)

STRATA VI_e
Height: 21.25" (540 mm)
Width: 12.9" (330 mm)
Depth: 2.75" (70 mm)
Weight: 15.63 lbs. (7.1 kg)

The STRATA S_e key service unit (Figure 3) is factory-equipped with two printed circuit boards (PCBs) and a power supply. The main PCB (SMAU) and power supply are secured to the cabinet base; the processor PCB (SCCU) is attached to the SMAU with four screws, and is

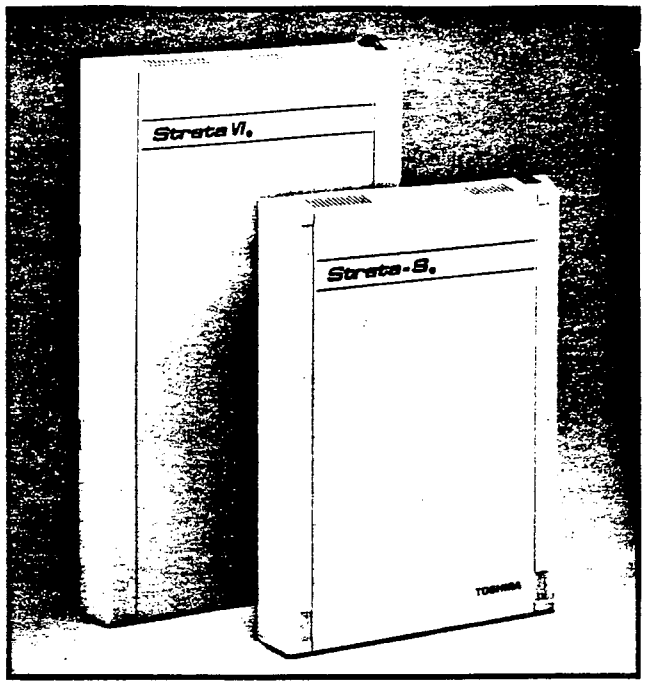

FIGURE 2—STRATA S_e and VI_e CABINETS

connected to it via four 10-pin connectors. These PCBs' dimensions are:

Main Board (SMAU):
12.5 x 9.5" (318 x 241 mm)
Controller (SCCU):
7.87 x 3.37" (201 x 86 mm)

The STRATA VI_e key service unit (Figure 4) is factory-equipped with two printed circuit boards (PCBs) and a power supply. The main PCB (VMAU) and power supply are secured to the cabinet base; the processor PCB (VCCU) is attached to the VMAU with four screws, and is connected to it via four 10-pin connectors. These PCBs' dimensions are:

Main Board (VMAU):
9.75 x 15.37" (248 x 390 mm)
Controller (VCCU):
6.00 x 6.50" (152 x 165 mm)

Each key service unit will accommodate up to eight optional printed circuit boards. The various dimensions and designations of these are:

Station Interface (SSTU):
4.13 x 4.60" (105 x 117 mm)
OCA Interface (SVCU):
3.37 x 1.62" (86 x 41 mm)
External Page Interface (SEPU):
4.25 x 3.00" (108 x 76 mm)
Music-on-hold Interface (SMOU):
2.25 x 1.13" (57 x 29 mm)

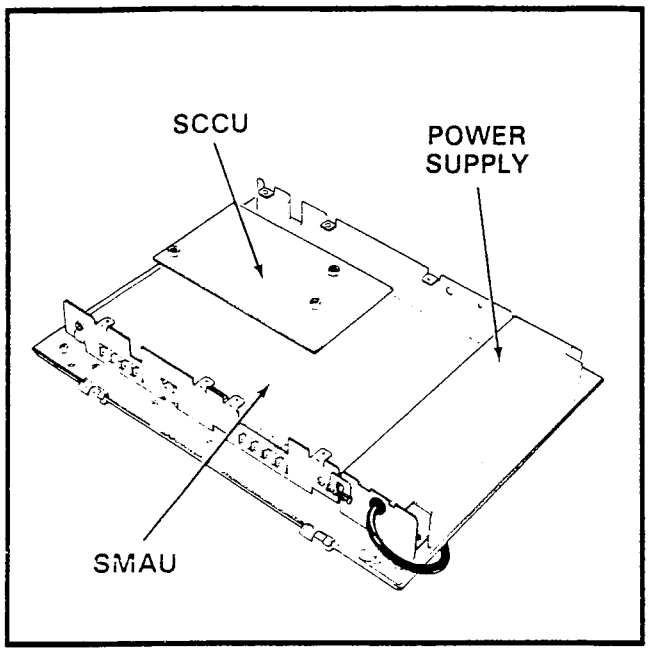

FIGURE 3—STRATA S_e CABINET (Interior)

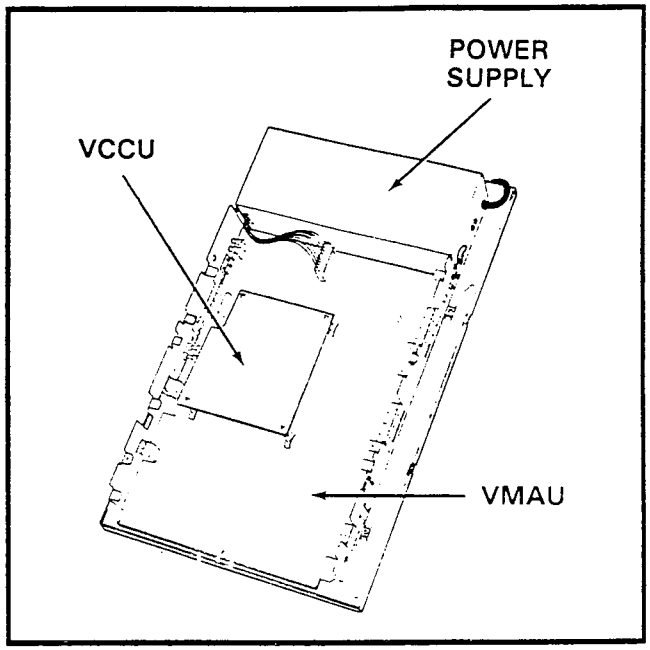

FIGURE 4—STRATA VI_e CABINET (Interior)

Remote Administration/Maintenance (SDTU):
5.06 x 2.75" (128 x 70 mm)
S_e CO Interface (SCOU):
4.13 x 4.60" (105 x 117 mm)
S_e Power Fail Unit (SPFU):
4.25 x 3.00" (108 x 76 mm)
S_e SMDR Interface (STMU):
5.06 x 3.0" (128 x 76 mm)
VI_e CO Interface (VCOU):
5.75 x 10.60" (146 x 269 mm)

Peripheral Equipment

Several optional expansion modules are available to accommodate additional STRATA$_e$ features: Station Message Detail Recording (HSMB), 1A2 Interface (HCNB), Auxiliary Device Interface (HIOB), Off-Premises Line (HOLB) and Off-Premises Extension (HOXB). The two pairs of modules are identical in external appearance (Figure 5).

An HDCB that is needed to support up to three door phones (Figure 6) is available, with two per system being the maximum. An external ring generator/power supply (MRGU) that can be used with the HOXB is also available (Figure 7). An external amplified speaker (HESB) can either be used to amplify the ringing bell of a telephone or as a paging speaker (Figure 8). When used in conjunction with the door phone unit, the HESB provides a talkback paging speaker capability.

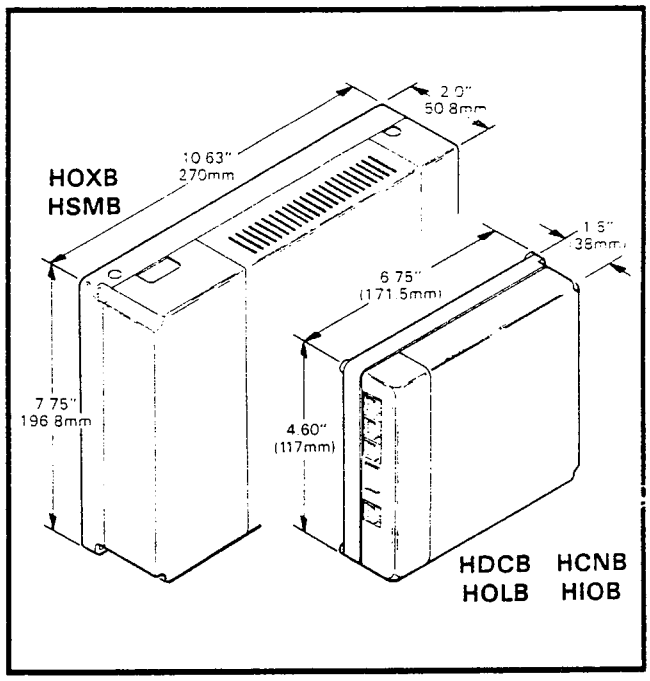

FIGURE 5—EXTERNAL MODULES

Electronic Telephones

Seven different electronic telephones may be used in either system. In addition, each telephone, except the single-line, may be optionally upgraded with an off-hook call announce (OCA) printed circuit board (HVSU) and/or a modem base.

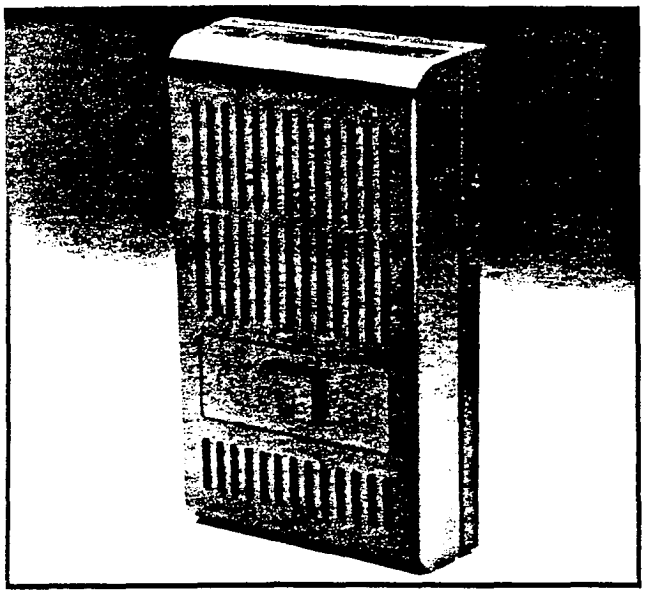

FIGURE 6—DOOR PHONE

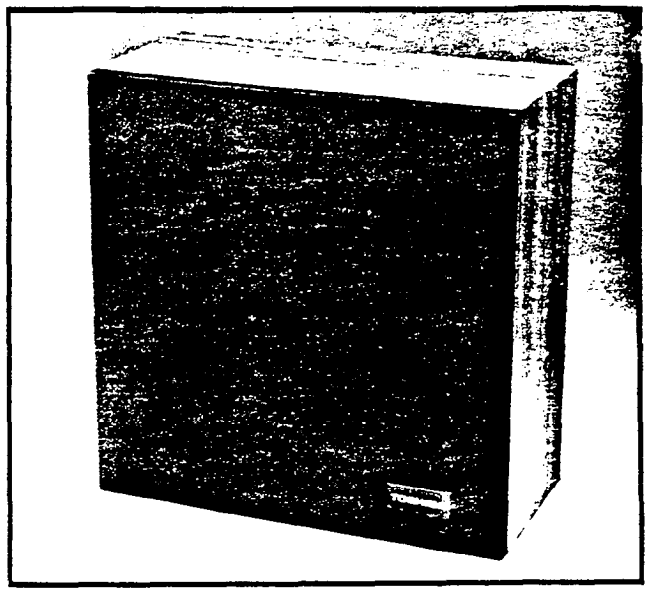

FIGURE 8—HESB

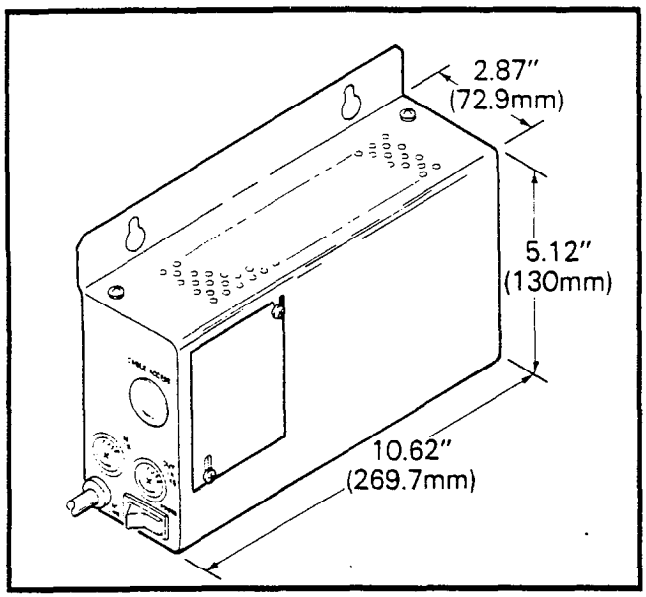

FIGURE 7—MRGU

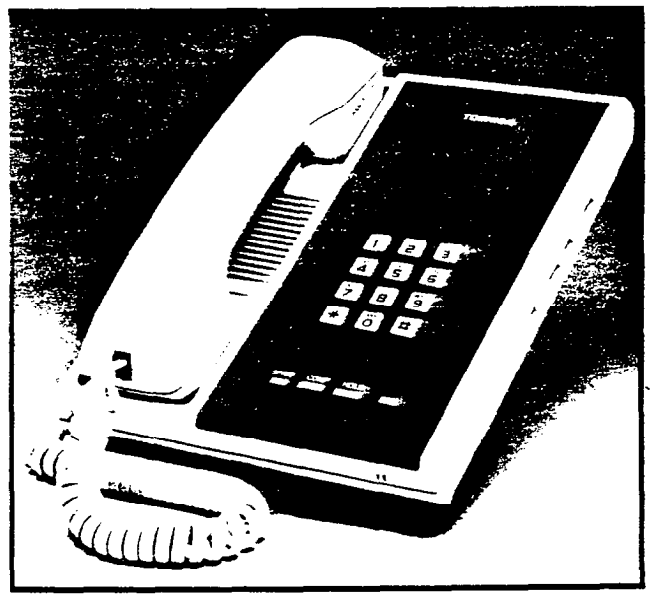

FIGURE 9—SINGLE-LINE ELECTRONIC TELEPHONE

NOTE:
Only the telephone receiving the off-hook call announcement is required to have the HVSU PCB installed.

1) Single-line electronic telephone (Figure 9): Equipped with three permanently dedicated buttons (HOLD CONF SPKR) and an Intercom/CO line button, which is not labeled.

2) 10-button electronic telephone (Figure 10): Available in two models, as a speakerphone or with handsfree answerback on intercom calls only. (See Figure 20 for a detailed illustration of the basic electronic telephone.)

3) 10-button Busy Lamp Field electronic telephone (Figure 11): Available as a speakerphone-only model, with 16 LEDs used as a Busy Lamp Field (with STRATA S_e stations 10 ~ 17 only are indicated).

4) 20-button electronic telephone (Figure 12): Also available in two models, speakerphone or handsfree answerback.

5) 20-button Liquid Crystal Display electronic telephone (Figure 13): Available as a speakerphone-only unit with a 32-character, alpha-

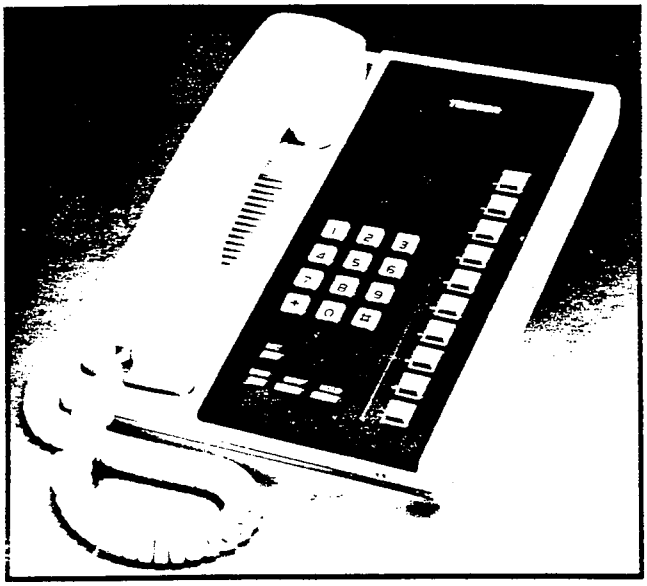

FIGURE 10—10-button ELECTRONIC TELEPHONE

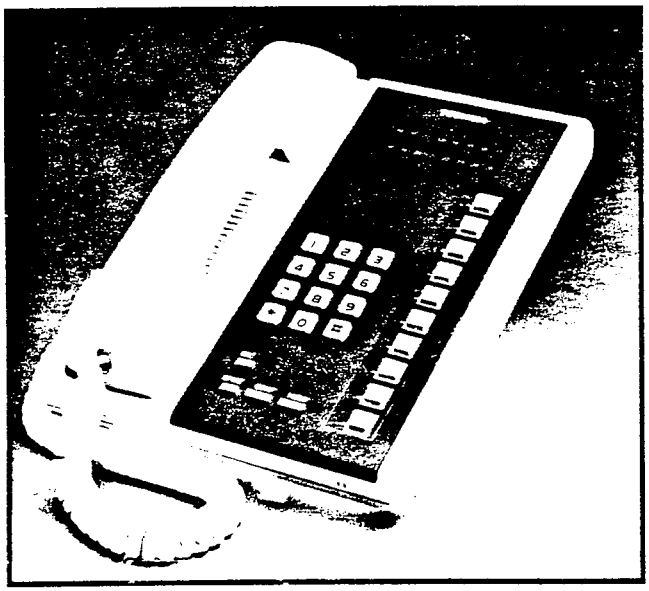

FIGURE 11—10-button BUSY LAMP FIELD ELECTRONIC TELEPHONE

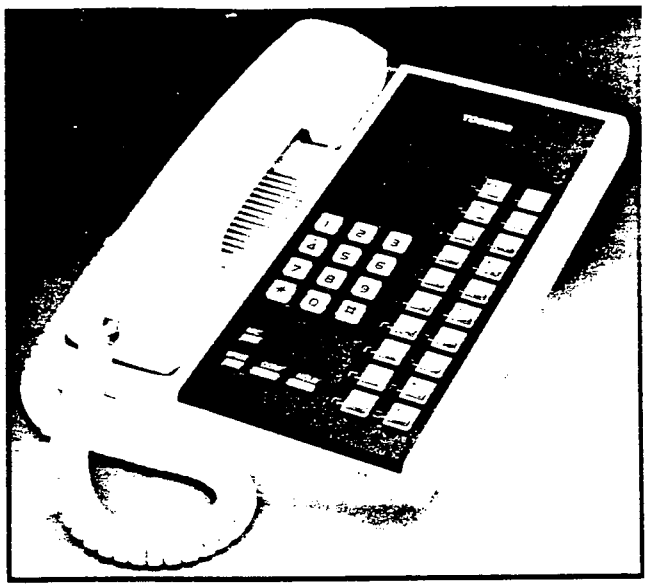

FIGURE 12—20-button ELECTRONIC TELEPHONE

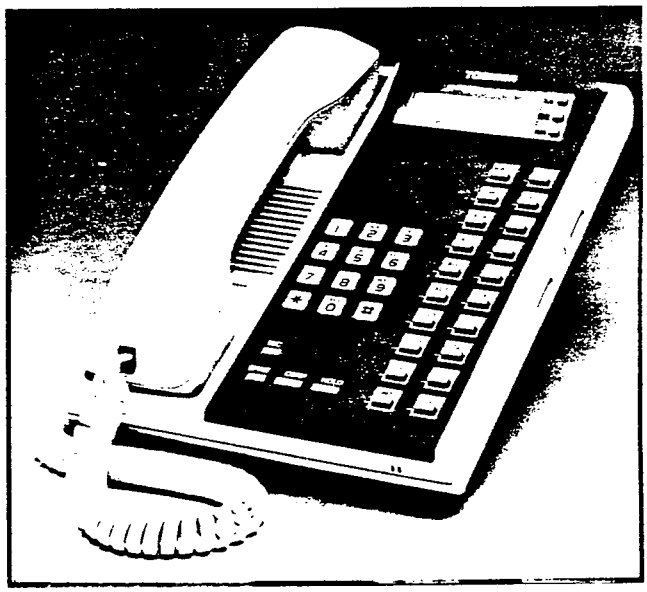

FIGURE 13—20-button LIQUID CRYSTAL DISPLAY ELECTRONIC TELEPHONE

numeric Liquid Crystal Display.

- Alphanumeric Messaging
  - Busy Station Messaging
  - Called Station Messaging
  - Calling Station Messaging
  - Remote Station Messaging
- Busy Lamp Field (BLF) Indication
- CO Line Identification
- Speed Dial Memo
- Timed Reminders

All phones have the same dimensions:
Height: 3.6" (92 mm)
Width: 7.0" (178 mm)
Depth: 9.0" (229 mm)

Housed in an impact-resistant, off-white plastic case, each phone comes with a brown faceplate (with wine, black or blue faceplates optionally available).

With an integrated modem unit (Figure 14), $STRATA_e$ can establish a simultaneous voice/

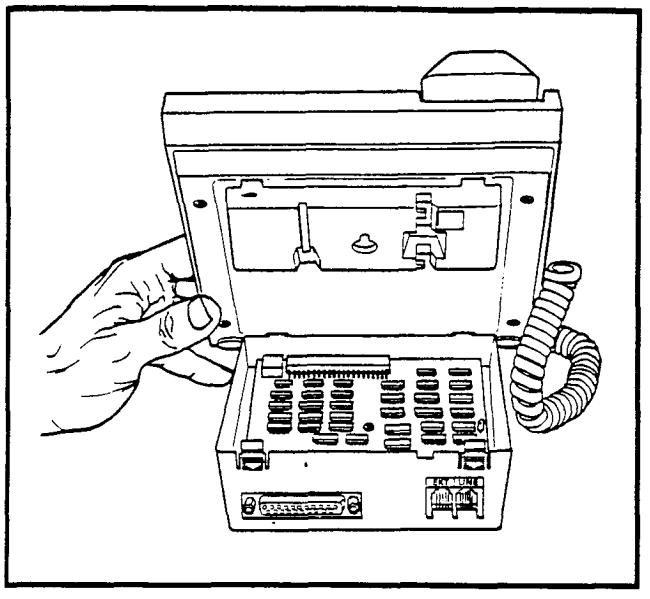

FIGURE 14—HMDB

data switching network for every station in the system. The integrated modem unit (HMDB) is installed in place of the standard electronic telephone base, and includes an RS232 connector for a personal computer or other data device. Each integrated modem unit will reduce the station capacity by one.

System software assignments permit a wide variation to the feature buttons on all telephones.

Each electronic telephone features a modular handset cord, a modular headset/audio-type device (headset I/O switch) connector (except the single-line) and is connected to the system via a 2-pair modular line cord. If a modem, off-hook call announce, or HESB as a Loud Ringing Bell is to be used, 3-pair cabling must be used. All phones are easily wall-mounted and are hearing-aid compatible.

03 ELECTRICAL CHARACTERISTICS

General

The key service unit operates from an internal power supply, which connects to a standard 3-wire, 117 VAC, 60-Hz, grounded wall outlet.

Loss of AC power will cause operational failure of the system. System memory, however, is protected from loss due to power failure with a memory backup battery. Full system reserve power is available as an option.

NOTE:
The memory backup battery is designed to maintain full memory protection for approximately one year with no external power source applied.

The electrical characteristics of the system are summarized in Table A.

04 FEATURES and SERVICES

The features and services of these electronic key telephone systems are summarized in Tables B and C, which list the standard and optional features, respectively.

TABLE A

SUMMARY OF ELECTRICAL CHARACTERISTICS

Loop Limits	
Station	1,000′ (305 M), 24 AWG cable
Door Phone Control Unit (HDCB)	1,000′ (305 M), 24 AWG cable
Door Phone/Monitor Station	1,000′ (305 M), 24 AWG cable
HOXB	500 ohms (including telephone), 48 VDC
HOLB, HSMB, HCNB,	17′ (5.2 M), 24 AWG cable
HIOB-to-KSU	1,000′ (305 M), 24 AWG cable
HIOB-to-Peripheral	17′ (5.2 M), 24 AWG cable
Ringing Tones	
CO Line (idle station)	600/800 Hz, modulated by 16 Hz, 1 second on—3 seconds off
CO Line (busy station)	2,400 Hz, modulated by 10 Hz, 1 second on—3 seconds off
Intercom Line	600 Hz, 1 second on—3 seconds off
Door Phone A & C Tones	870 Hz, 1 second/710 Hz, 2½-seconds (5 rings)
Door Phone B Tone	870 Hz, ½-second/710 Hz, 2½-seconds (5 rings)
Busy Override Tone	2,400 Hz, 1 second on—3 seconds off
Dial Tone (Intercom)	400 Hz, continuous
Ringback Tone	400 Hz, 1 second on—3 seconds off
Busy Tone	400 Hz, ¼-second on—¼-second off
Do Not Disturb Tone	400 Hz, ⅛-second on—⅛-second off
Voice Page Warning Tone	600 Hz, 1 second on only (via electronic telephone speaker)
Off-hook Call Announce Warning Tone	600 Hz, 1 second on only (via electronic telephone speaker)
Executive Override Warning Tone	600 Hz, ½-second on only (via handset)
Hold Recall Tone	2,400 Hz, modulated by 10 Hz, 1 second on—1 second off
Dialing	Push-button; system-generated DTMF or dial pulse
Primary Power	117 VAC, 60 Hz
HPSU 6120**	40 watts
HPSU 7120*	100 watts
Environmental Specifications	
Operating Temperature	32 ~ 122° F (0 ~ 50° C)
Operating Humidity	20 ~ 80% relative humidity without condensation

**STRATA VI_e only*
***STRATA S_e only*

TABLE B

STANDARD FEATURES

SYSTEM

- All Call Voice Page
- Alternate Point Answer
- Automatic Dialing-System
- Automatic Hold Recall
- Automatic Release from Hold
- CO Line Call Pickup Groups**
- Conference (Multi-CO Line)*
- Conference (Multi-Station)*
- CTX/PBX Compatible
- CTX Ringing Repeat
- Delayed Ringing
- Distinctive Ringing
- DTMF and Dial Pulse CO Line Compatible
- DTMF Signal Time (160/80 ms)
- External Page Interface
- Flexible Intercom Numbering
- Flexible Key Assignment
- Flexible Line Ringing Assignment
- Forced Account Code
- Group Paging
- Least Cost Routing**
- Live System Programming
- Message Waiting
- Multiple Simultaneous Handsfree Intercom Paths
- Music-On-Hold Interface
- Night Ringing Answer Code
- Night Ringing Over External Page**
- Night Transfer
- Non-blocking Dialing
- Outgoing Call Restriction
- Privacy/Non-Privacy
- Relay Service**
- Station Hunting
- Tenant Service
- Toll Restriction (6-digit)
- Toll Restriction Override by System Automatic Dialing
- Transfer Privacy
- Trunk-to-trunk Connection
- Voice or Tone Signalling
- Wall Mountable Key Service Unit

**Non-amplified*

STATION

- Automatic Callback (Intercom)
- Automatic Dialing Buttons
- Automatic Dialing-Station
- Automatic Off-Hook Selection
- Busy Override
- Call Forward
- Call Pickup
- Call Transfer with Camp-on
- CO/CTX/PBX Feature Buttons
- Directed Call Pickup
- Direct Station Selection (DSS) Buttons
- Distinctive LED Indications
  - Incoming Call
  - In-use
  - On-hold
- Do Not Disturb
- Do Not Disturb Override
- DP/MF Mode Change (TONE Button)
- Exclusive Hold
- Executive Override (Break-In)
- Flash Button (CTX/PBX Transfer or CO Dial Tone Recall)
- Handsfree Answerback
- Liquid Crystal Display Features
  - Alphanumeric Messaging
    - Busy Station Messaging
    - Called Station Messaging
    - Calling Station Messaging
    - Remote Station Messaging
  - Busy Lamp Field (BLF) Indication
  - CO Line Identification
  - Speed Dial Memo
  - Timed Reminders
- Microphone Cut-off Button
- Modular Handset and Line Cords
- On-Hook Dialing
- Privacy Button
- Privacy Override
- Private CO Lines
- Push-Button Dialing
- Remote Retrieval of Held Calls
- Repeat Last Number Dialed
- Ringing Line Preference
- Saved Number Redial
- Station Security (MCO Button)
- Toll Restriction Override Code
- Trunk Queuing

***STRATA VI_e only*

TABLE C

OPTIONAL FEATURES

- 1A2 Key System Interface (HCNB)
- Amplified Conference
- Auxiliary Device Interface (HIOB)
- Background Music with Station Control
- Door Phone/Monitor Station
  - Alarm Button
  - Door Lock Button
- Electronic Telephones
  - Faceplates (blue, black or wine)
  - Single-line
  - 10-button Handsfree Answerback or Speakerphone
  - 10-button Busy Lamp Field
  - 20-button Handsfree Answerback or Speakerphone
  - 20-button Liquid Crystal Display
- External Amplified Speaker (HESB)
  - Loud Ringing Bell
  - Amplified Speaker
  - Talkback Amplified Speaker
- External Page Amplifier
- Integrated Modem (HMDB)
- Music-On-Hold Source
- Off-Hook Call Announce
- Off-Premises Extension
  - Ring Generator/Power Supply (MRGU)
- Off-Premises Line
- Remote Administration/Maintenance
- Station Message Detail Recording (SMDR)
- System Battery Backup

05 SYSTEM OPERATION

General

A system (Figure 15) consists of a key service unit (VI_e HKSU is shown), power supply, up to 16 stations*, HOLB, HSMB and HOXB optional modules, and a maximum of six door phones. The door phone control unit(s) (HDCB) occupy one or two station location(s). All connections between the key service unit and the telephones are made via a customer-provided main distribution frame. Using modular line cord(s), the CO lines are then connected between the left side panel and the locally provided RJ-25C (up to two each) or RJ-11C (up to six each) jacks. An external tuner (or equivalent) is required if the Music-On-Hold/Background Music feature is utilized.

**Some optional features reduce maximum station capacities (see Optional Features).*

A functional block diagram of both key service units is shown in Figure 16. It consists of CO and station interfaces on the main PCB, including a solid-state, space-division matrix and the central control equipment (SCCU/VCCU). Optional interfacing equipment includes additional station connections (SSTU), off-hook call announce (SVCU), remote maintenance (SDTU), off-premises line (HOLB), station message detail record (HSMB/STMU*), 1A2 interface (HCNB), auxiliary device interface (HIOB), door phone controller (HDCB) and door phone/monitor station, external page amplifier (SEPU), internal music-on-hold source (SMOU), and power failure (SPFU*) PCBs are also shown.

**STRATA S_e only*

The system is entirely under the control of a single-chip microprocessor, located (along with the system program and data memories) on the VCCU/SCCU PCB (STRATA VI_e/S_e, respectively), which mounts on the VMAU/SMAU, respectively.

Connections between the station voice lines and the CO lines are via the switching matrix provided on the VMAU/SMAU PCB (STRATA VI_e/S_e, respectively). The VMAU/SMAU also provides a similar matrix for intercom connection, background music, paging connections and the distribution of various system tones (dial, busy, etc.).

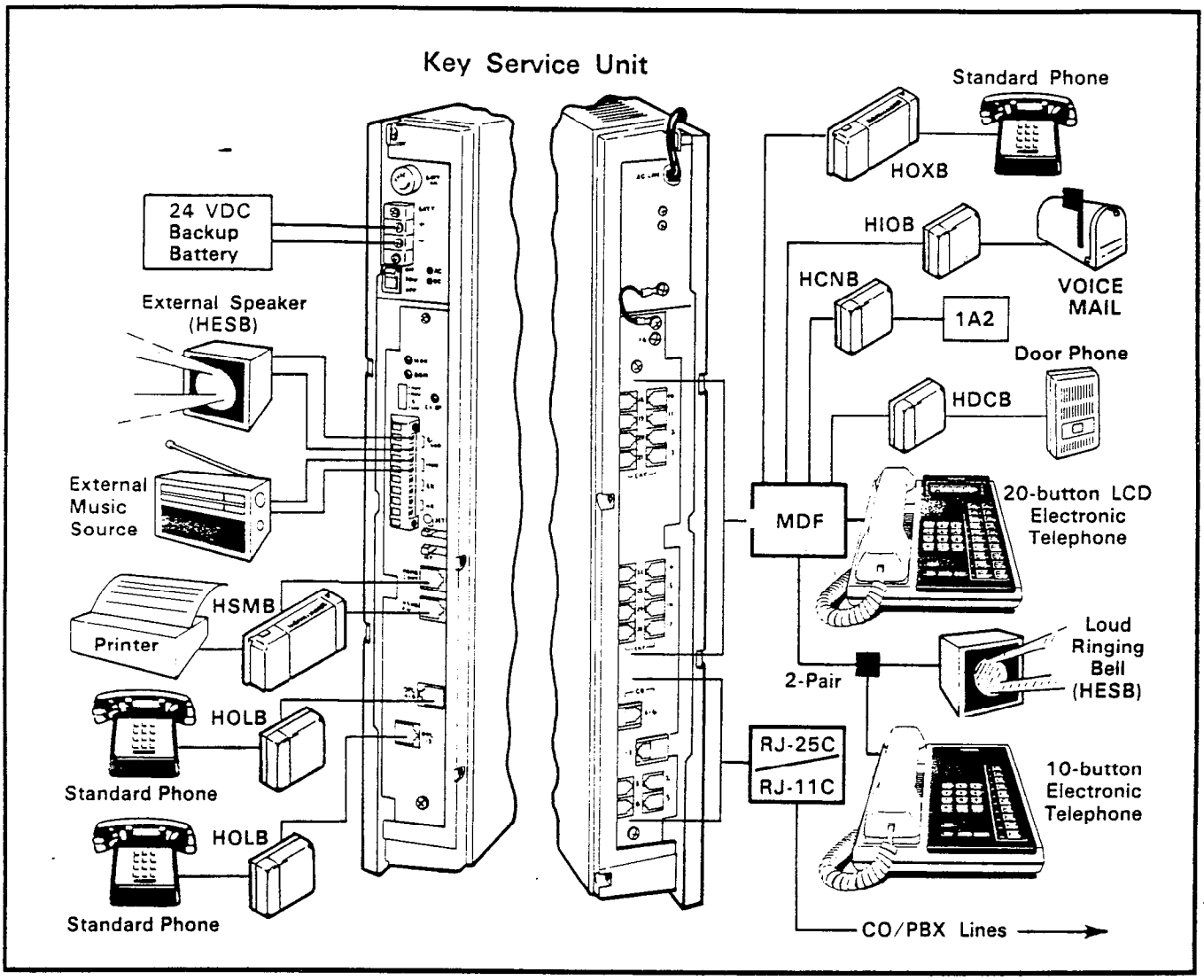

FIGURE 15—SYSTEM DIAGRAM

06 SYSTEM CONFIGURATION

Key Service Unit

The STRATA S_e key service unit arrangement illustrated in Figure 17 shows the locations of the various printed circuit boards and optional equipment.

The STRATA VI_e key service unit arrangement illustrated in Figure 18 shows the locations of the various printed circuit boards and optional equipment.

NOTE:
The optional modules are used only when required. All internal boards connect to the main PCB (in some cases, they also attach to the key service unit's side panel).

Complete with all available options, both key service units utilize up to eight printed circuit boards internally (as shown in Figures 17 and 18) and various option modules. The names and functions are as follows:

SMAU/VMAU: The main printed circuit board of the key service unit consists of the following three functions:

a) **Station Interface:** An interface between the key service unit and up to four stations (STRATA S_e) or up to eight stations (STRATA VI_e), which includes the solid-state, space-division matrix used for voice connections between the stations and the CO/PBX lines. Two-pair wiring is required for each station; one pair carrying voice and the other pair carrying control data to

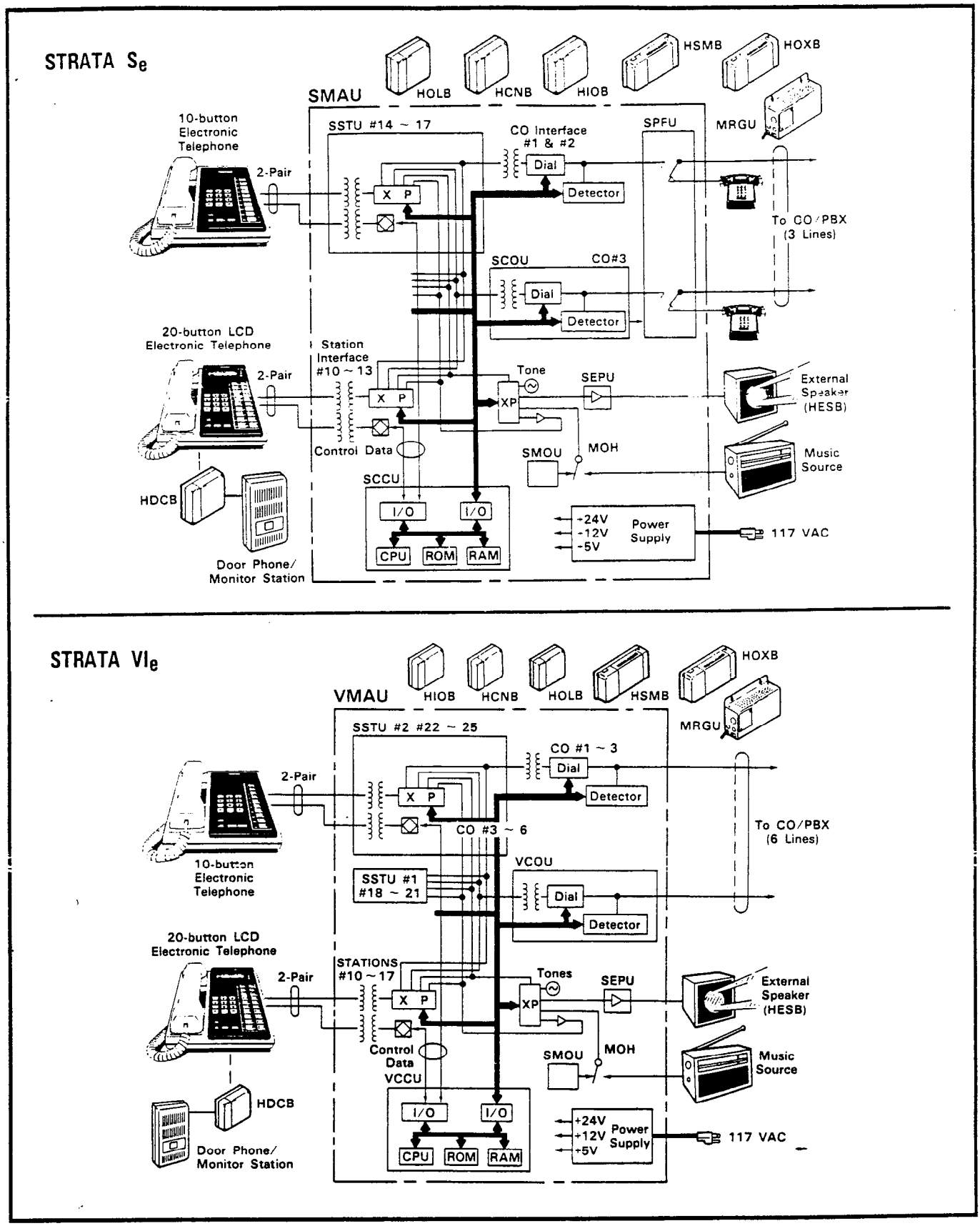

FIGURE 16—FUNCTIONAL BLOCK DIAGRAM

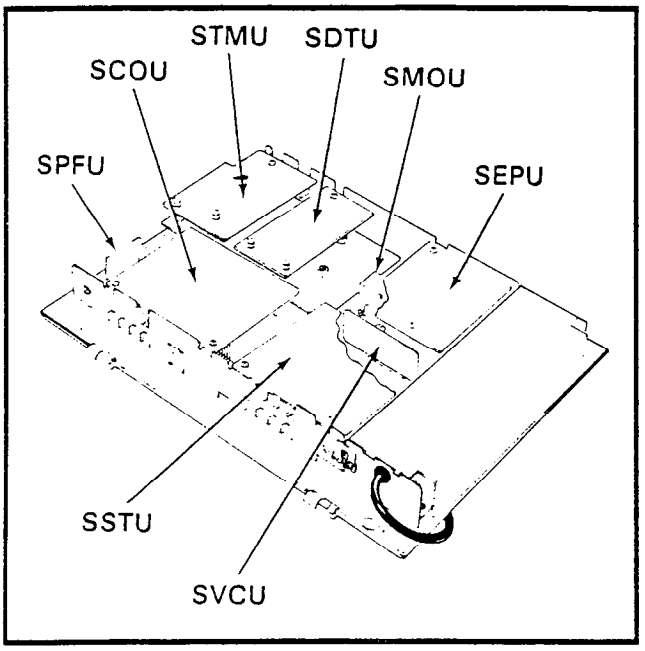

FIGURE 17
STRATA S_e KEY SERVICE UNIT (with PCBs)

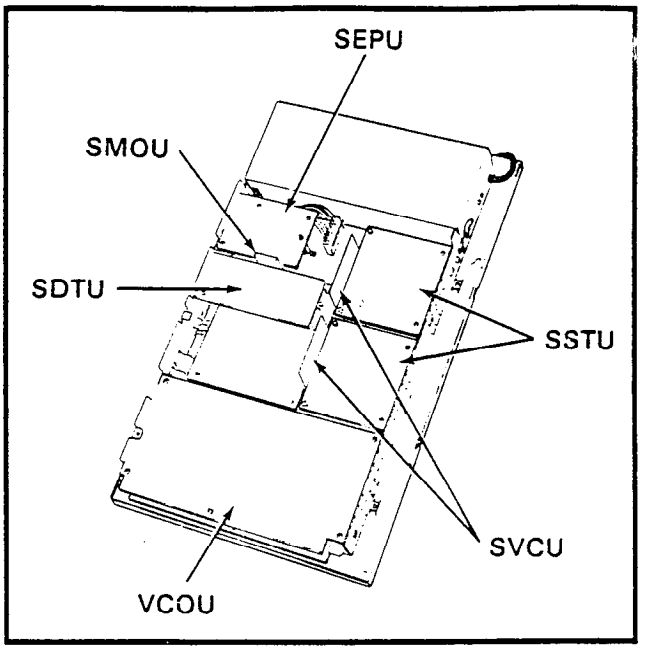

FIGURE 18
STRATA VI_e KEY SERVICE UNIT (with PCBs)

and from the station:

b) **CO Interface:** An interface between the key service unit and the public telephone network or PBX for up to two lines (STRATA S_e) or up to three lines (STRATA VI_e). Ring detection, hold and dial outpulsing for these lines are performed by this board. Depending upon local CO requirements, each incoming line can be separately connected and programmed to provide DTMF or rotary-dial outpulsing.

c) **Tone:** Performs a number of miscellaneous system functions:
   - Generates system tones.
   - Provides the switching matrix for the delivery of tones for both paging and intercom connections.

SCCU/VCCU: All system control functions are performed by the single-chip microprocessor on this printed circuit board. The system program stored in ROM, RAM for system operations, and the RAM for system data storage are also located on this circuit board. A battery on this board protects system memory should a power failure occur.

SCOU/VCOU: An optional interface between the SMAU/VMAU and one/three additional CO line(s). Depending upon local CO requirements, the SCOU/VCOU is programmed to provide DTMF or rotary-dial outpulsing. The SCOU serves one CO line; the VCOU serves up to three CO lines, and both serve up to three off-premises lines.

SSTU: An optional interface between the key service unit and stations 18 ~ 25 (stations 14 ~ 17 on STRATA S_e). Each SSTU PCB serves up to four stations. Two-pair wiring is required for each station; one pair carrying voice and the other pair carrying control data to and from the station.

SMOU: An optional music-on-hold source that provides electronic synthesized music. A choice of two musical tunes are available, selected via a switch on this board. The SMOU is connected to the SMAU/VMAU via an 8-pin connector.

SEPU: An optional 3-watt amplifier for external paging, using a customer-supplied 8-ohm speaker (connected to the SMAU/VMAU via a 10-pin connector).

SVCU: The Off-Hook Call Announce interface that mounts on the main printed circuit board of the key service unit to provide OCA access. One SVCU is required for every eight stations requiring OCA. (Adds two intercom lines in STRATA VI_e.)

SDTU: Provides Remote Administration/Maintenance access via its built-in 300/1200 baud modem. One SDTU per system is required for Remote Administration/Maintenance.

STMU: Required for connection to an HSMB to provide SMDR for a STRATA S_e key service unit.

HPSU 6120/7120: Each system's required voltages are provided by one of these factory-installed power supplies. The HPSU connects to a standard 3-wire, 117 VAC, 60-Hz, grounded wall outlet, with a permissible AC input voltage range of 90 ~ 130 VAC.

HPFB: An optional battery backup unit that is available for the HPSU 6120 (STRATA S_e). With the optional battery backup assembly installed, all functions of the system will continue to operate for approximately two to three hours after a loss of normal electrical power. Calls will not be disconnected during switch-over to or from battery power.

HPBU-7: An optional battery backup unit for the HPSU 7120 (STRATA VI_e). It is a printed circuit board that mounts inside the power supply housing and is connected to the recommended battery pack (which is customer-supplied, consisting of two 12 VDC, maintenance-free, automobile-type batteries—80 amp/hour maximum rating). With the optional battery backup assembly installed, all functions of the system will continue to operate for several hours (the actual time period is in direct ratio to the type and size of batteries selected) after a loss of normal electrical power. Calls will not be disconnected during switch-over to or from battery power. The HPBU-7 also provides a charge to the battery pack during normal operations.

Option Modules

HOLB: An off-premises line module that allows the bridging of a CO line, which appears in the system with a conventional telephone; supervision is provided. Each HOLB provides three circuits, all three of which may be directed to an answering machine (or similar device) attached to the HUNT connector.

HDCB: An optional module (two per system maximum) connected to the key service unit at station 13 and/or 14 (station 11 and/or 12 on STRATA S_e) that allows up to three (each HDCB) door phone/monitor stations (MDFBs) to ring pre-selected stations. The HDCB has three outputs (A, B, C), which are modular connectors for the three MDFBs. (Outputs B and C on either/both HDCB(s) may be used for the Door Lock and Alarm features, respectively.)

HOXB: An external module that serves as an interface between the key service unit and conventional, standard telephones or off-premises extension (OPX) lines. Each HOXB PCB serves two extensions; one HOXB per system. An HOXB will operate with either DTMF or rotary-dial telephones. An auxiliary ring generator/power supply (MRGU) is required for use with the HOXB.

HSMB: Serves as an interface between the key service unit and a printer or storage device used for the SMDR feature. The module is equipped with an RS-232C interface and connects to the left side panel via one supplied 8-wire modular connectors (one HSMB per system). (S_e also requires an STMU PCB.)

HCNB: Provides an interface between a 1A2 key system and the CO lines appearing therein to a STRATA$_e$ system. One HCNB is required for every three lines where dual appearances are desired. Also, A-lead control, lamp signal detection and dial outpulsing are performed by this module (see Figure 19).

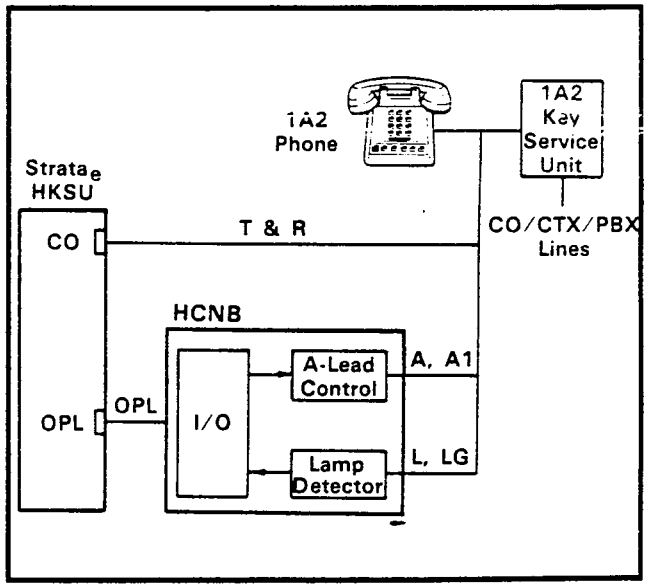

FIGURE 19
1A2 INTERFACE FUNCTIONAL BLOCK DIAGRAM

HIOB: Provides one circuit to interface with external devices such as a voice mail port, answering machine, standard telephone, modem, etc. Up to eight HIOBs (four on a STRATA S_e) may be installed on a system. Each HIOB is connected to a proprietary station port, reducing station capacity accordingly.

Station Equipment

The principal components of the electronic telephone are: handset, dial pad, speaker, microphone, two volume controls, four fixed feature buttons, an INT button, and 9 or 19 flexible CO/feature buttons. LED indicators are provided for all buttons except for HOLD and CONF. See Figures 10 and 12.

The single-line electronic telephone (Figure 9) is equipped with three permanently dedicated buttons (HOLD CONF SPKR) and an Intercom/CO line button, which is not labeled.

The 10-button Busy Lamp Field electronic telephone (Figure 11) with speakerphone provides 10 buttons that can be assigned to control intercom, CO line and feature operation, plus an LED indication of which stations are in use.

A 20-button Liquid Crystal Display electronic telephone (Figure 13) with speakerphone may be located at any or all of the stations. The 32-character alphanumeric display provides many capabilities—an accurate clock/calendar in its idle state; and elapsed time, dialed number, calling station and CO line are just a few of the features available. For additional explanations of the features listed below, see Liquid Crystal Display.

- Alphanumeric Messaging
  - Busy Station Messaging
  - Called Station Messaging
  - Calling Station Messaging
  - Remote Station Messaging
- Busy Lamp Field (BLF) Indication
- CO Line Identification
- Speed Dial Memo
- Timed Reminders

All phones are easily converted for wall mounting, feature modular handset cords, are equipped with a second modular connector for headset connection (except the single-line), and are connected to the system via modular line cords.

An optional replacement base for the electronic telephone provides a built-in 300/1200 baud modem with automatic answering capabilities. It is a Bell Standard, full duplex modem.

The optional door phone/monitor station (Figure 6) allows distinctive ringing to preselected station(s). When a station dials an individual door phone, a circuit providing monitoring capabilities on the intercom is established. This option requires station 13 and/or 14 (station 11 and/or 12 in STRATA S_e) to be replaced by a door phone control unit (HDCB) and up to six door phone units (MDFBs)—three each HDCB. One door phone/monitor (only station 13C for VI_e; 11C for S_e) can be replaced by an alarm control circuit on station 13 HDCB and one by a door lock control circuit on all HDCBs.

An external amplified speaker (HESB) may be connected in any one of the following three applications:

- **Loud Ringing Bell:** Allows you to amplify the tone of a paging/ringing signal without using other manufacturers' equipment. The signal can be amplified on all 6000-series phones, except the single-line electronic telephone. Three-pair wiring is required for this application.
- **Amplified Speaker:** Allows you to use the HESB as a paging speaker, reducing the need for other manufacturers' paging equipment.
- **Talkback Amplified Speaker:** Allows you to provide a talkback speaker in areas where a telephone is not needed. For talkback operation, connect the HESB to the door phone unit (MDFB), which is used as a microphone; however, the push-button is inoperative.

The HESB is a 6" 3-watt speaker with an amplifier that is built into an attractive speaker box (Figure 8). A +12 VDC power supply (HACU-120), which connects to the back panel via an 8' cord, is included with each HESB.

Installation

The key service unit is configured for wall mounting only.

All external devices are connected to the key service unit via connectors and terminals on the side panels, as follows:

a) CO lines are connected to the key service unit right side panel via separate (one for

each line) single-pair modular cords or a single 3-pair modular cord (STRATA S_e); or two 3-pair or six single-pair modular cords (STRATA VI_e).

b) The station connection points are extended from the key service unit to the main distribution frame using 3-pair modular line cords. The individual telephones are connected to the main distribution frame using 3-pair station cables.
c) A screw-terminal barrier strip is mounted on the left-hand side of the key service unit to provide attachment points for the music-on-hold source input, relay service (STRATA VI_e only) and external page output.
d) Two (only one for STRATA S_e) modular connectors are also provided on the left side panel for two (only one for STRATA S_e) optional off-premises line modules (HOLBs).

The power supply is mounted inside the key service unit. In STRATA S_e a connector is provided on the left side panel for optional system reserve power (HPFB). In STRATA VI_e an optional battery backup printed circuit board is available for the power supply.

Maintenance

Faults in the system are repaired by replacing any faulty component (printed circuit board, subassembly, telephone, etc.) and returning it to the manufacturer for repair.

In addition, remote administration/maintenance allows the system to interface via an SDTU (built-in modem) with a remote location. This reduces the cost of routine data base changes by eliminating the need of a technician to be on-site for each software change.

07 FEATURES and OPERATION

General

This section contains brief descriptions of the features listed earlier in Tables B and C and some associated operating instructions. For more detailed instructions, see the User Guide or Quick Reference Guide.

Standard Features

System

All Call Voice Page: Dialing a 2-digit access code permits a station user to page via all idle telephone speakers simultaneously. The system can also be programmed to include the External Page feature in an All Call Page.

Alternate Point Answer: CO or intercom calls can be answered from any station.

Automatic Dialing-System: Allows up to 40 numbers to be stored in the system memory. After selecting an outgoing line, any station user can cause one of the stored numbers to be outpulsed by dialing the proper access code.

Automatic Hold Recall: A CO line placed on hold by any station will recall that station after a programmable period of time. A different time period can be selected for each station.

Automatic Release from Hold: The system automatically releases held CO lines if a disconnect signal is received from the Central Office.

CO Line Pickup Groups: In STRATA VI_e only, using a dial code or the CPU button, allows CO line pickup from another station. Two Call Pickup Groups can be defined in programming and buttons (CPU1 and CPU2) can be assigned to phones for each group.

Conference (Multi-CO Line): The system will conference two CO lines and up to three stations. See Amplified Conference.

Conference (Multi-Station): Non-amplified conferencing is permitted to a maximum of four stations and one CO line. See Amplified Conference.

CTX/PBX Compatible: System features, such as Toll Restriction and Automatic Dialing, are compatible with CTX/PBX operation.

CTX Ringing Repeat: To facilitate the use of special calling/callback features on CO/CTX/PBX lines, the system will ring the called station with the same on/off cadence that is received from the outside line.

Delayed Ringing: A 12- and/or 24-second ring delay may be programmed for each station to permit alternate answering. The delayed ring is provided for each line selectively by each station.

Distinctive Ringing: CO and intercom calls are distinguished by different ringing tones.

DTMF and Dial Pulse CO Line Compatible: The system will interface with either DTMF or rotary-dial pulse CO lines on a line-by-line basis as determined by system programming.

External Page Interface: A 600-ohm connection point is provided for a customer-provided external amplifier/speaker. An SEPU PCB (see External Amplified Speaker and External Page Amplifier) is mounted in the key service unit when a customer-provided external speaker only is used; the output impedance is 8 ohms. This page circuit can be accessed as part of the All Call Voice Page feature.

Flexible Intercom Numbering: A station intercom number can be flexibly programmed up to any 4-digit number. It is, therefore, possible to match a station's intercom and CTX line extension number.

Flexible Key Assignment: Allows each phone to be programmed for the optimum use of its CO or feature buttons.

Flexible Line Ringing Assignment: A programmable ring or no ring option is provided for each line selectively by each station.

Forced Account Code: Requires selected station(s) to dial an account code prior to dialing a number. The account code is recorded with call details on the SMDR report.

Group Paging: Special 2-digit access codes (81, 82, 83 or 84) permit voice paging to one of four zones. Zone assignment is via software and is totally flexible. Paging is via the speakers of idle telephones.

Least Cost Routing: Enables the customer to decide over which trunks outgoing voice and data calls will be routed. This can greatly reduce the cost of long distance calling. Four classes of LCR can be programmed to give priority routes to the users who need them. (STRATA VI_e only.)

Live System Programming: Live system programming is accomplished without service interruption to other station users by placing the system in the special programming mode and inputting data via station 17 (station 13 in STRATA S_e). Station 17(13) is the only station that is "down" during programming.

Message Waiting: Any station (including the designated Message Center) can set a Message Waiting LED at any station with the Message Waiting LED of that station. The called station cancels the LED by lifting the handset and depressing the MW/FL button (not available on single-line electronic telephone). See Flash Button.

MF Signal Time (160/80 ms): The standard MF dial signal time is 80 milliseconds, but it may be extended to 160 milliseconds, if required by the Central Office or to activate remote equipment.

Multiple Simultaneous Handsfree Intercom Paths: Two intercom paths are standard in the systems. Both intercom lines are able to carry handsfree conversations simultaneously. (STRATA VI_e may be increased to four paths optionally.)

Music-On-Hold Interface: An interface is included for a customer-provided music source. CO lines placed on hold will be connected to this source. In addition, this music may also be broadcast from electronic telephone speakers and external page when the background music programming options are selected.

Night Ringing Answer Code: A night ringing call may be answered from any station via a dial code.

Night Ringing Over External Page: As a programmable option, while the night mode is active, a system-generated ring tone will be transmitted via the external speaker whenever any line rings (STRATA VI_e only).

Night Transfer: On a programmable optional basis, the system can function with two or three ringing patterns. If three patterns are selected, they are designated DAY, DAY 2, and NIGHT. If the two-pattern mode is selected, DAY and NIGHT designations are used. In both cases, the ringing modes are selected with the NT button on station 10.

Non-blocking Dialing: Dialing is permitted on intercom and all CO lines simultaneously.

Outgoing Call Restriction: Any station can be selectively restricted from originating calls on any or all CO lines. However, the station may still receive calls on the restricted line(s).

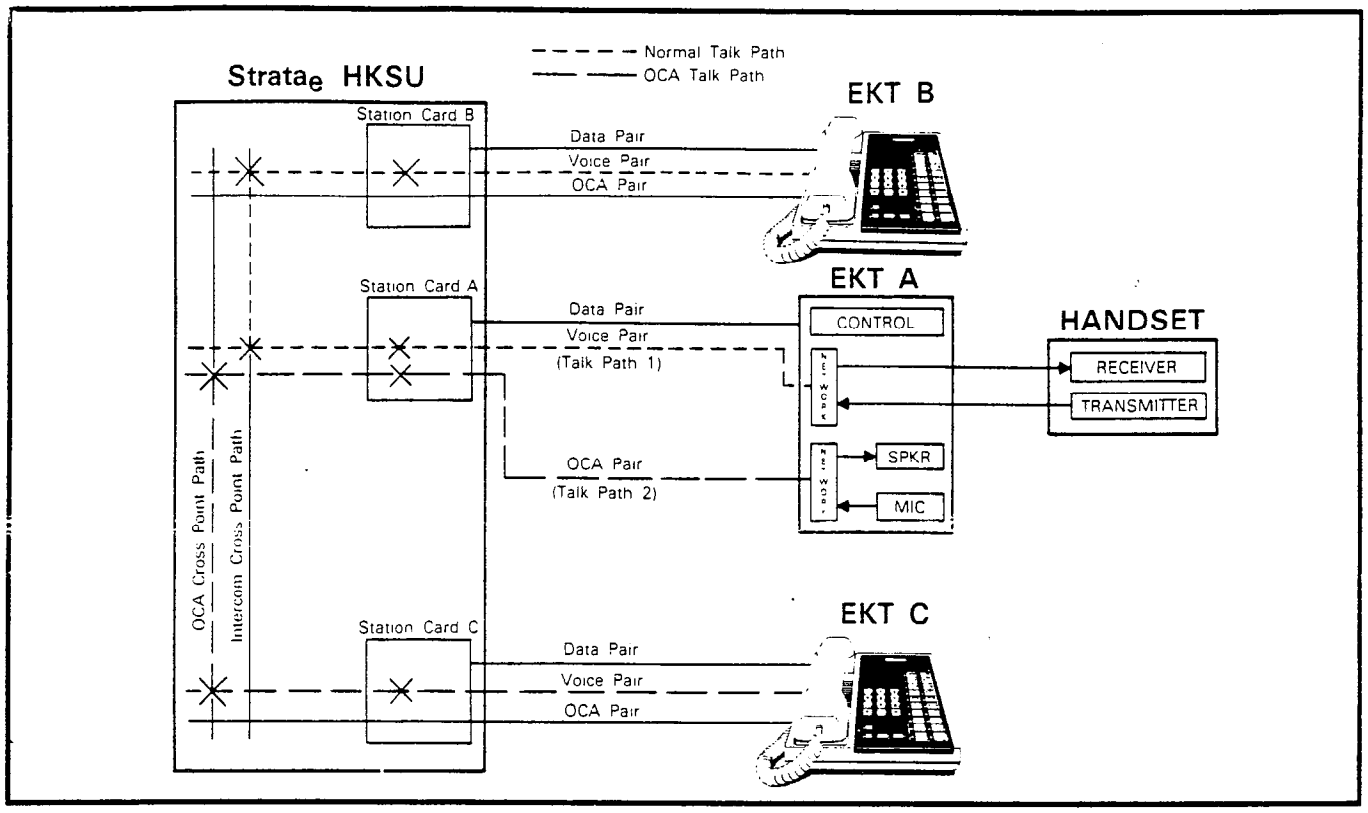

FIGURE 25—OFF-HOOK CALL ANNOUNCE FUNCTIONAL BLOCK DIAGRAM

- If in automatic mode*: Station A receives a single tone burst (an OCA speech path exists between stations A and C via the EKT's speaker and microphone—verify).
- If in dial 2 mode: Station C receives busy tone, then dials 2 to establish an OCA speech path between stations A and C—verify.

Program 5XX *LED 12 determines the mode of the originating station.*

09.10 HCNB

09.11 General: Provides 1A2 Interface for the system.Each HCNB supports three CO/1A2 interface line circuits. The HCNB provides line supervision between the HKSU and the 1A2 equipment. The maximum distance between these units is determined by the 1A2 Interface line circuit specifications. To install, follow the procedures listed below:

1) Connect tip/ring, lamp and A lead connections per Figure 26.

2) Using the provided 4-pair modular cord, connect the HKSU to the HCNB.

3) Connect the MDF to the modular blocks with 24 AWG wire.

4) Connect the supplied field ground wire.

NOTE:
Connecting the jumper wires **W1** *and* **W9** *is not necessary.*

09.12 Programming: Verify the correct programming for 1A2 interface via **Program 0#7.**

09.13 To Test 1A2 Interface: Conduct the following test on each incoming line:

1) Depress each CO line key on an EKT.
   - Verify that the corresponding lamp lights on a 1A2 telephone.

2) Make a test call from the EKT.
   - Verify that the call may be monitored at the 1A2 telephone.

3) Repeat steps 1 and 2 at the 1A2 telephone.

4) Place each CO line (one at a time) on hold at an EKT.
   - Verify that the CO appearance on the 1A2 telephone is on hold.

5) Repeat step 4 at the 1A2 telephone, and all appropriate telephones in both systems.

NOTE:
Exclusive hold is a function of each system (i.e., if a station places a line on exclusive hold, but the 1A2 system does not provide this feature, the line may be picked up by any 1A2 telephone (and vice versa).

09.20 HIOB

09.21 General: Provides a circuit interface with the system for external devices such as a voice mail machine, answering machine, standard telephone*, modem, etc. (see Figure 27). The HIOB circuit includes a DTMF generator, DTMF receiver, ring generator, answer detector and voice circuit (DTMF signal time from HIOB to device is fixed at 160 ms). Table A indicates available station lines and system capacities.

**Least Cost Routing and Toll Restriction apply to standard telephones.*

TABLE A—HIOB CAPACITY		
SYSTEM	Q'TY	STATIONS
S_e	4	14 ~ 17
VI_e	8	18 ~ 25

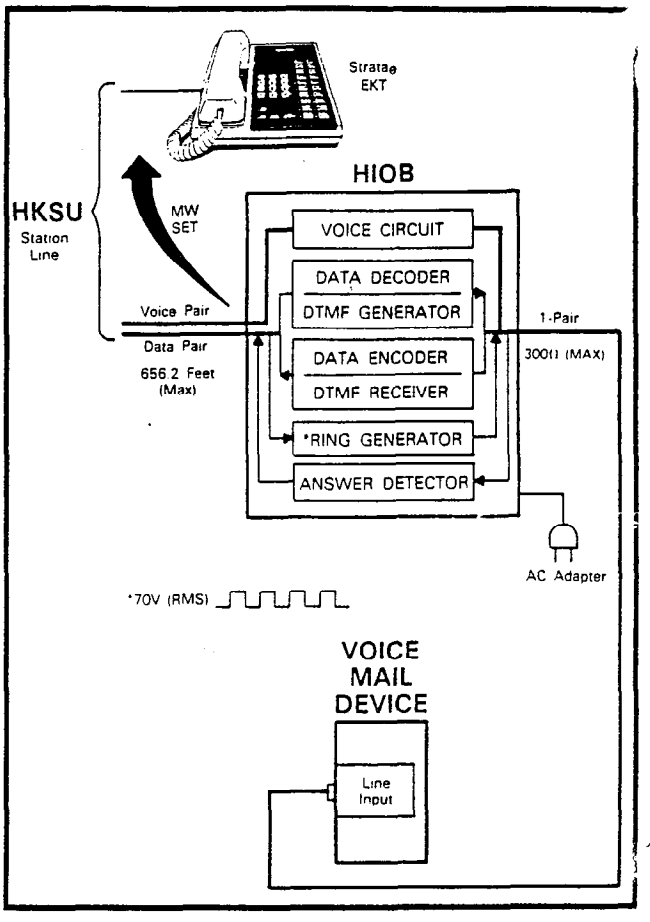

FIGURE 27—HIOB FUNCTIONAL BLOCK DIAGRAM

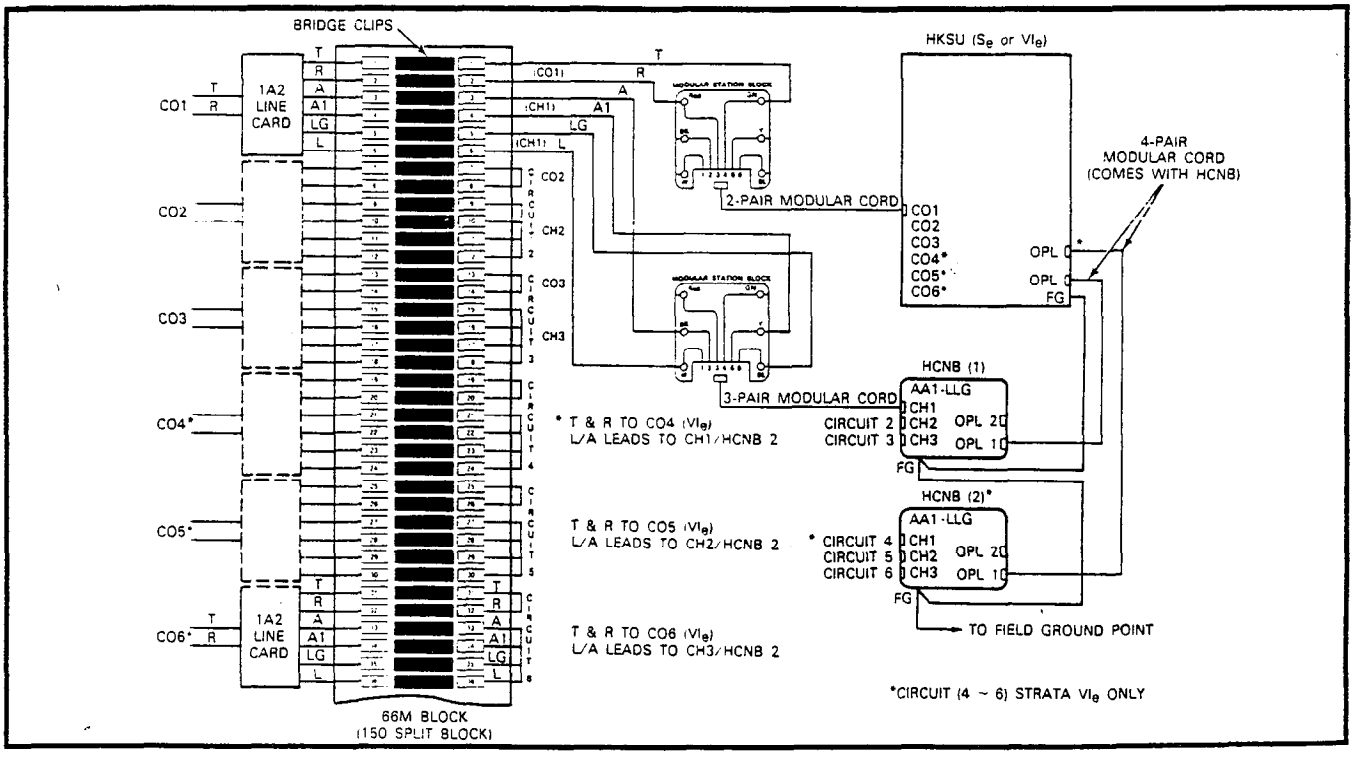

FIGURE 26—HCNB CONNECTIONS

an interactive silent messaging conversation.

- **Called Station Messaging:** Your station number and a message indication may be sent to another LCD station. When that called station responds, the station will receive the 32-character message.
- **Calling Station Messaging:** A message displayed on your LCD phone will be automatically displayed on the calling station's LCD when dialed.
- **Remote Station Messaging:** Allows any station to set a Called Station Message for another station, the recepient to be a station or group of stations.

b) **Busy Lamp Field (BLF) Indication:** The Liquid Crystal Display can be used to indicate the on-/off-hook status of all telephones in the system. BLF status is displayed up to the maximum number of stations for each system.

c) **CO Line Indication:** Allows each CO line to be identified with a 16-character name. All LCD phones using that line will display the name instead of the CO line number.

d) **Speed Dial Memo:** Each LCD telephone user may program a 16-character name for each of their 40 personal speed dial numbers. The memo pad of names and numbers (including system names and numbers) may be scrolled to select the appropriate party. Depressing a CO line button will cause the displayed number to be dialed automatically.

e) **Timed Reminders:** Allows five separate messages to be set at each LCD telephone. These messages will be displayed at the appropriate times (hour and minute) set by the station user. The messages can be repeated on a daily basis or displayed just once.

Microphone Cut-off Buttons: Electronic telephones may be programmed with an MCO button, allowing the microphone to be turned ON/OFF while a station is in the idle state (controls Handsfree Answerback). See Station Security.

Modular Handset and Line Cords: All electronic telephones are equipped with modular handset and line cords, and (except the single-line) are also equipped with an additional modular headset jack.

On-Hook Dialing: The system allows you to dial your calls with the handset still on-hook. Call progress can be heard via the telephone speaker; no need to pick up the handset until your party answers.

Privacy Button: Allows privacy or non-privacy to be selected (via the PRV button) on CO lines.

Privacy Override: A station programmed for this feature can enter any existing CO line conversation if the station is equipped with that CO line button. An initial warning tone is given, but no subsequent tones are provided. A maximum of two stations can be programmed for this feature.

Private CO Lines: Restrictions may be programmed into the system so that selected CO line(s) will appear only on selected station(s).

Push-Button Dialing: All electronic telephones are equipped with push-button dial pads.

Remote Retrieval of Held Calls: Calls that have been placed on hold by a station can be retrieved by a different station with the Call Pickup feature.

Repeat Last Number Dialed: The last number dialed by each station is always stored by the system and will be dialed automatically whenever the station user accesses a CO line and depresses the # or RDL button. See Saved Number Redial.

Ringing Line Preference: A line ringing a station can be answered by lifting the handset or depressing the SPKR button. The ringing line will be automatically selected.

Saved Number Redial: A programmable button that saves a dialed number for redial at a later time. May be used at any time and is exclusive of the Repeat Last Number Dialed feature.

Station Security (MCO Button): Stations may be programmed with an MCO button, allowing the microphone to be turned ON/OFF while a station is in the idle state (enables or disables the Handsfree Answerback).

Toll Restriction Override Code: Two special codes may be defined to override toll restriction from any station.

Trunk Queuing: Provides a means for station users to be "stacked" in a waiting queue for a busy outgoing trunk group by using the Automatic Callback feature. The station will then be signalled when a trunk in the group becomes available. As a programmable option, the system may be equipped with one trunk group (dial 9) or eight trunk groups (dial 91, 92, 93, 94, 95, 96, 97, 98).

Optional Features

1A2 Key System Interface (HCNB): Utilizing an optional line interface printed circuit board, both systems can be connected to CO/CTX/PBX lines through 1A2-type key telephone systems. The system will detect lamp lead status and supply A-lead control.

Amplified Conference: In some applications, it may be necessary to amplify the CO line used in a multi-CO line conference. A customer-provided amplifier can be connected to the system for this purpose. Reduces the system capacity by two stations.

Auxiliary Device Interface (HIOB): Allows system interaction with customer-provided auxiliary devices such as standard telephones, recording/dictating machines, modems and voice mail equipment. The unit contains both a DTMF tone generator and receiver for use with auxiliary devices. The following features are available through the voice mail interface.

- **Call Forward to Voice Mail Box:** Allows a station user to call forward to a voice mail box location. The system will ring the voice mail system and forward the digits of the desired mail box once answered.
- **Message Waiting Indication:** Allows the voice mail system to dial a special access code to set message waiting at the station when the voice mail system is the message center.
- **Voice Mail Control:** Allows the station user to control the voice mail equipment, using the dial pad, as DTMF signals are received by the voice mail equipment.

Background Music with Station Control: Music from the music-on-hold source can (at the station user's option) be heard via the telephone's speaker. The same music may also be broadcast via the external page interface if an external speaker is installed.

Door Phone/Monitor Station: Allows door phone unit(s) to distinctively ring pre-selected stations. A station dialing to an individual door phone unit provides monitoring capabilities on the intercom.

- **Alarm Button:** Turns off the alarm signal set in the system by a customer-supplied alarm system. The alarm signal is activated by a closure at the HDCB door phone C output from a customer-supplied alarm system. The alarm signal will be heard from all idle stations until the ALRM button is depressed (station 13 on VI_e, 11 on S_e).
- **Door Lock Button:** Activates a dry contact relay closure for indirect control of a door lock or other devices. When the DRLK button is depressed, the HDCB door phone B output will close for a period of 3 or 6 seconds.

Electronic Telephones:

- **Faceplates (blue, black or wine):** The standard brown faceplates can easily be changed on any electronic telephone to coordinate with office decor.
- **Single-line:** A basic telephone that is equipped with three permanently dedicated buttons (HOLD CONF SPKR) and an intercom/CO line button, which is not labeled. Electronic telephone features may be accessed via dial codes.
- **10-button Handsfree Answerback or Speakerphone:** A basic telephone with full speakerphone capability or handsfree answerback only, depending upon the requirements. This phone can be assigned to any station, and is equipped with an intercom button and nine flexible buttons that may be assigned as CO line appearances or feature access.
- **10-button Busy Lamp Field:** A 10-button telephone with full speakerphone capability and an LED panel showing the busy/idle status of certain stations (a station in the DND mode will show as busy).
- **20-button Handsfree Answerback or Speakerphone:** A 20-button telephone with full speakerphone capability or handsfree answerback only, depending upon the requirements, and is equipped with one Intercom button and 19 flexible buttons that are assigned as CO/PBX line appearances or feature access.
- **20-button Liquid Crystal Display:** This

20-button telephone features a 32-character, alphanumeric display, full speakerphone capability, recalling station identification, and the same button flexibility as the 20-button telephone. See Liquid Crystal Display Features.

External Amplified Speaker: An external amplified speaker (HESB) may be connected in any of the following three applications:

- **Amplified Speaker:** Allows you to use the HESB as a paging speaker.
- **Loud Ringing Bell:** Allows you to amplify the tone of an electronic telephone ring (except the Single-Line).
- **Talkback Amplified Speaker:** Allows you to provide a talkback speaker (via an MDFB) where a telephone is not needed.

NOTE:
If an HESB is installed, an external amplifier (SEPU PCB) is not necessary.

External Page Amplifier: This external page 3-watt amplifier (SEPU PCB) allows access to a customer-provided external 8-ohm speaker for paging.

Integrated Modem (HMDB): Allows simultaneous voice/data switching via an auto-answer modem (300/1200 baud). The modem replaces the base of any 10- or 20-button electronic telephone, and is connected to a proprietary station port. Can be used up to the system maximum capacity, but each modem reduces the station capacity by one.

Music-On-Hold Source: When installed, this electronic music source (SMOU PCB) eliminates the need for a customer-provided external music source and provides electronic-generated music to CO lines placed on hold.

Off-Hook Call Announce: Allows a station user to call and speak to an off-hook, busy electronic telephone through the speaker. The called station user can reply via the telephone's microphone without interrupting the existing conversation. If the called station is currently in use via the speakerphone/handsfree, the caller will receive a busy signal. Feature is activated automatically or by dial access (2) on a station-by-station basis.

Off-Premises Extension: Installing an HOXB allows the system to interface with conventional, standard telephones or off-premises circuits. The HOXB serves two extensions and replaces two stations in the system. (Maximum: two per STRATA S_e/four per STRATA VI_e.)

- **MRGU:** An auxiliary ringing/power supply for the HOXB.

Off-Premises Line: Installing an HOLB allows the bridging of a CO/PBX line that appears in the system with a conventional telephone (or other device, such as a modem). During Night Service, all incoming calls on an HOLB's three circuits may be directed to an answering machine (or similar device) connected to a "hunting" output. This option is set in programming.

Remote Administration/Maintenance: The SDTU provides this feature via its built-in 300/1200 baud modem. One SDTU per system is required for Remote Administration/Maintenance.

Station Message Detail Recording (SMDR): Adding an HSMB to a system allows data to be collected for each outgoing and incoming CO line call. This data is output to a printer or recording device via the RS-232C interface located on the HSMB. The HSMB is externally mounted.

System Battery Backup:

a) In STRATA S_e, an HPFB can be plugged into the HPSU to provide automatic switching to standby battery power. During normal power conditions, the batteries are kept fully charged by the power supply. The HPFB includes batteries and the charging unit:

b) In STRATA VI_e, an HPBU can be installed in the power supply to provide automatic switching to standby battery power (provided by customer). During normal power conditions, the batteries are kept fully charged by the power supply.

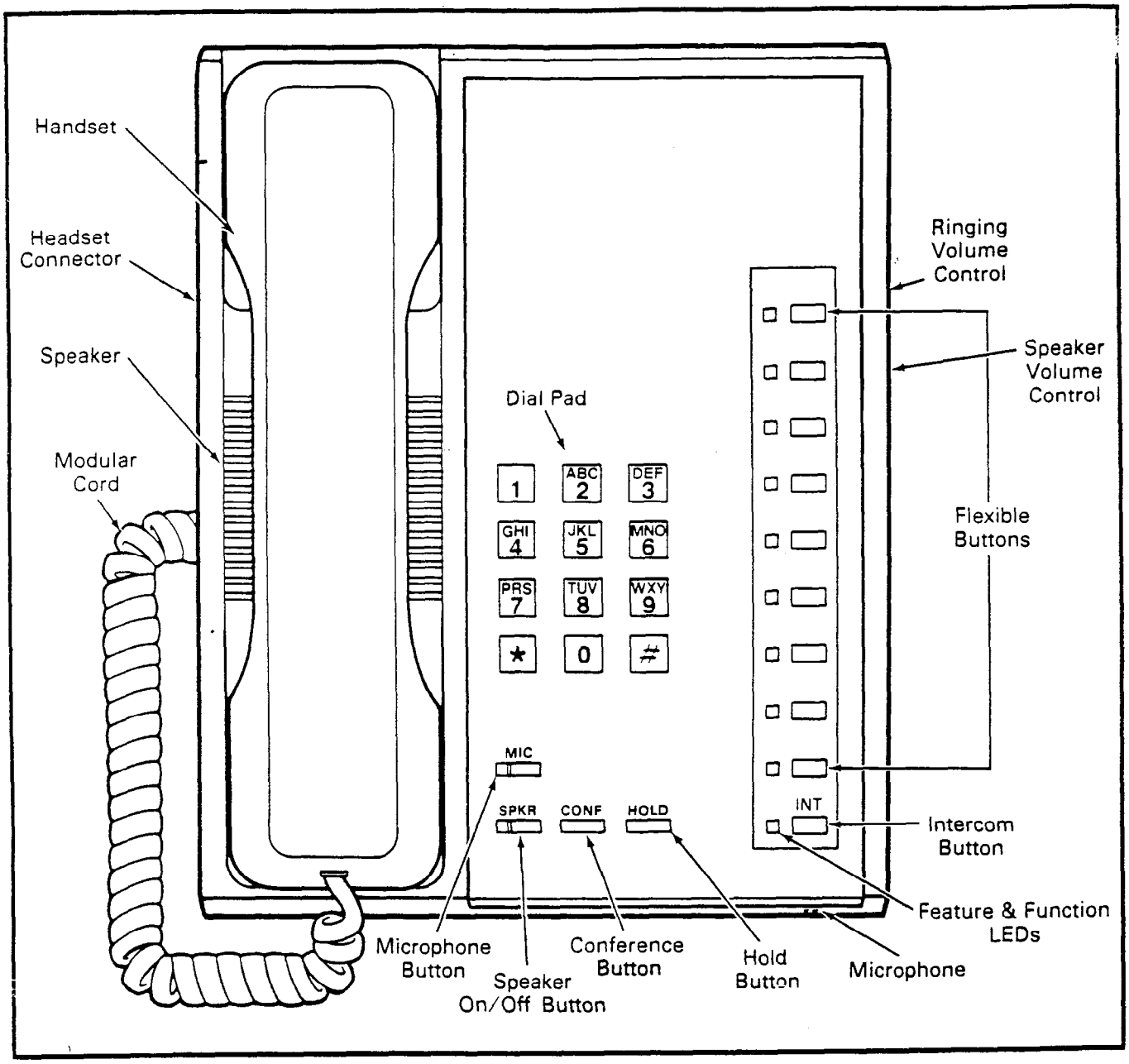

FIGURE 20—ELECTRONIC TELEPHONE DIAGRAM

INSTALLATION INSTRUCTIONS
SECTION 500-036-200
JANUARY 1988

Strata S_e & VI_e

RELEASE 2

INSTALLATION INSTRUCTIONS

INSTALLATION INSTRUCTIONS
TABLE of CONTENTS

PARAGRAPH	SUBJECT	PAGE
	TABLE of CONTENTS	i
	ILLUSTRATION LIST	iii
01	GENERAL	1
02	PACKING	1
02.00	Inspection	1
03	HKSU REQUIREMENTS	1
03.00	Cabling Considerations	1
03.10	Environmental Factors	1
03.20	Power Requirements	1
03.30	Main Distribution Frame Requirements	2
04	HKSU INSTALLATION	2
04.00	Mounting the HKSU	2
04.10	Power Supply Installation	2
04.20	System Ground Check	5
05	PRINTED CIRCUIT BOARD INSTALLATION	5
05.00	General	5
05.10	Factory-Installed PCB	6
05.20	SCOU/VCOU	6
05.30	SPFU (S_e only)	7
05.40	SSTU	7
05.50	SMOU	8
05.60	SEPU	8
05.70	SVCU	8
05.80	SDTU	8
05.90	STMU (STRATA S_e only)	9
06	BASIC CABLING REQUIREMENTS	9
06.00	Station Wiring	9
06.10	CO Line Connection	10
07	SYSTEM POWER-UP INITIALIZE	10
07.00	General	10
07.10	Clearing Automatic Dialing	11
07.20	Alphanumeric Messaging Initialization	12
07.30	Timer Reminder Messaging Initialization	12
07.40	System Real-Time Clock/Calendar Adjustment	12
08	EKT INFORMATION	12
08.00	General	12
08.10	HVSU Installation	13
08.20	EKT Wall Mounting	13
08.30	EKT Connections	14
08.40	Carbon Handset Installation	14
08.50	EKT Functional Check	15
09	INSTALLATION OF OPTIONS (External)	16
09.00	Off-hook Call Announce	16
09.10	HCNB	17
09.20	HIOB	18
	TABLE A—HIOB CAPACITY	18
09.30	HOXB	21
09.40	HDCB	22
09.50	HOLB	24
09.60	HSMB	25
	TABLE B—RS-232C (Female) PIN CONNECTIONS	26
09.70	HMDB Installation	28
	TABLE C—VR2 SETTINGS	31

INSTALLATION INSTRUCTIONS
TABLE of CONTENTS (continued)

PARAGRAPH	SUBJECT	PAGE
09.80	Amplified Conference	31
09.90	HESB	31
10	EQUIPMENT CONNECTIONS	33
10.00	Wiring Connections	33
10.10	MOH/BGM Source	33
10.20	External Paging Connections	34
10.30	Direct External Speaker Connection	34
10.40	External Amplifier	34
10.50	Talkback Amplifier	35
10.60	Background Music	35
10.70	Volume Setting Sequence	35
10.80	Night Relay Service (VI_e only)	36

INSTALLATION INSTRUCTIONS
ILLUSTRATION LIST

NUMBER	TITLE	PAGE
1	SCCU/VCCU Battery Strap	1
2	HKSU Side Covers	2
3	HKSU Wall Mounting	2
4	HPFB Installation	4
5	HPBU Installation	4
6	HKSU Cover Removal	6
7	SCOU and SPFU Locations	6
8	VCOU Location	7
9	S_e SSTU and SVCU Locations	7
10	VI_e SSTU and SVCU Locations	8
11	S_e/VI_e SEPU and SMOU Locations	8
12	S_e/VI_e SDTU Location	9
13	STMU Location	9
14	EKT Wiring	10
15	RJ-11C/RJ-25C Color Code	10
16	S_e/VI_e HKSU Right Side Panel	10
17	SCCU/VCCU Battery Strap	11
18	S_e/VI_e Initializing Switches	11
19	HVSU Location	13
20	Removing EKT Base	13
21	EKT Mounting Holes	14
22	EKT Wire Routing	14
23	Handset Hanger	14
24	Carbon Handset Modification	15
25	Off-hook Call Announce Functional Block Diagram	17
26	HCNB Connections	18
27	HIOB Functional Block Diagram	18
28	HIOB Wiring Diagram	19
29	HIOB Switches	20
30	HOXB Connection Straps	21
31	HOXB Wiring	21
32	HDCB Connection Straps	23
33	HDCB/MDFB Connection	23
34	HOLB Wiring	26
35	HSMB/Printer Cabling	26
36	HSMB Straps and Switches	26
37	HSMB Buttons	27
38	SMDR Printout Example (Outgoing Call)	28
39	SMDR Printout Example (Incoming Call)	28
40	HMDB External Switches	29
41	HMDB Wiring	29
42	HMDB Installation	29
43	HMDB Internal Switches	30
44	Amplified Conference Functional Block Diagram	31
45	HESB Back Panel	32
46	Modular-to-Terminal Strip Internal Connections	32
47	Terminal Strip	34
48	Impedance Switch	34
49	External Amplifier Hook-up	35
50	Volume Setting Controls	35
51	Relay Contacts	36
52	Night Relay Strapping	37

01 GENERAL

01.01 This section describes the installation procedures necessary to ensure proper operation of the STRATA S_e & VI_e systems. Installation procedures for the two systems vary only in relation to size; all other factors are the same.

02 PACKING

02.00 Inspection

02.01 When a system is received, examine all packages and carefully note any visible damage. If any damage is found, bring it to the attention of the delivery carrier and make the proper claims.

02.02 Check the number of cartons and the contents of the shipment against the purchase order and packing slip. If it is determined that any cartons are missing, contact your delivery carrier immediately. If it is determined that any equipment within a carton is missing, contact your Toshiba supplier immediately.

02.03 After unpacking (prior to beginning the installation), inspect all equipment for damage. If any damage is detected, contact your delivery carrier immediately. If possible, retain all the original packing material.

CAUTION!
When handling (installing, removing, examining, etc.) a printed circuit board, do not touch the back (soldered) side or the pin connector. Always hold a PCB by its edge.

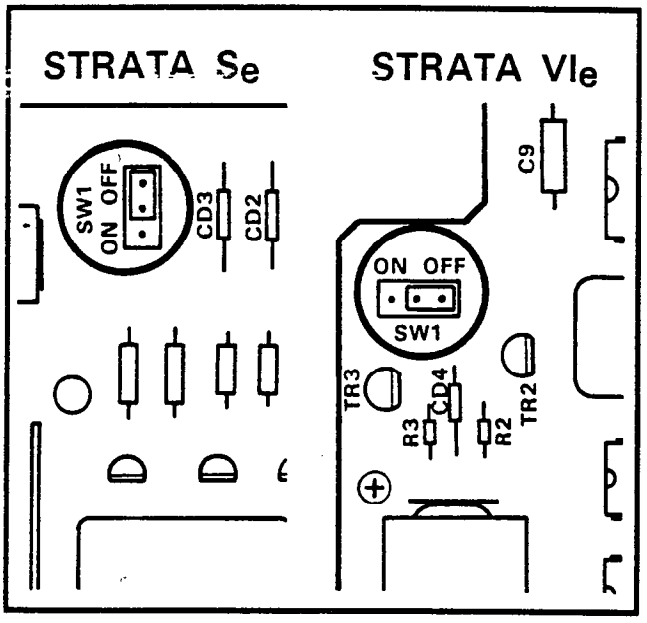

FIGURE 1—SCCU/VCCU BATTERY STRAP

02.04 When packing or storing a SCCU (or VCCU), ensure the following:

- **Do not** use plastic or any type of conductive material for packing a SCCU (or VCCU). Use plain paper.

CAUTION!
Conductive packing material may cause the internal backup battery to discharge and damage the PCB.

02.05 Whenever storing or shipping, always ensure that the battery strap is in the **OFF** position (Figure 1). The SMAU/VMAU is a "host" board for the SCCU/VCCU (which is required) and they are shipped as an assembled unit.

NOTE:
Always make sure the battery strap on the SCCU/VCCU is in the **ON** *position prior to instalation.* ***If not, the SET LED on the HKSU cannot operate.***

03 HKSU REQUIREMENTS

03.00 Cabling Considerations

03.01 The HKSU must be located so that all stations are within 1,000 cable feet (305 M) of it. Acceptable cable is 22 or 24 AWG inside telephone station cable, jacketed but not shielded, having two or more twisted wire pairs (three pair required for off-hook call announce).

03.10 Environmental Factors

03.11 Sufficient ventilation should exist to allow dissipation of heat generated by the power supply and HKSU.

03.12 Humidity at the HKSU location should be within 20 ~ 80% without condensation, and the temperature should be relatively constant within a range of 32 ~ 122° F (0 ~ 50° C). Exposure to dust and airborne chemicals should also be minimized.

03.20 Power Requirements

03.21 Power for the HKSU (both S_e & VI_e) is provided by the power supply (HPSU), which in turn requires power from a grounded 117 VAC outlet. The outlet should be separately fused (dedicated) and rated at 15 amps

03.30 Main Distribution Frame Requirements

03.31 To determine the Main Distribution Frame (MDF) space requirements, refer to the following paragraphs:

- Mounting the HKSU: Paragraph **04.00**
- Station Wiring: Paragraph **06.00**
- CO Line Connections: Paragraph **06.20**
- Installation of Options (External): Paragraph **09**
- HKSU Connections: Paragraph **10**

04 HKSU INSTALLATION

04.00 Mounting the HKSU

1) Remove both side covers from the HKSU (Figure 2) by pressing in on the two small ribbed sections on each side cover to free the holders.

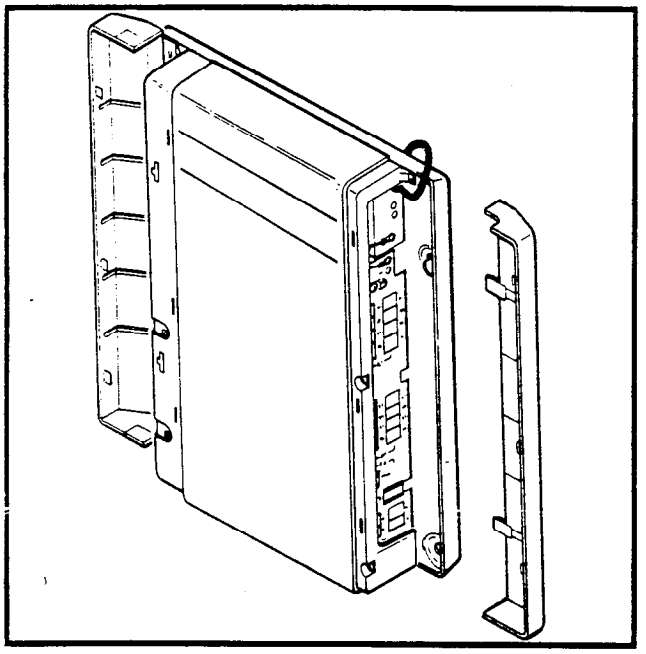

FIGURE 2—HKSU SIDE COVERS

2) Hold the HKSU against the wall in its planned location and mark the screw locations through the centers of the two keyholes on the upper sides of the HKSU (Figure 3).

3) Lay the HKSU aside for the moment and start two screws into the wall at the marked locations. Use 1¼" panhead wood screws and stop when they have penetrated to half their depth.

4) Hang the HKSU on the two screws and start two additional screws in the lower two holes (Figure 3). Tighten all four screws.

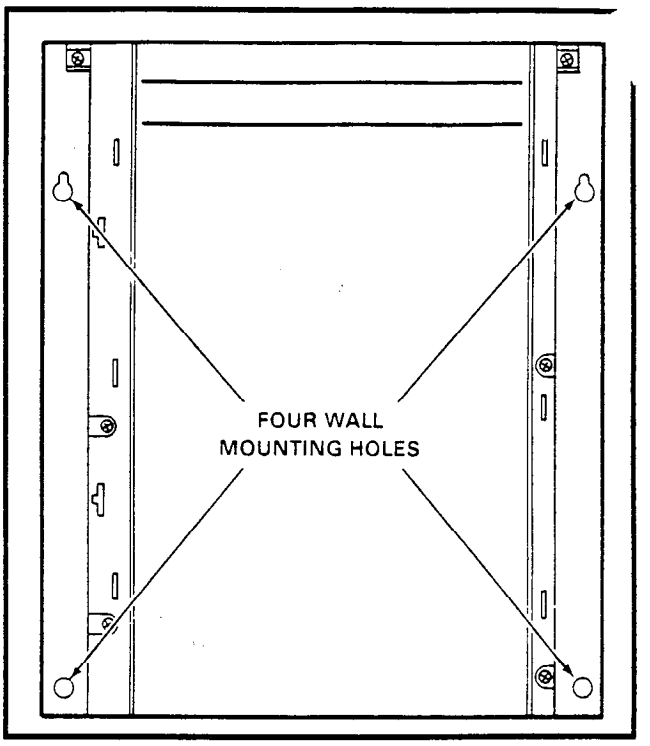

FIGURE 3—HKSU WALL MOUNTING

5) Knockouts are provided on top and bottom of the side covers to permit cables to enter the HKSU. Remove the appropriate knockouts.

6) Reinstall the side covers.

04.10 Power Supply Installation

04.11 The power supplies used with both systems are very similar in appearance but provide different current levels:

- S_e = HPSU 6120
- VI_e = HPSU 7120

04.12 The system requires 24 VDC, which is provided by the internal, factory-installed power supply (HPSU 6120/7120). The HPSU requires 117 VAC, 60 Hz, with a permissible AC input voltage range of 90 ~ 130 VAC.

04.13 In both systems, the HKSU is shipped with the power supply installed. Use the following procedures if it becomes necessary to remove or replace a power supply:

STRATA S_e:

1) Turn the system **OFF** and **unplug** the power cord.

2) Remove the power supply cable connector at **P7** in the upper left of the SMAU PCB. (It may be necessary to remove the SEPU PCB before doing this.)

3) Remove the ground straps on the right and left side panels of the HKSU as well as the two screws at the top corners of the power supply.

4) Pull the top of the power supply forward and lift the power supply out of the HKSU.

5) Test the power supply using the procedure in Paragraph **04.14**.

6) Install the new power supply in the HKSU.

7) Replace the screws and ground straps removed in step 3.

8) Reconnect the power supply cable connector to **P7** on the SMAU PCB. (Reinstall the SEPU PCB if it was removed.)

9) Plug the power cord in and turn the system **ON**.

STRATA VI_e:

1) Turn the system **OFF** and **unplug** the power cord.

2) Remove the power supply cable connector from **P1** in the top center of the VMAU PCB.

3) Remove the ground straps on the right and left side panels of the HKSU as well as the two screws at the top corners of the power supply.

4) Pull the top of the power supply forward and lift the power supply out of the HKSU.

5) Test the power supply using the procedure in Paragraph **04.14.**

6) Install the new power supply in the HKSU.

7) Replace the screws and ground straps removed in step 3.

8) Reconnect the power supply cable connector at **P1** on the VMAU PCB.

9) Plug the power cord in and turn the system **ON**.

04.14 If power supply problems are suspected or if a new power supply is being installed, the following voltage check should be performed:

STRATA S_e:

1) Turn the power supply **OFF** and disconnect the system power cord.

2) Remove the HKSU front cover.

3) Disconnect the power supply cable connector at **P7** in the upper left corner of the SMAU PCB.

4) Reconnect the power cord and turn the power **ON**.

5) Using a voltmeter, check the power supply output voltages at the power supply cable connector (**P7**) per the diagram below:

6) Verify that the voltages fall within the following ranges:

Nominal	Range
+24	+23 ~ +29
+12	+10.8 ~ +13.2
+5	+4.75 ~ +5.25

7) If the voltages are correct, go to step 8. If not, replace the power supply and recheck voltages.

8) Turn **OFF** the power.

9) Connect the power supply cable connector back to **P7** on the SMAU PCB.

10) Reinstall the HKSU cover, and turn the power back **ON**.

STRATA VI_e:

1) Turn **OFF** the power and **unplug** the power cord from facility power.

2) Remove the front cover from the HKSU.

3) Disconnect the power supply cable connector **P1** at the top center of the VMAU PCB (just below the power supply).

4) Reconnect the power cord and turn the power **ON**.

5) Using a voltmeter, check the power supply output voltages at the power supply cable connector (**P1**) per the diagram below:

6) Verify that the voltages fall within the following ranges:

Nominal	Range
+24	+23 ~ +29
+12	+10.8 ~ +13.2
+5	+4.75 ~ +5.25

7) If the voltages are correct, go to step 8. If not, replace the power supply and recheck voltages.

8) Turn **OFF** the power.

9) Connect the power supply cable connector back to **P1** on the VMAU PCB.

10) Reinstall the HKSU cover, and turn the power back **ON.**

04.15 Optional power backup units are available for both systems:

- S_e: HPFB
- VI_e: HPBU-7

STRATA S_e:

The HPFB is a separate unit that connects to the left side panel of the HKSU via a 2-wire connector (Figure 4).

- Up to three HPFB modules may be connected together in parallel to extend the power backup time. With the optional battery backup assembly installed, the system will continue to operate after a facilities power failure. The actual time period depends on the system configuration/application and number of battery backup modules used.

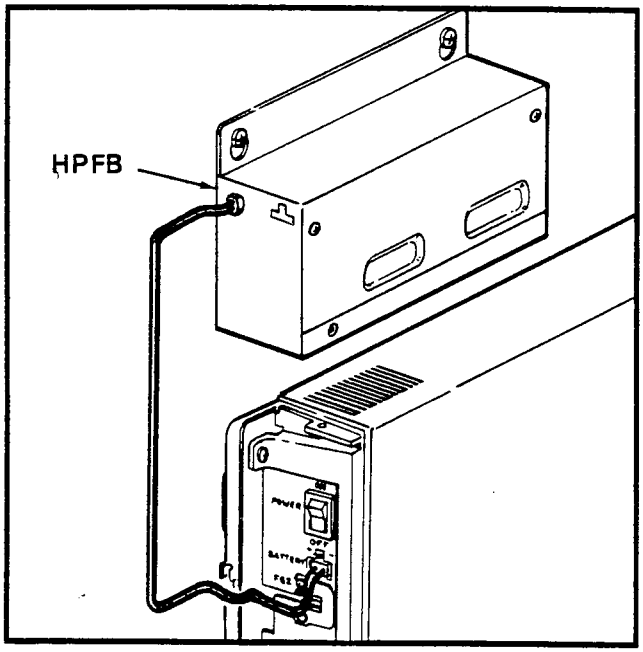

FIGURE 4—HPFB INSTALLATION

STRATA VI_e:

The HPBU-7 is a PCB that mounts inside the power supply housing (Figure 5) and is connected to the female 3-prong connector inside the power supply's case. Secure the HPBU with the two provided screws.

- The HPBU is then connected via the terminal block to the recommended battery pack (which is customer-supplied, consisting of two 12 VDC, maintenance-free, automobile-type batteries—80 amp/hour maximum rating). With the battery backup assembly installed, all functions of the system will continue to operate for several hours after a facilities power failure (the actual time period is in direct ratio to the type and size of batteries selected).

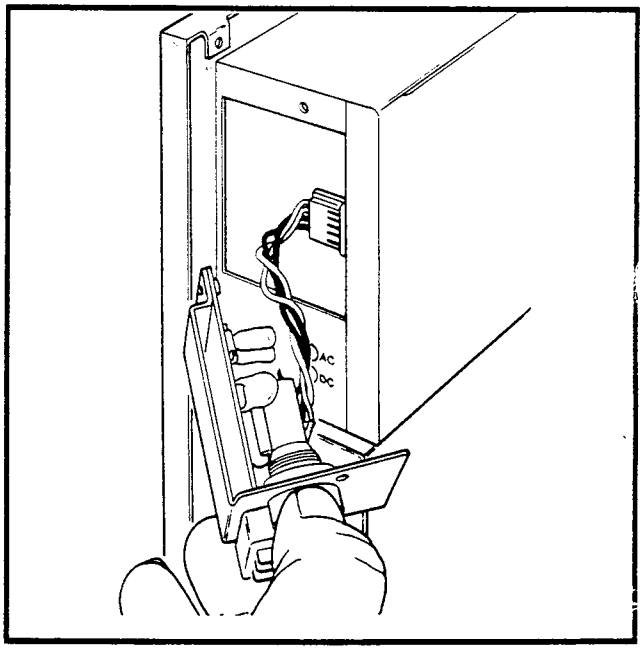

FIGURE 5—HPBU INSTALLATION

04.16 When installing or removing the HPBU, perform the following:

WARNING!
When installing the HPBU-7 in the power supply, care must be taken against accidental shorts that may injure the installer or damage the power supply.

1) Turn **OFF** the power and **unplug** the system power cord.

2) Remove the front cover from the HKSU

3) Remove the metal plate on the left s the power supply case (two screws

4) Connect the 4-wire connector extending from the rear of the HPBU-7 inside the power supply case as shown in Figure 5.

5) Mount the HPBU-7 with the two screws removed in step 3.

6) Connect the positive terminal on one battery to the negative terminal of the other battery (in series).

7) Connect the free negative battery terminal to the negative terminal on the HPBU-7.

8) Connect the free positive battery terminal to the positive terminal on the HPBU-7.

04.20 System Ground Check

04.21 Both Toshiba telephone systems require a solid earth ground. Failure to provide such a ground may lead to confusing trouble symptoms in the system and, in extreme cases, circuit board failure. In most installations (within the continental United States), the ground provided by the "third wire ground" at the commercial power outlet will be satisfactory for all system requirements. However, in a small percentage of installations, this ground may be installed incorrectly. Therefore, prior to installing a system, the third wire ground must be tested for continuity by either measuring the resistance between the third prong terminal (earth ground) and a metal cold water pipe, or by using a commercially available earth ground indicator. If neither procedure is possible, then the following test procedures should be performed.

WARNING!
Hazardous voltage is exposed during the following test. Use great care when working with AC powerline voltage.

1) Obtain a suitable voltmeter and set it for a possible reading of up to 250 VAC.

2) Connect the meter probes between the two main AC voltage points on the wall outlet. The reading obtained should be 90 ~ 130 VAC.

3) Move one of the meter probes to the third prong terminal (GND). Either the same reading or a reading of 0 volts should be obtained.

4) If the reading is 0V, leave one probe on the GND terminal and move the other probe to the second voltage terminal. If a reading of 0V is obtained on both voltage terminals, the outlet **is not** properly grounded. Omit steps 5 through 7 and proceed directly to step 8.

5) If a reading of 0V on one terminal and a reading of 90 ~ 130 VAC on the other terminal is not obtained, the outlet **is not** properly grounded. Omit steps 6 and 7 and proceed directly to step 8.

6) If a reading of 0V on one terminal and a reading of 90 ~ 130 VAC on the other terminal is obtained, remove both probes from the outlet.

7) Set the meter on the "OHMS/Rx1" scale, place one probe on the GND terminal and the other probe on the terminal that produced a reading of 0V. A reading of less than 1 ohm should be obtained. If a reading of more than 1 ohm is obtained, the outlet **is not** adequately grounded.

8) If the above tests show the outlet is improperly grounded, that condition should be corrected by a qualified electrician (per Article 250 of the National Electrical Code) before the system is connected.

05 PRINTED CIRCUIT BOARD INSTALLATION

05.00 General

05.01 Complete with all available options, both systems utilize up to ten (S_e) or eight (VI_e) printed circuit boards internally and various option modules. The names and functions are as follows

05.02 The SMAU/VMAU and SCCU/VCCU are factory-installed in the HKSU.

05.03 If any optional PCBs (SSTU, SEPU, STMU, SMOU, SPFU, SVCU, SDTU or SCOU/VCOU) are required, refer to Figure 6 and remove the HKSU cover as follows:

1) Remove both side covers by pressing in on the two small ribbed sections on each cover to free the holders.

2) Remove three screws from each side of the HKSU per Figure 6.

3) Lift the HKSU cover off.

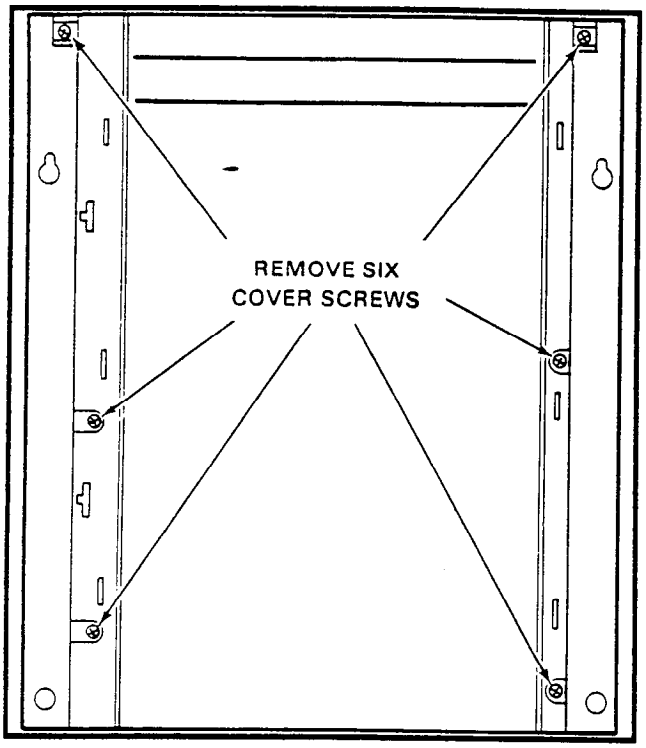

FIGURE 6—HKSU COVER REMOVAL

05.10 Factory-Installed PCBs

05.11 SMAU/VMAU: The main printed circuit board of the key service unit consists of the following three functions:

a) **Station Interface:** An interface between the key service unit and up to four stations (S_e) or up to eight stations (VI_e), which includes the solid-state, space-division matrix used for voice connections between the stations and the CO/PBX lines. Two-pair wiring is required for each station; one pair carrying voice and the other pair carrying control data to and from the station.

b) **CO Interface:** An interface between the key service unit and the public telephone network or PBX for up to two lines (S_e) or up to three lines (VI_e). Ring detection, hold and dial outpulsing for these lines are performed by this board. Depending upon local CO requirements, each incoming line can be separately connected and programmed to provide DTMF or rotary-dial outpulsing.

c) **Tone:** Performs a number of miscellaneous system functions:
- Generates system tones.
- Provides the switching matrix for the delivery of tones for both paging and intercom connections.

05.12 SCCU/VCCU: All system control functions are performed by the single-chip microprocessor on this printed circuit board. The system program stored in ROM, RAM for system operation, and the RAM for system data storage are also located on this circuit board. A battery on this board protects system memory should a power occur.

05.13 See Figure 1 and verify that the battery strap on the SCCU/VCCU is in the on position.

05.14 The SMAU/VMAU and SCCU/VCCU PCBs are factory-installed in the HKSU. If repair of either PCB is necessary, the HKSU should be replaced and returned to your supplier.

05.20 SCOU/VCOU

05.21 An optional interface between the SMAU/VMAU and one/three additional CO line(s). Depending upon local CO requirements, the SCOU/VCOU is programmed to provide DTMF or rotary-dial outpulsing. The SCOU serves one CO line; the VCOU serves up to three CO lines, and both serve up to three off-premises lines.

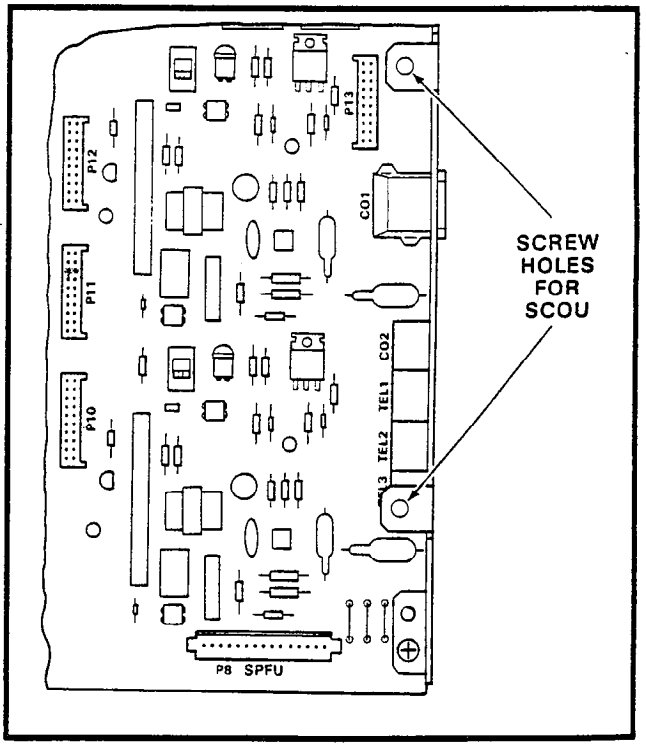

FIGURE 7—SCOU and SPFU LOCATIONS

STRATA S_e:

05.22 The SCOU PCB mounts on four 10-pin connectors at the bottom of the SMAU PCB into **P10**, **P11**, **P12** and **P13** connectors (Figure 7). Secure the SCOU PCB to the right side panel with the two provided screws.

STRATA VI_e:

05.23 The VCOU PCB mounts on four 10-pin connectors and one plastic standoff at the bottom of the VMAU PCB (Figure 8). Install the VCOU's three 10-pin connectors into the VMAU's **P6**, **P7** and **P8** connectors. Secure the VCOU to the left and the right side panels with two provided screws on each side.

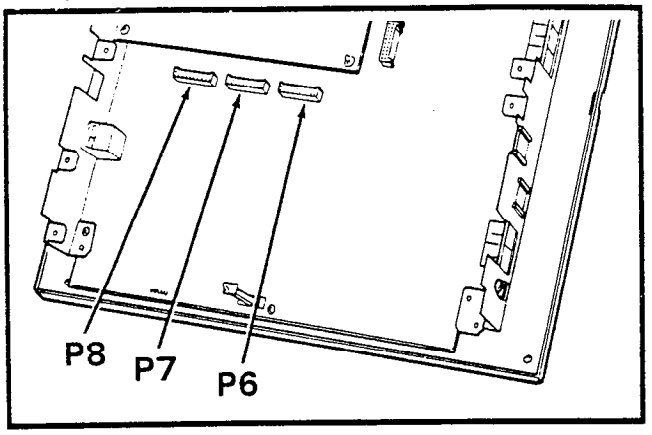

FIGURE 8—VCOU LOCATION

05.30 SPFU (S_e only)

05.31 An optional PCB with relays to connect the CO lines to three standard telephones if a power failure occurs.

05.32 Install into the connector marked **SPFU** at the bottom of the SMAU PCB (Figure 7).

05.40 SSTU

05.41 An optional interface between the key service unit and stations 14 ~ 17 (stations 18 ~ 25 on STRATA VI_e). Each SSTU PCB serves up to four stations. Two- or three-pair wiring is required for each station; one pair carrying voice and the other pair carrying control data to and from the station (the third pair is required for OCA).

STRATA S_e:

05.42 For adding stations 14 ~ 17, refer to Figure 9, and insert the three SSTU 10-pin connectors into **P14**, **P15** and **P16** connectors on the SMAU PCB. Secure the SSTU PCB to the right side panel with the two provided screws. Route the provided jumper cable from the SSTU **P19** connector to the **P19** connector on the SMAU to provide crosspoints for stations 14 ~ 17.

NOTE:
Jumper cable is necessary only when OCA is equipped.

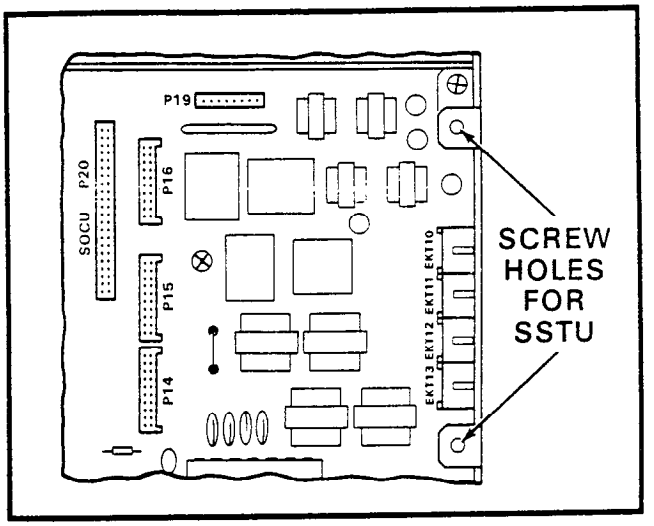

FIGURE 9—S_e SSTU and SVCU LOCATIONS

STRATA VI_e:

05.43 For adding stations 18 ~ 21, refer to Figure 10, and insert the three SSTU 10-pin connectors into **P9**, **P10** and **P11** connectors on the VMAU PCB. Secure the SSTU PCB to the right side panel with the two provided screws. (For stations 22 ~ 25, insert the three 10-pin connectors on another SSTU into **P12**, **P13** and **P14** connectors on the VMAU PCB. Secure the SSTU PCB to the right side panel with the two provided screws.)

a) Route the provided jumper cable from the SSTU **P19** connector to the **P21** connector on the VMAU to provide crosspoints for stations 18 ~ 21.

b) Route the provided jumper cable from the SSTU **P19** connector to the **P23** connector on the VMAU to provide crosspoints for stations 22 ~ 25.

NOTE:
Jumper cable is necessary only when OCA is equipped.

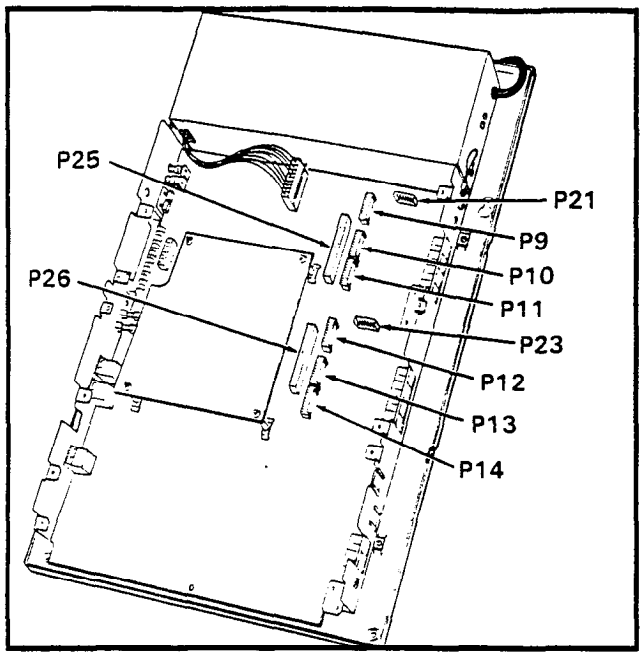

FIGURE 10—VI_e SSTU and SVCU LOCATIONS

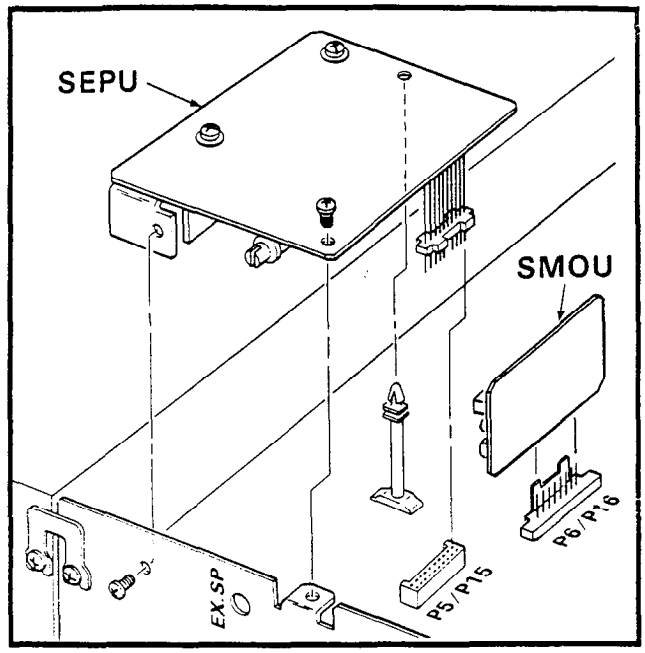

FIGURE 11—S_e/VI_e SEPU and SMOU LOCATIONS

05.50 SMOU

05.51 An optional music-on-hold source that provides electronic synthesized music. One or two musical tunes are available, selected via a switch on this board. The SMOU is connected to the SMAU/VMAU via a 7-pin connector.

STRATA S_e:

05.52 Install the SMOU PCB into connector **P6** on the upper center of the SMAU PCB (Figure 11).

STRATA VI_e:

05.53 Install the SMOU PCB into connector **P16** on the upper center of the VMAU PCB (Figure 11).

05.60 SEPU

05.61 An optional 3-watt amplifier for external paging, using a customer-supplied 8-ohm speaker (connected to the SMAU/VMAU via a 10-pin connector).

STRATA S_e:

05.62 Install the SEPU into connector **P5** on the SMAU PCB (Figure 11). Slide the SEPU's corner hole over the white, plastic standoff support. Secure the SEPU to the left side panel with two screws.

STRATA VI_e:

05.63 Install the SEPU into connector **P15** on the VMAU PCB (Figure 11). Slide the SEPU's corner hole over the white, plastic standoff support. Secure the SEPU to the left side panel with two screws.

05.70 SVCU

05.71 The Off-hook Call Announce interface that mounts on the main PCB of the key service unit to provide OCA access. One SVCU is required for every eight stations requiring OCA. (Adds two intercom lines and two OCA paths in STRATA VI_e.)

STRATA S_e:

05.72 Insert connector **P1** on the SVCU into the **P20** connector on the SMAU (Figure 9).

STRATA VI_e:

a) To provide OCA to stations 10 ~ 17, refer to Figure 10, and insert connector **P1** on the SVCU into the **P25** connector on the VMAU.

b) To provide OCA to stations 18 ~ 25, insert connector **P1** on the SVCU into the **P26** connector on the VMAU.

05.80 SDTU

05.81 Provides Remote Administration/

tenance access via its built-in 300/1200 bps modem. One SDTU per system is required for Remote Administration/Maintenance.

STRATA S_e:

05.82 Insert connectors **P1** and **P2** on the SDTU into the **P8** and **P9** connectors on the SCCU (Figure 12). Route the provided jumper cable from the SDTU **P3** connector to the **P22** connector on the SMAU.

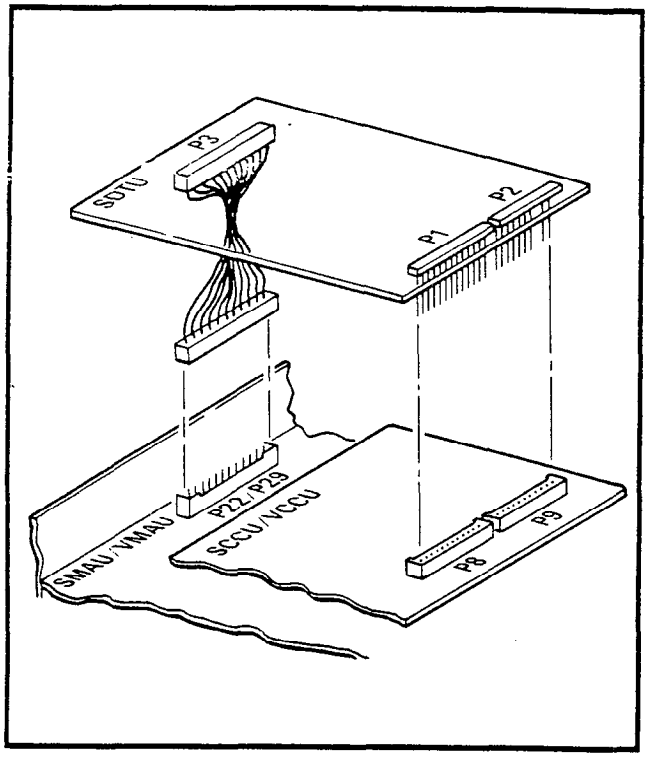

FIGURE 12—S_e/VI_e SDTU LOCATION

STRATA VI_e:

05.83 Insert connectors **P1** and **P2** on the SDTU into the **P8** and **P9** connectors on the VCCU (Figure 12). Route the provided jumper cable from the SDTU **P3** connector to the **P29** connector on the VMAU.

05.90 STMU (STRATA S_e only)

05.91 Required for connection to an HSMB to provide SMDR for a STRATA S_e HKSU.

05.92 Refer to Figure 13, and insert connectors **P4** and **P5** on the STMU into the **P4** and **P5** connectors on the SCCU. Route the provided jumper cable from the STMU **P23** connector to the **P23** connector on the SMAU.

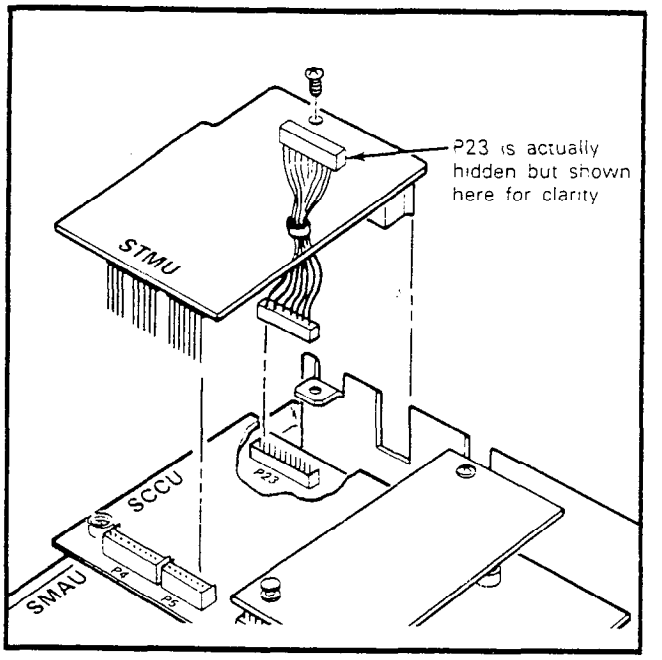

FIGURE 13—STMU LOCATION

06 BASIC CABLING REQUIREMENTS

06.00 Station Wiring

06.01 Intercom codes (station numbers) are assigned permanently to specific cable appearances in the system. Make sure the station cables are connected to the proper terminals.

06.02 Using the industry-standard color code sequence, terminate the individual 2- or 3-pair station cables consecutively on the MDF (3-pair cabling required for OCA). Connect the HKSU cable pairs to the station cable pairs.

WARNING!

When installing station cable, do not run parallel to and within 3' of an AC power line. Such power lines should be crossed at right angles (90°) only.

06.03 At the station locations, terminate the station cable in a conventional 4- or 6-conductor modular station connector to accommodate the modular line cord from the EKT. The standard modular EKT cord length is 7', while the maximum allowed length is 25'. Figure 14 shows the EKT wiring arrangement.

06.04 Various manufacturers of modular station blocks have employed different color codes to indicate the sequence of pairs in their blocks. However, the color code most commonly used is shown in Figure 15. Verify the configuration

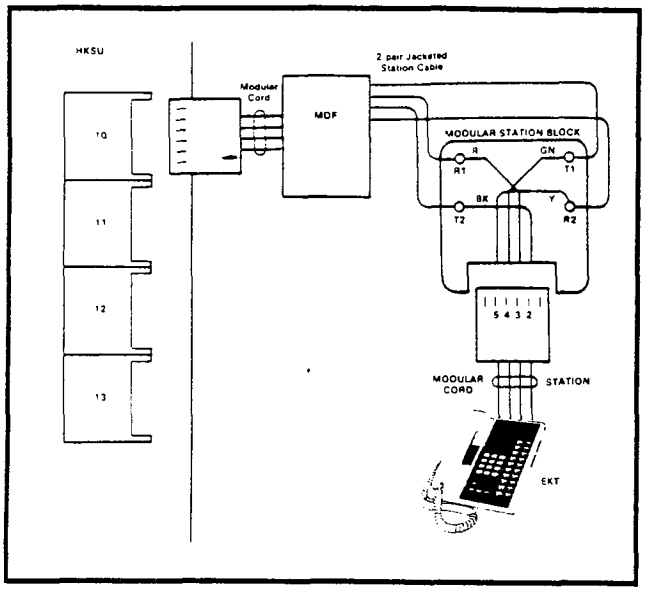

FIGURE 14—EKT WIRING

of your modular blocks before connecting the station cables.

NOTE:
White and blue (T3 & R3) are used for OCA voice pair on station line connectors.

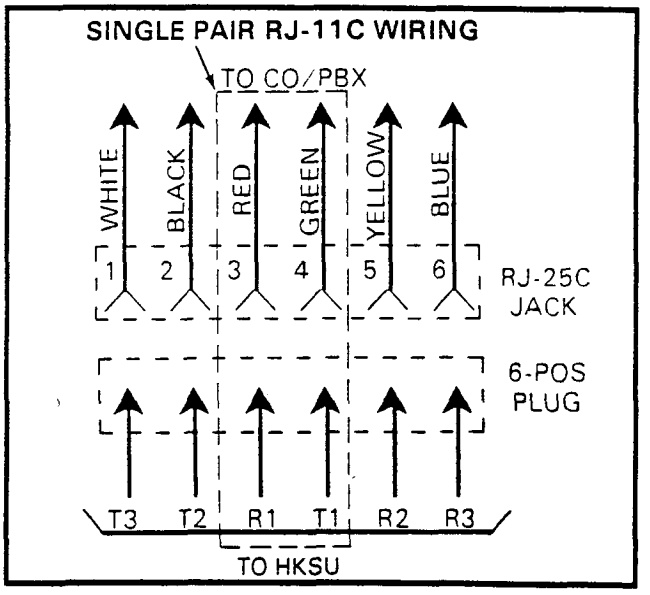

FIGURE 15—RJ-11C/RJ-25C COLOR CODE

06.10 CO Line Connection

06.11 The CO/PBX lines are connected to the system via 6-wire modular line cords (no longer than 25') that are connected directly to the HKSU's right side panel (Figure16)—CO1 modular connector on S_e; 1-3 and 4-6 modular connectors on VI_e. The opposite end of each cord

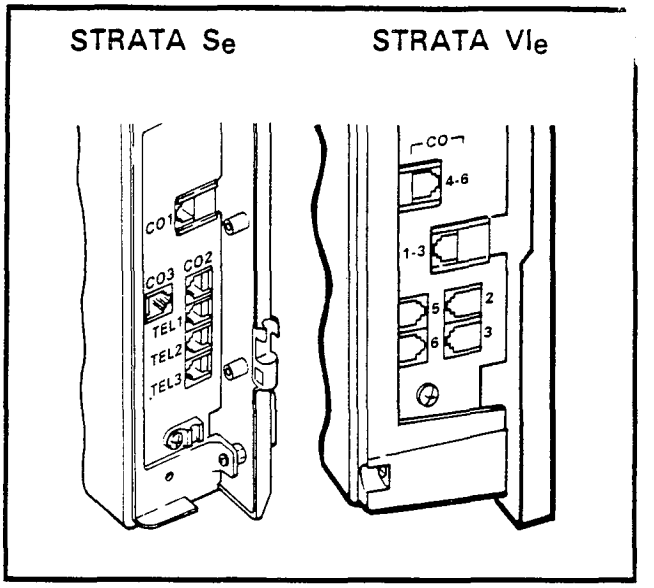

FIGURE 16—S_e/VI_e HKSU RIGHT SIDE PANEL

then terminates directly into a locally provided RJ-25C jack (Figure 15).

06.12 The CO/PBX lines may also be connected via 2-wire modular line cords to connectors CO1, CO2, and CO3 (S_e) or connectors 1-3, 4-6, 2, 3, 5 and 6 (VI_e) on the right side panel (Figure 16). The opposite end of each cord then terminates directly into a locally provided RJ-11C jack (Figure 15).

07 SYSTEM POWER-UP INITIALIZE

07.00 General

07.01 A list of standard system data assignments (stored in ROM) can be entered at any time by performing the initialize sequence outlined below. The system must be initialized when it is first installed or whenever the SCCU/VCCU PCB is changed. This will allow the system to be tested and any faults to be corrected before time is spent on programming.

NOTE:
Do not *initialize if using a preprogrammed, battery-protected SCCU/VCCU.*

07.02 Refer to Figure 17 and verify that the battery on the SCCU/VCCU is connected to ensure that data changes entered after initialization will not be lost due to power failure.

NOTE:
The SET LED will not function if the SCCU/VCCU battery is not connected.

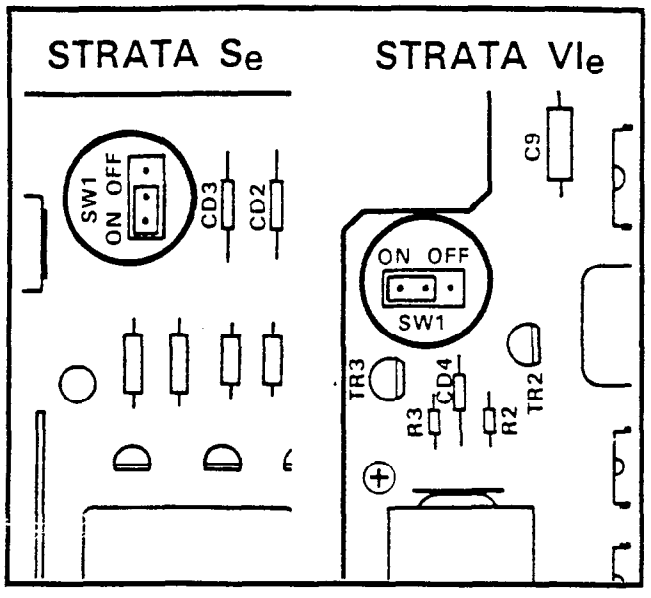

FIGURE 17—SCCU/VCCU BATTERY STRAP

07.03 To initialize STRATA S_e system data memory, refer to Figure 18, temporarily connect a 20-key EKT to station 13, and perform the following:

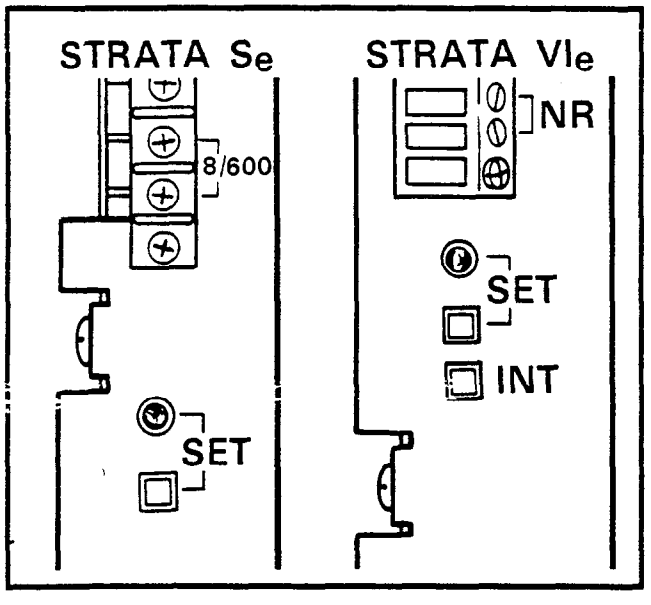

FIGURE 18—S_e/Vl_e INITIALIZING SWITCHES

1) Place the system power switch in the **ON** position.

2) Depress the **SET** switch and allow it to lock.
   - SET LED goes on.
   - Station 13: LED 19 goes on.

3) Depress the SPKR key on station 13.
   - Station 13: SPKR LED goes on.

4) Dial # # 0 on the dial pad.

5) Depress the 01 and 03 keys on station 13.
   - The corresponding LEDs go on.

6) Depress the HOLD key on station 13.
   - Station 13: All LEDs (except SPKR and MIC) begin blinking.

7) Depress and release the **SET** switch again.
   - SET LED goes off.
   - Station 13: LEDs go off.

8) Cycle the power switch **OFF** and **ON**.

07.04 To initialize STRATA Vl_e system data memory, refer to Figure 18, temporarily connect a 20-key EKT to station 17, and perform the following:

1) Place the system power switch (**POW**) in the **ON** position.

2) Depress the **INT** switch on the left side panel, and hold it in.

3) Depress the **SET** switch and allow it to lock.
   - SET LED goes on.
   - Station 17: All LEDs except SPKR and MIC flash continuously.

4) Depress and release the **SET** switch again.
   - SET LED goes off.
   - Station 17: All LEDs go off.

5) Release the **INT** switch.

6) Cycle the power switch **OFF** and **ON**.

07.10 Clearing Automatic Dialing

07.11 The Automatic Dialing memory contains random numbers when the system is powered up initially. Therefore, it is necessary to clear the memory to prevent meaningless numbers from being dialed.

IMPORTANT!

Station 13/17 may be equipped with either a 10- or a 20-key EKT. Prior to performing the procedure that follows (if a 10-key is to be used), refer to Paragraph 02.20/Figure 1, Programming Procedures, Section 500-036-300, for instructions on using a 10-key EKT for programming.

07.12 To clear the Automatic Dialing (-System and -Station) memory (up to 40 numbers), proceed as follows:

1) Lock in the **SET** switch.
   - Station 13/17: LED 19 lights steadily.

2) To clear station automatic dialing, depress the SPKR key and dial # * 1.
   - SPKR LED flashes continuously.
   - Depress keys 01 05 09 13.
   - Depress the HOLD key.

3) To clear system automatic dialing, depress the SPKR key and dial # * 3.
   - SPKR LED flashes continuously.
   - Depress keys 03 07 11 15.
   - Depress the HOLD key.

4) Release the **SET** switch.
   - The SET LED and LED 19 on station 13/17 go off.

07.20 Alphanumeric Messaging Initialization

NOTE:
There are 40 messages available in system memory (60 ~ 99), and 10 available at each station (10 ~ 19).

07.21 To initialize system alphanumeric messages, follow these procedures:

1) Lock in the **SET** switch.
   - Station 13/17: LED 19 lights steadily.

2) To clear codes 60 ~ 99, depress the SPKR key and dial # * 4.
   - SPKR LED flashes continuously.
   - Depress keys 00 04 08 12.
   - Depress the HOLD key.

07.22 To initialize station alphanumeric messages, follow these procedures:

1) Lock in the **SET** switch.
   - Station 13/17: LED 19 lights steadily.

2) To clear codes 10 ~ 19, depress the SPKR key and dial # * 5.
   - SPKR LED flashes continuously.
   - Depress keys 01 05 09 13.
   - Depress the HOLD key.

NOTE:
System messages can only be programmed or changed at station 10. When the system is initialized, five messages are automatically stored in memory:
60: OUT TO LUNCH
61: IN A MEETING
62: CALL
63: BACK AT
64: RETURN ON

07.30 Timer Reminder Messaging Initialization

07.31 To clear Timer Reminder messages, follow these procedures:

1) Lock in the **SET** switch.
   - Station 13/17: LED 19 lights steadily.

2) To clear timer codes, depress the SPKR key and dial # * 7.
   - SPKR LED flashes continuously.
   - Depress keys 03 07 11 15.
   - Depress the HOLD key.

07.40 System Real-Time Clock/Calendar Adjustment

07.41 The following procedures detail how to set the date, time and day in the system.

NOTE:
This operation is possible from station 10 only.

1) Handset on-hook.

2) To set date:
   a) Dial # * 5 1 (or RDL REP 5 1).
   b) Dial in date (year/month/day) in the format YYMMDD. Enter a leading 0 for single-digit month and day.
   c) Depress the # (or RDL) key.

3) To set time:
   a) Dial # * 5 2 (or RDL REP 5 2).
   b) Dial in time (hour/minute/second) in 24-hour clock format HHMMSS. Enter a leading 0 for single digit.
   c) Depress the # (or RDL) key.

4) To set day:
   a) Dial # * 5 3 (or RDL REP 5 3).
   b) Dial in the day (1 represents Sunday, 2 Monday, etc., through 7 for Saturday).
   c) Depress the # (or RDL) key.

08 EKT INFORMATION

08.00 General

08.01 Eight different electronic key telephones (EKTs) may be used in the system. See the *General Description* for complete descriptions of the EKTs.

08.02 All EKTs share the same dimensions:
Height: 3.7" (94 mm)
Width: 7.1" (180 mm)
Depth: 9.5" (241 mm)

08.03 All EKTs feature modular handset cords and are connected to the system via 4-conductor modular line cords. With the exception of the single-line EKT, all EKTs are also equipped with an additional modular headset connector. In addition, each EKT model may be used at any or all stations.

08.10 HVSU Installation

08.11 All Toshiba EKTs may originate Off-hook Call Announce (OCA) calls via intercom dialing, transfer/conference dialing, or Direct Station Selection. There are no special requirements to enable EKTS to originate OCA calls.

08.12 However, EKTs which are able to receive OCA calls:

- Must be equipped with an HVSU PCB.
- Must be equipped with a 3-pair modular cord.

08.13 Follow the instructions below to install an HVSU.

1) Loosen the four screws holding the bottom cover of the EKT and remove the cover.

2) Remove the HVSU label from the HVSU and attach it to the EKT label.

NOTE:
This step is very important so that an equipped EKT may be easily identified.

3) Plug the HVSU into the **P5** connector on the bottom of the EKT main board (Figure 19).

4) Reinstall the EKT bottom cover and tighten the four screws.

08.20 EKT Wall Mounting

08.21 All EKTs are mounted in the same manner, and they may be mounted on a wall or any other flat, vertical surface to which the base can be secured. When selecting the mounting site, consider the EKT's weight and the additional stresses to which the mounting will be subjected.

08.22 Mounting screws or mollies, appropriate for the surface on which the telephone is to be secured, must be provided by the installer.

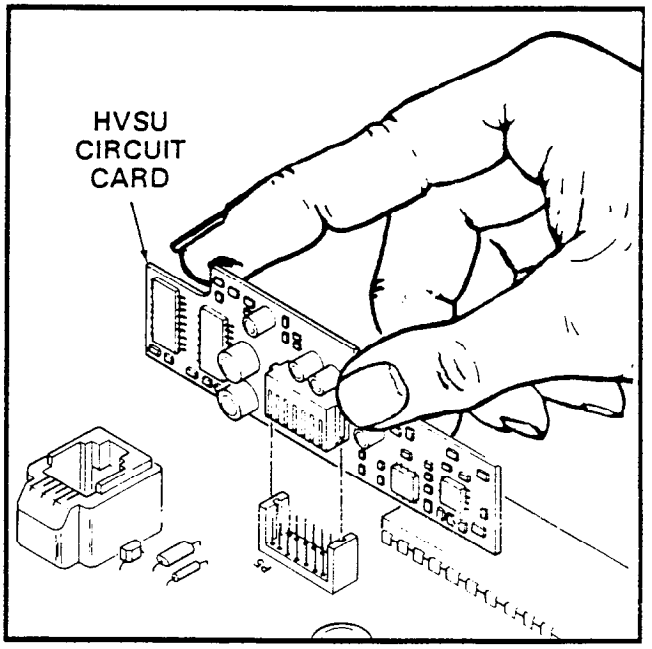

FIGURE 19—HVSU LOCATION

08.23 Locking tabs secure the EKT's base. The direction in which the base is attached to the EKT determines whether it is used as a desk unit or wall unit (it is factory-configured as a desk unit). To wall-mount an EKT, perform the following steps:

1) Disengage the locking tabs by pushing downward on the base (Figure 20), and then rotate the base 180° and insert it into the lower four locking slots.

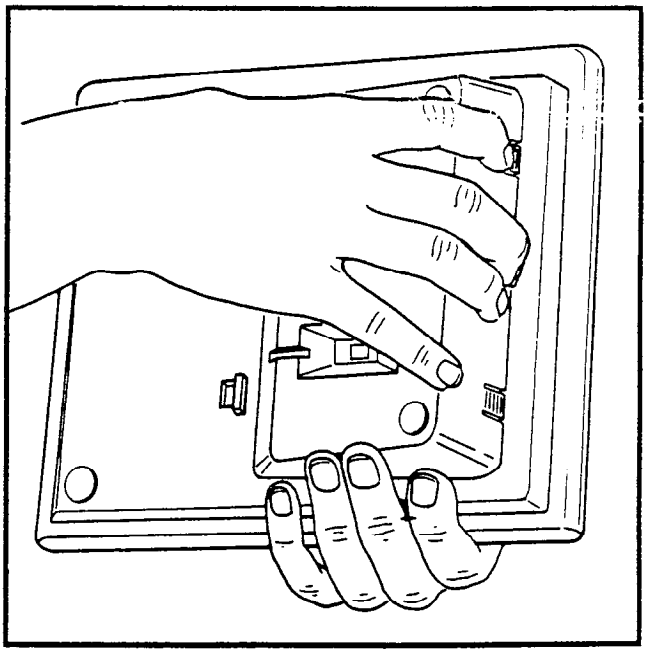

FIGURE 20—REMOVING EKT BASE

2) Route the line cord through the notch in the bottom of the EKT.

3) Secure the unit to the desired wall site. (Use dimensions shown in Figure 21 to position the unit.)

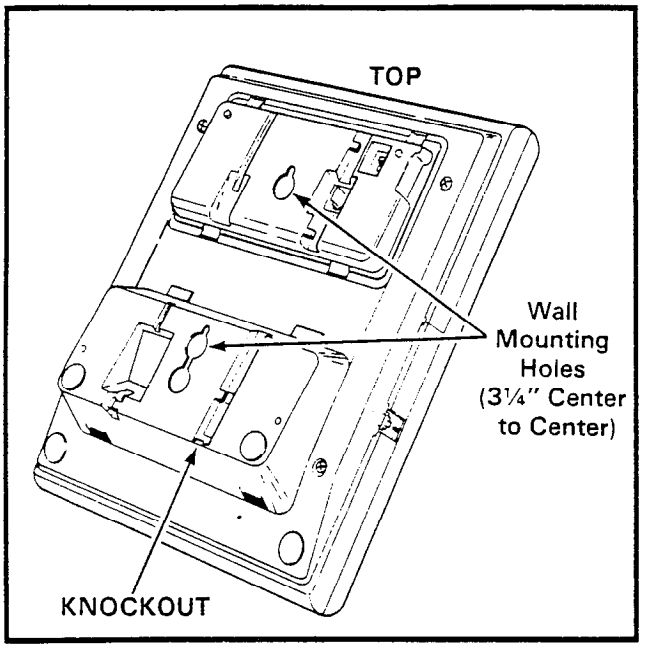

FIGURE 21—EKT MOUNTING HOLES

4) Route the tail cord through the holes in the base and secure the EKT (Figure 22).

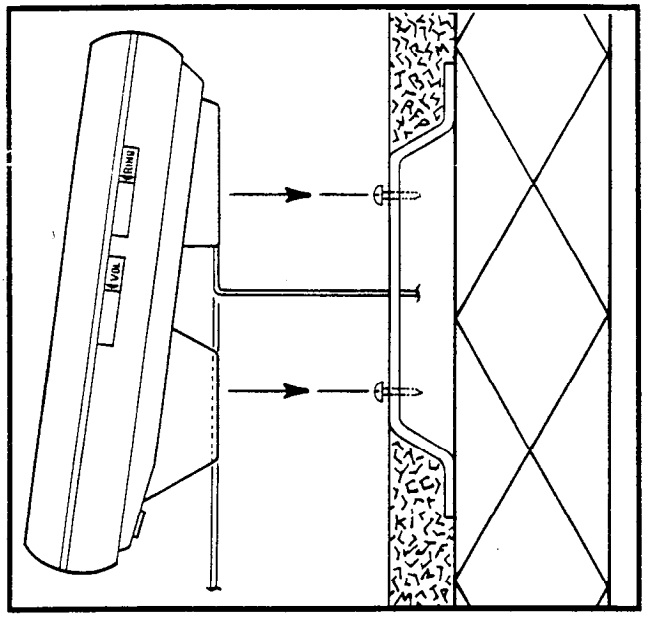

FIGURE 22—EKT WIRE ROUTING

5) To reposition the handset handger, insert a piece of wire (such as a paper clip, etc.) into the cutout just above the hanger (Figure 23) disengage the hanger's locking tabs, and slide the hanger out. Rotate the hanger 180° and reinsert it. Note that the hanger mates with the notch in the handset.

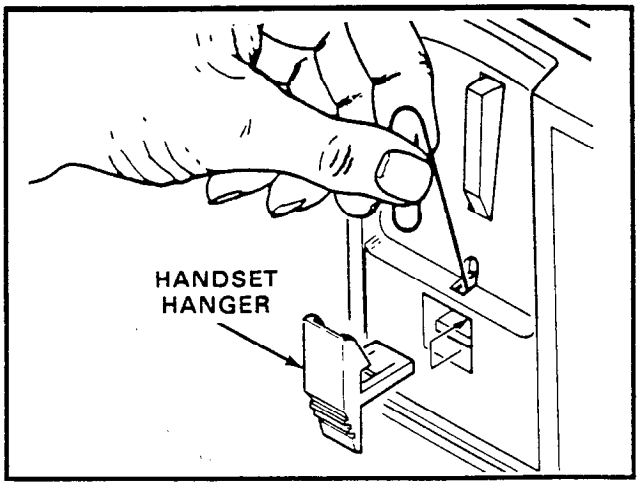

FIGURE 23—HANDSET HANGER

08.24 An optional 13' handset cord is available from your Toshiba supplier, and it is suggested that this cord be used when wall mounting an EKT.

08.30 EKT Connections

08.31 Connect the appropriate length line cord to the modular connector, route the cord to the EKT and connect to the EKT modular jack. Test the EKT per Paragraph **08.50**.

08.40 Carbon Handset Installation

08.41 All 6000-series EKTs are factory-equipped with dynamic handsets. If a carbon handset is desired, an EKT modification is necessary. With the exception of the single-line EKT, the following modification is applicable to all 6000-series EKTs:

1) Remove the four screws holding the base cover, and remove the base cover.

2) On the exposed PCB, cut jumpers marked "CARBON" (see Figure 24).

NOTE:
Figure 24 shows the locations of the carbon resistors for both handsfree answerback (HFU) and speakerphone (SPF) EKTs.

3) Reinstall the base cover and its four scre

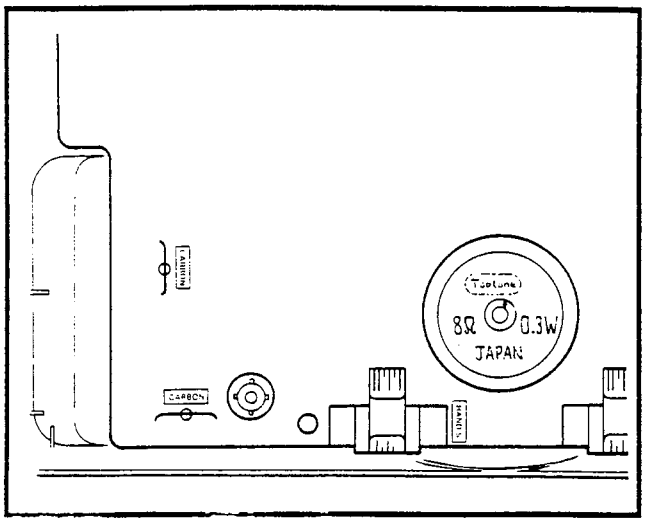

FIGURE 24—CARBON HANDSET MODIFICATION

4) Replace the dynamic handset with the carbon handset.

08.50 EKT Functional Check

08.51 In order to verify basic system functions, and confirm the proper functioning of the EKT itself, perform the following test procedures at each station. Begin with the lowest numbered station, and continue through all stations.

08.52 With handset on-hook:

a) Depress the INT key.
- INT LED: In-use flash.
- SPKR LED: on steady.
- MIC LED: on steady.
- Listen for intercom dial tone via EKT speaker.

b) Adjust speaker volume with the lower control on the right side of the EKT.

c) Depress the CO1 key.
- CO1 LED: In-use flash.
- SPKR & MIC LEDs: on steady.
- Listen for CO/PBX dial tone via the EKT speaker.

d) Dial any digit (2 ~ 9) on the dial pad and dial tone stops.

e) Depress the MW/FL key.
- Listen for circuit break followed by dial tone after approximately 2 seconds.

f) Continue to depress each CO key in order on every EKT; the following should occur:
- CO LED: In-use flash.
- SPKR & MIC LEDs: on steady.
- Listen for CO/PBX dial tone via the EKT speaker.

NOTE:
If no CO/PBX facility is connected to a CO key, dial tone cannot be heard but the LED is still functional.

g) When CO testing is complete on each EKT, continue the EKT test by depressing the SPKR key.
- SPKR & MIC LEDs: off.
- EKT speaker off.

h) Depress the DND key.
- DND LED: on.

i) Depress the DND key.
- DND LED: off.

j) Depress the CO1 key.
- CO1 LED: In-use flash.
- SPKR & MIC LEDs: on steady.
- Listen for CO/PBX dial tone via the EKT speaker.

k) Depress the HOLD key.
- CO1 LED: On-hold flash.
- Speaker off (no dial tone).
- SPKR & MIC LEDs: off.

l) Depress the CO1 key.
- CO1 LED: In-use flash.
- SPKR & MIC LEDs: on steady.
- Listen for CO/PBX dial tone via the EKT speaker.

m) Depress the CONF key.
- CO1 LED: Conference call flash rate.
- Dial tone continues.

n) Depress the CO1 and SPKR keys.
- CO1 LED: off.
- SPKR & MIC LEDs: off.
- Dial tone: off.

o) Call the EKT that is being tested from another station.
- Called station's INT LED: Incoming Call flash.
- Listen for the caller's voice via the called EKT's speaker after the single tone signal.

p) Dial 1 at calling station.
- Tone signalling heard via the called station's speaker.

q) Adjust tone signalling volume with upper control on the right side of the EKT.

r) Depress the INT key.
- INT LED: In-use flash.
- SPKR & MIC LEDs: on steady.
- Listen for intercom dial tone via the EKT speaker.

s) Lift handset.
- SPKR & MIC LEDs: off.
- Speaker off.
- Listen for dial tone via handset receiver.

t) Call another station and talk into the handset transmitter.
- Verify that your voice can be heard via the called EKT's speaker.

u) Hold down the SPKR key, and set the handset back on-hook.
- INT LED: In-use flash.
- SPKR & MIC LEDs: on steady.

v) Tap the EKT microphone and verify that the sound can be heard via the called EKT's speaker.

w) Depress the MIC key while tapping the microphone and verify that the sound cannot be heard via called the EKT's speaker.
- MIC LED: off while MIC key is depressed.

x) Depress the SPKR key.
- INT LED: off.
- SPKR & MIC LEDs: off.

NOTE:
Continue this portion of the EKT testing for any stations equipped with OCA. If the system has no OCA stations, continue to Paragraph **08.53**.

y) Busy-out an OCA-equipped station.

z) Call that station from another EKT.

aa) After receiving busy tone, dial 2.

NOTE:
If the system is programmed for automatic OCA, it is not necessary to dial 2—step bb) is in effect immediately after dialing the busy station.

bb) The called station receives a tone burst through its speaker, after which a speech path exists between the two stations.

08.53 This completes the station function check for the EKTs; repeat the procedure for all EKTs in the system.

09
INSTALLATION OF OPTIONS (External)

09.00 Off-hook Call Announce

09.01 General: Off-hook Call Announce (OCA) allows a station user, while in conversation via the handset (off-hook), to receive intercom calls through the EKT's speaker. The user may also reply via the EKT's microphone as long as the telephone remains off-hook. The feature is activated automatically or by dial access (2) on a programmable station-by-station basis (see Figure 25).

NOTE:
If the station user is involved in a hands-free conversation (on-hook), the caller receives a busy signal.

09.02 Programming: Verify the proper programming via **Programs 01** and **5XX** in *Programming Procedures*, Section **500-036-300** (LED 00 in **Program 01** must be set to voice first for OCA to function).

09.03 Hardware Requirements: Ensure the HKSU has part number 605 (S_e) or 705 (VI_e), and install:
- SVCU PCB per Paragraph **05.70**.
- Jumper cables on SSTU PCB per Paragraphs **05.40** and **05.70**.

09.04 EKT Requirements: Any Toshiba EKT, off-premises extension or HIOB station may *originate* an OCA call in a STRATA$_e$ **Release 2** system, as there are no special hardware requirements. But OCA calls may be *received* by EKTs meeting the following criteria only:
- 6XX5 series
- Connected with 3-pair wiring
- Equipped with HVSU PCB.

09.05 To Test OCA: Connect three stations (station A is equipped for OCA), and conduct the following:

1) Go off hook with station A and make an intercom call to station B, verify the speech path.

2) Use station C to call station A via the intercom:

PBX Compatible: All of the system's features, such as Toll Restriction and Automatic Dialing, are compatible with PBX operation.

Privacy/Non-Privacy: A private system prevents other stations from accessing the intercom or CO lines that are already in use. A non-private system provides conferencing on the CO and intercom lines.

Relay Service: In STRATA VI_e only, the VMAU PCB is equipped with relays that provide the following signals for external equipment:

a) **External Page:** The relay is activated whenever the external page circuit is accessed. A dry "make" contact is provided for control of background music on external page. This is required only when an external page amplifier is used.

b) **Night Relay Service:** The relay will provide a dry "make" contact at the **NR** terminals on the left side panel. A strap option on the VMAU allows the NR relay to function in one of two modes:

1) **Answering Machine Control:** If the strap remains intact, the relay is operated continuously when the system is in night service. This mode is intended for indirect control of an answering machine.

2) **Night Bell Control:** If the strap is cut, the relay pulses at a 1-second on/3-seconds off rate whenever the system is in Night Transfer mode and an incoming call is ringing the system. This mode is intended to be used for indirect control of an external night bell.

Station Hunting: Hunting always starts with called station number and ends with the last station number in the prearranged group; however, the call is completed to the first idle number. The hunting sequence can be either consecutive or nonconsecutive.

Toll Restriction (6-digit): Selectively programmed on a station class of service basis. The system performs toll restriction by analyzing the first 6 or 3 digits (area/office code) dialed. Simple restriction by rejecting the numbers 0 and 1 can be programmed on a per-station basis, if desired.

Toll Restriction Override by System Automatic Dialing: A programmable system feature that permits numbers stored by the Automatic Dialing-System feature to be called by toll-restricted stations.

Trunk-to-trunk Connection: Allows the system to set up a line-to-line connection (tandem switching), leaving the controlling station free to make other calls. A maximum of six (simultaneous) trunk-to-trunk circuit paths can be established.

Voice or Tone Signalling: A programmable system feature that optionally selects either tone ringing or voice page as the primary method of intercom call signalling. The calling station, however, may choose the alternate method by dialing 1 following the station number.

Wall Mountable Key Service Unit: The key service unit is designed for wall mounting only.

Station

Automatic Callback (Intercom): Permits a station user who encounters a busy station on intercom to request a callback by depressing the dedicated button. The system then monitors the called station and signals the caller when that station becomes idle.

Automatic Dialing Buttons: This feature can be used with a telephone that includes ADL buttons in its programmed assignments.

a) An outside telephone number or station number can be stored at each ADL button.

b) A number stored in memory can be sent over a CO line by depressing the appropriate ADL button after accessing the CO line (or an intercom line after pressing the INT button).

NOTE:
Each ADL button is counted as one of the 40 possible stored numbers available to each station.

Automatic Dialing-Station: Each station can store a private list of up to 40 telephone numbers. The Pause and Flash functions may also be stored when necessary.

Automatic Off-Hook Selection: Allows CO line, CO group or intercom access by merely lifting the handset; depressing a CO/Intercom button is not required.

Busy Override: After calling a busy station and receiving a busy tone, the caller can dial 2 and

cause a tone burst to be sounded via the called station's speaker.

Call Forward: Allows *all calls* to a station to be routed to another station. The activating station may be used to originate calls while this feature is active.

Call Pickup: Enables a station to pick up calls ringing at other stations or an external page by going off-hook and dialing an access code. Call Pickup (CPU) buttons can be assigned to stations to automatically pick up calls.

Call Transfer with Camp-on: Allows the transfer of an outside call to a station that is either idle or busy.

CO/CTX/PBX Feature Buttons: Station Automatic Dialing buttons can be used to store access codes, plus any flashes or pauses necessary for feature access in the host switching system. These are fixed feature buttons and can only be changed by station 10. Every fixed feature button assigned to the station reduces the number of ADL buttons.

Directed Call Pickup: *All calls* ringing at another station can be answered from any station by that station going off-hook and dialing the ringing station's number.

Direct Station Selection (DSS) Buttons: By depressing an assigned button, a station user causes the selected station to ring.

Distinctive LED Indications:

- **Incoming Call:** A distinctive flash appears on the respective LED at the station that is being called.
- **In-use:** A distinctive flash rate shows the line presently in use at a given station. Other stations see a steadily illuminated LED for that line.
- **On-hold:** The station user is shown a distinctive LED flash to indicate a line placed on hold at that station. All other stations see the usual on-hold flash.

Do Not Disturb: This feature is activated and deactivated by alternate depressions of the DND button. A station calling a station that is in the DND mode will receive a fast busy tone.

Do Not Disturb Override: After reaching a DND station, that station may be advised that a call is waiting by dialing 2. A tone signal will be heard at the DND station.

DP/MF Mode Change (TONE Button): Allows a station to change between DP and MF modes via the TONE button, as required.

Exclusive Hold: Depressing the HOLD button twice holds that call securely for the station that placed it on hold.

Executive Override (Break-In): A station programmed for this feature will override the automatic privacy feature and enter any existing conversation within the system. A warning tone, however, is inserted before the overriding station is actually connected. After reaching a busy station, dial a 3 to override.

Flash Button (CTX/PBX Transfer or CO Dial Tone Recall): Ten- and 20-button electronic telephones can be equipped with a Message Waiting/Flash (MW/FL) button which, when operated while connected to an incoming line, causes a timed "flash" to be transmitted to that line. The timing of the flash can be programmed to signal a CTX/PBX for feature operation or can be long enough to cause a disconnect and dial tone recall on a CO line (not available on single-line). See Message Waiting.

Handsfree Answerback: All electronic telephones (except the single-line) are equipped for handsfree answerback on voice-announced intercom calls as a standard feature.

Liquid Crystal Display Features: The following features are standard, but require an optional Liquid Crystal Display telephone to operate.

a) **Alphanumeric Messaging:** Allows system and personal messages to be displayed on the 32-character Liquid Crystal Display. There are 40 system messages of up to 32 characters in length for use by all LCD telephones and controlled by station 10. In addition, a limited number of stations (four in S_e, six in VI_e) have 10 personal messages available—plus the system messages for the following features:

- **Busy Station Messaging:** When reaching a busy LCD station, a message can be sent to that station (an audible tone will also be heard). The two stations may respond with LCD messages back and forth during conversation, creating

09.22 Wall Mounting: Mount the HIOB on a flat surface with the four provided screws. The dimensions are 4.6 x 6.8" (117 x 172 mm). Using the HIOB as a template, mark the four screw locations, create "starter" holes and secure the module.

09.23 Cabling: Each HIOB is connected to a station line via 2-pair 24 AWG wiring (Figure 28). It is connected to the peripheral device via single- or 2-pair (only the tip and ring are used) wiring. The maximum distance between the HKSU and the HIOB is 650' (200 M). The loop limit between the HIOB and the device is 300 ohms (including the resistance of the device).

09.24 Power and Ground: To complete the HIOB installation, refer to Figure 28, and perform the following:

1) Connect the provided 24 V converter to the HIOB and plug it into a 120 VAC outlet.

2) Connect a ground wire to the installation site's common ground and to **FG** on the HIOB.

09.25 Programming: Verify the proper programming via several selections in **Program 3#XX** in *Programming Procedures*, Section **500-036-300**.

09.26 Option Switches: There are two switches (Figure 29) on the HIOB that may have to be set.

1) **SW1** selects DTMF tones or dial pulse to be **received from** the peripheral device. Set **SW1**, if necessary (factory-set to **MF**), to **DP** or **MF** (DP = dial pulse, MF = DTMF).

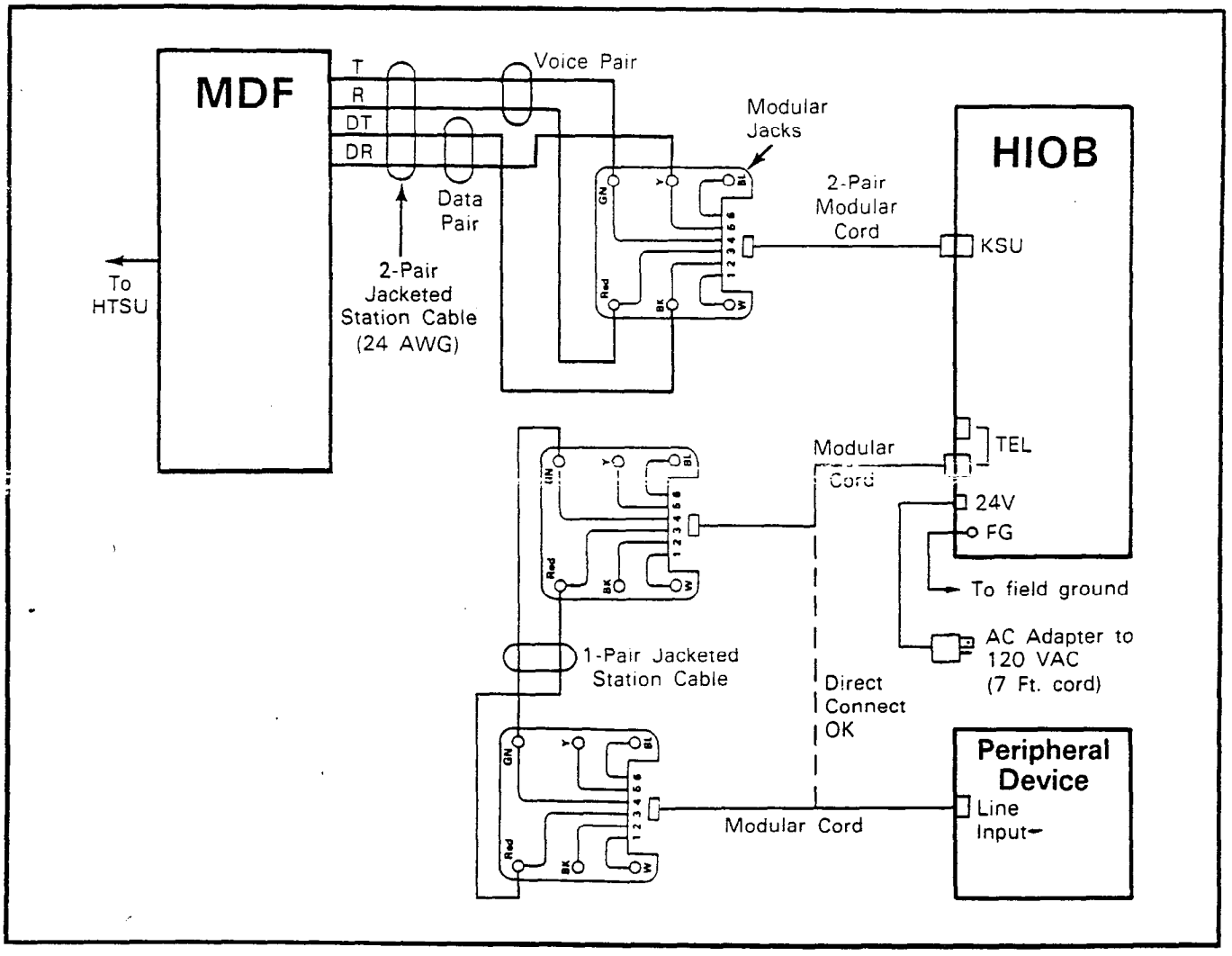

FIGURE 28—HIOB WIRING DIAGRAM

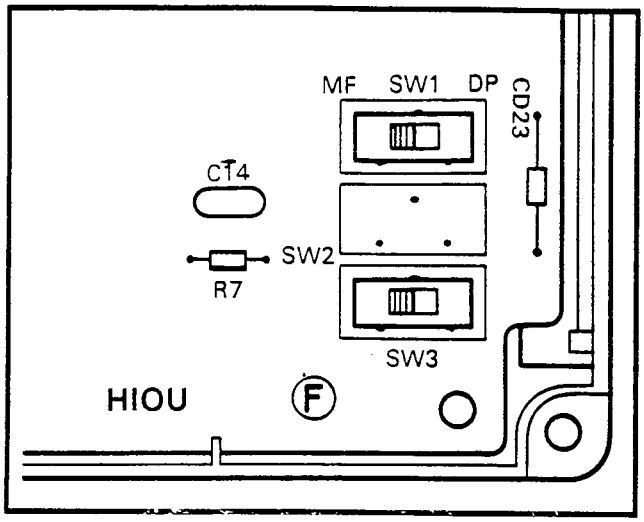

FIGURE 29—HIOB SWITCHES

2) **SW3** selects the ringing pattern sent to the peripheral device from the HIOB. Set **SW3**, if necessary (factory-set to 1/3), to 1/2 or 1/3 (1/2 = 1 second on, 2 seconds off; 1/3 = 1 second on, 3 seconds off).

09.27 To Test each HIOB: Connect a standard telephone to the "TEL" input of the HIOB, and perform the following:

1) Using an operational EKT, call the HIOB's station number.
   - Standard telephone rings.

2) Answer the ringing telephone and check for speech path.
   - Hang up.

3) Call the EKT's station number with the standard telephone.
   - EKT rings.

4) Answer the ringing telephone and check for speech path.
   - Hang up.

NOTE:
This procedure ensures that the HIOB connections and circuits are functioning (see Figure 27). If the peripheral device is a voice mail unit or similar device, more detailed testing is required. Since this testing varies between devices, verify the device's functions per the manufacturer's documentation.

09.28 Voice Mail Application: Stations may be programmed to automatically send digits (via the HIOB) to a voice mail device to step caller through voice mail prompts directly to the station's mail box. There are two cases where these digits will be sent. In each case, a different digit string may be programmed (16 digits maximum). The two cases are:

1) **Call Forward to Voice Mail:** Calls are forwarded to the voice mail box. When calls are answered, digits are sent from the called station via the HIOB. To program this case: From the station that is to send the digits:
   - Dial # * 5 6 (LCD displays # * 5 6 ID code set)
   - Dial the digits and pauses (MW/FL key) required (LCD displays the digits/pauses—pause = two digits)
   - Depress the # key to store data (will remain in memory until changed by the same procedure).

2) **Message Retrieve from Voice Mail:** Voice mail sets the station's message waiting light. When a station calls the voice mail to retrieve messages (by depressing the INT and MW/FL keys), voice mail answers and digits are sent from the calling station to the device via the HIOB. To program this case: From the station that is to send the digits:
   - Dial # * 5 7 (LCD displays # * 5 7 ID code set)
   - Dial the digits and pauses (MW/FL key) required (LCD displays the digits/pauses—pause = two digits)
   - Depress the # key to store data (will remain in memory until changed by the same procedure).

NOTE:
LED 07, **Program 3#XX** *(XX = HIOB station line), must be ON for this feature to operate.*

09.29 Voice Mail Device Programming: To set or cancel the Message Waiting light on a station, the voice mail device must have the capability of sending digits (codes) to the STRATA system.

1) To cause the MW/FL LED on an EKT to flash, the voice mail device must:
   - Go off-hook (receive dial tone from HIOB).
   - Send digits **8 6 X X** (XX = EKT station number).
   - Go on-hook.

2) To cancel the MW/FL LED, the voice mail device must:
   - Go off-hook (receive dial tone from HIOB).
   - Send digits **8 7 X X** (XX = EKT station number).
   - Go on-hook.

09.30 HOXB

09.31 General: Serves as an interface between the key service unit and conventional, standard telephones or off-premises extension (OPX) lines. Each HOXB serves two extensions, replacing two station assignments, and will operate with either DTMF or rotary-dial telephones. An MRGU (a ring generator and -48 VDC power supply) is required with each three HOXBs.

- Se: Two HOXB modules may be installed; using stations 14 ~ 17.
- Vle: Four HOXB modules; using stations 18 ~ 25.

NOTE:
LCR will function (Vle only) when a 2500-type telephone is attached to the HOXB.

09.32 Wall Mounting: An HOXB may be mounted on any vertical surface.

1) Locate the two mounting holes on the left-hand side.
2) Remove the module's right side cover to expose the two right-hand mounting holes.
3) Properly position the module adjacent to the HKSU with regards to wiring needs.
4) Secure the module to the mounting surface with provided screws.

09.33 Option Switches: Remove the cover of the HOXB and locate the two operational mode straps on the HOXU PCB (mounted to the HOXB base). As shown in Figure 30, the straps are located in the center of the PCB (**SW1** controls the operation of OPX telephone #1; **SW2** controls OPX telephone #2). Set each switch to **DP** for dial pulse or **MF** for DTMF tone output, as required. After setting the straps, reinstall the cover and secure it to the base. The MF position does not allow Toll Restriction for the OPX station.

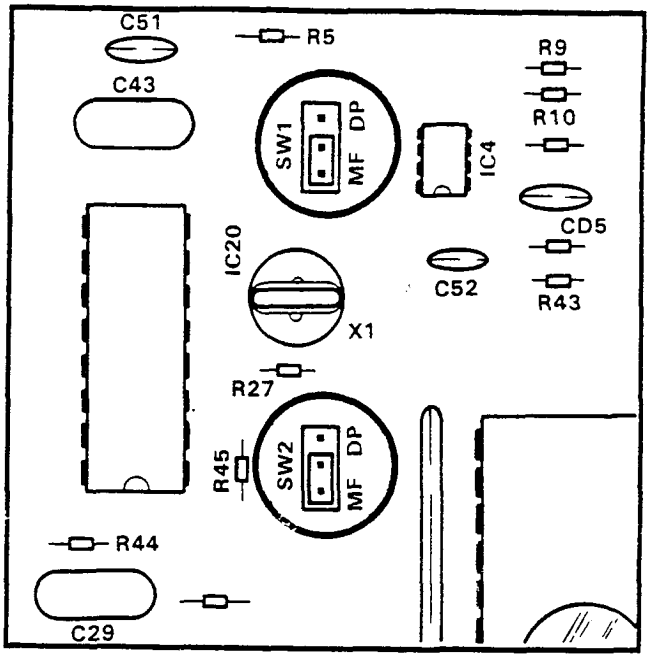

FIGURE 30—HOXB CONNECTION STRAPS

09.34 Cabling: Refer to Figure 31, three

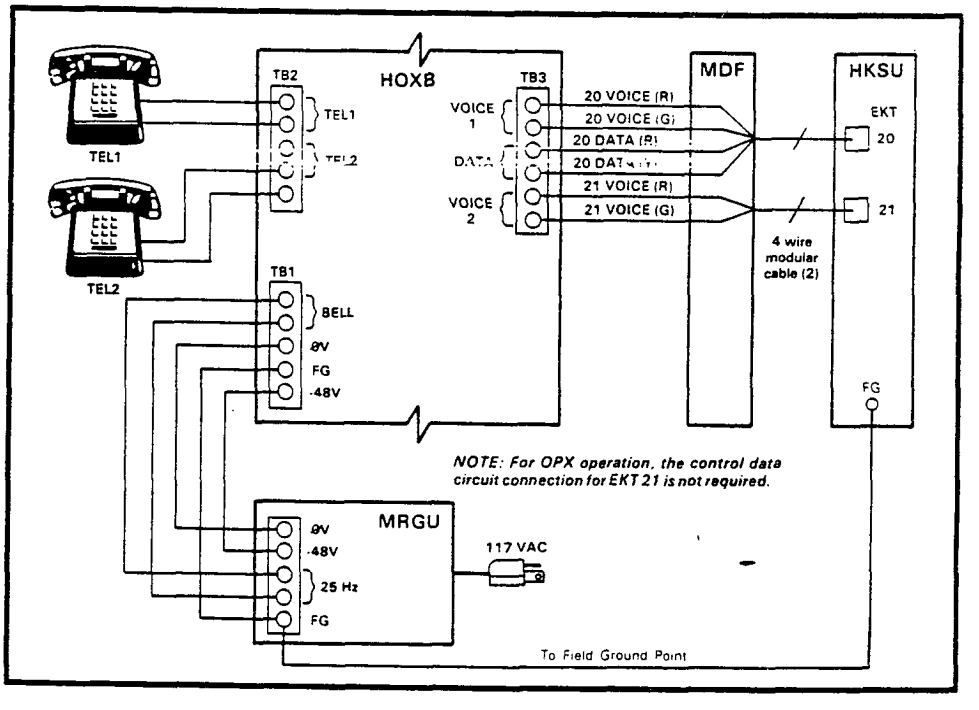

FIGURE 31—HOXB WIRING

types of wiring arrangements are necessary for off-premises extension/conventional, standard telephone (OPX) connections: HOXB-to-HKSU, HOXB-to-MRGU and HOXB-to-conventional, standard telephones.

NOTE:
OPXs are paired even/odd to the HOXB (S_e = 14/15 & 16/17; VI_e = 18/19, 20/21, 22/23 & 24/25).

1) HOXB-to-HKSU connections are made via single wires from the MDF station block to the HOXB terminal strip (TB3) voice and control data terminals. The first four wires are cross-connected with a station's voice and data circuits. A station voice-only connection for each HOXB is required if a second OPX circuit is desired for that HOXB.

2) HOXB-to-MRGU connections are made from the MRGU output terminal strip to the HOXB terminal strip (TB1).
   a) Connect the 80 VAC, 25 Hz output on the MRGU to the BELL input on HOXB.
   b) Connect the -48 VDC and 0 V battery terminals on both units, observing the correct polarity (see Figure 31).
   c) Connect **FG** from MRGU to **FG** on HOXB.
   d) **Must** connect **FG** on HOXB to HKSU.

IMPORTANT FCC INFORMATION:
The HOXB and MRGU are FCC registered with a facility interface code of* OL13A. *If an alternate DC supply/ring generator is to be used, contact your supplier for details.

3) HOXB-to-conventional, standard telephone connections are made from the telephone to the HOXB terminal strip (TB2) with industry-standard 2-, 4- or 6-wire cable. An RJ-11C jack for each OPX telephone is required at the HOXB. Run two single wires from the jack to the appropriate terminals on TB2.

NOTE:
The HOXB requires a negative DC voltage; therefore, the main HKSU power cannot be used (it is +24 volts).

09.35 Programming: Verify the proper programming via selections in **Programs 0#2** and **3#XX** in *Programming Procedures*, Section **500-036-300**.

09.36 To Test: Perform the following procedures at each Off-Premises Extension/Conventional Telephone (OPX) location:

a) Lift the OPX handset and listen for intercom dial tone.

b) Dial the number of another station.
   - Dial tone stops when first digit is dialed.
   - Ringing or voice paging can be heard at the called station.

c) Lift the handset at the called station.
   - Ringing stops.

d) Verify that a 2-way voice connection exists between the OPX and the called station.

e) Go on-hook at both stations.

f) Lift the OPX handset and listen for intercom dial tone.

g) Dial CO line access code.
   - Listen for CO dial tone.
   - An idle line, from the group defined by **Program 09** (or **91** ~ **98**), is seized.

h) Dial a test call.
   - Verify that a 2-way voice connection is established.

i) Flash the hookswitch on the OPX and listen for intercom dial tone.

j) Dial the number of another station.
   - Dial tone stops when first digit is dialed.
   - Ringing or voice page can be heard at the called station.

k) Lift the handset at the called station.
   - Ringing stops.

l) Verify that a 2-way voice connection exists between the OPX and the called station.

m) Flash the hookswitch on the OPX.

n) Verify that a 3-way conference is established.

o) Go on-hook at the OPX.

p) Verify that the CO line and called station are connected.

q) Go on-hook at the called station.

09.40 HDCB

09.41 General: Provides Door Phone/Monitor Stations, Door Lock and Alarm features. To equip the system with up to six Door Phone/

Monitor Stations and/or the Door Lock and Alarm features, install one or two HDCB external modules. The A, B and C modular connections provide the following functions:

- 11/13A & 12/14A: Door phones
- 11/13B & 12/14B: Door phones or door lock contacts.
- 11/13C & 12/14C: Door phones or alarm* detect.

**Alarm detect is available on door phone 11/13C only, and the alarm reset key may be assigned only to station 10.*

09.42 Wall Mount: An HDCB may be mounted on a wall only. Perform the following:

1) Locate the two mounting holes on the right-hand side.

2) Remove the module's left side cover to expose the two left-hand mounting holes.

3) Properly position the module adjacent to the HKSU with regards to wiring needs (17' maximum).

4) Secure the module to the mounting surface with the provided screws.

09.43 Option Switches: Remove the HDCB cover and locate (per Figure 32) **SW2** and **SW1** in the upper left corner (**SW1** controls output C; **SW2** controls output B).

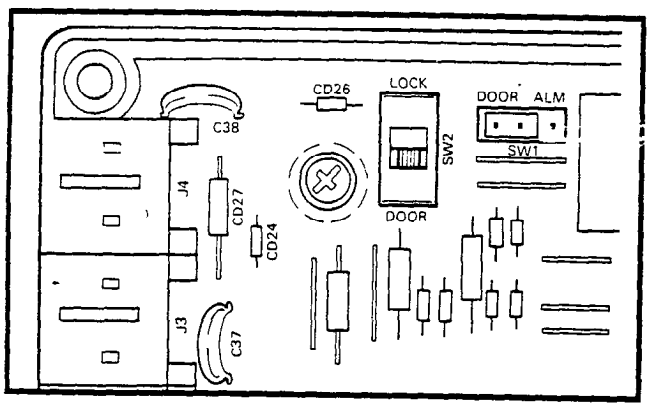

FIGURE 32—HDCB CONNECTION STRAPS

1) On the HDCB connected to station 11/13 only, when **SW1** is in the **DOOR** position, output C connects to a door phone/monitor station. When strapped in the **ALM** position, output C will detect a closure across its two leads (a short) and provide an alarm signal to all idle stations. The signal may be turned off with an **ALRM** key on station 10 only.

2) When **SW2** is in the **DOOR** position, output B connects to a door phone/monitor station. When strapped in the **LOCK** position, output B will provide a dry contact closure for indirect control of a door lock or other device. The closure will be for a period of 3 or 6 seconds (programmable) when an EKT's door lock (**DRLK**) key is depressed.

09.44 Cabling: The door phone control unit (HDCB) is connected to the HKSU at EKT 11/13 and/or 12/14 (program-controlled). Each door phone/monitor station (MDFB) is connected to the HDCB via a 2-wire modular connector at the HDCB and a split ring connector at the MDFB using screw terminals 1 and 2 (L1 and L2 are not used). Figure 33 shows the HDCB and MDFB wiring arrangement.

NOTE:
When using output B for the Door Lock feature, an appropriate modular connector must be used to interface the HDCB to the door lock devices.

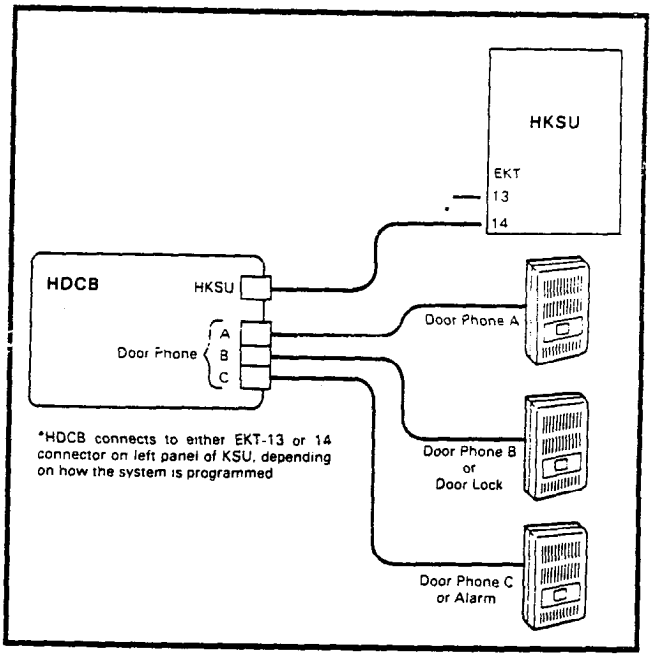

FIGURE 33—HDCB/MDFB CONNECTION

09.45 Programming: The following programs must be set for door phone, door lock and/or alarm operation:

- Door phone assignments: **Program 0#1**
- Door lock key assignments: **Program 4#XX** (codes 71 ~ 74)

- Station 10 alarm reset (ALRM) key: **Program 4#XX** (code "*"—lowest AD key) and **Program 03** (LED 10 on)
- Door phone/EKT ringing assignment: **Program 9#XX**
- First digit in station number may be changed via **Program *X#** (Flexible Numbering).

NOTE:
The door phone station numbers (used to call the door phones via the intercom) are as follows:

- *HDCB on station 11/13 only:*

Door Phone	Station No.	LCD Display
11/13A	66	1A
11/13B	67	1B
11/13C	68	1C

- *HDCB on stations 11/13 ~ 12/14:*

13A	661	1A
13B	662	1B
13C	663	1C
14A	664	2A
14B	665	2B
14C	666	2C

09.46 To Test: After installing and programming the door phone units, perform the following test at each door phone to confirm their proper functioning:

1) Depress the door phone button.
   - Preselected station(s) will ring five times.
   - The INT LED on the called station(s) will flash at the incoming call rate.
2) Depress the door phone button again.
   - Station(s) will ring.
3) Lift the handset at a ringing station.
   - Verify voice-page and talkback through the door phone speaker.
   - Hang up.
4) On any station, call the desired door phone's access code (see the above note).
   - Verify voice-page and talkback through the door phone speaker (there is no warning tone when accessing the door phone).
   - Hang up.

09.50 HOLB

09.51 General: An off-premises line module that allows the bridging of a CO line, which appears in the system, with a conventional telephone; supervision is provided. Each HOLB provides three circuits, all three of which may be directed to an answering machine (or similar device) attached to the HUNT connector. (Requires an HPLU PCB instead of an HCOU for each HOLB module desired.)

09.52 Wall Mount: An HOLB may be mounted on a wall only. Perform the following:

1) Locate the two mounting holes on the right-hand side.
2) Remove the module's left side cover to expose the two left-hand mounting holes.
3) Position the module adjacent to the HKSU with regards to wiring needs (17' maximum).
4) Secure the module to the mounting surface with the provided screws.

NOTE:
Internal HOLB strapping is not required.

09.53 Cabling: When using the HOLB unit, the CO lines are connected to the CO1, CO2, CO3 connectors (**J2**, **J3**, and **J4**) on the HOLB unit (Figure 34). Then, a 6-wire cable from the CO1, 2, 3 OUT (**J1**) connector on the HOLB is connected to the CO1-3 modular connector on the right side panel of the HKSU. Connect the provided 8-wire modular cable from the HOLB 1-3 connector (on the HKSU left side panel) to the HOLB unit. Connect the provided green ground wire between TB1 (**FG**) on the HOLB and the HKSU. (A similar procedure is followed if a second HOLB unit is to be connected to the HOLB 4-6 connector.)

09.54 Telephone Cabling: TEL1 (**J6**), TEL2 (**J7**) and TEL3 (**J8**) connectors on the HOLB connect to standard telephones or other tip-and-ring devices that serve as off-premises lines (see Figure 39). The HUNT (**J9**) connector connects to a standard telephone, answering machine or other device to which OPL calls hunt.

09.55 Programming: See **Program 0#9**, OPL Hunting.

09.56 To Test: Perform the following procedures on each OPL/CO line pair:

a) Lift the OPL telephone handset and listen for CO dial tone.

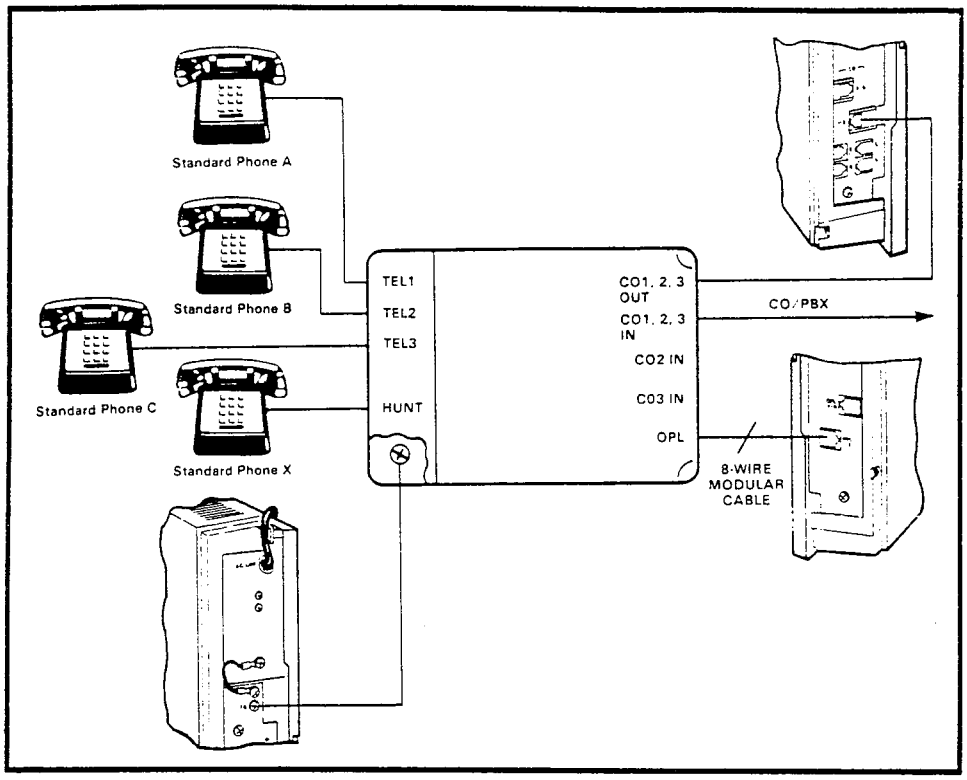

FIGURE 34—HOLB WIRING

b) Verify that the corresponding CO line LED lights on the system EKTs.

c) Dial a test call from the OPL telephone.
- Verify that a 2-way voice connection is established.

d) Depress the corresponding line key on an EKT.
- Verify that privacy feature prevents access.

e) Go on-hook at OPL telephone.

f) Depress the OPL CO line key on an EKT and listen for CO dial tone.

g) Dial a test call from the EKT.
- Verify that a 2-way voice connection is established.

h) Lift the OPL telephone handset.
- Verify that a 3-way voice connection is established.

i) Go on-hook at both stations.

j) Make an incoming call to the OPL CO line.
- Appropriate EKT LED(s) flash.
- Appropriate EKT(s) ring.
- OPL telephone rings.*

If OPL hunting is programmed for the line being tested, the call always rings OPL station #1 if it is idle.

k) Lift OPL telephone's handset to answer call.
- Ringing stops.
- EKT LED(s) light steadily.
- Verify that a 2-way voice connection is established.

l) Depress OPL CO key on an EKT.
- Verify that privacy feature prevents access.

m) Go on-hook at the OPL telephone.

n) Make another incoming call to the OPL CO line.

o) Answer the call using an EKT.
- Verify that a 2-way voice connection is established.

p) Lift the OPL telephone handset.
- Verify that a 3-way voice connection is established.

q) Go on-hook at both stations.

09.60 HSMB

09.61 General: Serves as an interface between the key service unit and a printer or storage device used for the SMDR feature. The module (one per system) is equipped with an RS-232C interface for the printer connection and connects to the HKSU via two supplied 8-wire modular cords.

09.62 Wall Mount: An HSMB may be mounted to any vertical surface.

1) Locate the two mounting holes on the left-hand side.

2) Remove the module's right side cover to expose the two right-hand mounting holes.

3) Properly position the module adjacent to the HKSU with regards to wiring needs.

4) Secure the module to the mounting surface with the provided screws.

09.63 Cabling: The HSMB must be installed within 17' of the HKSU (a 7' cord is provided with the module), and connected by an 8-wire modular cable. Connect the modular cable from **J1** (CONT) on the HSMB to the **CONT** connector on the HKSU. The RS-232C printer connector is installed at **J3** on the HSMB. Connect **FG** on the HSMB and the HKSU. Figure 35 shows the detailed connections for the printers listed above. Verify that the RS-232C output cable is connected to the PCB with the proper pinout connections (A or B). Printer types known to be compatible with these systems are:

Texas Instruments Model 743/745
OKI Data Model 82A

NOTE:
The female RS-232C cable may be 50' maximum.

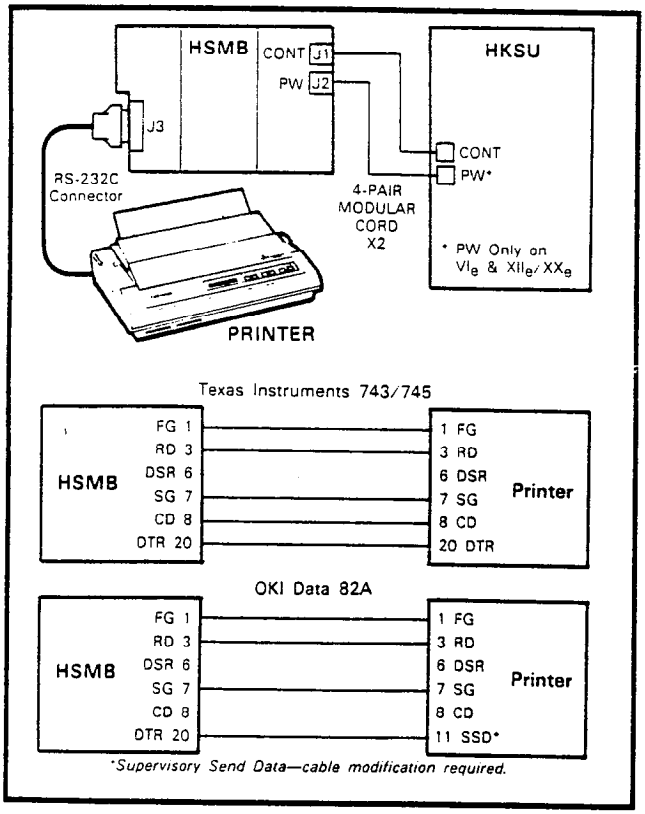

FIGURE 35—HSMB/PRINTER CABLING

09.64 Option Switches: Remove the HSMB cover and locate the various straps and switches (Figure 36) and perform the following

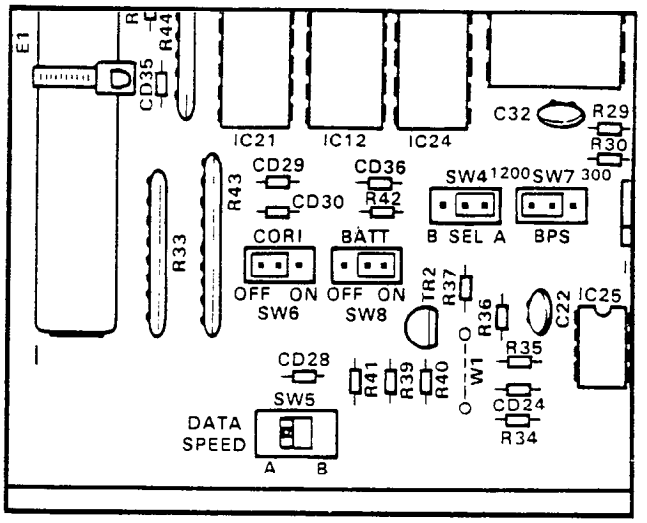

FIGURE 36—HSMB STRAPS and SWITCHES

1) Locate the **SW8** battery strap, and connect the memory backup battery. To connect the battery, install the strapping plug so that it bridges the center pin with the pin labeled **ON**.

2) Select the data output speed using the **SW7** strap. The speed may be set at 300 or 1200 bps by installing the strapping plug so that it bridges the center pin with the pin labeled **300** or **1200**.

3) Two other switches (**SW4** and **SW5**) located on the HSMB are normally set at position A. In position B, the HSMB can accommodate other printer types. See Table B to determine the RS-232C pin connections for positions A and B.

TABLE B
RS-232C (Female) PIN CONNECTIONS

Position A		Position B	
3	RD	2	RD
20	DTR	3	STATUS
6	DSR	6	DSR
7	SG	7	SG
8	CD	8	CD

4) The SMDR feature prints out records of both incoming and outgoing calls or only outgoing calls. This option is selected by the **SW6** strap. Installing the strapping plug so that it bridges the center pin with the terminal labeled **OFF** causes both incoming and out-

going calls to be recorded. Bridging the center pin with the terminal labeled **ON** causes only outgoing calls to be recorded.

5) Data output is in 7-bit ASCII code with one start bit, one parity bit (even parity) and one stop bit.

09.65 Clock/Calendar Information: One of the functions of the HSMB is to provide a calendar and clock for showing time, date and duration of recorded calls. This clock and calendar must be set when the system is first placed into service. The HSMB automatically adjusts for 30- and 28-day months and leap year. It is equipped with three buttons and two LED displays (Figure 37). Looking from top to bottom; the functions of the buttons are as follows:

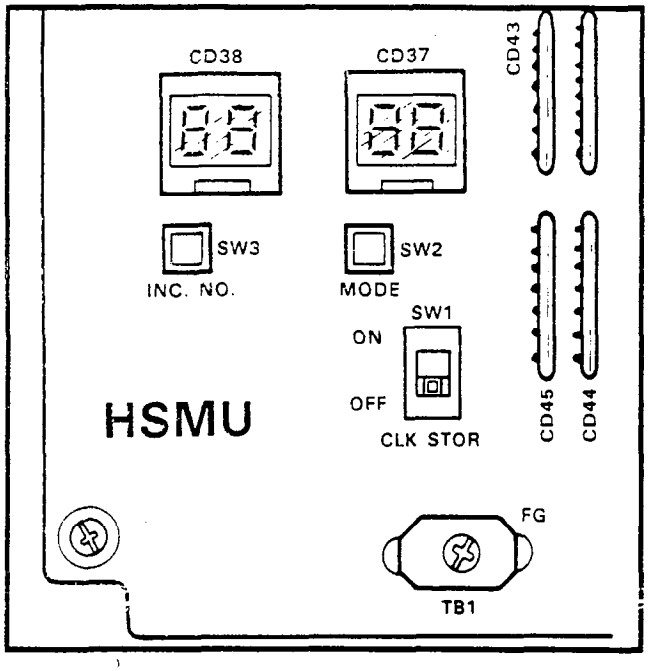

FIGURE 37—HSMB BUTTONS

STR: Writes data into memory once it is properly displayed.

MOD: Selects items to be adjusted. Multiple depressions of the **MOD** button cause item numbers to be displayed sequentially by LED 1. The possible displays are:

Off
1 = year
2 = month
3 = day
4 = hour
5 = minute
6 = start

INC: Selects the data (hour, minute, day, etc.) for the item number selected by the **MOD** button and displayed by LED 1. LED 2 displays data selected by the **INC** button.

- Depressing the **INC** button once increments data by 1.
- Depressing and holding the **INC** button causes data to increase continuously until the **INC** button is released.

09.66 To Set Clock and Calendar:

1) Verify that the battery is connected on the HSMB (Figure 36).

2) Depress the **MOD** button once.
   - LED 1 displays 1 (year).
   - LED 2 displays current data.

3) Use the **INC** button to correct data in LED 2 display.

4) Depress the **MOD** button once.
   - LED 1 displays 2 (month).
   - LED 2 displays current data.

5) Use the **INC** button to correct data in LED 2 display.

6) Depress the **MOD** button once.
   - LED 1 displays 3 (day).
   - LED 2 displays current data.

7) Use the **INC** button to correct data in LED 2 display.

8) Depress the **MOD** button once.
   - LED 1 displays 4 (hour).
   - LED 2 displays current data.

9) Use the **INC** button to correct data in LED 2 display.

10) Depress the **MOD** button once.
    - LED 1 displays 5 (minute).
    - LED 2 displays current data.

11) Use the **INC** button to correct data in LED 2 display.

12) Depress the **MOD** button once.
    - LED 1 displays 6 (start).
    - LED 2 has no display.

13) Slide the **STR** button to **ON** and then back to **OFF**.
    - LEDs go off.
    - Data is transferred to working memory and time keeping starts.

NOTE:
If LED 1 is changed to **OFF** *before* **STR** *is operated, existing data will not be changed, regardless of adjustments made in previous steps.*

09.67 To Test: Verify the proper functioning of the SMDR feature:

a) Connect the printer to the HSMB.

b) Set data speed and select type of calls to be recorded per Paragraph **09.64**.

c) Make an outgoing call from any EKT.

d) Enter an account code as follows:
- Dial the access code (# 5 0).
- Dial the account code (6 digits).

e) Hang up after the call has been active for at least 10 seconds (calls of less than 10 seconds duration are not recorded).
- The call record is output to the printer in the format shown in Figure 38.

f) Take the printer "off-line" (DTR signal "off").

g) Make an outgoing call.

h) Hang up after the call has been active for at least 10 seconds.
- Call record is not output.

i) Put the printer "on-line" (DTR signal "on").
- Call record is output.

j) Make an incoming call to the system and delay answering it for several rings.

k) Answer the call.

l) Enter an account code as in step d.

m) Hang up.
- Call record is output to the printer in the format shown in Figure 39.

09.70 HMDB Installation

09.71 General: An integrated modem unit which allows simultaneous voice/data switching to be controlled via an associated EKT. The HMDB is installed in place of the standard EKT base, and includes an RS-232C connector for a computer or other data device. Each HMDB will reduce the system's station capacity by one.

09.72 Optional Switches: The HMDB's data transmission speed may be set for either CCITT or Bell specifications at 300 bps (full duplex) or 1200 bps (half duplex). See Figure 40 and make selections prior to installation using **SW2**.

09.73 Cabling: The modem phone is connected to a station line as shown in Figure 41.

```
MM/DD/YY

 01   10   HH:MM   00:30;51          7305000
02    14   HH:MM   00:02;39           8531212   123456
04    18   HH:MM   00:01;37      12135551212    654321
03    15   HH:MM   00:04;51      18002436161
07    19   HH:MM   00:02;25           2731750
```

FIGURE 38—SMDR PRINTOUT EXAMPLE (Outgoing Call)

```
MM/DD/YY

 01   10   HH:MM   00:01;13   00;02
02    14   HH:MM   00:02;30   00;04
03    11   HH:MM   00:03;36   00;10          654321
```

FIGURE 39—SMDR PRINTOUT EXAMPLE (Incoming Call)

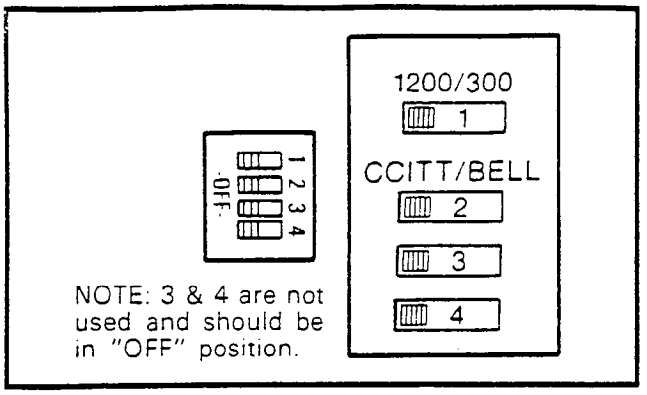

FIGURE 40—HMDB EXTERNAL SWITCHES

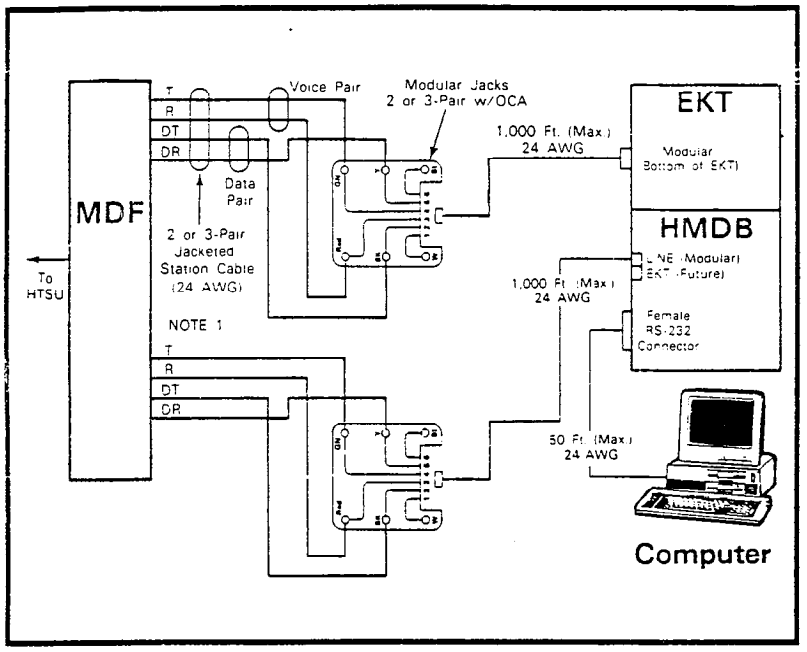

FIGURE 41—HMDB WIRING

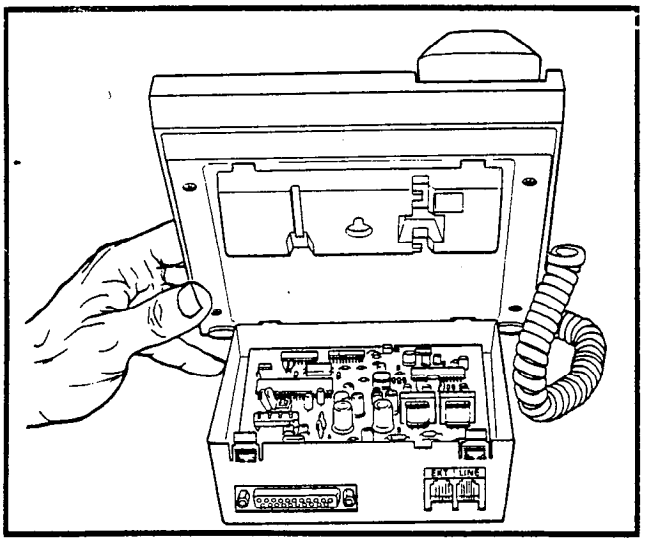

FIGURE 42—HMDB INSTALLATION

NOTE:
There are no internal connections between the modem and the associated EKT.

09.74 Installation: To install the HMDB on the bottom of an EKT, refer to Figure 42, and perform the following:

1) Remove the standard EKT base.

2) Insert the HMDB's front tabs into the matching holes in the bottom of the EKT.

3) Press the HMDB's rear tabs into the matching holes in the EKT. Continue pressing until the HMDB snaps into place.

09.75 Programming: Verify programming via **Programs 4#XX** and **3#XX**, *Programming Procedures*, Section **500-036-300**. Three keys must be programmed on the associated station. These keys control the modem phone operation.

- **Modem (MODM) Key:** Transfers calls from the EKT's **INT** or **CO** keys to the modem phone. It is also used to disconnect modem calls. The modem LED is on whenever the modem is in use.
- **Answer/Call (ANS/C) Key:** Selects the modem mode (answer or originate call); the mode switches each time the key is depressed (LED = answer/on; originate/off).
- **Manual/Auto (MA/M) Key:** Selects the modem mode (manual or auto answer); the mode switches each time the key is depressed (LED = auto/on; manual/off).

09.76 Terminal/Computer (PC) Installation:

1) Connect the RS-232C cable (50' maximum) to the HMDB's DB-25 female connector.

RS-232C Pin-outs

Pin No.	Name	Pin No.	Name
2	TD	7	SG
3	RD	8	CD
4	RTS	20	DTR
5	CTS	22	CI
6	DSR		

2) Connect the other end to a serial communications port on the PC (or the EIA RS-232C connector on the terminal).

3) A communication software package (such as Crosstalk, etc.) should be installed in the PC.

4) If necessary, set the following parameters on the PC/terminal to match the device with which the PC/terminal will be communicating.
   - Parity
   - Word length
   - Stop bits
   - Baud rate
   - Full/half duplex

09.77 Modem Phone (HMDB) Test: After installing and programming the PC/terminal, HMDB, and associated station, perfrom the following test:

1) **Originate Modem Call Test:** Calls may be originated from the station's intercom or CO line and then transferred to the modem line.
   a) Set the ANS/C key to the call mode (LED off).
   b) Set the MA/M key to the manual mode (LED off).
   c) Call another modem/device set via the CO or intercom line.
   d) Depress the MODM key when modem tone is received from the other end.
   e) Place the local terminal on-line—it displays "COMMUNICATIONS" or "CONNECTED" when the connection becomes successful (see Note 1). At this point, communications is possible between the terminal and the remote device.
   f) Depress the MODM key to disconnect the call.

2) **Auto Answer Call Test:** The modem may be set to auto answer calls directed to CO lines programmed to ring the HMDB or intercom calls directed to the modem line (not the associated station line).
   a) Set the local terminal to on-line.
   b) Using the ANS/C key, set to answer mode (LED on).
   c) Using the MA/M key, set to auto mode (LED on).
   d) Call the HMDB from another modem/terminal set-up.
   e) When the call rings in, the MODM LED turns on and the terminal displays "COMMUNICATIONS" or "CONNECTED" (see Note 1). At this point, communications is possible between the terminal and the remote device.
   f) Depress the MODM key to disconnect the call.

3) **HMDB Loop-back Test:** This test is required only when the Originate or Auto Answer tests are not successful. Note: Detach the HMDB from the EKT.
   a) Verify the PC/terminal is installed as instructed in Paragraph **09.76**.
   b) Verify that the HMDB is installed per Paragraph **09.73**.
   c) Select **TEST** with **SW1** (see Figure 43).
   d) Set the terminal to on-line.
   e) Characters input via the keyboard should display on the CRT or print at the terminal (see Note 3).
   f) IMPORTANT: Set **SW1** back to **NORMAL** (see step c)

NOTES:
1. *If the local terminal is blank or displays "NO CARRIER", make sure the terminal and remote device parameters match (per terminal set-up earlier in Paragraph* **09.76**. *Also, check programming and perform the loop-back test outline herein.*
2. *Verify that the CO line is programmed to ring the HMDB port in one ringing assignment program (***81XX** ~ **89XX**).
3. *If this test is not successful, verify the installation and programming procedures in this section.*

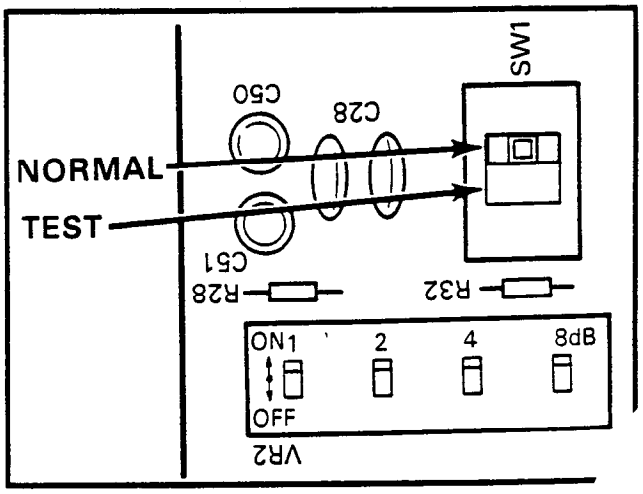

FIGURE 43—HMDB INTERNAL SWITCHES

TABLE C—VR2 SETTINGS

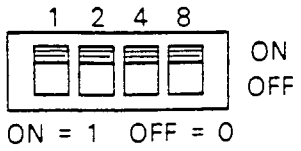

dB	0	1	2	3	4	5	6	7	8	9	10	11	12	13	14	15
1	0	1	0	1	0	1	0	1	0	1	0	1	0	1	0	1
2	0	0	1	1	0	0	1	1	0	0	1	1	0	0	1	1
4	0	0	0	0	1	1	1	1	0	0	0	0	1	1	1	1
8	0	0	0	0	0	0	0	0	1	1	1	1	1	1	1	1

NOTES:

1. **VR1** *is factory-adjusted, please do not alter setting.*
2. **VR2** *is used to set the HMDB's transmission level in 1dB increments (0 ~ -15dB). It is shipped with* **VR2** *set for the* ***normally required*** *-15dB. See Table C for* **VR2** *settings.*

09.80 Amplified Conference

09.81 General: Two Amplified Conference connections may be installed in the system, which requires a customer-supplied two-way amplifier. The Lorain VFR 5050 (R-TEC Systems) is known to be compatible.

09.82 Cabling: Refer to Figure 44 and the amplifier's installation procedures from the manufacturer and connect each amplifier between the voice leads (T and R) of stations 16/17 (S_e only) and 18/19 & 24/25 (VI_e only).

09.83 Programming: Ensure that these stations have been programmed for Amplified Conference via **Program 02**, *Programming Procedures*, Section **500-036-300**.

09.84 To Test: The amplifier is automatically connected once the conference is established. Amplification exists between any two outside CO lines used as well as between the second CO line selected and the station (no amplification between the first CO line and the station). If Trunk-to-Trunk connections are allowed in the system (**Program 02**), the CO line-to-CO line connection will be amplified. There are two Amplified Conference connections available that are established on a first-come/first-served basis only.

09.90 HESB

09.91 General: An external amplified speaker (HESB) may be connected in any one of the following three applications:

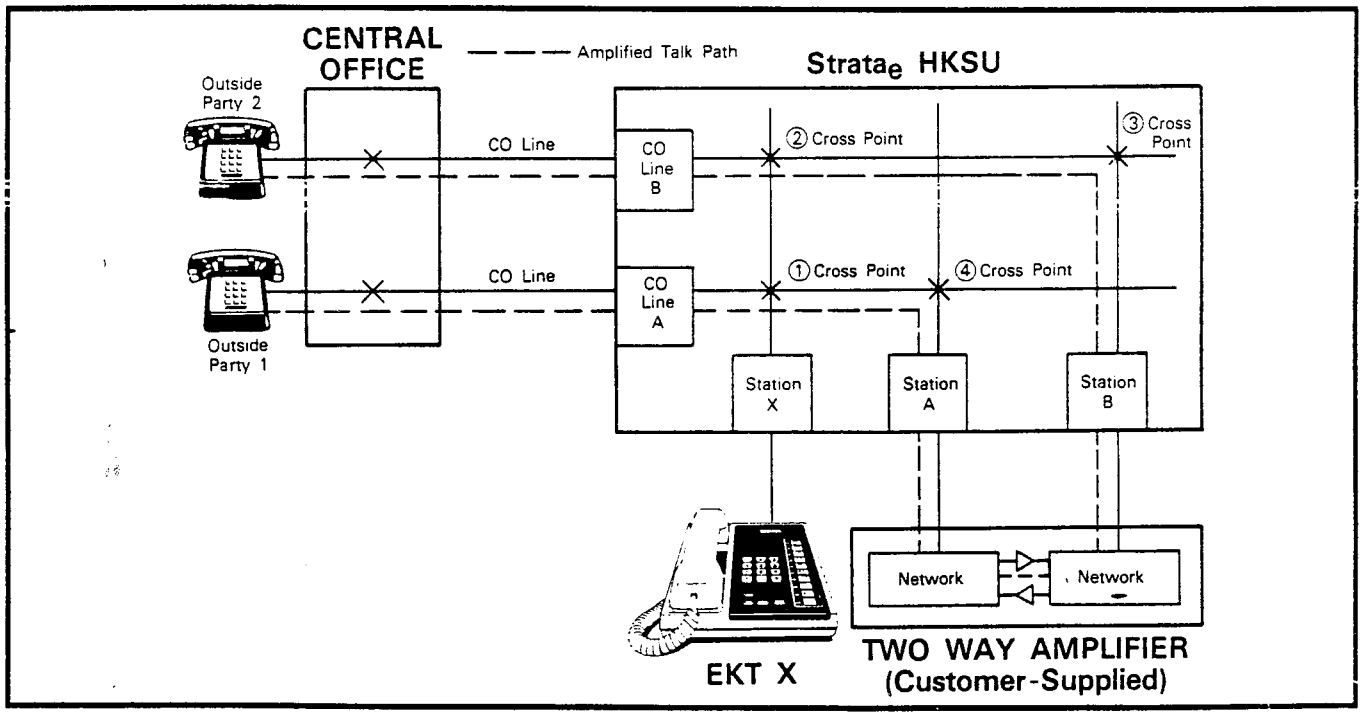

FIGURE 44—AMPLIFIED CONFERENCE FUNCTIONAL BLOCK DIAGRAM

- Loud Ringing Bell—Allows you to amplify the tone of an EKT ring (except the single-line EKT).
- Amplified Speaker—Allows you to use the HESB as a paging speaker.
- Talkback Amplified Speaker—Allows you to provide a talkback speaker where an EKT is not needed.

09.92 Power Requirements: The HESB is a 6" 3-watt speaker with an amplifier that is built into a wooden speaker box. A +12 VDC power supply (HACU-120), which connects to the back panel via an 8' cord, is shipped with each HESB.

09.93 Cabling—Loud Ringing Bell Application: Refer to Figure 45 and make the following connections between the back of the HESB and the second modular jack on the left side of the EKT:

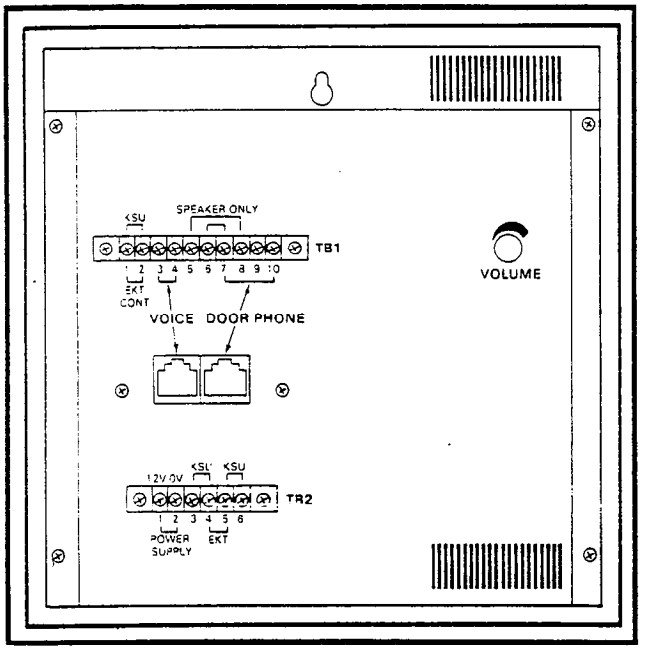

FIGURE 45—HESB BACK PANEL

1) Connect two "SPEAKER ONLY" jumpers (TB1):
   Terminal 6 to 7.
   Terminal 5 to 8.

2) Connect "EKT" jumper (TB2):
   Terminal 4 to 5.

3) Refer to Figure 51 and connect "VOICE" and "EKT CONT" (TB1). Connect terminals 1 ~ 4, respectively, to the indicated pins on the EKT modular connector:
   Terminal 1 to pin 1
   Terminal 2 to pin 6
   Terminal 3 to pin 3
   Terminal 4 to pin 4

NOTE:
These connections can be made to the "VOICE" modular connector (instead of TB1), as shown in Figure 46.

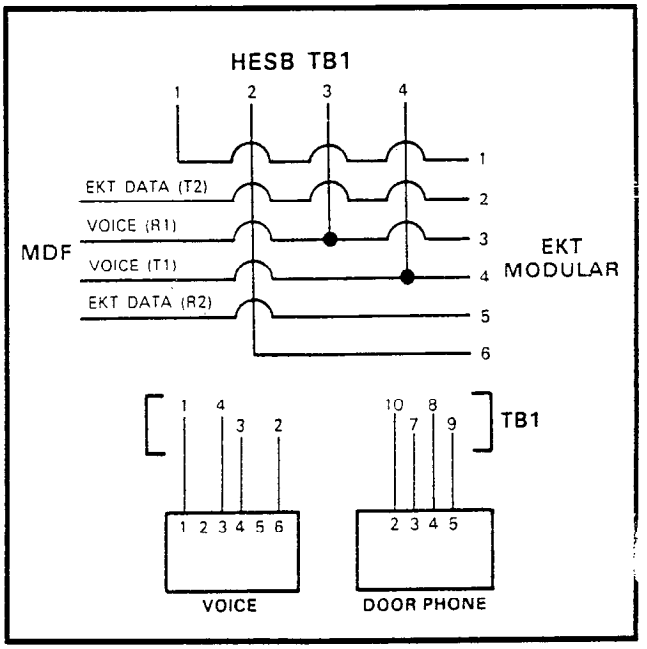

FIGURE 46—MODULAR-TO-TERMINAL STRIP INTERNAL CONNECTIONS

4) Connect the HACU-120 power supply to TB2 (+12V to terminal 1 and 0V to terminal 2).

5) Connect the male and female ends of the HACU-120.

6) Connect the HACU-120 to a 117 VAC, 60 Hz power source.

To Test:

1) Make a CO or station call to the station with the HESB.
   - Ringing will be heard over the HESB.

2) Adjust the volume control on the HESB to the desired level.

3) If you hear ringing at the station (but not at the HESB) make the following check:
   a) Using a voltmeter, measure across terminals 1 and 2 of TB1.
      - With the "plus lead" on termina

reading should be approximately 4.5 ~ 5.0 volts DC.

NOTE:
Ringing stops once the call is manually answered. There will be **NO** *voltage potential across terminals 1 and 2.*

b) If voltage does not appear across terminals 1 and 2 during ringing, check that the EKT wire connections have been made correctly (see Figure 46). (The wires to terminals 1 and 2 may be reversed.)

09.94 Cabling—Amplified Speaker Application: Refer to Figure 45 and make the following connections on the back of the HESB:

1) Connect "KSU" jumper (TB1):
Terminal 1 to 2.

2) Connect two "SPEAKER ONLY" jumpers (TB1):
Terminal 6 to 7.
Terminal 5 to 8.

3) Connect two "KSU" jumpers (TB2):
Terminal 3 to 4.
Terminal 5 to 6.

4) Connect the voice output from the external speaker or paging circuit on the system to terminals 3 and 4 on TB1 ("VOICE").

5) Connect the HACU-120 power supply to TB2 (+12V to terminal 1 and 0V to terminal 2).

6) Connect the male and female ends of the HACU-120.

7 Connect the HACU-120 to a 117 VAC, 60 Hz power source.

To Test:

1) Make an external page.
- You will hear your voice over the HESB.

2) Adjust the volume control to the desired level on the back of the HESB.

09.95 Cabling—Talkback Amplified Speaker Application: Refer to Figure 45 and make the following connections on the back of the HESB:

1) Connect "KSU" jumper (TB1):
Terminal 1 to 2.

2) Connect two "KSU" jumpers (TB2):
Terminal 3 to 4.
Terminal 5 to 6.

3) Connect "Door Phone" (TB1)—connect the following terminals to the indicated pins on the door phone unit (MDFB):
Terminal 9 to pin 1
Terminal 10 to pin 2
Terminal 8 to pin L1
Terminal 7 to pin L2

NOTE:
These connections can be made to the "DOOR PHONE" modular connector (instead of TB1), as shown in Figure 45.

4) Connect terminals 3 and 4, on TB1 ("VOICE"), to the 600-ohm terminals.

NOTE:
Set the 8/600-ohm switch to the 600-ohm position on the system.

5) Connect the HACU-120 power supply to TB2 (+12V to terminal 1 and 0V to terminal 2).

6) Connect the male and female ends of the HACU-120.

7) Connect the HACU-120 to a 117 VAC, 60 Hz power source.

To Test:

1) Make an external page.

2) Verify that your voice is heard over the HESB.

3) Verify that someone speaking into the door phone unit (MDFB) can be heard at the paging station.

10 EQUIPMENT CONNECTIONS

10.00 Wiring Connections

10.01 All connections to miscellaneous equipment are made via the terminal strip mounted on the left side panel as shown in Figure 47.

10.10 MOH/BGM Source

10.11 Music-on-Hold requires either the SMOU PCB, which generates electronic melodies, or a customer-provided external music source, such as an FM radio. If the SMOU is used, it must be installed per Paragraph **05.50**.

10.12 If an external music source is used for

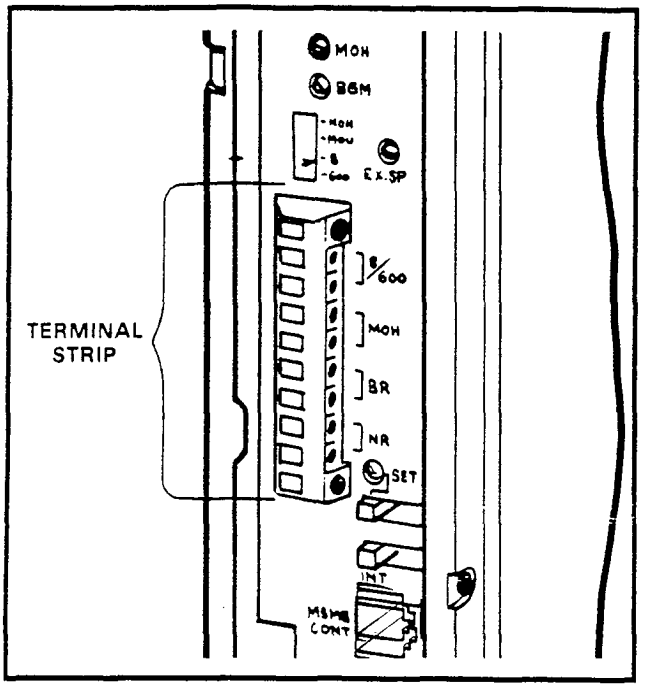

FIGURE 47—TERMINAL STRIP

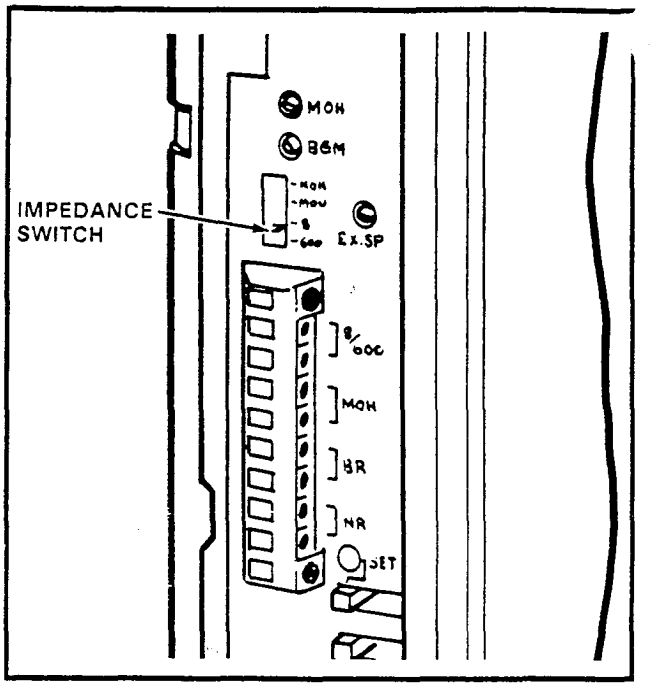

FIGURE 48—IMPEDANCE SWITCH

Music-on-Hold, its output leads must be connected to the **MOH** terminals on the HKSU.

10.13 Adjust the MOH volume with the **MOH** volume control on the HKSU. Maximum volume is limited by internal circuits in order to comply with FCC regulations. See Paragraph **10.70** for the correct volume setting sequence.

10.14 Background music is provided via the same source as music-on-hold. Either the SMOU or an external source may be used.

10.20 External Paging Connections

10.21 The system provides access to an external paging speaker. This speaker is also used for background music. The single output connection is made via the **EXP** or **600** terminals on the HKSU, and can be used in one of three ways:

1) To operate a customer-provided speaker directly via an internal 3-watt amplifier located on the SEPU PCB.

2) If more than 3 watts are required, an external customer-provided amplifier can be connected to operate the external speaker (**600** terminal).

3) If talkback capability is required, a customer-provided talkback amplifier/speaker can be connected (**600** terminal).

10.30 Direct External Speaker Connection

10.31 The exact number of speakers that may be connected to the 8-ohm, 3-watt output is dependent on the type of speaker used, conductor resistance, and desired volume.

10.32 The 8-ohm output impedance must be selected with switch **SW2** on the HKSU (Figure 48). The switch must be on the side labeled **8**.

10.33 Connect the external speaker to the two 8/600 terminals on the left side panel terminal strip.

10.34 Adjust the speaker volume with the **EX.SP** volume control on the left side panel.

10.40 External Amplifier

10.41 If more power is required than the SEPU amplifier can deliver, a customer-provided external amplifier may be connected to the 8/600 terminals on the left side panel (connect external speakers to the external amplifier).

10.42 Determine which output impedance is most suitable for the amplifier being used, and make the selection with **SW2**.

10.43 If 8-ohm impedance is chosen, the **EX.SP** volume control may be used to control input level to the external amplifier. If 600-ohm impedance is chosen, the level is fixed and input

must be controlled by the external amplifier. See Paragraph **10.70** for the correct volume setting sequence.

10.50 Talkback Amplifier

10.51 A customer-provided talkback amplifier/speaker may be connected to the external page (8/600) terminals on the left side panel.

10.52 For talkback operation, **SW2** must be set at "600". The SEPU amplifier is not used for the 600-ohm mode in order to permit a 2-way voice path.

10.53 The **EX.SP** volume control on the left side panel does not function in the 600-ohm mode.

10.60 Background Music

10.61 BGM uses the music-on-hold program source that is connected to the MOH input terminals on the left side panel of the internal MOH source (SMOU). It is broadcast through all EKT speakers (under the individual control of each station user) and will be heard if the **SPKR** key is operated with the handset on-hook and no line selected.

10.62 As a programmable option, the BGM from the MOH source can be heard via the external speaker (see Section **500-036-300**, *Programming Procedures*).

10.63 BGM is automatically pre-empted when a page or ringing signal must be output from an EKT speaker or the external speaker.

10.64 Overall system BGM volume is set with the **BGM** volume control on the left side panel of the HKSU (see Paragraph **10.70** for the correct volume setting sequence). The volume at individual stations is set with the lower volume control on the right-hand side of the EKTs.

10.65 If a separate BGM source is connected via an external amplifier on the external page, it can be heard from the external amplifier/speaker only. If required, the system can provide a dry contact control signal for muting the external BGM when a page is in progress.

10.66 To provide external BGM control, connect the BR terminals on the left side panel of the HKSU to the control terminals (mute, MIC switch, etc.) on the amplifier (see Figure 49).

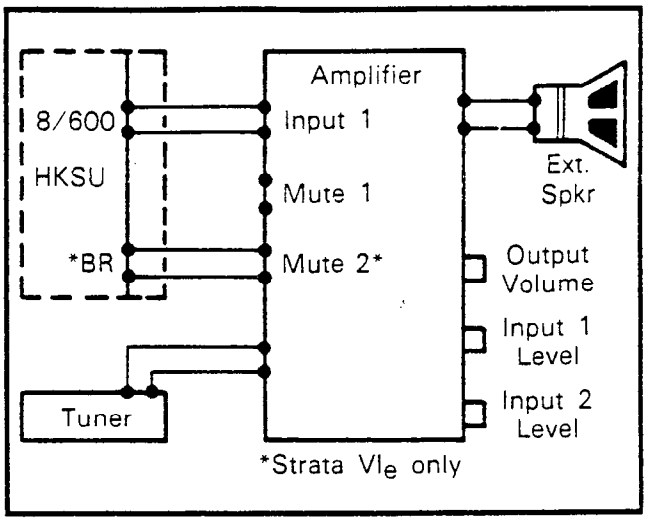

FIGURE 49—EXTERNAL AMPLIFIER HOOK-UP

10.70 Volume Setting Sequence

10.71 Refer to Figure 50 and adjust the volume for MOH, BGM and External Page in the sequence outlined in Paragraph **08.92**.

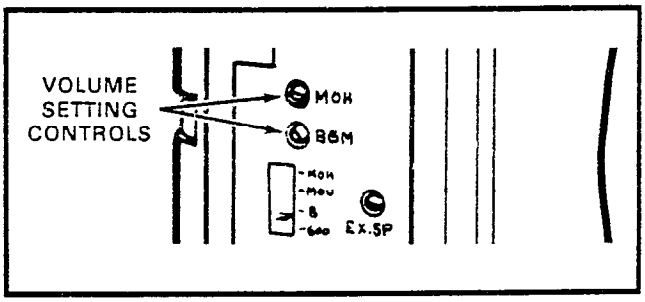

FIGURE 50—VOLUME SETTING CONTROLS

10.72 Adjust the MOH level first using the following procedure:

1) Set the **MOH** volume control to its lowest level (counterclockwise).

2) Lift the handset on one station and call another station using two CO/PBX lines.

3) At the called station, put the incoming call on hold, and listen on the handset (not the speaker) of the calling EKT.

4) Using the volume control on the MOH source, adjust MOH to the most comfortable level without distortion.

5) If a higher level is needed than can be provided by the MOH source, turn the **MOH** volume control slowly clockwise to achieve the most comfortable level without distortion.

6) Release the connection between the two CO lines.

7) No further changes should be made using the **MOH** control or the MOH source volume control.

10.73 If an external speaker is to be used in the system, adjust the external page and BGM levels as follows:

1) Adjustments should be made while an actual external page test is in progress. Adjust the voice volume to a comfortable level. The procedure varies depending on the paging system configuration and the setting of the 8/600-ohm switch (SW2):
   a) 8-ohm with no external amplifier—adjust output level using the **EX.SP** volume control on the left side panel.
   b) 8-ohm with external amplifier—adjust output level using the **EX.SP** volume control along with the controls on the external amplifier.
   c) 600-ohm—the volume level is fixed in this mode; adjustments must be made using the external amplifier controls.

2) If background music is to be heard over the external speaker:
   a) Adjust voice page level per above procedures.
   b) With music playing over the speaker, adjust the volume to a comfortable level using only the **BGM** control on the left side panel of the HKSU. Do not tamper with the **EX.SP** control, external amplifier or MOH adjustments.
   c) If background music is connected directly to the external amplifier instead of through the system, all adjustments must be made on the external amplifier.

10.74 If no external speaker is to be used in the system, adjust the BGM level as follows:

1) Using an EKT in speakerphone mode, make a call on a CO line, and adjust the EKT speaker volume to a comfortable level.

   NOTE:
   This should be done in an area that has background noise that is about average for that particular installation.

2) Using the **SPKR** key, disconnect the CO call and activate BGM at the EKT.

3) Using only the **BGM** volume control, adjust the BGM to a comfortable level. Do not use the EKT volume control.

10.80 Night Relay Service (VIe only)

10.81 As an option, a dry contact can be provided for the purpose of controlling an external loud ringing bell (or similar device) or an answering machine when the system is in the "NITE" mode.

10.82 To provide this service, connect the external device to the **NR** contacts on the left side panel (see Figure 51).

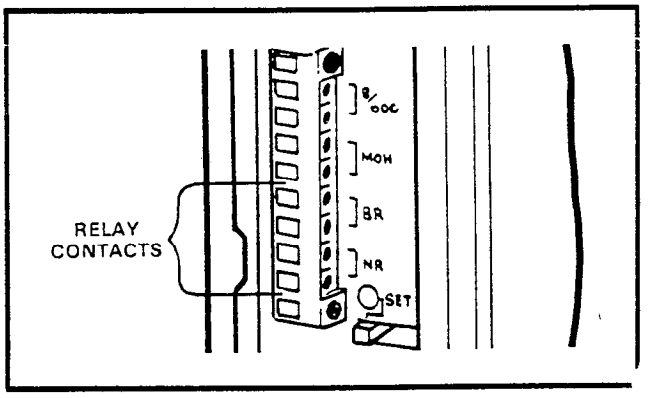

FIGURE 51—RELAY CONTACTS

IMPORTANT!
The NR and BR relay contacts are rated at 24 VDC/1 amp and are not intended to operate high power devices directly. If the power required for the device being controlled exceeds the contact ratings, an external slave relay must be used.

10.83 The **W3** strap option on the VMAU (see Figure 52) allows the NR relay to function in one of two modes:

1) Answering Machine Control—if the **W1** strap remains intact, the relay is operated continuously when the system is in Night Service. This mode is intended for indirect control of an answering machine.

2) Night Bell Control—if the **W3** strap is cut, the relay pulses at a 1-second on, 3-seconds off rate when the system is in Night Service and an incoming call is ringing the system. The mode is intended to be used for indirect control of an external night bell.

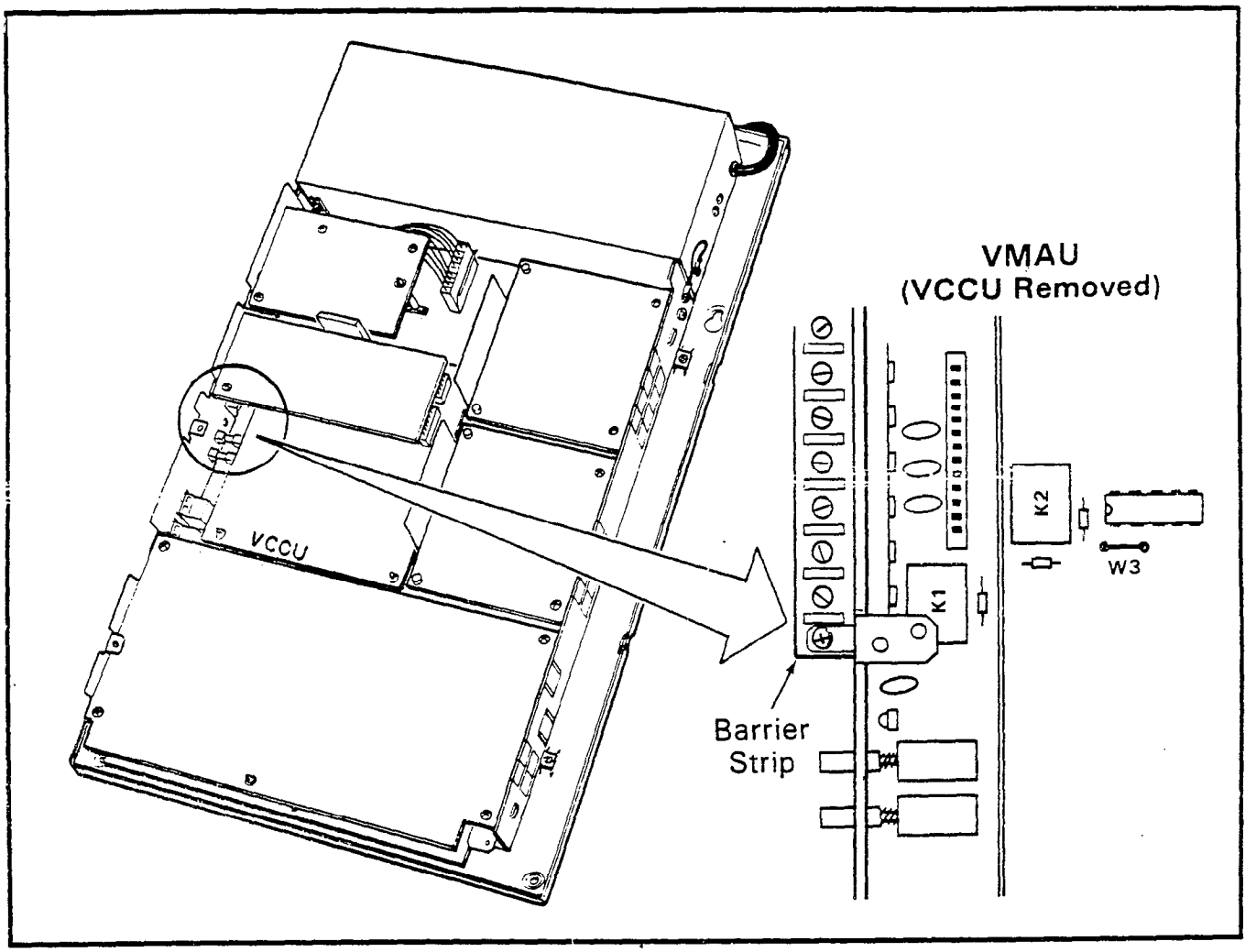

FIGURE 52—NIGHT RELAY STRAPPING

PROGRAMMING PROCEDURES
SECTION 500-036-300
JANUARY 1988

Strata S_e & VI_e

RELEASE 2

PROGRAMMING PROCEDURES

FCC REGISTRATION

The STRATA S_e/VI_e electronic key telephone systems are registered in accordance with the provisions of Part 68 of the Federal Communications Commission's Rules and Regulations.

FCC REQUIREMENTS

Means of Connection

The Federal Communications Commission (FCC) has established rules which permit the STRATA S_e/VI_e electronic key telephone systems to be connected directly to the telephone network. A locally provided jack is used for this connection—jacks for this type of customer-provided equipment will not be provided on party lines or coin lines.

Incidence of Harm

If a STRATA S_e/VI_e system is malfunctioning, it may also be disrupting the telephone network. The system should be disconnected until the problem can be determined and repaired. If this is not done, the telephone company may temporarily disconnect service.

Telephone Network Compatibility

The telephone company may make changes in its technical operations and procedures. If such changes affect the compatibility or use of the STRATA S_e/VI_e system, the telephone company is required to give adequate notice of changes.

Notification of Telephone Company

Before connecting a STRATA S_e/VI_e system to the telephone network, the telephone company must be provided with the following:

1) Your telephone number

2) FCC registration numbers:
   STRATA S_e: BF 287N-71491-KF-E
   STRATA VI_e: BF 287N-71465-KF-E

3) Ringer equivalence number: 0.5B

4) USOC jack required: RJ-25C or RJ-11C

Items 2, 3 and 4 are also indicated on the equipment label.

You must notify the telephone company upon final disconnection of your equipment.

For service or repair, contact your local Toshiba Telecommunications distributor. To obtain the nearest Toshiba Telecommunications distributor in your area, call Toshiba America, Telecommunication Systems Division in Irvine, CA (714) 583-3700 or Armonk, NY (914) 273-1750.

RADIO FREQUENCY INTERFERENCE

Warning: This equipment generates and uses radio frequency energy and if not installed and used in strict accordance with the manufacturer's instruction manual, may cause interference to radio and television reception. The equipment has been type-tested and found to comply with the limits for a Class B computing device pursuant to Subpart J of Part 15 of FCC Rules, which are designed to provide reasonable protection against such interference in a residential installation. However, there is no guarantee that interference will not occur. If this equipment does cause interference to radio or television reception, which can be determined by turning the equipment off and on, correct the interference by one or more of the following measures:

- Reorient the receiving antenna.
- Reorient the telephone equipment with respect to the receiver.
- Move the telephone equipment away from the receiver.
- Plug the key service unit's power cord into a different AC outlet so that the KSU and receiver are on different circuits.

If necessary, the user should consult the dealer or an experienced radio/television technician for additional suggestions. The user may find the following booklet helpful (prepared by the Federal Communications Commission): *How To Identify and Resolve Radio—TV Interference Problems.* This booklet is available from the U.S. Government Printing Office, Washington, D.C. 20402, Stock No. 004-000-00345-4.

This system is listed with Underwriters Laboratory.

LISTED
UL
49L7
E88891

Strata Se/VIe

PROGRAMMING PROCEDURES

TABLE of CONTENTS

PARAGRAPH	SUBJECT	PAGE
	TABLE of CONTENTS	i
	ILLUSTRATION LIST	i
	TABLE LIST	ii
01	INTRODUCTION	1
01.00	General	1
02	PROGRAMMING INFORMATION	1
02.00	General	1
02.10	Multiple Station Programming	2
02.20	Programming with 10-key EKT	2
03	PREPARATION	3
03.00	General	3
03.10	Programming Options	3
03.20	System Assignmnets	4
03.30	Toll Restriction Assignments	8
03.40	Least Cost Routing Assignments*	10
03.50	Station Assignments	11
	TABLE 1—HOLD RECALL TIME CODE	15
	TABLE LIST	17
04	PROGRAMMING PROCEDURES	18
04.00	Initialization	18
04.10	Clearing Automatic Dialing	19
04.20	Alphanumeric Messaging Initialization	19
	TABLE 2—INITIALIZED DATA	20
04.30	Timer Reminder Messaging Initialization	20
04.40	System Real-Time Clock/Calendar Adjustment	20

ILLUSTRATION LIST

NUMBER	TITLE	PAGE
1	10-key EKT Key Format	2
2	Se EKT Key Patterns	12
3	VIe EKT Key Patterns	13
4	Flexible Key Assignments	13

Strata Se/Vle

PROGRAMMING PROCEDURES

TABLE LIST

NUMBER	TITLE	PAGE
1	Hold Recall Time Code	15
2	Initialized Data	20
3	System Data Printout Selections Codes	25
4	Speed Dial Memory Printout Selection Codes	25
5	Program 01—System Assignments (Basic)	31
6	Program 0#1—Door Phone Selection	32
7	Program 02—System Assignments (Options)	33
8	Program 0#2—Account Code Digit Length and TIE Line/OPX Selection	34
9	Program 03—System Assignments (Options)	35
10	Program 04—CO Line Outpulsing Selection	36
11	Program #4—CO Line Identification	37
12	Program 05—Automatic Recall From Hold Timing	38
13	Program 0#5—Camp-on Timeout	39
14	Program 06—AROH Enable	40
15	Program 0#6—Trunk-to-Trunk Connection Enable	41
16	Program 07—AROH Timing	42
17	Program 0#7—1A2 Interface	43
18	Program 08—CO Line Call Pickup Selection	44
19	Program 0#8—Night Ringing Over External Page	45
20	Program 09—Single CO Line (Dial 9) Group Selection	46
21	Program 09X—CO Line (Dial 90 ~ 98) Group Assignments	47
22	Program 0#9—Off-Premises Line Hunting	48
23	Program 190—PBX Backup	49
24	Program 19X—PBX Access Codes	50
25	Program 100—Toll Restriction System Parameters	51
26	Program 101—Toll Restriction Disable	52
27	Program 102—Forced Account Code Check	53
28	Program 103/105—Other Common Carrier (OCC) or Equal Access #1 & #2	54
29	Program 104/106—OCC Authorization Codes #1 & #2	55
30	Program 108/109—Toll Restriction Override Code #1 & #2	56
31	Program 1X0—Toll Restriction Class Parameters	57
32	Program 1XY—Toll Restriction Class Area Code Entry	58
33	Program 1XZ—Toll Restriction Class Office Code Entry	59
34	Program 2XY—Toll Restriction Area/Office Code Exception Table	60
35	Program 1X1—Toll Restriction Class Area/Office Code Exception Table Selection	61
36	Program 1#00—Least Cost Routing Home Area Code	62
37	Program 1#0X—Least Cost Routing Special Codes	63
38	Program 1#06—Least Cost Routing Parameters	64
39	Program 1#07X—Select Long Distance Information Route	65
40	Program 1#08X—Select Local Call Route	66
41	Program 1#09—Dial Zero (0) Timeout	67
42	Program 1#XY—Least Cost Routing Area Code Table	68
43	Program 1#X8Y—Least Cost Routing Route Definition	69
44	Program 1#X50 ~ 53—Start Time A Schedule	70
45	Program 1#X60 ~ 63—Start Time B Schedule	71
46	Program 1#X70 ~ 73—Start Time C Schedule	72

Strata Se/VIe

PROGRAMMING PROCEDURES

TABLE LIST

NUMBER	TITLE	PAGE
47	Program 1#9XY—Modified Digits Table	73
48	Program 2#XY—LCR Area/Code Exception Table	74
49	Program 3XX—Station CO Line Access	75
50	Program 3#XX—HOXB, HMDB and HIOB Module Enable	76
51	Program 4XX—Station Type Assignment	77
52	Program 4#XX—Station Flexible Key Assignment	78
53	Program 5XX—Station Class of Service #1	79
54	Program 5#XX—Station Class of Service #2	80
55	Program 6XX—Station Toll Restriction/LCR Classification	81
56	Program 6#XX—Station-to-Station Hunting	82
57	Program 7XX—Station Outgoing Call Restriction	83
58	Program 81XX ~ 89XX—CO Ringing Assignments—DAY/DAY 2/NIGHT	84
59	Program 9#XX—Door Phone Ringing Assignments	85
60	Program *X#—Flexible Access Code Numbering	86
61	Program *XX—Flexible Intercom Numbering	87
62	Program #1XX*YY—Optional Programming	88

01 INTRODUCTION

01.00 General

01.01 Data governing overall system operation and feature execution for both systems are stored in read-only memory (ROM) and cannot be altered in the field. However, the data controlling operation of the various options, both system and station, are stored in random-access memory (RAM) and can easily be changed according to individual installation requirements.

01.02 All options are controlled by selections made in the system data tables. An initialization process is provided for verifying predetermined system assignments. The installer can then proceed with any necessary changes.

01.03 All system data changes indicated in this section are made via station 13/17 (as the input/output device), which may be equipped with either a 10-key or a 20-key EKT (although a 20-key LCD EKT is strongly recommended). Whenever the system is placed in the programming mode, the keys on station 13/17 are used to enter data while its LEDs display the current data. While station 13/17 is in the programming mode, the system may still be used in the usual fashion.

01.04 Internal battery power is provided to prevent loss of system data memory in the event of a power failure.

NOTE:
Whenever a system is installed for the first time or the SMAU/VMAU is changed, the system must be initialized. See Paragraph **04.00.**

01.05 Remote and on-site programming procedures via a terminal are covered in Remote Administration/Maintenance, Section **500-236-600**, of this manual.

02 PROGRAMMING INFORMATION

02.00 General

02.01 A system must be in the programming mode before system data can be verified or altered. With the exception of station 13/17, normal system functions are not suspended while in the programming mode.

02.02 To aid in programming this system, an overlay has been provided with the installation documentation. Place the programming overlay over the designation strip of the 20-key EKT at station 13/17. This insures that the key/LEDs are correctly identified and matched with the information given in this section.

02.03 When the system is in the programming mode, station 13/17 is used to enter the system data in one of two ways:

IMPORTANT!
Station 13/17 may be equipped with either a 10-key or a 20-key EKT (a 20-key LCD EKT is strongly recommended). However, in all tables and procedures that follow, the overlay key designation (for a 20-key) is given.

- In the majority of programs (Type 1), the various keys are used to change "bits" of system data. The LEDs associated with keys 00 ~ 19 show their status before and after key depression. Each key/LED has a different meaning, depending upon the program number being used.
- In Type 2 programs, the dial pad is used to enter data. In this case, the system, using LEDs 00 ~ 19, verifies the entered data by displaying it in binary format. An LCD EKT also displays the data, if equipped.

02.04 The programming mode is activated by locking in the **SET** switch on the HKSU and then depressing the **SPKR** key on station 13/17. After the station has been activated, a program number is dialed on the station dial pad, and the system responds as follows:

Type 1 programs: Station 13/17 LEDs display the existing data in these categories.

Type 2 programs: LED 10 on station 13/17 flashes continuously. Actual data can be reviewed without alteration by multiple depressions of the **#** key.

02.05 Data can be altered while it is being displayed. To input new data via station 13/17, perform the following:

Type 1 programs: The state of an LED is altered by depressing its associated key. Depressing the key while the LED is "on" will turn it off and vice versa.

Type 2 programs: Data is entered via the dial pad. The LEDs display the data in binary format. An LCD EKT also displays the data.

02.06 Once the desired data is entered and displayed, it is written into memory by depressing the HOLD key on station 13/17.

- System and CO line options are written into temporary storage when the HOLD key is depressed. After **all** changes in these categories have been made, transfer the data into working memory per Paragraph **02.06**.
- Station option data (with the exception of CO line access assignments) are written into the main data memory; therefore, all changes are effective immediately after the HOLD key is depressed. However, it is recommended that the data transfer procedures per Paragraph **02.06** be utilized for added programming protection.

02.07 Data may be secured in working memory in one of two ways:

1) If the system is not in service, release the **SET** switch on the HKSU, and cycle (rock) the system power switch **OFF**. Note: all calls are dropped when this occurs.

2) If the system is in service and calls should not be dropped, depress the following keys, in the order given here, on station 13/17: SPKR # 1 9 00 01 04 05 08 09 12 13 HOLD. This code secures the data in working memory without cancelling any calls. Release the **SET** switch to exit programming mode.

02.10 Multiple Station Programming

02.11 **Programs 3XX** through **9#XX** are used to select options for individual stations (where XX represents the station number of the station being programmed). To save time, it is possible to program *all* stations or groups of stations simultaneously.

02.12 Multiple station programming is accomplished by substituting a special group code for the station number part of the program number (XX). The codes are:

0 0: All stations
0 1: Stations 10 ~ 17*
0 2: Stations 18 ~ 25*

**STRATA VIe only*

02.13 When the multiple station group code is entered, the LEDs display existing data as follows:

Steady LED: Data is the same for all stations in the dialed group.

Flashing LED: Data is selected for at least one, but not all stations in that group.

02.14 The state of an LED is altered by depressing its associated key. LEDs that are flashing can be cycled through three states (flashing, on, off) by multiple key depressions. Other LEDs cycle between on and off states only. Select data as follows:

LED ON: Selects LED "ON" for all the stations in the group.

LED OFF: Selects LED "OFF" for all the stations in the group.

LED flash: No change to any station in the group.

02.15 Once the proper data is selected, depress the HOLD key in the usual manner to write it into memory.

02.20 Programming With 10-key EKT

02.21 If station 13/17 is equipped with a 10-key EKT, the system must be so informed by setting LED 07 to "ON" in **Program 01**. This change is effective immediately after the HOLD key is depressed, making it easy to switch between EKTs.

02.22 Once the system recognizes a 10-key EKT, the handset hookswitch can be used as a shift signal to make the 10-key LEDs compatible with the 20-key programming format.

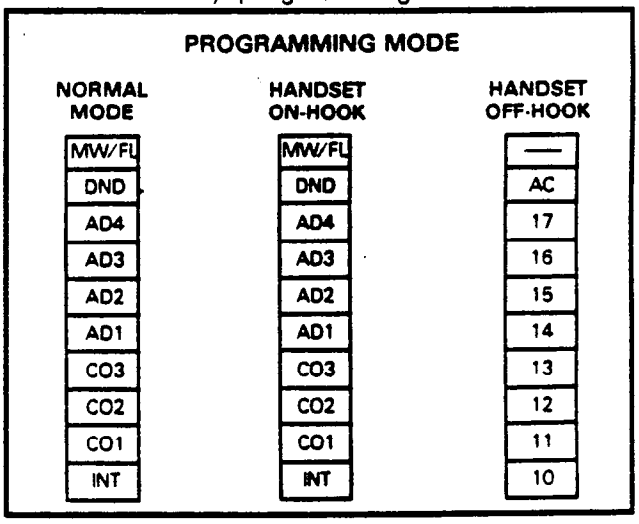

FIGURE 1—10-key EKT FORMAT

02.23 As shown in Figure 1, when in the programming mode, the key/LEDs represent 00 ~ 09 when the handset is on-hook and 10 ~ 19 when it's off-hook. It is possible to switch back and forth an unlimited number of times without disturbing the data.

NOTE:
This procedure is for programming purposes only! For normal operation, the station 13/17 EKT is set per **Program 4XX**.

03 PREPARATION

03.00 General

03.01 Before system data can be programmed, option selections must be made and then indicated on the System Record Sheet (see Appendix 1). The record sheet, one of which accompanies each HKSU, serves as a programming guide and installation record.

03.02 Programming options are grouped according to the three categories listed below, with several program numbers associated with each category. A different program number is used for each option or group of options being selected.

03.10 Programming Options

03.11 System Assignments

- **01:** System Assignments (Basic)
- **0#1:** Door Phone Selection
- **02:** System Assignments (Options)
- **0#2:** Account Code Digit Length Selection
- **03:** System Assignments (Options)
- **04:** CO Line Outpulsing Selection
- **#4** CO Line Identification
- **05:** Automatic Recall From Hold Timing
- **0#5:** Camp-on Timeout
- **06:** Automatic Release On Hold (AROH) Enable
- **0#6:** Trunk-to-Trunk Connection Enable
- **07:** Automatic Release On Hold Timing
- **0#7:** 1A2 Interface
- **08:** CO Line Groups
- **0#8:** Night Ringing Over External Page*
- **09:** Single CO Line (Dial 9) Group Selection
- **09X:** CO Line (Dial 91 ~ 98) Group Assignments
- **0#9:** Off-Premises Line Hunting
- **190:** PBX Backup
- **19X:** PBX Access Codes

**STRATA VIe only*

03.12 Toll Restriction Assignments

- **100:** Toll Restriction System Parameters
- **101:** Toll Restriction Disable
- **102:** Forced Account Code Check
- **103:** Equal Access #1
- **104:** OCC Authorization Code Length #1
- **105:** Equal Access #2
- **106:** OCC Authorization Code Length #2
- **108:** Toll Restriction Override Code #1
- **109:** Toll Restriction Override Code #2
- **1X0:** Toll Restriction Class Parameters
- **1XY:** Toll Restriction Class—Area Code Entry
- **1XZ:** Toll Restriction Class—Office Code Entry
- **2XY:** Toll Restriction Area/Office Code Exception Table
- **1X1:** Toll Restriction Class Area/Office Code Exception Table Selection

03.13 Least Cost Routing (LCR) Assignments*

**STRATA VIe only*

- **1#00** LCR Home Area Code
- **1#0X** LCR Special Codes
- **1#06** LCR Parameters
- **1#07X** Select Long Distance Information Route
- **1#08X** Select Local Call Route
- **1#09** Dial Zero (0) Timeout
- **1#XY** LCR Area Code Table
- **1#X8Y** LCR Route Definition
- **1#X50 ~ 53** Start Time A Schedule
- **1#X60 ~ 63** Start Time B Schedule
- **1#X70 ~ 73** Start Time C Schedule
- **1#9XY** Modified Digits Table
- **2#XY** LCR Area/Office Code Exception Table

03.14 Station Assignments

- **3XX:** Station CO Line Access
- **3#XX:** HOXB, HMDB, HTIB and HIOB Module Enable
- **4XX:** Station Type Assignment
- **4#XX:** Station Flexible Key Assignments

5XX:	Station Class of Service #1
5#XX:	Station Class of Service #2
6XX:	Station Toll Restriction/LCR Classification
6#XX:	Station-to-Station Hunting
7XX:	Station Outgoing Call Restriction
81XX ~	
83XX:	CO Ringing Assignments-DAY
84XX ~	
86XX:	CO Ringing Assignments-DAY 2
87XX ~	
89XX:	CO Ringing Assignments-NIGHT
9#XX:	Door Phone Ringing Assignments
*X#	Flexible Access Code Numbering
*XX	Flexible Intercom Numbering
#1XX*YY	Speed Dial (Optional)

03.15 The System Record Sheet is used to record the assignment of features for each program. For Type 1 programs, an "X" placed in the record indicates that the associated LED should be turned on (lit) during the programming process. For Type 2 programs, the actual data is recorded.

03.16 Make the system option selections per the following instructions, and record the various choices in the System Record Sheet. Use Tables 5 through 62 for detailed programming instructions.

03.20 System Assignments:

01 Program—System Assignments (Basic)

Fifteen options are selected with this program, using the various keys to change the status of their respective LEDs. For the options selected, mark an X as indicated.

1) Transfer Privacy—mark an X next to 17 if privacy is to be in effect on a transferred call. Leave blank if Alternate Point Answer of a transferred call is to be permitted.

2) Automatic Dialing Override Toll Restriction—mark an X next to 16 if System Automatic Dialing (addresses 60 ~ 99) is to override Toll Restriction. Leave blank if Toll Restriction is to remain in effect.

3) CO Line Groups—mark an X next to 15 if eight CO line groups (dial 91 ~ 98) are required. Leave blank if one group (dial 9) is sufficient.

4) Two CO Line Conferencing—mark an X next to 14 to inhibit two CO line conferencing. Leave blank if two CO line conferencing is to be permitted.

5) Least Cost Routing Access—mark an X next to 13 if Least Cost Routing will be used. Leave blank if LCR not used. (STRATA VIe only.)

6) DP Make Ratio—mark an X next to 12 if a 33% make/break timing ratio is required. Leave blank if 40% (usual setting) is sufficient.

7) DTMF Signal Time—mark an X next to 11 if 160 ms DTMF signal time is required. Leave blank if signal time is to remain 80 ms.

8) Non-Privacy/Privacy—mark an X next to 09 if the system is to be non-private. Leave blank if the system is to be private.

9) Station 13/17 10/20-key EKT—mark an X next to 07 if station 13/17 is equipped with a 10-key EKT for programming purposes. Leave blank if a 20-key EKT is used.

10) Incoming Call Abandon Timeout—mark an X next to 06 if the system should wait for 8 seconds after the last ring to consider an incoming call abandoned. Leave blank if 6 seconds are sufficient.

11) Pause Timing (After Flash)—mark an X next to 05 if a 3-second pause (for dial tone delay) is required after a flash. Leave blank if a 1 ½-second pause is sufficient.

12) Pause After Flash—mark an X next to 04 if the system is to insert a pause (defined by 05, this program) between a flash and an automatically dialed number. Leave blank if a pause is not required.

13) Pause Timing (MW/FL or PAU key)—mark an X next to 03 if a 3-second pause (for dial tone delay) is required. Leave blank if a 1 ½-second pause is sufficient.

14) Flash Timing—mark an X next to 02 if the line-open interval produced by the MW/FL key is to be ½-second. Leave blank if the 2-second open interval is required.

15) Tone First—mark an X next to 00 if intercom calls require tone ringing. Leave blank if they are to have one tone ring than voice announce.

Note:
If the system is to have the Off-hook Call Announce feature, leave 00 blank for voice announce.

0#1 Program—Door Phone Selection

Ten options are selected with this program using the various keys to change the status of their respective LEDs. For the options selected, mark an X as indicated.

1) Door Lock Timeout—mark an X next to 17 if the door lock is to operate for 6 seconds. Leave blank if 3 seconds are sufficient.

2) Door Phone 12/14B Door Lock—mark an X next to 08 if door phone 12/14B is to be a door lock output. Leave blank if it is to be a door phone.

3) Door Phone 12/14C Busy—mark an X next to 07 if the system is to busy-out door phone 12/14C. Leave blank if it is not to show busy.

4) Door Phone 12/14B Busy—mark an X next to 06 if the system is to busy-out door phone 12/14B. Leave blank if it is not to show busy.

5) Station 12/14 Door Phone/EKT—mark an X next to 05 if station 14 is to be a door phone output. Leave blank if an EKT is to be used at this station.

6) Door Phone Alarm (station 11/13 only)—mark an X next to 04 if door phone 11/13C is to be a door alarm input. Leave blank if it is to be a door phone.

7) Door Phone 11/13B Door Lock—mark an X next to 03 if door phone 11/13B is to be a door lock output. Leave blank if it is to be a door phone.

8) Door Phone 11/13C Busy—mark an X next to 02 if the system is to busy-out door phone 11/13C. Leave blank if it is not to show busy.

9) Door Phone 11/13B Busy—mark an X next to 01 if the system is to busy-out door phone 11/13B. Leave blank if it is not to show busy.

10) Station 11/13 Door Phone/EKT—mark an X next to 00 if station 13 is to be a door phone output. Leave blank if an EKT is to be used at this station.

NOTES:
1. Door Lock keys are assigned to stations in **Program 4#XX.** *Codes (71~ 74).*
2. An Alarm (Reset) key is available on station 10 only. The Alarm key mode must be programmed as the first **AD** *key (on station 10) in* **Program 4#XX.** *Code (*); LED 10 must be on in* **Program 03.**

02 Program—System Assignments (Options)

Seven options are selected with this program using the various keys to change the status of their respective LEDs. For the options selected, mark an X as indicated.

1) Trunk-to-Trunk Conference—mark an X next to 13 and/or 12 depending upon how many trunk-to-trunk conferences are to be allowed

2) Amplified Conference—mark an X next to 11 and/or 10 if system is to have up to two Amplified Conference circuits. Leave blank if system will not have Amplified Conference. (NOTE: Only 11 for S_e.)

NOTE:
Requires customer-supplied amplifier—also used for amplified trunk-to-trunk connections.

3) ACB Warning Tone—mark an X next to 06 if the destination station is to hear a warning tone when an automatic callback is initiated.

4) LCD Timer—mark an X next to 04 if the Dialed Number display on the LCD EKTs is on for 1 minute before changing to Elapsed Time. Leave blank if 15 seconds are sufficient.

5) Night Ringing Over External Page—mark an X next to 02 if Night Ringing Over External Page is required. Leave blank if no ringing is to be heard over External Page. Note: **Program 0#8** selects individual COs to ring (VI_e only).

6) Background Music (BGM) Over External Page—mark an X next to 01 if BGM is to be heard over the External Page circuit. Leave blank if BGM is not to be heard over the External Page circuit.

7) External Page with All Call Page—mark an X next to 00 if the External Page circuit is to be included in an All Call Page. Leave blank if All Call Page is not to be heard over the External Page circuit.

0#2 Program—Account Code Digit Length Selection

This program has two sections. The first defines the number of digits required in an account code (Forced Account Code feature). Enter the number of digits to be used (4 ~ 15). The second section sets SDTU modem speed and repeat ringing.

1) Repeat Ringing—mark an X next to 17 if repeat ringing is required. Leave blank if standard ringing is required.

2) Modem Speed—mark an X next to 15 if the modem speed required is 1200 bps. Leave blank if 300 bps is required.

3) Binary Numbers—mark an X next to 00, 01, 02, 03 and/or 04 to indicate the binary number of the account code length.

03 Program—System Assignments (Options)

Seven options are selected with this program, using the various keys to change the status of their respective LEDs. For the options selected, mark an X as indicated.

1) Station 10 ALRM Key—mark an X next to 10 if the AD1 key on station 10 is to be an ALRM key. Leave blank if AD1 key is required.

2) Station 10 DND Key—mark an X next to 09 if the DND key on station 10 is to be a DND key. Leave blank if a NT key is required.

3) Ringing Modes—mark an X next to 08 if three ringing modes (DAY, DAY 2, NIGHT) are used. Leave blank if two ringing modes (DAY, NIGHT) are required.

4) CO Line Groups—mark an X next to 07 if CO Line Groups feature is allowed.

5) Message Center-Station 12—mark an X next to 04 if station 12 is to be the Message Center.

6) Message Center-Station 11—mark an X next to 03 if station 11 is to be the Message Center.

7) Message Center-Station 10—mark an X next to 02 if station 10 is to be the Message Center.

NOTES:
1. *Only one station (10, 11 or 12) may be a Message Center; however, if more than one station is chosen as a Message Center, the lowest numbered station will be registered.*
2. AD *keys are assigned in* **Program 4#XX**.

04 Program—CO Line Outpulsing Selection

Selects DTMF tone (MF) or rotary-dial pulse (DP) outpulsing.

- Mark an X next to the appropriate key/LED if DP is required. Leave blank if MF is required.

#4 Program—CO Line Identification

Assigns names to the CO lines for use at stations with LCD-equipped EKTs. Up to 16 characters may be used.

- Enter the required name(s) in the boxes next to the appropriate CO line(s).

05 Program—Automatic Recall from Hold Timing

Sets the timing for the Automatic Recall from Hold feature. (Used only if LEDs 10, 11 and 12 are OFF in **Program 5#XX**.)

1) If recall is desired, select a time period of 16 ~ 160 seconds and mark an X next to the appropriate key/LED in the System Record Sheet. The times **are not** accumulative—only one key/LED can be selected.

2) If no recall is required, mark an X next to 00.

0#5 Program—Camp-on Timeout

Sets the timing for the originating station to be recalled by a CO line that was camped on to a busy station and remains unanswered.

- Select a period of time (16 ~ 64 seconds) and mark an X next to the appropriate key/LED on the System Record Sheet. The times **are not** accumulative—only one key/LED can be selected.

06 Program—Automatic Release on Hold Enable

Selects whether or not the Automatic Release on Hold (AROH) feature is to function on a given CO line. This feature will also release trunk-to-trunk connections if enabled in **Programs 02** and **0#6**.

- Mark an X next to each CO line that **requires** AROH.

NOTE:
If AROH is available, the CO will automatically drop the lines when the outside party hangs up. However, if AROH is not available, the person who sets up the Trunk-to-Trunk Connection must occasionally monitor the call and disconnect the CO lines when the two parties hang up.

0#6 Program—Trunk-to-Trunk Connection Enable

Selects the CO lines to be used for trunk-to-trunk connections.

- Mark an X next to CO lines to be used for trunk-to-trunk connections.

07 Program—Automatic Release on Hold Timing

Selects Cross Bar (XB) or ESS timing for the AROH time required for the CO to open line to enable call to be released from hold—XB greater than 95ms; ESS greater than 450ms. (Has no meaning if AROH was rejected in **Program 06**.)

- Mark an X next to each CO line that **requires** XB timing; leave blank if ESS timing is required.

0#7 Program—1A2 Interface

- Mark an X next to the CO lines to be bridged with the 1A2 system. Leave blank if they will not be bridged with the 1A2 system.

08 Program—CO Line Pickup Groups

Informs the system of the CO lines that are assigned to each group.

- Mark an X next to each CO line that is to belong to Group #2.

0#8 Program—Night Ringing Over External Page*

**STRATA VIe only*

Selects whether or not a CO line rings over external page. (Has no meaning if LED 02 was not ON in **Program 02**.)

- Mark an X next to the CO lines that **ring** over external page.

09 Program—Single CO Line (Dial 9) Group Selection

Informs the system of the CO lines that should be considered for selection when a station dials 9. (Used only if LED 15 in **Program 01** is OFF.)

- Mark an X next to each CO line that **is** to be **included** in the "Dial 9" group.

09X Program—CO Line (Dial 91 ~ 98) Group Assignments

Informs the system of the CO lines that should be considered for selection when a station dials 91, 92, 93, 94, 95, 96, 97 or 98. (Used only if LED 15 in **Program 01** is ON.)

- Mark an X next to each CO line/trunk group assignment.

0#9 Program—Off-Premises Line Hunting

Selects which CO lines ring the device connected to the "HUNT" output on the HOLB option module. The "TEL" output always rings.

1) With no Off-Premises Line Hunting (LED off):
   - Call comes into CO1: TEL1 and hunt ring.
   - Call comes into CO2: TEL2 rings, no hunt.
   - Call comes into CO3: TEL3 rings, no hunt.

   NOTE:
   NIGHT mode has no effect whenever LED is off.

2) Off-Premises Line Hunting (LED on), CO1:
   - TEL1 rings (DAY mode): No hunt.
   - TEL1 rings (NIGHT mode): Hunt rings.
   - TEL2 or 3 rings (DAY mode): No hunt.
   - TEL2 or 3 rings (NIGHT mode): Hunt rings.

190 Program—PBX Backup

Assigns CO lines to behind-PBX operation. The system recognizes PBX access codes on selected lines.

- Mark an X next to each CO key/LED that **is** to be **connected** to a PBX station line.

19X Program—PBX Access Codes

Assigns codes that are used to access CO lines connected to a PBX as determined in **Program 190**. The system recognizes the access codes and reacts appropriately for Toll Restriction, Automatic Dialing and Repeat Last Number Dialed.

- Enter the actual one- or two-digit access codes (maximum: 8).

NOTE:
If the access code is a single digit, enter "" in the second column. If all combinations following a particular first digit are to be considered access codes (e.g., 91, 92, 93, etc.), enter "D" (D = key 18 on station 13/17) in the second column.*

03.30 Toll Restriction Assignments

100 Program—Toll Restriction System Parameters

An entry in this program is required only if 3- or 6-digit toll restriction is desired. Informs the system of the dialing plan in the system home area code. Three types of dialing plans are available. Mark an X next to the LED that indicates the dialing plan area of the installation location.

02*: 1 + AC + NXX (long-distance dialing outside home area code)
NXX (toll dialing within home area code)

01: 1 + AC + NXX (long-distance dialing outside home area code)
1 + NXX (toll dialing within home area code)

00: AC + NXX (long-distance dialing outside home area code)
1 + NXX (toll dialing within home area code)

AC = Area Code
NXX = Office Code
N = 2 ~ 9
X = 0 ~ 9

**This dialing plan is required when the dialing plan area code has interchangeable codes (NXX). There are office codes that follow the area code format due to the unavailability of standard office codes.*

NOTE:
LEDs 03 & 04 are not used.

101 Program—Toll Restriction Disable

Assigns Toll Restriction to CO lines.

- Mark an X next to each CO line to which Toll Restriction **will not** apply.

102 Program—Forced Account Code Check

This program applies forced account code to CO lines. Stations accessing these lines are then forced to enter account codes. See **Program 5#XX**, LED 14. (Note: Has no meaning if stations are not selected for Forced Account Code in **Program 5#XX**.)

- Mark an X next to the CO lines that **are to force** an account code for the stations selected in **Program 5#XX**.

NOTE:
Program 0#2 *defines the number of digits in the account code.*

103 Program—Equal Access (10XXX) or Other Common Carrier (OCC) #1

Informs the system of the first 5-digit code (Equal Access or OCC) that is ignored for Toll Restriction purposes.

- Enter the actual Equal Access or OCC digits to be recognized and ignored.

104 Program—OCC Authorization Code Length #1

Informs the system of the number of digits in the first OCC Authorization Code. These digits are also ignored for Toll Restriction purposes when an outgoing call is placed over an OCC.

- Enter the number of digits in the authorization code.

105 Program—Equal Access (10XXX) or Other Common Carrier (OCC) #2

Informs the system of the second 5-digit code (Equal Access or OCC) that is ignored for Toll Restriction purposes.

- Enter the actual Equal Access or OCC digits to be recognized and ignored.

106 Program—OCC Authorization Code Length #2

Informs the system of the number of digits in the second OCC Authorization Code. These digits are also ignored for Toll Restriction purposes when an outgoing call is made over an OCC.

- Enter the number of digits in the authorization code.

NOTES (these notes are appropriate for **Programs 103 ~ 106***:*
1. Enter the equal access code or Other Common Carrier directory number (5 digits: 10XXX, X = 0 ~ 9).

2. *Enter the number of digits in the OCC Authorization Code (00 ~ 99).*
3. *Caution: Do not program more digits than required because toll restriction may be defeated.*

108 Program—Toll Restriction Override Code #1

Registers the first of two codes that override toll restriction on outgoing calls.

- Enter the four digits of the first toll restriction override code.

109 Program—Toll Restriction Override Code #2

Registers the second of two codes that override toll restriction on outgoing calls.

- Enter the four digits of the second toll restriction override code.

1X0 Program—Toll Restriction Class Parameters (X = 1 ~ 4)

This program defines parameters for each class of toll restriction (X = 1 ~ 4). There are four classes of toll restriction available on a station-by-station basis. (See **Program 6XX** to select the station class of toll restriction.) This program is required only if 3- or 6-digit toll restriction is desired.

- Mark an X next to the LED for each parameter of each toll restriction class used.

  02: All restricted area codes plus the office code of 555 are allowed, including out-of-area directory assistance calls (e.g., 213 + 555 + 1212).
  01: Overseas operator or unassisted overseas calls are to be restricted (01/011).
  00: Operator or operator-assisted calls are used to be restricted (0).

1XY Program—Toll Restriction Class Area Code Entry (X = Class 1 ~ 4) [Y = allow (2), deny (3) or display (4)]

This program defines the area codes allowed or denied for each toll restriction class. This program is required only if 3- or 6-digit toll restriction is desired. Each class area code table can be defined as an allow (2) or deny (3) table. Initialized data allows all area codes for each class. All allowed area codes can be displayed (4) for each class. For Toll Restriction Class 1, enter all allowed area codes in the upper section of the record sheet and all denied area codes in the lower section. Make additional copies of the record sheet for Toll Restriction Classes 2, 3 and 4.

1XZ Program—Toll Restriction Class Office Code Entry (X = Class 1 ~ 4) [Z = allow (6), deny (7) or display (8)]

This program defines the office codes allowed or denied for each toll restriction class within the home area code. Entry to this program is required only if 3- or 6-digit toll restriction is desired. Each class office code table can be defined as an allow (6) or deny (7) table. Initialized data allows all office codes in the home area code for each class. All allowed office codes can be displayed (8) for each class. See the detailed programming chart for office code entry procedures.

2XY Program—Toll Restriction Area/Office Code Exception Table

Entry to this program is required only if 6-digit (area/office code) toll restriction is desired. There are eight area/office code exception tables available that are defined by X (1 ~ 8). Each table may have one area code and up to 800 office codes entered. The area code is entered when Y = 1 for each table, while office codes are added (Y = 2) or deleted (Y = 3) for each table. All office codes in the table are displayed when Y = 4. Each area/office exception table selected with **Program 1X1** will be an exception (opposite) to the allow (**Program 1X2**) or deny (**Program 1X3**) area code table for each toll restriction class. See the detailed programming chart for area code and office code entry procedures. The examples below are provided for additional information.

1) Normal restriction for stations in Class 1 (allow all office codes within an area code).
   - **Program 1XY** is programmed to allow (**112**) area code 213. Class 1 stations are allowed to dial all office codes in area code 213.

2) Area/office code exception (allow all office codes within an area code except one) for stations in Class 1.
   - **Program 1XY** remains the same (**112**).
   - **Program 1X1** has area/office code exception Table 1 (INT) selected (**111**).

- Program 2XY (211 and 212) are programmed for area code 213 (212) and office code 635 also (211). Class 1 stations are allowed to dial all office codes in area code 213 *except* 635.

1X1 Program—Toll Restriction Class Area/ Office Code Exception Table Selection (X = Class 1 ~ 4)

Entry to this program is required only if 6-digit (area/office code) toll restriction is desired. There are eight area/office code exception tables available. These exception tables are shared by all four classes of toll restriction. Each class may use any one or all exception code tables. When an exception code table is selected for a toll restriction class, the dialed area code and office code in that table will be an exception to the normal restriction of that area code. See the examples following **Program 2XY**.

- Mark an X next to the LED of each area/ office code exception table (1 ~ 8/00 ~ 07) to be selected for each toll restriction class.

03.40 Least Cost Routing Assignments*

**STRATA VIe only*

1#00 Program—Home Area Code

- Enter the system's 3-digit home area code.

1#0X Program—LCR Special Codes (X = 1 ~ 5)

Five special codes may be entered.

- Enter each individual special code.
  Example: 911

1#06 Program—LCR Parameters (WNT, DT, LDI)

1) Mark an X next to 02 if a warning tone is required when the most expensive route is selected by the LCR software. Leave blank if not required.
2) Mark an X next to 01 if dial tone is required after dialing the access code. Leave blank if not required.
3) Mark an X next to 00 if long distance route information (555) will be allowed. Leave blank if not allowed.

1#07X Program—Select Long Distance Information Route (X = 1 ~ 8)

- Enter the route table number (1 ~ 8) that the system must use for long distance information calls (refer to **Program 1#X50**).

1#08X Program—Select Local Call Route (X = 1 ~ 8)

- Enter the route table number (1 ~ 8) that the system must use for local calls.

1#09 Program—Dial "0" Timeout

Selects the timeout between 0 and the telephone number during dialing.

1) Mark an X next to 03 for 10 seconds delay.
2) Mark an X next to 02 for 8 seconds delay.
3) Mark an X next to 01 for 6 seconds delay.
4) Mark an X next to 00 for 4 seconds delay.

NOTE:
Only one choice is allowed.

1#XY Program—Area Code Table (X = Route Table 1 ~ 8) [Y = Set(2), Delete (3) or Display (4)]

This program defines the area codes to add or delete for each route table.

1) Enter all area codes to be added to Table X.
2) All area codes may be displayed with Y = 4. To step through the codes, depress the # key repeatedly.

1#X8Y Program—LCR Route Definition (X = Route Table 1 ~ 8) (Y = Route Definition 1 4)

- Enter 2-digit number. The first digit is is a trunk group 1 ~ 8 (refer to **Programs 091 ~ 098**). The second digit is the number of the modified digit table to be assigned to this program.

1#X50 ~ 53 Program—LCR Route Table, Start Time A Schedule

This program will define the following areas:

- Route Table Number
- Start Time
- Priority Class
- Route Definition

1) Enter the 4-digit start time (24-hour clock) for each route table (**Program 1#X50**).

NOTE:
Start Time "B" is the stop time for "A"

Start Time "C" is the stop time for "B"
Start Time "A" is the stop time for "C"

2) Select the priority class required (**Programs 1#X51 ~ 53**). Enter the route group numbers (1 ~ 4) required (refer to **Program 1#8XY**).

NOTE:
If a table is to be used 24 hours a day, the Schedule B Start Time must be the same as Schedule A Start Time.

1#X60 ~ 63 Program—LCR Route Table, Start Time B Schedule

This program will define the stop time for a previously selected start time and/or the start time for another period.

- The procedure is the same as in **Program 1#X50 ~ 53**.

1#X70 ~ 73 Program—LCR Route Table, Start Time C Schedule

- The information and procedure are the same as **Program 1#X50 ~ 53.**

1#9XY Program—Modified Digits Table (X = Modified Digits Table 1 ~ 6) [Y = Delete Digits (0), Add Digits (1)]

1) Delete digits = 0 ~ 10. Add digits = 0 ~ 22.

NOTES:
1. *The quantity of digits that will be deleted from the digits dialed (deletion starts with the first digit).*
2. *A maximum of 22 digits may be added to the digits dialed via these tables. Pauses may also be inserted between digits added by depressing the appropriate keys (00 ~ 08) when the pause is required (a pause is counted as two digits).*
3. *Enter pauses in 2-second increments: 2 ~ 16.*

2) Enter the modified digits in the appropriate tables.

2#XY Program—LCR Area/Office Code Exception Table (X = Area/Office Code Exception Table 1 ~ 8) [Y = Route Table Number (0), Area Code (1), Office Code Allowed (2), Office Code Delete (3), Office Code Display (4)]

This table defines the route table that office codes in a specified area code will use.

1) Enter Area/Office Code Table number (1 ~ 8).

2) Enter the Route Table number required (1 ~ 8).

3) Enter the Area Code required.

4) Enter the Office Codes allowed.

5) Enter the Office Codes deleted.

6) Allowed Office Codes may be displayed.

03.50 Station Assignments

3XX Program—Station CO Line Access

The ability of an individual station to access any of the CO lines is determined by selections made using this program. A station denied access to a CO line by this program does not have key or LED functions for that CO line and cannot seize that line by dialing an access code.

- Selections must be repeated for all stations—mark an X next to each CO key/LED that is to be **accessed** by the station in question.

3#XX Program—HOXB, HMDB and HIOB Module Enable

Seven choices are enabled by this program.

1) Mark an X next to 07 if voice mail is connected to the HIOB. Leave blank if voice mail is not connected.

2) Mark an X next to 06 if the telephone or device connected to the HIOB is to use DTMF dialing. Leave blank if dialing is to be from rotary device (telephone).

3) Mark an X next to 04 if this station is to be a modem phone (HMDB). Leave blank if not equipped.

4) Mark an X next to 03 if this station is to be an HIOB module. Leave blank if not equipped.

5) Mark an X next to 02 if the unused OPX station is to show busy. Leave blank if it is not to show busy.

6) Mark an X next to 01 if an HOXB is connected to the station. Leave blank if the station is not equipped with an HOXB.

7) Mark an X next to 00 if the telephone or device connected to the HIOB is to have privacy. Leave blank if privacy is not required.

4XX Program—Station Type Assignment

NOTE:
*When programming, **always** do* **Program 4XX** *before* **Program 4#XX.** *If* **Program 4XX** *is programmed after* **4#XX,** *the stations' flexible key assignments will be reset to the default data.*

Informs the system of the EKT type being used at each station and the order of CO line appearance. The selections listed below are separated into two sections, S_e first and VI_e second, and must be repeated for each station. In all cases, mark an X where required.

**STRATA S_e only—see Figure 2.*

1) Mark an X next to 09 if the CO lines are to be assigned from top to bottom (descending order). If 09 is left blank, CO lines are assigned bottom to top (ascending order).
2) Mark Xs next to 05 and 01 if keystrip pattern D is desired.
3) Mark Xs next to 06 and 01 if keystrip pattern C is desired.
4) Mark Xs next to 06 and 00 if keystrip pattern B is desired.
5) Mark Xs next to 05 and 00 if keystrip pattern A is desired.
6) Mark an X next to 03 if a single-line EKT (with or without MW LED) is equipped.
7) Mark an X next to 01 if a 10-key EKT or single line with MW LED is equipped.
8) Mark an X next to 00 if a 20-key EKT is equipped.

NOTE:
The upper ten keys in keystrips A, B may be programmed for other features.

**STRATA VI_e only—see Figure 3.*

1) Mark an X next to 11 if you want the first CO line number to be CO4 (location depends on the selection at 09).
2) Mark an X next to 10 if you want the first CO line number to be CO1 (location depends on the selection at 09).
3) Mark an X next to 09 if the CO lines are to be assigned from top to bottom (descending order). If 09 is left blank, CO lines are assigned bottom to top (ascending order).
4) Mark an X next to 07 if 20-key pattern C is desired.
5) Mark an X next to 06 if 20-key pattern B is desired.
6) Mark an X next to 05 if 20-key pattern A is desired.
7) Mark an X next to 03 if a single-line EKT is equipped.
8) Mark an X next to 01 if a 10-key EKT is equipped.
9) Mark an X next to 00 if a 20-key EKT is equipped.

A

MW/FL	—
DND	AC
AD4	17
AD3	16
AD2	15
AD1	14
CO3	13
CO2	12
CO1	11
INT	10

B

MW/FL	AD
DND	AD
—	AD
—	AD
—	AD
—	AD
CO3	AD
CO2	AD
CO1	AD
INT	AD

C

MW/FL	BLF
DND	BLF
—	BLF
—	BLF
—	BLF
—	BLF
CO3	BLF
CO2	BLF
CO1	BLF
INT	BLF

D

MW/FL	BLF
DND	BLF
AD4	BLF
AD3	BLF
AD2	BLF
AD1	BLF
CO3	BLF
CO2	BLF
CO1	BLF
INT	BLF

FIGURE 2—S_e EKT KEY PATTERNS

4#XX Program—Station Flexible Key Assignments

NOTE:
Do this after **Program 4XX.**

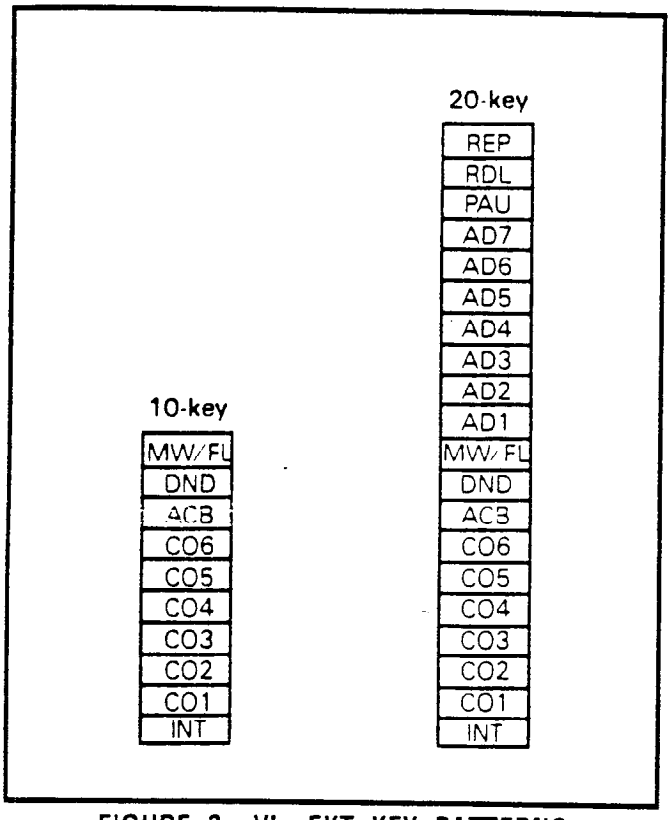

FIGURE 3—VIe EKT KEY PATTERNS

Informs the system of the features that are assigned to the flexible keys at each station.

- Any key (except INT) may be assigned a feature code (Figure 4). All assigned feature codes have priority over **Program 4XX** assignments. For each key on every station, write in the name or code for each feature to be assigned.

NOTES:

1. *A feature (code) may be assigned to one key only, except for Automatic Dialing (AD) keys. A feature will be rejected if you try to enter it at another key once its code has been entered. Rejected assignments will default to AD keys.*
2. *A locked AD key is assigned to a system auto-dial location (60 ~ 99). DSS key is assigned to a specific station. A modem key is assigned to the station associated with a modem phone. The modem phone's assignment is station XX.*
3. *Example program sequence:*

4#	XX	Key	Code	Station
4#	10	02	#	13

(Assigns key 02 on station 10 to DSS 13 and assigns LED 02 on station 10 as station 13's busy lamp.)

5XX Program—Station Class of Service #1

Fifteen options are selected with this pro-

CODE	DESCRIPTION	CODE	DESCRIPTION	CODE	DESCRIPTION
01	CO1	79	Modem Ans/Call	93	PRV
02	CO2	80	Modem Key	94	ACB
03	CO3	81	MSG	95	PAU
04	CO4	82	CPU2	96	RDL
05	CO5	83	CPU1	97	REP
06	CO6	84	CPU	98	DND
*	AD Key	85	SAVE	99	MW/FL
71	DP1 (Door Lock)	87	CFD	#YY	DSS/BLF
72	DP2 (Door Lock)	88	MCO	*ZZ	Locked AD Key
78	Modem MM/MA	90	TONE		

FIGURE 4—FLEXIBLE KEY ASSIGNMENTS

gram, using the various keys to change the status of their respective LEDs. The selections listed below must be repeated for each station. In all cases, mark an X where required.

1) Privacy Override—mark an X next to 17 if the station **is allowed** the Privacy Override feature. Allows an override (break-in) when a CO key is depressed with the CO LED on steady. Both parties can hear an override tone.

   NOTE:
   A maximum of two stations are permitted to use the Privacy Override feature. If more than two are programmed, only the two lowest numbered stations are allowed to use this feature; the others are ignored.

2) DND Override—mark an X next to 16 if the station **is allowed** the DND Override feature.

3) Executive Override (Dial 3)—mark an X next to 15 for stations that **are allowed** the Executive Override feature. (No limit to the number of stations.)

4) Off-hook Call Announce—mark an X next to 13 if off-hook call announce **is** to be **enabled**. Leave blank if it will not be enabled.

5) Off-Hook Call Announce Dial 2—mark an X next to 12 if dialing 2 is required for off-hook call announce. Leave blank if off-hook call announce is automatic.

   NOTE:
   LED 12 applies to the station originating OCA and LED 13 applies to the station receiving OCA.

6) Group Page 4—mark an X next to 09 if the station **is included** in Group Page 4.

7) Group Page 3—mark an X next to 08 if the station **is included** in Group Page 3.

8) Group Page 2—mark an X next to 07 if the station **is included** in Group Page 2.

9) Group Page 1—mark an X next to 06 if the station **is included** in Group Page 1.

10) All Call Page —mark an X next to 05 if the station **is included** in an All Call Page.

11) Warning Tone Disabled—mark an X next to 04 if no warning tone will be heard when dialing this station. Leave blank if a warning tone will be heard at the called station.

12) Handsfree Answerback Disabled—mark an X next to 03 if Handsfree Answerback is to be disabled at the station. Leave blank if it is not to be disabled (see MCO key feature).

13) MIC ON—mark an X next to 02 if the microphone and LED is to be ON at the start of a call. LED 01 (MIC key lock) must be on for this feature to function. Leave blank if the microphone on the EKT is to be OFF.

14) MIC Key Lock—mark an X next to 01 if the MIC key is to be operated in the push-on/push-off mode. Leave blank if momentary operation is required.

15) Speakerphone Enabled—mark an X next to 00 if the station **is allowed** to use the Speakerphone feature.

5#XX Program—Station Class of Service #2

Fourteen additional Class of Service features are selected with this program, using the various keys to change the status of their respective LEDs. The selections listed below must be repeated for each station. In all cases, mark an X where required.

1) 6000 LCD/2000 LCD—mark an X next to 17 if an alphanumeric (6000-series) LCD EKT is used. Leave blank if using a non-alphanumeric (2000-series) LCD EKT.

2) Station-to-Station Message Waiting with LCD Display—mark an X next to 16 if the station **is allowed** the Station-to-Station Message Waiting with LCD feature.

3) Speed Dial Memo—mark an X next to 15 if this station **is allowed** Speed Dial Memo. Leave blank if not allowed.

   NOTE:
   This feature is limited to 16 stations. The system initializes with this feature on stations 10 ~ 25.

4) Forced Account Code—mark an X next to 14 if this station **is required** to use an account code on CO lines programmed to forced account codes (see **Program 102**).

5) Toll Restriction Override Code—mark an X next to 13 if this station **is allowed** to change the Toll Restriction Override code. Leave

blank if not allowed. (See Toll Restriction Access Code.)

6) Hold Recall Time—referring to Table 1, mark an X next to the combination of 12, 11 and 10 that corresponds to the recall time desired for each station. If all locations are left blank, the timing for that station will default to that set in **Program 05**.

TABLE 1
HOLD RECALL TIME CODE

KEY/LED	16 sec.	32 sec.	48 sec.	64 sec.	96 sec.	128 sec.	160 sec.
12				X	X	X	X
11		X	X			X	X
10	X		X		X		X

7) Mark an X next to 07 if automatic off-hook selection is to be CO line Group 94 (defaults to 9 if Single CO Line Group was selected in **Program 01**).

8) Mark an X next to 06 if automatic off-hook selection is to be CO line Group 93 (defaults to 9 if Single CO Line Group was selected in **Program 01**).

9) Mark an X next to 05 if automatic off-hook selection is to be CO line Group 92 (defaults to 9 if Single CO Line Group was selected in **Program 01**).

10) Mark an X next to 04 if automatic off-hook selection is to be CO line Group 91 (defaults to 9 if Single CO Line Group was selected in **Program 01**).

**NOTE:*
If a line in a group is ringing on a station, that line will be selected.

11) Mark an X next to 03 if automatic off-hook selection is to be the CO line assigned to the 01 position.

12) Mark an X next to 02 if automatic off-hook selection is to be INT.

13) Ringing Line Preference—mark an X next to 01 if the station is allowed the Ringing Line Preference feature.

14) Automatic Dialing Allowed—mark an X next to 00 if the station is allowed the Automatic Dialing feature.

6XX Program—Station Toll Restriction Classification/LCR Priority Selection

Defines Toll Restriction and Least Cost Routing Priority Selection for individual stations. Selections must be made for each station, as follows:

1) Mark an X next to 12 if this station **is assigned** Least Cost Routing Class 3. (This allows LCR to choose the routes in class 3 only—STRATA VIe only.)

2) Mark an X next to 11 if this station **is assigned** Least Cost Routing Class 2. (This allows LCR to choose the routes in classes 2 and 3—STRATA VIe only.)

3) Mark an X next to 10 if this station **is assigned** Least Cost Routing Class 1. (This allows LCR to choose which of the three classes has the best route—STRATA VIe only.)

4) Digit Free/Restrict—mark an X next to 07 if this station **is not restricted** as to the number of digits that may be dialed. Leave blank if digit restriction is in effect.

NOTE:
If digit restriction is in effect, the station will be allowed to dial the number of digits allowed by its toll restriction, and NO additional digits.

5) Mark an X next to 06 if Toll Restriction Class 4 **is in effect** at this station.

6) Mark an X next to 05 if Toll Restriction Class 3 **is in effect** at this station.

7) Mark an X next to 04 if Toll Restriction Class 2 **is in effect** at this station.

8) Mark an X next to 03 if Toll Restriction Class 1 **is in effect** at this station.

NOTE:
Programs 100, 1X1, 1XY, 1XZ *and* **2XY** *define and modify Toll Restriction classes and operation.*

9) Mark an X next to 02 if this station **will be restricted** from dialing 0 or 1 as the first or second digit. This entry overrides any Toll Restriction Class assigned to this station.

10) Mark an X next to 01 if the station **will be allowed** to dial 1 + 7-digit number. This entry overrides any Toll Restriction Class assigned to this station.

11) Mark an X next to 00 if this station **will not be restricted**. This entry overrides all other Toll Restriction programming.

6#XX Program—Station-to-Station Hunting

Defines the station hunt destination if the called station is busy.

- Enter the station number of the hunt destination next to the station number called.

7XX Program—Station Outgoing Call Restriction

Restricts a station from outgoing access to any number of CO lines, but leaves it free to answer these lines when they are ringing or on hold. Selections must be made for each station.

- Mark an X next to the CO line that **is** to have **restricted** access by each station.

81XX ~ 83XX Programs—CO Ringing Assignments-DAY

Selects which CO lines ring at a given station when the system is in the DAY mode. Mark an X next to each CO line that is to ring at the station during the DAY mode.

- **Program 81XX** selects immediate ringing.
- **Program 82XX** selects 12-second delayed ringing.
- **Program 83XX** selects 24-second delayed ringing.

84XX ~ 86XX Programs—CO Ringing Assignments-DAY 2

Selects which CO lines ring at a given station when the system is in the DAY 2 mode. Mark an X next to each CO line that is to ring at the station during the DAY 2 mode.

- **Program 84XX** selects immediate ringing.
- **Program 85XX** selects 12-second delayed ringing.
- **Program 86XX** selects 24-second delayed ringing.

87XX ~ 89XX Programs—CO Ringing Assignments-NIGHT

Selects which CO lines ring at a given station when the system is in the NIGHT mode. Mark an X next to each CO line that is to ring at the station during the NIGHT mode.

- **Program 87XX** selects immediate ringing.
- **Program 88XX** selects 12-second delayed ringing.
- **Program 89XX** selects 24-second delayed ringing.

NOTE:
If a CO line is to have the call forward feature, it must be programmed to ring on ***one station only*** *per ringing assignment program.*

9#XX Program—Door Phone Ringing Assignments

Selects which door phones ring at a given station. Selections must be made for each station.

1) Mark an X next to 05 if the door phone connected to door phone control box output 12/14C is to ring this station. Leave blank if the door phone will not ring this station.

2) Mark an X next to 04 if the door phone connected to door phone control box output 12/14B is to ring this station. Leave blank if the door phone will not ring this station.

3) Mark an X next to 03 if the door phone connected to door phone control box output 12/14A is to ring this station. Leave blank if the door phone will not ring this station.

4) Mark an X next to 02 if the door phone connected to door phone control box output 11/13C is to ring this station. Leave blank if the door phone will not ring this station.

5) Mark an X next to 01 if the door phone connected to door phone control box output 11/13B is to ring this station. Leave blank if the door phone will not ring this station.

6) Mark an X next to 00 if the door phone connected to door phone control box output 11/13A is to ring this station. Leave blank if the door phone will not ring this station.

*X# Program—Flexible Access Code Numbering

Allows the first digit of the following access codes to be changed to be compatible with a flexible numbering plan:

- CO Line Dial Selection—7XX

- Paging—80 ~ 89
- Trunk Group—9, 91 ~ 98
- Least Cost Routing—9
- Door Phone/Monitor Station—66 ~ 68, 661 ~ 673

Enter the new *first* digit of the access code to be changed as desired. Ensure there are no numbering plan conflicts for proper operation.

Example:
Entering ✱ 3 # 4 *changes the Door Phone/Monitor Station access codes from 66, 67 and 68 to 46, 47 and 48, respectively.*

*XX Program—Flexible Intercom Numbering

Changes the system intercom number (2-digit) to a new intercom number (1 ~ 4 digits). Enter the new intercom number in the New Intercom Number column next to the system intercom number to be changed. Ensure there are no numbering plan conflicts for proper operation.

Example:
Entering ✱ 1 2 5 0 1 2 *changes station 12's intercom number to 5012.*

#1XX*YY Program—Optional Programming

Using the system record sheets, record each speed dial number to be programmed in the system and station automatic dialing locations.

NOTES:
1. *Use one record sheet per station, so make enough copies to cover every station in the system.*
2. *Stations may program their individual auto dial numbers, while only station 10 can program system auto dial numbers.*

TABLE LIST

Table	Title	Program	Page
3	System Data Printout Selection Codes	—	25
4	Speed Dial Memory Printout Selection Codes	—	25
5	System Assignments (Basic)	01	31
6	Door Phone Selection	0#1	32
7	System Assignments (Options)	02	33
8	Account Code Digit Length and TIE Line/OPX Selection	0#2	34
9	System Assignments (Options)	03	35
10	CO Line Outpulsing Selection	04	36
11	CO Line Identification	#4	37
12	Automatic Recall From Hold Timing	05	38
13	Camp-on Timeout	0#5	39
14	AROH Enable	06	40
15	Trunk-to-Trunk Connection Enable	0#6	41
16	AROH Timing	07	42
17	1A2 Interface	0#7	43
18	CO Line Call Pickup Selection	08	44
19	Night Ringing Over External Page	0#8	45
20	Single CO Line (Dial 9) Group Selection	09	46
21	CO Line (Dial 91 ~ 98) Group Assignments	09X	47
22	Off-Premises Line Hunting	0#9	48
23	PBX Backup	190	49
24	PBX Access Codes	19X	50
25	Toll Restriction System Parameters	100	51
26	Toll Restriction Disable	101	52
27	Forced Account Code Check	102	53
28	Other Common Carrier (OCC) or Equal Access #1 & #2	103/105	54
29	OCC Authorization Codes #1 & #2	104/106	55
30	Toll Restriction Override Code #1 & #2	108/109	56
31	Toll Restriction Class Parameters	1X0	57
32	Toll Restriction Class Area Code Entry	1XY	58

TABLE LIST (continued)

Table	Title	Program	Page
33	Toll Restriction Class Office Code Entry	1XZ	59
34	Toll Restriction Area/Office Code Exception Table	2XY	60
35	Toll Restriction Class Area/Office Code Exception Table Selection	1X1	61
36	Least Cost Routing Home Area Code	1#00	62
37	Least Cost Routing Special Codes	1#0X	63
38	Least Cost Routing Parameters	1#06	64
39	Select Long Distance Information Route	1#07X	65
40	Select Local Call Route	1#08X	66
41	Dial Zero (0) Timeout	1#09	67
42	Least Cost Routing Area Code Table	1#XY	68
43	Least Cost Routing Route Definition	1#X8Y	69
44	Start Time A Schedule	1#X50 ~ 53	70
45	Start Time B Schedule	1#X60 ~ 63	71
46	Start Time C Schedule	1#X70 ~ 73	72
47	Modified Digits Table	1#9XY	73
48	LCR Area/Office Code Exception Table	2#XY	74
49	Station CO Line Access	3XX	75
50	HOXB, HMDB and HIOB Module Enable	3#XX	76
51	Station Type Assignment	4XX	77
52	Station Flexible Key Assignments	4#XX	78
53	Station Class of Service #1	5XX	79
54	Station Class of Service #2	5#XX	80
55	Station Toll Restriction/LCR Classification	6XX	81
56	Station-to-Station Hunting	6#XX	82
57	Station Outgoing Call Restriction	7XX	83
58	CO Ringing Assignments—DAY/DAY 2/NIGHT	81XX ~ 89XX	84
59	Door Phone Ringing Assignments	9#XX	85
60	Flexible Access Code Numbering	*X#	86
61	Flexible Intercom Numbering	*XX	87
62	Optional Programming	#1XX*YY	88

04 PROGRAMMING PROCEDURES

04.00 Initialization

04.01 A list of standard system data assignments (stored in ROM) can be entered any time by initializing the system. The system must be initialized when it is first installed or whenever the SMAU/VMAU is changed. This allows the system to be tested and any faults corrected before time is spent on programming. Standard data assignments are listed in Table 2 in Paragraph **04.10**. (However, if a system is initialized after user-programmed data has been stored, all user data will be lost.)

04.02 To initialize the system data memory, temporaryily connect a 20-key EKT to the MDF at station 13/17 and perform the following:

04.03 STRATA S_e:

1) Place the system power switch in the **ON** position.
2) Depress the **SET** switch and allow it to lock.
   - SET LED goes on.
   - Station 13: LED 19 goes on.
3) Depress the SPKR key on station 13.
   - Station 13: SPKR LED goes on.
4) Dial # 1 0 on the dial pad.

5) Depress the 01 and 03 keys on station 13.
   - The corresponding LEDs go on.

6) Depress the HOLD key on station 13.
   - Station 13: All LEDs (except SPKR and MIC) begin blinking.

7) Depress and release the **SET** switch again.
   - SET LED goes off.
   - Station 13: LEDs go off.

8) Cycle the power switch **OFF** and **ON**.

04.04 STRATA VIe:

NOTE:
Verify that the battery on the VMAU is connected to ensure that data entered after system initialization is not lost due to power failure. (The SET LED cannot function if the battery is not connected.)

1) Place the system power switch in the **ON** position.

2) Depress the **INT** switch on the HKSU, and hold it in.

3) Depress the **SET** switch and allow it to lock.
   - SET LED goes on.
   - Station 17: All LEDs (except SPKR & MIC) blink continuously.

4) Depress and release the **SET** switch again.
   - SET LED goes off.
   - Station 17: LEDs go off.

5) Release the **INT** switch.

6) Cycle the power switch **OFF** and **ON**.

04.10 Clearing Automatic Dialing

04.11 The Automatic Dialing memory contains random numbers when the system is powered up initially. The memory, therefore, must be cleared to prevent meaningless numbers from being dialed.

IMPORTANT!
Station 13/17 may be equipped with either a 10- or a 20-key EKT. Prior to performing the procedure that follows, refer to Paragraph 02.10 for instructions on using a 10-key EKT for programming.

04.12 To clear the Automatic Dialing (-System and -Station) memory (up to 40 numbers), proceed as follows:

1) Lock in the **SET** switch.
   - Station 13/17: LED 19 lights steadily.

2) To clear station 10 ~ 33, depress the SPKR key and dial # # 1.
   - SPKR LED flashes continuously.
   - Depress keys 01 05 09 13.
   - Depress the HOLD key.

3) To clear station 34 ~ 57, depress the SPKR key and dial # # 2.
   - SPKR LED flashes continuously.
   - Depress keys 02 06 10 14.
   - Depress the HOLD key.

4) To clear station 58 ~ 65 and system speed dial, depress the SPKR key and dial # # 3.
   - SPKR LED flashes continuously.
   - Depress keys 03 07 11 15.
   - Depress the HOLD key.

5) Release the **SET** switch.
   - The SET LED and LED 19 on station 13/17 go off.

04.20 Alphanumeric Messaging Initialization

NOTE:
There are 40 messages available in system memory (60 ~ 99), and 10 available at each station (10 ~ 19).

04.21 To initialize system alphanumeric messages, follow these procedures:

1) Lock in the **SET** switch.
   - Station 13/17: LED 19 lights steadily.

2) To clear codes 60 ~ 99, depress the SPKR key and dial # # 4.
   - SPKR LED flashes continuously.
   - Depress keys 00 04 08 12.
   - Depress the HOLD key.

04.22 To initialize station alphanumeric messages, follow these procedures:

1) Lock in the **SET** switch.
   - Station 13/17: LED 19 lights steadily.

2) To clear codes 10 ~ 19, depress the SPKR key and dial # # 5.
   - SPKR LED flashes continuously.
   - Depress keys 01 05 09 13.
   - Depress the HOLD key.

NOTE:
System messages can only be programmed

or changed at station 10. When the system is initialized, five messages are automatically stored in memory:
60: OUT TO LUNCH
61: IN A MEETING
62: CALL
63: BACK AT
64: RETURN ON

04.30 Timer Reminder Messaging Initialization

04.31 To clear Timer Reminder messages, follow these procedures:

1) Lock in the **SET** switch.
   - Station 13/17: LED 19 lights steadily.
2) To clear timer codes, depress the SPKR key and dial # 1 7.
   - SPKR LED flashes continuously.
   - Depress keys 03 07 11 15.
   - Depress the HOLD key.

04.40 System Real-Time Clock/Calendar Adjustment

04.41 The following procedures detail how to set the date, time and day in the system.

NOTE:
This operation is possible from station 10 only.

1) Handset on-hook.
2) To set date:
   a) Dial # 1 5 1 (or RDL REP 5 1).
   b) Dial in date (year/month/day) in the format YYMMDD. Enter a leading 0 for single-digit month and day.
   c) Depress the # (or RDL) key.
3) To set time:
   a) Dial # 1 5 2 (or RDL REP 5 2).
   b) Dial in time (hour/minute/second) in 24-hour clock format HHMMSS. Enter a leading 0 for single digit.
   c) Depress the # (or RDL) key.
4) To set day:
   a) Dial # 1 5 3 (or RDL REP 5 3).
   b) Dial in the day (1 represents Sunday, 2 Monday, etc., through 7 for Saturday).
   c) Depress the # (or RDL) key.

04.50 System Data Entry

04.51 System data is entered via station 13/17 while the system is in the programming mode.

04.52 The system is placed in the programming mode and data is entered as follows:

1) Depress the **SET** switch on the HKSU and allow it to lock.
   - SET LED lights.
   - 19 LED on station 13/17 goes on.
2) Refer to the System Record Sheet (Appendix 1) for data to be entered and/or changes that must be made.
3) Select the required program number.
4) Refer to the proper programming table for detailed procedures for using each different program.

NOTE:
Each program should be accomplished sequentially until all necessary changes are made.

TABLE 2

INITIALIZED DATA

SYSTEM ASSIGNMENTS

01 Program
System Assignments (Basic)

Alternate Point Answer of Transferred CO Line = Allowed
System Speed Dial Override of Toll Restriction = Not allowed
CO Line Groups = 1 (dial 9)
Two CO Line Conferencing = Allowed
DP Make Ratio = 40%
MF Signal Time = 80 ms
Privacy/Non-Privacy = Privacy
Station 13/17 = 20-key EKT
Incoming Call Abandon = 6 seconds
Pause Timing After Flash = 1.5 seconds
Pause After Flash = None
Pause Timing After PBX Access Code = 1.5 seconds
Flash Key Timing = 2 seconds
Intercom Signalling = Voice first

TABLE 2—INITIALIZED DATA (continued)

0#1 Program
Door Phone Selection

None Selected

02 Program
System Assignments (Options)

Tandem Switching = Not selected
Stations 18/19 Amplified Conference = No Amplified Conference
ACB Warning Tone = No tone
Display Dialed Number Timeout = 15 seconds
Night Ringing* = Excluded from External Page
Background Music = Excluded from External Page
External Page = Not included in All Call Page

**STRATA VIe only*

0#2 Program
Account Code Digit Length Selection

Repeat Ring = Normal
Modem Speed = 300 bps

03 Program
System Assignments (Options)

Station 10 Alarm Key = AD1
Station 10 DND/NT (Night) Key = NT key
Ringing Modes = 2
CO Line Groups* = Not equipped
Message Center—Station 12 = Not equipped
Message Center—Station 11 = Not equipped
Message Center—Station 10 = Equipped

**STRATA VIe only*

04 Program
CO Line Outpulsing Selection

DTMF = Equipped

#4 Program
CO Line Identification

None

05 Program
Automatic Recall From Hold Timing

32 Seconds

0#5 Program
Camp-on Timeout

32 Seconds

06 Program
Automatic Release On Hold Enable

Disabled = All CO lines

0#6 Program
CO Tandem Switching

CO Tandem Switching = Disable

07 Program
Automatic Release On Hold Timing

ESS Timing = All CO lines

0#7 Program
1A2 Interface

Not Assigned

09, 09X Program
CO Line Group Selection

Dial 9 Group = All CO lines
Dial 91 Group = All CO lines

0#9 Program
Off-Premises Line Hunting

No Hunting Assigned

190 Program
PBX Backup

CO Operation = All CO lines unassigned

19X Program
PBX Access Codes

No Codes Assigned

TOLL RESTRICTION ASSIGNMENTS

100 Program
Toll Restriction

System Parameters (Dialing Plan)
AC + NNX 1 + O/C Selected

101 Program
Toll Restriction Disable

No Restriction = All CO lines

102 Program
Forced Account Code Check

No Check = All CO lines

103 Program
OCC or Equal Access #1

Blank

TABLE 2—INITIALIZED DATA (continued)

104 Program
OCC Authorization Code #1

Blank

105 Program
OCC or Equal Access #2

Blank

106 Program
OCC Authorization Code #2

Blank

108 Program
Toll Restriction Override Code #1

Blank

109 Program
Toll Restriction Override Code #2

Blank

1X0 Program
Toll Restriction Class Parameters

01 or 011 = Allowed
0 + = Allowed
AC + 555 = Not allowed

1XY Program
TR Class Area Code Entry

All Area Codes Allowed

1XZ Program
TR Class Office Code Entry

All Area Codes Allowed

2XY Program
Toll Restriction Area/Office Code Exception Table

Blank

1X1 Program—Toll Restriction Class Area/Office Code Exception Table Selection

None Selected

LEAST COST ROUTING ASSIGNMENTS

(STRATA VIe only)

1#00 Program
LCR Home Area Code

Blank

1#0X Program
LCR Special Codes

Blank

1#06 Program
LCR Parameters

Blank

1#07X Program
Select Long Distance Information Route Table

Table Chosen = 8

1#08X Program
Select Local Call Route

Table Chosen = 8

1#09 Program
Dial Zero (0) Timeout

6 Seconds

1#XY Program
LCR Area Code Table

Blank

1#X8Y Program
LCR Select Trunk Group

Route Table = 1
Route Group = 1

1#X50 ~ 53 Program
Start Time A Schedule

Blank

1#X60 ~ 63 Program
Start Time B Schedule

Blank

1#X70 ~ 73 Program
Start Time C Schedule

Blank

1#9XY Program
Modified Digits Table

Table Chosen = P1

TABLE 2—INITIALIZED DATA (continued)

2#XY Program
Area/Office Code Route Table

Table Chosen = 8

STATION ASSIGNMENTS

3XX Program
Station CO Line Access

Access Allowed = All lines, all stations

3#XX Program
HOXB, HMDB and HIOB Module Enable

Blank

4XX Program
Station Type Assignment

20-key Assigned* = All stations
CO1 Start = All stations Keystrip "A" Assigned** = All stations

**STRATA VI_e only*
***STRATA S_e only*

4#XX Program
Station Flexible Key Assignment

Assignment = Basic keystrip

5XX Program
Station Class of Service #1

Privacy Override = Not allowed, all stations
DND Override = Not allowed, all stations
Executive Override= Not allowed, all stations
OCA = Disable
OCA Connection = Automatic
Group Page 4 = Not included
Group Page 3 = Not included
Group Page 2 = Not included
Group Page 1 = Not included
All Call Page = Allowed, all stations
Room Monitor = Warning tone, all stations
Handsfree Answerback = Not allowed, all stations
MIC ON/Idle Mode = OFF, all stations
MIC Key Lock = Momentary, all stations
Speakerphone = Allowed, all stations

5#XX Program
Station Class of Service #2

6000 LCD/2000 LCD = 6000 LCD
Station-to-Station Message Waiting with LCD = Allowed, all stations
Address Memo Memory = Enable
Forced Account Code = Not required, all stations
Toll Restriction Override Code = Not allowed, all stations
Hold Recall Time = Per **Program 05**
Automatic Off-Hook Selection = No selection, all stations
Ringing Line Preference = Selected, all stations
Automatic Dialing = Allowed, all stations

6XX Program
Station Toll Restriction Classification

No Restrictions = All stations

6#XX Program
Station-to-Station Hunting

No Selection = All stations

7XX Program
Station Outgoing Call Restrictions

No Restrictions = All stations

81XX ~ 83XX Program
CO Ringing Assignments-DAY

All Lines Ring Station 10

84XX ~ 86XX Program
CO Ringing Assignments-DAY 2

No CO Ringing Assigned

87XX ~ 89XX Program
CO Ringing Assignments-NIGHT

All Lines Ring Station 11

9#XX Program
Door Phone Ringing Assignments

Blank

*X# Program
Flexible Access Code Numbering

Access Code = System

*XX Program
Flexible Intercom Numbering

Blank

#1XX*YY Program
Optional Programming

Blank

05 SYSTEM DATA PRINTOUT

05.00 System Data Printout Via SMDR

05.01 If the system is equipped with Station Message Detail Recording (SMDR), it is possible to obtain a printout of the system data and speed dialing memory via a printer that is connected to the SMDR output port (HSMB module).

05.02 The data should be printed during a low traffic period since this procedure interferes with normal SMDR output. Any call records generated during a printout will be lost.

05.03 Commands to print system data are entered by station 17 while it is in the programming mode. It is possible to print out all or parts of the system data and speed dial memory. The possible choices are:

System Data:
- All data
- **Programs 0XX ~ 0#XX**
- **Programs 1XX**
- **Program 2XY**
- **Program 3XX**
- **Program 4XX**
- **Program 4#XX**
- **Program 5XX**
- **Program 5#XX**
- **Program 6XX**
- **Program 6#XX**
- **Program 7XX**
- **Programs 81XX ~ 89XX**
- **Program 9#XX**
- **Program *XX**

Speed Dial Memory:
- All data
- System list
- Any individual station list

05.04 To request a printout.

1) Depress the **SET** switch on the HKSU.
   - SET LED goes on.
   - Station 13/17 LED 19 goes on.
2) Depress the SPKR key on station 13/17.
   - SPKR LED goes on.
3) Dial # #.
   - The SPKR LED begins to flash.
4) LEDs 00 ~ 08 switch on and off in response to operation of the associated keys. Refer to Tables 3 and 4 and set the appropriate LEDs to the proper pattern for the printout required.
5) Depress the HOLD key.
   - All station 13/17 LEDs (except 19) go off.
   - Printout begins (see Figures 4 ~ 9 for examples of the printout format).
6) Normal SMDR operation resumes when the printout is complete.
7) Repeat from step 2 until all desired printouts are completed.
8) Release the **SET** switch on the HKSU.

05.05 To stop a printout before it is complete.

1) Depress the SPKR key on station 13/17.
   - SPKR LED goes on.
2) Dial # #.
   - SPKR LED stays on.
   - LEDs 00 ~ 08 light.
3) Depress the appropriate keys necessary to extinguish all LEDs but the SPKR.
4) Depress the HOLD key.
   - SPKR LED goes off.
   - After a short delay, the printout stops.
5) Normal SMDR functions resume.

TABLE 3
SYSTEM DATA PRINTOUT SELECTION CODES

	PROGRAM NUMBER														
LED	01 ~ 0#9	100 ~ 19X	2XY	1#XY	2#XY	3XX	3#XX	4XX	4#XX	5XX	5#XX	6XX	6#XX	7XX	Print Out All
08	X	X	X	X	X	X	X	X	X	X	X	X	X	X	X
07	X	X	X	X	X	X	X	X	X	X	X	X	X	X	X
06	X	X	X	X	X	X	X	X	X	X	X	X	X	X	X
05	O	O	O	O	O	O	O	O	O	O	O	O	O	O	O
04	O	O	O	X	X	O	X	O	X	O	X	O	X	O	O
03	O	O	O	O	O	O	O	O	O	O	O	O	O	O	X
02	O	O	O	O	O	O	O	X	X	X	X	X	X	X	X
01	O	O	X	O	X	X	X	O	O	O	O	X	X	X	X
00	O	X	O	X	O	X	X	O	O	X	X	O	O	X	X

LED on = X LED off = O

TABLE 3
SYSTEM DATA PRINTOUT SELECTION CODES
(continued)

	PROGRAM NUMBER				
LED	81XX ~ 83XX	84XX ~ 86XX	87XX ~ 89XX	9#XX	*XX
08	X	X	X	X	X
07	X	X	X	X	X
06	X	X	X	X	X
05	O	O	O	O	O
04	O	X	O	X	X
03	X	X	X	X	X
02	O	O	O	O	O
01	O	O	O	O	X
00	O	O	X	X	X

LED on = X LED off = O

TABLE 4
AUTOMATIC DIALING MEMORY PRINTOUT SELECTION CODES
AUTO DIAL LISTS (System & Stations 10 ~ 25)

LED	SYS	10	11	12	13	14	15	16	17	18	19	20	21	22	23	24	25
08	X	X	X	X	X	X	X	X	X	X	X	X	X	X	X	X	X
07	O	O	O	O	O	O	O	O	O	O	O	O	O	O	O	O	O
06	X	O	O	O	O	O	O	O	O	O	O	O	O	O	O	O	O
05	X	O	O	O	O	O	O	O	O	O	O	X	X	X	X	X	X
04	X	X	X	X	X	X	X	X	X	X	X	O	O	O	O	O	O
03	O	O	O	O	O	O	O	O	O	X	X	O	O	O	O	O	O
02	O	O	O	O	O	X	X	X	X	O	O	O	O	O	O	X	X
01	O	O	O	X	X	O	O	X	X	O	O	O	O	X	X	O	O
00	O	O	X	O	X	O	X	O	X	O	X	O	X	O	X	O	X

```
##  SYSTEM PROGRAMMING     ##

                                                  1:SELECT(LED ON)
            21   16    15      8  7     1INT
0      1    000000    00000000  00000000
0      2    000000    00000000  00000000
0     #2    000000    00001000  00000110
0      3    000000    00010000  00000101
0      4    000000    00000000  01110000
0      5    000000    00000000  00000100
0     #5    000000    00000000  00000010
0      6    000000    00000000  00000000
0     #6    000000    00000000  00000000
0      7    000000    00000000  00000000
0      8    000000    00000000  00000000
0     #8    111111    11111111  11111110
0      9    111111    11111111  11111110
0     91    111111    11111111  11111110
0     92    000000    00000000  00000000
0     93    000000    00000000  00000000
0     94    000000    00000000  00000000
0     #9    000000    00000000  00000000

##  END OF PRINT           ##
```

FIGURE 4—SAMPLE PRINTOUT OF PROGRAMS 01 ~ 0#9

```
##  SYSTEM PROGRAMMING     ##

                                                  1:SELECT(LED ON)
              21   16    15      8  7     1INT
1     00       000000     00000000  00000001
1     01       000000     00000000  00000000
1     02       000000     00000000  00000000

                     (DATA = DIAL NUMBER)
1     03        10515
1     04           12
1     05        10736
1     06            9
1     08         5555
1     09         3621

                                                  1:SELECT(LED ON)
              21   16    15      8  7     1INT
1     10       000000     00000000  00000000
1     11       000000     00000000  00000000

1     14     000 ~ 999
1     18     000 ~ 999

.      .       .            .            .
.      .       .            .            .
.      .       .            .            .
                                                  1:SELECT(LED ON)
             21   16     15      8  7     1INT
1     90     000000       00000000  00000000

                     (DATA = DIAL NUMBER)
1     91       81
1     92       82
1     93       83
1     94       84
1     95       *8
1     96
1     97
1     98
##  END OF PRINT           ##
```

FIGURE 5—SAMPLE PRINTOUT OF PROGRAMS 100 ~ 19X

```
##  SYSTEM PROGRAMMING     ##

                        (DATA = DIAL NUMBER)

2     11         212

2     14                        472
                                495
                                669
                        (DATA = DIAL NUMBER)
2     21         317
2     24                        628
                                629
.      .          .          .
.      .          .          .
.      .          .          .
                        (DATA = DIAL NUMBER)
2     81
2     84

##  END OF PRINT           ##
```

FIGURE 6—SAMPLE PRINTOUT OF PROGRAM 2XY

```
##  SYSTEM PROGRAMMING     ##

                                                  1:SELECT(LED ON)
             21   16    15      8  7     1INT
3     10     111111     11111111  11111110
3     11     111111     11111111  11111110
3     12     111111     11111111  11111110
3     13     111111     11111111  11111110
3     14     111111     11111111  11111110
3     15     111111     11111111  11111110
3     16     111111     11111111  11111110
3     17     111111     11111111  11111110
3     18     111111     11111111  11111110
3     19     111111     11111111  11111110
3     20     111111     11111111  11111110
.      .       .          .              .
.      .       .          .              .
.      .       .          .              .
3     65     111111     11111111  11111110

##  END OF PRINT           ##
```

FIGURE 7—SAMPLE PRINTOUT OF PROGRAM 3XX (4XX ~ 9XX are identical)

```
##  SYSTEM PROGRAMMING  ##

4#     10      10          20          C010   C020
               09          19           C09   C019
               08          18           C08   C018
               07          17           C07   C017
               06          16           C06   C016
               05          15           C05   C015
               04          14           C04   C014
               03          13           C03   C013
               02          12           C02   C012
               01          11           C01   C011
 .      .       .           .            .      .
 .      .       .           .            .      .
 .      .       .           .            .      .
4#     65       *          99           AD3   MW/FL
                *          98           AD2   DND
                *          97           AD1   REP
               06          96           C06   RDL
               05          95           C05   PAU
               04          94           C04   ACB
               03          93           C03   PRV
               02          88           C02   MCO
               01          87           C01   CFD
               00          85           INT   SAVE

 ##  END OF PRINT  ##
```

NOTE:
Columns 1 and 2 give the code for the feature assigned to each key; columns 3 and 4 give the actual features assigned (corresponding to the codes in columns 1 and 2).

FIGURE 8—SAMPLE PRINTOUT OF PROGRAM 4#XX

```
##  REPERTORY DIAL    ##

#00   *60       17147305000
#00   *61       19142731750
#00   *62       12135551212
#00   *63       17148531212
#00   *64       17145551212
#00   *65       17147305000
#00   *66       19142731750
#00   *67       12135551212
#00   *68       17148531212
#00   *69       17145551212
#00   *70       17147305000
#00   *71       19142731750
#00   *72       12135551212
#00   *73       17148531212
#00   *74       17145551212
#00   *75       17147305000
#00   *76       19142731750
#00   *77       12135551212
#00   *78       17148531212
#00   *79       17145551212
#00   *80       17147305000
#00   *81       19142731750
#00   *82       12135551212
#00   *83       17148531212
#00   *84       17145551212
#00   *85       17147305000
#00   *86       19142731750
#00   *87       12135551212
#00   *88       17148531212
#00   *89       17145551212
#00   *90       17147305000
#00   *91       19142731750
#00   *92       12135551212
#00   *93       17148531212
#00   *94       17145551212
#00   *95       17147305000
#00   *96       19142731750
#00   *97       12135551212
#00   *98       17148531212
#00   *99       17145551212
##  END OF PRINT  ##
```

FIGURE 9—SAMPLE PRINTOUT OF SPEED DIAL—SYSTEM

TABLE 5

PROGRAM 01
SYSTEM ASSIGNMENTS (BASIC)

1) Lock in the **SET** switch on the HKSU.	SET LED on. Station 13/17 LED 19 on. System is in program mode. Normal functions halt on station 13/17.
2) Depress the SPKR key on station 13/17.	SPKR LED steady on.
3) Dial 0 1 on the dial pad.	SPKR LED flashes continuously. The various LEDs indicate present data.
4) Refer to the System Record Sheet. Using the various keys, turn their associated LEDs on or off, as required. The detailed meaning of each key/LED is shown below. *NOTE:* *If any key/LED is not shown, it is not used.*	An X on the record sheet means the LED should be on. If the LED is already on, depressing the associated key will turn it off and vice versa. LEDs may be turned off and on until the desired pattern is set.

KEY/LED	LED ON	LED OFF
17	Transfer Privacy	Alternate point answer of transferred CO line
16	Automatic Dialing—Override Toll Restriction	Restricted
15*	CO Line Group(s)—Eight (91~98)	CO Line Group(s)—One (9)
14	Two CO Line Conferencing—Inhibit	Allowed
13	Least Cost Routing	No Least Cost Routing
12	DP Make Ratio—33%	40%
11	DTMF Signal Time—160 ms	80ms
09	Non-Privacy	Privacy
07	Station 13/17—10-key EKT	Station 13/17—20-key EKT
06	Incoming Call Abandon—8 seconds	6 seconds
05	Pause After Flash—3 seconds	1.5 second
04	Insert Pause After Flash	No Pause
03	Pause (MW/FL or PAU key)—3 seconds	1.5 second
02	Flash—0.5 second	2 seconds
00**	Tone First	Voice First

5) Depress the HOLD key to place new data in memory.	All station 13/17 LEDs (except 19) go off.
6A) Go to Step 2 in another program table . . . or . . . 6B) Transfer data into working memory per Paragraph **02.06**.	SET LED goes off. Station 13/17 LED 19 goes off. New data is stored, previous data is erased.

If the LED 15 is off in this program, see* **Program 09; *if LED 15 is on, see* **Program 09X**.
***Voice First is required if the system is optioned for Off-hook Call Announce.*

TABLE 6

PROGRAM 0#1
DOOR PHONE SELECTION

1) Lock in the **SET** switch on the HKSU.	SET LED on. Station 13/17 LED 19 on. System is in program mode. Normal functions halt on station 13/17.
2) Depress the SPKR key on station 13/17.	SPKR LED steady on.
3) Dial 0 # 1 on the dial pad.	SPKR LED flashes continuously. The various LEDs indicate present data.
4) Refer to the System Record Sheet. Using the various keys, turn their associated LEDs on or off, as required. The detailed meaning of each key/LED is shown below. *NOTE:* *If any key/LED is not shown, it is not used.*	An X on the record sheet means the LED should be on. If the LED is already on, depressing the associated key will turn it off and vice versa. LEDs may be turned off and on until the desired pattern is set.

KEY/LED	LED ON	LED OFF
17	Door Lock Timeout—6 seconds	3 seconds
08	Door Phone 12/14B—Door Lock	Door Phone
07	Door Phone 12/14C—Busy-out	No Busy Signal
06	Door Phone 12/14B—Busy-out	No Busy Signal
05	Station 12/14—Door Phone	EKT
04	Door Phone 11/13C—Alarm*	Door Phone
03	Door Phone 11/13B—Door Lock	Door Phone
02	Door Phone 11/13C—Busy-out	No Busy Signal
01	Door Phone 11/13B—Busy-out	No Busy Signal
00	Station 11/13—Door Phone	EKT

5) Depress the HOLD key to place new data in memory.	All station 13/17 LEDs (except 19) go off.
6A) Go to Step 2 in another program table . . . or . . . 6B) Transfer data into working memory per Paragraph **02.06.**	SET LED goes off. Station 13/17 LED 19 goes off. New data is stored, previous data is erased.

**Station 13 only.*

TABLE 7

PROGRAM 02
SYSTEM ASSIGNMENTS (OPTIONS)

1) Lock in the **SET** switch on the HKSU.	SET LED on. Station 13/17 LED 19 on. System is in program mode. Normal functions halt on station 13/17.
2) Depress the SPKR key on station 13/17.	SPKR LED steady on.
3) Dial 0 2 on the dial pad.	SPKR LED flashes continuously. The various LEDs indicate present data.
4) Refer to the System Record Sheet. Using the various keys, turn their associated LEDs on or off, as required. The detailed meaning of each key/LED is shown below. *NOTE:* *If any key/LED is not shown, it is not used.*	An X on the record sheet means the LED should be on. If the LED is already on, depressing the associated key will turn it off and vice versa. LEDs may be turned off and on until the desired pattern is set.

KEY/LED	LED ON	LED OFF
13	Station 15/23—Trunk-to-trunk Connection	EKT
12	Station 14/22—Trunk-to-trunk Connection	EKT
11	Stations 16/18 & 17/19—Amplified Conference	Not Amplified
10	Stations 24 & 25*—Amplified Conference	Not Amplified
06	Automatic Callback—Warning Tone	No Warning Tone
04	LCD Display Dialed Number—1 minute	15 seconds
02	Night Ringing over External Page**—Allowed	Not Allowed
01	BGM over External Page—Allowed	Not Allowed
00	External Page with All Call Page—Included	Not Included

5) Depress the HOLD key to place new data in memory.	All station 13/17 LEDs (except 19) go off.
6A) Go to Step 2 in another program table . . . or . . . 6B) Transfer data into working memory per Paragraph **02.06.**	SET LED goes off. Station 13/17 LED 19 goes off. New data is stored, previous data is erased.

* *STRATA VI$_e$ only.*
****Program 0#8** *selects which individual CO(s) will ring.*

TABLE 8

PROGRAM 0#2
ACCOUNT CODE DIGIT LENGTH SELECTION

1) Lock in the **SET** switch on the HKSU.	SET LED on. Station 13/17 LED 19 on. System is in program mode. Normal functions halt on station 13/17.
2) Depress the **SPKR** key on station 13/17.	SPKR LED steady on.
3) Dial **0 # 2** on the dial pad.	SPKR LED flashes continuously. The various LEDs indicate present data.
4) Refer to the System Record Sheet. Using the various keys, turn their associated LEDs on or off, as required. The detailed meaning of each key/LED is shown below. This program also defines the length of the SMDR account code. Enter a number from 4 to 15 via the dial pad.	If the LED is already on, depressing the associated key will turn it off and vice versa. LEDs may be turned off and on until the desired pattern is set. For account code length, as each digit is entered, the entry is verified by LEDs as shown.

NOTES:
1. *Depressing the # key displays the data without changing it.*
2. *To clear existing data without entering a new number, depress the * key two times.*

KEY/LED	LED ON	LED OFF
17	Ringing Repeat	Standard Ring
15	HDTU Modern Speed—1200 bps	300 bps
04 ~ 00	Account Code Digit Length	

X = LED on
All LEDs off = no data

Digit Length	4	5	6	7	8	9	10	11	12	13	14	15
04							X	X	X	X	X	X
03					X	X						
02	X	X	X	X							X	X
01			X	X					X	X		
00		X		X		X		X		X		X

5) Depress the **HOLD** key to place new data in memory.	All station 13/17 LEDs (except 19) go off.
6A) Go to Step 2 in another program table . . . or . . . 6B) Transfer data into working memory per Paragraph **02.06.**	SET LED goes off. Station 13/17 LED 19 goes off. New data is stored, previous data is erased.

TABLE 9

PROGRAM 03
SYSTEM ASSIGNMENTS (OPTIONS)

1) Lock in the **SET** switch on the HKSU.	SET LED on. Station 13/17 LED 19 on. System is in program mode. Normal functions halt on station 13/17.
2) Depress the SPKR key on station 13/17.	SPKR LED steady on.
3) Dial 0 3 on the dial pad.	SPKR LED flashes continuously. The various LEDs indicate present data.
4) Refer to the System Record Sheet. Using the various keys, turn their associated LEDs on or off, as required. The detailed meaning of each key/LED is shown below. *NOTE:* *If any key/LED is not shown, it is not used.*	An X on the record sheet means the LED should be on. If the LED is already on, depressing the associated key will turn it off and vice versa. LEDs may be turned off and on until the desired pattern is set.

KEY/LED	LED ON	LED OFF
10	Station 10—ALARM key	AD1 key
09	Station 10—DND key	NT key
08	3-ring Mode	2-ring Mode
07	CO Line Groups—Allowed	Not Allowed
04	Message Center—Station 12	Not Equipped
03	Message Center—Station 11	Not Equipped
02	Message Center—Station 10	Not Equipped

5) Depress the HOLD key to place new data in memory.	All station 13/17 LEDs (except 19) go off.
6A) Go to Step 2 in another program table . . . or . . . 6B) Transfer data into working memory per Paragraph **02.06.**	SET LED goes off. Station 13/17 LED 19 goes off. New data is stored, previous data is erased

**Voice First must be optioned for Off-hook Call Announce.*

TABLE 10

PROGRAM 04
CO LINE OUTPULSING SELECTION

1) Lock in the **SET** switch on the HKSU.	SET LED on. Station 13/17 LED 19 on. System is in program mode. Normal functions halt on station 13/17.
2) Depress the SPKR key on station 13/17.	SPKR LED steady on.
3) Dial 0 4 on the dial pad.	SPKR LED flashes continuously. CO LEDs indicate present data.
4) Refer to the System Record Sheet. Each CO key/LED represents itself; depress the required keys. • LED OFF = DTMF tone operation. • LED ON = Dial Pulse (DP) operation.	An X on the record sheet means the LED should be on. If the LED is already on, depressing the associated key will turn it off and vice versa. LEDs may be turned off and on until the desired pattern is set.
5) Depress the HOLD key to place new data in memory.	All station 13/17 LEDs (except 19) go off.
6A) Go to Step 2 in another program table . . . or . . . 6B) Transfer data into working memory per Paragraph **02.06.**	SET LED goes off. Station 13/17 LED 19 goes off. New data is stored, previous data is erased.

TABLE 11

PROGRAM #4—CO LINE IDENTIFICATION
(LCD EKT Required)

1) Lock in the **SET** switch on the HKSU.	SET LED on. Station 13/17 LED 19 on. System is in program mode. Normal functions halt on station 13/17. LCD is in program mode.
2) Depress the **SPKR** key on station 13/17.	SPKR LED steady on. LCD: Program No.?.
3) Dial **# 4** on the dial pad	SPKR LED flashes continuously. LCD displays program number.
4) Refer to the System Record Sheet. Depress the required key, and enter the CO line name, as defined in the System Record Sheet, via the dial pad. a) Depress the **#** key to access alpha characters. b) Move the cursor to the desired position (the left edge of the display for a new message, two spaces to the right of the preprogrammed message to add information). c) Depress the key with a letter you wish to enter. Use the **0** key to shift from letter to letter on the key. For example: • If you press **3**, a D will be displayed. By pressing **0**, the D is changed to E. By pressing **0** again, the E is changed to F. Press **0** again and the F changes to D. • To enter spaces, press **1**. d) If want to enter a number, press the **#** key to change to numeric characters. Numbers are also entered on the dial pad. Press the **#** key again to return to alpha characters. e) The following special characters are set by pressing **1** and then pressing **0** to step through the available characters: Q, Z, :, -, +, /.	Cursor appears in LCD display. LCD displays characters as they are entered.
5) Depress the **HOLD** key to place new data in memory.	All station 13/17 LEDs (except 19) go off.
6A) Return to Step 2 in order to continue with this program . . . or . . . 6B) Go to Step 2 in another program table . . . or . . . 6C) Transfer data into working memory per Paragraph **02.06.**	SET LED goes off. Station 13/17 LED 19 goes off. New data is stored, previous data is erased.

TABLE 12

PROGRAM 05
AUTOMATIC RECALL FROM HOLD TIMING

(This program is used only if LEDs 10, 11 and 12 are ALL off in **Program 5#XX.***)*

1) Lock in the **SET** switch on the HKSU.	SET LED on. Station 13/17 LED 19 on. System is in program mode. Normal functions halt on station 13/17.
2) Depress the SPKR key on station 13/17.	SPKR LED steady on.
3) Dial 0 5 on the dial pad.	SPKR LED flashes continuously. One LED indicates present data.
4) Refer to the System Record Sheet. Using the various keys, turn an associated LED on or off, as required. The detailed meaning of each key/LED is shown below. *NOTE:* *If any key/LED is not shown, it is not used.*	An X on the record sheet means the LED should be on. Only one LED is permitted to be on, depressing another key will turn that LED on and turn off the previous LED.

KEY/LED	LED ON
07	160 seconds
06	128 seconds
05	96 seconds
04	64 seconds
03	48 seconds
02	32 seconds
01	16 seconds
00	No Recall

5) Depress the HOLD key to place new data in memory.	All station 13/17 LEDs (except 19) go off.
6A) Go to Step 2 in another program table . . . or . . . 6B) Transfer data into working memory per Paragraph **02.06.**	SET LED goes off. Station 13/17 LED 19 goes off. New data is stored, previous data is erased.

TABLE 13

PROGRAM 0#5
CAMP-ON TIMEOUT

1) Lock in the **SET** switch on the HKSU.	SET LED on. Station 13/17 LED 19 on. System is in program mode. Normal functions halt on station 13/17.
2) Depress the SPKR key on station 13/17.	SPKR LED steady on.
3) Dial 0 # 5 on the dial pad.	SPKR LED flashes continuously. One LED indicates present data.
4) Refer to the System Record Sheet. Using the various keys, turn an associated LED on or off, as required. The detailed meaning of each key/LED is shown below. *NOTE:* *If any key/LED is not shown, it is not used..*	An X on the record sheet means the LED should be on. Only one LED is permitted to be on; depressing another key will turn that LED on and turn off the previous LED.

KEY/LED	LED ON
03	64 seconds
02	48 seconds
01	32 seconds
00	16 seconds

5) Depress the HOLD key to place new data in memory.	All station 13/17 LEDs (except 19) go off.
6A) Go to Step 2 in another program table . . . or . . . 6B) Transfer data into working memory per Paragraph **02.06.**	SET LED goes off. Station 13/17 LED 19 goes off. New data is stored, previous data is erased.

TABLE 14

PROGRAM 06
AUTOMATIC RELEASE ON HOLD ENABLE

1) Lock in the **SET** switch on the HKSU.	SET LED on. Station 13/17 LED 19 on. System is in program mode. Normal functions halt on station 13/17.
2) Depress the SPKR key on station 13/17.	SPKR LED steady on.
3) Dial 0 5 on the dial pad.	SPKR LED flashes continuously. CO LEDs indicate present data.
4) Refer to the System Record Sheet. Using the various keys, turn their associated LEDs on or off, as required. Each CO key/LED represents itself—that is, if LED 01 is on, CO1 will have AROH during normal operation. If LED 01 is off, AROH will not function on that line.	An X on the record sheet means the LED should be on (AROH enabled). If the LED is already on, depressing the associated key will turn it off and vice versa. LEDs may be turned off and on until the desired pattern is set.
5) Depress the HOLD key to place new data in memory.	All station 13/17 LEDs (except 19) go off.
6A) Go to Step 2 in another program table . . . or . . . 6B) Transfer data into working memory per Paragraph **02.06.**	SET LED goes off. Station 13/17 LED 19 goes off. New data is stored, previous data is erased.

NOTES:

1. *This program is used to release Trunk-to-Trunk connections if enabled with* **Programs 02** *and* **0#6.**
2. *If Automatic Release from Hold is available, the CO will automatically drop the lines when the outside party hangs up. However, if Automatic Release from Hold is not available, the person who set up the trunk-to-trunk connection must occasionally monitor the call and disconnect the CO lines when the two parties hang up.*

TABLE 15

PROGRAM 0#6
TRUNK-to-TRUNK CONNECTION ENABLE

1) Lock in the **SET** switch on the HKSU.	SET LED on. Station 13/17 LED 19 on. System is in program mode. Normal functions halt on station 13/17.
2) Depress the SPKR key on station 13/17.	SPKR LED steady on.
3) Dial 0 # 6 on the dial pad.	SPKR LED flashes continuously. CO LEDs indicate present data.
4) Refer to the System Record Sheet. Using the various keys, turn their associated LEDs on or off, as required. Each CO key/LED represents itself—that is, if LED 01 is on, CO1 will be allowed trunk-to-trunk connection, if LED 01 is off, trunk-to-trunk connection will not be allowed on that line, etc.	An X on the record sheet means the LED should be on. If the LED is already on, depressing the associated key will turn it off and vice versa. LEDs may be turned off and on until the desired pattern is set.
5) Depress the HOLD key to place new data in memory.	All station 13/17 LEDs (except 19) go off.
6A) Go to Step 2 in another program table . . . or . . . 6B) Transfer data into working memory per Paragraph **02.06.**	SET LED goes off. Station 13/17 LED 19 goes off. New data is stored, previous data is erased.

TABLE 16

PROGRAM 07
AUTOMATIC RELEASE ON HOLD TIMING

1) Lock in the **SET** switch on the HKSU.	SET LED on. Station 13/17 LED 19 on. System is in program mode. Normal functions halt on station 13/17.
2) Depress the **SPKR** key on station 13/17.	SPKR LED steady on.
3) Dial **0 7** on the dial pad.	SPKR LED flashes continuously. CO LEDs indicate present data.
4) Refer to the System Record Sheet. Using the appropriate keys, turn their associated LEDs on or off, as required. Each CO key/LED represents itself—that is, if LED 01 is on, CO1 will have XB (crossbar) timing for AROH. If LED 01 is off, CO1 will have ESS (electronic) timing, etc.	An X on the record sheet means the LED should be on. If the LED is already on, depressing the associated key will turn it off and vice versa. LEDs may be turned off and on until the desired pattern is set.
5) Depress the **HOLD** key to place new data in memory.	All station 13/17 LEDs (except 19) go off.
6A) Go to Step 2 in another program table . . . or . . . 6B) Transfer data into working memory per Paragraph **02.06.**	SET LED goes off. Station 13/17 LED 19 goes off. New data is stored, previous data is erased.

NOTE:
This program affects only those CO lines enabled via **Program 06** *(AROH should be enabled for Trunk-to-Trunk connections).*

TABLE 17

PROGRAM 0#7
AUTOMATIC RELEASE ON HOLD TIMING

1) Lock in the **SET** switch on the HKSU.	SET LED on. Station 13/17 LED 19 on. System is in program mode. Normal functions halt on station 13/17.
2) Depress the **SPKR** key on station 13/17.	SPKR LED steady on.
3) Dial **0 # 7** on the dial pad.	SPKR LED flashes continuously. CO LEDs indicate present data.
4) Refer to the System Record Sheet. Using the appropriate keys, turn their associated LEDs on or off, as required. Each CO key/LED represents itself—that is, if LED 01 is on, CO1 is bridged with the 1A2 system. If LED 01 is off, CO1 is not bridged, etc.	An X on the record sheet means the LED should be on. If the LED is already on, depressing the associated key will turn it off and vice versa. LEDs may be turned off and on until the desired pattern is set.
5) Depress the **HOLD** key to place new data in memory.	All station 13/17 LEDs (except 19) go off.
6A) Go to Step 2 in another program table . . . or . . . 6B) Transfer data into working memory per Paragraph **02.06.**	SET LED goes off. Station 13/17 LED 19 goes off. New data is stored, previous data is erased.

TABLE 18

PROGRAM 08
CO LINE CALL PICKUP SELECTION

1) Lock in the **SET** switch on the HKSU.	SET LED on. Station 13/17 LED 19 on. System is in program mode. Normal functions halt on station 13/17.
2) Depress the SPKR key on station 13/17.	SPKR LED steady on.
3) Dial 0 8 on the dial pad.	SPKR LED flashes continuously. CO LEDs indicate present data.
4) Refer to the System Record Sheet. Using the appropriate keys, turn their associated LEDs on or off, as required. Each CO key/LED represents itself—that is, if LED 01 is on, CO1 will belong to CPU #2. If LED 01 is off, CO1 will belong to CPU #1.	An X on the record sheet means the LED should be on. If the LED is already on, depressing the associated key will turn it off and vice versa. LEDs may be turned off and on until the desired pattern is set.
5) Depress the HOLD key to place new data in memory.	All station 13/17 LEDs (except 19) go off.
6A) Go to Step 2 in another program table . . . or . . . 6B) Transfer data into working memory per Paragraph **02.06.**	SET LED goes off. Station 13/17 LED 19 goes off. New data is stored, previous data is erased.

NOTE:
This program will have no meaning unless Call Pickup was selected in **Program 03.**

TABLE 19

PROGRAM 0#8
NIGHT RINGING OVER EXTERNAL PAGE
(STRATA VIe only)

1) Lock in the **SET** switch on the HKSU.	SET LED on. Station 17 LED 19 on. System is in program mode. Normal functions halt on station 17.
2) Depress the SPKR key on station 17.	SPKR LED steady on.
3) Dial 0 # 8 on the dial pad.	SPKR LED flashes continuously. CO LEDs indicate present data.
4) Refer to the System Record Sheet. Using the appropriate keys, turn their associated LEDs on or off, as required. Each CO key/LED represents itself—that is, if LED 01 is on, when the system is in night operation, incoming calls over that CO line will ring over the external page; if LED 01 is off, incoming calls over that CO line will not ring in night operation, etc.	An X on the record sheet means the LED should be on. If the LED is already on, depressing the associated key will turn it off and vice versa. LEDs may be turned off and on until the desired pattern is set.
5) Depress the HOLD key to place new data in memory.	All station 17 LEDs (except 19) go off.
6A) Go to Step 2 in another program table . . . or . . . 6B) Transfer data into working memory per Paragraph **02.06.**	SET LED goes off. Station 17 LED 19 goes off. New data is stored, previous data is erased.

NOTE:
Use this program only if LED 02 is on in **Program 02.**

TABLE 20

PROGRAM 09
SINGLE CO LINE (DIAL 9) GROUP SELECTION

1) Lock in the **SET** switch on the HKSU.	SET LED on. Station 13/17 LED 19 on. System is in program mode. Normal functions halt on station 13/17.
2) Depress the **SPKR** key on station 13/17.	SPKR LED steady on.
3) Dial **0 9** on the dial pad.	SPKR LED flashes continuously. CO LEDs indicate present data.
4) Refer to the System Record Sheet. Using the appropriate keys, turn their associated LEDs on or off, as required. Each CO key/LED represents itself—that is, if LED 01 is on, CO1 will be included in the "Dial 9" group.	An X on the record sheet means the LED should be on. If the LED is already on, depressing the associated key will turn it off and vice versa. LEDs may be turned off and on until the desired pattern is set.
5) Depress the **HOLD** key to place new data in memory.	All station 13/17 LEDs (except 19) go off.
6A) Go to Step 2 in another program table . . . or . . . 6B) Transfer data into working memory per Paragraph **02.06**.	SET LED goes off. Station 13/17 LED 19 goes off. New data is stored, previous data is erased.

NOTE:
Use this program only if LED 15 is off in **Program 01**.

TABLE 21

PROGRAM 09X
CO LINE GROUPS (DIAL 91 ~ 98) ASSIGNMENTS

1) Lock in the **SET** switch on the HKSU.	SET LED on. Station 13/17 LED 19 on. System is in program mode. Normal functions halt on station 13/17.
2) Depress the SPKR key on station 13/17.	SPKR LED steady on.
3) Dial 09X on the dial pad. (X = 1 ~ 8 depending upon the group being defined.) Dial 091 for "Dial 91" group; 092 for "Dial 92" group, etc.	SPKR LED flashes continuously. CO LEDs indicate present data.
4) Refer to the System Record Sheet. Using the appropriate keys, turn their associated LEDs on or off, as required. Each CO key/LED represents itself—that is, if LED 01 is on, CO1 will be included in the "Dial 9X" group.	An X on the record sheet means the LED should be on. If the LED is already on, depressing the associated key will turn it off and vice versa. LEDs may be turned off and on until the desired pattern is set.
5) Depress the HOLD key to place new data in memory.	All station 13/17 LEDs (except 19) go off.
6A) Return to Step 2 in order to continue with this program . . . or . . . 6B) Go to Step 2 in another program table . . . or . . . 6C) Transfer data into working memory per Paragraph **02.06**.	SET LED goes off. Station 13/17 LED 19 goes off. New data is stored, previous data is erased.

NOTE:
Use this program only if LED 15 is on in **Program 01**.

TABLE 22

PROGRAM 0#9
OFF-PREMISES LINE HUNTING

1) Lock in the **SET** switch on the HKSU.	SET LED on. Station 13/17 LED 19 on. System is in program mode. Normal functions halt on station 13/17.
2) Depress the **SPKR** key on station 13/17.	SPKR LED steady on.
3) Dial **0 # 9** on the dial pad.	SPKR LED flashes continuously. CO LEDs indicate present data.
4) Refer to the System Record Sheet. Using using the appropriate keys, turn their associated LEDs on or off, as required. • LED OFF: (DAY and NIGHT mode) Hunt rings with LINE1/TEL1 only. • LED ON (DAY mode): Hunt does not ring with any LINES/TELS. • LED ON (NIGHT mode): Hunt rings with **ALL** LINES/TELS.	An X on the record sheet means the LED should be on. If the LED is already on, depressing the associated key will turn it off and vice versa. LEDs may be turned off and on until the desired pattern is set.
5) Depress the **HOLD** key to place new data in memory.	All station 13/17 LEDs (except 19) go off.
6A) Go to Step 2 in another program table . . . or . . . 6B) Transfer data into working memory per Paragraph **02.06**.	SET LED goes off. Station 13/17 LED 19 goes off. New data is stored, previous data is erased.

TABLE 23

PROGRAM 190
PBX BACKUP

1) Lock in the **SET** switch on the HKSU.	SET LED on. Station 13/17 LED 19 on. System is in program mode. Normal functions halt on station 13/17.
2) Depress the **SPKR** key on station 13/17.	SPKR LED steady on.
3) Dial **1 9 0** on the dial pad.	SPKR LED flashes continuously. CO LEDs indicate present data.
4) Refer to the System Record Sheet. Using the appropriate keys, turn their associated LEDs on or off, as required. Each CO key/LED represents itself—that is, if LED 01 is on, the system assumes that the CO1 line is connected to a PBX line and will cause features such as Toll Restriction and Automatic Dialing to function accordingly, etc.	An X on the record sheet means the LED should be on. If the LED is already on, depressing the associated key will turn it off and vice versa. LEDs may be turned off and on until the desired pattern is set.
5) Depress the **HOLD** key to place new data in memory.	All station 13/17 LEDs (except 19) go off.
6A) Go to Step 2 in another program table . . . or . . . 6B) Transfer data into working memory per Paragraph **02.06.**	SET LED goes off. Station 13/17 LED 19 goes off. New data is stored, previous data is erased.

TABLE 24

PROGRAM 19X
PBX ACCESS CODES

1) Lock in the **SET** switch on the HKSU.	SET LED on. Station 13/17 LED 19 on. System is in program mode. Normal functions halt on station 13/17.
2) Depress the SPKR key on station 13/17.	SPKR LED steady on.
3) Dial 1 9 X on the dial pad. X = 1 ~ 8 (corresponding to the access code being programmed). Dial 1 9 1 (X = 1) to program first access code, 1 9 2 (X = 2) to program second access code, etc.	SPKR LED flashes continuously. Various LEDs indicate present data.
4) Refer to the System Record Sheet. Using the dial pad, enter the required access code (two digits **must** be entered). • If the access code is a single digit, enter * as the second digit. • If all combinations following a particular first digit are to be considered access codes (e.g., 91, 92, 93, etc.), depress key 18 (= "D" on record sheet) for the second digit.	LEDs 00 ~ 03 indicate data in binary format. LED 10 or 11 indicates which digit is being displayed.

Key/LED	Start	1st Digit	2nd Digit
11			Steady
10	Flash	Steady	

NOTES:
1. *Depressing the # key displays the data without changing it. The first # will display the first digit; the second # will display the second digit, etc.*
2. *To clear existing data without entering a new number, depress the * key two times.*

X = LED on
All LEDs off = no data

Binary Numbers	1	2	3	4	5	6	7	8	9	0	D
03								X	X	X	X
02				X	X	X	X				X
01		X	X			X	X			X	
00	X		X		X		X		X		X

5) Depress the HOLD key to place new data in memory.	All station 13/17 LEDs (except 19) go off.
6A) Return to Step 2 in order to continue with this program . . . or . . . 6B) Go to Step 2 in another program table . . . or . . . 6C) Transfer data into working memory per Paragraph **02.06**.	SET LED goes off. Station 13/17 LED 19 goes off. New data is stored, previous data is erased.

TABLE 25

PROGRAM 100
TOLL RESTRICTION SYSTEM PARAMETERS
(DIALING PLAN)

1) Lock in the **SET** switch on the HKSU.	SET LED on. Station 13/17 LED 19 on. System is in program mode. Normal functions halt on station 13/17.
2) Depress the **SPKR** key on station 13/17.	SPKR LED steady on.
3) Dial **1 0 0** on the dial pad.	SPKR LED flashes continuously. An LED indicates present data.
4) Refer to the System Record Sheet. Turn the associated LED on for the dialing plan of the Home Area Code.	An X on the record sheet means the LED should be on. Only one LED may be on at one time. If the LED is already on, depressing the associated key will turn it off and vice versa.
5) Depress the **HOLD** key to place new data in memory.	All station 13/17 LEDs (except 19) go off.
6A) Go to Step 2 in another program table . . . or . . . 6B) Transfer data into working memory per Paragraph **02.06.**	SET LED goes off. Station 13/17 LED 19 goes off. New data is stored, previous data is erased.

TABLE 26

PROGRAM 101
TOLL RESTRICTION DISABLE

1) Lock in the **SET** switch on the HKSU.	SET LED on. Station 13/17 LED 19 on. System is in program mode. Normal functions halt on station 13/17.
2) Depress the **SPKR** key on station 13/17.	SPKR LED steady on.
3) Dial **1 0 1** on the dial pad.	SPKR LED flashes continuously. CO LEDs indicate present data.
4) Refer to the System Record Sheet. Using the appropriate keys, turn their associated LEDs on or off, as required. Each CO key/LED represents itself—that is, if LED 01 is on, toll restriction is not applied to that CO1 line; if LED 01 is off, toll restriction is applied to that CO1, etc.	An X on the record sheet means the LED should be on. If the LED is already on, depressing the associated key will turn it off and vice versa. LEDs may be turned off and on until the desired pattern is set.
5) Depress the **HOLD** key to place new data in memory.	All station 13/17 LEDs (except 19) go off.
6A) Go to Step 2 in another program table . . . or . . . 6B) Transfer data into working memory per Paragraph **02.06.**	SET LED goes off. Station 13/17 LED 19 goes off. New data is stored, previous data is erased.

TABLE 27

PROGRAM 102
FORCED ACCOUNT CODE CHECK

1) Lock in the **SET** switch on the HKSU.	SET LED on. Station 13/17 LED 19 on. System is in program mode. Normal functions halt on station 13/17.
2) Depress the **SPKR** key on station 13/17.	SPKR LED steady on.
3) Dial **1 0 2** on the dial pad.	SPKR LED flashes continuously. CO LEDs indicate present data.
4) Refer to the System Record Sheet. Using the appropriate keys, turn their LEDs on or off, as required. • LED ON = Forced Account Codes are checked. • Each CO key/LED represents itself—that is, if the LED 01 is on, stations calling out over CO1 will be forced to enter an account code (if required by **Program 5#XX**).	An X on the record sheet means the LED should be on. If the LED is already on, depressing the associated key will turn it off and vice versa. LEDs may be turned off and on until the desired pattern is set.
5) Depress the **HOLD** key to place new data in memory.	All station 13/17 LEDs (except 19) go off.
6A) Go to Step 2 in another program table . . . or . . . 6B) Transfer data into working memory per Paragraph **02.06.**	SET LED goes off. Station 13/17 LED 19 goes off. New data is stored, previous data is erased.

TABLE 28

PROGRAM 103/105
OTHER COMMON CARRIER or EQUAL ACCESS #1 and #2

1) Lock in the **SET** switch on the HKSU.	SET LED on. Station 13/17 LED 19 on. System is in program mode. Normal functions halt on station 13/17.
2) Depress the **SPKR** key on station 13/17.	SPKR LED steady on.
3) Dial **103** (**105**) on the dial pad.	SPKR LED flashes continuously. LEDs indicate present data.
4) Refer to the System Record Sheet. This program registers the 1st & 2nd equal access (OCC) numbers used by the system. These 5-digit numbers are entered via the dial pad.	As each digit is entered, the entry is verified by LEDs as shown below.

Key/LED	Start	1st Digit	2nd Digit	3rd Digit	4th Digit	5th Digit
12					Steady	Steady
11			Steady	Steady		
10	Flash	Steady		Steady		Steady

X = LED on
All LEDs off = no data

Binary Numbers:	1	2	3	4	5	6	7	8	9	0
03								X	X	X
02				X	X	X	X			
01		X	X			X	X			X
00	X		X		X		X		X	

5) Depress the **HOLD** key to place new data in memory.	All station 13/17 LEDs (except 19) go off. New data is stored, previous data is erased.
6A) Go to Step 2 in another program table . . . or . . . 6B) Transfer data into working memory per Paragraph **02.06.**	SET LED goes off. Station 13/17 LED 19 goes off.

NOTE:
Program 105 *follows the same procedure as* **Program 103.**
Program 105 *is used to register the second OCC number used by the system.*

TABLE 29

PROGRAM 104/106
OTHER COMMON CARRIER AUTHORIZATION CODE LENGTHS #1 and #2

1) Lock in the **SET** switch on the HKSU.	SET LED on. Station 13/17 LED 19 on. System is in program mode. Normal functions halt on station 13/17.
2) Depress the SPKR key on station 13/17.	SPKR LED steady on.
3) Dial 104 (106) n the dial pad.	SPKR LED flashes continuously. The various LEDs indicate present data.
4) Refer to the System Record Sheet. This program defines the lengths of the authorization codes for OCC #1 & #2. These 2-digit numbers are entered via the dial pad.	As each digit is entered, the entry is verified by LEDs as shown below.

Key/LED	Start	1st Digit	2nd Digit
11			Steady
10	Flash	Steady	

X = LED on
All LEDs off = no data

Binary Numbers:	1	2	3	4	5	6	7	8	9	0
03								X	X	X
02				X	X	X	X			
01		X	X			X	X			X
00	X		X		X		X		X	

5) Depress the HOLD key to place new data in memory.	All station 13/17 LEDs (except 19) go off. New data is stored, previous data is erased.
6A) Go to Step 2 in another program table . . . or . . . 6B) Transfer data into working memory per Paragraph **02.06.**	SET LED goes off. Station 13/17 LED 19 goes off.

NOTE:
Program 106 *follows the same procedure as* **Program 104.**
Program 106 *defines the length of OCC#2 authorization code.*

TABLE 30

PROGRAM 108/109
TOLL RESTRICTION OVERRIDE CODES #1 and #2

1) Lock in the **SET** switch on the HKSU.	SET LED on. Station 13/17 LED 19 on. System is in program mode. Normal functions halt on station 13/17.
2) Depress the **SPKR** key on station 13/17.	SPKR LED steady on.
3) Dial **108** (**109**) on the dial pad.	SPKR LED flashes continuously. LEDs indicate present data.
4) Refer to the System Record Sheet. Enter the 4-digit Toll Restriction Override Codes via the dial pad.	As each digit is entered, the entry is verified by LEDs as shown below.

Key/LED	Start	1st Digit	2nd Digit	3rd Digit	4th Digit
12					Steady
11			Steady	Steady	
10	Flash	Steady		Steady	

X = LED on
All LEDs off = no data

Binary Numbers:	1	2	3	4	5	6	7	8	9	0
03								X	X	X
02				X	X	X	X			
01		X	X			X	X			X
00	X		X		X		X		X	

5) Depress the **HOLD** key to place new data in memory.	All station 13/17 LEDs (except 19) go off. New data is stored, previous data is erased.
6A) Go to Step 2 in another program table . . . or . . . 6B) Transfer data into working memory per Paragraph **02.06.**	SET LED goes off. Station 13/17 LED 19 goes off.

NOTE:
Program 5#XX, *LED 13 enables stations to use Toll Restriction Override Codes 1 & 2.*

TABLE 31

PROGRAM 1X0
TOLL RESTRICTION CLASS PARAMETERS

1) Lock in the **SET** switch on the HKSU.	SET LED on. Station 13/17 LED 19 on. System is in program mode. Normal functions halt on station 13/17.
2) Depress the SPKR key on station 13/17.	SPKR LED steady on.
3) Dial 1 X 0 on the dial pad.	SPKR LED flashes continuously. An LED indicates present data.
4) Refer to the System Record Sheet. Using the various keys, turn their associated LEDs on or off, as required. The detailed meaning of each key/LED is shown below. *NOTE:* *If any key/LED is not shown, it is not used.*	An X on the record sheet means the LED should be on. If the LED is already on, depressing the associated key will turn it off and vice versa. LEDs may be turned off and on until the desired pattern is set.
5) Depress the HOLD key to place new data in memory.	All station 13/17 LEDs (except 19) go off.
6A) Go to Step 2 in another program table . . . or . . . 6B) Transfer data into working memory per Paragraph **02.06.**	SET LED goes off. Station 13/17 LED 19 goes off. New data is stored, previous data is erased.

KEY/LED	LED ON	LED OFF
02	Area code + 555 + XXXX—Allowed	Not Allowed
01	01 or 011 Overseas Restricted	Allowed
00	0 + Restricted	Allowed

TABLE 32

PROGRAM 1XY
TOLL RESTRICTION CLASS AREA CODE ENTRY
(LCD TELEPHONE REQUIRED)

1) Lock in the **SET** switch on the HKSU.	SET LED on. Station 13/17 LED 19 on. System is in program mode. Normal functions halt on station 13/17. LCD is blank.
2) Depress the **SPKR** key on station 13/17.	SPKR LED steady on. LCD is blank.
3) Dial **1 X 2** (Allow), **1 X 3** (Deny) or **1 X 4** (Display) as required. (X = Restriction class 1 ~ 4.)	SPKR LED flashes continuously. LCD displays dialed number.
4) Press **#** key.	1 X 2 = LCD is blank. 1 X 3 = LCD is blank. 1 X 4 = LCD displays all allowed codes.
5) Enter first area code in range sequence (start).	LCD displays code entered.
6) Depress ***** key.*	LCD shifts left to provide space for next code.
7) Enter final area code in range sequence (stop).*	LCD displays code entered.
8) Depress **#** key.	LCD is blank.
9) Return to Step 5 to enter additional area codes.	
10) Depress the **HOLD** key to place new data in memory.	All station 13/17 LEDs (except 19) go off.
11A) Return to Step 2 in order to continue with this program . . . or . . . 11B) Go to Step 2 in another program table . . . or . . . 11C) Transfer data into working memory per Paragraph **02.06.**	SET LED goes off. Station 13/17 LED 19 goes off. New data is stored, previous data is erased.

**Skip Steps 6 and 7 if only one area code in sequence is being entered.*

TABLE 33

PROGRAM 1XZ
TOLL RESTRICTION CLASS OFFICE CODE ENTRY
(LCD TELEPHONE REQUIRED)

1) Lock in the **SET** switch on the HKSU.	SET LED on. Station 13/17 LED 19 on. System is in program mode. Normal functions halt on station 13/17. LCD is blank.
2) Depress the SPKR key on station 13/17.	SPKR LED steady on. LCD is blank.
3) Dial 1 X 6 (Allow), 1 X 7 (Deny) or 1 X 8 (Display) as required. (X = Restriction class 1 ~ 4.)	SPKR LED flashes continuously. LCD displays dialed number.
4) Press # key.	1 X 6 = LCD is blank. 1 X 7 = LCD is blank. 1 X 8 = LCD displays all allowed codes.
5) Enter first office code in range sequence (start).	LCD displays code entered.
6) Depress * key:*	LCD shifts left to provide space for next code.
7) Enter final office code in range sequence (stop).*	LCD displays code entered.
8) Depress # key.	LCD is blank.
9) Return to Step 5 to enter additional office codes.	
10) Depress the HOLD key to place new data in memory.	All station 13/17 LEDs (except 19) go off.
11A) Return to Step 2 in order to continue with this program . . . or . . . 11B) Go to Step 2 in another program table . . . or . . . 11C) Transfer data into working memory per Paragraph **02.06.**	SET LED goes off. Station 13/17 LED 19 goes off. New data is stored, previous data is erased.

**Skip Steps 6 and 7 if only one office code in sequence is being entered.*

TABLE 34

PROGRAM 2XY
TOLL RESTRICTION AREA/OFFICE CODE EXCEPTION TABLE
(LCD TELEPHONE REQUIRED)

1) Lock in the **SET** switch on the HKSU.	SET LED on. Station 13/17 LED 19 on. System is in program mode. Normal functions halt on station 13/17. LCD is blank.
2) Depress the SPKR key on station 13/17.	SPKR LED steady on. LCD is blank.
3) Dial 2 X 1 (X = Table 1 ~ 8).	LCD displays dialed number, then shifts left to provide space for next entry (or displays current area code).
4) Enter area code.	LCD clears and displays area code entered. Binary data is shown on LEDs 00 ~ 03.
5) Depress the HOLD key.	LCD is blank.
6) Depress the SPKR key.	SPKR LED steady on. LCD is blank.
7) Dial 2 X 2 (Allow), 2 X 3 (Deny) or 2 X 4 (Display) as required. (X = Restriction class 1 ~ 8.)	SPKR LED flashes continuously. LCD displays dialed number.
8) Press # key.	2 X 2 = LCD is blank. 2 X 3 = LCD is blank. 2 X 4 = LCD displays all allowed codes.
9) Enter first office code in range sequence (start).	LCD displays code entered.
10) Depress * key.*	LCD shifts left to provide space for next code.
11) Enter final office code in range sequence (stop).*	LCD displays code entered.
12) Depress # key.	LCD is blank.
13) Return to Step 5 to enter additional office codes.	
14) Depress the HOLD key to place new data in memory.	All station 13/17 LEDs (except 19) go off.
15A) Return to Step 2 in order to continue with this program . . . or . . . 15B) Go to Step 2 in another program table . . . or . . . 15C) Transfer data into working memory per Paragraph **02.06.**	SET LED goes off. Station 13/17 LED 19 goes off. New data is stored, previous data is erased.

**Skip Steps 10 and 11 if only one office code in sequence is being entered.*

TABLE 35

PROGRAM 1X1
TOLL RESTRICTION CLASS AREA/OFFICE CODE EXCEPTION TABLE SELECTION

1) Lock in the **SET** switch on the HKSU.	SET LED on. Station 13/17 LED 19 on. System is in program mode. Normal functions halt on station 13/17.
2) Depress the SPKR key on station 13/17.	SPKR LED steady on.
3) Dial 1X1 on the dial pad. (X = Restriction class 1 ~ 4, as defined in **Program 6XX**.)	SPKR LED flashes continuously. The various LEDs indicate present data.
4) Refer to the System Record Sheet. Using the various keys, turn their associated LEDs on or off, as required. The detailed meaning of each key/LED is shown below. *NOTE:* *If any key/LED is not shown, it is not used.*	An X on the record sheet means the LED should be on. If the LED is already on, depressing the associated key will turn it off and vice versa. LEDs may be turned off and on until the desired pattern is set.
5) Depress the HOLD key to place new data in memory.	All station 13/17 LEDs (except 19) go off.
6A) Return to Step 2 in order to continue with this program . . . or . . . 6B) Go to Step 2 in another program table . . . or . . . 6C) Transfer data into working memory per Paragraph **02.06.**	SET LED goes off. Station 13/17 LED 19 goes off. New data is stored, previous data is erased.

KEY/LED	LED ON	LED OFF
07	Area/Office Code Table 8 Selected	Not Selected
06	Area/Office Code Table 7 Selected	Not Selected
05	Area/Office Code Table 6 Selected	Not Selected
04	Area/Office Code Table 5 Selected	Not Selected
03	Area/Office Code Table 4 Selected	Not Selected
02	Area/Office Code Table 3 Selected	Not Selected
01	Area/Office Code Table 2 Selected	Not Selected
00	Area/Office Code Table 1 Selected	Not Selected

TABLE 36
PROGRAM 1#00
LEAST COST ROUTING HOME AREA CODE ENTRY
(LCD EKT REQUIRED—STRATA VIe only)

1) Lock in the **SET** switch on the HKSU.	SET LED on. Station 17 LED 19 on. System is in program mode. Normal functions halt on station 17. LCD: PROGRAM MODE
2) Depress the **SPKR** key on station 17.	SPKR LED steady on. LCD: PROGRAM NO.?
3) Dial **1 # 0 0** on the dial pad.	SPKR LED flashes continuously. LCD: DATA = (indicates present data)
4) Refer to the System Record Sheet. Using the dial pad, enter the system's home area code. *NOTE:* *To clear existing data without entering a new number, depress the ▪ key once for each digit.*	LCD: (displays code entered)
5) Depress the **HOLD** key to place new data in memory.	All station 17 LEDs (except 19) go off.
6A) Go to Step 2 in another program table . . . or . . . 6B) Transfer data into working memory per Paragraph **02.06**.	SET LED goes off. Station 17 LED 19 goes off. New data is stored, previous data is erased.

TABLE 37

PROGRAM 1#0X
LEAST COST ROUTING SPECIAL CODES
(LCD EKT REQUIRED—STRATA VIe only)

1) Lock in the **SET** switch on the HKSU.	SET LED on. Station 17 LED 19 on. System is in program mode. Normal functions halt on station 17. LCD: PROGRAM MODE
2) Depress the **SPKR** key on station 17.	SPKR LED steady on. LCD: PROGRAM NO.?
3) Dial **1 # 0 X** on the dial pad. X = 1 ~ 5 corresponds to five different special codes that may be entered.	SPKR LED flashes continuously. LCD: DATA = (indicates present data)
4) Refer to the System Record Sheet. Using the dial pad, enter the special code number.	LCD displays code entered.
5) Depress the **HOLD** key to place new data in memory.	All station 17 LEDs (except 19) go off.
6A) Go to Step 2 in another program table . . . or . . . 6B) Transfer data into working memory per Paragraph **02.06.**	SET LED goes off. Station 17 LED 19 goes off. New data is stored, previous data is erased.

TABLE 38

PROGRAM 1#06
LEAST COST ROUTING PARAMETERS
(LCD EKT REQUIRED—STRATA VIe only)

1) Lock in the **SET** switch on the HKSU.	SET LED on. Station 17 LED 19 on. System is in program mode. Normal functions halt on station 17. LCD: PROGRAM MODE
2) Depress the **SPKR** key on station 17.	SPKR LED steady on. LCD: PROGRAM NO.?
3) Dial **1 # 0 3** on the dial pad.	SPKR LED flashes continuously. LCD: (displays program number) Various LEDs indicate present data.
4) Refer to the System Record Sheet. Using keys 00 ~ 02, turn their associated LEDs ON or OFF, as required.	LCD displays code entered.
5) Depress the **HOLD** key to place new data in memory.	All station 17 LEDs (except 19) go off.
6A) Go to Step 2 in another program table . . . or . . . 6B) Transfer data into working memory per Paragraph **02.06.**	SET LED goes off. Station 17 LED 19 goes off. New data is stored, previous data is erased.

TABLE 39

PROGRAM 1#07X
SELECT LONG DISTANCE INFORMATION (LDI) ROUTE
(LCD EKT REQUIRED—STRATA VIe only)

1) Lock in the **SET** switch on the HKSU.	SET LED on. Station 17 LED 19 on. System is in program mode. Normal functions halt on station 17. LCD: PROGRAM MODE
2) Depress the **SPKR** key on station 17.	SPKR LED steady on. LCD: PROGRAM NO.?
3) Dial **1 # 0 7** on the dial pad.	SPKR LED flashes continuously. LCD: DATA = 8
4) Refer to the System Record Sheet. Using the dial pad, enter X (X = 1 ~ 8, corresponding to one of eight route table numbers).	LCD displays code entered.
5) Depress the **HOLD** key to place new data in memory.	All station 17 LEDs (except 19) go off.
6A) Go to Step 2 in another program table . . . or . . . 6B) Transfer data into working memory per Paragraph **02.06.**	SET LED goes off. Station 17 LED 19 goes off. New data is stored, previous data is erased.

TABLE 40

PROGRAM 1#08X
SELECT LOCAL CALL ROUTE
(LCD EKT REQUIRED—STRATA VIe only)

1) Lock in the **SET** switch on the HKSU.	SET LED on. Station 17 LED 19 on. System is in program mode. Normal functions halt on station 17. LCD: PROGRAM MODE
2) Depress the **SPKR** key on station 17.	SPKR LED steady on. LCD: PROGRAM NO.?.
3) Dial **1 # 0 8** on the dial pad.	SPKR LED flashes continuously. LCD: DATA = 8
4) Refer to the System Record Sheet. Using the dial pad enter X. X = 1 ~ 8, corresponding to one of eight route table numbers.	LCD displays code entered.
5) Depress the **HOLD** key to place new data in memory.	All station 17 LEDs (except 19) go off.
6A) Go to Step 2 in another program table . . . or . . . 6B) Transfer data into working memory per Paragraph **02.06.**	SET LED goes off. Station 17 LED 19 goes off. New data is stored, previous data is erased.

TABLE 41

PROGRAM 1#09
DIAL ZERO (0) TIMEOUT
(LCD EKT REQUIRED—STRATA VIe only)

1) Lock in the **SET** switch on the HKSU.	SET LED on. Station 17 LED 19 on. System is in program mode. Normal functions halt on station 17. LCD: PROGRAM MODE
2) Depress the SPKR key on station 17.	SPKR LED steady on. LCD: PROGRAM NO.?
3) Dial 1 # 0 9 on the dial pad.	SPKR LED flashes continuously. LCD: (displays dialed number) An LED indicates present data.
4) Refer to the System Record Sheet. Using one key (00 ~ 03), turn its associated LED ON or OFF as required. *NOTE:* *Only one LED may be on at a time.*	An X on the record sheet means the LED should be on. Only one LED is permitted to be on; depressing another key will turn that LED on and turn off the previous LED.
5) Depress the HOLD key to place new data in memory.	All station 17 LEDs (except 19) go off.
6A) Go to Step 2 in another program table . . . or . . . 6B) Transfer data into working memory per Paragraph **02.06.**	SET LED goes off. Station 17 LED 19 goes off. New data is stored, previous data is erased.

TABLE 42

PROGRAM 1#XY
LEAST COST ROUTING AREA CODE TABLE
(LCD TELEPHONE REQUIRED—STRATA VIe only)

1) Lock in the **SET** switch on the HKSU.	SET LED on. Station 17 LED 19 on. System is in program mode. Normal functions halt on station 17. LCD: PROGRAM MODE
2) Depress the SPKR key on station 17.	SPKR LED steady on. LCD: PROGRAM NO.?
3) Dial 1 # X 2 (Allow), 1 # X 3 (Delete) or 1 # X 4 (Display) as required. (X = Route Table 1 ~ 8.)	SPKR LED flashes continuously. LCD: (displays dialed number)
4) Press # key.	1 # X 2 LCD: DATA = 1 # X 3 LCD: DATA = 1 # X 4 LCD: (displays all allowed codes)
5) Enter first area code in range sequence (start).	LCD: (displays code entered)
6) Depress * key.*	LCD: (shifts left to provide space for next code)
7) Enter final area code in range sequence (stop).*	LCD: (displays code entered)
8) Depress # key.	Number temporarily stored.
9) Return to Step 5 to enter additional area codes.	
10) Depress the HOLD key to place new data in memory.	All station 17 LEDs (except 19) go off.
11A) Return to Step 2 in order to continue with this program . . . or . . . 11B) Go to Step 2 in another program table . . . or . . . 11C) Transfer data into working memory per Paragraph **02.06.**	SET LED goes off. Station 17 LED 19 goes off. New data is stored, previous data is erased.

**Skip Steps 6 and 7 if only one area code in sequence is being entered.*

TABLE 43

PROGRAM 1#X8Y
LEAST COST ROUTE DEFINITION
(LCD EKT REQUIRED—STRATA VIe only)

1) Lock in the **SET** switch on the HKSU.	SET LED on. Station 17 LED 19 on. System is in program mode. Normal functions halt on station 17. LCD: PROGRAM MODE
2) Depress the SPKR key on station 17.	SPKR LED steady on. LCD: PROGRAM NO.?.
3) Dial 1#X8Y on the dial pad. X = Route Table 1 ~ 8; Y = Route Definition 1 ~ 4.	SPKR LED flashes continuously. LCD: DATA =
4) Refer to the System Record Sheet. Using the dial pad, enter the Route Definition number and Modified Digits Table number.	LEDs 00, 01, 02 & 03 show data in binary format. LEDs 10 & 11 indicate which digits are being displayed.
5) Depress the HOLD key to place new data in memory.	All station 17 LEDs (except 19) go off.
6A) Go to Step 2 in another program table . . . or . . . 6B) Transfer data into working memory per Paragraph **02.06**.	SET LED goes off. Station 17 LED 19 goes off. New data is stored, previous data is erased.

TABLE 44

PROGRAM 1#X50 ~ 53
START TIME A SCHEDULE
(LCD EKT REQUIRED—STRATA VIe only)

1) Lock in the **SET** switch on the HKSU.	SET LED on. Station 17 LED 19 on. System is in program mode. Normal functions halt on station 17. LCD: PROGRAM MODE
2) Depress the SPKR key on station 17.	SPKR LED steady on. LCD: PROGRAM NO.?
3) Dial 1#X50 ~ 53 on the dial pad. X = Route Table 1 ~ 8.	SPKR LED flashes continuously. LCD: (displays dialed number)
4) Refer to the System Record Sheet. Enter the required data for 50 ~ 53 via the dial pad.	LCD: (displays code entered)
5) Depress the HOLD key to place new data in memory.	All station 17 LEDs (except 19) go off.
6A) Return to Step 2 in order to continue with this program . . . or . . . 6B) Go to Step 2 in another program table . . . or . . . 6C) Transfer data into working memory per Paragraph **02.06.**	SET LED goes off. Station 17 LED 19 goes off. New data is stored, previous data is erased.

TABLE 45

PROGRAM 1#X60 ~ 63
START TIME B SCHEDULE
(LCD EKT REQUIRED—STRATA VIe only)

1) Lock in the **SET** switch on the HKSU.	SET LED on. Station 17 LED 19 on. System is in program mode. Normal functions halt on station 17. LCD: PROGRAM MODE
2) Depress the **SPKR** key on station 17.	SPKR LED steady on. LCD: PROGRAM NO.?
3) Dial **1 # X 6 0** ~ **6 3** on the dial pad. X = Route Table 1 ~ 8.	SPKR LED flashes continuously. LCD: (displays dialed number)
4) Refer to the System Record Sheet. Enter the required data for 60 ~ 63 via the dial pad.	LCD: (displays code entered)
5) Depress the **HOLD** key to place new data in memory.	All station 17 LEDs (except 19) go off.
6A) Return to Step 2 in order to continue with this program . . . or . . . 6B) Go to Step 2 in another program table . . . or . . . 6C) Transfer data into working memory per Paragraph **02.06.**	SET LED goes off. Station 17 LED 19 goes off. New data is stored, previous data is erased.

TABLE 46

PROGRAM 1#X70 ~ 73
START TIME C SCHEDULE
(LCD EKT REQUIRED—STRATA VIe only)

1) Lock in the **SET** switch on the HKSU.	SET LED on. Station 17 LED 19 on. System is in program mode. Normal functions halt on station 17. LCD: PROGRAM MODE
2) Depress the SPKR key on station 17.	SPKR LED steady on. LCD: PROGRAM NO.?
3) Dial 1 # X 7 0 ~ 7 3 on the dial pad. X = Route Table 1 ~ 8.	SPKR LED flashes continuously. LCD: (displays dialed number)
4) Refer to the System Record Sheet. Enter the required data for 70 ~ 73 via the dial pad.	LCD: (displays code entered)
5) Depress the HOLD key to place new data in memory.	All station 17 LEDs (except 19) go off.
6A) Return to Step 2 in order to continue with this program . . . or . . . 6B) Go to Step 2 in another program table . . . or . . . 6C) Transfer data into working memory per Paragraph **02.06**.	SET LED goes off. Station 17 LED 19 goes off. New data is stored, previous data is erased.

TABLE 47

PROGRAM 1#9XY
MODIFIED DIGITS TABLE
(LCD EKT REQUIRED—STRATA VIe only)

1) Lock in the **SET** switch on the HKSU.	SET LED on. Station 17 LED 19 on. System is in program mode. Normal functions halt on station 17. LCD: PROGRAM MODE
2) Depress the SPKR key on station 17.	SPKR LED steady on. LCD: PROGRAM NO.?
3) Dial 1 # 9 X Y on the dial pad. X = Modified Digits Table 1 ~ 6, Y = (0) delete, (1) add.	SPKR LED flashes continuously. LCD: (displays dialed number) Various LEDs indicate present data.
4) Refer to the System Record Sheet. Using the dial pad: A) Delete Table: Enter the quantity of digits to be deleted from the dialed number. B) Add Table: Enter the required modified digits to be added to the dialed number. To insert pauses (see table for duration in seconds) while adding digits, press the appropriate key when pause is required. *NOTE:* *Digits may be added or deleted in the same Modified Digits Table.*	LCD: (displays digits entered)
5) Depress the HOLD key to place new data in memory.	All station 17 LEDs (except 19) go off.
6A) Return to Step 2 in order to continue with this program . . . or . . . 6B) Go to Step 2 in another program table . . . or . . . 6C) Transfer data into working memory per Paragraph **02.06.**	SET LED goes off. Station 17 LED 19 goes off. New data is stored, previous data is erased.

KEY/LED	PAUSE
08	16
07	14
06	12
05	10
04	8
03	6
02	4
01	2

TABLE 48

PROGRAM 2#XY
LEAST COST ROUTING AREA/OFFICE CODE EXCEPTION TABLE
(LCD EKT REQUIRED—STRATA VIe only)

1) Lock in the **SET** switch on the HKSU.	SET LED on. Station 17 LED 19 on. Normal functions halt on station 17. LCD: PROGRAM MODE
2) Depress the SPKR key on station 17.	SPKR LED steady on. LCD: PROGRAM NO.?
3) Dial 2 # X 0 on the dial pad. X = Area/Office Code Table 1 ~ 8.	SPKR LED & LED 10 flash continuously.
4) Refer to System Record Sheet. Enter Route Table number (1 ~ 8).	LCD: (displays table number)
5) Depress the HOLD key.	
6) Depress the SPKR key on station 17.	SPKR LED steady on. LCD: PROGRAM NO.?
7) Dial 2 # X 1 on the dial pad. X = Area/Office Code Table 1 ~ 8.	LCD: (displays dialed number) then . . . DATA =
8) Enter Area Code via the dial pad.	LCD: (displays area code entered)
9) Depress the HOLD key.	
10) Depress the SPKR key.	SPKR LED steady on. LCD: PROGRAM NO.?
11) Dial 2#X2 (Add), 2#X3 (Delete), or 2#X4 (Display). X = Area/Office Code Table 1 ~ 8.	SPKR LED flashes continuously. LCD: (displays dialed number)
12) Depress # key.	2 # X 2 LCD: DATA = 2 # X 3 LCD: DATA = 2 # X 4 LCD: (displays all currently programmed office codes)
13) Enter first Area Code in range sequence (start).	LCD: (displays code entered)
14) Depress # key.*	LCD: (shifts left to provide space for next code)
15) Enter final Area Code in range sequence (stop).*	LCD: (displays code entered)
16) Depress # key.	
17) Return to Step 10 to enter additional Area Codes.	
18) Depress the HOLD key to place new data in memory.	All station 17 LEDs (except 19) go off.
19A) Go to step 2 in another program table . . . or . . . 19B) Transfer data into working memory per Paragraph **02.06.**	SET LED goes off. Station 17 LED 19 goes off. New data is stored, previous data is erased.

**Skip Steps 14 and 15 if only one area code in sequence is being entered.*

TABLE 49

PROGRAM 3XX
STATION CO LINE ACCESS

1) Lock in the **SET** switch on the HKSU.	SET LED on. Station 13/17 LED 19 on. System is in program mode. Normal functions halt on station 13/17.
2) Depress the SPKR key on station 13/17.	SPKR LED steady on.
3) Dial 3 X X on the dial pad (XX = the number of the station(s) to be programmed).	SPKR LED flashes continuously. The CO LEDs indicate present data.
4) Refer to the System Record Sheet. Using the appropriate keys, turn their associated LEDs on or off, as required. • LED ON = Access allowed. • Each CO key/LED represents itself—that is, if LED 01 is on, then the station being programmed (XX) is allowed access to CO1, etc.	An X on the record sheet means the LED should be on. If the LED is already on, depressing its associated key will turn it off and vice versa. LEDs may be turned off and on until the desired pattern is set.
5) Depress the HOLD key to place new data in memory.	All station 13/17 LEDs (except 19) go off.
6A) Return to Step 2 in order to continue with this program . . . or . . . 6B) Go to Step 2 in another program table . . . or . . . 6C) Transfer data into working memory per Paragraph **02.06.**	SET LED goes off. Station 13/17 LED 19 goes off. New data is stored, previous data is erased.

NOTE:
For multiple station programming, refer to Paragraph **02.10.**

TABLE 50
PROGRAM 3#XX
HOXB, HMDB and HIOB ENABLE

1) Lock in the **SET** switch on the HKSU.	SET LED on. Station 13/17 LED 19 on. System is in program mode. Normal functions halt on station 13/17.
2) Depress the **SPKR** key on station 13/17.	SPKR LED steady on.
3) Dial **3 # X X** on the dial pad (XX = the number of the station(s) to be programmed).	SPKR LED flashes continuously. The various LEDs indicate present data.
4) Refer to the System Record Sheet. Using the appropriate keys, turn their associated LEDs on or off, as required. The detailed meaning of each key/LED is shown below (if any key/LED is not shown, it is not used).	An X on the record sheet means the LED should be on. If the LED is already on, depressing the associated key will turn it off and vice versa. LEDs may be turned off and on until the desired pattern is set.

KEY/LED	FEATURE	LED ON	LED OFF
07	HIOB	Voice Mail	Normal
06	HIOB Outgoing Signals	DTMF	DP
04	HMDB	Equipped	Not Equipped
03	HIOB	Equipped	Not Equipped
02	OPX	Busy-out	No Busy Signal
01	OPX	Equipped	Not Equipped
00	HIOB Circuit	Privacy	Privacy Override

5) Depress the **HOLD** key to place new data in memory.	All station 13/17 LEDs (except 19) go off.
6A) Return to Step 2 in order to continue with this program . . . or . . . 6B) Go to Step 2 in another program table . . . or . . . 6C) Transfer data into working memory per Paragraph **02.06.**	SET LED goes off. Station 13/17 LED 19 goes off. New data is stored, previous data is erased.

NOTE:
For multiple station programming, refer to Paragraph **02.10.**

TABLE 51

PROGRAM 4XX
STATION TYPE ASSIGNMENT

(This program must be completed before **Program 4#XX.***)*

1) Lock in the **SET** switch on the HKSU.	SET LED on. Station 13/17 LED 19 on. System is in program mode. Normal functions halt on station 13/17.
2) Depress the SPKR key on station 13/17.	SPKR LED steady on.
3) Dial 4XX on the dial pad (XX = the number of the station(s) to be programmed).	SPKR LED flashes continuously. The CO LEDs indicate present data.
4) Refer to the System Record Sheet. Using the appropriate keys, turn their associated LEDs on or off, as required.	An X on the record sheet means the LED should be on. If the LED is already on, depressing its associated key will turn it off and vice versa. LEDs may be turned off and on until the desired pattern is set.
5) Depress the HOLD key to place new data in memory.	All station 13/17 LEDs (except 19) go off.
6A) Return to Step 2 in order to continue with this program . . . or . . . 6B) Go to Step 2 in another program table . . . or . . . 6C) Transfer data into working memory per Paragraph **02.06.**	SET LED goes off. Station 13/17 LED 19 goes off. New data is stored, previous data is erased.

NOTE:
For multiple station programming, refer to Paragraph **02.10.**

KEY/LED	FEATURE
11	Start at CO4
10	Start at CO1
09	Top to bottom
06	Pattern B
05	Pattern A
03	Single-line EKT
01	10-key EKT
00	20-key EKT

TABLE 52

PROGRAM 4#XX
STATION FLEXIBLE KEY ASSIGNMENTS
(IMPORTANT! LCD EKT HIGHLY RECOMMENDED)

(Do **Program 4XX** *for all stations before this program.)*

1) Lock in the **SET** switch on the HKSU.	SET LED on. Station 13/17 LED 19 on. System is in program mode. Normal functions halt on station 13/17.
2) Depress the SPKR key on station 13/17.	SPKR LED steady on.
3) Dial 4 # X X on the dial pad (XX = the number of the station(s) to be programmed).	SPKR LED flashes continuously.
4) Refer to the System Record Sheet. Depress the key to be programmed.	The feature currently assigned to the code number for that key is displayed by the LCD (see table below).
5) Dial in the new feature's number. The meaning of each feature code is shown below.	The new feature's number is displayed on the LCD (see table below).
6) Continue returning to Step 4 until all desired features for the chosen station(s) are programmed.	
7) Depress the HOLD key to place new data in memory.	All station 13/17 LEDs (except 19) go off.
8A) Return to Step 2 in order to continue with this program . . . or . . . 8B) Go to Step 2 in another program table . . . or . . . 8C) Transfer data into working memory per Paragraph **02.06**.	SET LED goes off. Station 13/17 LED 19 goes off. New data is stored, previous data is erased.

NOTES:

1. *For multiple station programming, refer to Paragraph* **02.10**.
2. *All codes can be assigned only once per EKT. If assigned more than once, keys become AD keys.*
   XX = Direct Station Selection (DSS) EKT distinction.

CODE	DESCRIPTION	CODE	DESCRIPTION	CODE	DESCRIPTION
01	CO1	79	Modem Ans/Call	93	PRV
02	CO2	80	Modem Key	94	ACB
03	CO3	81	MSG	95	PAU
04	CO4	82	CPU2	96	RDL
05	CO5	83	CPU1	97	REP
06	CO6	84	CPU	98	DND
*	AD Key	85	SAVE	99	MW/FL
71	DP1 (Door Lock)	87	CFD	#YY	DSS/BLF
72	DP2 (Door Lock)	88	MCO	*ZZ	Locked AD Key
78	Modem MM/MA	90	TONE		

TABLE 53
PROGRAM 5XX
STATION CLASS OF SERVICE #1

1) Lock in the **SET** switch on the HKSU.	SET LED on. Station 13/17 LED 19 on. System is in program mode. Normal functions halt on station 13/17.
2) Depress the SPKR key on station 13/17.	SPKR LED steady on.
3) Dial 5XX on the dial pad (XX = the number of the station(s) to be programmed).	SPKR LED flashes continuously. The various LEDs indicates present data.
4) Refer to the System Record Sheet. Using the appropriate keys, turn their associated LEDs on or off, as required.	An X on the record sheet means the LED should be on. If the LED is already on, depressing the associated key will turn it off and vice versa. LEDs may be turned off and on until the desired pattern is set.

KEY/LED	FEATURE	LED ON	LED OFF
17	Privacy Override	Allowed	Not Allowed
16	DND Override	Allowed	Not Allowed
15	Executive Override	Allowed	Not Allowed
13	OCA Receive	Enabled	Disabled
12	Off-hook Call Announce	Dial 2	Automatic
09	Group Page 4	Included	Not Included
08	Group Page 3	Included	Not Included
07	Group Page 2	Included	Not Included
06	Group Page 1	Included	Not Included
05	All Call Page	Allowed	Not Allowed
04	Auto.Callback Warning Tone	Not Allowed	Allowed
03	Handsfree Answerback	Disabled	Enabled
02	MIC on at start of call	On	Off
01	MIC key lock	Allowed	Not Allowed
00	Speakerphone	Enabled	Disabled

5) Depress the HOLD key to place new data in memory.	All station 13/17 LEDs (except 19) go off.
6A) Return to Step 2 in order to continue with this program . . . or . . . 6B) Go to Step 2 in another program table . . . or . . . 6C) Transfer data into working memory per Paragraph **02.06.**	SET LED goes off. Station 13/17 LED 19 goes off. New data is stored, previous data is erased.

NOTE:
For multiple station programming, refer to Paragraph **02.10.**

TABLE 54
PROGRAM 5#XX
STATION CLASS OF SERVICE #2

1) Lock in the **SET** switch on the HKSU.	SET LED on. Station 13/17 LED 19 on. System is in program mode. Normal functions halt on station 13/17.
2) Depress the SPKR key on station 13/17.	SPKR LED steady on.
3) Dial 5 # X X on the dial pad (XX = the number of station(s) to be programmed).	SPKR LED flashes continuously. The various LEDs indicate present data.
4) Refer to the System Record Sheet. Using the appropriate keys, turn their associated LEDs on or off, as required. If a key/LED is not shown, it is not used.	An X on the record sheet means the LED shou be on. If the LED is already on, depressing the associat key will turn it off and vice versa. LEDs may turned off and on until the desired pattern is s

KEY/LED	FEATURE	LED ON	LED OFF
17	Alphanumeric LCD	Equipped	Not Equipped
16	Station-to-station Message Waiting w/LCD	Allowed	Not Allowed
15	LCD Message Memory	Assigned	Not Assigned
14	Forced Account Code	Required	Not Required
13	Toll Restriction Override Code Change	Allowed	Not Allowed
12 ~ 10	Hold Recall Time Code	—	—
09	Automatic Busy Redial Access	Enable	Disabled
07 ~ 04	Automatic Off-hook Selection (94 ~ 91)	Enable	Disabled
03	Automatic Off-hook Selection (CO1)	Enable	Disabled
02	Automatic Off-hook Selection (INT)	Enable	Disabled
01	Ringing Line Preference	Enable	Disabled
00	Automatic Dialing	Allowed	Not Allowed

5) Depress the HOLD key to place new data in memory.	All station 13/17 LEDs (except 19) go off.
6A) Return to Step 2 in order to continue with this program . . . or . . . 6B) Go to Step 2 in another program table . . . or . . . 6C) Transfer data into working memory per Paragraph **02.06.**	SET LED goes off. Station 13/17 LED 19 goes off. New data is stored, previous data is erased.

NOTES:
1. *For multiple station programming, refer to Paragraph* **02.10.**
2. *If a station is programmed to automatically select a trunk group (9 or 91 ~ 94), it will select the last available line in that group unless a line in that group is ringing—it will select the ringing line.*

TABLE 55
PROGRAM 6XX
STATION TOLL RESTRICTION/LCR CLASSIFICATION

1) Lock in the **SET** switch on the HKSU.	SET LED on. Station 13/17 LED 19 on. System is in program mode. Normal functions halt on station 13/17.
2) Depress the **SPKR** key on station 13/17.	SPKR LED steady on.
3) Dial **3XX** on the dial pad (XX = the number of the station(s) to be programmed).	SPKR LED flashes continuously. An LED indicates present data.
4) Refer to the System Record Sheet. Using the various keys, turn an associated LED on or off, as required. The detailed meaning of each key/LED is shown below.	An X on the record sheet means the LED should be on. Only one LED may be on; depressing another key will turn that LED on and turn off the previous LED.

KEY/LED	FEATURE	LED ON	LED OFF
12	LCR Class 3 (Vle only)	Selected	None
11	LCR Class 2 (Vle only)	Selected	None
10	LCR Class 1 (Vle only)	Selected	None
07	Digit-Free	Selected	None
06	Class 4*	Selected	None
05	Class 3*	Selected	None
04	Class 2*	Selected	None
03	Class 1*	Selected	None
02	Restrict 0 or 1 as 1st and 2nd digit	Selected	None
01	Allow 1 + Office Code only	Selected	None
00	No Restriction	Selected	—

5) Depress the **HOLD** key to place new data in memory.	All station 13/17 LEDs (except 19) go off.
6A) Return to Step 2 in order to continue with this program . . . or . . . 6B) Go to Step 2 in another program table . . . or . . . 6C) Transfer data into working memory per Paragraph **02.06.**	SET LED goes off. Station 13/17 LED 19 goes off. New data is stored, previous data is erased.

**NOTES:*

1. *For multiple station programming, refer to Paragraph* **02.20.**
2. *See Toll Restriction;* **Programs 100, 1X1, 1XY, 1XZ,** *and* **2XY.**

TABLE 56

PROGRAM 6#XX
STATION-TO-STATION HUNTING

1) Lock in the **SET** switch on the HKSU.	SET LED on. Station 13/17 LED 19 on. System is in program mode. Normal functions halt on station 13/17.
2) Depress the **SPKR** key on station 13/17.	SPKR LED steady on.
3) Dial **6 # X X** on the dial pad (XX = the number of the station(s) to be programmed).	SPKR LED flashes continuously. The various LEDs indicate present data.
4) Refer to the System Record Sheet. This program defines the station hunt destination. Dial the 2-digit number using the dial pad.	As each digit is entered, the entry is verified by LEDs as shown below.

Key/LED	Start	1st Digit	2nd Digit
11			Steady
10	Flash	Steady	

X = LED on
All LEDs off = no data

Binary Numbers:	1	2	3	4	5	6	7	8	9	0
03								X	X	X
02				X	X	X	X			
01		X	X			X	X			X
00	X		X		X		X		X	

5) Depress the **HOLD** key to place new data in memory.	All station 13/17 LEDs (except 19) go off. New data is stored, previous data is erased.
6A) Return to Step 2 in order to continue with this program . . . or . . . 6B) Go to Step 2 in another program table . . . or . . . 6C) Transfer data into working memory per Paragraph **02.06.**	SET LED goes off. Station 13/17 LED 19 goes off.

NOTE:
For multiple station programming, refer to Paragraph **02.10.**

TABLE 57

PROGRAM 7XX
STATION OUTGOING CALL RESTRICTION

1) Lock in the **SET** switch on the HKSU.	SET LED on. Station 13/17 LED 19 on. System is in program mode. Normal functions halt on station 13/17.
2) Depress the SPKR key on station 13/17.	SPKR LED steady on.
3) Dial 7XX on the dial pad (XX = the number of the station(s) to be programmed).	SPKR LED flashes continuously. CO LEDs indicate present data.
4) Refer to the System Record Sheet. Using the appropriate keys, turn their associated LEDs on or off, as required. • LED ON = Restricted outgoing calls. • Each CO key/LED represents itself—that is, if LED 01 is on, then the station being programmed (XX) is restricted from outgoing calls on CO1, etc.	An X on the record sheet means the LED should be on. If the LED is already on, depressing its associated key will turn it off and vice versa. LEDs may be turned off and on until the desired pattern is set.
5) Depress the HOLD key to place new data in memory.	All station 13/17 LEDs (except 19) go off.
6A) Return to Step 2 in order to continue with this program . . . or . . . 6B) Go to Step 2 in another program table . . . or . . . 6C) Transfer data into working memory per Paragraph **02.06**.	SET LED goes off. Station 13/17 LED 19 goes off. New data is stored, previous data is erased.

NOTE:
For multiple station programming, refer to Paragraph **02.10.**

TABLE 58
PROGRAM 81XX ~ 89XX
CO RINGING ASSIGNMENTS (DAY/DAY2/NIGHT)

1) Lock in the **SET** switch on the HKSU.	SET LED on. Station 13/17 LED 19 on. System is in program mode. Normal functions halt on station 13/17.
2) Depress the SPKR key on station 13/17.	SPKR LED steady on.
3) Dial 8 Y X X on the dial pad (Y = 1 ~ 9*; XX = the number of station(s) to be programmed).	SPKR LED flashes continuously. CO LEDs indicate present data.
4) Refer to the System Record Sheet. Using the appropriate keys, turn their associated LEDs on or off, as required. • LED ON = Ringing assigned. • Each CO key/LED represents itself—that is, if LED 01 is on, then the station being programmed (XX) is allowed access to CO1, etc.	An X on the record sheet means the LED shou be on. If the LED is already on, depressing its associat key will turn it off and vice versa. LEDs may turned off and on until the desired pattern is s
5) Depress the HOLD key to place new data in memory.	All station 13/17 LEDs (except 19) go off.
6A) Return to Step 2 in order to continue with this program . . . or . . . 6B) Go to Step 2 in another program table . . . or . . . 6C) Transfer data into working memory per Paragraph **02.06.**	SET LED goes off. Station 13/17 LED 19 goes off. New data is stored, previous data is erased.

*1 = DAY—immediate	4 = DAY 2—immediate	7 = NIGHT—immediate
2 = DAY—12-seconds delay	5 = DAY 2—12-seconds delay	8 = NIGHT—12-seconds delay
3 = DAY—24-seconds delay	6 = DAY 2—24-seconds delay	9 = NIGHT—24-seconds delay

NOTE:
For multiple station programming, refer to Paragraph **02.10.**

TABLE 59

PROGRAM 9#XX
DOOR PHONE ASSIGNMENTS

1) Lock in the **SET** switch on the HKSU.	SET LED on. Station 13/17 LED 19 on. System is in program mode. Normal functions halt on station 13/17.
2) Depress the SPKR key on station 13/17.	SPKR LED steady on.
3) Dial 9 # X X on the dial pad (XX = the number of the station(s) to be programmed).	SPKR LED flashes continuously. CO LEDs indicate present data.
4) Refer to the System Record Sheet. Using the appropriate keys, turn their associated LEDs on or off, as required. • LED ON = Access allowed. • Each CO key/LED represents itself—that is, if LED 01 is on, then the station being programmed (XX) is allowed access to CO1, etc.	An X on the record sheet means the LED should be on. If the LED is already on, depressing its associated key will turn it off and vice versa. LEDs may be turned off and on until the desired pattern is set.
5) Depress the HOLD key to place new data in memory.	All station 13/17 LEDs (except 19) go off.
6A) Return to Step 2 in order to continue with this program . . . or . . . 6B) Go to Step 2 in another program table . . . or . . . 6C) Transfer data into working memory per Paragraph **02.06.**	SET LED goes off. Station 13/17 LED 19 goes off. New data is stored, previous data is erased.

NOTE:
For multiple station programming, refer to Paragraph **02.10.**

392-8617

TABLE 60

PROGRAM *X#
FLEXIBLE ACCESS CODE NUMBERING

1) Lock in the **SET** switch on the HKSU.	SET LED on. Station 13/17 LED 19 on. System is in program mode. Normal functions halt on station 13/17.
2) Depress the **SPKR** key on station 13/17.	SPKR LED steady on.
3) Dial * X # on the dial pad. (X = feature access code number).	SPKR LED flashes continuously. LEDs indicate present data.
4) Using the dial pad, enter the new digits of the access code.	As each digit is entered, the entry is verified by LEDs as shown below.

Key/LED		Start		1st Digit		2nd Digit			
11						Steady			
10		Flash		Steady					
Binary Numbers: 1	2	3	4	5	6	7	8	9	0
03							X	X	X
02			X	X	X	X			
01	X	X			X	X			X
00	X	X		X		X		X	

X = LED on
All LEDs off = no data

5) Depress the **HOLD** key to place new data in memory.	All station 13/17 LEDs (except 19) go off.
6A) Go to Step 2 in another program table . . . or . . . 6B) Transfer data into working memory per Paragraph **02.06.**	SET LED goes off. Station 13/17 LED 19 goes off. New data is stored, previous data is erased.

TABLE 61

PROGRAM *XX
FLEXIBLE INTERCOM NUMBERING

1) Lock in the **SET** switch on the HKSU.	SET LED on. Station 13/17 LED 19 on. System is in program mode. Normal functions halt on station 13/17.
2) Depress the **SPKR** key on station 13/17.	SPKR LED steady on.
3) Dial * X X on the dial pad (XX = the system intercom number).	SPKR LED and LED 10 flash continuously.
4) Refer to the System Record Sheet. Enter the 4-digit Toll Restriction Override Codes via the dial pad.	As each digit is entered, the entry is verified by LEDs as shown below.
5) Depress the **HOLD** key to place new data in memory.	All station 13/17 LEDs (except 19) go off. New data is stored, previous data is erased.
6A) Go to Step 2 in another program table . . . or . . . 6B) Transfer data into working memory per Paragraph **02.06.**	SET LED goes off. Station 13/17 LED 19 goes off.

Key/LED	Start	1st Digit	2nd Digit	3rd Digit	4th Digit
12					Steady
11			Steady	Steady	
10	Flash	Steady		Steady	

X = LED on
All LEDs off = no data

Binary Numbers:	1	2	3	4	5	6	7	8	9	0
03								X	X	X
02				X	X	X	X			
01		X	X			X	X			X
00	X		X		X		X		X	

TABLE 62

PROGRAM #1XX*YY
AUTOMATIC DIALING PROGRAMMING FROM STATION 17
(Requires LCD EKT)

1) Lock in the **SET** switch on the HKSU.	SET LED on. Station 13/17 LED 19 on. System is in program mode. Normal functions halt on station 13/17. LCD: PROGRAM MODE
2) Depress the SPKR key on station 13/17.	SPKR LED steady on. LCD: PROGRAM NO.?.
3) Dial # 1 X X on the dial pad. XX = the number of the station(s) to be programmed (XX must = 10 for System Auto Dial).	LCD: (displays dialed digits)
4) Depress the * key.	LCD: (displays dialed digits)
5) Refer to the System Record Sheet. Dial YY (YY = Auto dial code: 10 ~ 49, personal; 60 ~ 99, system).	LCD: (displays dialed digits) DATA =
6) Depress the auto dial digits (insert pauses via key 16 and flashes via key 17.	LCD: (displays dialed digits)
7) Depress the HOLD key to place new data in memory.	All station 13/17 LEDs (except 19) go off. LCD: DATA PROGRAMMED
8A) Return to Step 2 in order to continue with this program . . . or . . . 8B) Go to Step 2 in another program table . . . or . . . 8C) Transfer data into working memory per Paragraph **02.06**.	SET LED goes off. Station 13/17 LED 19 goes off. New data is stored, previous data is erased.

Strata S_e & VI_e

Release 2

SYSTEM RECORD

PROGRAM 01—SYSTEM ASSIGNMENTS (Basic)

KEY/LED	X	LED ON	LED OFF
17		Transfer Privacy	Alternate point answer of transferred CO line
16		System Speed Dial Override of Toll Restriction	Restricted
15		Eight CO Line Groups (91 ~ 98)	One CO Line Group (9)
14		Two CO Line Conferencing—Inhibit	Allowed
13*		LCR Access	No LCR
12		DP Make Ratio 33%	40%
11		DTMF Signal Time 160ms	80ms
09		Non-privacy	Privacy
07		Station 17/10-key EKT	Station 17/20-key EKT
06		Incoming Call Abandon/8-sec.	6-sec.
05		3-sec. Pause After Flash	1.5-sec. Pause
04		Insert Pause After Flash	No Pause
03		3-sec. Pause (MW/FL key)	1.5-sec. Pause
02		0.5-sec. Flash Timing	2-sec. Flash
00		Tone First	Voice First

X = Select (LED on) Initialized Data: All LEDs off

* *VI_e only*

PROGRAM 0#1

KEY/LED	X	LED ON	LED OFF
17		Door Lock Timeout (6 sec.)	3 sec.
08		Door Phone 2B Door Lock	Door Phone
07		Door Phone 2C Busy-out	No Busy Signal
06		Door Phone 2B Busy-out	No Busy Signal
05		Station 12/14 Door Phone	EKT
04		Door Phone 1C Alarm (Station 13 only)	Door Phone
03		Door Phone 1B Door Lock	Door Phone
02		Door Phone 1C Busy-out	No Busy Signal
01		Door Phone 1B Busy-out	No Busy Signal
00		Station 11/13 Door Phone	EKT

X = Select (LED on) Initialized Data: All LEDs off

PROGRAM 02—SYSTEM ASSIGNMENTS (Options)

KEY/LED	X	LED ON	LED OFF
13		Station 15/23 assigned to Trunk-to-trunk Connection	EKT
12		Station 14/22 assigned to Trunk-to-trunk Connection	EKT
11		Stations 16/18 & 17/19 assigned to Amplified Conference	Not Amplified
10*		Stations 24 & 25 assigned to Amplified Conference	Not Amplified
06		ACB Warning Tone	No Warning Tone
04		Display Dialed Number—1 minute	15 seconds
02*		Night Ringing Over Ext. Page—Allowed	Not Allowed
01		BGM Over Ext. Page—Allowed	Not Allowed
00		Ext. Page Included With All Call Page	Not Included

X = Select (LED on) Initialized Data: All LEDs off

VI_e only

AMP CONF:
S_e—16/17
VI_e—18/19, 24/25

TRK TO TRK:
S_e—14, 15
VI_e—22, 23

PROGRAM 0#2
ACCOUNT CODE DIGIT LENGTH and MODEM SPEED

KEY/LED	X	LED ON	LED OFF
17		Repeat Ringing	Standard Ringing
15		SDTU Modem Speed—1200 bps	300 bps
04		Account Code Digit Length	
03		Account Code Digit Length	
02		Account Code Digit Length	
01		Account Code Digit Length	
00		Account Code Digit Length	

X = Select (LED on) Initialized Data: LEDs 01 & 02 on; all other LEDs off.

NOTE:
LEDs 00 ~ 04 set the Account Code Digit Length (4 ~ 15 Digits) in binary format per the table below.

SMDR ACCOUNT CODE DIGIT LENGTH TABLE

Digit Length	4	5	6	7	8	9	10	11	12	13	14	15
04							X	X	X	X	X	X
03					X	X						
02	X	X	X	X							X	X
01			X	X					X	X		
00		X		X		X		X		X		X

X = LEDs on All LEDs off = no data

PROGRAM 03
SYSTEM ASSIGNMENTS (Options)

KEY/LED	X	LED ON	LED OFF
10		Staion 10—Alarm Key	AD1 Key
09		Station 10—DND Key	NT Key
08		3-Ring Mode (DAY 1/DAY 2/NT)	2-Ring Mode (DAY 1/NT)
07*		CO Line Pickup Groups (1 & 2)	1 Group only
04		Message Center—Station 12	Not Equipped
03		Message Center—Station 11	Not Equipped
02		Message Center—Station 10	Not Equipped

X = Select (LED on) Initialized Data: LEDs 00, 02, 05 on; all other LEDs off

* *VI_e only; see* **Program 08** *for group assignments.*

PROGRAM 04—CO LINE OUTPULSING SELECTION

KEY/LED	X	LED ON	LED OFF
06		DP	DTMF
05		DP	DTMF
04		DP	DTMF
03		DP	DTMF
02		DP	DTMF
01		DP	DTMF

Initialized Data: All LEDs off

PROGRAM #4

KEY/LED	CO LINE IDENTIFICATION (16 DIGITS MAX)															
21																
20																
19																
18																
17																
16																
15																
14																
13																
12																
11																
10																
09																
08																
07																
06																
05																
04																
03																
02																
01																
00																

PROGRAM 05
AUTOMATIC RECALL FROM HOLD TIMING

KEY/LED	X	TIME
07		160 sec.
06		128 sec.
05		96 sec.
04		64 sec.
03		48 sec.
02		32 sec.
01		16 sec.
00		No Recall

X = Select (LED on)
Initialized Data: LED 02, 10, 11 and 12 on

PROGRAM 06
AUTOMATIC RELEASE ON HOLD ENABLE

KEY/LED	X
06	
05	
04	
03	
02	
01	

X = Enable (LED on)
Initialized Data: All LEDs off

PROGRAM 07
AUTOMATIC RELEASE ON HOLD TIMING

KEY/LED	X
06	
05	
04	
03	
02	
01	

X = Cross Bar (XB) Timing (95ms)
Blank = ESS Timing (450ms)
Initialized Data: All LEDs off

PROGRAM 0#5
CAMP-ON TIMEOUT

KEY/LED	X	TIME
03		64 sec.
02		48 sec.
01		32 sec.
00		16 sec.

X = Select (LED on)
Initialized Data: LED 01 on

PROGRAM 0#6
TRUNK-to-TRUNK CONNECTION ENABLE

KEY/LED	X
06	
05	
04	
03	
02	
01	

X = Enable (LED on)
Initialized Data: All LEDs off

PROGRAM 0#7
1A2 INTERFACE

KEY/LED	X
06	
05	
04	
03	
02	
01	

X = Enable (LED on)
Initialized Data: All LEDs off

PROGRAM 08
CO LINE PICKUP GROUP

KEY/LED	X
06	
05	
04	
03	
02	
01	

X = Belongs to Group 2
Blank = Belongs to Group 1
Initialized Data: All LEDs off

PROGRAM 0#8
NIGHT RING OVER EXTERNAL PAGE (VI_e only)

KEY/LED	X
06	
05	
04	
03	
02	
01	

X = Ring (LED on) Blank = No ring
Initialized Data: All LEDs on

PROGRAM 09
SINGLE CO LINE (DIAL 9) GROUP SELECTION (OPX, Trunk Queuing)

KEY/LED	X
06	
05	
04	
03	
02	
01	

X = Include in "Dial 9" group (LED on)
Initialized Data: All LEDs on

NOTE:
Used only if LED 15 is off in **Program 01**.

PROGRAM 0#9
OPL LINE HUNTING

KEY/LED	X
06	
05	
04	
03	
02	
01	

X = Hunt
Initialized Data: All LEDS off

PROGRAM 09X
FOUR CO LINE GROUPS SELECTION (Dial 91, 92, 93, 94, 95, 96, 97, 98)

CO LINE	GROUP							
	091	092	093	094	095*	096*	097*	098*
06								
05								
04								
03								
02								
01								

X = Include in group (LED on)
Initialized Data: 091—All LEDs on
092 ~ 098—All LEDs off

NOTE:
Used only if LED 15 is on in **Program 01**
(Eight CO Line Groups).

* *VI_e only*

PROGRAM 19X
PBX ACCESS CODES

CODES	1st DIGIT	2nd DIGIT
#1 (191)		
#2 (192)		
#3 (193)		
#4 (194)		
#5 (195)		
#6 (196)		
#7 (197)		
#8 (198)		

Enter the Access Codes (Maximum: 8)
Initialized Data: None

NOTE:
If the access code is a single digit, enter "" in the second column. If all combinations following a particular 1st digit are to be considered access codes (e.g., 91, 92, 93, ect.), enter "D" (don't care) in the 2 nd column.*

PROGRAM 190
PBX BACKUP

CO LINE	X
06	
05	
04	
03	
02	
01	

X = Connected to PBX line (LED on)

Initialized Data: All LEDs off

PROGRAM 100—TOLL RESTRICTION SYSTEM PARAMETERS (Dialing Plan)

KEY/LED	X	LED ON	LED OFF
02		1 + A/C + NXX and NXX	
01		1 + A/C + NXX and 1 + NXX	
00		A/C + NXX and 1 + NXX	

X = Select (LED on) Initialized Data: LED 00 on

NOTE:
KEY/LED 03 and 04 are not used

PROGRAM 101
TOLL RESTRICTION DISABLE

KEY/LED	X
06	
05	
04	
03	
02	
01	

X = Disable (LED on)
Blank = Enable
Initialized Data: All LEDs

PROGRAM 102
FORCED ACCOUNT CODE CHECK

KEY/LED	X
06	
05	
04	
03	
02	
01	

X = Check Blank = No Check
Initialized Data: All LEDs off

NOTE:
Program 0#2 *defines number of digits in account code.*

PROGRAM 103, 104, 105 & 106
EQUAL ACCESS NUMBERS (1 & 2)
OCC AUTHORIZATION CODE LENGTHS (1 & 2)

PROGRAM	ITEM	ENTRY
103	Equal Access Number 1	
104	OCC Authorization Code Digit Length #1	
105	Equal Access Number 2	
106	OCC AuthorizationCode Digit Length #2	

PROGRAM 108/109
TOLL RESTRICTION
OVERRIDE CODES #1and #2

108 | | | | |
109 | | | | |

PROGRAM 1X0—TOLL RESTRICTION CLASS PARAMETERS

X = class 1 ~ 4

KEY/LED	X	LED ON	LED OFF
02		Area Code + 555 + XXXX Allowed	Not Allowed
01		01 or 011 Overseas Restricted	Allowed
00		0 + Restricted	Allowed

X = Select (LED on) Initialized Data: All LEDs on

PROGRAM 1XY—TOLL RESTRICTION CLASS AREA CODE ENTRY

X = Class 1 ~ 4
Y = 2 (allow)
3 (deny)
4 (display)

PROGRAM 1X2 ALLOW	
CLASS	AREA CODES

PROGRAM 1X3 DENY	
CLASS	AREA CODES

Initialized Data: Allow 000 ~ 999

NOTE:
Use multiple sheets as required. *Sheet* _____ *of* _____ .

PROGRAM 1XZ—TOLL RESTRICTION CLASS OFFICE CODE ENTRY*

X = Class 1 ~ 4
Z = 6 (allow)
7 (deny)
8 (display)

PROGRAM 1X6 ALLOW	
CLASS	AREA CODES

PROGRAM 1X7 DENY	
CLASS	AREA CODES

*This table will be used for office code restriction within home area code only.
Initialized Data: Allow 000 ~ 999

NOTE:
Use multiple sheets as required. *Sheet _____ of _____ .*

PROGRAM 2XY—TOLL RESTRICTION AREA/OFFICE CODE EXCEPTION TABLE

Table _____
(1 ~ 8)

Area Code _____

X = Table 1 ~ 8
Y = 1 (area code)
2 (office codes added)
3 (office codes deleted)
4 (display)

OFFICE CODES				

Initialized Data: Blank

NOTE:
Use multiple sheets as required. *Sheet _____ of _____.*

PROGRAM 1X1—TOLL RESTRICTION CLASS AREA/OFFICE CODE EXCEPTION TABLE SELECTION

KEY/LED	X	LED ON	LED OFF
07		Area/Office Code Table 8 selected	Not Selected
06		Area/Office Code Table 7 selected	Not Selected
05		Area/Office Code Table 6 selected	Not Selected
04		Area/Office Code Table 5 selected	Not Selected
03		Area/Office Code Table 4 selected	Not Selected
02		Area/Office Code Table 3 selected	Not Selected
01		Area/Office Code Table 2 selected	Not Selected
00		Area/Office Code Table 1 selected	Not Selected

Initialized Data: All LEDs off

NOTE:
Use multiple sheets as required. *Sheet ____ of ____.*

PROGRAM 1#00
LCR HOME AREA CODE

CODE		

Initialized Data: Data =

PROGRAM 1#0X
LCR SPECIAL CODES

(X = 1 ~ 5)

X	CODE		
1			
2			
3			
4			
5			

Initialized Data: Data =

PROGRAM 1#06
LCD PARAMETERS

KEY/LED	X	LED ON	LED OFF
02		WNT—Most Expensive Route	Not Equipped
01		DT—After Access Code	Silent
00		555—LDI Route	Normal

Initialized Data: All LEDs off

PROGRAM 1#07X
SELECT LONG DISTANCE INFORMATION (LDI) ROUTE

(X = Route Table 1 ~ 8)

Initialized Data: Data = 8

PROGRAM 1#08X
SELECT LOCAL CALL ROUTE

(X = 1 ~ 8)

[ ]

Initialized Data: Data = 8

NOTE: An area code table with local area code must be assigned to this route.

PROGRAM 1#09
DIAL ZERO TIMEOUT

KEY/LED	TIME
03	10 seconds
02	8 seconds
01	6 seconds
00	4 seconds

NOTE:
Only one choice is allowed.

Initialized Data: LED 01 on

PROGRAM 1#X8Y
LCR SELECT ROUTE DEFINITION

X = Route Table 1 ~ 8 Y = Route Definition 1 ~ 4

		DATA	
X	Y	Trunk Group No. (1 ~ 8)	Modified Digits Table No. (1 ~ 6)
	1		
	2		
	3		
	4		

Initialized Data: Data = 11

PROGRAM 1#XY
LCR/AREA CODE TABLE ENTRY

X = Route Table Number (1 ~ 8)
Y = 2#, Data = Area Code Added to Table
Y = 3#, Data = Area Code Deleted from Table
Y = 4#, Data = Displays the Area Codes in table.
(Press the # to step through area code table).

Table Number _____

AREA CODES							

NOTE: Area codes which are added to these tables are automatically removed from Table 8.
Area codes which are deleted from these tables are automatically transferred to Table 8.

Initialized Data: 1 # X 2 #, Data =
1 # X 3 #, Data =
1 # X 4 #, Data =
All Area Codes Are In Route Table 8

PROGRAM 1#X50 ~ 53
START TIME A SCHEDULE

*Start Time Data = HHMM (24-hour clock)
Priority Data = Route Definition (1 ~ 4)
Assigned in **Program 1#X8Y**

Route Definition Table

PROGRAM	FEATURE	*DATA			
50	Start Time A				
51	Priority Class 1				
52	Priority Class 2				
53	Priority Class 3				

Initialized Data: 50, 51 ~ 53, Data = 0000

PROGRAM 1#X60 ~ 63
START TIME B SCHEDULE

*Start Time Data = HHMM (24-hour clock)
Priority Data = Route Definition (1 ~ 4)
Assigned in **Program 1#X8Y**

Route Definition Table

PROGRAM	FEATURE	*DATA			
60	Start Time B				
61	Priority Class 1				
62	Priority Class 2				
63	Priority Class 3				

Initialized Data: 60, 61 ~ 63, Data = 0000

PROGRAM 1#X70 ~ 73
START TIME C SCHEDULE

*Start Time Data = HHMM (24-hour clock)
Priority Data = Route Definition (1 ~ 4)
Assigned in **Program 1#X8Y**

Route Definition Table

PROGRAM	FEATURE	*DATA			
70	Start Time C				
71	Priority Class 1				
72	Priority Class 2				
73	Priority Class 3				

Initialized Data: 70, 71 ~ 73, Data = 0000

PROGRAM 1#9X1
ADD DIGITS TABLES

	1	2	3	4	5	6	7	8	9	10	11	12	13	14	15	16	17	18	19	20	21	22
11																						
21																						
31																						
41																						
51																						
61																						

PROGRAM 1#9X0
DELETE DIGITS (QTY) TABLES

10		
20		
30		
40		
50		
60		

Initialized Data = P1
X = Modified digits table
(#1 ~ 6)

PROGRAM 2#XY
LEAST COST ROUTING
AREA/OFFICE CODE EXCEPTION TABLE ENTRY

X = Area/Office Code Table Number (1 ~ 8). ☐

Y = 0, Data = Route Table (1 ~ 8). ☐

Y = 1, Data = Area Code ☐ ☐ ☐ Exception

Y = 2#, Data = Office Code Added to Table (Exception)

Y = 3#, Data = Office Code Deleted from Table

Y = 4#, Data = Displays Office Codes in Table (depress the # to step through Office Code Table).

Table Number _____

OFFICE CODES (ALLOW)							

NOTE:
If Area Code is the home area code, the **Program 1#00** *must be entered.*
Use multiple sheets as required (_____ of _____)

Initialized Data: 2 # X 0, Data = 8
2 # X 1, Data =
2 # X 2, Data =
2 # X 3, Data =

PROGRAM 3XX—STATION CO LINE ACCESS

KEY/LED	FEATURE	STATION NUMBERS 10 11 12 13 14 15 16 17 18 19 20 21 22 23 24 25
06	Allow Access	
05	Allow Access	
04	Allow Access	
03	Allow Access	
02	Allow Access	
01	Allow Access	

X = Select (LED on) Initialized Data: All LEDs on

PROGRAM 3#XX
HOXB, HMDB and HIOB MODULE ENABLE

KEY/LED	LED ON	STATION NUMBERS 14 15 16 17 18 19 20 21 22 23 24 25
07	HIOB—Voice Mail;	
06	HIOB—Tone from device (MF)	
04	HMDB—Equipped	
03	HIOB—Equipped	
02	OPX—Busy-out	
01	OPX—Equipped	
00	HIOB—Privacy	

X = Select (LED on) Initialized Data: All LEDs off

PROGRAM 4XX—STATION TYPE ASSIGNMENT

KEY/LED	FEATURE	STATION NUMBERS 10 11 12 13 14 15 16 17 18 19 20 21 22 23 24 25
11*	Start at CO4	
10*	Start at CO1	
09	Top to Bottom	
06	Pattern B	
05	Pattern A	
03	Single-line EKT	
01	10-key EKT	
00	20-key EKT	

X = Select (LED on)
Initialized Data: LEDs 01 and 04 on; all other LEDs off

VI_e only

NOTE:
This program must be done before **Program 4#XX**.

PROGRAM 4#XX—STATION FLEXIBLE KEY ASSIGNMENTS

STATION KEY								
19								
18								
17								
16								
15								
14								
13								
12								
11								
10								
09								
08								
07								
06								
05								
04								
03								
02								
01								
00	INT	INT	INT	INT	INT	INT	INT	INT

NOTES:

1. *Do* **Program 4XX** *for all stations before this program.*
2. *Each code (except * for AD) can only be assigned once per station. If assigned more than once, keys become AD keys. Refer to Table 38 for feature codes.*
3. *Use two sheets if required (one sheet per eight stations). Sheet ____ of ____.*

FLEXIBLE KEY ASSIGNMENTS FEATURE CODES

CODE	DESCRIPTION	CODE	DESCRIPTION	CODE	DESCRIPTION	CODE	DESCRIPTION
01	CO1	71	DL1 key	83	CPU1 key	94	ACB key
02	CO2	72	DL2 key	84	CPU key	95	PAU key
03	CO3	78	MM / MA key	85	SAVE key	96	RDL key
04	CO4	79	ANS /CALL key	87	CFD key	97	REP key
05	CO5	80WW	MODM key	88	MCO key	98	DND key
06	CO6	81	MSG key	90	TONE key	99	MW/FL key
*	AD key	82	CPU2 key	93	PRV key	#YY	DSS key
						*ZZ	Locked AD key

NOTE:
WW = Modem Station Number
YY = DSS Destination Station Number
ZZ = System Speed Dial Code (60 ~ 99)

PROGRAM 5XX—STATION CLASS OF SERVICE #1

KEY/LED	FEATURE	STATION NUMBERS 10 11 12 13 14 15 16 17 18 19 20 21 22 23 24 25
17	Privacy Override—Allowed	
16	DND Override—Allowed	
15	Executive Overide—Allowed	
13	Off-Hook Call Announce—Enable	
12	OCA—Dial 2 (originate)	
09	Group Page 4	
08	Group Page 3	
07	Group Page 2	
06	Group Page 1	
05	All Call Page—Allowed	
04	Warning Tone—Disabled	
03	Handsfree Answerback—Disabled	
02	MIC on at Start of Call	
01	MIC Key Lock	
00	Speakerphone—Enabled	

X = Select (LED on) Initialized Data: LEDs 00 and 05 on; all other LEDs off

PROGRAM 5#XX—STATION CLASS OF SERVICE #2

KEY/LED	FEATURE	STATION NUMBERS 10 11 12 13 14 15 16 17 18 19 20 21 22 23 24 25
17	Alphanumeric LCD used	
16	Station-to-station MW with LCD	
15*	LCD Message Memory (personal)	
14	Forced Acct. Code—Required	
13**	Toll Restrict. Override Code	
12***	Hold Recall Time Code	
11***	Hold Recall Time Code	
10***	Hold Recall Time Code	
07	Auto Off-Hook Selection—94	
06	Auto Off-Hook Selection—93	
05	Auto Off-Hook Selection—92	
04	Auto Off-Hook Selection—91	
03	Auto Off-Hook Selection—01	
02	Auto Off-Hook Selection—INT	
01	Ringing Line Preference	
00	Auto Dialing—Allowed	

Initialized Data: LEDs 00, 01, 15, 16 and 17 on; all other LEDs off

** Enables personal messages and speed dial memo.*
VI_e—6 stations max.
S_e—4 stations max.
Initialized for lowest stations
*** Allows station to change the code*

*** Hold Recall Time Code

KEY/LED	Prog. 05	16 Sec.	32 Sec.	48 Sec.	64 Sec.	96 Sec.	128 Sec.	160 Sec.
12					X	X	X	X
11			X	X			X	X
10		X		X		X		X

PROGRAM 6XX—STATION TOLL RESTRICTION CLASSIFICATION

KEY/LED	FEATURE	STATION NUMBERS															
		10	11	12	13	14	15	16	17	18	19	20	21	22	23	24	25
12	LCR Class 3																
11	LCR Class 2																
10	LCR Class 1																
07	Digit Free																
06	Class 4																
05	Class 3																
04	Class 2																
03	Class 1																
02	Restrict 0 or 1 as 1st/2nd Digit																
01	Allow 1 + O/C Only																
00	No Restrict.																

X = Select (LED on) Initialized Data: LEDs 00 and 10 on; all other LEDs off

PROGRAM 6#XX—STATION-to-STATION HUNTING

	STATION NUMBERS															
	10	11	12	13	14	15	16	17	18	19	20	21	22	23	24	25
Station Hunt Destination																

PROGRAM 7XX—STATION OUTGOING CALL RESTRICTION

KEY/LED	FEATURE	STATION NUMBERS															
		10	11	12	13	14	15	16	17	18	19	20	21	22	23	24	25
06	Restricted																
05	Restricted																
04	Restricted																
03	Restricted																
02	Restricted																
01	Restricted																

X = Select (LED on) Initialized Data: All LEDs off

PROGRAM 81XX—RINGING ASSIGNMENTS-DAY/IMMEDIATE

KEY/LED	FEATURE	STATION NUMBERS																
		10	11	12	13	14	15	16	17	18	19	20	21	22	23	24	25	69
06	DAY/immediate																	
05	DAY/immediate																	
04	DAY/immediate																	
03	DAY/immediate																	
02	DAY/immediate																	
01	DAY/immediate																	

NOTES:
1. *69 = Assign for auto-connect Remote Maintenance.*
2. *If a CO is to "Call Forward" from a station, the CO must be assigned to ring* **ONLY** *that station. However, this CO may be assigned to ring other stations in other ringing assignment programs.*

PROGRAM 82XX—DELAYED CO RINGING ASSIGNMENTS-DAY/12-SEC. DELAY

KEY/LED	FEATURE	STATION NUMBERS																
		10	11	12	13	14	15	16	17	18	19	20	21	22	23	24	25	69
06	DAY/12-sec. delay																	
05	DAY/12-sec. delay																	
04	DAY/12-sec. delay																	
03	DAY/12-sec. delay																	
02	DAY/12-sec. delay																	
01	DAY/12-sec. delay																	

Initialized Data: All LEDs off

PROGRAM 83XX—DELAYED CO RINGING ASSIGNMENTS-DAY/24-SEC. DELAY*

KEY/LED	FEATURE	STATION NUMBERS																	
		10	11	12	13	14	15	16	17	18	19	20	21	22	23	24	25	69
06	DAY/24-sec. delay																	
05	DAY/24-sec. delay																	
04	DAY/24-sec. delay																	
03	DAY/24-sec. delay																	
02	DAY/24-sec. delay																	
01	DAY/24-sec. delay																	

NOTES:

1. *69 = Assign for auto-connect Remote Maintenance.*
2. *If a CO is to "Call Forward" from a station, the CO must be assigned to ring* **ONLY** *that station. However, this CO may be assigned to ring other stations in other ringing assignment programs.*

PROGRAM 84XX—DELAYED CO RINGING ASSIGNMENTS-DAY 2/IMMEDIATE*

KEY/LED	FEATURE	STATION NUMBERS																	
		10	11	12	13	14	15	16	17	18	19	20	21	22	23	24	25	69
06	DAY 2/immediate																	
05	DAY 2/immediate																	
04	DAY 2/immediate																	
03	DAY 2/immediate																	
02	DAY 2/immediate																	
01	DAY 2/immediate																	

Initialized Data: All LEDs off

NOTE:
This program is used only if the CO8 LED was turned on in **Program 03.**

PROGRAM 85XX—DELAYED CO RINGING ASSIGNMENTS-DAY 2/12-SEC. DELAY*

KEY/LED	FEATURE	STATION NUMBERS																	
		10	11	12	13	14	15	16	17	18	19	20	21	22	23	24	25	69
06	DAY 2/12-sec. delay																	
05	DAY 2/12-sec. delay																	
04	DAY 2/12-sec. delay																	
03	DAY 2/12-sec. delay																	
02	DAY 2/12-sec. delay																	
01	DAY 2/12-sec. delay																	

NOTES:
1. *69 = Assign for auto-connect Remote Maintenance.*
2. *If a CO is to "Call Forward" from a station, the CO must be assigned to ring* **ONLY** *that station. However, this CO may be assigned to ring other stations in other ringing assignment programs.*

PROGRAM 86XX—DELAYED CO RINGING ASSIGNMENTS-DAY 2/24-SEC. DELAY*

KEY/LED	FEATURE	STATION NUMBERS																	
		10	11	12	13	14	15	16	17	18	19	20	21	22	23	24	25	69
06	DAY 2/24-sec. delay																	
05	DAY 2/24-sec. delay																	
04	DAY 2/24-sec. delay																	
03	DAY 2/24-sec. delay																	
02	DAY 2/24-sec. delay																	
01	DAY 2/24-sec. delay																	

X = Select (LED on) Initialized Data: All LEDs off

NOTE:
This program is used only if the CO8 LED was turned on in **Program 03.**

PROGRAM 87XX—DELAYED CO RINGING ASSIGNMENTS-NIGHT/IMMEDIATE*

KEY/LED	FEATURE	STATION NUMBERS																
		10	11	12	13	14	15	16	17	18	19	20	21	22	23	24	25	69
06	NIGHT/immediate																	
05	NIGHT/immediate																	
04	NIGHT/immediate																	
03	NIGHT/immediate																	
02	NIGHT/immediate																	
01	NIGHT/immediate																	

PROGRAM 88XX—DELAYED CO RINGING ASSIGNMENTS-NIGHT/12-SEC. DELAY*

KEY/LED	FEATURE	STATION NUMBERS																
		10	11	12	13	14	15	16	17	18	19	20	21	22	23	24	25	69
06	NIGHT/12-sec. delay																	
05	NIGHT/12-sec. delay																	
04	NIGHT/12-sec. delay																	
03	NIGHT/12-sec. delay																	
02	NIGHT/12-sec. delay																	
01	NIGHT/12-sec. delay																	

PROGRAM 89XX—DELAYED CO RINGING ASSIGNMENTS-NIGHT/24-SEC. DELAY*

KEY/LED	FEATURE	STATION NUMBERS																
		10	11	12	13	14	15	16	17	18	19	20	21	22	23	24	25	69
06	NIGHT/24-sec. delay																	
05	NIGHT/24-sec. delay																	
04	NIGHT/24-sec. delay																	
03	NIGHT/24-sec. delay																	
02	NIGHT/24-sec. delay																	
01	NIGHT/24-sec. dealy																	

X = Select (LED on) Initialized Data: All LEDs off

NOTES:

1. *69 = Assign for auto-connect Remote Maintenance.*
2. *If a CO is to "Call Forward" from a station, the CO must be assigned to ring* **ONLY** *that station. However, this CO may be assigned to ring other stations in other ringing assignment programs.*

PROGRAM 9#XX—DOOR PHONE RINGING ASSIGNMENTS

KEY/LED	FEATURE	STATION NUMBERS															
		10	11	12	13	14	15	16	17	18	19	20	21	22	23	24	25
05	Door Phone 12/14 Ring C																
04	Door Phone 12/14 Ring B																
03	Door Phone 12/14 Ring A																
02	Door Phone 11/13 Ring C																
01	Door Phone 11/13 Ring B																
00	Door Phone 11/13 Ring A																

X = Select (LED on) Initialized Data: All LEDs off

PROGRAM *X#
FLEXIBLE ACCESS CODE NUMBERING

FEATURE	ACCESS CODE		NEW 1ST DIGIT*	
Door Phone/ Monitor Station	6	6		6
	6	7	"	7
	6	8	"	8
CO Line Dial Selection	7	X X		X X
Paging	8	0		0
	8	1	"	1
	8	2	"	2
	8	3	"	3
	8	4	"	4
	8	5	"	5
	8	6	"	6
	8	7	"	7
	8	8	"	8
	8	9	"	9
Trunk Group		9	—	
	9	1		1
	9	2	"	2
	9	3	"	3
	9	4	"	4

Initialized Data: Access Code Column

**Enter the new first digit of the access code in the blank space where applicable.*

PROGRAM *XX
FLEXIBLE INTERCOM NUMBERING

SYSTEM INTERCOM NUMBER	NEW INTERCOM NUMBER (1 - 4 digits)
10	
11	
12	
13	
14	
15	
16	
17	
18	
19	
20	
21	
22	
23	
24	
25	

Initialized Data: System intercom numbers

PROGRAM #1XX*YY—SYSTEM AUTO DIAL RECORD

AUTO DIAL CODE	AUTO DIAL DIGITS (Pauses) 16 MAX															
	1	2	3	4	5	6	7	8	9	10	11	12	13	14	15	16
60																
61																
62																
63																
64																
65																
66																
67																
68																
69																
70																
71																
72																
73																
74																
75																
76																
77																
78																
79																
80																
81																
82																
83																
84																
85																
86																
87																
88																
89																
90																
91																
92																
93																
94																
95																
96																
97																
98																
99																

NOTE: Enter a "P" for each 1 second pause

PROGRAM #1XX*YY—STATION AUTO DIAL RECORD SHEET

STATION # ____ ____ (XX)

AUTO DIAL CODE	AUTO DIAL DIGITS (Pauses) 16 MAX															
	1	2	3	4	5	6	7	8	9	10	11	12	13	14	15	16
10																
11																
12																
13																
14																
15																
16																
17																
18																
19																
20																
21																
22																
23																
24																
25																
26																
27																
28																
29																
30																
31																
32																
33																
34																
35																
36																
37																
38																
39																
40																
41																
42																
43																
44																
45																
46																
47																
48																
49																

NOTE: Enter a "P" for each 1 second pause

FAULT FINDING
SECTION 500-036-500
JANUARY 1988

Strata Se / VIe

RELEASE 2

FAULT FINDING PROCEDURES

STRATA S_e/VI_e

FAULT FINDING

TABLE OF CONTENTS

PARAGRAPH	SUBJECT	PAGE
	TABLE OF CONTENTS	i
01	GENERAL	1
02	FAULT CLASSIFICATION	1
	TABLE A—FLOWCHARTS	1
03	FAULT CLEARING PROCEDURES	1
04	DEFECTIVE APPARATUS RETURNS	2
05	FLAULT IDENTIFICATION AND ELIMINATION PROCEDURES	2
06	POWER SUPPLY	2
07	STATION CABLE CONTINUITY CHECK	2
07.01	Voltmeter Test	2
	TABLE B—STATION CABLE CONTINUITY CHECK USING VOLTMETER	3
07.10	Ohmmeter Test	3
	TABLE C—STATION CABLE CONTINUITY CHECK USING OHMMETER	3
	FLOWCHARTS	
	CHART NO. 1 — FAULT CLASSIFICATION	4
	CHART NO. 2 — POWER FAULTS	7
	CHART NO. 3 — STATION FAULTS	9
	CHART NO. 4 — HKSU FAULTS	10
	CHART NO. 5 — CO LINE FAULTS	11
	CHART NO. 6 — MOH FAULTS	12
	CHART NO. 7 — PAGE/BGM FAULTS	13
	CHART NO. 8 — DOOR PHONE FAULTS	14
	CHART NO. 9 — SMDR FAULTS	17
	CHART NO. 10 — OPX FAULTS	18
	CHART NO. 11 — OPL FAULTS	19
	CHART NO. 12 — REMOTE MAINTENANCE FAULTS	20

ILLUSTRATION LIST

FIGURE	TITLE	PAGE
1	FLOWCHART SYMBOLS	1

01 GENERAL

01.01 This section describes the maintenance procedures used for the diagnosis of faults in this electronic key telephone system. Faults are classified and then cleared by replacing the apparatus and performing operational tests in the sequences prescribed by the fault clearing flowcharts in Paragraph 05.

02 FAULT CLASSIFICATION

02.01 A Fault Classification Flowchart is provided to ensure that fault clearing is pursued in a logical sequence (Chart No. 1).

02.02 An assumption is made in the flowcharts that the fault was discovered and reported by an EKT user. All faults, therefore, are classified according to the way they would appear at the EKT.

02.03 Faults and associated flowcharts in Table A are organized into the following categories:

TABLE A — FLOWCHARTS

Flowchart	Title
1	Fault Classification
2	Power Faults
3	Station Faults
4	HKSU Faults
5	CO Line Faults
6	MOH Faults
7	Page/BGM Faults
8	Door Phone Faults
9	SMDR Faults
10	OPX Faults
11	OPL Faults
12	Remote Maintenance Faults

03 FAULT CLEARING PROCEDURES

03.01 Before attempting to clear any fault, ensure that it is in the system and not caused by associated external equipment, such as wiring, MOH source, etc.

IMPORTANT!

Many system features are assigned, enabled or disabled using software entries as described in Programming Procedures. ***Further, with the exception of*** **Programs 5XX ~ 9XX,** ***programming changes are not effective until the new data has been secured in working memory (see Paragraph*** **02.06** ***of*** Programming Procedures***). It is important to verify that the system programming is correct and functional before troubleshooting the hardware.***

03.02 In new systems, or when the SCCU/VCCU PCB has been changed, the initialization procedure must be performed before testing. The system data stored on the original SCCU/VCCU will be protected from loss by the backup battery on that PCB. Therefore, the initialization sequence *should not* be performed if the original PCB is reinstalled.

03.03 Faults in the system are cleared by replacing PCBs, EKTs or the power supply, as instructed in the flowcharts.

03.04 Five symbols are used in the flowcharts, which are identified in Figure 1.

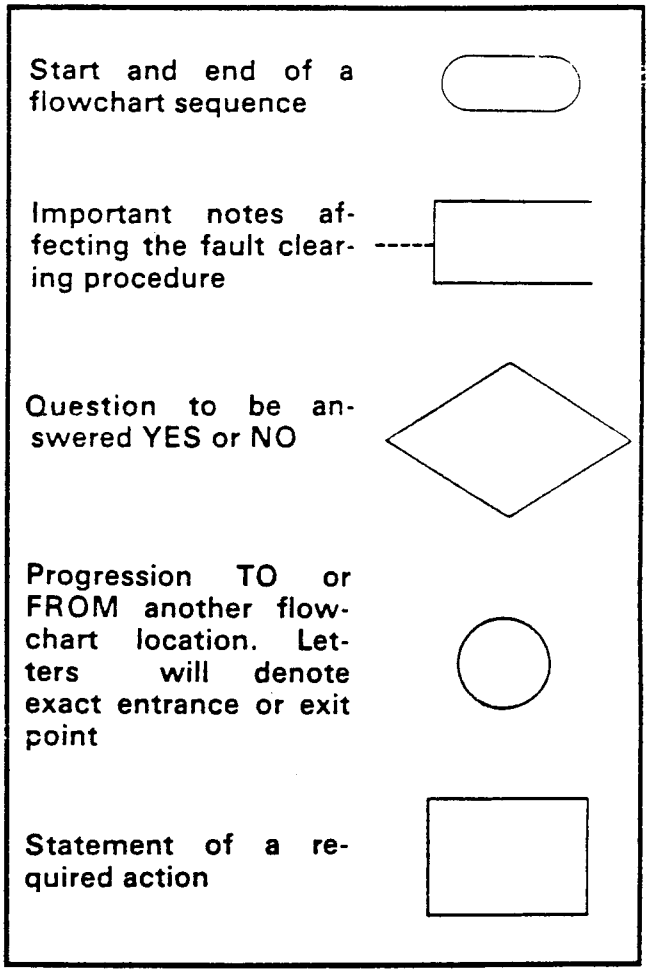

FIGURE 1—FLOWCHART SYMBOLS

03.05 The flowcharts are sequentially arranged to permit rapid fault localization within the system. *All fault clearing must begin with the Fault Classification Flowchart, which is arranged in the correct fault locating sequence.*

03.06 The following precautions must be observed when handling PCBs.

DO NOT:

- Drop a PCB.
- Stack one PCB on top of another.
- Handle a PCB without discharging any static electricity from your person by touching the grounded HKSU.
- Touch PCB contacts with your fingers.

IMPORTANT!
If the fault is not cleared by substituting a PCB, the original PCB must be reinstalled in the HKSU** before **trying another PCB.

04
DEFECTIVE APPARATUS RETURNS

04.01 When a defective system apparatus is shipped for repair, the apparatus must be packed in a suitable container (the original box is highly recommended), as follows:

a) Anti-static container for the SSTU, SCOU, VCOU and SMOU PCBs.

b) Paper container for the VCCU PCB.

c) Plastic bags for EKTs, HKSU, etc.

04.02 NEVER WRITE ON THE APPARATUS ITSELF! Describe the nature of the defect on an information tag. Attach the tag to the front of the unit with string (not wire) so the tag can remain attached during the testing and repair process.

04.03 If different and/or additional faults are created in the system by substituting a PCB, tag and return the substitute PCB as a defective unit.

05
FAULT IDENTIFICATION and ELIMINATION PROCEDURES

05.01 The SCCU/VCCU PCB may contain a "soft" fault due to static electricity. If it is found defective during the fault finding procedures, attempt to clear a soft fault prior to returning the SCCU/VCCU PCB for repair. The correct procedure for this is to reinstall the SCCU/VCCU, perform the initialization procedure, and then reprogram the system as necessary to test for the fault. If the fault returns after these procedures are performed, tag the defective SCCU/VCCU PCB and return it for repair.

06 POWER SUPPLY

06.01 If a power supply fault is suspected, the power supply should be removed from the HKSU **after** unplugging the power cable. Using a voltmeter, check the power supply output voltages at the power supply cable connector per the diagram below:

STRATA VI_e — HPSU 7120 (P1 connector):

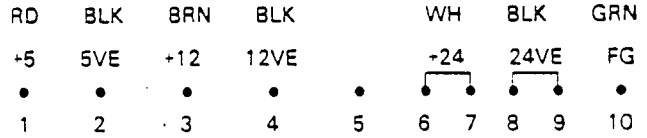

STRATA S_e — HPSU 6120 (P7 connector):

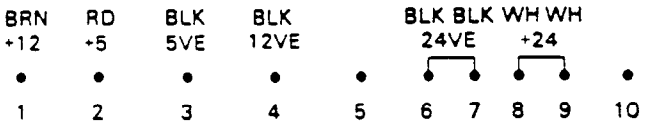

06.02 Voltages should fall within the following ranges:

Nominal	Range
+24	+23.0 ~ 29.0
+12	+10.8 ~ 13.2
+ 5	+4.75 ~ 5.25

06.03 If voltage checks indicate a power supply fault, replace the HPSU with a correctly operating unit. Refer to the *Installation* section of this manual for HPSU installation procedures.

07
STATION CABLE CONTINUITY CHECK

07.01 Voltmeter Test

07.02 The continuity of the cable run between the HKSU and the EKT is checked with a voltmeter as follows:

NOTE:
Perform the following at the locations indicated:
1. Modular block: Check all station cables.
2. MDF: Check cable from HKSU to MDF.

1) Disconnect the EKT.

2) Using a DC voltmeter, measure between the wires of the two pairs to verify the readings shown in Table B.

3) An improper reading indicates an open, crossed or shorted wire.

4) For the MDF-to-EKT cable, a more precise check is made using an ohmmeter.

TABLE B

STATION CABLE CONTINUITY CHECK USING VOLTMETER

FROM			TO			VOLTAGE*
Pair	Wire	Color	Pair	Wire	Color	
1	T	Green	2	T	Black	24
1	R	Red	2	T	Black	24
1	T	Green	2	R	Yellow	24
1	R	Red	2	R	Yellow	24
1	T	Green	1	R	Red	0
2	T	Red	2	R	Yellow	0
3	T	White	3	R	Blue	0
3	T	White	1	R	Red	0
3	R	Blue	1	R	Red	0
3	T	White	1	T	Green	0
3	R	Blue	1	T	Green	0
3	T	White	2	T	Black	0
3	R	Blue	2	T	Black	0
3	T	White	2	R	Yellow	0
3	R	Blue	2	R	Yellow	0

**Nominal voltage—within the power supply limits of +23.2 ~ 28.2 VDC while under AC power.*

07.10 Ohmmeter Test

07.11 The continuity of the cable run between the HKSU and the EKT is checked with an ohmmeter as follows:

1) Disconnect the EKT.

2) At the MDF, remove the bridging clips.

3) Using an ohmmeter, measure the resistance between all combinations of the four wires at the modular block. All measurements should exceed 1 M ohm.

4) At the MDF, place shorting jumper wires between the T and R of pair #1 (green-red), the T and R of pair #2 (black-yellow), and the T and R of pair #3 (blue-white).

5) At the modular block, measure the resistance between all wire combinations. The proper readings are shown in Table C.

TABLE C

STATION CABLE CONTINUITY CHECK USING OHMMETER

FROM			TO			RESISTANCE
Pair	Wire	Color	Pair	Wire	Color	
1	T	Green	2	T	Black	1M ohm
1	R	Red	2	T	Black	1M ohm
1	T	Green	2	R	Yellow	1M ohm
1	R	Red	2	R	Yellow	1M ohm
1	T	Green	1	R	Red	55M ohms*
2	T	Black	2	R	Yellow	55M ohms*
3	T	White	3	R	Blue	55 ohms*
3	T	White	1	R	Red	1M ohm
3	R	Blue	1	R	Red	1M ohm
3	T	White	1	T	Green	1M ohm
3	R	Blue	1	T	Green	1M ohm
3	T	White	2	T	Black	1M ohm
3	R	Blue	2	T	Black	1M ohm
3	T	White	2	R	Yellow	1M ohm

**NOTE:*
The green-red and black-yellow measurements should be within 10% of each other.

CHART NO. 1
FAULT CLASSIFICATION

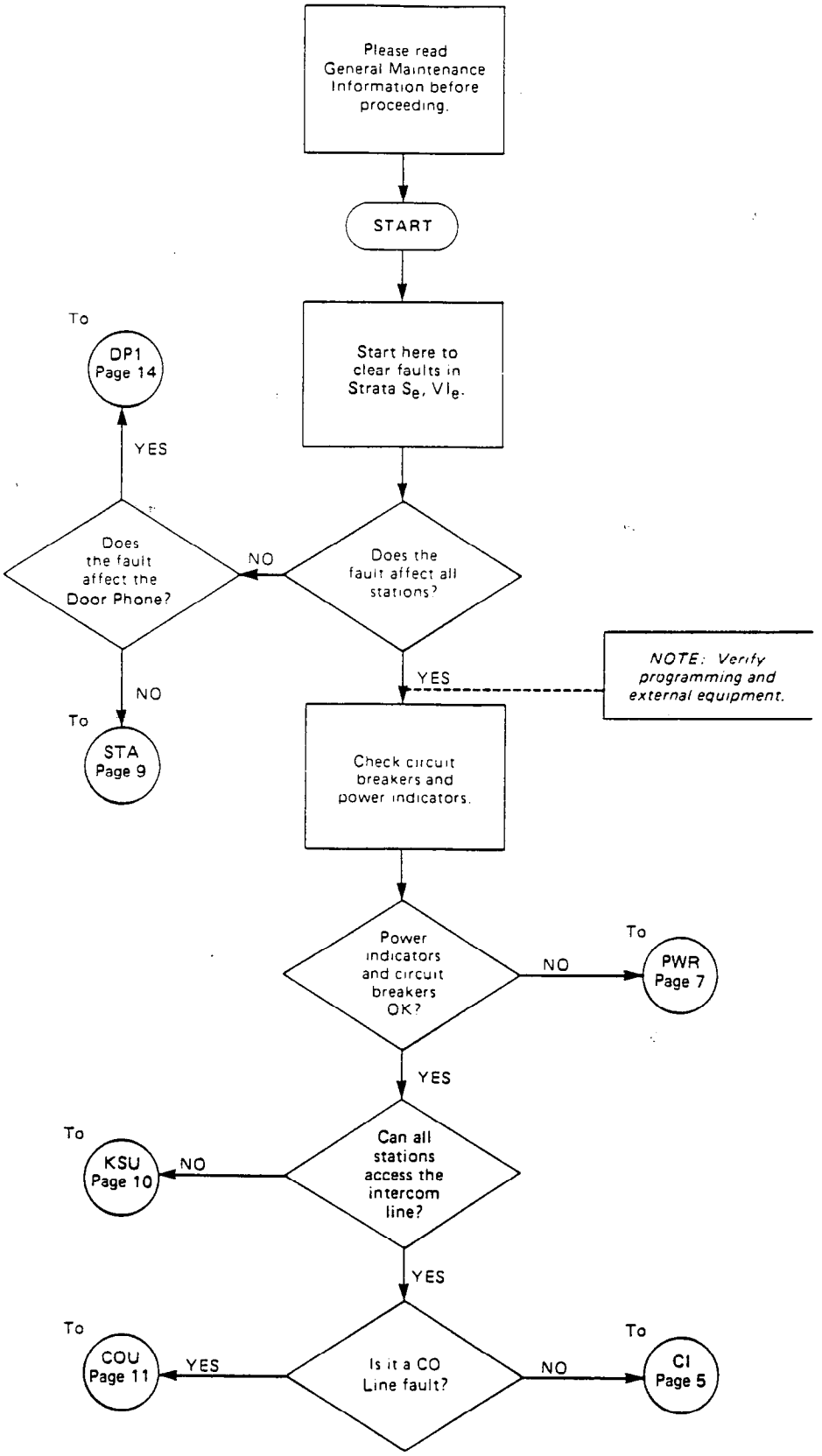

CHART NO. 1
FAULT CLASSIFICATION (cont.)

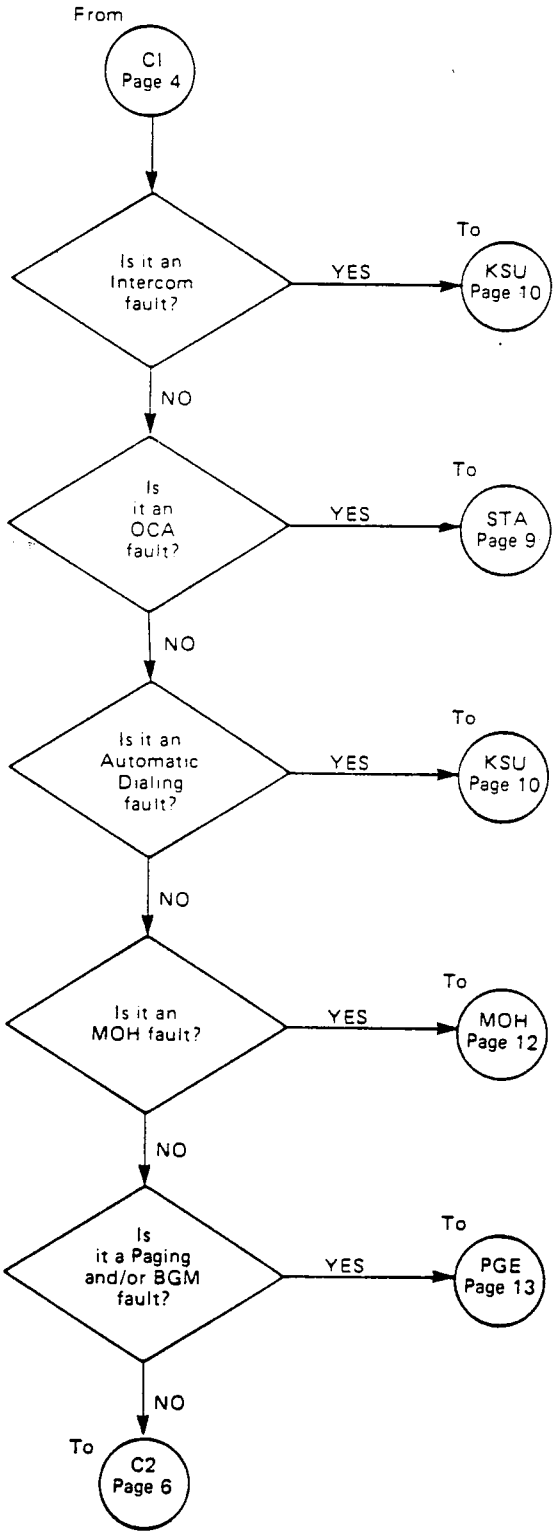

CHART NO. 1
FAULT CLASSIFICATION (cont.)

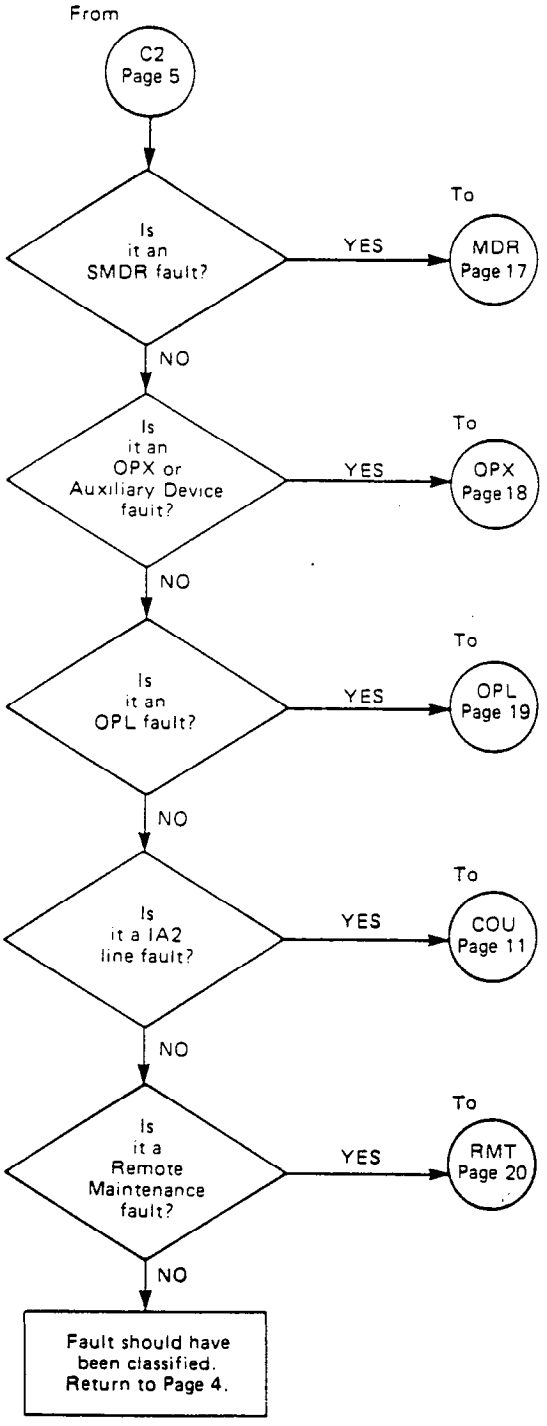

CHART NO. 2
POWER FAULTS

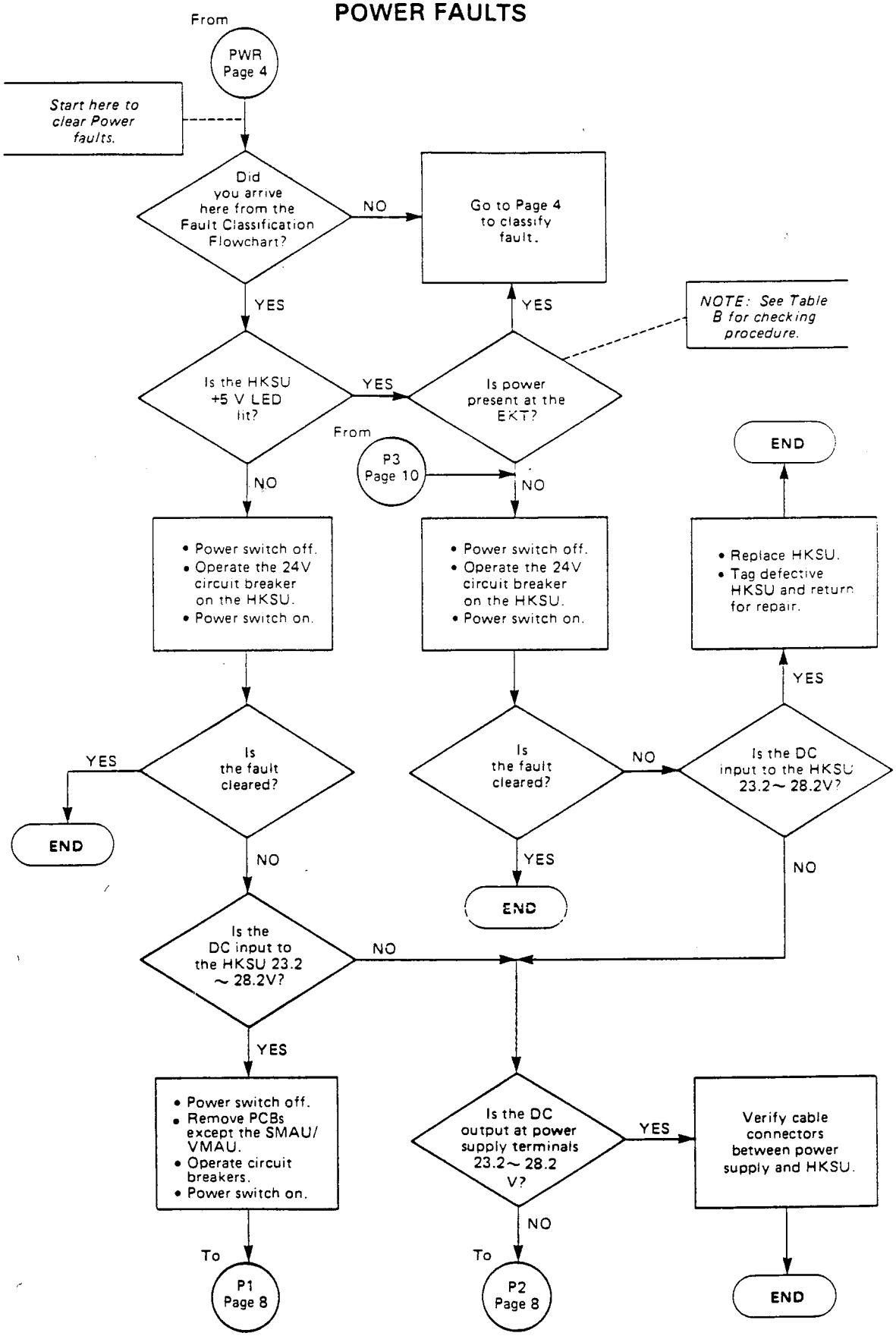

CHART NO. 2
POWER FAULTS (cont.)

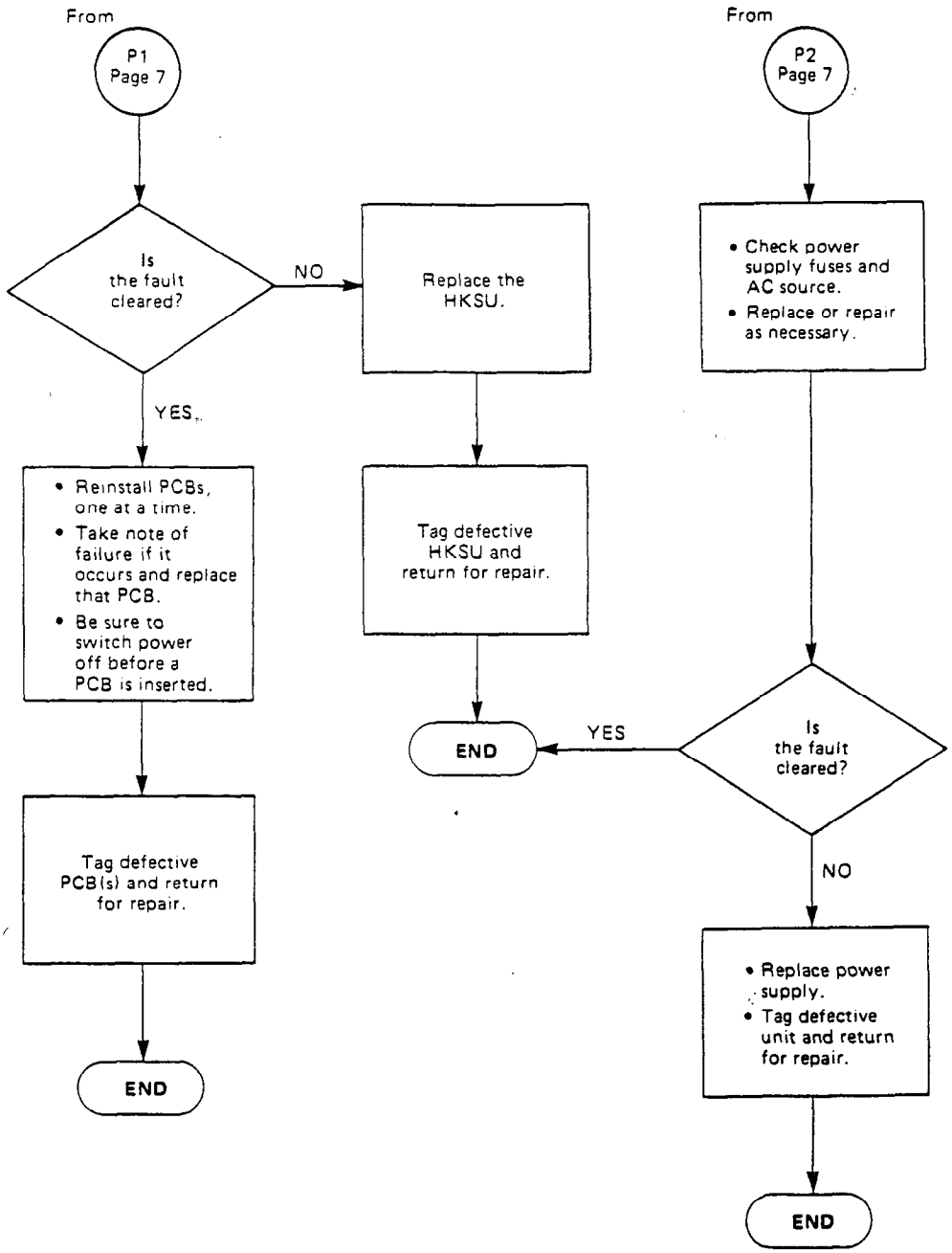

CHART NO. 3
STATION FAULTS

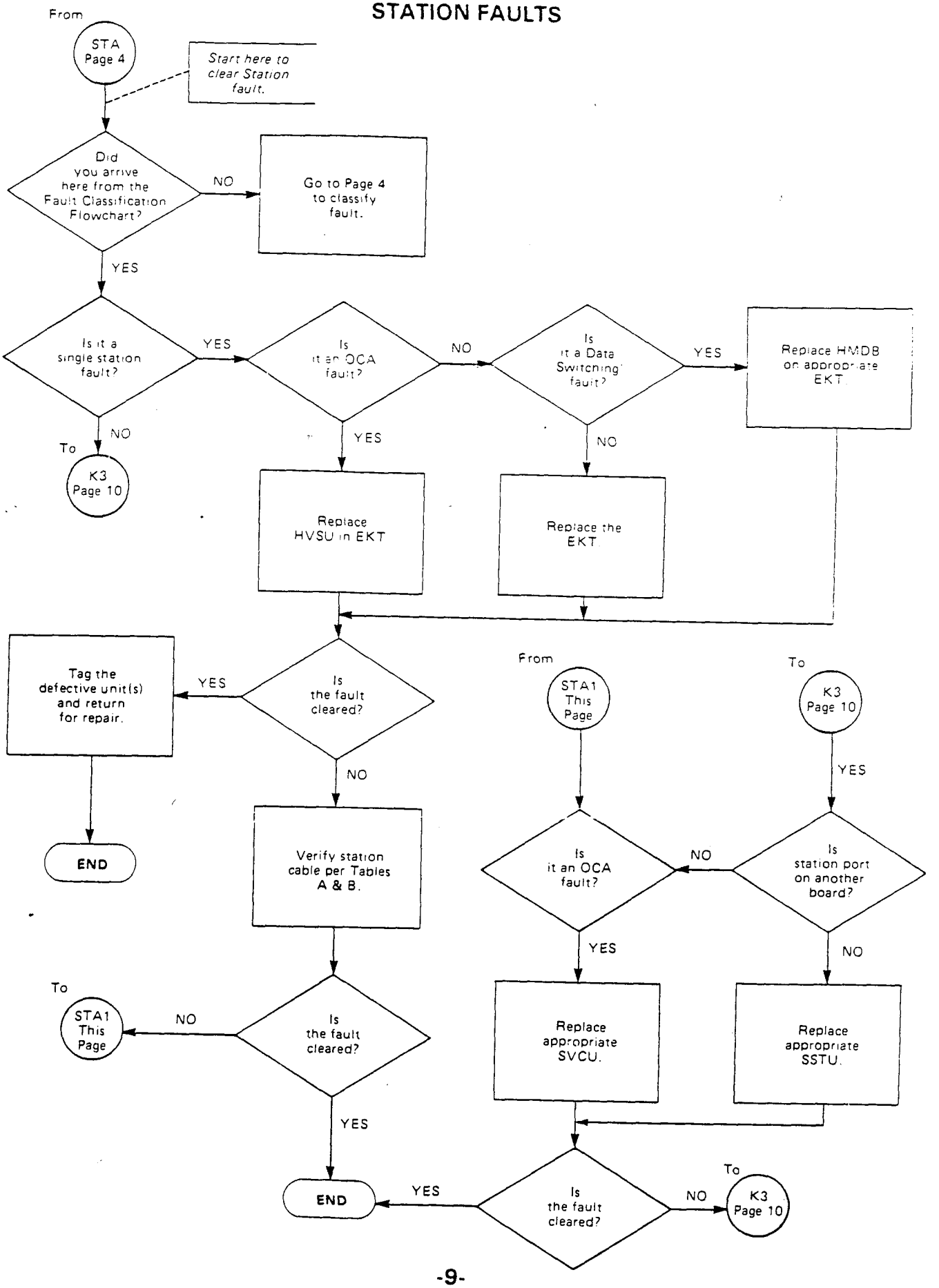

CHART NO. 4
HKSU FAULTS

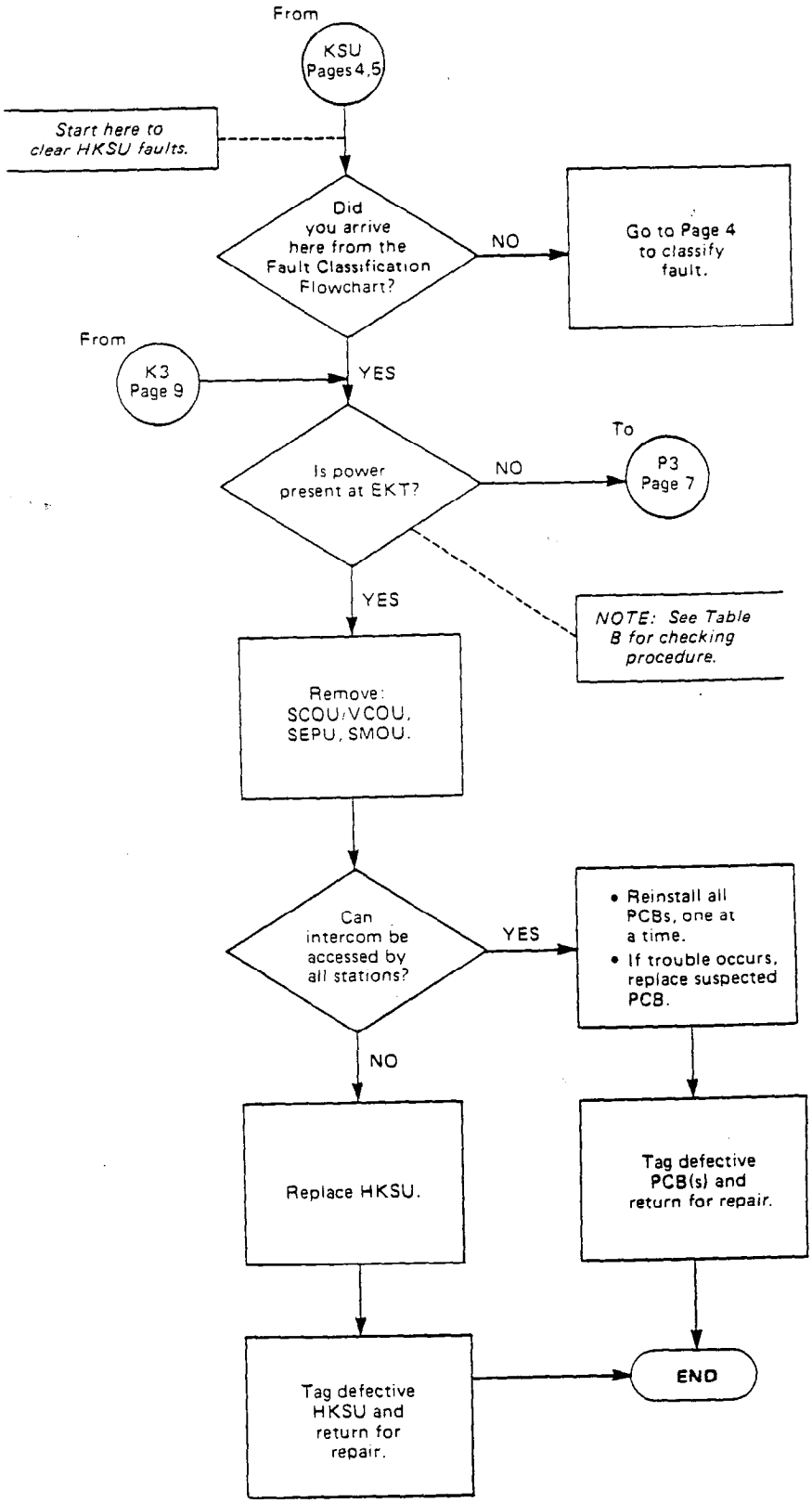

CHART NO. 5
CO LINE FAULTS

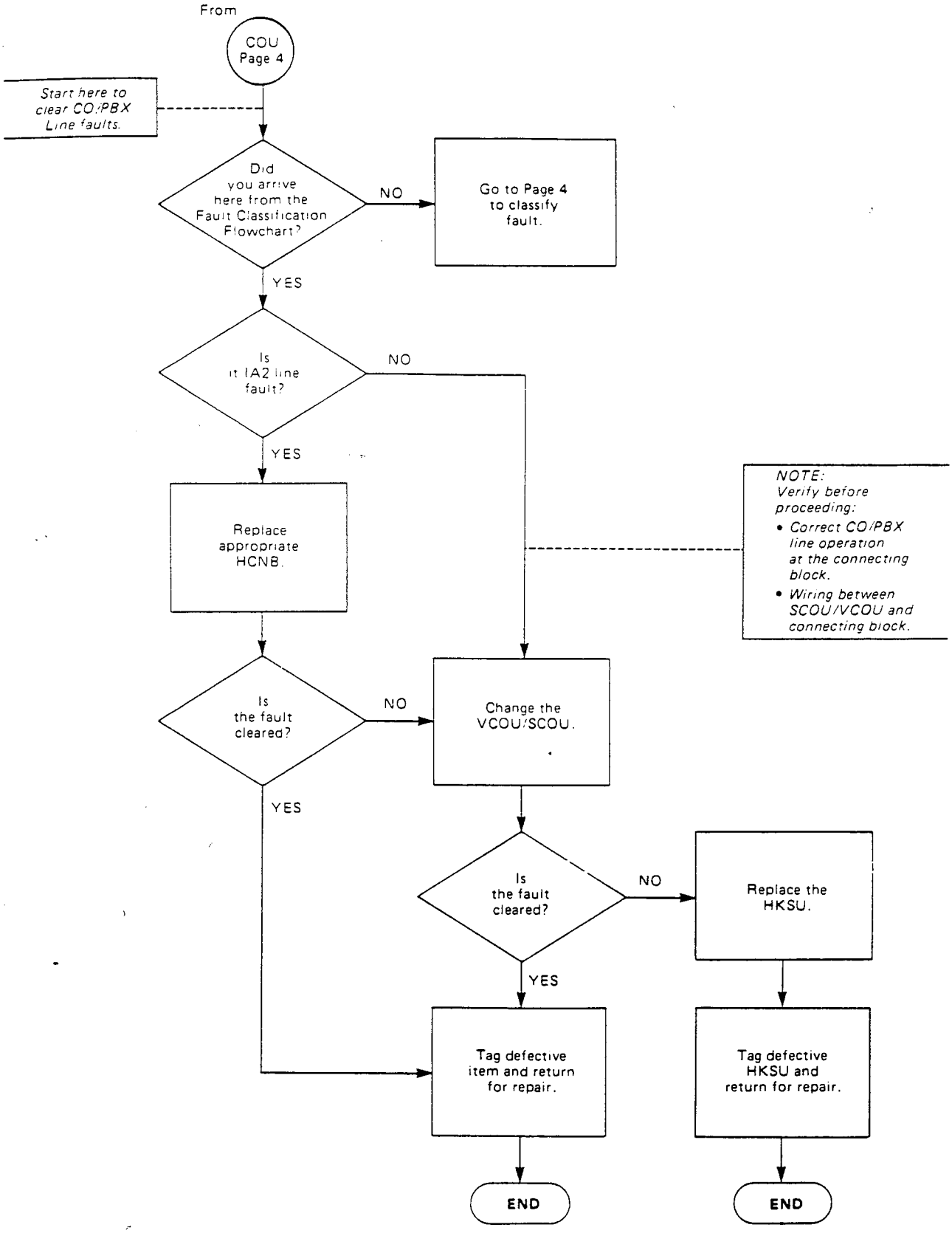

CHART NO. 6
MOH FAULTS

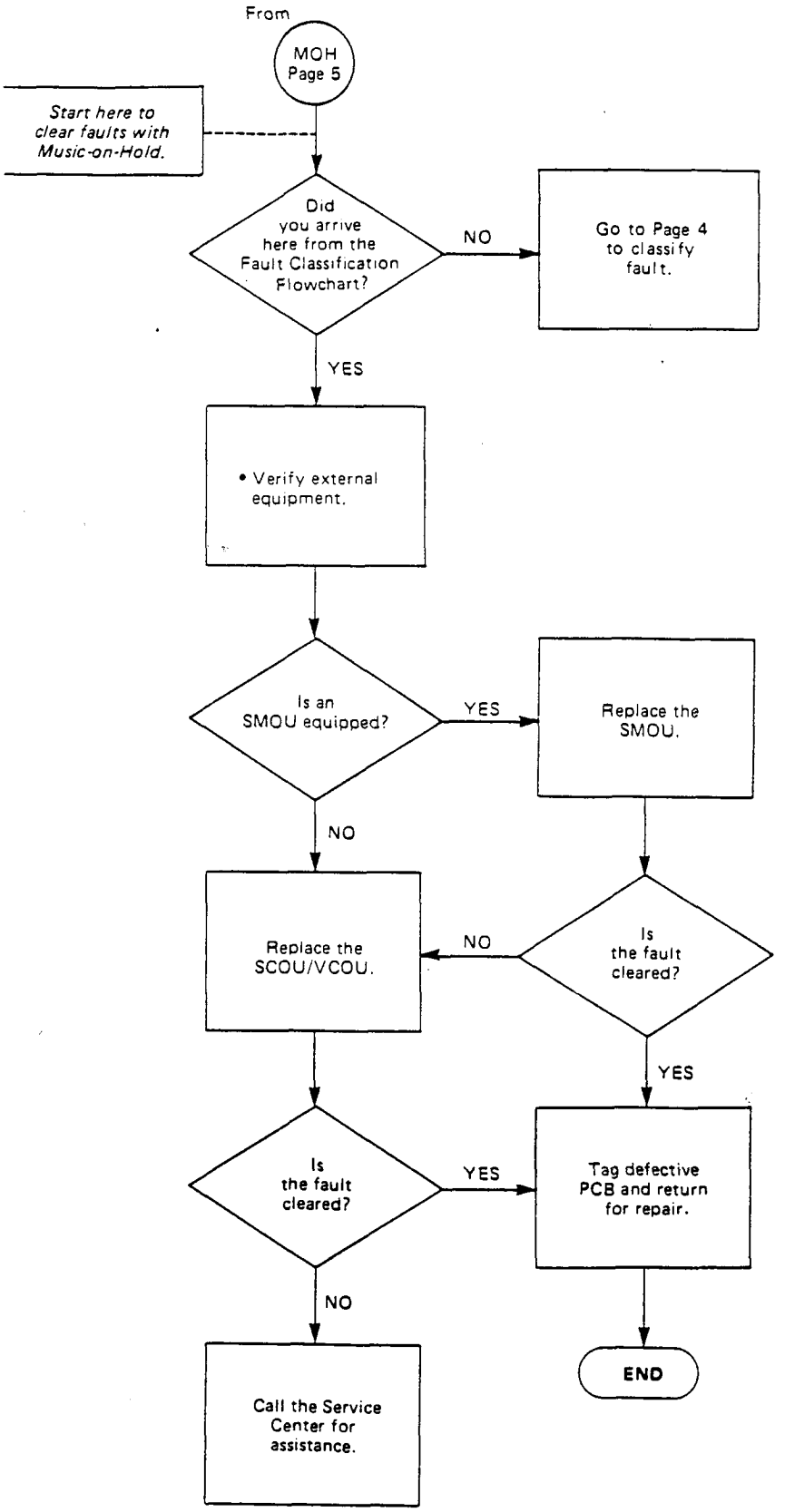

CHART NO. 7
PAGE/BGM FAULTS

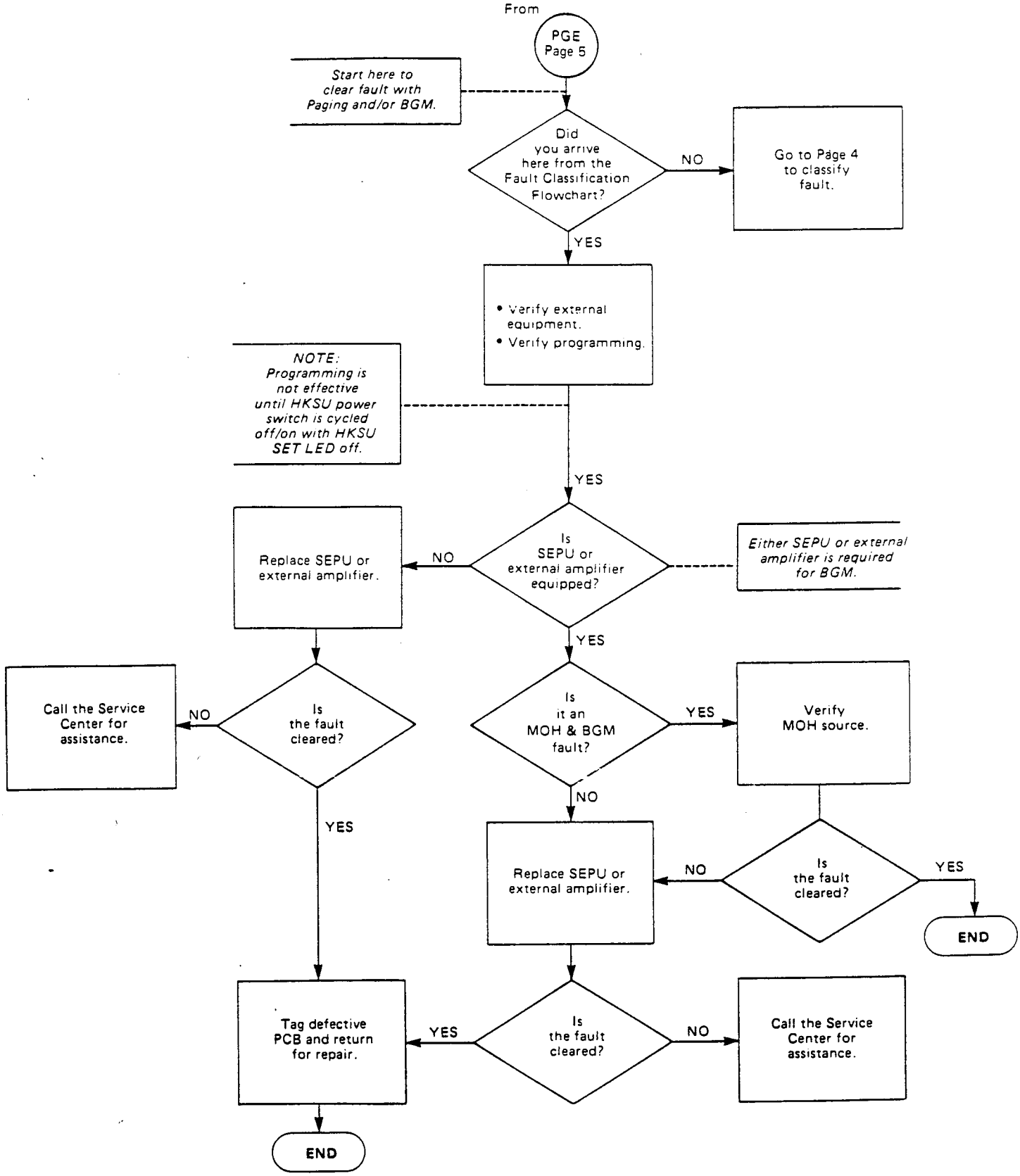

CHART NO. 8
DOOR PHONE FAULTS

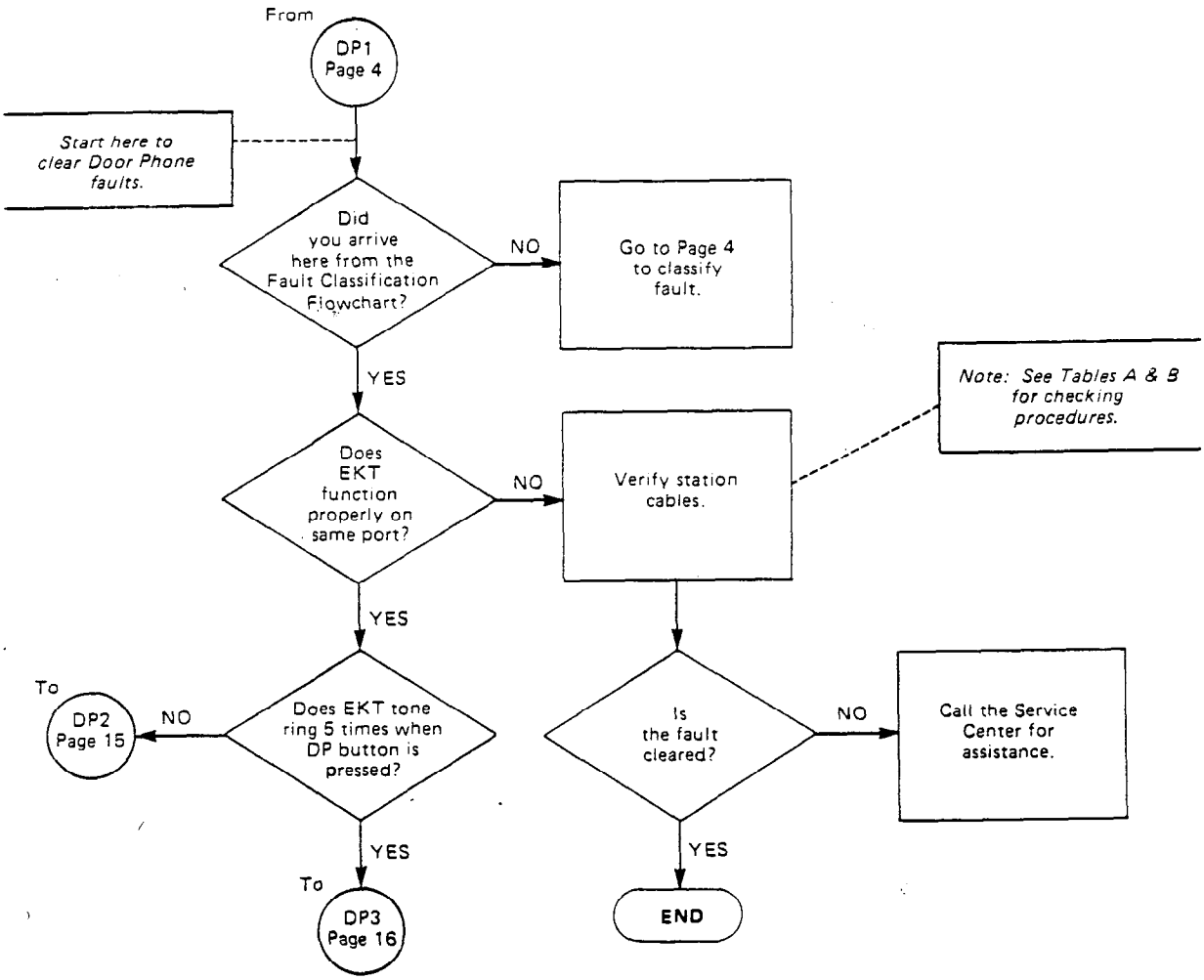

CHART NO. 8
DOOR PHONE FAULTS (cont.)

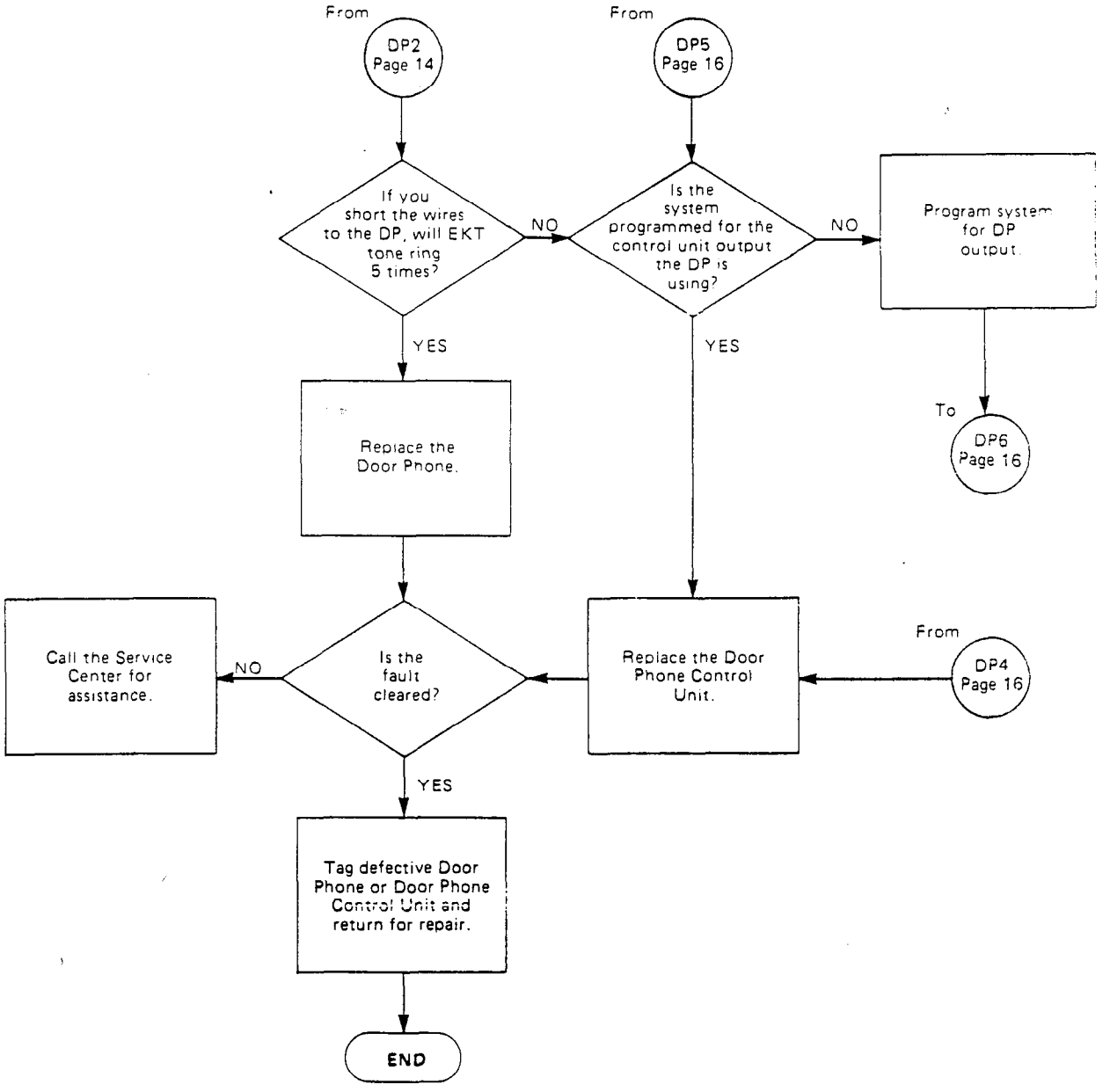

CHART NO. 8
DOOR PHONE FAULTS (cont.)

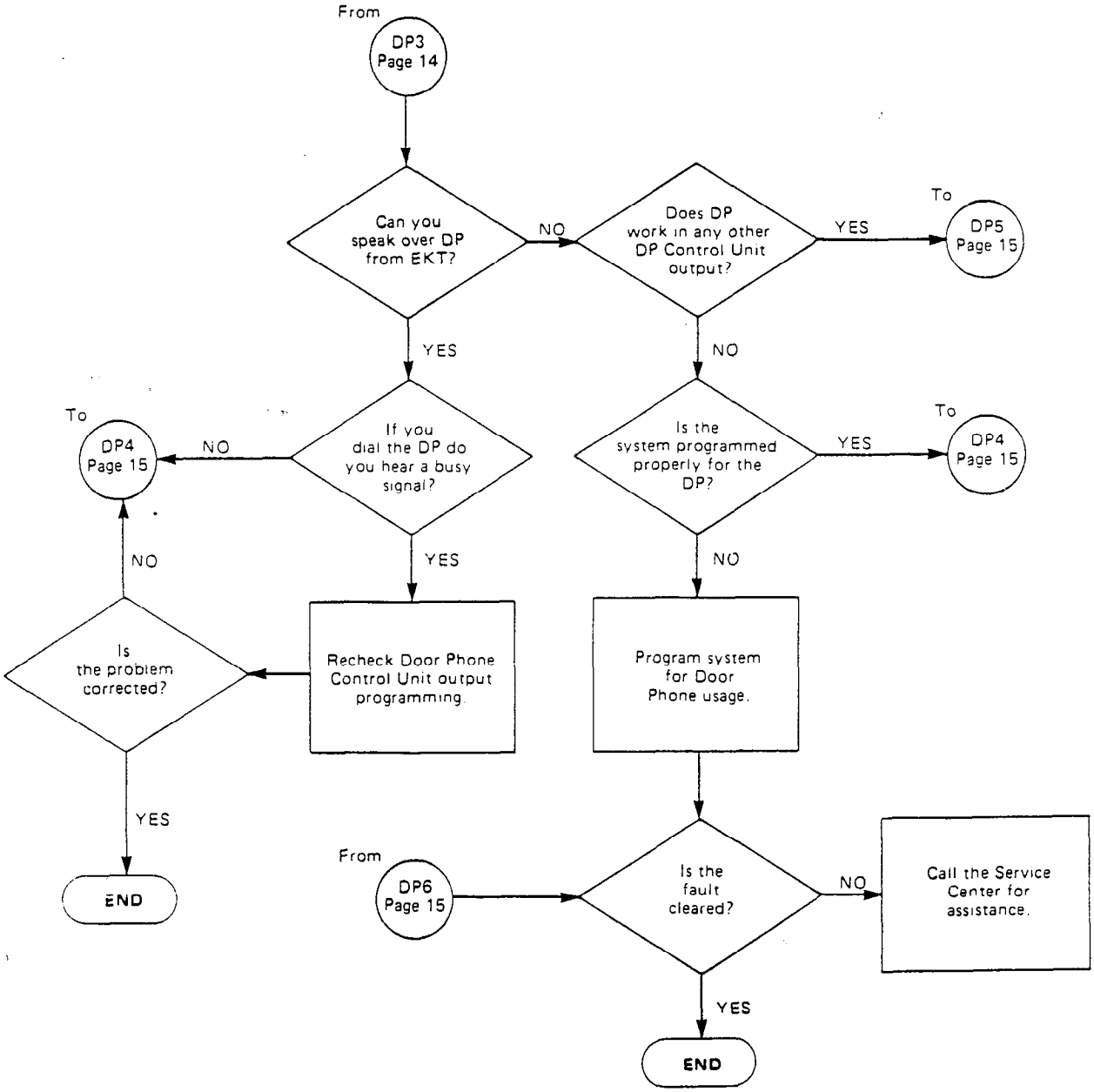

CHART NO. 9
SMDR FAULTS

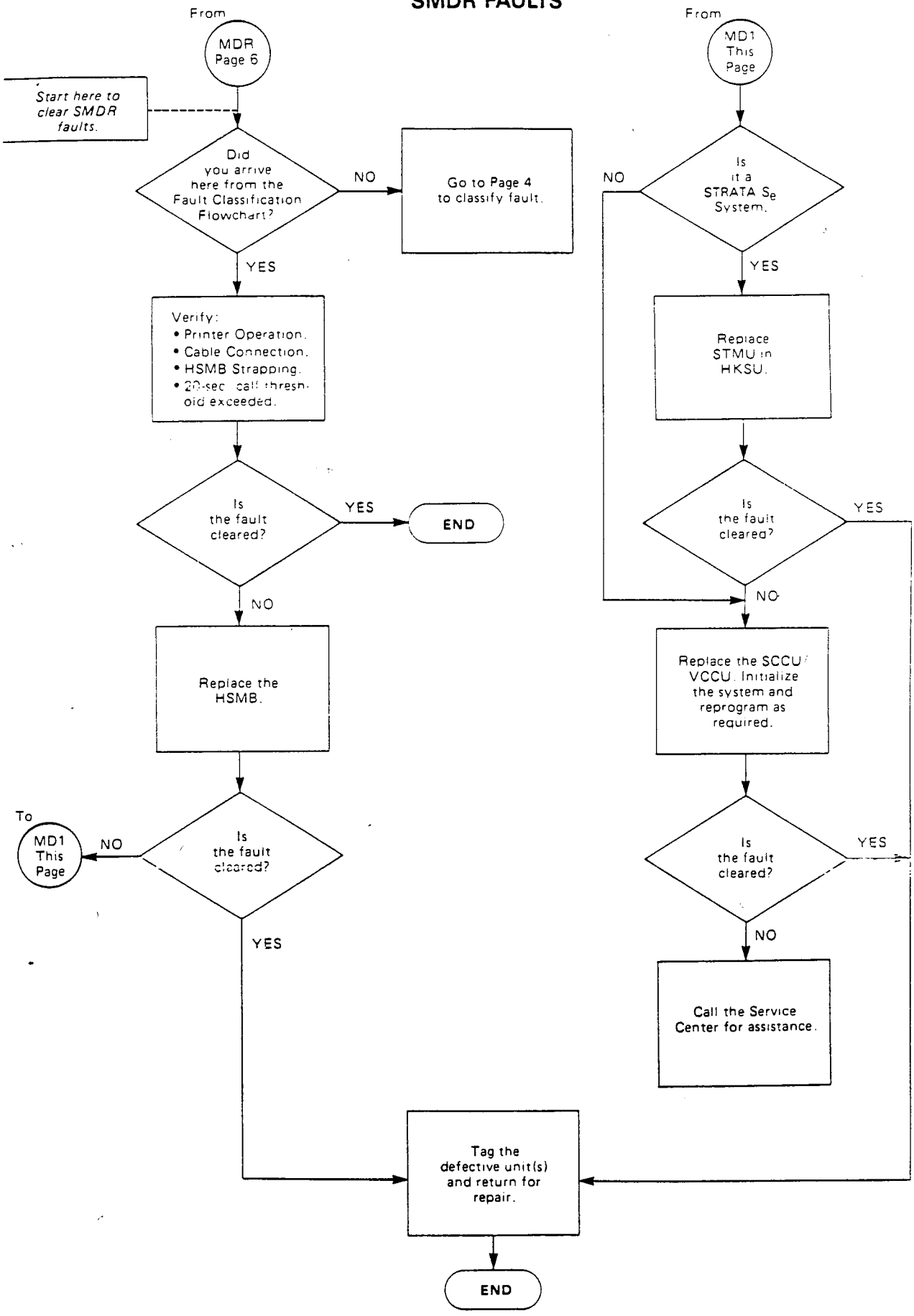

CHART NO. 10
OPX FAULTS

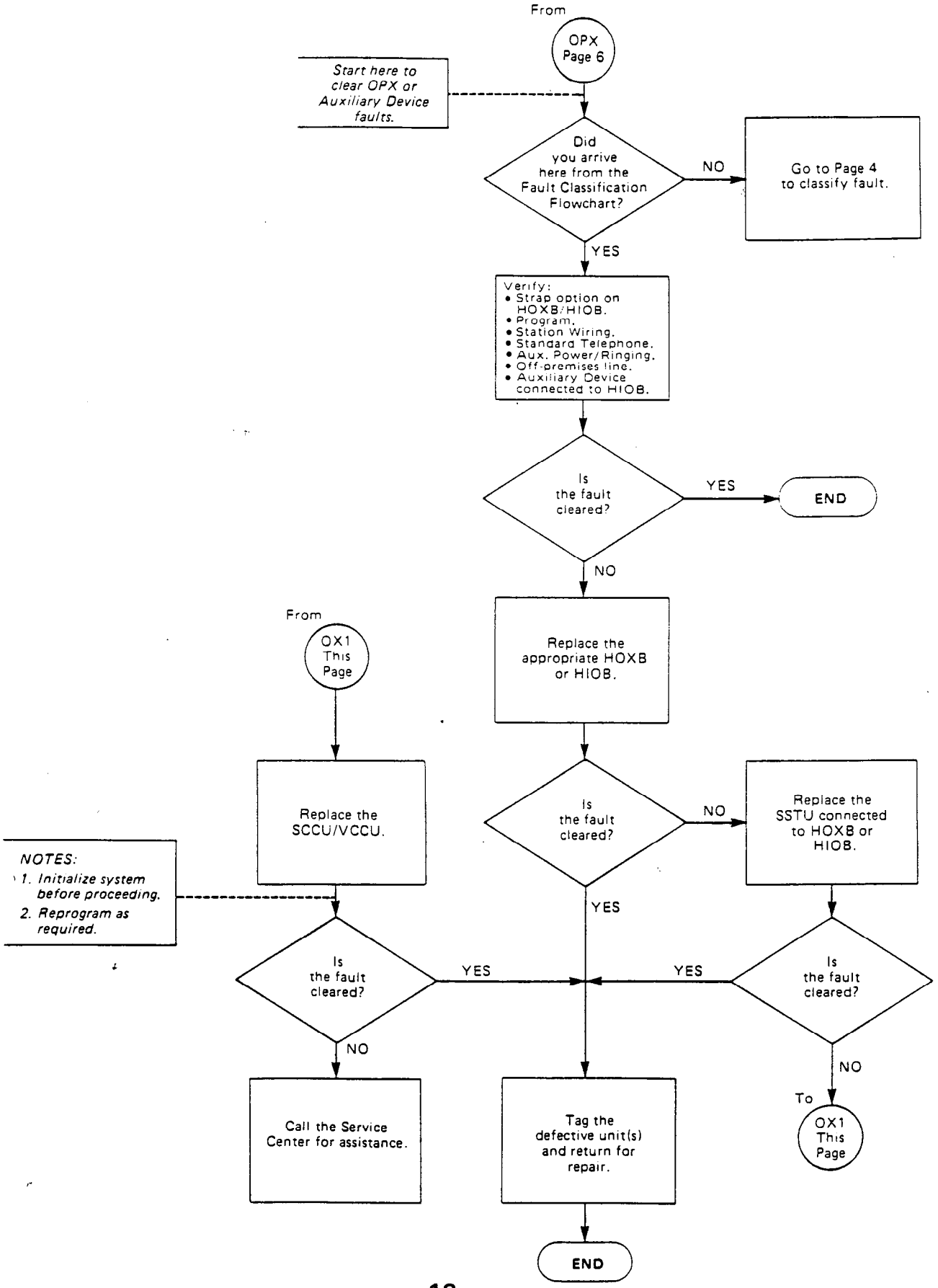

CHART NO. 11
OPL FAULTS

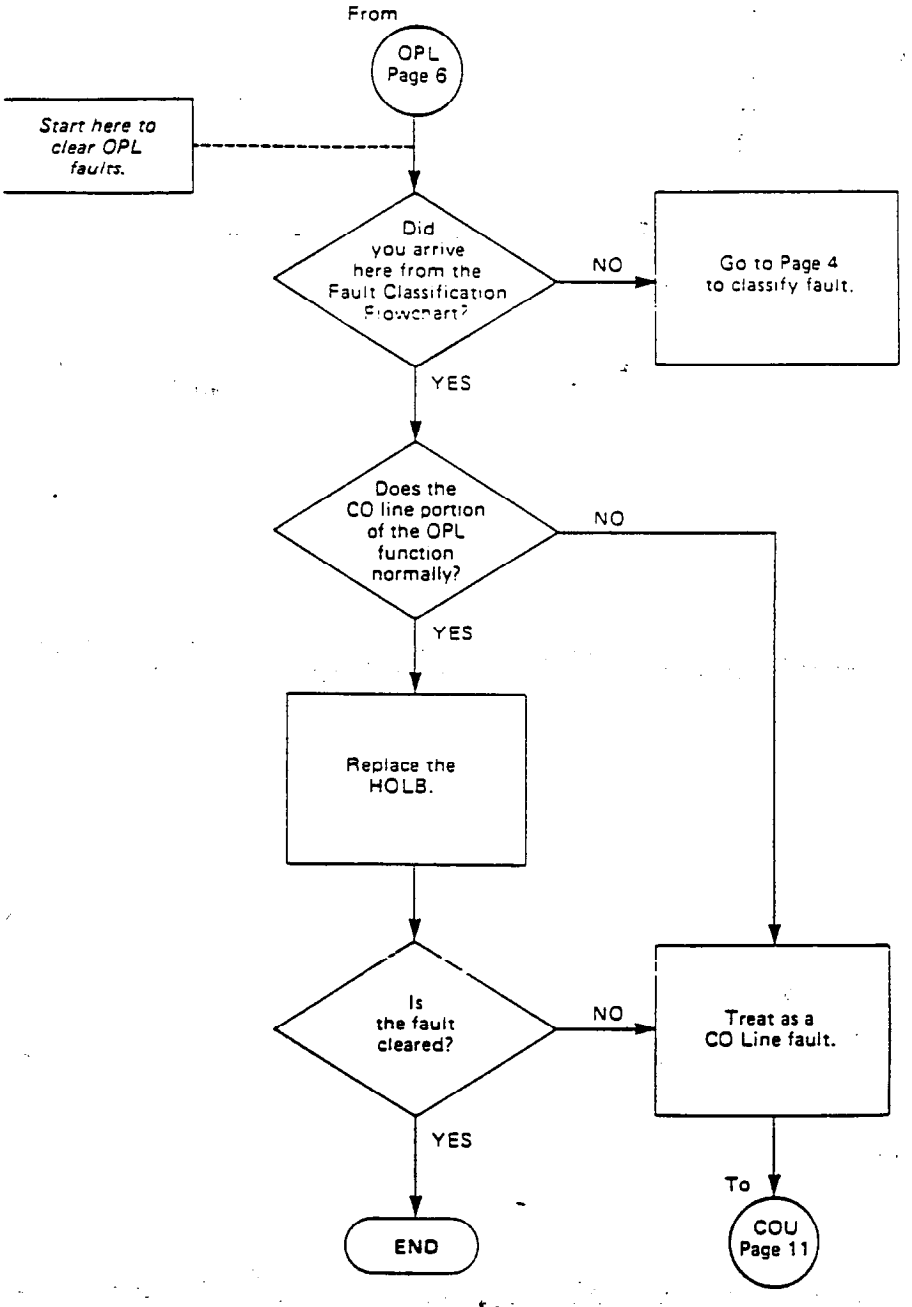
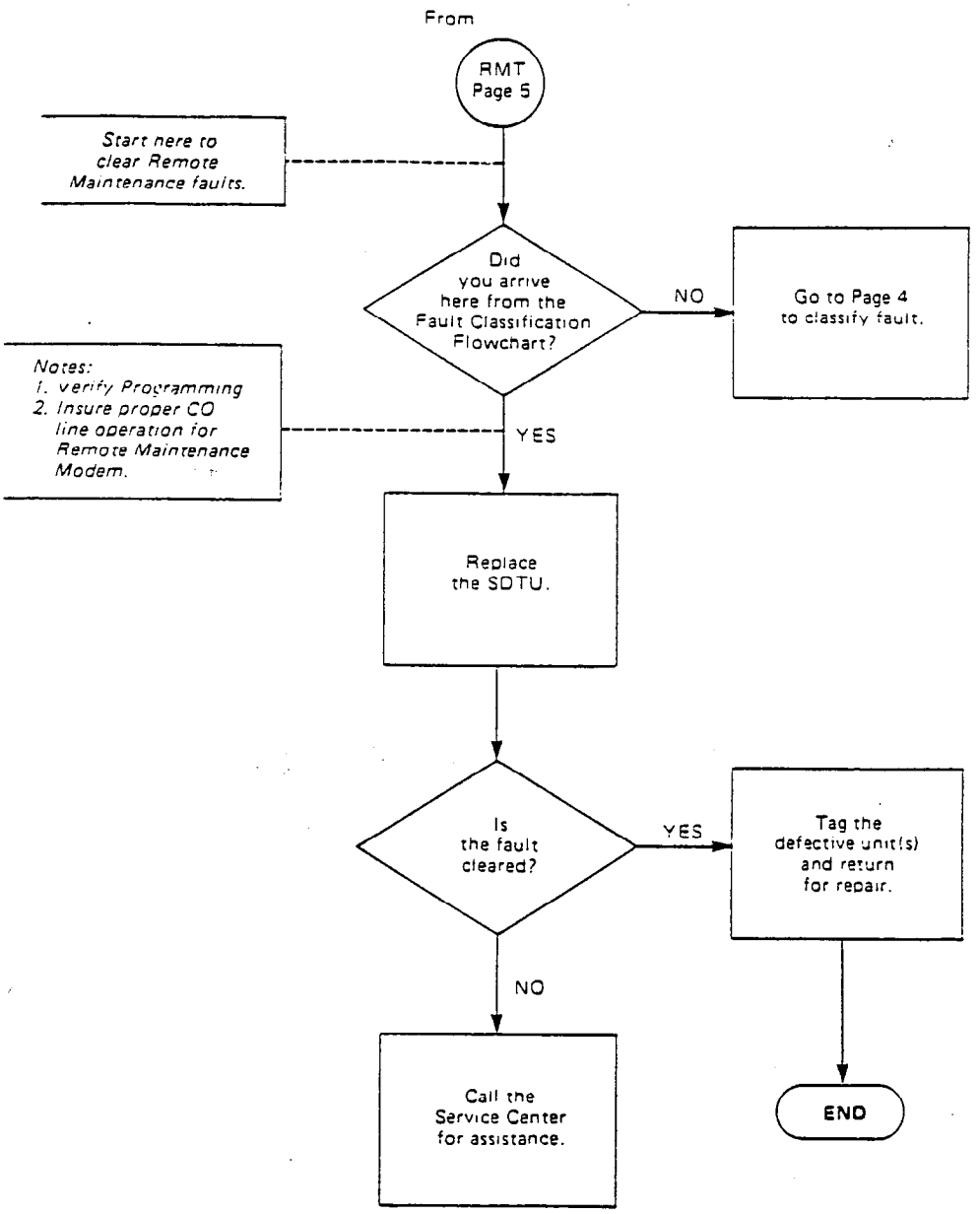
CHART NO. 12
REMOTE MAINTENANCE FAULTS